UNITED STATES ENVIRONMENTAL PROTECTION AGENCY
REGION IX
75 Hawthorne Street
San Francisco, CA 94105

FEB 17 2012

Mr. Steve Slaten
NASA Groundwater Cleanup Project Manager
NASA Management Office
4800 Oak Grove Drive
Pasadena, California 91109

Subject: National Aeronautics and Space Administration (NASA) Jet Propulsion Laboratory (JPL) First Five Year Review (2007 through 2012) dated February 8, 2012

Dear Mr. Slaten:

The U.S. Environmental Protection Agency (EPA) Region 9 has received and reviewed the Final Five Year Review Report for NASA JPL (here in after referred to as the Report) dated February 8, 2012. Based on this review, EPA agrees with the findings, conclusions, and recommendations provided in the Report, and concurs with NASA that the interim remedies in place are protective of human health and the environment in the short term. Long term protection of human health and the environment at this site will be achieved when the final Record of Decision(s) for ground water are issued and implemented.

If you have any questions, please do not hesitate to call my staff Judy Huang at (415) 972-3681 or e-mail her at huang.judy@epa.gov.

Sincerely,

Michael Montgomery, Assistant Director
Federal Facilities and Site Cleanup
Branch

FINAL
FIRST FIVE-YEAR REVIEW REPORT

National Aeronautics and Space Administration
Jet Propulsion Laboratory
Pasadena, California

EPA ID# CA9800013030

Prepared for:

National Aeronautics and Space Administration
Management Office, Jet Propulsion Laboratory
4800 Oak Grove Drive
Pasadena, California 91109

February 2012

CONTENTS

FIGURES iii
TABLES iv
ABBREVIATIONS v
EXECUTIVE SUMMARY vii

1. INTRODUCTION 1

2. SITE CHRONOLOGY 3

3. BACKGROUND 7
   3.1 General Site Description and Physical Characteristics 7
      3.1.1 Geology and Seismology 7
      3.1.2 Hydrology 10
   3.2 Land and Resource Use 10
   3.3 History of Contamination 12
   3.4 Initial Response 12
   3.5 Basis of Taking Action 12
      3.5.1 Operable Unit 1 13
      3.5.2 Operable Unit 3 13

4. REMEDIAL ACTIONS 14
   4.1 Operable Unit 1 14
      4.1.1 Operable Unit 1 System Operations Summary 17
      4.1.2 Operable Unit 1 System Monitoring Summary 18
      4.1.3 Operable Unit 1 Summary of System Operation and Maintenance Costs 19
   4.2 Operable Unit 3 19
      4.2.1 Operable Unit 3 System Operations Summary 20
      4.2.2 Operable Unit 3 System Monitoring Summary 26
      4.2.3 Operable Unit 3 Summary of System Operation and Maintenance Costs 28

5. PROGRESS SINCE THE LAST REVIEW 30

6. FIVE-YEAR REVIEW PROCESS 31
   6.1 Administrative Components of the Five-Year Review Process 31
   6.2 Community Involvement 31
   6.3 Document Review 31
   6.4 Data Review 31
   6.5 Site Inspection 32
   6.6 Interviews 32

7. TECHNICAL ASSESSMENT FIVE-YEAR REVIEW PROCESS 33
   7.1 OU-1, Source Area Groundwater 33
      7.1.1 Question A: Is the remedy functioning as intended by the decision documents? 33
      7.1.2 Question B: Are the exposure assumptions, toxicity data, cleanup levels, and remedial action objectives used at the time of the remedy selection still valid? 38
      7.1.3 Question C: Has any other information come to light that could call into question the protectiveness of the remedy? 38
   7.2 OU-3, Off-Facility Groundwater 38

7.2.1 Question A: Is the remedy functioning as intended by the decision documents? 38
7.2.2 Question B: Are the exposure assumptions, toxicity data, cleanup levels, and remedial action objectives used at the time of the remedy selection still valid? 42
7.2.3 Question C: Has any other information come to light that could call into question the protectiveness of the remedy? 43

8. ISSUES 45

9. RECOMMENDATIONS AND FOLLOW-UP ACTIONS 46

10. PROTECTIVENESS STATEMENTS 48

11. NEXT REVIEW 49

12. REFERENCES 50

APPENDIX A: INTERVIEW RECORDS WITH LAWC AND PWP

FIGURES

Figure 3-1. Map of JPL and the Surrounding Area 8
Figure 3-2. Map of Regional Geology and Physiology 9
Figure 3-3. Conceptual Model of JPL Aquifer Layers 11
Figure 4-1. OU-1 Process Flow Diagram 16
Figure 4-2. Conceptual Representation of the Chemical Release and Groundwater Cleanup Program at NASA JPL 23
Figure 4-3. MHTS Process Flow Diagram 24
Figure 4-4. LAWC Process Flow Diagram 25
Figure 4-5. Ion Exchange System Performance 29
Figure 7-1. Groundwater Contour Map, April 2004 (Baseline before Extraction) 34
Figure 7-2. Groundwater Contour Map, April/May 2011 (with Extraction) 35
Figure 7-3. Trichloroethylene Concentrations vs. Time in OU-1 36
Figure 7-4. Carbon Tetrachloride Concentrations vs. Time in OU-1 36
Figure 7-5. Perchlorate Concentrations vs. Time in OU-1 37
Figure 7-6. Historical Concentrations of Carbon Tetrachloride in MW-17 40
Figure 7-7. Historical Concentrations of TCE in MW-17 40
Figure 7-8. Historical Concentrations of Perchlorate in MW-17 41
Figure 7-9. Carbon Tetrachloride, TCE, and Perchlorate Concentration Trends in LAWC#3 41
Figure 7-10. Carbon Tetrachloride, TCE, and Perchlorate Concentration Trends in LAWC#5 42
Figure 7-11. Capture Zones for the MHTS and LAWC Wells Relative to the Current Extent of Perchlorate in Groundwater Originating from JPL 44

TABLES

Table 2-1. Chronology of Site Events 3
Table 4-1. Summary of Groundwater Discharge Limits for Treated Water 15
Table 4-2. Summary of Annual O&M Costs 19
Table 4-3. Summary of Perchlorate and VOC Requirements for the MHTS and the LAWC Treatment Systems 21
Table 4-4. LAWC System Operational Summary (July 2004 through August 2011) 22
Table 4-5. Summary of Annual O&M Costs at LAWC 29
Table 7-1. OU-1 Source Area Monitoring Well Concentrations 34
Table 9-1. Summary of Recommendations and Follow-up Actions 47

AR/AV	air release and air vacuum
ARAR	Applicable or Relevant and Appropriate Requirement
ATSDR	Agency for Toxic Substances and Disease Registry
bgs	below ground surface
CalTech	California Institute of Technology
CCL_4	carbon tetrachloride
CERCLA	Comprehensive Environmental Response, Compensation and Liability Act
DCA	dichloroethane
DCE	dichloroethene
DHS	Department of Health Services
DO	dissolved oxygen
DPH	Department of Public Health
DTSC	Department of Toxic Substances Control
FBR	fluidized bed reactor
FFA	Federal Facilities Agreement
FS	Feasibility Study
FWEC	Foster Wheeler Environmental Corporation
gpd	gallons per day
gpm	gallons per minute
HPC	heterotrophic plate count
IRIS	Integrated Risk Information System
JPL	Jet Propulsion Laboratory
LAWC	Lincoln Avenue Water Company
LDR	land disposal restriction
LGAC	liquid-phase granular activated carbon
MCL	maximum contaminant level
MHTS	Monk Hill Treatment System
NASA	National Aeronautics and Space Administration
NCP	National Contingency Plan
NDBA	N-nitrosodi-n-butylamine
NDEA	N-nitrosodiethylamine
NDMA	N-nitrosodimethylamine
NDPA	N-nitroso-n-propylamine
NL	notification level
NPL	National Priorities List

ORP	oxidation reduction potential
OU	Operable Unit
PA/SI	preliminary assessment/site inspection
PCE	tetrachloroethene
ppmv	parts per million by volume
PWP	Pasadena Water and Power
RBMB	Raymond Basin Management Board
RCRA	Resource Conservation and Recovery Act
RD/RA	remedial design/remedial action
RI	remedial investigation
ROD	Record of Decision
RPM	Remedial Project Manager
RWQCB	Regional Water Quality Control Board
SARA	Superfund Amendments and Reauthorization Act
SCAQMD	South Coast Air Quality Management District
SDWA	Safe Drinking Water Act
SVE	soil vapor extraction
SVOC	semivolatile organic compound
TCE	trichloroethene
TTHM	total trihalomethane
U.S. EPA	U.S. Environmental Protection Agency
VOC	volatile organic compound
WDR	waste discharge requirement

EXECUTIVE SUMMARY

This is the first five-year review for the National Aeronautics and Space Administration (NASA) Jet Propulsion Laboratory (JPL) site in Pasadena, California. This report was prepared pursuant to the Comprehensive Environmental Response, Compensation, and Liability Act (CERCLA) §121 by the lead agency, NASA, to document the five-year review of the implemented remedies. The trigger action for this statutory review is the finalization of the interim record of decision (ROD) for Operable Unit (OU)-1 in February 2007 (NASA, 2007a). This five-year review is required because the remedial actions for OU-1 (source area groundwater) and OU-3 (off-facility groundwater) are continuing for more than five years to achieve cleanup to levels that allow for unlimited use and unrestricted exposure.

Both active OUs, OU-1 and OU-3, are included in this five-year review. OU-2 is not included in this five-year review, because the cleanup activities for OU-2 did not continue for more than five years and were completed prior to the finalization of the OU-1 ROD (NASA, 2007d). OU-2 included treatment of volatile organic compounds (VOCs) in on-facility vadose zone soil using soil vapor extraction (SVE).

OU-1 covers source area groundwater treatment activities consisting of a groundwater pump and treat system with reinjection for treatment of perchlorate and VOCs. Components of the OU-1 treatment system include liquid-phase granular activated carbon (LGAC) for VOC removal, fluidized bed reactor (FBR) for perchlorate treatment, and filtration. OU-3 covers off-facility groundwater treatment activities consisting of two pump and treat systems that supply treated drinking water: the Monk Hill Treatment System (MHTS) in the City of Pasadena, and the Lincoln Avenue Water Company (LAWC) treatment system in Altadena. These treatment systems were designed to remove perchlorate from groundwater using ion exchange and VOCs using LGAC. Both OUs are currently in the post construction completion phase of the CERCLA cleanup process (i.e., long-term operation and maintenance [O&M] of the treatment systems).

Recent monitoring data, installation reports, and treatment system progress reports, as well as other relevant documents, were reviewed to evaluate the protectiveness of the remedies. Based on the information reviewed, the treatment systems are performing as designed, and no new information that would compromise the protectiveness of the selected remedies was identified. Therefore, the remedies at both OU-1 and OU-3 are deemed to be protective of human health and the environment. Potential exposure pathways that could result in unacceptable risk (i.e., ingestion and contact with chemicals in groundwater) are being effectively controlled through groundwater extraction and treatment by the MHTS and the LAWC treatment system, and routine monitoring of these systems. Treated water from both the MHTS and the LAWC system is in compliance with all water quality requirements specified by Federal and state regulations, with concentrations below Federal and California maximum contaminant levels (MCLs).

Five-Year Review Summary Form

SITE IDENTIFICATION		
Site Name: Jet Propulsion Laboratory (NASA)		
EPA ID: CA9800013030		
Region: 9	**State:** CA	**City/County:** Pasadena/Los Angeles County

SITE STATUS	
NPL Status: Final	
Multiple OUs? Yes	**Has the site achieved construction completion?** Yes

REVIEW STATUS
Lead agency: Other Federal Agency **If "Other Federal Agency" was selected above, enter Agency name:** NASA
Author name (Federal or State Project Manager): NASA
Author affiliation:
Review period: 11/14/2011 - 2/8/2012
Date of site inspection: Routine; ongoing. Note: EPA concurred with NASA's decision not to conduct additional site inspections specific for this Five-Year Review Report due to the frequency of on-going inspections.
Type of review: Statutory
Review number: 1
Triggering action date: 2/8/2007
Due date *(five years after triggering action date)*: 2/8/2012

Five-Year Review Summary Form (continued)

Issues/Recommendations

Issues and Recommendations Identified in the Five-Year Review:

OU(s): OU-1	**Issue Category: Monitoring**			
	Issue: Reduced perchlorate concentrations in OU-1 extraction well EW-2			
	Recommendation: Evaluate future monitoring data in consideration of reducing or suspending extraction from this well if the perchlorate concentration trend continues to decrease. The evaluation will be included in the subsequent Technical Memoranda documenting performance of the OU-1 treatment system.			
Affect Current Protectiveness	**Affect Future Protectiveness**	**Implementing Party**	**Oversight Party**	**Milestone Date**
No No		Monitoring by NASA	Evaluation and reporting by NASA	April 2012 and October 2012

Issues and Recommendations Identified in the Five-Year Review:

OU(s): OU-3	**Issue Category: Monitoring**			
	Issue: Increased perchlorate levels in production well LAWC#5			
	Recommendation: Evaluate future sampling results for LAWC#5 to monitor the perchlorate concentration trend at this well. The evaluation will be included in the next Technical Memorandum documenting performance of the LAWC treatment system.			
Affect Current Protectiveness	**Affect Future Protectiveness**	**Implementing Party**	**Oversight Party**	**Milestone Date**
No No		Monitoring by LAWC	Data evaluation and CERCLA reporting by NASA	April 2012

Five-Year Review Summary Form (continued)

Issues and Recommendations Identified in the Five-Year Review:				
OU(s): OU-3	**Issue Category: Operations and Maintenance**			
	Issue: Detection of nitrosamines during startup of MHTS			
	Recommendation: Minimize nitrosamine leaching from virgin resin at the MHTS by minimizing the use of chlorinated water to flush the resin; pre-rinse newly installed resin prior to placing the vessel into service; perform subsequent monitoring for nitrosamines; develop best practices with the vendor for on-site maintenance activities to minimize the formation of nitrosamines; and require that the vendor pre-rinse resin at an off-site location prior to placing it in the MHTS vessels. Results of efforts to minimize nitrosamine leaching will be reported at the monthly CERCLA RPM meetings, as part of the treatment system performance update.			
Affect Current Protectiveness	**Affect Future Protectiveness**	**Implementing Party**	**Oversight Party**	**Milestone Date**
No No		Implementation and monitoring by Pasadena Water and Power	CERCLA reporting by NASA	Effective immediately during loading of virgin ion exchange resin

Sitewide Protectiveness Statement (if applicable)	
For sites that have achieved construction completion, enter a sitewide protectiveness determination and statement.	
Protectiveness Determination: Protective	*Addendum Due Date (if applicable):*
Protectiveness Statement: The interim remedies at both OU-1 and OU-3 evaluated in this Five-Year Review Report are protective of human health and the environment in the short term. Potential exposure pathways that could result in unacceptable risk (i.e., ingestion and contact with chemicals in groundwater) are being controlled through groundwater extraction and treatment by the MHTS and LAWC treatment system. Both systems have routine monitoring programs in place to ensure chemicals are effectively removed. Treated water from both the MHTS and the LAWC system is in compliance with all water quality requirements specified by Federal and state regulations, with concentrations below Federal and California MCLs. In order for the remedy to be protective in the long term, final remedies for OU-1 and OU-3 must be incorporated into a final decision document and implemented. It is anticipated that a Final ROD for groundwater will be issued prior to the next Five-Year Review and will include any active remedial actions and institutional controls necessary to provide long-term protection of human health and the environment.	

1. INTRODUCTION

The purpose of this five-year review is to determine whether the remedies at the National Aeronautics and Space Administration (NASA) Jet Propulsion Laboratory (JPL) site are protective of human health and the environment. The methods, findings, and conclusions of this review are documented in this Five-Year Review report. In addition, this Five-Year Review report will identify issues found during the review, if any, and identify recommendations to address them.

This five-year review is being prepared pursuant to the Comprehensive Environmental Response, Compensation, and Liability Act (CERCLA) §121 and the NCP. CERCLA §121 states:

> *If the President selects a remedial action that results in any hazardous substances, pollutants, or contaminants remaining at the site, the President shall review such remedial action no less often than each five years after the initiation of such remedial action to assure that human health and the environment are being protected by the remedial action being implemented. In addition, if upon such review it is the judgment of the President that action is appropriate at such site in accordance with section [104] or [106], the President shall take or require such action. The President shall report to the Congress a list of facilities for which such review is required, the results of all such reviews, and any actions taken as a result of such reviews.*

This requirement is further interpreted in the National Contingency Plan (NCP); 40 CFR §300.430(f)(4)(ii) states:

> *If a remedial action is selected that results in hazardous substances, pollutants, or contaminants remaining at the site above levels that allow for unlimited use and unrestricted exposure, the lead agency shall review such action no less often than every five years after the initiation of the selected remedial action.*

This report was prepared for the lead agency, NASA, to document the five-year review of the remedies implemented at the NASA JPL site in Pasadena, California. This review was conducted from September 2011 through November 2011 by NASA's prime remedial action contractor for the site during this time period, Battelle.

This is the first five-year review for the NASA JPL site. The trigger action for this statutory review is the finalization of interim record of decision (ROD) for Operable Unit (OU)-1 in February 2007 (NASA, 2007a). This five-year review is required because the remedial actions for OU-1 (source area groundwater) and OU-3 (off-facility groundwater) are continuing for more than five years to achieve cleanup to levels that allow for unlimited use and unrestricted exposure.

Both active OUs, OU-1 and OU-3, are included in this five-year review. OU-1 covers source area groundwater treatment activities consisting of a groundwater pump and treat system with reinjection for treatment of perchlorate and volatile organic compounds (VOCs). OU-3 covers off-facility groundwater treatment activities consisting of two pump and treat systems that supply treated drinking water: the Monk Hill Treatment System (MHTS) in the City of Pasadena and the Lincoln Avenue Water Company (LAWC) treatment system in Altadena. Like OU-1, the OU-3 treatment systems were designed to remove perchlorate and VOCs from groundwater. Both OUs are currently in the post construction completion phase of the CERCLA cleanup process (i.e., long-term operation and maintenance [O&M] of the treatment systems).

OU-2, which included soil vapor extraction (SVE) treatment of VOCs in on-facility vadose zone soil, is not included in this five-year review. The ROD for OU-2 was signed in September 2002 (NASA, 2002), and cleanup activities were completed in March 2007 with the finalization of the *OU-2 Remedial Action Report* (NASA, 2007c). Because the cleanup activities for OU-2 did not continue for more than five years, a five-year review was not required for this operable unit (NASA, 2007d).

A chronological list of important site events and relevant dates is provided in Table 2-1.

Table 2-1. Chronology of Site Events

Date	Event
1936	JPL begins through the Guggenheim Aeronautical Laboratory at the California Institute of Technology.
1940	Army Air Corp funds first permanent structure near present day facility.
1942	Parsons first proposes the use of potassium perchlorate as oxidizer for solid rocket fuel.
1945	JPL continues to grow, under jurisdiction of the U.S. Army Ordnance Corps.
1945-1960	Throughout this time, wastes are disposed of through seepage pits located on JPL property. The seepage pits were constructed and installed according to Army Corps of Engineers guidance specifications.
1958	NASA takes over control of JPL from the Army (Executive Order 10793).
1958-1963	Seepage pits backfilled and sanitary sewer system installed.
1980	• Trichloroethene (TCE) and carbon tetrachloride (CCL_4) detected above drinking water standards in City of Pasadena Arroyo Well. • TCE detected in LAWC supply wells (generally below drinking water standards). • CERCLA enacted by Congress on December 11.
1982	City of Pasadena conducts a preliminary hydrogeologic assessment of Arroyo Seco to identify source of chemicals in wells.
1984	• JPL conducts preliminary assessment of seepage pits and groundwater from the City of Pasadena wells. • Two Lincoln Avenue water supply wells (LAWC#3 and LAWC#5) are temporarily closed by the California Department of Health Services (DHS) due to VOC concentrations above drinking water standards.
1985	Two City of Pasadena water supply wells (Arroyo Well and Well 52) are temporarily closed by the California DHS due to VOC concentrations above drinking water standards.
1988	In April, a preliminary assessment/site inspection (PA/SI) was completed at JPL, indicating further site characterization was needed. Based on the PA/SI, a preliminary Hazard Ranking System (HRS) score of 38.3 was determined for JPL (exceeding a score of 28.5 leads a site to be considered for designation on the National Priorities List [NPL]).
1989	Two additional City of Pasadena water supply wells (Ventura Well and Windsor Well) are temporarily closed due to elevated VOC concentrations.
1990	• NASA funds construction of a water treatment plant (air stripping with vapor-phase granular activated carbon) to handle VOC concentrations and to reopen the temporarily closed City of Pasadena water supply wells. A settlement agreement for the installation and operation of the VOC water treatment plant was signed between the California Institute of Technology (CalTech) and the City of Pasadena. • JPL removes a suspected source area under Building 306 consisting of a storm drain catch basin (6 ft × 6 ft × 10 ft) and 160 yd^3 of soil and sludge. • Commencement of field activities for the expanded site inspection, which discovers

Table 2-1. Chronology of Site Events (Continued)

Date	Event
	CCl_4, TCE, 1,1-dichloroethane (DCA), and tetrachloroethene (PCE) are present in the groundwater beneath JPL at concentrations greater than drinking water standards. • Based on an expanded site inspection, a new HRS score of 50 was determined for JPL.
1992	• JPL placed on the NPL in October. • City of Pasadena provides letter to U.S. Environmental Protection Agency (U.S. EPA) NPL staff supporting the CERCLA listing of JPL. • Following placement on the NPL, a Federal Facilities Agreement (FFA) specifying investigation and cleanup work that will be conducted at JPL was negotiated between U.S. EPA, the State of California, and NASA. All parties signed the FFA on December 30. The designated Remedial Project Managers (RPMs) are representatives from U.S. EPA Region IX; State of California Department of Toxic Substances Control (DTSC), Regional Water Quality Control Board Los Angeles Region (RWQCB), and NASA JPL. • The LAWC installs a VOC water treatment (liquid-phase granular activated carbon [LGAC]) system to reopen the two wells temporarily closed in 1984. • In anticipation of being placed on the NPL, JPL begins a preliminary remedial investigation (RI) late in the year. • Provisional toxicity value (i.e., oral reference dose) for perchlorate is issued by U.S. EPA Superfund Technical Support Center.
1993	• The preliminary RI is completed and reported in the *Final Work Plan for Performing a Remedial Investigation/Feasibility Study* (Ebasco, 1993). • During preparation of the RI work plan for JPL, the groundwater beneath and downgradient of JPL was divided into two OUs (i.e., OU-1 and OU-3) at the request of the U.S. EPA. Soil is considered a separate OU (OU-2).
1994	• RI field activities commence. • Finalized the FFA and Community Relations Plan
1995	The provisional reference dose for perchlorate is revised.
1997	• Perchlorate detected in groundwater on JPL property. • PWP shuts down Arroyo Well due to perchlorate levels. • Personnel from the Agency for Toxic Substances and Disease Registry (ATSDR) conduct site visits on August 12 and 20 and September 2 and 3.
1998	ATSDR releases its Public Health Assessment report for review and comment on August 4. ATSDR determines that there is no public health risk from the NPL site. Perchlorate was not addressed in the assessment because a maximum contaminant level (MCL) did not exist.
1999	• Final RI for OU-1/OU-3 submitted in August. • Final RI for OU-2 submitted in November. • Completed Ion Exchange Pilot Study by Calgon Carbon Corporation. • Final Public Health Assessment released by ATSDR in September.
2000	• An action level of 18 µg/L perchlorate is established by California DHS. • NASA assumes lead role in CERCLA Program on May 18. • Final Feasibility Study (FS) for OU-2 submitted in July.
2001	• Proposed Plan for OU-2 finalized in April. • OU-2 public meetings conducted in May and June. • Completed GAC-Fluidized Bed Reactor (FBR) Pilot Study by US Filter and Envirogen.

Table 2-1. Chronology of Site Events (Continued)

Date	Event
2002	• U.S. EPA releases draft risk assessment for perchlorate. • Action level for perchlorate reduced to 4 μg/L by DHS. • NASA finalizes ROD for OU-2 in September. • Initiated full-scale operation of soil vapor extraction in OU-2. • PWP shuts down the following wells due to perchlorate levels: Well 52, Ventura, Windsor, Sunset, Bangham, and Copelin. • California Office of Environmental Health Hazard Assessment proposes draft public health goal range of 2 to 6 μg/L for perchlorate. • Completed packed bed bioreactor pilot study by Foster Wheeler. • Completed an in situ bioremediation pilot study by ARCADIS.
2003	• Finalized Community Relations Plan – Amendment 1 in January. • Finalized Work Plan to implement an Expanded Treatability Study for OU-1 in October.
2004	• Deployed the NASA JPL CERCLA Program Web site. • California Office of Environmental Health Hazard Assessment issues a final public health goal of 6 μg/L for perchlorate. • Initiated construction of the OU-1 Expanded Treatability Study system. • Implemented a 2,000 gallons per minute (gpm) ion exchange perchlorate treatment system for LAWC as a time-critical CERCLA removal action. The system was fully operational in July. • Finalized the RI Addendum Work Plan in December. Objectives of the work plan included: (1) evaluating the downgradient (southern) extent of chemicals that originate from the JPL facility; and (2) determining if the occurrence of perchlorate in the Sunset Reservoir area is associated with migration from the JPL facility. • Installed an additional multi-port monitoring well (MW-25) in the Sunset Reservoir area.
2005	• Completed construction of OU-1 Expanded Treatability Study system and initiated operations in January. • Finalized the Proposed Plan and conducted a public meeting to discuss expansion of the OU-1 system. Public Comment Period: November 1 to December 15. • Operation of the SVE unit at OU-2 was concluded in September. • Installed an additional multi-port monitoring well (MW-26). • Conducted an additional investigation and isotope study to evaluate perchlorate occurrence near the Sunset Reservoir wells. • Initial field investigation (geophysical, topographic, geotechnical) was conducted at Windsor Reservoir to evaluate the site for location of the future drinking water treatment plant in June. • Issued a Predevelopment Plan to the City of Pasadena for the Monk Hill treatment plant on November 30. • National Academy of Sciences' published *Health Implications of Perchlorate Ingestion.*
2006	• Agreement signed between the City of Pasadena and CalTech associated with implementation of a drinking water treatment facility on January 23. • Finalized the Proposed Plan and conducted public meetings to discuss the OU-3 interim remedial action. Public Comment Period: April 19 to July 7. • Published the Update of Community Involvement Plan in October.

Table 2-1. Chronology of Site Events (Continued)

Date	Event
2007	• Submitted a Technical Memorandum summarizing the results of the additional investigation on January 31. • Completed and signed the Interim ROD for OU-1 in February. • Finalized the Remedial Design/Remedial Action (RD/RA) Work Plan for the OU-1 Source Area Treatment System Expansion in February. • Completed Remedial Action Report in March 2007 documenting completion of cleanup activities at OU-2. • Completed and signed the Interim ROD for OU-3 in August. • Completed construction activities associated with OU-1 Source Area Treatment System Expansion in October.
2008	• Continued operation and monitoring of the OU-1 Source Area Treatment System.
2009	• Completed the OU-1 Source Area Treatment System Installation Report in January. • Completed RD/RA Work Plan for OU-3 Monk Hill Treatment System in June. • Initiated construction of the MHTS.
2010	• Continued construction of the MHTS.
2011	• Post-construction complete phase begins for OU-3 in July (i.e., long-term O&M) • Completed MHTS Installation Report in September.

3. BACKGROUND

This section provides general background information for the site and a description of site characteristics. The purpose of this section is to identify the threat posed to the public and the environment at the time of the interim RODs, so that the performance of the remedies can be easily compared with the site conditions the remedies were intended to address.

3.1 General Site Description and Physical Characteristics

Located in Los Angeles County, JPL adjoins the incorporated cities of La Cañada-Flintridge and Pasadena, and is bordered on the east by the unincorporated community of Altadena. JPL encompasses approximately 176 acres of land and more than 150 buildings and other structures. Figure 3-1 is a map showing the JPL facility and surrounding area.

JPL is situated on a south-facing slope along the base of the southern edge of the east-west trending San Gabriel Mountains at the northern edge of the metropolitan Los Angeles area. The Arroyo Seco, an intermittent streambed, lies immediately to the east and southeast of JPL. Within the Arroyo Seco is a series of surface impoundments used as surface water collection and spreading basins for groundwater recharge. Residential development, an equestrian club (Flintridge Riding Club), and a Los Angeles County Fire Department Station (Fire Camp #2) border the JPL along its southwestern and western boundaries. Residential development also is present to the east of JPL, along the eastern edge of the Arroyo Seco.

3.1.1 Geology and Seismology

JPL is located immediately south of the southwestern edge of the San Gabriel Mountains (Figure 3-2). The San Gabriel Mountains, together with the San Bernadino Mountains to the east and the Santa Monica Mountains to the west, make up a major part of the east-west trending Transverse Ranges province of California. This province is dominated by north-south compressional deformation.

The San Gabriel Mountains are primarily composed of crystalline basement rocks. These rocks range in age from Precambrian to Tertiary and include various types of diorites, granites, monzonites, and granodiorites with a complex history of intrusion and metamorphism (Dibblee, 1982). The northwest portion of the San Gabriel Valley, near JPL, is composed of about 1,500 to 2,000 ft of Cenozoic alluvial-fan deposits that unconformably overlie the crystalline basement complex exposed in the San Gabriel Mountains (Smith, 1986). These alluvial deposits typically consist of poorly sorted, coarse-grained sands and gravels, with some finer sand and silty material. Clasts within the alluvial deposits range from silt size to boulders more than 3 ft in diameter.

Periodic tectonic uplift of the San Gabriel Mountains has occurred during the past 1 to 2 million years. This uplift is responsible for the present topography of the area (Smith, 1986). Most of this uplift has occurred along north- to northeast-dipping reverse and thrust faults located along the south to southwest edges of the San Gabriel Mountains. This system of faults along the southern edge of the San Gabriel Mountains is the Sierra Madre Fault system. The Sierra Madre Fault system separates the San Gabriel Mountains to the north from the San Gabriel Valley to the south.

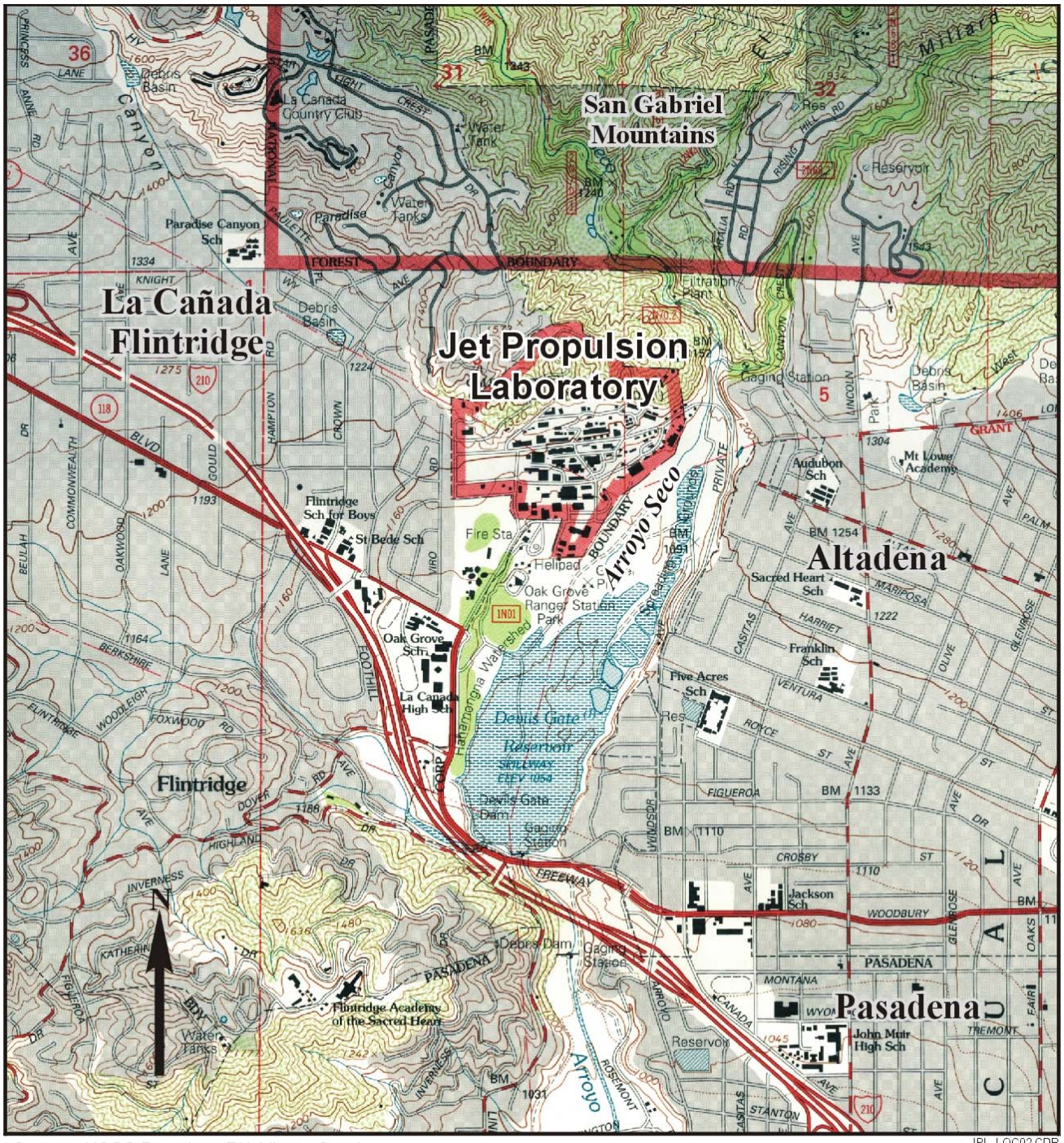

Source: USGS Pasadena 7½-Minute Quad, 1995.
Note: (1) Devil's Gate Reservoir is dry most of the year.

JPL_LOC02.CDR

Scale in Miles
0 0.5 1

Figure 3-1. Map of JPL and the Surrounding Area

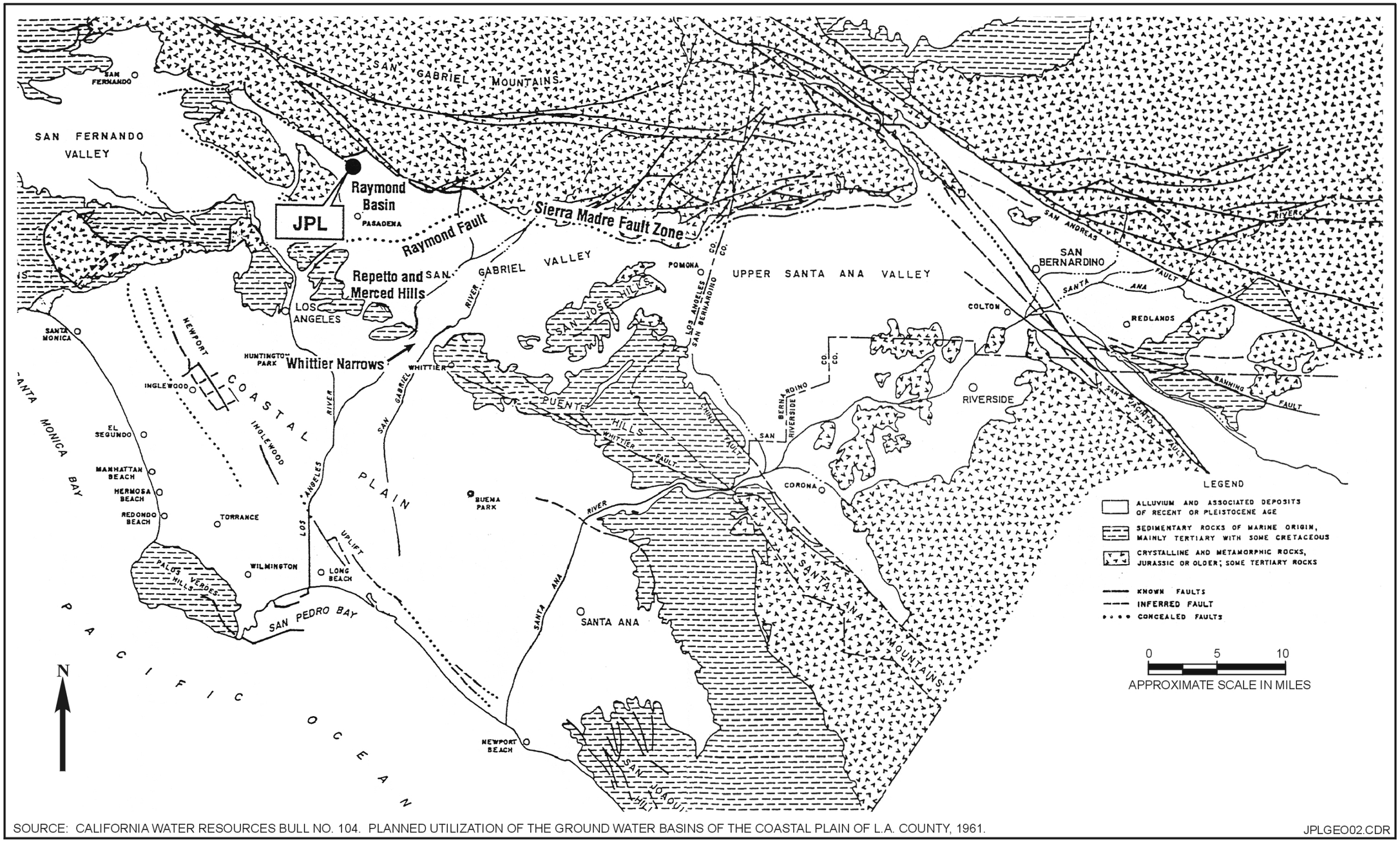

SOURCE: CALIFORNIA WATER RESOURCES BULL NO. 104. PLANNED UTILIZATION OF THE GROUND WATER BASINS OF THE COASTAL PLAIN OF L.A. COUNTY, 1961.

Figure 3-2. Map of Regional Geology and Physiology

3.1.2 Hydrology

There are no permanent surface water bodies within the boundaries of JPL. The northernmost part of JPL consists of Gould Mesa, a flat-topped southern promontory of the San Gabriel Mountains that rises 300 ft above the main part of the JPL complex. The remainder of JPL is moderately sloped and has been graded extensively throughout its development. The Arroyo Seco Creek intermittently flows through the Arroyo Seco wash on the eastern side of JPL. Within the Arroyo Seco, a series of surface impoundments are used as surface water collection and spreading basins for groundwater recharge.

The San Gabriel Valley contains distinct groundwater basins, including the Raymond Basin, where JPL is located. The Raymond Basin is bordered on the north by the San Gabriel Mountains, on the west by the San Rafael Hills, and on the south and east by the Raymond Fault (Figure 3-2). The Raymond Basin provides an important source of potable groundwater for many communities in the area around JPL, including Pasadena, La Cañada-Flintridge, San Marino, Sierra Madre, Altadena, Alhambra, and Arcadia.

North of the JPL Thrust Fault, groundwater primarily occurs in joints and fractures in the bedrock. Because the bedrock is of low porosity, it is considered non-waterbearing. South of the JPL Thrust Fault, groundwater occurs in alluvial deposits.

The aquifer below JPL consists of four layers that are separated by noncontiguous, low permeability silt layers (Figure 3-3). Layer 1 consists of the upper 75 to 100 ft of saturated alluvium. Layer 2 underlies Layer 1 and is about 150 to 200 ft thick. Layer 3 is about 200 to 300 ft thick and generally overlies crystalline basement rock beneath JPL. Layer 4 occurs only at the far eastern end of JPL, is about 150 ft thick, and rests on crystalline basement rocks.

Depth to groundwater at JPL ranges from 22 ft below ground surface (bgs) to 270 ft bgs. This wide range of depth to water is attributed to steep topography in the northern part of the site and to seasonal groundwater recharge. The depth to groundwater under most of the JPL complex averages approximately 200 ft.

3.2 Land and Resource Use

JPL is a federally-funded Research and Development Center in Pasadena, California, currently operated under contract by the CalTech for NASA. JPL's primary activities include the exploration of the earth and solar system by automated spacecraft and the design and operation of the Global Deep Space Tracking Network.

Of the JPL facility's 176 acres, approximately 156 acres are federally owned. The remaining land is leased for parking from the City of Pasadena and the Flintridge Riding Club. Development at JPL is primarily located on the southern half, in two regions, an early-developed northeastern area and a later-developed southwestern area. Most of the northern half of JPL is undeveloped because of steeply sloping terrain. Currently, the northeastern early-developed portion of JPL is used for project support, testing, and storage. The southwestern later-developed part is used mostly for administrative, management, laboratory, and project functions. Further development of JPL is constrained because of steeply sloping terrain to the north, the Arroyo Seco to the south and east, and residential development to the west.

The primary land use in the areas surrounding JPL is residential and light commercial. Industrial areas, such as manufacturing, processing, and packaging, are limited. The closest residential properties are those located along the western fence line of JPL. The nearest off-facility buildings are the Flintridge Riding Club and Fire Camp #2, both located approximately 100 yards from the southern border of JPL. The total number of buildings within 2 miles of JPL is about 2,500, primarily residential and community (e.g., schools, daycare centers, churches). Land use is not expected to change in the next five years.

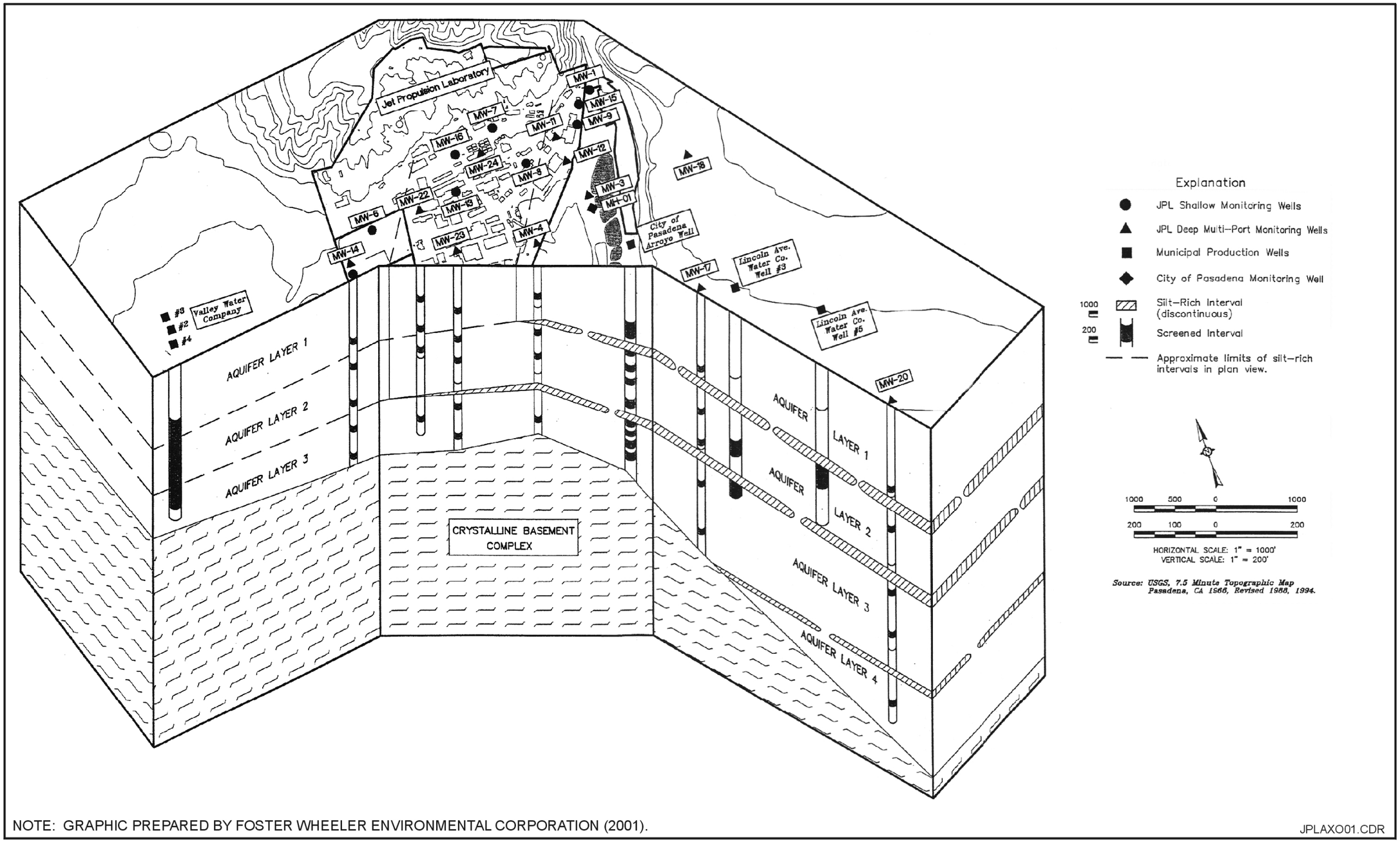

Figure 3-3. Conceptual Model of JPL Aquifer Layers

3.3 History of Contamination

During historic operations at JPL, various chemicals (including chlorinated solvents, solid rocket fuel propellants, cooling tower chemicals, sulfuric acid, Freon™, and mercury) and other materials were used at the site. During the 1940s and 1950s, many buildings at JPL maintained subsurface seepage pits for disposal of sanitary wastes and laboratory chemical wastes collected from drains and sinks within the buildings. The RI identified 40 seepage pits, five waste pits, and four discharge points at the site that were used during historic operations (Foster Wheeler Environmental Corporation [FWEC], 1999). Some of the seepage pits received VOCs and other waste materials that are currently found in vadose zone soil and soil vapor beneath JPL. In the late 1950s and early 1960s, a sanitary sewer system was installed at JPL to handle sewage and wastewater, and the use of seepage pits for sanitary and chemical waste disposal was discontinued. Today, laboratory chemical wastes are either recycled or sent offsite for treatment and disposal at regulated, Resource Conservation and Recovery Act (RCRA)-permitted hazardous waste facilities.

In 1980, the analyses of groundwater revealed the presence of VOCs in City of Pasadena water-supply wells located southeast of JPL in the Arroyo Seco. At about the same time, VOCs were detected in two water-supply wells used by the LAWC, located east of the Arroyo Seco (FWEC, 1999). In 1984, increasing concentrations required that these production wells be shut down.

In 1988, a PA/SI was completed at JPL, which indicated that further site characterization was warranted (Ebasco, 1988). Subsequent site investigations were conducted at JPL (Ebasco, 1990a and 1990b) and VOCs were detected in on-facility groundwater at levels above drinking water standards. In 1992, JPL was placed on the NPL and subject to regulation under CERCLA (47189-47187 *Federal Register*, 1992, Vol. 57, No. 199).

3.4 Initial Response

After being placed on the NPL, potential source areas and the nature and extent of chemicals in the groundwater were investigated during the RI, which lasted from 1994 to 1998. The OU-1/OU-3 RI Report (FWEC, 1999), which characterized the nature and extent of the chemicals in the groundwater, was completed in the fall of 1999. Since that time, additional groundwater data have been obtained from a long-term groundwater monitoring program in place at the facility since August 1996, which continues to be active. During the initial phases of the RI, comprehensive suites of analyses were performed, including VOCs, semivolatile organic compounds (SVOCs), Title 26 metals, additional metals analyses for strontium, aluminum and hexavalent chromium, cyanide, gross alpha/gross beta radiation and total petroleum hydrocarbons. In later sampling events, various analyses were added or dropped based on previous results or new information. The long-term groundwater monitoring program initiated in 1996 analyzes for VOCs and inorganics, including metals, anions, cations and other field parameters.

In addition to these studies, NASA funded treatment facilities for LAWC in Altadena and for the City of Pasadena in the early 1990s to remove VOCs from drinking water wells that were affected by chemicals from JPL. In July 2004, NASA implemented a removal action directed at the off-facility groundwater by funding additional treatment facilities at LAWC to remove perchlorate in addition to VOCs. The perchlorate removal system uses an ion-exchange technology that has worked well, successfully treating over one billion gallons of water since initiating operation.

3.5 Basis of Taking Action

Response actions were considered necessary to mitigate the risks posed to human health by the VOC and perchlorate impacted groundwater at OU-1 and OU-3. This is documented in the decision documents for these OUs (NASA, 2007a and NASA, 2007b) and summarized below.

3.5.1 Operable Unit 1

Based on data collected during the routine quarterly groundwater monitoring program for OU-1 (source area groundwater), several VOCs (CCL_4, TCE, 1,2-DCA, and 1,1-dichloroethene [1,1-DCE]) as well as perchlorate are consistently detected at concentrations exceeding their respective drinking water standards. The groundwater at the JPL facility (OU-1) is not extracted for distribution within the facility and workers at the facility do not have access to untreated water from the site. Hypothetically, the exposure mechanisms to untreated groundwater from accessing well water for humans could include ingestion (drinking), dermal (skin) contact, and inhalation of vapors from domestic water sources. These exposure pathways were evaluated as part of the human health risk assessment (FWEC, 1999).

Based on the results of routine groundwater monitoring and the human health risk assessment, it was determined that the groundwater beneath the JPL facility contains elevated levels of chemicals that represent a continuing source. The basis for the response action is to contain the source of chemicals in groundwater to prevent further migration to receptors (i.e., production wells) located outside the JPL facility boundary, and to reduce the period of performance of action taken in OU-3.

3.5.2 Operable Unit 3

In OU-3 monitoring wells (off-facility groundwater), quarterly groundwater monitoring has identified four target chemicals (CCL_4, TCE, PCE, and perchlorate) which continue to be detected above state and federal drinking water standards. The groundwater in OU-3 serves as a drinking water source for local residents; therefore, ingestion and contact with chemicals in groundwater pumped from nearby water production wells (i.e., City of Pasadena and LAWC wells located in the Raymond Basin) are considered the primary exposure pathways for human receptors and were evaluated in the human health risk assessment (FWEC, 1999).

The groundwater outside the JPL fence line contains elevated levels of VOCs and perchlorate, which requires treatment prior to drinking water use by the local community. The basis for this response action is to remove target chemicals from the aquifer being used by the local community (LAWC and the City of Pasadena) for drinking water, as well as to prevent additional migration of chemicals in groundwater outside the JPL fence line.

In October 1992, NASA JPL was placed on the NPL and, therefore, is subject to the provisions of CERCLA. The NASA JPL site has been divided into three OUs, including OU-1 for source area groundwater, OU-2 for on-facility vadose zone soil, and OU-3 for off-facility groundwater. The ROD for OU-2 was signed in September 2002, and the cleanup activities were complete in March 2007. Completion of a five-year review was not required at that time because the cleanup was completed in less than five years. Interim RODs for OU-1 and OU-3 were finalized in February 2007 and August 2007, respectively. It will take more than five years to complete the cleanup activities for OU-1 and OU-3; therefore, this five-year review has been completed. The following sections describe the response actions underway for OU-1 and OU-3.

4.1 Operable Unit 1

NASA performed a number of studies to determine the best technologies for treating source area groundwater at OU-1. In the late 1990s and early 2000s, NASA conducted pilot testing of several technologies to address dissolved perchlorate in source area groundwater, including a study that evaluated the effectiveness of a biological treatment technology called a FBR. Based on these studies, NASA installed a demonstration treatment plant located on JPL in the source area in early 2005. This system consists of two groundwater extraction wells (EW-1 and EW-2), LGAC treatment to remove VOCs and a FBR treatment to remove perchlorate, and two injection wells for treated water (IW-1 and IW-2). Based on the successful results from this demonstration project, an interim ROD was signed in February 2007 with groundwater extraction, treatment and reinjection as the selected remedy. VOCs are treated using LGAC and perchlorate is treated using a FBR. The remedial action objectives for OU-1 are as follows:

- Remove chemicals in groundwater and prevent the further spread of VOCs and perchlorate from the groundwater source area.
- Reduce the amount of chemicals distributed in the source area groundwater to improve the effectiveness and efficiency – and reduce costs – of the final cleanup remedy selected for off-facility groundwater (OU-3).

The selected remedy also includes an ongoing groundwater monitoring program that is used to evaluate the extraction, treatment, and reinjection system effectiveness and remedial progress. In addition, the interim ROD states that potential post-construction refinements may include the following:

- Addition or removal of extraction or injection wells.
- Adjusting the system flow rate.
- Refining ex situ treatment components as influent concentrations change.
- Modifying ex situ treatment chemicals or amendments prior to groundwater reinjection.
- Addition or removal of monitoring wells.

As described in the Interim ROD for OU-1, JPL is on the NPL, and therefore is subject to the provisions of CERCLA as amended by the Superfund Amendments and Reauthorization Act (SARA). As such, federal regulations and policy governing reinjection of water into the subsurface must be adhered to, in conjunction with complying with the substantive requirements of state regulations and policy (U.S. EPA, 1992). Applicable or relevant and appropriate requirements (ARARs) for this interim action include the following: Section 3020 of RCRA, land disposal restrictions (LDRs) under RCRA, RWQCB general waste discharge requirements (WDRs), and California Hazardous Waste Identification Criteria. As noted in the ROD, an interim action must comply with action- and location-specific ARARs. However, an interim action does not need to comply with chemical-specific ARARs pertaining to aquifer restoration.

Chemical-specific ARARs associated with attaining aquifer cleanup will be addressed by the final remedy.

Requirements under RCRA and WDRs are related to reinjection of treated groundwater from the OU-1 treatment system. Treated water is routinely monitored to demonstrate compliance with all discharge requirements (Table 4-1). Performance and compliance monitoring includes weekly sample collection and laboratory analysis, as well as daily performance monitoring using field equipment. The analytical results and the daily performance monitoring results are documented semi-annually in technical memoranda (NASA, 2009). Based on results of this monitoring, groundwater reinjection activities associated with the OU-1 treatment system are in compliance with federal regulations and policy surrounding applicable RCRA requirements and the substantive requirements of state regulations and policy surrounding RWQCB WDRs. In addition, all waste (e.g., spent LGAC) is characterized in accordance with the RCRA and California hazardous waste requirements and disposed of accordingly. Therefore, implementation of the OU-1 interim action is being implemented in accordance with all identified ARARs.

Table 4-1. Summary of Groundwater Discharge Limits for Treated Water

Compound	Units	Applicable Limits for Treated Water [(a)]
Perchlorate	µg/L	6
Carbon tetrachloride	µg/L	0.5
1,1-Dichloroethene	µg/L	6
1,2-Dichloroethane	µg/L	0.5
Tetrachloroethene	µg/L	5
Trichloroethene	µg/L	5
1,4-Dioxane	µg/L	None[(b)]
Arsenic	µg/L	50
Trivalent chromium	µg/L	50
Hexavalent chromium	µg/L	50
Fluoride	mg/L	2
Nitrogen (as nitrate-nitrogen plus nitrite-nitrogen)	mg/L	45
Nitrate-nitrogen (NO_3-N)	mg/L	10
Nitrite-nitrogen (NO_2-N)	mg/L	1
pH	units	6.5 to 8.5
Color	units	15
Odor threshold	units	3
Turbidity	units	5
Sulfate	mg/L	40 or background
Chloride	mg/L	15 or background
Total dissolved solids	mg/L	300 or background

(a) Discharge limitations as provided in Order No. R4-2007-0019 or specified in Title 22 of the California Code of Regulations unless otherwise designated.

(b) No promulgated drinking water, health-based, or LDR treatment standards exists for 1,4-dioxane. Based on monitoring data, 1,4-dioxane levels in the extracted groundwater are expected to be near 5 µg/L.

Note: In September 2011, EPA revised the health assessment for TCE, which changed the associated toxicity factors in the Integrated Risk Information System (IRIS) database. The revised toxicity values could result in lower treatment standards for TCE in the future. No change is required at this time.

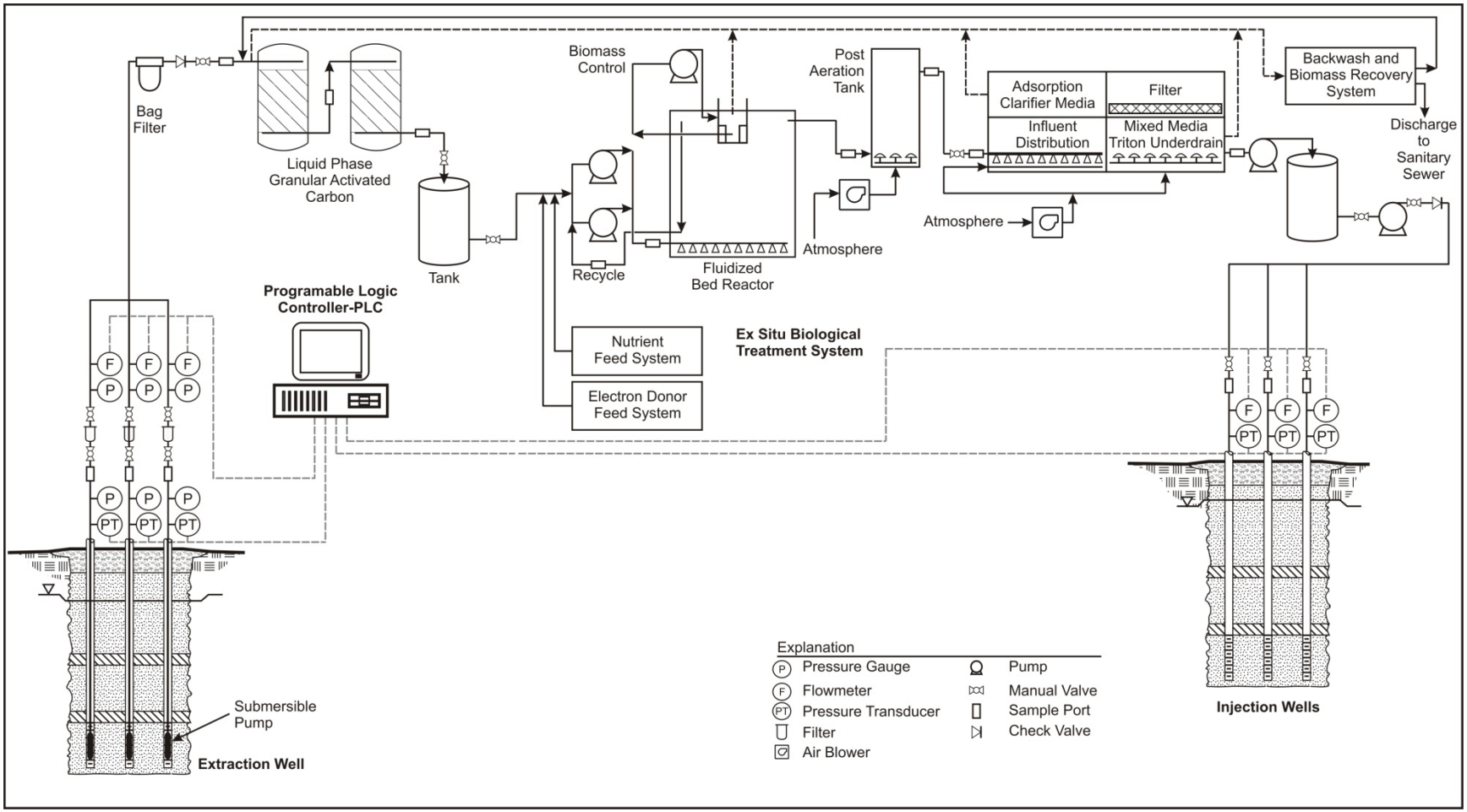

Figure 4-1. OU-1 Process Flow Diagram

4.1.1 Operable Unit 1 System Operations Summary

In October 2007, the expansion of the groundwater extraction, treatment and reinjection system was completed with installation of a new extraction well (EW-3) and new injection well (IW-3). A treatment system flow diagram is provided in Figure 4-1. Routine system operation and monitoring has been ongoing and is documented through periodic technical memorandum progress reports.

Recent monitoring data indicate that the OU-1 treatment system is operating at an average extraction flow rate of approximately 271 gpm, and the total volume of water extracted and treated is approximately 2,074 acre-feet through August 31, 2011. The cumulative chemical mass removed by the OU-1 system through the end of August 2011 was estimated at approximately 1,596 lb of perchlorate, 32.9 lb of CCl_4, and 5.6 lb of TCE (NASA, 2011a).

Over the past four years of operation, the LGAC vessels were changed out every five to seven months on average. The most recent LGAC media change-out event was performed at the end of August 2011. During each change out, the media in the lead LGAC vessel is replaced and the lag vessel is moved to the lead configuration. Samples are collected on a weekly basis at the LGAC influent, the LGAC lead vessel effluent, and the LGAC lag vessel effluent to monitor for breakthrough and determine when the LGAC media change outs are needed.

Operation of the FBR facilitates biodegradation of nitrate and perchlorate when the dissolved oxygen (DO) concentrations are low (<1mg/L), the oxidation reduction potential (ORP) indicates reducing conditions, and there is an adequate supply of electron donor (acetic acid) and nutrients (urea/diammonium phosphate). The DO, nitrate, and perchlorate concentrations in the extracted groundwater are the parameters that determine the acetic acid demand within the FBR. As these parameters have changed over time, the acetic acid concentrations have been manually adjusted on a weekly basis to match the influent conditions. The acetic acid dosage during the most recent reporting period ranged from 8 to 12 gallons per day (gpd), with an average of 10 gpd (NASA, 2011a).

Treatment system monitoring data collected between March and August 2011 identified two occasions with breakthrough of perchlorate above the method detection limit of 2.0 µg/L. The first occasion was in March 2011 (89.2 µg/L) and the second occurred in June 2011 (24.2 µg/L). These instances were a result of an unplanned extended shutdown of the treatment plant over the weekend. In each instance, the system was placed back online after the problem was diagnosed and repaired. A new protocol for dealing with weekend occurrences of system shutdown has been established and conveyed to the on-site operator.

Under normal operations, the FBR will convert small amounts of natural sulfate in the groundwater to dissolved hydrogen sulfide. Hydrogen sulfide has a noticeable odor at a threshold value of 0.0005 parts per million by volume (ppmv) in the ambient air based on data from the ATSDR. Between September 2006 and August 2011, sulfide production has been effectively controlled. In addition, a vapor phase treatment system is in place as a precautionary measure to ensure that the system does not release any nuisance odors to the ambient air. Hydrogen sulfide concentrations in the ambient air are measured daily at locations within and nearby the OU-1 plant and continue to be below detection limits.

Following the LGAC units and FBR, the final treatment stage includes filtration using a Trimite™ filter. The filter helps recover biomass solids and reduce the turbidity of the treated water to protect the injection wells. The Trimite™ filter has been in operation for more than six years, and the media is starting to show signs of wear. Over the next 6 months, Battelle will be making efforts to clean the media where possible and replace some of the media, as required. Typical operations of low turbidity water yield a media lifecycle of approximately 10 to 15 years according to the manufacturer.

Reinjection of the treated water occurs at three injection wells (IW-1, IW-2, and IW-3). Over time, biofouling of the injection wells occurs, increasing the well head pressure and decreasing the injection rates. Periodic well rehabilitation is conducted to maintain adequate injection capacity at the injection wells. Chlorination of treated groundwater prior to reinjection was initiated on December 15, 2006, and has been successful in extending the time period between well rehabilitation events. Chlorination is achieved by using a 12.5% solution of sodium hypochlorite and the chlorine concentration in the treated water is maintained at 1 to 2 mg/L. The last routine injection well rehabilitation and maintenance event was conducted in February 2010, and the next event is scheduled for November 2011.

4.1.2 Operable Unit 1 System Monitoring Summary

Routine system monitoring for the OU-1 treatment system includes the following:

- VOC and perchlorate concentrations in the extraction wells (EW-1, EW-2, and EW-3)
- VOC concentrations in the LGAC lead influent, LGAC lead effluent and LGAC lag effluent
- DO, nitrate, and perchlorate in the FBR influent and effluent
- ORP and sulfide conditions within the FBR
- Effluent turbidity following filtration
- Hydrogen sulfide concentrations in ambient air.

Overall, there has been a general decreasing trend in perchlorate and VOC concentrations in the extracted groundwater over the duration of system operation. Perchlorate concentrations decreased from approximately 2,300 μg/L in February 2005 to approximately 150 μg/L in August 2011. CCl_4 and TCE concentrations have decreased from approximately 40 to 2 μg/L and 7 μg/L to non-detect levels, respectively. Concentrations of both perchlorate and VOCs increased when EW-3 was brought online in late 2007, but have since decreased.

Currently, perchlorate concentrations in EW-1 are approximately 5 μg/L (these low levels of perchlorate are the reason that water is not being extracted from EW-1 at this time). Perchlorate levels in EW-2 are currently around 80 μg/L and extraction from this well may be reduced or suspended during the next six months. EW-3 currently has levels of perchlorate at approximately 100 μg/L, which is down from 210 μg/L as reported in the previous reporting period.

Since May 2007, concentrations of several disinfection byproducts have been detected in samples collected from the OU-1 extraction wells. The disinfection byproducts include chloroform, bromodichloromethane, dibromochloromethane, and bromoform, and are associated with chlorination of injected water to control biofouling at the injection wells. Chloroform concentrations were also detected prior to the start of chlorination, although concentrations have increased with chlorination activities. The concentration of the disinfection byproducts has ranged from 6.2 to 18.7 μg/L since initiating chlorination.

U.S. EPA has published the Stage 1 Disinfectants/Disinfection Byproducts Rule to regulate total trihalomethanes (disinfection byproducts) at a maximum allowable annual average level of 80 μg/L (69390- 69476 *Federal Register, 1998, Volume 63, Part 261*). The current annual average level of trihalomethanes recorded at the OU-1 extraction wells is 7.4 μg/L. The treatment system removes the disinfection byproducts and all finished water concentrations have been non-detect. The disinfection byproducts will continue to be monitored and evaluated over time based on the concentrations detected at the system extraction wells.

4.1.3 Operable Unit 1 Summary of System Operation and Maintenance Costs

The annual O&M cost estimated during preparation of the interim ROD was approximately $825,000 (NASA, 2007a). This cost includes labor, materials, electricity, laboratory costs, well rehabilitation, and reporting/project management, but does not include costs associated with groundwater monitoring. Table 4-2 summarizes the annual O&M costs incurred from completion of the treatment system expansion (January 2008) through the end of the last calendar year. In general, actual costs incurred were approximately equal to the estimated costs.

Table 4-2. Summary of Annual O&M Costs

Year	Annual O&M Cost
2008	$909,400
2009	$909,400
2010	$808,800

4.2 Operable Unit 3

In August 2007, an Interim ROD was signed documenting the response action for cleaning up off-facility groundwater, which includes the deep groundwater outside the JPL fence line (i.e., OU-3). This Interim ROD documents two separate CERCLA actions, as part of OU-3 (NASA, 2007b):

- Work closely with the City of Pasadena and fund the construction and operation of a treatment system for groundwater from the four City drinking water wells located just east of JPL near the Arroyo Seco. NASA will directly administer some of the work associated with siting the new City of Pasadena treatment system. NASA also will provide some technical support to the City for the permitting process. The City of Pasadena is required by its own ordinances to go through several permitting processes, some of which include public review.

- Continue to fund treatment of groundwater from two LAWC drinking water wells at the existing treatment facility. This treatment system is included as part of the remedial action for off-facility groundwater.

This response action is necessary to remove target chemicals from the aquifer being used by the local community (LAWC and the City of Pasadena) for drinking water. In addition, active treatment will provide an additional level of hydraulic control to prevent the migration of chemical mass in groundwater. The remedial action objectives for this response action are as follows:

- Remove target chemicals from the aquifer by treating water pumped from specified drinking water wells in the Monk Hill Subarea of the Raymond Basin (referred to as centralized treatment)
- Prevent further migration of the chemicals in groundwater
- Provide additional data to assess possible long-term cleanup remedies for groundwater both on and off the JPL facility.

Figure 4-2 depicts a conceptual representation of the cleanup program that has been developed to achieve cleanup of the aquifer. The OU-3 response action described in the Interim ROD is part of a comprehensive approach to develop a final remedy that will successfully remediate target chemicals in

groundwater. This approach includes soil treatment (OU-2 which was completed as of March 2007), source area groundwater (OU-1) treatment within the JPL fence line, mid-plume treatment using the four City of Pasadena drinking water wells, and treatment of the leading edge of the plume using the two wells owned by LAWC. NASA will evaluate the results from both the on-facility source area reduction interim action (NASA, 2007a) and the OU-3 interim action to aid the development of the final remedy for groundwater at JPL.

As described in the Interim ROD for OU-3, JPL is on the NPL, and the site is therefore subject to the provisions of CERCLA as amended by SARA. As such, applicable and relevant federal regulations and policy must be adhered to, in conjunction with complying with the substantive requirements of state regulations and policy (U.S. EPA, 1992). ARARs for this interim action include the following: federal and state Safe Drinking Water Act (SDWA), RCRA, California Hazardous Waste Identification Criteria, the South Coast Air Quality Management District (SCAQMD) rules 401 and 403, the guidance set forth by the DHS, and local requirements of the City of Pasadena of construction and water use. As noted in the ROD, an interim action must comply with action- and location-specific ARARs. However, an interim action does not need to comply with chemical-specific ARARs pertaining to aquifer restoration. Chemical-specific ARARs associated with attaining aquifer cleanup will be addressed by the final remedy.

Treated water intended for drinking water use must comply with the federal and state MCLs promulgated under the federal and state SDWAs. Treated water from both the MHTS and the LAWC treatment system operate under specific California Department of Public Health (DPH) permits/guidance and are monitored regularly to ensure compliance with the federal and state MCLs. Table 4-3 summarizes the perchlorate and VOC MCLs for treated water from the MHTS and the LAWC treatment system.

During construction of the MHTS, air quality monitoring was performed to demonstrate compliance with all requirements related to fugitive dust under SCAQMD rules 401 and 403, and all necessary permits for construction were obtained by PWP from the City of Pasadena. In addition, all waste from the MHTS and the LAWC treatment system (e.g., spent LGAC and ion exchange resin) is characterized in accordance with the RCRA and California hazardous waste requirements and disposed of accordingly. Based on this information, implementation of the OU-3 interim action is being implemented in accordance with all identified ARARs.

4.2.1 Operable Unit 3 System Operations Summary

As described in the Interim ROD (NASA, 2007b), the OU-3 response action consists of two separate actions, including continued funding for operation of the LAWC treatment system and installation and funding for operation of the City of Pasadena treatment system, known as the MHTS. Operation of these systems is funded by NASA, which provides oversight to LAWC and the City of Pasadena, including facility inspections and progress reporting. The following sections summarize the current status of these treatment systems.

MHTS Operations Summary

The MHTS treats groundwater from four City of Pasadena production wells (Arroyo Well, Ventura Well, Well 52, and Windsor Well). Drinking water wells in the Monk Hill subarea were selected for treatment based on elevated levels of perchlorate and VOCs, originating from the JPL facility (NASA, 2007b). Arroyo Well, Ventura Well, and Well 52 are pumped to an equalization sump located at the Ventura Well site. Booster pumps transfer water from the sump to the MHTS located at the Windsor site. Water from Windsor Well is pumped directly from the well to the MHTS. The MHTS consists of three parallel cartridge filters (two active and one stand-by) for pre-filtration, four parallel pairs of lead-lag ion

Table 4-3. Summary of Perchlorate and VOC Requirements for the MHTS and the LAWC Treatment Systems

Compound	Units	Maximum Contaminant Level
Perchlorate	µg/L	6
Benzene	µg/L	1
Carbon tetrachloride	µg/L	0.5
1,2-Dichlorobenzene	µg/L	600
1,4-Dichlorobenzene	µg/L	5
1,1-Dichloroethene	µg/L	5
1,2-Dichloroethane	µg/L	0.5
1,1-Dichloroethylene	µg/L	6
cis-1,2-Dichloroethylene	µg/L	6
trans-1,2-Dichloroethylene	µg/L	10
Dichloromethane	µg/L	5
1,2-Dichloropropane	µg/L	5
1,3-Dichloropropane	µg/L	5
Ethylbenzene	µg/L	700
Methyl-tert-butyl ether	µg/L	13
Monochlorobenzene	µg/L	70
Styrene	µg/L	100
1,1,2,2-Tetrachloroethane	µg/L	1
Tetrachloroethylene	µg/L	5
Toluene	µg/L	150
1,2,4-Trichlorobenzene	µg/L	70
1,1,1-Trichloroethane	µg/L	200
1,1,2-Trichloroethane	µg/L	5
Trichloroethylene	µg/L	5
Trichlorofluoromethane	µg/L	150
1,1,2-Trichloro-1,2,2-Trifluoroethane	µg/L	1,200
Vinyl Chloride	µg/L	0.5
Xylenes	µg/L	1,750*

*MCL is for either a single isomer or the sum of the isomers.
Note: In September 2011, EPA revised the health assessment for TCE, which changed the associated toxicity factors in the IRIS database. The revised toxicity values could result in lower treatment standards for TCE in the future. No change is required at this time.

exchange units for perchlorate removal, five parallel pairs of lead-lag LGAC units for removal of VOCs, and disinfection for distribution as drinking water to the City of Pasadena (Figure 4-3). The total flow capacity of the MHTS is 7,000 gpm. Construction of the MHTS is complete, and the MHTS Installation Report was prepared in August 2011 (NASA, 2011b). Construction completion was documented for OU-3 in a letter received from U.S. EPA Region IX on September 12, 2011 (Montgomery, 2011).

As of March 21, 2011, Pasadena Water and Power (PWP) began intermittent operation of the treatment system for drinking water production. PWP is being funded by NASA to lease the treatment equipment and operate the system. As of July 2011, approximately 327,765,000 gallons have been extracted and successfully treated by the MHTS. Approximately 107,038,000 gallons of the treated water have been

disinfected and supplied to City of Pasadena customers. During well rehabilitation and startup, an estimated 35 lb of perchlorate and 5 lb of VOCs were removed by the MHTS through July 2011.

The MHTS is currently running at a reduced capacity of 2,200 gpm because of the additional well repairs that are ongoing at Windsor Well and Well 52. The reduced operations result in only six of eight ion exchange vessels being in operation and all 10 LGAC vessels being operation. The vessels that are not being used require maintenance flushing in order to minimize bacteriological growth.

LAWC Operations Summary

The Action Memorandum for this removal action was signed on August 23, 2004 (NASA, 2004), and operation of the treatment system is now part of the remedial action for OU-3 documented in the interim ROD (NASA, 2007b). The LAWC treatment plant processes water from two production wells, LAWC #3 and LAWC #5. The treatment plant consists of four parallel LGAC vessels for removal of VOCs and two ion exchange vessels in series for perchlorate removal (Figure 4-4). The total flow capacity of the LAWC treatment system is 2,000 gpm. NASA provides funding to LAWC for operation of the treatment system, and the system is operated per the operating permit obtained from the DPH. Table 4-4 provides a recent summary of the system operations to date, which began on July 28, 2004 (NASA, 2011c).

Table 4-4. LAWC System Operational Summary (July 2004 through August 2011)

Parameter	Units	LAWC #3	LAWC #5	Total
Total Volume of Groundwater Extracted	Acre-ft	8,875	5,768	14,643
Mass of Perchlorate Removed	lbs	584	183	767
Mass of Carbon Tetrachloride Removed	lbs	46	21	67
Mass of TCE Removed	lbs	55	53	108

Activated carbon media in the LGAC vessels is changed out based on monitoring results for VOC samples collected from the fourth sampling port on each vessel. Typically, CCl_4 is the first VOC detected in the breakthrough monitoring. If the system is operating full time, the time between changes ranges from 2 to 6 months, with an average of approximately 4.5 months between medial change outs. However, carbon changes were less frequent in 2010 due to a reduction in the treatment system operating time.

As mentioned above, the design capacity of the LAWC treatment system is 2,000 gpm; however, with only approximately 500 acre-feet per year, LAWC can only operate the treatment system for about 8 weeks per year at this capacity. In the past, LAWC has been able to lease water rights from the City of Pasadena, allowing for near continuous operation of the system. However, an agreement for additional water rights was not made for the 2010 operating year, and the treatment system was shut down on March 11, 2010 (NASA, 2011c). Operation of the LAWC treatment system was reinitiated on July 1, 2011, and will continue until LAWC's water rights are exhausted or additional water rights are obtained. While year-round pumping is preferred for containing the leading edge of the JPL perchlorate plume, operation of the LAWC system using only its decreed water rights is consistent with the ROD. Additionally, the upgradient MHTS is now operational and will help to accomplish plume containment and perchlorate and VOC mass removal from the off-facility plume area.

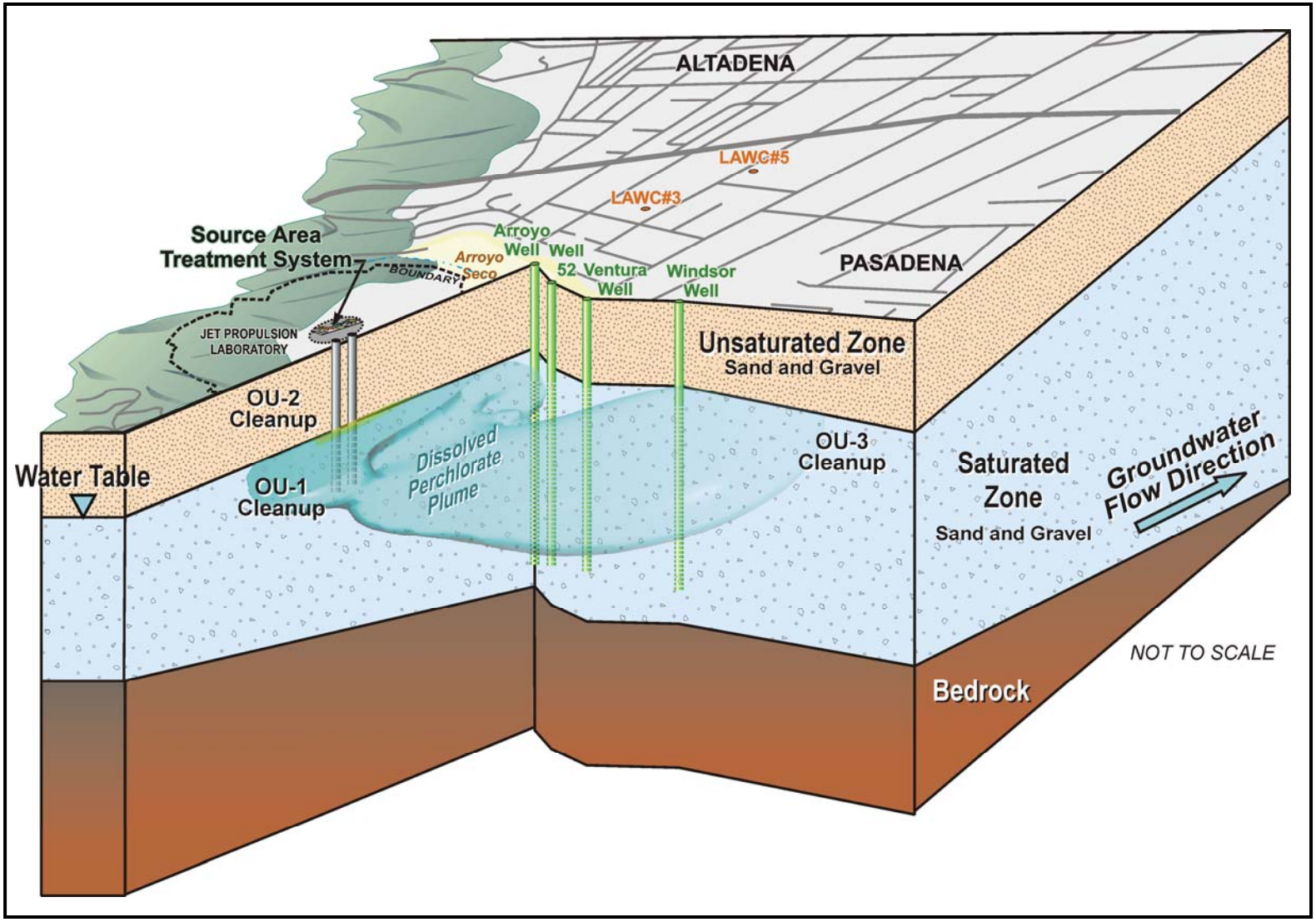

Figure 4-2. Conceptual Representation of the Chemical Release and Groundwater Cleanup Program at NASA JPL

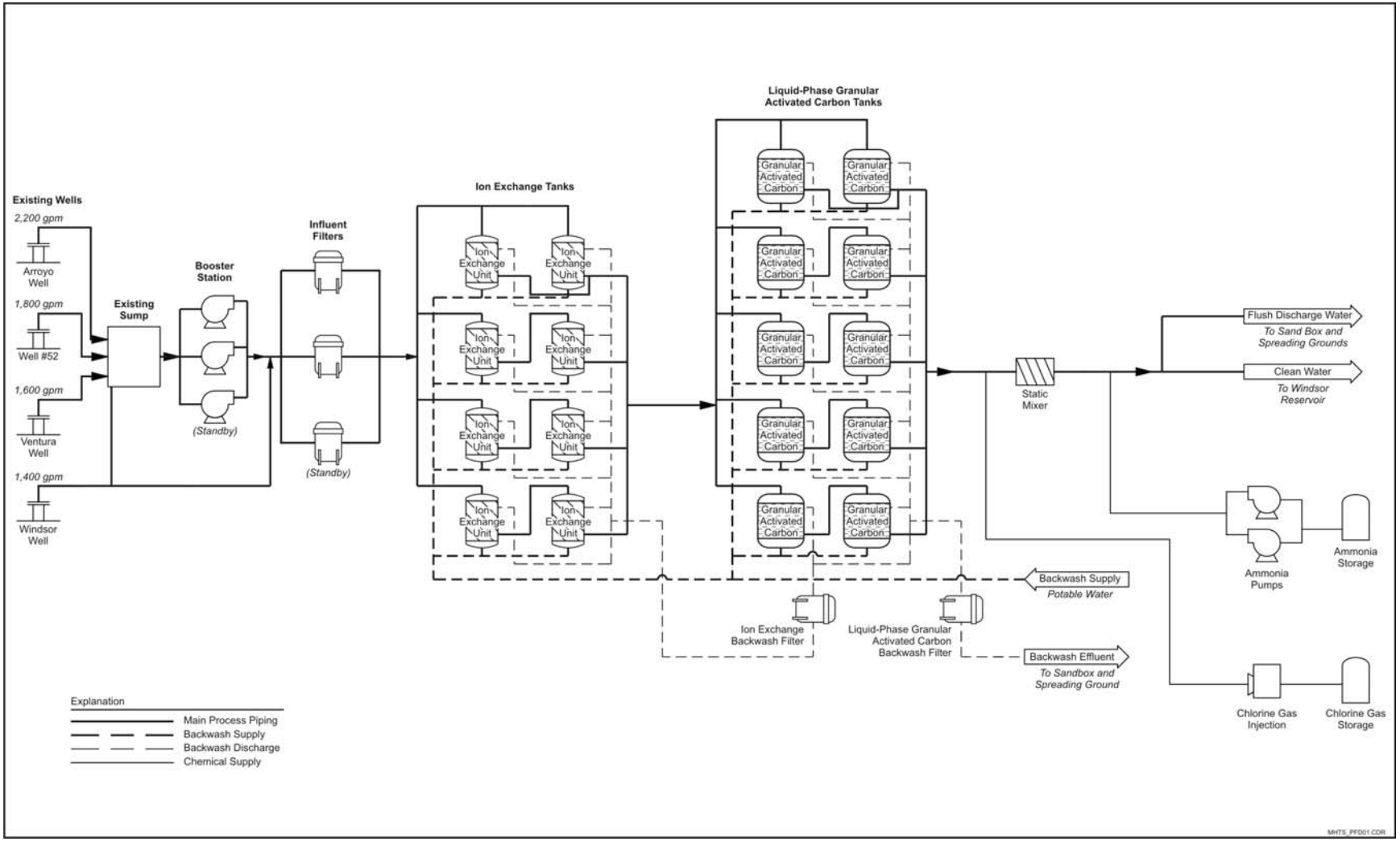

Figure 4-3. MHTS Process Flow Diagram

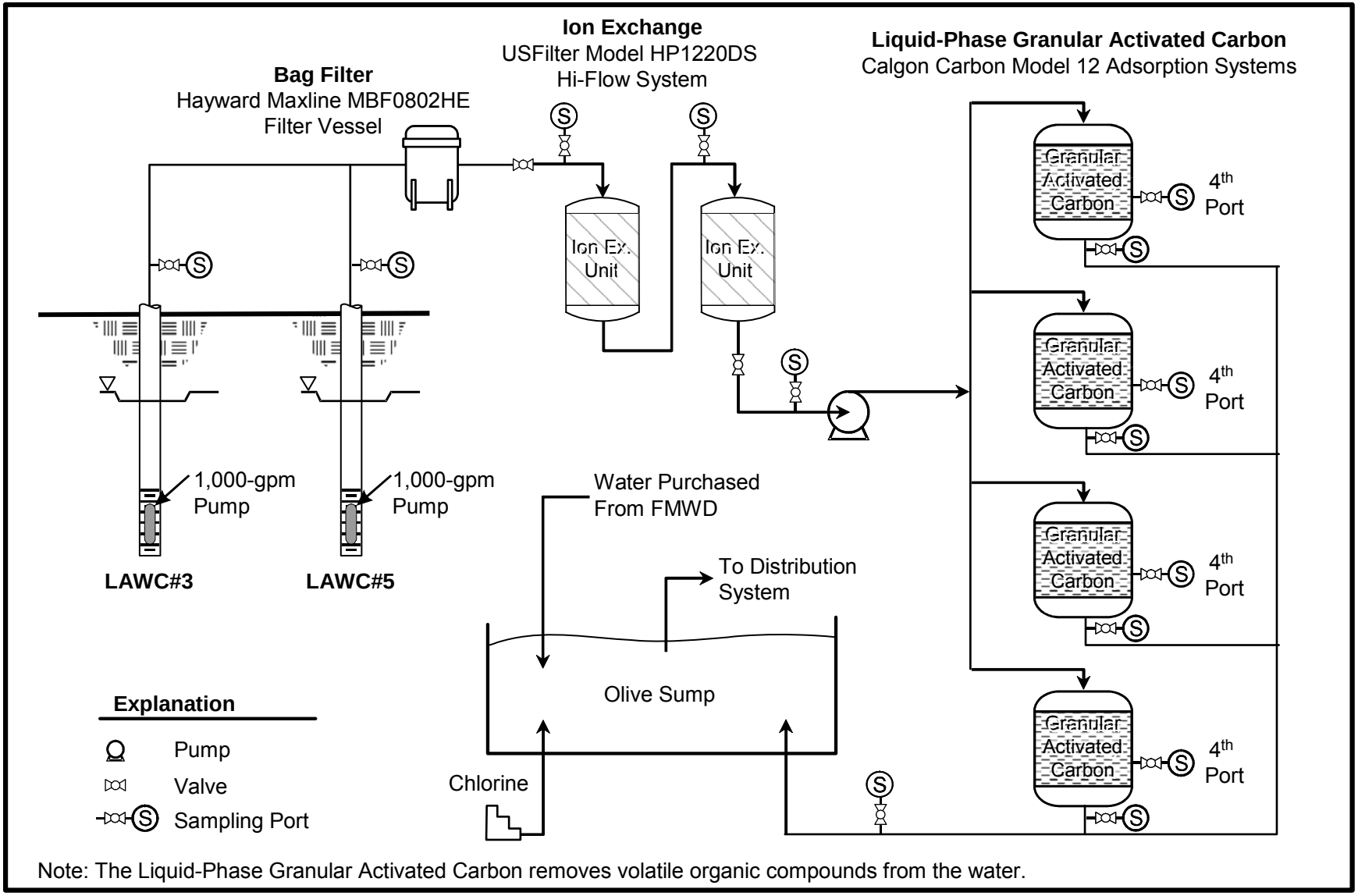

Figure 4-4. LAWC Process Flow Diagram

4.2.2 Operable Unit 3 System Monitoring Summary

Monitoring of the MHTS and LAWC treatment systems is performed on a routine basis. The following sections summarize the monitoring conducted for each system.

MHTS Monitoring Summary

Monitoring of the MHTS consists of production well monitoring as well as influent, effluent, and intermediate sampling of the treatment system per the DPH operating permit. The following list summarizes the monitoring conducted for the MHTS:

- Perchlorate, VOCs, nitrate, coliform, and heterotrophic plate count (HPC) monthly, and chlorate, 1,4-dioxane and 1,2,3-trichloropropane quarterly at the production wells (i.e., Arroyo Well, Well 52, Ventura Well, and Windsor Well)
- Perchlorate at the ion exchange combined influent, and perchlorate, coliform and HPC at the ion exchange combined effluent
- Perchlorate at each lead ion exchange vessel effluent; change out of the lead bed resin occurs when perchlorate reaches 6 μg/L
- Perchlorate at each lag ion exchange vessel only when it is detected in the combined effluent; change out of the lead bed resin occurs for any pair where perchlorate is detected in the lag vessel effluent
- VOCs at the LGAC combined influent and combined effluent locations
- VOCs at each lag LGAC vessel only when it is detected in the combined effluent; change out of the lead bed LGAC occurs for any pair where VOCs are detected in the lag vessel effluent
- VOCs at each lead LGAC vessel 25% bed depth port; if detected then sampling at 50% port; if detected, then sampling at 75% port; followed by change out if VOCs are detected at 75% port.

The required monitoring frequencies are identified in the DPH operating permit; however, as data are gathered to demonstrate system effectiveness, the frequencies may be modified upon request to the DPH. Intermittent operation of the MHTS began in March 2011; therefore, no data trends have been established at this time.

Start-up testing was conducted in December 2010 through January 2011 per the system performance test and startup procedures approved by DPH. Overall, the treatment system was successful in removing perchlorate and VOCs from the extracted groundwater and functioned as designed. A total of six operating scenarios were tested, which represents the full range of operating conditions the treatment plant would undertake.

During the startup testing, the levels of perchlorate from the four production wells varied between 5.34 and 45.4 μg/L. In all operating scenarios, the perchlorate levels following ion exchange treatment were below detection limits.

Historically, VOCs detected in one or more of the four City of Pasadena production wells included CCl_4 TCE, PCE, and 1,2-DCA. During the start up testing, only TCE and PCE, as well as one or more forms of total trihalomethane (TTHMs; a disinfection byproduct) were detected in the production wells. None of these VOCs were detected at the effluent of the LGAC system.

It was noted during the startup testing that m,p-xylene and o-xylene were at non-detected levels in the LGAC influent, but detected at levels < 2 μg/L at the effluent (note that the MCLs for these two VOCs combined is 1,750 μg/L). The xylene compounds were only detected during testing in one of six scenarios, and the xylene levels were non-detect in the effluent during the final two scenarios. It was observed that the sampling port from which the xylene detections were noted is located near an air release and air vacuum (AR/AV) valve which was recently painted. A known potential source of xylenes is coatings such as external paints or those used to internally coat the pipes and vessels. The two xylene compounds detected in the LGAC effluent will continue to be monitored as part of the overall VOC sampling program to ensure that the source was indeed the recent painting of the AR/AV valve or the internal system coating resulting in the temporary detection.

Nitrosamines were detected from two wells (detected levels were below 10 nanogram per liter [ppt] at Arroyo and Well 52) and in the ion exchange treatment effluent. Depending on the resin manufacture, pre-treatment process, and on-site handling and maintenance, one or more forms of nitrosamines may emit (leach) from the resin. Specifically, for N-nitrosodi-n-butylamine (NDBA), the levels varied from 11 to 110 ppt in the ion exchange effluent, but were non-detect at the four production wells. Nitrosamines leaching from virgin resins are typically the highest prior to running well water through it, and levels diminish rapidly thereafter as water flows. At system start up the level was 110 ppt and had reduced to 11 ppt within a 24-hour period.

A factor that may increase the formation of nitrosamines is maintenance-related activities to protect the resin from bacteriological growth during non-operating conditions (i.e., when the treatment plant is off-line). In anticipation of the startup testing, the resins were installed weeks ahead of the testing. As a result, the resin sat in the vessels unutilized for at least 1 month prior to exposing the resin to testing. The equipment vendor recommended that the vessels be flushed with chlorinated potable water on a weekly basis to minimize or limit bacteriological growth in the vessels. The drawback, however, is that chlorine contact with the resin media may increase the possibility of nitrosamine formation.

There is a notification level (NL) of 10 ppt for three forms of nitrosamines – N-nitrosodimethylamine (NDMA), N-nitrosodiethylamine (NDEA), and N-nitroso-n-propylamine (NDPA) (California DPH, 2011). However, NDBA does not have a NL. To address the levels of NDBA, the following actions are recommended:

- Minimize the use of chlorinated water to flush the resin. When the treatment plant is fully permitted and operating, it may be possible to use treated water coming off the effluent of the LGAC treatment system and upstream of the disinfection system to flush the resin. This source water will be absent of disinfectant, thus reducing the formation of nitrosamines. However, there may be instances when the only source available is chlorinated water. In these instances, the flushing would be minimized based on the vendor's recommendation.

- Nitrosamine formation is highest for virgin resin. During initial startup, all four pairs of lead and lag ion exchange vessels are loaded with virgin resins. When the individual lead vessels are exhausted, resin replacement will occur. Since it is highly unlikely that all vessels will simultaneously require resin replacement, the nitrosamine in the combined effluent will be greatly reduced by blending the treated water from the vessels filled with virgin resin with the treated water from the remaining vessels.

- Newly installed resin will be rinsed prior to placing the vessel into service. The resin vendor will be required to provide recommendations for the volume of rinse water.

- Perform subsequent monitoring for nitrosamines.

- Develop best practices with the vendor for on-site maintenance activities to minimize the formation of nitrosamines. Also, NASA will coordinate with DPH during the development and implementation of best practices.

- Incorporate language into the specifications for future resin replacement contracts that the supplier must pre-rinse the resin offsite. Pre-rinsing will remove some nitrosamines and will reduce the need for on-site flushing.

LAWC Monitoring Summary
Monitoring of the LAWC production wells and treatment system is conducted to determine progress toward the remedial action goals and demonstrate that the treatment system is effectively treating the target chemicals. Monitoring of this system includes the following:

- Perchlorate, VOCs, and total coliform at production wells LAWC #3 and LAWC #5
- Perchlorate and nitrate at the ion exchange lead influent, lead effluent, and lag effluent
- VOCs from the fourth sampling port on each LGAC vessel
- VOCs, nitrate, total coliform, and HPC from the effluent sampling port on each LGAC vessel
- Perchlorate, VOCs, total coliform, and HPC at the combined system effluent.

Influent perchlorate concentrations showed a generally decreasing trend from 2004 through 2009. However, perchlorate concentrations increased during 2010 because LAWC#3 concentrations have increased slightly and LAWC#5 was offline (Figure 4-5). The system operated effectively, removing perchlorate to below detectable levels at the effluent of the lag ion exchange vessel. Resin is changed out in the lead ion exchange vessel when perchlorate breakthrough in that vessel is detected. The ion exchange vessel with fresh resin is then placed in the lag position. Resin change outs are typically required two to three times per year (NASA, 2011c).

Overall, influent concentrations of TCE from LAWC #3 and LAWC #5 have decreased over time, with concentrations now consistently below 5 µg/L. Influent concentrations of CCl_4 have shown a slight increasing trend; however, maximum concentrations remain below the Federal MCL but above the California MCL, at 4 µg/L and 2.2 µg/ in LAWC #3 and LAWC #5, respectively. The carbon tetrachloride levels are expected to decrease over time now that the MHTS is operating with extraction well located upgradient of the LAWC wells (i.e., in between the JPL facility and the LAWC wells).

The LGAC effluent and combined effluent sampling locations have not contained detectable CCl_4, TCE, PCE, or perchlorate concentrations at any time since startup in July 2004. This demonstrates that the plant is operating effectively. Also, total coliform and HPC sampling is conducted weekly to evaluate biological activity in the system. Results indicated that biological activity was effectively controlled.

4.2.3 Operable Unit 3 Summary of System Operation and Maintenance Costs

The annual O&M costs estimated during preparation of the interim ROD were approximately $923,500 for the LAWC treatment system and $3,080,900 for the MHTS (NASA, 2007b). This cost includes labor, materials, equipment leases, electricity, laboratory costs, and reporting/project management, but does not include costs associated with groundwater monitoring. Table 4-5 summarizes the annual O&M costs incurred for operation of the LAWC treatment system from the time of the interim ROD through the end of the last calendar year. With the exception of 2007, actual costs incurred were approximately equal to the estimated costs. In 2007, an additional resin change out event was required due to damaged resin.

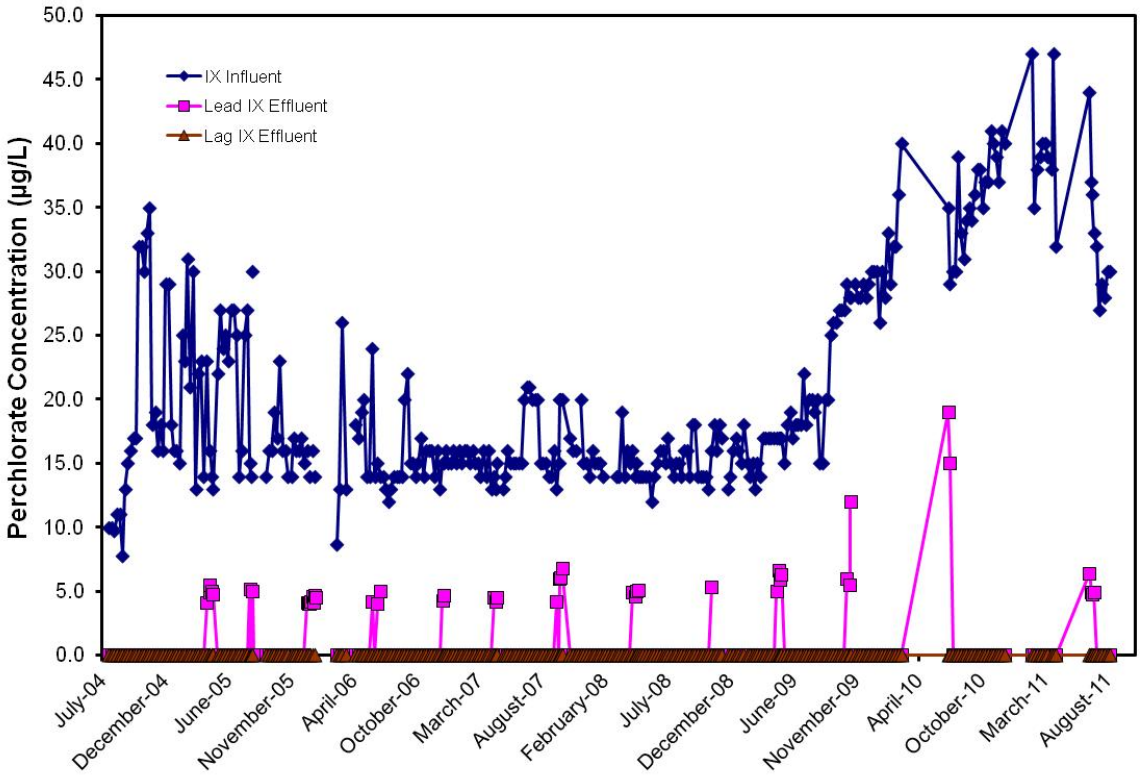

Figure 4-5. Ion Exchange System Performance

Following this event, a new resin vendor was contracted at the site and the resin procurement process was changed. These events resulted in a higher than expected annual operating cost in 2007.

Construction of the MHTS was recently completed and, therefore, a full year of O&M costs have not yet been incurred. Actual annual O&M costs for the MHTS will be summarized in the next five-year review report.

Table 4-5. Summary of Annual O&M Costs at LAWC

Year	Annual O&M Cost
2007	$1,400,400
2008	$903,500
2009	$923,900
2010(1)	$360,100

(1) In 2010, the LAWC treatment system operated only from January 1 through March 11.

5. PROGRESS SINCE THE LAST REVIEW

This is the first five-year review conducted for the NASA JPL site.

6. FIVE-YEAR REVIEW PROCESS

This section provides a description of the activities performed during the five-year review process for OU-1 and OU-3 at NASA JPL.

6.1 Administrative Components of the Five-Year Review Process

This Five-Year Review Report was prepared for the lead agency, NASA, to document the five-year review of the OU-1 and OU-3 remedies implemented at the NASA JPL site. This review was conducted from September 2011 through November 2011 by NASA and the prime remedial action contractor for the site during this time period, Battelle. The review team included members from NASA and Battelle project management and technical staff familiar with the NASA JPL groundwater cleanup program.

Completion of the Five-Year Review Report is required under CERCLA and the FFA. The timing for completion of the Five-Year Review Report is documented in the FFA schedule. Representatives from the U.S. EPA, DTSC, and RWQCB are parties to the FFA along with NASA and are therefore informed of the completion of this five-year review.

6.2 Community Involvement

Activities to involve the community in the five-year review process were initiated through distribution of a newsletter released in early December 2011. The newsletter informed the public that the five-year review process was underway, and explained the purpose of this review. A brief summary of the remedies was included, noting that three groundwater extraction and aboveground treatment systems are currently operating to remove VOCs and perchlorate from the groundwater. The newsletter was made available on the JPL CERCLA Program Web site (http://jplwater.nasa.gov/). In addition, hard copies were distributed to JPL CERCLA Program stakeholders and over 4,000 residences near the JPL facility, and all JPL personnel (more than 5,000) were notified of the newsletter via e-mail and directed to the electronic version.

Questions regarding the Five-Year Review Report were directed to the NASA Manager for Community Involvement, Merrilee Fellows. No comments were received. A second public notice via posting on the project Web site is planned to notify the community of the final Five-Year Review Report and associated Fact Sheet.

6.3 Document Review

The five-year review process consisted of a review of relevant documents including the RI/FS, RODs, quarterly groundwater monitoring reports, remedial action/groundwater treatment system progress reports, and installation reports. Documents reviewed during this five-year review are included in Section 12.

6.4 Data Review

The data review included examination of treatment system monitoring data, groundwater monitoring information, risk assessment information, and regulatory standards to identify any changes to the protectiveness of the selected remedies. The most recent sampling data were used in evaluating protectiveness of the remedies, and data trends over time were evaluated to determine the progress made toward achieving the remedial action objectives at each OU. A review of this data for OU-1 and OU-3 is presented in Sections 7.1 and 7.2, respectively.

6.5 Site Inspection

The purpose of the site inspections is to review and document current site conditions at the OUs and evaluate visual evidence regarding the protectiveness of the remediation systems and monitoring equipment. Site inspections were not deemed necessary specifically in support of this five-year review given the active status of the on-going pump and treat activities, as well as the routine quarterly groundwater monitoring that is conducted at the site. U.S. EPA concurred with NASA's decision not to conduct additional site inspections specific for this Five-Year Review Report due to the frequency of on-going inspections. Treatment system equipment is monitored and maintained on a routine basis in accordance with the O&M plan for each system, and semi-annual and annual progress reports for the OU-1 and OU-3 systems, respectively, are submitted to FFA signatories and other stakeholders (NASA, 2011a and NASA, 2011c). The condition of monitoring wells is observed during quarterly groundwater monitoring, and necessary maintenance activities are completed when necessary to ensure the wells are maintained in good condition.

6.6 Interviews

In addition to the on-facility water treatment system, NASA has funded treatment systems on the property of two off-facility water purveyors. The two purveyors, LAWC and PWP, were interviewed regarding community involvement measures undertaken by NASA with respect to NASA's groundwater cleanup, and specifically with regard to the installation and operation of the off-site water treatment systems in the neighboring communities.

The interview questions were developed by Merrilee Fellows, NASA Community Outreach Manager, and Steven Slaten, NASA Remedial Project Manager. Respondents were Bob Hayward, the General Manager of LAWC, and Gary Takara and Brad Boman, engineering staff at PWP responsible for the MHTS. Both sets of respondents felt that community outreach had been extensive and effective. They commented that materials have been easily accessible and questions from the community had been addressed immediately. With regard to NASA's request for recommendations about project management, impact on the community and outreach activities, both purveyors responded that continuing communications should occur. NASA plans to continue its prompt responses to community questions and concerns and will continue developing materials that are easy-to-understand and useful to the residents.

The interview questions and answers are provided in Appendix A.

In addition, individuals responsible for or familiar with current activities at OU-1 and OU-3 were given the opportunity to review and provide comments on the draft Five-Year Review Report. This includes representatives from the U.S. EPA and state agencies (i.e., DTSC and RWQCB).

7. TECHNICAL ASSESSMENT FIVE-YEAR REVIEW PROCESS

This section presents the technical assessments for the active remedies at OU-1 and OU-3. In accordance with U.S. EPA guidance (2001), this section evaluates the following three questions to determine the protectiveness of each remedy:

- **Question A:** Is the remedy functioning as intended by the decision documents?
- **Question B:** Are the exposure assumptions, toxicity data, cleanup levels, and remedial action objectives used at the time of the remedy selection still valid?
- **Question C:** Has any other information come to light that could call in to question the protectiveness of the remedy?

7.1 OU-1, Source Area Groundwater

A technical assessment of the OU-1 source area groundwater extraction and treatment system is presented in the following subsections. The technical assessment is based on the recent OU-1 progress report (NASA, 2011a), as well as additional data and documents reviewed during this five-year review process.

7.1.1 Question A: Is the remedy functioning as intended by the decision documents?

Data reviewed from operation and monitoring of the OU-1 treatment system indicates that the remedy is functioning as intended by the Interim ROD. The intended function of the OU-1 remedy is defined by the remedial action objectives documented in the Interim ROD:

- Remove chemicals in groundwater and prevent the further spread of VOCs and perchlorate from the groundwater source area, and
- Reduce the amount of chemicals distributed in the source area groundwater to improve the effectiveness and efficiency – and reduce costs – of the final cleanup remedy selected for groundwater in OU-3 (off-facility).

Groundwater level elevation and chemical data were used to evaluate the effectiveness of the OU-1 groundwater extraction and treatment system. Groundwater level elevation data are collected from the NASA JPL monitoring wells on a quarterly basis and transducers are used to record data from the extraction wells. In addition, groundwater levels are collected on a weekly basis from NASA JPL monitoring wells MW-7, MW-8, MW-13, MW-16, and IRZ-IW2 as part of the OU-1 system operations.

Historic elevation data (April 2004) indicate a steep southwest gradient from the mouth of the Arroyo Seco to the OU-1 system area coupled with a southeastern gradient from the northwestern portion of the JPL facility. Flow converges to the south of the treatment zone and migrates toward the south/southeast under a reduced gradient (Figure 7-1). The groundwater elevation contour map showing conditions in April/May 2011 (Figure 7-2) demonstrates groundwater flow is significantly affected by operation of the system, with a drawdown of roughly 25 to 30 ft observed in the extraction wells. Data indicate that the extraction wells influence groundwater within a radius greater than 160 ft of the extraction wells. These data demonstrates effective containment of the source area groundwater as required by the first remedial action objective stated in the Interim ROD.

Isoconcentration contour maps (Figures 7-3 through 7-5) are provided for trichloroethylene, CCl_4, and perchlorate for baseline conditions before operation (October/November 2004) and for the most recent

monitoring data (April/May 2011). Table 7-1 provides a summary of current concentrations, historical highs, and baseline conditions for perchlorate, CCl_4 and trichloroethylene.

Table 7-1. OU-1 Source Area Monitoring Well Concentrations

Source Area Monitoring Well Concentrations		MW-7	MW-13	MW-16	MW-24
		µg/L			
Current Levels (April/May 2011)	Perchlorate	2.9	81.8	2.4	17.5
	Carbon Tetrachloride	< 0.5	0.5	< 0.5	< 0.5
	Trichloroethylene	< 0.5	1.0	< 0.5	< 0.5
Prior to OU-1 Startup	Perchlorate	4,810	51.5	322	4,880
	Carbon Tetrachloride	51.4	< 0.5	< 0.5	7.8
	Trichloroethylene	8.7	1.4	< 0.5	1.6
Historic Highs	Perchlorate	13,300	2,100	13,100	4,880
	Carbon Tetrachloride	310	70	200	58
	Trichloroethylene	48	73	43	15

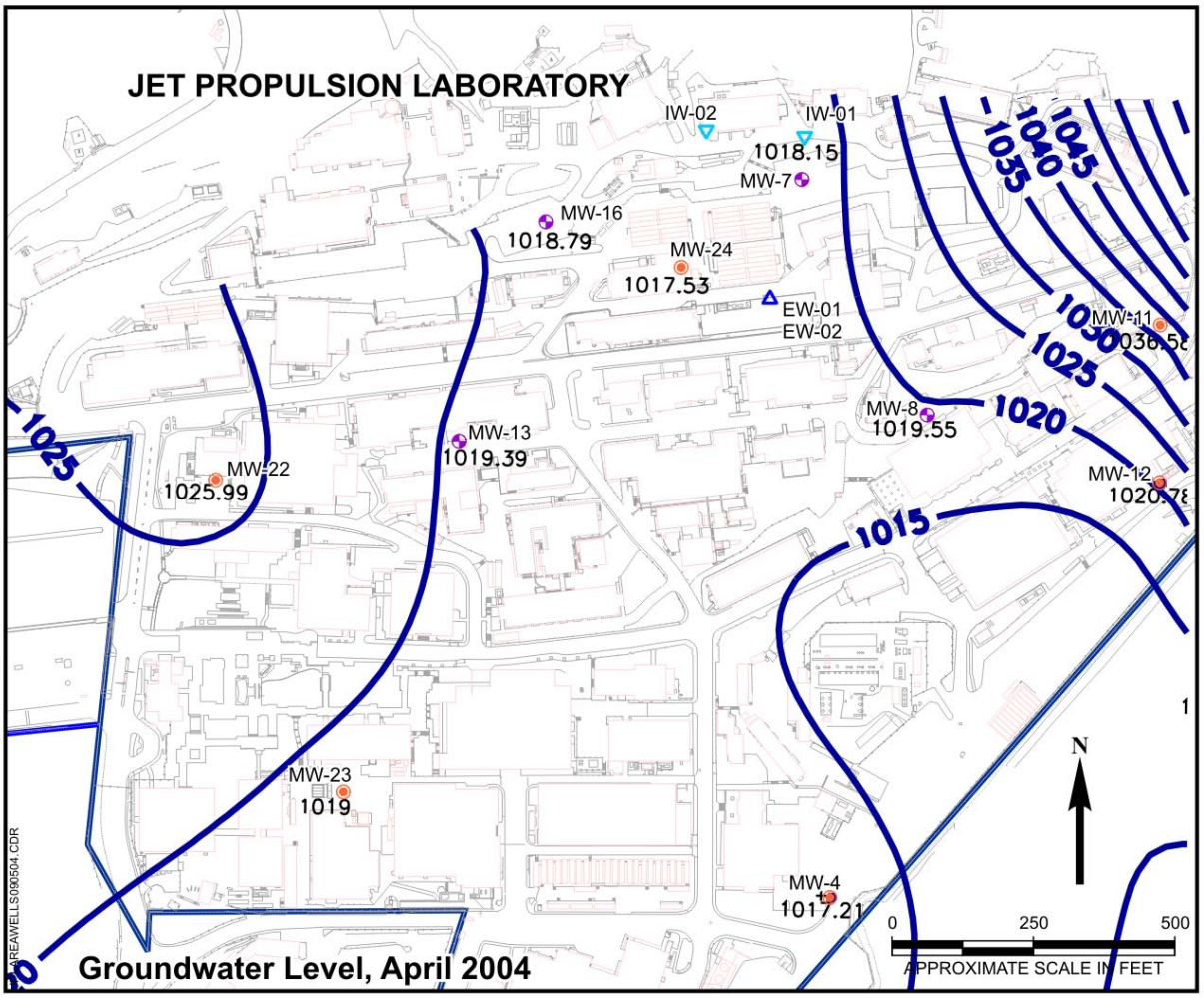

Figure 7-1. Groundwater Contour Map, April 2004 (Baseline before Extraction)

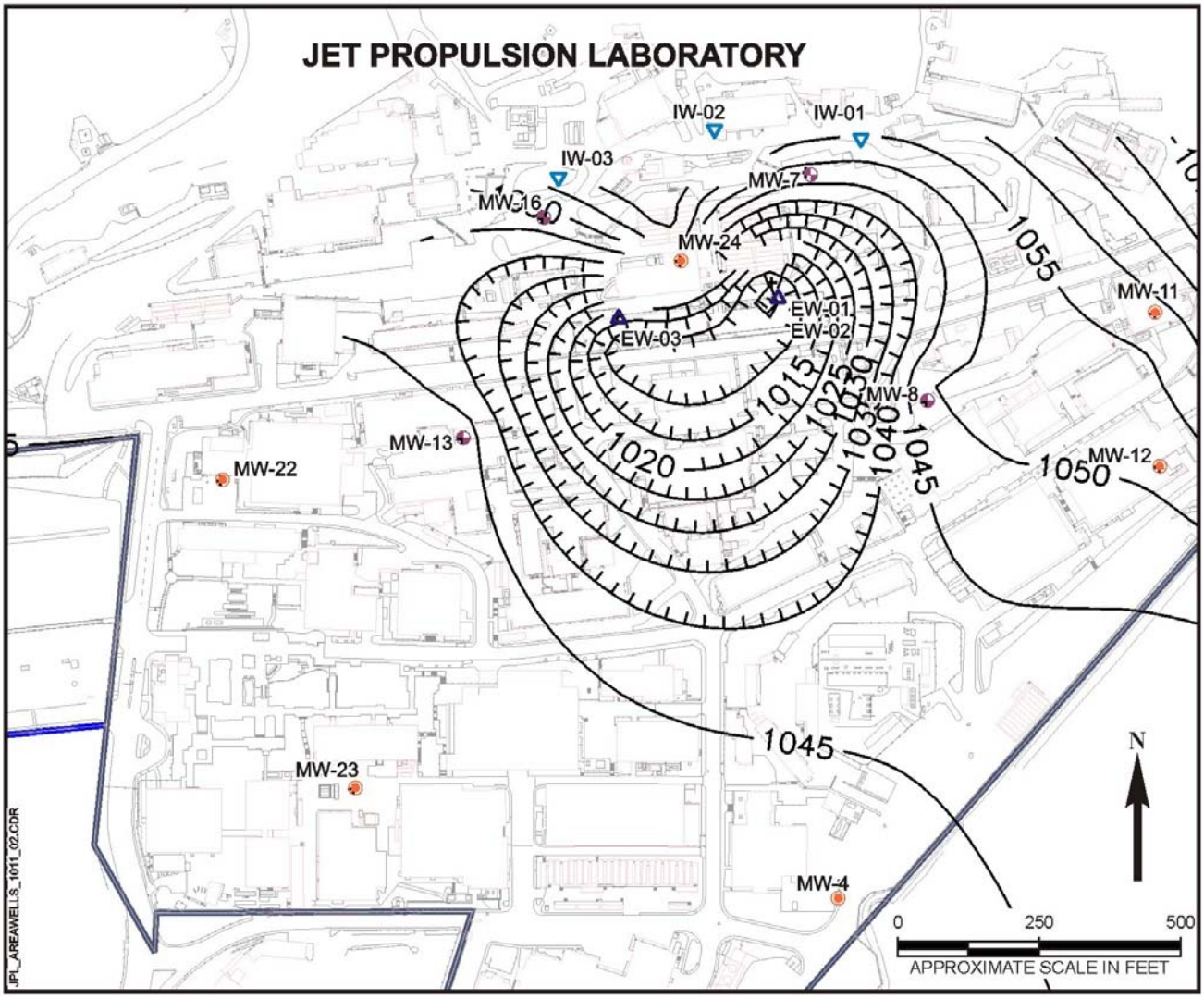

Figure 7-2. Groundwater Contour Map, April/May 2011 (with Extraction)

Data collected during the quarterly groundwater monitoring indicate the following:

- The concentration of VOCs and perchlorate in the treatment zone (i.e., MW-7, MW-13, MW-16, and MW-24) has decreased significantly since system startup.
- Concentrations of TCE in the treatment zone are below the state and federal MCL (5.0 µg/L).
- CCl_4 was detected in MW-13 (0.5 µg/L) at a concentration equal to the state MCL (0.5 µg/L); however, CCl_4 in all other source area wells was below 0.5 µg/L in April/May 2011.
- Perchlorate concentrations in MW-7 and MW-24 have declined from 4,810 and 4,880 µg/L to concentrations of 2.9 µg/L and 17.5 µg/L, respectively.
- The perchlorate concentration in MW-13 was 81.3 µg/L in April/May 2011. Perchlorate levels in this well have varied widely since commencing operation of the OU-1 in January 2005.

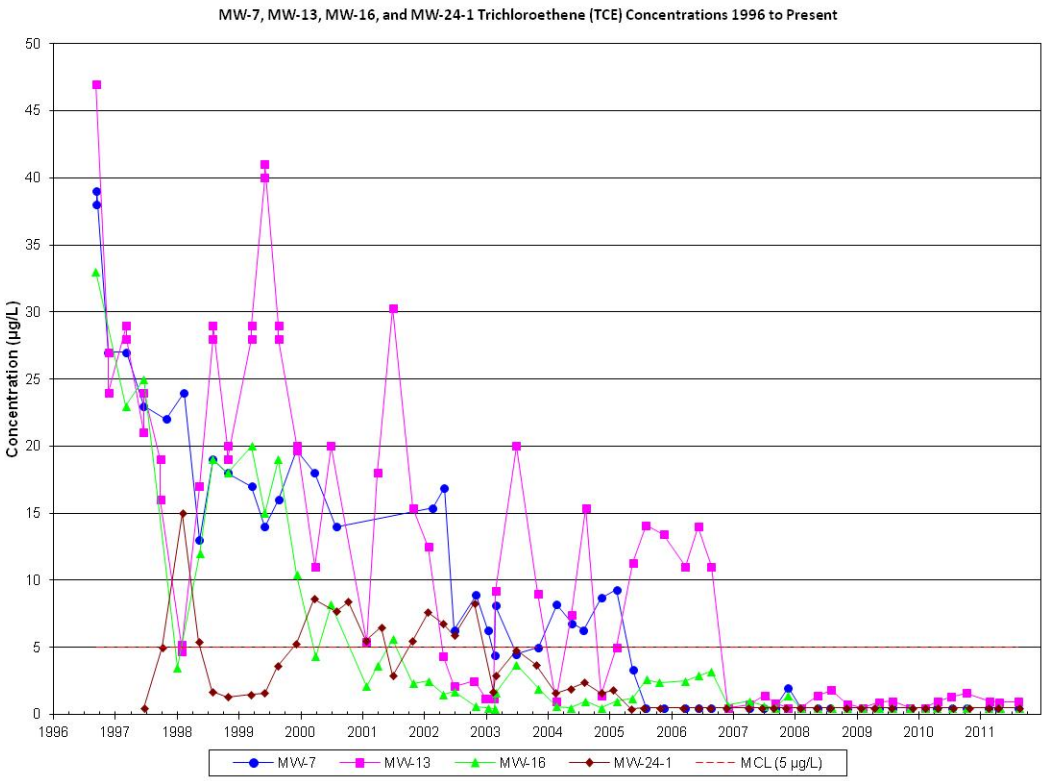

Figure 7-3. Trichloroethylene Concentrations vs. Time in OU-1

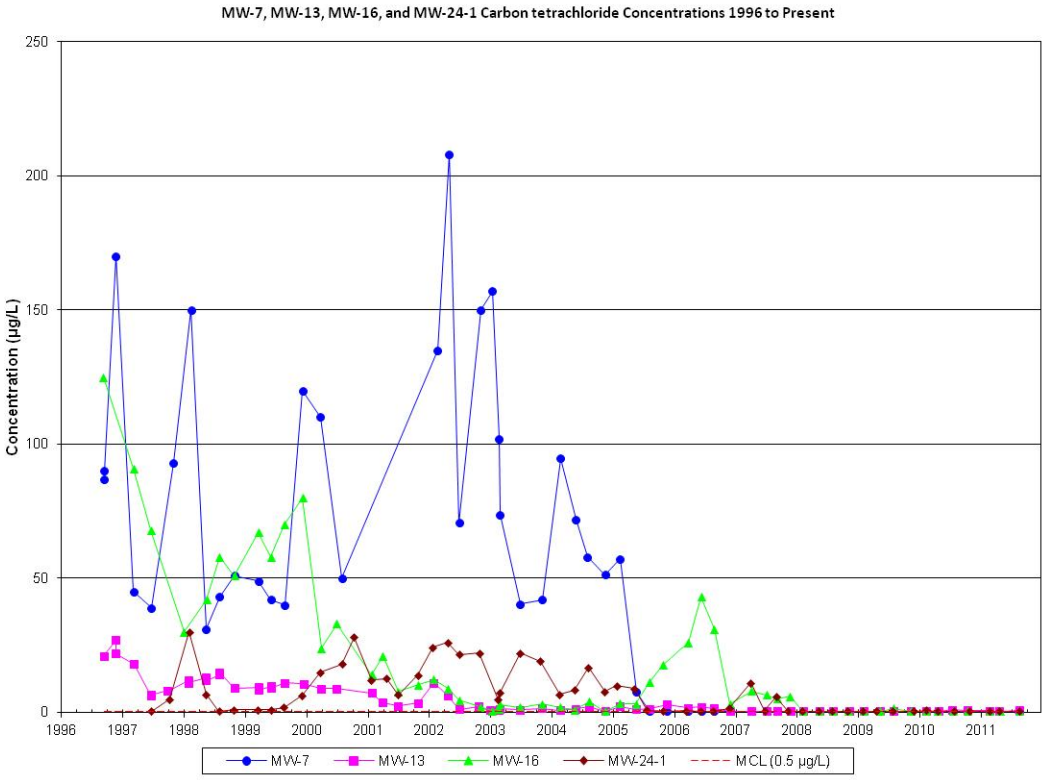

Figure 7-4. Carbon Tetrachloride Concentrations vs. Time in OU-1

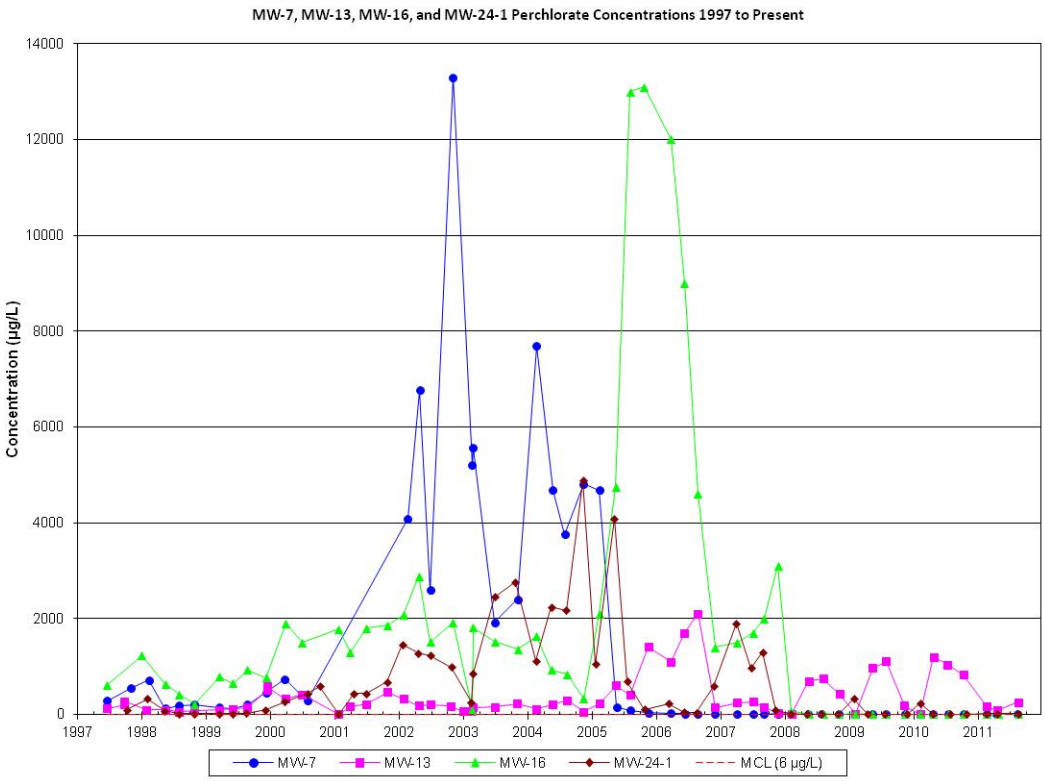

Figure 7-5. Perchlorate Concentrations vs. Time in OU-1

These data demonstrate that operation of the OU-1 treatment system has significantly reduced the chemical concentrations within the source area. The overall reduction in chemical mass within the source area will improve the effectiveness and efficiency of the off-facility (OU-3) remedy as required by the second remedial action objective. Although institutional controls are not a component of the Interim ROD, short-term protectiveness is assured through the operation of the treatment system and voluntary and regulatory groundwater use restrictions (groundwater basin adjudication, California Safe Drinking Water Act, etc.). It is anticipated that a Final ROD for groundwater will be issued prior to the next Five-Year Review that will include any active remedial actions and institutional controls necessary to provide long-term protection of human health and the environment.

Continued routine system maintenance, such as activated carbon change outs and injection well rehabilitation, and continual optimization of the FBR unit (e.g., acetic acid and nutrient addition) will ensure that the system is operating at maximum efficiency. In addition, routine monitoring of the treatment system influent and effluent, as well as monitoring of the treatment system components (i.e., FBR, Trimite™ filter, and LGAC) will ensure that the system continues to operate effectively. Treatment system monitoring data collected over the past calendar year indicated that there were two occasions where breakthrough of perchlorate was detected above the method detection limit (2.0 µg/L). The first occasion was in March 2011 (89.2 µg/L) and the second occurred in June 2011 (24.2 µg/L). These instances were a result of unplanned extended shutdowns of the treatment plant over the weekend. In each instance, the treatment system was placed back online after the problem was diagnosed and repaired.

A new protocol for dealing with weekend occurrences of system shutdown has been established and conveyed to the on-site operator.

7.1.2 Question B: Are the exposure assumptions, toxicity data, cleanup levels, and remedial action objectives used at the time of the remedy selection still valid?

The human health risk assessment evaluated potential risks to human health associated with hypothetical exposure to chemicals in untreated groundwater beneath the JPL facility. However, it is important to note that because groundwater is in a deep aquifer and does not recharge surface water bodies with the area of concern, and because water purveyors treat impacted groundwater before use, there is no complete or direct pathway for exposure to JPL groundwater. In addition, OU-1 is located in an adjudicated groundwater basin; therefore, all groundwater extractions in the basin are coordinated and monitored by the Raymond Basin Management Board (RBMB). No other wells are known to exist in the aquifer zones containing chemicals that originated from JPL. No groundwater exposure pathways to ecological receptors were identified. There have been no changes in the physical conditions of the site that would affect the protectiveness of the remedy with respect to exposure pathways. Based on this information, no new information has been identified that would affect the protectiveness of the remedy, and therefore the remedial action objectives and selected remedy remain valid for OU-1.

7.1.3 Question C: Has any other information come to light that could call into question the protectiveness of the remedy?

No additional information was identified during the five-year review process which would affect the protectiveness of the OU-1 remedy. Based on this technical assessment, the remedy at OU-1 is protective of human health and the environment, and the exposure pathways that could result in unacceptable risks are being controlled.

7.2 OU-3, Off-Facility Groundwater

A technical assessment of the OU-3 off-facility groundwater extraction and treatment system is presented in the following subsections. The technical assessment is based on the recent LAWC progress report (NASA, 2011c) and the MHTS Installation Report (NASA, 2011b), as well as additional data and documents reviewed during this five-year review process.

7.2.1 Question A: Is the remedy functioning as intended by the decision documents?

Construction of the MHTS is complete and was documented for OU-3 in a letter received from EPA Region IX on September 12, 2011 (U.S. EPA, 2011). Start-up testing was conducted in December 2010 through January 2011 per the system performance test and startup procedures approved by DPH. Overall, the treatment system was successful in removing perchlorate and VOCs from the extracted groundwater and the system functioned as intended.

As of March 21, 2011, PWP began intermittent operation of the treatment system for drinking water production. PWP is being funded by NASA to lease the treatment equipment and operate the system. As of July 2011, approximately 327,765,000 gallons had been extracted and successfully treated by the MHTS. Approximately 107,038,000 gallons of the treated water were also disinfected and supplied to City of Pasadena customers. Limited operating data are available for the MHTS given the recent completion of construction activities; however, the monitoring data obtained to date indicate that the system is operating as intended by the treatment system design.

Data reviewed from operation and monitoring of the LAWC treatment system indicate that the remedy is functioning as intended by the Interim ROD. The intended function of the OU-3 remedy is defined by the remedial action objectives documented in the Interim ROD (NASA, 2007b):

- Remove target chemicals from the aquifer by treating water pumped from specified drinking water wells in the Monk Hill Subarea of the Raymond Basin.

- Prevent further migration of the chemicals in groundwater.
- Provide additional data to assess possible long-term cleanup remedies for groundwater both on and off the JPL facility.

Treatment system effluent samples have not contained detectable CCl_4, TCE, or perchlorate concentrations at any time since startup in July 2004. This demonstrates that the treatment system is operating effectively and removing target chemicals from the aquifer in accordance with the first remedial action objective identified above. Although institutional controls are not a component of the Interim ROD, short-term protectiveness is assured through the operation of the treatment system and voluntary and regulatory groundwater use restrictions (groundwater basin adjudication, California Safe Drinking Water Act, etc.). It is anticipated that a Final ROD for groundwater will be issued prior to the next Five-Year Review that will include any active remedial actions and institutional controls necessary to provide long-term protection of human health and the environment.

NASA JPL has a multiport monitoring well, MW-17, located less than 500 ft upgradient of LAWC#3. This monitoring well serves as the best available indicator of near-future (1-2 years) concentrations that may be observed in LAWC wells. Figures 7-6, 7-7, and 7-8 provide the historical concentrations of CCl_4, TCE, and perchlorate in MW-17. Analytical results of samples collected from MW-17 (Screens 2 and 3) indicated that the decreasing trend in perchlorate and CCl_4 concentrations continued through 2010. TCE concentrations in MW-17 continued to be relatively stable and below the MCL.

Figures 7-9 and 7-10 are graphs of the concentrations in extracted groundwater samples collected from LAWC#3 and LAWC#5. During the most recent reporting period (NASA, 2011c), LAWC#3 was in operation from July 2010 through March 2011 and LAWC#5 was operated only in March 2011 (after being offline since September 2009). Perchlorate concentrations in LAWC#3 ranged from 31 to 40 µg/L, with an average of 36 µg/L. Concentrations of CCl_4 and TCE were stable throughout the reporting period, averaging 1.2 µg/L and 1.8 µg/L, respectively.

As shown in Figure 7-9, perchlorate levels in LAWC#5 were higher in the March 2011 sample than in the samples from 2009. In fact, the March 2011 sample represents the highest level of perchlorate measured in LAWC#5. Perchlorate concentrations in LAWC#5 will be evaluated closely during the future operation of this well. Concentrations of TCE and CCl_4 in LAWC#5 were measured at 2.1 µg/L and 4.9 µg/L, respectively, in March 2011.

Figure 7-11 shows the capture zones of the MHTS and LAWC wells relative to the estimated extent of perchlorate originating from JPL. The estimated extent of perchlorate conservatively represents all site-related chemicals. Although on Figure 7-11 the downgradient boundary of the perchlorate plume appears to extend past the LAWC and MHTS capture zones, it is an artifact of plume contouring using currently available data. Routine (i.e., weekly) monitoring is conducted at the Rubio Cañon Land and Water production wells, which are located downgradient of the LAWC wells, to verify the contaminant plume has not escaped the capture zones. The highest detection of perchlorate in these wells was 3.1 µg/L, and no increasing trends have been observed. Data from the Rubio Cañon Land and Water wells along with data from MW-17 demonstrate that operation of the LAWC treatment system is effectively preventing further migration of chemicals in groundwater. Based on the groundwater modeling, operation of the MHTS will further control migration of chemicals in groundwater (NASA, 2003).

The combined impact of operating the LAWC treatment system and MHTS will be evaluated over the next few years, and their effectiveness in preventing further migration of chemicals will be documented in the final groundwater ROD.

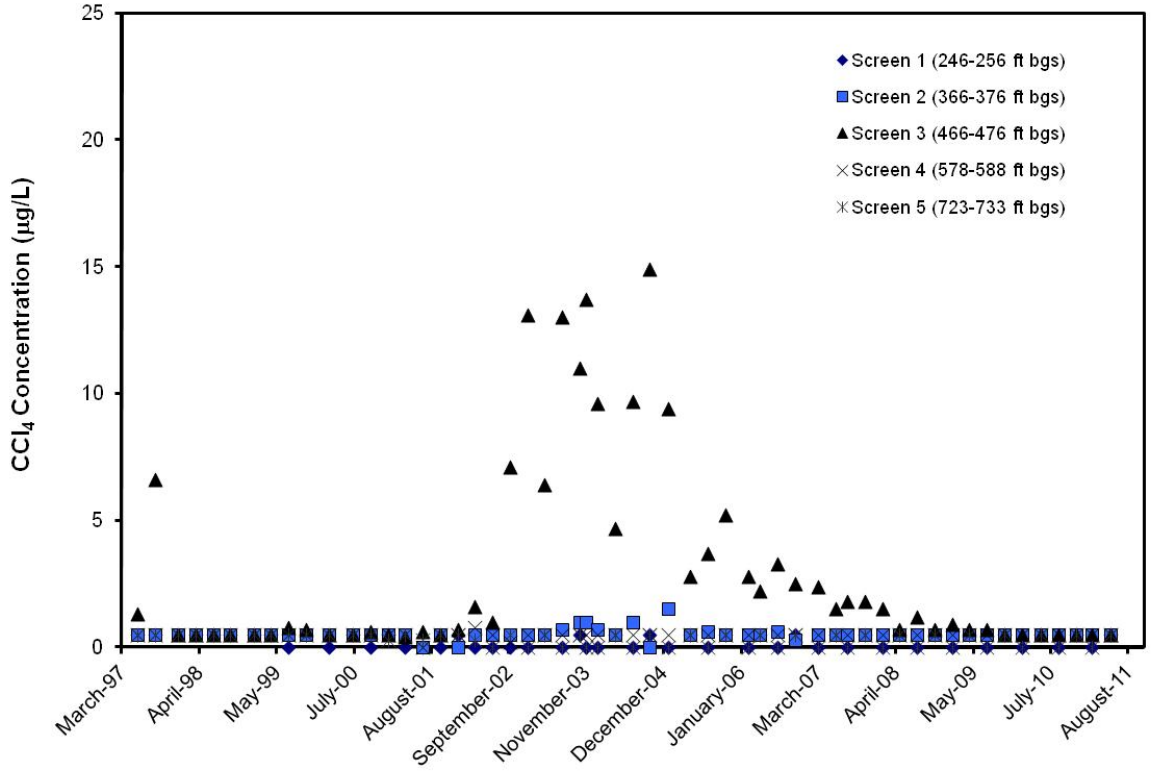

Figure 7-6. Historical Concentrations of Carbon Tetrachloride in MW-17

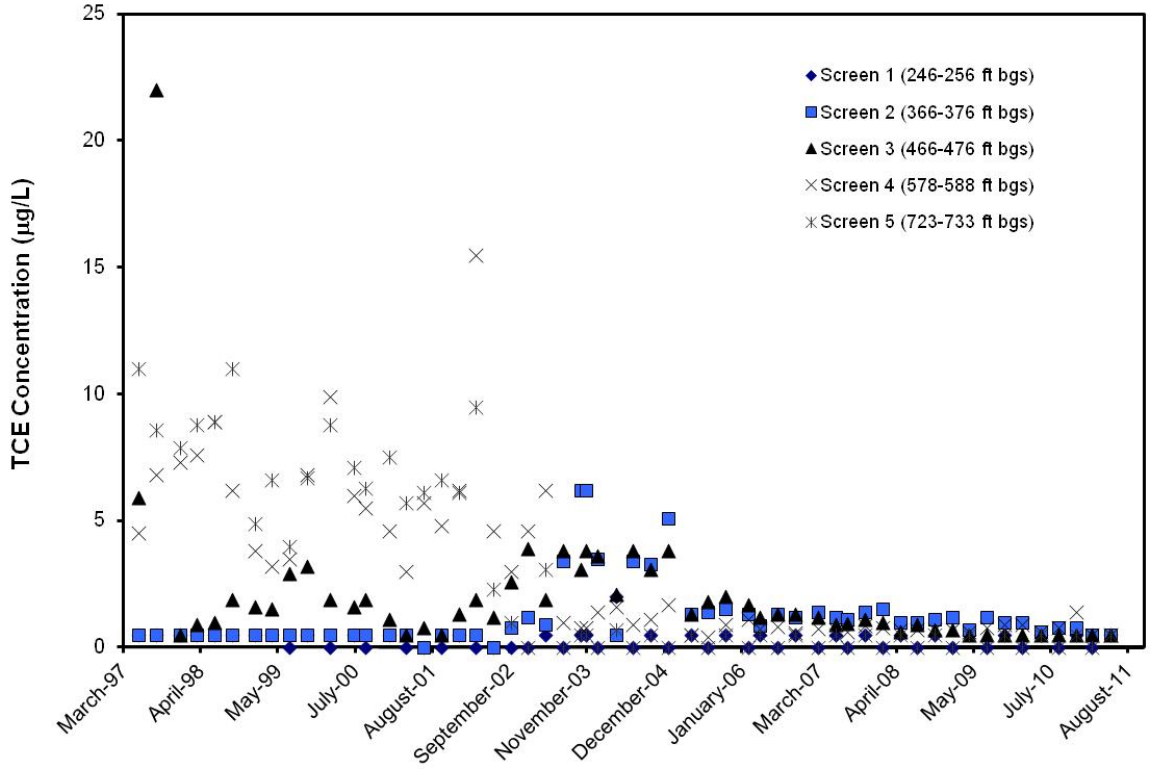

Figure 7-7. Historical Concentrations of TCE in MW-17

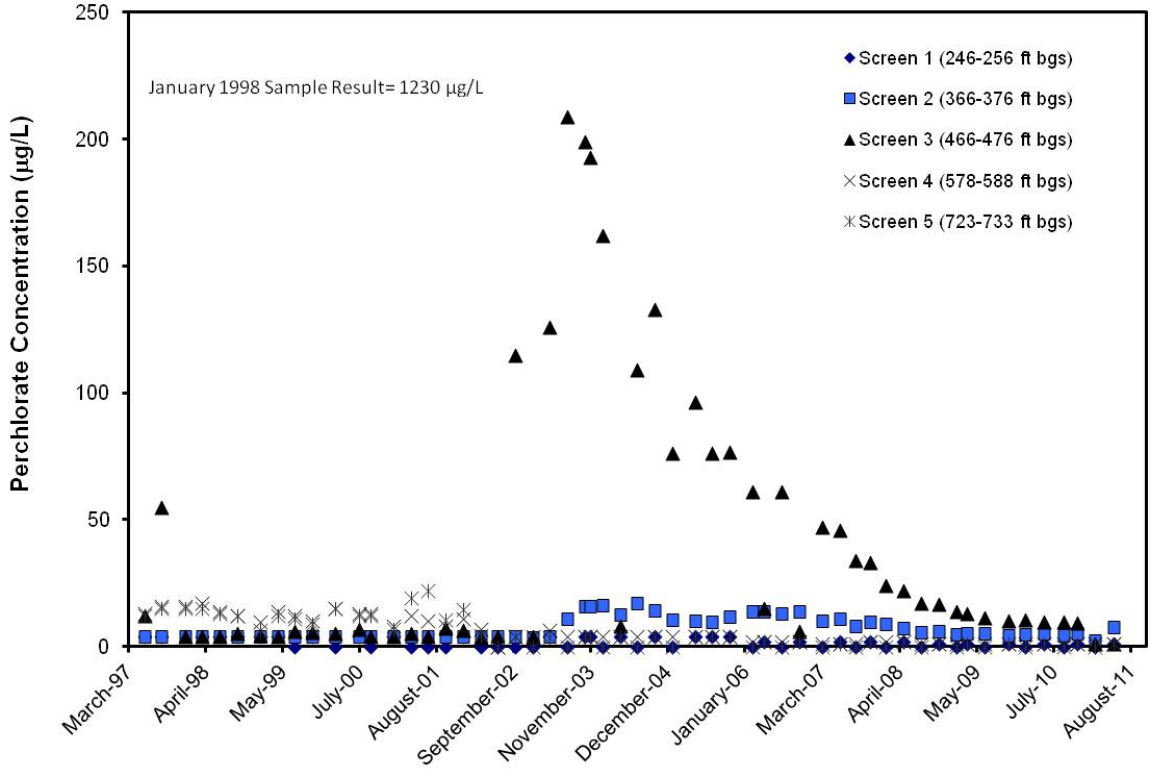

Figure 7-8. Historical Concentrations of Perchlorate in MW-17

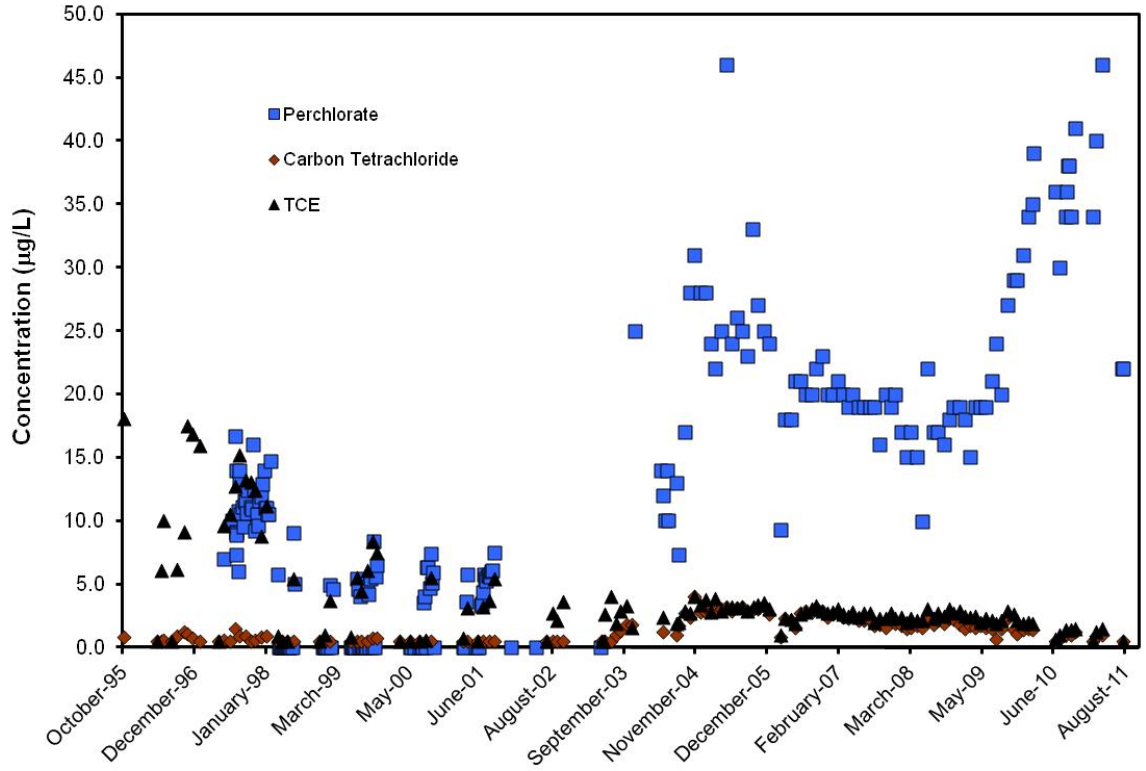

Figure 7-9. Carbon Tetrachloride, TCE, and Perchlorate Concentration Trends in LAWC#3

7.2.2 Question B: Are the exposure assumptions, toxicity data, cleanup levels, and remedial action objectives used at the time of the remedy selection still valid?

The human health risk assessment evaluated potential risks to human health associated with hypothetical exposure to chemicals in untreated groundwater beneath the JPL facility. However, it is important to note that because groundwater is in a deep aquifer and does not recharge surface water bodies with the area of concern, and because water purveyors treat impacted groundwater before use, there is no complete or direct pathway for exposure to JPL groundwater. In addition, OU-3 is located in an adjudicated groundwater basin; therefore, all groundwater extractions in the basin are coordinated and monitored by the RBMB. Other wells are not known to exist in the aquifer zones containing chemicals that originated from JPL. No groundwater exposure pathways to ecological receptors were identified. There have been no changes in the physical conditions of the site that would affect the protectiveness of the remedy with respect to exposure pathways.

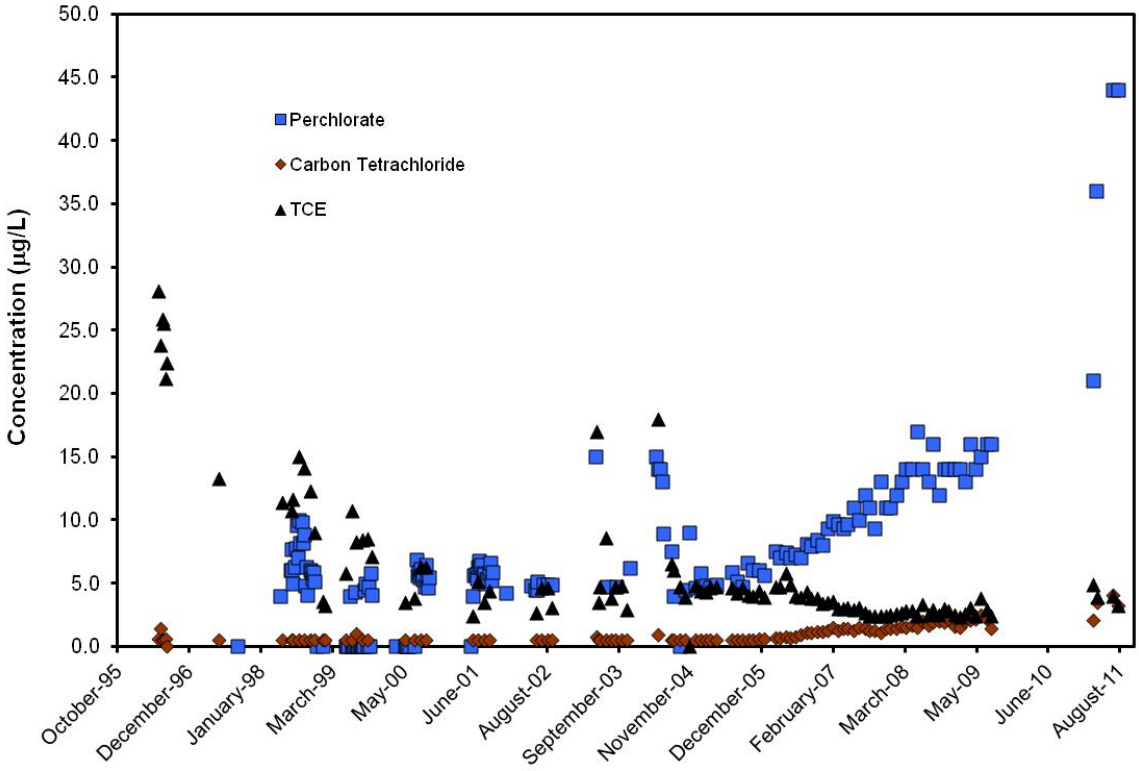

Figure 7-10. Carbon Tetrachloride, TCE, and Perchlorate Concentration Trends in LAWC#5

State and Federal drinking water standards are applicable for groundwater treated at the LAWC and MHTS that is discharged to the drinking water reservoirs. There have been no changes to the drinking water standards that would affect the protectiveness of the remedy. Based on this information, no new information has been identified that would affect the protectiveness of the remedy, and therefore the remedial action objectives and selected remedy remain valid for OU-3.

7.2.3 Question C: Has any other information come to light that could call into question the protectiveness of the remedy?

No additional information was identified during the five-year review process that would affect the protectiveness of the OU-3 remedy. Based on this technical assessment, the remedy at OU-3 is protective of human health and the environment, and the exposure pathways that could result in unacceptable risks are being controlled.

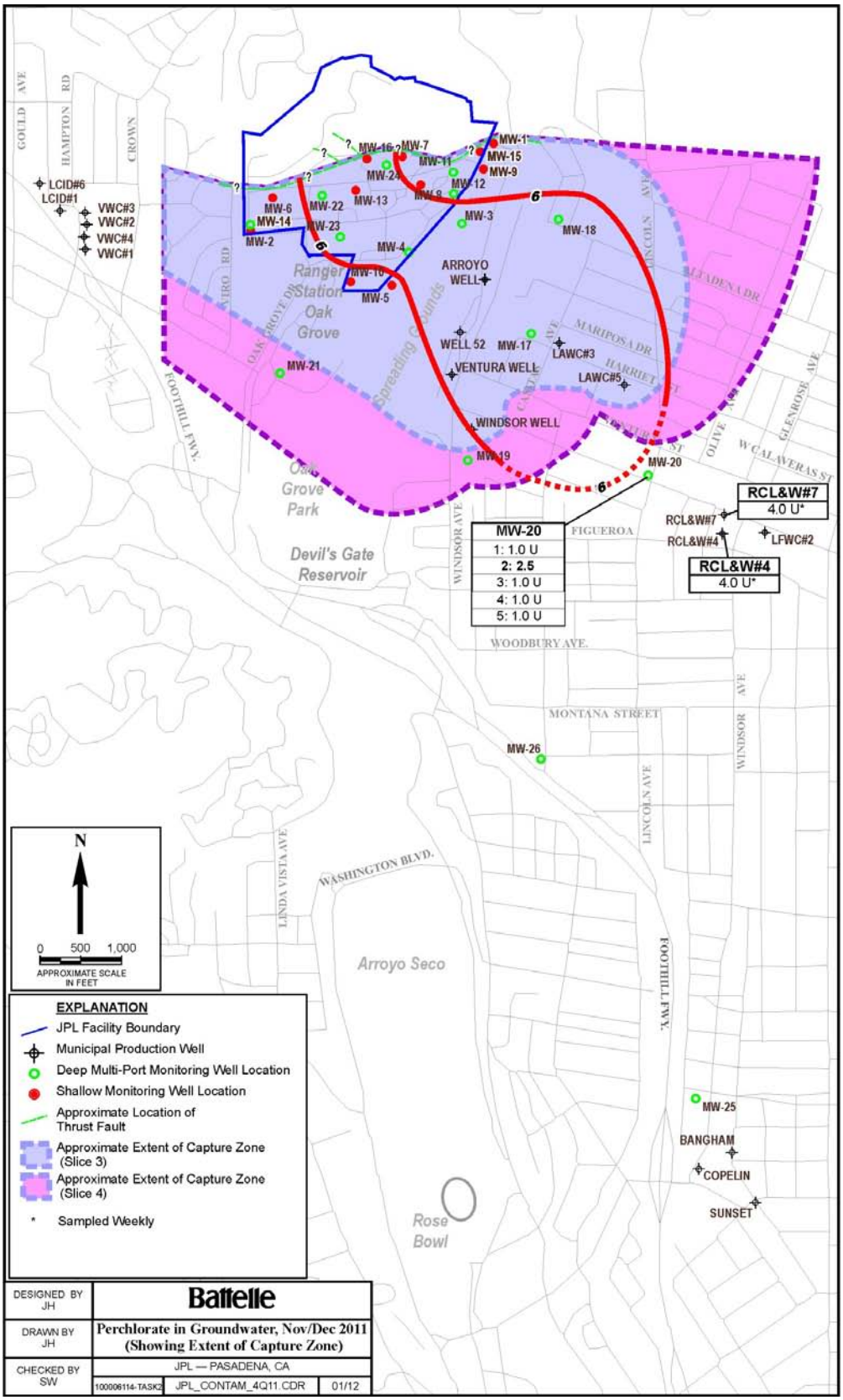

Figure 7-11. Capture Zones for the MHTS and LAWC Wells Relative to the Current Extent of Perchlorate in Groundwater Originating from JPL

8. ISSUES

No significant issues were identified with respect to remedy protectiveness during this five-year review period at the NASA JPL site. Two issues related to treatment system operation were noted as conditions that require additional observation and evaluation as the operation of the OU-1 and OU-3 treatment systems continue to operate. Recommendations to address each of these issues are presented in Section 9:

(1) As discussed in Section 7.2.1, perchlorate levels in LAWC#5 represent the highest level of perchlorate historically measured in LAWC#5. Future sampling results will be evaluated closely to monitor the perchlorate concentration trend at this well.

(2) In the MHTS, nitrosamines were detected from two wells (detected levels were below 10 ppt at Arroyo and Well 52) and in the ion exchange treatment effluent. Depending on the resin manufacture, pre-treatment process, and on-site handling and maintenance, one or more forms of nitrosamines may emit (leach) from the resin. Specifically, for NDBA, the levels varied from 11 to 110 ppt in the ion exchange effluent, but were non-detect at the four production wells (no NL is currently in place for NDBA). Nitrosamines leaching from virgin resins are typically the highest prior to running well water through it, and levels diminish rapidly thereafter as water flows. At system startup, the level was 110 ppt and had reduced to 11 ppt within a 24-hour period.

9. RECOMMENDATIONS AND FOLLOW-UP ACTIONS

This section presents recommendations to address issues related to the remedial system operation, as identified in Section 8. Table 9-1 summarizes the recommendations and follow-up actions, and provides implementation dates and the responsible parties.

(1) Evaluate future sampling results for LAWC#5 closely to monitor the perchlorate concentration trend at this well.

(2) The following actions are recommended to address the levels of nitrosamines potentially leaching from virgin ion exchange resin:

- Minimize the use of chlorinated water to flush the resin. When the treatment plant is fully permitted and operating, it may be possible to use treated water coming off the effluent of the LGAC treatment system and upstream of the disinfection system to flush the resin. This source water will be absent of disinfectant, thus reducing the formation of nitrosamines. However, there may be instances when the only source available is chlorinated water. In these instances, the flushing would be minimized based on the vendor's recommendation.

- Nitrosamine formation is highest for virgin resin. During initial startup, all four pairs of lead and lag ion exchange vessels are loaded with virgin resin. When the individual lead vessels are exhausted, resin replacement will occur. Since it is highly unlikely that all vessels will simultaneously require resin replacement, the nitrosamine in the combined effluent will be greatly reduced by blending the treated water from the vessels filled with virgin resin with the treated water from the remaining vessels.

- Pre-rinse newly installed resin prior to placing the vessel into service. The resin vendor will be required to provide recommendations for the volume of rinse water.

- Perform subsequent monitoring for nitrosamines.

- Develop best practices with the vendor for on-site maintenance activities to minimize the formation of nitrosamines.

- Incorporate language into the specifications for future resin replacement contracts that the supplier must pre-rinse the resin offsite. Pre-rinsing will remove some nitrosamines and will reduce the need for on-site flushing.

- Results of efforts to minimize nitrosamine leaching will be reported at the monthly CERCLA RPM meetings, as part of the treatment system performance update.

In addition, the following recommendation was developed to support optimization of the OU-1 treatment system operation:

(1) Recent monitoring data from the OU-1 treatment system indicate that the perchlorate concentration in EW-2 is approximately 80 µg/L. Evaluate future monitoring data closely in consideration of reducing or suspending extraction from this well if the perchlorate concentration trend continues to decrease.

Table 9-1. Summary of Recommendations and Follow-up Actions

Recommendation	Proposed Implementation Dates	Party(ies) Responsible
Evaluate future sampling results for LAWC#5 to monitor the perchlorate concentration trend at this well. The evaluation will be included in the next Technical Memorandum documenting performance of the LAWC treatment system.	April 2012; Weekly sampling during operation of LAWC#5 will continue.	NASA is responsible for the evaluation and the technical memorandum. LAWC is responsible for weekly sampling and reporting to DPH.
Minimize nitrosamine leaching from virgin resin at the MHTS by minimizing the use of chlorinated water to flush the resin; pre-rinse newly installed resin prior to placing the vessel into service; perform subsequent monitoring for nitrosamines; develop best practices with the vendor for on-site maintenance activities to minimize the formation of nitrosamines; and require that the vendor pre-rinse resin at an off-site location prior to placing it in the MHTS vessels.	Effectively immediately during loading of virgin ion exchange resin.	Pasadena Water and Power to lead development of new standard operating procedures. Results of efforts to minimize nitrosamine leaching will be reported at the monthly CERCLA RPM meetings, as part of the treatment system performance update.
Recent monitoring data from the OU-1 treatment system indicate that the perchlorate concentration in EW-2 is approximately 80 µg/L. Evaluate future monitoring data in consideration of reducing or suspending extraction from this well if the perchlorate concentration trend continues to decrease. The evaluation will be included in the subsequent semi-annual Technical Memoranda documenting performance of the OU-1 treatment system.	April 2012 and October 2012	NASA is responsible for the evaluation and the technical memoranda.

10. PROTECTIVENESS STATEMENTS

The interim remedies at both OU-1 and OU-3 evaluated in this Five-Year Review Report are protective of human health and the environment in the short term. Potential exposure pathways that could result in unacceptable risk (i.e., ingestion and contact with chemicals in groundwater) are being controlled through groundwater extraction and treatment by the MHTS and LAWC treatment systems. Both systems have routine monitoring programs in place to ensure chemicals are effectively removed. Treated water from both the MHTS and the LAWC systems is in compliance with all water quality requirements specified by Federal and state regulations, with concentrations below Federal and California MCLs. In order for the remedy to be protective in the long term, final remedies for OU-1 and OU-3 must be incorporated into a final decision document and implemented. It is anticipated that a Final ROD for groundwater will be issued prior to the next Five-Year Review and will include any active remedial actions and institutional controls necessary to provide long-term protection of human health and the environment. Both OU-1 and OU-3 are located in an adjudicated groundwater basin; therefore, all groundwater extractions in the basin are coordinated and monitored by the RBMB. No other wells are known to exist in the aquifer zones containing chemicals that originated from JPL.

.

11. NEXT REVIEW

The next five-year review for the NASA JPL site is required by February 2017, five years from the date of this review.

California Department of Public Health (DPH). 2011. Drinking Water Notification Levels. Web address: http://www.cdph.ca.gov/certlic/drinkingwater/Pages/NotificationLevels.aspx. May.

Dibblee, T.W., Jr. 1982. "Geology of the San Gabriel Mountains, Southern California." In *Geology and Mineral Wealth of the California Transverse Ranges*. D.L. Life and J.A. Minch, eds., South Coast Geological Society. pp. 131-147.

Ebasco. 1988. *Preliminary Assessment/ Site Inspection Report for Jet Propulsion Laboratory, Pasadena, California*. April.

Ebasco. 1990a. *Expanded Site Inspection Report for NASA-Jet Propulsion Laboratory, Pasadena, California*. May.

Ebasco. 1990b. *Supplemental Information to the Expanded Site Inspection Report for NASA-Jet Propulsion Laboratory, Pasadena, California*. December.

Ebasco. 1993. *Work Plan for Performing a Remedial Investigation/Feasibility Study for NASA-Jet Propulsion Laboratory, Pasadena, California*. November.

Foster Wheeler Environmental Corporation (FWEC). 1999. *Final Remedial Investigation Report for Operable Unit 2: Potential On-Site Contaminant Source Areas*. National Aeronautics and Space Administration, Jet Propulsion Laboratory, Pasadena, CA. November.

National Aeronautics and Space Administration (NASA). 2011a. *Technical Memorandum, Operable Unit 1 Source Area Treatment System Progress Report, March 2011 through August 2011, National Aeronautics and Space Administration, Jet Propulsion Laboratory, Pasadena, California*. October.

National Aeronautics and Space Administration (NASA). 2011b. *Operable Unit 3, Monk Hill Treatment System, Installation Report, National Aeronautics and Space Administration, Jet Propulsion Laboratory, Pasadena, California*. August.

National Aeronautics and Space Administration (NASA). 2009. *Technical Memorandum, Operable Unit 1 Source Area Groundwater Treatment System, Modifications to Performance and Compliance Monitoring, National Aeronautics and Space Administration, Jet Propulsion Laboratory, Pasadena, California*. July.

National Aeronautics and Space Administration (NASA). 2011c. *Technical Memorandum, Lincoln Avenue Water Company (LAWC) Treatment System, National Aeronautics and Space Administration, Jet Propulsion Laboratory, Pasadena, California*. May.

National Aeronautics and Space Administration (NASA). 2007a. *Interim Record of Decision for Operable Unit 1 Source Area Groundwater, National Aeronautics and Space Administration, Jet Propulsion Laboratory, Pasadena, California*. March.

National Aeronautics and Space Administration (NASA). 2007b. *Interim Record of Decision for Operable Unit 3 Off-Facility Groundwater, National Aeronautics and Space Administration, Jet Propulsion Laboratory, Pasadena, California*. August.

National Aeronautics and Space Administration (NASA). 2007c. *Final Remedial Action Report for Operable Unit 2, National Aeronautics and Space Administration, Jet Propulsion Laboratory, Pasadena, California*. March.

National Aeronautics and Space Administration (NASA). 2007d. *Technical Memorandum, CERCLA Five-Year Review Determination, National Aeronautics and Space Administration, Jet Propulsion Laboratory, Pasadena, California*. September.

National Aeronautics and Space Administration (NASA). 2004. *Action Memorandum for the Lincoln Avenue Water Company (LAWC), Altadena, California Associated with Groundwater Cleanup at the National Aeronautics and Space Administration, Jet Propulsion Laboratory, Pasadena, California*. August.

National Aeronautics and Space Administration (NASA). 2003. *JPL Groundwater Modeling Report, National Aeronautics and Space Administration, Jet Propulsion Laboratory, Pasadena, California*. December.

National Aeronautics and Space Administration (NASA). 2002. *Final Record of Decision and Remedial Action Plan for Operable Unit 2, National Aeronautics and Space Administration, Jet Propulsion Laboratory, Pasadena, California*. September.

Smith, D.P. 1986. *Geology of the North Half of the Pasadena Quadrangle, Los Angeles County, California*. California Division of Mines and Geology Open File Report 86-4 LA.

U.S. Environmental Protection Agency (U.S. EPA). 2011. "Interim Remedial Action Completion at Operable Unit 3 (OU3) Monk Hill Treatment System," Letter to Steve Slaten from EPA Region IX. September 12.

U.S. Environmental Protection Agency (U.S. EPA). 2001. *Comprehensive Five-Year Review Guidance*. EPA 540-R-01-007. June.

U.S. Environmental Protection Agency (U.S. EPA). 1992. "Permits and Permit 'Equivalency' Processes for CERCLA On-Site Response Actions." Memorandum from Henry L. Longest II, Director, Office of Emergency and Remedial Response. OSWER Directive No. 9355.7-03. February 19.

APPENDIX A

INTERVIEW RECORDS WITH LAWC AND PWP

Interview Questions for Five-Year Review of the NASA JPL CERCLA Project

Responses Provided By: Robert Hayward (LAWC)

Date: January 20, 2012

1. How would you describe NASA's community outreach efforts regarding the JPL CERCLA site?

   Response: Very effective. The community was informed and information was easily accessible.

2. How well has NASA responded to questions and issues raised by your customers and, specifically, by treatment plant neighbors?

   Response: Very well. Questions or concerns were addressed immediately.

3. How well has NASA involved the community in decision-making and design and construction issues for your treatment plants?

   Response: NASA has done a good job keeping the community involved in the operation of the treatment system.

4. What were the most useful forms of outreach NASA implemented or supported you in implementing?

   Response: Town Hall forums, mailers, and website information access.

5. How important was NASA community outreach and involvement to getting the remedies [treatment plant] implemented?

   Response: Very Important. The community is actively involved in issues that affect our area.

6. Are there additional actions you might recommend NASA do to ensure ongoing good community relations?

   Response: Continue addressing questions and comments as they arise.

7. Do you have any comments, suggestions, or recommendations regarding NASA's project management, impact on the community, or outreach activities?

   Response: None at this time.

Interview Questions for Five-year Review of the NASA JPL CERCLA Project

Responses Provided By: Brad Boman and Gary Takara (Pasadena Water and Power)

Date: January 20, 2012

1. How would you describe NASA's community outreach efforts regarding the JPL CERCLA site?

   Response: Good, pretty extensive, opportunities were provided for detailed information, website is more than enough for both MHTS and overall.

2. How well has NASA responded to questions and issues raised by your customers and, specifically, by treatment plant neighbors?

   Response: NASA went above and beyond legal requirements, got to know neighbors and specifically address their concerns.

3. How well has NASA involved the community in decision-making and design and construction issues for your treatment plants?

   Response: NASA helped PWP with 500' notification, partnership with PWP in meeting both NASA and City's environmental process, a team effort.

4. What were the most useful forms of outreach NASA implemented or supported you in implementing?

   Response: Shared renderings with public, so they can see what the system could look like, maybe not as bad as imagined. Early health (cancer) meetings were very positive in addressing community concerns.

5. How important was NASA community outreach and involvement to getting the remedies [treatment plant] implemented?

   Response: Very important in getting buy-in. Pasadena /Altadena are very active communities. Also, the outreach program was important for getting buy-in from decision makers in Pasadena, City and Town Councils.

6. Are there additional actions you might recommend NASA do to ensure ongoing good community relations?

   Response: Continue to communicate to public via newsletters.

7. Do you have any comments, suggestions, or recommendations regarding NASA's project management, impact on the community, or outreach activities?

   Response: PWP will need to continue to interact with NASA on ongoing and future operational challenges. To date, there has been good interaction between NASA and PWP technical staff, with open communication and collaborative problem solving.