US ENVIRONMENTAL PROTECTION AGENCY
REGION 10
WYCKOFF REPLACEMENT GROUNDWATER TREATMENT PLANT
TREATMENT PLANT AS-BUILT
DRAWINGS

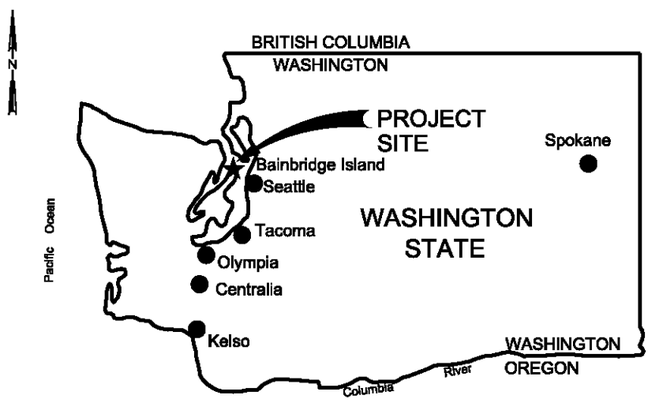

VICINITY MAP
NTS

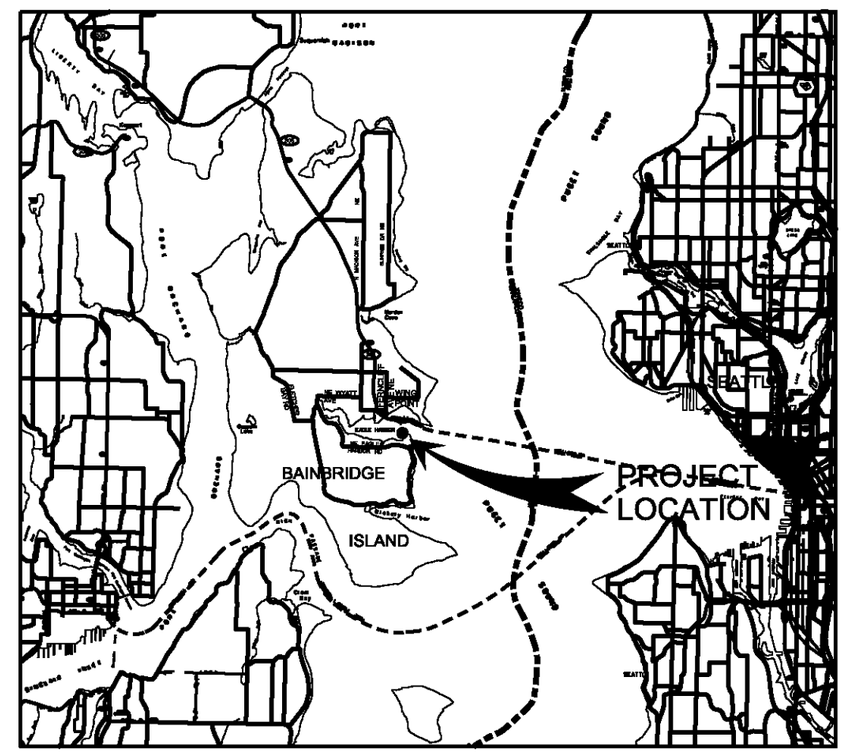

LOCATION MAP
NTS

AS-BUILT

DSGN ER BROWN					
DR ER BROWN	3	4/27/10	REVISED AS-BUILT	JB	ROW
CHK A CHANG	2	5/14/09	PRELIMINARY AS-BUILT	JB	ROW
APVD KT SCHEFFLER	1	3/4/09	AS-BUILT FIELD DATA - PRELIMINARY	JFF	GS
	NO.	DATE	REVISION	BY	APVD

VERIFY SCALE
BAR IS ONE INCH ON ORIGINAL DRAWING.
0 1"
IF NOT ONE INCH ON THIS SHEET, ADJUST SCALES ACCORDINGLY.

CH2MHILL

US ENVIRONMENTAL PROTECTION AGENCY
WYCKOFF GROUNDWATER TREATMENT PLANT
BAINBRIDGE ISLAND, WA

GENERAL
LOCATION AND VICINITY MAPS

SHEET	1
DWG	01-G-01
DATE	JANUARY 4 2006
PROJ	316783.FD.B

FILENAME: 01NG001D_316783.DGN PLOT DATE: 4/27/2010 PLOT TIME: 3:24:10 PM

INDEX TO DRAWINGS

		GENERAL - 01
1	01-G-01	LOCATION AND VICINITY MAPS
2	01-G-02	INDEX TO DRAWINGS
3	01-G-03	ABBREVIATIONS
4	01-G-04	CIVIL LEGENDS AND GENERAL NOTES
5	01-G-05	GENERAL STRUCTURAL NOTES
6	01-G-06	ARCHITECTURAL / STRUCTURAL GENERAL NOTES, LEGEND AND CODE NOTES
7	01-G-07	MECHANICAL LEGEND
8	01-G-08	BUILDING MECHANICAL LEGENDS
9	01-G-09	INSTRUMENTATION AND CONTROL LEGEND SHEET 1
10	01-G-10	INSTRUMENTATION AND CONTROL LEGEND SHEET 2
11	01-G-11	ELECTRICAL LEGEND AND ABBREVIATIONS SHEET 1
12	01-G-12	ELECTRICAL LEGEND SHEET 2
13	01-G-13	DESIGN DATA SUMMARY
14	01-G-14	PROCESS FLOW DIAGRAM
15	01-G-15	SIMPLIFIED PROCESS FLOW DIAGRAM AND MASS BALANCE
		SITE DEVELOPMENT - 05
16	05-C-100	CIVIL OVERALL SITE PLAN
17	05-CL-101	CIVIL LOCATION PLAN
18	05-CG-101	CIVIL GRADING PLAN
19	05-CY-101	CIVIL YARD PIPING PLAN
20	05-C-401	CIVIL DETAILS
21	05-C-402	CIVIL DETAILS
22	05-E-100	ELECTRICAL OVERALL SITE PLAN
		INSTRUMENTATION AND CONTROL - 08
23	08-I-01	P&ID PLANT INFLUENT
24	08-I-02	P&ID DISSOLVED AIR FLOTATION PACKAGE SYSTEM
25	08-I-03	P&ID DAF EFFLUENT PUMPING
26	08-I-04	P&ID MEDIA FILTERS
27	08-I-05	P&ID CARBON ADSORBERS
28	08-I-06	P&ID EFFLUENT
29	08-I-07	P&ID DAF FROTH TANK AND PRODUCT TANK
30	08-I-08	P&ID DIGESTER AND FILTER BACKWASH TANK
31	08-I-09	P&ID FILTER PRESS
32	08-I-10	P&ID STORMWATER TANK AND CONTAINMENT AREA
33	08-I-11	P&ID POLYMER SYSTEM / PLANT WATER AND PLANT AIR
34	08-I-12	CONTROL SYSTEM BLOCK DIAGRAM
35	08-I-13	TYPICAL CONTROL PANEL LAYOUT AND ELECTRICAL WIRING
36	08-I-14	TYPICAL ANALOG LOOP DIAGRAM
		TREATMENT FACILITY - 50
37	50-DAS-141	DEMOLITION ARCHITECTURAL / STRUCTURAL PLAN
38	50-DME-141	DEMOLITION MECHANICAL / ELECTRICAL PLAN
39	50-A-141	ARCHITECTURAL FLOOR PLAN
40	50-A-145	ARCHITECTURAL ENLARGED PLAN AND INTERIOR ELEVATIONS
41	50-A-151	ARCHITECTURAL PARTIAL REFLECTED CEILING PLAN, PARTIAL FINISH PLAN AND ROOF PLAN
42	50-A-201	ARCHITECTURAL SECTIONS AND DETAILS
43	50-A-301	ARCHITECTURAL ELEVATIONS
44	50-S-141	STRUCTURAL TREATMENT BUILDING FLOOR AND FOUNDATION PLAN
45	50-S-142	STRUCTURAL TANK FARM FOUNDATION PLAN
46	50-S-201	STRUCTURAL SECTIONS
47	50-S-202	STRUCTURAL TANK FARM SECTION
48	50-M-141	MECHANICAL TREATMENT BUILDING PLAN
49	50-M-142	MECHANICAL TANK FARM PLAN
50	50-M-201	MECHANICAL SECTIONS
51	50-M-202	MECHANICAL SECTIONS
52	50-M-203	MECHANICAL SECTIONS
53	50-M-204	MECHANICAL SECTIONS
54	50-M-205	MECHANICAL SECTIONS
55	50-M-206	MECHANICAL SECTIONS
56	50-M-207	MECHANICAL SECTION AND DETAIL
57	50-M-208	MECHANICAL SECTIONS
58	50-M-209	MECHANICAL SECTIONS
59	50-M-210	MECHANICAL SECTIONS
60	50-M-401	MECHANICAL DETAILS
61	50-M-402	MECHANICAL DETAILS
62	50-M-403	MECHANICAL DETAILS
63	50-M-404	MECHANICAL DETAILS
64	50-M-405	MECHANICAL DETAILS
65	50-M-406	MECHANICAL DETAILS
66	50-M-407	MECHANICAL DETAILS
67	50-H-141	HVAC PLAN
68	50-H-401	HVAC EQUIPMENT SCHEDULES AND SECTION
69	50-P-141	PLUMBING TREATMENT BUILDING SERVICE PIPING PLAN
70	50-P-142	PLUMBING TREATMENT BUILDING PROCESS DRAIN AND VENT PLAN
71	50-P-143	PLUMBING TANK FARM SERVICE PIPING PLAN
72	50-P-144	PLUMBING TANK FARM PROCESS DRAIN AND VENT PLAN
73	50-P-401	PLUMBING ENLARGED PLANS
74	50-P-402	PLUMBING DETAILS
75	50-FP-141	FIRE PROTECTION TREATMENT BUILDING FIRE DETECTION PLAN AND RISER DIAGRAM
76	50-E-141	ELECTRICAL TREATMENT BUILDING AND TANK FARM POWER PLANS
77	50-E-145	ELECTRICAL TREATMENT BUILDING AND TANK FARM LIGHTING PLANS
		ELECTRICAL - 98
78	98-E-501	OVERALL PLANT ONE-LINE DIAGRAM
79	98-E-502	ONE-LINE DIAGRAM AND MCC ELEVATION
80	98-E-503	CABLE BLOCK DIAGRAMS
81	98-E-504	CABLE BLOCK DIAGRAMS
82	98-E-505	CABLE BLOCK DIAGRAMS
83	98-E-506	CONTROL DIAGRAMS
84	98-E-507	CONTROL DIAGRAMS
85	98-E-508	CONTROL DIAGRAMS
86	98-E-509	LUMINAIRE SCHEDULE
87	98-E-510	PANEL SCHEDULES

AS-BUILT

DSGN ER BROWN					
DR ER BROWN	3	4/27/10	REVISED AS-BUILT	JB	ROW
CHK A CHANG	2	5/14/09	PRELIMINARY AS-BUILT	JB	ROW
APVD KT SCHEFFLER	1	3/4/09	AS-BUILT FIELD DATA - PRELIMINARY	JFF	GS
	NO.	DATE	REVISION	BY	APVD

VERIFY SCALE
BAR IS ONE INCH ON ORIGINAL DRAWING.
0 1"
IF NOT ONE INCH ON THIS SHEET, ADJUST SCALES ACCORDINGLY.

CH2MHILL

US ENVIRONMENTAL PROTECTION AGENCY
WYCKOFF GROUNDWATER TREATMENT PLANT
BAINBRIDGE ISLAND, WA

GENERAL
INDEX TO DRAWINGS

SHEET	2
DWG	01-G-02
DATE	JANUARY 4 2006
PROJ	316783.FD.B

FILENAME: 01NG002D_316783.DGN PLOT DATE: 4/27/10 PLOT TIME: 3:45:20 PM

ABBREVIATIONS

@	AT
AB	ANCHOR BOLT, AGGREGATE BASE
AC	ASPHALTIC CONCRETE
ACI	AMERICAN CONCRETE INSTITUTE
ACP	ASPHALT CONCRETE PAVEMENT
ACT	ACOUSTICAL TILE
ADDL	ADDITIONAL
ADH AB	ADHESIVE ANCHOR BOLT
ADJ	ADJACENT, ADJUSTABLE
AFF	ABOVE FINISH FLOOR
AFG	ABOVE FINISH GRADE
AHR	ANCHOR
AISC	AMERICAN INSTITUTE OF STEEL CONSTRUCTION
AL	ALUMINUM
ALTN	ALTERNATE
ANSI	AMERICAN NATIONAL STANDARDS INSTITUTE
AP	ANGLE POINT
APPROX	APPROXIMATELY
APVD	APPROVED
ARCH.	ARCHITECTURAL
ARV	AIR RELEASE VALVE
ARVTR	ACID RESISTANT VENT THRU ROOF
ASSY	ASSEMBLY
AUTO.	AUTOMATIC
AUX	AUXILIARY
AVG	AVERAGE
AWG	AMERICAN WIRE GAGE
AWWA	AMERICAN WATER WORKS ASSOCIATION
BC	BEGIN CURVE, BOTTOM CONTINUOUS
BD	BUTTERFLY DAMPER, BOARD
BETW	BETWEEN
BF	BLIND FLANGE, BOTTOM FACE
BFD	BUTTERFLY VALVE DAMPER
BFV	BUTTERFLY VALVE
BLDG	BUILDING
BM	BENCH MARK, BEAM
BO	BLOW OFF
BOB	BOTTOM OF BEAM
BOD	BOTTOM OF DUCT
BOP	BOTTOM OF PIPE
BOS	BOTTOM OF STEEL
BOT	BOTTOM
BRG	BEARING
BV	BALL VALVE
BVC	BEGINNING OF VERTICAL CURVE
C	CHANNEL (BEAM)
CAB.	CABINET
CAC	CONTACT ADSORPTION CLARIFIER
CAP.	CAPACITY
CB	CATCH BASIN
CC	CENTER OF CURVE
CCP	CONCRETE CYLINDER PIPE
CD	CONDENSE DRAIN
CFM	CUBIC FEET PER MINUTE
CFS	CUBIC FEET PER SECOND
CHEM	CHEMICAL
CHKD PL	CHECKERED PLATE
CI	CAST IRON
CIGC	CAST IRON GROOVED COUPLING
CIMJ	CAST IRON MECHANICAL JOINT
CIP	CAST IRON PIPE, CAST IN PLACE
CIRJ	CAST IRON RESTRAINED JOINT
CISP	CAST IRON SOIL PIPE
CJ	CONSTRUCTION JOINT
CLDI	CEMENT-LINED DUCTILE IRON
CLG	CEILING
CLR	CLEAR
CL	CENTERLINE, CLASS
CMP	CORRUGATED METAL PIPE
CMU	CONCRETE MASONRY UNIT
CO	CLEANOUT
COL	COLUMN
CONC	CONCRETE
CONN	CONNECTION
CONT	CONTINUOUS, CONTINUED, CONTINUATION
COORD	COORDINATE
COP.	COPPER
CP	CONTROL POINT
CPLG	COUPLING
CPVC	CHLORINATED POLYVINYL CHLORIDE
CRS	COLD ROLLED STEEL
CSP	CONCRETE SEWER PIPE
CTD	CENTERED
CTR	CENTER
C TO C	CENTER TO CENTER
CU	CUBIC
CULV	CULVERT
CV	CHECK VALVE
°C	DEGREES CELCIUS

D	PENNY (NAIL SIZE)
DBA	DEFORMED BAR ANCHOR
D	DRAIN, DEEP
DD	DIGESTER DRAIN
DBL	DOUBLE
DEC	DECANT
DEMO	DEMOLITION
DET	DETAIL
DI	DROP INLET, DUCTILE IRON
DIA	DIAMETER
DIAG	DIAGONAL
DIL	DILUTE
DIMJ	DUCTILE IRON MECHANICAL JOINT
DIP	DUCTILE IRON PIPE
DIPOL	DUCTILE IRON PIPE, FLANGED, GLASS LINED
DIR	DIRECTION
DIST	DISTANCE
DN	DOWN
DWG	DRAWING
E	EAST
EA	EACH
EC	END CURVE
ECC	ECCENTRIC
EF	EACH FACE, EXHAUST FAN
EFL	EFFLUENT
EIFS	EXTERIOR INSULATION AND FINISH SYSTEMS
EL	ELEVATION
ELB	ELBOW
ELC	ELECTRICAL LOAD CENTER
ELEC	ELECTRIC, ELECTRICAL
ENGR	ENGINEER
ENT	ENTERING
EO	EMERGENCY OVERFLOW
EQL SP	EQUALLY SPACED
EQPT	EQUIPMENT
EVC	END OF VERTICAL CURVE
EW	EACH WAY
EW,EF	EACH WAY, EACH FACE
EXC	EXCAVATE
EXH	EXHAUST
EXP	EXPOSED, EXPANSION
EXP JT	EXPANSION JOINT
EXST	EXISTING
EXT	EXTENSION
FB	FLAT BAR
FC	FLEXIBLE COUPLING
FCA	FLANGED COUPLING ADAPTER
FCO	FLOOR CLEANOUT
FD	FLOOR DRAIN
FDA	FLOOR DRAIN W/INTEGRAL TRAP
FDN	FOUNDATION
FES	FLARED END SECTION
F.EXT	FIRE EXTINGUISHER
FF	FINISH FLOOR
FG	FINISH GRADE
FHY	FIRE HYDRANT
FIG.	FIGURE
FLEX	FLEXIBLE
FLG	FLANGE
FLH	FLAT HEAD
FLL	FLOW LINE
FLR	FLOOR
FLTR	FILTER
FM	FORCE MAIN
FNSH	FINISH
FOB	FLAT ON BOTTOM
FOC	FACE OF CONCRETE
FOT	FLAT ON TOP
FRP	FIBERGLASS REINFORCED PLASTIC
FT	FOOT OR FEET
FTG	FOOTING
FWD	FORWARD
°F	DEGREES FAHRENHEIT
GA	GAGE
GAL	GALLON
GALV	GALVANIZED
GB	GRAB BAR
GC	GROOVED COUPLING
GCO	GRADE CLEANOUT
GCF	GROOVED COUPLING FITTING
GE	GROOVED END
GL	GLASS
GLDI	GLASS LINED DUCTILE IRON
GLB	GLULAM BEAM
GPD	GALLONS PER DAY
GPH	GALLONS PER HOUR
GPM	GALLONS PER MINUTE
GRTG	GRATING
GSP	GALVANIZED STEEL PIPE
GV	GATE VALVE
GVL	GRAVEL
GWB	GYPSUM WALLBOARD
GYP	GYPSUM

H	HIGH, HEIGHT
H.A.S.	HEADED ANCHOR STUD
HBU	HOLLOW BRICK UNIT
HD	HUB DRAIN
HDPE	HIGH DENSITY POLYETHYLENE
HDR	HEADER
HDW	HARDWARE
HGT	HEIGHT
HM	HOLLOW METAL
HORIZ	HORIZONTAL
HP	HORSEPOWER
HPT	HIGH POINT
HR	HANDRAIL, HOSE RACK
HRT	HYDRAULIC RETENTION TIME
HSS	HOLLOW STRUCTURAL SECTION
HV	HOSE VALVE
I&C	INSTRUMENTATION & CONTROL
IBC	INTERNATIONAL BUILDING CODE
ID	INSIDE DIAMETER
IE	INVERT ELEVATION
I.F.	INSIDE FACE
IN.	INCH
INFL	INFLUENT
INSTM	INSTRUMENTATION
INSUL	INSULATE, INSULATION
INTX	INTERSECTION
INVT	INVERT
JT	JOINT
KIP	THOUSAND POUNDS
KW	KILOWATT
L	LEFT, ANGLE, LENGTH
LAB	LABORATORY
LAT'L	LATERAL
LAV	LAVATORY
LB	POUNDS
LB/CU FT	POUNDS PER CUBIC FOOT
LF	LINEAR FEET
LG	LONG
LH	LEFT HAND
LLV	LONG LEG VERTICAL
LONG.	LONGITUDINAL
LPT	LOW POINT
LR	LONG RADIUS
LVG	LEAVING
MAX	MAXIMUM
MB	MACHINE BOLT
MCC	MOTOR CONTROL CENTER
MECH	MECHANICAL
MFR	MANUFACTURER
MGD	MILLION GALLONS PER DAY
MG/L	MILLIGRAMS PER LITER
MH	MANHOLE
MIL	MILLIMETER
MIN	MINIMUM, MINUTE
MISC	MISCELLANEOUS
MJ	MECHANICAL JOINT
MO	MASONRY OPENING
MSNRY	MASONRY
MTL	MATERIAL
MTS	MILL TYPE STEEL
MWS	MAXIMUM WATER SURFACE
N	NORTH
N/A	NOT APPLICABLE
NC	NORMALLY CLOSED
NIC	NOT IN CONTRACT
NO.	NUMBER, NUMBERING, NORMALLY OPEN
NPT	NATIONAL PIPE THREAD
NTS	NOT TO SCALE
OC	ON CENTER
OD	OUTSIDE DIAMETER, OVERFLOW DRAIN
O.F.	OUTSIDE FACE, OVERFLOW
OG	ORIGINAL GROUND
OPNG	OPENING
OPP	OPPOSITE
OSD	OPEN SITE DRAIN
O TO O	OUT TO OUT
OZ	OUNCE
PAH	POLYNUCLEAR AROMATIC HYDROCARBON
PC	POINT OF CURVE
PCP	PENTACHLOROPHENOL
PE	PLAIN END
PENT	PENETRATION
PI	POINT OF INTERSECTION
PJF	PREMOLDED JOINT FILLER
PL	PLATE, PROPERTY LINE
PLYWD	PLYWOOD
POT	POINT ON TANGENT

PPM	PARTS PER MILLION
PRC	POINT OF REVERSE CURVE
PRCST	PRECAST
PREFAB	PREFABRICATED
PRESS.	PRESSURE
PRI	PRIMARY
PROP.	PROPERTY
PSF	POUNDS PER SQUARE FOOT
PSI	POUNDS PER SQUARE INCH
PSIG	POUNDS PER SQUARE INCH, GAUGE
PT	POINT OF TANGENCY, PRESSURE TREATED
PV	PLUG VALVE
PVC	POLYVINYL CHLORIDE PLASTIC
PVCGS	POLYVINYL CHLORIDE PLASTIC-GRAVITY SEWER TYPE
PVCW	POLYVINYL CHLORIDE PLASTIC-WATER DISTRIBUTION SERVICE TYPE
PVMT	PAVEMENT
RAC	ROOM AIR CONDITIONER
R. RAD	RADIUS
RC	REINFORCED CONCRETE
RCP	REINFORCED CONCRETE PIPE
RCPP	REINFORCED CONCRETE PRESSURE PIPE
RD	ROAD, ROOF DRAIN
RDCR	REDUCER
REF	REFER OR REFERENCE
REINF	REINFORCED, REINFORCING, REINFORCE
REQD	REQUIRED
RH	RIGHTHAND, RODHOLE
RJ	RESTRAINED JOINT
RLS	RUBBER LINED STEEL
RM	ROOM
RO	ROUGH OPENING
RST	REINFORCING STEEL
RTN	RETURN
RV	ROOF VENT
R/W	RIGHT-OF-WAY
S	I-BEAM, SOUTH
SA	SAMPLE
SC	SOLID CORE
SCFH	STANDARD CUBIC FEET PER HOUR
SCFM	STANDARD CUBIC FEET PER MINUTE
SCH, SCHED	SCHEDULE
SD	STORM DRAIN, SOAP DISPENSER
SEC	SECONDARY
SECT	SECTION
SEW.	SEWAGE
SH	SHEET
SIM	SIMILAR
SLD	SLUDGE
SLP	SLOPE
SOLN	SOLUTION
SP	SPACE OR SPACES
SPD	SUMP PUMP DISCHARGE
SPEC	SPECIFICATIONS
SPG	SPACING
SPLY	SUPPLY
SQ	SQUARE
SQ FT	SQUARE FOOT
SQ IN	SQUARE INCH
SSH	SAFETY SHOWER
SST	STAINLESS STEEL
STA	STATION
STD	STANDARD
STIF	STIFFENER
STL	STEEL
STR	STRAIGHT
STRL	STRUCTURAL
STRUCT	STRUCTURE
SUBFL	SUBFLOOR
SUSP	SUSPEND, SUSPENDED
SYMM	SYMMETRICAL
S/W	SIDEWALK

T, TAN	TANGENT
TBG	TUBING
T&B	TOP AND BOTTOM
TC	TOP OF CURB, TOP CONTINUOUS
TDH	TOTAL DYNAMIC HEAD
TECH	TECHNICAL
TEL	TELEPHONE
TEMP	TEMPERATURE
TF	TOP FACE
T&G	TONGUE AND GROOVE
THD	THREAD
THK	THICK
TJB	TERMINAL JUNCTION BOX
TOP.	TOP OF
TOC	TOP OF CONCRETE
TOF	TOP OF FOOTING
TP	TURNING POINT
TRANS	TRANSITION
TRANSV	TRANSVERSE
TSS	TOTAL SUSPENDED SOLIDS
TST	TOP OF STEEL
TT	THRUST TIE
TW	TOP OF WALL
TYP	TYPICAL
UD	UNDERDRAIN
UH	UNIT HEATER (ELECTRIC)
UNO	UNLESS NOTED OTHERWISE
UP.	UNIT PROCESS
UR	URINAL
V	VENT, VOLT, VALVE
VAC	VACUUM
VAR	VENT ACID RESISTANT
VC	VERTICAL CURVE
VERT	VERTICAL
VPI	VERTICAL POINT OF INTERSECTION
VPS	VENEER PLASTER SYSTEM
VTR	VENT THRU ROOF
W/	WITH
W	WIDE FLANGE (BEAM), WEST
WC	WATER CLOSET
WD	WOOD
WH	WATER HEATER, WALL HEATER
WM	WATER METER
WR	WATER RESISTANT
WS	WATER SURFACE, WATER STOP
W SH ST	WEATHERING SHEET STEEL
WSP	WELDED STEEL PIPE
WTR	WATER
WW	WASHWATER
WWF	WELDED WIRE FABRIC
X	CROSS
YD	YARD
YR	YEAR

NOTES:

1. THIS IS A STANDARD LEGEND SHEET. SOME SYMBOLS OR ABBREVIATIONS MAY APPEAR ON THIS SHEET AND NOT ON THE DRAWINGS.
2. FOR FLOW STREAM IDENTIFICATION SEE PIPING SCHEDULE IN SPECIFICATION SECTION 15200 AND DRAWING 01-G-10.
3. FOR ADDITIONAL ABBREVIATIONS SEE THE FOLLOWING DRAWINGS:

HVAC	01-G-08
PLUMBING	01-G-08
I&C	01-G-09, 01-G-10
ELECTRICAL	01-G-11

4. CONTACT ENGINEER FOR ABBREVIATIONS NOT LISTED.

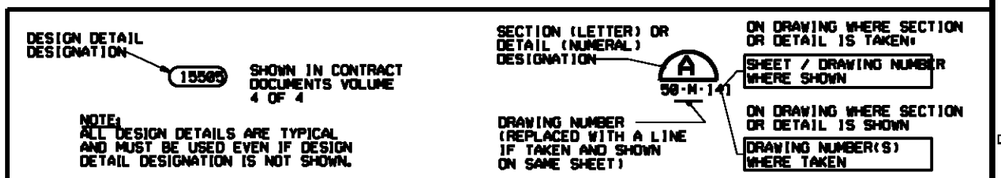

DESIGN DETAIL DESIGNATION

DETAIL AND SECTION DESIGNATION

AS BUILT

DSGN ER BROWN					
DR ER BROWN	3	4/27/10	REVISED AS-BUILT	JB	ROW
CHK A CHANG	2	5/14/09	PRELIMINARY AS-BUILT	JB	ROW
APVD KT SCHEEFLER	1	3/4/09	AS-BUILT FIELD DATA - PRELIMINARY	JFF	GS
	NO.	DATE	REVISION	BY	APVD

VERIFY SCALE
BAR IS ONE INCH ON ORIGINAL DRAWING.
0 1"
IF NOT ONE INCH ON THIS SHEET, ADJUST SCALES ACCORDINGLY.

CH2MHILL

US ENVIRONMENTAL PROTECTION AGENCY
WYCKOFF GROUNDWATER TREATMENT PLANT
BAINBRIDGE ISLAND, WA

GENERAL

ABBREVIATIONS

SHEET	3
DWG	01-G-03
DATE	JANUARY 4 2006
PROJ	316783.FD.B

FILENAME: 01NG003D_316783.DGN PLOT DATE: 4/27/2010 PLOT TIME: 4:02:01 PM

GENERAL SITE NOTES:

1. EXISTING TOPOGRAPHY, STRUCTURES, AND SITE FEATURES AND WORK BY OTHERS ARE SHOWN SCREENED AND/OR LIGHT-LINED. NEW FINISH GRADE, STRUCTURES, AND SITE FEATURES ARE SHOWN HEAVY-LINED.
2. MAINTAIN, RELOCATE, OR REPLACE EXISTING SURVEY MONUMENTS, CONTROL POINTS, AND STAKES WHICH ARE DISTURBED OR DESTROYED. PERFORM THE WORK TO PRODUCE THE SAME LEVEL OF ACCURACY AS THE ORIGINAL MONUMENT(S) IN A TIMELY MANNER, AND AT THE CONTRACTOR'S EXPENSE.
3. FOR LOCATION OF CONTROL POINT ON STRUCTURES, SEE CIVIL DRAWINGS, OTHERWISE COORDINATES SHOWN ARE TO OUTSIDE FACE OF WALL AT TOP OF FOOTING.
4. COORDINATES AND DIMENSIONS SHOWN FOR ROADWAY IMPROVEMENTS ARE TO EDGE OF SURFACING.
5. STAGING AREA SHALL BE FOR CONTRACTOR'S EMPLOYEE PARKING, CONTRACTOR'S TRAILERS AND ON-SITE STORAGE OF MATERIALS.
6. PROVIDE TEMPORARY FENCING AS NECESSARY TO MAINTAIN SECURITY AT ALL TIMES.
7. ELEVATIONS GIVEN ARE TO FINISH GRADE UNLESS OTHERWISE SHOWN.
8. SLOPE UNIFORMLY BETWEEN CONTOURS AND SPOT ELEVATIONS SHOWN.
9. UNLESS SHOWN OTHERWISE, ALL DISTURBED AREAS NOT RECEIVING A HARD SURFACE SHALL BE COVERED WITH GRASS OR OTHER APPROVED DUST AND EROSION CONTROL MEASURES.
10. CONTRACTOR SHALL BE RESPONSIBLE FOR IMPLEMENTING AND MAINTAINING EROSION AND DUST CONTROL DEVICES DURING CONSTRUCTION. CONTRACTOR SHALL TAKE ALL MEASURES TO POSITIVELY PRECLUDE EROSION MATERIALS FROM LEAVING THE SITE. SEE EROSION CONTROL DETAILS 2710, 2715, 2750 AND 2755.
11. CONTRACTOR SHALL PREPARE AND SUBMIT A GRADING, DRAINAGE, EROSION, SEDIMENTATION CONTROL (GDESC) PLAN IN ACCORDANCE WITH THE CITY OF BAINBRIDGE ISLAND DESIGN AND CONSTRUCTION STANDARDS AND SPECIFICATIONS PRIOR TO BEGINNING EARTH DISTURBING ACTIVITIES.

GENERAL YARD PIPING AND UTILITIES NOTES:

1. EXISTING UNDERGROUND UTILITIES OBTAINED FROM AS-BUILTS AND FROM FIELD SURVEY. CONTRACTOR SHALL FIELD VERIFY DEPTH AND LOCATION PRIOR TO EXCAVATION. PROTECT ALL EXISTING UTILITIES NOT DESIGNATED FOR REMOVAL DURING CONSTRUCTION.
2. FOR PIPING FLOW STREAM IDENTIFICATION, SEE DRAWING 01-G-10.
3. EXISTING PIPING AND EQUIPMENT, AND WORK BY OTHERS ARE SHOWN SCREENED AND/OR LIGHT-LINED. NEW PIPING AND EQUIPMENT ARE SHOWN HEAVY-LINED.
4. ALL PIPES SHALL HAVE A CONSTANT SLOPE BETWEEN CENTERLINE OR INVERT ELEVATIONS UNLESS A FITTING IS SHOWN.
5. ALL NEW WATER PIPES MUST BE PROPERLY FLUSHED, PRESSURE TESTED, CHLORINATED AND BACTERIOLOGICALLY TESTED, AS SPECIFIED AND AS REQUIRED BY GOVERNING JURISDICTION.
6. FOR TRENCHING AND BACKFILL, SEE 2310.
7. FOR PIPE CROSSINGS, USE CLSM IF REQUIRED PER DETAIL 2335.

GENERAL NOTE:

1. THIS IS A STANDARD LEGEND SHEET. THEREFORE, NOT ALL OF THE INFORMATION SHOWN MAY BE USED ON THIS PROJECT.

CIVIL LEGEND

EXISTING	THIS CONTRACT	
× 157.7	⊗ 158.5	SPOT ELEVATION
155	155	CONTOUR LINE
	3:1	EMBANKMENT AND SLOPE
		DRAINAGEWAY OR DITCH
		CATCH BASIN OR INLET
	OR	SIGN
		MANHOLE
		ELECTRICAL MANHOLE
		ELECTRIC HANDHOLE
		POST OR GUARD POST
		GUY ANCHOR
		FIRE HYDRANT
		UTILITY POLE
		LIGHT POLE
		BENCH MARK
		SURVEY CONTROL POINT OR POINT OF INTERSECTION
		BRUSH/TREE LINE
		TREE
		PROPERTY LINE
		CENTER LINE, BUILDING, ROAD, ETC.
		STAGING OR WORK AREA LIMITS
	N 1000.00 E 1000.00	STRUCTURE, BUILDING OR FACILITY LOCATION POINT - COORDINATES
	B-1	BORING LOCATION AND NUMBER
	TP-2	TEST PIT LOCATION AND NUMBER
	P-3	PIEZOMETER LOCATION AND NUMBER
OR OR		DEMOLITION
OR	OR	STRUCTURE, BUILDING OR FACILITY
		ASPHALT CONCRETE PAVEMENT
		GRAVEL SURFACING
		CONCRETE PAVEMENT
		CURB
		CURB AND GUTTER
		SINGLE SWING GATE
		DOUBLE SWING GATE
		SLIDING GATE
		GUARD RAIL
		CHAIN LINK FENCE
		ARCHITECTURAL FENCE
		WIRE FENCE
		CULVERT

AS-BUILT

YARD PIPING LEGEND

EXISTING	THIS CONTRACT	
		NOMINAL PIPE DIAMETER
		PIPE USE IDENTIFICATION
8" PE	8" PE	PIPING
		PIPING
		EXISTING PIPE TO BE ABANDONED
		EXISTING PIPE TO BE REMOVED
		NON-FREEZE HOSE VALVE (V-X) X = NO. IN SPECIFICATIONS
		NON-FREEZE HOSE VALVE WITH HOSE RACK (V-X) X = NO. IN SPECIFICATIONS
		INDICATOR POST VALVE
		GATE VALVE AND VALVE BOX
		BUTTERFLY VALVE AND VALVE BOX
		PLUG VALVE AND VALVE BOX
		FLEXIBLE COUPLING
		90° ELBOW UP
		90° ELBOW DOWN
		BEND < 90° UP
		BEND < 90° DOWN
		CONCENTRIC REDUCER
		CAP OR PLUG
		CLEANOUT
		FIRE HYDRANT
		PLUG AND ABANDON
		PLUG AND ABANDON

DSGN D.J.PETERSON						VERIFY SCALE
DR DC.EVANS	3	4/27/10	REVISED AS-BUILT	JB	ROW	BAR IS ONE INCH ON ORIGINAL DRAWING. 0 1" IF NOT ONE INCH ON THIS SHEET, ADJUST SCALES ACCORDINGLY.
CHK WB.WAGNER	2	5/14/09	PRELIMINARY AS-BUILT	JB	ROW	
	1	3/4/09	AS-BUILT FIELD DATA - PRELIMINARY	JFF	GS	
APVD KT.SCHEFFLER	NO.	DATE	REVISION	BY	APVD	

CH2MHILL

US ENVIRONMENTAL PROTECTION AGENCY
WYCKOFF GROUNDWATER TREATMENT PLANT
BAINBRIDGE ISLAND, WA

GENERAL

CIVIL LEGENDS AND GENERAL NOTES

SHEET	4
DWG	01-G-04
DATE	JANUARY 4 2006
PROJ	316783.FD.B

FILENAME: 01NG004D_316783.DGN PLOT DATE: 4/27/2010 PLOT TIME: 4:08:28 PM

GENERAL STRUCTURAL NOTES

DESIGN CRITERIA:

1. ALL MATERIALS AND WORKMANSHIP SHALL CONFORM TO THE INTERNATIONAL BUILDING CODE, 2003 EDITION (I.B.C.) AS AMENDED BY THE STATE OF WASHINGTON AND LOCAL AGENCIES.

2. DESIGN LOADS:

   LIVE LOADS:

PROCESS AREAS	= 200 PSF
ELECTRICAL ROOMS	= 300 PSF
OFFICE/LAB AREAS	= 100 PSF
ACCESS PLATFORMS	= 100 PSF
VEHICULAR TRAFFIC	AASHTO HS 20

   SNOW LOAD CRITERIA:

GROUND SNOW LOAD Pg	= 25 PSF
EXPOSURE FACTOR Ce	= 0.9
IMPORTANCE FACTOR Is	= 1.1
ROOF SNOW LOAD	N/A, EXISTING ROOF

   WIND LOAD CRITERIA:

WIND SPEED	= 90 MPH
EXPOSURE	= D
IMPORTANCE FACTOR Iw	= 1.15

   SEISMIC CRITERIA:

   BEDROCK ACCELERATION, 2% IN 50 YEARS:

SS	= 1.55G
S1	= 0.53G
SOIL PROFILE TYPE	= D

   DESIGN GROUND SURFACE ACCELERATION:

SDS	= 1.03G
SD1	= 0.53G
SEISMIC USE GROUP	= II
IMPORTANCE FACTOR Ie	= 1.25
SEISMIC DESIGN CATEGORY	D

3. REFER TO INDIVIDUAL STRUCTURE DRAWINGS FOR ADDITIONAL LOADS, NOTES, AND REQUIREMENTS.

4. NET ALLOWABLE SOIL BEARING PRESSURE = 3000 PSF
   EQUIVALENT DRAINED AT-REST FLUID PRESSURE 58 PCF
   EQUIVALENT DRAINED ACTIVE FLUID PRESSURE 36 PCF
   EQUIVALENT UNDRAINED AT-REST FLUID PRESSURE PCF
   EQUIVALENT UNDRAINED ACTIVE FLUID PRESSURE 2 PCF
   DESIGN GROUND WATER EL 20.0.

5. DATUM: SEE SITE DRAWINGS.

GENERAL INFORMATION:

1. FOR ABBREVIATIONS NOT LISTED, SEE "ABBREVIATIONS FOR USE ON DRAWINGS AND TEXT", PUBLISHED BY THE AMERICAN NATIONAL STANDARDS INSTITUTE INC. (ANSI).

2. DESIGN DETAILS AS SHOWN ON THE DRAWINGS ARE INTENDED TO BE TYPICAL AND SHALL APPLY TO ALL SIMILAR SITUATIONS OCCURRING ON THE PROJECT, WHETHER OR NOT THEY ARE KEYED IN EACH LOCATION. CONSULT THE ENGINEER FOR REVIEW PRIOR TO CONSTRUCTION.

3. DETAILING AND DIMENSIONS OF EXISTING STRUCTURES SHOWN ARE BASED ON RECORD DRAWINGS, AND DO NOT NECESSARILY REPRESENT THE AS-CONSTRUCTED CONDITIONS. THE CONTRACTOR SHALL FIELD VERIFY DIMENSIONS AND DETAILING OF THE EXISTING STRUCTURES PRIOR TO CONSTRUCTION.

4. VERIFY ALL OPENING DIMENSIONS IN WALLS, SLABS, AND DECKS WITH THE ARCHITECTURAL, MECHANICAL, AND ELECTRICAL DRAWINGS.

5. FOR NUMBER, TYPE, SIZE, ARRANGEMENT, AND/OR LOCATION OF EQUIPMENT PADS SEE OTHER DISCIPLINE DRAWINGS. COORDINATE WITH EQUIPMENT SUPPLIER PRIOR TO PLACING SLABS, WALLS, AND FOUNDATIONS. COORDINATE PIPING OPENINGS WITH OTHER DISCIPLINE DRAWINGS.

6. NO STRUCTURAL MEMBERS SHALL BE CUT FOR PIPES, DUCTS, ETC, UNLESS SPECIFICALLY DETAILED OR APPROVED IN WRITING BY THE ENGINEER.

7. VISITS TO THE JOB SITE BY THE ENGINEER TO OBSERVE THE CONSTRUCTION DO NOT IN ANY WAY MEAN THAT THEY ARE GUARANTORS OF THE CONSTRUCTOR'S WORK, NOR RESPONSIBLE FOR COMPREHENSIVE OR SPECIAL INSPECTIONS, COORDINATION, SUPERVISION, NOR SAFETY AT THE JOB SITE.

8. SPECIAL INSPECTION (OWNER FURNISHED) IS REQUIRED IN ACCORDANCE WITH 2003 IBC ON THE FOLLOWING PORTIONS OF THE WORK:
   - CONCRETE PLACEMENT
   - REINFORCING STEEL PLACEMENT
   - STRUCTURAL WELDING
   - ANCHORS, EMBEDS AND BOLTS INSTALLED IN CONCRETE
   - CONCRETE ANCHORS
   - GRADING, EXCAVATION, AND FILLING
   - OTHER NOTED ITEMS

   SEE SECTION 01370 FOR DETAILED REQUIREMENTS.

9. SPECIFIED FIELD MATERIAL TESTING DURING CONSTRUCTION SHALL BE OWNER FURNISHED. SPECIFIED LABORATORY TEST MIXES SHALL BE THE RESPONSIBILITY OF THE CONTRACTOR.

FOUNDATIONS:

1. REFER TO GEOTECHNICAL NARRATIVE, SECTION 12 IN THE SCHEMATIC DESIGN REPORT DATED SEPTEMBER 2004, FOR COMPLETE INFORMATION.

2. ALL FOUNDATION SLABS, SLABS-ON-GRADE, AND WALL FOUNDATIONS SPECIFICALLY NOTED TO BE ON FILL SHALL BEAR ON COMPACTED GRANULAR FILL AS SPECIFIED.

3. ALL FOUNDATION BEARING SURFACES SHALL BE INSPECTED BY THE GEOTECHNICAL ENGINEER PRIOR TO PLACEMENT OF FORMS OR REINFORCING STEEL.

4. NO BACKFILL SHALL BE PLACED BEHIND CANTILEVERED, FREE TOP WALLS UNTIL THE CONCRETE HAS ATTAINED 100% OF ITS SPECIFIED COMPRESSIVE STRENGTH.

5. NO BACKFILL SHALL BE PLACED BEHIND TOP-SUPPORTED WALLS UNTIL THE WALL AND TOP SLAB CONCRETE HAVE ATTAINED 80% OF THEIR SPECIFIED COMPRESSIVE STRENGTH.

6. EXCAVATIONS SHALL BE SHORED AS REQUIRED TO PREVENT SUBSIDENCE OR DAMAGE TO ADJACENT EXISTING STRUCTURES, STREETS, UTILITIES, ETC.

FORMWORK, SHORING AND BRACING:

1. CONSTRUCTION SHORING AND BRACING OF FORMWORK SHALL BE IN ACCORDANCE WITH CHAPTER 4 OF ACI 301 "SPECIFICATIONS FOR STRUCTURAL CONCRETE FOR BUILDINGS" AND ACI 347 "RECOMMENDED PRACTICE FOR CONCRETE FORMWORK".

2. THE STRUCTURES SHOWN ON THE DRAWINGS HAVE BEEN DESIGNED FOR STABILITY UNDER FINAL CONDITIONS ONLY. THESE PLANS DO NOT INCLUDE THE NECESSARY COMPONENTS OR EQUIPMENT FOR THE STRUCTURES DURING CONSTRUCTION. THE CONTRACTOR IS RESPONSIBLE FOR ALL WORK RELATING TO CONSTRUCTION ERECTION METHODS, BRACING, SHORING, RIGGING, GUYS, SCAFFOLDING, FORMWORK, AND OTHER WORK AIDS REQUIRED TO SAFELY PERFORM THE WORK SHOWN.

3. WALLS TIED TO ELEVATED FLOOR OR ROOF SLABS SHALL BE BRACED AND REMOVAL OF BRACING FOLLOWED BY BACKFILLING SHALL NOT BE ALLOWED UNTIL THE SLAB IS COMPLETE AND HAS ATTAINED 80% OF ITS SPECIFIED COMPRESSIVE STRENGTH.

4. TEMPORARY SHORING SHALL REMAIN IN PLACE UNTIL ELEVATED CONCRETE FLOOR OR ROOF SLABS HAVE REACHED 28 DAY DESIGN STRENGTH AS DETERMINED BY CYLINDER BREAKS.

CONCRETE:

1. ALL CAST-IN-PLACE CONCRETE SHALL HAVE A MINIMUM 28 DAY COMPRESSIVE STRENGTH OF 4000 PSI.

2. REINFORCING STEEL SHALL CONFORM TO ASTM A615, GRADE 60. FABRICATION AND PLACEMENT OF REINFORCING STEEL SHALL BE IN ACCORDANCE WITH CRSI MSP-1 "MANUAL OF STANDARD PRACTICE" AND ACI 301 "SPECIFICATIONS FOR STRUCTURAL CONCRETE FOR BUILDING".

3. CONSTRUCTION JOINTS INDICATED ARE SUGGESTED LOCATIONS. CONTRACTOR MAY REVISE LOCATION OF JOINTS, SUBJECT TO SPECIFIED REQUIREMENTS, AND SHALL SUBMIT ALL JOINT LOCATIONS FOR REVIEW BY THE ENGINEER. ADDITIONAL CONSTRUCTION JOINT LOCATIONS, AS REQUIRED FOR CONSTRUCTION, SHALL BE SUBMITTED FOR REVIEW.

4. CONTINUOUS WATERSTOP AS SPECIFIED SHALL BE INSTALLED IN ALL CONSTRUCTION JOINTS IN WALLS OF WATER HOLDING BASINS, CHANNELS, AND BELOW GRADE STRUCTURES, EXCEPT WHERE SPECIFICALLY NOTED OTHERWISE.

5. ROUGHEN AND CLEAN ALL CONSTRUCTION JOINTS IN WALLS AND SLABS AS SPECIFIED PRIOR TO PLACING ADJACENT CONCRETE. SANDBLASTING OR OTHER PREPARATION OF HORIZONTAL AND VERTICAL JOINTS IS REQUIRED.

6. THE CONTRACTOR SHALL COORDINATE PLACEMENT OF ALL OPENINGS, CURBS, DOWELS, SLEEVES, CONDUITS, BOLTS AND INSERTS PRIOR TO PLACEMENT OF CONCRETE.

7. NO ALUMINUM CONDUIT OR PRODUCTS CONTAINING ALUMINUM OR ANY OTHER MATERIAL INJURIOUS TO THE CONCRETE SHALL BE EMBEDDED IN THE CONCRETE.

CONCRETE REINFORCING

1. THE MINIMUM REINFORCING FOR ALL CONCRETE WALLS AND SLABS SHALL BE AS FOLLOWS:

WALL THICKNESS	REINF EACH WAY	LOCATION
6"	#4@12"	CENTERED
8"	#5@12"	CENTERED
10"	#4@12"	EACH FACE
12"	#5@12"	EACH FACE

   PROVIDE LARGER SIZES AND MORE REINFORCING IN ALL SECTIONS OF CONCRETE WHERE REQUIRED BY THE DETAILS ON THE DRAWINGS OR BY THE SPECIFICATIONS.

2. CLEARANCE FOR REINFORCEMENT BARS, UNLESS SHOWN OTHERWISE, SHALL BE:
   - WHEN PLACED ON GROUND ——— 3"
   - ALL OTHER CONCRETE SURFACES:
     - #5 BAR OR SMALLER ——— 1 1/2"
     - #6 BAR OR LARGER ——— 2"

CONCRETE REINFORCING (CON'T.)

3. REFER TO WALL CORNER AND WALL INTERSECTION REINFORCING DETAILS 3303. IN GENERAL, THE WALL CORNER REINFORCING SIZES AND SPACINGS SHALL BE CALLED OUT ON THE PLANS AND REFERENCED TO THESE DETAILS AND THE TYPICAL HORIZONTAL WALL REINFORCING SHALL LAP WITH THE CORNER HORIZONTAL REINFORCING.

4. ALL BENDS, UNLESS OTHERWISE SHOWN, SHALL BE A 90 DEGREE STANDARD BEND AS DEFINED IN LATEST EDITION OF ACI 318.

5. ALL WALL CORNER AND WALL INTERSECTION REINFORCEMENT BARS SHALL BE CONTINUOUS AROUND CORNERS AND THROUGH COLUMNS OR PILASTERS. REINFORCEMENT SHALL BE EXTENDED INTO CONNECTING WALLS AND LAPPED ON THE OPPOSITE FACE OF THE CONNECTING WALLS, AS INDICATED ELSEWHERE ON THIS SHEET.

6. VERTICAL WALL BARS SHALL BE LAPPED WITH DOWELS FROM BASE SLABS AND EXTENDED INTO THE TOP FACE OF ROOF SLABS AND LAPPED WITH TOP SLAB REINFORCEMENT. FOR HYDRAULIC STRUCTURES, PROVIDE A MINIMUM OF TWO FULL HEIGHT VERTICAL BARS WITH MATCHING DOWELS AT WALL ENDS, CORNERS AND INTERSECTIONS WITH SIZE TO MATCH TYPICAL VERTICAL REINFORCING STEEL SHOWN OR REQUIRED BY NOTES ABOVE.

7. UNLESS INDICATED OTHERWISE, CONTRACTOR MAY SPLICE CONTINUOUS SLAB OR LONGITUDINAL BEAM BARS AT LOCATIONS OF HIS CHOOSING, EXCEPT THAT TOP BAR SPLICES SHALL BE LOCATED AT MIDSPAN AND BOTTOM BAR SPLICES SHALL BE LOCATED AT SUPPORTS. ALL REINFORCEMENT BENDS AND LAPS, UNLESS OTHERWISE NOTED, SHALL SATISFY THE FOLLOWING MINIMUM REQUIREMENTS:

CONCRETE DESIGN STRENGTH = 4,000 PSI GRADE 60 REINFORCING STEEL										
BAR SIZE (ENGLISH)		#3	#4	#5	#6	#7	#8	#9	#10	#11
BAR SIZE (SOFT METRIC)		#13	#16	#19	#22	#25	#29	#32	#36	
LAP SPLICE LENGTH										
SPACING<6"	TOP BAR#	1'-4"	2'-0"	3'-0"	4'-0"	5'-10"	6'-8"	7'-7"	8'-6"	9'-5"
	OTHER BAR	1'-4"	1'-8"	2'-4"	3'-1"	4'-6"	5'-2"	5'-10"	6'-7"	7'-3"
SPACING>6"	TOP BAR#	1'-4"	1'-6"	2'-0"	2'-5"	3'-6"	4'-0"	5'-0"	6'-2"	7'-5"
	OTHER BAR	1'-4"	1'-4"	1'-7"	1'-10"	2'-9"	3'-1"	3'-10"	4'-9"	5'-8"
EMBEDMENT LENGTH										
SPACING<6"	TOP BAR#	1'-0"	1'-8"	2'-4"	3'-1"	4'-6"	5'-2"	5'-10"	6'-7"	7'-3"
	OTHER BAR	1'-0"	1'-3"	1'-9"	2'-5"	3'-6"	4'-0"	4'-6"	5'-1"	5'-7"
SPACING>6"	TOP BAR#	1'-0"	1'-3"	1'-7"	1'-10"	2'-9"	3'-1"	3'-10"	4'-9"	5'-8"
	OTHER BAR	1'-0"	1'-0"	1'-3"	1'-5"	2'-1"	2'-5"	3'-0"	3'-8"	4'-5"

\# TOP BARS SHALL BE DEFINED AS ANY HORIZONTAL BARS PLACED SUCH THAT MORE THAN 12" OF FRESH CONCRETE IS CAST IN THE MEMBER BELOW THE BAR IN ANY SINGLE POUR. HORIZONTAL WALL BARS ARE CONSIDERED TOP BARS.

STRUCTURAL AND MISCELLANEOUS STEEL:

1. ALL STRUCTURAL STEEL SHALL CONFORM TO ASTM A-36 UNLESS SHOWN OTHERWISE. SQUARE OR RECTANGULAR STEEL TUBING SHALL CONFORM TO ASTM A-500, GRADE B. STEEL PIPE SHALL BE A501 OR ASTM A53, GRADE B.

2. ALL STRUCTURAL STEEL SHALL BE FABRICATED AND ERECTED IN CONFORMANCE WITH THE AISC MANUAL OF STEEL CONSTRUCTION, CURRENT EDITION.

3. ALL BOLTS SHALL BE HIGH STRENGTH BOLTS CONFORMING TO ASTM A325-N (OR A325-SC WHERE INDICATED) UNLESS OTHERWISE SHOWN. BOLTS INDICATED AS MACHINE BOLTS (MB) OR ANCHOR BOLTS (AB) SHALL CONFORM TO ASTM A307 FOR CARBON STEEL, A193 FOR STAINLESS STEEL, AND A153 FOR GALVANIZED STEEL EXCEPT WHERE SPECIFICALLY INDICATED OTHERWISE. ALL JOINT CONTACT SURFACES SHALL BE CLEAN AND FREE FROM OIL, DIRT AND PAINT.

4. ALL WELDS SHALL BE DONE BY AWS CERTIFIED WELDERS AND SHALL CONFORM TO AWS D 1.1, LATEST EDITION. ALL BUTT WELDS ARE FULL PENETRATION UNLESS INDICATED OTHERWISE. WELD FILLER METAL SHALL BE AWS A5.1 OR A5.5 E70XX ELECTRODES.

5. ALL WELDS FOUND DEFECTIVE SHALL BE REPAIRED AND/OR REPLACED AND RETESTED FOR ADEQUACY AT THE CONTRACTOR'S EXPENSE.

6. AT ALL FIELD WELDS, AT EMBED PLATES, AND ANGLES, LOW HEAT AND INTERMITTENT WELDS SHALL BE UTILIZED TO AVOID SPALLING OR CRACKING THE EXISTING CONCRETE.

7. ALL STRUCTURAL STEEL TO BE EMBEDDED IN CONCRETE SHALL BE CLEAN AND FREE OF PAINT, OIL OR DIRT.

8. NO HOLES OTHER THAN THOSE SPECIFICALLY DETAILED SHALL BE ALLOWED THROUGH STRUCTURAL STEEL MEMBERS. NO CUTTING OR BURNING OF STRUCTURAL STEEL WILL BE PERMITTED WITHOUT THE APPROVAL OF THE ENGINEER.

AS-BUILT

DSGN RA HORNING					
DR ER BROWN	3	4/27/10	REVISED AS-BUILT	JB	ROW
CHK SM FREY	2	5/14/09	PRELIMINARY AS-BUILT	JB	ROW
APVD KT SCHEFFLER	1	3/4/09	AS-BUILT FIELD DATA - PRELIMINARY	JFF	GS
	NO.	DATE	REVISION	BY	APVD

VERIFY SCALE
BAR IS ONE INCH ON ORIGINAL DRAWING.
0 1"
IF NOT ONE INCH ON THIS SHEET, ADJUST SCALES ACCORDINGLY.

CH2MHILL

US ENVIRONMENTAL PROTECTION AGENCY
WYCKOFF GROUNDWATER TREATMENT PLANT
BAINBRIDGE ISLAND, WA

GENERAL
GENERAL STRUCTURAL NOTES

SHEET	5
DWG	01-G-05
DATE	MARCH 2006
PROJ	316783.FD.B

FILENAME: 01NG005D_316783.DGN PLOT DATE: 4/27/2010 PLOT TIME: 4:38:07 PM

GENERAL STRUCTURAL NOTES - CONTINUED

LIGHT GAUGE STEEL FRAMING

1. STUDS SHALL BE DESIGNED, FABRICATED AND ERECTED IN ACCORDANCE WITH THE STANDARD SPECIFICATIONS OF THE AMERICAN IRON STEEL INSTITUTE.

   MANUFACTURER SHALL DESIGN THE STUDS FOR THE FOLLOWING LOADS:

   SUPERIMPOSED LIVE LOAD - 40 PSF

   SUPERIMPOSED DEAD LOAD
   - A. METAL DECK - 2 PSF
   - B. MECH/ELEC/PIPING - 10 PSF
   - C. MISCELLANEOUS - 2 PSF

2. THE SUPERIMPOSED DEAD LOADS INDICATED ARE A MINIMUM DESIGN LOAD BUT SHALL NOT BE CONSTRUED TO BE ALL THE DEAD LOADS THAT COULD BE ON THE MEMBERS. THE DRAWINGS SHALL BE REVIEWED AND ANY DEAD LOADS INFERRED BY THE PLANS SHALL BE INCLUDED IN THE DESIGN, WHICH WOULD BE INCLUDED IN COMMON PRACTICE, INCLUDING LOADS FROM EQUIPMENT AND ANY LOADS FROM THE CONTRACTOR'S OPERATION.

3. STUD SIZES INDICATED ON THE PLANS ARE MINIMUM SIZES ONLY. FINAL DESIGN BY THE MANUFACTURER MAY RESULT IN A LARGER SIZE BEING REQUIRED.

4. PROVIDE CALCULATIONS, PRODUCT DATA, MATERIAL PROPERTIES, CONNECTION DETAILS, ETC FOR ALL TYPES OF FRAMING. CALCULATIONS SHALL BE STAMPED AND SIGNED BY AN ENGINEER REGISTERED IN THE STATE OF THE PROJECT.

5. BRACING, AND OTHER ACCESSORIES SHALL BE PER THE MANUFACTURER'S STANDARDS AND AS INDICATED ON THE DRAWINGS. PERMANENTLY BRACE FRAMING AT SPACING RECOMMENDED BY THE MANUFACTURER, UNLESS SPECIFICALLY INDICATED OTHERWISE. BRACING SHALL EXTEND TO WALLS.

GENERAL ARCHITECTURAL NOTES

1. UNLESS OTHERWISE INDICATED, PLAN DIMENSIONS ARE TO COLUMN GRID ON CENTERLINES, NOMINAL SURFACE OF MASONRY, FACE OF STUDS AND FACE OF CONCRETE WALLS.
2. "FLOOR LINE" REFERS TO TOP ON CONCRETE SLABS. FINISH FLOORING IS INSTALLED ABOVE THE FLOOR LINE. FOR DEPRESSED FLOORS AND CURBS, SEE STRUCTURAL DRAWINGS.
3. REPETITIVE FEATURES ARE NOT DRAWN IN THEIR ENTIRETY AND SHALL BE COMPLETELY PROVIDED AS IF DRAWN IN FULL.
4. WHERE DOOR IS LOCATED NEAR CORNER OF ROOM AND IS NOT LOCATED BY DIMENSION ON PLAN OR DETAILS, DIMENSION SHALL BE 3-INCHES FROM FACE OF STUD (WALL) TO FACE OF ROUGH OPENING. DIMENSION SHALL BE 6" FROM FACE OF WALL TO EDGE OF ROUGH OPENING AT CONCRETE WALLS, 8" AT CMU WALLS.
5. AT SOUND INSULATED WALLS, FULL HEIGHT PARTITIONS SHALL BE SEALED BOTH SIDES WITH ACOUSTIC SEALANT; TOP, BOTTOM, INTERSECTION, DOOR FRAMES, GLAZED OPENING FRAMES, AND OTHER PENETRATIONS.
6. LINE OF EXISTING GRADES, AS SHOWN ON THE BUILDING ELEVATIONS AND SECTIONS ARE APPROXIMATE. THEY ARE AT THE BUILDING FACE, OR ON THE SECTION END EXCEPT AS NOTED.
7. VERIFY ALL ROUGH-IN DIMENSIONS FOR EQUIPMENT PROVIDED IN THIS CONTRACT, OR BY OTHERS.
8. REFER TO ARCHITECTURAL, STRUCTURAL, MECHANICAL, ELECTRICAL AND OTHER CATEGORIES OR DRAWINGS FOR ADDITIONAL NOTES.
9. VERIFY SIZE AND LOCATION OF, AND PROVIDE: REQUIRED OPENINGS THROUGH FLOORS AND WALLS, ACCESS DOORS, FURRING, CURBS, ANCHORS AND INSERTS. PROVIDE ALL BASES AND BLOCKING REQUIRED FOR ACCESSORIES, MECHANICAL, ELECTRICAL AND OTHER EQUIPMENT.

ARCH/STRUCT MATERIAL SYMBOLS

SYMBOL	LEGEND
	GRATING, SPAN DIRECTION INDICATED
	CHECKERED PLATE
	GROUT
	GRANULAR FILL
	EARTH OR FINISH GRADE
	BEDROCK
	CONCRETE
	CMU WALL (PLAN)
	CMU WALL (SECTION)
	MASONRY WALL
	METAL STUD WALL (PLAN)
	WOOD STUD WALL (PLAN)
	RIGID INSULATION
	BATT INSULATION
	STEEL
	ALUMINUM
	PLYWOOD
	GYPSUM WALLBOARD
	ACOUSTICAL TILE
	WOOD, ROUGH CONTINUOUS
	WOOD, ROUGH NON-CONTINUOUS
	WOOD, FINISHED

ARCHITECTURAL/STRUCTURAL LEGEND

SYMBOL	LEGEND
ROOM NAME 101	ROOM NUMBER - SEE SPECIFICATION SECTION 09000
101 A	DOOR NUMBER - SEE SPECIFICATION SECTION 08001
W-1	WINDOW NUMBER - SEE SPECIFICATION SECTION 08002
L-1	LOUVER NUMBER - SEE SPECIFICATION SECTION 10200
1 DIRECTION SHOWN	INTERIOR ELEVATION
S-1	SIGN NUMBER - SEE SPECIFICATION SECTION 10400
● 110.50	SPOT ELEVATION
	DIRECTION OF SLOPE DOWN
1 XX-AS-401 WHERE SHOWN, LINE INDICATES DIRECTION AND EXTENT OF DETAIL CUT	DETAIL REFERENCE
HINGE SIDE	DOOR/HATCH SWING
ACTIVE INACTIVE	INDICATES PAIR OF DOORS
F.EXT-X	FIRE EXTINGUISHER "X" - NUMBER IN SPECIFICATIONS
	CONTROL JOINT
	EXPANSION JOINT
POST	RAILINGS
	DEMOLITION

AS-BUILT

CODE NOTES (2003 INTERNATIONAL BUILDING CODE)

NOTE: RETROFIT OF EXISTING FACILITY.

OCCUPANCY:	MIXED: F-2 AT PROCESS MECHANICAL, ELECTRICAL, AND MECHANICAL ROOMS. B AT CONTROL, CORRIDOR, RESTROOM, SHOWER, AND LOCKER ROOMS.
CONSTRUCTION TYPE:	V-B
OCCUPANCY SEPARTION:	NO SEPARATION REQUIRED PER NONSEPRATED USES. THE MOST RESTRICTIVE REGULATIONS SHALL GOVERN. (IBC 302.3.1) A 1 HR SEPARATION WILL BE PROVIDED BETWEEN THE PROCESS MECHANICAL ROOM AND THE REMAINDER OF THE BUILDING.
ALLOWABLE FLOOR AREA:	9,000 SF
ACTUAL FLOOR AREA:	5,376 FT
ALLOWABLE BUILDING HEIGHT:	40 FEET
ACTUAL BUILDING HEIGHT:	21 FEET
ALLOWABLE NUMBER OF STORIES:	TWO
ACTUAL NUMBER OF STORIES:	ONE
NUMBER OF OCCUPANTS (CALCULATED):	5,376/100 = 53.76 (54)
NUMBER OF OCCUPANTS (ACTUAL):	FIVE
FIRE PROTECTION SYSTEMS:	CLEAN AGENT FIRE SUPPRESSION SYSTEM IN THE ELECTRICAL ROOM AND HAND HELD FIRE EXTINGUISHERS AS INDICATED ON 50-A-141 AND 50-A-301.
CHEMICALS STORED:	QUANTITY / HAZARD: 200 LBS / HYDRATED LIME 50,000 LBS / CARBON (WET) 55 GAL / SODIUM HYPOCHLORITE 55 GAL / SODIUM BISULFITE 120 GAL / GASOLINE LESS THAN 1000 GAL / CREOSOTE BY-PRODUCT

DSGN GBK / RAH						VERIFY SCALE
DR ER BROWN	3	4/27/10	REVISED AS-BUILT	JB	ROW	BAR IS ONE INCH ON ORIGINAL DRAWING. 0 1" IF NOT ONE INCH ON THIS SHEET, ADJUST SCALES ACCORDINGLY.
CHK EBP / SMF	2	5/14/09	PRELIMINARY AS-BUILT	JB	ROW	
APVD KT SCHEEFLER	1	3/4/09	AS-BUILT FIELD DATA - PRELIMINARY	JFF	GS	
	NO.	DATE	REVISION	BY	APVD	

CH2MHILL

US ENVIRONMENTAL PROTECTION AGENCY

WYCKOFF GROUNDWATER TREATMENT PLANT
BAINBRIDGE ISLAND, WA

GENERAL

ARCHITECTURAL / STRUCTURAL GENERAL NOTES, LEGEND AND CODE NOTES

SHEET	6
DWG	01-G-06
DATE	JANUARY 4 2006
PROJ	316783.FD.B

FILENAME:01NG006D_316783.DGN PLOT DATE: 4/27/2010 PLOT TIME: 4:45:53 PM

PROJECT MATERIAL NOTES

1. ALL MATERIALS IN CONTACT WITH PROCESS WATER MUST BE RATED FOR CREOSOTE AND NAPHTHALENE SERVICE. GASKETS AND SEALS ON MECHANICAL COMPONENTS IN PROCESS SERVICE MUST BE EITHER VITON OR TEFLON.

GENERAL PIPING NOTES

1. LAY PIPE TO UNIFORM GRADE BETWEEN INDICATED ELEVATION POINTS.
2. SIZE OF FITTINGS SHOWN ON PLANS SHALL CORRESPOND TO ADJACENT STRAIGHT RUN OF PIPE, UNLESS OTHERWISE INDICATED. TYPE OF JOINT AND FITTING MATERIAL SHALL BE THE SAME AS SHOWN FOR ADJACENT STRAIGHT RUN OF PIPE.
3. LOCATION AND NUMBER OF PIPE HANGERS AND PIPE SUPPORTS SHOWN IS ONLY APPROXIMATE. MAXIMUM SPACING SHALL BE AS SPECIFIED.
4. ALL JOINTS SHALL BE WATERTIGHT. WALL PIPES SHALL BE USED WHEREVER PIPING PASSES FROM A STRUCTURE TO BACKFILL.
5. ALL FLEXIBLE CONNECTORS OR FLANGED COUPLING ADAPTERS SHALL BE PROVIDED WITH THRUST TIES, BLOCKS, OR ANCHORS, UNLESS OTHERWISE NOTED. THRUST PROTECTION SHALL BE ADEQUATE FOR TEST PRESSURES SPECIFIED.
6. SYMBOLS, LEGENDS, AND PIPE USE IDENTIFICATIONS SHOWN SHALL BE FOLLOWED THROUGHOUT THE PLANS, WHEREVER APPLICABLE. NOT ALL OF THE VARIOUS PIPING COMPONENTS ARE NECESSARILY USED IN THE PROJECT.
7. NUMBER AND LOCATION OF UNIONS SHOWN ON PLANS IS ONLY APPROXIMATE. PROVIDE ALL UNIONS NECESSARY TO FACILITATE CONVENIENT REMOVAL OF VALVES AND MECHANICAL EQUIPMENT.

PIPE AND FITTING SYMBOLS

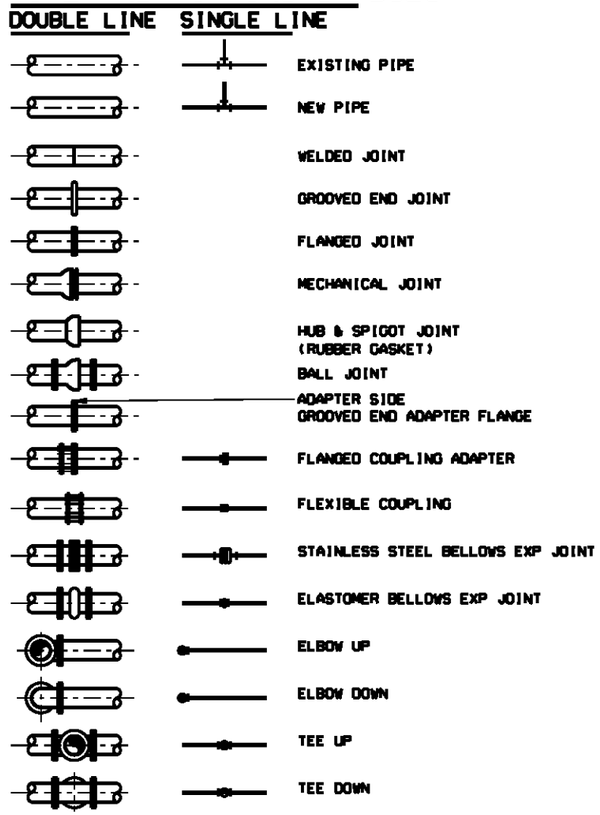

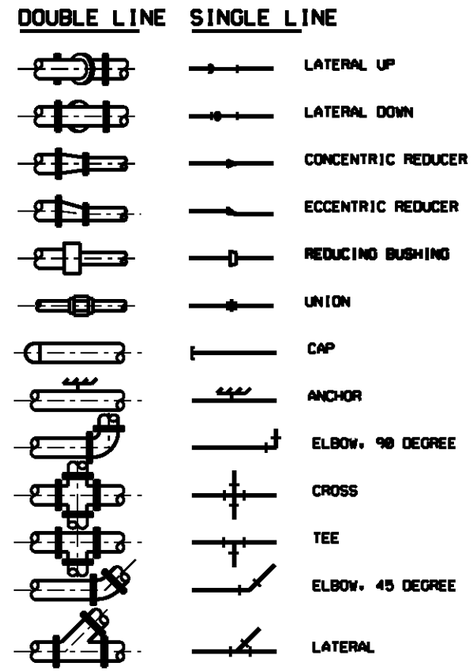

NOTES:

1. ONLY FLANGED END CONNECTIONS ARE SHOWN HERE FOR DOUBLE LINE FITTINGS. FITTINGS WITH OTHER END PATTERNS ARE SHOWN SIMILARLY ON THE CONSTRUCTION DRAWINGS. ALSO SEE PIPING SPECIFICATIONS.
2. SYMBOLS SHOWN HERE FOR SINGLE LINE FITTINGS ARE GENERIC ONLY. REFER TO PIPING SPECIFICATIONS FOR SPECIFIC END CONNECTIONS FOR SINGLE LINE PIPE AND FITTINGS.
3. EXISTING PIPE AND EQUIPMENT IS SHOWN LIGHT-LINED AND/OR SCREENED AND IS NOTED AS EXISTING. NEW PIPING AND EQUIPMENT IS SHOWN HEAVY-LINED.

MISCELLANEOUS PIPING SYMBOLS

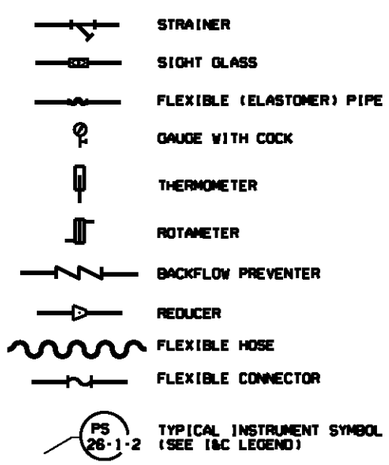

AS-BUILT

VALVE SYMBOLS

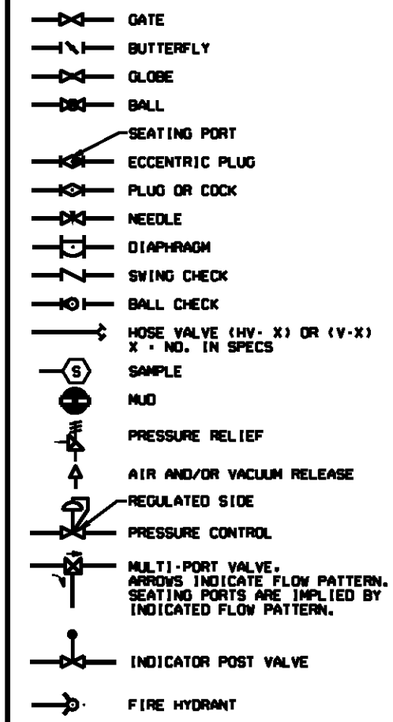

GATE SYMBOLS

VALVE DESIGNATIONS

MANUAL VALVES AND CHECK VALVES

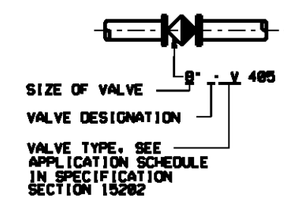

CONTROL VALVES

• BUBBLE WITH FUNCTION AND THE TAG NUMBER DESIGNATION (SEE I&C LEGEND FOR TAGGING NSTRUMENT IDENTIFICATION)

PIPING DESIGNATION

EXAMPLE:

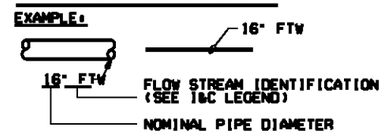

DSGN CL KIRKPATRICK					
DR ER BROWN	3	4/27/10	REVISED AS-BUILT	JB	ROW
CHK KG CLEGG	2	5/14/09	PRELIMINARY AS-BUILT	JB	ROW
APVD KT SCHEFFLER	1	3/4/09	AS-BUILT FIELD DATA - PRELIMINARY	JFF	GS
	NO.	DATE	REVISION	BY	APVD

VERIFY SCALE
BAR IS ONE INCH ON ORIGINAL DRAWING.
0 1"
IF NOT ONE INCH ON THIS SHEET, ADJUST SCALES ACCORDINGLY.

CH2MHILL

US ENVIRONMENTAL PROTECTION AGENCY
WYCKOFF GROUNDWATER TREATMENT PLANT
BAINBRIDGE ISLAND, WA

GENERAL
MECHANICAL LEGEND

SHEET	7
DWG	01-G-07
DATE	JANUARY 4 2006
PROJ	316783.FD.B

FILENAME: 01NG007D_316783.DGN PLOT DATE: 4/27/2010 PLOT TIME: 4:55:22 PM

BUILDING SERVICES SYMBOLS

- HOSE RACK (TYPE AS INDICATED)
- XCO — X = F - FLOOR CLEANOUT; D - DECK CLEANOUT; W - WALL CLEANOUT
- FD-XY — FLOOR DRAIN; X - NO. IN SPECS; Y - T WITH TRAP; Y - P WITH PRIMED TRAP
- HD-XY — HUB DRAIN; X - NO. IN SPECS; Y - T WITH TRAP; Y - P WITH PRIMED TRAP

MISCELLANEOUS PIPING SYMBOLS

- ANCHOR
- PIPE ALIGNMENT GUIDE
- FLEXIBLE (ELASTOMER) PIPE CONNECTION
- STRAINER
- SIGHT GLASS
- GAUGE WITH COCK
- THERMOMETER
- ROTAMETER
- GAUGE GLASS WITH COCKS
- STEAM TRAP; X - NO. IN SPECS
- FS — FLOW SWITCH
- FM — FLOW METER; X - NO. SHOWN IN SPECS
- PS — PRESSURE SWITCH

PLUMBING FIXTURE IDENTIFICATION

FCO	FLOOR CLEANOUT
FD	FLOOR DRAIN
HV	HOSE VALVE
LAV	LAVATORY
MS	MOP SINK
ON	OVERFLOW NOZZLE
PRV	PRESSURE REGULATING VALVE
SH	SHOWER
SK	SINK
SSH	SAFETY SHOWER
TK	TANK
WC	WATER CLOSET
WH	WATER HEATER
HD	HUB DRAIN
LSK	LAB SINK
UR	URINAL
HR	HOSE RACK
CO	CLEANOUT

EXAMPLE:

LAV -2

FIXTURE LEGEND

NO. IN SPECIFICATIONS

HEATING, VENTILATING, AND AIR CONDITIONING SYMBOLS

- WALL REGISTER OR GRILLE (SUPPLY) SR, SG
- CEILING DIFFUSER OR REGISTER (SUPPLY) CD
- CEILING REGISTER OR GRILLE (TRANSFER, RETURN AND EXHAUST) EG, ER, RG, RR, TG, TR
- WALL REGISTER OR GRILLE (TRANSFER, RETURN AND EXHAUST) EG, ER, RG, RR, TG, TR
- LINED DUCT
- FLEXIBLE CONNECTION
- MANUAL DAMPER, BALANCING
- TURNING VANES
- 45 DEGREE ENTRY
- MOTORIZED DAMPER
- SUPPLY DUCT (SECTION)
- INTAKE, RETURN, OR EXHAUST DUCT (SECTION)
- THERMOSTAT
- MANUAL ON/OFF CONTROL SWITCH
- DAMPER MOTOR
- (400) AIR FLOW IN STANDARD CUBIC FEET PER MINUTE

HVAC EQUIPMENT IDENTIFICATION AND ABBREVIATIONS

ACU	AIR CONDITIONING UNIT
BDD	BACKDRAFT DAMPER
BOD	BOTTOM OF DUCT
CBBD	COUNTERBALANCED BACKDRAFT DAMPER
CD	CEILING DIFFUSER
CFM	CUBIC FEET PER MINUTE
DB	DRY BULB
EF	EXHAUST FAN
EG	EXHAUST GRILLE
ESP	EXTERNAL STATIC PRESSURE
ESS	EMERGENCY SHUTDOWN SWITCH
FC	FLEXIBLE CONNECTION
FD	FIRE DAMPER
FPM	FEET PER MINUTE
IG	INTAKE GRILLE
MBH	THOUSAND BTU PER HOUR
MD	MOTORIZED DAMPER
OBD	OPPOSED BLADE DAMPER
OSA	OUTSIDE AIR
OSAT	OUTSIDE AIR TEMPERATURE
RA	RETURN AIR
SCFM	STANDARD CUBIC FEET PER MINUTE
SF	SUPPLY FAN
SG	SUPPLY GRILLE
SR	SUPPLY REGISTER
TG	TRANSFER GRILLE
TRANS	TRANSITION
UH	UNIT HEATER
VEL	VELOCITY
WH	WALL HEATER

THIS IS A STANDARD LEGEND SHEET. THEREFORE, SOME SYMBOLS OR ABBREVIATIONS MAY APPEAR ON THIS SHEET AND NOT ON THE DRAWINGS.

AS-BUILT

DSGN KL WELP					
DR JS WILLIAMSON	3	4/27/10	REVISED AS-BUILT	JB	ROW
CHK TJ PRICE	2	5/14/09	PRELIMINARY AS-BUILT	JB	ROW
APVD KT SCHEFFLER	1	3/4/09	AS-BUILT FIELD DATA - PRELIMINARY	JFF	GS
	NO.	DATE	REVISION	BY	APVD

VERIFY SCALE
BAR IS ONE INCH ON ORIGINAL DRAWING.
0 1"
IF NOT ONE INCH ON THIS SHEET, ADJUST SCALES ACCORDINGLY.

CH2MHILL

US ENVIRONMENTAL PROTECTION AGENCY
WYCKOFF GROUNDWATER TREATMENT PLANT
BAINBRIDGE ISLAND, WA

GENERAL
BUILDING MECHANICAL LEGENDS

SHEET	8
DWG	01-G-08
DATE	JANUARY 4 2006
PROJ	316783.FD.B

FILENAME: 01NG008D_316783.DGN PLOT DATE: 4/27/2010 PLOT TIME: 5:01:28 PM

INSTRUMENT IDENTIFICATION

EXAMPLE SYMBOLS

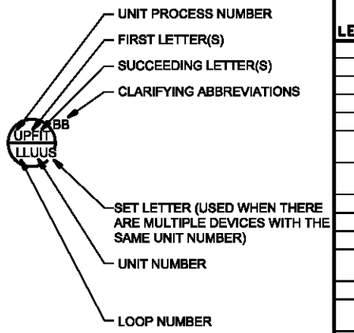

INSTRUMENT IDENTIFICATION LETTERS TABLE

LETTER	FIRST-LETTER: PROCESS OR INITIATING VARIABLE	FIRST-LETTER: MODIFIER	SUCCEEDING-LETTERS: READOUT OR PASSIVE FUNCTION	SUCCEEDING-LETTERS: OUTPUT FUNCTION	SUCCEEDING-LETTERS: MODIFIER
A	ANALYSIS (•)		ALARM		
B	BURNER, COMBUSTION		USER'S CHOICE••	USER'S CHOICE••	USER'S CHOICE•••
C	USER'S CHOICE••			CONTROL	
D	DENSITY (S.G)	DIFFERENTIAL			
E	VOLTAGE		PRIMARY ELEMENT, SENSOR		
F	FLOW RATE	RATIO (FRACTION)			
G	USER'S CHOICE••		GLASS, GAUGE VIEWING DEVICE	GATE	
H	HAND (MANUAL)				HIGH
!	CURRENT (ELECTRICAL)		INDICATE		
J	POWER	SCAN			
K	TIME, TIME SCHEDULE	TIME RATE OF CHANGE		CONTROL STATION	
L	LEVEL		LIGHT (PILOT)		LOW
M	MOTION	MOMENTARY			MIDDLE, INTERMEDIATE
N	TORQUE		USER'S CHOICE••	USER'S CHOICE••	USER'S CHOICE•••
O	USER'S CHOICE••		ORIFICE, RESTRICTION		
P	PRESSURE, VACUUM		POINT (TEST) CONNECTION		
Q	QUANTITY	INTEGRATE TOTALIZE			
R	RADIATION		RECORD OR PRINT		
S	SPEED, FREQUENCY	SAFETY		SWITCH	
T	TEMPERATURE			TRANSMIT	
U	MULTIVARIABLE		MULTIFUNCTION	MULTIFUNCTION	MULTIFUNCTION
V	VIBRATION, MECHANICAL ANALYSIS			VALVE, DAMPER, LOUVER	
W	WEIGHT, FORCE		WELL		
X	UNCLASSIFIED (•)	X AXIS	UNCLASSIFIED (•)	UNCLASSIFIED (•)	UNCLASSIFIED (+)
Y	EVENT, STATE OR PRESENCE	Y AXIS		RELAY, COMPUTE, CONVERT	
Z	POSITION	Z AXIS		DRIVE, ACTUATOR, UNCLASSIFIED FINAL CONTROL ELEMENT	

TABLE BASED ON THE INSTRUMENTATION, SYSTEMS, AND AUTOMATION SOCIETY (ISA) STANDARD.

••WHEN USED, EXPLANATION IS SHOWN ADJACENT TO INSTRUMENT SYMBOL. SEE ABBREVIATIONS AND LETTER SYMBOLS.

•••WHEN USED, DEFINE THE MEANING HERE FOR THE PROJECT

DIGITAL SYSTEM INTERFACES

- ▲ ANALOG INPUT
- ▼ ANALOG OUTPUT
- Δ_x DISCRETE INPUT
- ∇_x DISCRETE OUTPUT

WHERE X•
A • ALARM
H • MAINTAINED
M • MOMENTARY
S • STATUS

GENERAL INSTRUMENT OR FUNCTIONAL SYMBOLS

- FIELD MOUNTED INSTRUMENT
- REAR-OF-PANEL MOUNTED INSTRUMENT (OPERATOR INACCESSIBLE)
- PANEL MOUNTED INSTRUMENT
- MOTOR CONTROL CENTER MOUNTED INSTRUMENT
- COMPUTER FUNCTION
- PLC FUNCTION

TRANSDUCERS

A	ANALOG	I	CURRENT
D	DIGITAL	P	PNEUMATIC
E	VOLTAGE	PF	PULSE FREQUENCY
F	FREQUENCY	PD	PULSE DURATION
H	HYDRAULIC	R	RESISTANCE

EXAMPLE•

FY I/P — CURRENT TO PNEUMATIC TRANSDUCER (BACK OF PANEL, IN A FLOW LOOP)

SPECIAL CASES

YL 00 — ON AND OFF EVENT LIGHTS

HS 00 — ON-OFF HAND SWITCH, MAINTAINED CONTACT SWITCH (CONTROLLED DEVICE WILL RESTART ON RETURN OF POWER AFTER POWER FAILURE).

HS SS — STOP-START HAND SWITCH MOMENTARY CONTACT SWITCHES (CONTROLLED DEVICE WILL NOT RESTART ON RETURN OF POWER AFTER POWER FAILURE).

ACCESSORY DEVICES

EXAMPLE• TRANSMITTER AS AN ACCESSORY TO A FLOW ELEMENT

FT
T

- A • ALARM
- C • CONTROLLER
- I • INDICATOR
- R • RECORDER
- S • SWITCH
- T • TRANSMITTER
- X • UNCLASSIFIED

AS-BUILT

LINE LEGEND

- PROCESS (CLOSED CONDUIT, DASHED LINE INDICATES ALTERNATE FLOW STREAM)
- PROCESS (OPEN CHANNEL)
- ANALOG SIGNAL (4 TO 20 MADC, ETC.)
- DISCRETE SIGNAL (ON/OFF, ETC.)
- PNEUMATIC SIGNAL
- FILLED SYSTEM SIGNAL
- HYDRAULIC SYSTEM SIGNAL
- DATA LINK
- EXISTING EQUIPMENT
- FLEXIBLE HOSE
- BUILDING OR FACILITY BOUNDARY
- PACKAGE SYSTEM EQUIPMENT
- PARALLELING LINES — (2) 3(2) (A) (B) — (A)TOTAL OF 2 SIGNALS (B)3 TYPICAL SETS OF 2 SIGNALS EACH, TOTAL OF 6 SIGNALS.
- CONNECTING LINES
- NON-CONNECTING LINES

INTERFACE SYMBOLS

S WA — WA D

- PROCESS INTERFACE
- SIGNAL INTERFACE
- W • SOURCE UNIT PROCESS NO. (1 OR 2 DIGITS)
- A • INTERFACE NO. (2 DIGITS)
- D • DESTINATION DRAWING NO.
- S • SOURCE DRAWING NO.

N — PROCESS OR SIGNAL LINE CONTINUATION N•1,2,3,ETC — N

INTERFACE TO OR FROM PROCESS EXTERNAL TO PROJECT

SELF CONTAINED VALVE & EQUIPMENT TAG NUMBERS

W-D-X-Y

- W • UNIT PROCESS NUMBER
- D• ARV • AIR RELEASE VALVE
  - AVRV • AIR AND VACUUM RELEASE VALVE
  - E • EJECTOR
  - G • GATE
  - M • MECHANICAL EQUIPMENT
  - P • PUMP
  - T • TANK
- X • LOOP NUMBER
- Y • UNIT NUMBER

ABBREVIATIONS & LETTER SYMBOLS

AC	ALTERNATING CURRENT
AM	AUTO-MANUAL
CAM	COMPUTER-AUTO-MANUAL
CCS	CENTRAL CONTROL SYSTEM
CL_2 etc.	CHLORINE (TYPICAL: USE STANDARD CHEMICAL ELEMENT ABBREVIATION)
CM	COMPUTER-MANUAL
COD	CHEMICAL OXYGEN DEMAND
CP-X	CONTROL PANEL NO. X
DC	DIRECT CURRENT
DCS	DISTRIBUTED CONTROL SYSTEM
DCU	DISTRIBUTED CONTROL UNIT
DO	DISSOLVED OXYGEN
FCL_2	FREE CHLORINE RESIDUAL
FOS	FAST-OFF-SLOW
FOSA	FAST-OFF-SLOW-AUTO
FOSR	FAST-OFF-SLOW-REMOTE
FP-W-X	FIELD PANEL NO. WX (W = UNIT PROCESS NUMBER X = PANEL NUMBER)
FR	FORWARD-REVERSE
HOA	HAND-OFF-AUTO
HOR	HAND-OFF-REMOTE
ISR	INTRINSICALLY SAFE RELAY
LEL	LOWER EXPLOSIVE LIMIT
LOS	LOCKOUT STOP
LR	LOCAL-REMOTE
MA	MANUAL-AUTO
MC	MODULATE-CLOSE
MCC-X	MOTOR CONTROL CENTER NO. X
MSC	MANUFACTURER SUPPLIED CABLE
OC	OPEN-CLOSE (D)
OCR	OPEN-CLOSE-REMOTE
OCA	OPEN-CLOSE-AUTO
OO	ON-OFF
OOA	ON-OFF-AUTO
OOR	ON-OFF-REMOTE
ORP	OXIDATION REDUCTION POTENTIAL
OSC	OPEN-STOP-CLOSE
pH	HYDROGEN ION CONCENTRATION
PLC	PROGRAMMABLE LOGIC CONTROLLER
RM-X	REMOTE MULTIPLEXING MODULE NO. X
RTU-X	REMOTE TELEMETRY UNIT NO. X
SF	SLOWER-FASTER
SS	START-STOP
SSC	SUPERVISORY SET POINT CONTROL
TCL_2	TOTAL CHLORINE RESIDUAL
TOC	TOTAL ORGANIC CARBON
TOD	TOTAL OXYGEN DEMAND
TURB	TURBIDITY
VHC	VOLATILE HYDROCARBONS
VIB	VIBRATION
Δ	DIFFERENCE
Σ	SUM
X	MULTIPLY
÷	DIVIDE
F(X)	CHARACTERIZED
X^N	RAISE TO THE Nth POWER
√	SQUARE ROOT
AVG	AVERAGE
1•1	REPEAT OR BOOST
•	SELECT HIGHEST SIGNAL
•	SELECT LOWEST SIGNAL
•	BIAS
%	GAIN OR ATTENUATE

GENERAL NOTES

1. COMPONENTS AND PANELS SHOWN WITH A SINGLE ASTERISK (✱) ARE TO BE PROVIDED AS PART OF A PACKAGE SYSTEM.
2. COMPONENTS AND PANELS SHOWN WITH A DOUBLE ASTERISK (✱✱) ARE TO BE PROVIDED UNDER DIVISION 16, ELECTRICAL.
3. THIS IS A STANDARD LEGEND. THEREFORE, NOT ALL OF THIS INFORMATION MAY BE USED ON THIS PROJECT.

DSGN	KL ANDERSON				
DR	DS PARKER	3	4/27/10	REVISED AS-BUILT	JB	ROW
CHK	LL WOOD	2	5/14/09	PRELIMINARY AS-BUILT	JB	ROW
APVD	KT SCHEFFLER	1	3/4/09	AS-BUILT FIELD DATA - PRELIMINARY	JFF	GS
		NO.	DATE	REVISION	BY	APVD

VERIFY SCALE
BAR IS ONE INCH ON ORIGINAL DRAWING.
0 1"
IF NOT ONE INCH ON THIS SHEET, ADJUST SCALES ACCORDINGLY.

CH2MHILL

US ENVIRONMENTAL PROTECTION AGENCY
WYCKOFF GROUNDWATER TREATMENT PLANT
BAINBRIDGE ISLAND, WA

GENERAL
INSTRUMENTATION AND CONTROL LEGEND SHEET 1

SHEET	9
DWG	01-G-09
DATE	JANUARY 4 2006
PROJ	316783.FD.B

FILENAME: 01ng009d_316783.dgn PLOT DATE: 4/28/2010 PLOT TIME: 8:07:23 AM

VALVE SYMBOLS

- GATE
- KNIFE GATE
- BUTTERFLY
- GLOBE
- BALL
- VENTED BALL
- PLUG
- SEAT PORT ECCENTRIC PLUG
- DIAPHRAGM
- PINCH
- NEEDLE
- SWING CHECK
- BALL CHECK
- PRESSURE RELIEF
- AIR AND/OR VACUUM RELEASE
- REGULATED SIDE PRESSURE CONTROL
- MULTI-PORT VALVES (BALL VALVE SHOWN. FOR OTHER VALVE TYPES. APPROPRIATE VALVE SYMBOL SHOWN.) ARROWS INDICATE FLOW PATTERN. SEAT PORTS ARE IMPLIED BY INDICATED FLOW PATTERN.
- TELESCOPE
- SAMPLE
- MUD

GATE SYMBOLS

- SLUICE
- BUTTERFLY
- FLAP
- FABRICATED SLIDE
- SHEAR

ACTUATOR SYMBOLS

- XX PNEUMATIC DIAPHRAM SPRING-OPPOSED. SINGLE OR DOUBLE ACTING
- XX PNEUMATIC CYLINDER SINGLE OR DOUBLE ACTING ACTUATED BY ONE INPUT
- MANUAL
- XX ELECTRIC MOTOR
- XX ELECTROHYDRAULIC
- XX SOLENOID
- XX HYDRAULIC

NOTE:
ON LOSS OF PRIMARY POWER (PNEUMATIC. ELECTRICAL OR HYDRAULIC)
XX: FO -FAIL OPEN
FC -FAIL CLOSED
FLP-FAIL TO LAST POSITION

PRIMARY ELEMENT SYMBOLS

- PARSHALL FLUME
- WEIR
- ORFICE PLATE
- FLOW TUBE
- PITOT-STATIC
- VORTEX METER
- FI ROTAMETER
- ULTRASONIC FLOWMETER
- ELECTROMAGNETIC FLOWMETER
- PROPELLER OR TURBINE METER
- DE DENSITY METER
- XX GENERIC
- LE LEVEL (ULTRASONIC)
- LEVEL (BUBBLER TUBE)
- LS LEVEL (FLOAT)

MISCELLANEOUS SYMBOLS

- LE SIGHT GLASS
- DIAPHRAGM SEAL
- BLIND FLANGE
- THREADED PLUG
- AIR GAP
- V VENT TO ATMOSPHERE
- AERATOR
- PLUG
- RECEPTACLE
- A SELF CONTAINED AIR SUPPLY
- SD COMPOSITE SAMPLER (DIPPER TYPE)
- SS COMPOSITE SAMPLER (SUCTION TYPE)
- RADIO ANTENNA
- ON-TD X-SEC "ON" TIME DELAY B "ON" X-SEC. AFTER A "ON". INSTANT "OFF".
- OFF-TD X-SEC "OFF" TIME DELAY B "OFF" X-SEC. AFTER A "OFF". INSTANT "ON".
- I OR INTERLOCK. SEE CONTROL DIAGRAMS
- S R MEMORY ELEMENT S: SET . R: RESET
- X PURGE SET X:W : WATER A : AIR SEE
- XX AIR SET XX: SUPPLY PRESSURE IN PSIG.
- FILTER/ REGULATOR/ GAUGE SET
- FLEXIBLE CONNECTOR
- PULSATION DAMPENER
- FILTER
- 120V 120 VOLT. 60 HZ POWER
- 480V 480 VOLT. 60 HZ POWER
- ANNULAR DIAPHRAGM SEAL
- RUPTURE DISK (PRESSURE)
- RUPTURE DISK (VACUUM)
- PIG INSERT POINT
- OR PIG CATCH POINT
- MIXER
- M ELECTRIC MOTOR
- PRESSURE GAUGE
- X TONE TRANSMITTER NO. X
- X TONE RECEIVER NO. X
- VOICE COMMUNICATION POINT
- TV TV MONITOR
- AND LOGIC ELEMENT: IF A AND NOT B THEN C
- OR LOGIC ELEMENT: IF A OR B THEN C
- R ON/OFF RELAY. INPUT IS CONNECTED TO OUTPUT WHEN SWITCHING SIGNAL IS PRESENT.
- SWITCHING SIGNAL
- R SWITCHING RELAY. INPUT WITH DOT IS CONNECTED TO OUTPUT WHEN SWITCHING SIGNAL IS PRESENT
- OTHER INPUT IS CONNECTED TO OUTPUT WHEN SWITCHING SIGNAL IS NOT PRESENT.
- F FLUSHING CONNECTION
- FEMALE HOSE ADAPTOR
- MALE HOSE ADAPTOR
- S SEAL WATER SET
- SIGHT GLASS
- FFLCPLLLX
- PANEL CONTINUED ON SAME OR OTHER DRAWING
- PANEL OUTLINE
- PANEL NAME
- CONTROL PANEL DATABASE SYMBOL

AS-BUILT

PUMP AND COMPRESSOR SYMBOLS

NOTE: XX:AS ADJUSTABLE SPEED
CS-1 CONSTANT SPEED (SINGLE SPEED)
CS-2 CONSTANT SPEED (TWO SPEED)

- CENTRIFUGAL PUMP (DRY PIT)
- CENTRIFUGAL WET PIT PUMP OR TURBINE PUMP
- CHEMICAL FEED PUMP
- DIAPHRAGM PUMP
- GEAR PUMP OR BLOWER (POSITIVE DISPLACEMENT)
- PISTON PUMP
- SUBMERSIBLE SUMP PUMP
- PROGRESSIVE CAVITY PUMP
- COMPRESSOR (CENTRIFUGAL)
- COMPRESSOR (PISTON)
- BLOWER OR FAN (CENTRIFUGAL)
- EJECTOR

LINE SIZE AND MATERIAL IDENTIFICATION

(FOR REFERENCE ONLY. SEE SITE AND MECHANICAL DRAWINGS)

PIPING CHANGE DATABASE SYMBOL: 18CLDI
PIPE DIAMETER IN INCHES
PIPE MATERIAL ABBREVIATION

CISP	CAST IRON SOIL PIPE
CLDI	CEMENT LINED DUCTILE IRON
CLSTL	CEMENT LINED STEEL
CU	COPPER
FRP	FIBERGLASS REINFORCED PLASTIC
PVC	POLYVINYL CHLORIDE
SST	STAINLESS STEEL
STL	STEEL

FLOW STREAM IDENTIFICATION

AHP	AIR.HIGH PRESSURE PROCESS
AI	AIR. INSTRUMENT
ALP	AIR. LOW PRESSURE PROCESS
BDS	BLENDED DIGESTED SLUDGE
BFE	BIO-FILTER EFFLUENT
BFI	BIO-FILTER INFLUENT
BFR	BIO-FILTER RECYCLE
BWE	BACKWASH EFFLUENT
BWR	BACKWASH RECYCLE
BWS	BACKWASH SUPPLY
BYP	BYPASS
C	CARBON SLURRY
CHS	CHEMICAL SLUDGE
CL	CHLORINE LIQUID
CD	CONDENSATE DRAIN
CS	CHLORINE SOLUTION
CWR	COOLING WATER RETURN
CWS	COOLING WATER SUPPLY
D	DRAIN (SANITARY)
DAS	DIGESTED ACTIVATED SLUDGE
DC	DECANT
DE	DAF EFFLUENT
DG	DIGESTER GAS
DI	DAF INFLUENT
DL	DRY LIME
DR	DAF RECYCLE
DS	DIGESTED SLUDGE
DSS	DEWATERED STABILIZED SLUDGE
DW	DISTILLED WATER
F	FILTRATE
FD	FREEZE DRAIN
FE	FILTER EFFLUENT
FFE	FORWARD FLUSH EFFLUENT
FFS	FORWARD FLUSH SUPPLY
FI	FILTER INFLUENT
FOR	FUEL OIL RETURN
FRE	FROTH EFFLUENT
FRI	FROTH INFLUENT
FTW	FILTER TO WASTE
GR	GRIT SLURRY
HCL	HYDROCHLORIC ACID
HPR	HIGH PRESSURE RETURN (CONDENSATE)
HPS	HIGH PRESSURE STEAM
HS	HEAVY SOLIDS
HWR	HEATING WATER RETURN
HWS	HEATING WATER SUPPLY
LD	DRY LIME
LPD	LIQUID POLYMER
LPR	LOW PRESSURE RETURN (CONDENSATE)
LPS	LOW PRESSURE STEAM
LS	LIME SLURRY
LSD	LIME SLUDGE
ML	MIXED LIQUOR
MPR	MEDIUM PRESSURE RETURN (CONDENSATE)
MPS	MEDUIM PRESSURE STEAM
NA	SODIUM HYDROXIDE
NAPL	NONAQUEOUS PHASE LIQUID
OF	OVERFLOW
PD	PLANT DRAIN
PDS	PRIMARY DIGESTED SLUDGE
PE	PRIMARY EFFLUENT
PI	PRIMARY INFLUENT
PLE	PLANT EFFLUENT
PLI	PLANT INFLUENT
PO	POLYMER SOLUTION
PS	PRESSURE SEWER
PSD	PRIMARY SLUDGE
PSM	PRIMARY SCUM
RAS	RETURN ACTIVATED SLUDGE
RCS	RECARBONATION SLUDGE
RCY	RECYCLE
RHW	RECIRCULATED HOT WATER
RSD	RECIRCULATED SLUDGE
SA	SAMPLE
SE	SECONDARY EFFLUENT
SH	HEATED SLUDGE
SHC	SODIUM HYPOCHLORITE
SS	STABILIZED SOLIDS
SSD	SECONDARY DIGESTED SLUDGE
SSM	SECONDARY SCUM
STS	SANITARY SEWER
STW	STORM WATER
SW	SURFACE WASH
TAS	THICKENED ACTIVATED SLUDGE
TB	TREATED BRINE
TBS	THICKENER BOTTOM SLUDGE
TDS	THICKENED DIGESTED SLUDGE
TPS	THICKENED PRIMARY SLUDGE
TS	THICKENED SOLIDS
TUF	THICKENER UNDERFLOW
UD	UNDERDRAIN
V	VENT
VAC	VACUUM
WAS	WASTE ACTIVATED SLUDGE
W1	NO. 1 (POTABLE) WATER
W2	NO. 2 (NONPOTABLE) WATER
W3	NO. 3 WATER
W4	NO. 4 WATER

DSGN KL ANDERSON					
DR DS PARKER	2	4/27/10	REVISED AS-BUILT	JB	ROW
CHK LL WOOD	2	5/14/09	PRELIMINARY AS-BUILT	JB	ROW
APVD KT SCHEFFLER	1	3/4/09	AS-BUILT FIELD DATA - PRELIMINARY	JFF	GS
	NO.	DATE	REVISION	BY	APVD

VERIFY SCALE
BAR IS ONE INCH ON ORIGINAL DRAWING.
0 1"
IF NOT ONE INCH ON THIS SHEET, ADJUST SCALES ACCORDINGLY.

CH2MHILL

US ENVIRONMENTAL PROTECTION AGENCY
WYCKOFF GROUNDWATER TREATMENT PLANT
BAINBRIDGE ISLAND, WA

GENERAL
INSTRUMENTATION AND CONTROL LEGEND SHEET 2

SHEET	10
DWG	01-G-10
DATE	JANUARY 4 2006
PROJ	316783.FD.B

FILENAME: 01ng010d_316783.dgn PLOT DATE: 4/28/2010 PLOT TIME: 8:26:39 AM

ELECTRICAL LEGEND

SYMBOL	DESCRIPTION
●	CONNECTION POINT TO EQUIPMENT SPECIFIED. FURNISHED AND INSTALLED UNDER OTHER DIVISIONS WITHIN THE SCOPE OF THIS CONTRACT. RACEWAY, CONDUCTOR AND CONNECTION SPECIFIED IN DIVISION 16. COORDINATE FINAL CONNECTION WITH EQUIPMENT SUPPLIER.
MCC-A	MAJOR ELECTRICAL COMPONENT OR DEVICE - NAME OR IDENTIFYING SYMBOL AS SHOWN.
	BRANCH CIRCUIT PANELBOARD
TIC	TELEPHONE TERMINAL CABINET
CIC	COMPUTER TERMINAL CABINET
TJB	TERMINAL JUNCTION BOX
M	MOTOR, SQUIRREL CAGE INDUCTION, HORSEPOWER INDICATED ON ONE-LINE DIAGRAM. (M) SHOWN ON PLANS
SA OR (2A)	SMALL LETTER SUBSCRIPT AT SWITCH AND LUMINAIRE INDICATES SWITCHING. NUMBER IN PARENTHESIS AT LUMINAIRE INDICATES CIRCUIT IN PANELBOARD.
LA-2	HOME RUN - DESTINATION SHOWN
OR-W-G	EXPOSED CONDUIT AND CONDUCTORS*
OR-W-G	CONCEALED CONDUIT AND CONDUCTORS*

NOTE:
* ALL UNMARKED CONDUIT RUNS CONSIST OF TWO NO.12 CONDUCTORS IN CONDUIT. RUNS MARKED WITH CROSSHATCHES INDICATE NUMBER OF NO. 12 CONDUCTORS. CROSSHATCH WITH SUBSCRIPT "G" INDICATES GREEN GROUND WIRE. SIZE CONDUIT ACCORDING TO SPECIFICATIONS AND APPLICABLE CODE.

[ ]	CIRCUIT CALLOUT. [1*C.3*8.1*10G] CONDUIT, CONDUCTOR, AND NUMBER INDICATED. [2*3*C.3*350 KCMIL, 1*1/0G EA]: INDICATES TWO CONDUITS, EACH WITH CONDUCTORS INDICATED.

CONTROL CABLE TYPE IDENTIFICATION
A-B TYPE C
A - NUMBER OF CABLES
B - NUMBER OF SINGLE WIRES IN EACH CABLE
C - CABLE TYPE NUMBER PER SPECIFICATIONS

EXAMPLES:
1-7C TYPE 1 - A SEVEN (SINGLE CONDUCTOR) TYPE 1 MULTICONDUCTOR CONTROL CABLE
1-TYPE 3 - A SINGLE TYPE 3 CONTROL CABLE
4-19C TYPE 1 - FOUR, NINETEEN (SINGLE CONDUCTOR) TYPE 1 MULTICONDUCTOR CONTROL CABLE

	GROUND TEST WELL
	GROUND ROD
#	CROSSHATCHES WITH BAR INDICATE #10 CONDUCTOR. SIZE CONDUIT ACCORDING TO SPECIFICATIONS AND APPLICABLE CODE.
	CABLE TRAY
-B-	BUS DUCT, SEE SPECIFICATIONS
-CE-	CONCRETE ENCASED CONDUIT
-DB-	DIRECT BURIED CONDUIT
-G-	GROUND
-P-	TRENCHING FOR UTILITY COMPANY PRIMARY POWER CIRCUITS
-T-	TRENCHING FOR TELEPHONE COMPANY CIRCUITS
	CONVENIENCE RECEPTACLE - DUPLEX UNLESS SPECIFIED OTHERWISE WP-WEATHERPROOF C- CLOCK HANGER TL-TWIST LOCK CRE-CORROSION RESISTANT
30	RECEPTACLE - 240V, 1PH, AMPERAGE INDICATED

SYMBOL	DESCRIPTION
30	RECEPTACLE, SPECIAL PURPOSE - AMPERAGE INDICATED
	DUPLEX CONVENIENCE RECEPTACLE - FLUSH IN FLOOR
	TELEPHONE RECEPTACLE (OUTLET BOX ONLY) FLUSH IN FLOOR
	TELEPHONE RECEPTACLE (OUTLET BOX ONLY)
	DATA RECEPTACLE (OUTLET BOX ONLY)
	TELEPHONE AND DATA RECEPTACLE (OUTLET BOX ONLY)
H	GENERAL CONTROL OR ELECTRICAL EQUIPMENT. LETTER SYMBOLS OR ABBREVIATIONS INDICATE TYPE OF DEVICE.
CS	CONTROL STATION. SEE CONTROL DIAGRAMS FOR TYPE.
J	CONDUIT FITTING OR JUNCTION BOX
1	NONFUSED DISCONNECT SWITCH. 30A. 3 POLE UNLESS INDICATED OTHERWISE.
60/40 1	FUSED DISCONNECT SWITCH. SIZE INDICATED (60/40, 60 - SWITCH RATING; 40 - FUSE RATING) 3 POLE UNLESS INDICATED OTHERWISE.
2	CONTACTOR, MAGNETIC, NEMA SIZE INDICATED.
30 L	LIGHTING CONTACTOR. CURRENT RATING INDICATED. FOR NUMBER OF POLES, SEE CONTROL DIAGRAM.
2	STARTER MAGNETIC NEMA SIZE INDICATED. SEE CONTROL DIAGRAM.
2 1	COMBINATION (FUSE OR CIRCUIT BREAKER AS INDICATED) MAGNETIC STARTER, NEMA SIZE INDICATED. SEE CONTROL DIAGRAM.
	METERING FACILITIES
	CONE TYPE PAGING SPEAKER, CEILING MOUNTED
	INTERIOR PAGING TRUMPET SOUND REPRODUCER, WITH REMOTE AMPLIFIER, SURFACE MOUNTED.
	OUTDOOR PAGING TRUMPET SOUND REPRODUCER, WITH REMOTE AMPLIFIER, SURFACE MOUNTED.
	TERMINAL CABINET FOR COMMUNICATIONS SYSTEM
F	FIRE ALARM STATION, MANUAL
F	FIRE ALARM STROBE
F	FIRE ALARM HORN
F	FIRE ALARM COMBINATION STROBE/HORN
E	GO/NO-GO ALARM LIGHT
S	FIRE ALARM COMBINATION STROBE/SPEAKER, WALL MOUNT
F	FIRE ALARM IONIZATION DETECTOR
F H	FIRE ALARM, IONIZATION AND HEAT DETECTOR
I	AIR DUCT IONIZATION DETECTOR
FA	FIRE ALARM HEAT DETECTOR
S	SWITCH:

WALL SWITCH:
- 2- DOUBLE POLE
- 3- THREE WAY
- 4- FOUR WAY
- CRE- CORROSION RESISTANT
- D- DIMMER
- K- KEY OPERATED
- P- PILOT LIGHT
- WP- WEATHERPROOF

MOTOR SWITCH:
- M- MOTOR RATED TOGGLE SWITCH WITHOUT OVERLOADS
- MS- MANUAL MOTOR STARTER WITH OVERLOADS

AS-BUILT

SYMBOL	DESCRIPTION
PPK	POWER PACK IN NEMA 1 ENCLOSURE. MOUNT ON EXPOSED CEILING OR ABOVE ACCESSIBLE SUSPENDED CEILINGS.
	INFRARED SENSOR, WALL MOUNT, TWO LAMP LUMINAIRES
	ULTRASONIC SENSOR, CEILING
1	CONTACT - NORMALLY OPEN WITH NEMA SIZE INDICATED AS APPLICABLE
	CONTACT - NORMALLY CLOSED
	OVERLOAD RELAY HEATER
1	MAGNETIC STARTER WITH NEMA SIZE INDICATED
100/M	CIRCUIT BREAKER, MAGNETIC TRIP ONLY, FRAME SIZE SHOWN, 3 POLE UNLESS INDICATED OTHERWISE.
400	CIRCUIT BREAKER, THERMAL MAGNETIC TRIP SHOWN 3 POLE UNLESS INDICATED OTHERWISE.
AS AF OR AI AF	CIRCUIT BREAKER, STATIC TRIP UNIT, SENSOR, AMP AND FRAME RATINGS SHOWN, 3 POLE
100	SWITCH - CURRENT RATING INDICATED, 3 POLE UNLESS INDICATED OTHERWISE.
225	FUSE - RATING INDICATED
	SURGE ARRESTER
10	CAPACITOR - KVAR INDICATED
VS V 0-600V	METER WITH SWITCH - SCALE RANGE SHOWN
	GROUND
120V OR 120/240V 15 KVA, 1PH	TRANSFORMER, SECONDARY VOLTAGES, PHASE AND RATING INDICATED AS APPLICABLE
	ISOLATION TRANSFORMER SECONDARY VOLTAGES, PHASE, AND RATING INDICATED AS APPLICABLE
GFI 25A 0.1	PICK-UP SETTING TIME CURRENT CHARACTERISTIC } GROUND FAULT RELAY WITH CURRENT TRANSFORMER
	PUSH-BUTTON SWITCH, MOMENTARY CONTACT, NORMALLY OPEN
	PUSH-BUTTON SWITCH, MOMENTARY CONTACT, NORMALLY CLOSED
	PUSH BUTTON SWITCH, MAINTAINED CONTACTS WITH MECHANICAL INTERLOCK
	NORMALLY OPEN, LIMIT SWITCH
	NORMALLY CLOSED, LIMIT SWITCH
	NORMALLY CLOSED, TIME DELAY OPENING
	NORMALLY CLOSED, TIME DELAY CLOSING
	NORMALLY OPEN, TIME DELAY CLOSED
	NORMALLY OPEN, TIME DELAY OPEN
	REMOTE DEVICE
O H A X00 00X	SELECTOR SWITCH - MAINTAINED CONTACT - CHART IDENTIFIES OPERATION:

CKT	POSITION HAND	OFF	AUTO
1	X	O	O
2	O	O	X

X - CLOSED CONTACT
O - OPEN CONTACT

(3)	CURRENT TRANSFORMER, NUMBER INDICATED
A	INDICATING LIGHT, PUSH-TO-TEST, LETTER INDICATES COLOR
A	INDICATING LIGHT - LETTER INDICATES COLOR A - AMBER G - GREEN Y - YELLOW B - BLUE R - RED C - CLEAR W - WHITE

ABBREVIATIONS

ABBREVIATIONS	DESCRIPTION
A	AMMETER, AMPERE, AMBER ANALOG
AF	AMPERE FRAME
AFD	ADJUSTABLE FREQUENCY DRIVE
AFF	ABOVE FINISHED FLOOR
AFG	ABOVE FINISHED GRADE
AIC	AMP INTERUPTING CAPACITY
AS	AMMETER SWITCH, AMPERE SENSOR
ASD	ADJUSTABLE SPEED DRIVE
ASU	AIR SUPPLY UNIT
AT	AMPERE TRIP
ATS	AUTOMATIC TRANSFER SWITCH
BC	BARE COPPER
BFG	BELOW FINISHED GRADE
BRKR	BREAKER
C	CONDUIT, CONTACTOR
CB	CIRCUIT BREAKER
CBLP.	CONTROL CABLE
CKT	CIRCUIT
CPT	CONTROL POWER TRANSFORMER
CR	CONTROL RELAY
CRE	CORROSION-RESISTANT
CRS	COATED RIGID STEEL CONDUIT
CT	CURRENT TRANSFORMER
DC	DIRECT CURRENT
DIV	DIVISION
DP	DISTRIBUTION PANELBOARD
E	EMPTY, EMERGENCY
EM	ELECTRONIC METER
EO	ELECTRIC OPERATOR
EQPT	EQUIPMENT
ESS	EMERGENCY SHUTDOWN SWITCH
EXST	EXISTING
FDR	FEEDER
F	FUSE
FLUOR	FLUORESCENT
FS	SPRINKLER SYSTEM FLOW SWITCH
FSCP	FIRE SUPPRESSION CONTROL PANEL
FVNR	FULL VOLTAGE NON-REVERSING
G	GREEN, GROUND
GALV	GALVANIZED
GFCI	GROUND FAULT CIRCUIT INTERRUPTER
GFI	GROUND FAULT INTERRUPTER
GFR	GROUND FAULT RELAY
GND	GROUND
H	HIGH SPEED
HH	HANDHOLE
HID	HIGH INTENSITY DISCHARGE
HPS	HIGH PRESSURE SODIUM
HS	HAND SWITCH
HT	HEAT TRACE
IC	INTERRUPTING CAPACITY
I &C	INSTRUMENTATION AND CONTROL
INCAND	INCANDESCENT
INST	INSTANTANEOUS
IP	INDICATING PANEL
J.	J-BOX JUNCTION BOX
K	KEY INTERLOCK

ABBREVIATIONS	DESCRIPTION
L	LIGHTING CONTACTOR, LOW SPEED
LOS	LOCKOUT STOP PUSH BUTTON
LP	LIGHTING PANELBOARD
LR	LATCHING RELAY
LTF	LIQUID TIGHT FLEX CONDUIT
LTS	LIGHTS
M	MAGNETIC CONTACTOR COIL
MCC	MOTOR CONTROL CENTER
MH	METAL HALIDE
MO	MOTOR OPERATOR
MS	MOTOR STARTER
MSC	MANUFACTURER SUPPLIED CABLE
MT	MOUNT
MTD	MOUNTED
N	NEUTRAL
NC	NORMALLY CLOSED
NL	NIGHT LIGHT
NO	NORMALLY OPEN
NP	NAMEPLATE
OC	ON CENTER
PB	PULL BOX, PUSH BUTTON SWITCH
PC	PHOTOCELL, PHOTOCONTROL
PH	PHASE
PMR	PHASE MONITOR RELAY
PNL	PANEL
PS	PRESSURE SWITCH
PT	POTENTIAL TRANSFORMER
PVC	POLYVINYL CHLORIDE CONDUIT
R	RED
RCPT	RECEPTACLE
REQD	REQUIRED
RS	RIGID STEEL CONDUIT
RT	REMOTE TELEMETRY
SA	SURGE ARRESTOR
SCCR	SHORT CIRCUIT CURRENT RATING
S/N	SOLID NEUTRAL
SPD	SPEED
SSRV	SOLID STATE REDUCED VOLTAGE SOFT STARTER
SST	STAINLESS STEEL
SV	SOLENOID VALVE
SW	SWITCH
T	THERMOSTAT
TB	TERMINAL BOARD
TC	TIME CLOSE
TD	TEMPERATURE DETECTOR RELAY
TDR	TIME DELAY RELAY
TJB	TERMINAL JUNCTION BOX
T.O.	TIME OPEN
TS	SPRINKLER SYSTEM TAMPER SWITCH
TSP	TWISTED SHIELDED PAIR
TST	TWISTED SHIELDED TRIAD
TVSS	TRANSIENT VOLTAGE SURGE SUPPRESSOR
TYP	TYPICAL
UH	UNIT HEATER
UVR	UNDER VOLTAGE RELAY
V	VOLTMETER, VOLT
VFD	VARIABLE FREQUENCY DRIVE
VS	VOLTMETER SWITCH
W	WATT
WHD	WATTHOUR DEMAND METER
WP	WEATHERPROOF
XFMR	TRANSFORMER

NOTES:
1. THIS IS A STANDARD LEGEND SHEET. SOME SYMBOLS OR ABBREVIATIONS MAY APPEAR ON THIS DRAWING AND NOT ON THE PLANS.
2. FOR ADDITIONAL ABBREVIATIONS OF OTHER DIVISIONS (HVAC, MECHANICAL, AND STRUCTURAL/ARCHITECTURAL), SEE OTHER LEGENDS.

DSGN	RL HAMILTON				
DR	DW CLARK	3	4/27/10	REVISED AS-BUILT	JB	ROW
CHK	TG OSSOWSKI	2	5/14/09	PRELIMINARY AS-BUILT	JB	ROW
APVD	KT SCHEEFLER	1	3/4/09	AS-BUILT FIELD DATA - PRELIMINARY	JFF	GS
		NO.	DATE	REVISION	BY	APVD

VERIFY SCALE
BAR IS ONE INCH ON ORIGINAL DRAWING.
0 1"
IF NOT ONE INCH ON THIS SHEET, ADJUST SCALES ACCORDINGLY.

CH2MHILL

US ENVIRONMENTAL PROTECTION AGENCY
WYCKOFF GROUNDWATER TREATMENT PLANT
BAINBRIDGE ISLAND, WA

GENERAL
ELECTRICAL LEGEND AND ABBREVIATIONS SHEET 1

SHEET	11
DWG	01-G-11
DATE	JANUARY 4 2006
PROJ	316783.FD.B

FILENAME: 01ng011d_316783.dgn PLOT DATE: 4/28/2010 PLOT TIME: 8:34:06 AM

GENERAL CIRCUIT CONDUCTOR AND CONDUIT IDENTIFICATION

ANALOG CIRCUIT CALLOUTS

TAG	DESCRIPTION
[A1]	[3/4"C,1 TYPE3]
[A2]	[1"C,2 TYPE3]
[A3]	[1"C,3 TYPE3]
[A4]	[1"C,4 TYPE3]
[A5]	[1 1/4"C,5 TYPE3]
[A6]	[1 1/4"C,6 TYPE3]
[A7]	[1 1/2"C,7 TYPE3]
[A8]	[1 1/2"C,8 TYPE3]
[A9]	[1 1/2"C,9 TYPE3]
[A10]	[2"C,10 TYPE3]
[A11]	[2"C,11 TYPE3]
[A12]	[2"C,12 TYPE3]
[A13]	[2"C,13 TYPE3]
[A14]	[2"C,14 TYPE3]
[A15]	[3/4"C,1 TYPE4]
[A16]	[3/4"C,2 TYPE4]
[A17]	[1"C,3 TYPE4]
[A18]	[1 1/4"C,4 TYPE4]
[A19]	[1 1/4"C,5 TYPE4]
[A20]	[1 1/4"C,6 TYPE4]
[A21]	[1 1/2"C,7 TYPE4]
[A22]	[1 1/2"C,8 TYPE4]
[A23]	[2"C,9 TYPE4]
[A24]	[3/4"C,1-4PR TYPE5]
[A25]	[1"C,2-4PR TYPE5]

CONTROL CIRCUIT CALLOUTS

TAG	DESCRIPTION
[C1]	[3/4"C,MSC]
[C2]	[3/4"C,2#14,1#14G]
[C3]	[3/4"C,3#14,1#14G]
[C4]	[3/4"C,4#14,1#14G]
[C5]	[3/4"C,5#14,1#14G]
[C6]	[3/4"C,6#14,1#14G]
[C7]	[3/4"C,7#14,1#14G]
[C8]	[3/4"C,8#14,1#14G]
[C9]	[3/4"C,9#14,1#14G]
[C10]	[3/4"C,10#14,1#14G]
[C11]	[3/4"C,11#14,1#14G]
[C12]	[3/4"C,12#14,1#14G]
[C13]	[3/4"C,13#14,1#14G]
[C14]	[3/4"C,14#14,1#14G]
[C15]	[3/4"C,15#14,1#14G]
[C16]	[3/4"C,16#14,1#14G]
[C17]	[3/4"C,17#14,1#14G]
[C18]	[3/4"C,18#14,1#14G]
[C19]	[3/4"C,19#14,1#14G]
[C20]	[3/4"C,20#14,1#14G]
[C21]	[3/4"C,21#14,1#14G]
[C22]	[3/4"C,22#14,1#14G]
[C23]	[3/4"C,23#14,1#14G]
[C24]	[1"C,24#14,1#14G]
[C25]	[1"C,25#14,1#14G]

CONTROL CABLE CIRCUIT CALLOUTS

TAG	DESCRIPTION
[CC5]	[3/4"C,1-5C TYPE1]
[CC7]	[3/4"C,1-7C TYPE1]
CC12]	[1"C,1-12C TYPE1]
[CC19]	[1 1/2"C,1-19C TYPE1]
[CC25]	[1 1/2"C,1-25C TYPE1]
[CC37]	[2"C,1-37C TYPE1]
[CCC1]	[1-7C#12 TYPE1]

POWER CABLE CIRCUIT CALLOUTS

TAG	DESCRIPTION
[PC1]	[3/4"C,1-4C#12, TYPE2]
[PC2]	[3/4"C,1-4C#10, TYPE2]
[PC3]	[1"C,1-4C#8, TYPE2]
[PC4]	[1 1/4"C,2-4C#12, TYPE2]
[PC5]	[1 1/2"C,2-4C#10, TYPE2]
[PC1A]	[3/4"C,1-3C#12, TYPE2]
[PC2A]	[3/4"C,1-3C#10, TYPE2]

EMPTY CONDUIT

TAG	DESCRIPTION
[CE]	[3/4"C, WITH PULL STRING]

POWER CIRCUIT CALLOUTS

TAG	DESCRIPTION	TAG	DESCRIPTION
[B1]	[3/4"C,MSC]	[B24]	[1"C,3#8,3#14,1#10G]
[B2]	[3/4"C,2#12,1#12G]	[B25]	[1"C,3#8,4#14,1#10G]
[B3]	[3/4"C,3#12,1#12G]	[B26]	[1"C,3#8,5#14,1#10G]
[B4]	[3/4"C,4#12,1#12G]	[B27]	[1"C,2#6,1#10G]
[B5]	[3/4"C,5#12,1#12G]	[B28]	[1"C,3#6,1#10G]
[B6]	[3/4"C,6#12,1#12G]	[B29]	[1"C,3#6,2#14,1#10G]
[B7]	[3/4"C,7#12,1#12G]	[B30]	[1"C,3#6,3#14,1#10G]
[B8]	[3/4"C,8#12,1#12G]	[B31]	[1"C,3#6,4#14,1#10G]
[B9]	[3/4"C,3#12,2#14,1#12G]	[B32]	[1"C,3#6,5#14,1#10G]
[B10]	[3/4"C,3#12,3#14,1#12G]	[B33]	[1"C,3#4,1#8G]
[B11]	[3/4"C,3#12,4#14,1#12G]	[B34]	[1 1/4"C,3#4,3#14,1#8G]
[B12]	[3/4"C,3#12,5#14,1#12G]	[B35]	[1 1/4"C,3#4,5#14,1#8G]
[B13]	[3/4"C,3#12,6#14,1#12G]	[B36]	[1 1/4"C,3#3,1#8G]
[B14]	[3/4"C,3#12,7#14,1#12G]	[B37]	[1 1/4"C,3#3,3#14,1#8G]
[B15]	[3/4"C,2#10,1#10G]	[B38]	[1 1/4"C,3#2,1#6G]
[B16]	[3/4"C,3#10,1#10G]	[B39]	[1 1/4"C,3#1,1#6G]
[B17]	[3/4"C,3#10,2#14,1#10G]	[B40]	[1 1/2"C,3#1,3#14,1#6G]
[B18]	[3/4"C,3#10,3#14,1#10G]	[B41]	[1 1/2"C,3#2/0,1#6G]
[B19]	[3/4"C,3#10,4#14,1#10G]	[B42]	[2"C,3#3/0,1#4G]
[B20]	[3/4"C,3#10,5#14,1#10G]	[B43]	[2"C,3#4/0,1#4G]
[B21]	[1"C,2#8,1#10G]		
[B22]	[1"C,3#8,1#10G]		
[B23]	[1"C,3#8,2#14,1#10G]		

GENERAL ELECTRICAL CONSTRUCTION NOTES

1. APPLICATION: THESE PROVISIONS APPLY TO ALL WORK GENERALLY, UNLESS OTHERWISE SPECIFIED BY SPECIFIC NOTE OR REFERENCE.
2. ELECTRICAL INSTALLATION CONDITIONS: FOR REQUIREMENTS, SEE SPECIFICATION SECTION 16010, AREA DESIGNATIONS.
3. ANALYZE THE REQUIREMENTS FOR ROUTING EACH RACEWAY AND INSTALL ACCORDING TO THE SPECIFICATIONS. WHERE SPECIFIC ROUTING RIGHTS-OF-WAY (R.O.W.) ARE SHOWN, ROUTING OF RACEWAYS SHALL CONFORM TO THOSE CORRIDORS UNLESS ALLOWED OTHERWISE. WHERE ACCESS, CONSTRUCTABILITY, OR COORDINATION WITH OTHER ELEMENTS OF THE WORK SUGGESTS THAT AN ALTERNATE ROUTING BE CONSIDERED, SUBMIT THAT ALTERNATE PLAN FOR APPROVAL.
4. DEMOLITION: REFER TO SPECIFICATIONS FOR DETAILED REQUIREMENTS. RETAIN AND PROTECT ALL EXISTING CIRCUITS, RACEWAYS, HANDHOLES, MANHOLES, AND EQUIPMENT UNLESS SPECIFICALLY IDENTIFIED FOR DEMOLITION ON THE SITE OR FACILITY DEMOLITION PLANS. MAINTAIN ALL CIRCUITS IN CONTINUOUS OPERATION UNLESS OTHERWISE SHOWN OR SPECIFIED. ANY INTERRUPTION OF NORMAL OPERATION SHALL BE APPROVED BY AND COORDINATED WITH THE OWNER.
5. FINAL CIRCUIT ROUTING FOR PNEUMATIC CONTROL VALVE ACTUATORS: THE ACTUATORS CONSIST OF MULTIPLE DEVICES, EACH REQUIRING INDIVIDUAL CONNECTION OF ELECTRIC POWER AND CONTROL CIRCUITS. FOR CLARITY, A SINGLE CONNECTION SYMBOL IS SHOWN. AT EACH VALVE, THE ASSOCIATED CIRCUITS AND RACEWAY SHALL BE ROUTED TO A SINGLE JUNCTION BOX MOUNTED AT OR ADJACENT TO THE VALVE. EXTEND EACH CIRCUIT TO ITS RESPECTIVE DEVICE VIA 3/4-INCH FLEXIBLE CONDUIT. TAP THE EQUIPMENT GROUNDING CONDUCTOR IN THE BOX AND EXTEND TO EACH DEVICE.
6. FINAL CIRCUIT ROUTING FOR ELECTRIC CONTROL VALVE AND GATE ACTUATORS: EACH ACTUATOR SHALL BE CONNECTED TO ITS POWER BRANCH CIRCUIT VIA A DEDICTED DISCONNECT SWITCH, AS SHOWN ON THE CIRCUIT/RACEWAY BLOCK DIAGRAMS. FOR CLARITY, A SINGLE CONNECTION SYSMBOL IS SHOWN, REPRESENTING EACH ACTUATOR AND ITS ASSOCIATED DISCONNECT SWITCH. THE SPECIFIED BRANCH CIRCUIT CONDUCTORS AND RACEWAY SHALL BE ROUTED TO THE DISCONNECT SWITCH, MOUNTED AT OR ADJACENT TO THE VALVE. THEN EXTEND THE SAME CIRCUIT TO THE ACTUATOR.
7. FOR INTERFACING CIRCUITS AND CONDUITS AT DEVICES, SEE SPECIFICATION SECTION 13411 SUPPLEMENT FOR I & C DESIGN DETAILS.
8. USE TRAY RATED CABLE WHERE CABLE TRAY IS USED FOR WIRE DISTRIBUTION.

AS-BUILT

DSGN RL HAMILTON					
DR DW CLARK	3	4/27/10	REVISED AS-BUILT	JB	ROW
CHK TG OSSOWSKI	2	5/14/09	PRELIMINARY AS-BUILT	JB	ROW
APVD KT SCHEFFLER	1	3/4/09	AS-BUILT FIELD DATA - PRELIMINARY	JFF	GS
	NO.	DATE	REVISION	BY	APVD

VERIFY SCALE
BAR IS ONE INCH ON ORIGINAL DRAWING.
0 1"
IF NOT ONE INCH ON THIS SHEET, ADJUST SCALES ACCORDINGLY.

CH2MHILL

US ENVIRONMENTAL PROTECTION AGENCY
WYCKOFF GROUNDWATER TREATMENT PLANT
BAINBRIDGE ISLAND, WA

GENERAL
ELECTRICAL LEGEND
SHEET 2

SHEET	12
DWG	01-G-12
DATE	JANUARY 4 2006
PROJ	316783.FD.B

FILENAME:01ng012d_316783.dgn PLOT DATE:4/28/2010 PLOT TIME:8:40:07 AM

INFLUENT FLOWS AND LOADS

Flow Rates, gpm	
Design	70
Future	25
Total PAH's (μg/L)	16,279
PCP (μg/L)	919
TSS (mg/L)	100
Oil & Grease (mg/L)	22

EFFLUENT REQUIREMENTS

Total PAH's (μg/L)	20
PCP (μg/L)	6

LIQUID UNIT PROCESS SECTION

Tanks/Vessels/Sumps

Equalization Tank	
Diameter, ft	18
Wall height, ft	27
Sidewater height, ft	25.5
Total liquid volume, gal	48,540
Water working volume, gal	38,075
Tank volume, gal	51,400
HRT, hr (@ 70 gpm)	9.1
HRT, hr (@ 11 gpm)	58

Stormwater/Recycle Tank	
Diameter, ft	13
Wall height, ft	18
Sidewater height, ft	16.5
Liquid volume, gal	16,380
Tank volume, gal	17,870

Froth Tank	
Width, ft	4
Length, ft	13
Wall height, ft	6
Sidewater height, ft	5
Liquid volume, gal	1,950
Tank volume, gal	2,330
Surface overflow rate @ 15 gpm, gpm/ft^2	0.1

Product Tank [redacted]		
Width, ft	8.92	8.92
Length, ft	24.92	24.92
Wall height, ft	5	5
Liquid volume, gal	6,650	6,650
Tank volume, g	8,320	8,320
Storage capacity, month	49	49

LIQUID UNIT PROCESS SECTION (continued)

Equalization Skim Sump	
Width, ft	5
Length, ft	5
Wall height, ft	5
Sidewater height, ft	4
Liquid volume, gal	748
Tank volume, gal	935

Effluent Tank	
Backwash volume requirement , gpm	27,350
Diameter, ft	16
Wall height, ft	22
Sidewater Height, ft	20
Liquid volume, gal	20,080
Tank volume, gal	33,090
HRT, hr (@ 70 gpm)	7.2

Dirty Backwash Tank	
Volume requirement, gal	19,700
Diameter, ft	18
Straight wall height, ft	14
Sidewater height, ft	12
Cone bottom angle, deg	45
Liquid volume, gal	28,560
Tank volume, gal	32,360

Containment Area Sump	
Volume requirement, gal	10,942
Width, ft	4
Length, ft	70
Wall height, ft (avg)	5.7
Sump volume	11,880

Tank Containment Pad	
Volume requirement, gal	67,482
Surface area, ft^2	3,817
Open surface area, ft^2	2,332
Wall Height, ft	≥3.87

Process Pumps

Stormwater/Recycle Pump	
Units	1
Type	Centrifugal
Capacity, ea, gpm	70
Drive	Constant
Motor, hp	1.0
TDH, ft	26

DAF Feed Pump	
Units	2
Type	Progressing cavity
Capacity, ea, gpm	80
Drive	VFD
Motor, hp	3
TDH, ft	10

LIQUID UNIT PROCESS SECTION (continued)

Froth Pump	
Units	2
Type	Elec. Diaphragm
Capacity, ea, gpm	10
Drive	Manual
Motor, hp	2
TDH, ft	12

Oil Pump	
Units	1
Type	Air Diaphragm
Capacity, ea, gpm	15
Drive	Manual
TDH, ft	11

Decant Pump	
Units	2
Type	Centrifugal
Capacity, ea, gpm	10
Drive	VFD
Motor, hp	0.75
TDH, ft	29

Filter Feed Pump	
Units	2
Type	Centrifugal
Capacity, ea, gpm	70
Drive	VFD
Motor, hp	7.5
TDH, ft	150

Backwash Pump	
Units	2
Type	Centrifugal
Capacity, ea, gpm	330
Drive	Constant
Motor, hp	15
TDH, ft	69

Backwash/Recycle Pump	
Units	1
Type	Centrifugal
Capacity, ea, gpm	115
Drive	Constant
Motor, hp	2
TDH, ft	28

LIQUID UNIT PROCESS SECTION (continued)

Spare/Product Disposal Pump	
Units	1
Type	Air Diaphragm
Capacity, ea, gpm	20
Drive	Constant
TDH, ft	28

Sump Pump	
Units	2
Type	Submersible
Capacity, ea, gpm	350
Drive	Constant
Motor, hp	5
TDH, ft	27

Filters/Clarifiers/Adsorbers

DAF System (with Recycle/Air Saturation System)	
Tank Length, ft	18.5
Tank Width, ft	6
Tank Height, ft	9

Carbon Adsorbers	
Units	5
Diameter, ft	8
Bed height, ft (Approx.)	7.5
Dry Weight Carbon, lbs	10,000
Backwash flowrate, gpm/ft^2	12.7
Backwash time, min	25
Volume per backwash, gal	17,500
Hydraulic loading, @ 70 gpm, gpm/ft^2	1.4
Empty bed contact time, min	40

SOLIDS UNIT PROCESS SECTION

Tanks/Vessels/Sumps

Digester Tank	
Diameter, ft	10
Straight wall height, ft	14
Sidewater heig	12
Cone bottom angle, deg	30
Liquid volume, (	7,620
Tank volume, gal	8,790
HRT, day (@55	138

Filter Press Feed Tank	
Units	2
Diameter, ft	4
Wall height, ft	4
Sidewater height, ft	3.5
Liquid volume, gal (each)	329
Tank volume, gal (each)	376

Filtrate Tank	
Diameter, ft	4
Wall height, ft	4
Sidewater height, ft	3.5
Liquid volume, gal	329
Tank volume, gal	376

Process Pumps

Digestor/Skim Pump	
Units	1
Type	Air Diaphragm
Capacity, ea, gpm	20
Drive	Manual
TDH, ft	13

Filter Press/Digester Feed Pump	
Units	1
Type	Air Diaphragm
Capacity, ea, gpm	20
Drive	Manual
TDH, ft	267

Filters

Filter Press	
Units	1
Type	Plate & Frame
Typical batch size, gal	600

AS-BUILT

DSGN GT HICKMAN						
DR ER BROWN	3	4/27/10	REVISED AS-BUILT	JB	ROW	
CHK MW DAVIS	2	5/14/09	PRELIMINARY AS-BUILT	DLS	ROW	
APVD KT SCHEFFLER	1	3/4/09	AS-BUILT FIELD DATA - PRELIMINARY	JFF	GS	
	NO.	DATE	REVISION	BY	APVD	

VERIFY SCALE
BAR IS ONE INCH ON ORIGINAL DRAWING.
0 1"
IF NOT ONE INCH ON THIS SHEET, ADJUST SCALES ACCORDINGLY.

CH2MHILL

US ENVIRONMENTAL PROTECTION AGENCY
WYCKOFF GROUNDWATER TREATMENT PLANT
BAINBRIDGE ISLAND, WA

GENERAL
DESIGN DATA SUMMARY

SHEET	13
DWG	01-G-13
DATE	JANUARY 4 2006
PROJ	316783.FD.B

FILENAME:01ng013d_316783.dgn PLOT DATE: 4/28/2010 PLOT TIME: 8:45:07 AM

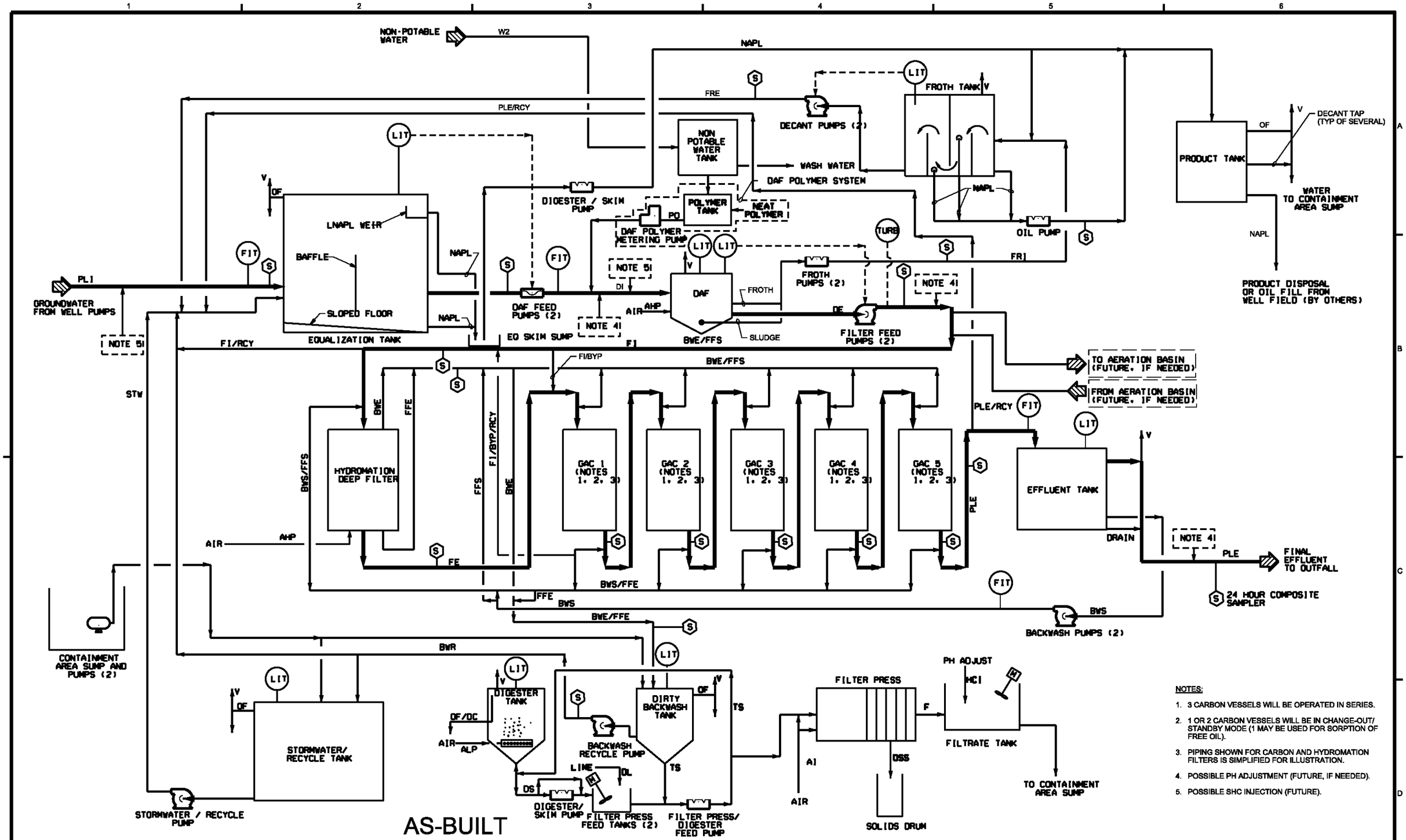

NOTES:

1. 3 CARBON VESSELS WILL BE OPERATED IN SERIES.
2. 1 OR 2 CARBON VESSELS WILL BE IN CHANGE-OUT/ STANDBY MODE (1 MAY BE USED FOR SORPTION OF FREE OIL).
3. PIPING SHOWN FOR CARBON AND HYDROMATION FILTERS IS SIMPLIFIED FOR ILLUSTRATION.
4. POSSIBLE PH ADJUSTMENT (FUTURE, IF NEEDED).
5. POSSIBLE SHC INJECTION (FUTURE).

DSGN GT HICKMAN					
DR PD VALENTINE	3	4/27/10	REVISED AS-BUILT	JB	ROW
CHK MW DAVIS	2	5/14/09	PRELIMINARY AS-BUILT	DLS	ROW
APVD KT SCHEFFLER	1	3/4/09	AS-BUILT FIELD DATA - PRELIMINARY	JFF	GS
	NO.	DATE	REVISION	BY	APVD

VERIFY SCALE
BAR IS ONE INCH ON ORIGINAL DRAWING.
0 1"
IF NOT ONE INCH ON THIS SHEET, ADJUST SCALES ACCORDINGLY.

CH2MHILL

US ENVIRONMENTAL PROTECTION AGENCY
WYCKOFF GROUNDWATER TREATMENT PLANT
BAINBRIDGE ISLAND, WA

GENERAL
PROCESS FLOW DIAGRAM

SHEET	14
DWG	01-G-14
DATE	JANUARY 4 2006
PROJ	316783.FD.B

FILENAME: 01ng014d_316783.dgn PLOT DATE: 4/28/2010 PLOT TIME: 8:52:54 AM

STREAM NUMBER		1	2	3	4	5	6	7	8	9	10	11	12
DESCRIPTION		Groundwater Influent	EQ Tank Effluent/ DAF Influent	DAF Effluent/ MF Influent	MF Effluent/ Carbon Influent	Carbon Effluent/ Outfall	DBW Tank Influent	DBW Tank Supernatant	DBW Underflow / Digester Influent	Digester Effluent/ Filter Press Influent	Filter Press Effluent/ Filtrate Tank Influent	Filter Press Cake Effluent	Filtrate Tank Effluent
FLOWRATE													
Overall	(gpm)	63	75	70	70	70	-	-	-	-	-	-	-
	(gpd)	-	-	-	-	-	9850	9838	12	12	11	1.7	11
O&G	(lb/day)	14	18	9	5.7	0.8	2.8	2.8	N/A	N/A	N/A	N/A	N/A
TSS	(lb/day)	23	25	12	5.8	0.8	5.8	0.58	5.3	4.2	0.04	4.2	0.04
PCP	(lb/day)	0.4	0.4	0.3	0.3	0.001	0.04	0.037	N/A	N/A	N/A	N/A	N/A
PAH	(lb/day)	15	16	7.5	5.0	0.008	2.5	2.49	N/A	N/A	N/A	N/A	N/A
CONCENTRATION													
O&G	(mg/L)	19	20	10	7	1	34	34	N/A	N/A	N/A	N/A	N/A
TSS	(mg/L)	30	28	14	7	1	71	7	51550	41240	479	294118	479
PCP	(µg/L)	480	435	405	360	1	0.5	0.5	N/A	N/A	N/A	N/A	N/A
PAH	(µg/L)	19800	17955	8977	6015	10	30	30	N/A	N/A	N/A	N/A	N/A

Notes & Assumptions

Stream 1 :
1 - Overall flowrate = groundwater flow from wellfield (53.6 gpm) + design stormwater runoff flow (9.6 gpm).
2 - O&G, PCP and PAH concentrations are the historical average influent concentrations to the existing GWTP, Sept 2003 - Sept 2004
3 - TSS concentration is the assumed groundwater influent concentration for the existing GWTP

Stream 2 :
1 - Overall flowrate = Stream #1 flowrate + backwash recycle (Stream #7) + Froth Tank Decant Recycle (5 gpm)
2 - Froth recycle concentrations assumed to be the same as Stream #1 groundwater influent concentrations

Stream 3 :
1 - Overall flowrate = Stream #2 flowrate - Froth Tank Decant Recycle (5 gpm)

Stream 5 :
1 - Contaminant concentrations set at expected target levels.

Backwash Batch Streams 6, 7, 8

Stream 6 :
1 - Overall flowrate is the total 840 gallons used for one MF backwash averaged over 24 hours. Assumes one MF backwash per day. The flowrate is not continuous.
2 - TSS flowrate (lb/day) represents the solids sent to the Dirty Backwash (DBW) Tank during a backwash run, assuming one MF backwash per day.
3 - Mass flowrates assume that all of the contaminants removed by the MF are backwashed to the DBW Tank.

Stream 7 :
1 - Mass flowrates assume that 10% of solids flow from the tank with the supernatant
2 - Mass flowrates assume that 100% of O&G, PCP, and PAH flow from the tank with the supernatant. This is expected to be conservatively high.

Stream 8 :
1 - Overall flowrate to the Digester Tank is calculated based on the assumed concentration of solids in the DBW Tank bottom and the mass of settled solids collected per day
2 - TSS mass flowrate (lb/day) assumes 90% of the solids from a single backwash batch are settled and sent to the Digester Tank
3 - TSS concentration assumes that the DBW solids settle to a concentration of 5% solids and that the solids density is 2.5 g/mL

Filter Press Batch Streams 9, 10, 11, 12

Stream 9 :
1 - Overall flowrate for Digester effluent is assumed to be the same as Digester Influent.
2 - Overall flowrate is not continuous. The overall flowrate should be interpreted as an average flowrate over the approximately 30-day period between Filter Press runs.

Stream 10 :
1 - Overall flowrate is not continuous. The overall flowrate should be interpreted as an average flowrate over the approximately 30-day period between Filter Press runs.

Stream 11 :
1 - Overall flowrate is calculated based on the mass of cake solids and the assumed concentration of the cake (25% solids).
2 - Overall flowrate is not continuous. The overall flowrate should be interpreted as an average flowrate over the approximately 30-day period between Filter Press runs.
3 - TSS concentration assumes that the cake is 25% solids and the solids density is 2.5 g/mL

Stream 12 :
1 - Flowrates and concentrations for Filtrate Tank influent and effluent are assumed to be the same
2 - TSS mass flowrate (lb/day) represents the mass of solids leaving the Filtrate Tank effluent and being sent back to the DBW Tank during one Filter Press batch load.

Process Equipment Removal Efficiencies

Contaminant	EQ Tank	DAF	MF	Digester Tank	Filter Press
O&G	0%	50%	33%	-	-
TSS	0%	50%	50%	20%	99%
PCP	0%	7%	11%	-	-
PAH	0%	50%	33%	-	-

1 - Removal efficiencies used in calculations for contaminant removal across individual process equipment.
2 - Removal efficiencies are based on the historical efficiencies at the existing GWTP, Sept '03 - Sept '04, or assumed based on reasonable expectations.

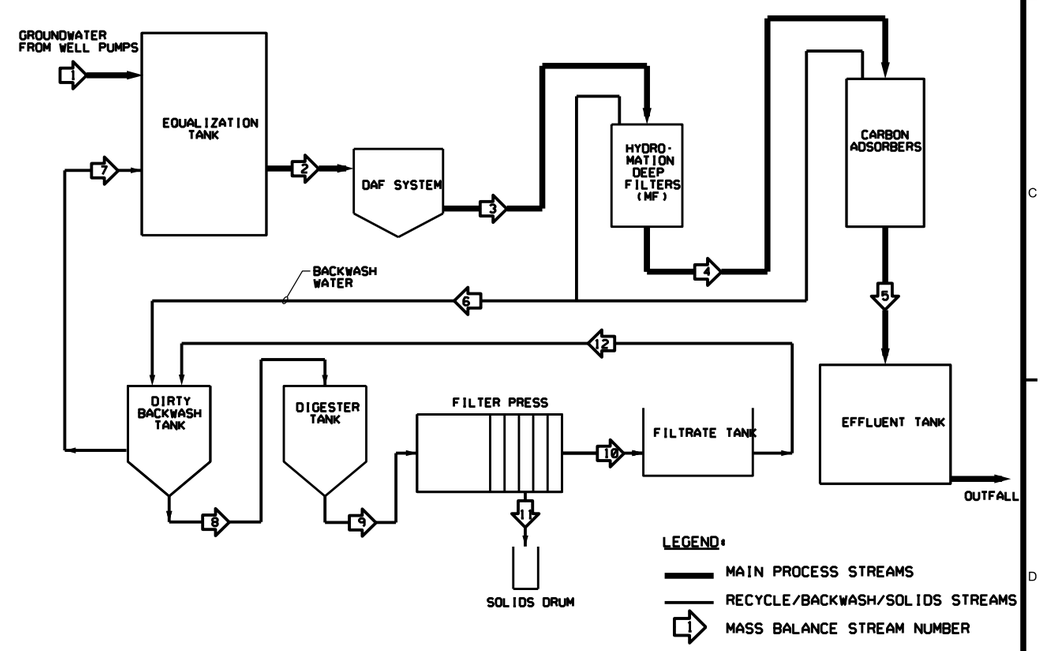

AS-BUILT

NO.	DATE	REVISION	BY	APVD
3	4/27/10	REVISED AS-BUILT	JB	ROW
2	5/14/09	PRELIMINARY AS-BUILT	DLS	ROW
1	3/4/09	AS-BUILT FIELD DATA - PRELIMINARY	JFF	GS

DSGN GT HICKMAN
DR PD VALENTINE
CHK MW DAVIS
APVD KT SCHEFFLER

VERIFY SCALE
BAR IS ONE INCH ON ORIGINAL DRAWING.
0 1"
IF NOT ONE INCH ON THIS SHEET, ADJUST SCALES ACCORDINGLY.

CH2MHILL

US ENVIRONMENTAL PROTECTION AGENCY
WYCKOFF GROUNDWATER TREATMENT PLANT
BAINBRIDGE ISLAND, WA

GENERAL
SIMPLIFIED PROCESS FLOW DIAGRAM AND MASS BALANCE

SHEET 15
DWG 01-G-15
DATE JANUARY 4 2006
PROJ 316783.FD.B

FILENAME: 01ng015d_316783.dgn PLOT DATE: 4/28/2010 PLOT TIME: 8:57:59 AM

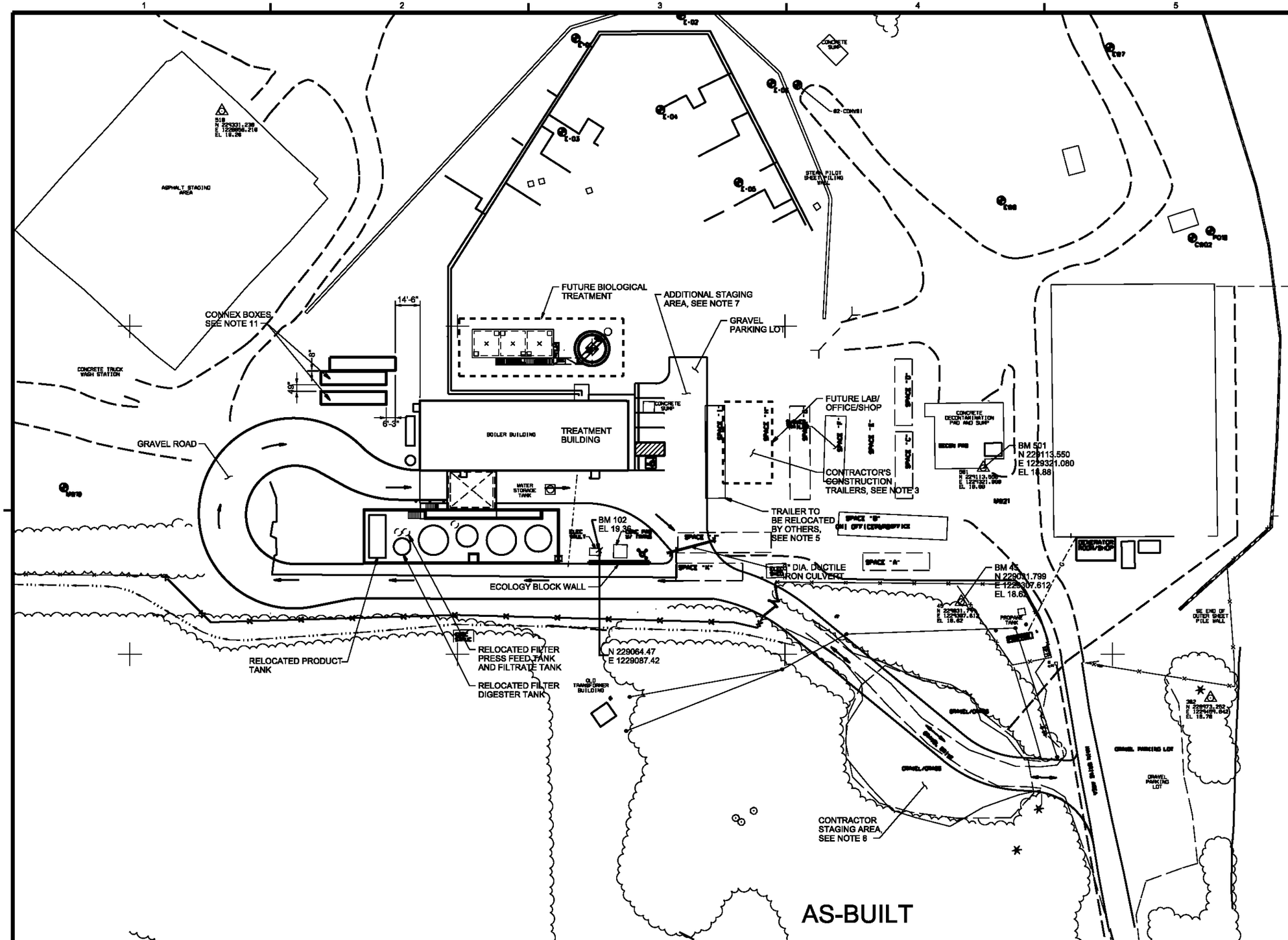

AS-BUILT

NOTES:

1. HORIZONTAL CONTROL BASED ON WASH. COORD. SYS., NORTH ZONE, NAD 83/91.
2. VERTICAL CONTROL BASED ON M.L.L.W.
3. CONTRACTOR MAY USE TRAILER SPACES H AND I FOR CONSTRUCTION TRAILERS.
4. EXISTING TREATMENT PLANT TO BE REMOVED BY OTHERS, UNDER SEPARATE CONTRACT, FOLLOWING RELOCATION OF IDENTIFIED EQUIPMENT.
5. CONTRACTOR SHALL COORDINATE SCHEDULE AND SEQUENCE WITH OWNER AND PLANT OPERATIONS STAFF. SEE SPECIFICATION SECTION 01145.
6. CONTRACTOR MAY USE EXISTING GRAVEL AND GRASS AREA FOR A STAGING AREA. VEGETATION MAY BE CLEARED TO PROVIDE MORE AREA IF NECESSARY, AS APPROVED BY THE ENGINEER. PLACE TEMPORARY FENCING AROUND STAGING AREA.
7. AREA BETWEEN BOILER BUILDING AND TRAILER SPACE I MAY BE USED FOR ADDITIONAL STAGING AREA IF NECESSARY.
8. CONTRACTOR SHALL SUBMIT A STAGING AREA PLAN FOR ENGINEER'S APPROVAL PRIOR TO CONSTRUCTION.
9. FOR EROSION CONTROL NOTES, SEE 01-G-04.
10. GRAVEL CONSTRUCTION ENTRANCE AND WHEEL WASH FOR CONSTRUCTION ONLY. CONTRACTOR IS RESPONSIBLE FOR PROVIDING AND DISPOSING OF WASH WATER. REMOVE AT THE END OF CONSTRUCTION.
11. PRIOR TO PLACEMENT OF CONNEX BOXES, GRADE AREA AS REQUIRED TO PROVIDE A LEVEL SURFACE AND PREVENT PONDING OF STORMWATER.
12. USED EXISTING BENCHMARK BM 45 LOCATED NEAR THE MAIN GATE ENTRANCE (EL = 18.62). LOCAL BENCHMARK BM 102 ESTABLISHED AT NORTHEAST CORNER OF POWER VAULT (EL = 19.36).

DSGN JA BOOTH	5	4/27/10	REVISED AS-BUILT	JB	ROW
DR DC EVANS	4	12/15/09	PRELIMINARY AS-BUILT	JB	ROW
CHK WB WAGNER	3	7/20/09	PRELIMINARY AS-BUILT	DLS	ROW
APVD KT SCHEEFLER	1	3/4/09	AS-BUILT FIELD DATA - PRELIMINARY	JFF	GS
	NO.	DATE	REVISION	BY	APVD

VERIFY SCALE
BAR IS ONE INCH ON ORIGINAL DRAWING.
0 1"
IF NOT ONE INCH ON THIS SHEET, ADJUST SCALES ACCORDINGLY.

CH2MHILL

US ENVIRONMENTAL PROTECTION AGENCY
WYCKOFF GROUNDWATER TREATMENT PLANT
BAINBRIDGE ISLAND, WA

SITE DEVELOPMENT
CIVIL
OVERALL SITE PLAN

SHEET	16
DWG	05-C-100
DATE	MARCH 2006
PROJ	316783.FD.B

FILENAME: 05nc100d_316783.dgn PLOT DATE: 4/28/2010 PLOT TIME: 9:51:28 AM

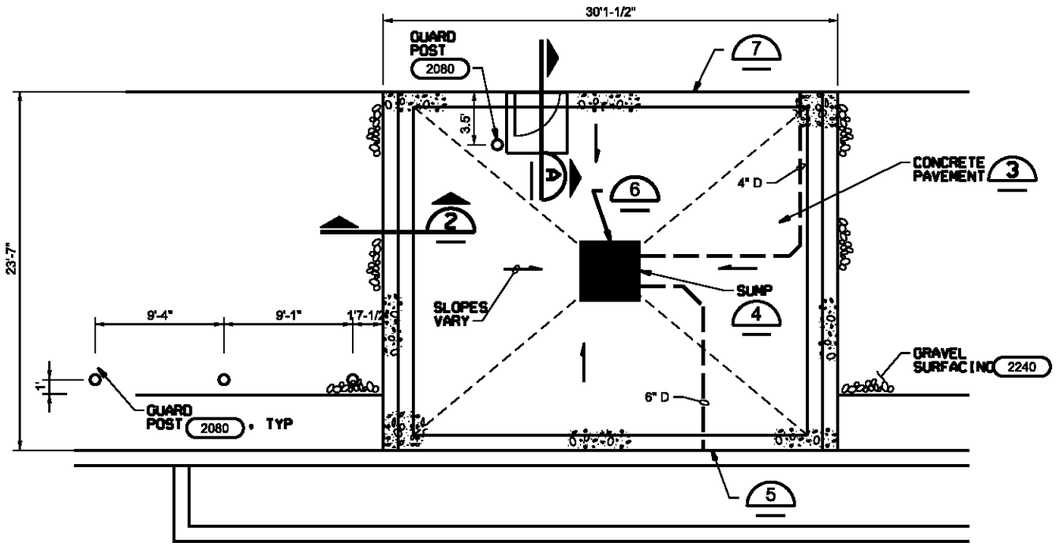

CONTAINMENT SLAB 1
1"=5'
05-CL-101
05-CG-101

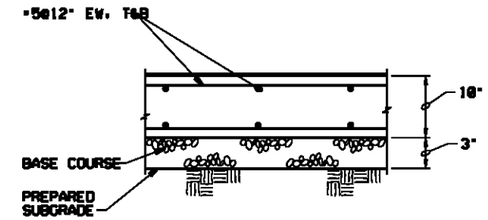

SECTION

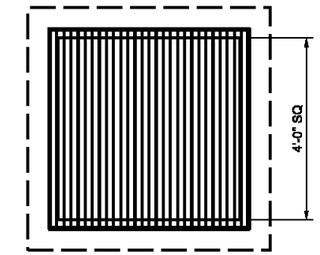

CONCRETE PAVEMENT 3
NTS

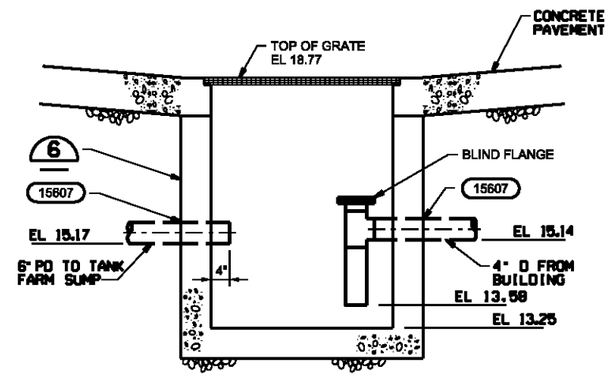

SUMP 4
NTS

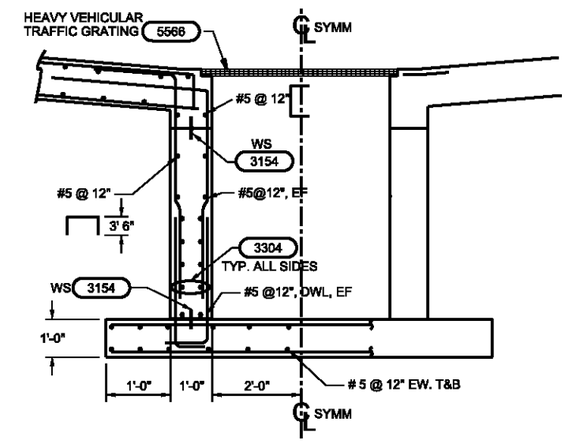

CONTAINMENT SLAB SUMP DETAIL 6
NTS

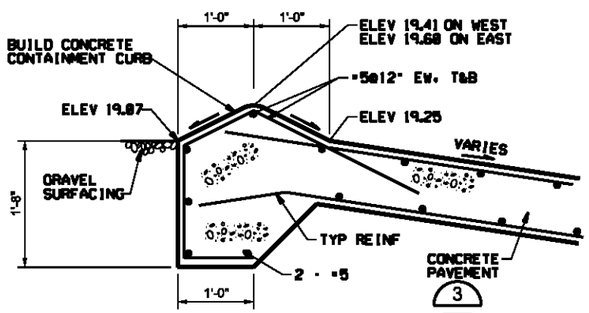

CONTAINMENT CURB 2
NTS

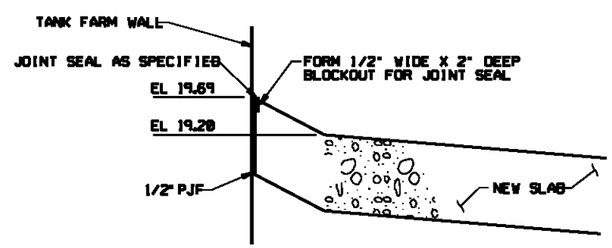

NOTE:
REINF NOT SHOWN

JOINT 5
NTS

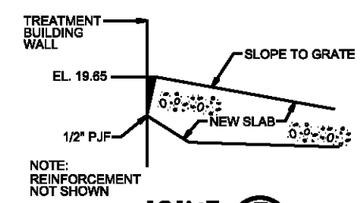

NOTE:
REINFORCEMENT NOT SHOWN

JOINT 7
NTS

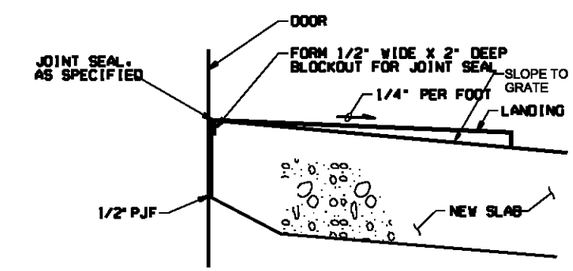

NOTE:
REINF NOT SHOWN

SECTION A
NTS

NOTE:
ADJUSTMENTS TO REINFORCING BAR AND CONCRETE AT THE 6-INCH CURB ON THE NORTH SIDE OF THE DECONTAMINATION PAD WERE COMPLETED PER REQUEST IN MOD 008 FL012. NO DETAIL DRAWINGS OR SPECIFICATIONS WERE PROVIDED BY THE DESIGN ENGINEER.

AS-BUILT

DSGN JA BOOTH	5	4/27/10	REVISED AS-BUILT	JB	ROW	VERIFY SCALE
DR DC EVANS	4	12/15/09	PRELIMINARY AS-BUILT	JB	ROW	BAR IS ONE INCH ON ORIGINAL DRAWING. 0 1" IF NOT ONE INCH ON THIS SHEET, ADJUST SCALES ACCORDINGLY.
CHK WB WAGNER	3	7/20/09	PRELIMINARY AS-BUILT	DLS	ROW	
APVD KT SCHEEFLER	1	3/4/09	AS-BUILT FIELD DATA - PRELIMINARY	JFF	GS	
	NO.	DATE	REVISION	BY	APVD	

CH2MHILL

US ENVIRONMENTAL PROTECTION AGENCY
WYCKOFF GROUNDWATER TREATMENT PLANT
BAINBRIDGE ISLAND, WA

SITE DEVELOPMENT
CIVIL DETAILS

SHEET	20
DWG	05-C-401
DATE	JANUARY 4 2006
PROJ	316783.FD.B

FILENAME:05nc401d_316783.dgn PLOT DATE:4/28/2010 PLOT TIME:2:52:26 PM

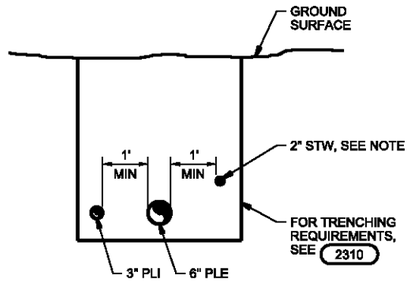

NOTE:
1. 2" STW MAY BE CONSTRUCTED IN A SEPARATE TRENCH.

PIPE CORRIDOR (7)
NTS 05-CY-101

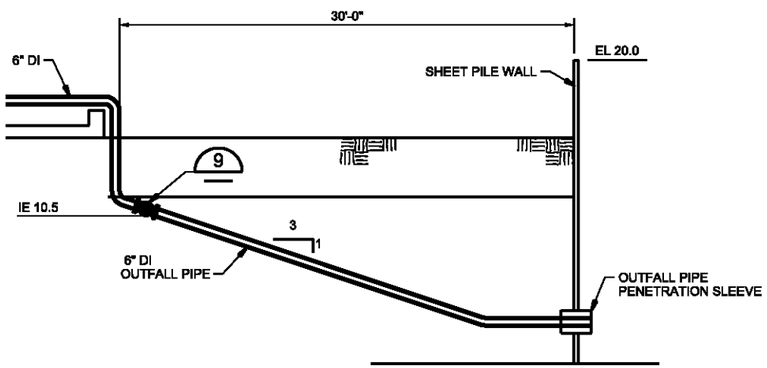

6" PLE CONNECTION (8)
NTS 05-CY-101

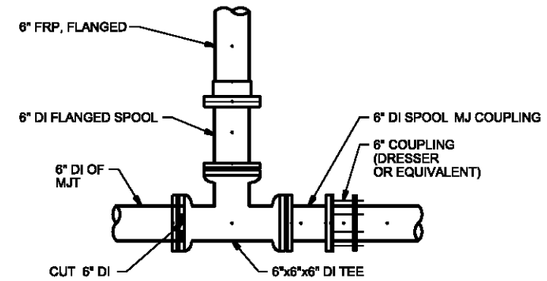

6" PLE CONNECTION (9)
NTS

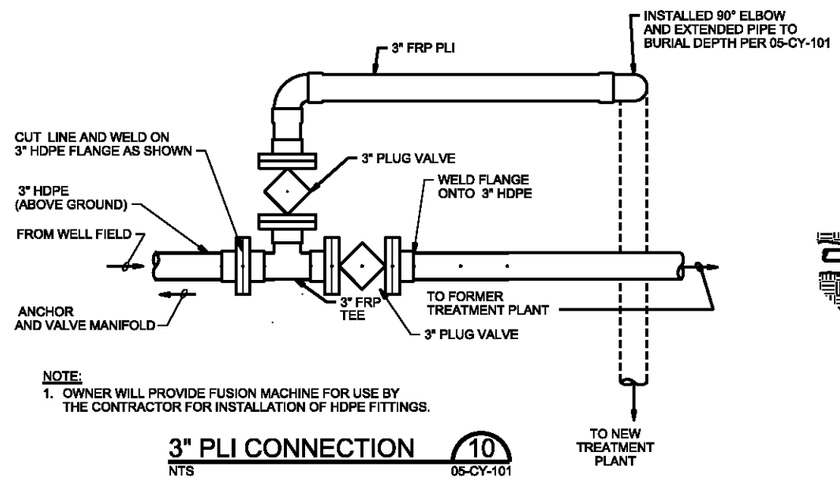

NOTE:
1. OWNER WILL PROVIDE FUSION MACHINE FOR USE BY THE CONTRACTOR FOR INSTALLATION OF HDPE FITTINGS.

3" PLI CONNECTION (10)
NTS 05-CY-101

BEARING AREA OF THRUST BLOCKS IN SQ. FT. (HORIZONTAL BENDS)							
FITTING SIZE	TEE, WYE, PLUG, OR CAP	90° BEND PLUGGED CROSS	TEE PLUGGED RUN		BEND ANGLE		
			A_1	A_2	45°	22 1/2°	11 1/4°
4	1.0	1.4	1.9	1.4	1.0	-	-
6	2.1	3.0	4.3	3.0	1.6	1.0	-
8	3.8	5.3	7.6	5.4	2.9	1.5	1.0
10	5.9	8.4	11.8	8.4	4.6	2.4	1.2
12	8.5	12.0	17.0	12.0	6.6	3.4	1.7
14	11.5	16.3	23.0	16.3	8.9	4.6	2.3
16	15.0	21.3	30.0	21.3	11.6	6.0	3.0
18	19.0	27.0	38.0	27.0	14.6	7.6	3.8
20	23.5	33.3	47.0	33.3	18.1	9.4	4.7
24	34.0	48.0	68.0	48.0	26.2	13.6	6.8

VOLUME OF THRUST BLOCK IN CUBIC YARDS (VERTICAL BENDS)			
FITTING SIZE	BEND ANGLE		
	45°	22 1/2°	11 1/4°
4	1.1	0.4	0.2
6	2.7	1.0	0.4
8	4.0	1.5	0.6
10	6.0	2.3	0.9
12	8.5	3.2	1.3
14	11.5	4.3	1.8
16	14.8	5.6	2.3

FITTING SIZE	ROD SIZE	EMBEDMENT
12" AND LESS	#6	30"
14"-16"	#8	36"

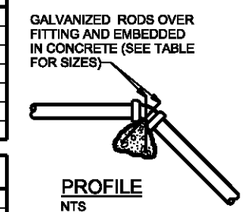

PROFILE
NTS

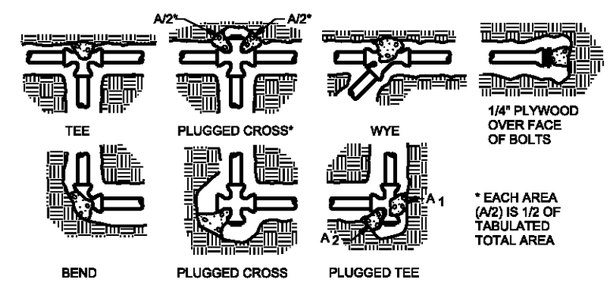

THRUST BLOCK NOTES

1. KEEP CONCRETE CLEAR OF JOINT AND JOINT ACCESSORIES.
2. CONCRETE THRUST BLOCKING SHALL BE POURED AGAINST UNDISTURBED EARTH.
3. REQUIRED VOLUMES OR BEARING AREAS AT FITTINGS SHALL BE AS INDICATED BELOW, ADJUSTED, IF NECESSARY, TO CONFORM TO THE TEST PRESSURE(S) AND ALLOWABLE SOIL BEARING STRESS(ES) STATED IN THE SPECIFICATIONS.
4. THRUST BLOCK VOLUMES FOR VERTICAL BENDS HAVING UPWARD RESULTANT THRUSTS ARE BASED ON TEST PRESSURE OF 150 PSIG AND THE WEIGHT OF CONCRETE = 4050 LBS/CU YD. TO COMPUTE VOLUMES FOR DIFFERENT TEST PRESSURES, USE THE FOLLOWING EQUATION: VOLUME = (TEST PRESS./150) x (TABLE VALUE).
5. BEARING AREAS FOR HORIZONTAL BEND THRUST BLOCKS ARE BASED ON TEST PRESSURE OF 150 PSIG AND AN ALLOWABLE SOIL BEARING STRESS OF 2000 LBS/SQ FT. TO COMPUTE BEARING AREAS FOR DIFFERENT TEST PRESSURES AND SOIL BEARING STRESSES, MULTIPLY TABLE VALUES BY THE FACTOR $(13.33)(P'/S'_b)$, WHERE: P' = ACTUAL TEST PRESSURE, PSIG; S'_b = ACTUAL SOIL BEARING PRESSURE, PSF.
6. THRUST BLOCKS FOR VERTICAL BENDS HAVING DOWNWARD RESULTANT THRUSTS SHALL BE THE SAME AS FOR HORIZONTAL BENDS.
7. BEARING AREAS, VOLUMES, AND SPECIAL BLOCKING DETAILS SHOWN ON PLANS TAKE PRECEDENCE OVER THIS STANDARD
8. BEARING AREA OF THRUST BLOCK SHALL NOT BE LESS THAN 1.0 SQ FT.
9. VERTICAL BENDS THAT REQUIRE A THRUST BLOCK VOLUME EXCEEDING 5 CUBIC YARDS REQUIRE SPECIAL BLOCKING DETAILS. SEE PLANS FOR VOLUMES SHOWN TO LEFT OF SOLID LINE IN TABLE.
10. TEST PRESSURES ARE SHOWN IN THE PIPING SCHEDULE.
11. ALLOWABLE SOIL BEARING STRESS IS 2000 LBS/SQ FT.

CONCRETE THRUST BLOCKS (11)
NTS 05-CY-101

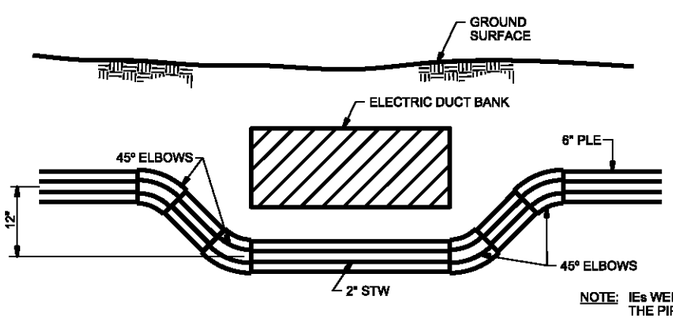

NOTE: IEs WERE NOT DETERMINED FOR THE PIPELINE DIVERSIONS UNDER THE ELECTRICAL DUCT BANK.

ELECTRIC DUCT BANK (12)
NTS 05-CY-101

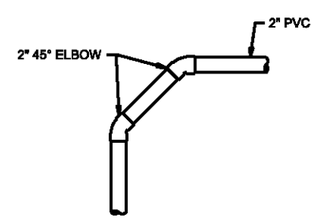

2" STS CONNECTION (13)
NTS 05-CY-101

AS-BUILT

DSGN JA BOOTH	5	4/27/10	REVISED AS-BUILT	JB	ROW	VERIFY SCALE
DR DC EVANS	4	12/15/09	PRELIMINARY AS-BUILT	JB	ROW	BAR IS ONE INCH ON ORIGINAL DRAWING. 0 1" IF NOT ONE INCH ON THIS SHEET, ADJUST SCALES ACCORDINGLY.
CHK WB WAGNER	3	7/20/09	PRELIMINARY AS-BUILT	DLS	ROW	
APVD KT SCHEFFLER	1	3/4/09	AS-BUILT FIELD DATA - PRELIMINARY	JFF	GS	
	NO.	DATE	REVISION	BY	APVD	

CH2MHILL

US ENVIRONMENTAL PROTECTION AGENCY
WYCKOFF GROUNDWATER TREATMENT PLANT
BAINBRIDGE ISLAND, WA

SITE DEVELOPMENT
CIVIL DETAILS

SHEET	21
DWG	05-C-402
DATE	MARCH 2006
PROJ	316783.FD.B

FILENAME:05nc402d_316783.dgn PLOT DATE:4/28/2010 PLOT TIME:3:27:53 PM

NOTE: ADDED ECOLOGY BLOCK WALL, DUCTILE IRON DRAIN CULVERT EPOXY ENCASEMENT AND CONCRETE PAD AT BROKEN ELECTRICAL CONDUIT.

NOTE: RELOCATE 2 CONNEX BOXES AS SHOWN ON SHEET 16.

GRAVEL SURFACING SHALL BE FLUSH WITH SUMP COVER

DOWNSPOUT PIPE DISCHARGE

PLACED LEACH FIELD DRAIN ROCK INSIDE EACH OF 3 EXISTING INFILTRATOR LINES

SLOPE TO MATCH EXIST GRADE

TREATMENT BUILDING

DECON PAD AND SUMP, SEE DWG 05-C-401

CONCRETE SUMP

4:1 SLOPE

SHOWER TRAILER

NOTE: SWICHED LOCATION OF ADA PARKING STALL

CONCRETE DECONTAMINATION PAD AND SUMP

DECON PAD

501
N 229113.550
E 1229321.080
EL 18.88

MW21

MAIN OFFICE

TOP OF VAULT

ELEC VAULT

CONC PAD W/ TRANS

8" DIA. (DUCTILE IRON, NO CEMENT LINING)

REMOVED AND CAPPED 3/4" PVC WATER HOOK-UP, 4" PVC SEWER HOOK-UP, AND CLEANOUT AT ABANDONED TRAILER SPOT

GRADING LIMITS

ELEC SHED

BOLLARDS

ACCESS LADDER

ECOLOGY BLOCK WALL

PROTECT EXIST POWER POLE

49
N 229031.791
E 1229387.612
EL 18.62

PROPANE TANK

PROPANE

NOTE: MOVED ROAD WITHOUT CHANGING GEOMETRY 15' EAST OF DESIGN LOCATION

LOCATION OF EXISTING INFILTRATOR LEACHING FIELD (3 LEACHING LINES)

AREA OF BROKEN ELECTRICAL CONDUIT EXPOSED CABLES ENCASED IN EPOXY, COVERED BY 3' X 3' X 6" INCH THICK CONCRETE SLAB

ELEC TRANSFORMER BUILDING

SWALE

4:1 SLOPE

GRAVEL/GRASS

GRAVEL DRIVE

MAIN DRIVE AREA

GRAVEL PARK

MATCH EXST GRADE AT ROAD

Scale In Feet: 0 20 40 60

N

AS-BUILT

DSGN JA BOOTH	5	4/27/10	REVISED AS-BUILT	JB	ROW
DR DC EVANS	4	12/15/09	PRELIMINARY AS-BUILT	JB	ROW
CHK WB WAGNER	3	7/20/09	PRELIMINARY AS-BUILT	DLS	ROW
APVD KT SCHEEFLER	1	3/4/09	AS-BUILT FIELD DATA - PRELIMINARY	JFF	GS
	NO.	DATE	REVISION	BY	APVD

VERIFY SCALE
BAR IS ONE INCH ON ORIGINAL DRAWING.
0 1"
IF NOT ONE INCH ON THIS SHEET, ADJUST SCALES ACCORDINGLY.

CH2MHILL

US ENVIRONMENTAL PROTECTION AGENCY
WYCKOFF GROUNDWATER TREATMENT PLANT
BAINBRIDGE ISLAND, WA

SITE DEVELOPMENT
CIVIL
GRADING PLAN

SHEET	18
DWG	05-CG-101
DATE	JANUARY 4 2006
PROJ	316783.FD.B

FILENAME: 05ncg101d_316783.dgn PLOT DATE: 4/28/2010 PLOT TIME: 12:19:33 PM

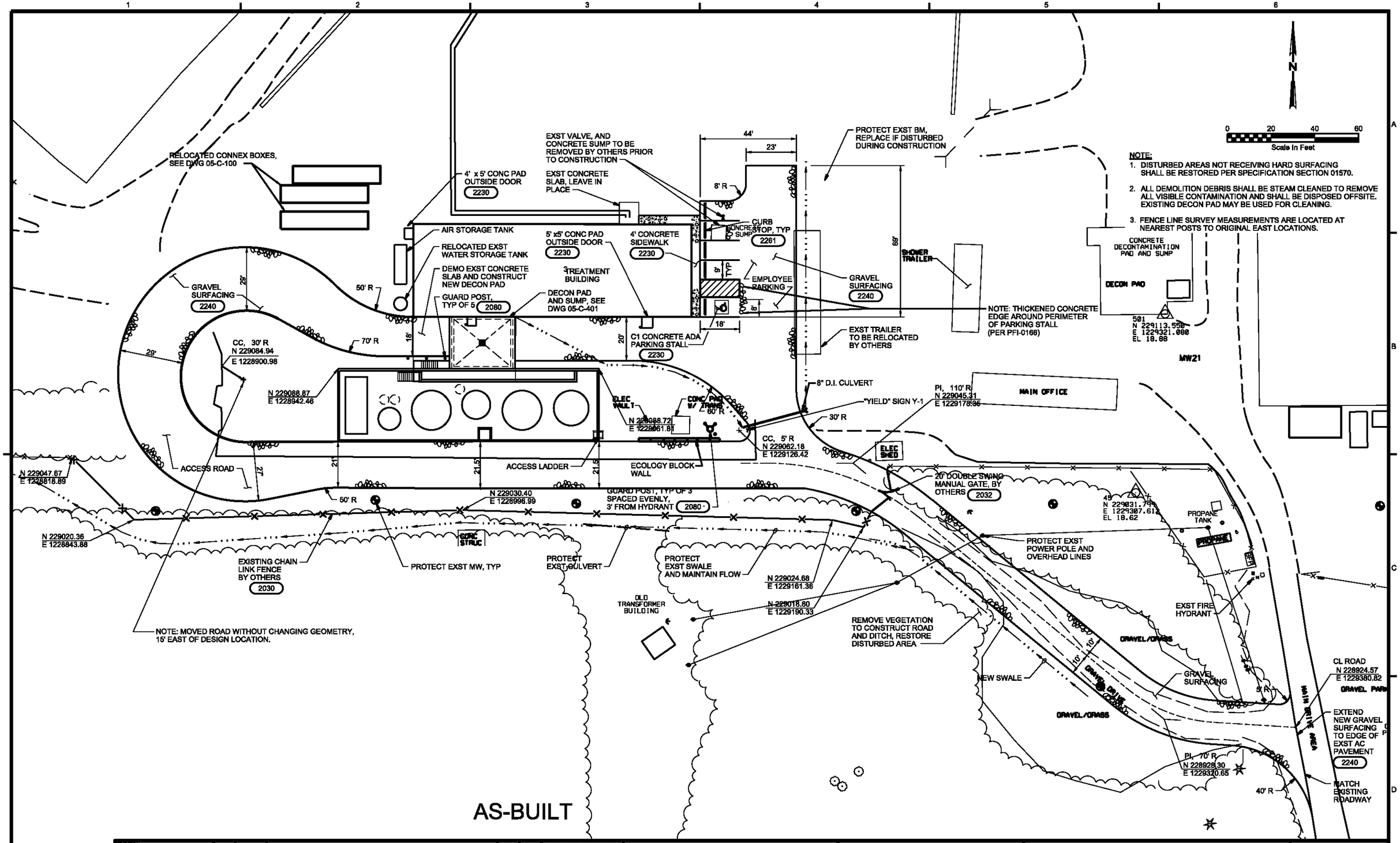

DSGN JA BOOTH	5	4/27/10	REVISED AS-BUILT	JB	ROW	VERIFY SCALE
DR DC EVANS	4	12/15/09	PRELIMINARY AS-BUILT	JB	ROW	BAR IS ONE INCH ON ORIGINAL DRAWING. 0 1"
CHK WB WAGNER	3	7/20/09	PRELIMINARY AS-BUILT	JB	ROW	IF NOT ONE INCH ON THIS SHEET, ADJUST SCALES ACCORDINGLY.
APVD KT SCHEFFLER	1	3/4/09	AS-BUILT FIELD DATA - PRELIMINARY	JFF	GS	
	NO.	DATE	REVISION	BY	APVD	

CH2MHILL

US ENVIRONMENTAL PROTECTION AGENCY

WYCKOFF GROUNDWATER TREATMENT PLANT
BAINBRIDGE ISLAND, WA

SITE DEVELOPMENT

CIVIL
LOCATION PLAN

SHEET	17
DWG	05-CL-101
DATE	MARCH 2006
PROJ	316783.FD.B

FILENAME:05ncl101d_316783.dgn PLOT DATE:4/28/2010 PLOT TIME:11:00:59 AM

NOTES:

1. INSTALL CLEANOUTS AT ALL 90 DEGREE BENDS ON PLI, PLE, STW, STS AND Q BURIED LINES. INSTALL THREAD END PLUGS OR BLIND FLANGES APPROPRIATELY RATED FOR THE LINE TEST PRESSURES, SEE (2440). CLEANOUTS FOLLOW DIRECTION OF FLOW.
2. FOR PIPING BETWEEN TREATMENT BUILDING AND TANK FARM, SEE DWG 50-M-142. FOR PLUMBING ON SOUTH SIDE OF TREATMENT BUILDING, SEE DWGS 50-P-141 AND 50-P-142. PROVIDE MIN 3' COVER.
3. FOR TYPICAL TRENCH, SEE (2310).
4. WHERE REQUIRED, USE PIPE CROSSING DETAIL (2335).
5. FOR SURFACE RESTORATION, SEE (2320).
6. COORDINATES ARE GIVEN FOR 6" PLE FOR PIPE CORRIDOR SECTION, SEE (7) 05-C-402
7. PROVIDE MIN 3' COVER OVER ALL NEW PIPING UNLESS OTHERWISE SHOWN.
8. PROVIDE CONSTANT SLOPE FROM DECON PAD PUMP DISCHARGE LINE TO TANK FARM.
9. 3" PLI SHALL HAVE SAME INVERT ELEVATIONS AS 6" PLE.
10. CUT EXISTING 4" W2 AND INSTALL NEW 90° ELBOW AND NEW PIPING TO RELOCATED STORAGE TANK.
11. CUT EXISTING 8" DI LINE AND INSTALL MECHANICALLY RESTRAINED DI TEE, 8" RESILIENT SEAT NRS GATE VALVE MANUFACTURED IN ACCORDANCE WITH AWWA C509 AND 6" CAST IRON BURIED VALVE BOX RATED FOR H-20 TRAFFIC LOADINGS. VALVE SHALL BE PLACED BETWEEN THE 8" TEE AND THE NEW TREATMENT PLANT BUILDING TO ENABLE ISOLATION OF THE NEW WATER SERVICE FROM THE EXISTING WATER SERVICE LINE. ALL POTABLE WATER SERVICE FITTINGS, VALVES, VALVE BOXES AND INSTALLATION DETAILS SHALL BE IN COMPLIANCE WITH THE CITY OF BAINBRIDGE ISLAND REQUIREMENTS. PROVIDE THRUST BLOCK WITH MINIMUM 4 SQUARE FEET OF BEARING AREA AGAINST UNDISTURBED EARTH.
12. CONTRACTOR SHALL VERIFY EXISTING DISCHARGE LINE SIZE AND PROVIDE FITTINGS AS NECESSARY TO CONNECT NEW 2" STW.
13. ENCASE 2" W1 FROM 2" TAPPING SADDLE 2" X 2" X 1-1/2" TEE TO SURFACE PENETRATION PRIOR TO ENTRANCE TO TREATMENT BUILDING WITH CONTROLLED LOW-STRENGTH FILL (CLSF). ~~ENCASE~~ MINIMUM 9" AROUND PERIMETER OF PIPE. SEE SPECIFICATION SECTION 02320 FOR CLSF REQUIREMENTS.

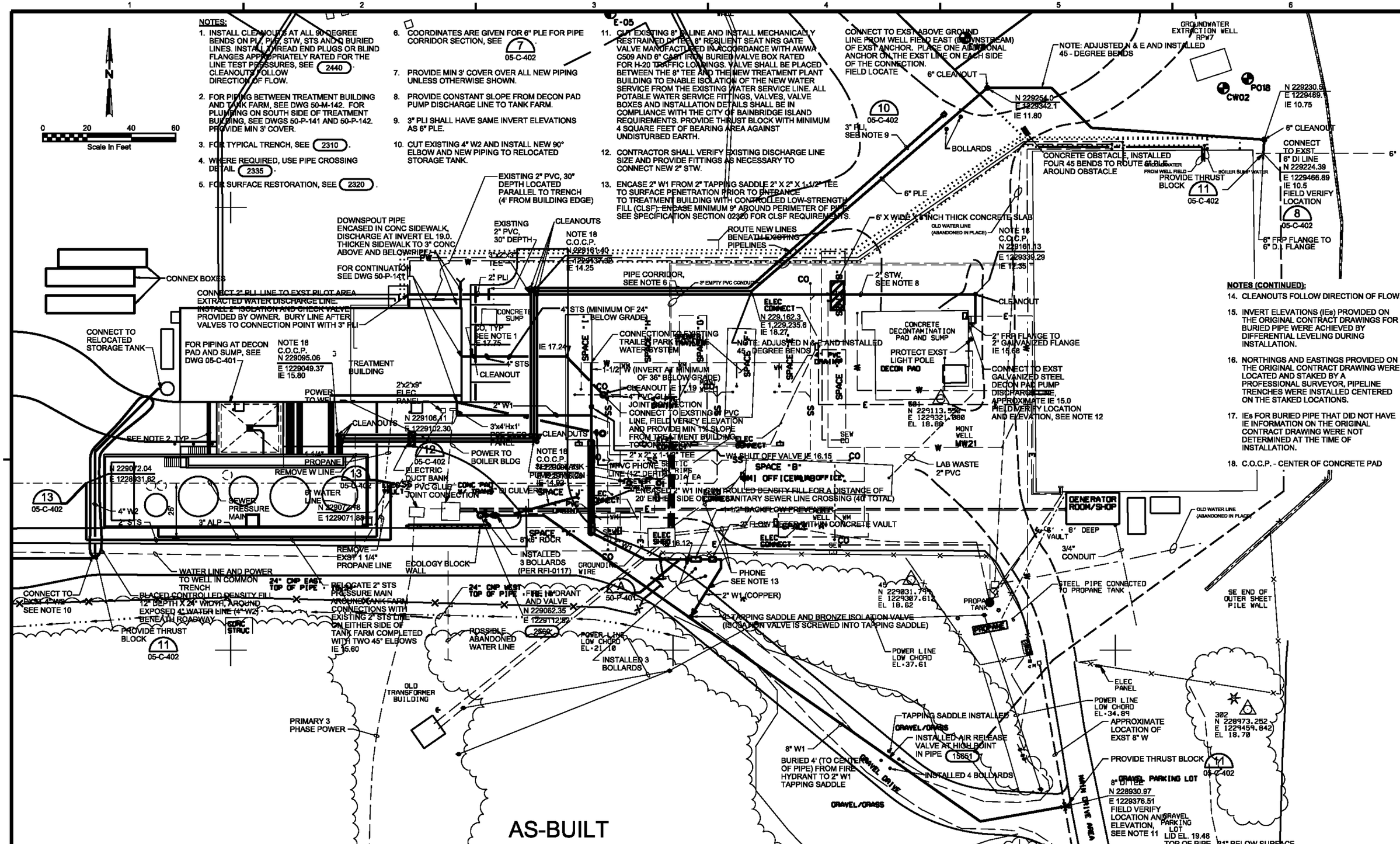

NOTES (CONTINUED):

14. CLEANOUTS FOLLOW DIRECTION OF FLOW.
15. INVERT ELEVATIONS (IEs) PROVIDED ON THE ORIGINAL CONTRACT DRAWINGS FOR BURIED PIPE WERE ACHIEVED BY DIFFERENTIAL LEVELING DURING INSTALLATION.
16. NORTHINGS AND EASTINGS PROVIDED ON THE ORIGINAL CONTRACT DRAWING WERE LOCATED AND STAKED BY A PROFESSIONAL SURVEYOR, PIPELINE TRENCHES WERE INSTALLED CENTERED ON THE STAKED LOCATIONS.
17. IEs FOR BURIED PIPE THAT DID NOT HAVE IE INFORMATION ON THE ORIGINAL CONTRACT DRAWING WERE NOT DETERMINED AT THE TIME OF INSTALLATION.
18. C.O.C.P. - CENTER OF CONCRETE PAD

DSGN JA BOOTH	5	4/27/10	REVISED AS-BUILT	JB	ROW	VERIFY SCALE	
DR DC EVANS	4	12/15/09	PRELIMINARY AS-BUILT	JB	ROW	BAR IS ONE INCH ON ORIGINAL DRAWING. 0 1" IF NOT ONE INCH ON THIS SHEET, ADJUST SCALES ACCORDINGLY.	
CHK WB WAGNER	3	7/20/09	PRELIMINARY AS-BUILT	JB	ROW		
APVD KT SCHEFFLER	1	3/4/09	AS-BUILT FIELD DATA - PRELIMINARY	JFF	GS		
	NO.	DATE	REVISION	BY	APVD		

CH2MHILL

US ENVIRONMENTAL PROTECTION AGENCY
WYCKOFF GROUNDWATER TREATMENT PLANT
BAINBRIDGE ISLAND, WA

SITE DEVELOPMENT
CIVIL
YARD PIPING PLAN

SHEET	19
DWG	05-CY-101
DATE	MARCH 2006
PROJ	316783.FD.B

FILENAME: 05ncy101d_316783.dgn PLOT DATE: 4/28/2010 PLOT TIME: 2:23:10 PM

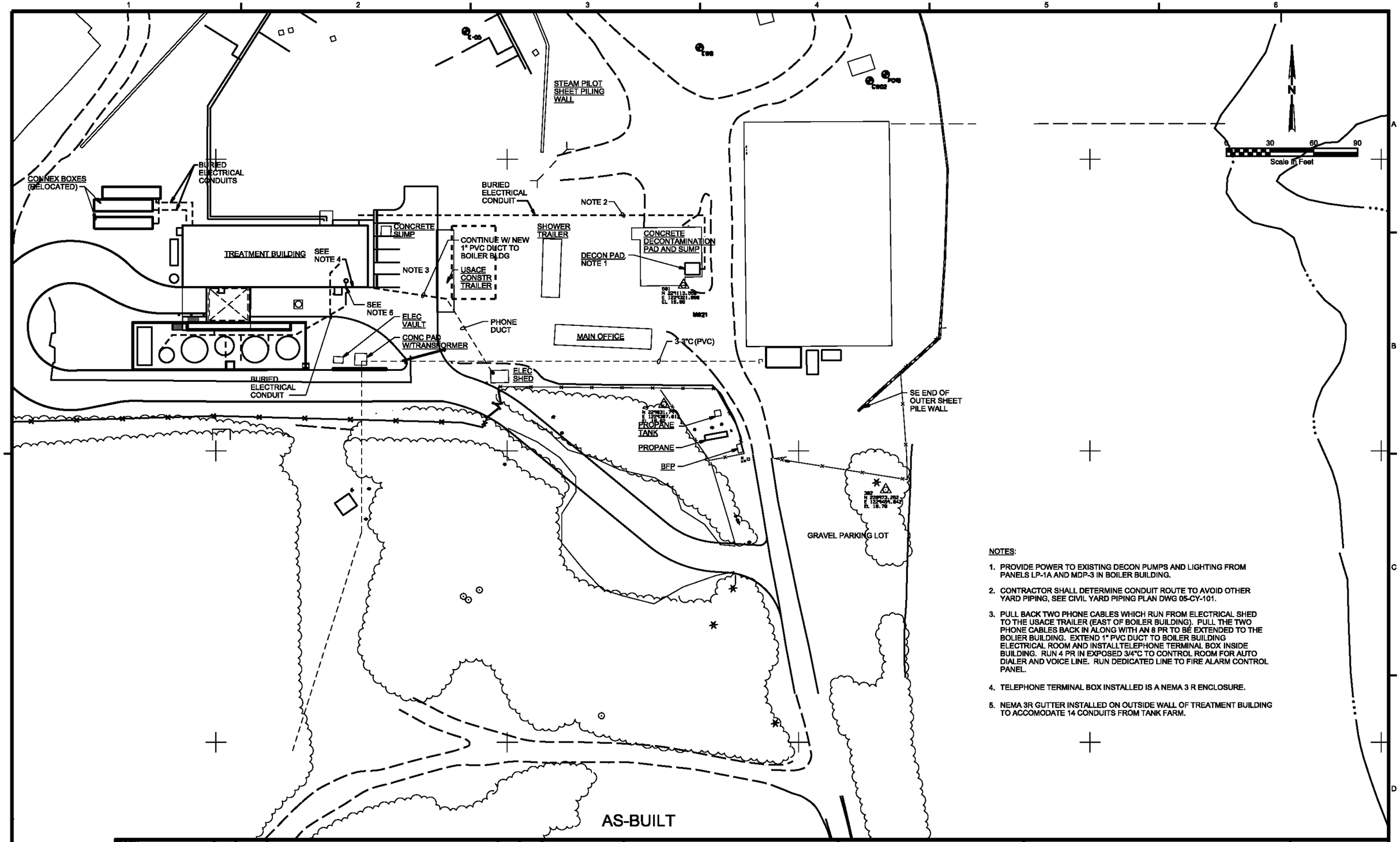

NOTES:

1. PROVIDE POWER TO EXISTING DECON PUMPS AND LIGHTING FROM PANELS LP-1A AND MDP-3 IN BOILER BUILDING.
2. CONTRACTOR SHALL DETERMINE CONDUIT ROUTE TO AVOID OTHER YARD PIPING, SEE CIVIL YARD PIPING PLAN DWG 05-CY-101.
3. PULL BACK TWO PHONE CABLES WHICH RUN FROM ELECTRICAL SHED TO THE USACE TRAILER (EAST OF BOILER BUILDING). PULL THE TWO PHONE CABLES BACK IN ALONG WITH AN 8 PR TO BE EXTENDED TO THE BOLIER BUILDING. EXTEND 1" PVC DUCT TO BOILER BUILDING ELECTRICAL ROOM AND INSTALLTELEPHONE TERMINAL BOX INSIDE BUILDING. RUN 4 PR IN EXPOSED 3/4"C TO CONTROL ROOM FOR AUTO DIALER AND VOICE LINE. RUN DEDICATED LINE TO FIRE ALARM CONTROL PANEL.
4. TELEPHONE TERMINAL BOX INSTALLED IS A NEMA 3 R ENCLOSURE.
5. NEMA 3R GUTTER INSTALLED ON OUTSIDE WALL OF TREATMENT BUILDING TO ACCOMODATE 14 CONDUITS FROM TANK FARM.

DSGN RL HAMILTON	4	4/27/10	REVISED AS-BUILT	JB	ROW
DR DW CLARK	3	12/15/09	PRELIMINARY AS-BUILT	JB	ROW
CHK TG OSSOWSKI	2	5/14/09	PRELIMINARY AS-BUILT	DLS	ROW
APVD KT SCHEFFLER	1	3/4/09	AS-BUILT FIELD DATA - PRELIMINARY	JFF	GS
	NO.	DATE	REVISION	BY	APVD

VERIFY SCALE
BAR IS ONE INCH ON ORIGINAL DRAWING.
0 1"
IF NOT ONE INCH ON THIS SHEET, ADJUST SCALES ACCORDINGLY.

CH2MHILL

US ENVIRONMENTAL PROTECTION AGENCY
WYCKOFF GROUNDWATER TREATMENT PLANT
BAINBRIDGE ISLAND, WA

SITE DEVELOPMENT
ELECTRICAL
OVERALL SITE PLAN

SHEET	22
DWG	05-E-100
DATE	JANUARY 4 2006
PROJ	316783.FD.B

FILENAME: 05ne100d_316783.dgn PLOT DATE: 4/28/2010 PLOT TIME: 4:05:25 PM

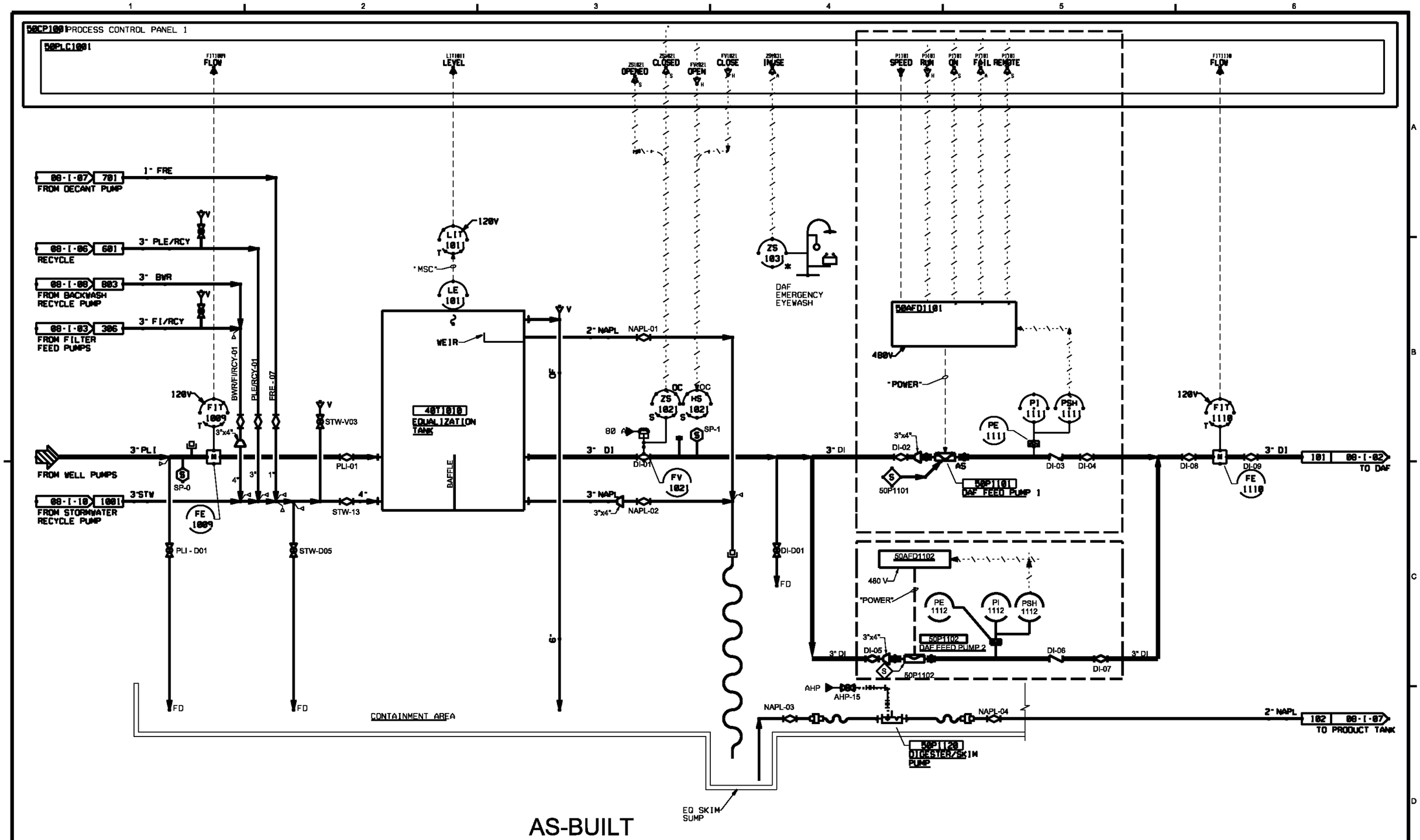

AS-BUILT

DSGN KL ANDERSON	5	4/27/10	REVISED AS-BUILT	JB	ROW	VERIFY SCALE
DR DS PARKER	4	12/15/09	PRELIMINARY AS-BUILT	JB	ROW	BAR IS ONE INCH ON ORIGINAL DRAWING. 0 1" IF NOT ONE INCH ON THIS SHEET, ADJUST SCALES ACCORDINGLY.
CHK LL WOOD	3	7/20/09	PRELIMINARY AS-BUILT	DLS	ROW	
	1	3/4/09	AS-BUILT FIELD DATA - PRELIMINARY	JFF	GS	
APVD KT SCHEEFLER	NO.	DATE	REVISION	BY	APVD	

CH2MHILL

US ENVIRONMENTAL PROTECTION AGENCY

WYCKOFF GROUNDWATER TREATMENT PLANT
BAINBRIDGE ISLAND, WA

INSTRUMENTATION AND CONTROL

P&ID
PLANT INFLUENT

SHEET	23
DWG	08-I-01
DATE	JANUARY 4 2006
PROJ	316783.FD.B

FILENAME: 08nl001d_316783.dgn PLOT DATE: 4/28/2010 PLOT TIME: 4:18:53 PM

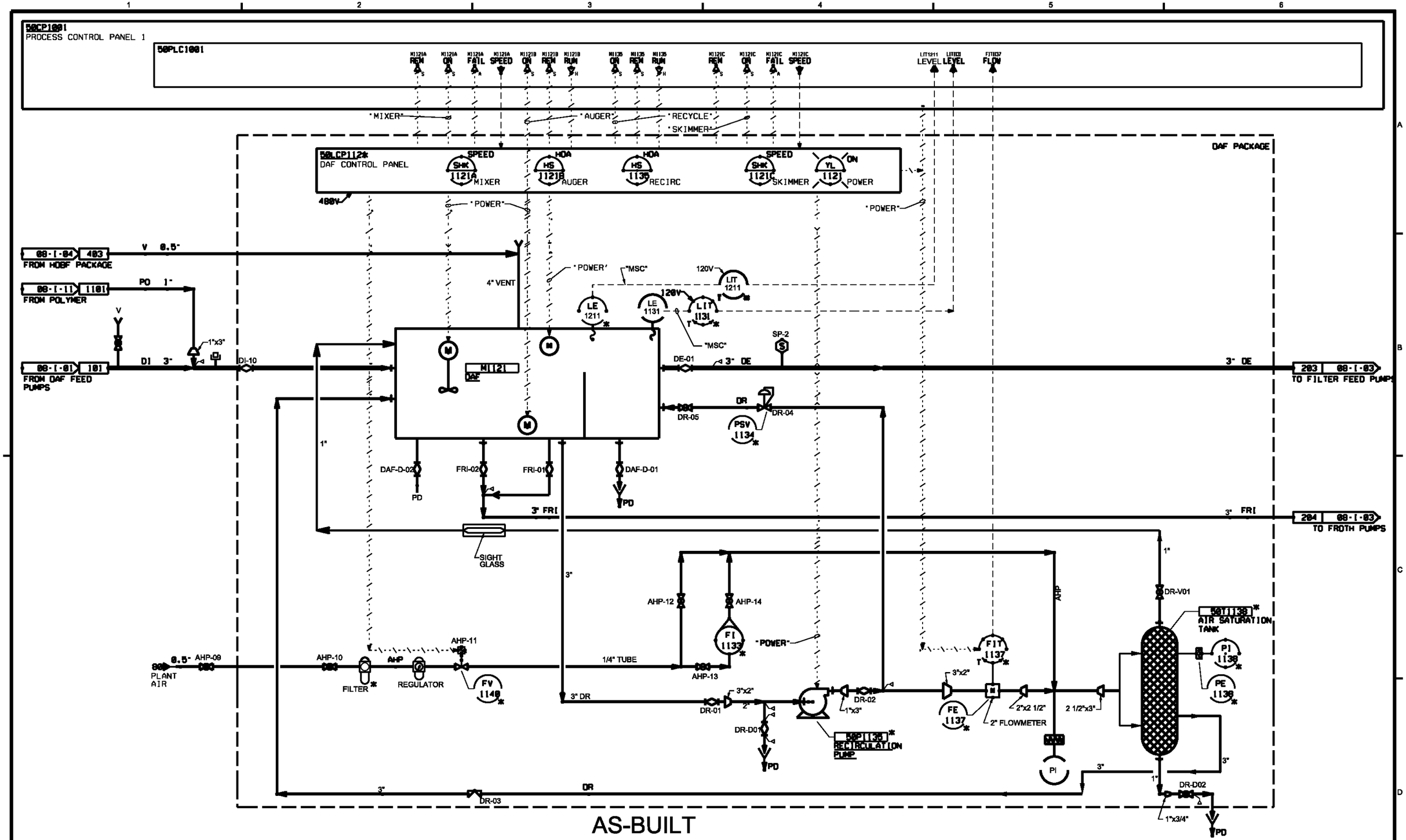

AS-BUILT

DSGN KL ANDERSON	5	4/27/10	REVISED AS-BUILT	JB	ROW	VERIFY SCALE
DR DS PARKER	4	12/15/09	PRELIMINARY AS-BUILT	JB	ROW	BAR IS ONE INCH ON ORIGINAL DRAWING. 0 1" IF NOT ONE INCH ON THIS SHEET, ADJUST SCALES ACCORDINGLY.
CHK LL WOOD	3	7/20/09	PRELIMINARY AS-BUILT	JB	ROW	
	1	3/4/09	AS-BUILT FIELD DATA - PRELIMINARY	JFF	GS	
APVD KT SCHEFFLER	NO.	DATE	REVISION	BY	APVD	

CH2MHILL

US ENVIRONMENTAL PROTECTION AGENCY
WYCKOFF GROUNDWATER TREATMENT PLANT
BAINBRIDGE ISLAND, WA

INSTRUMENTATION AND CONTROL
P&ID
DISSOLVED AIR FLOTATION PACKAGE SYSTEM

SHEET	24
DWG	08-I-02
DATE	JANUARY 4 2006
PROJ	316783.FD.B

FILENAME: 08nl002d_316783.dgn PLOT DATE: 4/26/2010 PLOT TIME: 4:44:39 PM

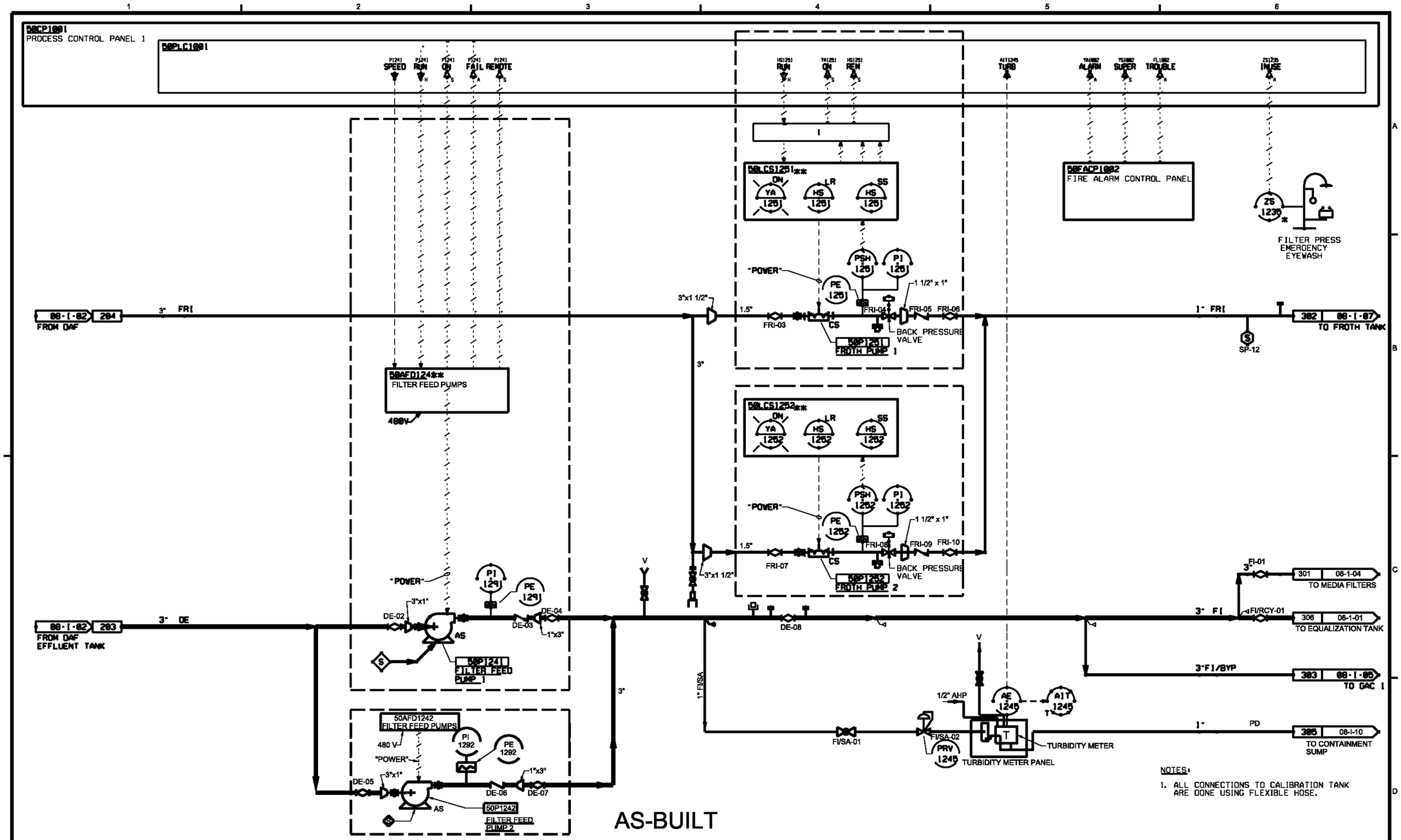

DSGN KL ANDERSON	5	4/27/10	REVISED AS-BUILT	JB	ROW
DR DS PARKER	4	12/15/09	PRELIMINARY AS-BUILT	JB	ROW
CHK LL WOOD	3	7/20/09	PRELIMINARY AS-BUILT	JB	ROW
APVD KT SCHEFFLER	1	3/4/09	AS-BUILT FIELD DATA - PRELIMINARY	JFF	GS
	NO.	DATE	REVISION	BY	APVD

VERIFY SCALE
BAR IS ONE INCH ON ORIGINAL DRAWING.
0 1"
IF NOT ONE INCH ON THIS SHEET, ADJUST SCALES ACCORDINGLY.

CH2MHILL

US ENVIRONMENTAL PROTECTION AGENCY
WYCKOFF GROUNDWATER TREATMENT PLANT
BAINBRIDGE ISLAND, WA

INSTRUMENTATION AND CONTROL
P&ID
DAF EFFLUENT PUMPING

SHEET	25
DWG	08-I-03
DATE	JANUARY 4 2006
PROJ	316783.FD.B

FILENAME: 08nl003d_316783.dgn PLOT DATE: 4/28/2010 PLOT TIME: 5:07:15 PM

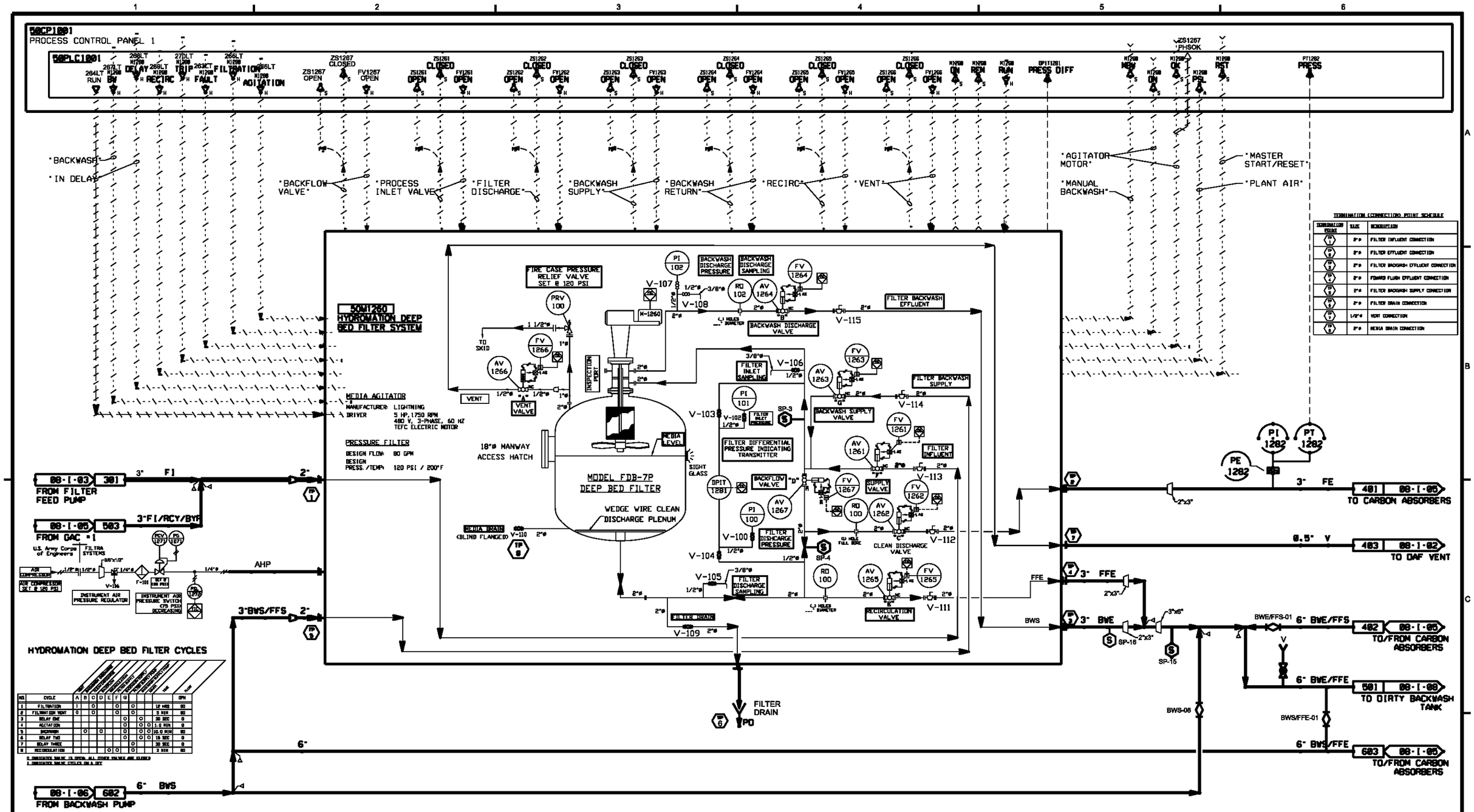

AS-BUILT

NOTE: I/O LIST REVISED

DSGN KL ANDERSON	5	4/27/10	REVISED AS-BUILT	JB	ROW
DR DS PARKER	4	12/15/09	PRELIMINARY AS-BUILT	JB	ROW
CHK LL WOOD	3	7/20/09	PRELIMINARY AS-BUILT	JB	ROW
APVD KT SCHEEFLER	1	3/4/09	AS-BUILT FIELD DATA - PRELIMINARY	JFF	GS
	NO.	DATE	REVISION	BY	APVD

VERIFY SCALE
BAR IS ONE INCH ON ORIGINAL DRAWING.
0 1"
IF NOT ONE INCH ON THIS SHEET, ADJUST SCALES ACCORDINGLY.

CH2MHILL

US ENVIRONMENTAL PROTECTION AGENCY
WYCKOFF GROUNDWATER TREATMENT PLANT
BAINBRIDGE ISLAND, WA

INSTRUMENTATION AND CONTROL
P&ID
MEDIA FILTERS

SHEET	26
DWG	08-I-04
DATE	MARCH 2006
PROJ	316783.FD.B

FILENAME: 08nl004d_316783.dgn PLOT DATE: 2/10/2010 PLOT TIME: 2:56:29 PM

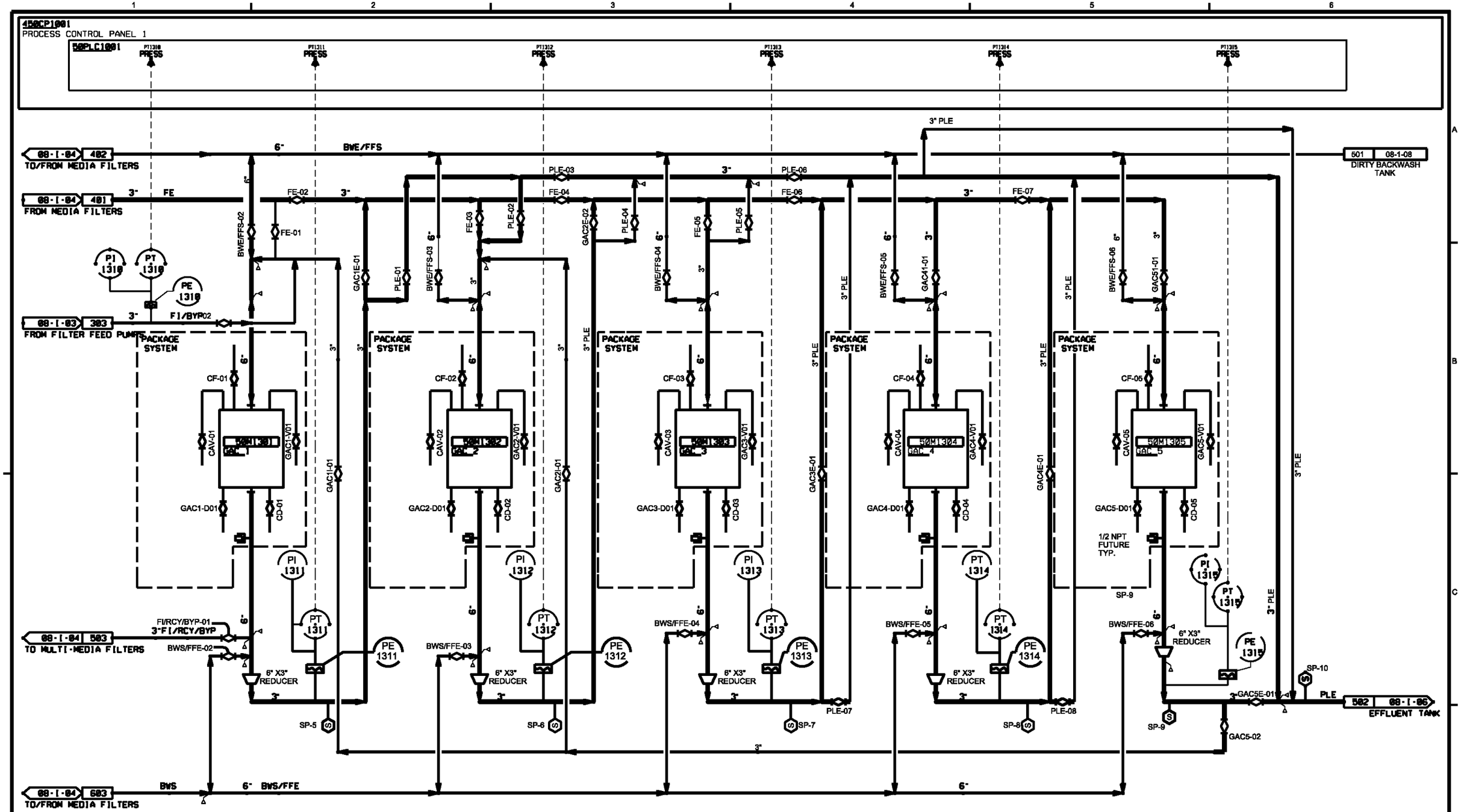

AS-BUILT

DSGN KL ANDERSON	5	4/27/10	REVISED AS-BUILT	JB	ROW	VERIFY SCALE
DR DS PARKER	4	12/15/09	PRELIMINARY AS-BUILT	JB	ROW	BAR IS ONE INCH ON ORIGINAL DRAWING. 0 1" IF NOT ONE INCH ON THIS SHEET, ADJUST SCALES ACCORDINGLY.
CHK LL WOOD	3	7/20/09	PRELIMINARY AS-BUILT	JB	ROW	
	1	3/4/09	AS-BUILT FIELD DATA - PRELIMINARY	JFF	GS	
APVD KT SCHEFFLER	NO.	DATE	REVISION	BY	APVD	

CH2MHILL

US ENVIRONMENTAL PROTECTION AGENCY

WYCKOFF GROUNDWATER TREATMENT PLANT
BAINBRIDGE ISLAND, WA

INSTRUMENTATION AND CONTROL
P&ID
CARBON ADSORBERS

SHEET	27
DWG	08-I-05
DATE	JANUARY 4 2006
PROJ	316783.FD.B

FILENAME:08nl005d_316783.dgn PLOT DATE:4/29/2010 PLOT TIME:2:34:56 PM

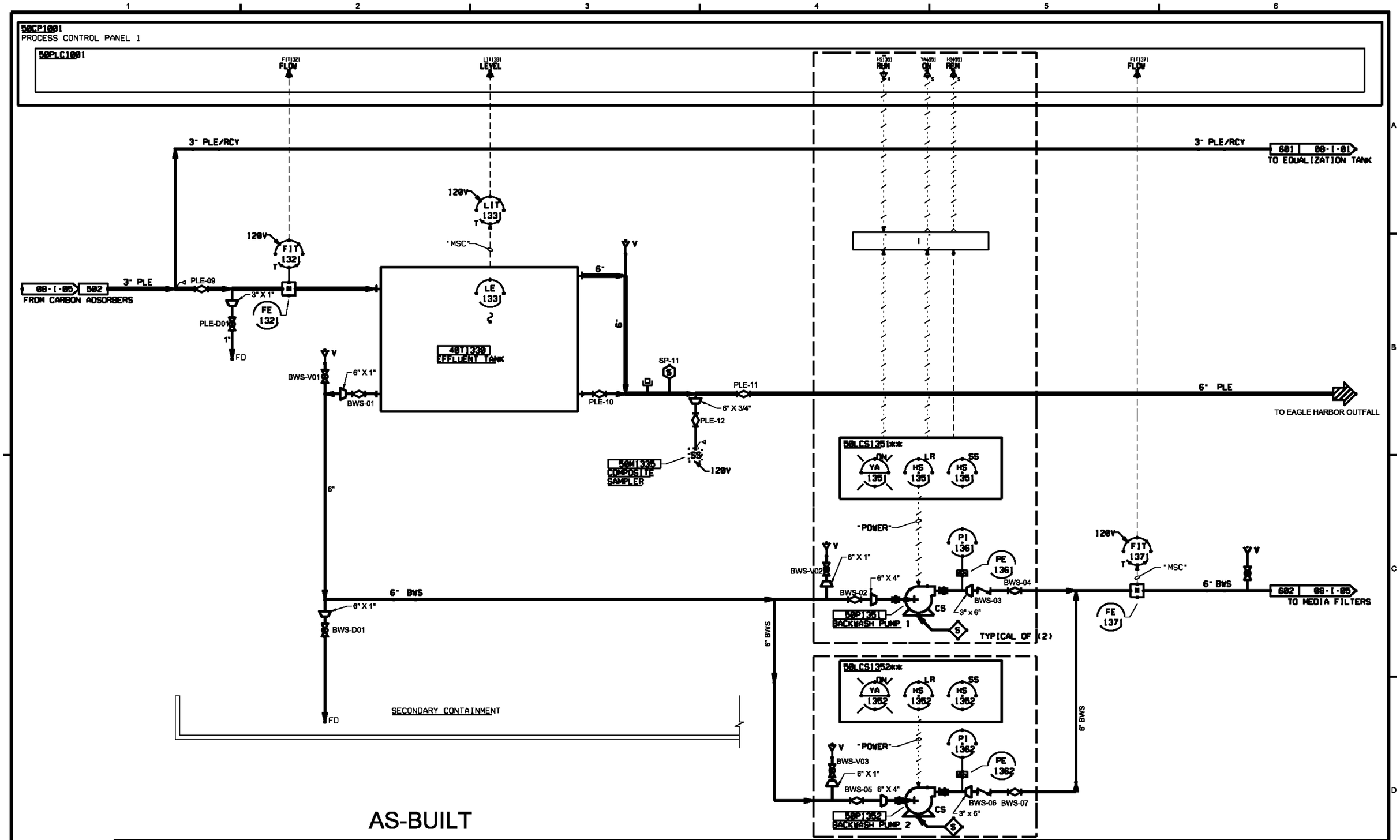

AS-BUILT

DSGN KL ANDERSON	5	4/27/10	REVISED AS-BUILT	JB	ROW	VERIFY SCALE
DR DS PARKER	4	12/15/09	PRELIMINARY AS-BUILT	JB	ROW	BAR IS ONE INCH ON ORIGINAL DRAWING. 0 1"
CHK LL WOOD	3	7/20/09	PRELIMINARY AS-BUILT	DLS	ROW	IF NOT ONE INCH ON THIS SHEET, ADJUST SCALES ACCORDINGLY.
APVD KT SCHEFFLER	1	3/4/09	AS-BUILT FIELD DATA - PRELIMINARY	JFF	GS	
	NO.	DATE	REVISION	BY	APVD	

CH2MHILL

US ENVIRONMENTAL PROTECTION AGENCY
WYCKOFF GROUNDWATER TREATMENT PLANT
BAINBRIDGE ISLAND, WA

INSTRUMENTATION AND CONTROL
P&ID
EFFLUENT

SHEET	28
DWG	08-I-06
DATE	JANUARY 4 2006
PROJ	316783.FD.B

FILENAME: 08ni006d_316783.dgn PLOT DATE: 4/29/2010 PLOT TIME: 3:38:39 PM

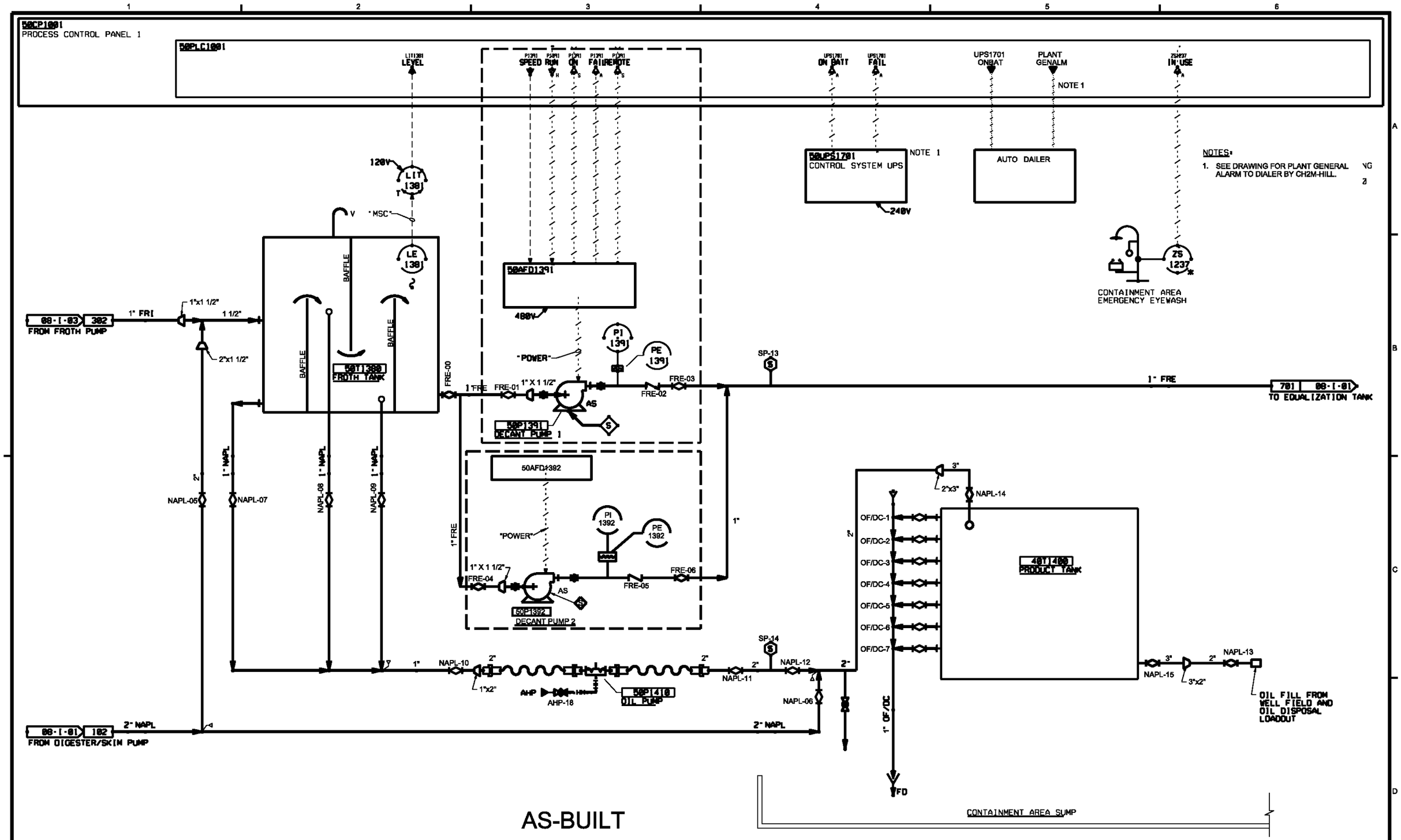

AS-BUILT

DSGN KL ANDERSON	5	4/27/10	REVISED AS-BUILT	JB	ROW	VERIFY SCALE	
DR DS PARKER	4	12/15/09	PRELIMINARY AS-BUILT	JB	ROW	BAR IS ONE INCH ON ORIGINAL DRAWING. 0 1" IF NOT ONE INCH ON THIS SHEET, ADJUST SCALES ACCORDINGLY.	
CHK LL WOOD	3	7/20/09	PRELIMINARY AS-BUILT	JB	ROW		
	1	3/4/09	AS-BUILT FIELD DATA - PRELIMINARY	JFF	GS		
APVD KT SCHEFFLER	NO.	DATE	REVISION	BY	APVD		

CH2MHILL

US ENVIRONMENTAL PROTECTION AGENCY
WYCKOFF GROUNDWATER TREATMENT PLANT
BAINBRIDGE ISLAND, WA

INSTRUMENTATION AND CONTROL
P&ID
DAF FROTH TANK
AND PRODUCT TANK

SHEET	29
DWG	08-I-07
DATE	MARCH 2006
PROJ	316783.FD.B

FILENAME: 08ni007d_316783.dgn PLOT DATE: 4/29/2010 PLOT TIME: 3:55:47 PM

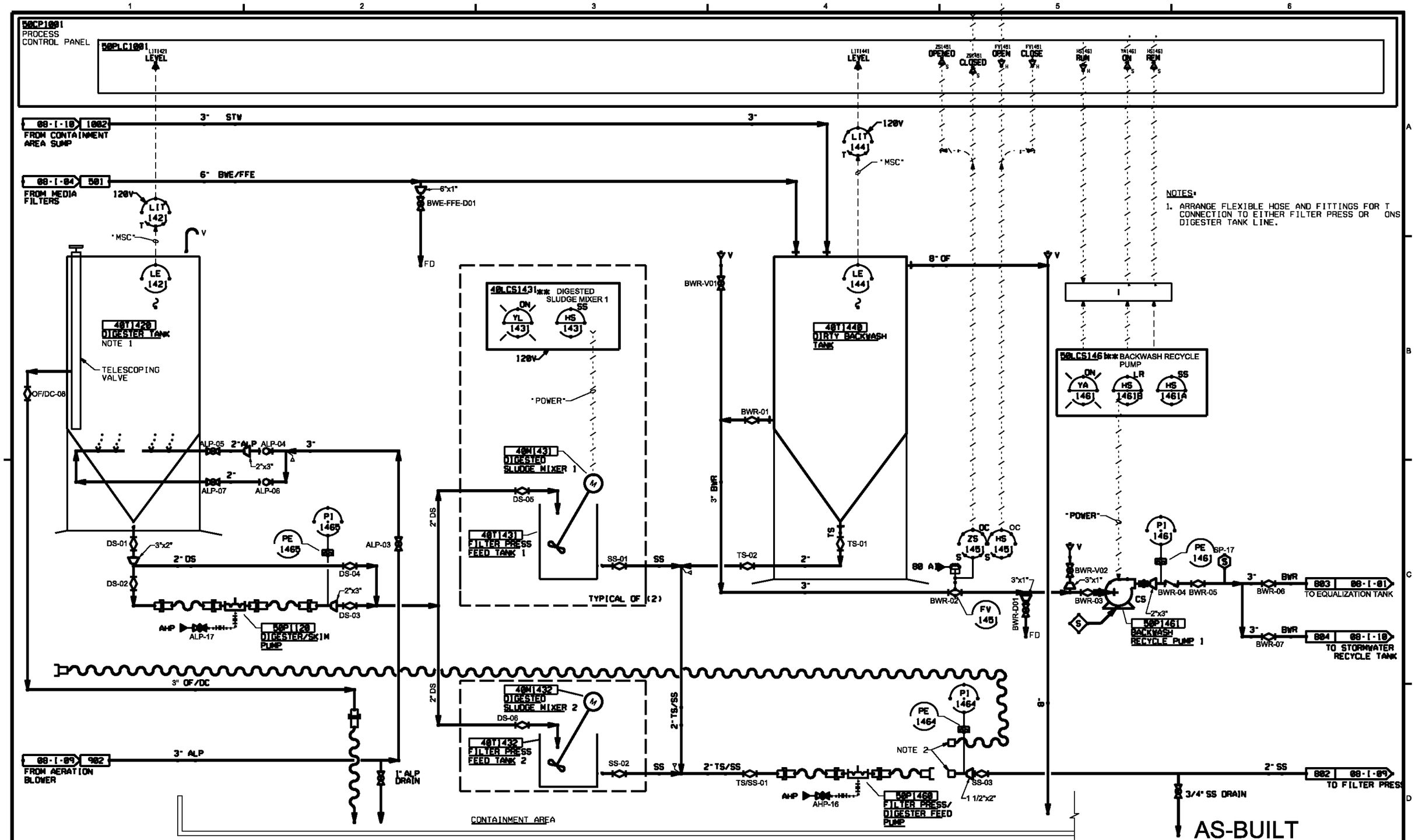

DSGN KL ANDERSON	5	4/27/10	REVISED AS-BUILT	JB	ROW	VERIFY SCALE
DR DS PARKER	4	12/15/09	PRELIMINARY AS-BUILT	JB	ROW	BAR IS ONE INCH ON ORIGINAL DRAWING. 0 1" IF NOT ONE INCH ON THIS SHEET, ADJUST SCALES ACCORDINGLY.
CHK LL WOOD	3	7/20/09	PRELIMINARY AS-BUILT	DLS	ROW	
APVD KT SCHEFFLER	1	3/4/09	AS-BUILT FIELD DATA - PRELIMINARY	JFF	GS	
	NO.	DATE	REVISION	BY	APVD	

CH2MHILL

US ENVIRONMENTAL PROTECTION AGENCY

WYCKOFF GROUNDWATER TREATMENT PLANT
BAINBRIDGE ISLAND, WA

INSTRUMENTATION AND CONTROL

P&ID
DIGESTER AND
FILTER BACKWASH TANK

SHEET	30
DWG	08-I-08
DATE	MARCH 2006
PROJ	316783.FD.B

FILENAME: 08ni008d_316783.dgn PLOT DATE: 4/29/2010 PLOT TIME: 4:14:18 PM

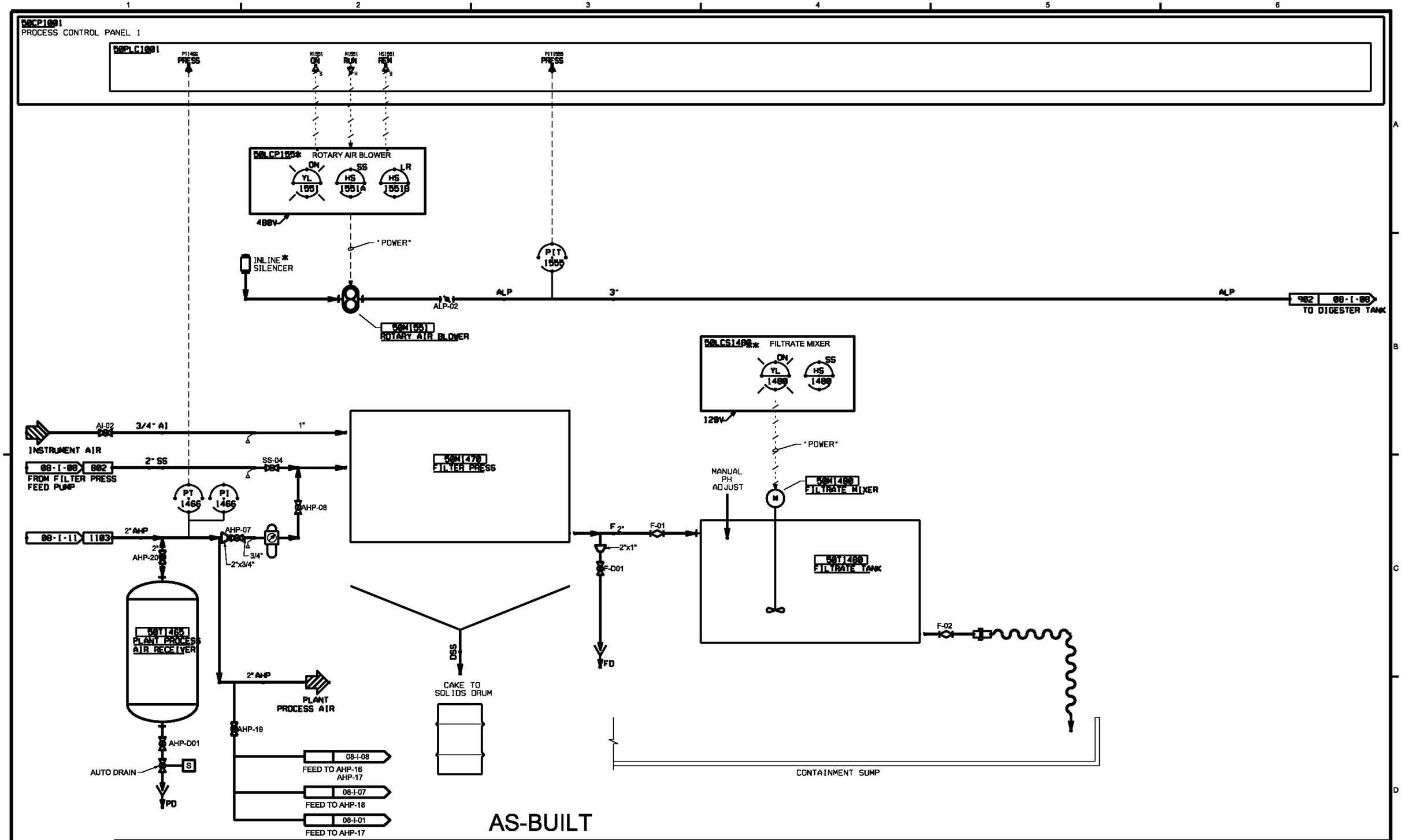

AS-BUILT

DSGN KL ANDERSON	5	4/27/10	REVISED AS-BUILT	JH	ROW	VERIFY SCALE	
DR DS PARKER	4	12/15/09	PRELIMINARY AS-BUILT	JH	ROW	BAR IS ONE INCH ON ORIGINAL DRAWING. 0 1" IF NOT ONE INCH ON THIS SHEET, ADJUST SCALES ACCORDINGLY.	
CHK LL WOOD	3	7/20/09	PRELIMINARY AS-BUILT	JH	ROW		
APVD KT SCHEEFLER	1	3/4/09	AS-BUILT FIELD DATA - PRELIMINARY	JFF	GS		
	NO.	DATE	REVISION	BY	APVD		

CH2MHILL

US ENVIRONMENTAL PROTECTION AGENCY
WYCKOFF GROUNDWATER TREATMENT PLANT
BAINBRIDGE ISLAND, WA

INSTRUMENTATION AND CONTROL
P&ID
FILTER PRESS

SHEET	31
DWG	08-I-09
DATE	JANUARY 4 2006
PROJ	316783.FD.B

FILENAME:08ni009d_316783.dgn PLOT DATE:4/29/2010 PLOT TIME:4:23:59 PM

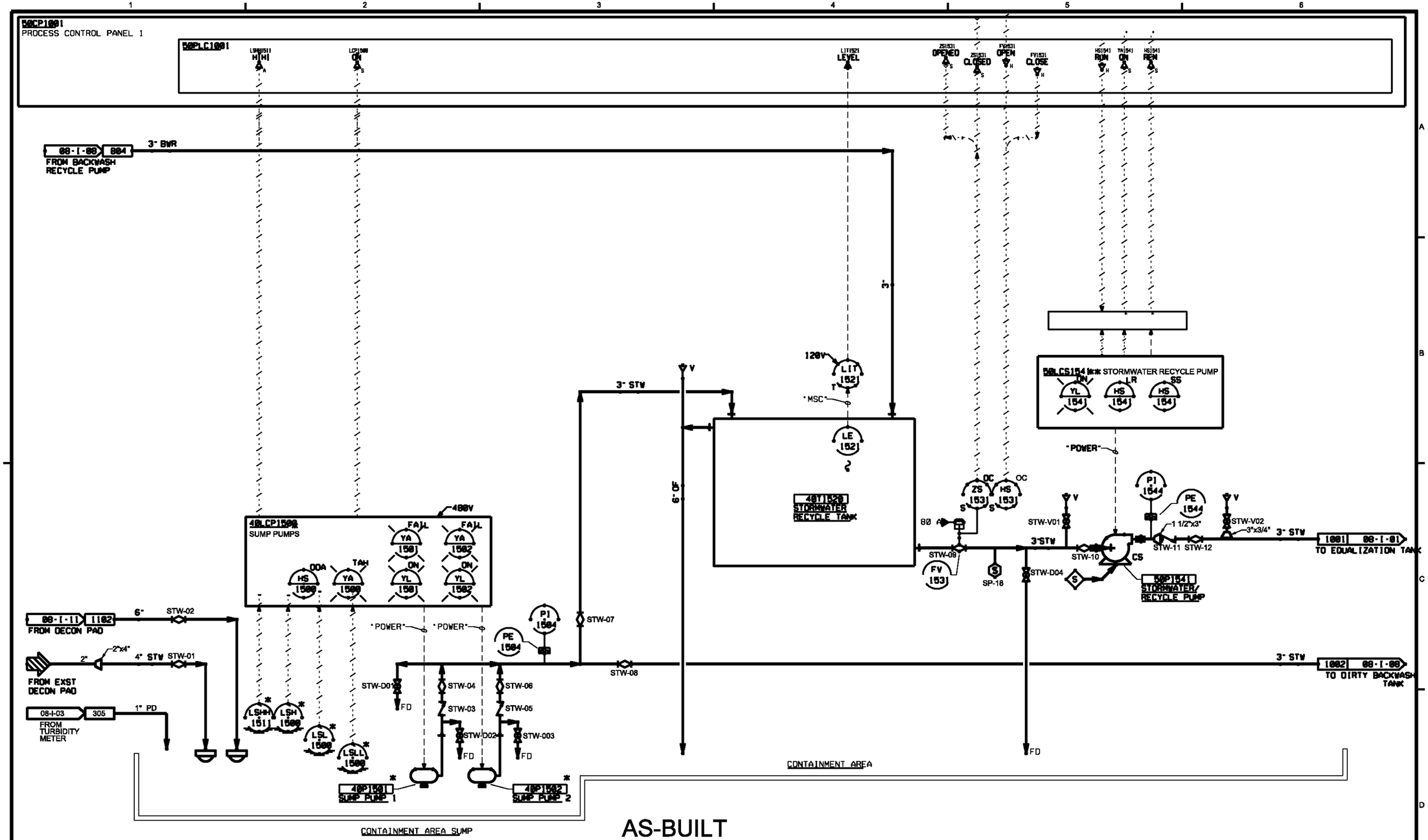

AS-BUILT

DSGN KL ANDERSON	5	4/27/10	REVISED AS-BUILT	JB	ROW	VERIFY SCALE
DR DS PARKER	4	12/15/09	PRELIMINARY AS-BUILT	JB	ROW	BAR IS ONE INCH ON ORIGINAL DRAWING. 0 1" IF NOT ONE INCH ON THIS SHEET, ADJUST SCALES ACCORDINGLY.
CHK LL WOOD	3	7/20/09	PRELIMINARY AS-BUILT	JB	ROW	
	1	3/4/09	AS-BUILT FIELD DATA - PRELIMINARY	JFF	GS	
APVD KT SCHEEFLER	NO.	DATE	REVISION	BY	APVD	

CH2MHILL

US ENVIRONMENTAL PROTECTION AGENCY

WYCKOFF GROUNDWATER TREATMENT PLANT
BAINBRIDGE ISLAND, WA

INSTRUMENTATION AND CONTROL

P&ID
STORMWATER TANK
AND CONTAINMENT AREA

SHEET	32
DWG	08-I-10
DATE	JANUARY 4 2006
PROJ	316783.FD.B

FILENAME: 08nl010d_316783.dgn PLOT DATE: 4/29/2010 PLOT TIME: 4:36:48 PM

50CP1001
PROCESS CONTROL PANEL 1

50PLC1001

P1561 RUN ON REMOTE

LIT1570 LEVEL

M1640 RUN ON

SV1625 OPEN AUTO

M1640 SPEED

FS1625 LOW FLOW

PT1591 PRESS

PSH1641 HIGH

PT1650 PRESS

50LCP1601
POLYMER PANAL
NOTE 1

120V

50P1611
NEAT POLYMER PUMP

PO-01

PO-02

PO

W2-12

W2-13

FI 1621

FI 1622

INLINE MIXER

LSHL 1631

40T1620
POLYMER BLEND TANK

PO-03

PO-04

50P1640
POLYMER FEED PUMP

NOTE 1

DECON WASHDOWN

6" STW

1102 08-I-10
TO CONTAINMENT AREA SUMP

PSH 164

PI 164

PE 164

3/4"x1"

1/2"x3/4"

PO-05

PO-06

1" PO

1101 08-I-02
TO DAF

PT 1650

PI 1650

PARTICULATE FILTER

3/4"

AI-01

AI

3/4"x1/2"

3/4"

INSTRUMENT AIR

AI 3/4"

AI-03

TO WELL FIELD

PD

AI 1/2"

AI-04

1/2"x3/4"

3/4"

TO PNEUMATIC VALVES IN TANK FARM

08-I-01 TO FV1021

08-I-08 TO FV1451

08-I-10 TO FV1531

REGRIGERATED AIR DRYER

120V

3/4"

2"x3/4"

2" AHP-05

480V

COMPRESSOR

PSHL 1651

PI 1651

50M1651
AIR COMPRESSOR PACKAGE SYSTEM 1

AHP-01

1"

AHP-02

1"x3/4"

PD

480V

PSHL 1652

PI 1652

COMPRESSOR

50M1652
AIR COMPRESSOR PACKAGE SYSTEM 2

AHP-03

AHP-04

1"

2"x1 1/2"

1"x1 1/2"

1 1/2"

AHP-06

1 1/2"x2"

2"

PARTICULATE FILTER

1103 08-I-09
TO PLANT PROCESS AIR RECEIVER

W2 TO W2 DISTRIBUTION

WELL PUMP MOTOR STARTER AND DISCONNECT (LOCATED AT W2 WELL) SEE NOTE 2

W2-01

LIT 1570 (ULTRASONIC LEVEL ELEMENT AND TRANSMITTER)

PUMP

W2 WELL

50T1575
PLANT WATER PRESSURE TANK

NOTE 1
SV 1625
SEE NOTE 1b

FS 1620

24 VDC POWER FROM 50CP1001

W2-11

W2-10

W2-02

W2-03

W2-04

W2-05

W2-06

W2-07

W2-08

W2-09

CS

CS

PI 159

PT 159

PE 159

PSH 159

AS-BUILT

NOTES:

1. FIELD MODIFICATIONS TO THIS EXISTING EQUIPMENT ARE REQUIRED. SEE SPECIFICATIONS SECTIONS 13400 AND 01645 FOR DETAILS.
   ADD SOLENOID VALVE "OPEN" STATUS INDICATION:
   a. AN INPUT TO THE PLC1001 INDICATING "OPEN" STATUS OF THE W2 WATER FEED SOLENOID VALVE IS REQUIRED. MODIFY THE EXISTING POLYMER PANEL INCLUDING ADDITION OF AN INTER POSING RELAY IF NECESSARY TO PROVIDE A "DRY" CONDUIT FOR "OPEN" STATUS ON THE SOLENOID VALVE AND WIRE THIS INPUT TO THE PLC
   b. FIELD VERIFY HARDWARE AND WIRING REQUIREMENTS TO COMPLETE THIS ADDITION OF W2 WATER SUPPLY SOLENOID VALVE "OPEN" STATUS INDICATION TO THE PLC1001

2. THE 40LCP1561 WELL PUMP CONTROL PANEL DOES NOT EXIST AS A LOCAL CONTROL PANEL. BUT THERE IS A MOTOR STARTER AND DISCONNECT AT THE WELL THAT CONTROLS THE WELL PUMP.
   a. ADD THE FOLLOWING I/O BETWEEN THE EXISTING WELL PUMP MOTOR STARTER AND 50PLC1001. PLC1001 IN PUTS WELL PUMP "ON", AND "REMOTE". PLC1001 OUTPUT - "RUN".

DSGN KL ANDERSON	5	4/27/10	REVISED AS-BUILT	JB	ROW	VERIFY SCALE
DR DS PARKER	4	12/15/09	PRELIMINARY AS-BUILT	JB	ROW	BAR IS ONE INCH ON ORIGINAL DRAWING. 0 1"
CHK LL WOOD	3	7/20/09	PRELIMINARY AS-BUILT	DLS	ROW	IF NOT ONE INCH ON THIS SHEET, ADJUST SCALES ACCORDINGLY.
APVD KT SCHEFFLER	1	3/4/09	AS-BUILT FIELD DATA - PRELIMINARY	JFF	GS	
	NO.	DATE	REVISION	BY	APVD	

CH2MHILL

US ENVIRONMENTAL PROTECTION AGENCY

WYCKOFF GROUNDWATER TREATMENT PLANT
BAINBRIDGE ISLAND, WA

INSTRUMENTATION AND CONTROL

P&ID
POLYMER SYSTEM / PLANT WATER AND PLANT AIR

SHEET	33
DWG	08-I-11
DATE	MARCH 2006
PROJ	316783.FD.B

FILENAME: 08ni011d_316783.dgn PLOT DATE: 4/30/2010 PLOT TIME: 9:46:28 AM

NOTES:

1. ITEMS SHOWN WITH ◆ ARE PROVIDED BY OTHERS.

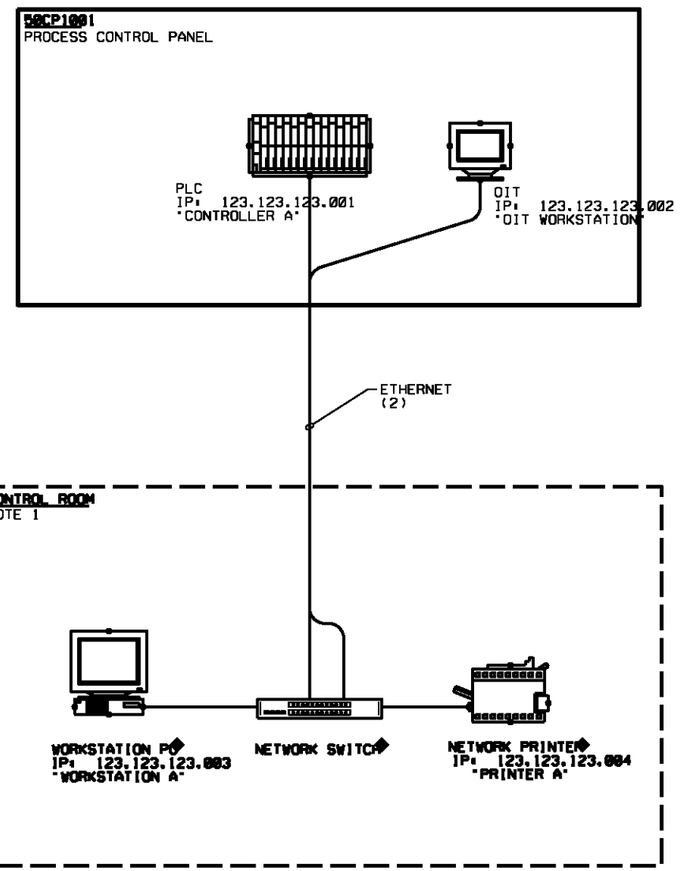

AS-BUILT

DSGN KL ANDERSON						
DR DS PARKER	3	4/27/10	REVISED AS-BUILT	JB	ROW	
CHK LL WOOD	2	5/14/09	PRELIMINARY AS-BUILT	DLS	ROW	
APVD KT SCHEFFLER	1	3/4/09	AS-BUILT FIELD DATA - PRELIMINARY	JFF	GS	
	NO.	DATE	REVISION	BY	APVD	

VERIFY SCALE
BAR IS ONE INCH ON ORIGINAL DRAWING.
0 1"
IF NOT ONE INCH ON THIS SHEET, ADJUST SCALES ACCORDINGLY.

CH2MHILL

US ENVIRONMENTAL PROTECTION AGENCY
WYCKOFF GROUNDWATER TREATMENT PLANT
BAINBRIDGE ISLAND, WA

INSTRUMENTATION AND CONTROL

CONTROL SYSTEM BLOCK DIAGRAM

SHEET	34
DWG	08-I-12
DATE	JANUARY 4 2006
PROJ	316783.FD.B

FILENAME: 08nl012d_316783.dgn PLOT DATE: 4/30/2010 PLOT TIME: 9:56:08 AM

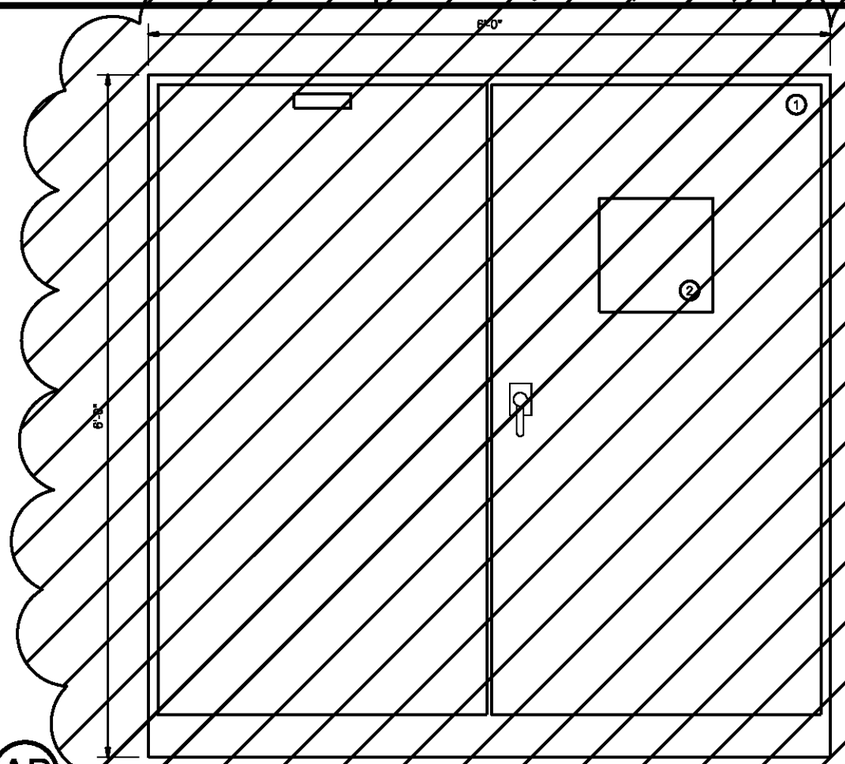

CONTROL PANEL EXTERIOR
1 1/2"=1'-0"

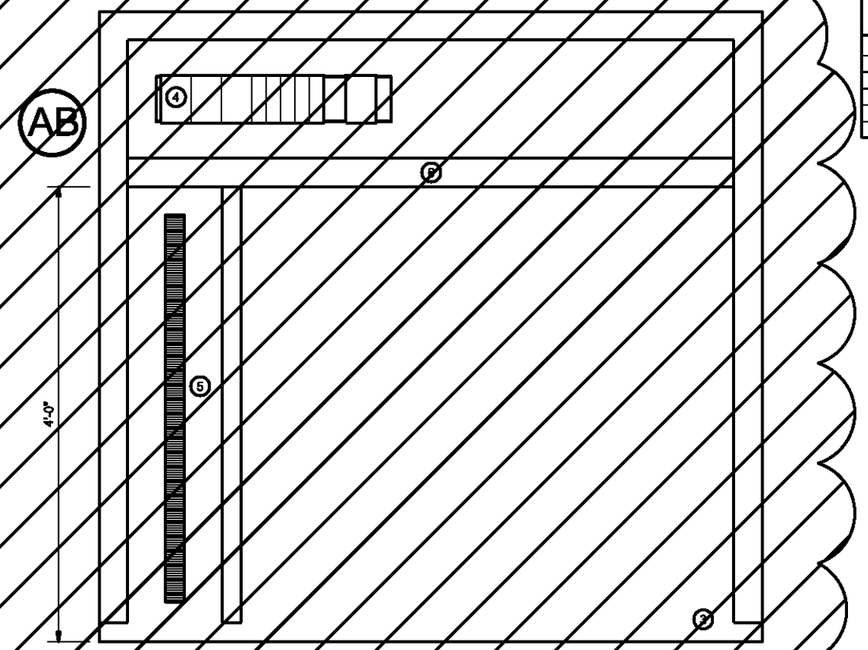

CONTROL PANEL INTERIOR
1 1/2"=1'-0"

PANEL SCHEDULE	
ITEM NO.	DESCRIPTION
1	ENCLOSURE
2	OPERATOR INTERFACE TERMINAL
3	BACKPANEL
4	PROGRAMMABLE LOGIC CONTROLLER
5	TERMINAL BLOCKS
6	WIRE DUCT

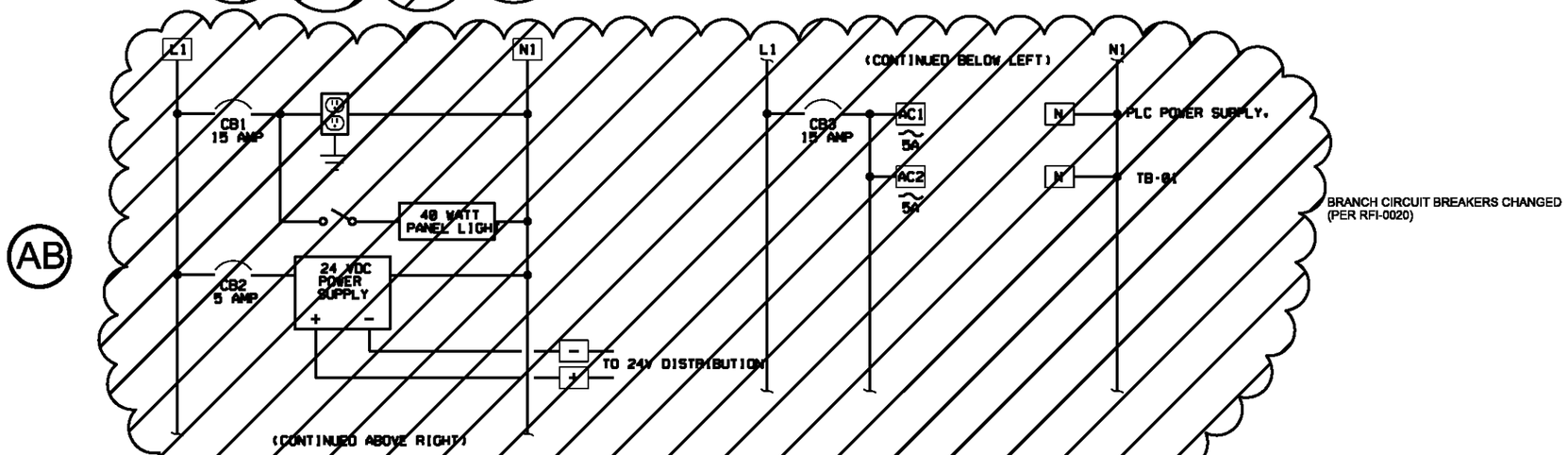

TYPICAL PLC CONTROL PANEL POWER DIAGRAM

DSGN KL ANDERSON					
DR DS PARKER	3	12/15/09	PRELIMINARY AS-BUILT	JB	ROW
CHK LL WOOD	2	5/14/09	PRELIMINARY AS-BUILT	DLS	ROW
APVD KT SCHEFFLER	1	3/4/09	AS-BUILT FIELD DATA - PRELIMINARY	JFF	GS
	NO.	DATE	REVISION	BY	APVD

VERIFY SCALE
BAR IS ONE INCH ON ORIGINAL DRAWING.
0 1"
IF NOT ONE INCH ON THIS SHEET, ADJUST SCALES ACCORDINGLY.

CH2MHILL

US ENVIRONMENTAL PROTECTION AGENCY
WYCKOFF GROUNDWATER TREATMENT PLANT
BAINBRIDGE ISLAND, WA

INSTRUMENTATION AND CONTROL

TYPICAL CONTROL PANEL LAYOUT AND ELECTRICAL WIRING

SHEET	35
DWG	08-I-13
DATE	JANUARY 4 2006
PROJ	316783.FD.B

FILENAME: 08nl013d_316783.dgn PLOT DATE: 12/29/2009 PLOT TIME: 10:34:12 AM

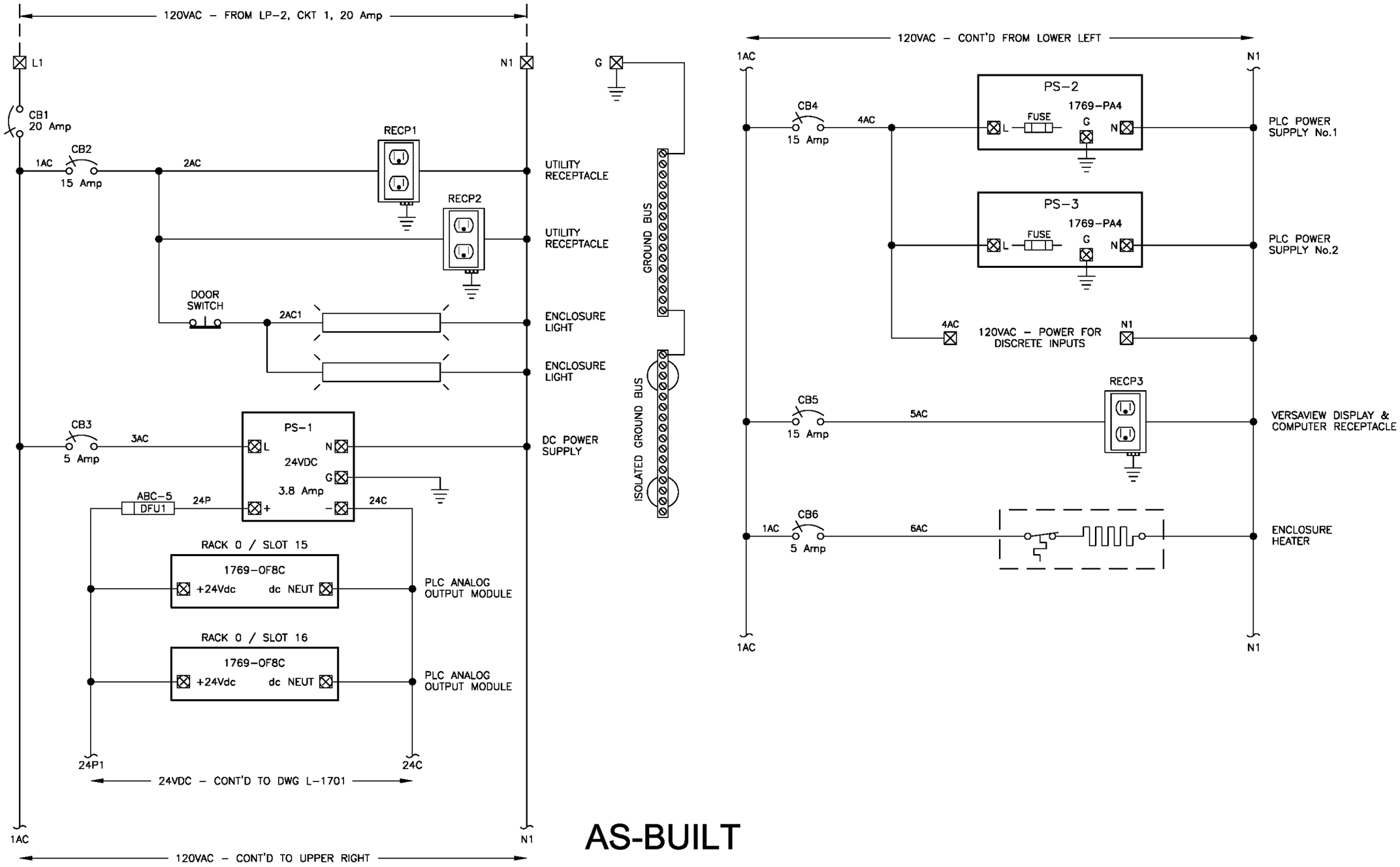

AS-BUILT

4	4/27/10	REVISED AS-BUILT	JB ROW
3	12/15/09	PRELIMINARY AS-BUILT	JB ROW

INSTRUMENTATION AND CONTROL

35a

PROCESS CONTROL PANEL No. 1 (50CP1001)
CONTROL POWER DISTRIBUTION

08nl013dA_316783.dgn 4/30/2010 10:08:32 AM

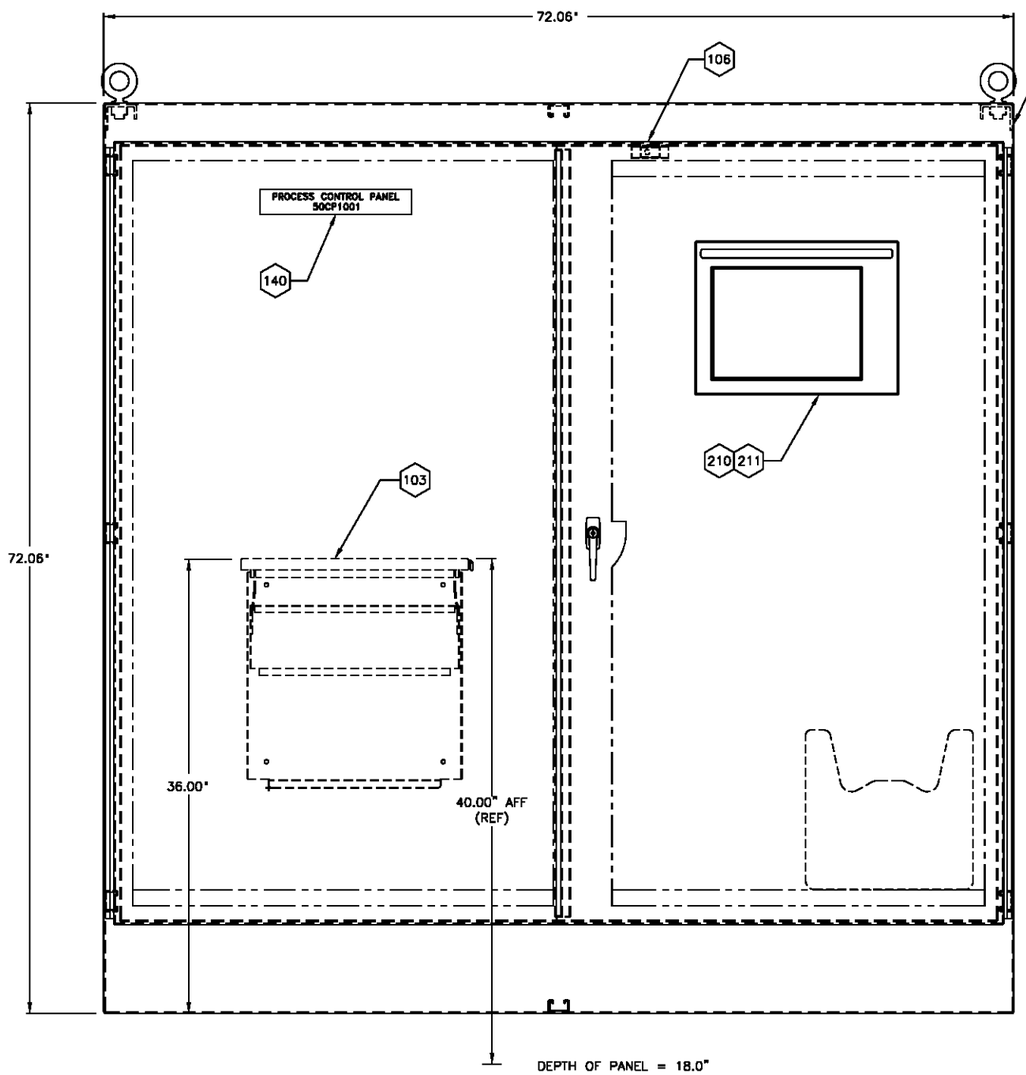

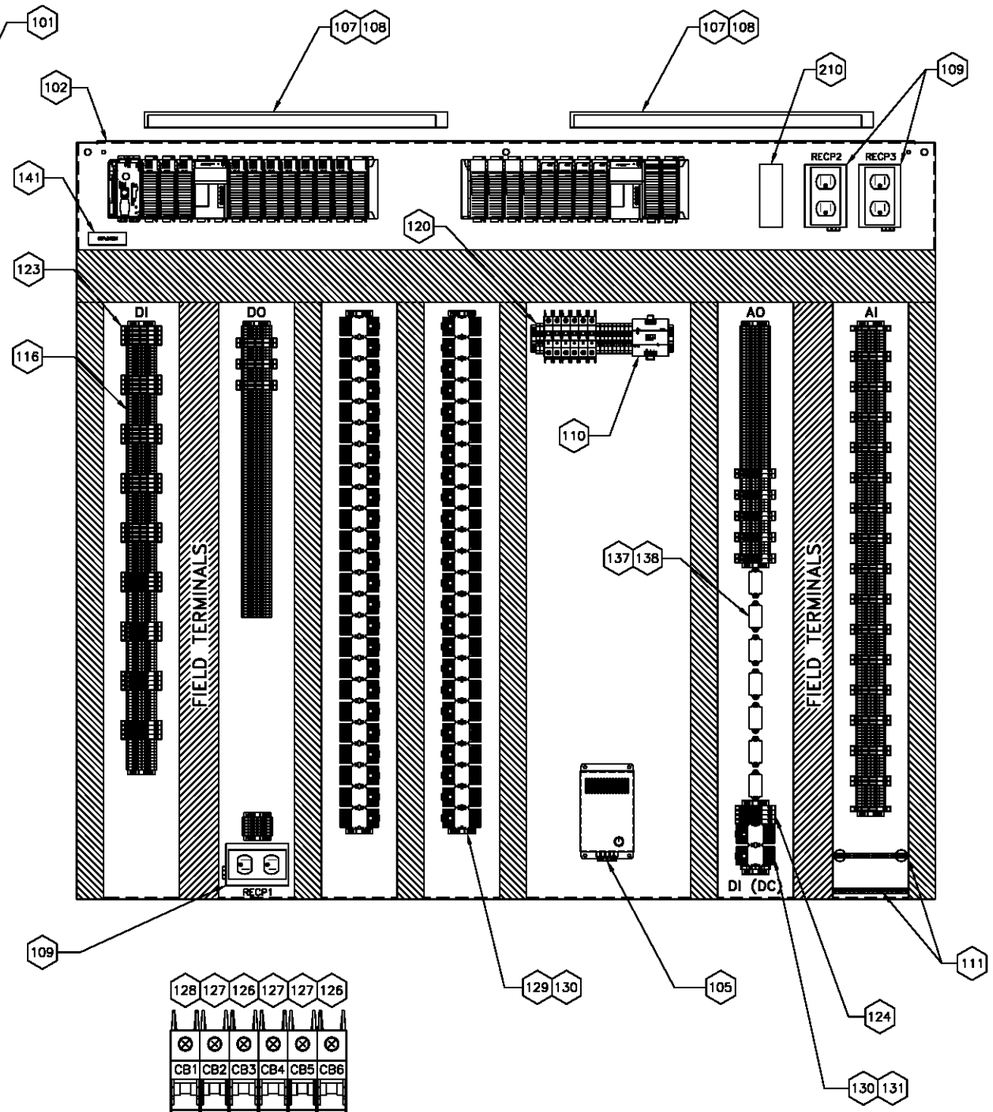

AS-BUILT

NOTE:
FOR ITEM DESCRIPTIONS SEE THE TECHNICAL SYSTEMS, INC. (TSI) BILL OF MATERIALS (VOL 3,DEVICE OPERATION AND MAINTENANCE DATA) IN VOLUME VIII OF THE OPERATION ANDMAINTENANCE DATA (MANUAL).

4	4/27/10	REVISED AS-BUILT	JB	ROW
3	12/15/09	PRELININARY AS-BUILT	JB	ROW

INSTRUMENTATION AND CONTROL

35b

PROCESS CONTROL PANEL No. 1 (50CP1001)
PANEL LAYOUT

08ni013dB_316783.dgn 5/3/2010 1:14:00 PM

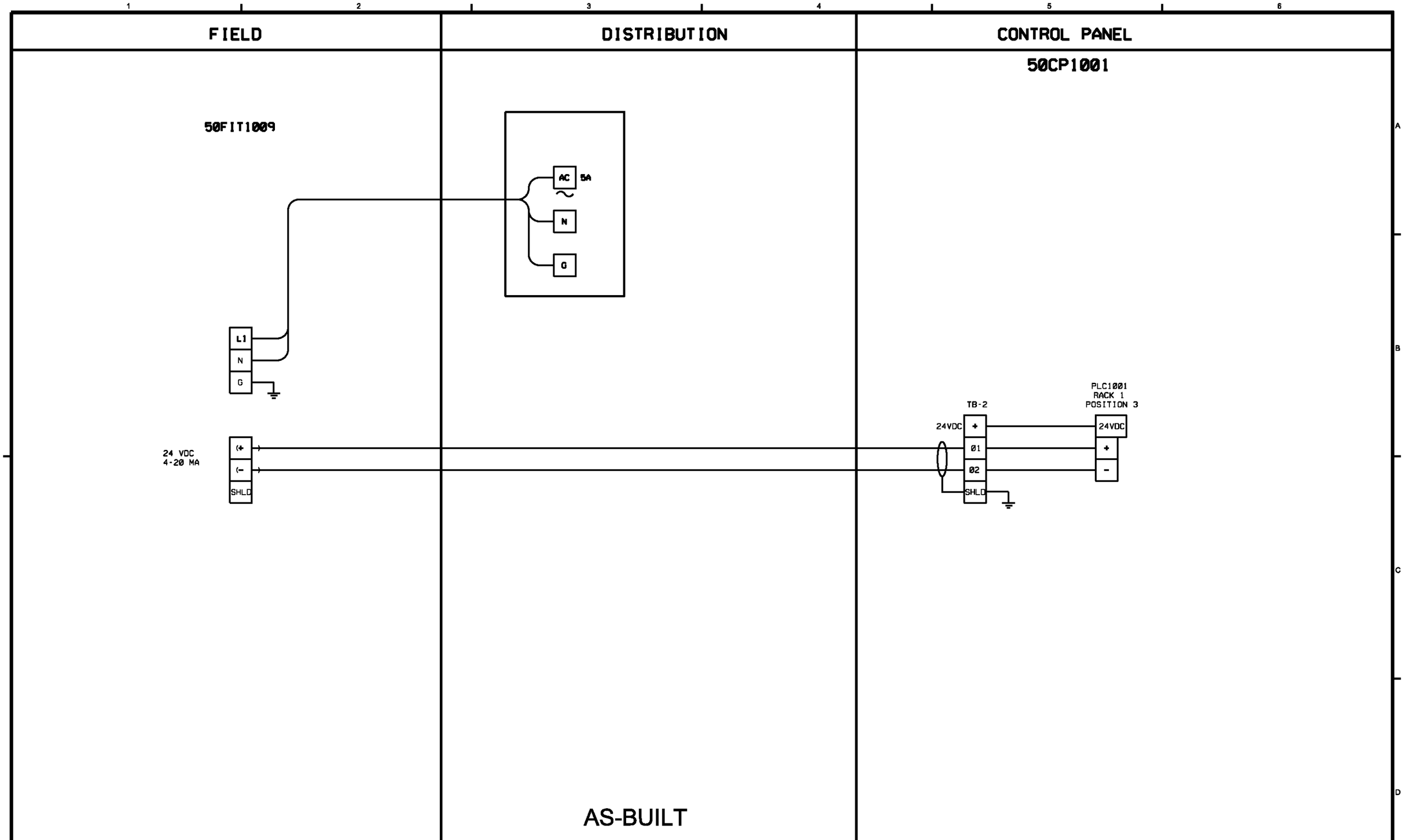

DSGN KL ANDERSON						
DR DS PARKER	2	4/27/10	REVISED AS-BUILT	DLS	ROW	
CHK LL WOOD	2	5/14/09	PRELIMINARY AS-BUILT	DLS	ROW	
APVD KT SCHEFFLER	1	3/4/09	AS-BUILT FIELD DATA - PRELIMINARY	JFF	GS	
	NO.	DATE	REVISION	BY	APVD	

VERIFY SCALE
BAR IS ONE INCH ON ORIGINAL DRAWING.
0 1"
IF NOT ONE INCH ON THIS SHEET, ADJUST SCALES ACCORDINGLY.

CH2MHILL

US ENVIRONMENTAL PROTECTION AGENCY
WYCKOFF GROUNDWATER TREATMENT PLANT
BAINBRIDGE ISLAND, WA

INSTRUMENTATION AND CONTROL

TYPICAL ANALOG LOOP DIAGRAM

SHEET	36
DWG	08-I-14
DATE	JANUARY 4 2006
PROJ	316783.FD.B

FILENAME: 08nl014d_316783.dgn PLOT DATE: 4/30/2010 PLOT TIME: 10:38:26 AM

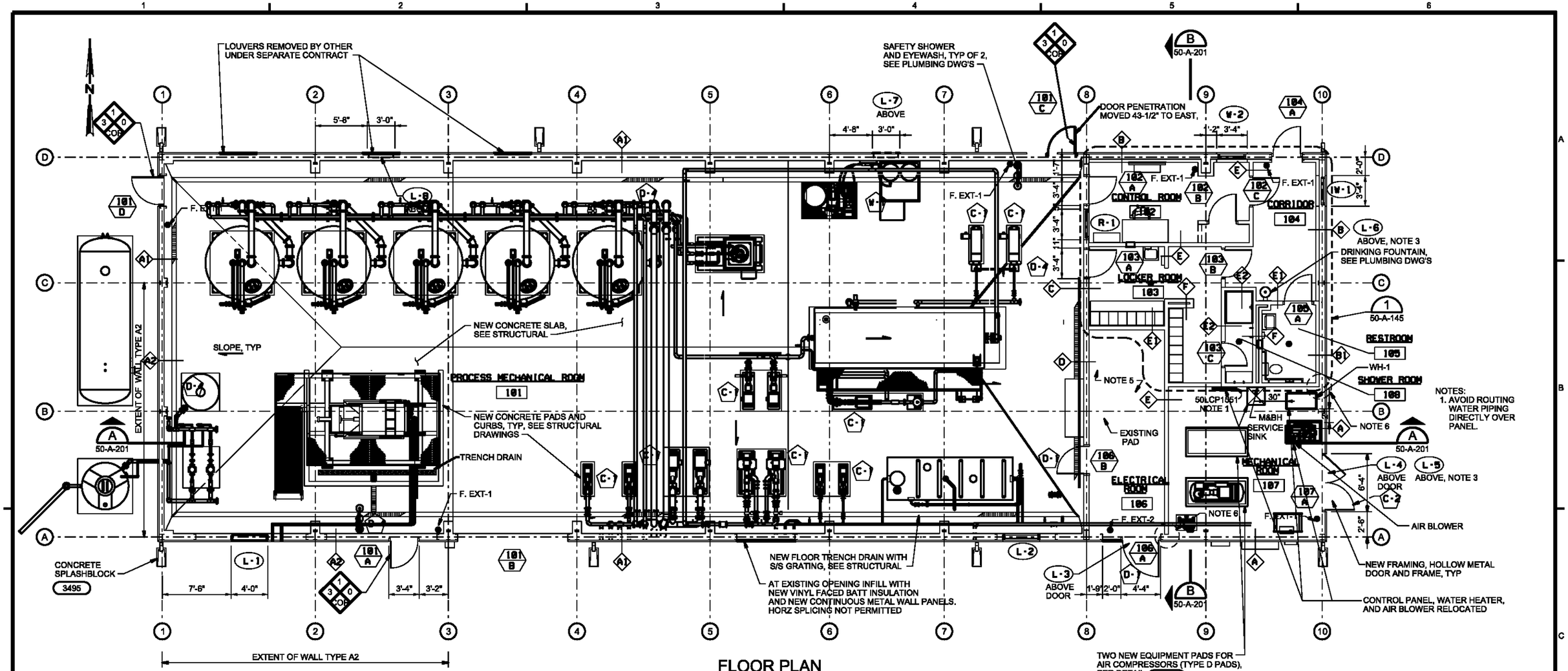

NOTES:
1. AVOID ROUTING WATER PIPING DIRECTLY OVER PANEL.

FLOOR PLAN
3/16"=1'-0"

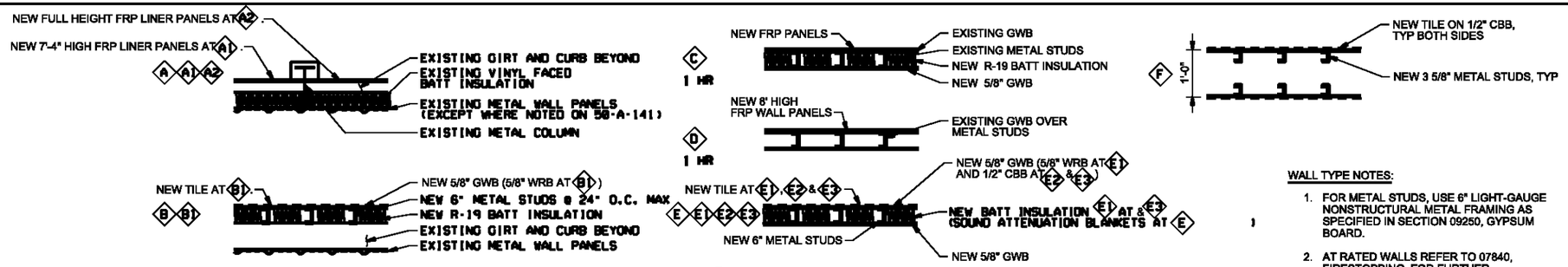

AS-BUILT

WALL TYPES
NTS

WALL TYPE NOTES:

1. FOR METAL STUDS, USE 6" LIGHT-GAUGE NONSTRUCTURAL METAL FRAMING AS SPECIFIED IN SECTION 09250, GYPSUM BOARD.
2. AT RATED WALLS REFER TO 07840, FIRESTOPPING, FOR FURTHER REQUIREMENTS.

FLOOR PLAN NOTES:

1. FOR CODE NOTES SEE 01-G-06
2. AT EXISTING WALL OPENINGS WHERE PIPES, DUCTS OR OTHER EQUIPMENT HAVE BEEN REMOVED, PROVIDE NEW VINYL FACED BATT INSULATION AND METAL WALL PANELS. REPLACE ENTIRE WALL PANEL, NO SPLICING PERMITTED.
3. SEE ELEVATIONS FOR LOCATION.
4. FIELD VERIFY EXISTING DIMENSIONS AND CONDITIONS.
5. REGARDLESS OF FIRE RATING, SEAL ALL PENETRATIONS AND GAPS IN THE ELECTRICAL ROOM IN ACCORDANCE WITH 07840, FIRESTOPPING.
6. TERMINATE NEW STUD WALLS TIGHT TO EXISTING EXTERIOR WALL PANELS. PROVIDE METAL TRIM FOR CLEAN EDGE AND SEAL GAPS.

DSGN GB KIRSTEN	5	4/27/10	REVISED AS-BUILT	JB	ROW	VERIFY SCALE
DR JC HALEC	4	12/15/09	PRELIMINARY AS-BUILT	JB	ROW	BAR IS ONE INCH ON ORIGINAL DRAWING. 0 1" IF NOT ONE INCH ON THIS SHEET, ADJUST SCALES ACCORDINGLY.
CHK EB PIETERICK	3	7/20/09	PRELIMINARY AS-BUILT	DLS	ROW	
APVD KT SCHEEFLER	1	3/4/09	AS-BUILT FIELD DATA - PRELIMINARY	JFF	GS	
	NO.	DATE	REVISION	BY	APVD	

CH2MHILL

US ENVIRONMENTAL PROTECTION AGENCY
WYCKOFF GROUNDWATER TREATMENT PLANT
BAINBRIDGE ISLAND, WA

TREATMENT FACILITY
ARCHITECTURAL
FLOOR PLAN

SHEET	39
DWG	50-A-141
DATE	JANUARY 4 2006
PROJ	316783.FD.B

FILENAME:50na141d_316783.dgn PLOT DATE:5/5/2010 PLOT TIME:9:27:04 AM

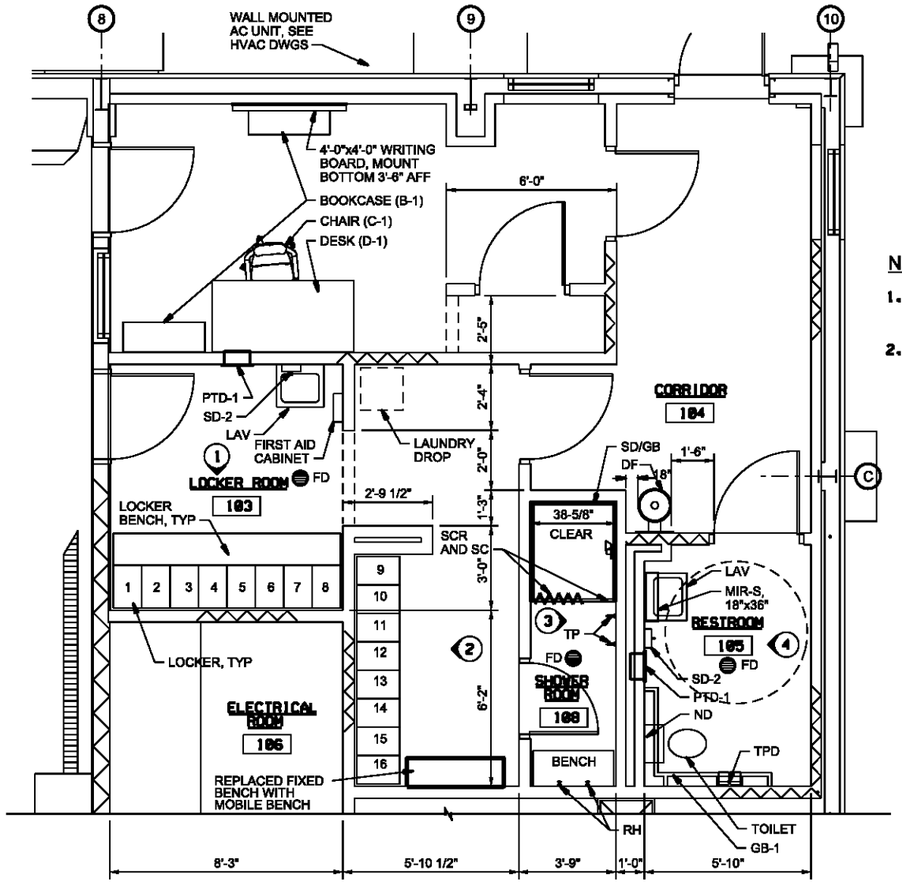

ENLARGED PLAN 1

3/8"=1'-0" 50-A-141

NOTES:

1. FOR TOILET AND BATH ACCESSORY ABBREVIATIONS SEE SPEC SECTION 10800.
2. REFERENCE SPECIFICATIONS AND PLUMBING DRAWINGS FOR FIXTURE MODELS.

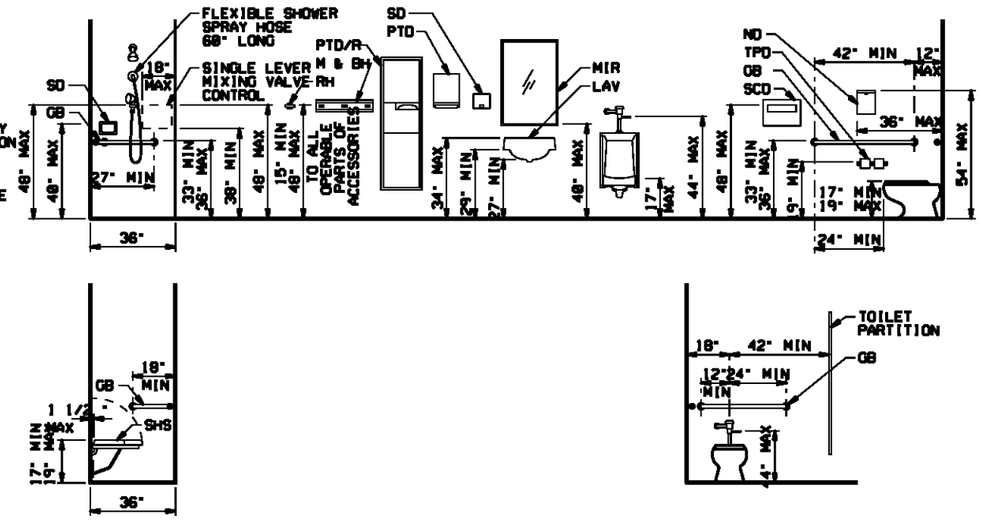

STANDARD ACCESSIBLE FIXTURE MOUNTING HEIGHTS 2

NTS

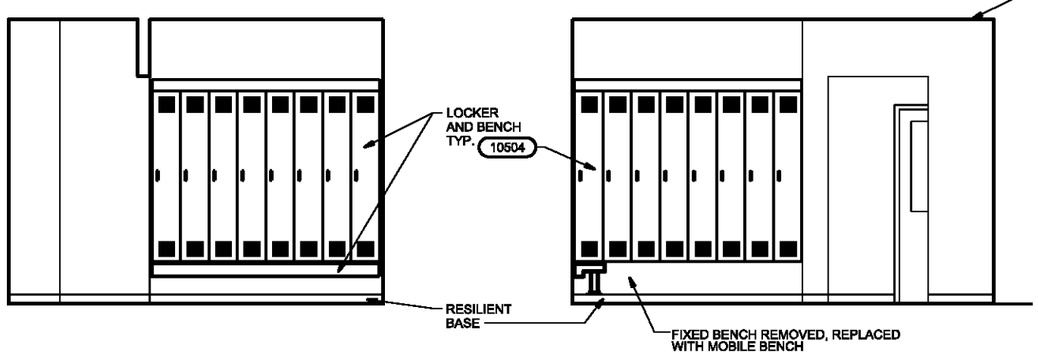

INTERIOR ELEVATION 1

3/8"=1'-0"

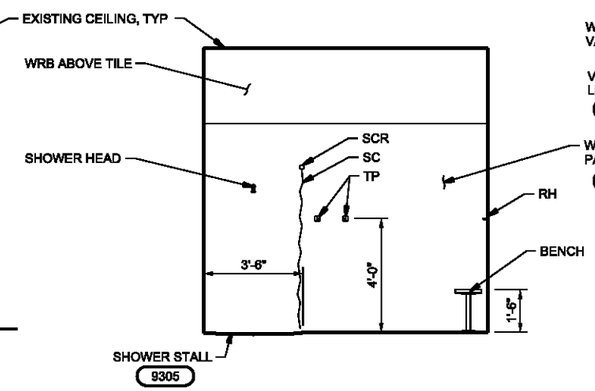

INTERIOR ELEVATION 2

3/8"=1'-0"

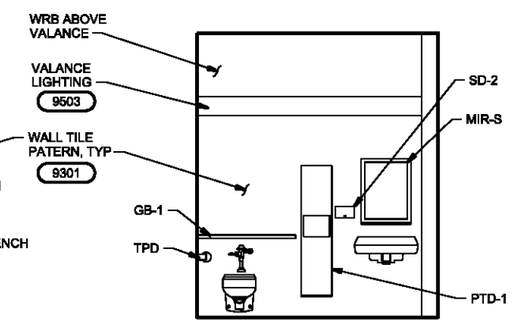

INTERIOR ELEVATION 3

3/8"=1'-0"

INTERIOR ELEVATION 4

3/8"=1'-0"

AS-BUILT

DSGN GB KIRSTEN	5	4/27/10	REVISED AS-BUILT	JB	ROW	VERIFY SCALE
DR JC HALEC	4	12/15/09	PRELIMINARY AS-BUILT	JB	ROW	BAR IS ONE INCH ON ORIGINAL DRAWING. 0 1" IF NOT ONE INCH ON THIS SHEET, ADJUST SCALES ACCORDINGLY.
CHK EB PIETERICK	3	7/20/09	PRELIMINARY AS-BUILT	DLS	ROW	
APVD KT SCHEFFLER	1	3/4/09	AS-BUILT FIELD DATA - PRELIMINARY	JFF	GS	
	NO.	DATE	REVISION	BY	APVD	

CH2MHILL

US ENVIRONMENTAL PROTECTION AGENCY

WYCKOFF GROUNDWATER TREATMENT PLANT
BAINBRIDGE ISLAND, WA

TREATMENT FACILITY

ARCHITECTURAL
ENLARGED PLAN AND
INTERIOR ELEVATIONS

SHEET	40
DWG	50-A-145
DATE	JANUARY 4 2006
PROJ	316783.FD.B

FILENAME: 50na145d_316783.dgn PLOT DATE: 4/30/2010 PLOT TIME: 1:14:35 PM

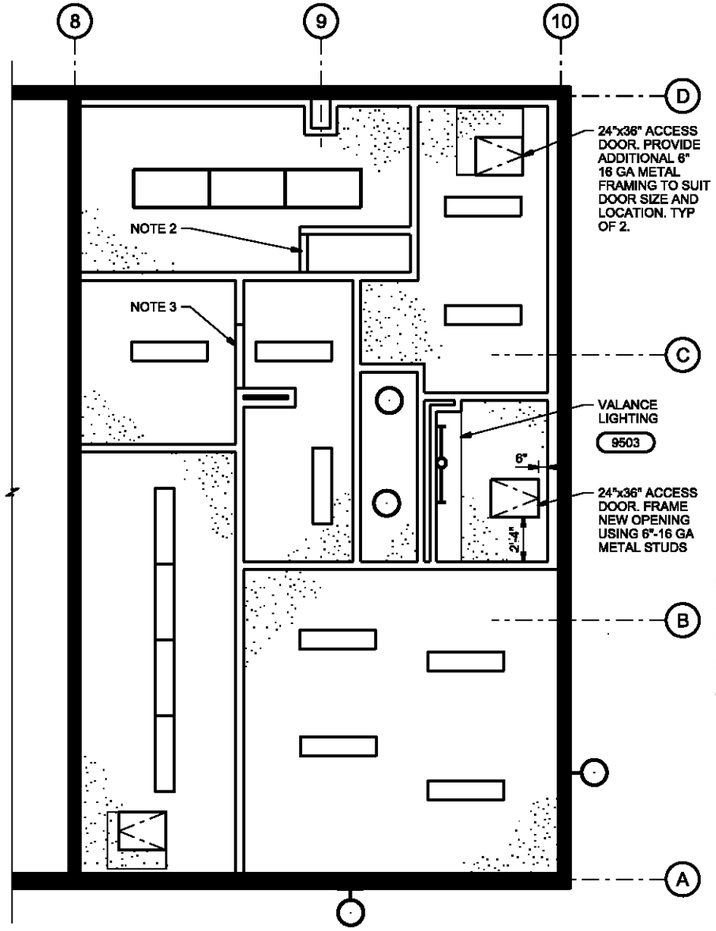

PARTIAL REFLECTED CEILING PLAN
1/4"=1'-0"

REFLECTED CEILING PLAN LEGEND

- EXISTING GYPSUM BOARD WITH NEW FINISH AS SCHEDULED
- 1X4 SURFACE MOUNT LUMINAIRE
- 2X4 SURFACE MOUNT LUMINAIRE
- RECESSED DOWNLIGHT
- EXHAUST GRILLE
- FULL HEIGHT WALLS
- WALLS TIGHT TO UNDERSIDE OF CEILING

REFLECTED CEILING NOTES:

1. EXISTING CEILING HEIGHT IS 10'-0" +/-
2. HEADER AT 7'-0"
3. HEADER AT 8'-0"
4. EXISTING CEILING FRAMING IS ESTIMATED TO BE CAPABLE OF SUPPORTING PEDESTRIAN ACCESS FOR MAINTENANCE ONLY, BUT NOT FOR ANY KIND OF STORAGE

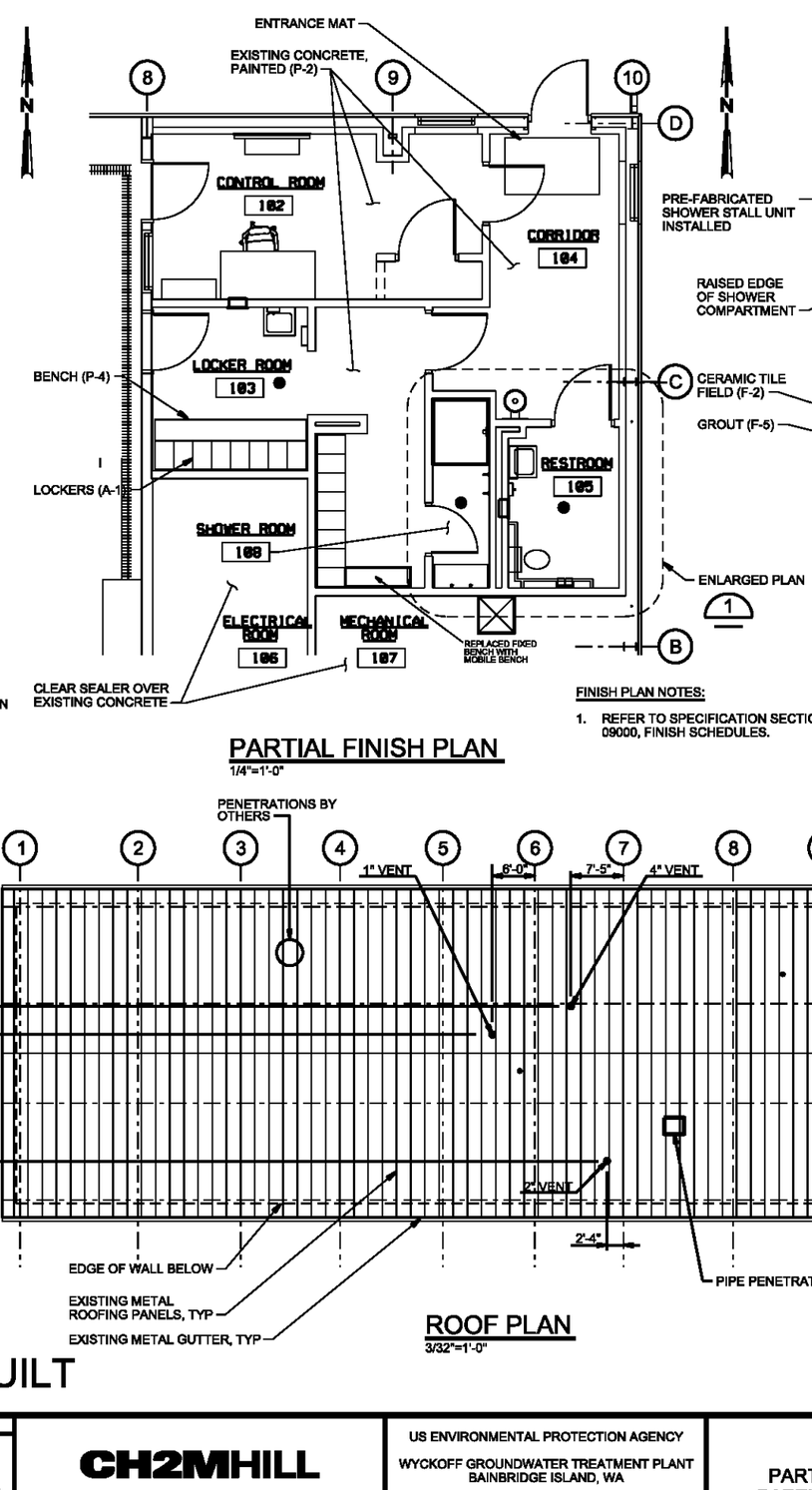

PARTIAL FINISH PLAN
1/4"=1'-0"

FINISH PLAN NOTES:

1. REFER TO SPECIFICATION SECTION 09000, FINISH SCHEDULES.

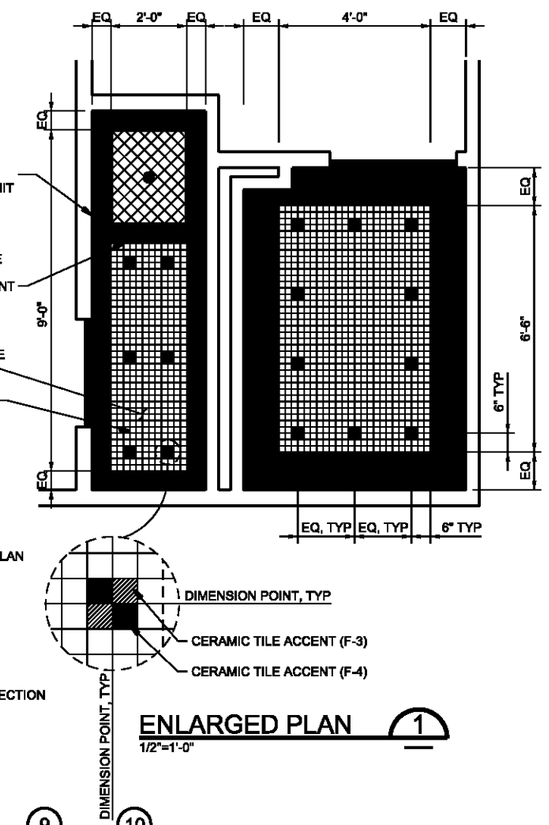

ENLARGED PLAN 1
1/2"=1'-0"

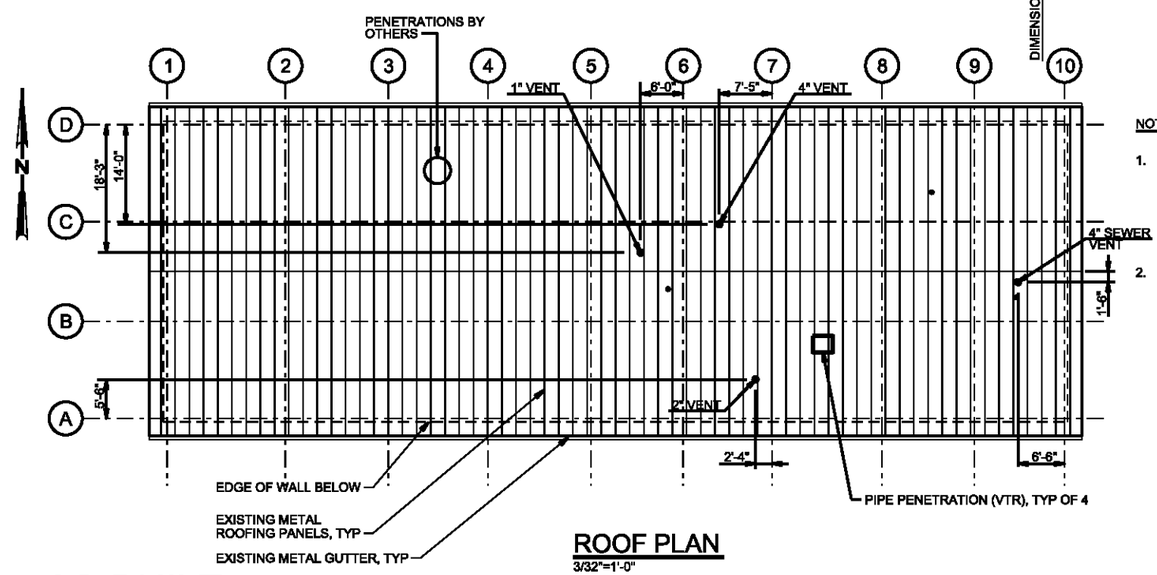

ROOF PLAN
3/32"=1'-0"

NOTES:

1. AT EXISTING OPENINGS IN ROOF PANELS WHERE PIPES, DUCTS, OR OTHER EQUIPMENT HAVE BEEN REMOVED, PROVIDE NEW VINYL FACED BATT INSULATION AND METAL ROOFING PANELS. REPLACE ENITRE ROOF PANEL. NO SPLICING PERMITTED.
2. MATERIALS FOR THE INSTALLATION OF THREE 2-INCH ROOF BOOTS AND ONE 4-INCH ROOF BOOT FURNISHED BY GOVERNMENT (INCLUDES BOOTS, CAULKING, INSTALLATION INSTRUCTIONS AND SELF-DRILLING SCREWS). LOCATED ROOF PENETRATIONS TO PROVIDE THE BEST FIT FOR PROCESS EQUIPMENT. REMOVED A SMALL PIECE OF ROOF INSULATION AROUND EACH ROOF PENETRATION AND TESTED THE ROOF BOOT FOR VISIBLE LEAKAGE FROM RAIN OR WATER SPRAY ON THE ROOF. REPAIRED THE ROOF INSULATION WITH APPROPRIATE INSULATION TAPE AFTER BOOT INSTALLATION AND LEAKAGE TESTING COMPLETED.

AS-BUILT

DSGN GB KIRSTEN	5	4/27/10	PRELIMINARY AS-BUILT	JB	ROW	VERIFY SCALE
DR JC HALEC	4	12/15/09	PRELIMINARY AS-BUILT	JB	ROW	BAR IS ONE INCH ON ORIGINAL DRAWING. 0 1" IF NOT ONE INCH ON THIS SHEET, ADJUST SCALES ACCORDINGLY.
CHK EB PIETERICK	3	7/20/09	PRELIMINARY AS-BUILT	JB	ROW	
APVD KT SCHEEFLER	1	3/4/09	AS-BUILT FIELD DATA - PRELIMINARY	JFF	GS	
	NO.	DATE	REVISION	BY	APVD	

CH2MHILL

US ENVIRONMENTAL PROTECTION AGENCY

WYCKOFF GROUNDWATER TREATMENT PLANT
BAINBRIDGE ISLAND, WA

TREATMENT FACILITY
ARCHITECTURAL
PARTIAL REFLECTED CEILING PLAN, PARTIAL FINISH PLAN AND ROOF PLAN

SHEET	41
DWG	50-A-151
DATE	JANUARY 4 2006
PROJ	316783.FD.B

FILENAME: 50na151d_316783.dgn PLOT DATE: 5/3/2010 PLOT TIME: 1:44:35 PM

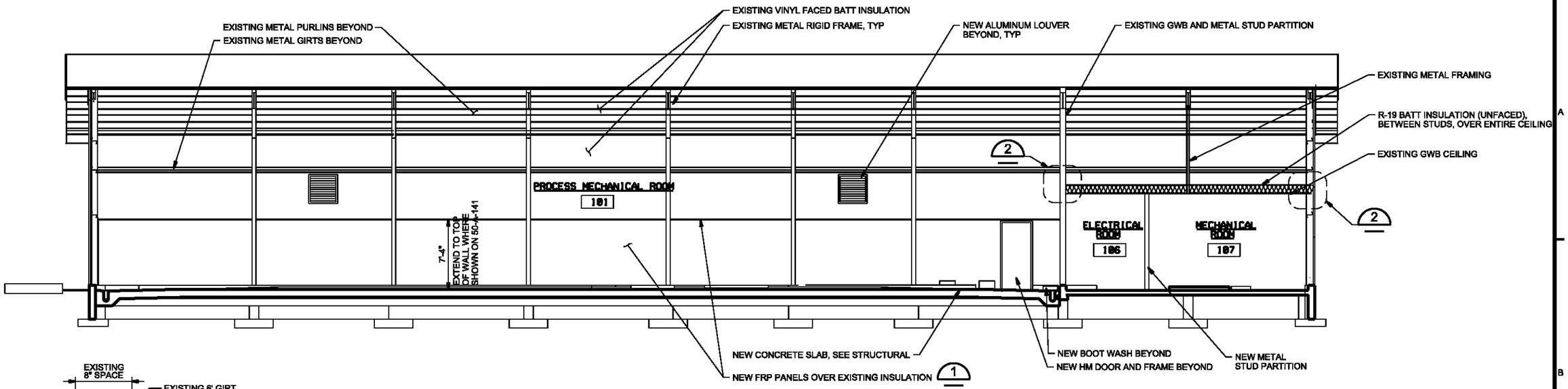

SECTION A
3/16"=1'-0" 50-A-141

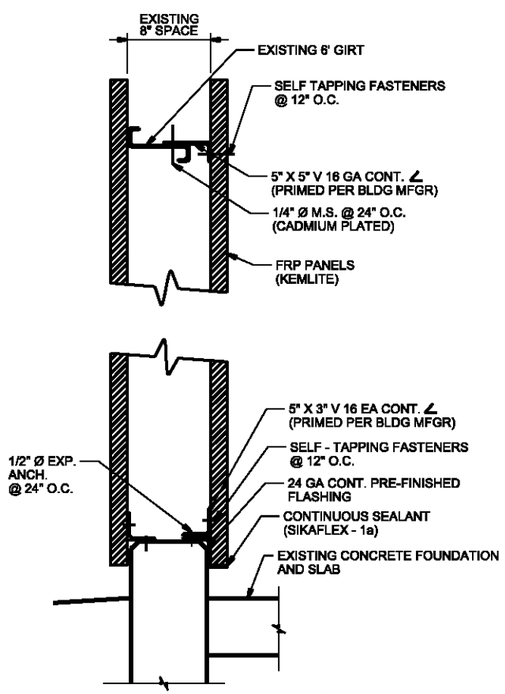

WALL SECTION 1
1 1/2"=1'-0"

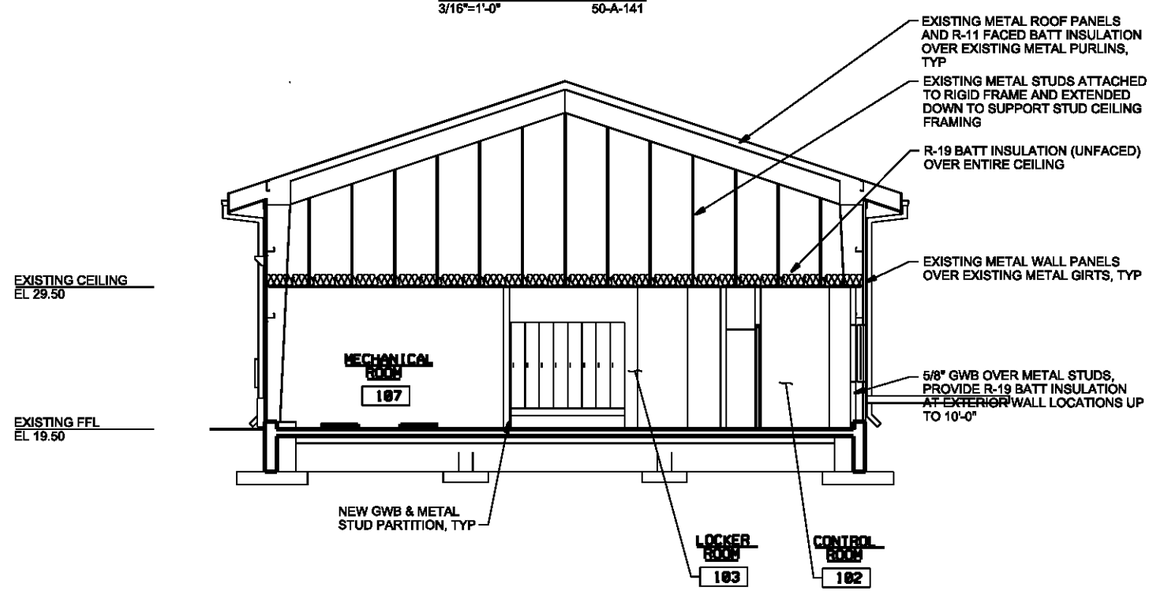

SECTION B
3/16"=1'-0" 50-A-141

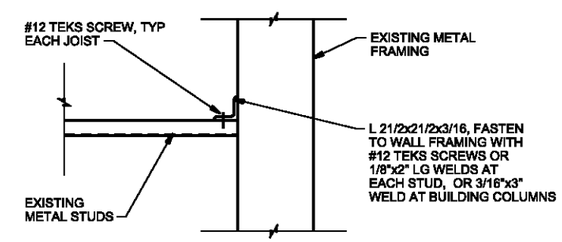

NOTE:
DETAIL APPLIES ONLY WHERE CEILING FRAMING DOES NOT BEAR DIRECTLY ON EXISTING OR NEW WALL STUDS.

FRAMING DETAIL 2
1 1/2"=1'-0"

AS-BUILT

DSGN GB KIRSTEN	4	4/27/10	REVISED AS-BUILT	DLS	ROW	VERIFY SCALE
DR JC HALEC	3	7/20/09	PRELIMINARY AS-BUILT	DLS	ROW	BAR IS ONE INCH ON ORIGINAL DRAWING. 0 1"
CHK EB PIETERICK	2	5/15/09	PRELIMINARY AS-BUILT	JB	ROW	IF NOT ONE INCH ON THIS SHEET, ADJUST SCALES ACCORDINGLY.
APVD KT SCHEFFLER	1	3/4/09	AS-BUILT FIELD DATA - PRELIMINARY	JFF	GS	
	NO.	DATE	REVISION	BY	APVD	

CH2MHILL

US ENVIRONMENTAL PROTECTION AGENCY
WYCKOFF GROUNDWATER TREATMENT PLANT
BAINBRIDGE ISLAND, WA

TREATMENT FACILITY
ARCHITECTURAL
SECTIONS AND DETAILS

SHEET	42
DWG	50-A-201
DATE	JANUARY 4 2006
PROJ	316783.FD.B

FILENAME: 50na201d_316783.dgn PLOT DATE: 4/30/2010 PLOT TIME: 1:45:09 PM

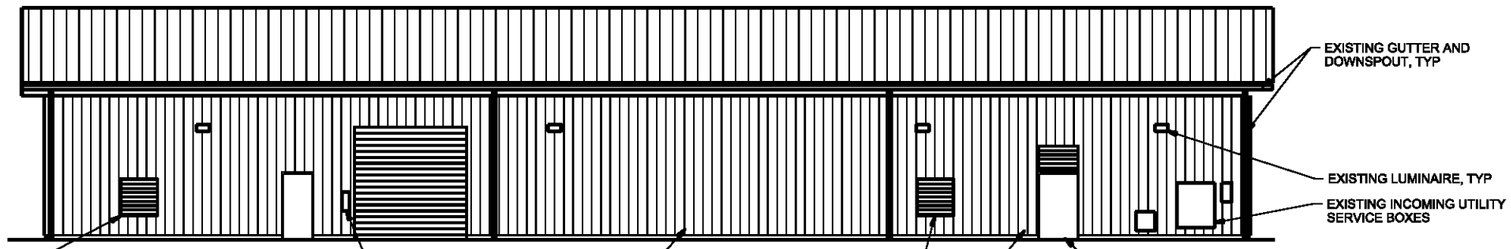

SOUTH ELEVATION
1/8"=1'-0"

NOTES:

1. FIELD VERIFY ALL DIMENSIONS AND CONDITIONS.
2. NOT ALL WALL PENETRATIONS ARE SHOWN. FIELD VERIFY ALL WALLS, PATCH AND REPAIR ALL PENETRATIONS FOR WEATHER-TIGHT INSTALLATION.

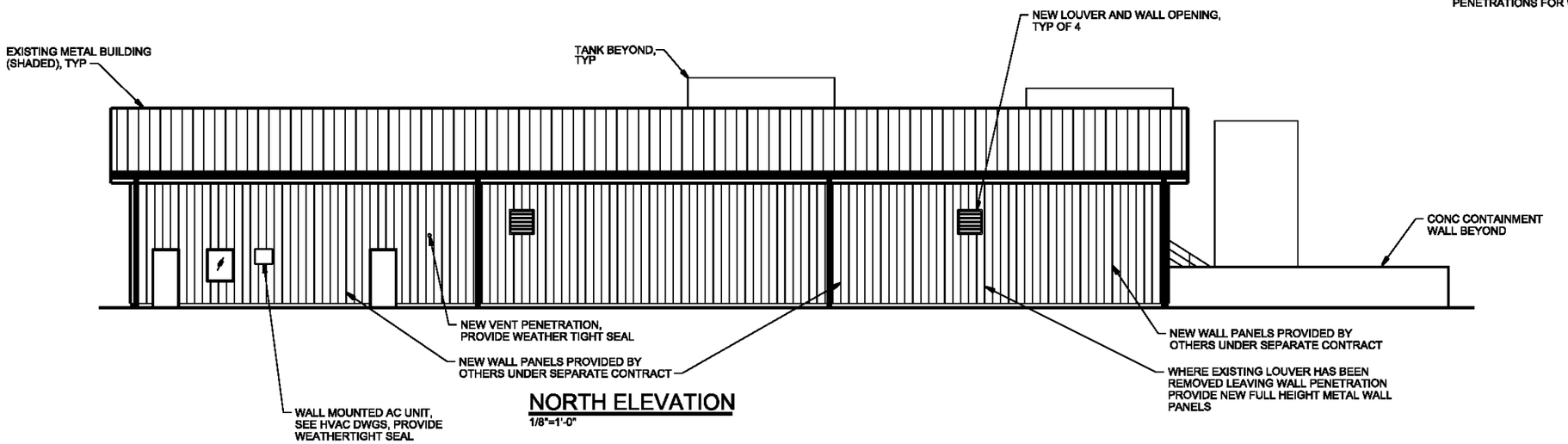

NORTH ELEVATION
1/8"=1'-0"

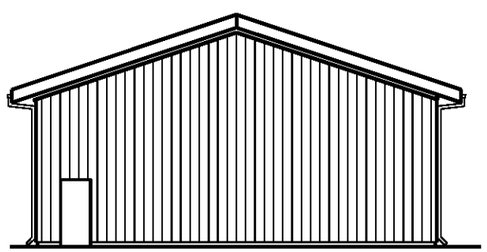

WEST ELEVATION
1/8"=1'-0"

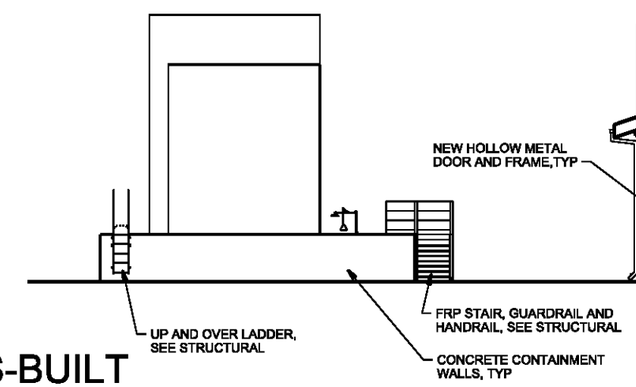

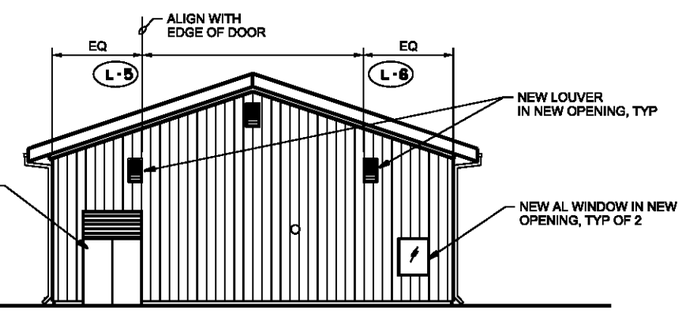

EAST ELEVATION
1/8"=1'-0"

AS-BUILT

DSGN GB KIRSTEN						
DR JC HALEC	3	4/27/10	REVISED AS-BUILT	DLS	ROW	
CHK EB PIETERICK	2	5/14/09	PRELIMINARY AS-BUILT	DLS	ROW	
APVD KT SCHEFFLER	1	3/4/09	AS-BUILT FIELD DATA - PRELIMINARY	JFF	GS	
	NO.	DATE	REVISION	BY	APVD	

VERIFY SCALE
BAR IS ONE INCH ON ORIGINAL DRAWING.
0 1"
IF NOT ONE INCH ON THIS SHEET, ADJUST SCALES ACCORDINGLY.

CH2MHILL

US ENVIRONMENTAL PROTECTION AGENCY
WYCKOFF GROUNDWATER TREATMENT PLANT
BAINBRIDGE ISLAND, WA

TREATMENT FACILITY
ARCHITECTURAL ELEVATIONS

SHEET	43
DWG	50-A-301
DATE	JANUARY 4 2006
PROJ	316783.FD.B

FILENAME: 50na301d_316783.dgn PLOT DATE: 5/3/2010 PLOT TIME: 1:48:57 PM

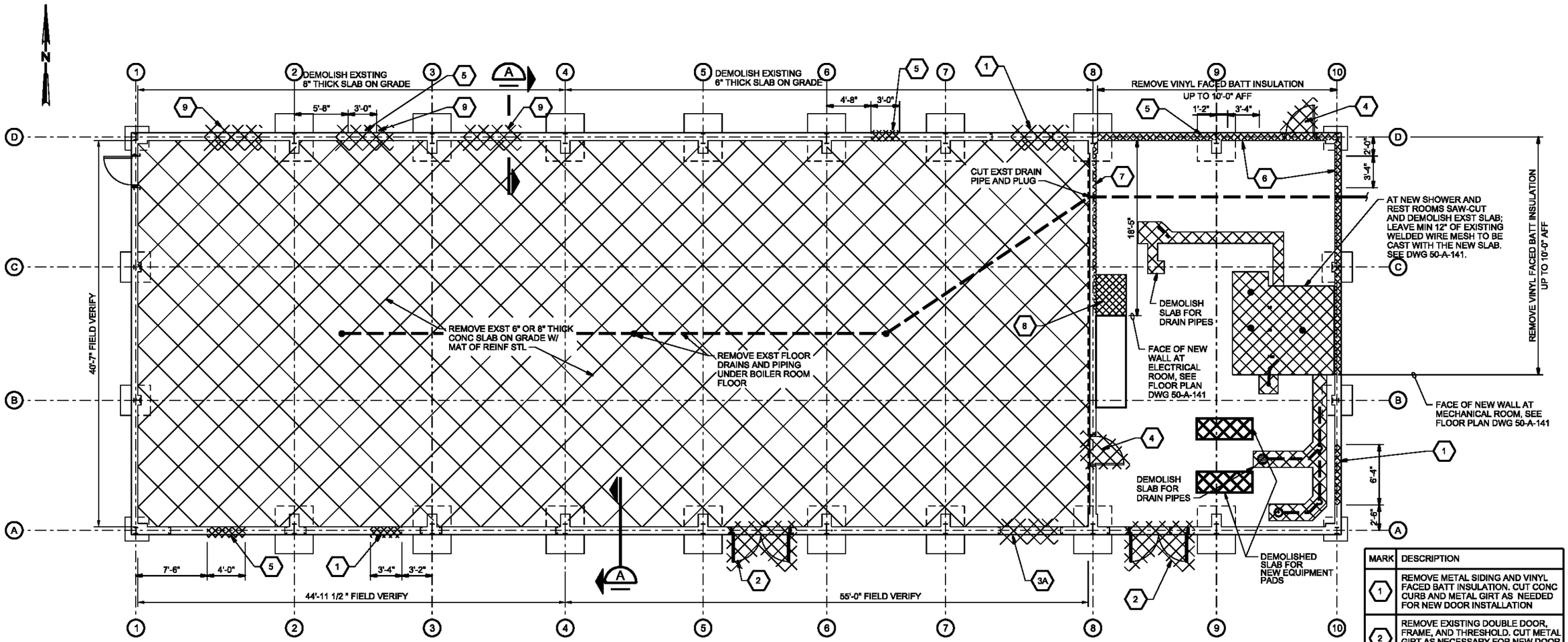

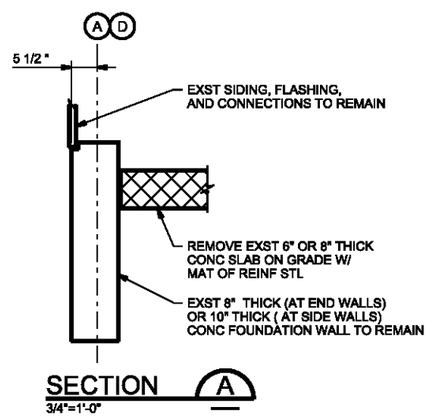

SECTION A
3/4"=1'-0"

DEMOLITION PLAN
3/16"=1'-0"

NOTE:

COMPACT REMAINING MATERIAL UNDER DEMOLISHED FLOOR SLAB AS SPECIFIED IN SECTION 02319 "SUBGRADE PREPARATION".

MARK	DESCRIPTION
1	REMOVE METAL SIDING AND VINYL FACED BATT INSULATION. CUT CONC CURB AND METAL GIRT AS NEEDED FOR NEW DOOR INSTALLATION
2	REMOVE EXISTING DOUBLE DOOR, FRAME, AND THRESHOLD. CUT METAL GIRT AS NECESSARY FOR NEW DOOR INSTALLATION
3	REMOVE EXISTING LOUVER. METAL SUPPORT FRAMING TO REMAIN ONLY AT 3A
4	REMOVE EXISTING DOOR, FRAME, AND THRESHOLD
5	REMOVE METAL SIDING AND VINYL FACED BATT INSULATION AS NEEDED FOR NEW LOUVER / AIR CONDITIONING UNIT INSTALLATION
6	REMOVE METAL SIDING AND VINYL FACED BATT INSULATION AS NEEDED FOR NEW WINDOW INSTALLATION
7	REMOVE EXISTNG GWB FROM EAST SIDE OF WALL TO 10'-0" AFF
8	CUT EXISTING CONCRETE PAD TO FACE OF NEW ELECTRICAL ROOM WALL, SEE 3273
9	LOUVER TO BE REMOVED BY OTHERS UNDER SEPARATE CONTRACT

AS-BUILT

DSGN GBK / RAH	4	4/27/10	REVISED AS-BUILT	JB	ROW	VERIFY SCALE
DR KJ DAVIS	3	12/15/09	PRELIMINARY AS-BUILT	JB	ROW	BAR IS ONE INCH ON ORIGINAL DRAWING. 0 1"
CHK EBP / SMF	2	5/14/09	PRELIMINARY AS-BUILT	DLS	ROW	IF NOT ONE INCH ON THIS SHEET, ADJUST SCALES ACCORDINGLY.
APVD KT SCHEFFLER	1	3/4/09	AS-BUILT FIELD DATA PRELIMINARY	JFF	GS	
	NO.	DATE	REVISION	BY	APVD	

CH2MHILL

US ENVIRONMENTAL PROTECTION AGENCY

WYCKOFF GROUNDWATER TREATMENT PLANT
BAINBRIDGE ISLAND, WA

TREATMENT FACILITY
DEMOLITION
ARCHITECTURAL / STRUCTURAL
PLAN

SHEET	37
DWG	50-DAS-141
DATE	JANUARY 4 2006
PROJ	316783.FD.B

FILENAME:50ndas141d_316783.dgn PLOT DATE: 5/3/2010 PLOT TIME: 1:36:45 PM

NOTES:

1. CROSS HATCHING INDICATES EQUIPMENT REMOVED BY OTHERS.

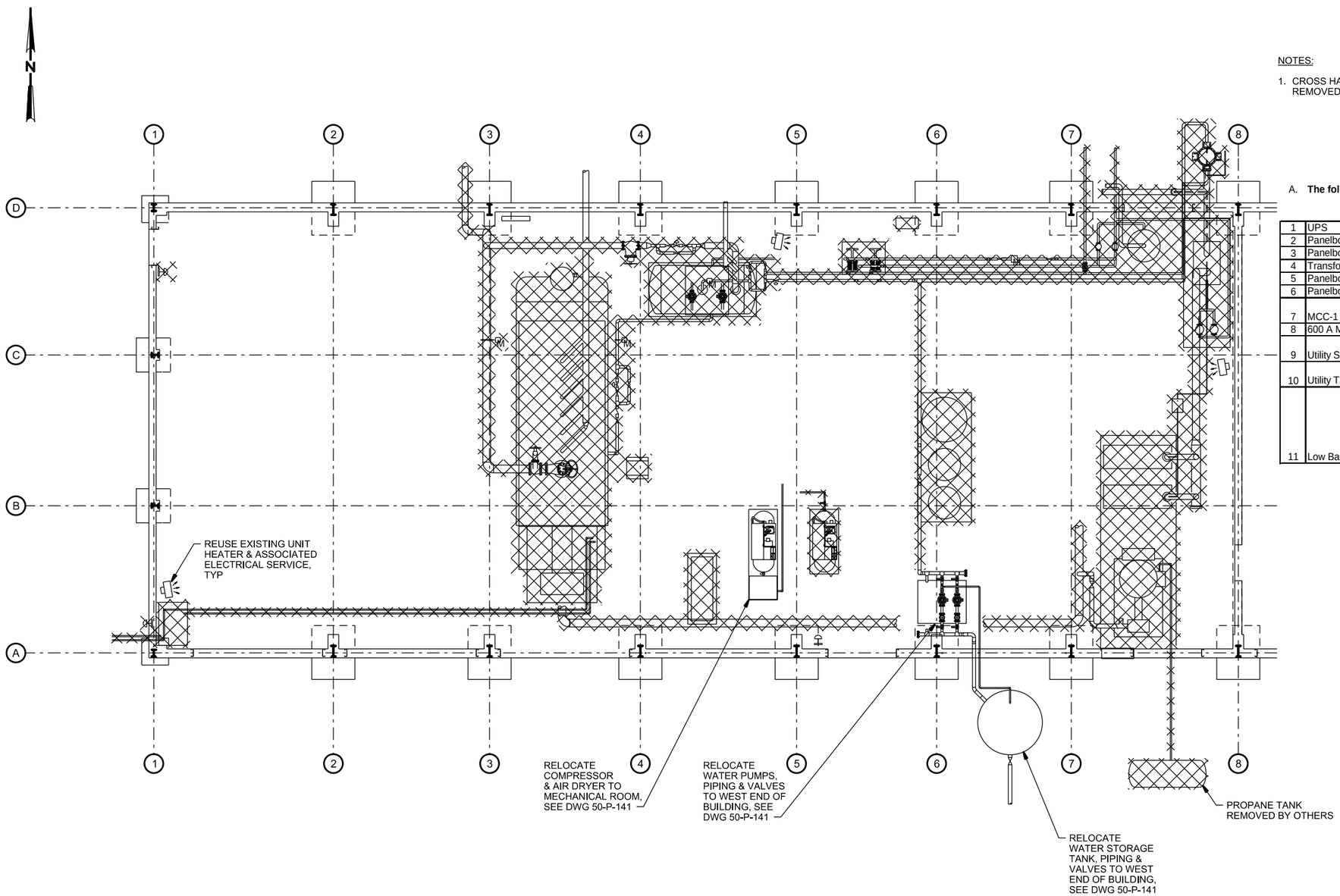

A. **The following Electrical Equipment is to be relocated (as required) and reused for this project.**

	Equipment	Existing Location	New Location
1	UPS	Non Process Area - West Wall	Electric Room - East Wall
2	Panelboard MDP-1	Process Area - North Wall	Electric Room - East Wall
3	Panelboard MDP-2	Process Area - North Wall	Electric Room - East Wall
4	Transformer T-2	Non Process Area - West Wall	Electric Room - East Wall
5	Panelboard LP-1	Non Process Area - West Wall	Remains in existing location
6	Panelboard LP-2	Non Process Area - West Wall	Electric Room - East Wall
7	MCC-1	Non Process Area - West Wall	Move south to allow it to be contained inside electrical room.
8	600 A Manual Transfer Switch	Non Process Area - South Wall	Remains in existing location
9	Utility Service/Metering	Non Process Area - Exterior South Wall	Remains in existing location
10	Utility Transformer	Non Process Area - South of Building	Remains in existing location
11	Low Bay Lighting	Process Area	Light fixtures remain in existing locations - Provide new switches, replacement conduit and wire as required up to approximately 8 ft above floor due to demolition by others.

MECHANICAL / ELECTRICAL DEMOLITION PLAN

3/16"=1'-0"

AS-BUILT

DSGN CLK / RLH					
DR ER BROWN	3	4/27/10	REVISED AS-BUILT	JB	ROW
CHK MWD / TGO	2	5/15/09	PRELIMINARY AS-BUILT	JB	ROW
APVD KT SCHEEFLER	1	3/4/09	AS-BUILT FIELD DATA - PRELIMINARY	JFF	GS
	NO.	DATE	REVISION	BY	APVD

VERIFY SCALE
BAR IS ONE INCH ON ORIGINAL DRAWING.
0 1"
IF NOT ONE INCH ON THIS SHEET, ADJUST SCALES ACCORDINGLY.

CH2MHILL

US ENVIRONMENTAL PROTECTION AGENCY
WYCKOFF GROUNDWATER TREATMENT PLANT
BAINBRIDGE ISLAND, WA

TREATMENT FACILITY
DEMOLITION
MECHANICAL / ELECTRICAL
PLAN

SHEET	38
DWG	50-DME-141
DATE	JANUARY 4 2006
PROJ	316783.FD.B

FILENAME: 50ndme141d_316783.dgn PLOT DATE:4/30/2010 PLOT TIME:11:08:02 AM

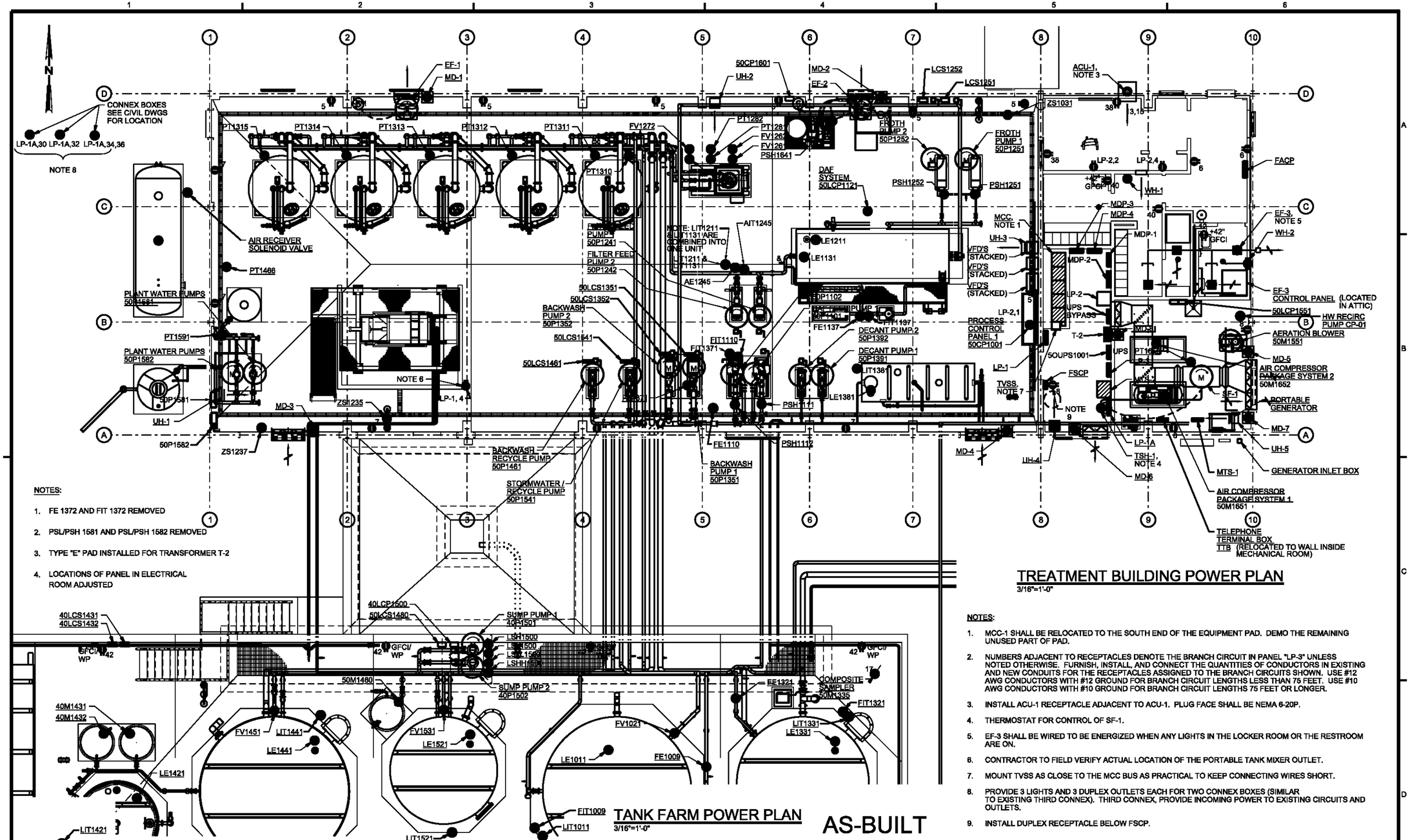

TREATMENT BUILDING POWER PLAN

3/16"=1'-0"

TANK FARM POWER PLAN

3/16"=1'-0"

AS-BUILT

NOTES:

1. FE 1372 AND FIT 1372 REMOVED
2. PSL/PSH 1581 AND PSL/PSH 1582 REMOVED
3. TYPE "E" PAD INSTALLED FOR TRANSFORMER T-2
4. LOCATIONS OF PANEL IN ELECTRICAL ROOM ADJUSTED

NOTES:

1. MCC-1 SHALL BE RELOCATED TO THE SOUTH END OF THE EQUIPMENT PAD. DEMO THE REMAINING UNUSED PART OF PAD.
2. NUMBERS ADJACENT TO RECEPTACLES DENOTE THE BRANCH CIRCUIT IN PANEL "LP-3" UNLESS NOTED OTHERWISE. FURNISH, INSTALL, AND CONNECT THE QUANTITIES OF CONDUCTORS IN EXISTING AND NEW CONDUITS FOR THE RECEPTACLES ASSIGNED TO THE BRANCH CIRCUITS SHOWN. USE #12 AWG CONDUCTORS WITH #12 GROUND FOR BRANCH CIRCUIT LENGTHS LESS THAN 75 FEET. USE #10 AWG CONDUCTORS WITH #10 GROUND FOR BRANCH CIRCUIT LENGTHS 75 FEET OR LONGER.
3. INSTALL ACU-1 RECEPTACLE ADJACENT TO ACU-1. PLUG FACE SHALL BE NEMA 6-20P.
4. THERMOSTAT FOR CONTROL OF SF-1.
5. EF-3 SHALL BE WIRED TO BE ENERGIZED WHEN ANY LIGHTS IN THE LOCKER ROOM OR THE RESTROOM ARE ON.
6. CONTRACTOR TO FIELD VERIFY ACTUAL LOCATION OF THE PORTABLE TANK MIXER OUTLET.
7. MOUNT TVSS AS CLOSE TO THE MCC BUS AS PRACTICAL TO KEEP CONNECTING WIRES SHORT.
8. PROVIDE 3 LIGHTS AND 3 DUPLEX OUTLETS EACH FOR TWO CONNEX BOXES (SIMILAR TO EXISTING THIRD CONNEX). THIRD CONNEX, PROVIDE INCOMING POWER TO EXISTING CIRCUITS AND OUTLETS.
9. INSTALL DUPLEX RECEPTACLE BELOW FSCP.

DSGN RL HAMILTON	4	4/27/10	REVISED AS-BUILT	JB	ROW	VERIFY SCALE
DR DW CLARK	3	12/15/09	PRELIMINARY AS-BUILT	JB	ROW	BAR IS ONE INCH ON ORIGINAL DRAWING. 0 1"
CHK TG OSSOWSKI	2	5/14/09	PRELIMINARY AS-BUILT	DLS	ROW	IF NOT ONE INCH ON THIS SHEET, ADJUST SCALES ACCORDINGLY.
APVD KT SCHEFFLER	1	3/4/09	AS-BUILT FIELD DATA - PRELIMINARY	JFF	GS	
	NO.	DATE	REVISION	BY	APVD	

CH2MHILL

US ENVIRONMENTAL PROTECTION AGENCY

WYCKOFF GROUNDWATER TREATMENT PLANT
BAINBRIDGE ISLAND, WA

TREATMENT FACILITY
ELECTRICAL
TREATMENT BUILDING AND TANK FARM
POWER PLANS

SHEET	76
DWG	50-E-141
DATE	JANUARY 4 2006
PROJ	316783.FD.B

FILENAME: 50ne141d_316783.dgn PLOT DATE: 5/7/2010 PLOT TIME: 9:01:33 AM

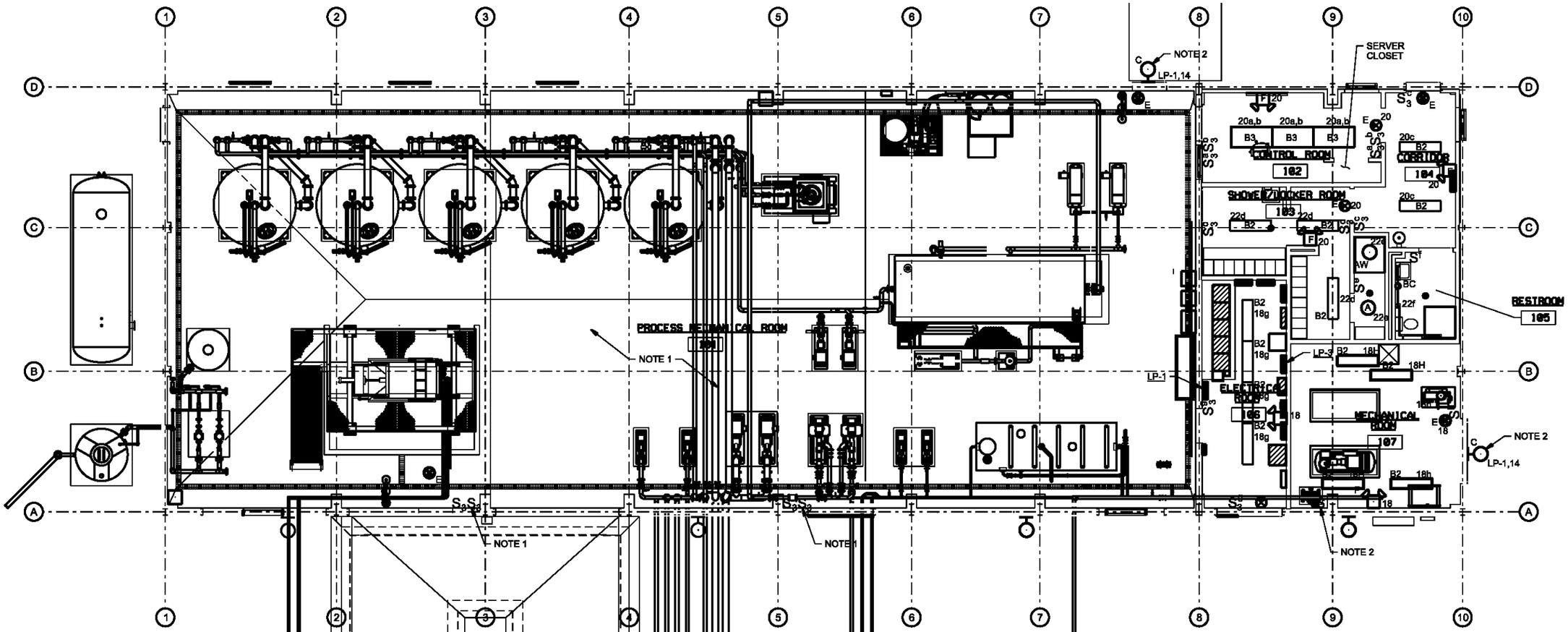

TREATMENT BUILDING LIGHTING PLAN

3/16"=1'-0"

TANK FARM LIGHTING PLAN

3/16"=1'-0"

NOTES:

1. EXISTING LIGHTING IN THE PROCESS MECHANICAL ROOM WILL REMAIN. PROVIDE NEW WEATHERPROOF LIGHT SWITCHES AND RELOCATE SWITCHES ADJACENT TO NEW DOOR.
2. CONNECT EXTERIOR LUMINAIRES TO THE EXISTING CIRCUIT INSIDE THE MECHANICAL ROOM. EXTERIOR LIGHTING CONTROLLED BY S^{a}_{3}
3. TANK FARM LIGHTS SHALL BE CONTROLLED ONLY BY THE LOCAL SWITCH AT THE STAIRS (NO PHOTOCELL). 16211
4. NUMBERS ADJACENT TO LUMINAIRES DENOTE THE BRANCH CIRCUIT IN PANEL "LP-3" UNLESS NOTED OTHERWISE. LOWERCASE LETTERS DENOTE SWITCH/LUMINAIRE CONTROL GROUPINGS. FURNISH, INSTALL, AND CONNECT THE QUANTITIES OF CONDUCTORS IN EXISTING AND NEW CONDUITS FOR THE COMBINATIONS OF LUMINAIRES AND SWITCHES ASSIGNED TO THE BRANCH CIRCUITS SHOWN. USE #12 AWG CONDUCTORS WITH #12 GROUND FOR BRANCH CIRCUIT LENGHTS LESS THAN 75 FEET. USE #10 AWG CONDUCTORS WITH #10 GROUND FOR BRANCH CIRCUIT LENGHTS 75 FEET OR LONGER.
5. EF-3 SHALL BE WIRED TO BE ENERGIZED WHEN ANY LIGHTS IN THE LOCKER ROOM OR THE RESTROOM ARE ON.

AS-BUILT

DSGN RL HAMILTON	4	4/27/10	REVISED AS-BUILT	JB	ROW
DR DW CLARK	3	12/15/09	PRELIMINARY AS-BUILT	JB	ROW
CHK TG OSSOWSKI	2	5/14/09	PRELIMINARY AS-BUILT	DLS	ROW
APVD KT SCHEEFLER	1	3/4/09	AS-BUILT FIELD DATA - PRELIMINARY	JFF	
	NO.	DATE	REVISION	BY	APVD

VERIFY SCALE
BAR IS ONE INCH ON ORIGINAL DRAWING.
0 1"
IF NOT ONE INCH ON THIS SHEET, ADJUST SCALES ACCORDINGLY.

CH2MHILL

US ENVIRONMENTAL PROTECTION AGENCY
WYCKOFF GROUNDWATER TREATMENT PLANT
BAINBRIDGE ISLAND, WA

TREATMENT FACILITY
ELECTRICAL
TREATMENT BUILDING AND TANK FARM LIGHTING PLANS

SHEET	77
DWG	50-E-145
DATE	JANUARY 4 2006
PROJ	316783.FD.B

FILENAME: 50ne145d_316783.dgn PLOT DATE: 5/7/2010 PLOT TIME: 9:42:34 AM

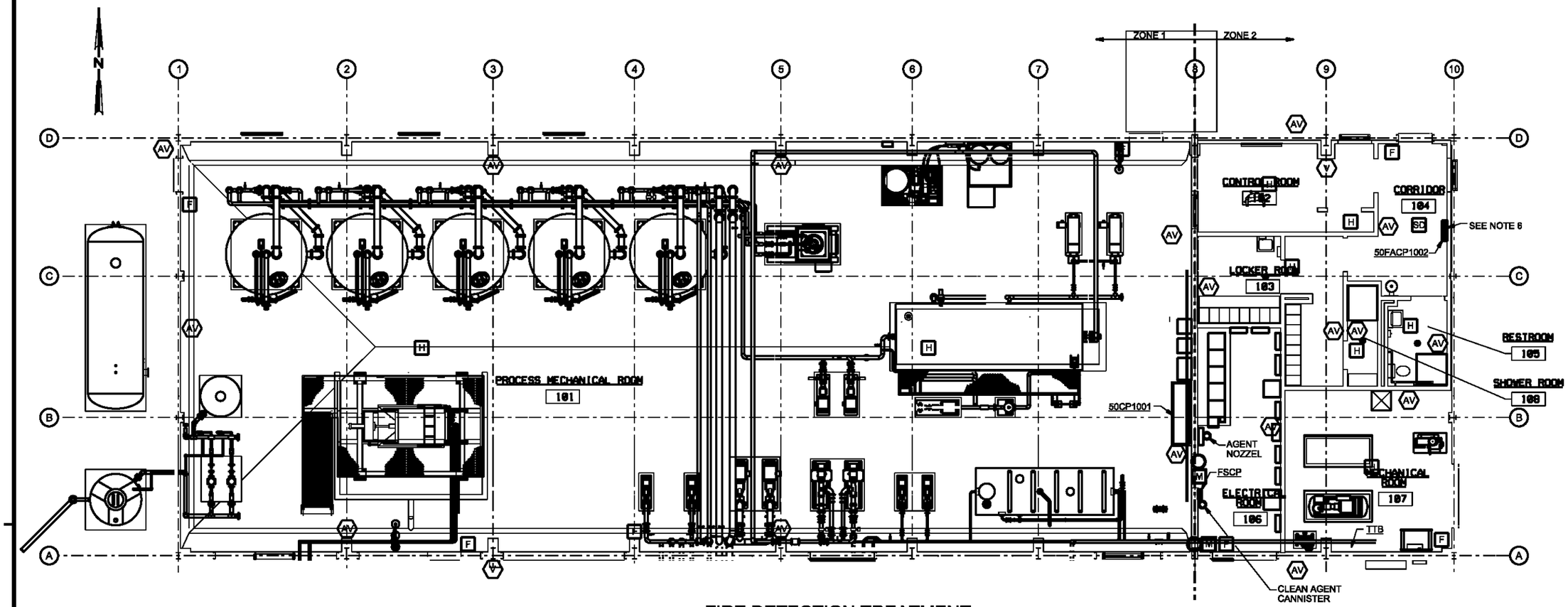

FIRE DETECTION TREATMENT BUILDING PLAN AND RISER DIAGRAM

3/16"=1'-0"

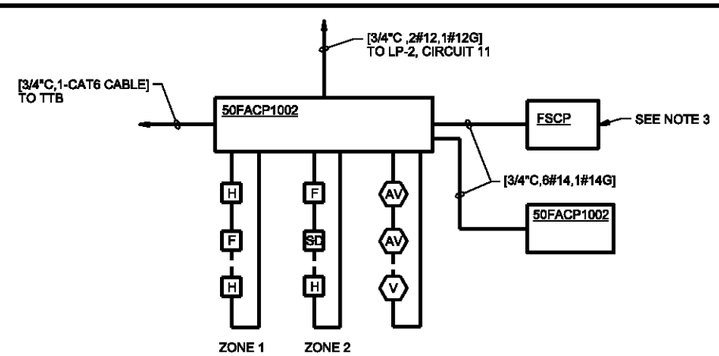

RISER DIAGRAM

AS-BUILT

NOTES:

1. FIRE SYSTEM SHOWN SCHEMATICALLY, ONLY REPRESENTATIVE DEVICES ARE SHOWN. DEVICE LOCATION, QUANTITIES, AND TYPE TO BE DETERMINED BY FIRE ALARM SYSTEM VENDOR. SEE FACILITY PLAN VIEW AND SPECIFICATIONS.
2. CONDUCTOR TYPE BETWEEN THE FACP AND THE DEVICES ARE MANUFACTURER SPECIFIC AND WILL VARY ACCORDINGLY. INSTALL ALL CONDUCTORS EXTERIOR TO THE FACP AND THE DEVICES IN CONDUIT SIZED PER THE NEC REQUIREMENTS FOR CONDUCTOR FILL. MINIMUM CONDUIT SIZE SHALL BE 3/4".
3. FIRE SUPPRESSION CONTROL PANEL INSTALLED UNDER SPEC SECTION 13935 AND AS SHOWN ON DWG 50-H-141. COORDINATE TERMINATIONS AND INSTALLATION OF FIRE ALARM SYSTEM COMPONENTS WITH THE FSCP VENDOR.

SYMBOL LEGEND

SD	- SMOKE DETECOR
F	- MANUAL ALARM STATION
H	- HEAT DETECTOR
FACP	- FIRE ALARM CONTROL PANEL
FSCP	- FIRE SUPPRESSION CONTROL PANEL
AV	- AUDIO-VISUAL ALARM DEVICE
V	- VISUAL ALARM DEVICE
M	- MANUAL RELEASE
O	- ANTI-RELEASE BUTTON

NOTES:

1. FIRE ALARM SYSTEM COMPONENTS SHOWN IN APPROXIMATE LOCATION AND IN QUANTITY. FINAL LOCATION AND QUANTITY TO BE DETERMINED BY FIRE ALARM SYSTEM VENDOR. FOR ADDITIONAL FIRE ALARM SYSTEM REQUIREMENTS, SEE SPECIFICATIONS SECTION 13850.
2. MINIMUM CONDUIT SIZE IS 3/4".
3. COORDINATE INSTALLATION OF DEVICES AND SYSTEM COMPONENTS WITH OTHER TRADES TO ELIMINATE CONFLICTS.
4. ALL NOTIFICATION DEVICES WALL MOUNTED UNLESS OTHERWISE NOTED.
5. ALL CONDUCTOR RUNS SHALL BE CONTINUOUS, SPLICES ARE STRICTLY PROHIBITED.
6. FLUSH MOUNT FIRE PANEL.

DSGN R COLLETTE					
DR G LOVE	3	4/27/10	REVISED AS-BUILT	DLS	ROW
CHK RL HAMILTON	2	5/14/09	PRELIMINARY AS-BUILT	DLS	ROW
APVD KT SCHEFFLER	1	3/4/09	AS-BUILT FIELD DATA - PRELIMINARY	JFF	GS
	NO.	DATE	REVISION	BY	APVD

VERIFY SCALE
BAR IS ONE INCH ON ORIGINAL DRAWING.
0 1"
IF NOT ONE INCH ON THIS SHEET, ADJUST SCALES ACCORDINGLY.

CH2MHILL

US ENVIRONMENTAL PROTECTION AGENCY
WYCKOFF GROUNDWATER TREATMENT PLANT
BAINBRIDGE ISLAND, WA

TREATMENT FACILITY
FIRE PROTECTION
TREATMENT BUILDING FIRE DETECTION PLAN AND RISER DIAGRAM

SHEET	75
DWG	50-FP-141
DATE	JANUARY 4 2006
PROJ	316783.FD.B

FILENAME: 50nfp141d_316783.dgn PLOT DATE: 5/7/2010 PLOT TIME: 8:31:05 AM

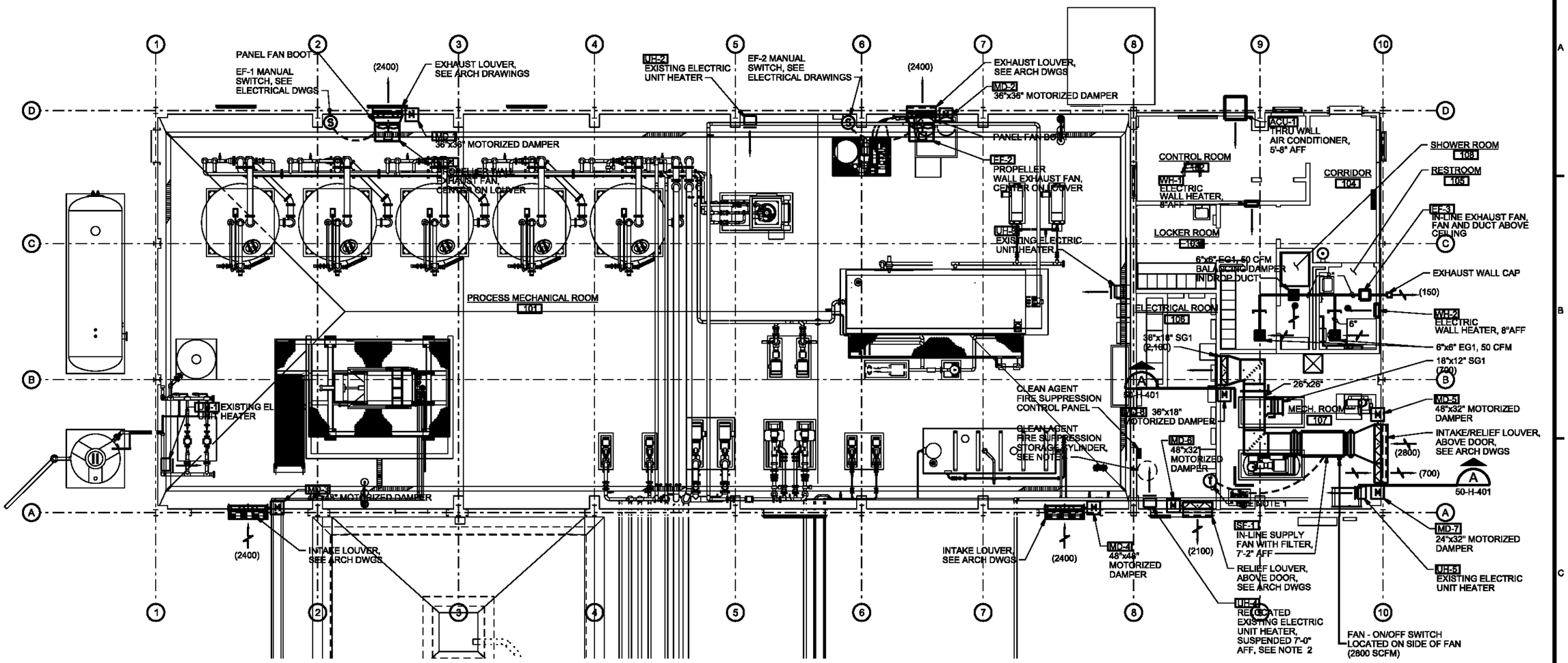

NOTES:

1. SF-1 THERMOSTAT (TSH-1), 120 VOLT, 2 POSITION, 50 TO 90 DEGREES F DIAL, EXTERNAL ADJUSTMENTS, ADJUSTABLE SENSITIVITY, NON-LOCKING WIRE PROTECTIVE GUARD, HONEYWELL T6051 OR EQUAL.
2. RELOCATE EXISTING ELECTRIC UNIT HEATER AND RELATED THERMOSTAT FROM NORTHWEST CORNER OF CONTROL ROOM TO LOCATION SHOWN.
3. SEE ELECTRICAL DRAWINGS FOR CONTROL WIRING DIAGRAMS FOR VENTILATION FAN SYSTEMS.
4. FOR FIRE SUPRESSION SYSTEM SEE SPECIFICATION SECTION 13935.

HVAC PLAN

3/16"=1'-0"

AS-BUILT

DSGN KL WELP	4	4/27/10	REVISED AS-BUILT	JB	ROW	VERIFY SCALE
DR KL WELP	3	12/15/09	PRELIMINARY AS-BUILT	JB	ROW	BAR IS ONE INCH ON ORIGINAL DRAWING. 0 1"
CHK TJ PRICE	2	5/14/09	PRELIMINARY AS-BUILT	DLS	ROW	IF NOT ONE INCH ON THIS SHEET, ADJUST SCALES ACCORDINGLY.
APVD KT SCHEFFLER	1	3/4/09	AS-BUILT FIELD DATA - PRELIMINARY	JFF	GS	
	NO.	DATE	REVISION	BY	APVD	

CH2MHILL

US ENVIRONMENTAL PROTECTION AGENCY

WYCKOFF GROUNDWATER TREATMENT PLANT
BAINBRIDGE ISLAND, WA

TREATMENT FACILITY
HVAC
PLAN

SHEET	67
DWG	50-H-141
DATE	JANUARY 4 2006
PROJ	316783.FD.B

FILENAME:50nh141d_316783.dgn PLOT DATE: 5/6/2010 PLOT TIME:2:30:40 PM

FANS

15830

SYMBOL	SERVICE	TYPE	FAN DATA: AIRFLOW MAXIMUM CFM	AIRFLOW @ SP IN. WG.	AIRFLOW MINIMUM CFM	SPEED RPM	DRIVE TYPE	MAXIMUM BHP	SOUND DATA: MAX. FAN SOUND POWER LEVEL dB (RE 10^{-12} W) @ MID OCTAVE BAND FREQUENCY (Hz) 63	125	250	500	1K	2K	4K	8K	LwA	dBA	SONES	ELECTRICAL DATA: MOTOR HP	RPM	ENCLOSURE	VOLT	PH	MAXIMUM DIMENSIONS: PHYSICAL SIZE INCHES L	W	H	WEIGHT LBS.	MANUFACTURER AND MODEL NO.	APPLICABLE REMARKS
SF-1	ELECTRICAL ROOM VENTILATION	INLINE FAN, CENTRIFUGAL, SQUARE	2,800	0.90	2,800	962	BELT	0.817	76	77	76	73	70	68	62	55	76	76	12.5	1	1725	TEFC	460	3	32	30	45	356	COOK; 195SQN-B	A
EF-1	PROCESS MECH RM VENTILATION	WALL FAN, PROPELLER, HEAVY DUTY	2,400	0.35	2,400	898	BELT	0.325	84	84	78	73	69	65	62	55	76	76	14.5	1/2	1725	TEFC	120	1	23	31	31	205	COOK; 24XMWH	A
EF-2	PROCESS MECH RM VENTILATION	WALL FAN, PROPELLER, HEAVY DUTY	2,400	0.35	2,400	898	BELT	0.325	84	84	78	73	69	65	62	55	76	76	14.5	1/2	1725	TEFC	120	1	23	31	31	205	COOK; 24XMWH	A
EF-3	LOCKER/SHOWER/RESTROOM VENT	CABINET FAN, CENTRIFUGAL	150	0.25	150	1,174	DIRECT	58 WATTS	58	52	50	46	33	24	27	31	47	47	1.5	2.2 AMPS	1174	STANDARD	120	1	14	12	11	29	COOK; GN-320	A

REMARKS:

A: SEE SPECIFICATION FOR REQUIRED ACCESSORIES.

ROOM AIR CONDITIONER

15730

SYMBOL	LOCATION	INDOOR FAN DATA: SUPPLY AIR CFM	OUTSIDE AIR CFM	DX COOLING DATA: TOTAL BTU/H	EER	ELEC HEAT DATA: TOTAL BTU/H	kW	UNIT ELECTRICAL DATA: AMPS	VOLT	PH	UNIT DIMENSIONS INCHES: H	W	D	MAX WEIGHT LBS.	MANUFACTURER AND MODEL NO.	REMARKS
ACU-1	CONTROL ROOM 102	310	40	12,000	11.0	10,700	3.5	16.0	230	1	16	26	28	111	FRIEDRICH; ES12L33	A, B, C, D

REMARKS:

A. THROUGH THE WALL SLEEVE
B. FRESH AIR INTAKE AND EXHAUST VENTS
C. FILTER AND HOUSING
D. THREE SPEED COOLING AND HEATING AND FAN ONLY SETTINGS.

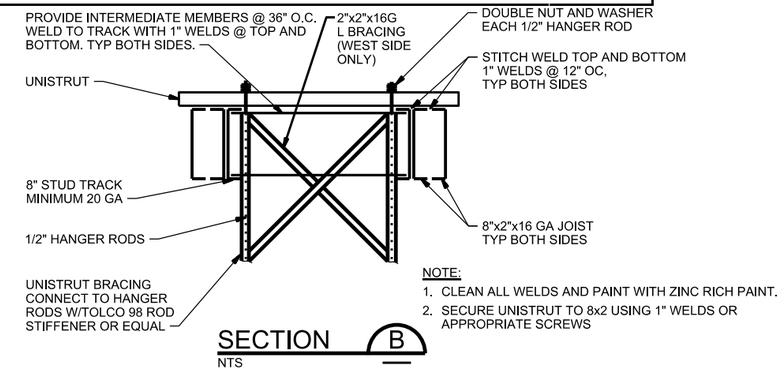

NOTE:
1. CLEAN ALL WELDS AND PAINT WITH ZINC RICH PAINT.
2. SECURE UNISTRUT TO 8x2 USING 1" WELDS OR APPROPRIATE SCREWS

SECTION B
NTS

ELECTRIC WALL HEATER

15760

SYMBOL	SERVING	AIRFLOW CFM	ELECTRIC DATA: CAPACITY BTUH	CAPACITY kW	AMPS	VOLT	PH	MAX. UNIT DIMENSIONS: PHYSICAL SIZE INCHES H	W	D	WEIGHT LBS	MANUFACTURER AND MODEL NO.	APPLICABLE REMARKS
WH-1	LOCKER ROOM 103	100	13,650	4.0	16.7	240	1	20	16	5.5	-	QMARK; CWH-3404	A
WH-2	RESTROOM 105	100	6,830	2.0	16.7	240	1	20	16	5.5	-	QMARK; CWH-3404	A

REMARKS:

A: RECESSED MOUNT

SEQUENCE OF OPERATION

ELECTRICAL ROOM VENTILATION COOLING:

ON CALL FOR COOLING FROM THE ELECTRICAL ROOM THERMOSTAT, TSH-1, MOTORIZED DAMPERS MD-5, 6, 7, & 8 SHALL OPEN, THEN SUPPLY FAN SF-1 SHALL START. WHEN THE THERMOSTAT IS SATISFIED THE FAN SHALL STOP AND THE DAMPERS SHALL CLOSE. AN ALARM SIGNAL FROM THE ELECTRICAL ROOM FIRE SUPPRESSION SYSTEM SHALL OVERRIDE THE THERMOSTAT, STOPPING THE FAN AND CLOSING THE DAMPERS.

PROCESS MECHANICAL ROOM VENTILATION COOLING:

WHEN THE MANUAL START SWITCH FOR EXHAUST FAN EF-1 IS TURNED ON, MOTORIZED DAMPERS MD-1 AND MD-3 SHALL OPEN AND EF-1 SHALL START. WHEN SWITCHED OFF THE FAN SHALL STOP AND THE DAMPERS SHALL CLOSE.

WHEN THE MANUAL START SWITCH FOR EXHAUST FAN EF-2 IS TURNED ON, MOTORIZED DAMPERS MD-2 AND MD-4 SHALL OPEN AND EF-2 SHALL START. WHEN SWITCHED OFF THE FAN SHALL STOP AND THE DAMPERS SHALL CLOSE.

LOCKER, SHOWER, RESTROOM VENTILATION:

EXHAUST FAN EF-1 SHALL START WHEN THE LIGHTS ARE TURNED ON IN THE LOCKER ROOM OR THE RESTROOM. THE FAN SHALL CONTINUE TO OPERATE UNTIL 5 MINUTES AFTER THE LIGHTS ARE SWITCHED OFF IN BOTH ROOMS.

CONTROL ROOM HEATING AND COOLING:

THE CONTROL ROOM WILL BE HEATED AND COOLED BY AIR CONDITIONING UNIT ACU-1, CONTROLLED BY ACU-1 INTEGRAL CONTROLS.

HEATING, GENERAL:

HEATING FOR THE PROCESS MECHANICAL, ELECTRICAL, MECHANICAL, LOCKER, AND RESTROOM IS PROVIDED BY UNIT HEATERS AND WALL HEATERS. THESE HEATERS ARE INDIVIDUALLY CONTROLLED BY INTEGRAL OR WALL MOUNTED THERMOSTATS.

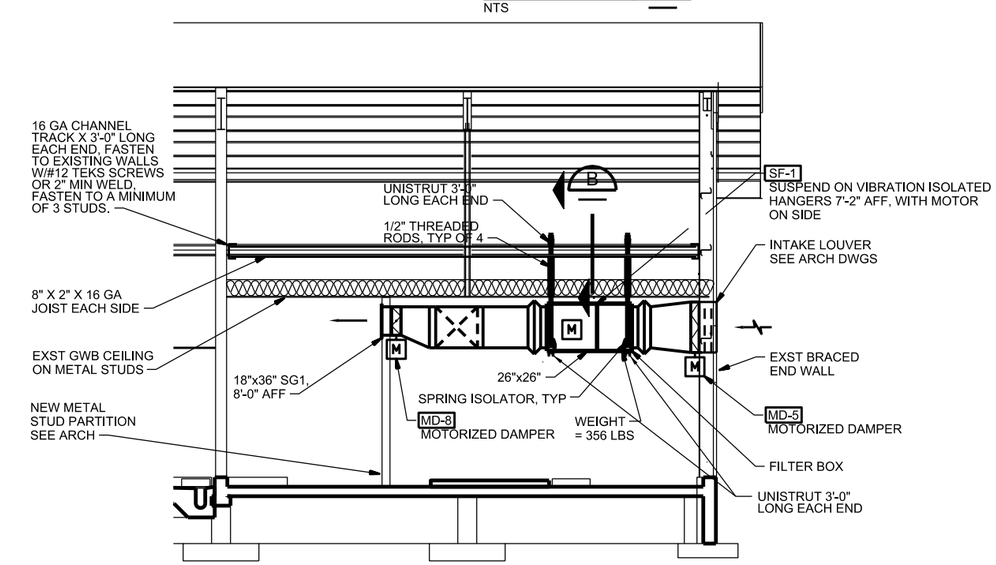

NOTE:

PROVIDE SEISMIC BRACING TO WITHSTAND MOTION IN EACH HORIZONTAL DIRECTION, Fp=325#

SECTION A
1/4"=1'-0" 50-H-141

AS-BULT

DSGN KL WELP	5	4/27/10	REVISED AS-BUILT	JB	ROW	VERIFY SCALE
DR KL WELP	4	12/15/09	PRELIMINARY AS-BUILT	JB	ROW	BAR IS ONE INCH ON ORIGINAL DRAWING. 0 1"
CHK TJ PRICE	3	7/20/09	PRELIMINARY AS-BUILT	DLS	ROW	IF NOT ONE INCH ON THIS SHEET, ADJUST SCALES ACCORDINGLY.
APVD KT SCHEFFLER	1	3/4/09	AS-BUILT FIELD DATA - PRELIMINARY	JFF	GS	
	NO.	DATE	REVISION	BY	APVD	

CH2MHILL

US ENVIRONMENTAL PROTECTION AGENCY
WYCKOFF GROUNDWATER TREATMENT PLANT
BAINBRIDGE ISLAND, WA

TREATMENT FACILITY
HVAC
EQUIPMENT SCHEDULES AND SECTION

SHEET	68
DWG	50-H-401
DATE	JANUARY 4 2006
PROJ	316783.FD.B

FILENAME: 50nh401d_316783.dgn PLOT DATE: 5/6/2010 PLOT TIME: 2:41:13 PM

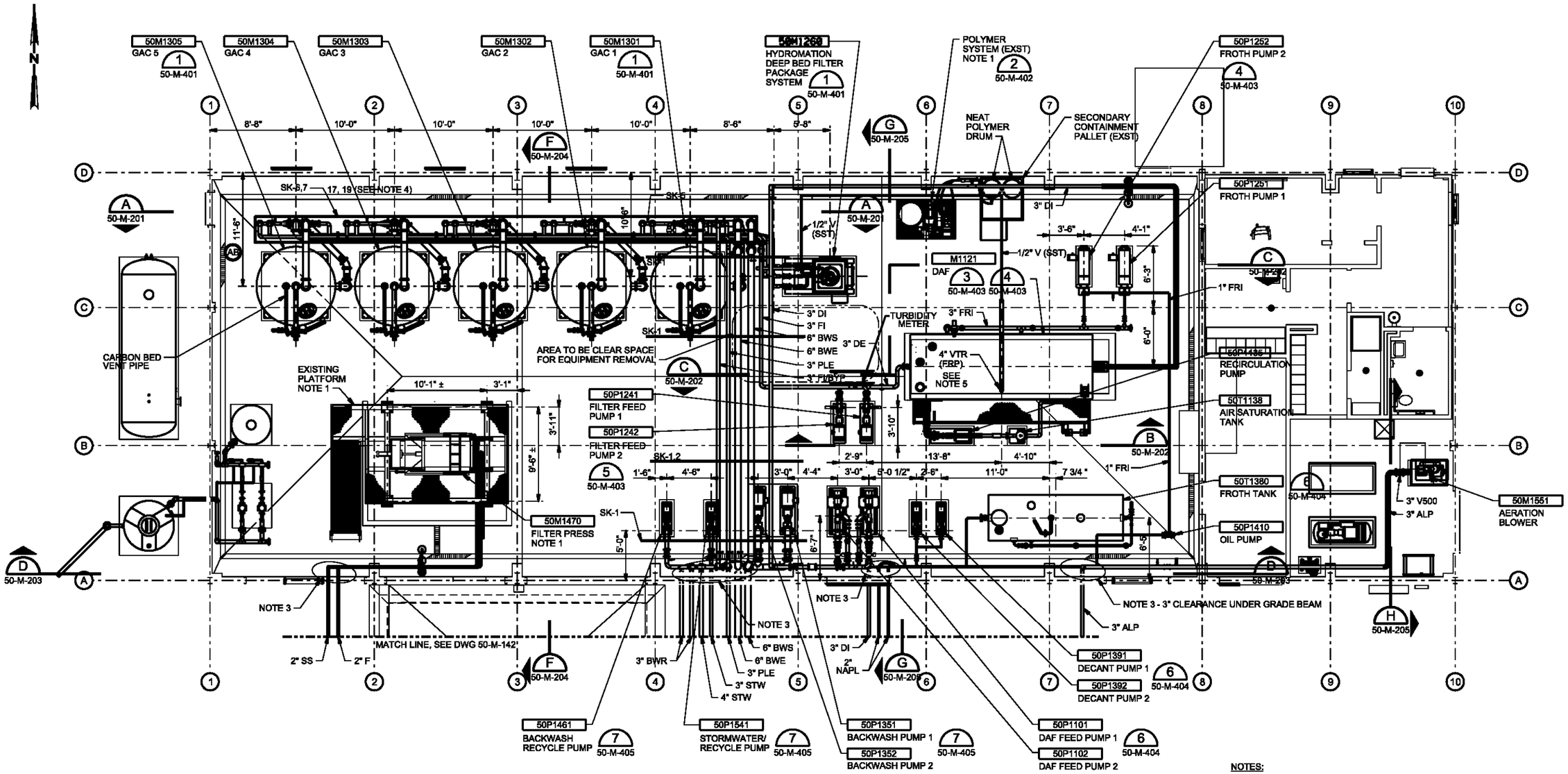

TREATMENT BUILDING PLAN

3/16"=1'-0"

AS-BUILT

NOTES:

1. SEE DWG 05-C-100 AND SPECIFICATION 01645 FOR EXISTING EQUIPMENT RELOCATION INFORMATION.
2. SEE DWG 50-DME-141 FOR EXISTING EQUIPMENT LOCATION.
3. CONCRETE ENCASE PIPING UNDER STRUCTURE TO OUTSIDE EDGE OF FOOTING PER (3316).

   BED ALL BURIED PIPE FROM OUTSIDE EDGE OF PIPE ENCASEMENT TO 5 FEET OUTSIDE OF STRUCTURE ON ONE LAYER OF 50MM POLYETHYLENE FOAM (DOW ETHAFOAM HS45). EXTEND FOAM A MINIMUM OF 2-INCH OUTSIDE OF PIPE DIAMETER.
4. STANDARD DETAILS AND LOCATIONS FOR PIPING SUPPORTS, VALVE SUPPORTS AND EQUIPMENT SUPPORTS (SK-1, SK-2, etc) HAVE BEEN PREPARED BY KPFF ENGINEERS AND ARE INCLUDED IN THE SUBMITTAL RECORD.
5. 4" VTR , MOVED TO CENTER OF DAF UNIT.

DSGN GT HICKMAN	5	4/27/10	REVISED AS-BUILT	DLS	ROW	VERIFY SCALE
DR ER BROWN	4	12/15/09	PRELIMINARY AS-BUILT	DLS	ROW	BAR IS ONE INCH ON ORIGINAL DRAWING. 0 1" IF NOT ONE INCH ON THIS SHEET, ADJUST SCALES ACCORDINGLY.
CHK MW DAVIS	3	7/20/09	PRELIMINARY AS-BUILT	DLS	ROW	
APVD KT SCHEFFLER	1	3/4/09	AS-BUILT FIELD DATA - PRELIMINARY	JFF	GS	
	NO.	DATE	REVISION	BY	APVD	

CH2MHILL

US ENVIRONMENTAL PROTECTION AGENCY

WYCKOFF GROUNDWATER TREATMENT PLANT
BAINBRIDGE ISLAND, WA

TREATMENT FACILITY
MECHANICAL
TREATMENT BUILDING PLAN

SHEET	48
DWG	50-M-141
DATE	JANUARY 4 2006
PROJ	316783.FD.B

FILENAME: 50nm141d_316783.dgn PLOT DATE: 5/4/2010 PLOT TIME: 10:03:45 AM

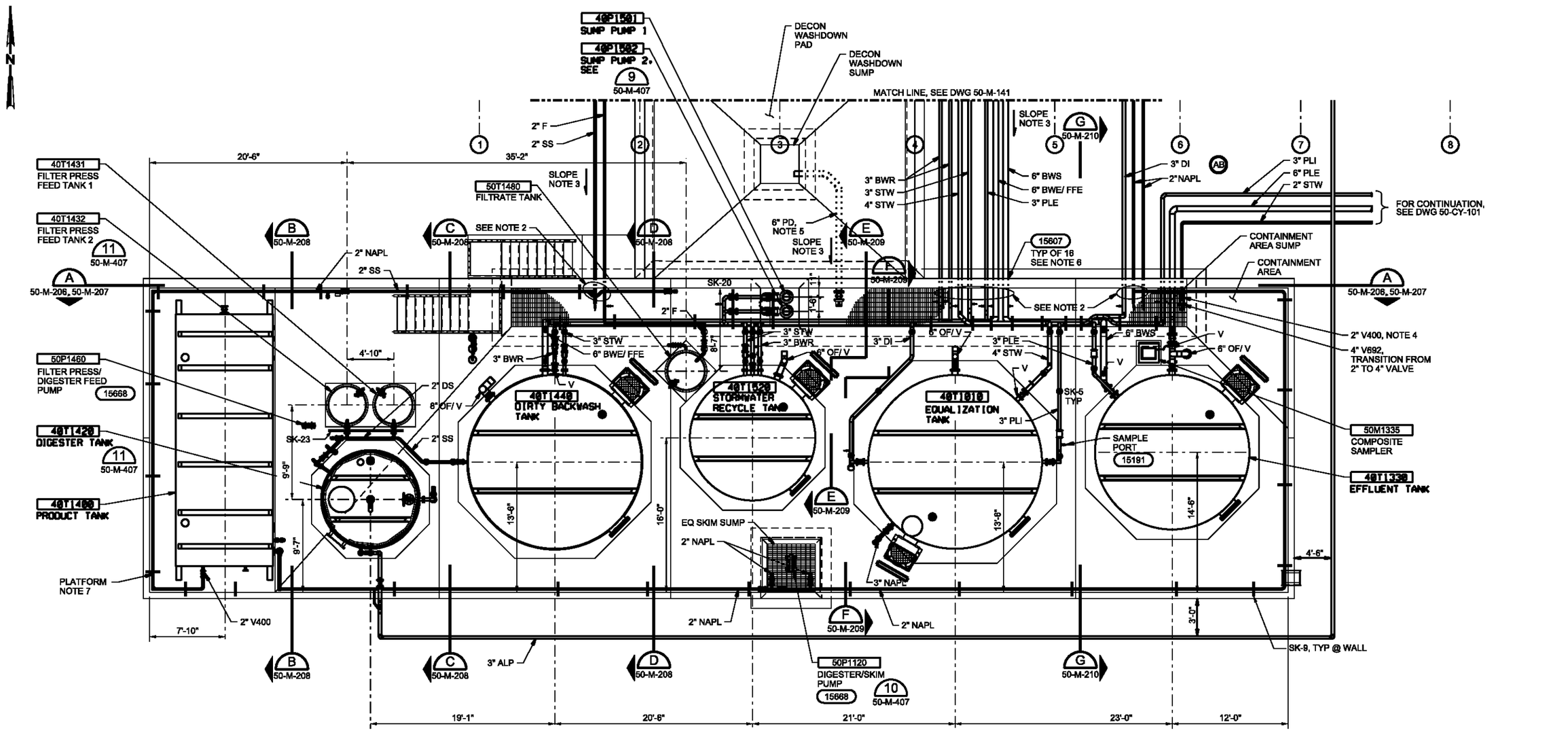

TANK FARM PLAN

3/16"=1'-0"

NOTES:

1. FOR ISOMETRIC DETAIL OF THIS TANK FARM, SEE 8 / 50-M-406.
2. PROVIDE DOUBLE WALL LEAK DETECTION CONNECTION IN CONTAINMENT SUMP PER DETAIL 15510. TRANSITION TO SINGLE WALL PIPE AFTER LEAK DETECTION CONNECTION WITH DUAL WALL TO SINGLE WALL TRANSITION FITTING.
3. SLOPE ALL PIPING 1/8" PER FOOT TO THE TANK FARM SUMP.
4. PROVIDE VALVE WITH EXTENSION STEM, STEM GUIDE AND OPERATING NUT, LOCATED 2-INCHES BELOW GRATING. REMOVE GRATING GRID AS REQUIRED TO ACCESS OPERATING NUT.
5. PIPING ENCASED IN CONTROLLED DENSITY FILL.
6. BED ALL BURIED PIPE FROM OUTSIDE WALL OF STRUCTURE TO 5 FEET OUTSIDE OF STRUCTURE ON ONE LAYER OF 50MM POLYETHYLENE FOAM (DOW ETHAFOAM HS45). EXTEND FOAM A MINIMUM OF 2-INCHES OUTSIDE OF PIPE DIAMETER.
7. PLATFORM AND LADDERS WERE NOT REINSTALLED ON PRODUCT TANK.
8. INSTALL BIRD SCREEN ON ALL VENT AND EXHAUST OPENINGS.

AS-BUILT

DSGN GT HICKMAN	5	4/27/10	REVISED AS-BUILT	JB	ROW	VERIFY SCALE
DR ER BROWN	4	12/15/09	PRELIMINARY AS-BUILT	JB	ROW	BAR IS ONE INCH ON ORIGINAL DRAWING. 0 1" IF NOT ONE INCH ON THIS SHEET, ADJUST SCALES ACCORDINGLY.
CHK MW DAVIS	3	7/20/09	PRELIMINARY AS-BUILT	DLS	ROW	
APVD KT SCHEFFLER	1	3/4/09	AS-BUILT FIELD DATA - PRELIMINARY	JFF	GS	
	NO.	DATE	REVISION	BY	APVD	

CH2MHILL

US ENVIRONMENTAL PROTECTION AGENCY

WYCKOFF GROUNDWATER TREATMENT PLANT
BAINBRIDGE ISLAND, WA

TREATMENT FACILITY
MECHANICAL
TANK FARM PLAN

SHEET	49
DWG	50-M-142
DATE	JANUARY 4 2006
PROJ	316783.FD.B

FILENAME:50nm142d_316783.dgn PLOT DATE:5/4/2010 PLOT TIME: 10:55:40 AM

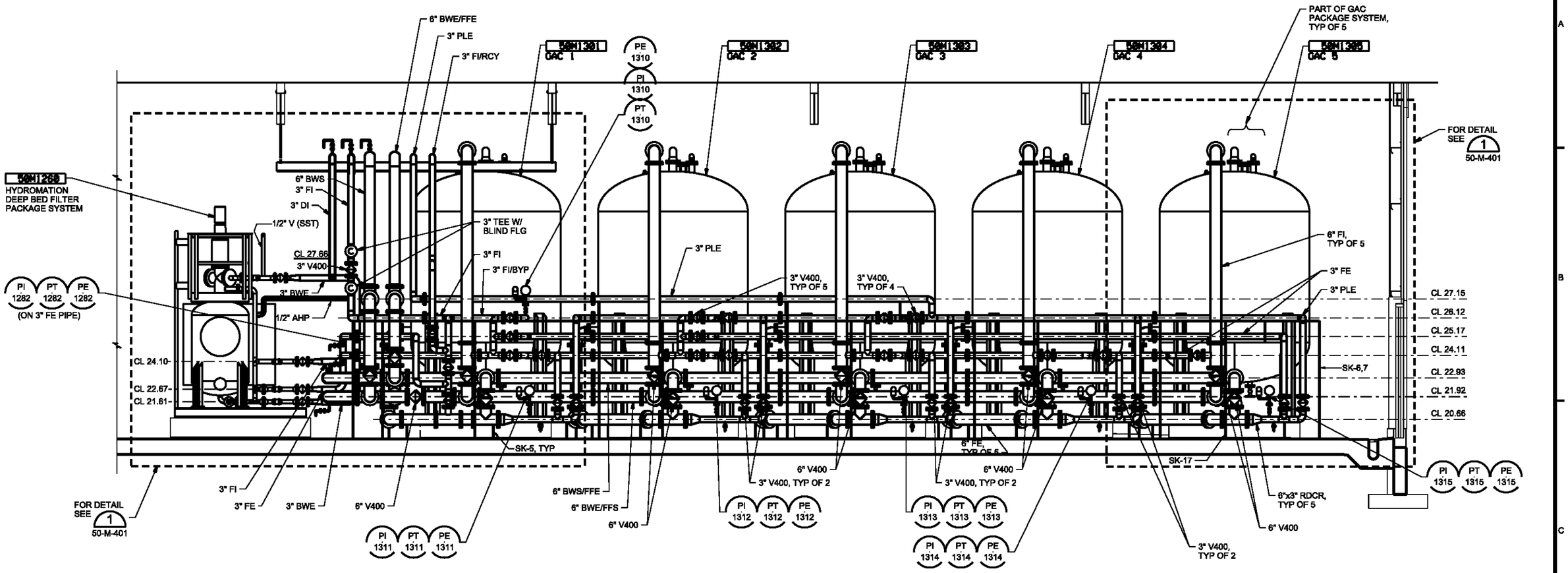

AS-BUILT

SECTION A
3/8"=1'-0" 50-M-141

DSGN GT HICKMAN	5	4/27/10	REVISED AS-BUILT	JB	ROW	VERIFY SCALE	
DR ER BROWN	4	12/15/09	PRELIMINARY AS-BUILT	JB	ROW	BAR IS ONE INCH ON ORIGINAL DRAWING. 0 1" IF NOT ONE INCH ON THIS SHEET, ADJUST SCALES ACCORDINGLY.	
CHK MW DAVIS	3	7/20/09	PRELIMINARY AS-BUILT	DLS	ROW		
APVD KT SCHEFFLER	1	3/4/09	AS-BUILT FIELD DATA - PRELIMINARY	JFF	GS		
	NO.	DATE	REVISION	BY	APVD		

CH2MHILL

US ENVIRONMENTAL PROTECTION AGENCY
WYCKOFF GROUNDWATER TREATMENT PLANT
BAINBRIDGE ISLAND, WA

TREATMENT FACILITY
MECHANICAL SECTIONS

SHEET	50
DWG	50-M-201
DATE	JANUARY 4 2006
PROJ	316783.FD.B

FILENAME: 50nm201d_316783.dgn PLOT DATE: 5/5/2010 PLOT TIME: 10:07:44 AM

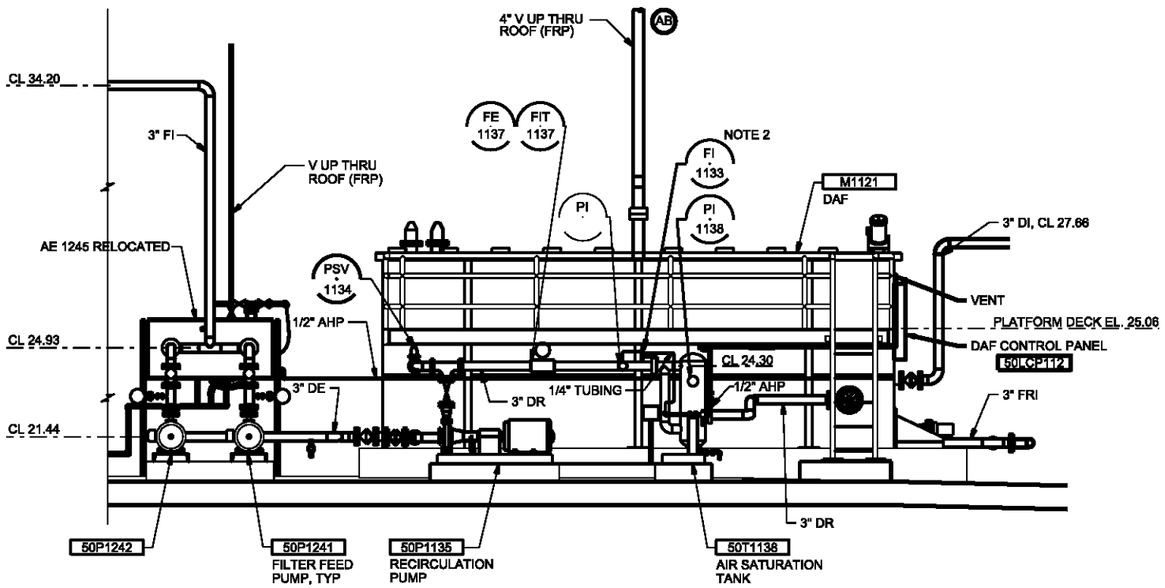

SECTION B
3/8"=1'-0" 50-M-141

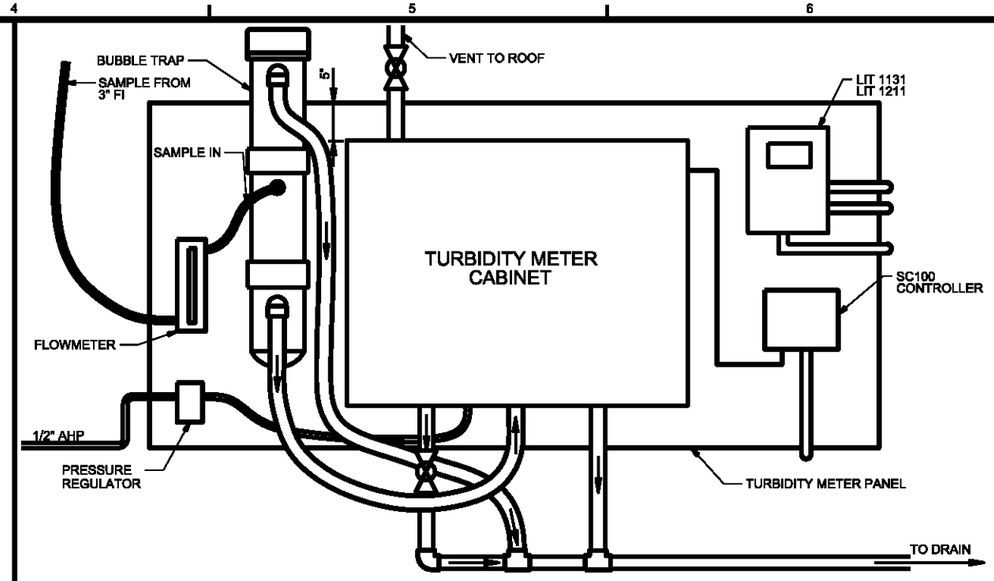

TURBIDITY METER DETAIL 1
NO SCALE

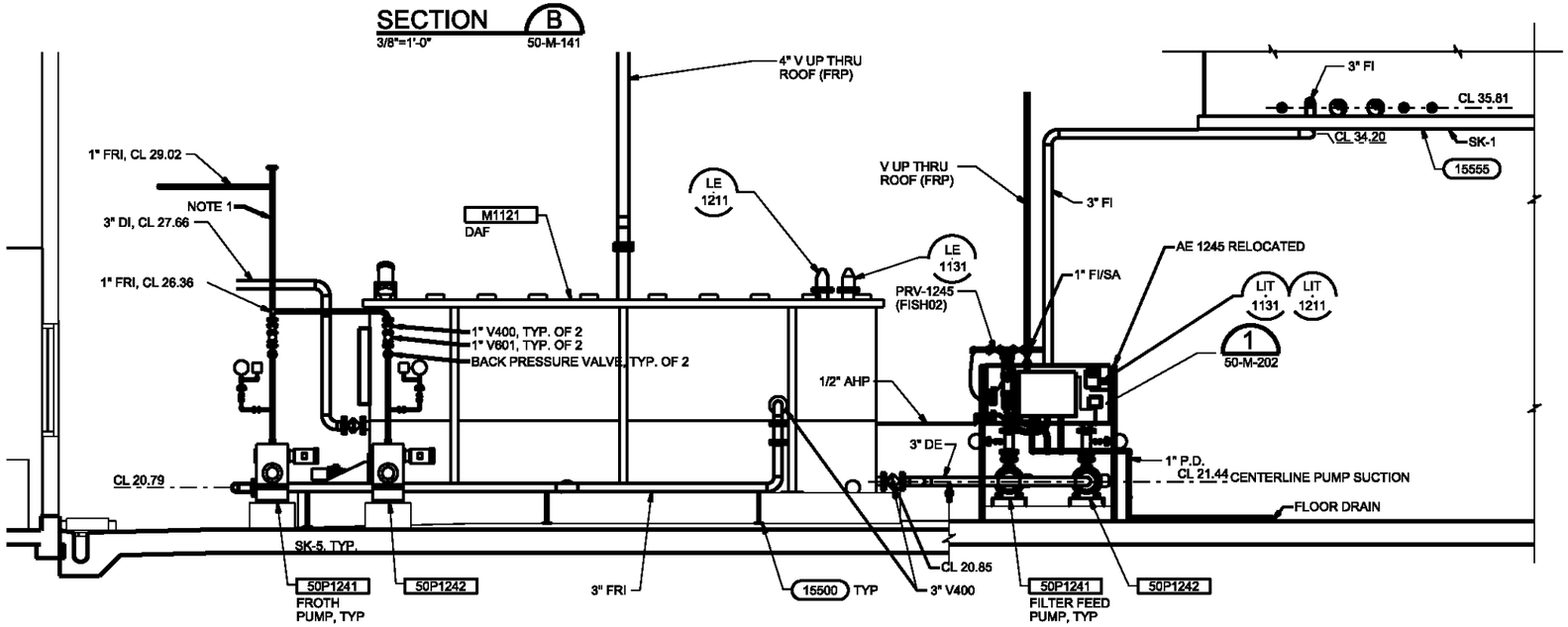

SECTION C
3/8"=1'-0" 50-M-141

NOTES: 1 - SAMPLE PORT/DRAIN FOR 1" FRI IS LOCATED ON REVERSE SIDE OF VERTICAL DISCHARGE PIPE FROM FROTH PUMP 1241.
2 - PI 1133 IS A VAN AIRE ROTAMETER

AS-BUILT

DSGN GT HICKMAN	5	4/27/10	REVISED AS-BUILT	JB	ROW	VERIFY SCALE
DR ER BROWN	4	12/15/09	PRELIMINARY AS-BUILT	JB	ROW	BAR IS ONE INCH ON ORIGINAL DRAWING. 0 1" IF NOT ONE INCH ON THIS SHEET, ADJUST SCALES ACCORDINGLY.
CHK MW DAVIS	3	7/20/09	PRELIMINARY AS-BUILT	DLS	ROW	
	1	3/4/09	AS-BUILT FIELD DATA - PRELIMINARY	JFF	GS	
APVD KT SCHEFFLER	NO.	DATE	REVISION	BY	APVD	

CH2MHILL

US ENVIRONMENTAL PROTECTION AGENCY
WYCKOFF GROUNDWATER TREATMENT PLANT
BAINBRIDGE ISLAND, WA

TREATMENT FACILITY
MECHANICAL SECTIONS

SHEET	51
DWG	50-M-202
DATE	JANUARY 4 2006
PROJ	316783.FD.B

FILENAME: 50nm202d_316783.dgn PLOT DATE: 5/3/2010 PLOT TIME: 5:17:10 PM

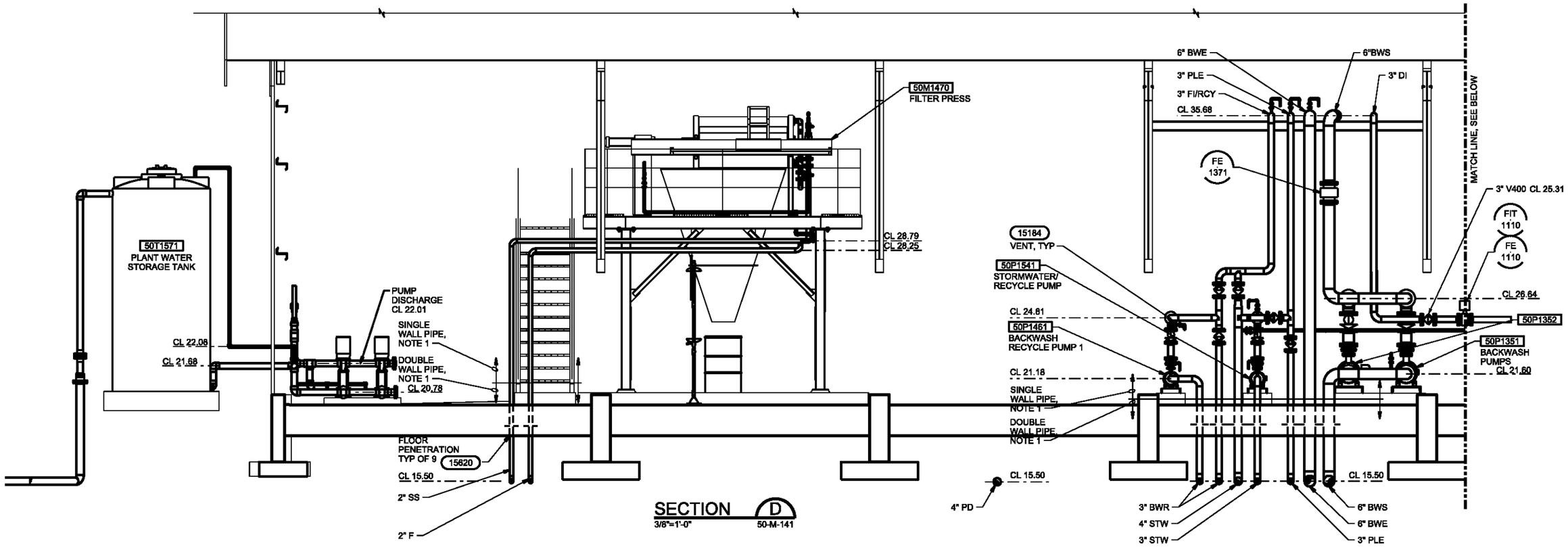

NOTES:

1. FOR TRANSITION FROM DOUBLE WALL TO SINGLE WALL PIPE USE TRANSITION FITTING.

AS-BUILT

DSGN GT HICKMAN	5	4/27/10	REVISED AS-BUILT	JB	ROW	VERIFY SCALE
DR ER BROWN	4	12/15/09	PRELIMINARY AS-BUILT	JB	ROW	BAR IS ONE INCH ON ORIGINAL DRAWING. 0 1"
CHK MW DAVIS	3	7/20/09	PRELIMINARY AS-BUILT	DLS	ROW	IF NOT ONE INCH ON THIS SHEET, ADJUST SCALES ACCORDINGLY.
APVD KT SCHEFFLER	1	3/4/09	AS-BUILT FIELD DATA - PRELIMINARY	JFF	GS	
	NO.	DATE	REVISION	BY	APVD	

CH2MHILL

US ENVIRONMENTAL PROTECTION AGENCY
WYCKOFF GROUNDWATER TREATMENT PLANT
BAINBRIDGE ISLAND, WA

TREATMENT FACILITY
MECHANICAL SECTIONS

SHEET	52
DWG	50-M-203
DATE	JANUARY 4 2006
PROJ	316783.FD.B

FILENAME: 50nm203d_316783.dgn PLOT DATE: 5/4/2010 PLOT TIME:12:54:50 PM

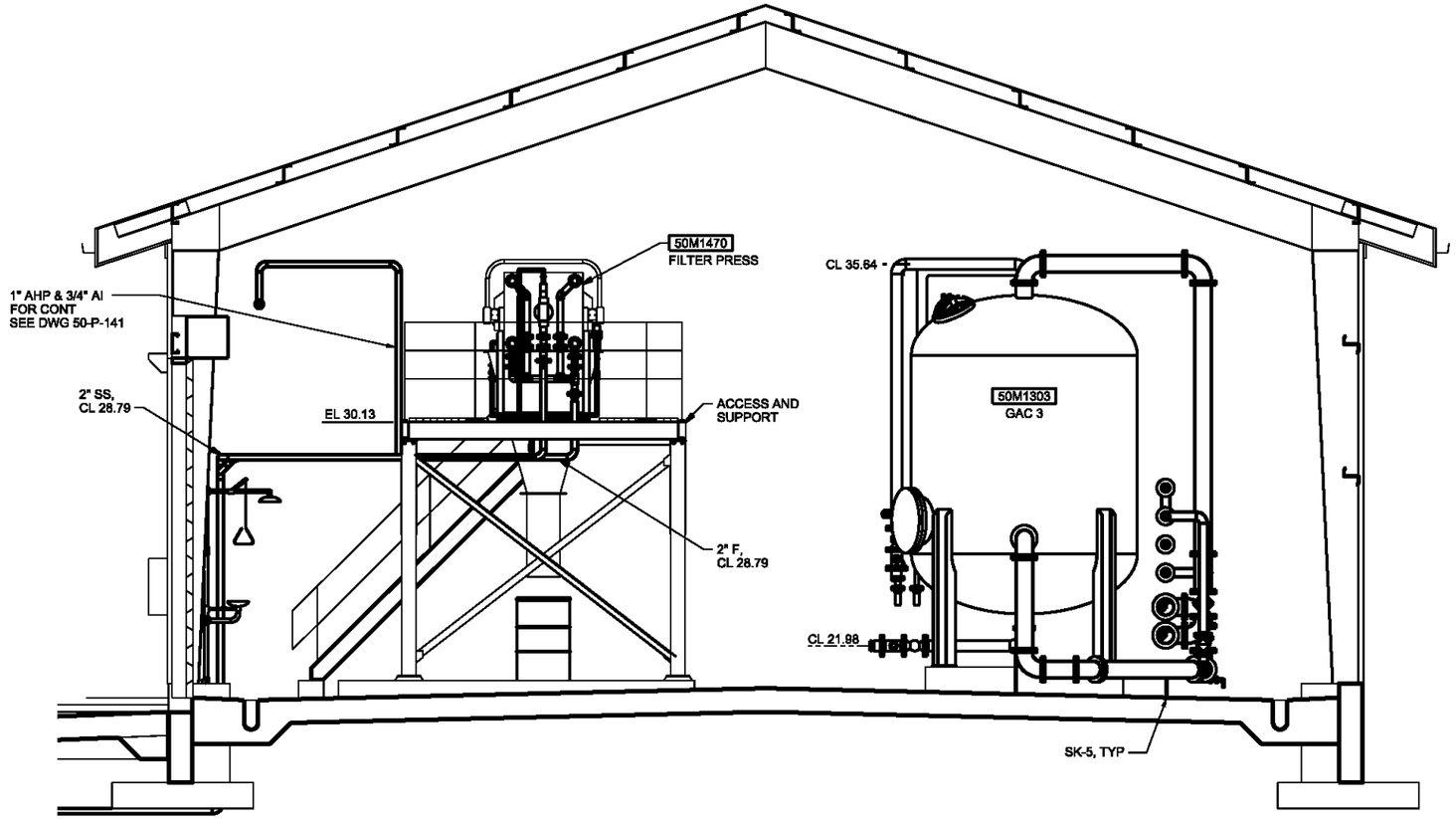

SECTION F
3/8"=1'-0" 50-M-141

AS-BUILT

DSGN GT HICKMAN	5	4/27/10	REVISED AS-BUILT	JH	ROW	VERIFY SCALE
DR ER BROWN	4	12/15/09	PRELIMINARY AS-BUILT	JH	ROW	BAR IS ONE INCH ON ORIGINAL DRAWING. 0 1" IF NOT ONE INCH ON THIS SHEET, ADJUST SCALES ACCORDINGLY.
CHK MW DAVIS	3	7/20/09	PRELIMINARY AS-BUILT	DLS	ROW	
APVD KT SCHEFFLER	1	3/4/09	AS-BUILT FIELD DATA - PRELIMINARY	JFF	GS	
	NO.	DATE	REVISION	BY	APVD	

CH2MHILL

US ENVIRONMENTAL PROTECTION AGENCY
WYCKOFF GROUNDWATER TREATMENT PLANT
BAINBRIDGE ISLAND, WA

TREATMENT FACILITY
MECHANICAL
SECTIONS

SHEET	53
DWG	50-M-204
DATE	JANUARY 4 2006
PROJ	316783.FD.B

FILENAME: 50nm204d_316783.dgn PLOT DATE: 5/4/2010 PLOT TIME:2:25:06 PM

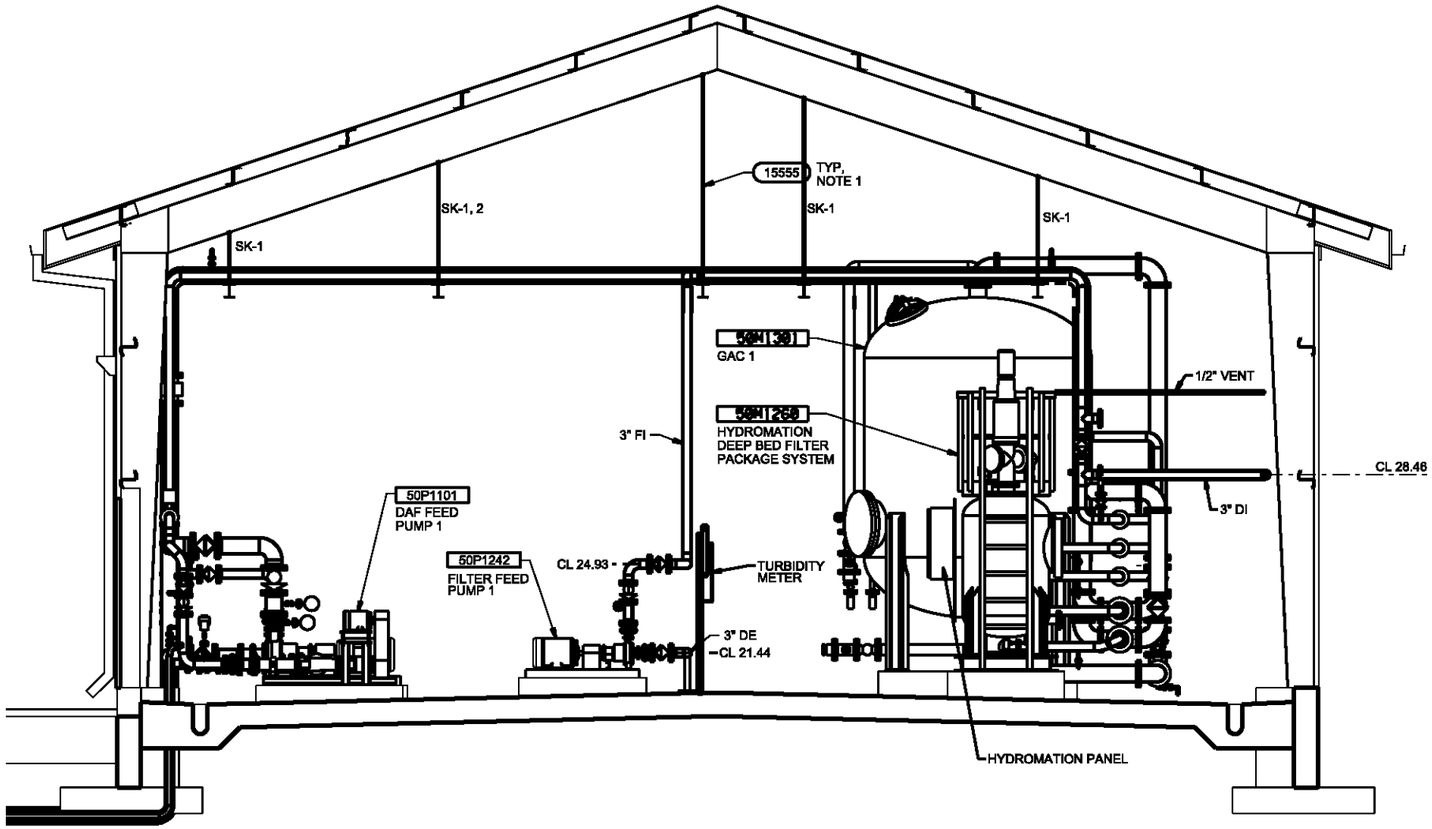

NOTES:

1. SUPPORT SPACING SHALL BE AS REQUIRED BY PIPE SUPPLIER. -

SECTION G
3/8"=1'-0" 50-M-141

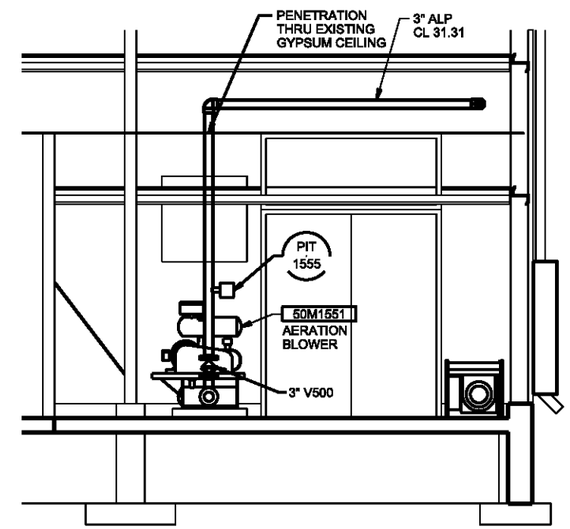

SECTION H
3/8"=1'-0" 50-M-141

AS-BUILT

DSGN GT HICKMAN	5	4/27/10	REVISED AS-BUILT	JB	ROW	VERIFY SCALE
DR ER BROWN	4	12/15/09	PRELIMINARY AS-BUILT	JB	ROW	BAR IS ONE INCH ON ORIGINAL DRAWING. 0 1" IF NOT ONE INCH ON THIS SHEET, ADJUST SCALES ACCORDINGLY.
CHK MW DAVIS	3	7/20/09	PRELIMINARY AS-BUILT	DLS	ROW	
APVD KT SCHEFFLER	1	3/4/09	AS-BUILT FIELD DATA - PRELIMINARY	JFF	GS	
	NO.	DATE	REVISION	BY	APVD	

CH2MHILL

US ENVIRONMENTAL PROTECTION AGENCY

WYCKOFF GROUNDWATER TREATMENT PLANT
BAINBRIDGE ISLAND, WA

TREATMENT FACILITY
MECHANICAL SECTIONS

SHEET	54
DWG	50-M-205
DATE	JANUARY 4 2006
PROJ	316783.FD.B

FILENAME: 50nm205d_316783.dgn PLOT DATE: 5/5/2010 PLOT TIME: 8:45:40 AM

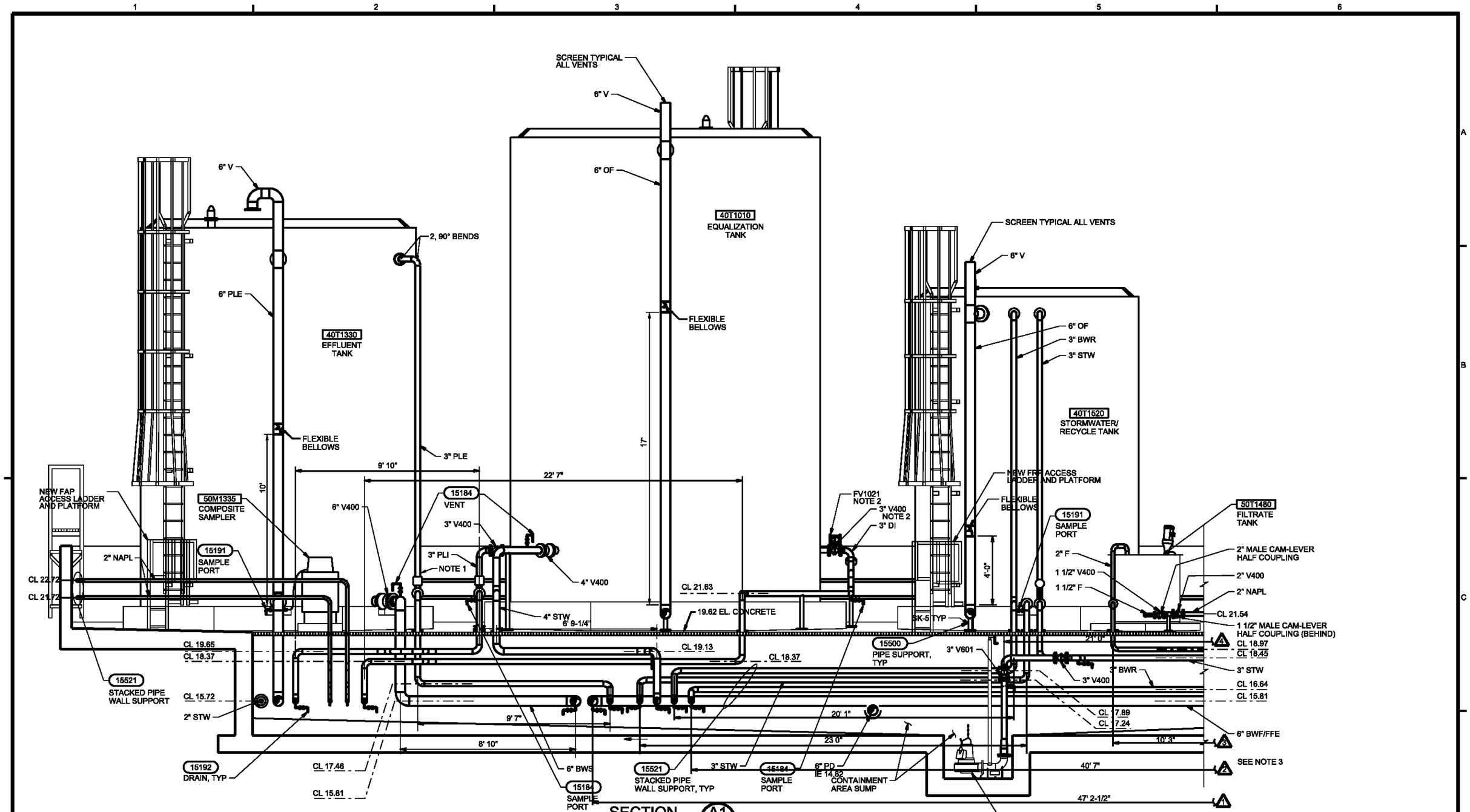

NOTE 1 - TANK REPAIR/CUT OUT PER RFI-0201 (40T1330 EFFLUENT TANK)

2 - 3" PLUG VALVE ON THE 3" DI IS AIR ACTUATED.

3 - DIMENSIONS CONTINUED ON SHEET 56

AS-BUILT

DSGN GT HICKMAN	5	4/27/10	REVISED AS-BUILT	JB	ROW	VERIFY SCALE
DR ER BROWN	4	12/15/09	PRELIMINARY AS-BUILT	JB	ROW	BAR IS ONE INCH ON ORIGINAL DRAWING. 0 1"
CHK MW DAVIS	3	7/20/09	PRELIMINARY AS-BUILT	DLS	ROW	IF NOT ONE INCH ON THIS SHEET, ADJUST SCALES ACCORDINGLY.
APVD KT SCHEFFLER	1	3/4/09	AS-BUILT FIELD DATA - PRELIMINARY	JFF	GS	
	NO.	DATE	REVISION	BY	APVD	

CH2MHILL

US ENVIRONMENTAL PROTECTION AGENCY

WYCKOFF GROUNDWATER TREATMENT PLANT
BAINBRIDGE ISLAND, WA

TREATMENT FACILITY
MECHANICAL SECTIONS

SHEET	55
DWG	50-M-206
DATE	JANUARY 4 2006
PROJ	316783.FD.B

FILENAME:50nm206d_316783.dgn PLOT DATE:5/5/2010 PLOT TIME:11:36:35 AM

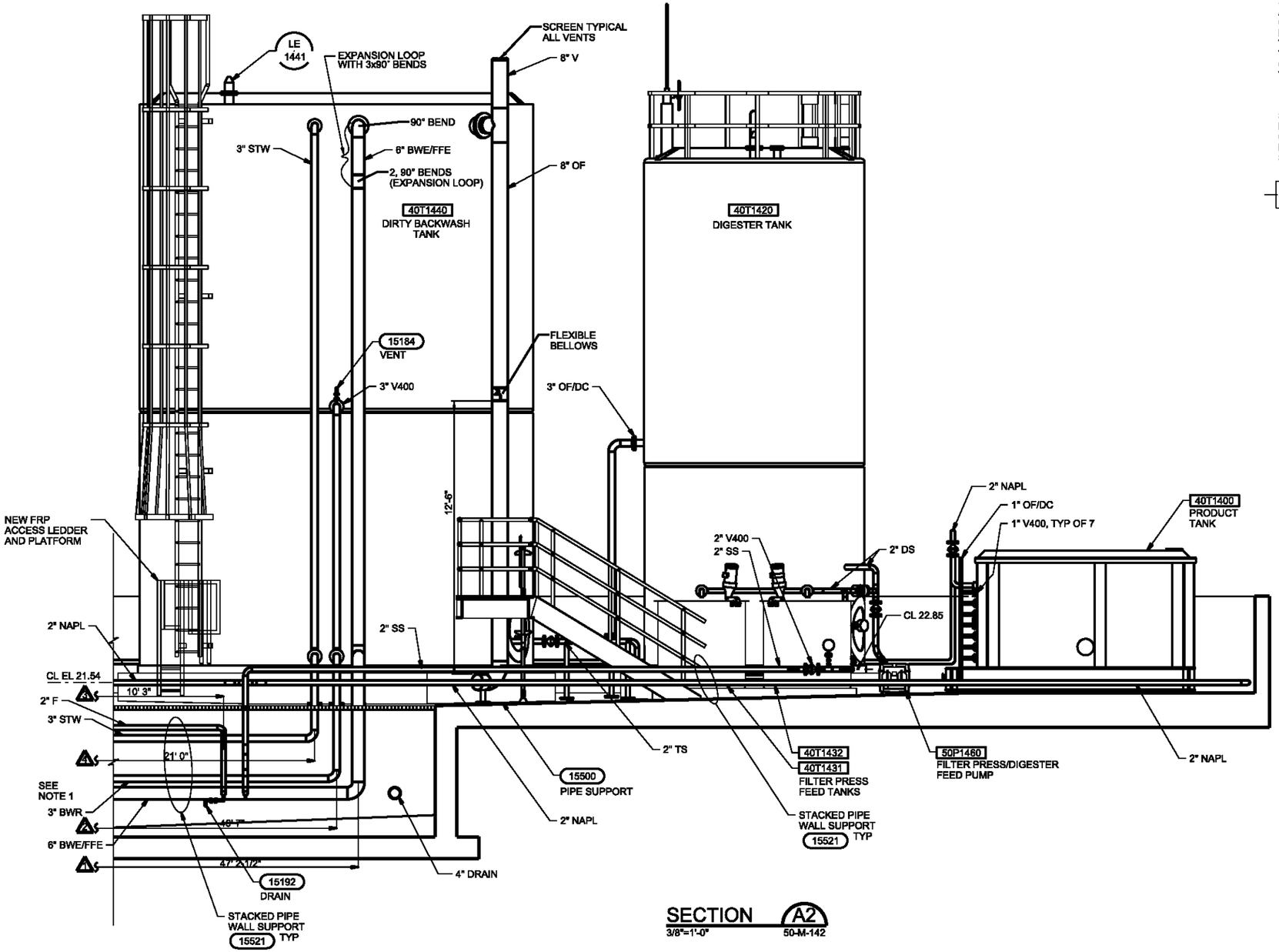

SECTION A2
3/8"=1'-0" 50-M-142

NOTES: 1 - DIMENSIONS CONTINUED ON SHEET 55

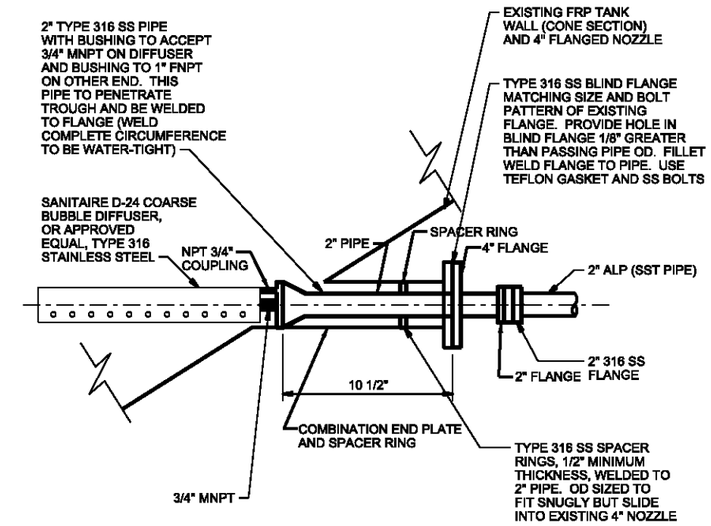

DIGESTER TANK AERATOR DETAIL 1
1 1/2"=1'-0" 50-M-208

AS-BUILT

DSGN GT HICKMAN	4	4/27/10	REVISED AS-BUILT	JB	ROW	VERIFY SCALE	
DR ER BROWN	3	12/15/09	PRELIMINARY AS-BUILT	JB	ROW	BAR IS ONE INCH ON ORIGINAL DRAWING. 0 1" IF NOT ONE INCH ON THIS SHEET, ADJUST SCALES ACCORDINGLY.	
CHK MW DAVIS	2	5/14/09	PRELIMINARY AS-BUILT	DLS	ROW		
APVD KT SCHEFFLER	1	3/4/09	AS-BUILT FIELD DATA - PRELIMINARY	JFF	GS		
	NO.	DATE	REVISION	BY	APVD		

CH2MHILL

US ENVIRONMENTAL PROTECTION AGENCY
WYCKOFF GROUNDWATER TREATMENT PLANT
BAINBRIDGE ISLAND, WA

TREATMENT FACILITY
MECHANICAL
SECTION AND DETAIL

SHEET	56
DWG	50-M-207
DATE	JANUARY 4 2006
PROJ	316783.FD.B

FILENAME: 50nm207d_316783.dgn PLOT DATE: 5/5/2010 PLOT TIME:12:18:01 PM

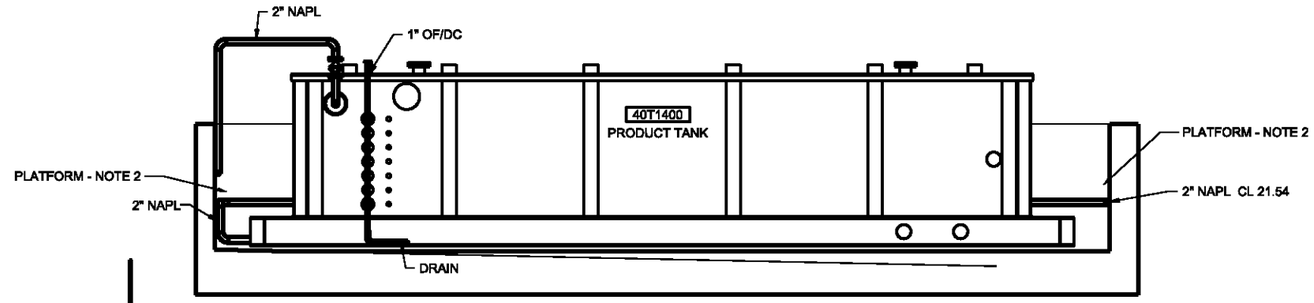

SECTION B
3/8"=1'-0" 50-M-142

NOTES:

1. PROVIDE 6-INCH HIGH DRIP LEG BELOW 3" ALP INVERT. ROUTE 1" ALP/DRAIN ABOVE GRADE AND OVER WALL AS SHOWN.
2. PRODUCT TANK MEZZANINE (PLATFORM) NOT INSTALLED.

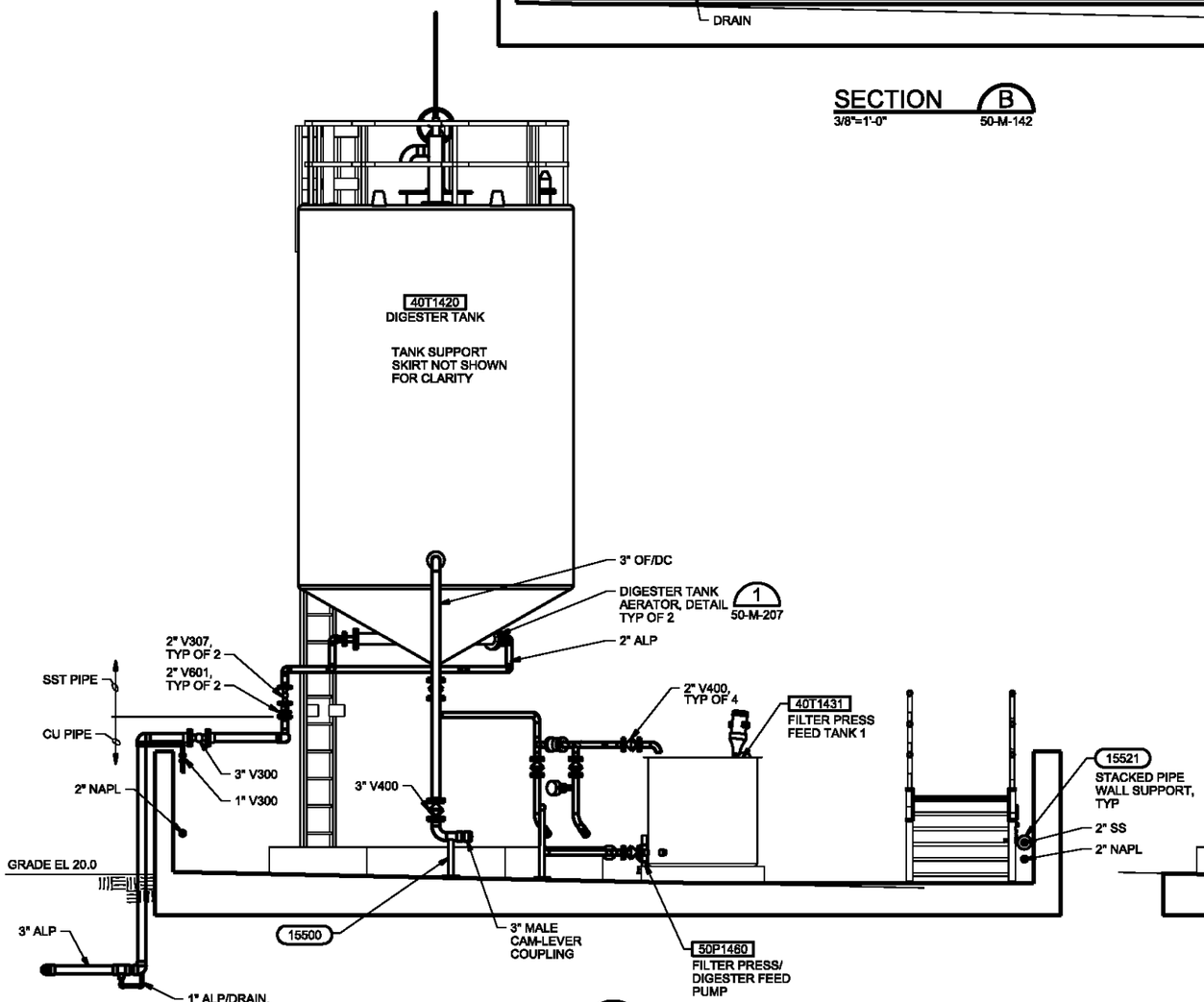

SECTION C
3/8"=1'-0" 50-M-142

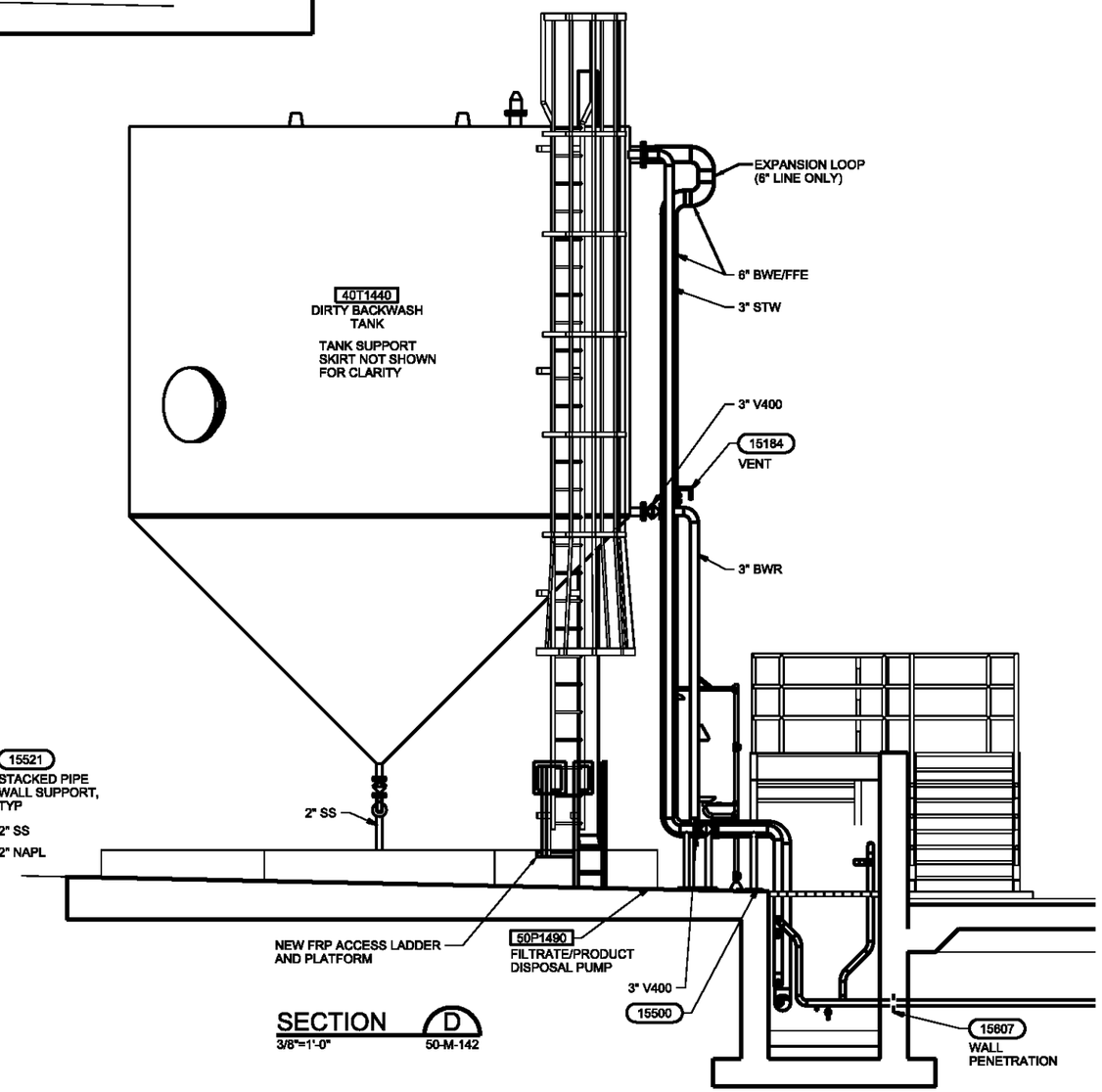

SECTION D
3/8"=1'-0" 50-M-142

AS-BUILT

DSGN GT HICKMAN	5	4/27/10	REVISED AS-BUILT	JB	ROW	VERIFY SCALE
DR ER BROWN	4	12/15/09	PRELIMINARY AS-BUILT	JB	ROW	BAR IS ONE INCH ON ORIGINAL DRAWING. 0 1" IF NOT ONE INCH ON THIS SHEET, ADJUST SCALES ACCORDINGLY.
CHK MW DAVIS	3	7/20/09	PRELIMINARY AS-BUILT	DLS	ROW	
APVD KT SCHEFFLER	1	3/4/09	AS-BUILT FIELD DATA - PRELIMINARY	JFF	GS	
	NO.	DATE	REVISION	BY	APVD	

CH2MHILL

US ENVIRONMENTAL PROTECTION AGENCY
WYCKOFF GROUNDWATER TREATMENT PLANT
BAINBRIDGE ISLAND, WA

TREATMENT FACILITY
MECHANICAL SECTIONS

SHEET	57
DWG	50-M-208
DATE	JANUARY 4 2006
PROJ	316783.FD.B

FILENAME:50nm208d_316783.dgn PLOT DATE: 5/5/2010 PLOT TIME:12:37:42 PM

NOTES:

1. PROVIDE VALVE WITH EXTENSION STEM, STEM GUIDE AND OPERATING NUT, LOCATED 2-INCH BELOW GRATING. REMOVE GRATING GRID AS REQUIRED TO ACCESS OPERATING NUT.

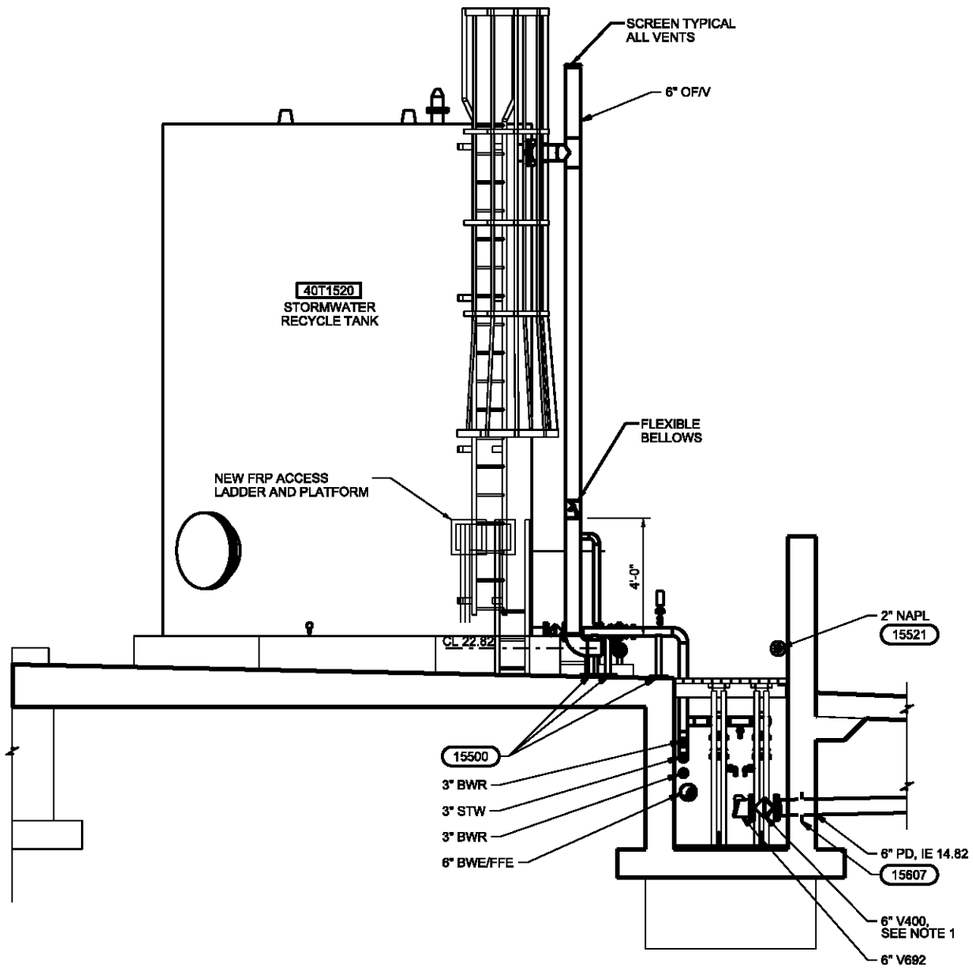

SECTION E
3/8"=1'-0" 50-M-142

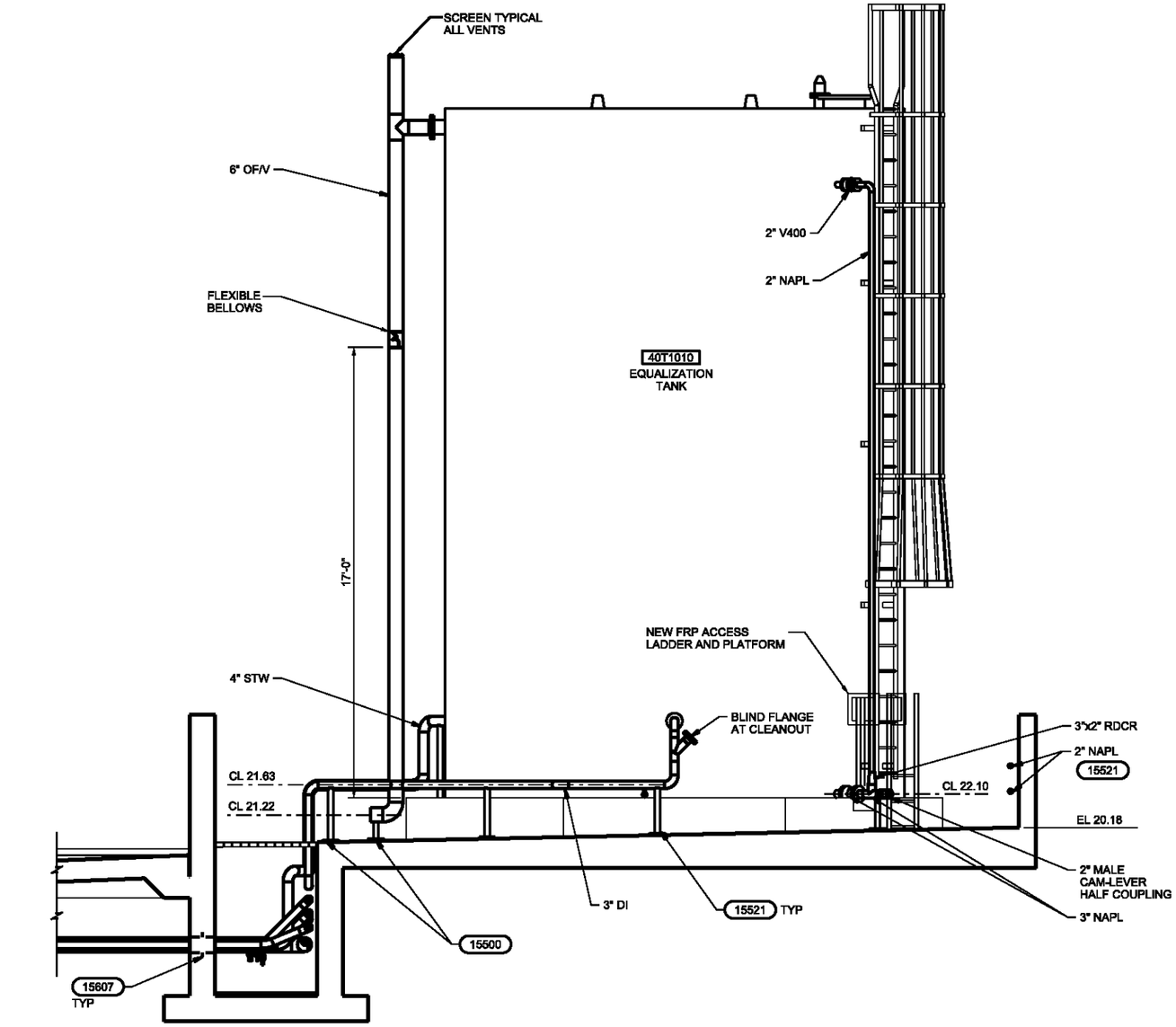

NOTE: CHANGED INVERT ELEVATION TO MAINTAIN SLOPE FROM DECON SUMP.

SECTION F
3/8"=1'-0" 50-M-142

AS-BUILT

DSGN GT HICKMAN	4	4/27/10	REVISED AS-BUILT	JB	ROW	VERIFY SCALE
DR ER BROWN	3	12/15/09	PRELIMINARY AS-BUILT	JB	ROW	BAR IS ONE INCH ON ORIGINAL DRAWING. 0 1"
CHK MW DAVIS	2	5/14/09	PRELIMINARY AS-BUILT	DLS	ROW	IF NOT ONE INCH ON THIS SHEET, ADJUST SCALES ACCORDINGLY.
APVD KT SCHEFFLER	1	3/4/09	AS-BUILT FIELD DATA - PRELIMINARY	JFF	GS	
	NO.	DATE	REVISION	BY	APVD	

CH2MHILL

US ENVIRONMENTAL PROTECTION AGENCY

WYCKOFF GROUNDWATER TREATMENT PLANT
BAINBRIDGE ISLAND, WA

TREATMENT FACILITY
MECHANICAL SECTIONS

SHEET	58
DWG	50-M-209
DATE	JANUARY 4 2006
PROJ	316783.FD.B

FILENAME:50nm209d_316783.dgn PLOT DATE: 5/5/2010 PLOT TIME: 12:52:50 PM

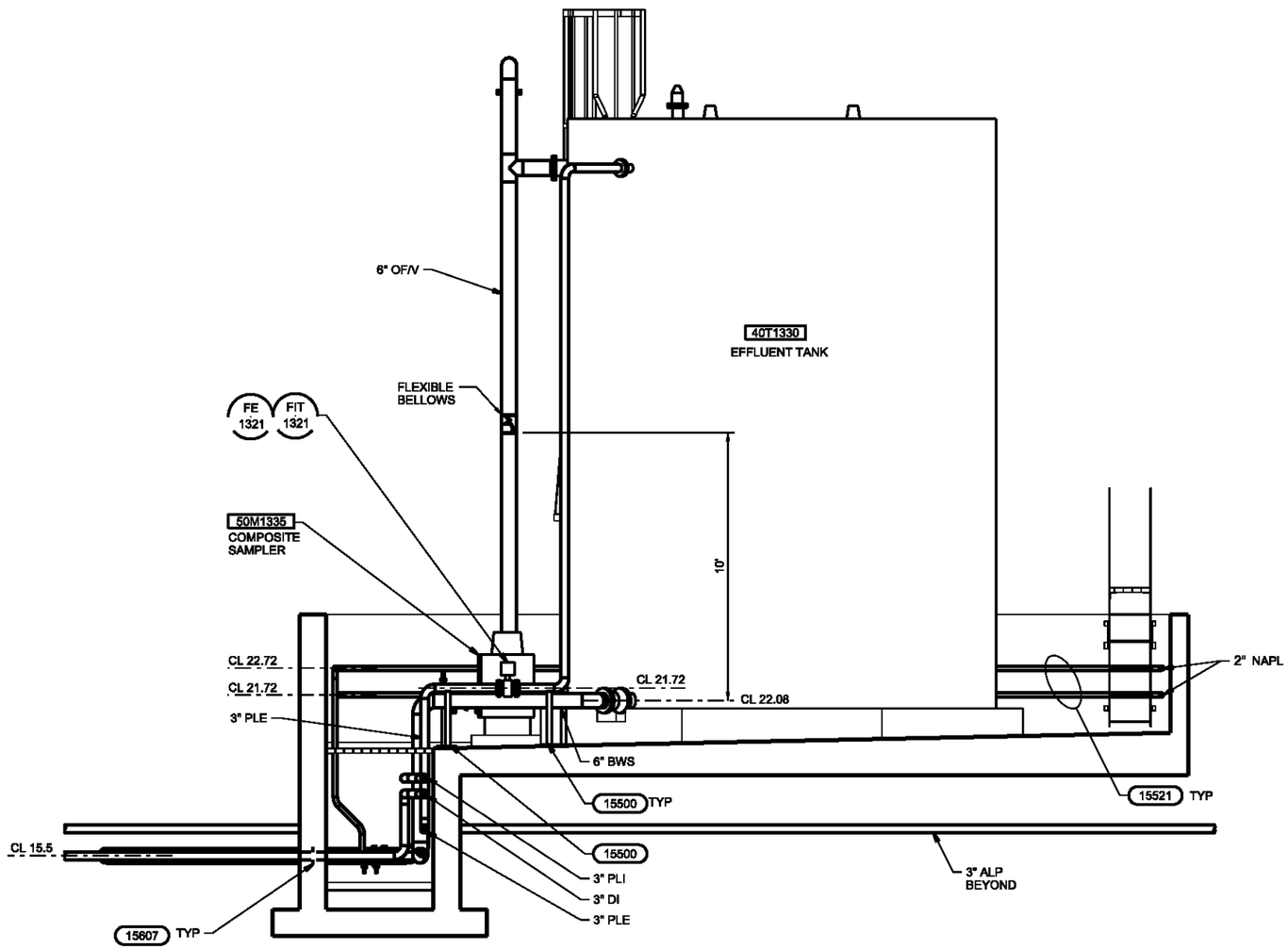

SECTION G
3/8"=1'-0" 50-M-142

AS-BUILT

DSGN GT HICKMAN	4	4/27/10	REVISED AS-BUILT	JB	ROW	VERIFY SCALE
DR ER BROWN	3	12/15/09	PRELIMINARY AS-BUILT	JB	ROW	BAR IS ONE INCH ON ORIGINAL DRAWING. 0 1" IF NOT ONE INCH ON THIS SHEET, ADJUST SCALES ACCORDINGLY.
CHK MW DAVIS	2	5/14/09	PRELIMINARY AS-BUILT	DLS	ROW	
APVD KT SCHEFFLER	1	3/4/09	AS-BUILT FIELD DATA - PRELIMINARY	JFF	GS	
	NO.	DATE	REVISION	BY	APVD	

CH2MHILL

US ENVIRONMENTAL PROTECTION AGENCY
WYCKOFF GROUNDWATER TREATMENT PLANT
BAINBRIDGE ISLAND, WA

TREATMENT FACILITY
MECHANICAL SECTIONS

SHEET	59
DWG	50-M-210
DATE	JANUARY 4 2006
PROJ	316783.FD.B

FILENAME: 50nm210d_316783.dgn PLOT DATE: 5/5/2010 PLOT TIME: 1:38:02 PM

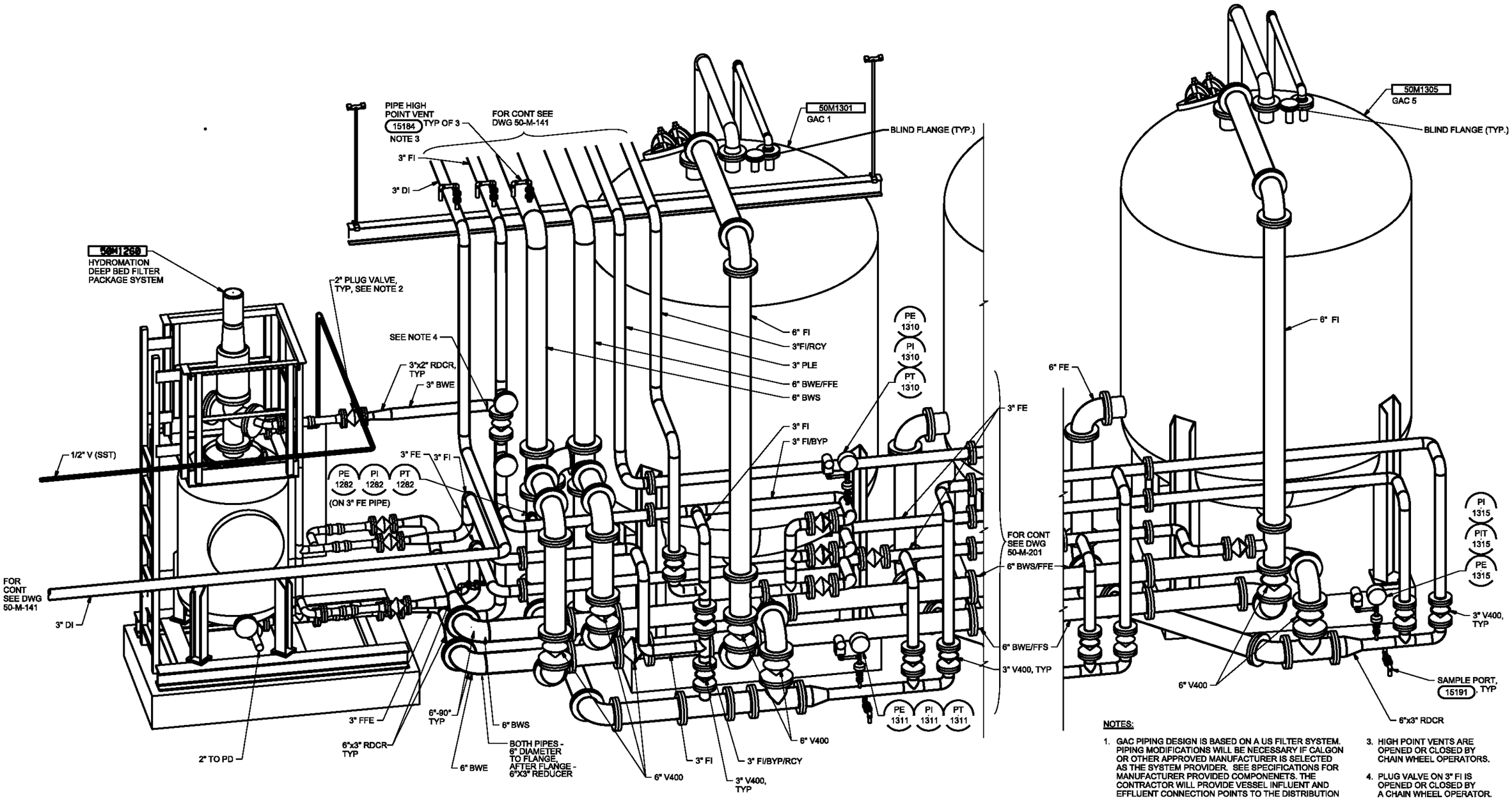

DETAIL 1
NTS
50-M-141
50-M-201

AS-BUILT

NOTES:

1. GAC PIPING DESIGN IS BASED ON A US FILTER SYSTEM. PIPING MODIFICATIONS WILL BE NECESSARY IF CALGON OR OTHER APPROVED MANUFACTURER IS SELECTED AS THE SYSTEM PROVIDER. SEE SPECIFICATIONS FOR MANUFACTURER PROVIDED COMPONENETS. THE CONTRACTOR WILL PROVIDE VESSEL INFLUENT AND EFFLUENT CONNECTION POINTS TO THE DISTRIBUTION MANIFOLD.
2. HYDROMATION DEEP BED FILTER SYSTEM SUPPLIER TO PROVIDE 2-INCH PLUG VALVES AND PIPING ON FILTER SIDE. CONTRACTOR TO PROVIDE AND INSTALL PIPING UP TO 2-INCH PLUG VALVES.
3. HIGH POINT VENTS ARE OPENED OR CLOSED BY CHAIN WHEEL OPERATORS.
4. PLUG VALVE ON 3" FI IS OPENED OR CLOSED BY A CHAIN WHEEL OPERATOR.

DSGN GT HICKMAN	5	4/27/10	REVISED AS-BUILT	JB	ROW	VERIFY SCALE
DR ER BROWN	4	12/15/09	PRELIMINARY AS-BUILT	JB	ROW	BAR IS ONE INCH ON ORIGINAL DRAWING. 0 1" IF NOT ONE INCH ON THIS SHEET, ADJUST SCALES ACCORDINGLY.
CHK MW DAVIS	3	7/20/09	PRELIMINARY AS-BUILT	DLS	ROW	
APVD KT SCHEEFLER	1	3/4/09	AS-BUILT FIELD DATA - PRELIMINARY	JFF	GS	
	NO.	DATE	REVISION	BY	APVD	

CH2MHILL

US ENVIRONMENTAL PROTECTION AGENCY

WYCKOFF GROUNDWATER TREATMENT PLANT
BAINBRIDGE ISLAND, WA

TREATMENT FACILITY
MECHANICAL DETAILS

SHEET	60
DWG	50-M-401
DATE	JANUARY 4 2006
PROJ	316783.FD.B

FILENAME: 50nm401d_316783.dgn PLOT DATE: 5/5/2010 PLOT TIME: 4:54:33 PM

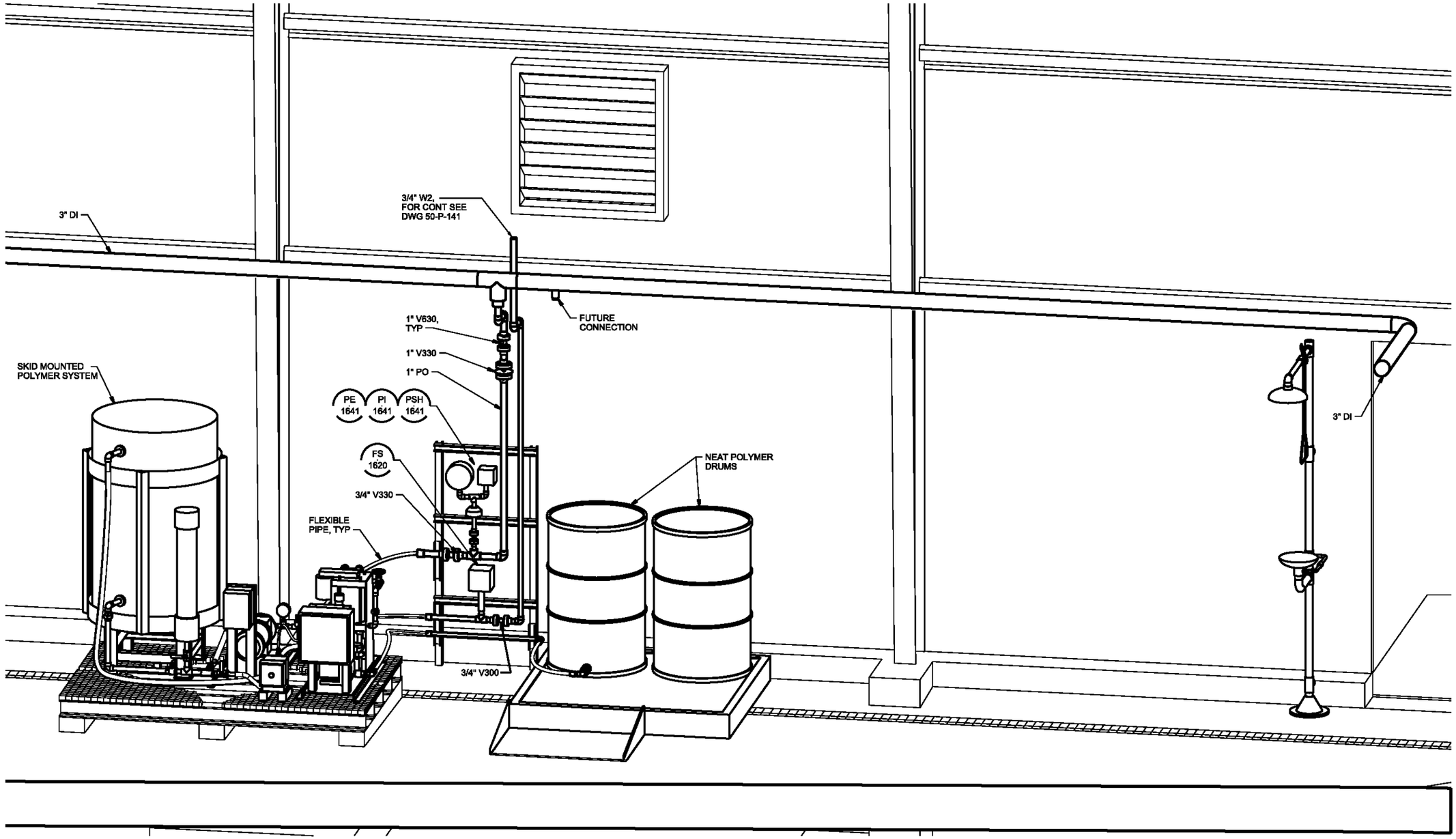

AS-BUILT

DETAIL 2 / 50-M-141
NTS

DSGN GT HICKMAN	4	4/27/10	REVISED AS-BUILT	JB	ROW	VERIFY SCALE
DR ER BROWN	3	12/15/09	PRELIMINARY AS-BUILT	JB	ROW	BAR IS ONE INCH ON ORIGINAL DRAWING. 0 1" IF NOT ONE INCH ON THIS SHEET, ADJUST SCALES ACCORDINGLY.
CHK MW DAVIS	2	5/14/09	PRELIMINARY AS-BUILT	DLS	ROW	
	1	3/4/09	AS-BUILT FIELD DATA - PRELIMINARY	JFF	GS	
APVD KT SCHEFFLER	NO.	DATE	REVISION	BY	APVD	

CH2MHILL

US ENVIRONMENTAL PROTECTION AGENCY

WYCKOFF GROUNDWATER TREATMENT PLANT
BAINBRIDGE ISLAND, WA

TREATMENT FACILITY
MECHANICAL DETAILS

SHEET	61
DWG	50-M-402
DATE	MARCH 2006
PROJ	316783.FD.B

FILENAME:50nm402d_316783.dgn PLOT DATE:5/6/2010 PLOT TIME:8:01:36 AM

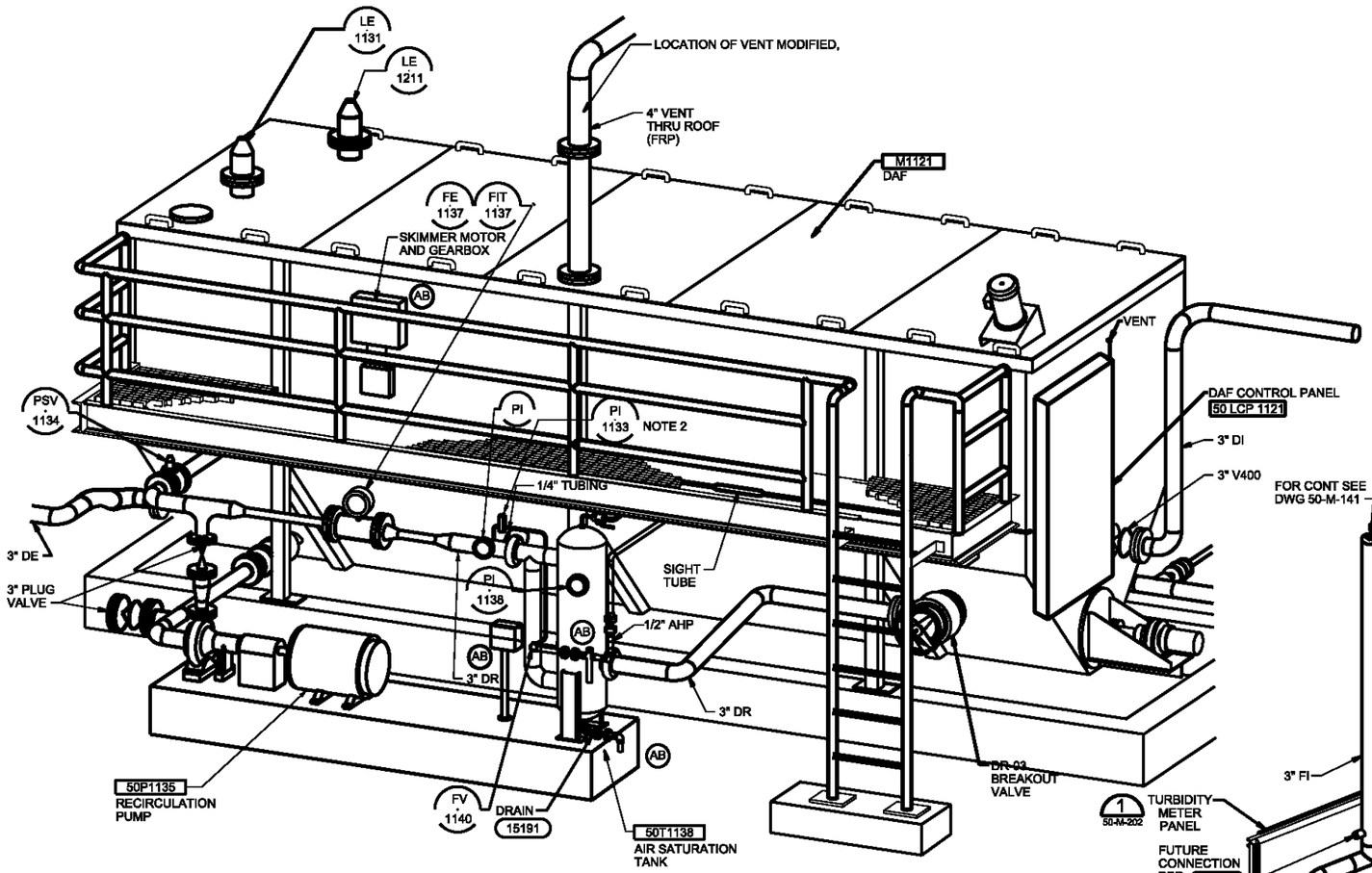

DETAIL 3
NTS 50-M-141

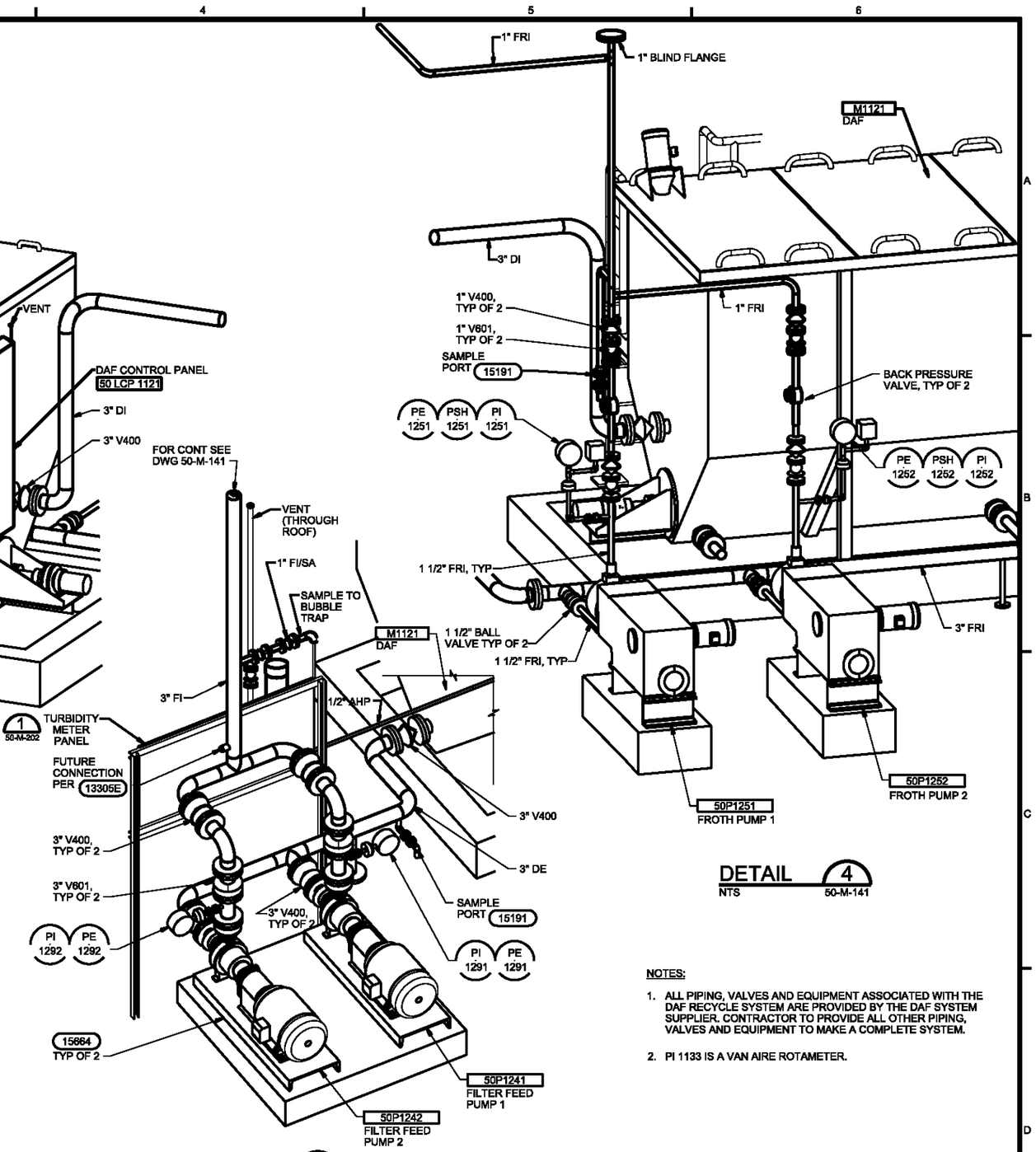

DETAIL 4
NTS 50-M-141

DETAIL 5
NTS 50-M-141

NOTES:

1. ALL PIPING, VALVES AND EQUIPMENT ASSOCIATED WITH THE DAF RECYCLE SYSTEM ARE PROVIDED BY THE DAF SYSTEM SUPPLIER. CONTRACTOR TO PROVIDE ALL OTHER PIPING, VALVES AND EQUIPMENT TO MAKE A COMPLETE SYSTEM.
2. PI 1133 IS A VAN AIRE ROTAMETER.

AS-BUILT

DSGN GT HICKMAN	5	4/27/10	REVISED AS-BUILT	JB	ROW
DR ER BROWN	4	12/15/09	PRELIMINARY AS-BUILT	JB	ROW
CHK MW DAVIS	3	7/20/09	PRELIMINARY AS-BUILT	DLS	ROW
APVD KT SCHEEFLER	1	3/4/09	AS-BUILT FIELD DATA - PRELIMINARY	JFF	GS
	NO.	DATE	REVISION	BY	APVD

VERIFY SCALE
BAR IS ONE INCH ON ORIGINAL DRAWING.
0 1"
IF NOT ONE INCH ON THIS SHEET, ADJUST SCALES ACCORDINGLY.

CH2MHILL

US ENVIRONMENTAL PROTECTION AGENCY
WYCKOFF GROUNDWATER TREATMENT PLANT
BAINBRIDGE ISLAND, WA

TREATMENT FACILITY
MECHANICAL DETAILS

SHEET	62
DWG	50-M-403
DATE	JANUARY 4 2006
PROJ	316783.FD.B

FILENAME: 50nm403d_316783.dgn PLOT DATE: 5/6/2010 PLOT TIME:

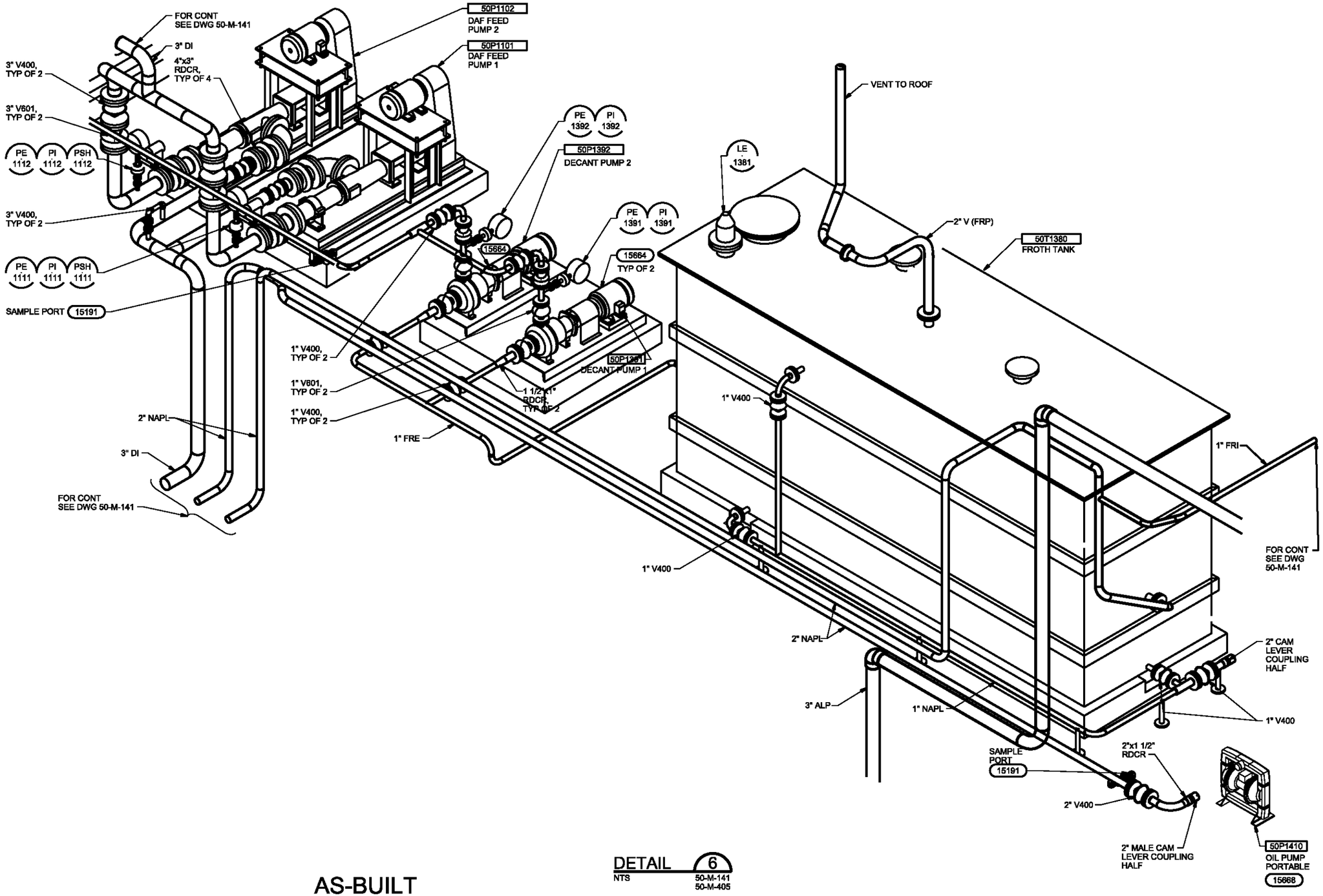

DETAIL 6
NTS
50-M-141
50-M-405

AS-BUILT

DSGN GT HICKMAN	5	4/27/10	REVISED AS-BUILT	JB	ROW	VERIFY SCALE
DR ER BROWN	4	12/15/09	PRELIMINARY AS-BUILT	JB	ROW	BAR IS ONE INCH ON ORIGINAL DRAWING. 0 1" IF NOT ONE INCH ON THIS SHEET, ADJUST SCALES ACCORDINGLY.
CHK MW DAVIS	3	7/20/09	PRELIMINARY AS-BUILT	DLS	ROW	
APVD KT SCHEFFLER	1	3/4/09	AS-BUILT FIELD DATA - PRELIMINARY	JFF	GS	
	NO.	DATE	REVISION	BY	APVD	

CH2MHILL

US ENVIRONMENTAL PROTECTION AGENCY

WYCKOFF GROUNDWATER TREATMENT PLANT
BAINBRIDGE ISLAND, WA

TREATMENT FACILITY
MECHANICAL
DETAILS

SHEET	63
DWG	50-M-404
DATE	JANUARY 4 2006
PROJ	316783.FD.B

FILENAME:50nm404d_316783.dgn PLOT DATE:5/7/2010 PLOT TIME:5:47:28 PM

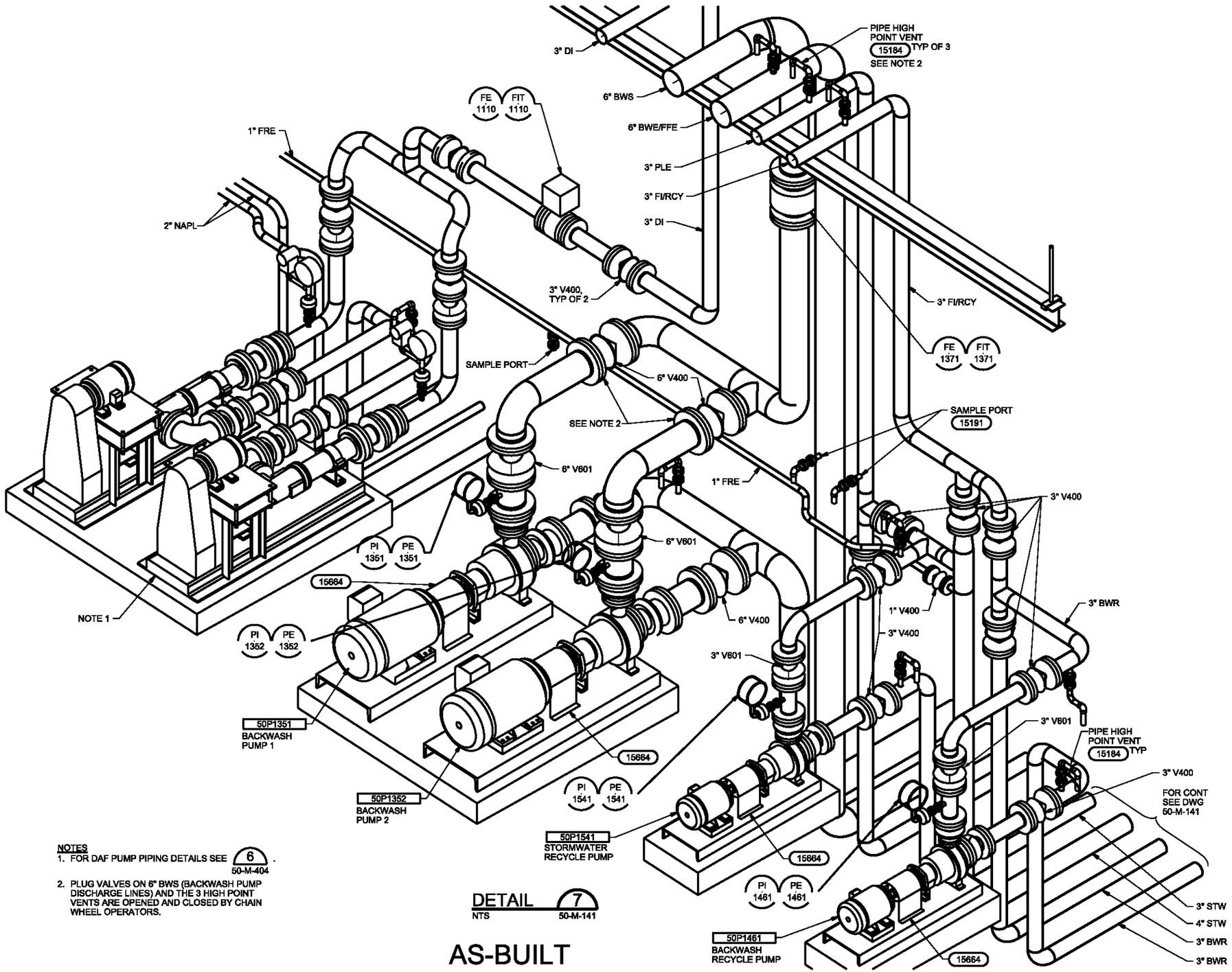

NOTES
1. FOR DAF PUMP PIPING DETAILS SEE 6 / 50-M-404.
2. PLUG VALVES ON 6" BWS (BACKWASH PUMP DISCHARGE LINES) AND THE 3 HIGH POINT VENTS ARE OPENED AND CLOSED BY CHAIN WHEEL OPERATORS.

DETAIL 7 / 50-M-141
NTS

AS-BUILT

DSGN GT HICKMAN	4	4/27/10	REVISED AS-BUILT	JB	ROW	VERIFY SCALE
DR ER BROWN	3	12/15/09	PRELIMINARY AS-BUILT	JB	ROW	BAR IS ONE INCH ON ORIGINAL DRAWING. 0 1" IF NOT ONE INCH ON THIS SHEET, ADJUST SCALES ACCORDINGLY.
CHK MW DAVIS	2	5/14/09	PRELIMINARY AS-BUILT	DLS	ROW	
	1	3/4/09	AS-BUILT FIELD DATA - PRELIMINARY	JFF	GS	
APVD KT SCHEEFLER	NO.	DATE	REVISION	BY	APVD	

CH2MHILL

US ENVIRONMENTAL PROTECTION AGENCY
WYCKOFF GROUNDWATER TREATMENT PLANT
BAINBRIDGE ISLAND, WA

TREATMENT FACILITY
MECHANICAL DETAILS

SHEET	64
DWG	50-M-405
DATE	JANUARY 4 2006
PROJ	316783.FD.B

FILENAME: 50nm405d_316783.dgn PLOT DATE: 5/6/2010 PLOT TIME: 1:48:08 PM

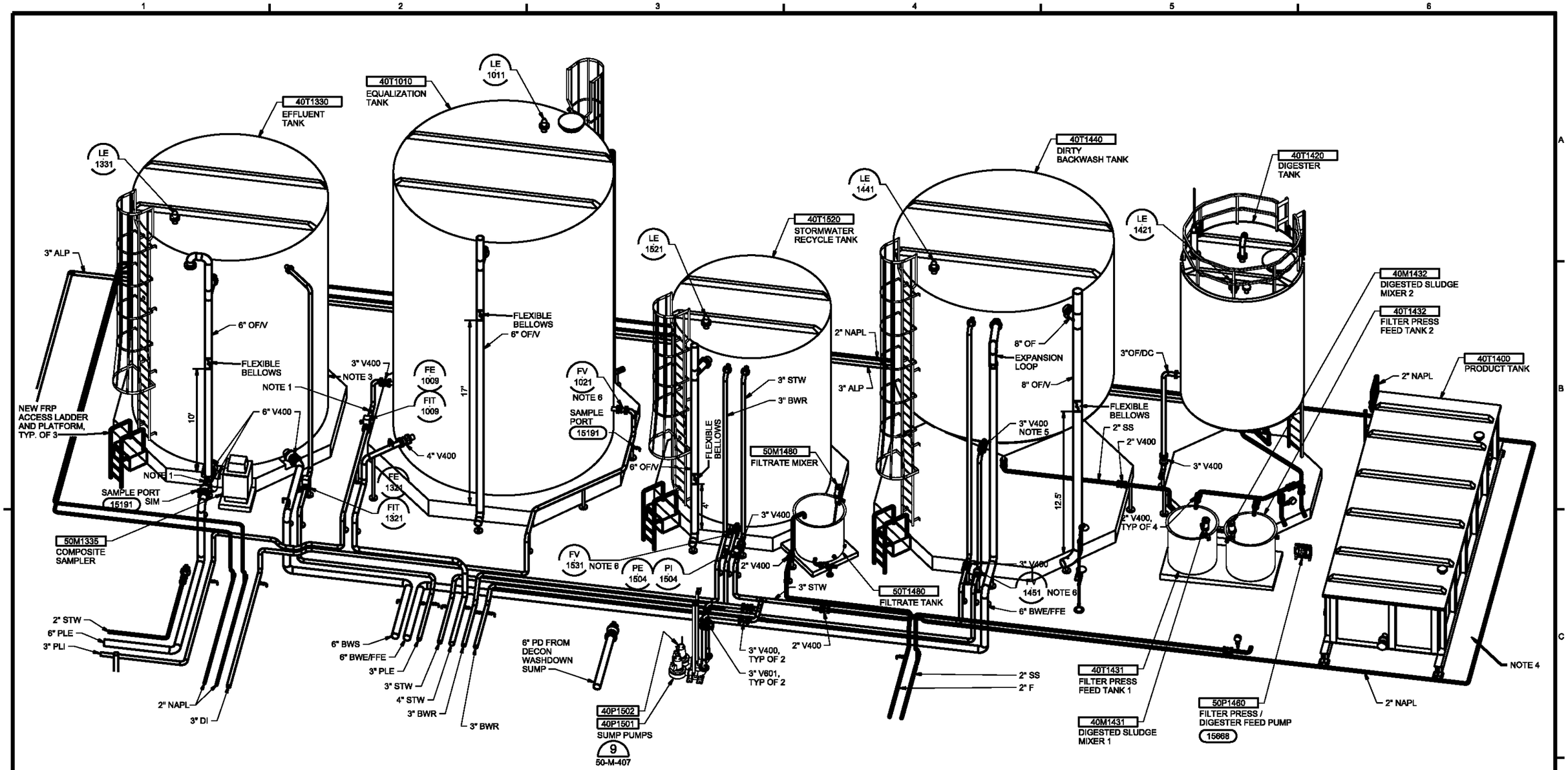

NOTES:

1. FUTURE CONNECTION.
2. DIRTY BACKWASH TANK SKIRT AND DIGESTER TANK SKIRT NOT SHOWN FOR CLARITY.
3. TANK CUTOUT/REPAIR. (PER RFI-0201)
4. PRODUCT TANK MEZZANINE (PLATFORM) REMOVED.
5. PLUG VALVE AND HIGH POINT VENT ON 3" BWR ARE OPENED OR CLOSED BY A CHAIN WHEEL OPERATORS.
6. FV 1021, FV 1531, AND FV1451 ARE AIR ACTUATED VALVES.

DETAIL 8
NTS 50-M-142

AS-BUILT

DSGN GT HICKMAN	5	4/27/10	REVISED AS-BUILT	JB	ROW	VERIFY SCALE
DR ER BROWN	4	12/15/09	PRELIMINARY AS-BUILT	JB	ROW	BAR IS ONE INCH ON ORIGINAL DRAWING. 0 1" IF NOT ONE INCH ON THIS SHEET, ADJUST SCALES ACCORDINGLY.
CHK MW DAVIS	3	7/20/09	PRELIMINARY AS-BUILT	DLS	ROW	
APVD KT SCHEFFLER	1	3/4/09	AS-BUILT FIELD DATA - PRELIMINARY	JFF	GS	
	NO.	DATE	REVISION	BY	APVD	

CH2MHILL

US ENVIRONMENTAL PROTECTION AGENCY
WYCKOFF GROUNDWATER TREATMENT PLANT
BAINBRIDGE ISLAND, WA

TREATMENT FACILITY
MECHANICAL DETAILS

SHEET	65
DWG	50-M-406
DATE	JANUARY 4 2006
PROJ	316783.FD.B

FILENAME: 50nm406d_316783.dgn PLOT DATE: 5/6/2010 PLOT TIME: 2:09:02 PM

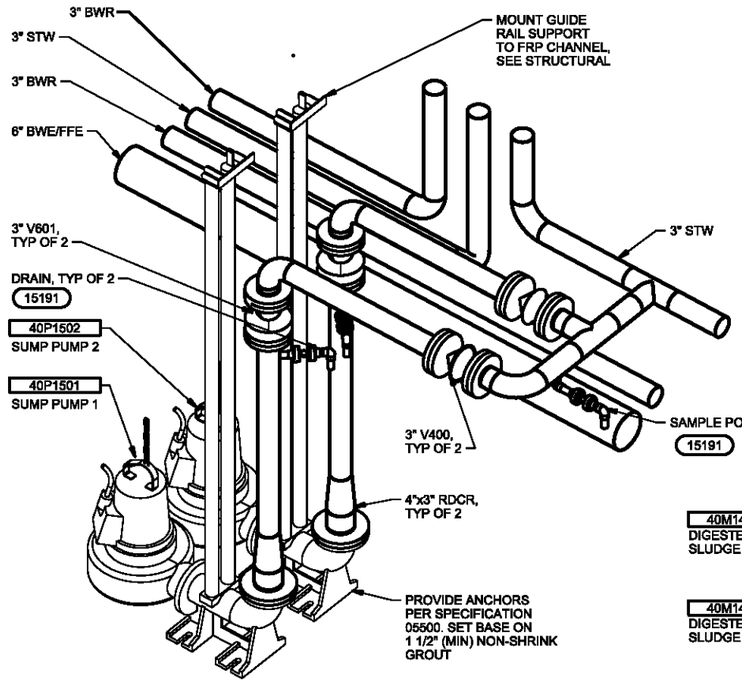

DETAIL 9
NTS 50-M-142 50-M-406

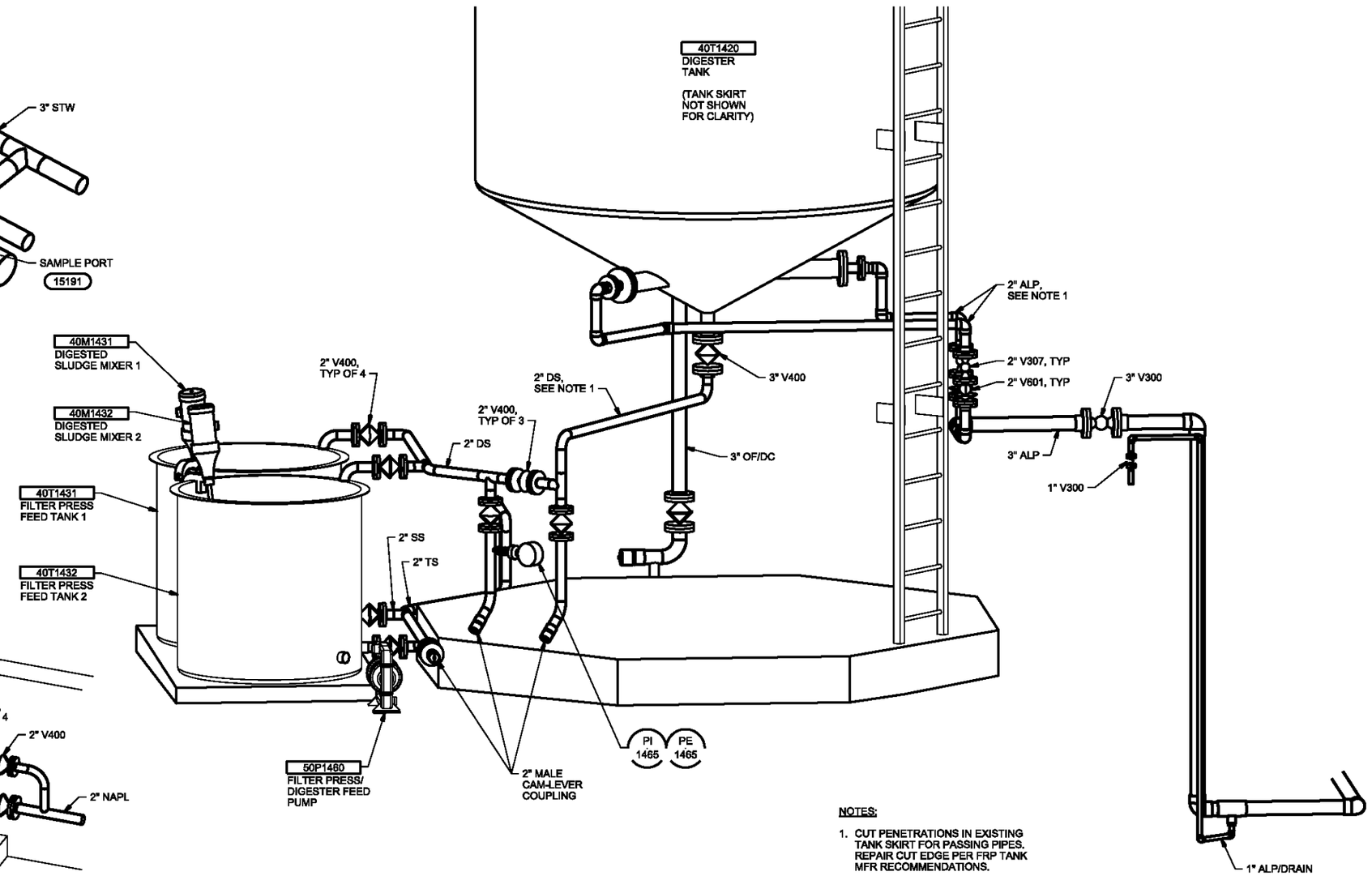

NOTES:

1. CUT PENETRATIONS IN EXISTING TANK SKIRT FOR PASSING PIPES. REPAIR CUT EDGE PER FRP TANK MFR RECOMMENDATIONS.

DETAIL 11
NTS 50-M-142

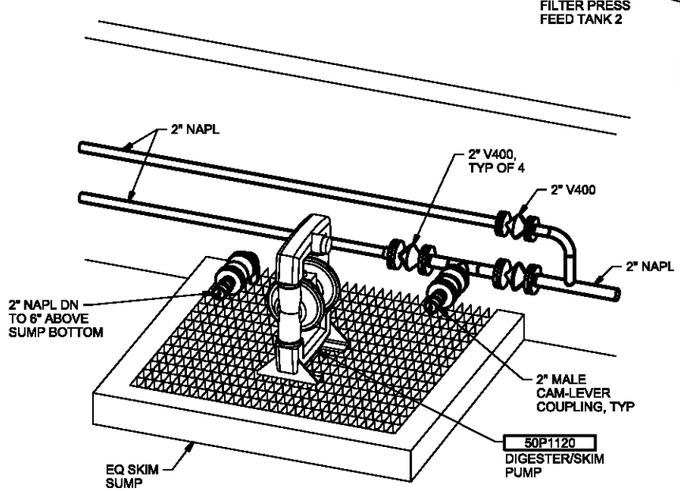

DETAIL 10
NTS 50-M-142

AS-BUILT

DSGN GT HICKMAN	5	4/27/10	REVISED AS-BUILT	JB	ROW	VERIFY SCALE
DR ER BROWN	4	12/15/09	PRELIMINARY AS-BUILT	JB	ROW	BAR IS ONE INCH ON ORIGINAL DRAWING. 0 1" IF NOT ONE INCH ON THIS SHEET, ADJUST SCALES ACCORDINGLY.
CHK MW DAVIS	3	7/20/09	PRELIMINARY AS-BUILT	DLS	ROW	
APVD KT SCHEFFLER	1	3/4/09	AS-BUILT FIELD DATA - PRELIMINARY	JFF	GS	
	NO.	DATE	REVISION	BY	APVD	

CH2MHILL

US ENVIRONMENTAL PROTECTION AGENCY
WYCKOFF GROUNDWATER TREATMENT PLANT
BAINBRIDGE ISLAND, WA

TREATMENT FACILITY
MECHANICAL DETAILS

SHEET	66
DWG	50-M-407
DATE	JANUARY 4 2006
PROJ	316783.FD.B

FILENAME: 50nm407d_316783.dgn PLOT DATE: 5/6/2010 PLOT TIME: 2:21:25 PM

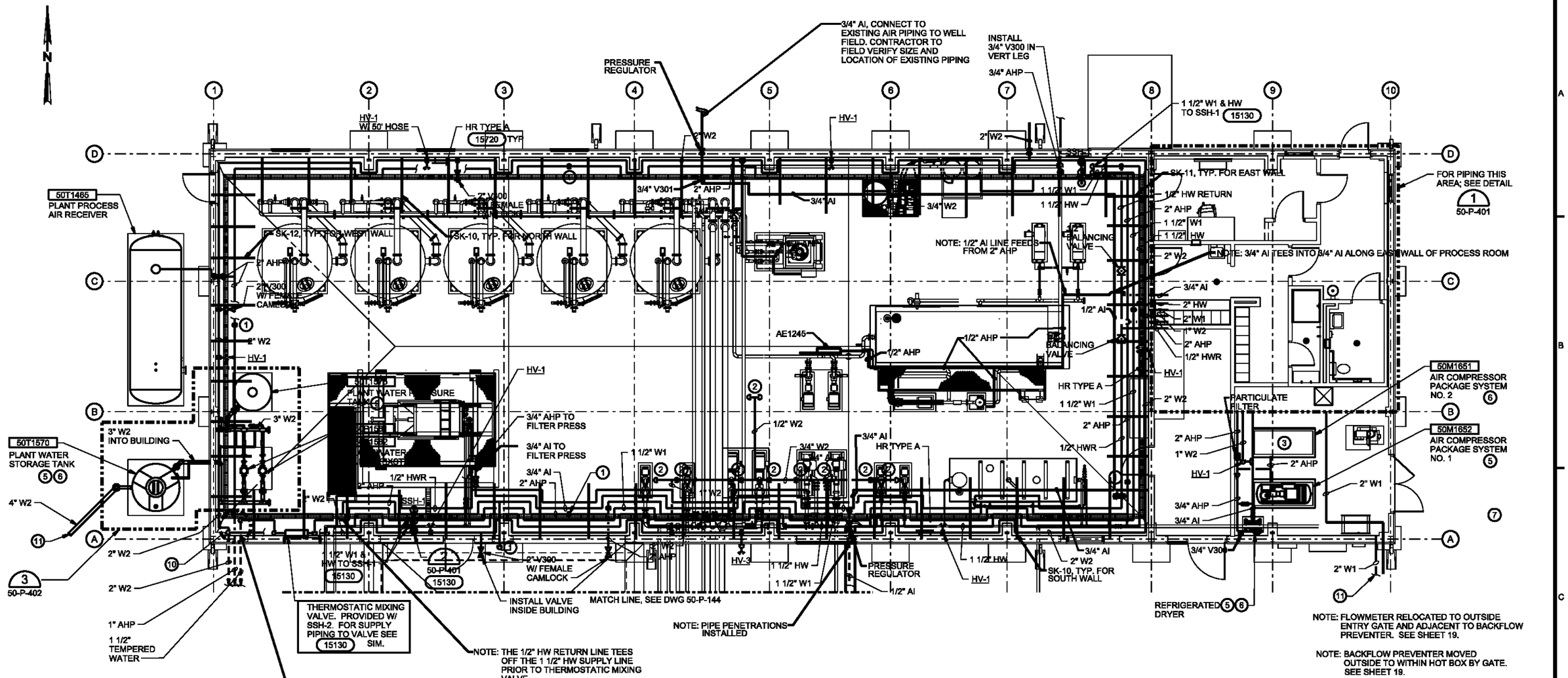

1. AIR STATION - SEE 15100
2. 1/2" W2 PIPING DROP FOR PUMP SEAL; SEE 15664
3. CONTRACTOR TO RUN PIPING TO SUIT TO CONNECT UP TO EXISTING COMPRESSORS.
4. PIPING ALONG WALLS IN PROCESS AREAS SHOWN SPACED OUT FOR CLARITY; CONTRACTOR TO STACK PIPING AND RUN TO SUIT.
5. SEE DWG 05-C-100 AND SPECIFICATION 01645 FOR EXISTING EQUIPMENT RELOCATION INFORMATION.
6. SEE DWG 50-DME-141 FOR EXISTING EQUIPMENT LOCATION.
7. CONTRACTOR TO COORDINATE REQUIREMENTS OF FLOW METER WITH CITY OF BAINBRIDGE ISLAND. CONTRACTOR TO PROVIDE FLOWMETER PER CITY REQUIREMENTS.
8. DO NOT RUN PIPING IN FRONT OF LOUVERS.
9. SEE SPECIFICATION 15440 FOR DETAILS.
10. PROVIDE V300 IN VERTICAL LEG OF PIPE PRIOR TO LEAVING THE BUILDING.
11. SEE DWG 05-CY-101 FOR CONTINUATION.

TREATMENT BUILDING PLAN

3/16"=1'-0"

AS-BUILT

DSGN RE MCKENNA	4	4/27/10	REVISED AS-BUILT	JB	ROW	VERIFY SCALE
DR JS WILLIAMSON	3	12/15/09	PRELIMINARY AS-BUILT	JB	ROW	BAR IS ONE INCH ON ORIGINAL DRAWING. 0 1"
CHK TJ PRICE	2	5/14/09	PRELIMINARY AS-BUILT	DLS	ROW	IF NOT ONE INCH ON THIS SHEET, ADJUST SCALES ACCORDINGLY.
APVD KT SCHEEFLER	1	3/4/09	AS-BUILT FIELD DATA - PRELIMINARY	JFF	GS	
	NO.	DATE	REVISION	BY	APVD	

CH2MHILL

US ENVIRONMENTAL PROTECTION AGENCY

WYCKOFF GROUNDWATER TREATMENT PLANT
BAINBRIDGE ISLAND, WA

TREATMENT FACILITY
PLUMBING
TREATMENT BUILDING
SERVICE PIPING PLAN

SHEET	69
DWG	50-P-141
DATE	JANUARY 4 2006
PROJ	316783.FD.B

FILENAME:50np141d_316783.dgn PLOT DATE:5/6/2010 PLOT TIME:3:14:08 PM

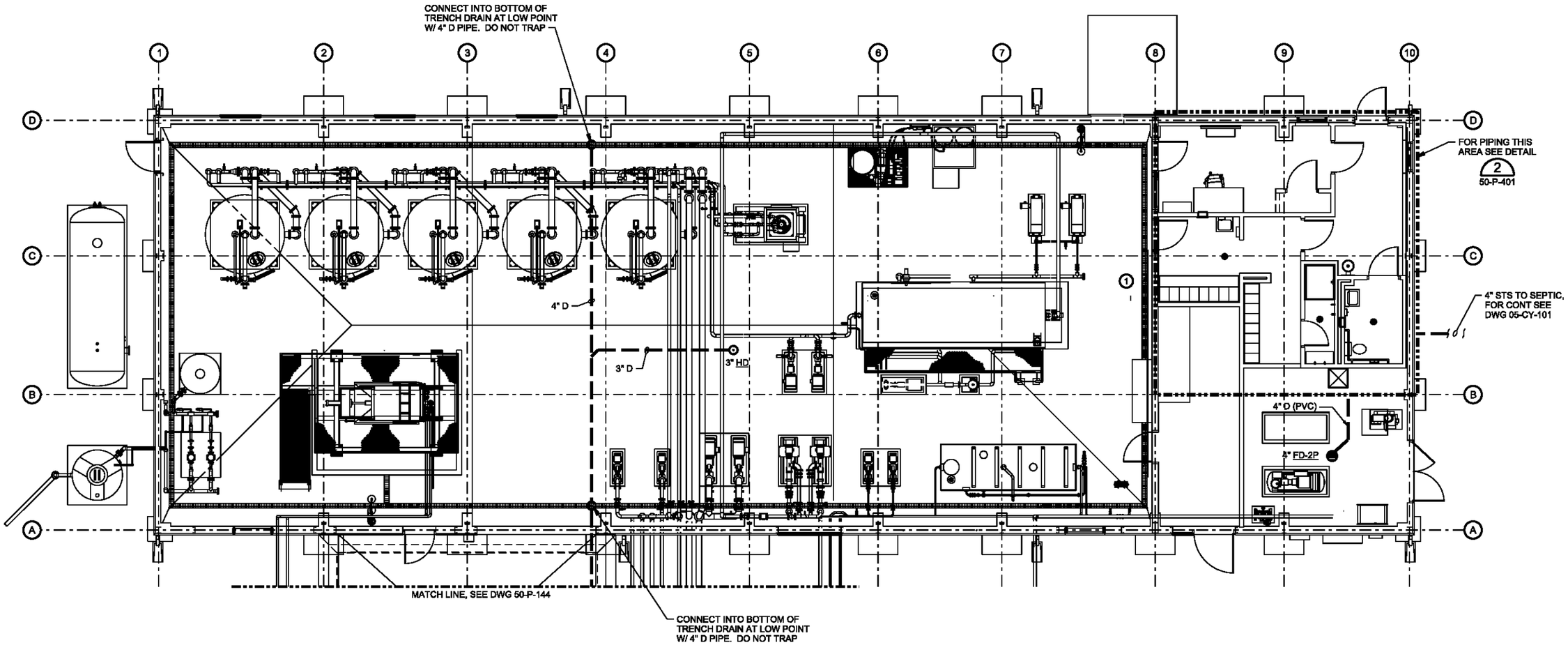

1. S-1 (BOOTWASH) DRAINS TO BE ROUTED TO TRENCH DRAIN.
2. DRAIN PIPING TO HAVE MIN SLOPE OF 1/4" VERTICAL TO 1' HORIZONTAL (2% SLOPE).

TREATMENT BUILDING PLAN

3/16"=1'-0"

AS-BUILT

DSGN RE MCKENNA	4	4/27/10	REVISED AS-BUILT	JB	ROW	VERIFY SCALE
DR JS WILLIAMSON	3	12/15/09	PRELIMINARY AS-BUILT	JB	ROW	BAR IS ONE INCH ON ORIGINAL DRAWING. 0 1"
CHK TJ PRICE	2	5/14/09	PRELIMINARY AS-BUILT	DLS	ROW	IF NOT ONE INCH ON THIS SHEET, ADJUST SCALES ACCORDINGLY.
APVD KT SCHEFFLER	1	3/4/09	AS-BUILT FIELD DATA - PRELIMINARY	JFF	GS	
	NO.	DATE	REVISION	BY	APVD	

CH2MHILL

US ENVIRONMENTAL PROTECTION AGENCY

WYCKOFF GROUNDWATER TREATMENT PLANT
BAINBRIDGE ISLAND, WA

TREATMENT FACILITY
PLUMBING
TREATMENT BUILDING
PROCESS DRAIN AND VENT PLAN

SHEET	70
DWG	50-P-142
DATE	JANUARY 4 2006
PROJ	316783.FD.B

FILENAME:50np142d_316783.dgn PLOT DATE:5/6/2010 PLOT TIME:3:26:20 PM

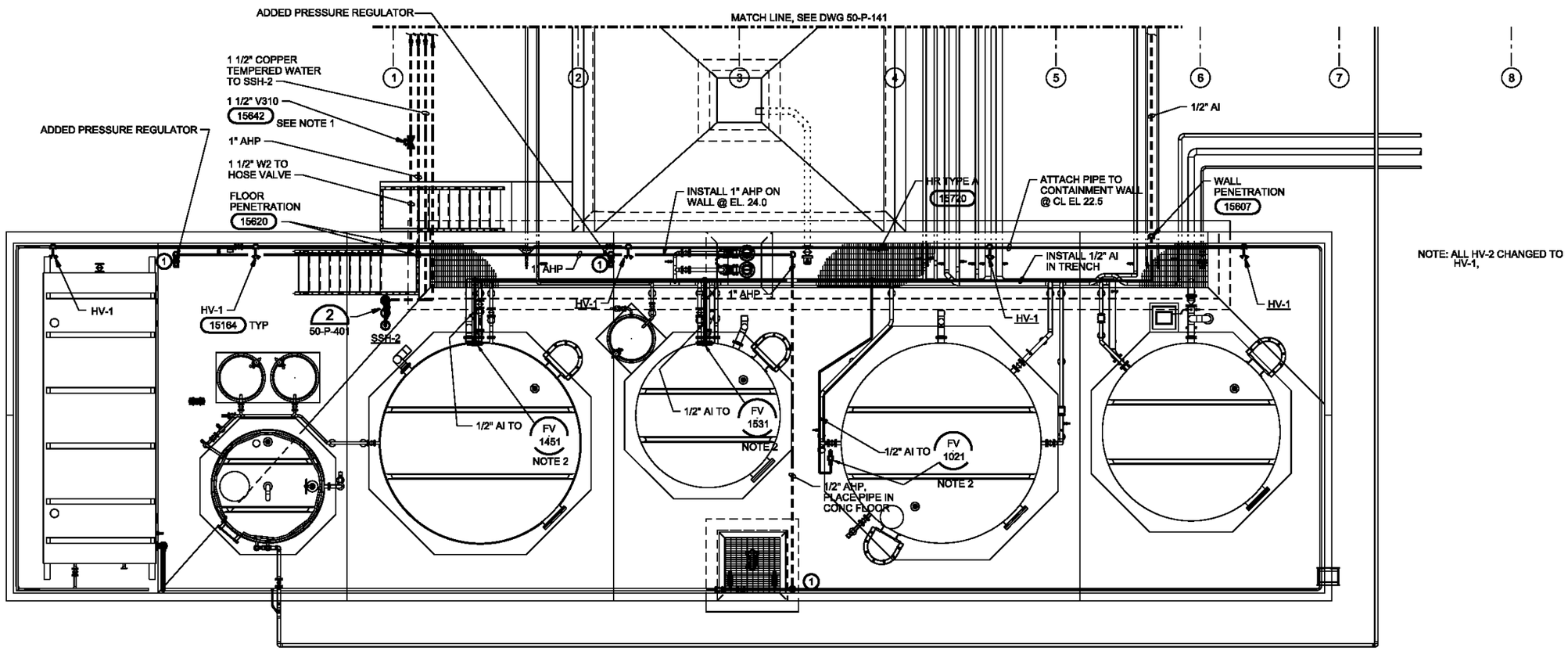

NOTES 1. 3-WAY VALVE IS BURIED IN ROADWAY WITH COVER.

2. FV 1021, FV1531, AND FV1451 ARE AIR-ACTUATED VALVES.

(1) AIR STATION (15100).

TANK FARM PLAN

3/16"=1'-0"

AS-BUILT

DSGN RE MCKENNA	5	4/27/10	REVISED AS-BUILT	JB	ROW	VERIFY SCALE
DR JS WILLIAMSON	4	12/15/09	PRELIMINARY AS-BUILT	JB	ROW	BAR IS ONE INCH ON ORIGINAL DRAWING. 0 1"
CHK TJ PRICE	3	7/20/09	PRELIMINARY AS-BUILT	DLS	ROW	IF NOT ONE INCH ON THIS SHEET, ADJUST SCALES ACCORDINGLY.
APVD KT SCHEFFLER	1	3/4/09	AS-BUILT FIELD DATA - PRELIMINARY	JFF	GS	
	NO.	DATE	REVISION	BY	APVD	

CH2MHILL

US ENVIRONMENTAL PROTECTION AGENCY

WYCKOFF GROUNDWATER TREATMENT PLANT
BAINBRIDGE ISLAND, WA

TREATMENT FACILITY
PLUMBING
TANK FARM
SERVICE PIPING PLAN

SHEET	71
DWG	50-P-143
DATE	JANUARY 4 2006
PROJ	316783.FD.B

FILENAME: 50np143d_316783.dgn PLOT DATE: 5/6/2010 PLOT TIME: 3:44:16 PM

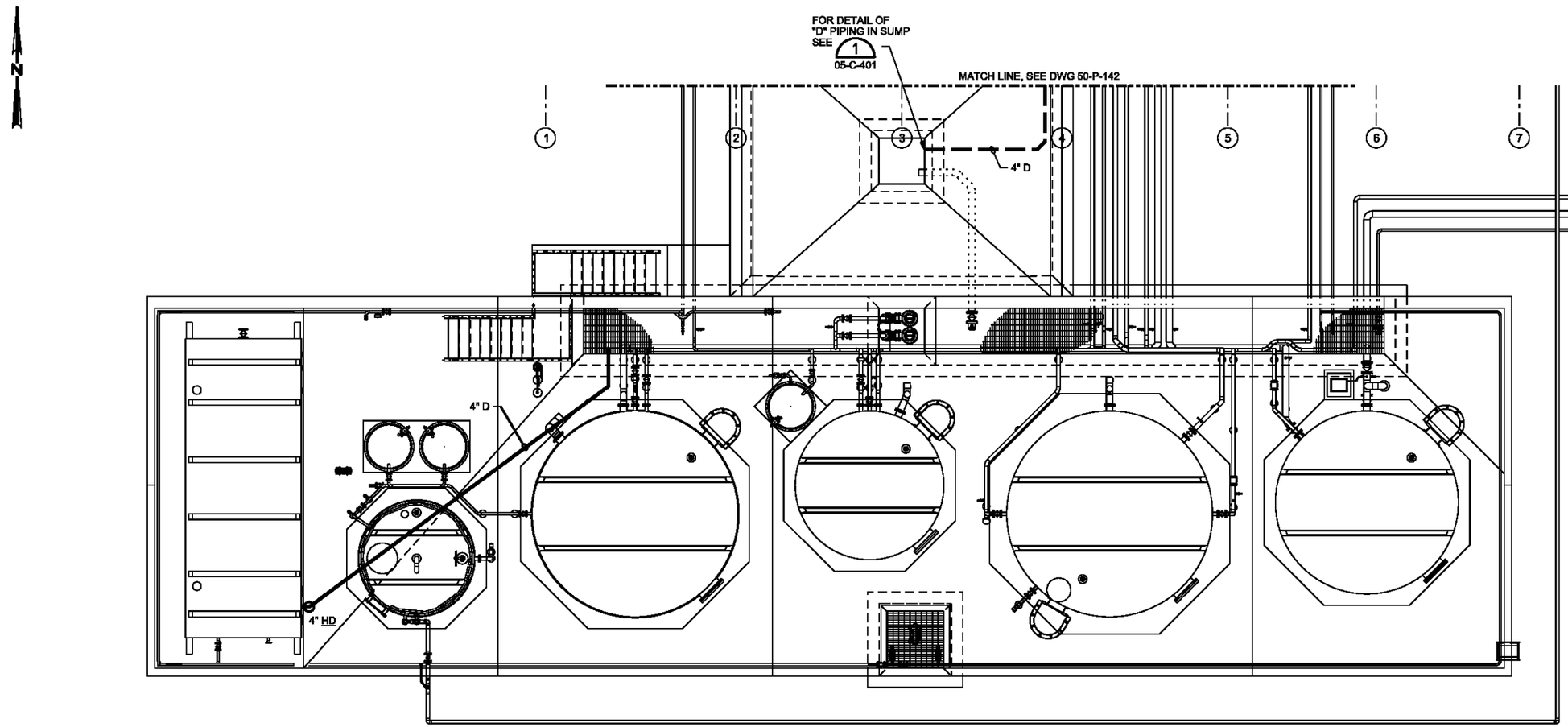

AS-BUILT

TANK FARM PLAN
3/16"=1'-0"

DSGN RE MCKENNA	4	4/27/10	REVISED AS-BUILT	JB	ROW	VERIFY SCALE
DR JS WILLIAMSON	3	12/15/09	PRELIMINARY AS-BUILT	JB	ROW	BAR IS ONE INCH ON ORIGINAL DRAWING. 0 1" IF NOT ONE INCH ON THIS SHEET, ADJUST SCALES ACCORDINGLY.
CHK T.J PRICE	2	5/14/09	PRELIMINARY AS-BUILT	DLS	ROW	
APVD KT SCHEFFLER	1	3/4/09	AS-BUILT FIELD DATA - PRELIMINARY	JFF	GS	
	NO.	DATE	REVISION	BY	APVD	

CH2MHILL

US ENVIRONMENTAL PROTECTION AGENCY

WYCKOFF GROUNDWATER TREATMENT PLANT
BAINBRIDGE ISLAND, WA

TREATMENT FACILITY
PLUMBING
TANK FARM
PROCESS DRAIN AND VENT PLAN

SHEET	72
DWG	50-P-144
DATE	JANUARY 4 2006
PROJ	316783.FD.B

FILENAME: 50np144d_316783.dgn PLOT DATE: 5/6/2010 PLOT TIME: 3:55:07 PM

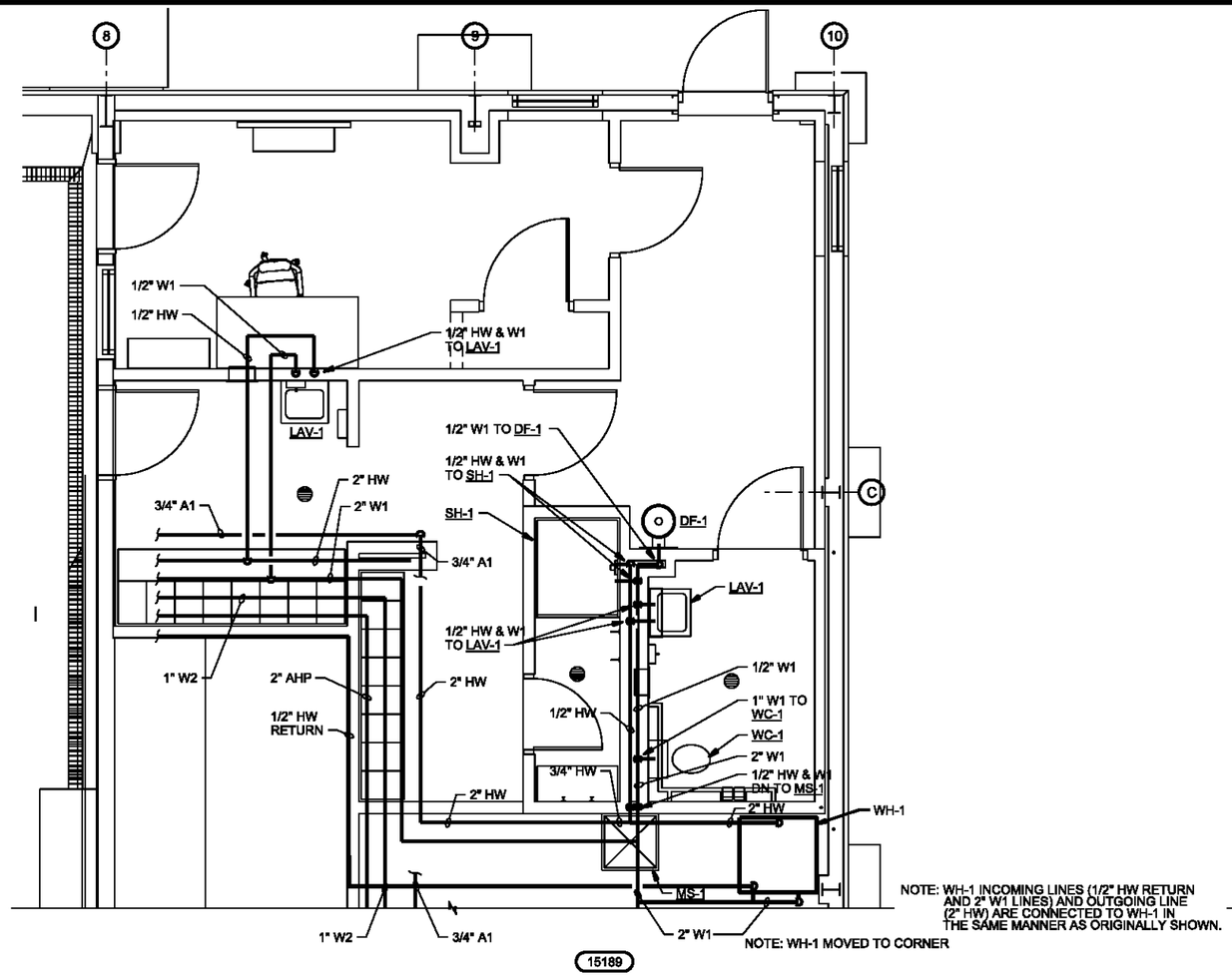

NOTE: WH-1 INCOMING LINES (1/2" HW RETURN AND 2" W1 LINES) AND OUTGOING LINE (2" HW) ARE CONNECTED TO WH-1 IN THE SAME MANNER AS ORIGINALLY SHOWN.

SERVICE PIPING ENLARGED PLAN (1)

3/8"=1'-0" 50-P-141

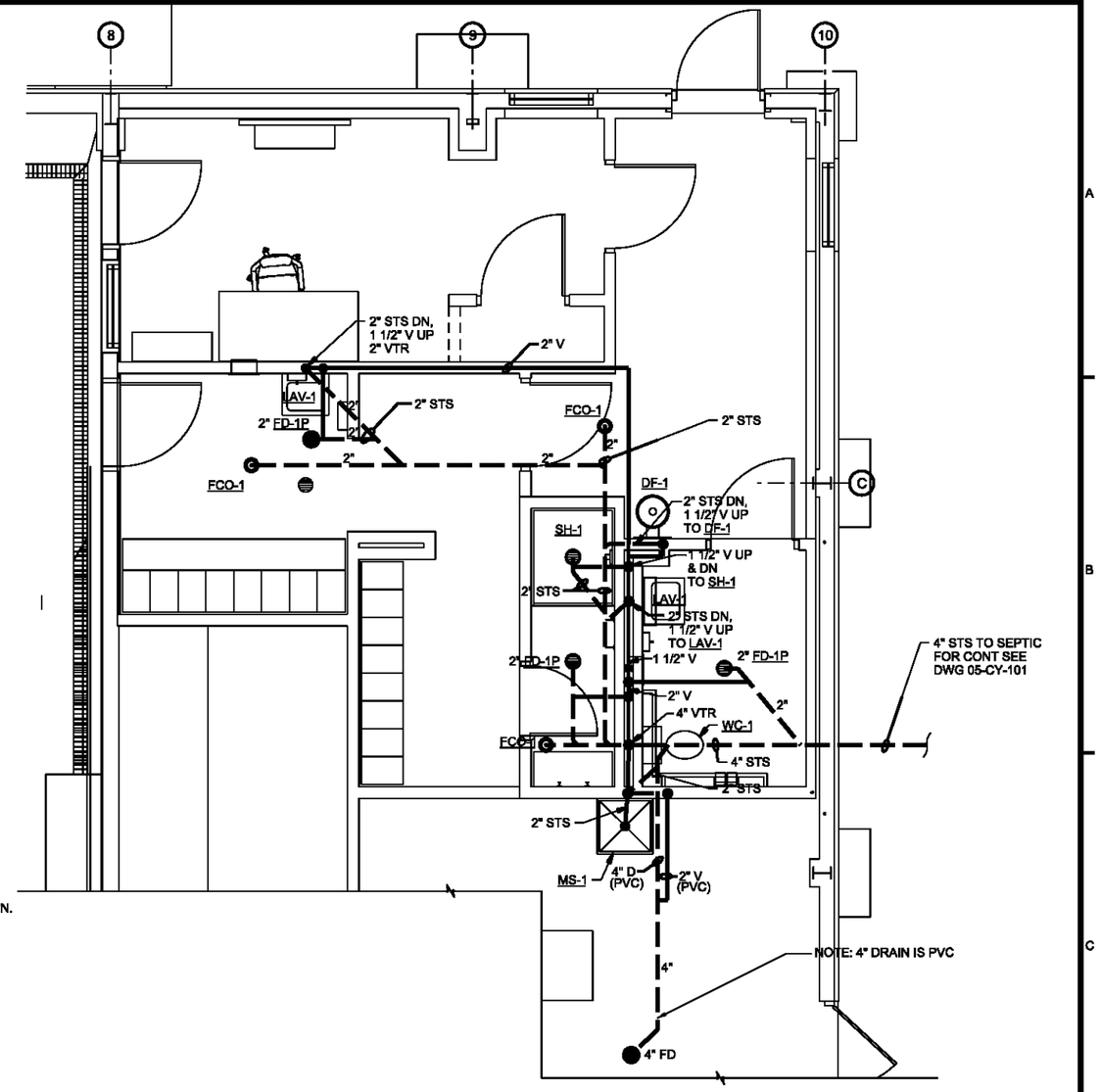

DRAIN AND VENT ENLARGED PLAN (2)

3/8"=1'-0" 50-P-142

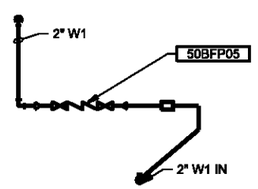

SECTION (A)

NTS 05-CY-101

NOTE: BACKFLOW PREVENTER RELOCATED TO HOT BOX ON GROUND BY GATE. (SEE SHEET 19)

NOTE: FLOW METER RELOCATED TO OUTSIDE OF ENTRY GATE AND ADJACENT TO (PRECEDING) BACKFLOW PREVENTER. (SEE SHEET 19)

AS-BUILT

DSGN RE MCKENNA	5	4/27/10	REVISED AS-BUILT	JB	ROW	VERIFY SCALE
DR JS WILLIAMSON	4	12/15/09	PRELIMINARY AS-BUILT	JB	ROW	BAR IS ONE INCH ON ORIGINAL DRAWING. 0 1" IF NOT ONE INCH ON THIS SHEET, ADJUST SCALES ACCORDINGLY.
CHK TJ PRICE	3	7/20/09	PRELIMINARY AS-BUILT	DLS	ROW	
	1	3/4/09	AS-BUILT FIELD DATA - PRELIMINARY	JFF	GS	
APVD KT SCHEFFLER	NO.	DATE	REVISION	BY	APVD	

CH2MHILL

US ENVIRONMENTAL PROTECTION AGENCY
WYCKOFF GROUNDWATER TREATMENT PLANT
BAINBRIDGE ISLAND, WA

TREATMENT FACILITY
PLUMBING
ENLARGED PLANS

SHEET	73
DWG	50-P-401
DATE	JANUARY 4 2006
PROJ	316783.FD.B

FILENAME:50np401d_316783.dgn PLOT DATE: 5/6/2010 PLOT TIME: 4:58:33 PM

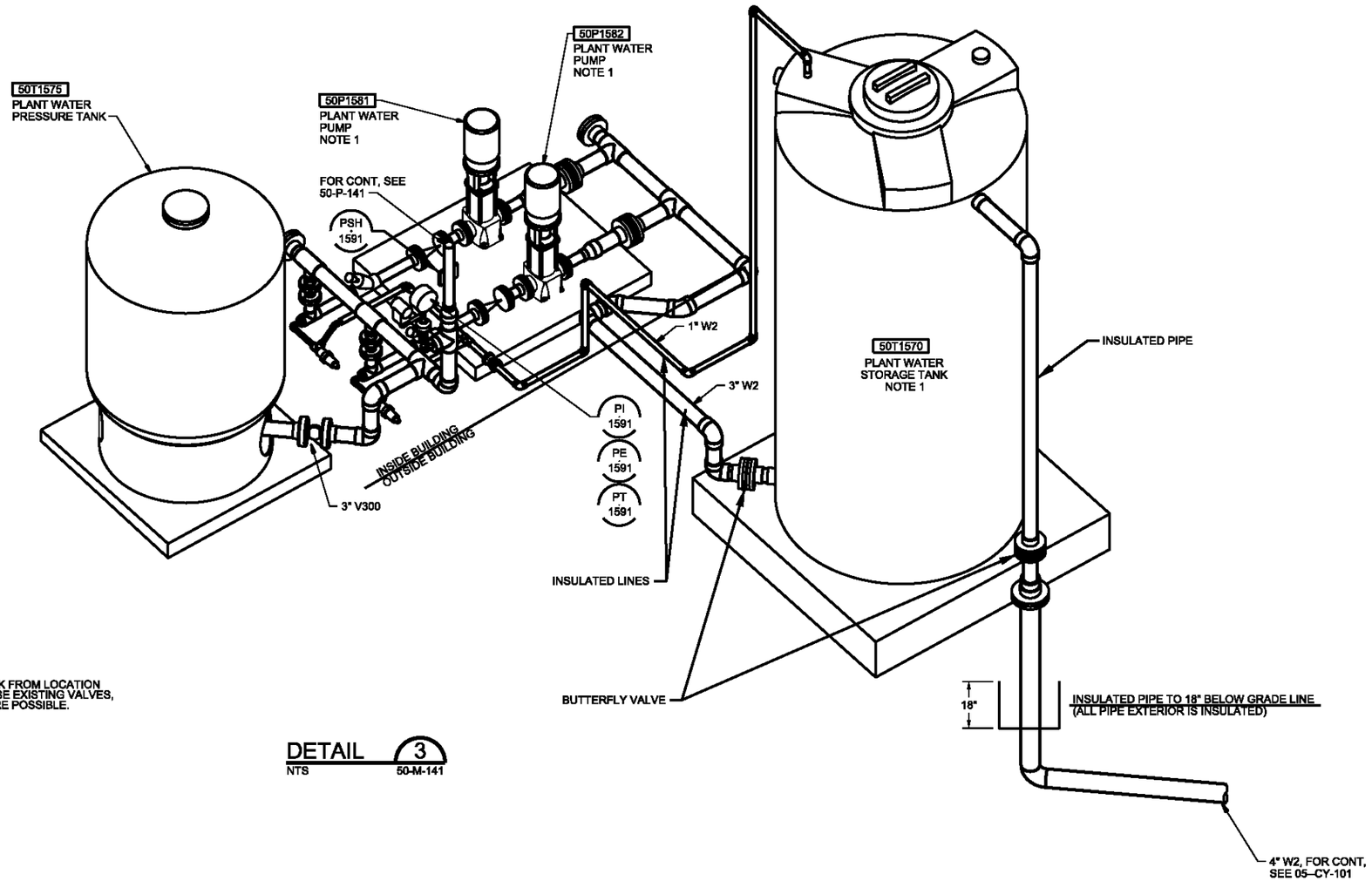

NOTES:

1. RELOCATE PUMPS AND TANK FROM LOCATION SHOWN ON 05-CY-100. REUSE EXISTING VALVES, FITTINGS, AND PIPING WHERE POSSIBLE.

DETAIL 3
NTS 50-M-141

AS-BUILT

DSGN RE MCKENNA	5	4/27/10	REVISED AS-BUILT	JB	ROW	VERIFY SCALE
DR JS WILLIAMSON	3	12/15/09	PRELIMINARY AS-BUILT	JB	ROW	BAR IS ONE INCH ON ORIGINAL DRAWING. 0 1" IF NOT ONE INCH ON THIS SHEET, ADJUST SCALES ACCORDINGLY.
CHK TJ PRICE	2	5/14/09	PRELIMINARY AS-BUILT	DLS	ROW	
APVD KT SCHEFFLER	1	3/4/09	AS-BUILT FIELD DATA - PRELIMINARY	JFF	GS	
	NO.	DATE	REVISION	BY	APVD	

CH2MHILL

US ENVIRONMENTAL PROTECTION AGENCY

WYCKOFF GROUNDWATER TREATMENT PLANT
BAINBRIDGE ISLAND, WA

TREATMENT FACILITY
PLUMBING
DETAILS

SHEET	74
DWG	50-P-402
DATE	JANUARY 4 2006
PROJ	316783.FD.B

FILENAME:50np402d_316783.dgn PLOT DATE:5/7/2010 PLOT TIME:8:21:10 AM

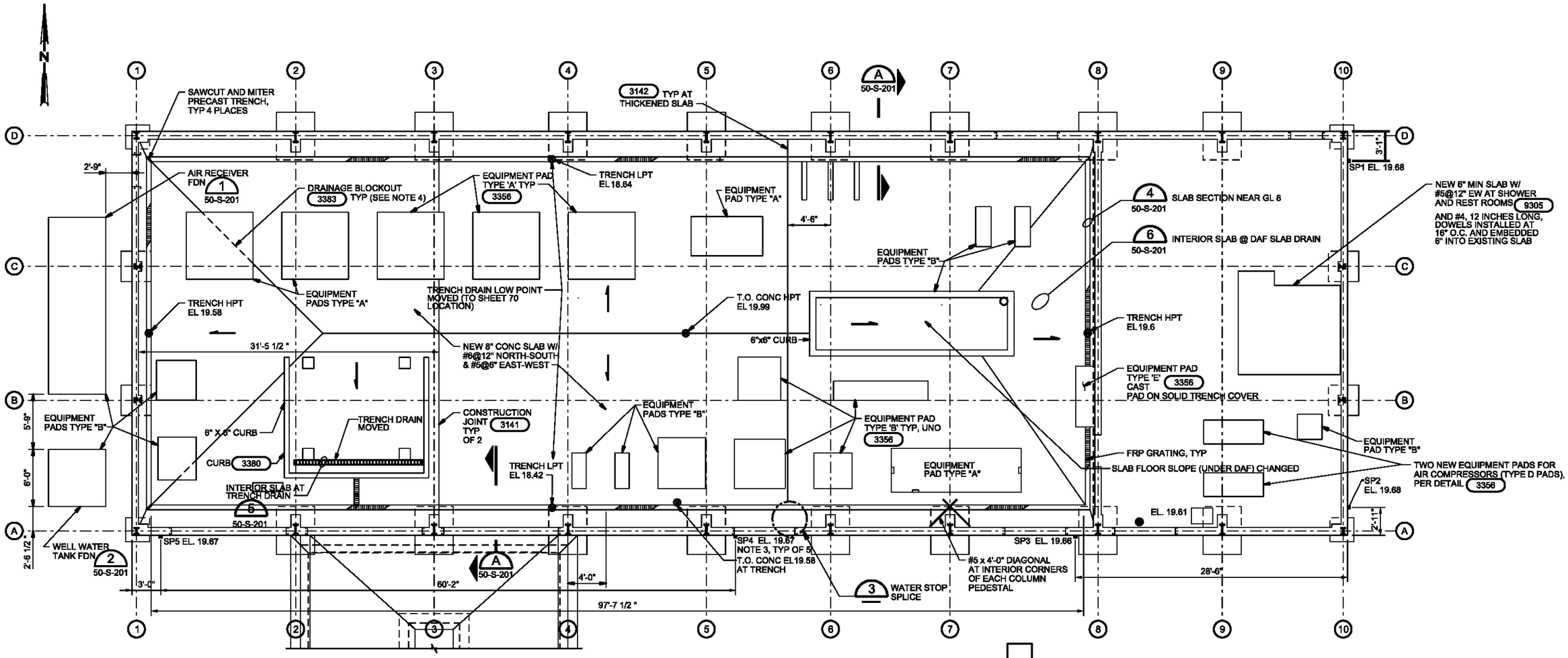

FOUNDATION PLAN

3/16"=1'-0"

NOTES:

1. TRENCH GRATING AT ROLL-UP DOOR (BETWEEN COLUMNS 3-A AND 4-A) AND UNDER MECHANICAL OR ELECTRICAL EQUIPMENT SHALL BE RATED FOR H20 TRUCK.
2. FLOOR COATING SYSTEM DETAILS PROVIDED UNDER SUBMITTAL 09900-9.1. FLOOR SURFACES PREPARED BY APPLYING 14-16 MILS OF KOESTERS VAP 1 #2000 FOLLOWED BY LIGHT SANDING AND VAPOR TRANSMISSION TESTING. VERTICAL SURFACES OF EQUIPMENT PADS COATED WITH 8-10 MILS SEMSTONE 110 FOLLOWED BY SCRATCH COAT OF SEMSTONE 110 BLENDED WITH 80/120 MESH SILICA AND THIXOTROPE PART "D", 1/16" INCH THICK, AND 40 MILS TOP COAT OF SEMSTONE 145 BLENDED WITH 80/120 MESH SILICA AND THIXOTROPE PART "D". TOP SURFACES OF EQUIPMENT PADS COATED WITH 8-10 MILS PRIMER (SEMSTONE 110) FOLLOWED BY 40 MILS TOPCOAT (SEMSTONE 145 BLENDED WITH 80/120 SILICA AND SEMSTONE THIXOTROPE PART 'D'). PROCESS FLOOR AREAS COATED WITH 8-10 MILS PRIMER (SEMSTONE 110), 20-25 MILS TACK-COAT (SEMSTONE 145), SCRIM CLOTH REINFORCEMENT, 30 MILS SATURANT COAT (SEMSTONE 145), AGGREGATE FILL (20/40 MESH SILICA OR ALUMINUM OXIDE) AND 20 MILS TOPCOAT (SEMSTONE 145).
3. SETTLEMENT POINTS (SP) ARE LOCATED ON EXTERIOR OF TREATMENT BUILDING AND CONSIST OF 1/4" RAWL BOLTS.
4. DRAINAGE BLOCKOUT UNDER EQUIPMENT PAD FOR GAC5 WAS PLUGGED AT BOTH ENDS.
5. EXPANSION JOINT TREATMENT
   A.) FLOOR TO WALL EXPANSION JOINTS COATED WITH 8-10 MILS SEMSTONE 110 FOLLOWED BY SEMSTONE 806 BLENDED WITH THIXOTROPE PART "D"; A TACK COAT OF SEMSTONE 806 (40-50 MILS); #100 POLYPROPYLENE REINFORCEMENT CLOTH IMBEDDED IN THE SEMSTONE 806; AND 10 MILS SATURANT COAT OF SEMSTONE 806.
   B.) EXPANSION JOINTS FOR FOOT TRAFFIC AREAS COATED WITH 8-10 MILS SEMSTONE 110 3 INCHES EITHER SIDE OF EXPANSION JOINT, FOLLOWED BY SEMSTONE 806 POURED INTO EXPANSION JOINT UNTIL FLUSH WITH CONCRETE FLOOR; DUCT TAPE PLACED CENTERED OVER JOINT; 40-50 MILS SEMSTONE 806; #100 REINFORCEMENT CLOTH IMBEDDED IN THE SEMSTONE 806; AND TOPCOAT OF SEMSTONE 806 (10 MILS).

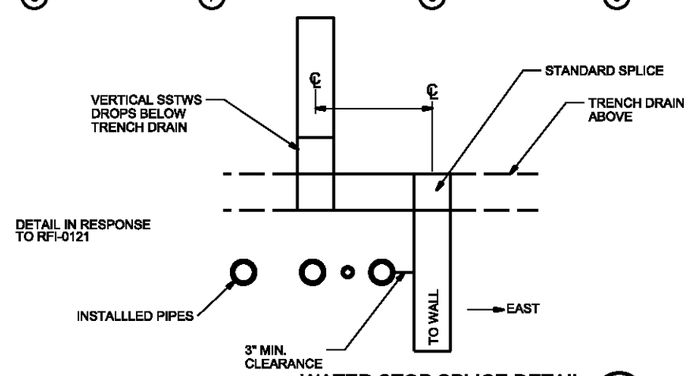

WATER STOP SPLICE DETAIL 3

NOT TO SCALE

AS-BUILT

DSGN RA HORNING	5	4/27/10	REVISED AS-BUILT	JB	ROW	VERIFY SCALE	
DR KJ DAVIS	4	12/15/09	PRELIMINARY AS-BUILT	JB	ROW	BAR IS ONE INCH ON ORIGINAL DRAWING. 0 1" IF NOT ONE INCH ON THIS SHEET, ADJUST SCALES ACCORDINGLY.	
CHK SM FREY	3	7/20/09	PRELIMINARY AS-BUILT	DLS	ROW		
APVD KT SCHEEFLER	1	3/4/09	AS-BUILT FIELD DATA - PRELIMINARY	JFF	GS		
	NO.	DATE	REVISION	BY	APVD		

CH2MHILL

US ENVIRONMENTAL PROTECTION AGENCY

WYCKOFF GROUNDWATER TREATMENT PLANT
BAINBRIDGE ISLAND, WA

TREATMENT FACILITY
STRUCTURAL
TREATMENT BUILDING FLOOR AND FOUNDATION PLAN

SHEET	44
DWG	50-S-141
DATE	JANUARY 4 2006
PROJ	316783.FD.B

FILENAME:50ns141d_316783.dgn PLOT DATE: 5/3/2010 PLOT TIME: 1:55:36 PM

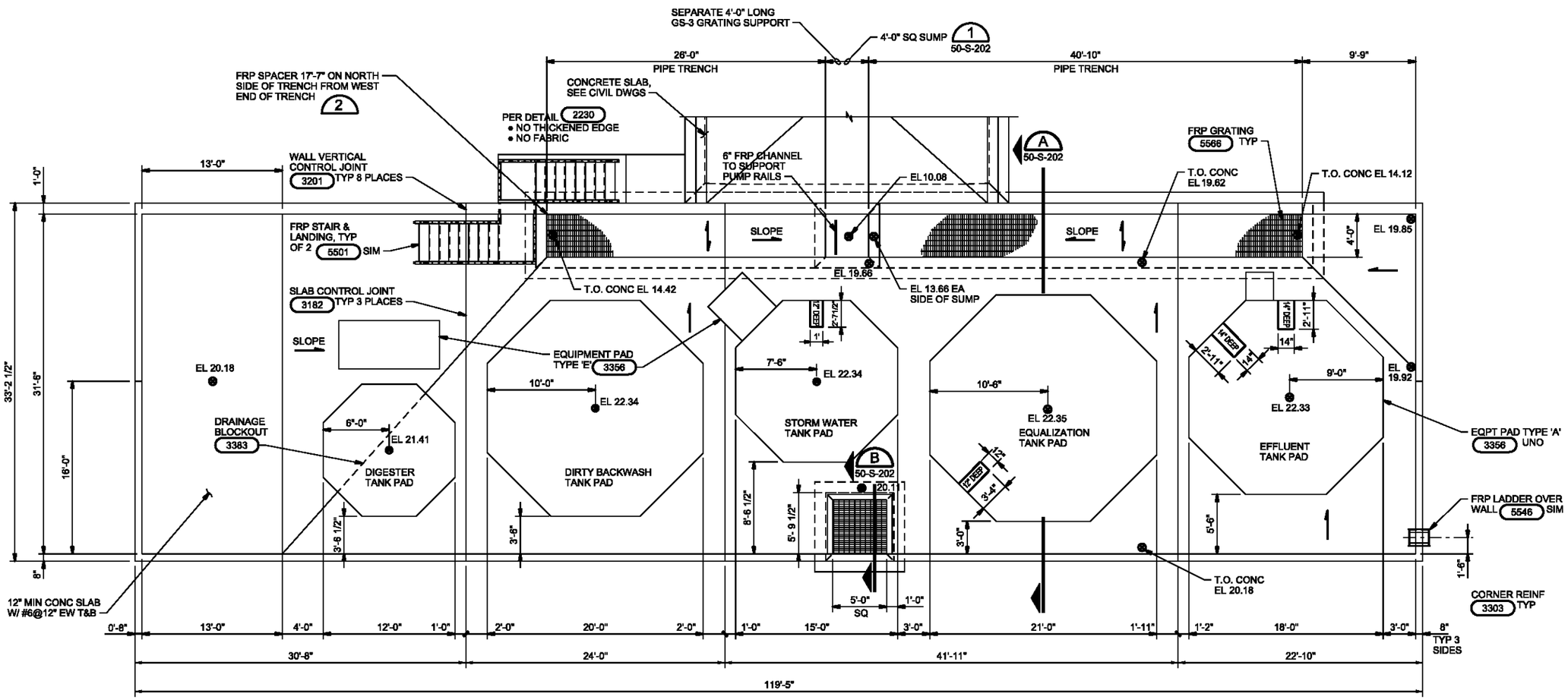

PLAN
3/16"=1'-0"

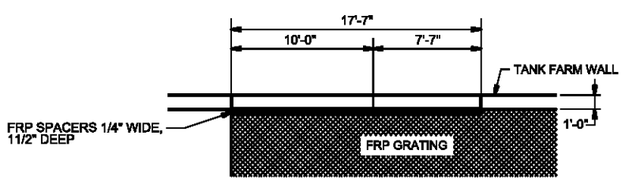

NOTE:
FRP SPACERS ATTACHED TO TANK FARM WALL WITH EPOXY AND STAINLESS STEEL ALL THREAD (1/4")

FRP SPACER DETAIL 2
NTS

AS-BUILT

DSGN RA HORNING	5	4/27/10	REVISED AS-BUILT	JB	ROW	VERIFY SCALE
DR KJ DAVIS	4	12/15/09	PRELIMINARY AS-BUILT	JB	ROW	BAR IS ONE INCH ON ORIGINAL DRAWING. 0 1" IF NOT ONE INCH ON THIS SHEET, ADJUST SCALES ACCORDINGLY.
CHK SM FREY	3	7/20/09	PRELIMINARY AS-BUILT	DLS	ROW	
APVD KT SCHEFFLER	1	3/4/09	AS-BUILT FIELD DATA - PRELIMINARY	JFF	GS	
	NO.	DATE	REVISION	BY	APVD	

CH2MHILL

US ENVIRONMENTAL PROTECTION AGENCY
WYCKOFF GROUNDWATER TREATMENT PLANT
BAINBRIDGE ISLAND, WA

TREATMENT FACILITY
STRUCTURAL
TANK FARM FOUNDATION PLAN

SHEET	45
DWG	50-S-142
DATE	JANUARY 4 2006
PROJ	316783.FD.B

FILENAME: 50ns142d_316783.dgn PLOT DATE: 5/4/2010 PLOT TIME: 10:40:17 AM

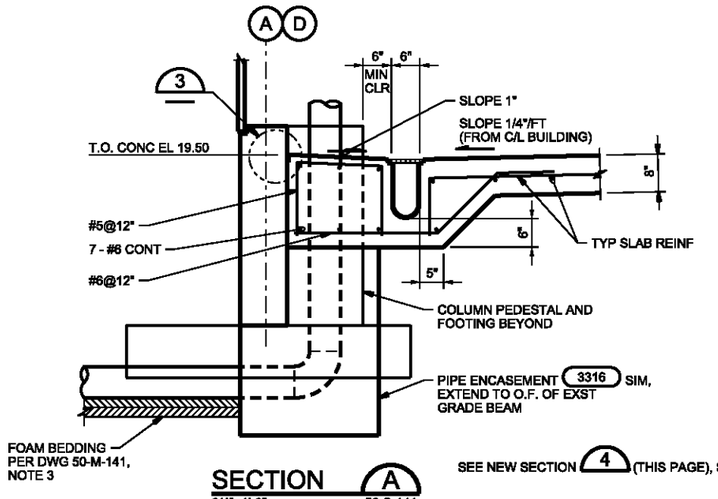

SEE NEW SECTION 4 (THIS PAGE), SLAB SECTION NEAR GL 8

SECTION A
3/4"=1'-0" 50-S-141

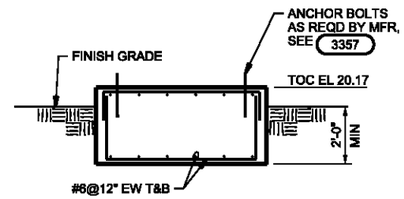

SECTION B
3/8"=1'-0"

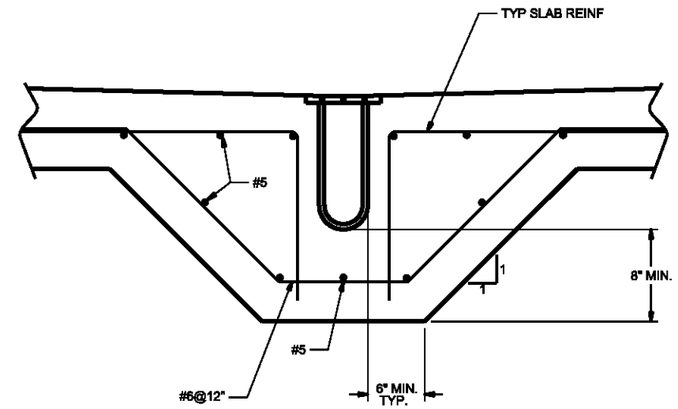

SECTION - TYPICAL INTERIOR SLAB @ TRENCH DRAIN 5
NTS 50-S-141

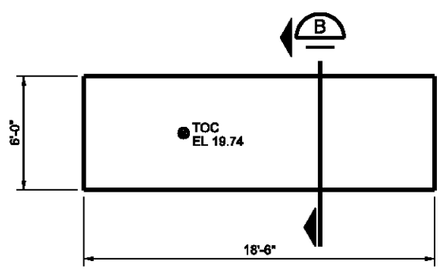

PLAN

AIR RECEIVER FOUNDATION 1
1/4"=1'-0" 50-S-141

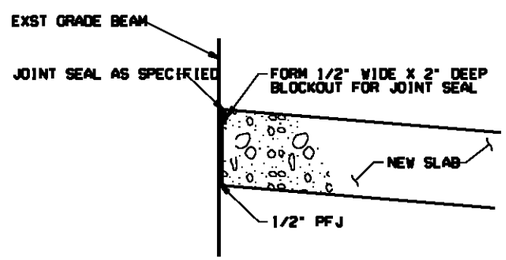

NOTE:
REINF NOT SHOWN

JOINT 3
NTS

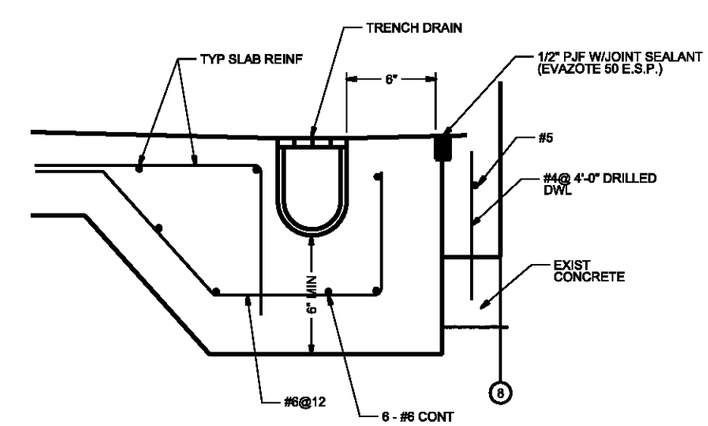

SLAB SECTION NEAR GL 8 (ALONG EAST WALL) 4
NTS 50-S-141

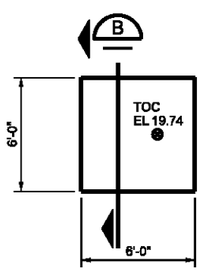

PLAN

WELL WATER TANK FOUNDATION 2
1/4"=1'-0" 50-S-141

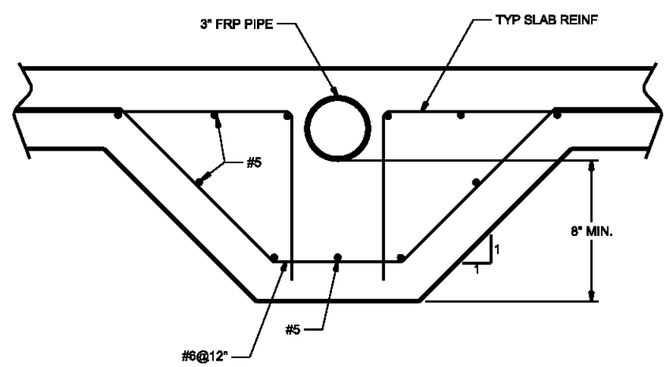

SECTION - TYPICAL INTERIOR SLAB AT DAF SLAB DRAIN 6
NTS 50-S-141

AS-BUILT

DSGN RA HORNING	5	4/27/10	REVISED AS-BUILT	JB	ROW	VERIFY SCALE
DR KJ DAVIS	4	12/15/09	PRELIMINARY AS-BUILT	JB	ROW	BAR IS ONE INCH ON ORIGINAL DRAWING. 0 1" IF NOT ONE INCH ON THIS SHEET, ADJUST SCALES ACCORDINGLY.
CHK SM FREY	3	7/20/09	PRELIMINARY AS-BUILT	DLS	ROW	
APVD KT SCHEEFLER	1	3/4/09	AS-BUILT FIELD DATA - PRELIMINARY	JFF	GS	
	NO.	DATE	REVISION	BY	APVD	

CH2MHILL

US ENVIRONMENTAL PROTECTION AGENCY
WYCKOFF GROUNDWATER TREATMENT PLANT
BAINBRIDGE ISLAND, WA

TREATMENT FACILITY
STRUCTURAL SECTIONS

SHEET	46
DWG	50-S-201
DATE	JANUARY 4 2006
PROJ	316783.FD.B

FILENAME: 50ns201d_316783.dgn PLOT DATE: 4/30/2010 PLOT TIME: 3:02:06 PM

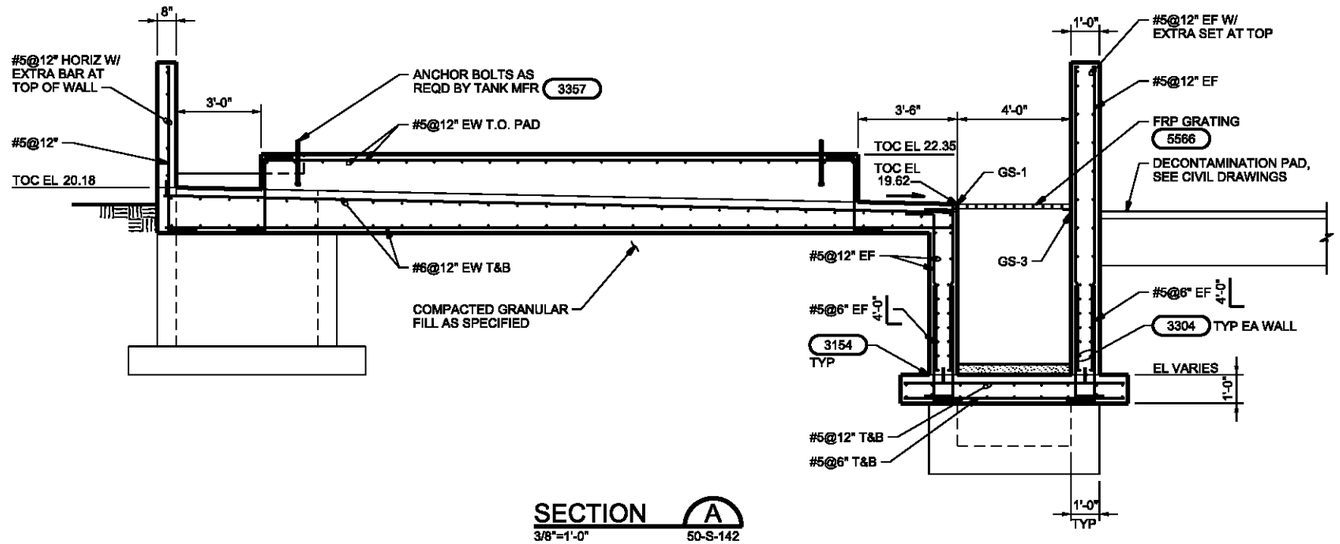

SECTION A
3/8"=1'-0" 50-S-142

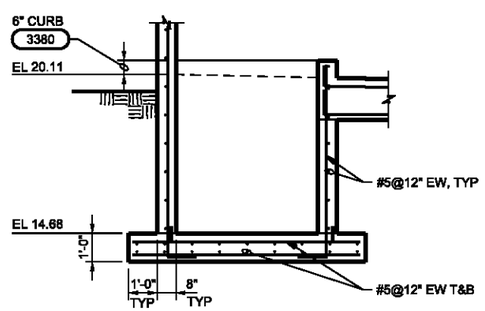

SECTION B
3/8"=1'-0" 50-S-142

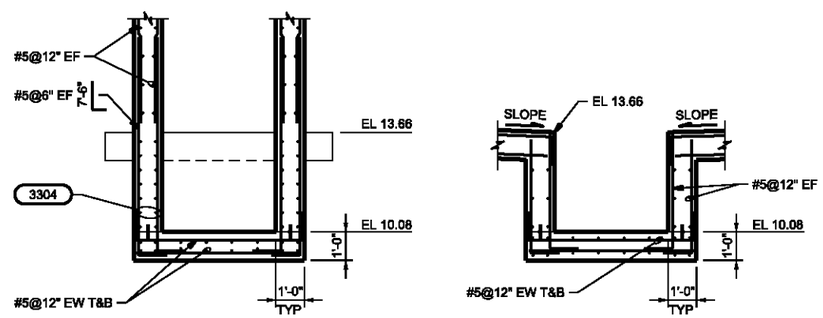

SUMP DETAILS 1
3/8"=1'-0" 50-S-142

AS-BUILT

DSGN RA HORNING	4	4/27/10	REVISED AS-BUILT	JB	ROW	VERIFY SCALE
DR KJ DAVIS	3	12/15/09	PRELIMINARY AS-BUILT	JB	ROW	BAR IS ONE INCH ON ORIGINAL DRAWING. 0 1" IF NOT ONE INCH ON THIS SHEET, ADJUST SCALES ACCORDINGLY.
CHK SM FREY	2	5/14/09	PRELIMINARY AS-BUILT	DLS	ROW	
APVD KT SCHEEFLER	1	3/4/09	AS-BUILT FIELD DATA - PRELIMINARY	JFF	GS	
	NO.	DATE	REVISION	BY	APVD	

CH2MHILL

US ENVIRONMENTAL PROTECTION AGENCY
WYCKOFF GROUNDWATER TREATMENT PLANT
BAINBRIDGE ISLAND, WA

TREATMENT FACILITY
STRUCTURAL
TANK FARM SECTION

SHEET	47
DWG	50-S-202
DATE	JANUARY 4 2006
PROJ	316783.FD.B

FILENAME: 50ns202d_316783.dgn PLOT DATE: 4/30/2010 PLOT TIME: 3:15:17 PM

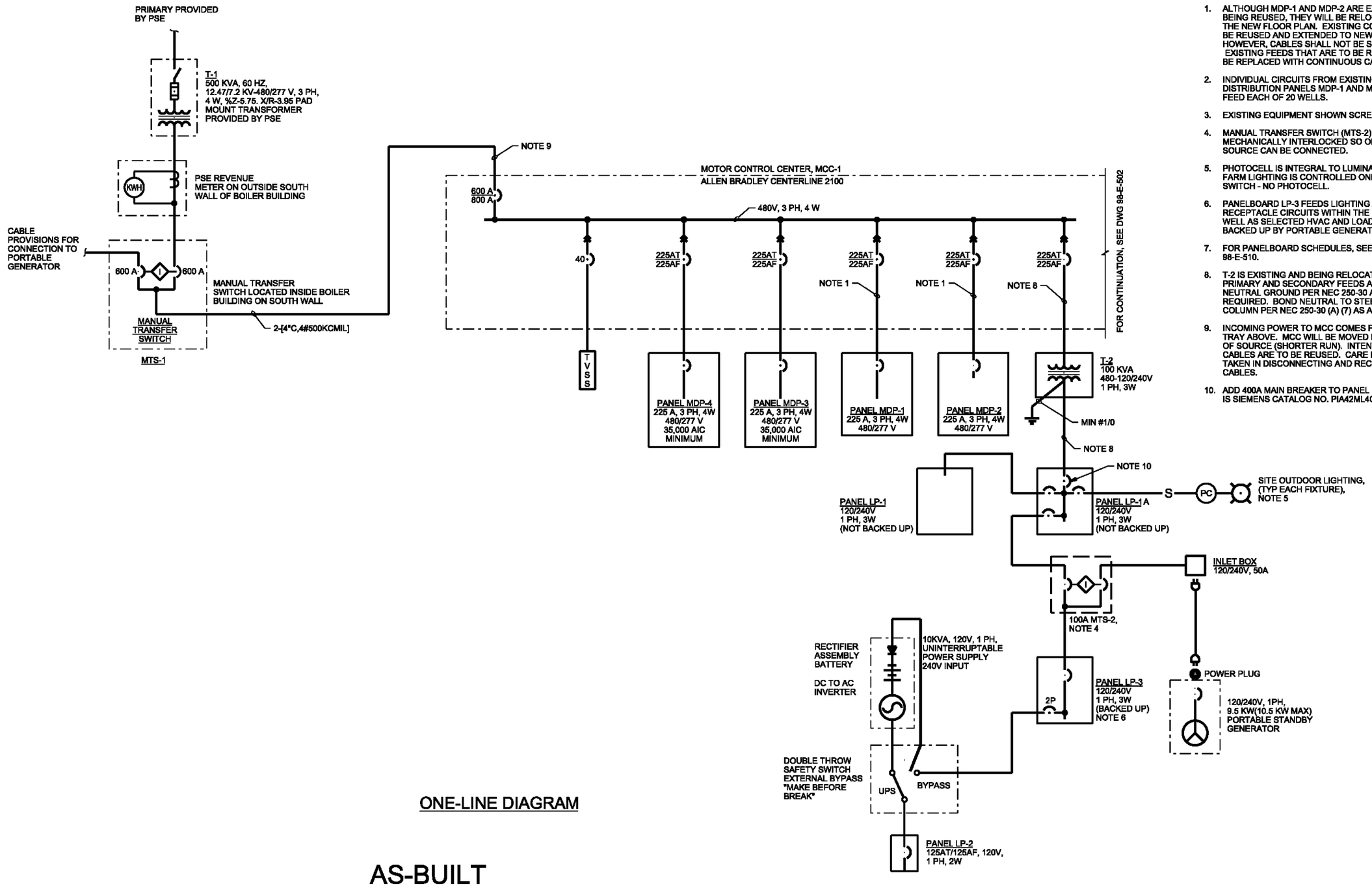

NOTES:

1. ALTHOUGH MDP-1 AND MDP-2 ARE EXISTING AND BEING REUSED, THEY WILL BE RELOCATED PER THE NEW FLOOR PLAN. EXISTING CONDUIT MAY BE REUSED AND EXTENDED TO NEW LOCATION, HOWEVER, CABLES SHALL NOT BE SPLICED. EXISTING FEEDS THAT ARE TO BE REUSED SHALL BE REPLACED WITH CONTINUOUS CABLE RUNS.
2. INDIVIDUAL CIRCUITS FROM EXISTING 480V DISTRIBUTION PANELS MDP-1 AND MDP-2 WILL FEED EACH OF 20 WELLS.
3. EXISTING EQUIPMENT SHOWN SCREENED.
4. MANUAL TRANSFER SWITCH (MTS-2) IS MECHANICALLY INTERLOCKED SO ONLY ONE SOURCE CAN BE CONNECTED.
5. PHOTOCELL IS INTEGRAL TO LUMINAIRE. TANK FARM LIGHTING IS CONTROLLED ONLY BY A SWITCH - NO PHOTOCELL.
6. PANELBOARD LP-3 FEEDS LIGHTING AND RECEPTACLE CIRCUITS WITHIN THE BUILDING AS WELL AS SELECTED HVAC AND LOADS TO BE BACKED UP BY PORTABLE GENERATOR.
7. FOR PANELBOARD SCHEDULES, SEE DRAWING 98-E-510.
8. T-2 IS EXISTING AND BEING RELOCATED. NEW PRIMARY AND SECONDARY FEEDS AND NEW NEUTRAL GROUND PER NEC 250-30 ARE REQUIRED. BOND NEUTRAL TO STEEL BUILDING COLUMN PER NEC 250-30 (A) (7) AS A MINIMUM.
9. INCOMING POWER TO MCC COMES FROM CABLE TRAY ABOVE. MCC WILL BE MOVED IN DIRECTION OF SOURCE (SHORTER RUN). INTENT IS EXISTING CABLES ARE TO BE REUSED. CARE IS TO BE TAKEN IN DISCONNECTING AND RECONNECTING CABLES.
10. ADD 400A MAIN BREAKER TO PANEL LP-1. PANEL IS SIEMENS CATALOG NO. PIA42ML400ATS.

ONE-LINE DIAGRAM

AS-BUILT

DSGN RL HAMILTON	4	4/27/10	REVISED AS-BUILT	JB	ROW	VERIFY SCALE
DR DW CLARK	3	12/15/09	PRELIMINARY AS-BUILT	JB	ROW	BAR IS ONE INCH ON ORIGINAL DRAWING. 0 1" IF NOT ONE INCH ON THIS SHEET, ADJUST SCALES ACCORDINGLY.
CHK TG OSSOWSKI	2	5/14/09	PRELIMINARY AS-BUILT	DLS	ROW	
	1	3/4/09	AS-BUILT FIELD DATA - PRELIMINARY	JFF	GS	
APVD KT SCHEFFLER	NO.	DATE	REVISION	BY	APVD	

CH2MHILL

US ENVIRONMENTAL PROTECTION AGENCY

WYCKOFF GROUNDWATER TREATMENT PLANT
BAINBRIDGE ISLAND, WA

ELECTRICAL

OVERALL PLANT ONE-LINE DIAGRAM

SHEET	78
DWG	98-E-501
DATE	JANUARY 4 2006
PROJ	316783.FD.B

FILENAME:98ne501d_316783.dgn PLOT DATE: 5/7/2010 PLOT TIME: 9:57:50 AM

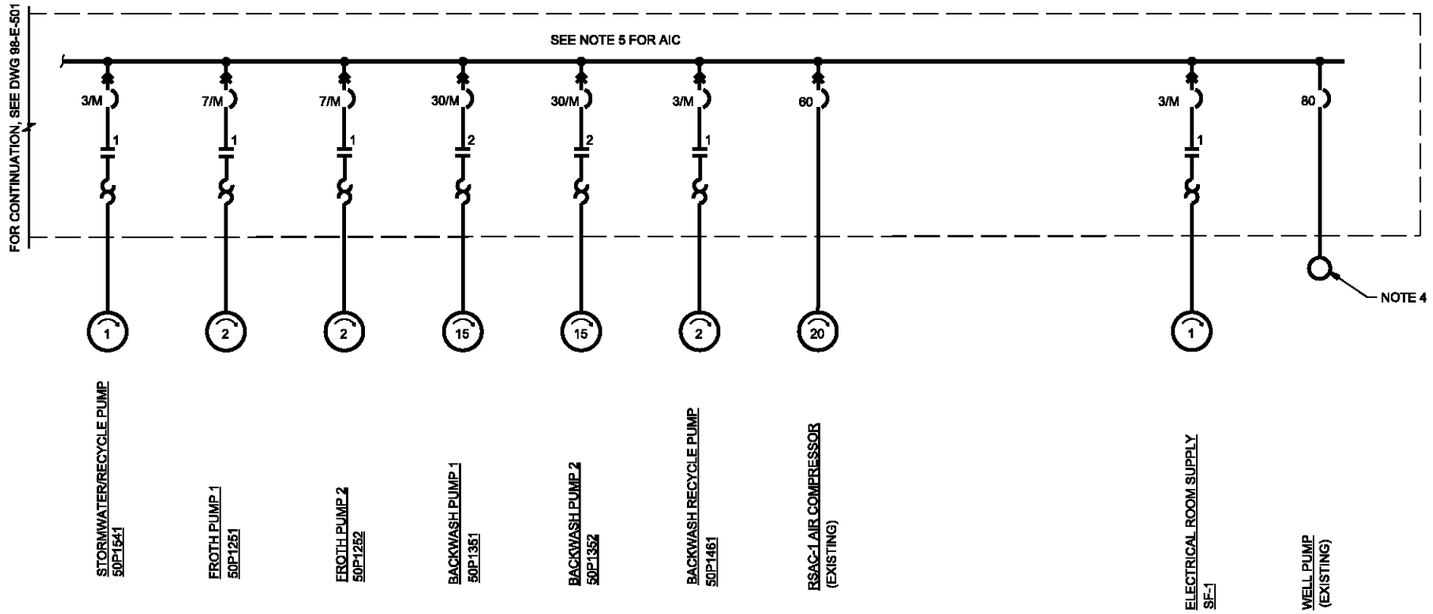

ONE-LINE DIAGRAM

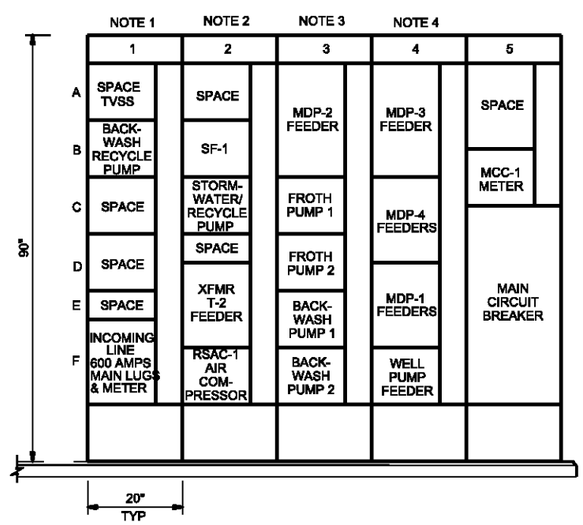

MCC-1 ELEVATION (REVISED EXISTING)

NTS

NOTES:

1. DEMO LVRP-1 IN 1A AND LVRP-2 IN 1B. REPLACE WITH NEW STARTERS AS SHOWN.
2. DEMO BLOWER STARTER IN 2A&B.

   REPLACE 24" DOOR WITH TWO 12" DOORS. REPLACE WITH NEW STARTERS AS SHOWN.
3. MCC-1 WILL BE RELOCATED PER THE NEW FLOOR PLAN. RECONNECT ALL REMAINING EQUIPMENT IN MCC-1. EXISTING CONDUIT MAY BE REUSED, HOWEVER, CABLES SHALL NOT BE SPLICED. EXISTING FEEDS THAT ARE TO BE REUSED SHALL BE REPLACED WITH CONTINUOUS CABLE RUNS.
4. CABLES TO EXISTING WELL PUMP ARE INTENDED TO BE REUSED AFTER MCC IS MOVED. CARE IS TO BE TAKEN IN DISCONNECTING AND RECONNECTING. IF NECESSARY TO INCREASE RUN LENGTH, ADD REQUIRED J-BOX, CONDUIT AND CABLE. SEE 98-E-505
5. ALL NEW STARTERS SHALL BE RATED 65,000 AIC MINIMUM.

AS-BUILT

DSGN RL HAMILTON	4	4/27/10	REVISED AS-BUILT	JB	ROW	VERIFY SCALE
DR DW CLARK	3	12/15/09	PRELIMINARY AS-BUILT	JB	ROW	BAR IS ONE INCH ON ORIGINAL DRAWING. 0 1" IF NOT ONE INCH ON THIS SHEET, ADJUST SCALES ACCORDINGLY.
CHK TG OSSOWSKI	2	5/14/09	PRELIMINARY AS-BUILT	DLS	ROW	
	1	3/4/09	AS-BUILT FIELD DATA - PRELIMINARY	JFF	GS	
APVD KT SCHEEFLER	NO.	DATE	REVISION	BY	APVD	

CH2MHILL

US ENVIRONMENTAL PROTECTION AGENCY

WYCKOFF GROUNDWATER TREATMENT PLANT
BAINBRIDGE ISLAND, WA

ELECTRICAL

ONE-LINE DIAGRAM AND MCC ELEVATION

SHEET	79
DWG	98-E-502
DATE	JANUARY 4 2006
PROJ	316783.FD.B

FILENAME: 98ne502d_316783.dgn PLOT DATE:5/7/2010 PLOT TIME:10:14:31 AM

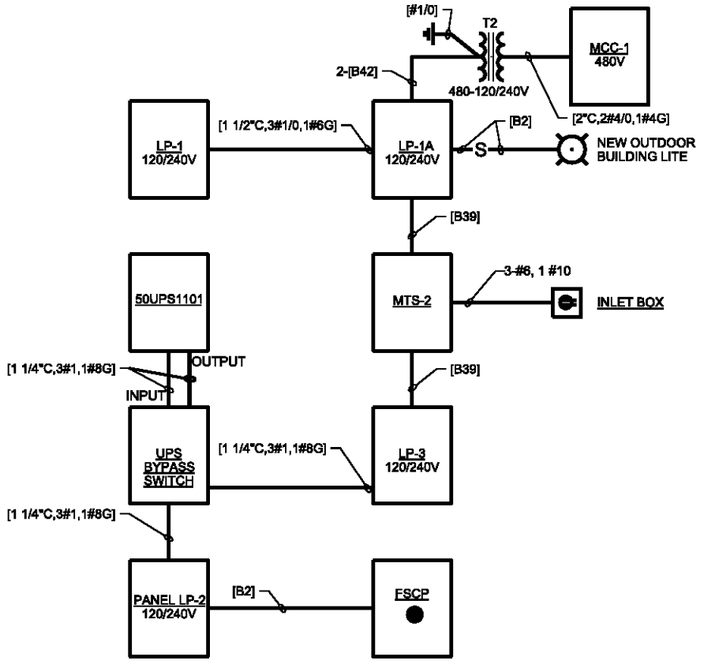

120/240V PANEL DISTRIBUTION
NTS

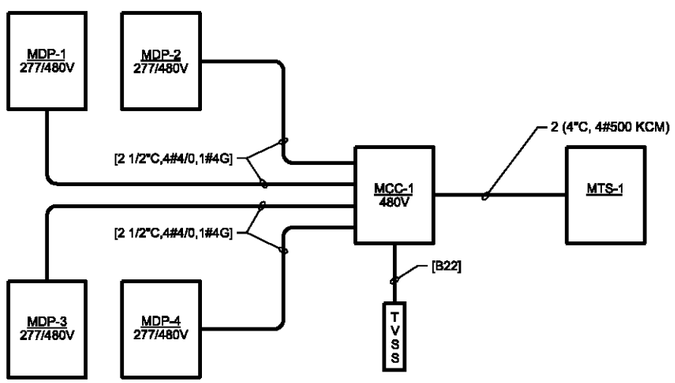

480Y/277V PANEL DISTRIBUTION
NTS

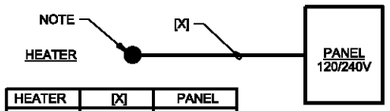

HEATER	[X]	PANEL
UH-1	[B21]	LP-1
UH-2	[B21]	LP-1
UH-3	[B21]	LP-1
UH-4	[B21]	LP-3
UH-5	[B21]	LP-3
WH-1	[B2]	LP-1A
WH-2	[B2]	LP-3

NOTE:
PROVIDE DICONNECT WHERE REQUIRED.

UNIT HEATER AND WATER HEATERS
NTS

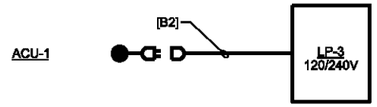

AIR CONDITIONING UNIT
NTS

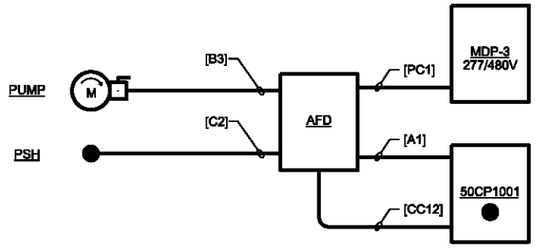

PUMP	AFD	PSH
50P1101	50AFD1101	PSH1111
50P1102	50ASD1102	PSH1112
50P1241	50AFD1241	N/A
50P1242	50AFD1242	N/A
50P1391	50AFD1391	N/A
50P1392	50AFD1392	N/A

ADJUSTABLE FREQUENCY DRIVE PUMPS
NTS

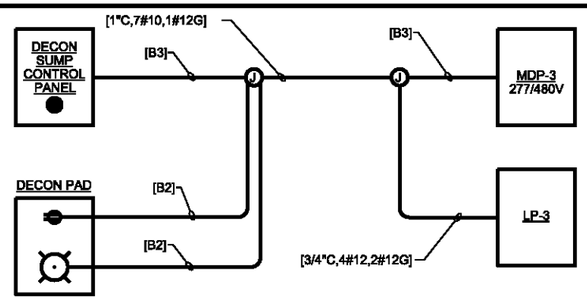

DECON PAD RECEPTACLE/LIGHT AND DECON SUMP CONTROL PANEL
NTS

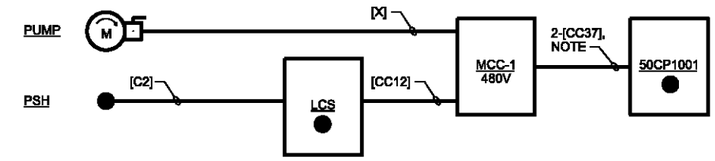

PUMP	[X]	LCS	PSH
50P1461	[PC1]	50CS1461	N/A
50P1541	[PC1]	50CS1541	N/A
50P1251	[PC1]	50CS1251	PSH1251
50P1252	[PC1]	50CS1252	PSH1252
50P1581	[PC1]	50LCS1581	
50P1582	[PC1]	50LCS1582	
50P1351	[PC2]	50CS1351	N/A
50P1352	[PC2]	50LCS1352	N/A

NOTE:
CABLE/CONDUIT CALLOUT BETWEEN MCC-1 AND 50LCP1001 REPRESENTS SUMMATION OF ALL PUMPS.

CONSTANT SPEED PUMPS
NTS

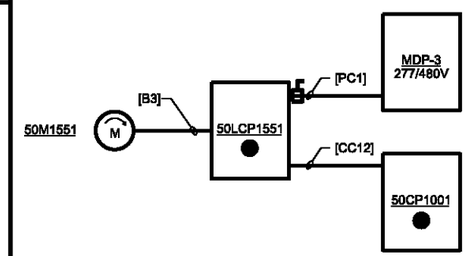

AERATION BLOWER
NTS

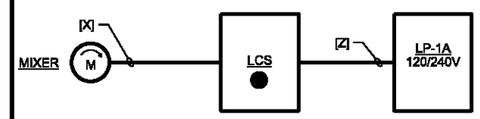

MIXER	[X]	LCS	[Z]
40M1431	[B16]	40LCS1431	[PC2]
40M1432	[B16]	40LCS1432	[PC2]
50M1480	[B16]	50LCS1480	[PC2]

TANK MIXERS
NTS

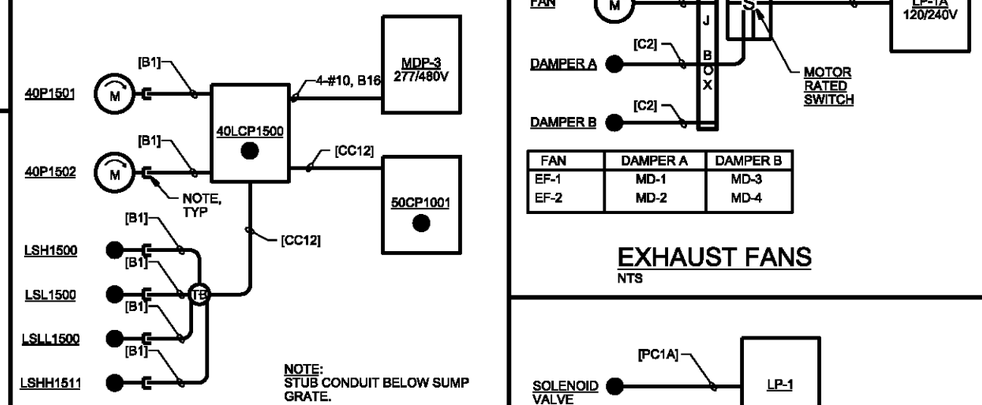

FAN	DAMPER A	DAMPER B
EF-1	MD-1	MD-3
EF-2	MD-2	MD-4

EXHAUST FANS
NTS

98ne503d_316783.dgn

SUMP PUMPS
NTS

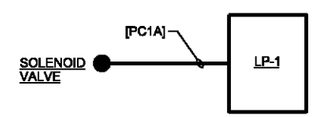

AIR RECEIVER
NTS

AS-BUILT

DSGN JC REID	4	4/27/10	REVISED AS-BUILT	JB	ROW	VERIFY SCALE
DR DW CLARK	3	12/15/09	PRELIMINARY AS-BUILT	JB	ROW	BAR IS ONE INCH ON ORIGINAL DRAWING. 0 1" IF NOT ONE INCH ON THIS SHEET, ADJUST SCALES ACCORDINGLY.
CHK TG OSSOWSKI	2	5/14/09	PRELIMINARY AS-BUILT	DLS	ROW	
	1	3/4/09	AS-BUILT FIELD DATA - PRELIMINARY	JFF	GS	
APVD KT SCHEEFLER	NO.	DATE	REVISION	BY	APVD	

CH2MHILL

US ENVIRONMENTAL PROTECTION AGENCY
WYCKOFF GROUNDWATER TREATMENT PLANT
BAINBRIDGE ISLAND, WA

ELECTRICAL

CABLE BLOCK DIAGRAMS

SHEET	80
DWG	98-E-503
DATE	JANUARY 4 2006
PROJ	316783.FD.B

FILENAME: 98ne503d_316783.dgn PLOT DATE: 5/7/2010 PLOT TIME: 10:41:58 AM

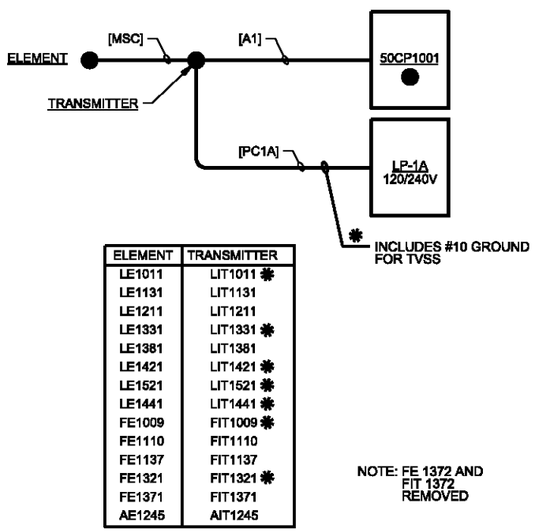

ELEMENT	TRANSMITTER
LE1011	LIT1011 ✱
LE1131	LIT1131
LE1211	LIT1211
LE1331	LIT1331 ✱
LE1381	LIT1381
LE1421	LIT1421 ✱
LE1521	LIT1521 ✱
LE1441	LIT1441 ✱
FE1009	FIT1009 ✱
FE1110	FIT1110
FE1137	FIT1137
FE1321	FIT1321 ✱
FE1371	FIT1371
AE1245	AIT1245

NOTE: FE 1372 AND FIT 1372 REMOVED

ELEMENT AND TRANSMITTER
NTS

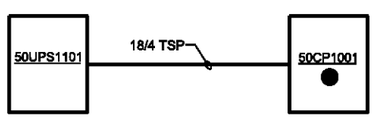

UPS CONTROL
NTS

AS-BUILT

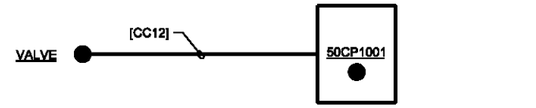

VALVE
FV1021
FV1451
FV1531

NOTE: POWER FOR THE SOLENOID ASSOCIATED WITH EACH OF THE AIR OPERATED VALVES (1 SOLENOID PER VALVE) PROVIDED FROM PLC (50CP1001)

AIR OPERATED VALVES
NTS

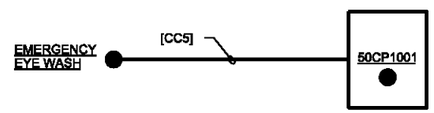

EMERGENCY EYE WASH
ZS1031
ZS1235
ZS1237

EMERGENCY EYE WASH
NTS

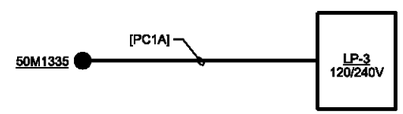

COMPOSITE SAMPLER
NTS

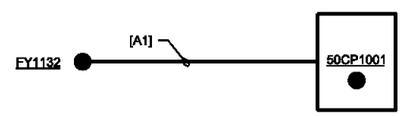

FLOW CONTROL VALVE RELAY
NTS

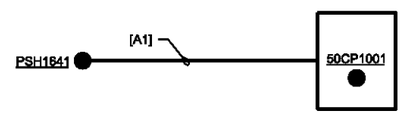

POLYMER SYSTEM PRESSURE INDICATOR
NTS

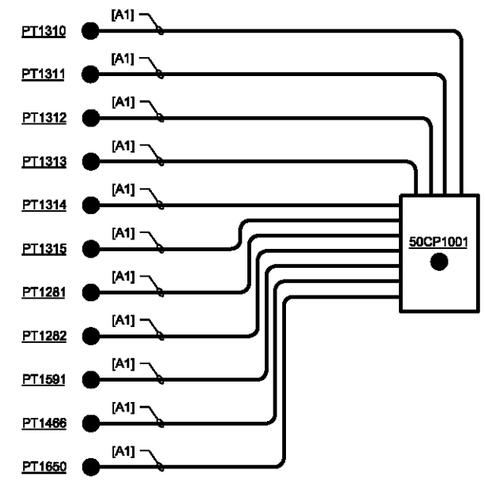

PRESSURE TRANSMITTERS
NTS

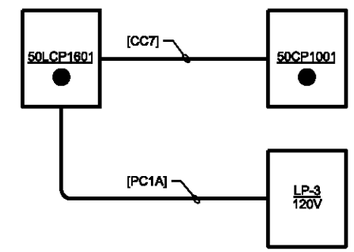

POLYMER SYSTEM
NTS

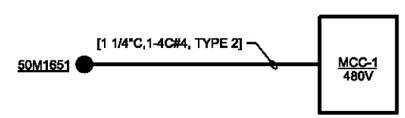

AIR COMPRESSOR 1
NTS

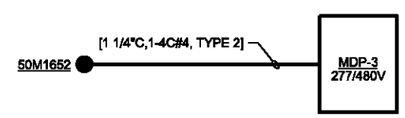

AIR COMPRESSOR 2
NTS

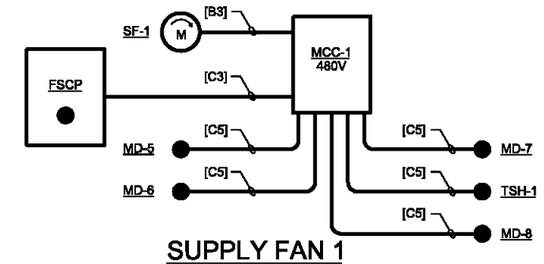

SUPPLY FAN 1
NTS

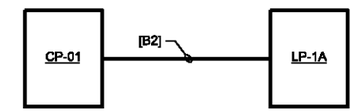

CIRC PUMP	PANEL
CP-01	LP-1A

HOT WATER CIRC PUMP
NTS

DSGN	JC REID	4	4/27/10	REVISED AS-BUILT	JB	ROW	VERIFY SCALE
DR	DW CLARK	3	12/15/09	PRELIMINARY AS-BUILT	JB	ROW	BAR IS ONE INCH ON ORIGINAL DRAWING. 0 1"
CHK	TG OSSOWSKI	2	5/14/09	PRELIMINARY AS-BUILT	DLS	ROW	IF NOT ONE INCH ON THIS SHEET, ADJUST SCALES ACCORDINGLY.
APVD	KT SCHEFFLER	1	3/4/09	AS-BUILT FIELD DATA - PRELIMINARY	JFF	GS	
		NO.	DATE	REVISION	BY	APVD	

CH2MHILL

US ENVIRONMENTAL PROTECTION AGENCY
WYCKOFF GROUNDWATER TREATMENT PLANT
BAINBRIDGE ISLAND, WA

ELECTRICAL

CABLE BLOCK DIAGRAMS

SHEET	81
DWG	98-E-504
DATE	JANUARY 4 2006
PROJ	316783.FD.B

FILENAME: 98ne504d_316783.dgn PLOT DATE: 5/7/2010 PLOT TIME: 10:55:28 AM

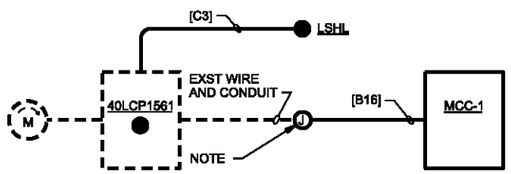

NOTE:
PROVIDE TERMINAL BLOCK IN JUNCTION BOX FOR CONNECTION BETWEEN EXISTING WIRE AND NEW WIRE. VERIFY NUMBER OF WIRES REQUIRED. OMIT J-BOX AND NEW WIRING IF EXISTING WIRE LENGTH ALLOWS RECONNECTING AFTER MCC IS RELOCATED.

WELL PUMP
NTS

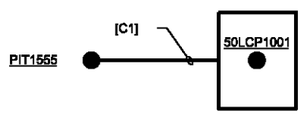

PRESSURE INDICATOR TRANSMITTER
NTS

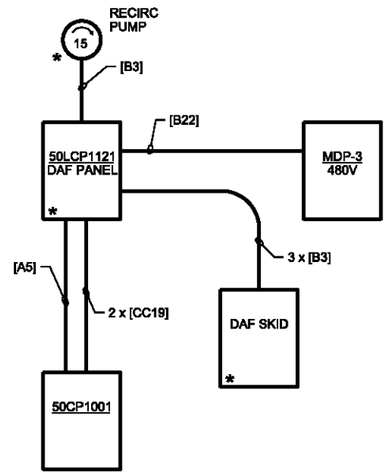

* VENDOR SUPPLIED COMPONENTS. ALL INTERCONNECTING WIRING BY CONTRACTOR.

DAF SYSTEM
NTS

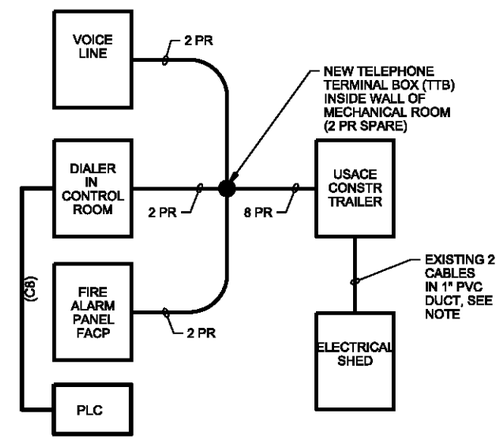

NOTE:
PULL BACK 2 EXISTING PHONE CABLES TO ELECTRICAL SHED. ADD NEW 8 PR AND PULL THE THREE CABLES BACK THROUGH EXISTING DUCT. 8 PR CONTINUES TO BOILER BUILDING. COORDINATE LOCATION OF VOICE LINE WITH OWNER.

PHONE DIALER RECEIVES POWER FROM PANEL LP-1A.

PHONE SYSTEM
NTS

1 - DEDICATED LINE FOR FIRE ALARM
1 - LINE FOR DIALER
1 - LINE FOR COMMUNICATIONS

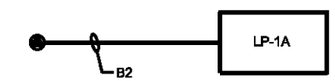

AIR DRYER
NTS

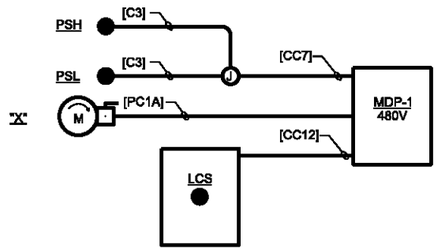

"X"	LCS
50P1581	50LCS1581
50P1582	50LCS1582

NOTE: PSL/PSH 1581 AND PSL/PSH 1582 REMOVED AND REPLACED BY PRESSURE TRANSDUCER PT-1591

PLANT WATER PUMPS
NTS

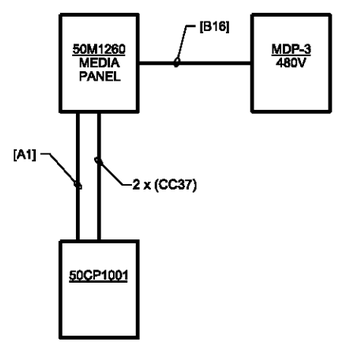

MEDIA FILTERS
NTS

AS-BUILT

DSGN JC REID	5	4/27/10	REVISED AS-BUILT	JB	ROW	VERIFY SCALE
DR DW CLARK	4	12/15/09	PRELIMINARY AS-BUILT	JB	ROW	BAR IS ONE INCH ON ORIGINAL DRAWING. 0 1" IF NOT ONE INCH ON THIS SHEET, ADJUST SCALES ACCORDINGLY.
CHK TG OSSOWSKI	3	7/20/09	PRELIMINARY AS-BUILT	DLS	ROW	
APVD KT SCHEEFLER	1	3/4/09	AS-BUILT FIELD DATA - PRELIMINARY	JFF	GS	
	NO.	DATE	REVISION	BY	APVD	

CH2MHILL

US ENVIRONMENTAL PROTECTION AGENCY
WYCKOFF GROUNDWATER TREATMENT PLANT
BAINBRIDGE ISLAND, WA

ELECTRICAL

CABLE BLOCK DIAGRAMS

SHEET	82
DWG	98-E-505
DATE	JANUARY 4 2006
PROJ	316783.FD.B

FILENAME: 98ne505d_316783.dgn PLOT DATE: 5/7/2010 PLOT TIME:11:11:50 AM

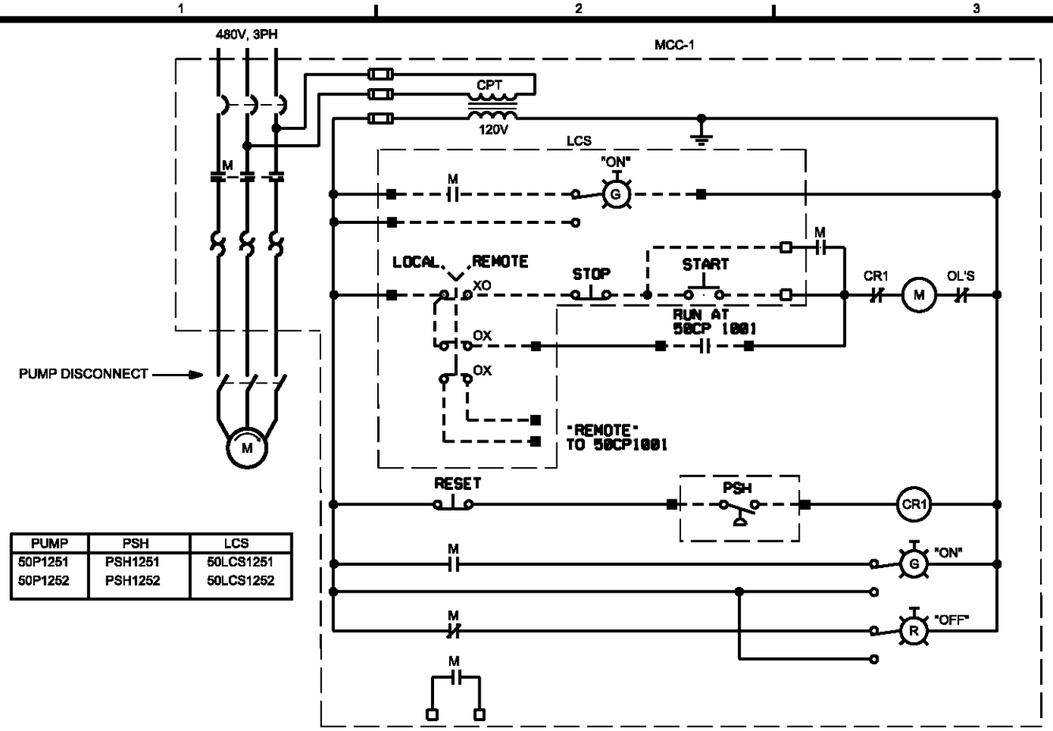

PUMP	PSH	LCS
50P1251	PSH1251	50LCS1251
50P1252	PSH1252	50LCS1252

FROTH PUMP 1, FROTH PUMP 2

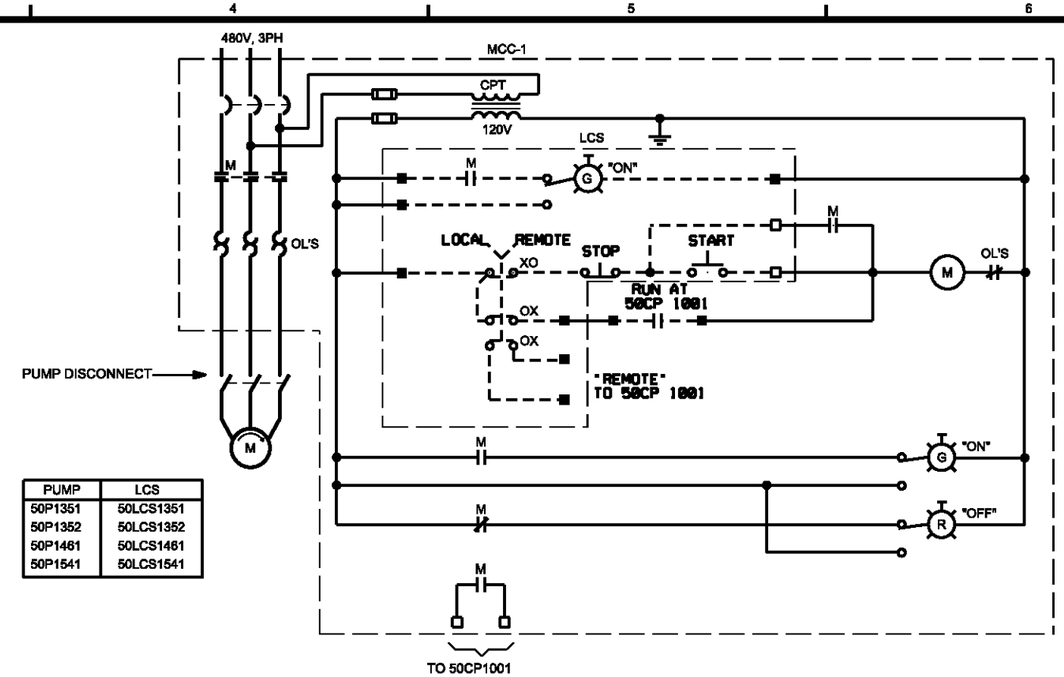

PUMP	LCS
50P1351	50LCS1351
50P1352	50LCS1352
50P1461	50LCS1461
50P1541	50LCS1541

BACKWASH PUMP 1, BACKWASH PUMP 2
BACKWASH RECYCLE PUMP 1,
STORM WATER RECYCLE PUMP

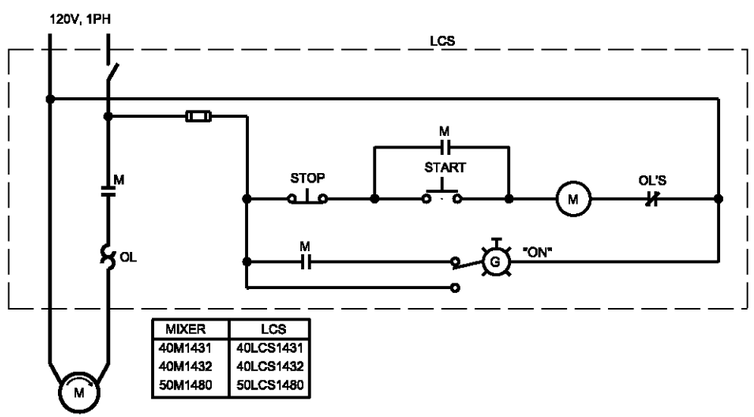

MIXER	LCS
40M1431	40LCS1431
40M1432	40LCS1432
50M1480	50LCS1480

FILTER PRESS FEED TANK MIXER 1
FILTER PRESS FEED TANK MIXER 2
FILTRATE TANK MIXER

AS-BUILT

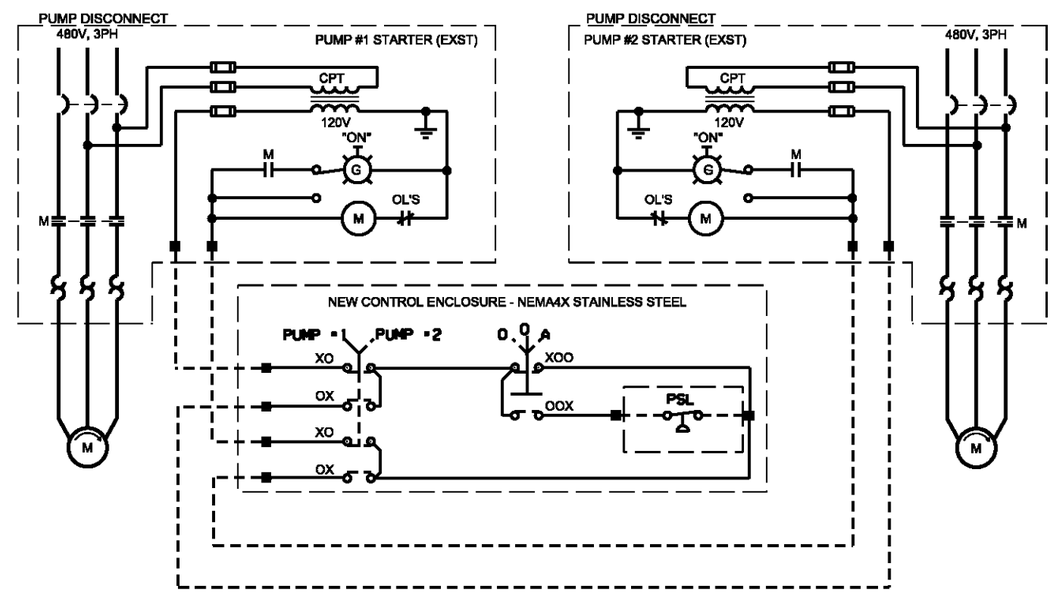

PLANT WATER PUMP 1, PLANT WATER PUMP 2

DSGN JC REID	4	4/27/10	REVISED AS-BUILT	JB	ROW	VERIFY SCALE
DR DW CLARK	3	12/15/09	PRELIMINARY AS-BUILT	JB	ROW	BAR IS ONE INCH ON ORIGINAL DRAWING. 0 1" IF NOT ONE INCH ON THIS SHEET, ADJUST SCALES ACCORDINGLY.
CHK TG OSSOWSKI	2	5/14/09	PRELIMINARY AS-BUILT	DLS	ROW	
APVD KT SCHEEFLER	1	3/4/09	AS-BUILT FIELD DATA - PRELIMINARY	JFF	GS	
	NO.	DATE	REVISION	BY	APVD	

CH2MHILL

US ENVIRONMENTAL PROTECTION AGENCY
WYCKOFF GROUNDWATER TREATMENT PLANT
BAINBRIDGE ISLAND, WA

ELECTRICAL

CONTROL DIAGRAMS

SHEET	83
DWG	98-E-506
DATE	JANUARY 4 2006
PROJ	316783.FD.B

FILENAME: 98ne506d_316783.dgn PLOT DATE: 5/7/2010 PLOT TIME: 11:20:42 AM

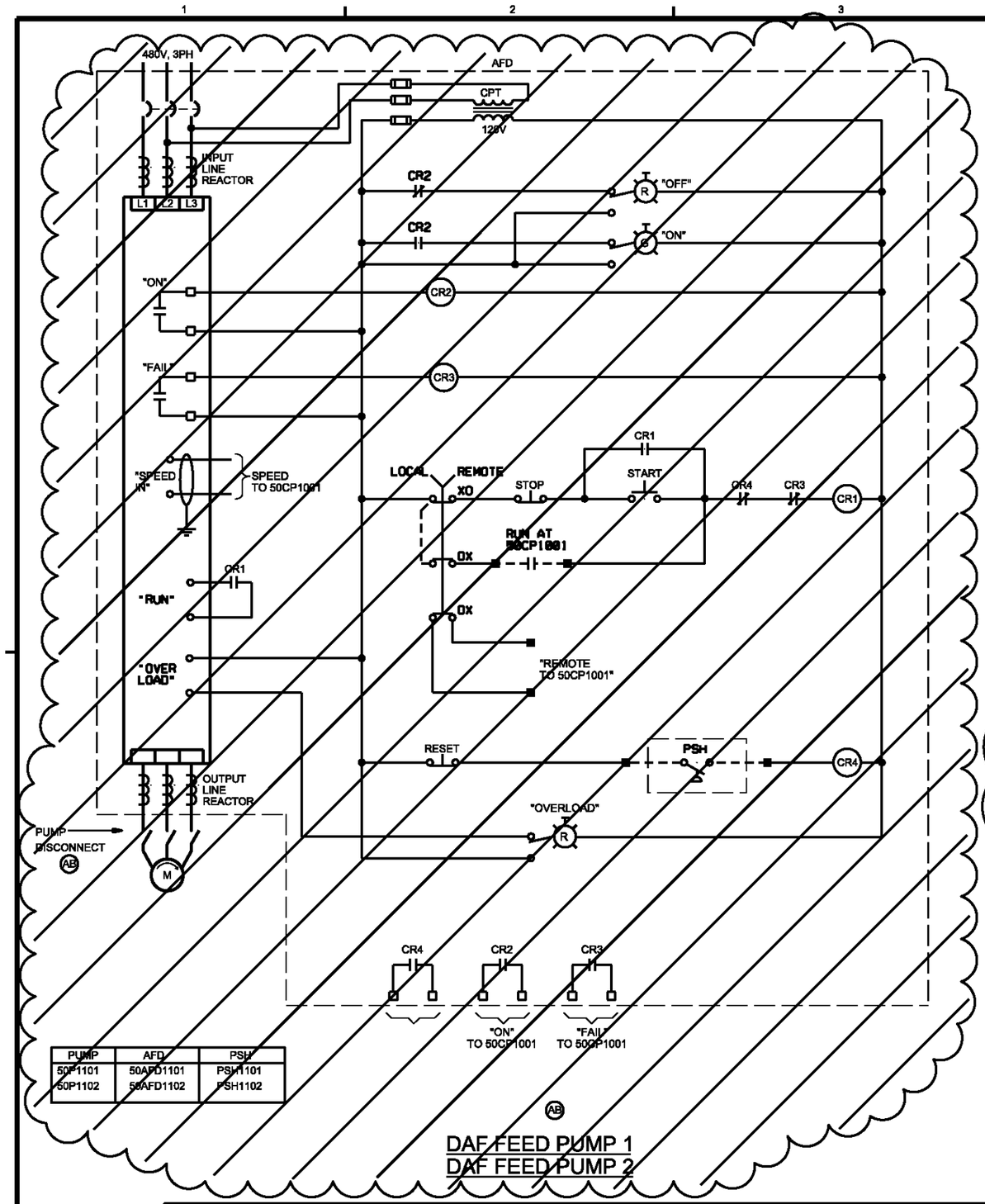

PUMP	AFD	PSH
50P1101	50AFD1101	PSH1101
50P1102	50AFD1102	PSH1102

DAF FEED PUMP 1
DAF FEED PUMP 2

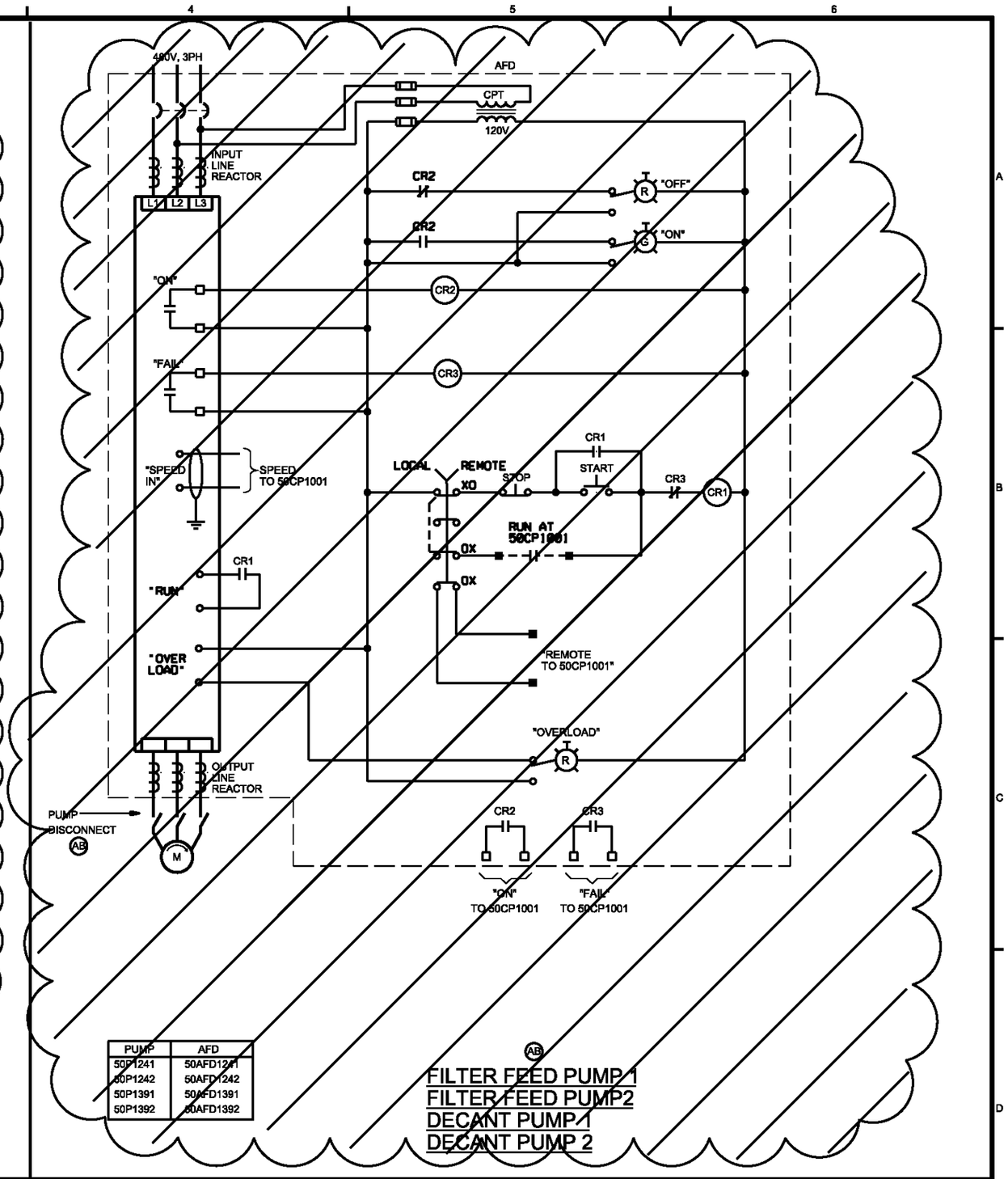

PUMP	AFD
50P1241	50AFD1241
50P1242	50AFD1242
50P1391	50AFD1391
50P1392	50AFD1392

FILTER FEED PUMP 1
FILTER FEED PUMP2
DECANT PUMP 1
DECANT PUMP 2

DSGN JC REID	4	4/15/10	PRELIMINARY AS-BUILT	JB	ROW	VERIFY SCALE	
DR DW CLARK	3	12/15/09	PRELIMINARY AS-BUILT	JB	ROW	BAR IS ONE INCH ON ORIGINAL DRAWING. 0 1" IF NOT ONE INCH ON THIS SHEET, ADJUST SCALES ACCORDINGLY.	
CHK TG OSSOWSKI	2	5/14/09	PRELIMINARY AS-BUILT	DLS	ROW		
APVD KT SCHEEFLER	1	3/4/09	AS-BUILT FIELD DATA - PRELIMINARY	JFF	GS		
	NO.	DATE	REVISION	BY	APVD		

CH2MHILL

US ENVIRONMENTAL PROTECTION AGENCY
WYCKOFF GROUNDWATER TREATMENT PLANT
BAINBRIDGE ISLAND, WA

ELECTRICAL

CONTROL DIAGRAMS

SHEET	84
DWG	98-E-507
DATE	JANUARY 4 2006
PROJ	316783.FD.B

FILENAME: 98ne507dA_316783.dgn PLOT DATE: 4/15/2010 PLOT TIME: 9:10:59 AM

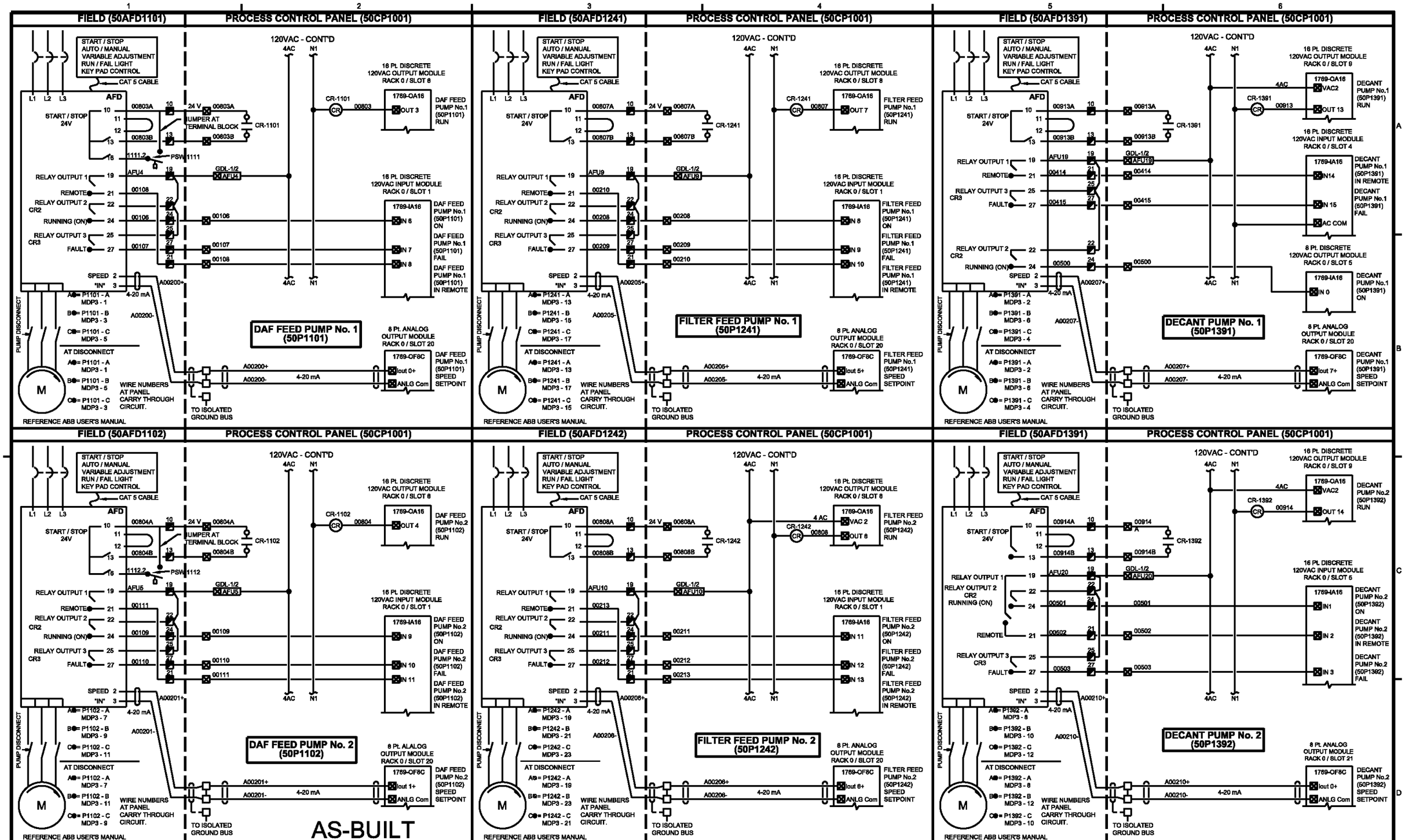

DSGN JC REID	5	4/27/10	REVISED AS-BUILT	JB	ROW	VERIFY SCALE
DR DW CLARK	4	4/22/10	PRELIMINARY AS-BUILT	JB	ROW	BAR IS ONE INCH ON ORIGINAL DRAWING. 0 1"
CHK TG OSSOWSKI	3	12/15/09	PRELIMINARY AS-BUILT	JB	ROW	IF NOT ONE INCH ON THIS SHEET, ADJUST SCALES ACCORDINGLY.
APVD KT SCHEFFLER	1	3/4/09	AS-BUILT FIELD DATA - PRELIMINARY	JFF	GS	
	NO.	DATE	REVISION	BY	APVD	

CH2MHILL

US ENVIRONMENTAL PROTECTION AGENCY

WYCKOFF GROUNDWATER TREATMENT PLANT
BAINBRIDGE ISLAND, WA

ELECTRICAL

CONTROL DIAGRAMS

SHEET	84
DWG	98-E-507
DATE	JANUARY 4 2006
PROJ	316783.FD.B

FILENAME: 98ne507dB_316783.dgn PLOT DATE: 5/7/2010 PLOT TIME: 11:30:23 AM

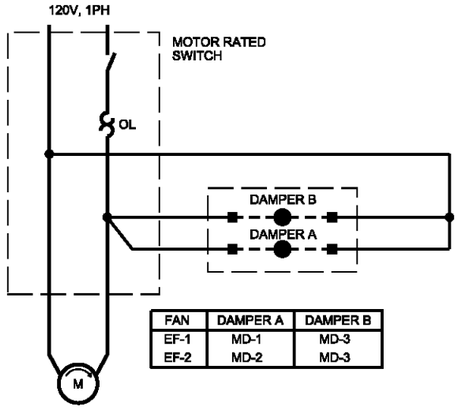

FAN	DAMPER A	DAMPER B
EF-1	MD-1	MD-3
EF-2	MD-2	MD-3

EXHAUST FAN 1
EXHAUST FAN 2

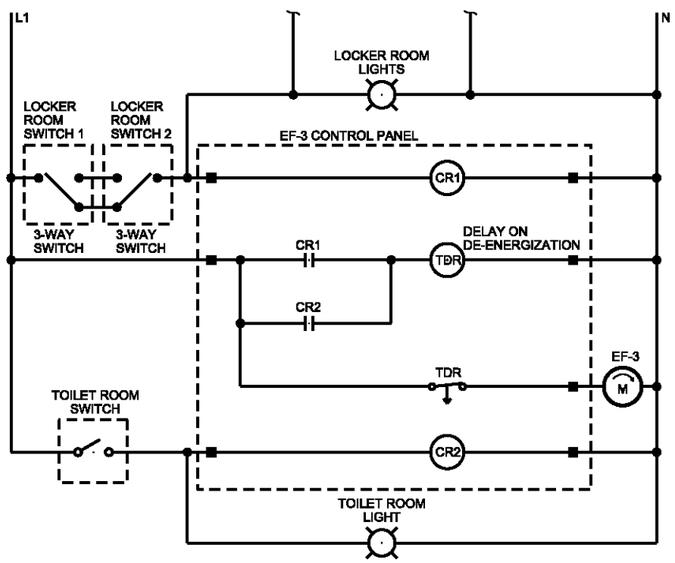

NOTE:
TIME DELAY RELAY IN NEMA 1 ENCLOSURE.
ADJUSTABLE FROM 1 TO 10 MINUTES, SET AT 5 MINUTES.

EXHAUST FAN 3

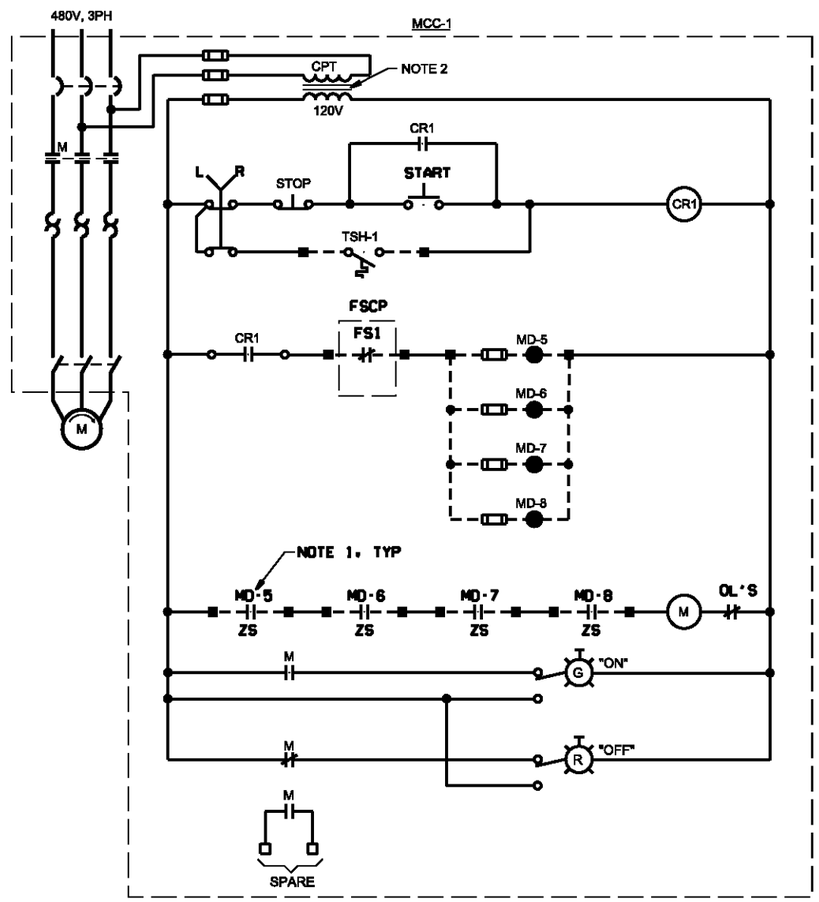

NOTES:

1. POSITION SWITCH PART OF DAMPER ASSEMBLY SEE SPECIFICATION 15810.
2. SIZE CONTROL PANEL TO SUPPORT ALL CONTROL DEVICE SHOWN ON DRAWING.

SUPPLY FAN 1

AS-BUILT

DSGN JC REID						
DR DW CLARK	3	4/27/10	REVISED AS-BUILT	JB	ROW
CHK TG OSSOWSKI	2	5/14/09	PRELIMINARY AS-BUILT	DLS	ROW
	1	3/4/09	AS-BUILT FIELD DATA - PRELIMINARY	JFF	GS
APVD KT SCHEFFLER	NO.	DATE	REVISION	BY	APVD

VERIFY SCALE
BAR IS ONE INCH ON ORIGINAL DRAWING.
0 1"
IF NOT ONE INCH ON THIS SHEET, ADJUST SCALES ACCORDINGLY.

CH2MHILL

US ENVIRONMENTAL PROTECTION AGENCY
WYCKOFF GROUNDWATER TREATMENT PLANT
BAINBRIDGE ISLAND, WA

ELECTRICAL
CONTROL DIAGRAMS

SHEET	85
DWG	98-E-508
DATE	JANUARY 4 2006
PROJ	316783.FD.B

FILENAME: 98ne508d_316783.dgn PLOT DATE: 5/7/2010 PLOT TIME: 11:36:15 AM

LUMINAIRE SCHEDULE

SYMBOL	TYPE	VOLTAGE	INPUT WATTS	DESCRIPTION	MANUFACTURER AND CATALOG NO.	LAMPS	MOUNTING
A	FLUOR	120	28	6" DIA DOWNLIGHT, VERTICAL BASE-UP MOUNT LIGHT, ALUMINUM HOUSING, CLEAR DIFFUSE REFLECTOR, WHITE METAL FLANGE.	LITHONIA LP6F/607A	(1) 26TRT 3500K/RS 26W	RECESSED
AW	FLUOR	120	28	SIMILAR TO TYPE 'A' EXCEPT: WITH DROP OPAL POLYCARBONATE LENS WITH WHITE PLASTIC FLANGE. LISTED FOR WET LOCATIONS.	LITHONIA LP6F/6LD1	(1) 26TRT 3500K/RS 26W	RECESSED
B2	FLUOR	120	66	1'x4' SURFACE ENCLOSED WRAPAROUND WITH LOW BRIGHTNESS INJECTED MOLDED ACRYLIC REFRACTOR.	METALUX SA-240IMA	(2) F32T8	SURFACE
B3	FLUOR	120	99	SIMILAR TO TYPE 'B2' EXCEPT: 2'x4' THREE LAMP WITH TWO BALLASTS FOR DUAL SWITCHING, NOTE 4.	METALUX SA-240IMA	(3) F32T8	SURFACE
BC	FLUOR	120	66	5"Wx48"L OPEN STANDARD CHANNEL STRIP, DIE FORMED STEEL WITH WHITE ENAMEL FINISH. WIRE GUARD.	LITHONIA "C" SERIES	(2) F32T8	COVE, SEE ARCH DETAILS
C	HID	120	120	15"x13"x9" EXTERIOR CUTOFF ADJUSTABLE WALL LIGHT WITH INTEGRAL PHOTOCELL. TYPE I I LIGHT DISTRIBUTION. UL LISTED FOR WET LOCATIONS.	KIM LIGHTING WALL DIRECTOR WD14 SERIES	(1) 100W HPS	WALL, MATCH EXST
D	HID	120	120	ENCLOSED INDUCTRIAL WITH PRISMATIC GLASS REFRACTOR. EVEN VERTICAL AND HORIZONTAL ILLUMINATION FOR SYMMETRIC LIGHT DISTRIBUTION. UL LISTED FOR WET LOCATIONS.	HOLOPHANE BANTAM 2000 PRISMATITE SERIES BA-10DHP-12-A-G	(1) 100W HPS	STANCHION AT 7'-6" ABOVE HANDRAIL FROM 1 1/2" CONDUIT
E	LED	120	7	EMERGENCY EXIT SIGN: DIE-CAST, UNIVERSAL SURFACE MOUNT, UNIVERSAL CHEVRONS, WHITE FINISH, RED LETTERS ON WHITE BACKGROUND. NICKEL CADMIUM BATTERY WITH AUTOMATIC AC/DC CONVERSION. SHADED AREA OF SYMBOL INDICATES ILLUMINATED FACE OF EXIT LIGHT.	PRESCOLITE EDC-1-R-EN-W	LED	WALL AT +8'-0" AFF, OR +1'-0" ABOVE DOOR
F	INCAND	120	17	EMERGENCY BATTERY UNIT WITH TWO FULLY DIRECTIONAL LAMP HEADS. COMPACT SIZE WITH WHITE FINISH. SOLID STATE CHARGER, PILOT LIGHT, TEST SWITCH, AND 10 YEAR LEAD BATTERY.	PRESCOLITE EDCS4 SERIES	(2) 7.2W	WALL AT +9'-0" AFF

NOTES:

1. THIS IS A STANDARD LUMINAIRE SCHEDULE. SOME LUMINIARES MAY APPEAR ON THE SCHEDULES BUT NOT ON THE PLANS.
2. ALL DIMENSIONS INDICATED ARE "NOMINAL DIMENSIONS".
3. THREE-LAMP FLUORESCENTS SHALL BE WIRED SO THAT THE TWO OUTSIDE LAMPS/BALLAST ARE CONTROLLED FROM ONE SWITCH AND THE INSIDE LAMP/BALLAST IS CONTROLLED FROM THE OTHER SWITCH.
4. FOR CEILING TYPES, SEE ARCHITECTURAL PLANS AND/OR SPECIFICATIONS.

AS-BUILT

DSGN RL HAMILTON					
DR DW CLARK	3	4/27/10	REVISED AS-BUILT	JB	ROW
CHK TG OSSOWSKI	2	5/14/09	PRELIMINARY AS-BUILT	DLS	ROW
	1	3/4/09	AS-BUILT FIELD DATA - PRELIMINARY	JFF	GS
APVD KT SCHEEFLER	NO.	DATE	REVISION	BY	APVD

VERIFY SCALE
BAR IS ONE INCH ON ORIGINAL DRAWING.
0 1"
IF NOT ONE INCH ON THIS SHEET, ADJUST SCALES ACCORDINGLY.

CH2MHILL

US ENVIRONMENTAL PROTECTION AGENCY
WYCKOFF GROUNDWATER TREATMENT PLANT
BAINBRIDGE ISLAND, WA

ELECTRICAL
LUMINAIRE SCHEDULE

SHEET	86
DWG	98-E-509
DATE	JANUARY 4 2006
PROJ	316783.FD.B

FILENAME: 98ne509d_316783.dgn PLOT DATE: 5/7/2010 PLOT TIME: 11:40:50 AM

PANEL: MDP-1

ELECTRICAL PANELBOARD SCHEDULE

VOLTAGE: 480Y/277V, 3PH, 4W
BUS SIZE: 250A
MAIN SIZE: 100A

LOCATION: ELECTRICAL RM 106
MOUNTING: SURFACE
FED FROM: MCC-1
MAIN TYPE: BREAKER

CIRCUIT TITLE	BREAKER CKT NO.	AMP	POLE	LOAD, VA PHASE A	B	C	LOAD, VA PHASE A	B	C	BREAKER POLE	AMP	CKT NO.	CIRCUIT TITLE
WELL PUMP (FUTURE)	1	***15***	***3***							***3***	***15***	2	WELL PUMP (FUTURE)
--	3	--	--							--	--	4	--
--	5	--	--							--	--	6	--
WELL PUMP (FUTURE)	7	***15***	***3***							***3***	***15***	8	WELL PUMP (FUTURE)
--	9	--	--							--	--	10	--
--	11	--	--							--	--	12	--
WELL PUMP (FUTURE)	13	***15***	***3***							***3***	***15***	14	WELL PUMP (FUTURE)
--	15	--	--							--	--	16	--
--	17	--	--							--	--	18	--
WELL PUMP (FUTURE)	19	***15***	***3***							***3***	***15***	20	WELL PUMP (FUTURE)
--	21	--	--							--	--	22	--
--	23	--	--							--	--	24	--
	25	***15***	***3***							***3***	***15***	26	
	27	--	--							--	--	28	
	29	--	--							--	--	30	
SPARE	31	***15***	***3***							***3***	***15***	32	SPARE
SPARE	33	--	--							--	--	34	SPARE
SPARE	35	--	--							--	--	36	SPARE
SPARE	37	***15***	***3***							***3***	***15***	38	***SPARE***
SPARE	39	--	--							--	--	40	SPARE
SPARE	41	--	--							--	--	42	SPARE
TOTAL LOAD				0	0	0	0	0	0				

PHASE A LOAD (VA) = 0
PHASE B LOAD (VA) = 0
PHASE C LOAD (VA) = 0
TOTAL LOAD (VA) = 0

I = 0.0 AMPS

PANEL: MDP

ELECTRICAL PANELBOARD SCHEDULE

VOLTAGE: 480Y/277V, 3PH, 4W
BUS SIZE: 250A
MAIN SIZE: N/A

LOCATION: ELECTRICAL RM 106
MOUNTING: SURFACE
FED FROM: MCC-1
MAIN TYPE: LUGS ONLY

CIRCUIT TITLE	BREAKER CKT NO.	AMP	POLE	LOAD, VA PHASE A	B	C	LOAD, VA PHASE A	B	C	BREAKER POLE	AMP	CKT NO.	CIRCUIT TITLE
SPACE	1											2	SPACE
--	3											4	--
--	5											6	--
SPACE	7											8	SPACE
--	9											10	--
--	11											12	--
SPACE	13											14	SPACE
--	15											16	--
--	17											18	--
SPACE	19											20	SPACE
--	21											22	--
--	23											24	--
SPACE	25											26	SPACE
--	27											28	--
--	29											30	--
SPACE	31											32	SPACE
--	33											34	--
--	35											36	--
SPACE	37											38	SPACE
--	39											40	--
--	41											42	--
TOTAL LOAD				0	0	0	0	0	0				

PHASE A LOAD (VA) = 0
PHASE B LOAD (VA) = 0
PHASE C LOAD (VA) = 0
TOTAL LOAD (VA) = 0

I = 0.0 AMPS

PANEL: LP-2

ELECTRICAL PANELBOARD SCHEDULE

VOLTAGE: 240V 1PH, 2W
BUS SIZE: 125A
MAIN SIZE: 125A

LOCATION: ELECTRICAL RM 106
MOUNTING: SURFACE
FED FROM: PANEL LP-3 VIA UPS
MAIN TYPE: BREAKER

CIRCUIT TITLE	BREAKER CKT NO.	AMP	POLE	LOAD, VA PHASE A	B	LOAD, VA PHASE	A	BREAKER POLE	AMP	CKT NO.	CIRCUIT TITLE
PROCESS CONTROL PANEL: 50CP1001	1	*20*	1	500			180	1	20	2	RECEPT: CONTROL ROOM
FSCP (FIRE PANEL)	3	***20***	***1***	200			180	1	20	4	RECEPT: CONTROL ROOM CLOSET
SPARE	5	***20***	***1***					1	20	6	SPARE
SPARE	7	20						1	20	8	SPARE
SPARE	9	20						1	20	10	SPARE
FACP	11	***20***	***1***	100				1	20	12	SPARE
	13									14	SPACE
	15									16	SPACE
SPACE	17									18	SPACE
SPACE	19									20	SPACE
SPACE	21									22	SPACE
SPACE	23									24	SPACE
TOTAL LOAD				800	0	0	360				

PHASE A LOAD (VA) = 1160
TOTAL LOAD (VA) = 1160

I = 9.7 AMPS

PANEL: MDP-2

ELECTRICAL PANELBOARD SCHEDULE

VOLTAGE: 480Y/277V, 3PH, 4W
BUS SIZE: 250A
MAIN SIZE: 100A

LOCATION: ELECTRICAL RM 106
MOUNTING: SURFACE
FED FROM: MCC-1
MAIN TYPE: BREAKER

CIRCUIT TITLE	BREAKER CKT NO.	AMP	POLE	LOAD, VA PHASE A	B	C	LOAD, VA PHASE A	B	C	BREAKER POLE	AMP	CKT NO.	CIRCUIT TITLE
SPARE	1	***15***	***3***							***3***	***15***	2	SPARE
-- SPARE	3	--	--							--	--	4	-- SPARE
-- SPARE	5	--	--							--	--	6	-- SPARE
SPARE	7	***15***	***3***							***3***	***15***	8	SPARE
-- SPARE	9	--	--							--	--	10	-- SPARE
-- SPARE	11	--	--							--	--	12	-- SPARE
SPARE	13	***15***	***3***							***3***	***15***	14	SPARE
-- SPARE	15	--	--							--	--	16	-- SPARE
-- SPARE	17	--	--							--	--	18	-- SPARE
SPARE	19	***15***	***3***							***3***	***15***	20	SPARE
-- SPARE	21	--	--							--	--	22	-- SPARE
-- SPARE	23	--	--							--	--	24	-- SPARE
SPACE	25									3	60	26	SPARE
-- SPACE	27	--	--							--	--	28	-- SPARE
-- SPACE	29	--	--							--	--	30	-- SPARE
SPACE	31											32	***SPACE***
-- SPACE	33											34	-- SPACE
-- SPACE	35											36	-- SPACE
SPACE	37											38	***SPACE***
-- SPACE	39											40	-- SPACE
-- SPACE	41											42	-- SPACE
TOTAL LOAD				0	0	0	0	0	0				

PHASE A LOAD (VA) = 0
PHASE B LOAD (VA) = 0
PHASE C LOAD (VA) = 0
TOTAL LOAD (VA) = 0

I = 0.0 AMPS

NOTE 3

PANEL: LP-1

ELECTRICAL PANELBOARD SCHEDULE

VOLTAGE: 120/240V, 1PH, 3W
BUS SIZE: 400A
MAIN SIZE: N/A

LOCATION: ELECTRICAL RM 106
MOUNTING: SURFACE
FED FROM:
MAIN TYPE:

CIRCUIT TITLE	BREAKER CKT NO.	AMP	POLE	LOAD, VA PHASE A	B	LOAD, VA PHASE A	B	BREAKER POLE	AMP	CKT NO.	CIRCUIT TITLE
	1			5552		500		***1***	***20***	2	AIR RECEIVER SOLENOID VALVE
	3				3916			***1***	***20***	4	PORTABLE TANK MIXER
	5			11330				***1***	***20***	6	SPARE
	7				11490			***1***	***20***	8	SPARE
	9	***20***	***1***					***1***	***20***	10	SPARE
SPARE	11	***20***	***1***					***1***	***20***	12	SPARE
WELL LIGHTS / RECEPTACLE	13	***20***	***1***			700		***1***	***20***	14	***LTS: EXTERIOR***
	15	***20***	***1***					***1***	***20***	16	EM LTS: PROCESS ROOM
UH-3 PROCESS ROOM (EAST)	17		***1***					***1***	***20***	18	SPARE
UH-3 PROCESS ROOM (EAST)	19		***1***					***1***	***20***	20	SPARE
LTS: PROCESS ROOM (NORTH)	21	***20***	***2***	1250		2500		***2***	***40***	22	***UH-1: PROCESS ROOM***
LTS: PROCESS ROOM (NORTH)	23		--		1250		2500	--	--	24	--UH-1: PROCESS ROOM (WEST)
LTS: PROCESS ROOM (SOUTH)	25	***20***	***2***	1375				***2***	***40***	26	SPARE
LTS: PROCESS ROOM (SOUTH)	27		--		1375			--	--	28	--SPARE
UH-2: PROCESS ROOM (NORTH)	29		2	2000				***2***	***40***	30	UH-4: ELECTRIC ROOM
UH-2 PROCESS ROOM (NORTH)	31	40	--		2000			--	--	32	--UH-4: ELECTRIC ROOM
	33		2	2000				***2***	***15***	34	SPARE
--	35		--		2000			--	--	36	--
SPARE	37		***2***					***1***	***20***	38	SPARE
--	39		--					***1***	***20***	40	SPARE
	41	***20***	***1***					***1***	***20***	42	SPARE
TOTAL LOAD				23507	22031	3700	2500				

PHASE A LOAD (VA) = 27207
PHASE B LOAD (VA) = 24531
TOTAL LOAD (VA) = 51738

I = 215.6 AMPS

NOTE 4

PANEL: LP-3 (NEW)

ELECTRICAL PANELBOARD SCHEDULE

NOTE 4

VOLTAGE: 120/240V, 1PH, 3W
BUS SIZE: 250A
MAIN SIZE: 150A

LOCATION: ELECTRICAL RM 106
MOUNTING: SURFACE
FED FROM: PANEL
MAIN TYPE: BREAKER

CIRCUIT TITLE	BREAKER CKT NO.	AMP	POLE	LOAD, VA PHASE A	B	LOAD, VA PHASE A	B	BREAKER POLE	AMP	CKT NO.	CIRCUIT TITLE
	1					--			100	2	UPS BYPASS SWITCH
	3						--			4	
RECEPTS: PROCESS ROOM (NORTH)	5	20	1	900		360		1	20	6	RECEPT: CORRIDOR
RECEPTS: PROCESS ROOM (SOUTH)	7	20	1		1080		540	1	20	8	RECEPT: ELECTRIC/MECHANICAL
LTS: DECON PAD	9	20	1	100		180		1	20	10	
RECEPTS: DECON PAD	11	20	1		360		180	1	20	12	RECEPT: RESTROOM
ACU-1: AIR CONDITIONER	13	20	2	1920				1	20	14	SPARE
ACU-1 AIR CONDITIONER	15	--	--		1920		500	1	20	16	
COMPOSITE SAMPLER: 50M1335	17	20	1			530		1	20	18	LTS: ELECTRICAL/ MECHANICAL RM
POLYMER SYSTEM: 50CP1601	19	20	1		0		910	1	20	20	LTS: CONTROL/ SHOWER/ CORR/ BATH
SPARE	21	20	1			1340		1	20	22	EF-3 & LIGHTS LOCKER/RESTROOM
SPARE	23	20	1				2500	2	40	24	
WH-2: RESTROOM	25	20	2	1000		2500		--	--	26	--SPARE
WH-2 RESTROOM	27	--	--		1000		2500	2	40	28	UH-5: MECHANICAL ROOM
SPARE	29	20	1			2500		--	--	30	--UH-5: MECHANICAL ROOM
SPARE	31	20	1							32	SPACE
SPACE	33									34	SPACE
SPACE	35									36	SPACE
SPACE	37					360		1	20	38	RECEPT: CONTROL ROOM
SPACE	39						360	1	20	40	RECEPT: SHOWER/LOCKER ROOM
SPACE	41					540		1	20	42	RECEPT: TANK FARM
TOTAL LOAD				3920	4360	7410	7130				

NOTES:
1. PROVIDE HACR RATED CB FOR ACU-1.

PHASE A LOAD (VA) = 11330
PHASE B LOAD (VA) = 11490
TOTAL LOAD (VA) = 22820

I = 95.1 AMPS

PANEL: MDP-3 (NEW)

ELECTRICAL PANELBOARD SCHEDULE

VOLTAGE: 480Y/277V, 3PH, 4W
BUS SIZE: 250A
MAIN SIZE: N/A

LOCATION: ELECTRICAL RM 106
MOUNTING: SURFACE
FED FROM: MCC-1
MAIN TYPE: LUGS ONLY

CIRCUIT TITLE	BREAKER CKT NO.	AMP	POLE	LOAD, VA PHASE A	B	C	LOAD, VA PHASE A	B	C	BREAKER POLE	AMP	CKT NO.	CIRCUIT TITLE
DAF FEED PUMP 1	1	15	3	1330			450			3	15	2	DECANT PUMP 1
50P1101	3	--	--		1330			450		--	--	4	50P1391
(3 HP)	5	--	--			1330			450	--	--	6	(3/4 HP)
DAF FEED PUMP 2	7	15	3	1330			450			3	15	8	DECANT PUMP 2
50P1102	9	--	--		1330			450		--	--	10	50P1392
(3 HP)	11	--	--			1330			450	--	--	12	(3/4 HP)
FILTER FEED PUMP 1	13	20	3	3050			4200			3		14	SUMP PUMPS CONTROL PANEL
50P1241	15	--	--		3050			4200		--	--	16	
(7.5 HP)	17	--	--			3050			4200	--	--	18	
FILTER FEED PUMP 2	19	20	3	3050			3050			3	20	20	AERATION BLOWER CONTROL PANEL
50P1242	21	--	--		3050			3050		--	--	22	
(7.5 HP)	23	--	--			3050			3050	--	--	24	
DAF CONTROL PANEL	25	40	3	5500			7480			3	70	26	AIR COMPRESSOR
	27	--	--		5500			7480		--	--	28	
--	29	--	--			5500			7480	--	--	30	--
DECON SUMP CONTROL PANEL	31	20	3	1663			6700			3		32	
--	33	--	--		1663			6700		--	--	34	
--	35	--	--			1663			6700	--	--	36	
MEDIA FILTER	37		3	1385			18000			3	90	38	Water Heater
	39	--	--		1385			18000		--	--	40	
--	41	--	--			1385			18000	--	--	42	--
TOTAL LOAD				17308	17308	17308	40330	40330	40330				

PHASE A LOAD (VA) = 57638
PHASE B LOAD (VA) = 57638
PHASE C LOAD (VA) = 57638
TOTAL LOAD (VA) = 172914

I = 208.0 AMPS

FARM

PANEL: LP-1A (NEW)

ELECTRICAL PANELBOARD SCHEDULE

VOLTAGE: 120/240V, 1PH, 3W
BUS SIZE:
MAIN SIZE:

LOCATION: ELECTRICAL RM 106
MOUNTING: SURFACE
FED FROM:
MAIN TYPE:

CIRCUIT TITLE	BREAKER CKT NO.	AMP	POLE	LOAD, VA PHASE A	B	LOAD, VA PHASE A	B	BREAKER POLE	AMP	CKT NO.	CIRCUIT TITLE
	1	15	1			180				2	
SPARE	3	30	1				180			4	
MIXER: 40M1431	5	20	1	1656		180		1	20	6	
MIXER: 40M1432	7	20	1		1656		1180	1	20	8	EF-1: PROCESS ROOM
MIXER: 50M1480	9	20	1	1656		1180		1	20	10	EF-2: PROCESS ROOM
LIT 1011	11	15	1		100		100	1	15	12	FIT 1137
	13	15	1	100		100		1	15	14	FIT 1321
LIT 1211	15	15	1		100		100	1	15	16	FIT 1371
LIT 1331	17	15	1	100		100		1	15	18	AIT 1245
LIT 1381	19	15	1		100		100	1	15	20	
LIT 1421	21	15	1	100				1	15	22	SPARE
LIT 1521	23	15	1		100			1	15	24	SPARE
LIT 1441	25	15	1	100						26	
FIT 1009	27	15	1		100					28	
FIT 1110	29	15	1	100						30	
HOT WATER RECIRC PUMP CP-01	31	20	1		100					32	
SPARE	33	20	1							34	
SPACE	35									36	
SPACE	37									38	SPACE
SPACE	39									40	SPACE
SPACE	41									42	SPACE
TOTAL LOAD				3812	2256	1740	1660				

PHASE A LOAD (VA) = 5552
PHASE B LOAD (VA) = 3916
TOTAL LOAD (VA) = 9468

I = 39.5 AMPS

NOTES:

1. EXISTING CIRCUITS SHOWN IN BOLD ITALICS.
2. MINIMUM CB AIC SHALL BE 22,000 A AT 240V AND 35,000 A AT 480V AS APPLICABLE.
3. MAIN BREAKER TO BE ADDED TO EXISTING PANEL LP-1. PANEL IS SIEMENS TYPE P1, CATALOG NO. PLA42M1400ATS.
4. LOADS ON LP-3 CAN NOT ALL BE SUPPLIED BY EMERGENCY GENERATOR. OPERATOR WILL SELECT LOADS SO TOTAL IS WITHIN GENERATOR CAPABILITY.

AS-BUILT

RL HAMILTON	4	4/27/10	REVISED AS-BUILT	JB	ROW
DW CLARK	3	12/15/09	PRELIMINARY AS-BUILT	JB	ROW
	2	5/14/09	PRELIMINARY AS-BUILT	DLS	ROW
TG OSSOWSKI	1	3/4/09	AS-BUILT FIELD DATA - PRELIMINARY	JFF	GS
KT SCHEFFLER					

US ENVIRONMENTAL PROTECTION AGENCY

WYCKOFF GROUNDWATER TREATMENT PLANT
BAINBRIDGE ISLAND, WA

ELECTRICAL

PANEL SCHEDULES

87
98-E-510
JANUARY 4 2006
316783.FD.B

98ne510d_316783.dwg 5/7/2010 2:51:59 PM

NO. 9 GALV
WIRE CLIP
SPACE 12" MAX
BOTTOM TIE
TO BE 10" MAX
ABOVE GROUND

LINE POST CONNECTION

NO. 9 GALV
WIRE CLIP
SPACE 24" MAX

TOP RAIL CONNECTION

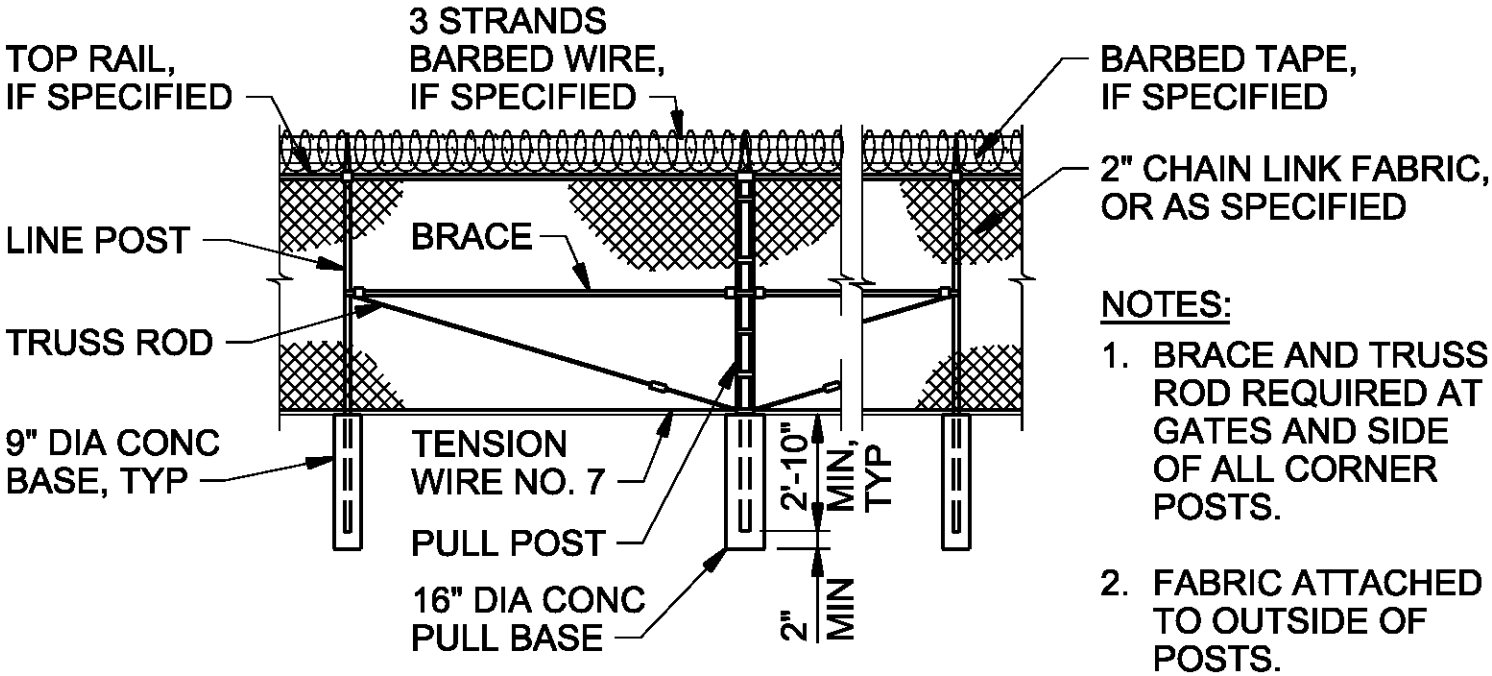

NOTES:

1. BRACE AND TRUSS ROD REQUIRED AT GATES AND SIDE OF ALL CORNER POSTS.
2. FABRIC ATTACHED TO OUTSIDE OF POSTS.

TYPICAL PULL POST

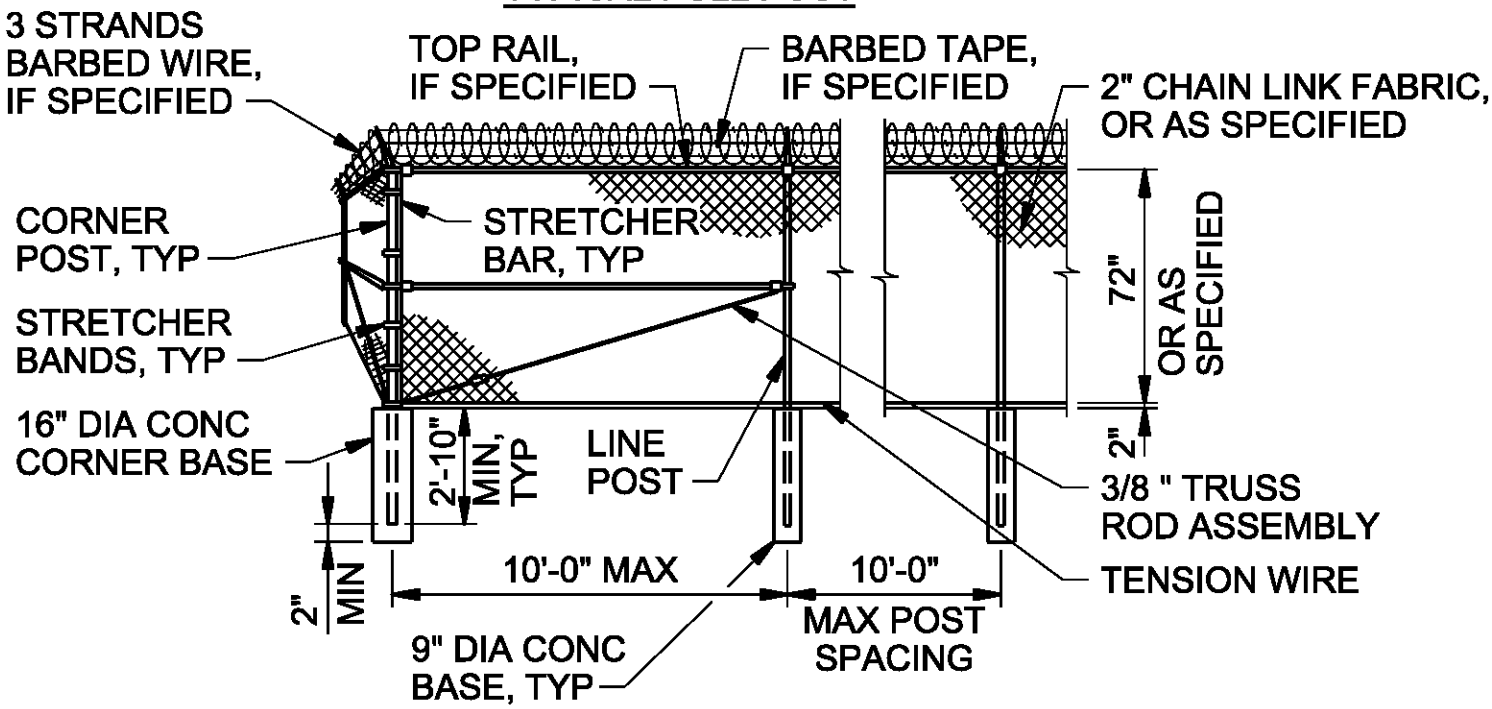

TYPICAL CORNER POST

CHAIN LINK FENCE

WYCKOFF GROUNDWATER
TREATMENT PLANT

2030

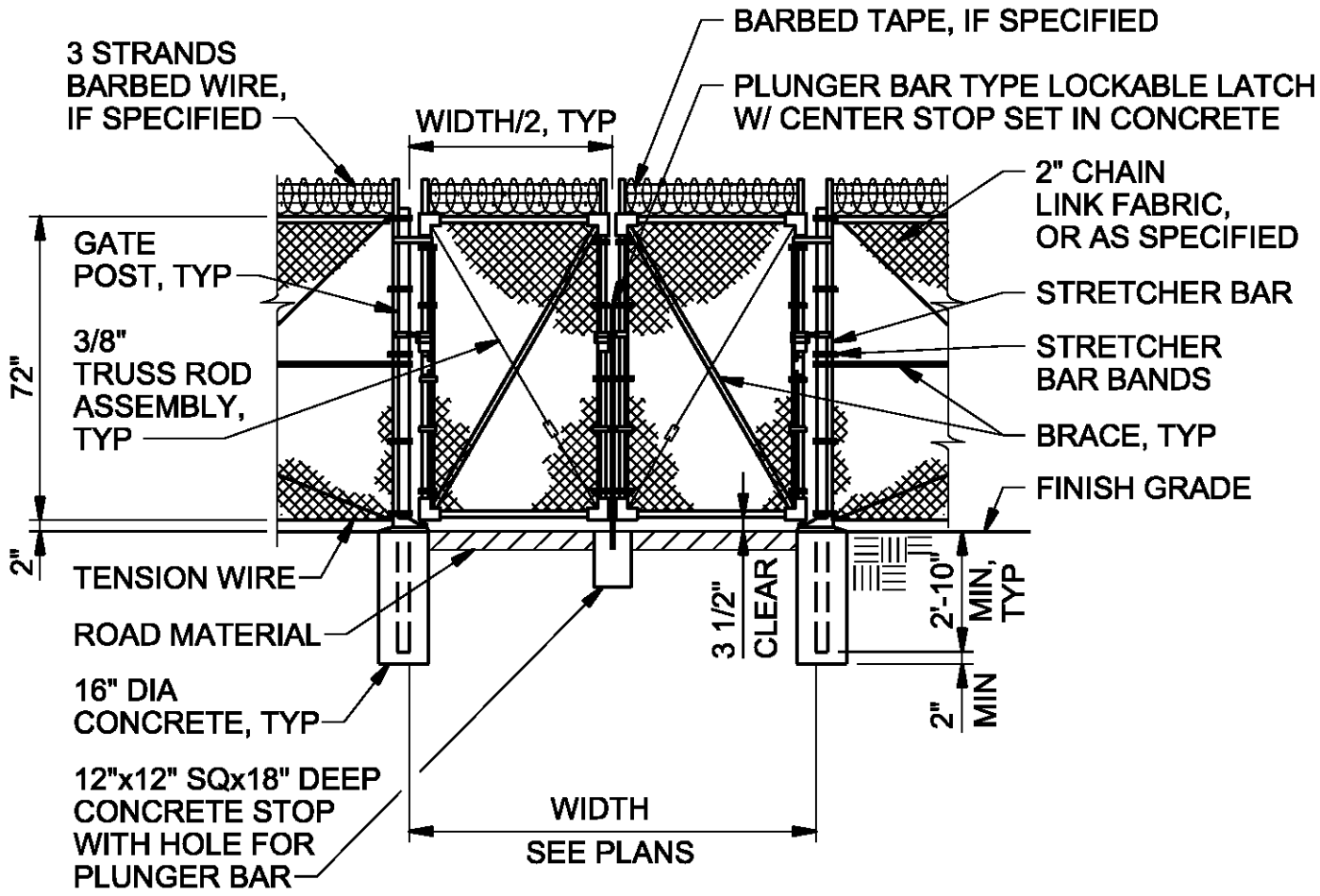

DOUBLE SWING GATE

WYCKOFF GROUNDWATER TREATMENT PLANT

BAINBRIDGE ISLAND, WA

2032

CH2MHILL

OR WITH WELDED
VERIFY WALL FRAMING
FRAME DIMENSION

$FILENAME $PLOTTIME

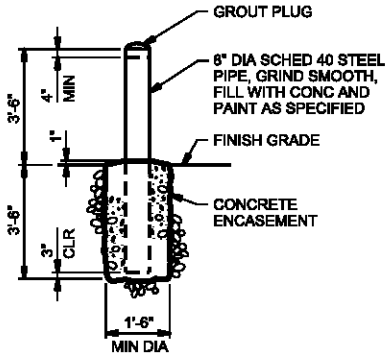

NOTE:
FOR INTERIOR GUARD POST, SEE 5626 .

GUARD POST - EXTERIOR
NTS

WYCKOFF GROUNDWATER TREATMENT PLANT
BAINBRIDGE ISLAND, WA

2080

CH2MHILL

3"=1'-0".....
MAKE SUR
AS GUIDE

PAVEMENT TYPE(S) SEE NOTE 5	DIMENSION (INCHES)		REINFORCING
	A	B	C
CI	6"	6"	#4@12" CTD 2" COVER

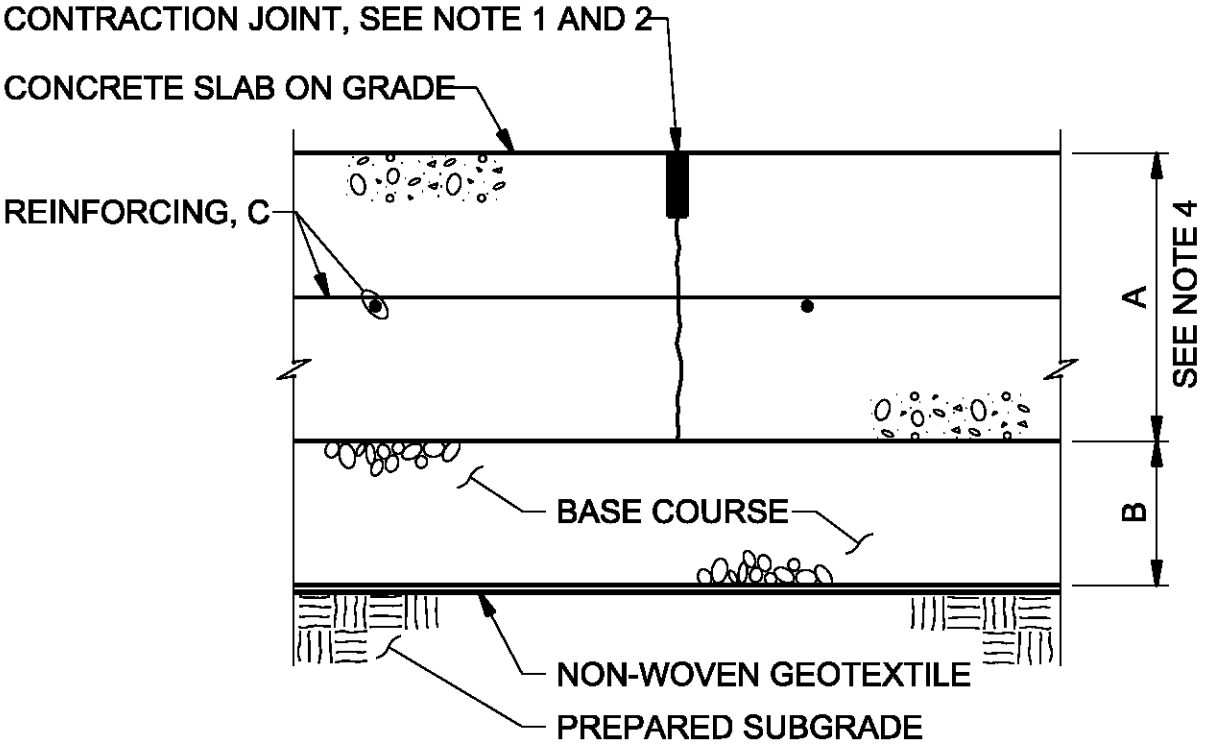

NOTES:

1. CONTRACTION JOINT SHALL BE MADE, CLEANED WITH COMPRESSED AIR, AND FILLED WITH SEALANT AS SPECIFIED.
2. CONCRETE JOINT SPACING: 4' x 4' OR AS SHOWN.
3. INSTALL 1/2" PREMOLDED JOINT FILLER FULL DEPTH WHERE CONCRETE PAVEMENT ABUTS CONCRETE CURB, BUILDING OR ANY RIGID STRUCTURE.
4. PROVIDE A 12" THICK BY 18" WIDE THICKENED EDGE AROUND PERIMETER OF SLAB. TRANSITION THICKENED EDGE TO NORMAL 6" THICKNESS IN 18".
5. PROVIDE PORTLAND CEMENT CONCRETE PAVEMENT TYPE AS SHOWN ON PLANS.

CONCRETE PAVEMENT

WYCKOFF GROUNDWATER TREATMENT PLANT

BAINBRIDGE ISLAND, WA

2230

CH2MHILL

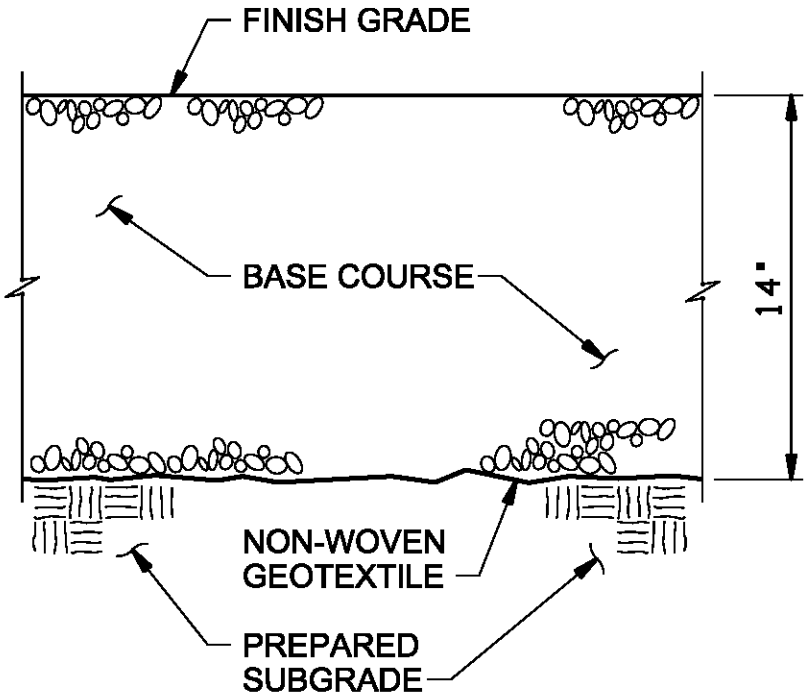

GRAVEL SURFACING

WYCKOFF GROUNDWATER
TREATMENT PLANT

BAINBRIDGE ISLAND, WA

2240

CH2MHILL

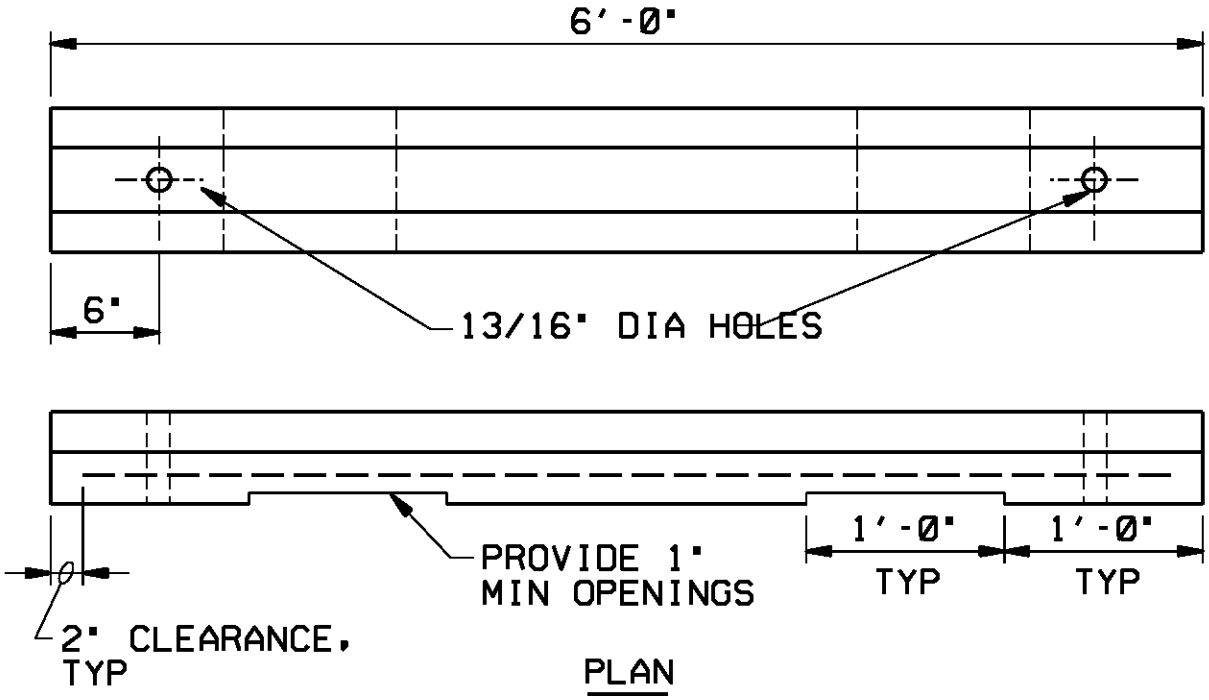

PLAN

NOTE:

WHEEL STOP SHALL BE CENTERED IN PARKING STALL.

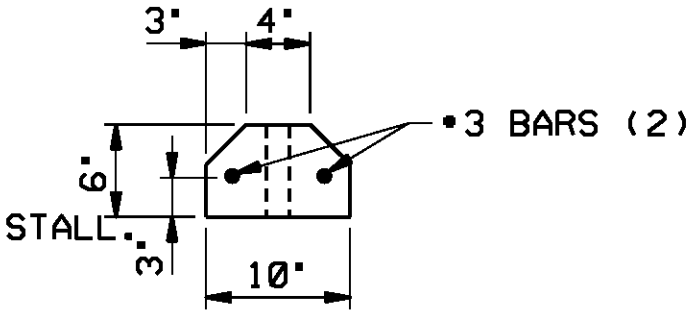

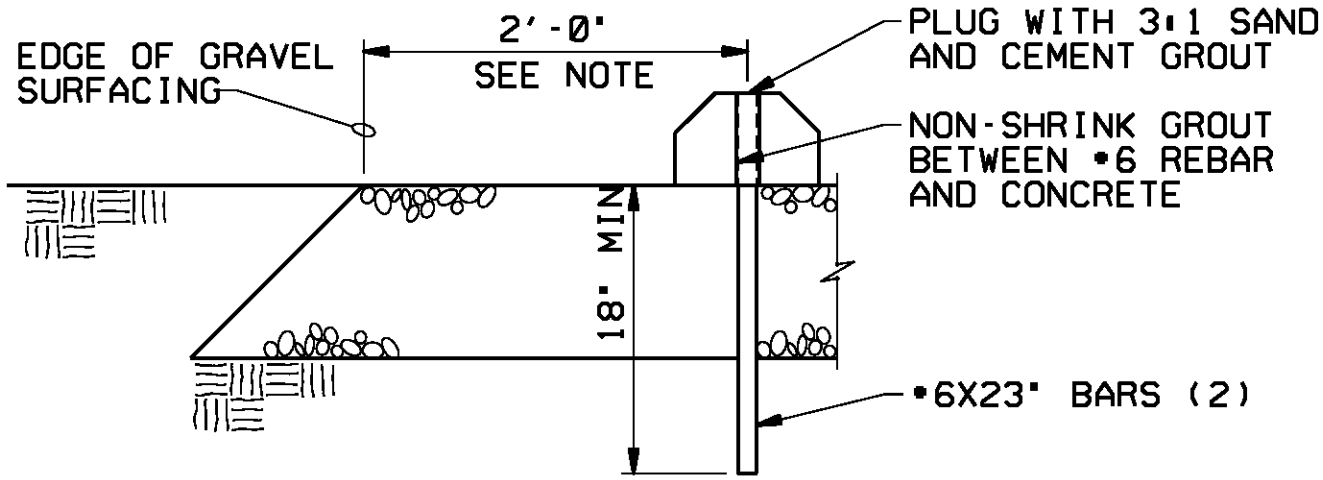

ATTACHMENT DETAIL

PRECAST CONCRETE WHEEL STOP

NTS

WYCKOFF GROUNDWATER TREATMENT PLANT

BAINBRIDGE ISLAND, WA

2261

CH2MHILL

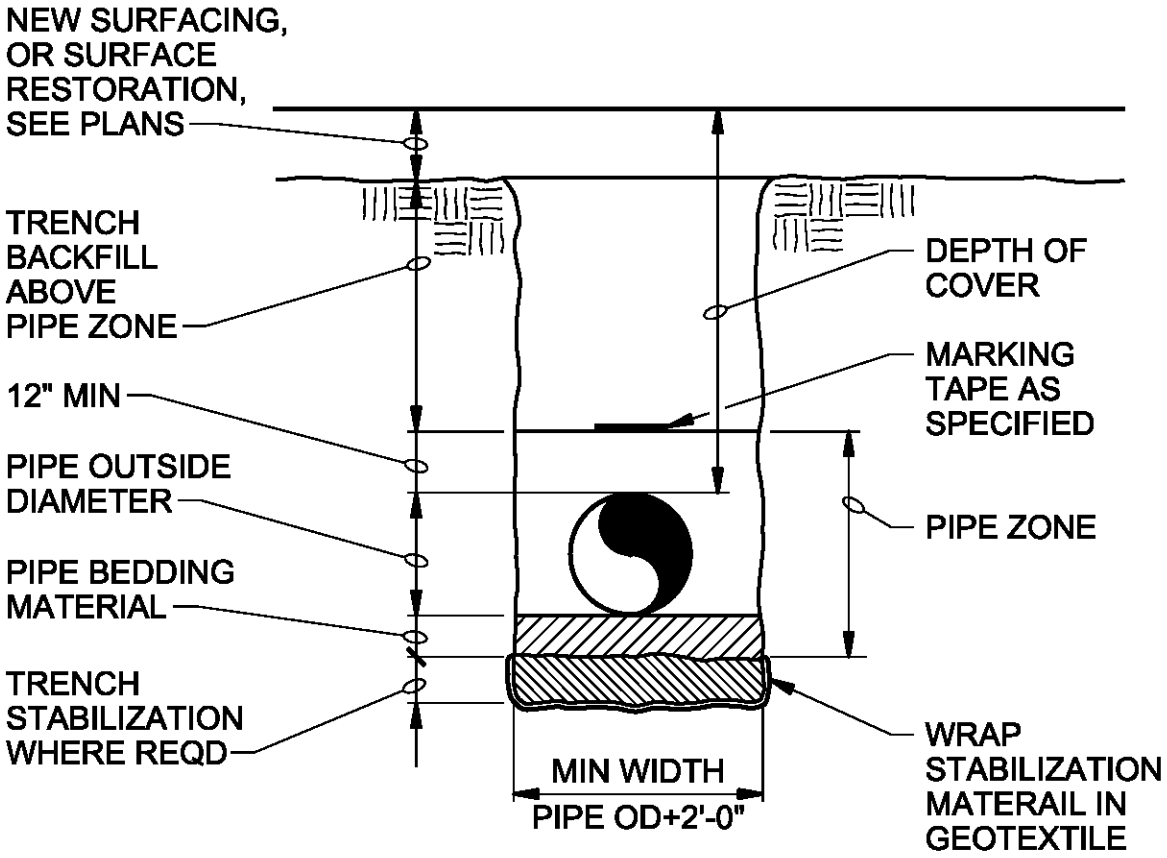

TYPICAL TRENCH

WYCKOFF GROUNDWATER TREATMENT PLANT

BAINBRIDGE ISLAND, WA

2310

CH2MHILL

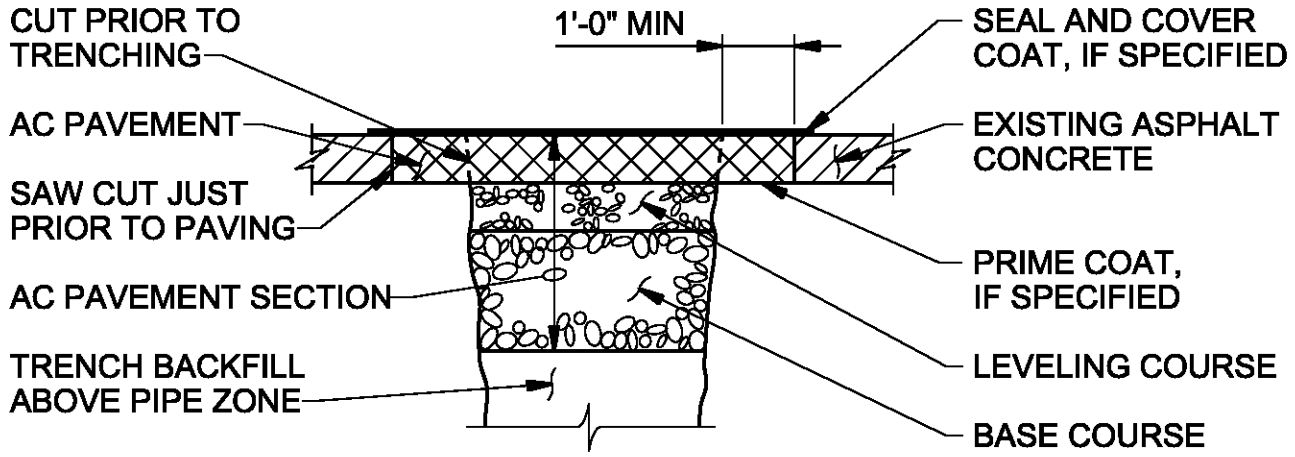

ASPHALT SURFACING

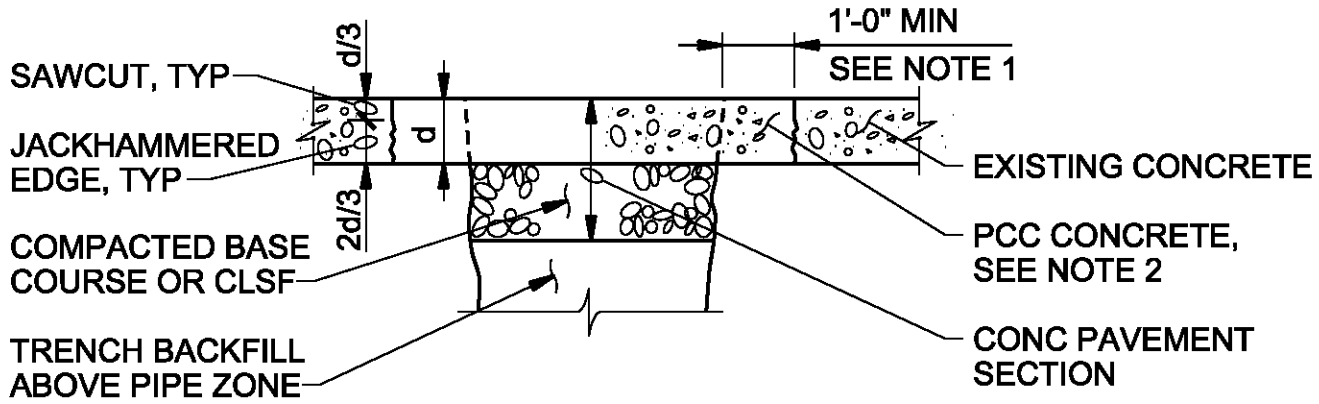

PCC CONCRETE SURFACING

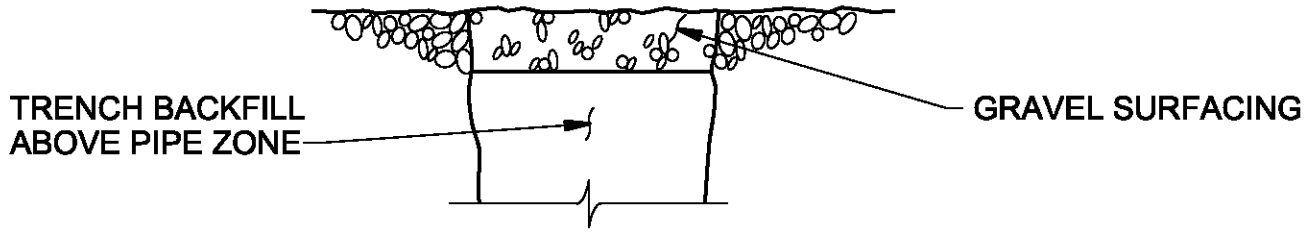

GRAVEL SURFACING

NOTES:

1. IF LOCATION OF TRENCH SAW CUT IS WITHIN 2 FEET OF AN EXISTING JOINT OR EDGE OF CONCRETE, REPLACE ENTIRE CONCRETE TO THE JOINT OR EDGE.

2. CONSTRUCT JOINTS ACROSS NEW CONCRETE TO MATCH EXISTING JOINT TYPES AND LOCATIONS.

SURFACE RESTORATION

WYCKOFF GROUNDWATER TREATMENT PLANT

BAINBRIDGE ISLAND, WA

2320

CH2MHILL

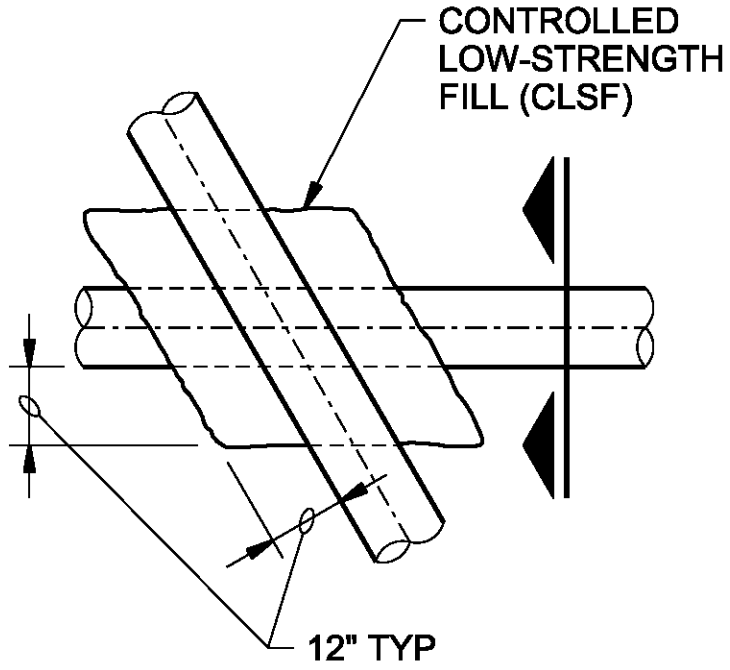

PLAN

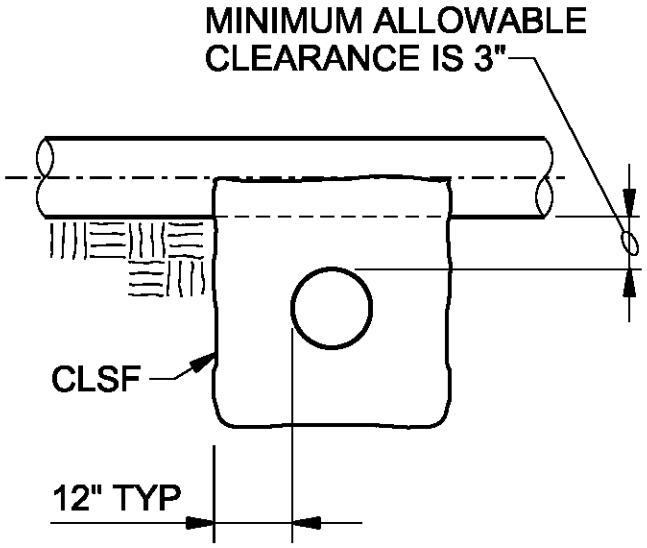

SECTION

NOTES:

CLSF SUPPORT IS REQUIRED:

1. WHEN BOTH PIPELINES ARE NEW AND CLEARANCE BETWEEN THEM IS LESS THAN 12".
2. WHEN A NEW PIPELINE IS CROSSING OVER AN EXISTING PIPELINE AND THE CLEARANCE BETWEEN THEM IS LESS THAN 12".
3. AT ALL PIPE CROSSINGS WHERE A NEW PIPELINE IS CROSSING UNDER AN EXISTING PIPELINE.
4. REFER TO SPECIFICATION SECTION 02320 FOR CLSF REQUIREMENTS.

PIPE CROSSING

WYCKOFF GROUNDWATER TREATMENT PLANT

2335

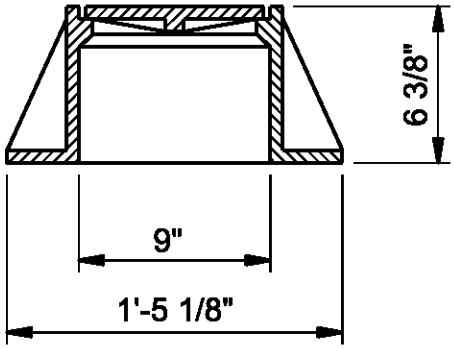

CLEANOUT FRAME AND COVER

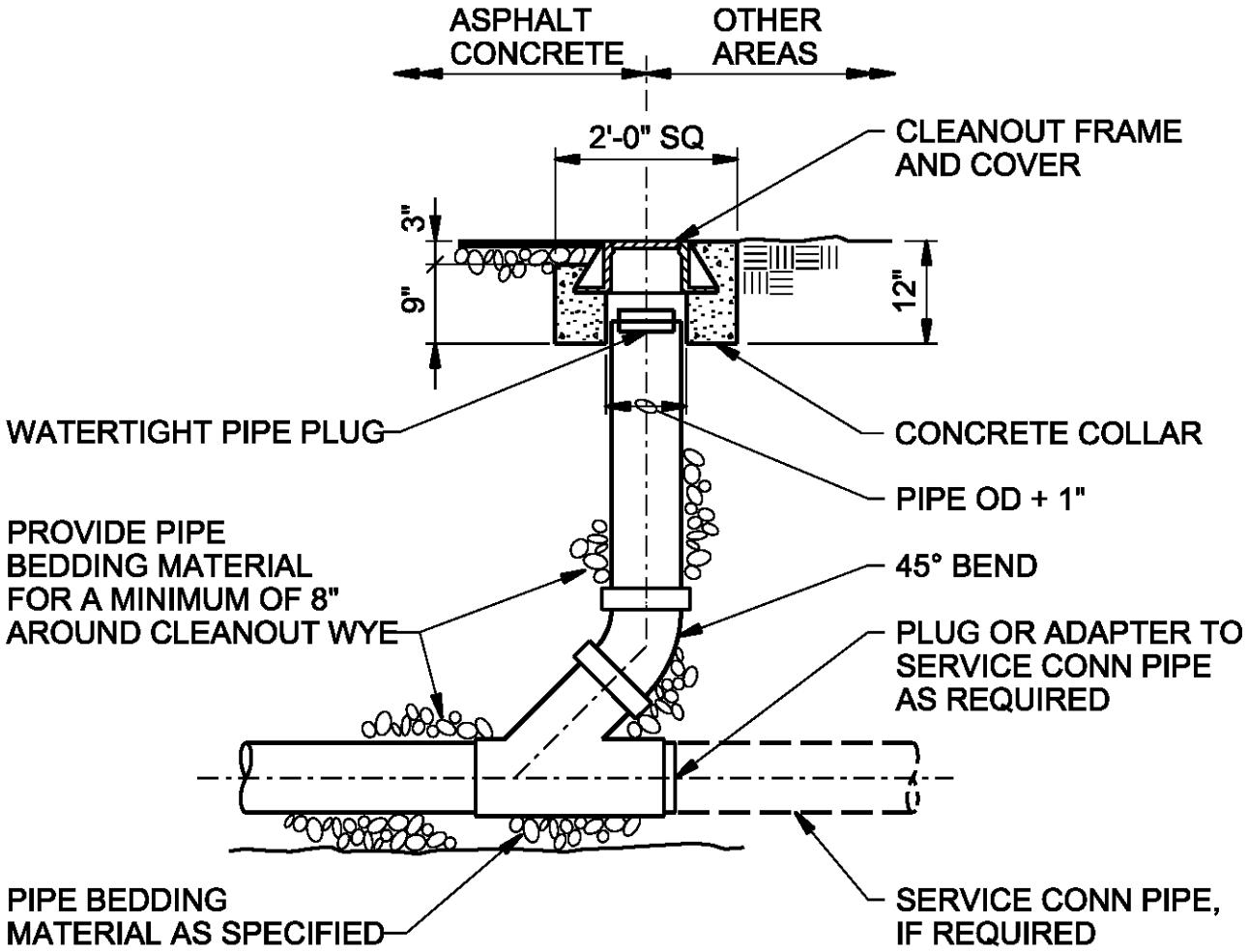

CLEANOUT

EXTERIOR CLEANOUT

WYCKOFF GROUNDWATER TREATMENT PLANT

BAINBRIDGE ISLAND, WA

2440

CH2MHILL

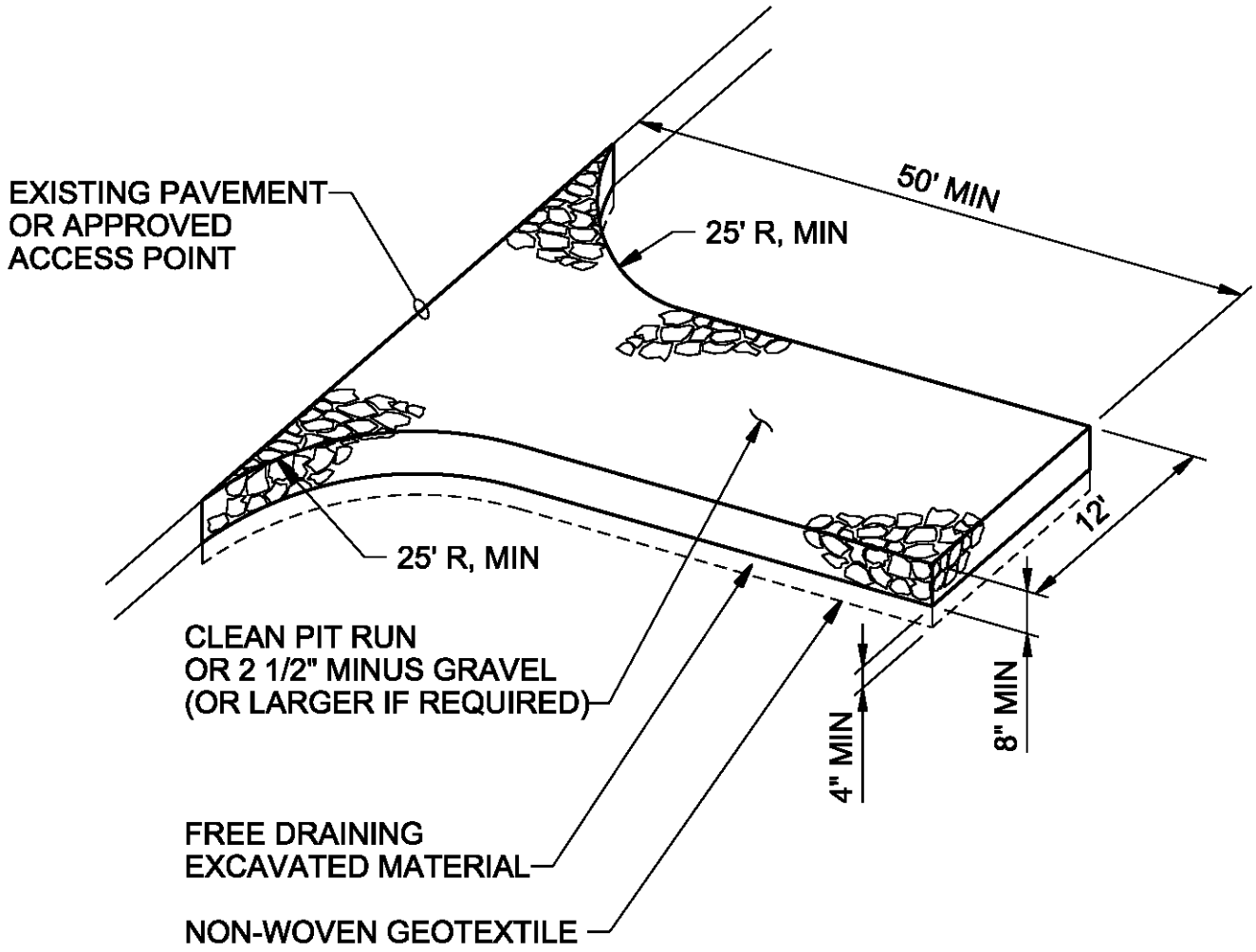

NOTES:

1. ADDITIONAL GRAVEL MAY HAVE TO BE ADDED PERIODICALLY TO MAINTAIN PROPER FUNCTION OF THE PAD.

2. REMOVE GRAVEL ENTRANCE AND REPLACE WITH NEW BASE COURSE PRIOR TO COMPLETION OF ACCESS ROAD.

GRAVEL CONSTRUCTION ENTRANCE

WYCKOFF GROUNDWATER TREATMENT PLANT

BAINBRIDGE ISLAND, WA

27-10

CH2MHILL

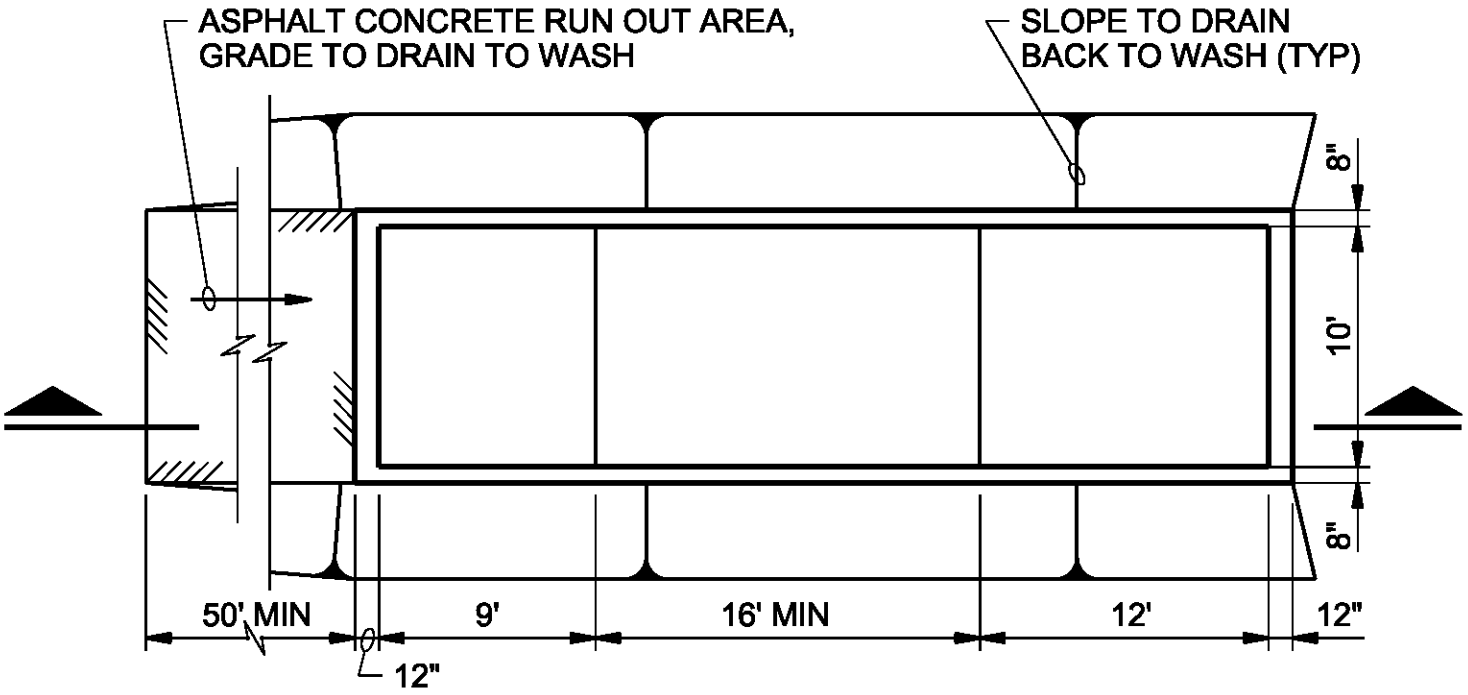

PLAN

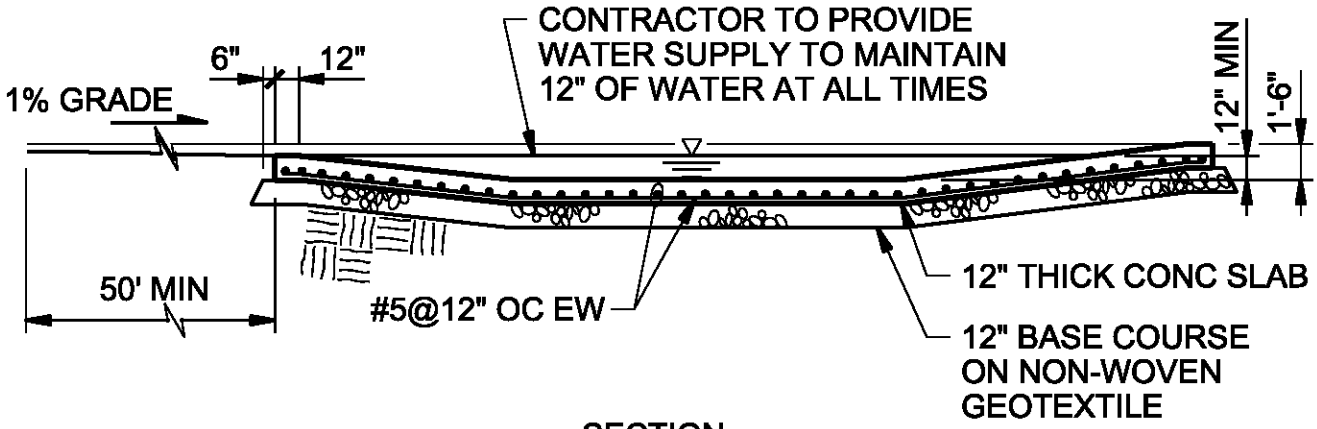

SECTION

NOTE:

CONTRACTOR TO REMOVE ACCUMULATED SEDIMENT FROM WHEEL WASH, MAY BE PIPED TO AN APPROVED SEDIMENT TRAP.

WHEEL WASH

WYCKOFF GROUNDWATER TREATMENT PLANT

BAINBRIDGE ISLAND, WA

27-15

CH2MHILL

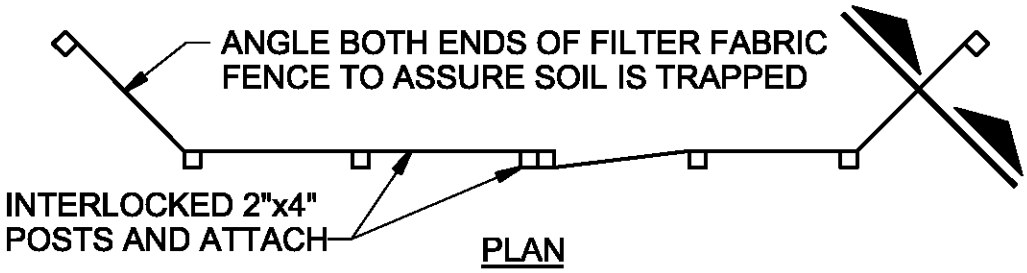

PLAN

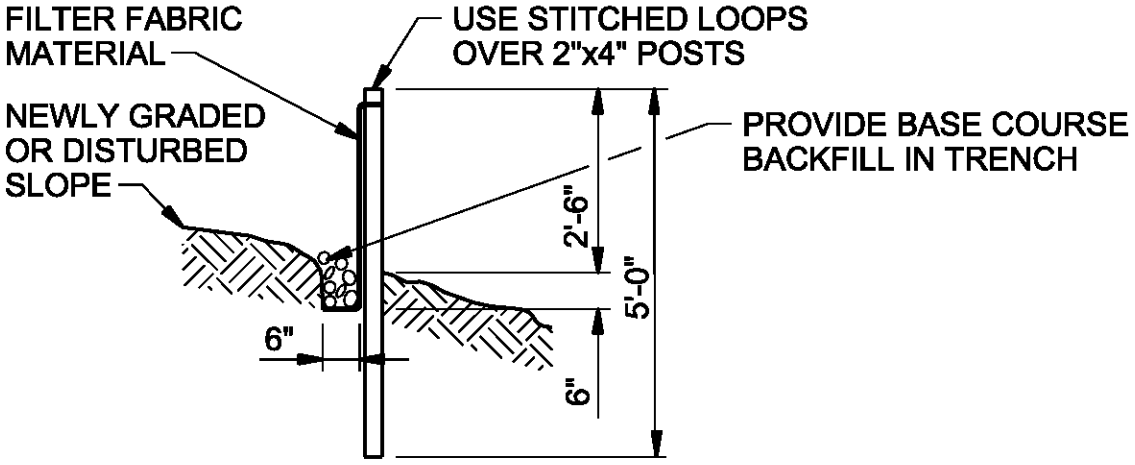

SECTION

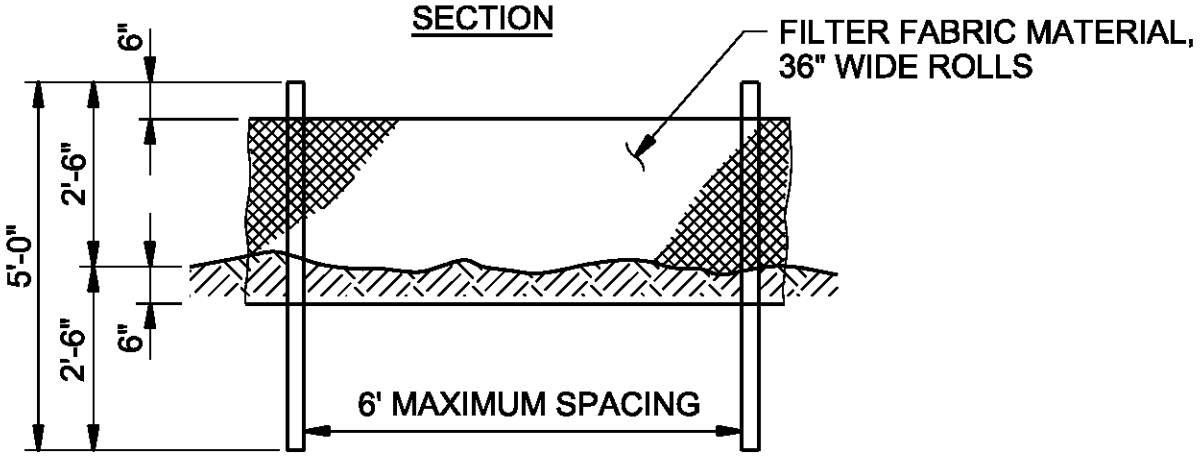

ELEVATION

NOTES:

1. BURY BOTTOM OF FILTER FABRIC 6" VERTICALLY BELOW FINISHED GRADE.
2. 2"x4" DOUGLAS FIR OR STEEL FENCE POSTS.
3. STITCHED LOOPS TO BE INSTALLED DOWNHILL SIDE OF SLOPE.
4. COMPACT ALL AREAS OF FILTER FABRIC TRENCH.

SEDIMENT FENCE

WYCKOFF GROUNDWATER TREATMENT PLANT

BAINBRIDGE ISLAND, WA

2750

CH2MHILL

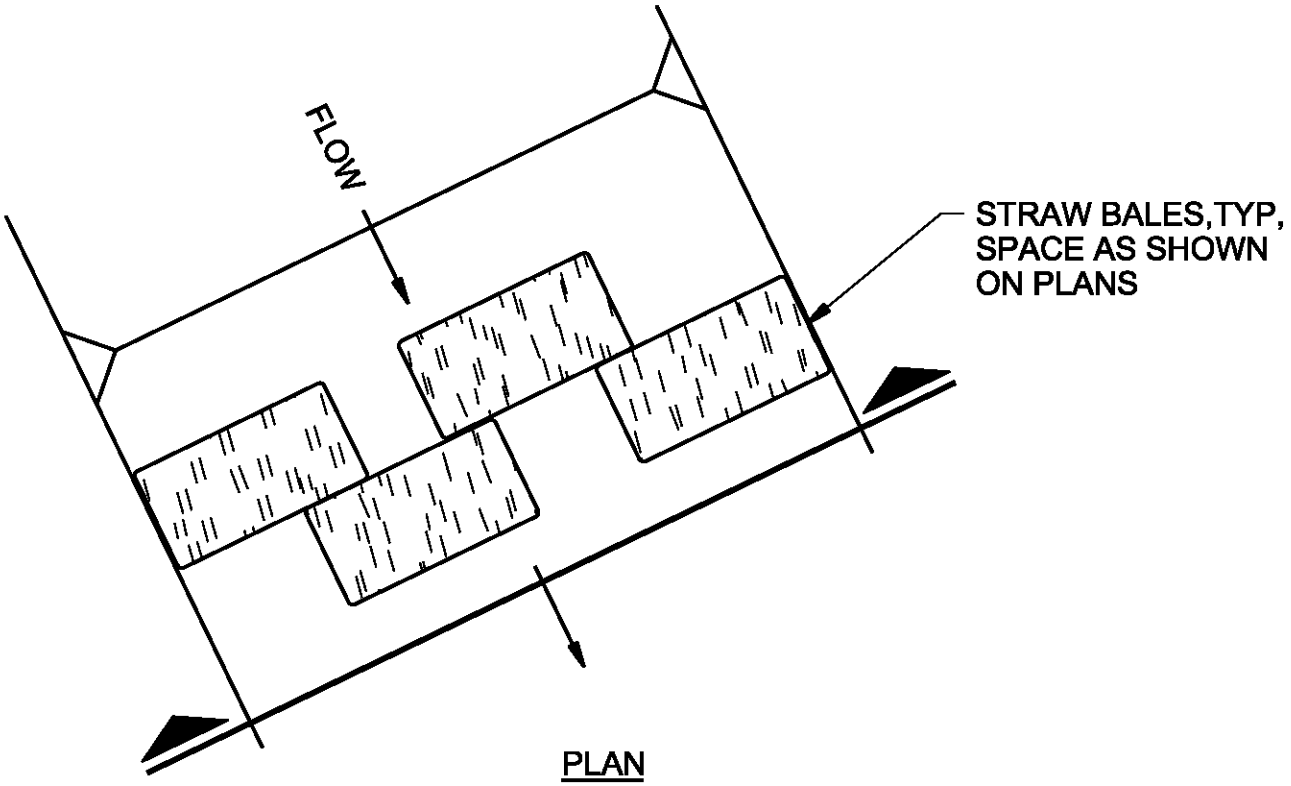

PLAN

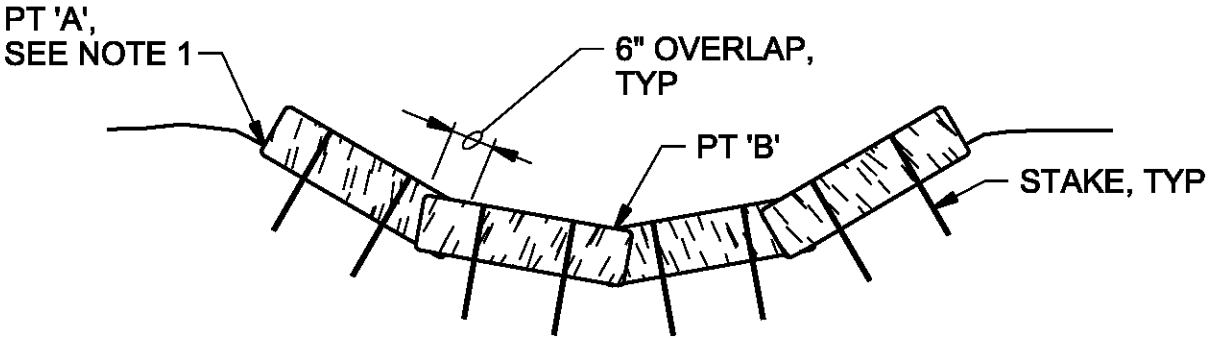

SECTION

NOTES:

1. POINT 'A' MUST BE 6" MINIMUM HIGHER THAN PT 'B'.
2. STAKING OF BALES IS REQUIRED USING (2)2"x2"x3' LONG WOOD STAKES OR APPROVED EQUAL PER BALE.
3. DRIVE STAKES MINIMUM 12" INTO GROUND AND FLUSH WITH TOP OF BALES.
4. EMBED BALES MINIMUM OF 4" INTO GROUND SURFACE.
5. BIOFILTER BAGS TO BE USED, IF SPECIFIED.

STRAW BALES IN DITCHES

WYCKOFF GROUNDWATER TREATMENT PLANT

BAINBRIDGE ISLAND, WA

2755

CH2MHILL

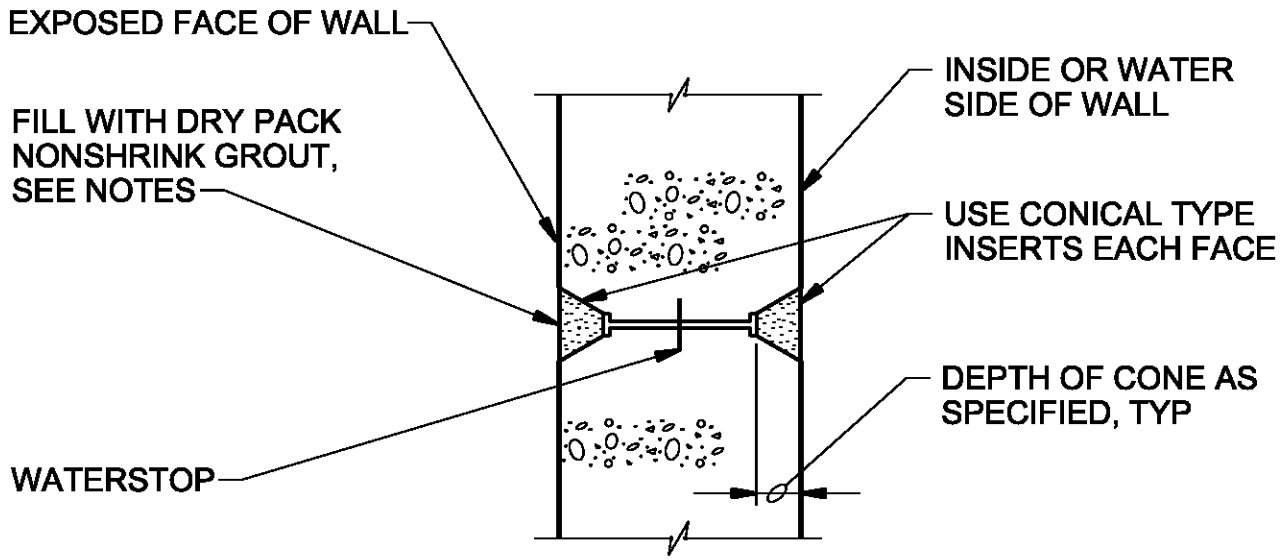

NOTES:

1. THE SPACING OF FORM TIES ON EXPOSED PORTIONS OF WALLS SHALL BE APPROXIMATELY EQUAL HORIZONTALLY AND VERTICALLY AND SHALL BE UNIFORM IN EACH DIRECTION.
2. DRY PACK METHOD SHALL BE AS SPECIFIED USING STEEL TOOLS.

FORM SNAP-TIE HOLE

WYCKOFF GROUNDWATER TREATMENT PLANT

BAINBRIDGE ISLAND, WA

3051

CH2MHILL

FOR PROJECT DESIGN DETAILS
TURN OFF LV=SHBD,SHBD-DTL AND SHBD-OTLN IN THE ACTIVE FILE WHEN PLOTTING

$FILENAME $PLOTTIME

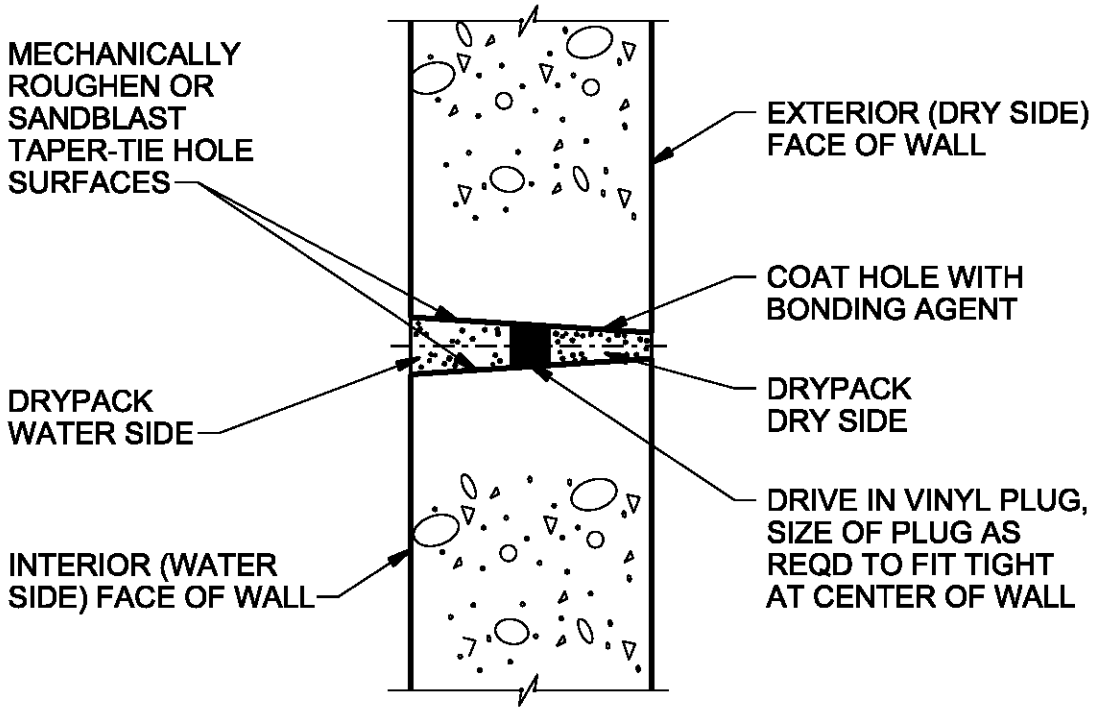

NOTE:

MINIMUM HOLE DIAMETER AT EXTERIOR FACE = 1". TAPER HOLE SO THAT MINIMUM HOLE DIAMETER AT INTERIOR FACE = 1 1/4"

CONSTRUCTION STEPS:

1. SANDBLAST OR MECHANICALLY ROUGHEN WITH ELECTRIC EQUIPMENT.
2. DRIVE IN VINYL PLUG.
3. COAT HOLE ON DRY SIDE OF PLUG AND WHILE BONDING AGENT IS TACKY, DRYPACK.
4. COAT HOLE ON WATER SIDE OF PLUG AND WHILE BONDING AGENT IS TACKY, DRYPACK.
5. USE TYPE II, NON-SHRINK GROUT AS SPECIFIED.

ALTERNATE FORM TIE-THROUGH BOLT

WYCKOFF GROUNDWATER TREATMENT PLANT

BAINBRIDGE ISLAND, WA

3052

CH2MHILL

FOR PROJECT DESIGN DETAILS
TURN OFF LV=SHBD,SHBD-DTL AND SHBD-OTLN IN THE ACTIVE FILE WHEN PLOTTING

$FILENAME $PLOTTIME

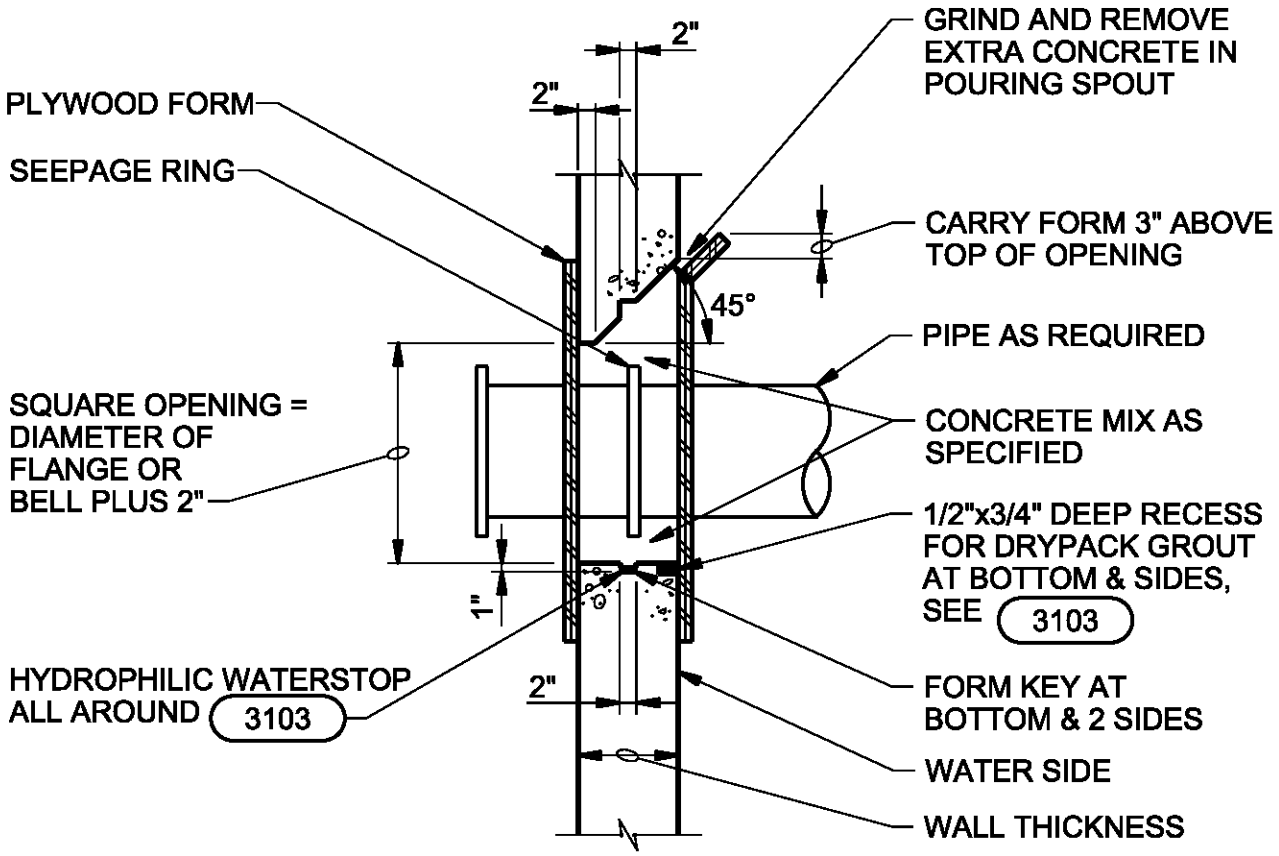

NOTES:

1. PIPE BLOCKOUT NOT TO BE USED WITHOUT WRITTEN APPROVAL OF ENGINEER UNLESS SPECIFICALLY INDICATED ON PLANS.
2. COAT CONCRETE ENCASED PORTION OF PIPE WITH SPECIFIED COATING SYSTEM.
3. REINFORCE AROUND BLOCKOUT OPENING PER 3301
4. CONTINUE TYPICAL WALL REINFORCING THROUGH BLOCKOUT. FIELD CUT REINFORCING ONLY AS REQUIRED TO CLEAR PIPE.

PIPE BLOCKOUT

WYCKOFF GROUNDWATER TREATMENT PLANT

BAINBRIDGE ISLAND, WA

3061

CH2MHILL

FOR PROJECT DESIGN DETAILS
TURN OFF LV=SHBD,SHBD-DTL AND SHBD-OTLN IN THE ACTIVE FILE WHEN PLOTTING

$FILENAME $PLOTTIME

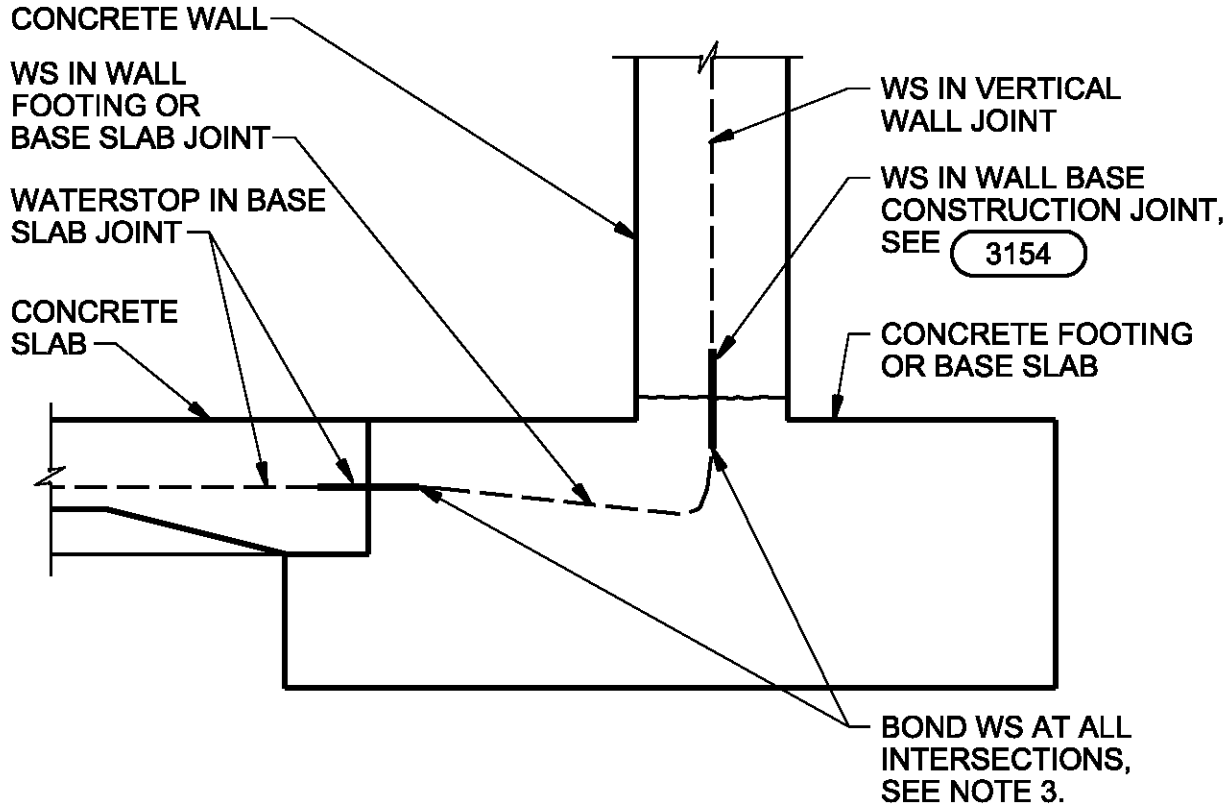

NOTES:

1. SUBMIT DETAILS OF SPLICING AND LOCATION.
2. BOND OR SPLICE ALL HORIZONTAL TRANSVERSE WATERSTOPS IN BASE SLAB JOINTS TO CONTINUOUS LONGITUDINAL WATERSTOP IN WALL BASE FOR COMPLETE SEAL.
3. BOND OR SPLICE ALL VERTICAL WATERSTOPS IN WALL JOINTS TO LONGITUDINAL WATERSTOP IN WALL BASE FOR COMPLETE SEAL, SEE 3114

WATERSTOP CONNECTION

WYCKOFF GROUNDWATER TREATMENT PLANT
BAINBRIDGE ISLAND, WA

3112

CH2MHILL

FOR PROJECT DESIGN DETAILS
TURN OFF LV=SHBD,SHBD-DTL AND SHBD-OTLN IN THE ACTIVE FILE WHEN PLOTTING

$FILENAME $PLOTTIME

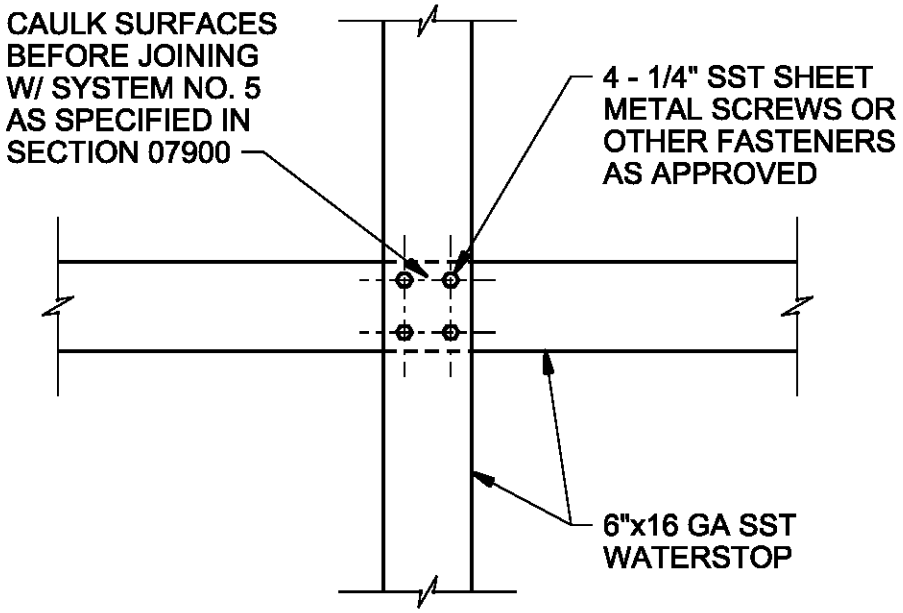

STEEL-STEEL WATERSTOP SPLICE

WYCKOFF GROUNDWATER TREATMENT PLANT

BAINBRIDGE ISLAND, WA

31·14

CH2MHILL

FOR PROJECT DESIGN DETAILS
TURN OFF LV=SHBD,SHBD-DTL AND SHBD-OTLN IN THE ACTIVE FILE WHEN PLOTTING

$FILENAME $PLOTTIME

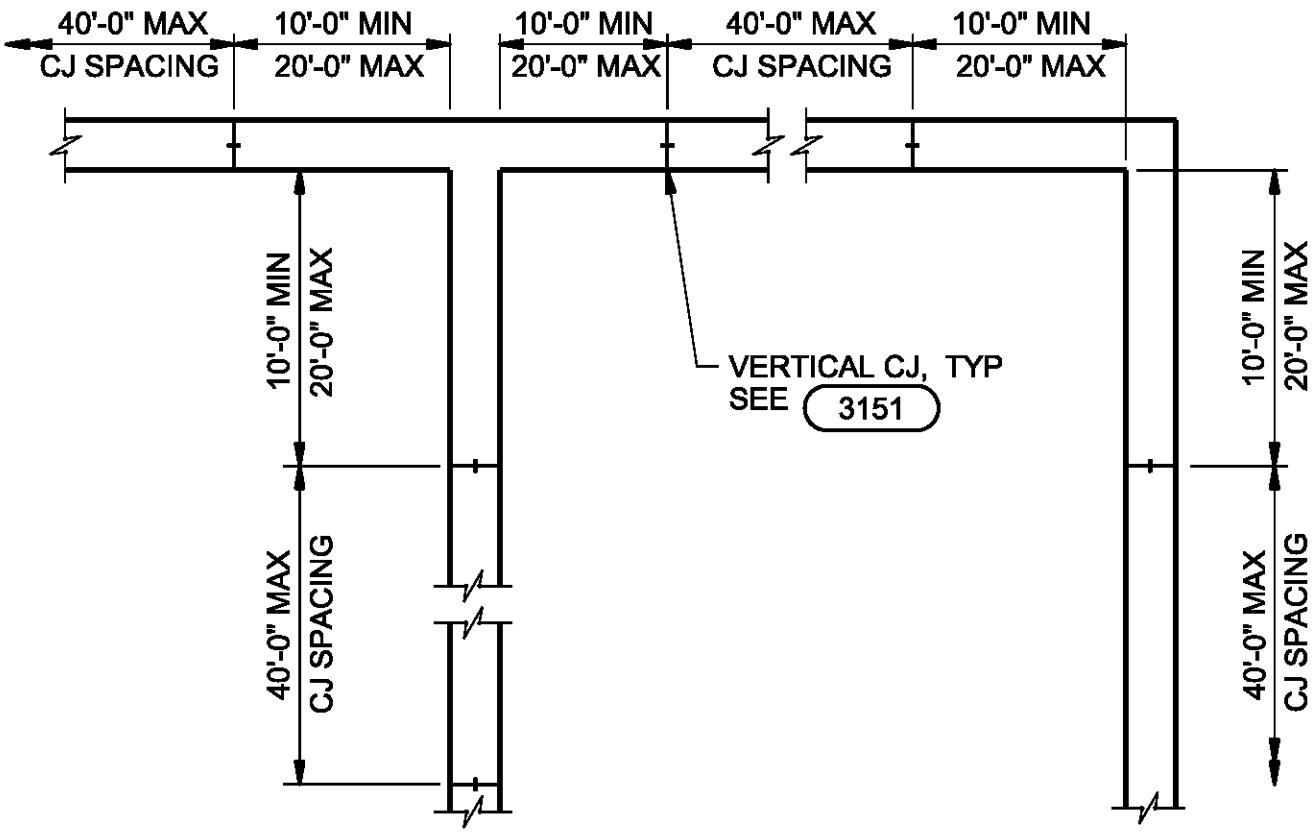

PLAN

NOTES:

1. COORDINATE CONSTRUCTION JOINT LOCATIONS AND TIME BETWEEN CONCRETE POURS WITH SPECIFICATION 3300.
2. LOCATE WALL CONSTRUCTION JOINTS AS SHOWN, UNLESS INDICATED OTHERWISE.

WALL CONSTRUCTION JOINT SPACING

WYCKOFF GROUNDWATER TREATMENT PLANT
BAINBRIDGE ISLAND, WA

3131

CH2MHILL

FOR PROJECT DESIGN DETAILS
TURN OFF LV=SHBD,SHBD-DTL AND SHBD-OTLN IN THE ACTIVE FILE WHEN PLOTTING

$FILENAME $PLOTTIME

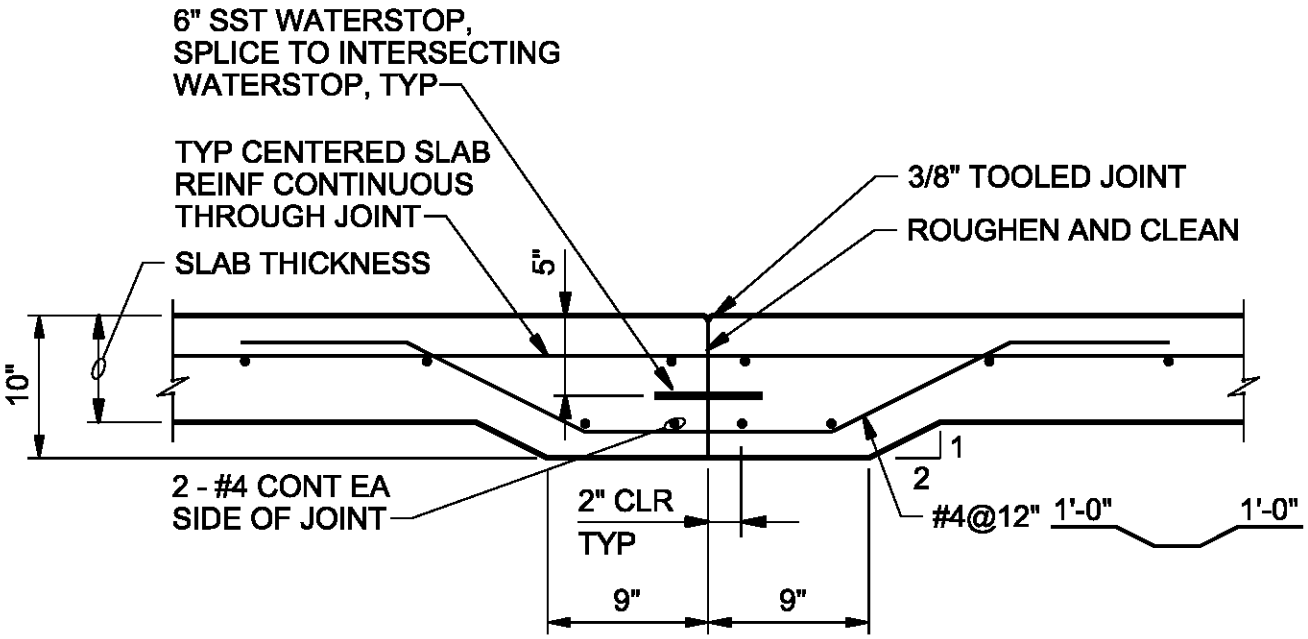

SLAB CONSTRUCTION JOINT

WYCKOFF GROUNDWATER
TREATMENT PLANT
BAINBRIDGE ISLAND, WA

3141

CH2MHILL

FOR PROJECT DESIGN DETAILS
TURN OFF LV=SHBD,SHBD-DTL AND SHBD-OTLN IN THE ACTIVE FILE WHEN PLOTTING

$FILENAME $PLOTTIME

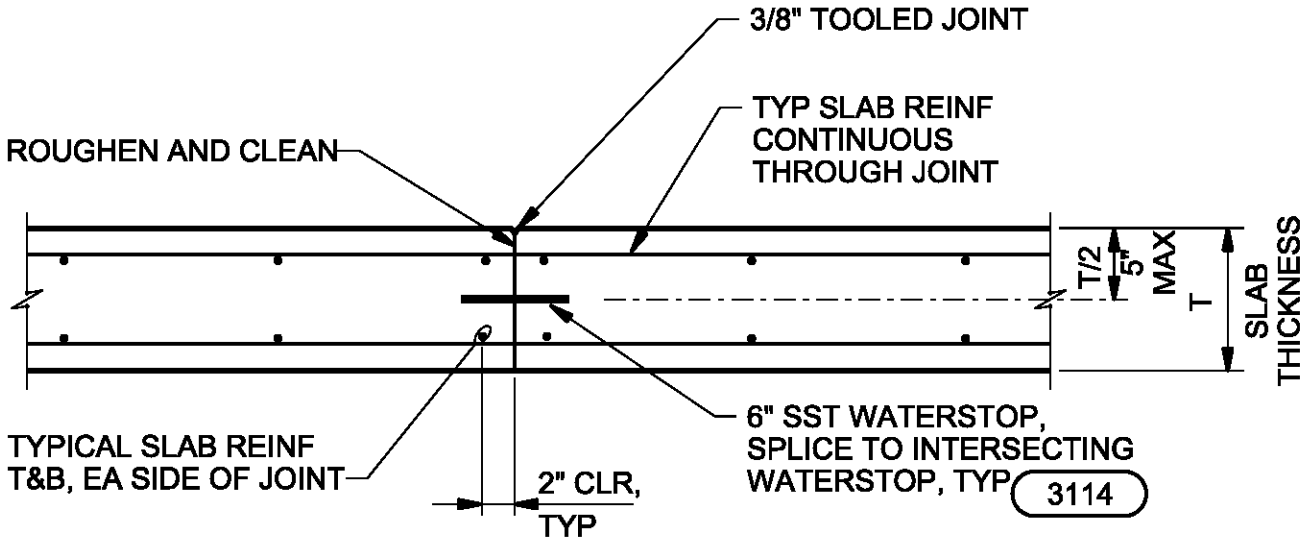

SLAB CONSTRUCTION JOINT

WYCKOFF GROUNDWATER
TREATMENT PLANT
BAINBRIDGE ISLAND, WA

3142

CH2MHILL

FOR PROJECT DESIGN DETAILS
TURN OFF LV=SHBD,SHBD-DTL AND SHBD-OTLN IN THE ACTIVE FILE WHEN PLOTTING

$FILENAME $PLOTTIME

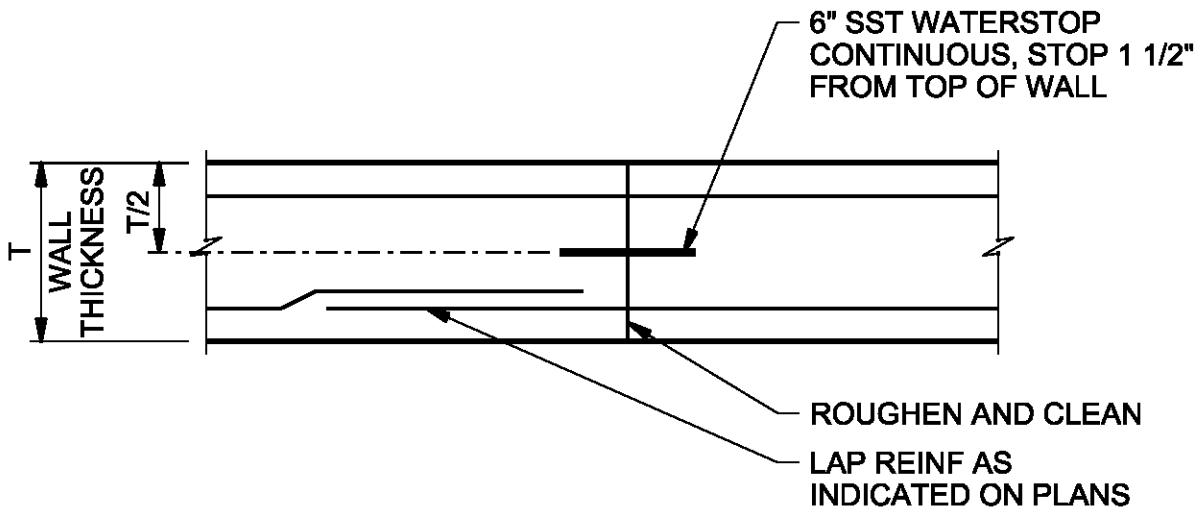

PLAN

NOTES:

1. ALL REINFORCING CONTINUOUS ACROSS JOINT.
2. FOR LOCATIONS, SEE 3131

WALL VERTICAL CONSTRUCTION JOINT

WYCKOFF GROUNDWATER
TREATMENT PLANT
BAINBRIDGE ISLAND, WA

3151

CH2MHILL

FOR PROJECT DESIGN DETAILS
TURN OFF LV=SHBD,SHBD-DTL AND SHBD-OTLN IN THE ACTIVE FILE WHEN PLOTTING

$FILENAME $PLOTTIME

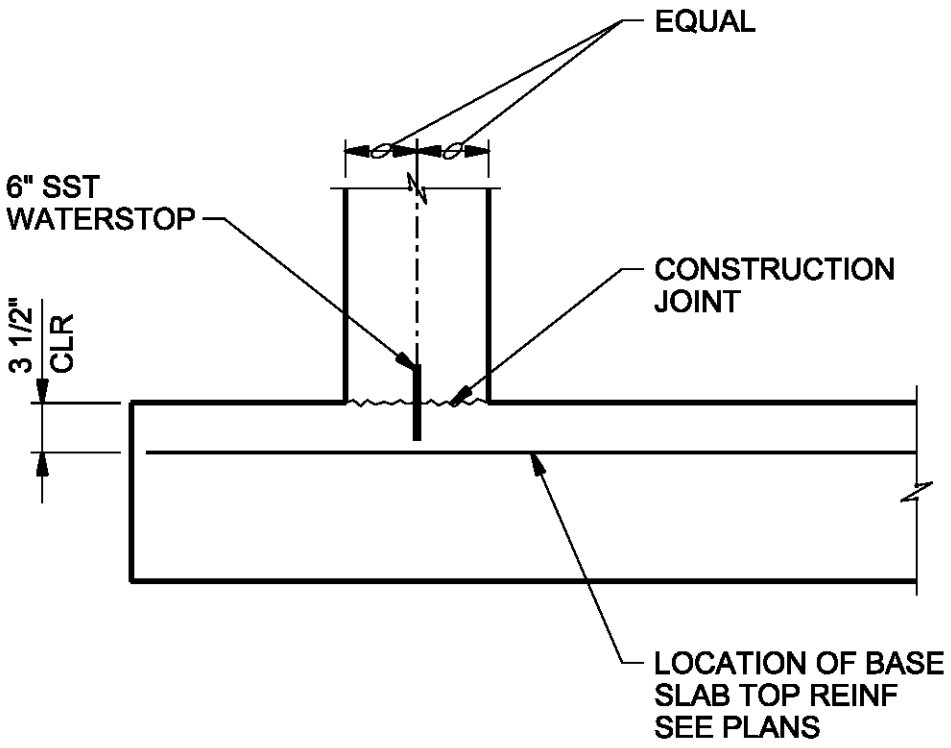

NOTES:

1. FOR WALLS WITH SINGLE MAT OF REINFORCING LOCATE WATERSTOP ON LIQUID FACE, 1" CLEAR OF REINFORCEMENT.
2. SECURE WATERSTOP IN-PLACE AS SPECIFIED.

WALL BASE CONSTRUCTION JOINT

WYCKOFF GROUNDWATER
TREATMENT PLANT
BAINBRIDGE ISLAND, WA

31-54

CH2MHILL

FOR PROJECT DESIGN DETAILS
TURN OFF LV=SHBD,SHBD-DTL AND SHBD-OTLN IN THE ACTIVE FILE WHEN PLOTTING

$FILENAME $PLOTTIME

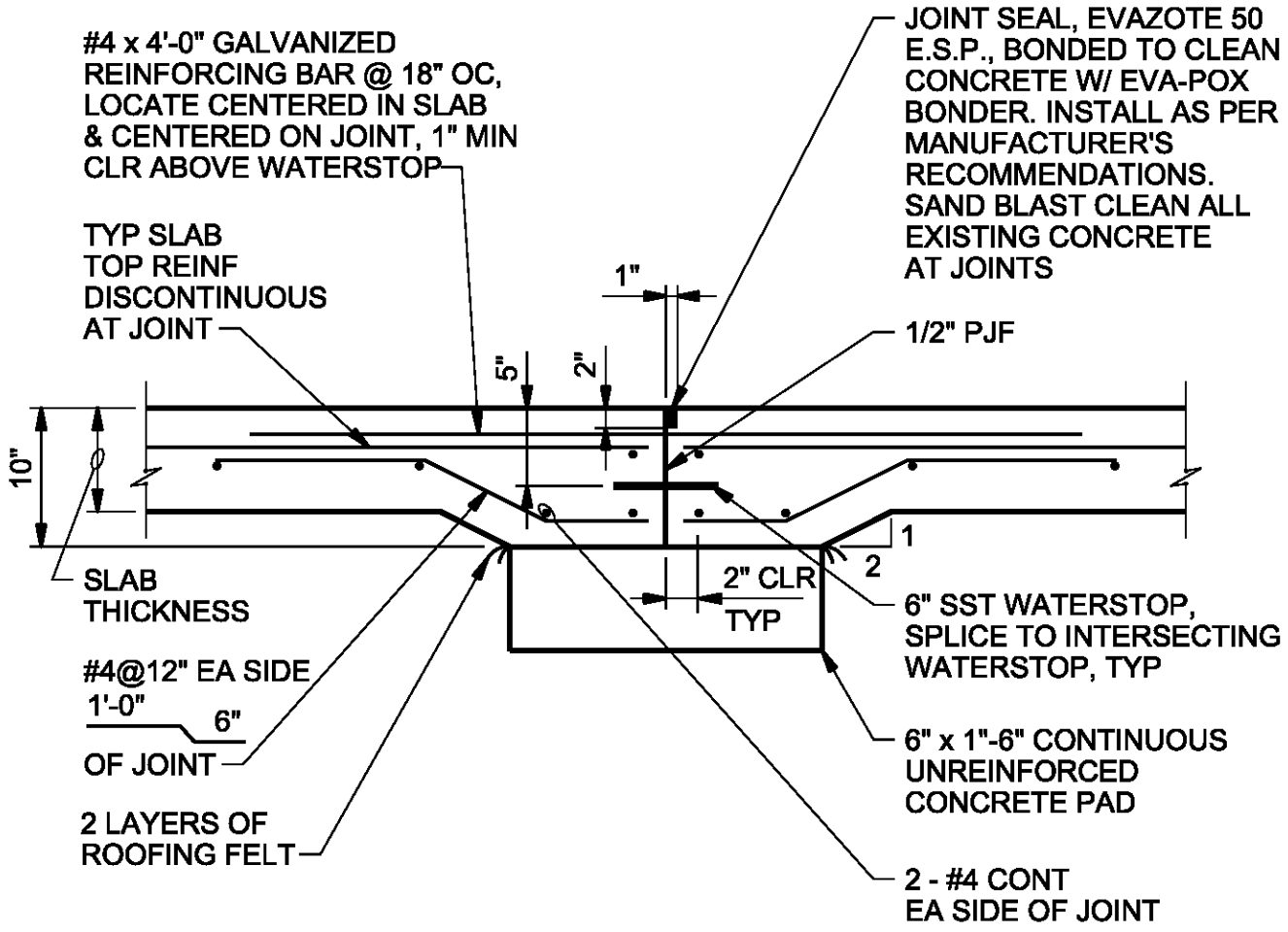

BASE SLAB CONTROL JOINT

WYCKOFF GROUNDWATER TREATMENT PLANT

BAINBRIDGE ISLAND, WA

3181

CH2MHILL

FOR PROJECT DESIGN DETAILS
TURN OFF LV=SHBD,SHBD-DTL AND SHBD-OTLN IN THE ACTIVE FILE WHEN PLOTTING

$FILENAME $PLOTTIME

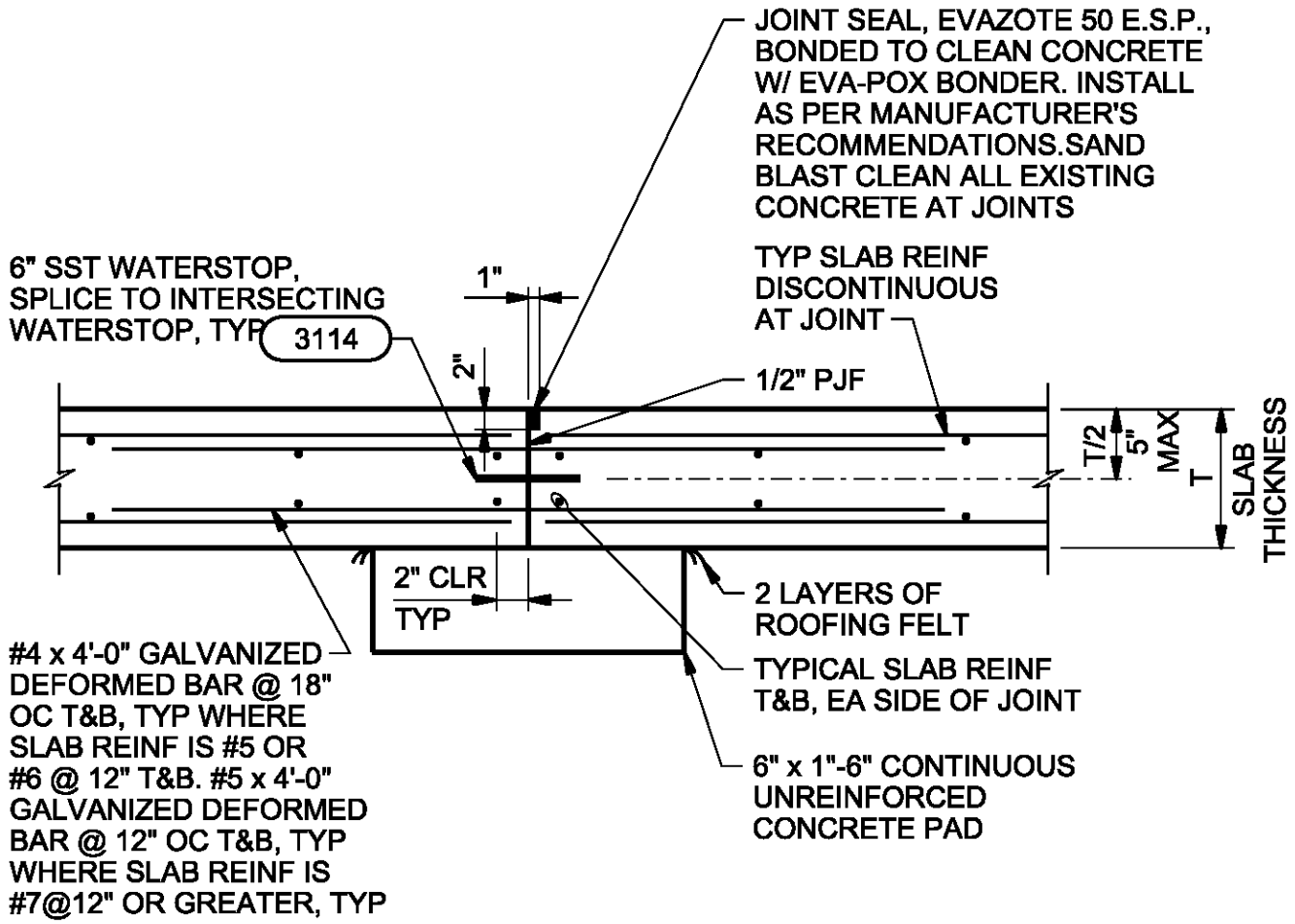

BASE SLAB CONTROL JOINT

WYCKOFF GROUNDWATER TREATMENT PLANT

BAINBRIDGE ISLAND, WA

3182

CH2MHILL

FOR PROJECT DESIGN DETAILS
TURN OFF LV=SHBD,SHBD-DTL AND SHBD-OTLN IN THE ACTIVE FILE WHEN PLOTTING

$FILENAME $PLOTTIME

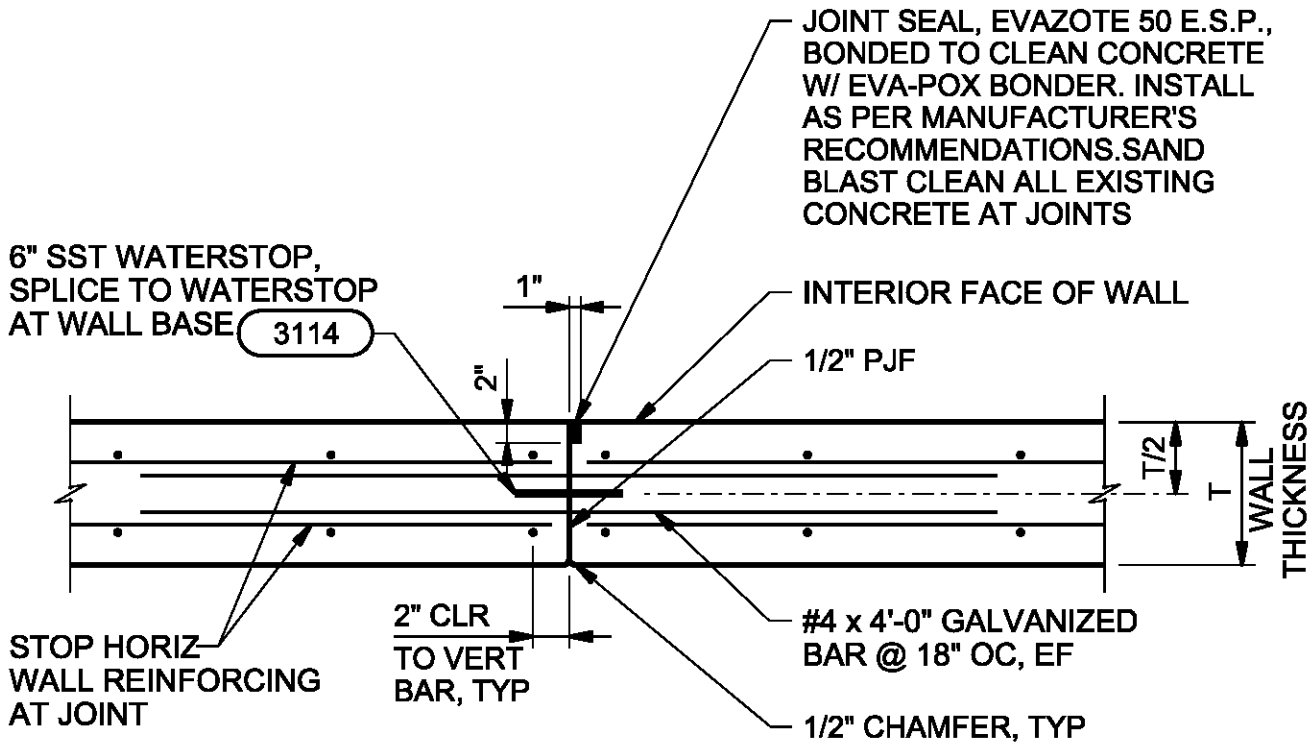

PLAN

WALL VERTICAL CONTROL JOINT

WYCKOFF GROUNDWATER TREATMENT PLANT

BAINBRIDGE ISLAND, WA

3201

CH2MHILL

FOR PROJECT DESIGN DETAILS
TURN OFF LV=SHBD,SHBD-DTL AND SHBD-OTLN IN THE ACTIVE FILE WHEN PLOTTING

$FILENAME $PLOTTIME

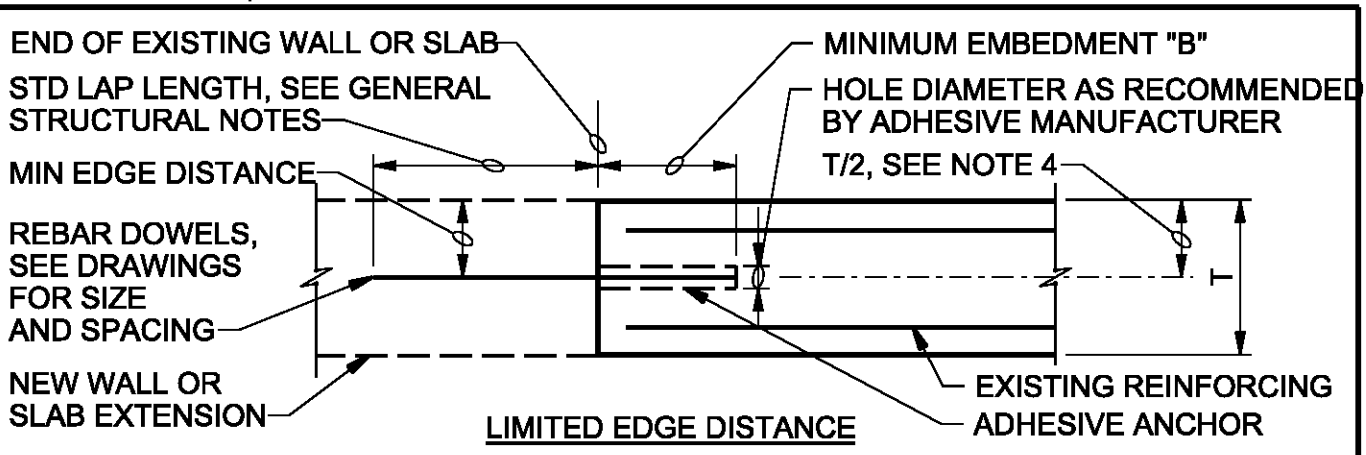

LIMITED EDGE DISTANCE

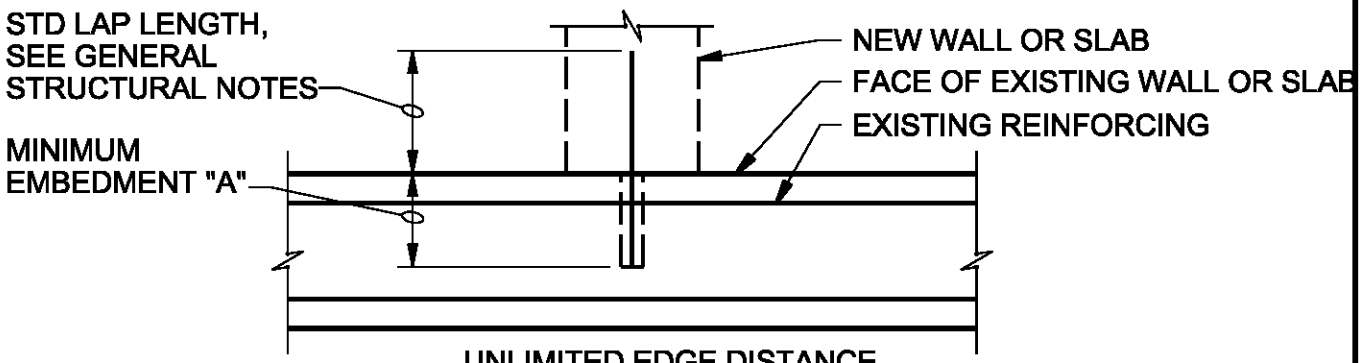

UNLIMITED EDGE DISTANCE

DOWEL SIZE	MINIMUM EDGE DIST	MINIMUM EMBEDMENT A	MINIMUM EMBEDMENT B
#3	2 1/2"	5"	8"
#4	3 1/2"	7"	11"
#5	4"	8"	13"
#6	5"	10 1/2"	16"
#7	6"	12 1/2"	20"
#8	7"	14"	22"
#9	7 1/2"	15"	24"

NOTES:

1. CONFORM TO THE REQUIREMENTS OF SPECIFICATION SECTION 03215, DOWELING FOR CONCRETE.
2. FOLLOW ADHESIVE MANUFACTURER'S INSTRUCTIONS FOR INSTALLATION.
3. USE MINIMUM EMBEDMENTS SHOWN, EXCEPT USE MANUFACTURER'S MINIMUM RECOMMENDED EMBEDMENT IF GREATER.
4. LOCATE DOWELS CENTERED IN WALL OR SLAB UNLESS OTHERWISE NOTED ON DRAWINGS. WHERE 2 ROWS OF DOWELS INDICATED, STAGGER SPACING & LOCATE ALTERNATING DOWELS AT MINIMUM EDGE DISTANCE FROM OPPOSITE FACES.

ADHESIVE DOWEL

WYCKOFF GROUNDWATER TREATMENT PLANT

BAINBRIDGE ISLAND, WA

3265

CH2MHILL

FOR PROJECT DESIGN DETAILS
TURN OFF LV=SHBD,SHBD-DTL AND SHBD-OTLN IN THE ACTIVE FILE WHEN PLOTTING

$FILENAME $PLOTTIME

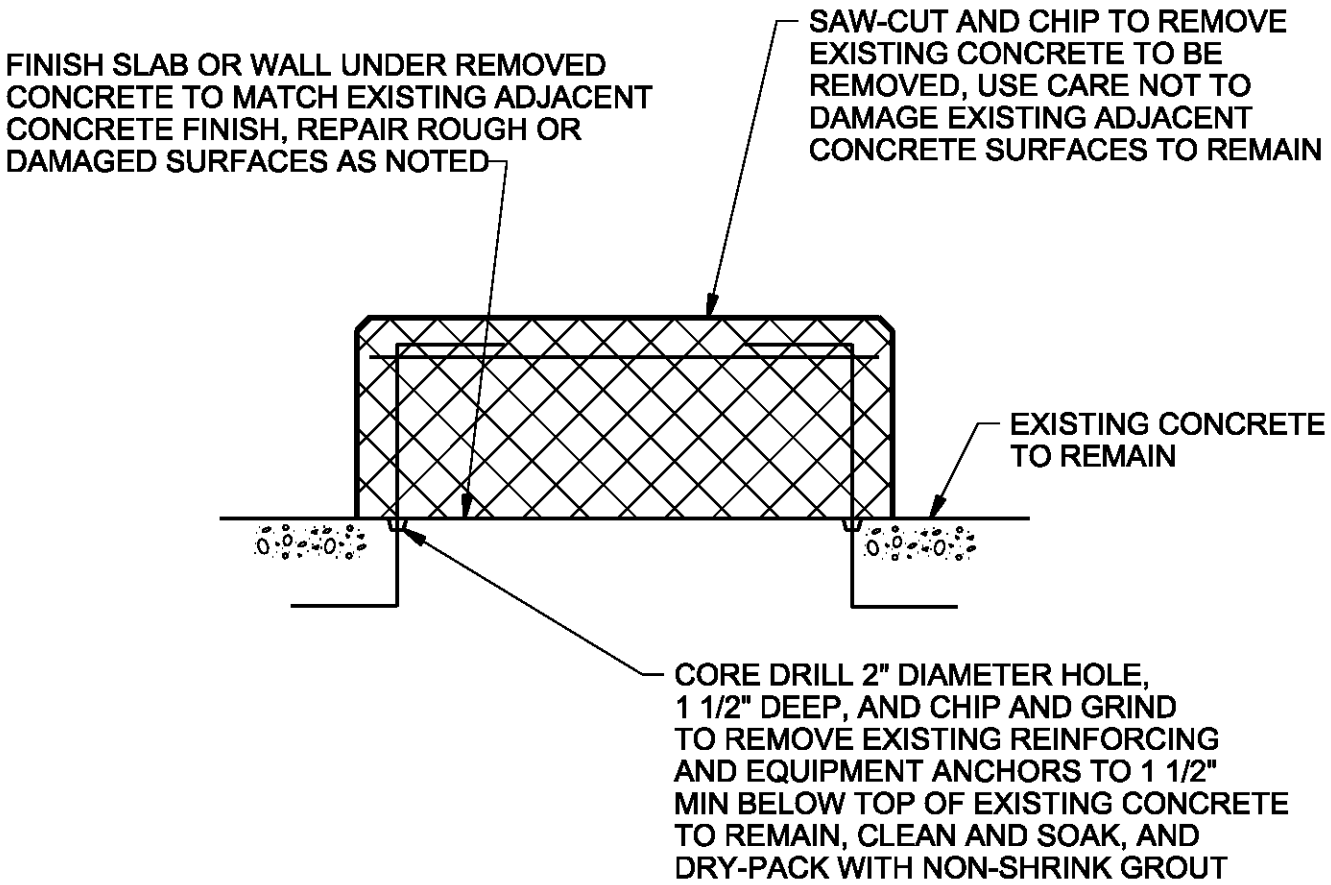

NOTES:

1. REMOVE CONCRETE OUT TO SOUND CONCRETE.
2. IF CHIPPING INTO THE SURFACE OF THE EXISTING SLAB OR WALL TO REMAIN IS REQUIRED, MAKE EDGES PERPENDICULAR TO THE SURFACE. DO NOT FEATHER EDGES.
3. FILL DEFECTIVE AREA WITH NON-SHRINK GROUT OR AN APPROVED PREPACKAGED PATCHING MATERIAL TO MATCH APPREARANCE OF ADJACENT CONCRETE SURFACES.
4. USE APPROVED BONDING AGENT ON SURFACES TO BE PATCHED PRIOR TO PLACING NON-SHRINK GROUT.
5. DEMONSTRATE METHODS FOR REPAIR USING ACTUAL MATERIALS, METHODS, AND CURING PROCEDURES REQUIRED BY MATERIAL MANUFACTURERS. CONSULT WITH BONDING AGENT MANUFACTURER AND NON-SHRINK GROUT MANUFACTURER ON TECHNIQUES.

CONCRETE DEMOLITION

WYCKOFF GROUNDWATER TREATMENT PLANT
BAINBRIDGE ISLAND, WA

3273

CH2MHILL

FOR PROJECT DESIGN DETAILS
TURN OFF LV=SHBD,SHBD-DTL AND SHBD-OTLN IN THE ACTIVE FILE WHEN PLOTTING

$FILENAME $PLOTTIME

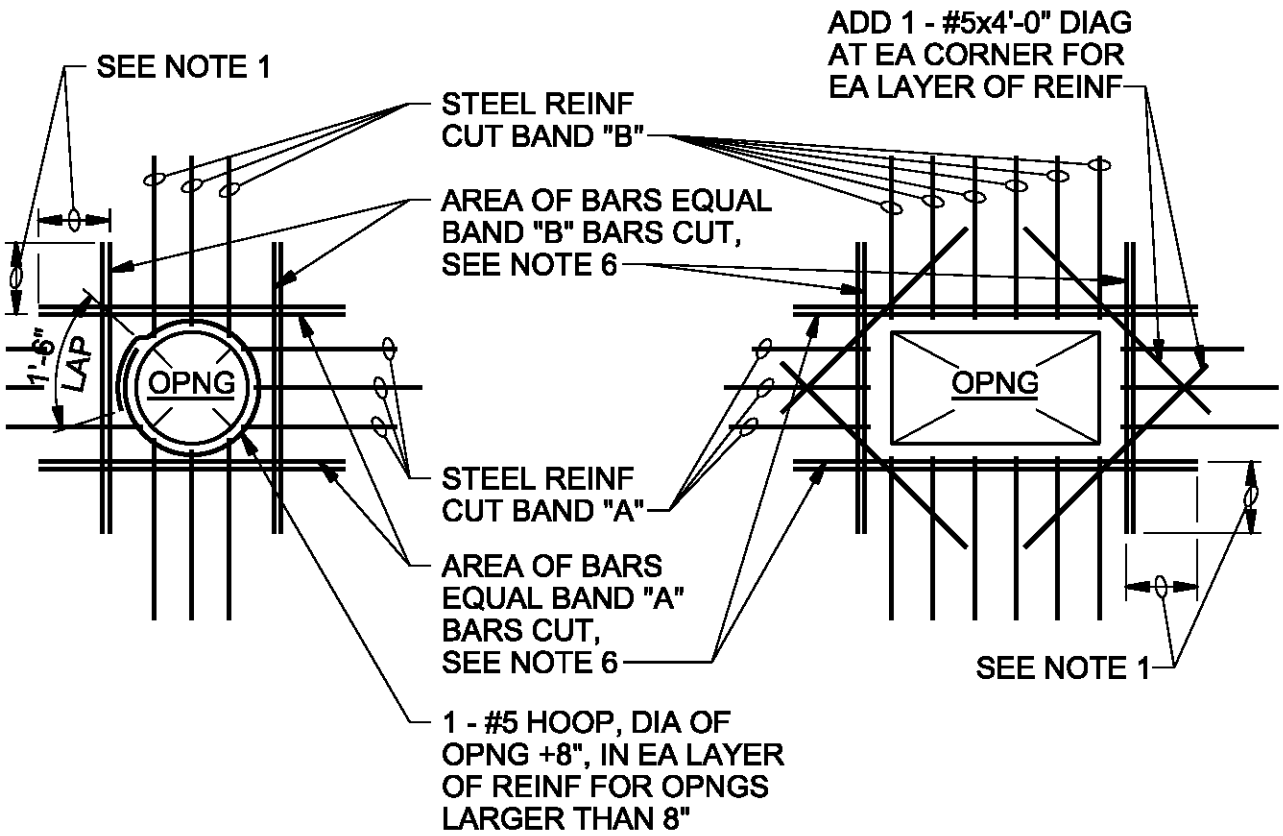

NOTES:

1. PROVIDE MINIMUM LAP, SEE GENERAL STRUCTURAL NOTES.
2. TYPICAL FOR ALL OPENINGS IN CONCRETE WALLS OF BELOW GRADE AND HYDRAULIC STRUCTURES AND ALL STRUCTURAL CONCRETE SLABS UNLESS INDICATED OTHERWISE ON PLANS.
3. DO NOT WELD REINFORCEMENT TO PIPE SLEEVES AND INSERTS.
4. PROVIDE A MINIMUM OF 2 "A" BARS AND 2 "B" BARS EACH SIDE OF OPENING (1 EACH FACE).
5. FOR OPENINGS LARGER THAN 8'-0", REINFORCE SAME AS FOR 8'-0" OPENINGS.
6. SPACE AT 3 BAR DIAMETERS (OR 3" MINIMUM) ON CENTER.

OPENING REINFORCING

WYCKOFF GROUNDWATER
TREATMENT PLANT
BAINBRIDGE ISLAND, WA

3301

CH2MHILL

FOR PROJECT DESIGN DETAILS
TURN OFF LV=SHBD,SHBD-DTL AND SHBD-OTLN IN THE ACTIVE FILE WHEN PLOTTING

$FILENAME $PLOTTIME

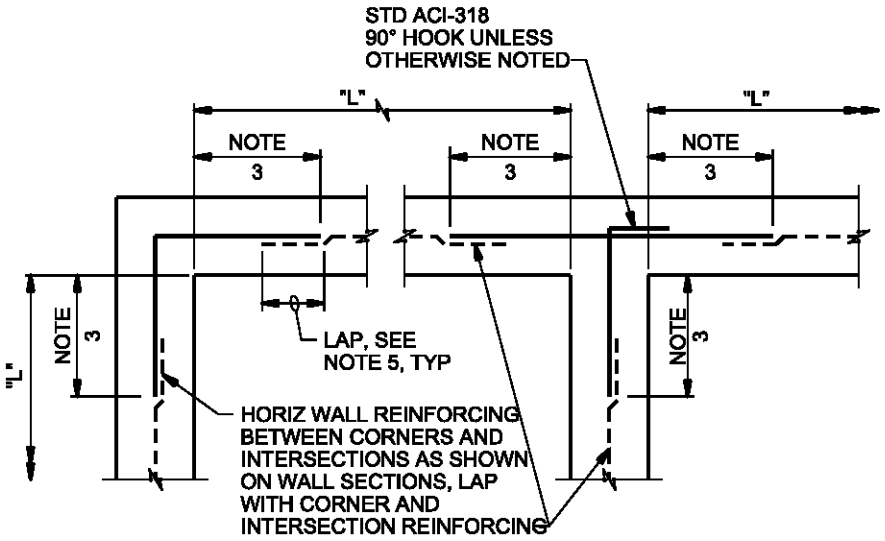

SINGLE REINFORCING MAT

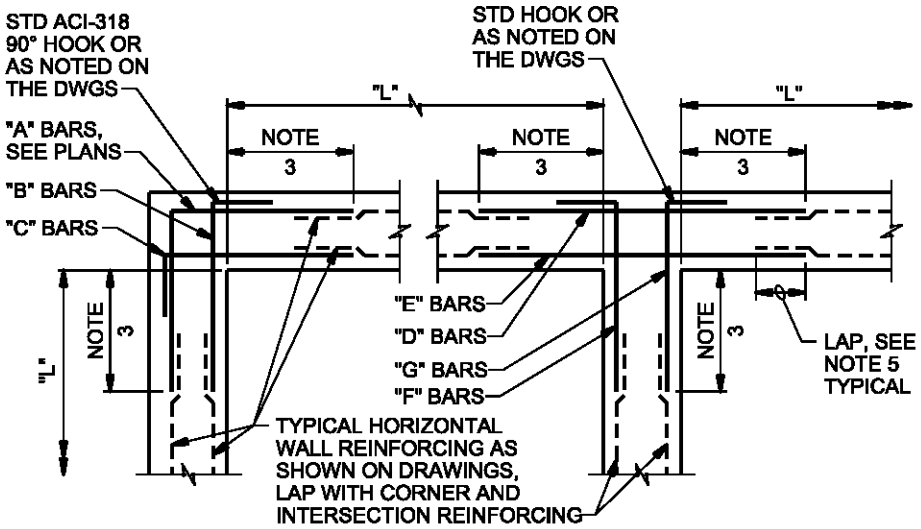

DOUBLE REINFORCING MAT

NOTES:

1. TYPICAL HORIZONTAL WALL CORNER AND INTERSECTION REINFORCING LAYOUT IS SHOWN TO AVOID CONGESTION AND PERMIT PROPER PLACEMENT, FOR SIZE AND SPACING SEE PLANS. ALL HORIZONTAL REINFORCING AT CORNERS AND INTERSECTIONS SHALL BE FABRICATED AND INSTALLED WITH SPLICES LOCATED WHERE SHOWN REGARDLESS OF BAR SIZE AND SPACING.
2. WHERE THE CORNER OR INTERSECTION REINFORCING SIZE AND SPACING IS NOT SHOWN, NOTED OR TABULATED ON THE PLANS, THE SIZE AND SPACING SHALL BE THE SAME AS THE WALL HORIZONTAL REINFORCING SHOWN ON THE WALL SECTIONS OR AS NOTED FOR THE REINFORCING BETWEEN THE CORNERS OR INTERSECTIONS.
3. EXCEPT WHERE OTHERWISE SHOWN ON THE DRAWINGS, THE LENGTH INDICATED AS "NOTE 3" SHALL BE THE LESSER OF L/4, 10 FEET, OR 1.0 TIMES THE HEIGHT OF THE WALL, EXCEPT THAT IN NO CASE SHALL IT BE LESS THAN 2 FEET.
4. L = LENGTH OF WALL PARALLEL TO THE BAR LENGTH IN QUESTION.
5. EXCEPT WHERE OTHERWISE SHOWN ON THE DRAWINGS, THE LENGTH INDICATED AS "NOTE 5" SHALL BE EQUAL TO ONE "LAP LENGTH" AS REQUIRED BY THE GENERAL STRUCTURAL NOTES. USE THE LAP LENGTH AS REQUIRED FOR THE SMALLER OF THE TWO REINFORCING BARS BEING SPLICED.
6. UNLESS OTHERWISE NOTED, "B" AND "C" BARS ARE THE SAME SIZE AND SPACING AND, "F" AND "G" BARS ARE THE SAME SIZE AND SPACING.

TYPICAL WALL CORNER AND INTERSECTION REINFORCING

WYCKOFF GROUNDWATER
TREATMENT PLANT
BAINBRIDGE ISLAND, WA

3303

CH2MHILL

FOR PROJECT DESIGN DETAILS
TURN OFF LV=SHBD,SHBD-DTL AND SHBD-OTLN IN THE ACTIVE FILE WHEN PLOTTING

$FILENAME $PLOTTIME

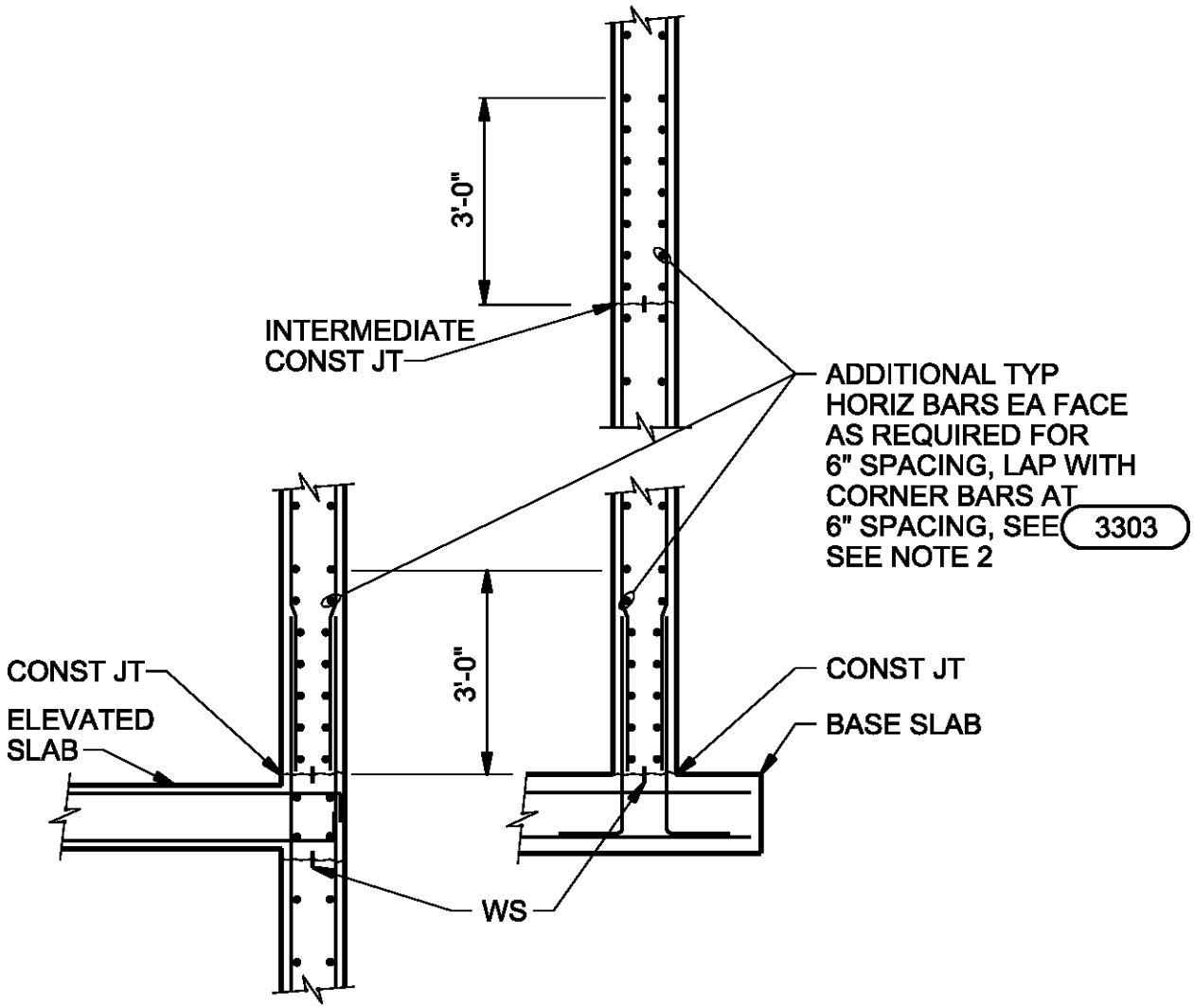

WALL SECTION

NOTES:

1. PROVIDE ADDITIONAL HORIZONTAL BARS AS SHOWN IN THE FIRST THREE FEET ABOVE ALL HORIZONTAL WALL CONSTRUCTION JOINTS IN HYDRAULIC AND BELOW-GRADE STRUCTURES.
2. PROVIDE ADDITIONAL HORIZONTAL CORNER BARS EA. FACE AS REQUIRED FOR 6" SPACING TO LAP WITH THE ADDITIONAL TYPICAL HORIZONTAL BARS SHOWN.

ADDITIONAL REINFORCING AT

WYCKOFF GROUNDWATER
TREATMENT PLANT

BAINBRIDGE ISLAND, WA

3304

CH2MHILL

FOR PROJECT DESIGN DETAILS
TURN OFF LV=SHBD,SHBD-DTL AND SHBD-OTLN IN THE ACTIVE FILE WHEN PLOTTING

$FILENAME $PLOTTIME

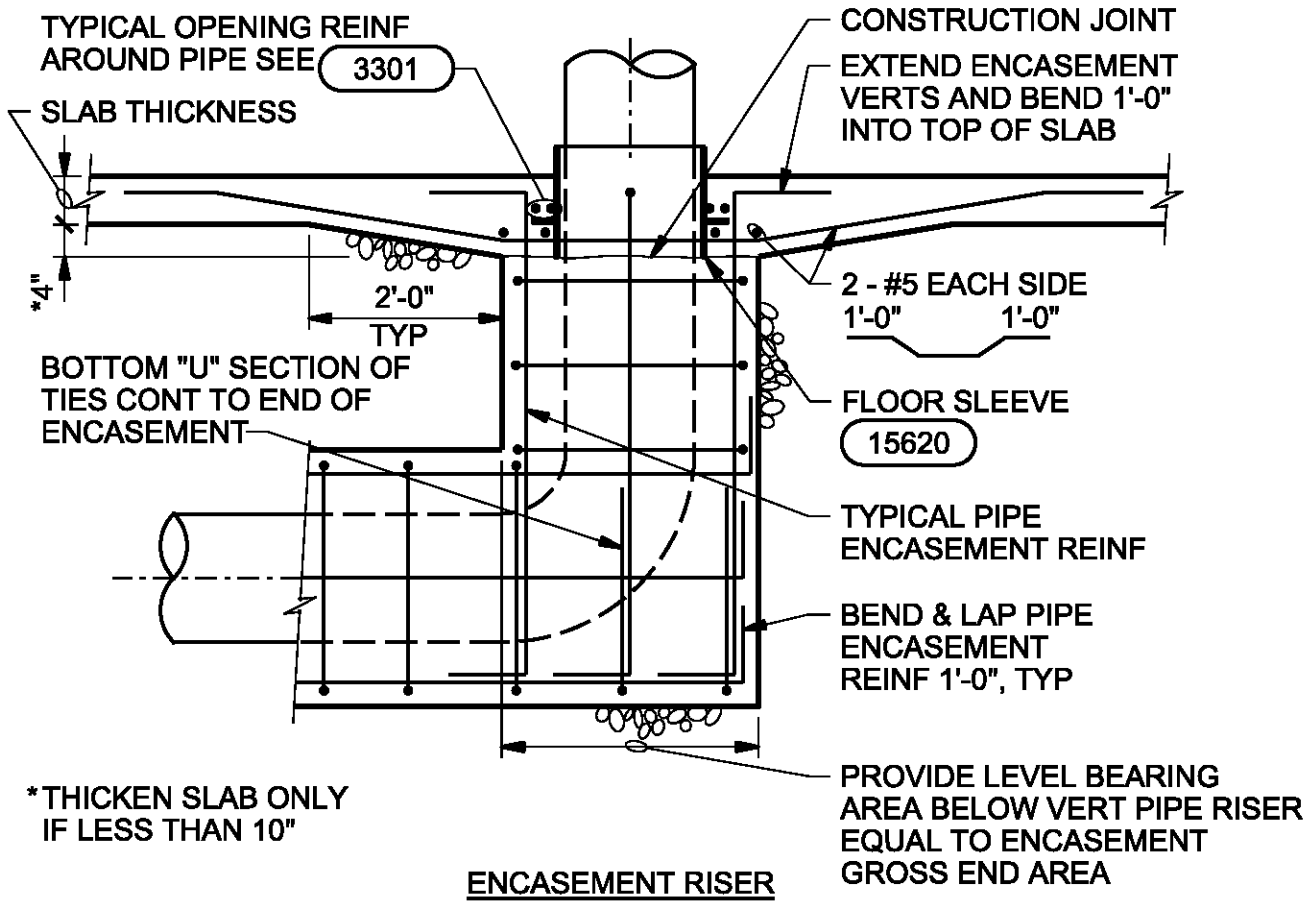

ENCASEMENT RISER

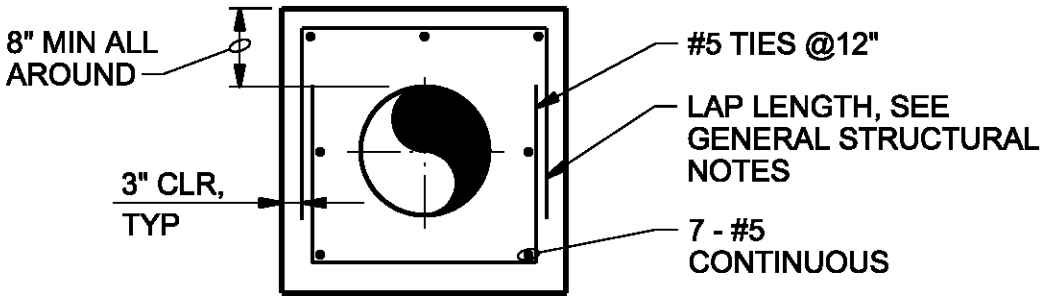

SECTION

NOTES:

1. SECTION APPLIES TO PIPES W/ DIAMETERS 18" AND SMALLER. FOR 20" DIAMETER PIPES AND LARGER, SEE 3317
2. WHEN PIPE ENCASEMENT IS CLOSER THAN 4" TO SLAB ABOVE, TIE SLAB & ENCASEMENT TOGETHER. SEE 3318

PIPE ENCASEMENT

WYCKOFF GROUNDWATER TREATMENT PLANT

BAINBRIDGE ISLAND, WA

3316

CH2MHILL

FOR PROJECT DESIGN DETAILS
TURN OFF LV=SHBD,SHBD-DTL AND SHBD-OTLN IN THE ACTIVE FILE WHEN PLOTTING

$FILENAME $PLOTTIME

PIPE ENCASEMENT TABLE								
PIPE DIA (IN.)	H=10 FEET		H=20 FEET		H=30 FEET		H=40 FEET	
	T (in)	REINF	T (in)	REINF	T (in)	REINF	T (in)	REINF
20 THRU 30	8	#5@12"	10	#5@12"	10	#5@12"	10	#6@12"
36 THRU 42	10	#5@12"	10	#6@12"	10	#7@12"	10	#6@6"
48 THRU 54	10	#6@12"	10	#7@12"	10	#7@6"	12	#7@6"
UP TO 60	10	#6@12"	10	#6@6"	14	#7@6"	14	#7@6"

HEAVY DARK LINE INDICATES BREAK BETWEEN ONE LAYER OF REINFORCING AND TWO. SEE NOTE 2.

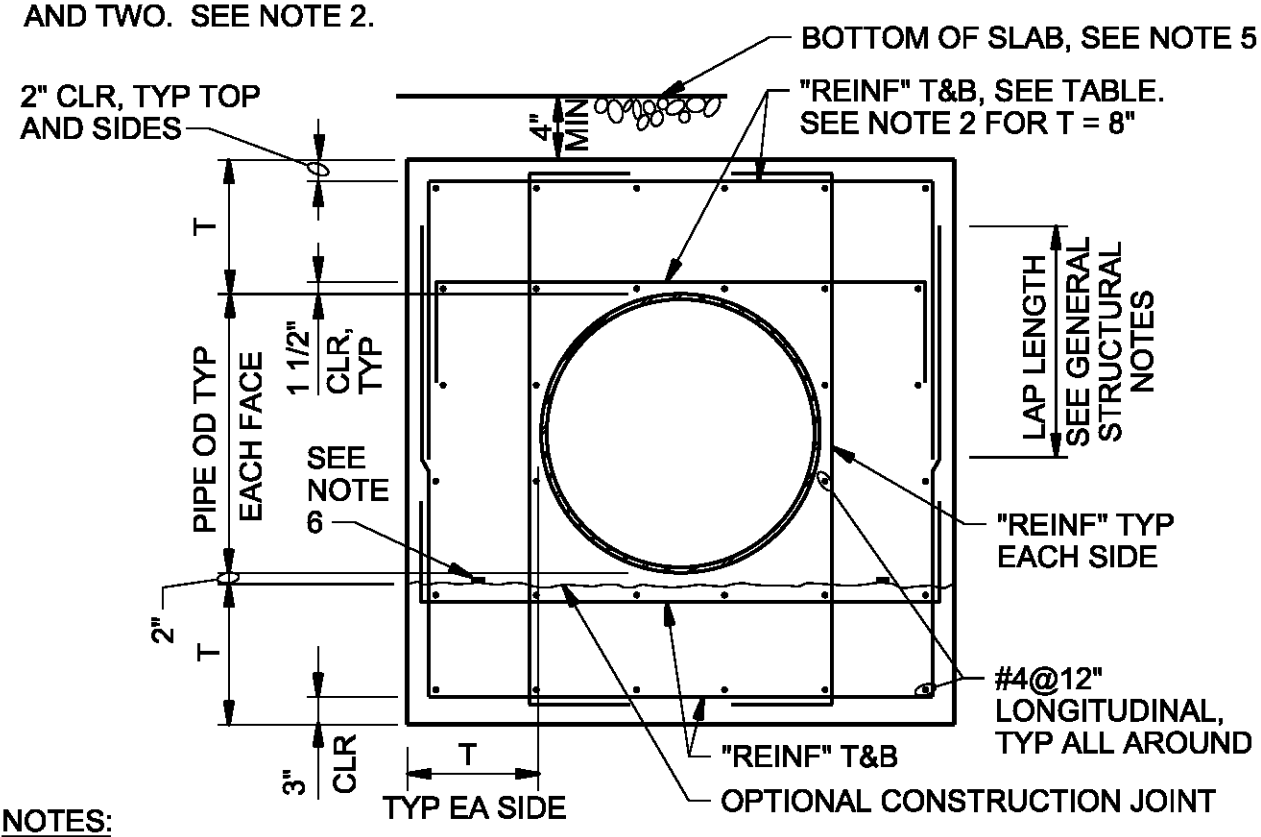

NOTES:

1. THIS DETAIL APPLIES TO PIPE DIAMETER OF 20" AND LARGER. FOR SMALLER THAN 20", SEE DETAIL 3316
2. FOR T=8" REINFORCING SHALL BE ONE LAYER AND CENTERED IN SLABS OR WALLS. SIM 3316
3. FOR ENCASEMENT AT PIPE RISER, SEE 3316
4. "H" IS FILL HEIGHT OR WATER DEPTH OR COMBINATION ABOVE PIPE.
5. WHEN PIPE ENCASEMENT CLOSER THAN 4" TO SLAB ABOVE, TIE SLAB & ENCASEMENT TOGETHER. SEE 3318

PIPE ENCASEMENT

WYCKOFF GROUNDWATER TREATMENT PLANT
BAINBRIDGE ISLAND, WA

3317

CH2MHILL

FOR PROJECT DESIGN DETAILS
TURN OFF LV=SHBD,SHBD-DTL AND SHBD-OTLN IN THE ACTIVE FILE WHEN PLOTTING

$FILENAME $PLOTTIME

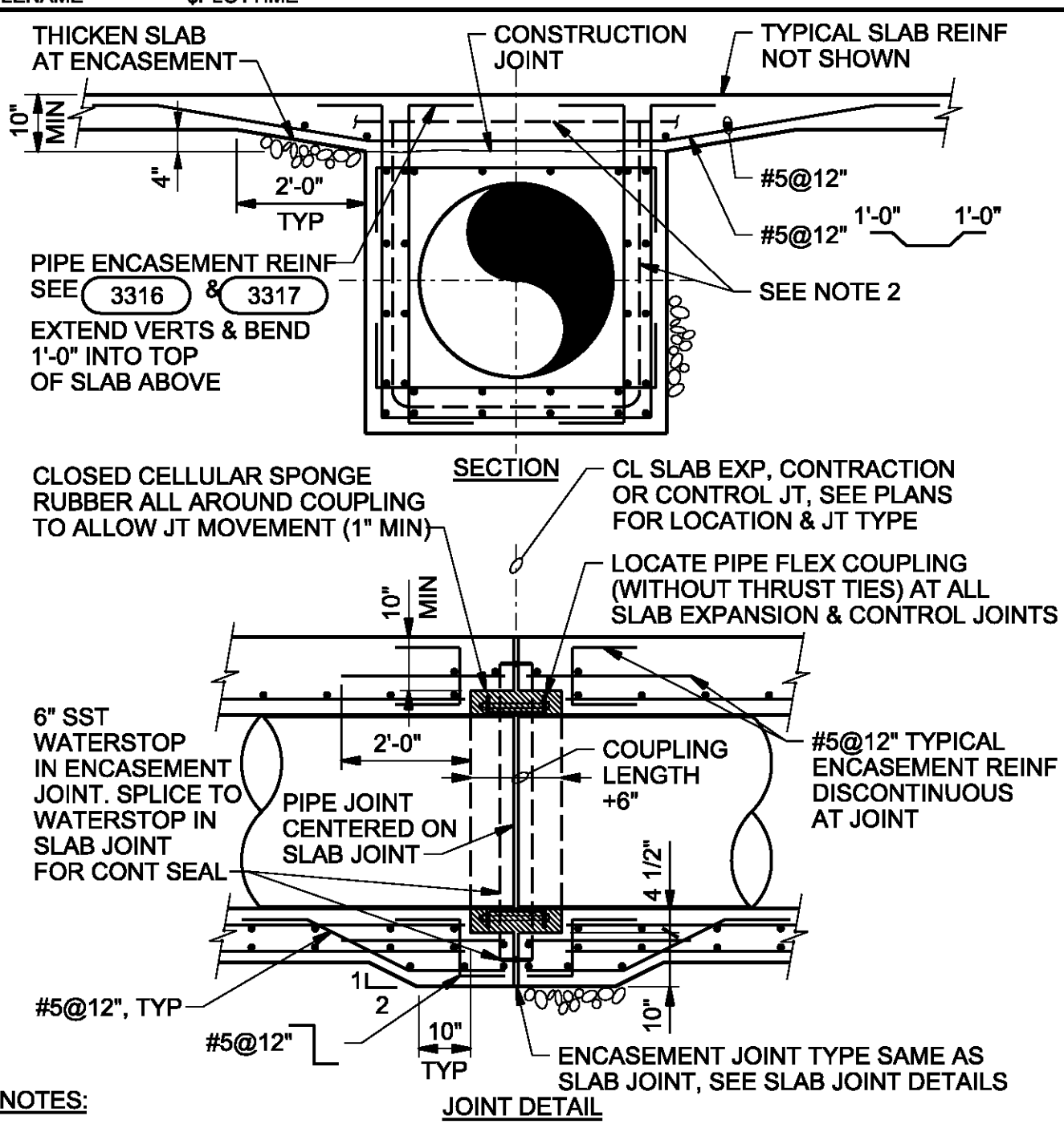

NOTES:

1. TIE PIPE ENCASEMENT TO SLAB AS SHOWN WHEN DISTANCE BETWEEN PIPE ENCASEMENT AND BOTTOM OF SLAB IS LESS THAN 4".
2. 6" SST WS IN ENCASEMENT JOINTS. SPLICE TO WS IN SLAB JOINTS. SEE DETAIL 3114

PIPE ENCASEMENT AT SLAB

WYCKOFF GROUNDWATER TREATMENT PLANT

BAINBRIDGE ISLAND, WA

3318

CH2MHILL

FOR PROJECT DESIGN DETAILS
TURN OFF LV=SHBD,SHBD-DTL AND SHBD-OTLN IN THE ACTIVE FILE WHEN PLOTTING

$FILENAME $PLOTTIME

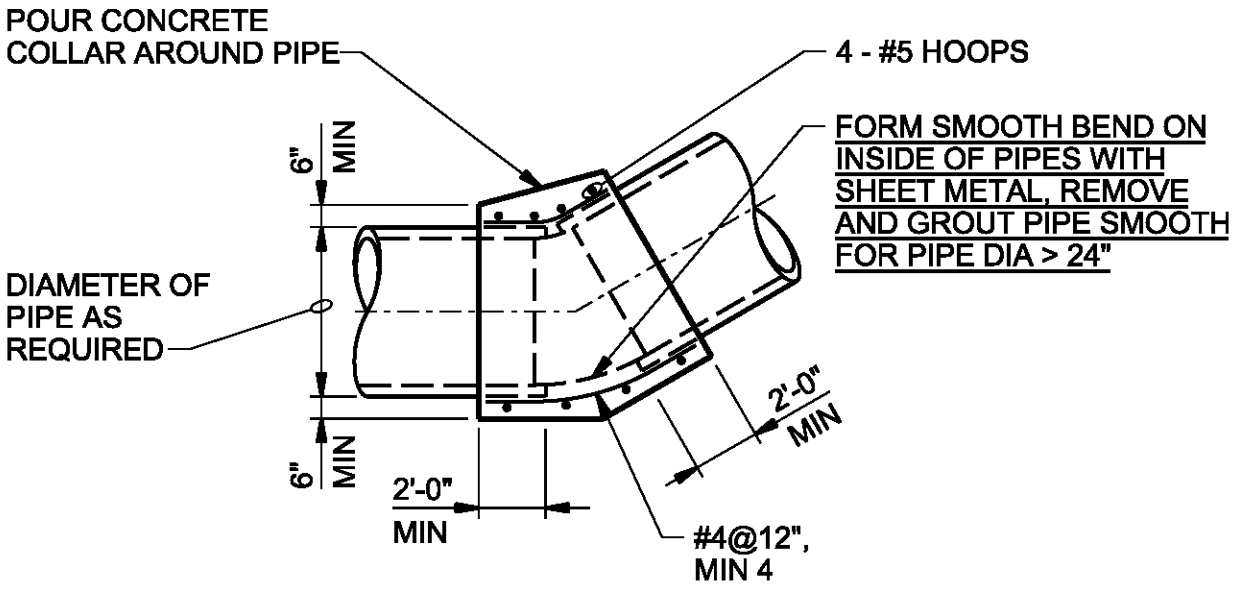

NOTES:

1. PIPE SUPPLIER'S SHOP BUILT ELBOWS WITH RUBBER RING JOINTS MAY BE USED
2. ELBOW USED FOR BOTH HORIZONTAL ANGLE CHANGES AND VERTICAL ELEVATION CHANGES.

FIELD FABRICATED ELBOW FOR CONCRETE PIPE

WYCKOFF GROUNDWATER TREATMENT PLANT

BAINBRIDGE ISLAND, WA

3319

CH2MHILL

FOR PROJECT DESIGN DETAILS
TURN OFF LV=SHBD,SHBD-DTL AND SHBD-OTLN IN THE ACTIVE FILE WHEN PLOTTING

$FILENAME $PLOTTIME

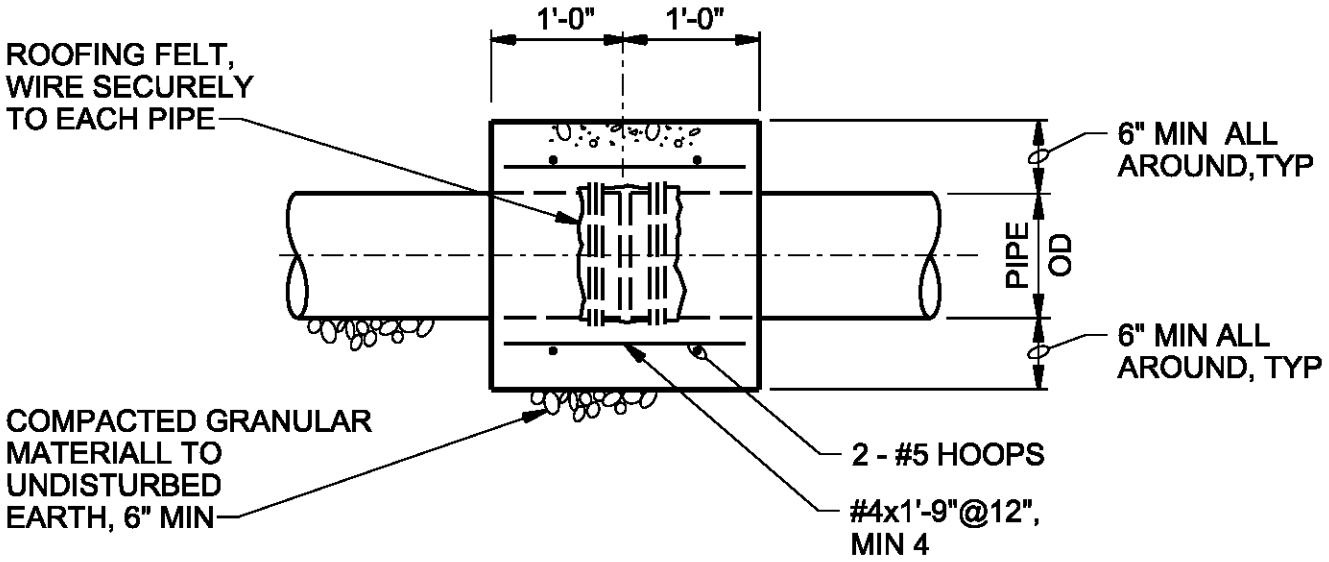

CONCRETE CLOSURE COLLAR

WYCKOFF GROUNDWATER TREATMENT PLANT

BAINBRIDGE ISLAND, WA

3320

CH2MHILL

FOR PROJECT DESIGN DETAILS
TURN OFF LV=SHBD,SHBD-DTL AND SHBD-OTLN IN THE ACTIVE FILE WHEN PLOTTING

$FILENAME $PLOTTIME

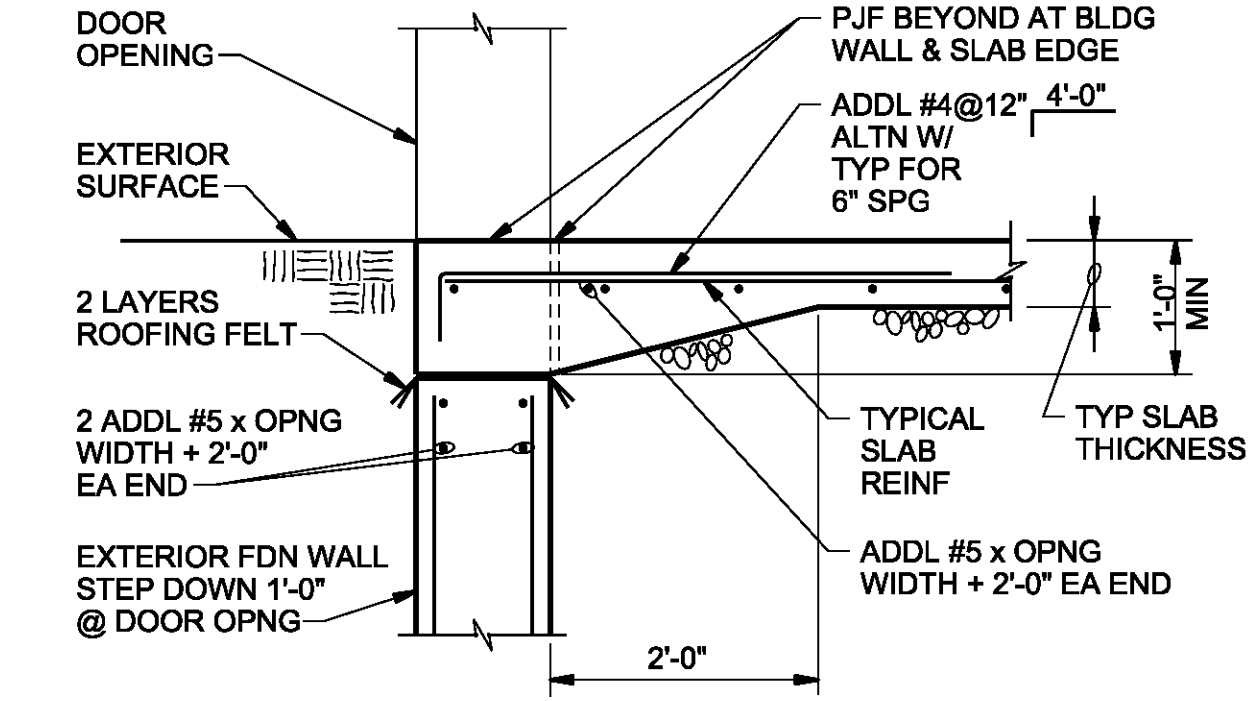

EXTERIOR

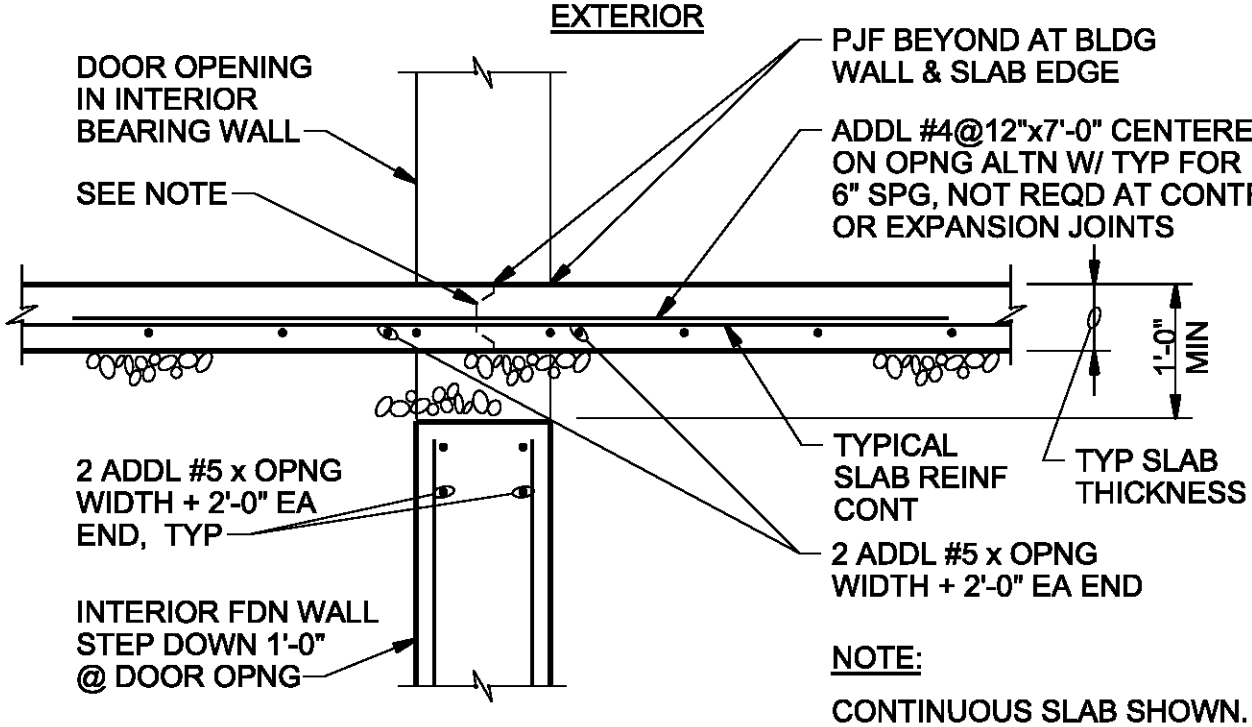

INTERIOR

NOTE:

CONTINUOUS SLAB SHOWN. PROVIDE CONTROL OR EXPANSION JOINTS WHERE NOTED ON PLANS, WITH DISCONTINUOUS REINFORCING.

SLAB AT DOOR OPENING

WYCKOFF GROUNDWATER TREATMENT PLANT

BAINBRIDGE ISLAND, WA

3341

CH2MHILL

FOR PROJECT DESIGN DETAILS
TURN OFF LV=SHBD,SHBD-DTL AND SHBD-OTLN IN THE ACTIVE FILE WHEN PLOTTING

$FILENAME $PLOTTIME

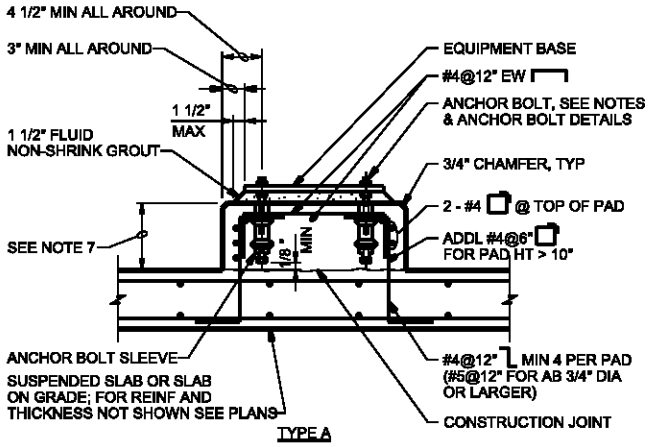

TYPE A

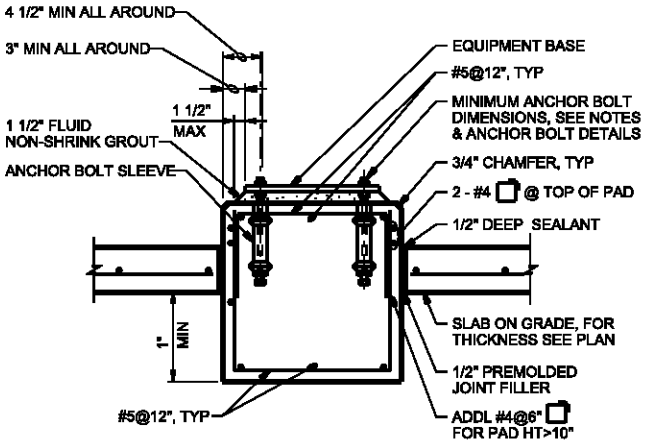

TYPE D

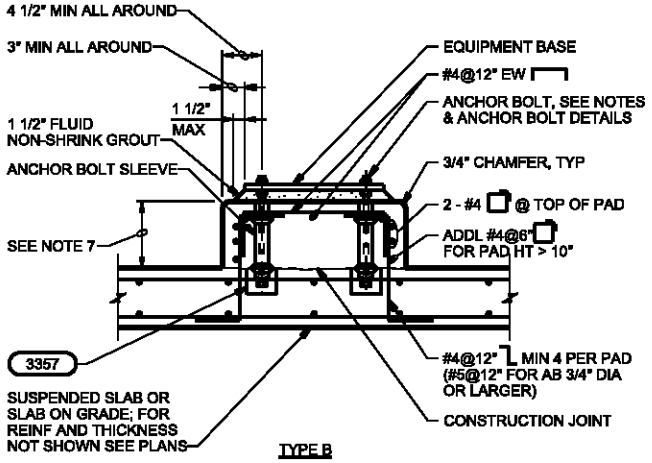

TYPE B

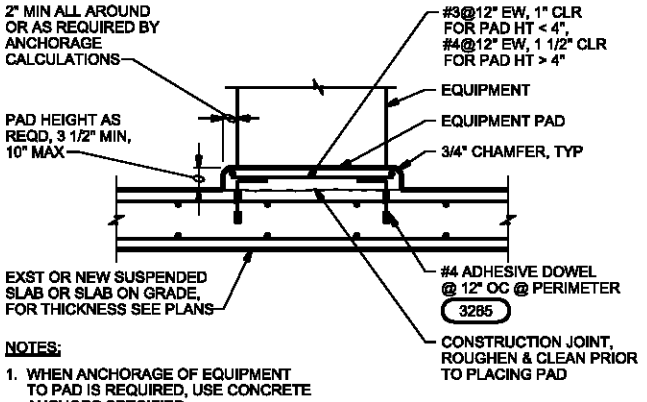

NOTES:

1. WHEN ANCHORAGE OF EQUIPMENT TO PAD IS REQUIRED, USE CONCRETE ANCHORS SPECIFIED.
2. CONCRETE PADS FOR ELECTRICAL EQUIPMENT SHALL BE 3 1/2" HIGH, UNLESS NOTED OTHERWISE.

TYPE E

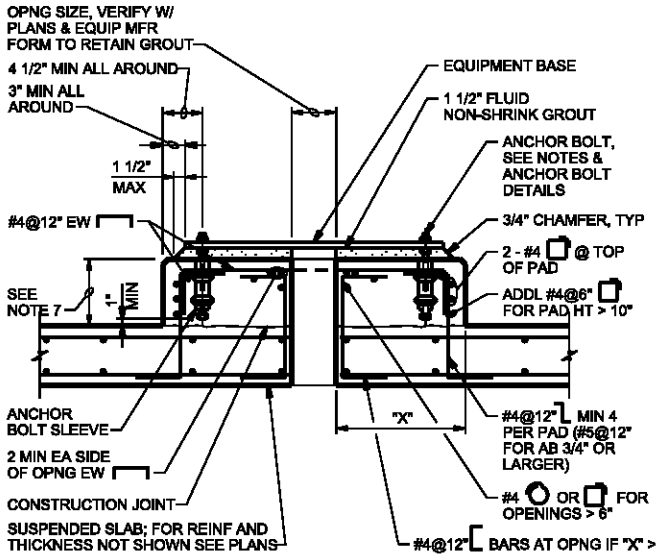

TYPE C

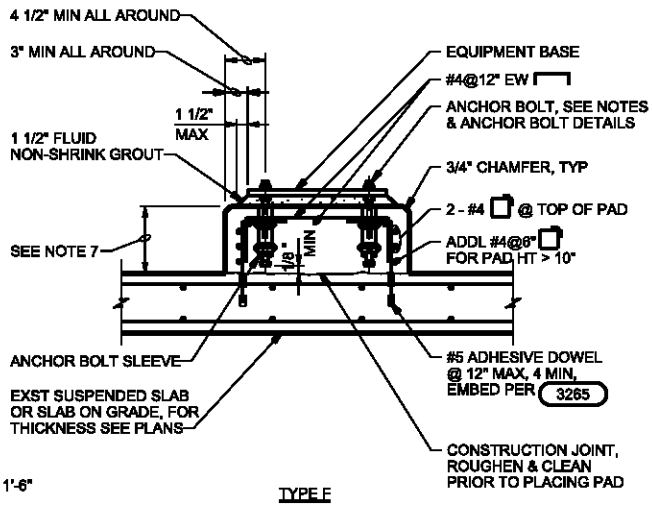

TYPE F

CONCRETE EQUIPMENT PADS

DETAIL 1 OF 2

3356

WYCKOFF GROUNDWATER TREATMENT PLANT

BAINBRIDGE ISLAND, WA

CH2MHILL

FOR PROJECT DESIGN DETAILS
TURN OFF LV=SHBD,SHBD-DTL AND SHBD-OTLN IN THE ACTIVE FILE WHEN PLOTTING

$FILENAME $PLOTTIME

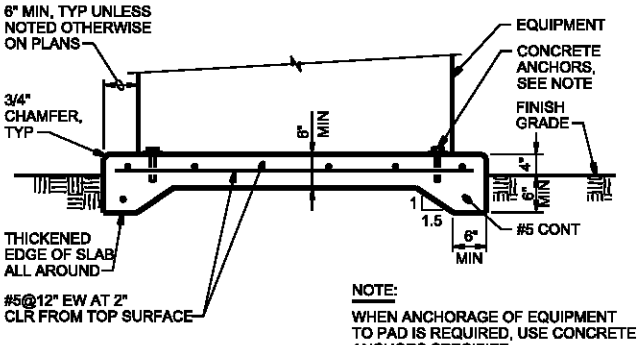

NOTE:
WHEN ANCHORAGE OF EQUIPMENT TO PAD IS REQUIRED, USE CONCRETE ANCHORS SPECIFIED.

TYPE G

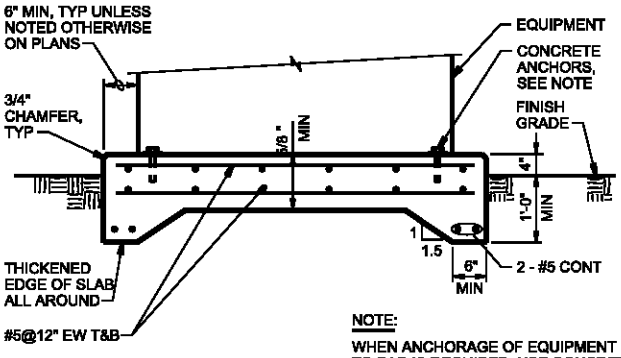

NOTE:
WHEN ANCHORAGE OF EQUIPMENT TO PAD IS REQUIRED, USE CONCRETE ANCHORS SPECIFIED.

TYPE H

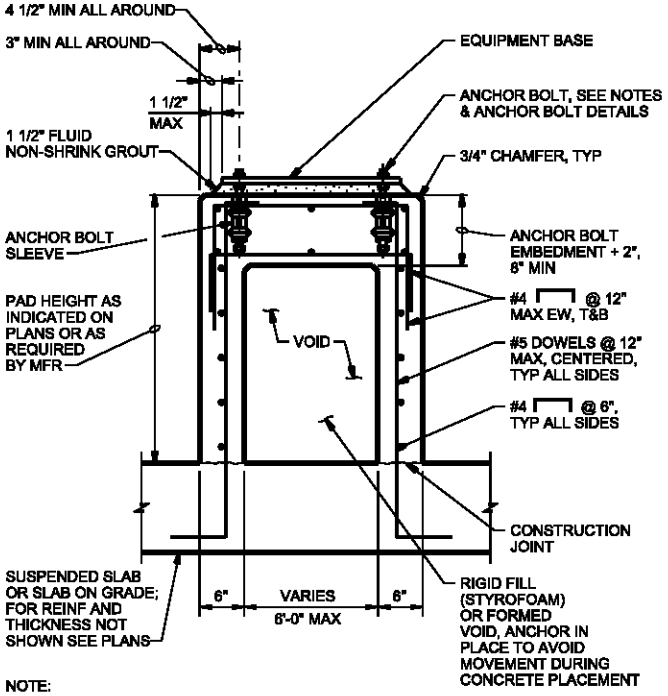

NOTE:
DO NOT USE FOR VIBRATORY EQUIPMENT OF FOR EQUIPMENT THAT WEIGHS MORE THAN 2000 POUNDS.

TYPE K

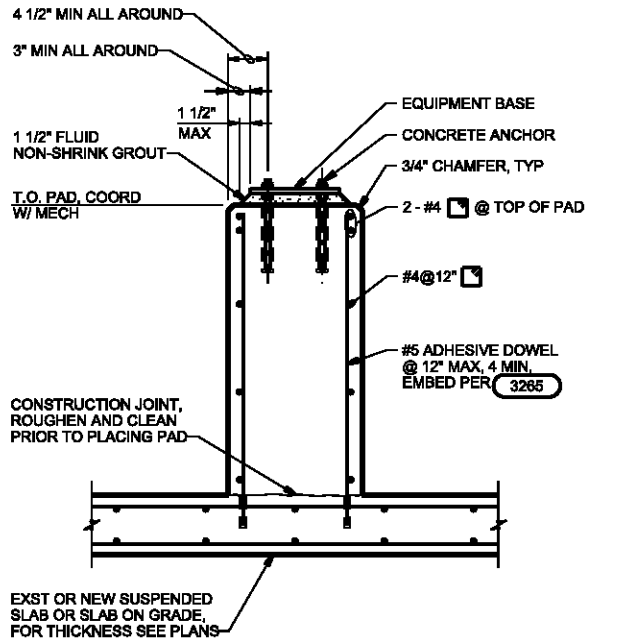

TYPE J

NOTES:

1. PAD SIZE SHALL BE MINIMUM INDICATED OR AS SHOWN ON THE PLANS OR AS INDICATED BY THE MANUFACTURER AND APPROVED BY THE ENGINEER.
2. THE SIZE, NUMBER, TYPE, LOCATION, AND THREAD PROJECTION OF THE ANCHOR BOLTS SHALL BE DETERMINED BY THE EQUIPMENT MANUFACTURER AND AS APPROVED BY THE ENGINEER. ANCHOR BOLTS SHALL BE HELD IN POSITION WITH A TEMPLATE OR OTHER ACCEPTABLE MEANS, MATCHING THE BASE PLATE, WHILE PAD IS BEING PLACED.
3. ANCHOR BOLT SLEEVES SHALL BE USED TO PROVIDE MINIMUM ANCHOR BOLT MOVEMENT OF 1/2" IN ALL HORIZONTAL DIRECTIONS. THE MINIMUM SLEEVE LENGTH SHALL BE 8 TIMES THE BOLT DIAMETER.
4. ANCHOR BOLT SLEEVES SHALL HAVE A MINIMUM INTERNAL DIAMETER 1" GREATER THAN BOLT DIAMETER AND A MAXIMUM INTERNAL DIAMETER 3" GREATER THAN ANCHOR BOLT DIAMETER. SLEEVES SHALL BE FILLED WITH NON-SHRINK GROUT AFTER BOLTS ARE ALIGNED. SEE 3357 .
5. EQUIPMENT BASES SHALL BE INSTALLED LEVEL UNLESS INDICATED OTHERWISE.
6. WEDGES, SHIMS, OR LEVELING NUTS SHALL BE USED TO SUPPORT THE BASE WHILE THE NON-SHRINK GROUT IS PLACED. WEDGES OR SHIMS THAT ARE LEFT IN PLACE SHALL NOT BE EXPOSED TO VIEW.
7. HEIGHT OF PADS SHALL BE MINIMUM REQUIRED FOR ANCHOR BOLT CLEARANCE TO KEEP ANCHOR BOLT ABOVE SUPPORTING SLAB (SEE TABLE BELOW). WHERE EQUIPMENT OR PIPING ELEVATION REQUIRE A PAD HEIGHT LESS THAN THE MINIMUM SHOWN, USE TYPE "B" EQUIPMENT PAD WITH BLOCKOUT.
8. TYPE "D" PAD SHALL BE USED ONLY WHERE SPECIFICALLY INDICATED. PLACE THE SURROUNDING FLOOR SLAB AFTER THE EQUIPMENT PAD.
9. AT CONTRACTOR'S OPTION, CONCRETE ANCHORS MAY BE USED IN LIEU OF CAST-IN-PLACE ANCHOR BOLTS FOR EQUIPMENT ANCHOR BOLTS LESS THAN 3/4" DIAMETER WHEN APPROVED BY THE EQUIPMENT MANUFACTURER AND APPROVED BY THE ENGINEER. ANCHORS SHALL BE INSTALLED WITH 4" MINIMUM EDGE DISTANCE IN EACH DIRECTION.

AB DIA (IN.)	1/2	5/8	3/4	7/8	1	1 1/4	1 3/8	1 1/2	1 3/4	2
MIN PAD HT (IN.)	7	8 1/2	10	11	12 1/2	15	16 1/2	18	21	24

CONCRETE EQUIPMENT PADS

DETAIL 2 OF 2

3356

WYCKOFF GROUNDWATER TREATMENT PLANT

BAINBRIDGE ISLAND, WA

CH2MHILL

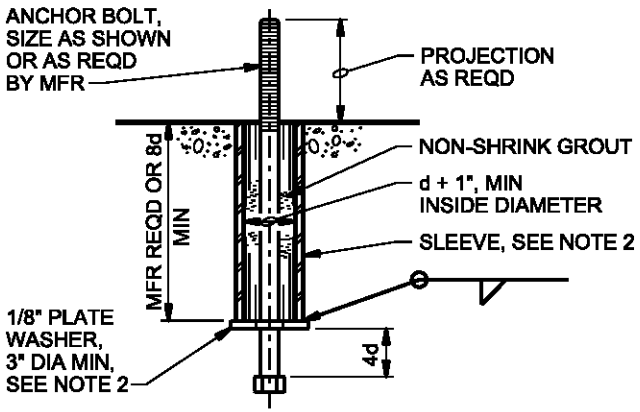

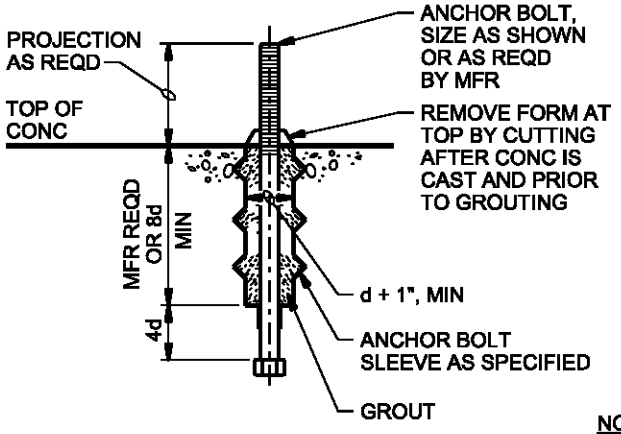

MACHINERY ANCHOR BOLT DETAIL

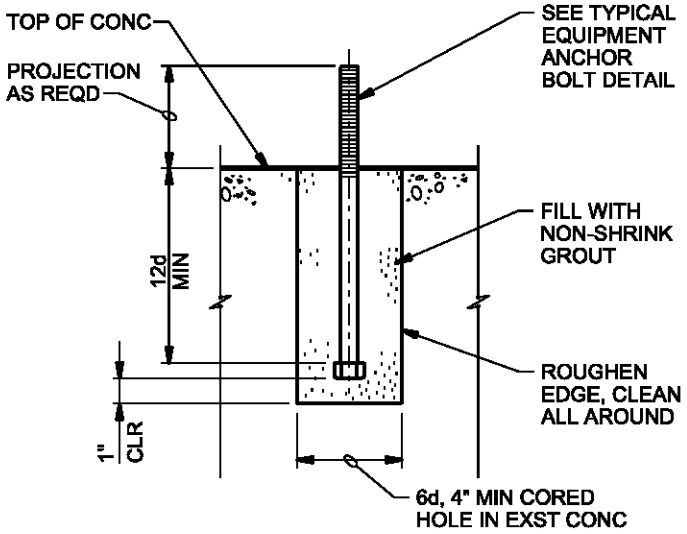

ANCHOR BOLT RETROFIT

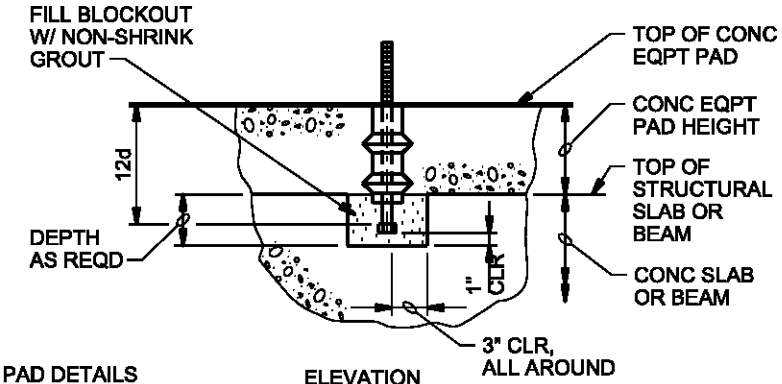

ELEVATION

ANCHOR BOLT BLOCKOUT

NOTES:

1. FOR CONCRETE EQUIPMENT PAD DETAILS AND NOTES NOT SHOWN SEE 3356
2. MATERIAL TO MATCH BOLT.

ANCHOR BOLT DETAILS

WYCKOFF GROUNDWATER TREATMENT PLANT

BAINBRIDGE ISLAND, WA

3357

CH2MHILL

FOR PROJECT DESIGN DETAILS
TURN OFF LV=SHBD,SHBD-DTL AND SHBD-OTLN IN THE ACTIVE FILE WHEN PLOTTING

$FILENAME $PLOTTIME

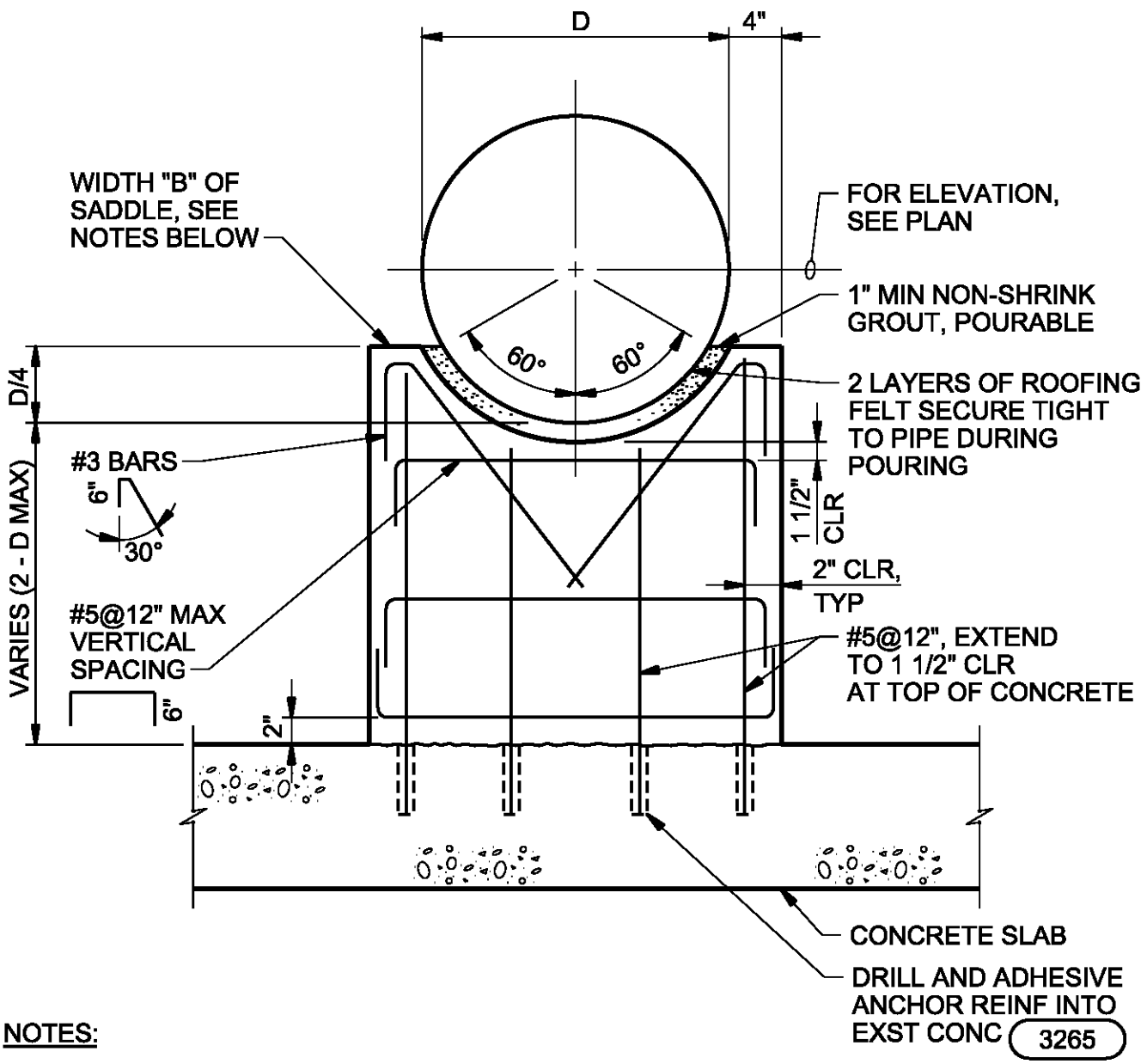

NOTES:

1. THICKNESS "B" OF SADDLE
   B = 6" WHEN: D < 12"
   B = 8" WHEN: 12"≤ D < 24
   B = 10" WHEN: 24" ≤ D < 36"
   B = 12" WHEN: 36" ≤ D < 48"
2. FOR "B"=10" OR THICKER, USE 2 LAYERS OF REINFORCING, TURN HORIZONTAL BARS 90° TO HOOK AROUND VERTICALS, 1 1/2" CLEAR OF CONCRETE
3. FORM 3/4" BEVEL ON ALL EXPOSED CORNERS OF SUPPORT.

CONCRETE PIPE SUPPORT

WYCKOFF GROUNDWATER TREATMENT PLANT

BAINBRIDGE ISLAND, WA

3361

CH2MHILL

FOR PROJECT DESIGN DETAILS
TURN OFF LV=SHBD,SHBD-DTL AND SHBD-OTLN IN THE ACTIVE FILE WHEN PLOTTING

$FILENAME $PLOTTIME

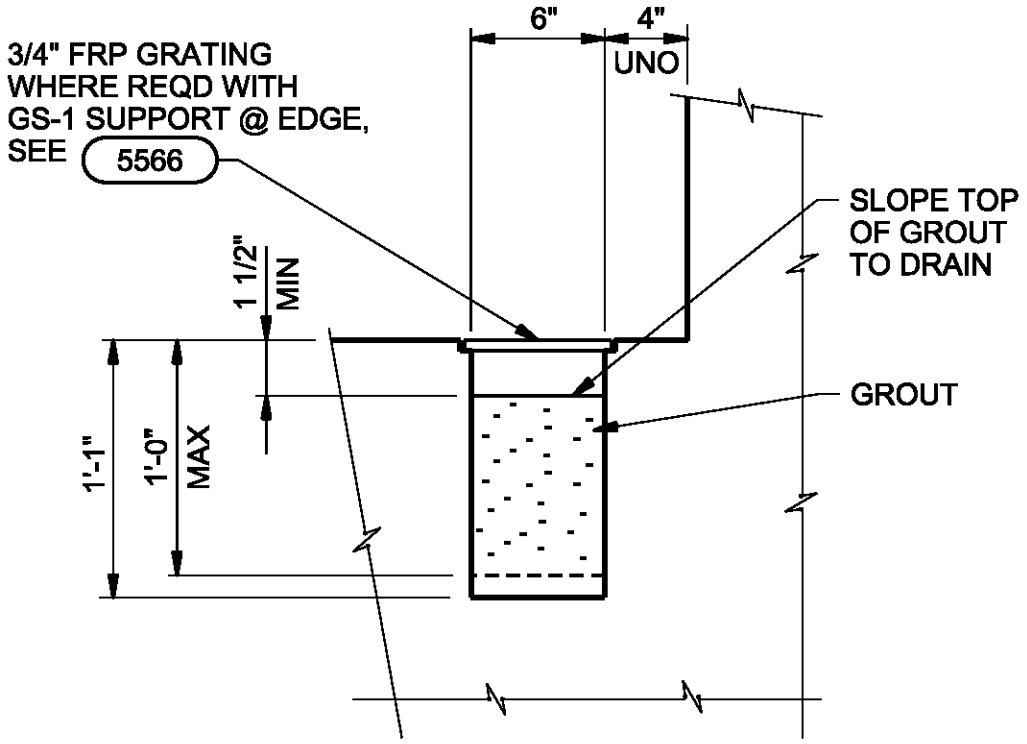

NOTES:

1. PROVIDE GRATING WHERE GUTTER CROSSES WALKWAY OR WORKING AREAS.
2. WHERE TRENCH IS ADJACENT TO WALL DO NOT PROVIDE GRATING UNLESS SPECIFICALLY SHOWN.
3. MAY BE USED AT CONTRACTOR'S OPTION AS AN ALTERNATIVE TO PRECAST DRAIN TRENCH.

FORMED CONCRETE TRENCH

WYCKOFF GROUNDWATER
TREATMENT PLANT
BAINBRIDGE ISLAND, WA

3377

CH2MHILL

FOR PROJECT DESIGN DETAILS
TURN OFF LV=SHBD,SHBD-DTL AND SHBD-OTLN IN THE ACTIVE FILE WHEN PLOTTING

$FILENAME $PLOTTIME

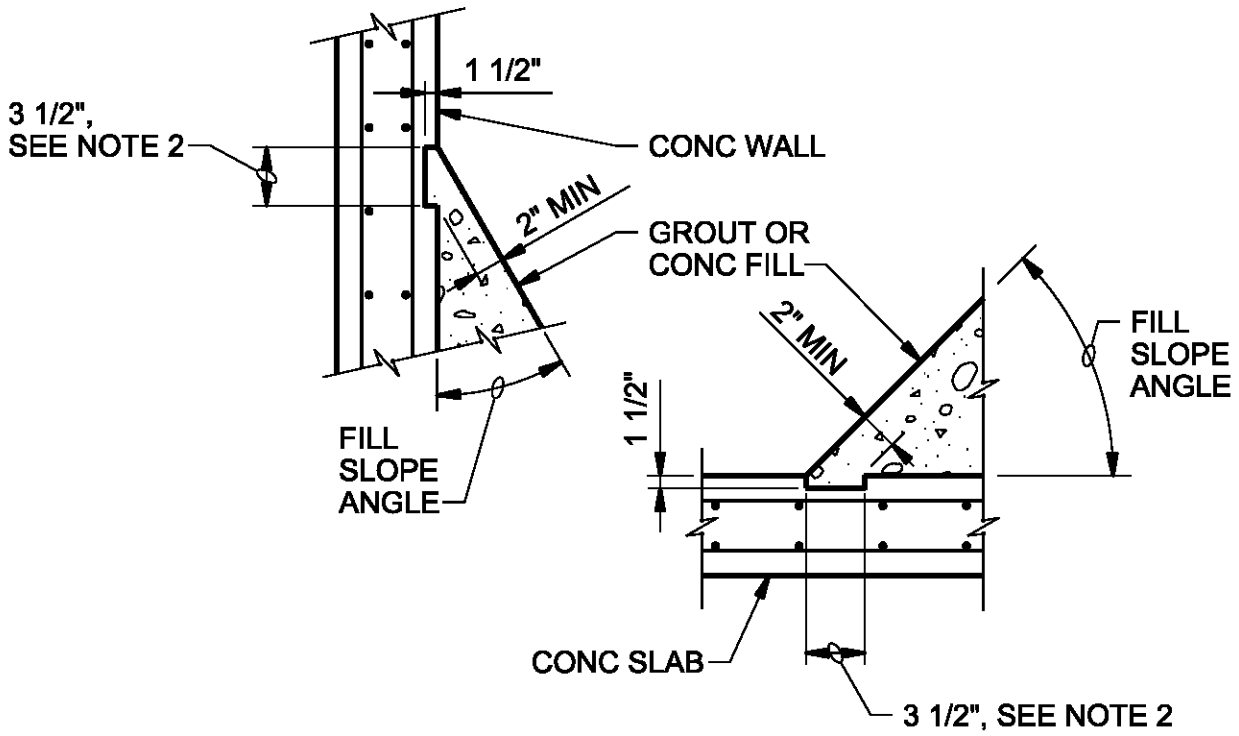

NOTES:

1. PROVIDE KEY FOR ALL FILL WHERE FILL SLOPE ANGLE TO WALL OR SLAB IS LESS THAN 45 DEGREES.
2. LENGTHEN 3 1/2" BLOCKOUT AS REQUIRED TO MAINTAIN 2" MINIMUM THICKNESS OF GROUT OR CONCRETE FILL.

CONCRETE OR GROUT FILL KEY

WYCKOFF GROUNDWATER
TREATMENT PLANT
BAINBRIDGE ISLAND, WA

3378

CH2MHILL

FOR PROJECT DESIGN DETAILS
TURN OFF LV=SHBD,SHBD-DTL AND SHBD-OTLN IN THE ACTIVE FILE WHEN PLOTTING

$FILENAME $PLOTTIME

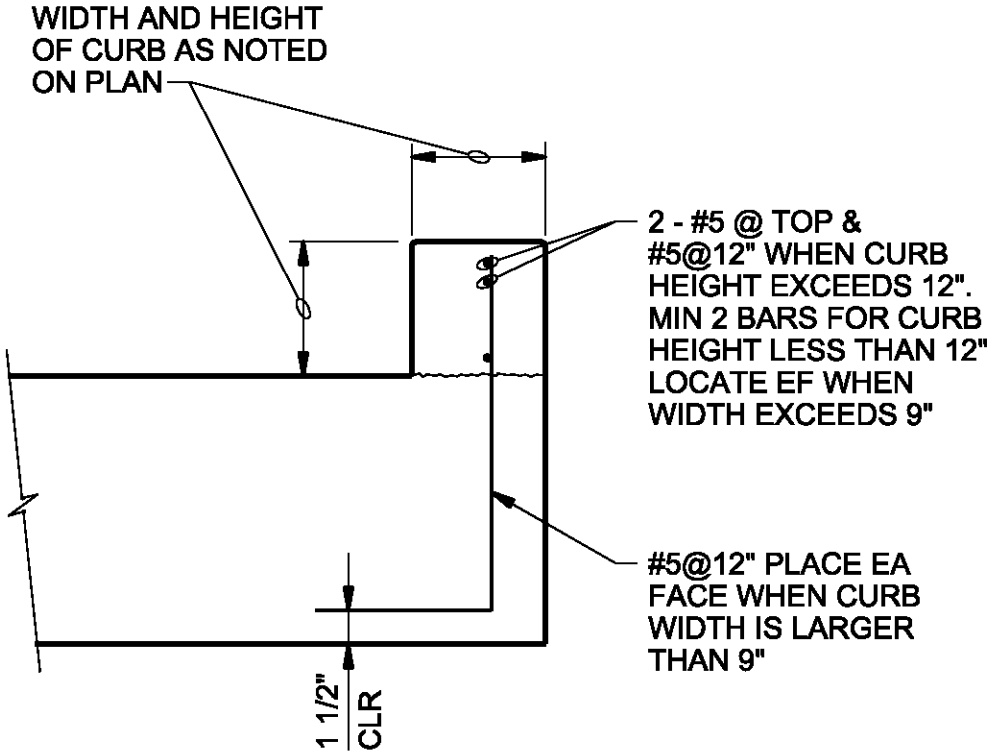

CONCRETE CURB

WYCKOFF GROUNDWATER
TREATMENT PLANT
BAINBRIDGE ISLAND, WA

3380

CH2MHILL

FOR PROJECT DESIGN DETAILS
TURN OFF LV=SHBD,SHBD-DTL AND SHBD-OTLN IN THE ACTIVE FILE WHEN PLOTTING

$FILENAME $PLOTTIME

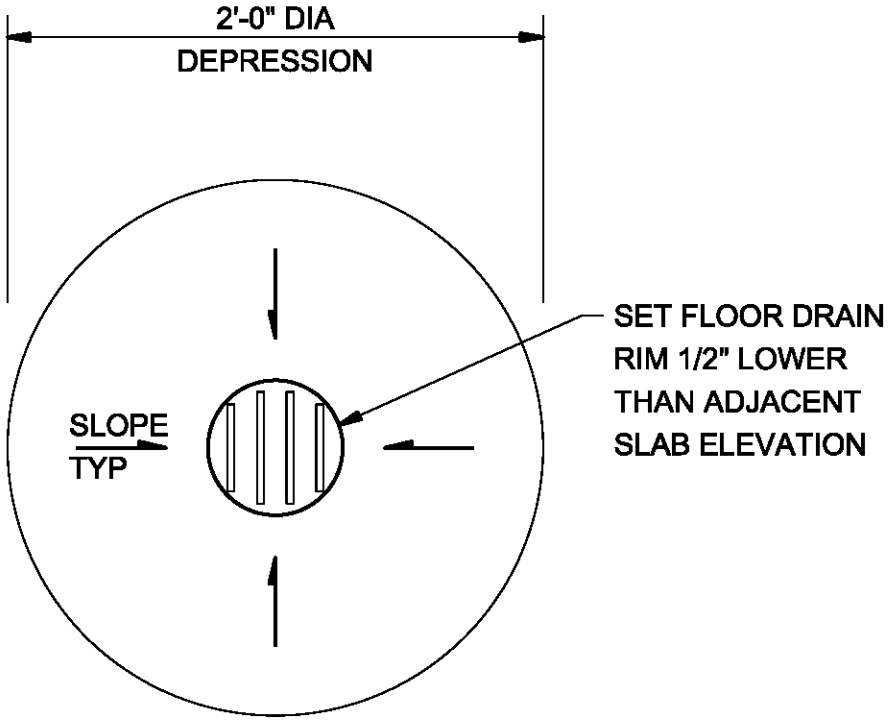

FLOOR DRAIN

WYCKOFF GROUNDWATER
TREATMENT PLANT
BAINBRIDGE ISLAND, WA

3382

CH2MHILL

FOR PROJECT DESIGN DETAILS
TURN OFF LV=SHBD,SHBD-DTL AND SHBD-OTLN IN THE ACTIVE FILE WHEN PLOTTING

$FILENAME $PLOTTIME

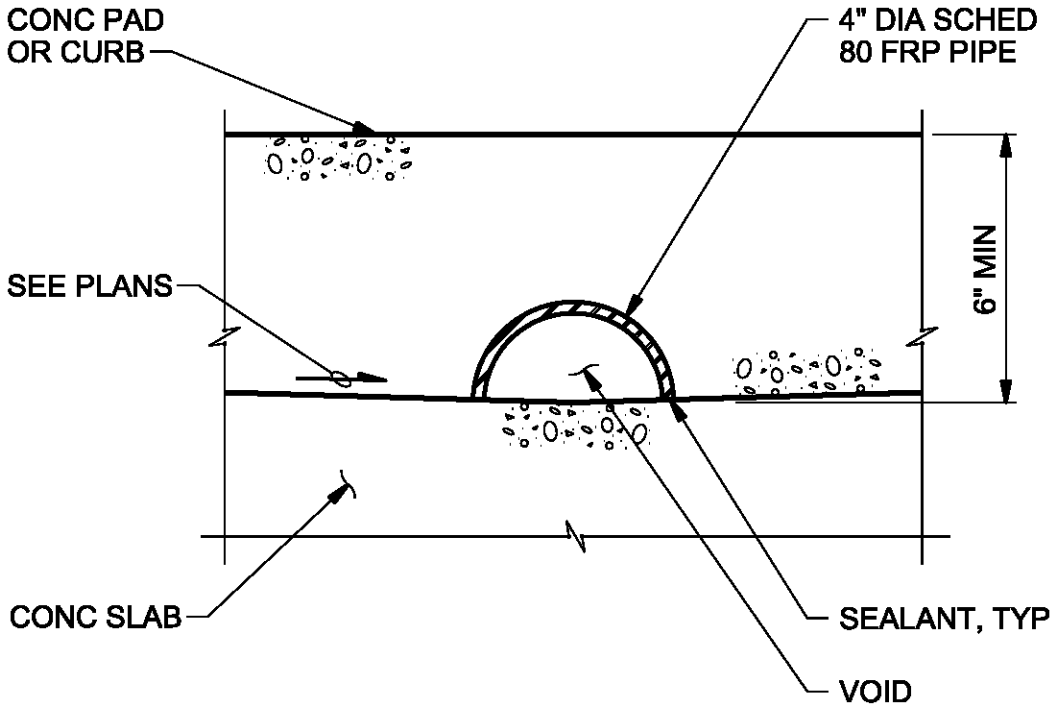

NOTE:

ANCHOR IN PLACE WITH SST STRAPPING AND ADHESIVE ANCHORS AS REQUIRED.

DRAINAGE BLOCKOUT

WYCKOFF GROUNDWATER
TREATMENT PLANT
BAINBRIDGE ISLAND, WA

3383

CH2MHILL

FOR PROJECT DESIGN DETAILS
TURN OFF LV=SHBD,SHBD-DTL, SHBD-TITL AND SHBD-OTLN IN THE ACTIVE FILE WHEN PLOTTING

$FILENAME $PLOTDATE

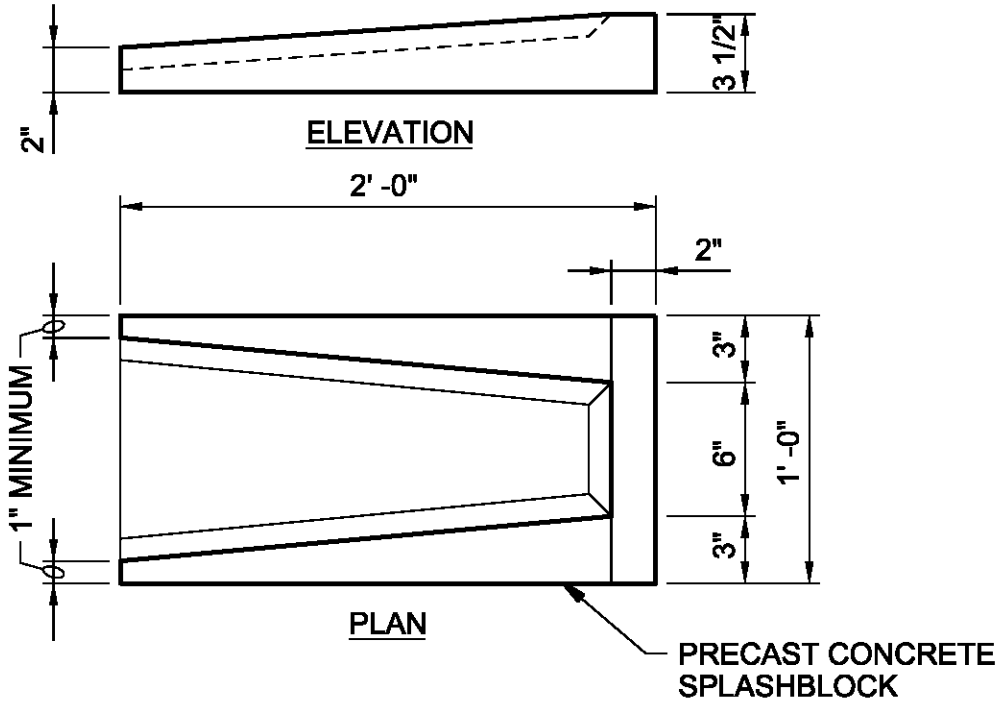

SPLASHBLOCK

NTS

WYCKOFF GROUNDWATER
TREATMENT PLANT

BAINBRIDGE ISLAND, WA

3495

CH2MHILL

FOR PROJECT DESIGN DETAILS
TURN OFF LV=SHBD,SHBD-DTL AND SHBD-OTLN IN THE ACTIVE FILE WHEN PLOTTING

$FILENAME $PLOTTIME

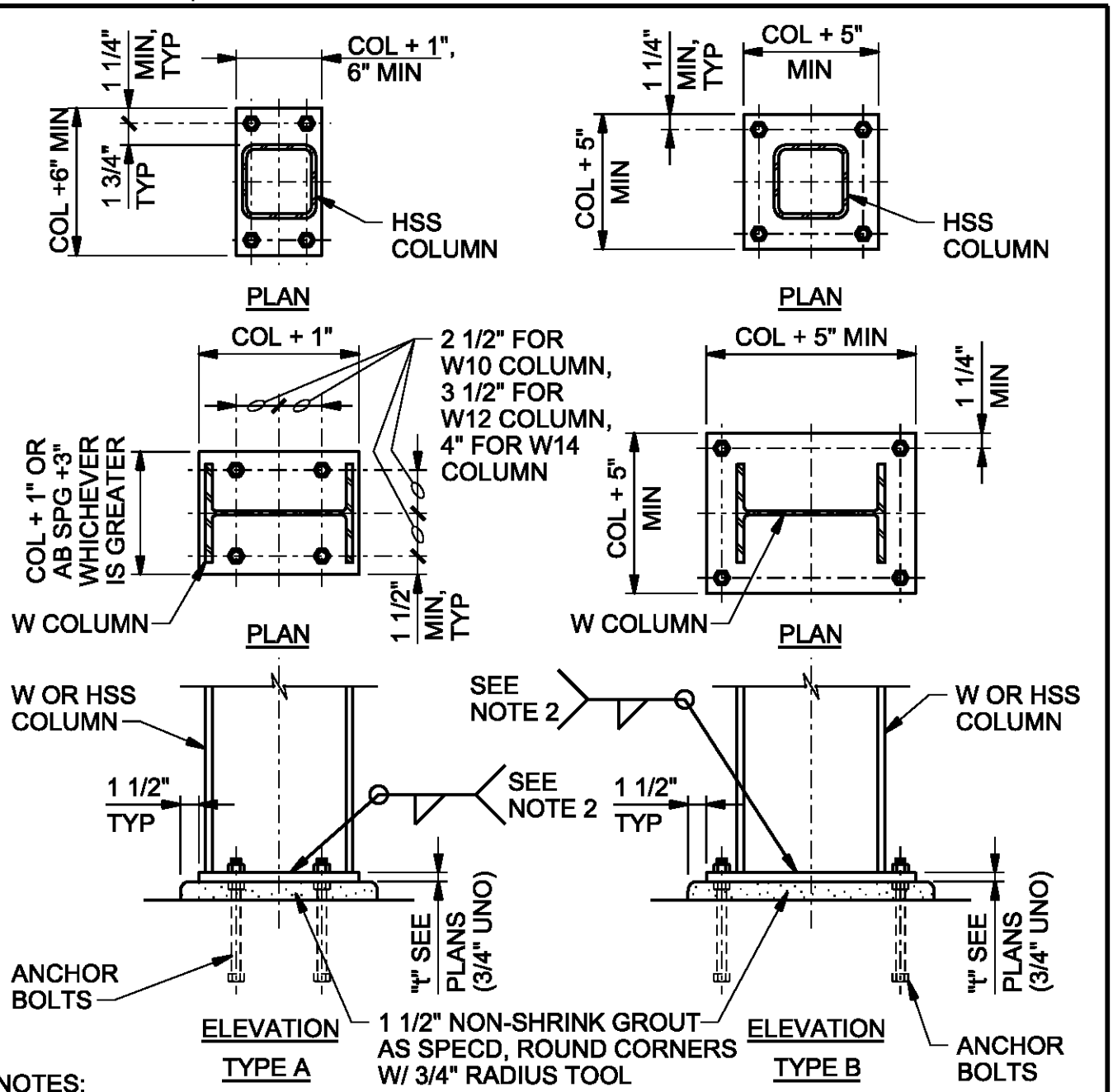

NOTES:

1. UNLESS OTHERWISE NOTED, ANCHOR BOLTS SHALL BE 3/4" DIA x REQUIRED WITH LEVELING NUTS AND 1'-0" MINIMUM EMBED AND BASEPLATES SHALL BE CENTERED ON COLUMN.
2. WELD SIZE SHALL BE DETERMINED BY THE THICKEST MEMBER JOINED; MINIMUM WELD SIZE SHALL BE 3/16" FILLET FOR MATERIAL THICKNESSES UP TO AND INCLUDING 1/2", 1/4" FILLET FOR THICKNESSES OVER 1/2" TO 3/4", AND 5/16" FILLET FOR MATERIAL THICKNESSES OVER 3/4". ALL WELDS SHALL BE SINGLE-PASS WELDS.

STEEL COLUMN BASE

WYCKOFF GROUNDWATER TREATMENT PLANT

BAINBRIDGE ISLAND, WA

5001

CH2MHILL

FOR PROJECT DESIGN DETAILS
TURN OFF LV=SHBD,SHBD-DTL AND SHBD-OTLN IN THE ACTIVE FILE WHEN PLOTTING

$FILENAME $PLOTTIME

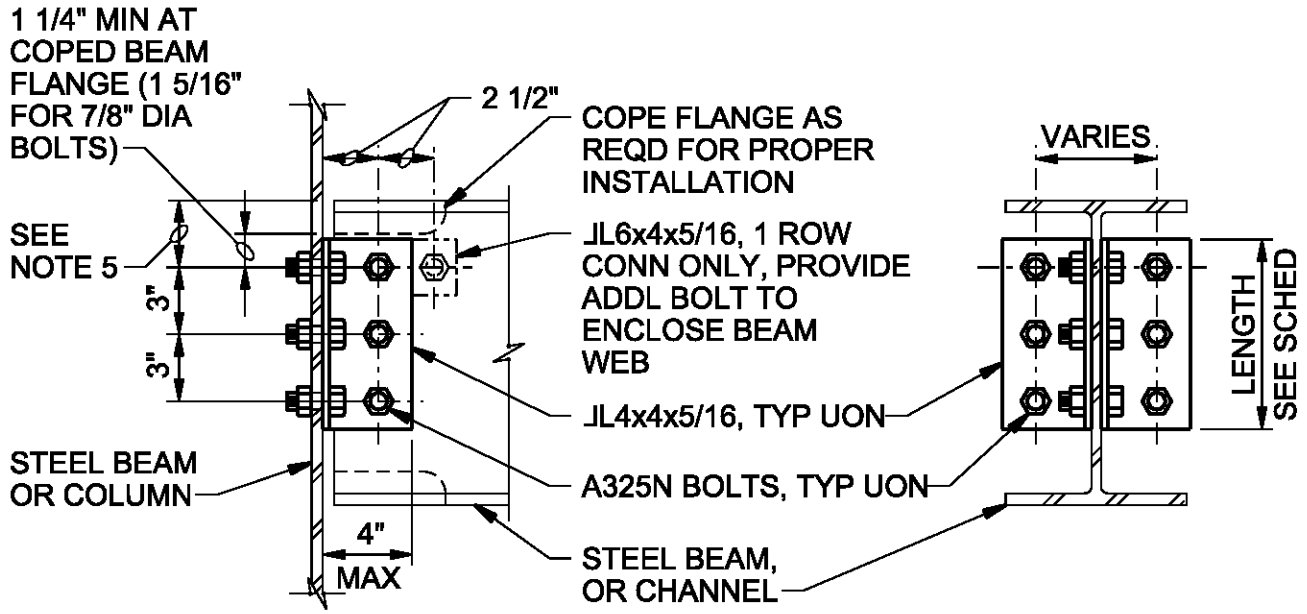

NOMINAL BEAM DEPTH, INCHES	ROWS OF BOLTS	BOLT DIA, INCHES	DOUBLE ANGLE, LENGTH, INCHES	COMMENTS
36	10	7/8"	2'-5 1/2"	-
33	9	7/8"	2'-2 1/2"	-
30	8	7/8"	1'-11 1/2"	-
27	7	3/4"	1'-8 1/2"	-
24	6	3/4"	1'-5 1/2"	-
21	5	3/4"	1'-2 1/2"	-
16-18	4	3/4"	0'-11 1/2"	-
12-15	3	3/4"	0'-8 1/2"	-
8-10	2	3/4"	0'-5 1/2"	-
6	1	3/4"	0'-3"	SEE NOTE 3
4	1	3/4"	0'-2 1/2"	SEE NOTE 3

NOTES

1. UNLESS OTHERWISE NOTED, NUMBER OF ROWS IS EQUAL TO NUMBER OF BOLTS TO ENCLOSE BEAM WEB.
2. ALL BEAM FRAMING CONNECTIONS SHALL CONFORM TO THIS DETAIL UNLESS SPECIFICALLY NOTED OTHERWISE OR APPROVED IN WRITING BY THE ENGINEER.
3. FOR NOMINAL BEAM DEPTHS LESS THAN 8", EXTEND LONG LEG OF DOUBLE ANGLE ALONG BEAM WEB AND PROVIDE ADDITIONAL BOLT TO ENCLOSE BEAM WEB AS SHOWN.
4. PROVIDE ADDITIONAL 1 1/2" LENGTH TO DOUBLE ANGLE FOR STAGGERED BOLT CONNECTIONS WHERE REQUIRED.
5. DIMENSION SHALL BE 3" UNLESS OTHERWISE REQUIRED FOR PROPER FABRICATION.

TYPICAL BEAM CONNECTION

WYCKOFF GROUNDWATER TREATMENT PLANT

BAINBRIDGE ISLAND, WA

5020

CH2MHILL

DETAIL SCALE: 1 1/2"=1'-0"

FOR PROJECT DESIGN DETAILS
TURN OFF LV=SHBD,SHBD-DTL AND SHBD-OTLN IN THE ACTIVE FILE WHEN PLOTTING

$FILENAME $PLOTTIME

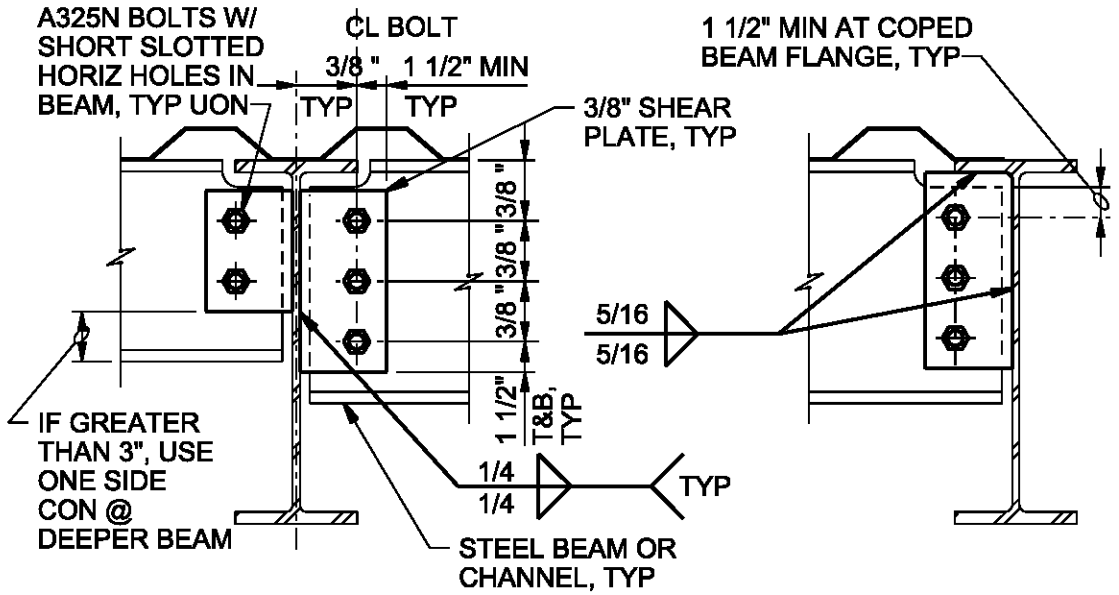

TWO SIDE CONN ONE SIDE CONN

NOMINAL BEAM DEPTH, INCHES	ROWS OF BOLTS	BOLT DIA, INCHES	LENGTH OF SHEAR PLATE, INCHES, SEE NOTE 3
27	8	7/8"	2'-0"
24	7	3/4"	1'-9"
21	6	3/4"	1'-6"
18	5	3/4"	1'-3"
16	4	3/4"	1'-0"
12-15	3	3/4"	9"
8-10	2	3/4"	6"

NOTES:

1. NUMBER OF ROWS IS EQUAL TO NUMBER OF BOLTS CONNECTING SHEAR PLATE TO BEAM.
2. THIS DETAIL APPLIES ONLY WHERE SPECIFICALLY SHOWN ON DRAWINGS.
3. AT ONE-SIDE CONNECTIONS, EXTEND TOP OF SHEAR PLATE TO UNDERSIDE OF BEAM TOP FLANGE AS SHOWN.
4. (*) INDICATES 3" DIMENSION IS TYPICAL EXCEPT AS RECOMMENDED BY AISC FOR LARGER MEMBERS.
5. CONNECTION DETAIL SHOWN APPLICABLE ONLY TO BEAMS BRACED BY METAL DECK (COMPOSITE OR NON-COMPOSITE); FOR OTHER BEAM FRAMING CONDITIONS, SEE DETAIL 5020

BEAM SINGLE PLATE SHEAR CONNECTION

WYCKOFF GROUNDWATER TREATMENT PLANT
BAINBRIDGE ISLAND, WA

5022

CH2MHILL

FOR PROJECT DESIGN DETAILS
TURN OFF LV=SHBD,SHBD-DTL AND SHBD-OTLN IN THE ACTIVE FILE WHEN PLOTTING

$FILENAME $PLOTTIME

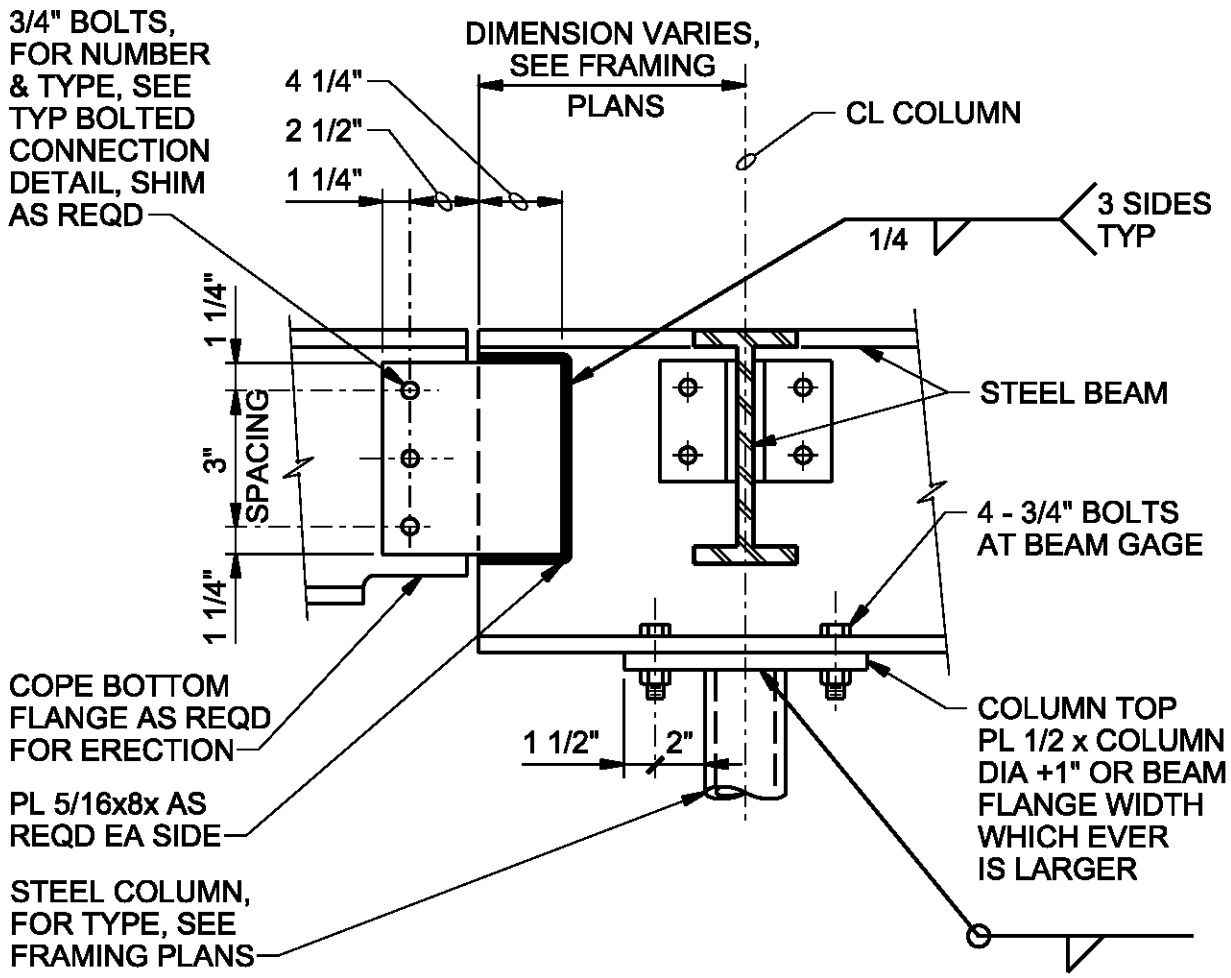

BEAM COLUMN CONNECTION

WYCKOFF GROUNDWATER TREATMENT PLANT

BAINBRIDGE ISLAND, WA

5040

CH2MHILL

FOR PROJECT DESIGN DETAILS
TURN OFF LV=SHBD,SHBD-DTL AND SHBD-OTLN IN THE ACTIVE FILE WHEN PLOTTING

$FILENAME $PLOTTIME

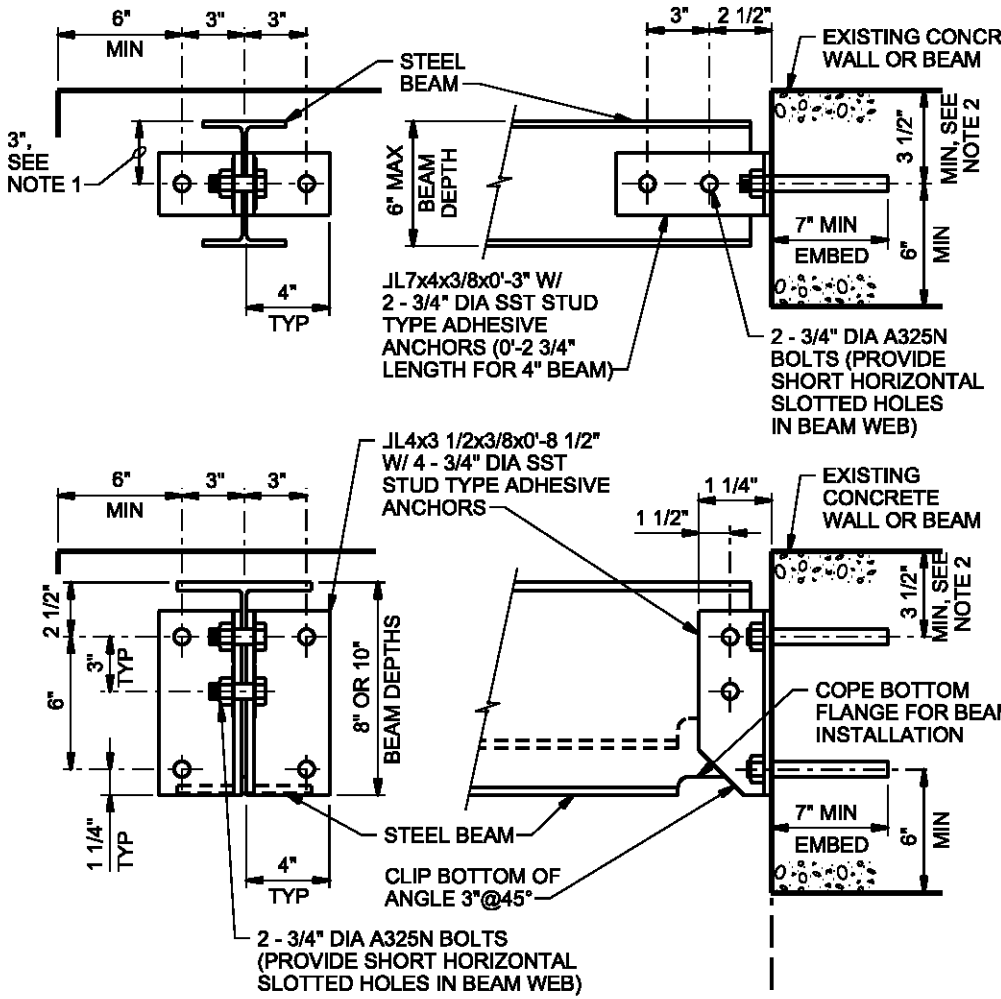

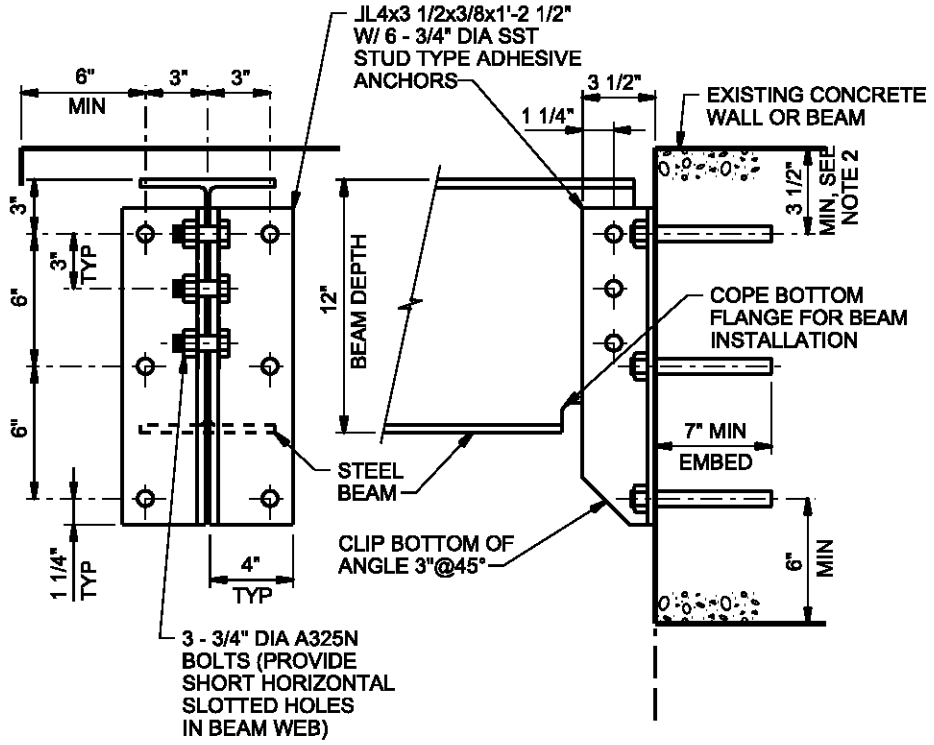

NOTES:

1. 3" DIMENSION TYPICAL EXCEPT 2 1/2" FOR 5" BEAMS AND 2" FOR 4" BEAMS.
2. DO NOT CUT EXISTING CONCRETE BEAM TOP REINFORCING DURING DRILL-IN ANCHOR INSTALLATION. FIELD LOCATE BEAM REINFORCING PRIOR TO FABRICATION. ADD LENGTH TO CLIP ANGLES AS REQUIRED TO LOWER ANCHORS TO CLEAR REINFORCING WHILE MAINTAINING SPACING AND EDGE DISTANCE AS SHOWN.
3. WHERE BOTH ENDS OF BEAM ARE ATTACHED TO A WALL, PROVIDE LONG TIGHT HORIZONTALLY SLOTTED HOLES IN BEAM WEB AT ONE END. TIGHTEN NUTS SNUG, BACK OFF 1/2 TURN, AND LOCK WITH DOUBLE NUT.

BEAM/WALL CONNECTION - STEEL

WYCKOFF GROUNDWATER TREATMENT PLANT
BAINBRIDGE ISLAND, WA

5056

CH2MHILL

FOR PROJECT DESIGN DETAILS
TURN OFF LV=SHBD,SHBD-DTL AND SHBD-OTLN IN THE ACTIVE FILE WHEN PLOTTING

$FILENAME $PLOTTIME

ALUMINUM		
NOMINAL BEAM DEPTH, INCHES	ROWS OF BOLTS	LENGTH OF ANGLE
10	3	7 1/2"
7-8-9	2	5"
5-6	1	3"
4	1	2 3/4"

NOTES:

1. NUMBER OF ROWS IS EQUAL TO NUMBER OF BOLTS TO ENCLOSED WEB.
2. ALL FRAMING CONNECTIONS SHALL CONFORM TO SCHEDULE UNLESS DETAILED OTHERWISE ON FRAMING PLANS.

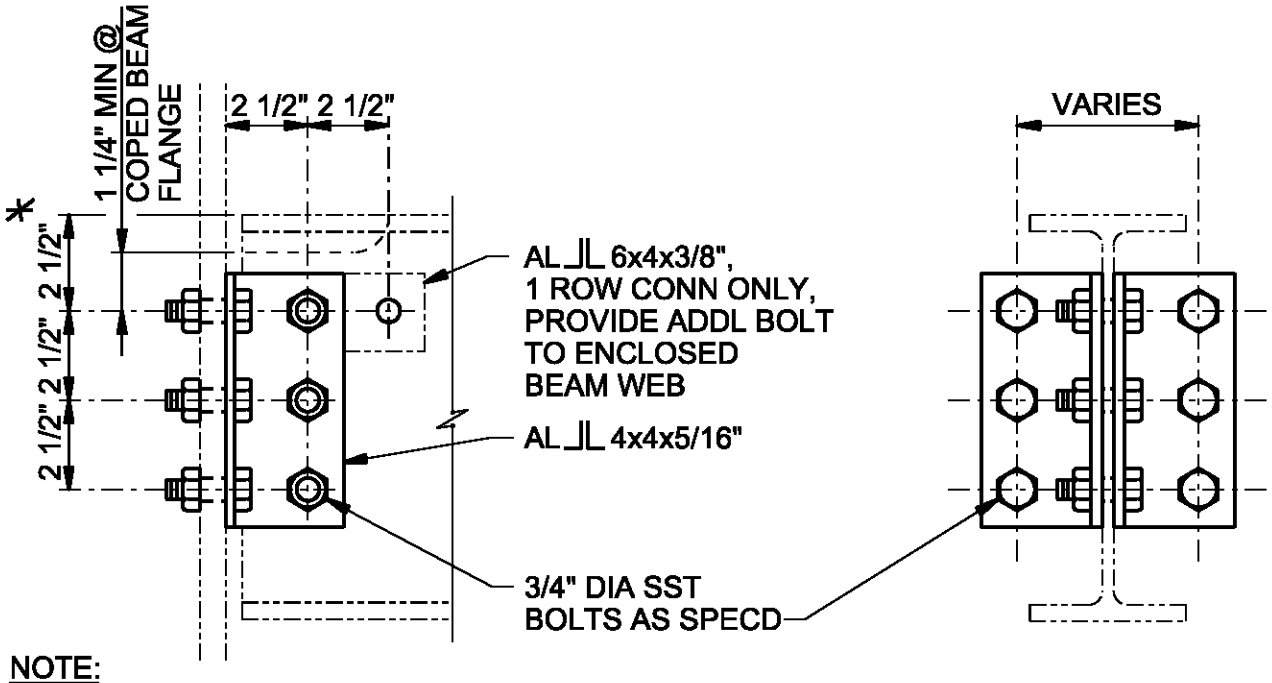

NOTE:

* 2 1/2" DIMENSION TYPICAL EXCEPT 2" FOR 4" BEAM.

TYPICAL FRAMING CONNECTION - ALUMINUM

WYCKOFF GROUNDWATER TREATMENT PLANT

BAINBRIDGE ISLAND, WA

5076

CH2MHILL

$FILENAME $PLOTTIME

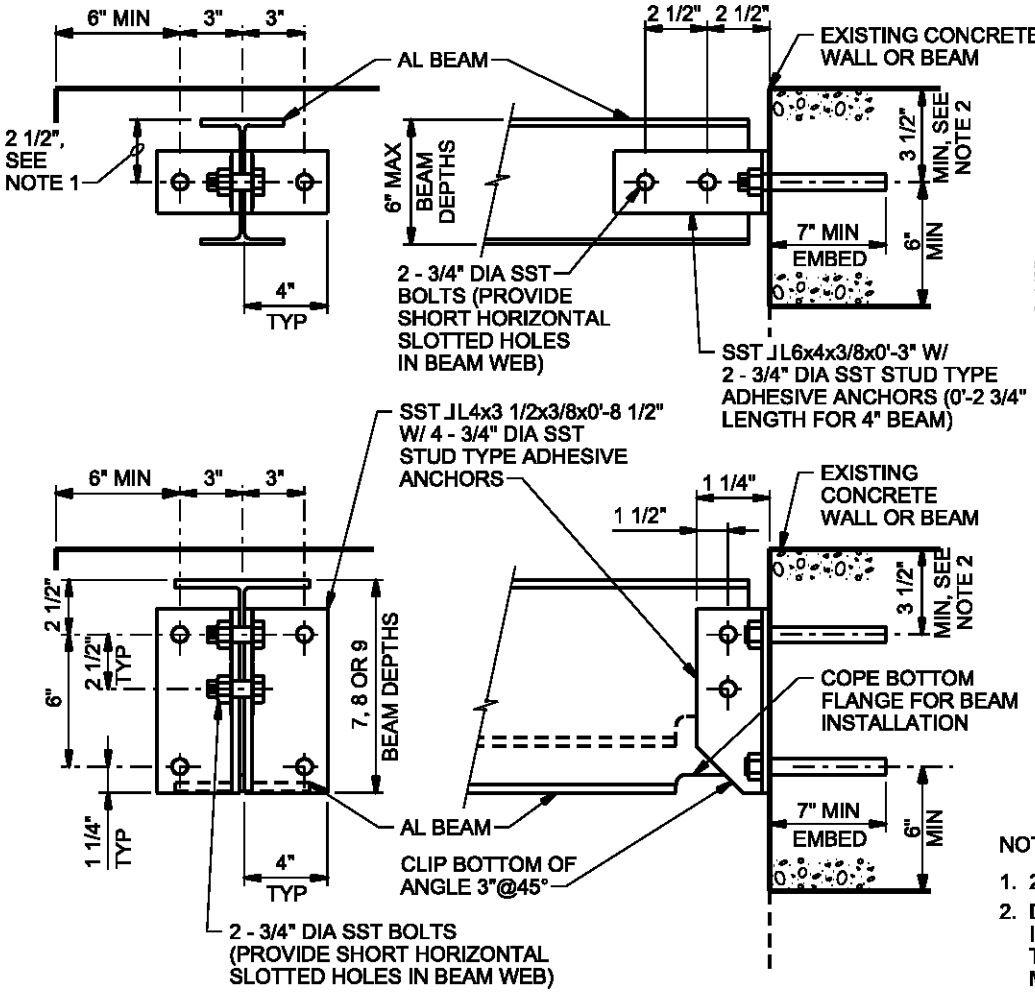

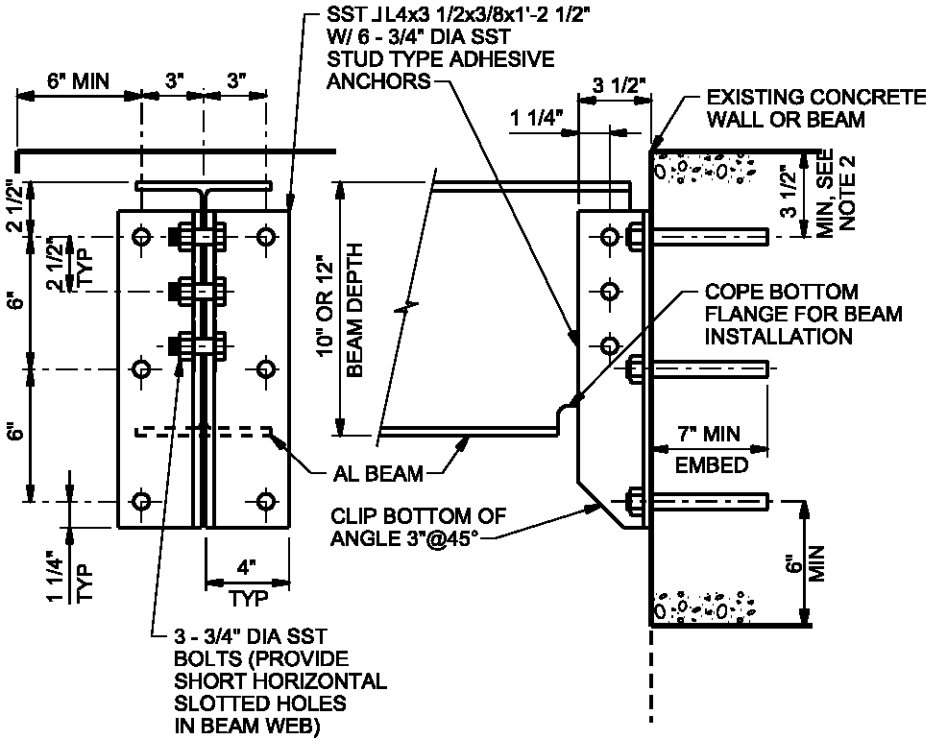

NOTES:

1. 2 1/2" DIMENSION TYPICAL EXCEPT 2" FOR 4" BEAMS.
2. DO NOT CUT EXISTING CONCRETE BEAM TOP REINFORCING DURING DRILL-IN ANCHOR INSTALLATION. FIELD LOCATE BEAM REINFORCING PRIOR TO FABRICATION. ADD LENGTH TO CLIP ANGLES AS REQUIRED TO LOWER ANCHORS TO CLEAR REINFORCING WHILE MAINTAINING SPACING AND EDGE DISTANCE AS SHOWN.
3. WHERE BOTH ENDS OF BEAM ARE ATTACHED TO A WALL, PROVIDE LONG TIGHT HORIZONTALLY SLOTTED HOLES IN BEAM WEB AT ONE END. TIGHTEN NUTS SNUG, BACK OFF 1/2 TURN, AND LOCK WITH DOUBLE NUT.

BEAM/WALL CONNECTION - ALUMINUM

WYCKOFF GROUNDWATER TREATMENT PLANT

BAINBRIDGE ISLAND, WA

5087

CH2MHILL

$FILENAME $PLOTTIME

STAIRWAY WIDTH	TREAD BEARING BARS
	ALUMINUM TREAD
2'-3" OR LESS	1" x 3/16"
2'-9" OR LESS	1 1/4" x 3/16"
3'-3" OR LESS	1 1/2" x 3/16"
4'-7" OR LESS	1 3/4" x 3/16"

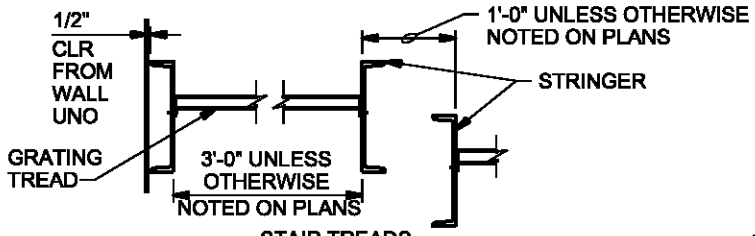

STAIR TREADS

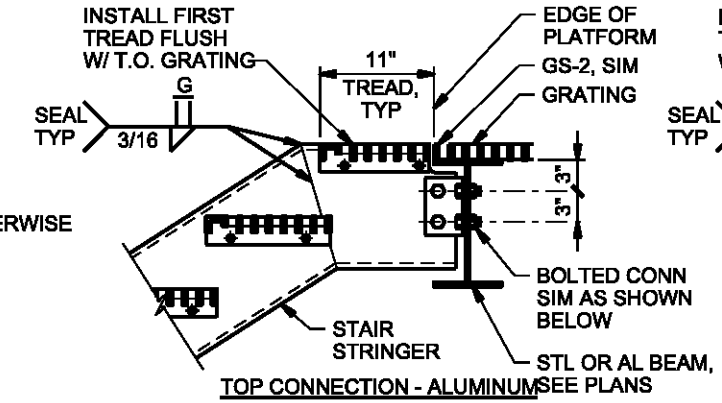

TOP CONNECTION - ALUMINUM

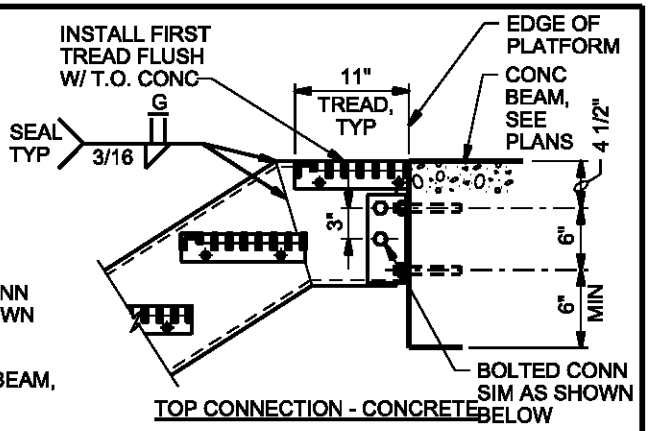

TOP CONNECTION - CONCRETE

NOTES:

1. PROVIDE PROTECTION FOR DISSIMILAR METALS AND CONCRETE AS SPECIFIED.
2. AMERICAN STANDARD C12x7.41 ALUMINUM STRINGERS TYPICAL EXCEPT WHERE OTHERWISE NOTED ON PLANS.
3. STAIR HANDRAIL NOT SHOWN.
4. STAIR MANUFACTURER TO COORDINATE BOLTED TREADS AND HANDRAIL CONNECTIONS.
5. ALL FASTENERS SHALL BE STAINLESS STEEL.
6. FIELD VERIFY DIMENSIONS & ELEVATIONS PRIOR TO FABRICATION.

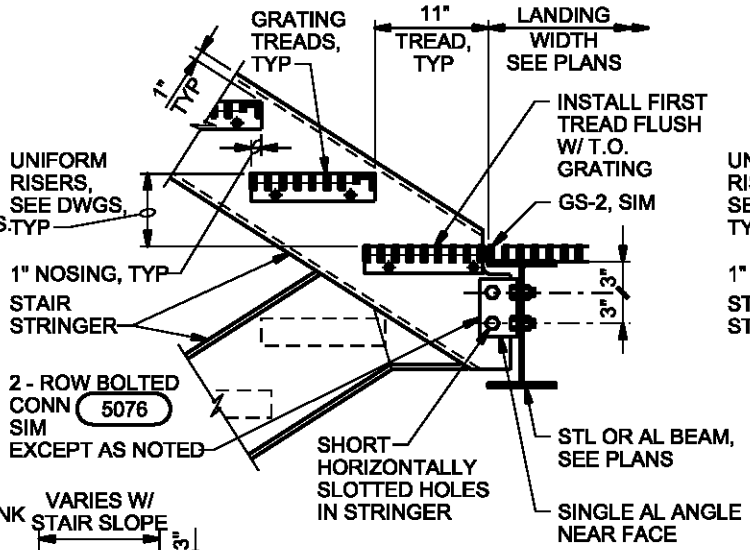

LANDING CONNECTION - ALUMINUM

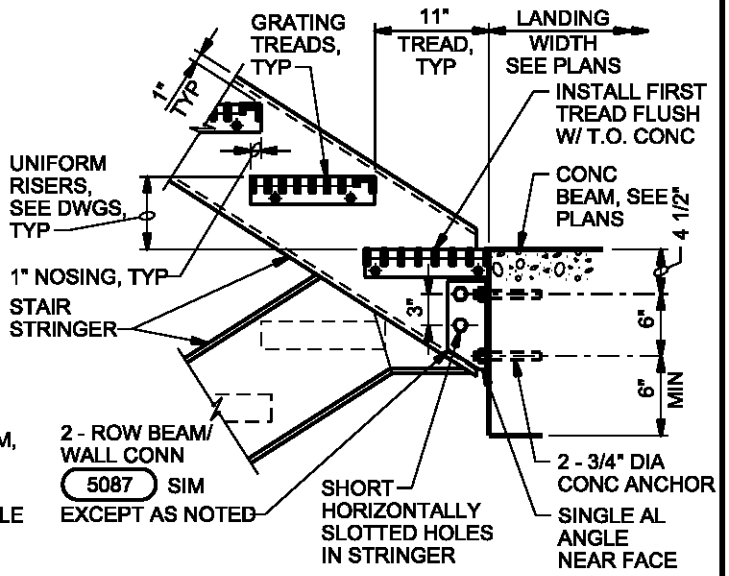

LANDING CONNECTION - CONCRETE

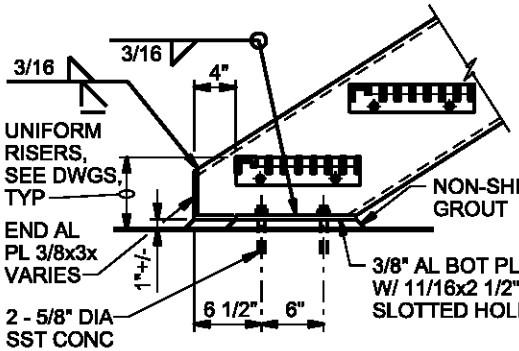

BOTTOM CONNECTION

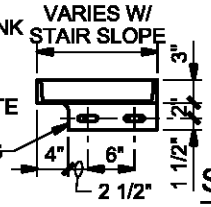

PLAN

STAIR DETAILS - ALUMINUM

WYCKOFF GROUNDWATER TREATMENT PLANT

BAINBRIDGE ISLAND, WA

5501

CH2MHILL

FOR PROJECT DESIGN DETAILS
TURN OFF LV=SHBD,SHBD-DTL AND SHBD-OTLN IN THE ACTIVE FILE WHEN PLOTTING

$FILENAME $PLOTTIME

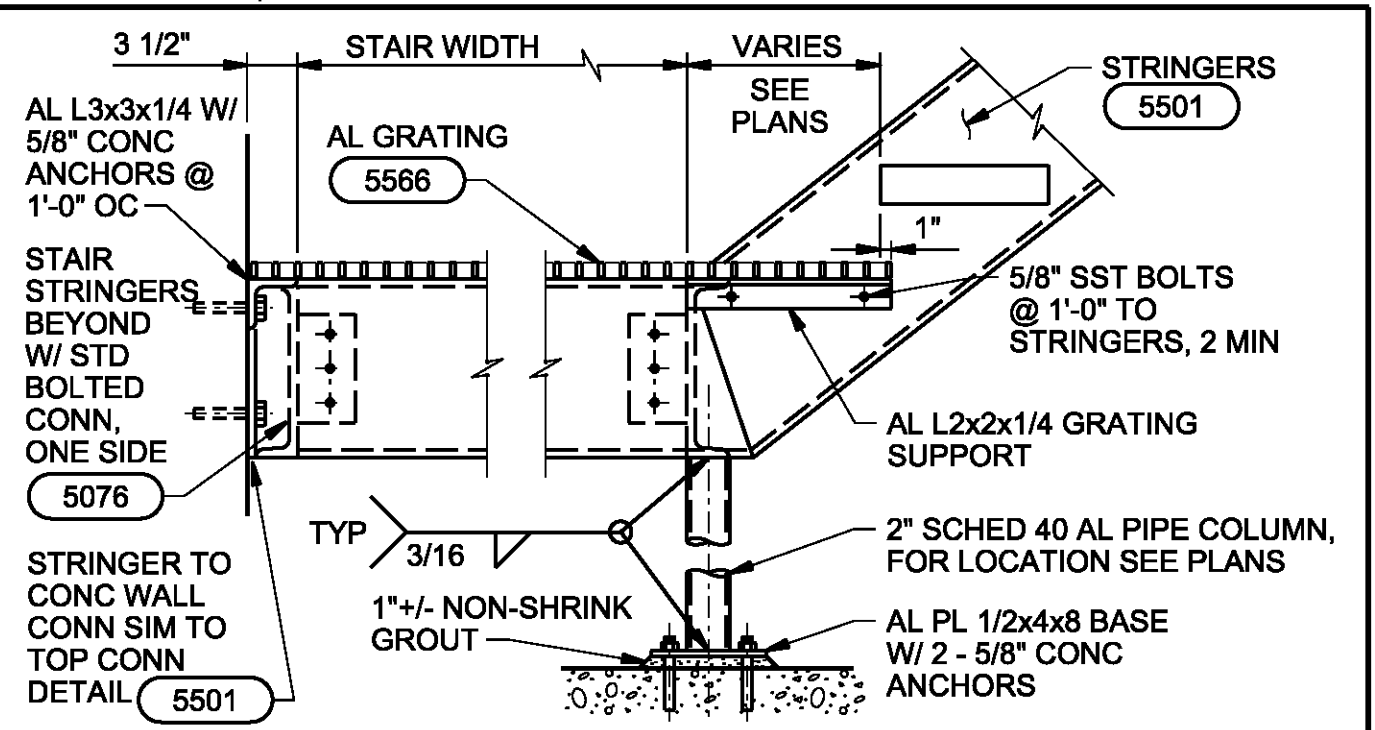

TYPE A

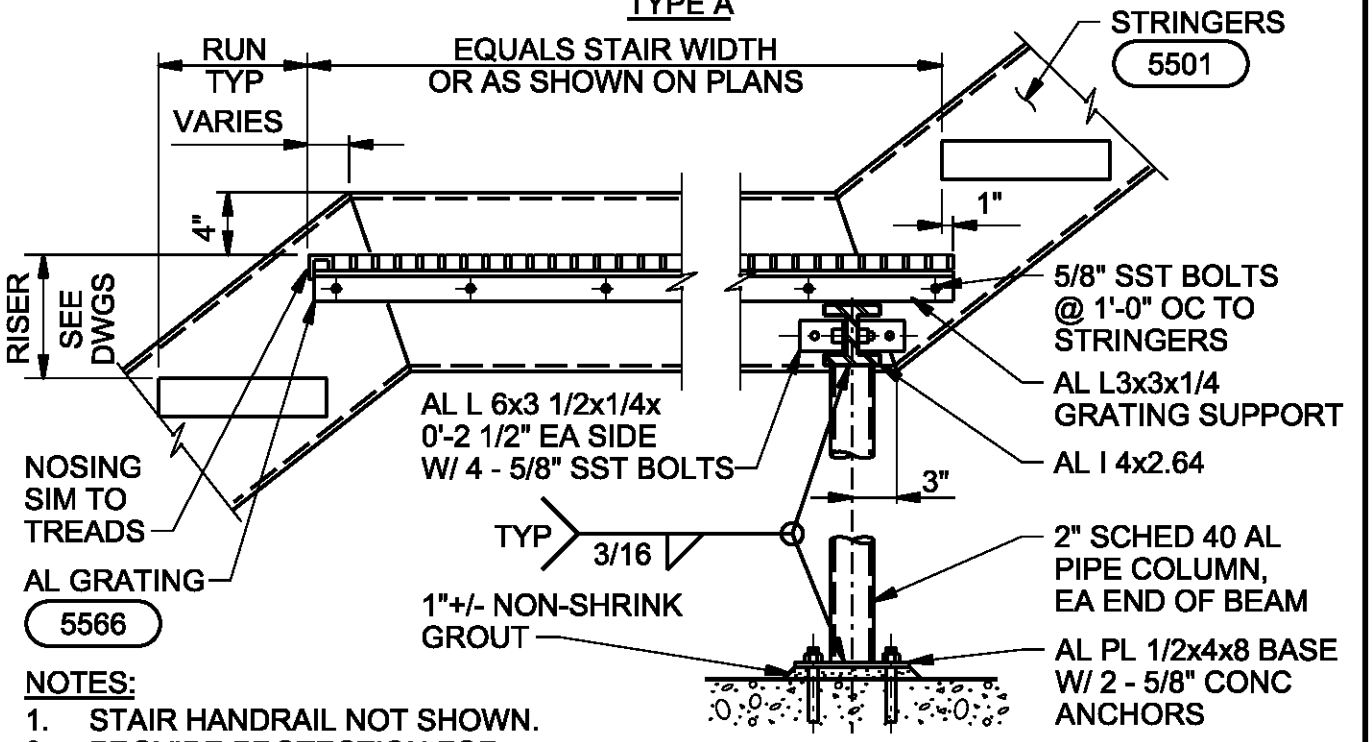

TYPE B

NOTES:

1. STAIR HANDRAIL NOT SHOWN.
2. PROVIDE PROTECTION FOR DISSIMILAR METALS AND CONCRETE

STAIR LANDING WITH SUPPORTS - ALUMINUM

WYCKOFF GROUNDWATER TREATMENT PLANT

BAINBRIDGE ISLAND, WA

5502

CH2MHILL

$FILENAME $PLOTTIME

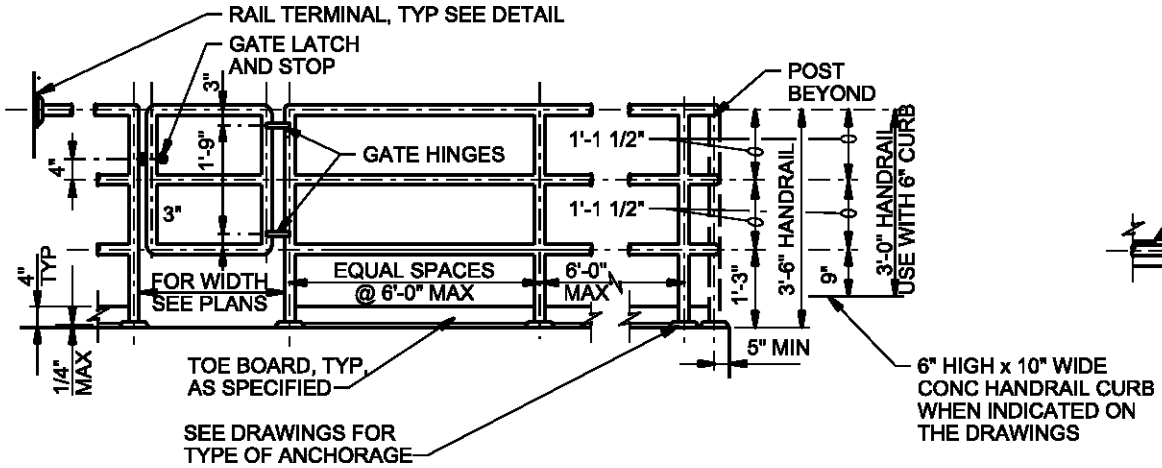

ELEVATION

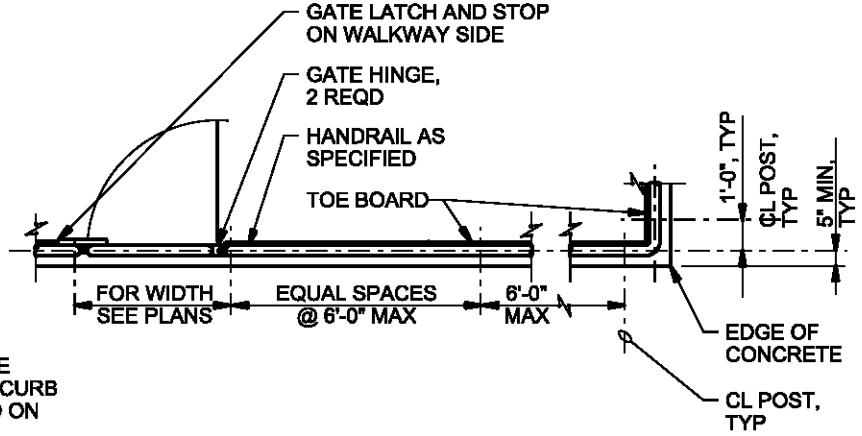

PLAN

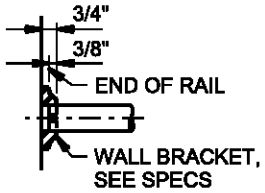

RAIL TERMINAL

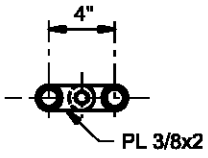

PLAN

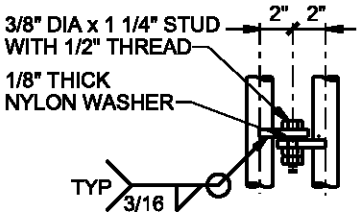

ELEVATION

HINGE

NOTES:

1. FASTEN RAIL TO WALL BRACKET PER MANUFACTURERS RECOMMENDATIONS.
2. WALL FLANGE TO BE MOUNTED TO WALL WITH 2 - 3/8" DIA SST WEDGE ANCHORS.

THREE-RAIL HANDRAIL-ALUMINUM

DETAIL 1 OF 6

WYCKOFF GROUNDWATER TREATMENT PLANT

BAINBRIDGE ISLAND, WA

5521

CH2MHILL

FOR PROJECT DESIGN DETAILS
TURN OFF LV=SHBD,SHBD-DTL AND SHBD-OTLN IN THE ACTIVE FILE WHEN PLOTTING

$FILENAME $PLOTTIME

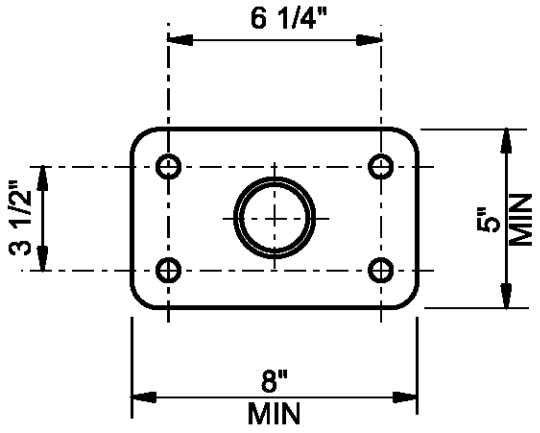

PLAN

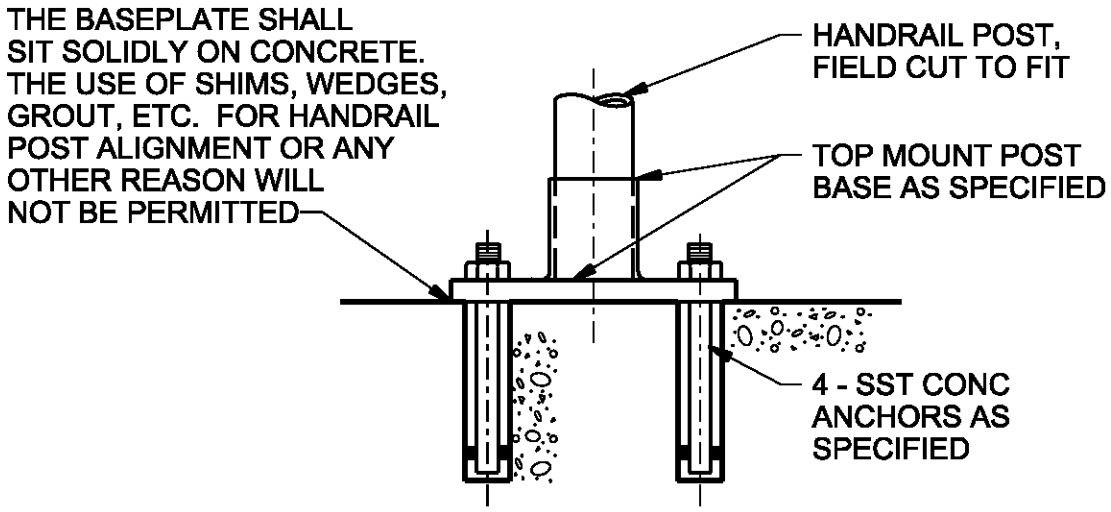

ELEVATION

TYPE "A"

NOTE:

PROVIDE PROTECTION FOR DISSIMILAR METALS AND CONCRETE PER SPECIFICATIONS.

HANDRAIL POST ANCHORAGE-ALUMINUM

DETAIL 2 OF 6

WYCKOFF GROUNDWATER TREATMENT PLANT

BAINBRIDGE ISLAND, WA

5521

CH2MHILL

FOR PROJECT DESIGN DETAILS
TURN OFF LV=SHBD,SHBD-DTL AND SHBD-OTLN IN THE ACTIVE FILE WHEN PLOTTING

$FILENAME $PLOTTIME

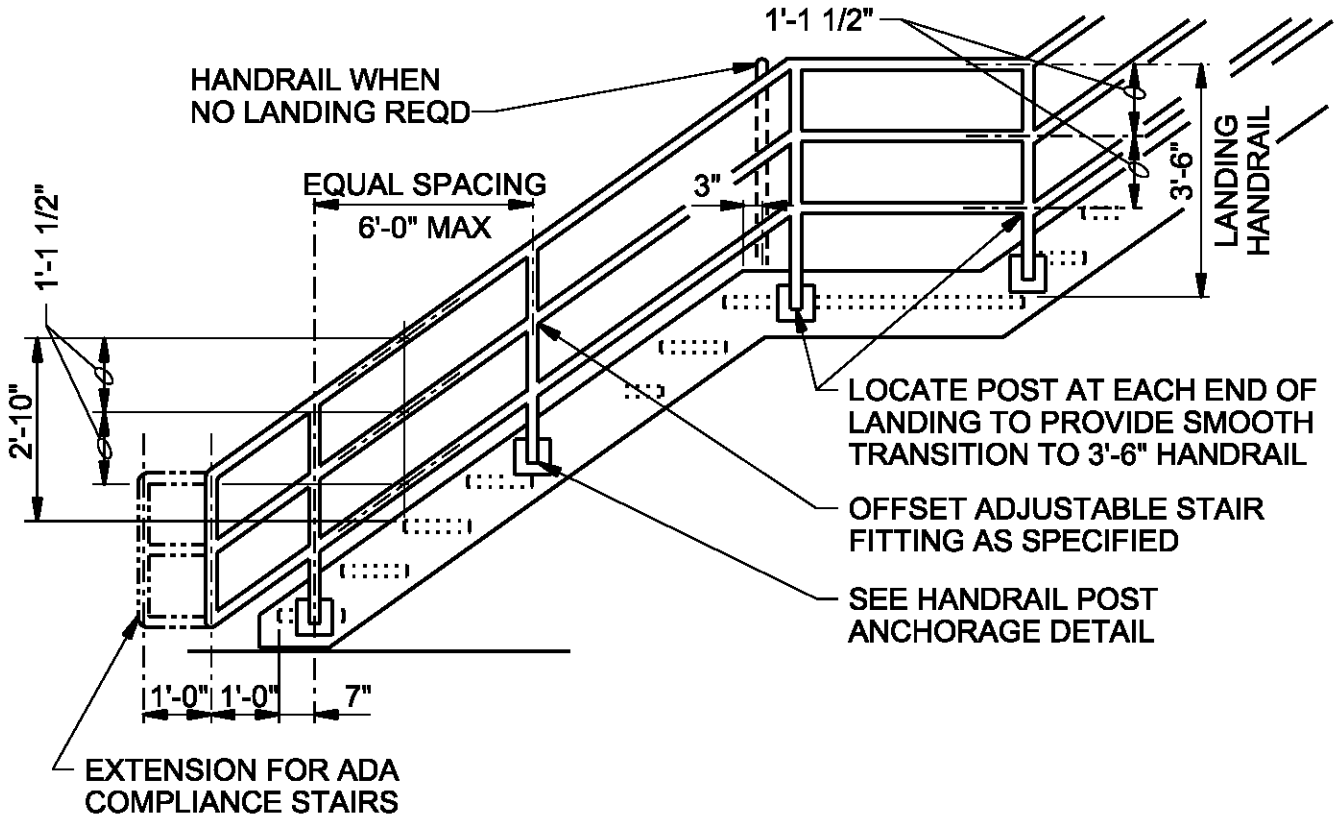

NOTE:

SEE TYPICAL HANDRAIL DETAIL.

THREE-RAIL STAIR HANDRAIL-ALUMINUM

DETAIL 3 OF 6

WYCKOFF GROUNDWATER
TREATMENT PLANT

BAINBRIDGE ISLAND, WA

5521

CH2MHILL

FOR PROJECT DESIGN DETAILS
TURN OFF LV=SHBD,SHBD-DTL AND SHBD-OTLN IN THE ACTIVE FILE WHEN PLOTTING

$FILENAME $PLOTTIME

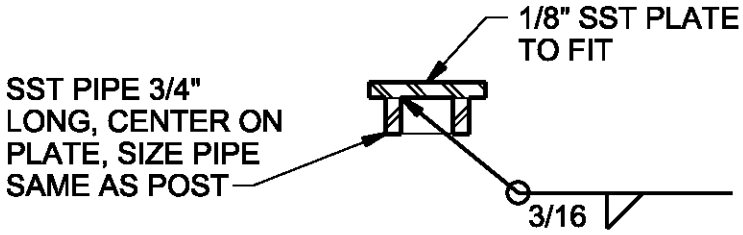

COVER PLATE

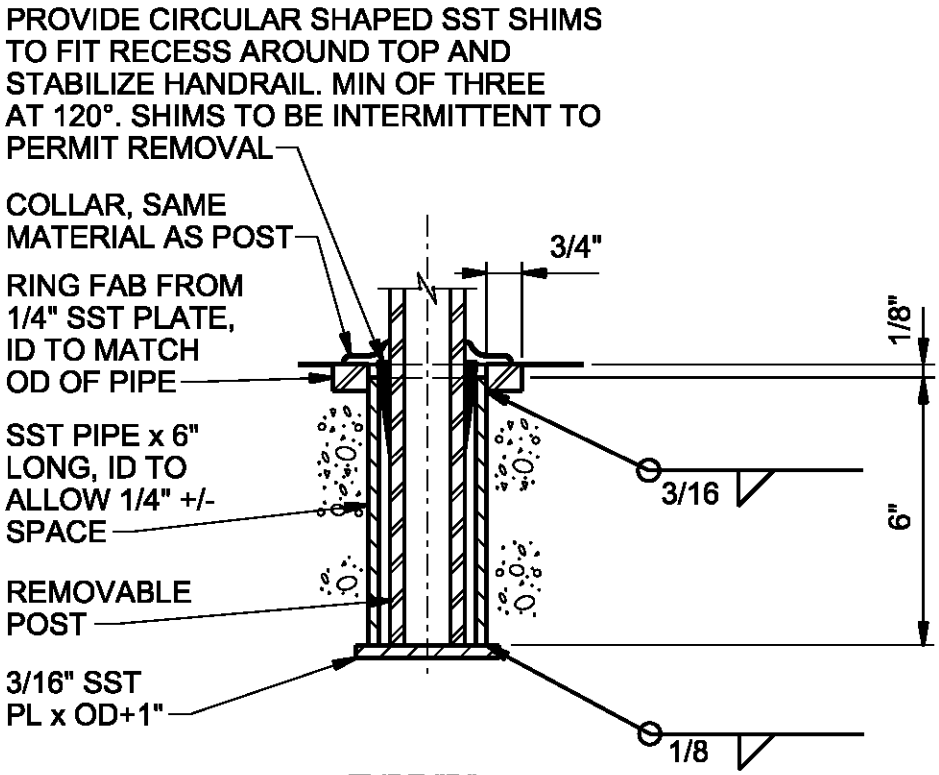

TYPE "D"

NOTE:

PROVIDE COVER PLATE FOR EACH ANCHORAGE SLEEVE.

HANDRAIL POST ANCHORAGE-ALUMINUM

DETAIL 4 OF 6

WYCKOFF GROUNDWATER
TREATMENT PLANT

BAINBRIDGE ISLAND, WA

5521

CH2MHILL

FOR PROJECT DESIGN DETAILS
TURN OFF LV=SHBD,SHBD-DTL AND SHBD-OTLN IN THE ACTIVE FILE WHEN PLOTTING

$FILENAME $PLOTTIME

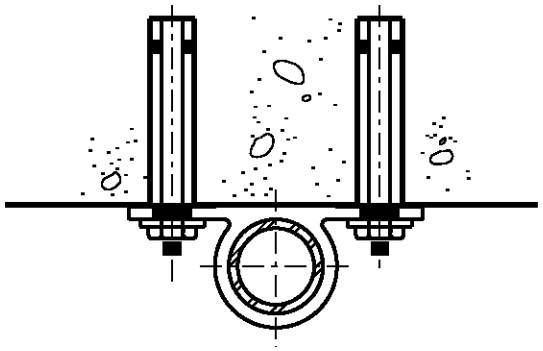

PLAN

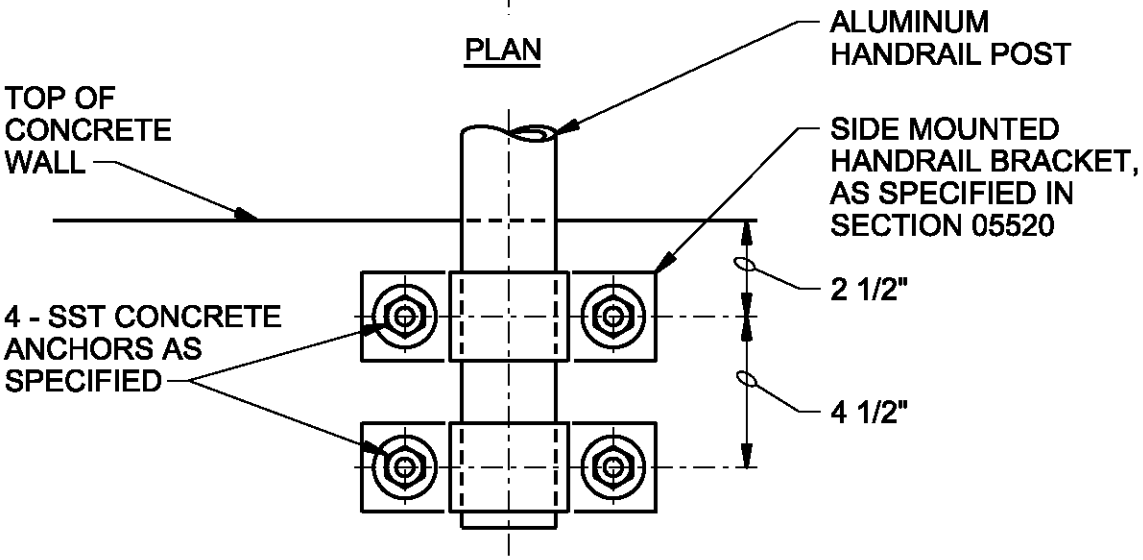

ELEVATION

TYPE "E"

NOTES:

1. PROVIDE PROTECTION FOR DISSIMILAR METALS AND CONCRETE PER SPECIFICATIONS.
2. USE SIDE MOUNTED HANDRAIL BRACKET AS A TEMPLATE FOR THE ANCHOR BOLTS.

HANDRAIL POST ANCHORAGE-ALUMINUM

DETAIL 5 OF 6

WYCKOFF GROUNDWATER
TREATMENT PLANT

BAINBRIDGE ISLAND, WA

5521

CH2MHILL

FOR PROJECT DESIGN DETAILS
TURN OFF LV=SHBD,SHBD-DTL AND SHBD-OTLN IN THE ACTIVE FILE WHEN PLOTTING

$FILENAME $PLOTTIME

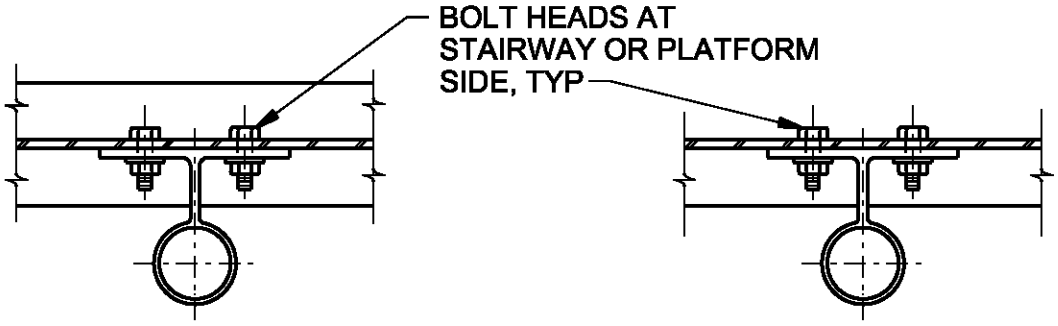

PLAN

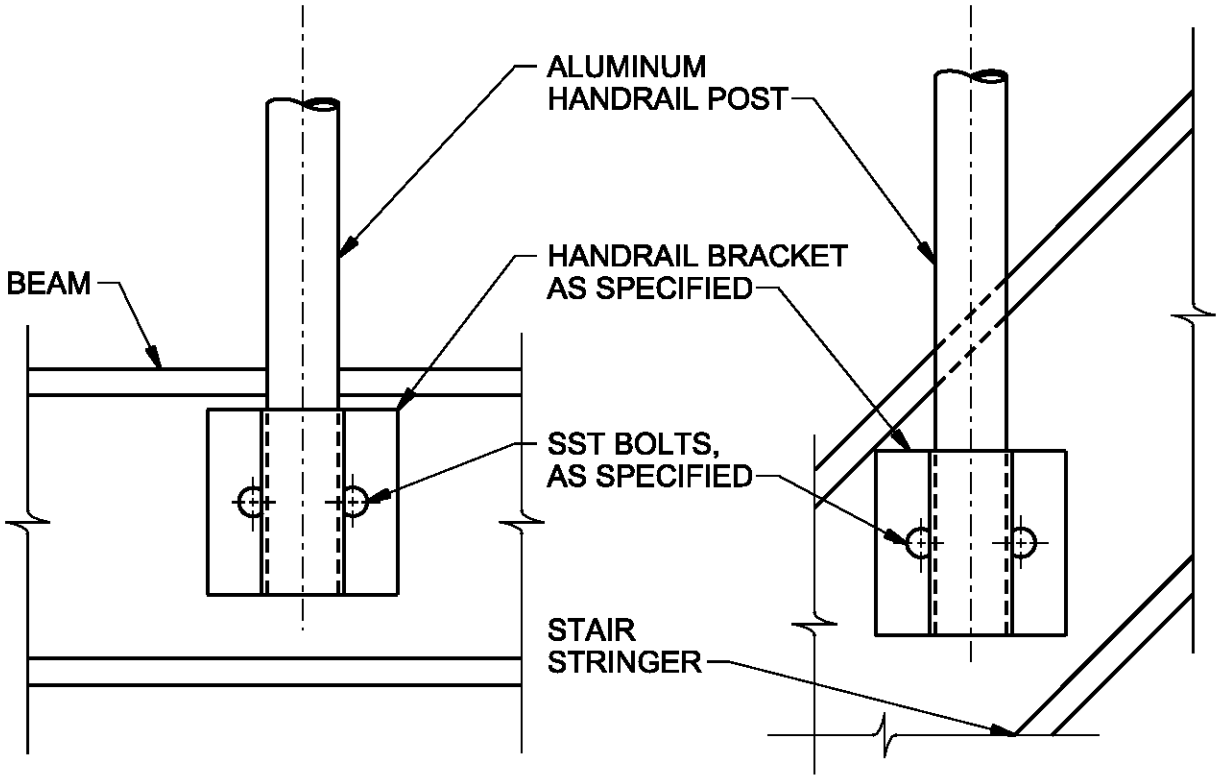

ELEVATION

TYPE "H"

NOTE:

PROVIDE PROTECTION FOR DISSIMILAR METALS AND CONCRETE PER SPECIFICATIONS.

HANDRAIL POST ANCHORAGE-ALUMINUM

DETAIL 6 OF 6

WYCKOFF GROUNDWATER
TREATMENT PLANT

BAINBRIDGE ISLAND, WA

5521

CH2MHILL

FOR PROJECT DESIGN DETAILS
TURN OFF LV=SHBD,SHBD-DTL AND SHBD-OTLN IN THE ACTIVE FILE WHEN PLOTTING

$FILENAME $PLOTTIME

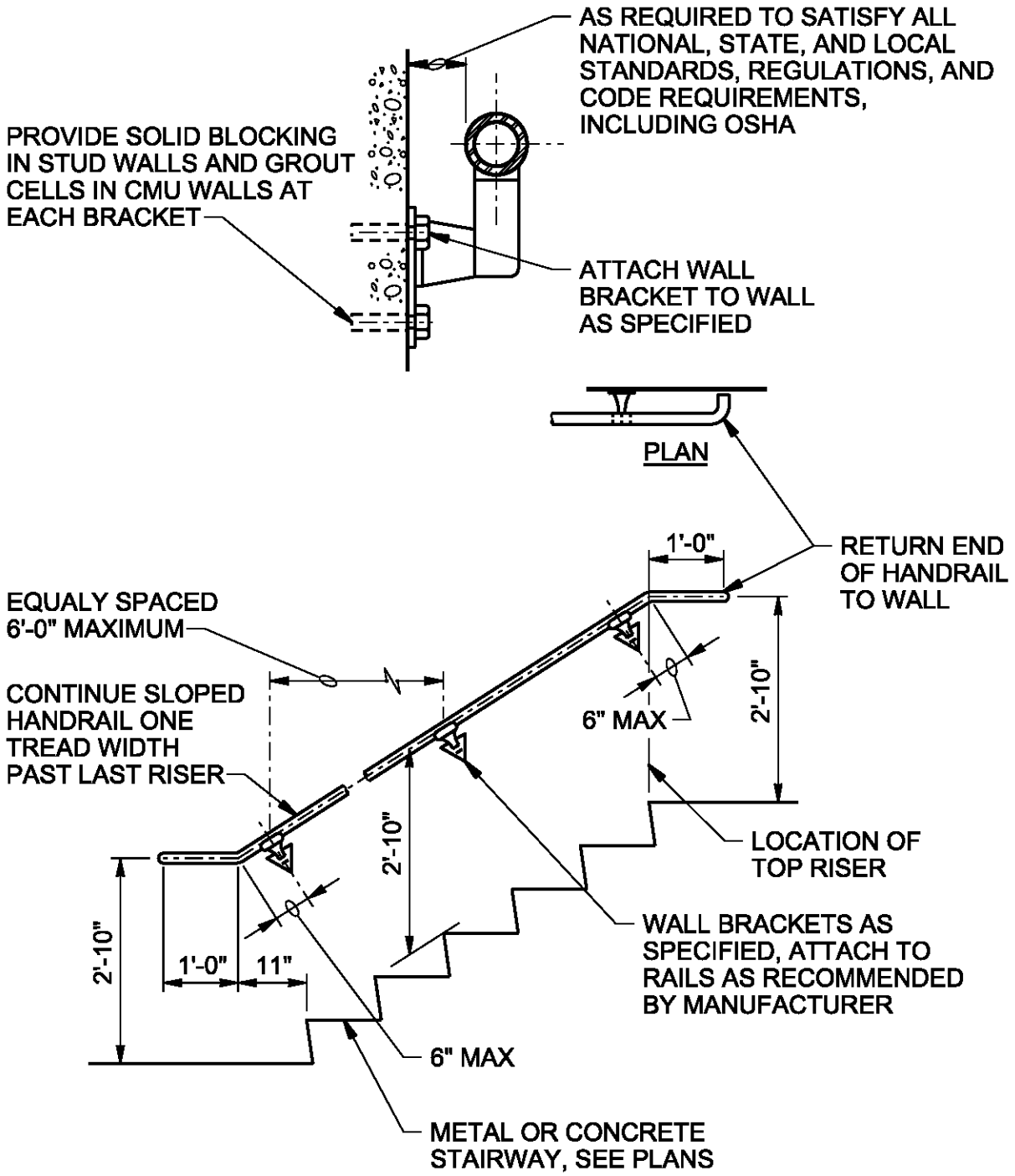

WALL HANDRAIL-ALUMINUM

WYCKOFF GROUNDWATER TREATMENT PLANT

BAINBRIDGE ISLAND, WA

5522

CH2MHILL

FOR PROJECT DESIGN DETAILS
TURN OFF LV=SHBD,SHBD-DTL AND SHBD-OTLN IN THE ACTIVE FILE WHEN PLOTTING

$FILENAME $PLOTTIME

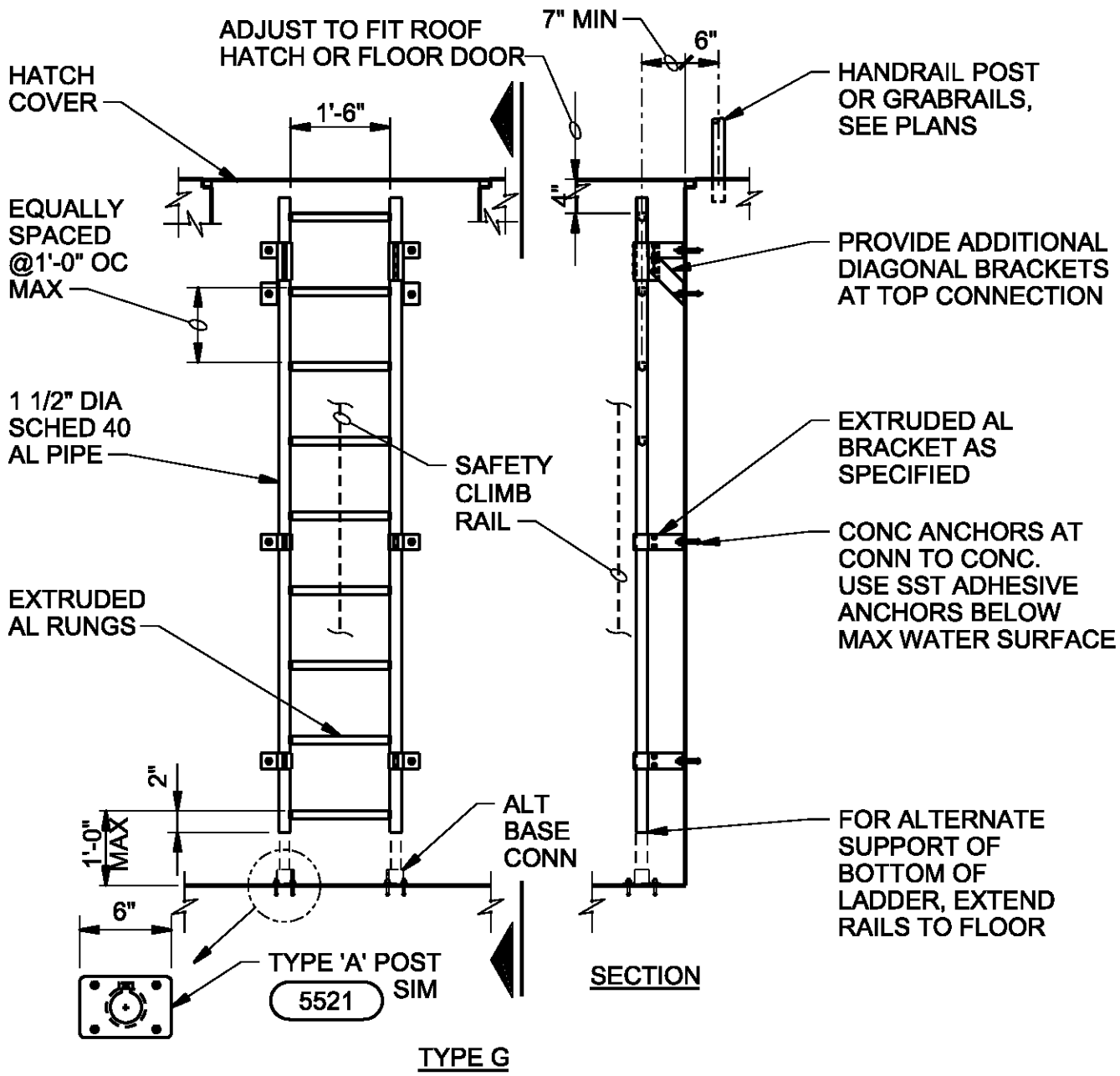

NOTES:

1. PROVIDE PROTECTION FOR ALUMINUM IN CONTACT WITH CONCRETE AS SPECIFIED.
2. PROVIDE LADDER SAFETY POST AS SPECIFIED, WHERE INDICATED.
3. PROVIDE SAFETY CLIMB RAIL WITH BELT & EXTENSION RAIL AS SPECIFIED WHERE INDICATED.

PIPE LADDER UNDER COVER-ALUMINUM

DETAIL 1 OF 2

WYCKOFF GROUNDWATER TREATMENT PLANT

BAINBRIDGE ISLAND, WA

5546

CH2MHILL

FOR PROJECT DESIGN DETAILS
TURN OFF LV=SHBD,SHBD-DTL AND SHBD-OTLN IN THE ACTIVE FILE WHEN PLOTTING

$FILENAME $PLOTTIME

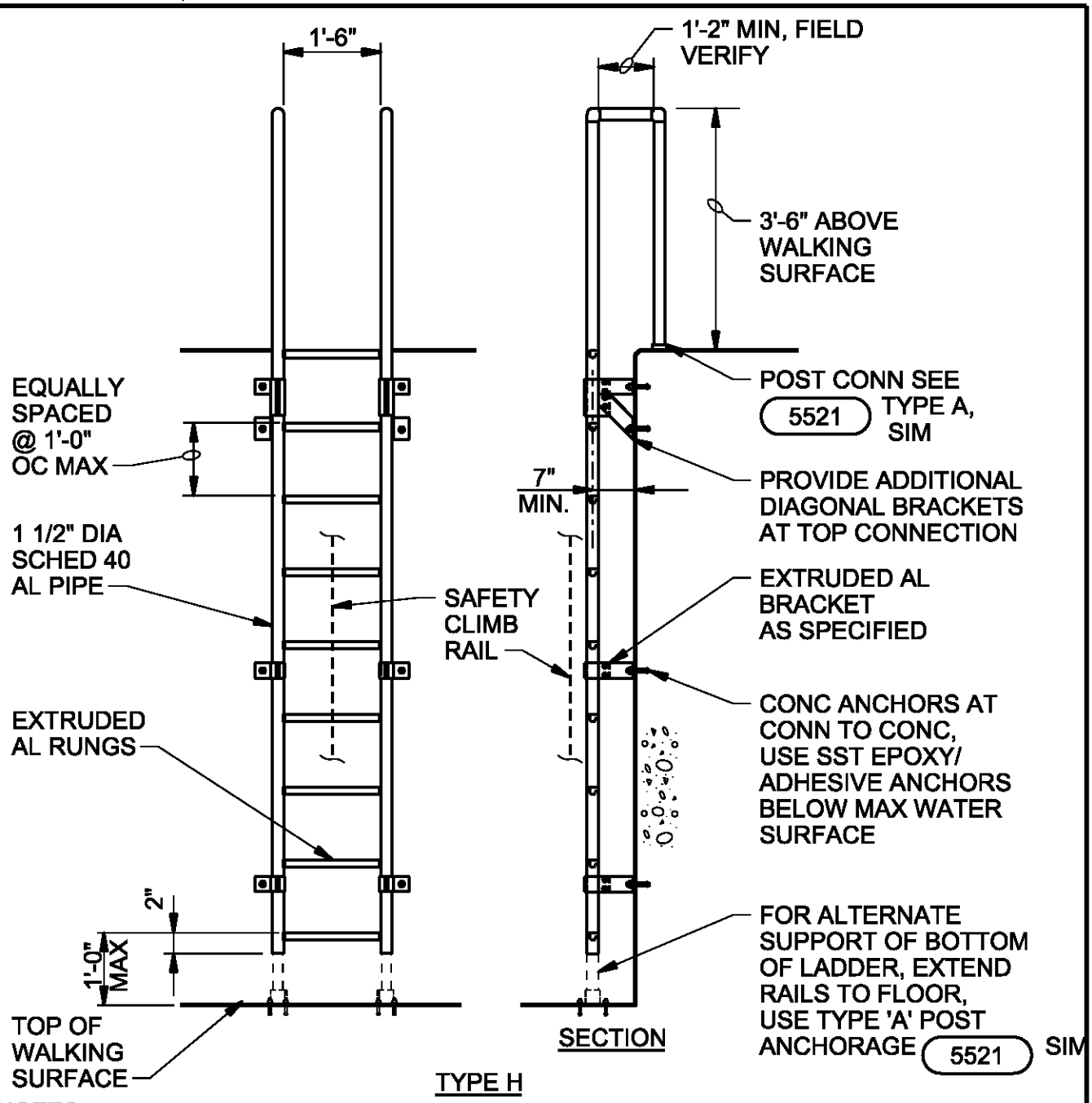

NOTES:

1. PROVIDE PROTECTION FOR ALUMINUM IN CONTACT WITH CONCRETE AS SPECIFIED.
2. PROVIDE LADDER SAFETY POST AS SPECIFIED, WHERE INDICATED.

PIPE LADDER WITH EXTENSION-ALUMINUM

DETAIL 2 OF 2

WYCKOFF GROUNDWATER TREATMENT PLANT

BAINBRIDGE ISLAND, WA

5546

CH2MHILL

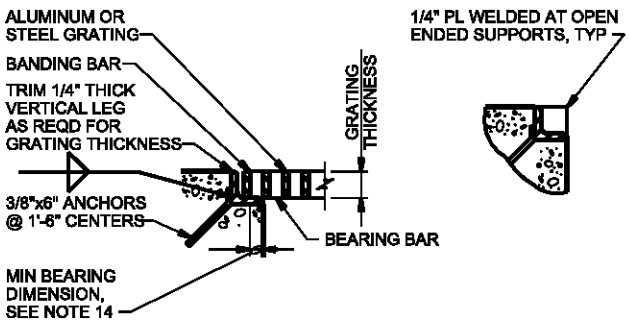

GS-1

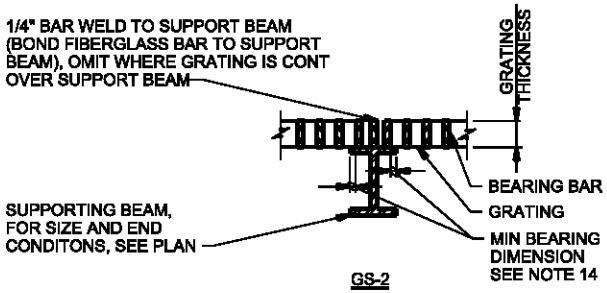

GS-2

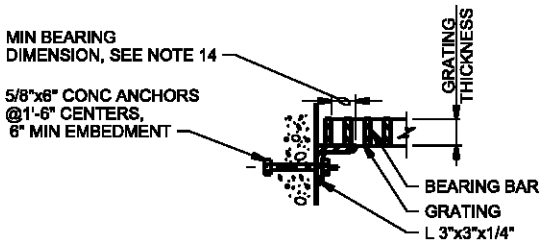

NOTE:
USE GS-3 ONLY FOR FOOT TRAFFIC GRATING.

GS-3

GENERAL NOTES:

1. EXTEND GRATING CONTINUOUSLY OVER GATE GUIDES AND GATES.
2. NOTCH GRATING SUPPORTS AT GATES AS REQUIRED.
3. GRATING SPAN SEE PLAN.
4. WIDTH OF GRATING SECTIONS SHALL NOT EXCEED 3'-0".
5. SHOP DRAWINGS BASED ON FIELD DIMENSIONS SHALL BE SUBMITTED TO THE ENGINEER PRIOR TO FABRICATION.
6. MATERIAL FOR SUPPORTS OF STEEL AND ALUMINUM GRATING TO BE SAME AS GRATING, EXCEPT METAL SUPPORTS THAT ARE TO BE EMBEDDED IN CONCRETE SHALL BE TYPE 316 STAINLESS STEEL.
7. UNLESS NOTED OTHERWISE ON PLANS, GRATING THICKNESS SHALL BE AS TABULATED IN "GRATING THICKNESS TABLE" FOR APPLICABLE TRAFFIC.
8. BEARING BAR THICKNESS FOR GRATING TO BE 3/16" MINIMUM.
9. BAND ALL EDGES WITH 3/16 x DEPTH OF BEARING BAR.
10. PROVIDE MISCELLANEOUS GRATING FASTENERS AS REQUIRED.
11. TYPE OF MATERIAL USED SHALL BE AS SHOWN ON PLANS OR AS SPECIFIED. THIS STANDARD DETAIL INCLUDES 2 TYPES, ALTHOUGH BOTH MAY NOT BE INCLUDED IN PROJECT.
12. THE HORIZONTAL CLEARANCE BETWEEN THE GRATING AND GRATING SUPPORTS SHALL NOT BE LESS THAN 1/4" NOR GREATER THAN 1/2" AND AS SPECIFIED.
13. ALL GRATING SECTIONS, WHEN IN PLACE, SHALL ALWAYS BE FIRMLY ANCHORED TO THEIR SUPPORTS AS SPECIFIED.
14. MIN BEARING HORIZONTAL DIMENSION = 1" FOR GRATING DEPTH 2 1/4" OR LESS, MIN BEARING HORIZONTAL = 2" FOR GRATING DEPTH GREATER THAN 2 1/4"

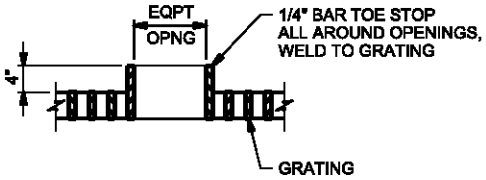

EQUIPMENT OPENINGS

FOOT TRAFFIC		
GRATING THICKNESS TABLE		
MAXIMUM SPAN	ALUMINUM	STEEL
3'-6"	1 1/4"	1"
4'-0"	1 1/2"	1"
4'-6"	1 3/4"	1"
5'-0"	1 3/4"	1 1/4"
5'-6"	2"	1 1/4"
6'-0"	2 1/4"	1 1/2"
6'-6"	2 1/4"	1 1/2"
7'-0"	2 1/2"	1 3/4"

HEAVY VEHICULAR TRAFFIC (HS 20-44)		
MAXIMUM SPAN	STEEL	ALUMINUM
1'-0"	2"x3/16"	DO NOT USE ALUMINUM GRATING
1'-8"	2 1/2"x1/4"	
2'-0"	2 1/2"x3/8" OR 3"x1/4"	
2'-6"	3"x3/8" OR 4"x1/4"	
3'-3"	3 1/2"x3/8"	
4'-0"	4"x3/8"	
5'-0"	4 1/2"x3/8"	

LIGHT VEHICULAR TRAFFIC (WHEEL LOAD = 2000 POUNDS OR LESS)		
MAXIMUM SPAN	STEEL	ALUMINUM
1'-0"	1 3/4"x3/16"	1 3/4"x3/16"
1'-6"	1 3/4"x3/16"	1 3/4"x3/16"
2'-0"	2"x3/16"	2"x3/16"
2'-6"	2 1/4"x3/16"	2 1/4"x3/16"
3'-0"	2 1/2"x3/16"	2 1/2"x3/16"
4'-0"	2 1/2"x1/4"	DO NOT USE ALUMINUM GRATING
5'-0"	2 1/2"x3/8"	
6'-0"	2 1/2"x3/8"	
7'-0"	3"x3/8"	

VEHICULAR TRAFFIC NOTE:

STEEL GRATING BEARING BARS FOR VEHICULAR TRAFFIC SHALL BE SPACED AT 1 7/8" OC; ALUMINUM GRATING BEARING BARS FOR VEHICULAR TRAFFIC SHALL BE SPACED AT 1 3/16" OC.

SERRATED BEARING BARS:

INCREASE GRATING THICKNESSES SHOWN IN TABLES BY 1/4" FOR GRATING WITH SERRATED SLIP RESISTANT SURFACES.

STANDARD GRATING

WYCKOFF GROUNDWATER TREATMENT PLANT

BAINBRIDGE ISLAND, WA

5566

CH2MHILL

$FILENAME $PLOTTIME

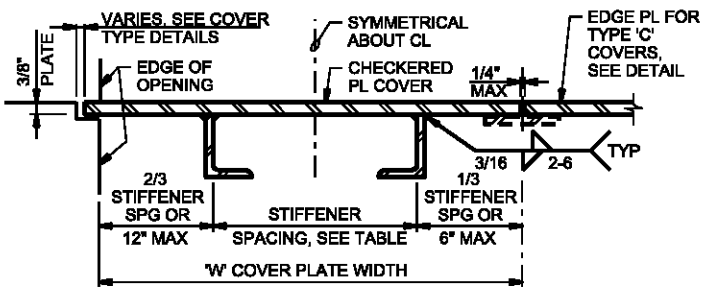

TABLE			
OPENING SPAN LENGTH 'L'	STIFFENER SIZE	MAX STIFFENER SPACING	MAX PLATE WIDTH 'W'
L<2'-6"	NONE	-	5'-0"
2'-6"<L<3'-6"	L2x1 1/2x1/4	1'-6"	4'-0"
3'-6"<L<4'-0"	L2 1/2x1 1/2x1/4	1'-6"	4'-0"
4'-0"<L<4'-6"	L2 1/2x1 1/2x1/4	1'-3"	4'-0"
4'-6"<L<5'-0"	L3x2x1/4	1'-6"	4'-0"
5'-0"<L<5'-6"	L3x2x1/4	1'-3"	3'-0"
5'-6"<L<6'-0"	L3 1/2x2 1/2x1/4	1'-6"	3'-0"
6'-0"<L<6'-6"	L3 1/2x2 1/2x1/4	1'-3"	2'-6"
6'-6"<L<7'-0"	L4x3x1/4	1'-3"	2'-6"
7'-0"<L<7'-6"	L4x3x1/4	1'-0"	2'-0"

NOTES:
1. STIFFENERS TO BE PLACED LONG LEG VERTICAL.
2. SPAN DIRECTION OF PLATE TO BE PARALLEL TO STIFFENERS, AND SHALL BE SHORT DIMENSION OF OPENING UNLESS NOTED OTHERWISE ON PLANS.
3. MAXIMUM ALLOWABLE UNIFORM DESIGN LOAD = 300psf.
4. MAXIMUM WEIGHT OF COVER PLATE TO BE 125 POUNDS.
5. COVER PLATES AND STIFFENERS ARE ALUMINUM PLATES AND ANGLES.
6. ALL COVER PLATES TO HAVE A MINIMUM OF TWO EYES AS SHOWN IN LIFTING EYE DETAILS.

COVER STIFFENERS

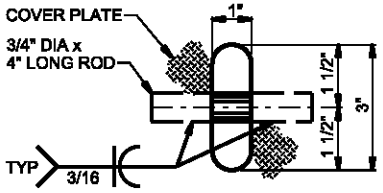

NOTE:
THIS DETAIL IS APPLICABLE TO TYPES "A" AND "B" COVERS AND OTHER COVERS NOT INTENDED TO BE AIRTIGHT.

LIFTING EYE TYPE "A"

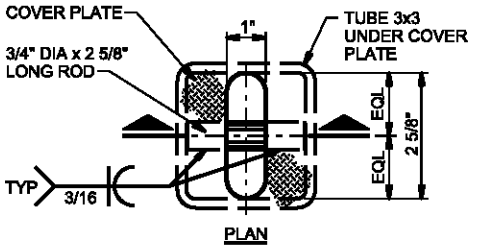

PLAN

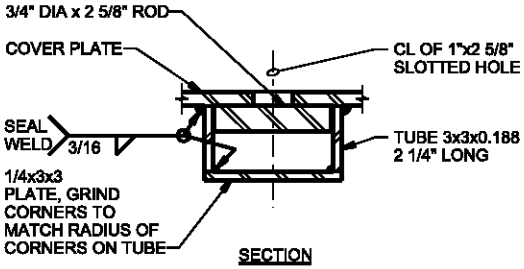

SECTION

NOTE:
THE DETAIL IS APPLICABLE TO TYPE "C" COVERS AND OTHER AIR TIGHT COVERS.

LIFTING EYE TYPE "B"

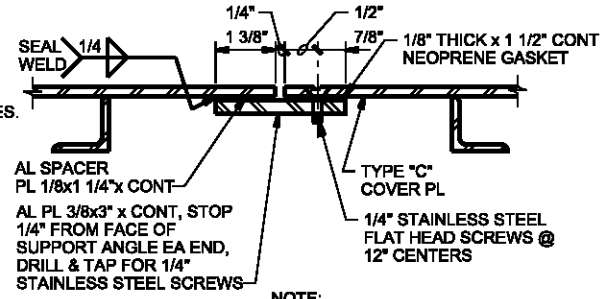

NOTE:
THIS DETAIL APPLIES AT TYPE "C" COVERS AND OTHER AIRTIGHT COVERS.

EDGE PLATE DETAIL

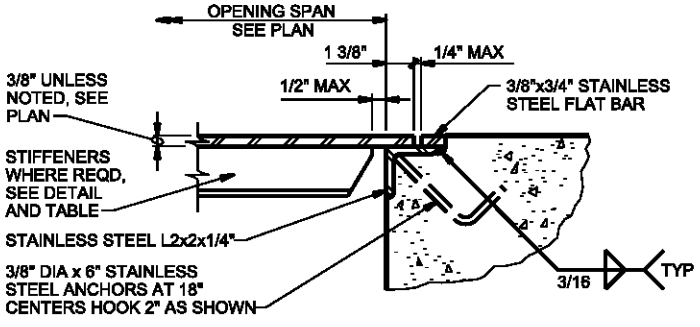

COVER TYPE "A"

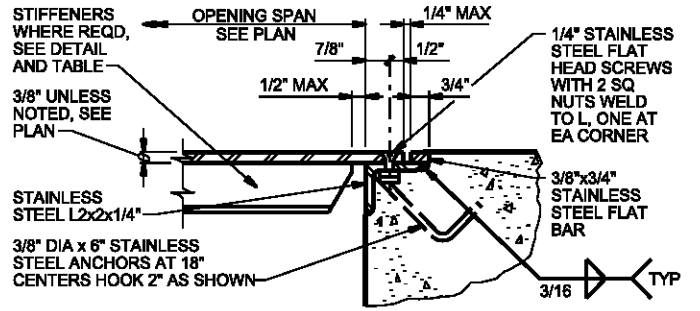

COVER TYPE "B"

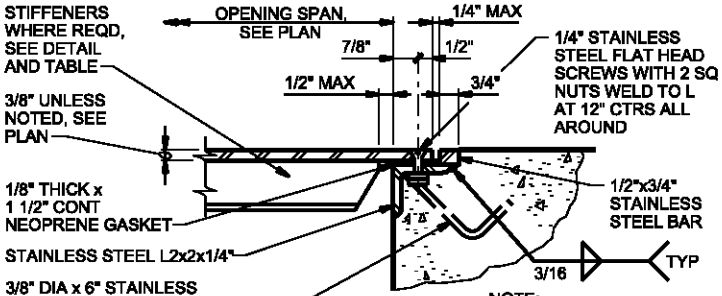

NOTE:
THIS DETAIL APPLIES AT OPENINGS THAT REQUIRE AIR TIGHT COVERS.

COVER TYPE "C"

CHECKERED ALUMINUM FLOOR PLATE

WYCKOFF GROUNDWATER TREATMENT PLANT

BAINBRIDGE ISLAND, WA

5576

CH2MHILL

FOR PROJECT DESIGN DETAILS
TURN OFF LV=SHBD,SHBD-DTL AND SHBD-OTLN IN THE ACTIVE FILE WHEN PLOTTING

$FILENAME $PLOTTIME

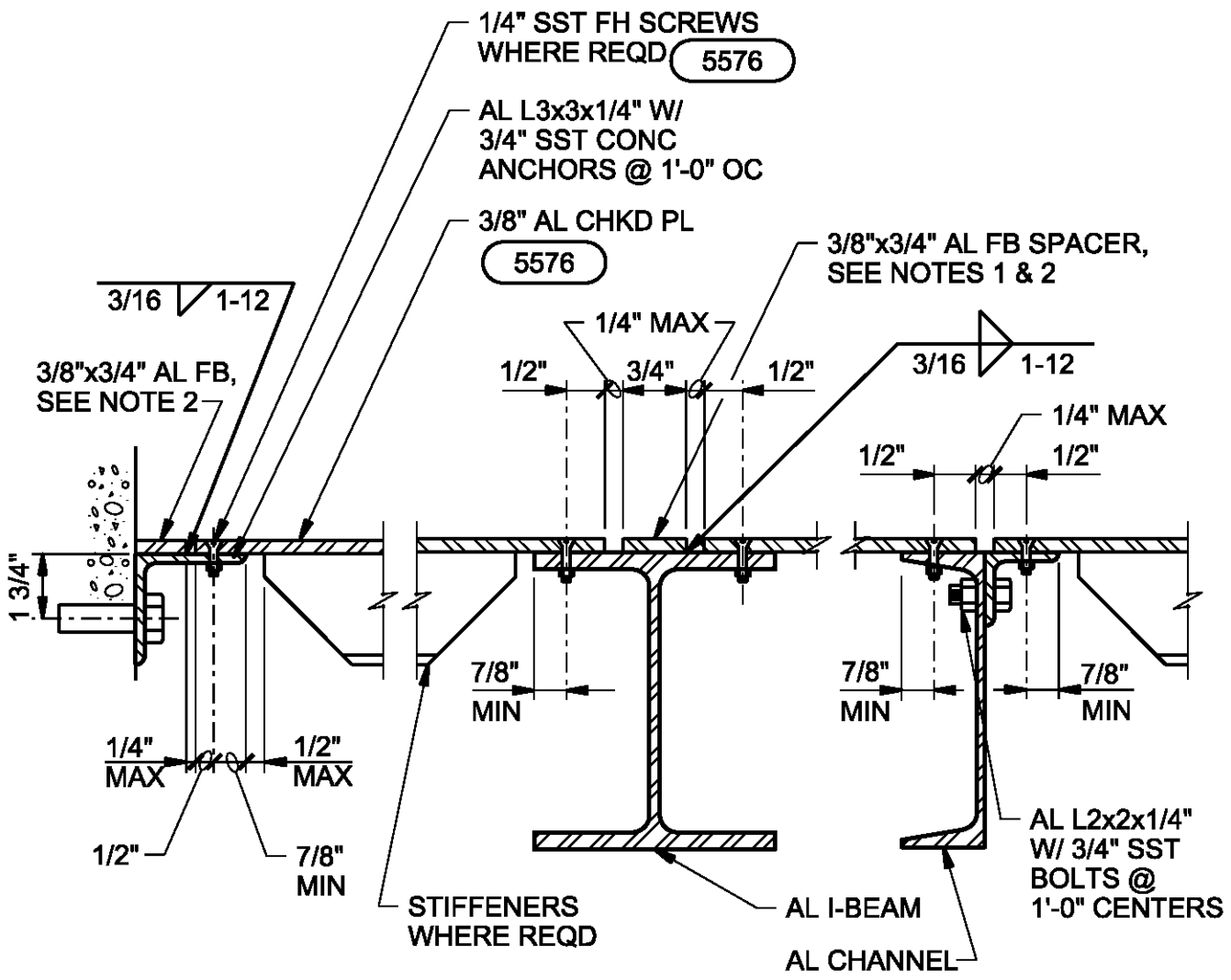

NOTES:

1. PROVIDE AL FB 3/8" AT CL SUPPORT WHERE FLANGE WIDTH (OR FLANGE PLUS ANGLE) EXCEEDS 4".
2. TYPE "B" COVER SHOWN. DETAIL SIMILAR FOR TYPE "A" COVER. PROVIDE 1/2" THICK FLAT BAR SPACERS FOR TYPE "C" COVER.

FLOOR PLATE SUPPORT FRAMING

WYCKOFF GROUNDWATER
TREATMENT PLANT
BAINBRIDGE ISLAND, WA

5577

CH2MHILL

FOR PROJECT DESIGN DETAILS
TURN OFF LV=SHBD,SHBD-DTL AND SHBD-OTLN IN THE ACTIVE FILE WHEN PLOTTING

$FILENAME $PLOTTIME

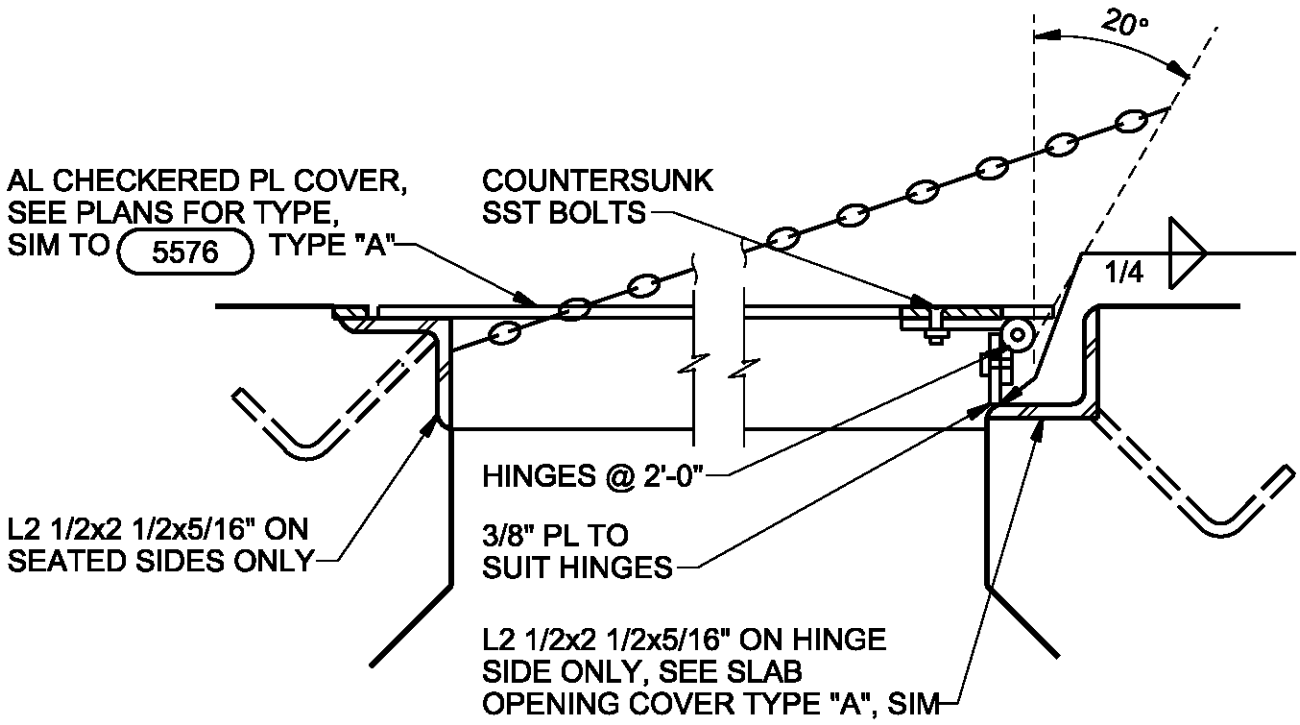

NOTES:

1. INSTALL SST CHAIN. TACK WELD OR BOLT TO PL AND FRAME. CHAIN TO STOP PL AT 20° PAST VERTICAL.
2. HINGES TO BE STAINLESS STEEL FULL MORTISE BUTT HINGES WITH STAINLESS STEEL BOLTS.
3. MAX WEIGHT TO BE 80 POUNDS.
4. SEE LIFTING EYE DETAILS AND PLANS FOR TYPE.

CHECKERED ALUMINUM HINGED FLOOR PLATE

WYCKOFF GROUNDWATER
TREATMENT PLANT
BAINBRIDGE ISLAND, WA

5578

CH2MHILL

FOR PROJECT DESIGN DETAILS
TURN OFF LV=SHBD,SHBD-DTL AND SHBD-OTLN IN THE ACTIVE FILE WHEN PLOTTING

$FILENAME $PLOTTIME

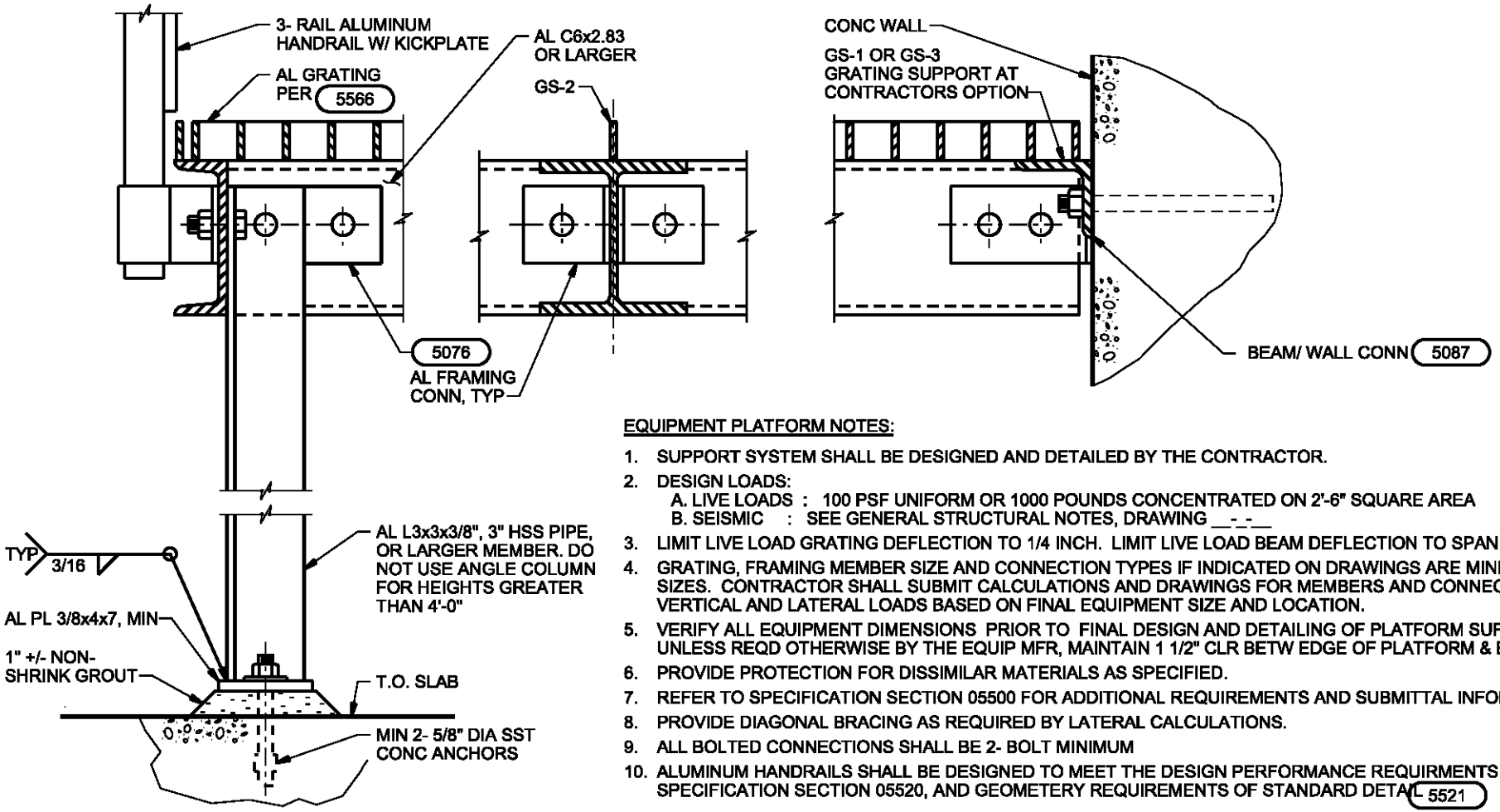

EQUIPMENT PLATFORM NOTES:

1. SUPPORT SYSTEM SHALL BE DESIGNED AND DETAILED BY THE CONTRACTOR.
2. DESIGN LOADS:
   A. LIVE LOADS : 100 PSF UNIFORM OR 1000 POUNDS CONCENTRATED ON 2'-6" SQUARE AREA
   B. SEISMIC : SEE GENERAL STRUCTURAL NOTES, DRAWING __-_-__
3. LIMIT LIVE LOAD GRATING DEFLECTION TO 1/4 INCH. LIMIT LIVE LOAD BEAM DEFLECTION TO SPAN LENGTH OVER 480.
4. GRATING, FRAMING MEMBER SIZE AND CONNECTION TYPES IF INDICATED ON DRAWINGS ARE MINIMUM ACCEPTABLE SIZES. CONTRACTOR SHALL SUBMIT CALCULATIONS AND DRAWINGS FOR MEMBERS AND CONNECTIONS FOR BOTH VERTICAL AND LATERAL LOADS BASED ON FINAL EQUIPMENT SIZE AND LOCATION.
5. VERIFY ALL EQUIPMENT DIMENSIONS PRIOR TO FINAL DESIGN AND DETAILING OF PLATFORM SUPPORT SYSTEM, UNLESS REQD OTHERWISE BY THE EQUIP MFR, MAINTAIN 1 1/2" CLR BETW EDGE OF PLATFORM & EQUIP.
6. PROVIDE PROTECTION FOR DISSIMILAR MATERIALS AS SPECIFIED.
7. REFER TO SPECIFICATION SECTION 05500 FOR ADDITIONAL REQUIREMENTS AND SUBMITTAL INFORMATION.
8. PROVIDE DIAGONAL BRACING AS REQUIRED BY LATERAL CALCULATIONS.
9. ALL BOLTED CONNECTIONS SHALL BE 2- BOLT MINIMUM
10. ALUMINUM HANDRAILS SHALL BE DESIGNED TO MEET THE DESIGN PERFORMANCE REQUIRMENTS OF SPECIFICATION SECTION 05520, AND GEOMETERY REQUIREMENTS OF STANDARD DETAIL 5521

TYPICAL EQUIPMENT PLATFORM CONNECTION-ALUMINUM

WYCKOFF GROUNDWATER TREATMENT PLANT
BAINBRIDGE ISLAND, WA

5601

CH2MHILL

FOR PROJECT DESIGN DETAILS
TURN OFF LV=SHBD,SHBD-DTL AND SHBD-OTLN IN THE ACTIVE FILE WHEN PLOTTING

$FILENAME $PLOTTIME

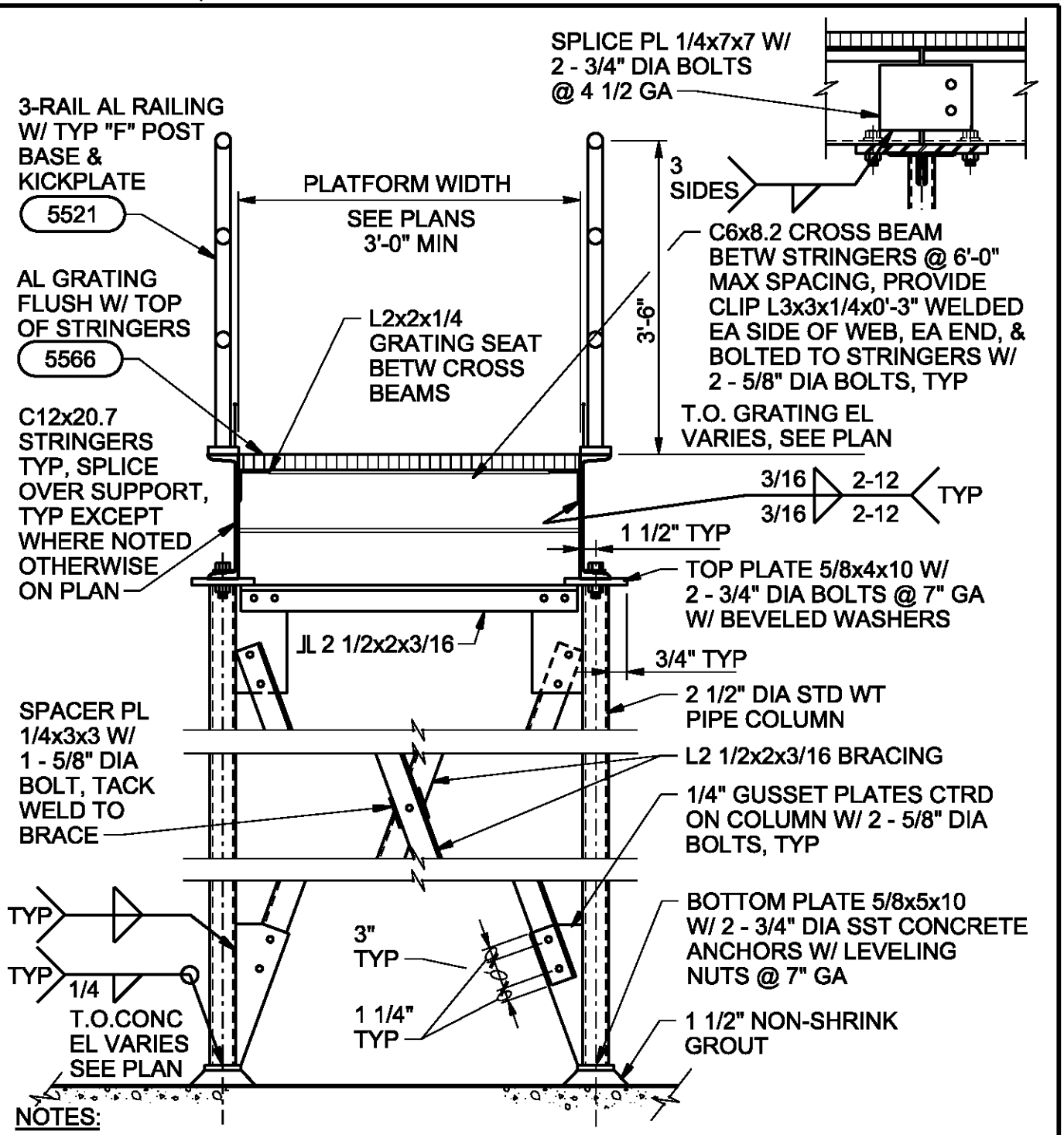

NOTES:

1. HOT-DIP GALV STEEL ACCESS PLATFORM, SUPPORTS AND CONN'S AFTER FABRICATION.
2. PROVIDE PROTECTION BETWEEN AL & GALV STEEL AS SPECIFIED IN SPEC 09900 FOR DISSIMILAR METALS.

ACCESS PLATFORM SUPPORT

WYCKOFF GROUNDWATER
TREATMENT PLANT
BAINBRIDGE ISLAND, WA

5602

CH2MHILL

FOR PROJECT DESIGN DETAILS
TURN OFF LV=SHBD,SHBD-DTL AND SHBD-OTLN IN THE ACTIVE FILE WHEN PLOTTING

$FILENAME $PLOTTIME

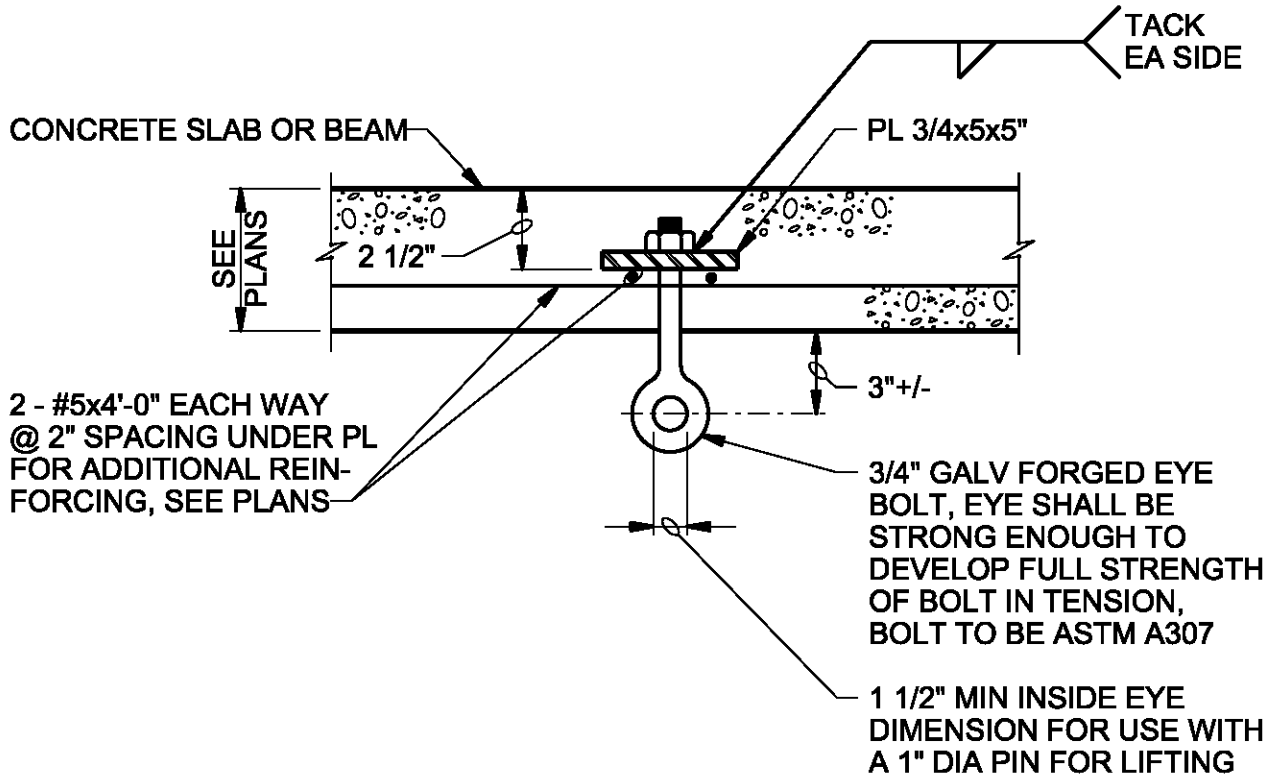

NOTES:

1. MAXIMUM LOAD RATING FOR LIFTING EYE: 2000 LBS.
2. SUBMIT DATA ON EYE BOLT WITH SHOP DRAWINGS.

LIFTING EYE - TYPE 1

WYCKOFF GROUNDWATER
TREATMENT PLANT
BAINBRIDGE ISLAND, WA

5621a

CH2MHILL

FOR PROJECT DESIGN DETAILS
TURN OFF LV=SHBD,SHBD-DTL AND SHBD-OTLN IN THE ACTIVE FILE WHEN PLOTTING

$FILENAME $PLOTTIME

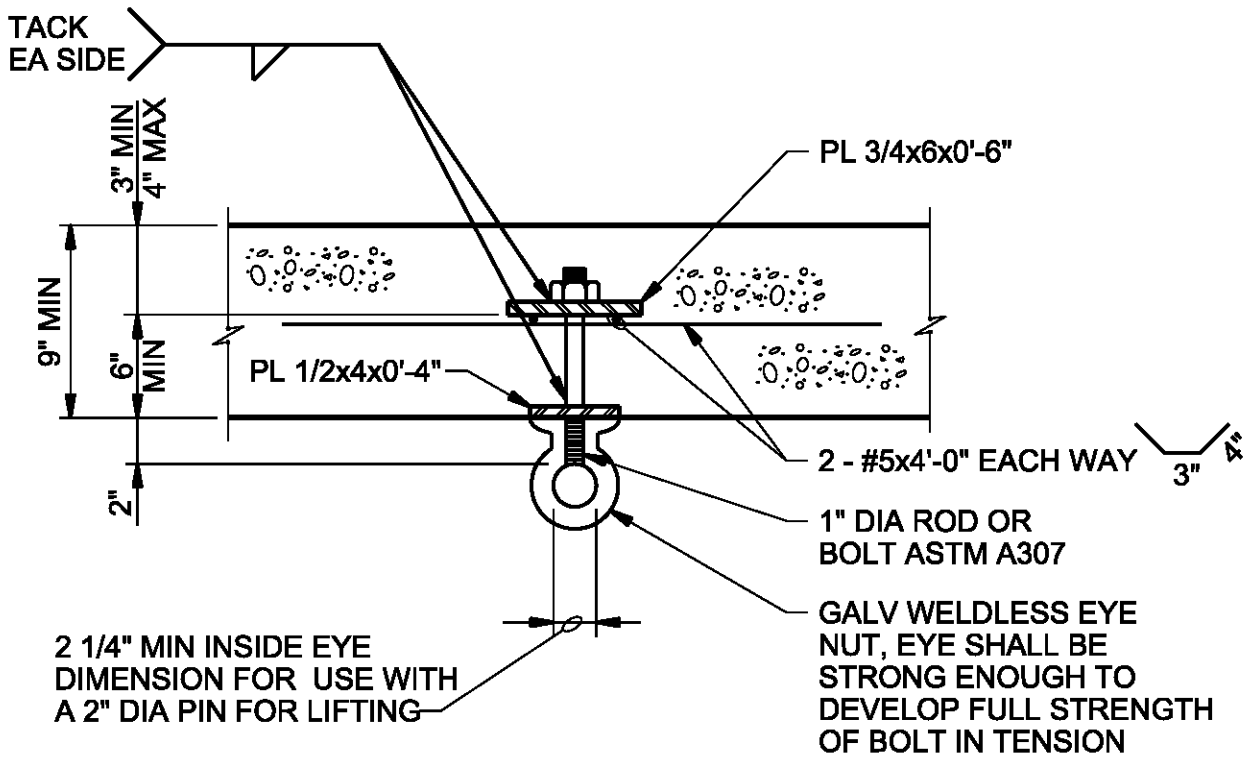

NOTES:

1. MAXIMUM LOAD RATING FOR LIFTING EYE 4000 LBS.
2. SUBMIT DATA ON EYE BOLT WITH SHOP DRAWINGS.

LIFTING EYE - TYPE 2

WYCKOFF GROUNDWATER
TREATMENT PLANT
BAINBRIDGE ISLAND, WA

5621b

CH2MHILL

FOR PROJECT DESIGN DETAILS
TURN OFF LV=SHBD,SHBD-DTL AND SHBD-OTLN IN THE ACTIVE FILE WHEN PLOTTING

$FILENAME $PLOTTIME

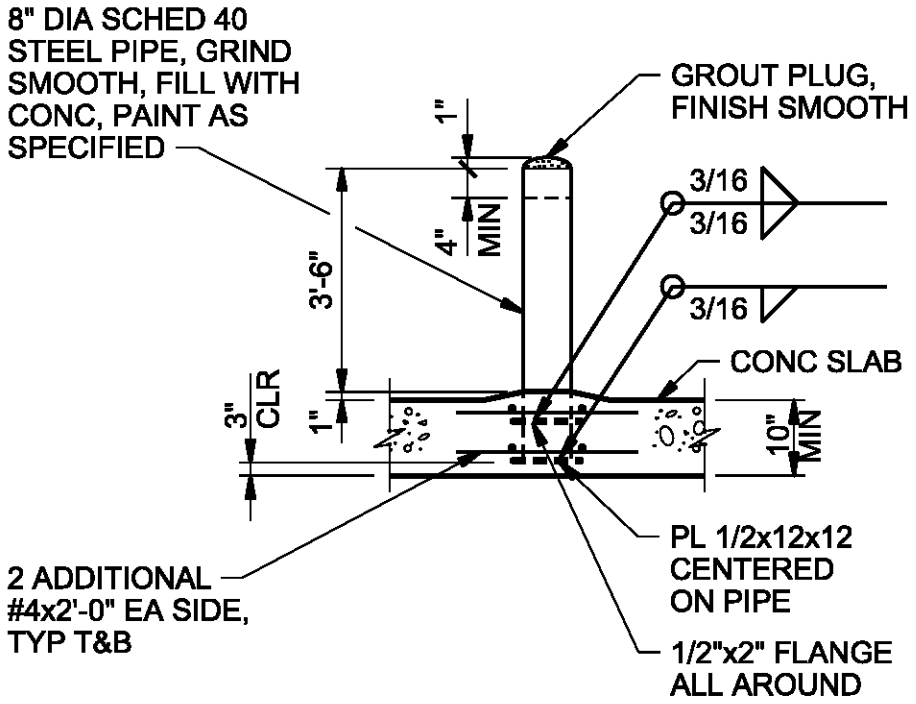

NOTES:

1. HOT DIPPED GALVANIZE AFTER FABRICATION.
2. FOR EXTERIOR GUARD POST, SEE 2080

GUARD POST - INTERIOR

WYCKOFF GROUNDWATER TREATMENT PLANT

BAINBRIDGE ISLAND, WA

5626

CH2MHILL

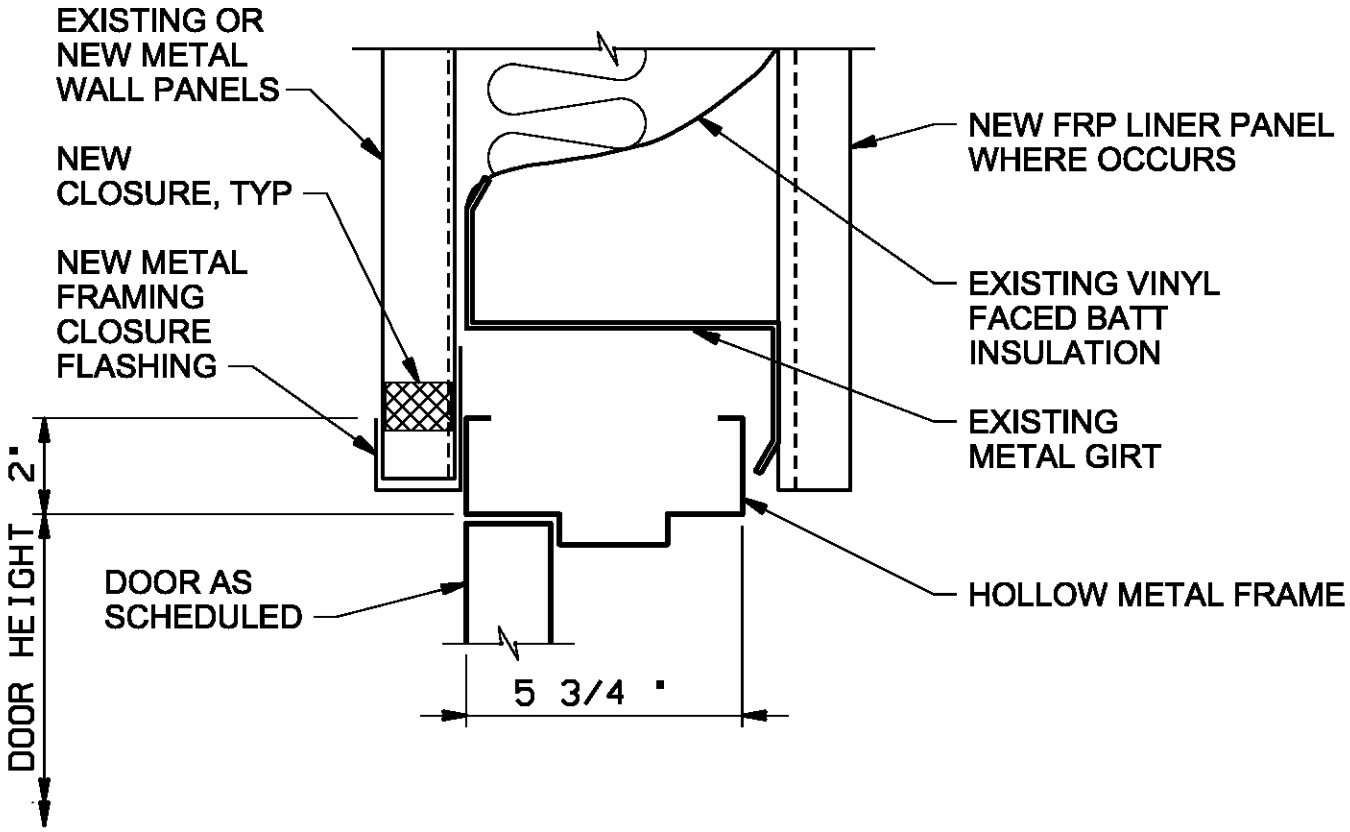

DOOR HEAD

NTS

WYCKOFF GROUNDWATER
TREATMENT PLANT

BAINBRIDGE ISLAND, WA

8109

CH2MHILL

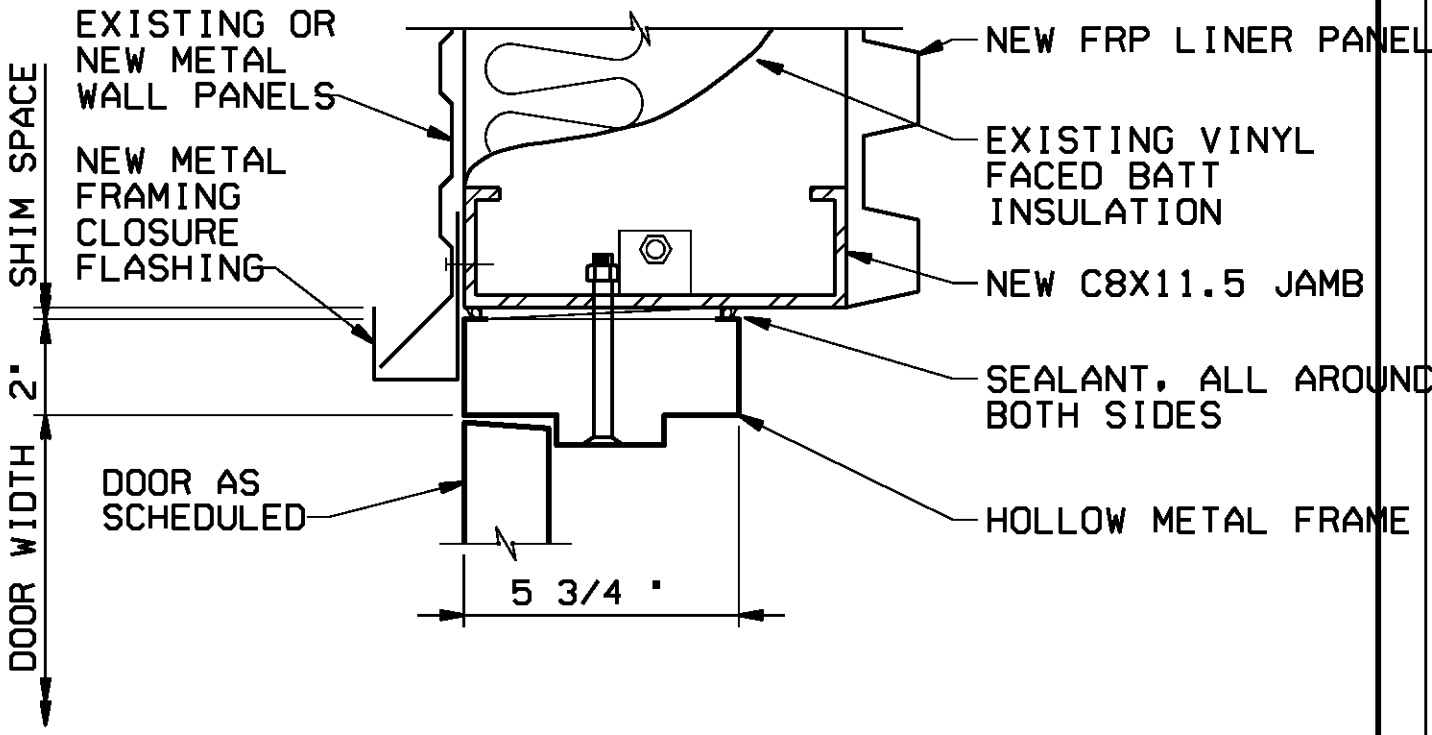

DOOR JAMB

NTS

WYCKOFF GROUNDWATER
TREATMENT PLANT

BAINBRIDGE ISLAND, WA

81-10

CH2MHILL

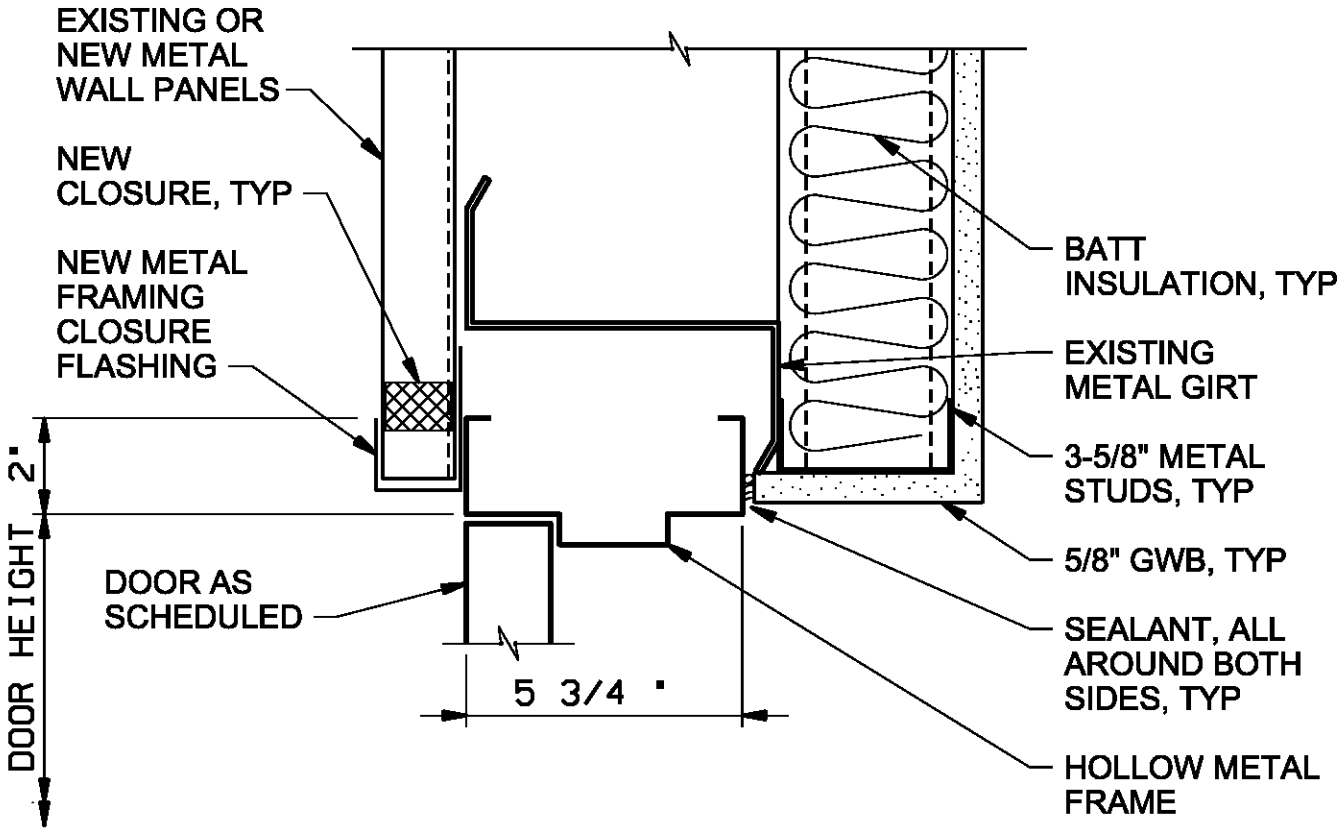

DOOR HEAD

NTS

WYCKOFF GROUNDWATER TREATMENT PLANT

BAINBRIDGE ISLAND, WA

8111

CH2MHILL

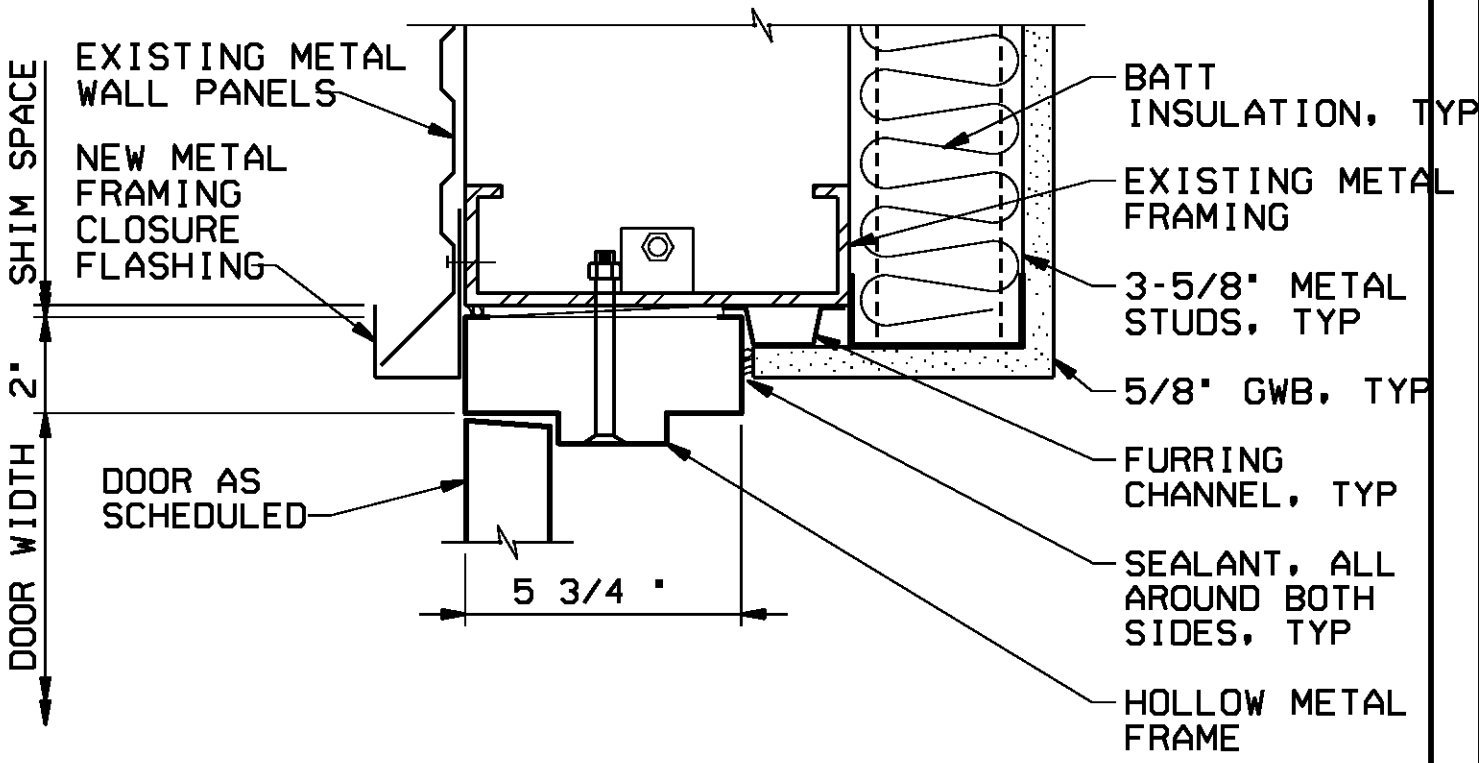

DOOR JAMB

NTS

WYCKOFF GROUNDWATER TREATMENT PLANT

BAINBRIDGE ISLAND, WA

8112

CH2MHILL

FOR PROJECT DESIGN DETAILS
TURN OFF LV=SHBD,SHBD-DTL, SHBD-TITL AND SHBD-OTLN IN THE ACTIVE FILE WHEN PLOTTING

$FILENAME $PLOTDATE

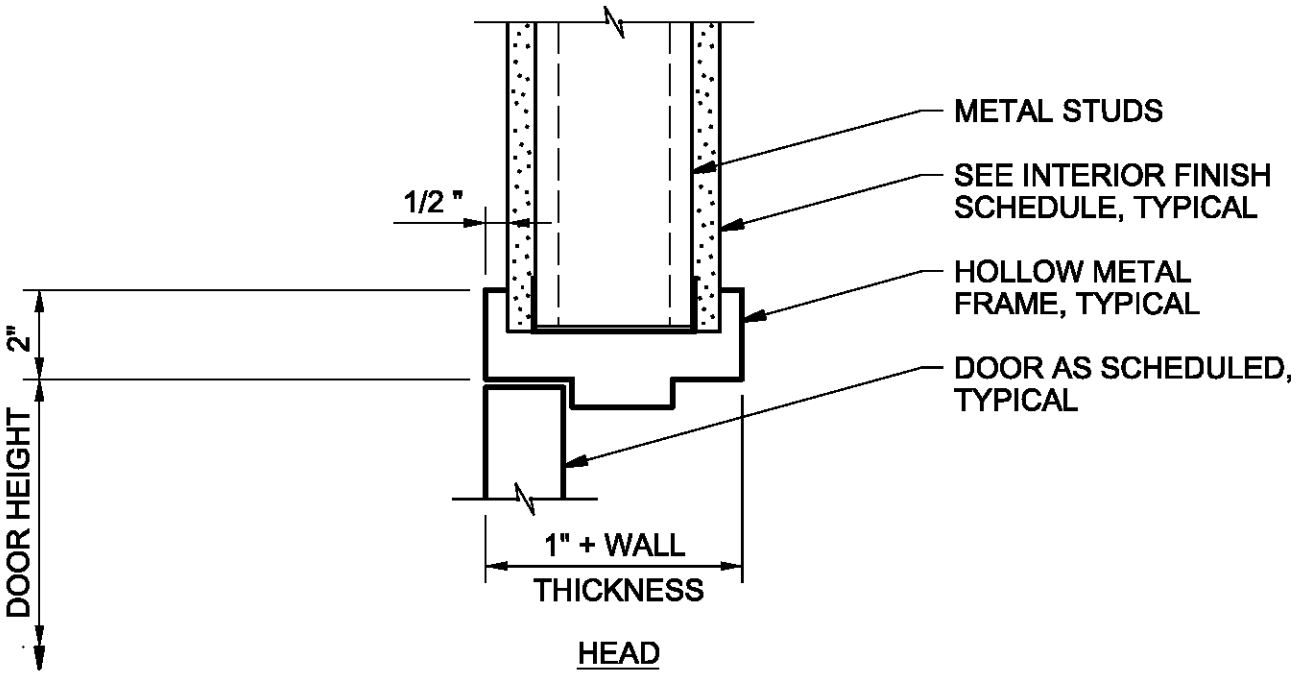

HEAD

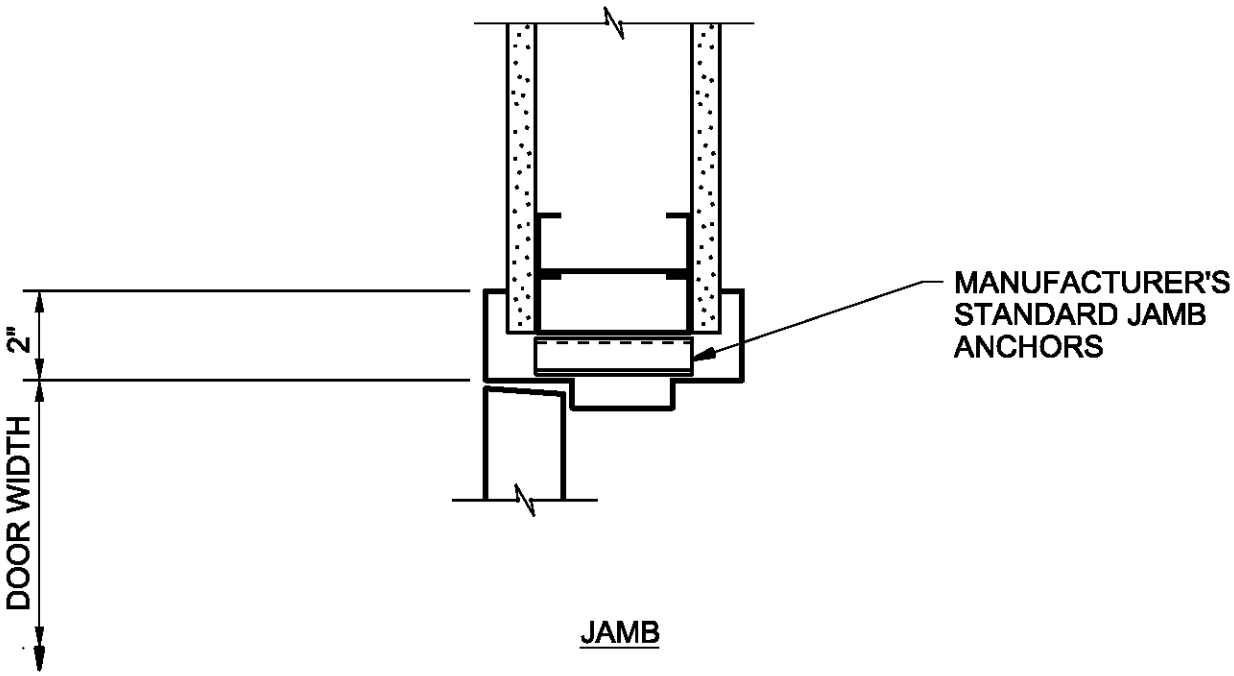

JAMB

DOOR HEAD AND JAMB

NTS

WYCKOFF GROUNDWATER TREATMENT PLANT

BAINBRIDGE ISLAND, WA

8132

CH2MHILL

FOR PROJECT DESIGN DETAILS
TURN OFF LV=SHBD,SHBD-DTL, SHBD-TITL AND SHBD-OTLN IN THE ACTIVE FILE WHEN PLOTTING

$FILENAME $PLOTDATE

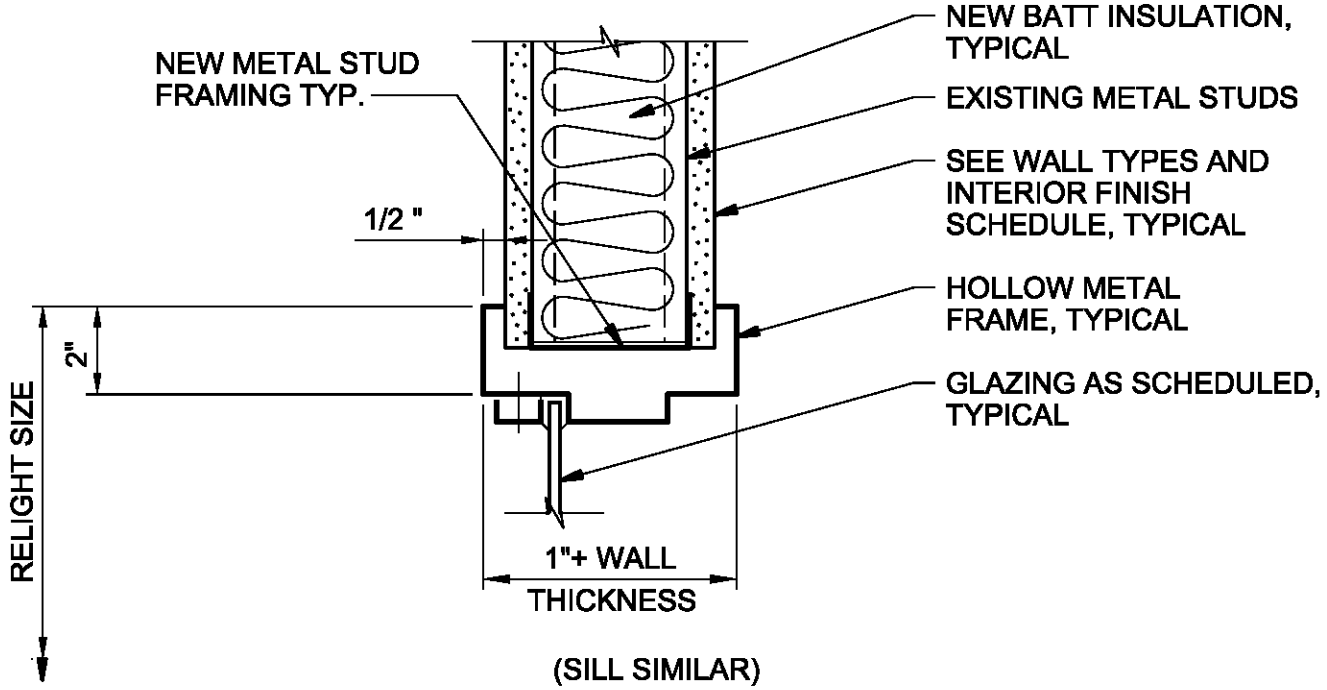

(SILL SIMILAR)

HEAD

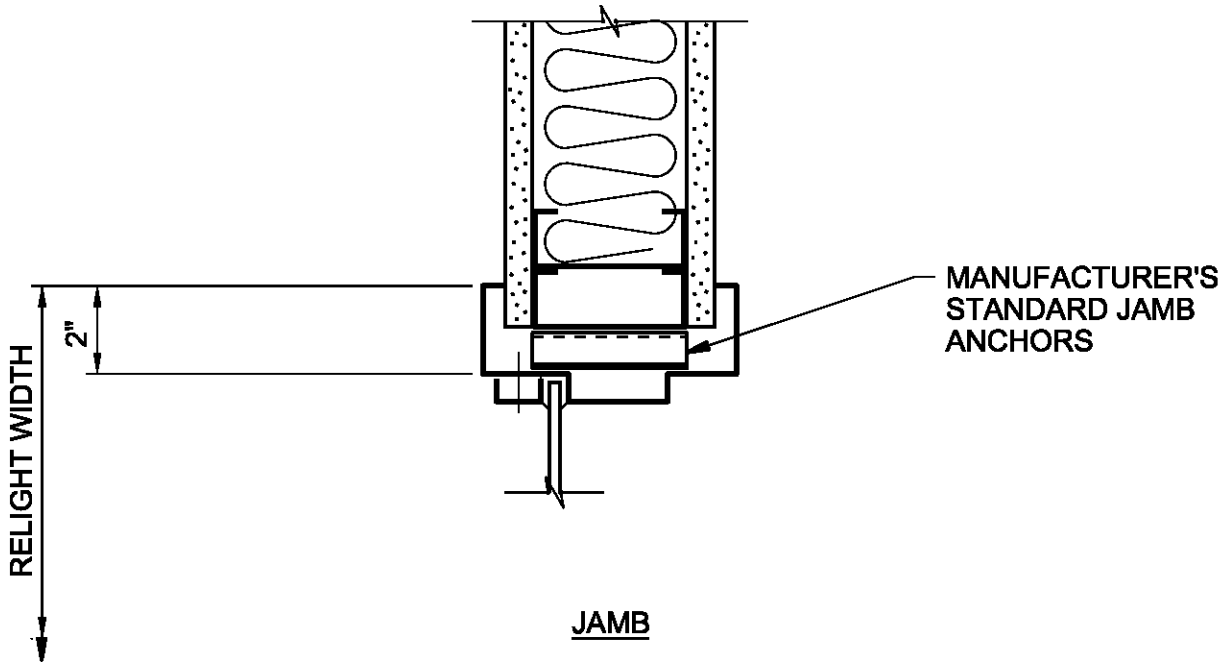

JAMB

RELIGHT HEAD AND JAMB

NTS

WYCKOFF GROUNDWATER TREATMENT PLANT

BAINBRIDGE ISLAND, WA

8136

CH2MHILL

FOR PROJECT DESIGN DETAILS
TURN OFF LV=SHBD,SHBD-DTL, SHBD-TITL AND SHBD-OTLN IN THE ACTIVE FILE WHEN PLOTTING

$FILENAME $PLOTDATE

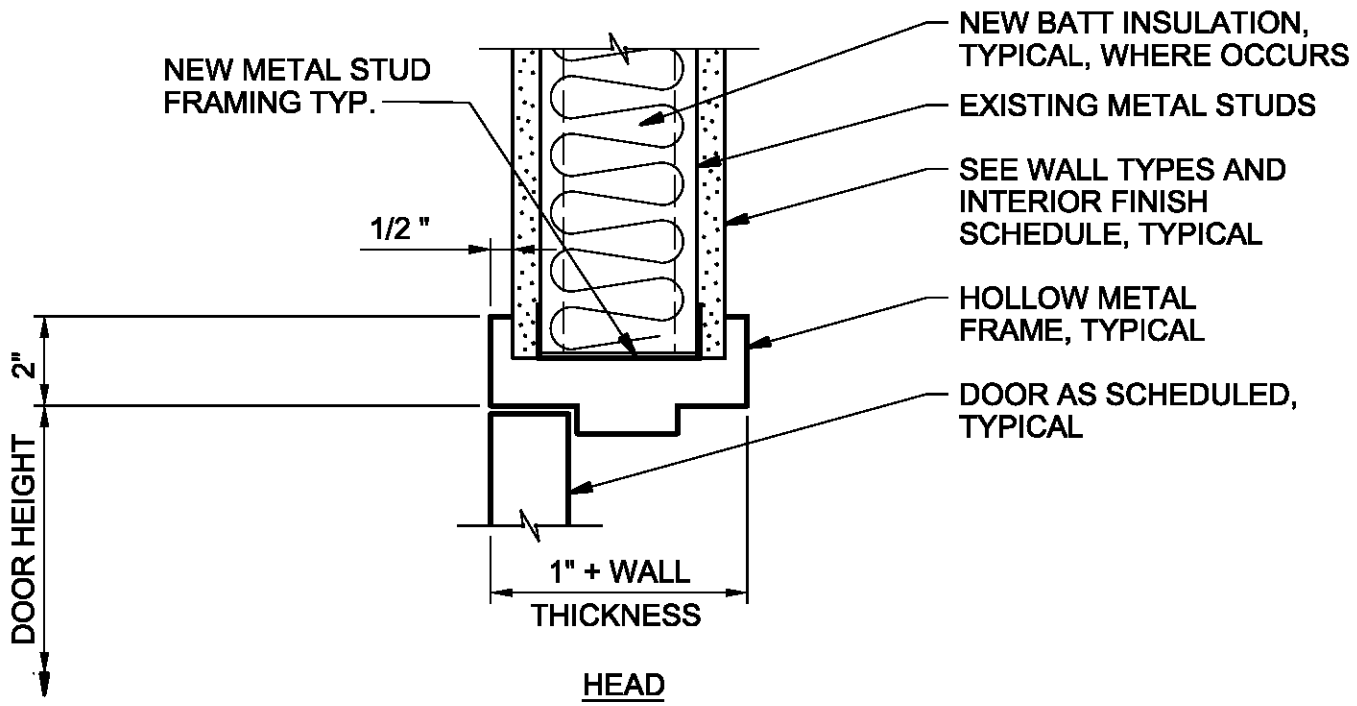

HEAD

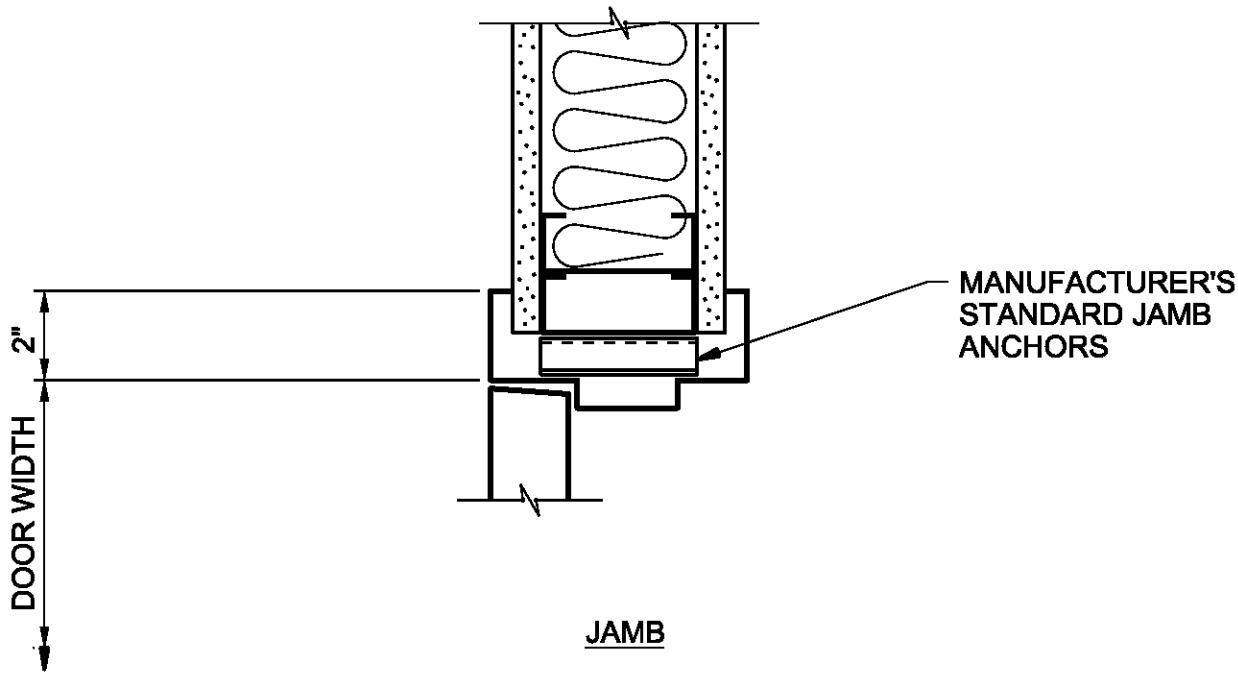

JAMB

DOOR HEAD AND JAMB

NTS

WYCKOFF GROUNDWATER TREATMENT PLANT

BAINBRIDGE ISLAND, WA

8137

CH2MHILL

I08503.DGN 25-JAN-2005

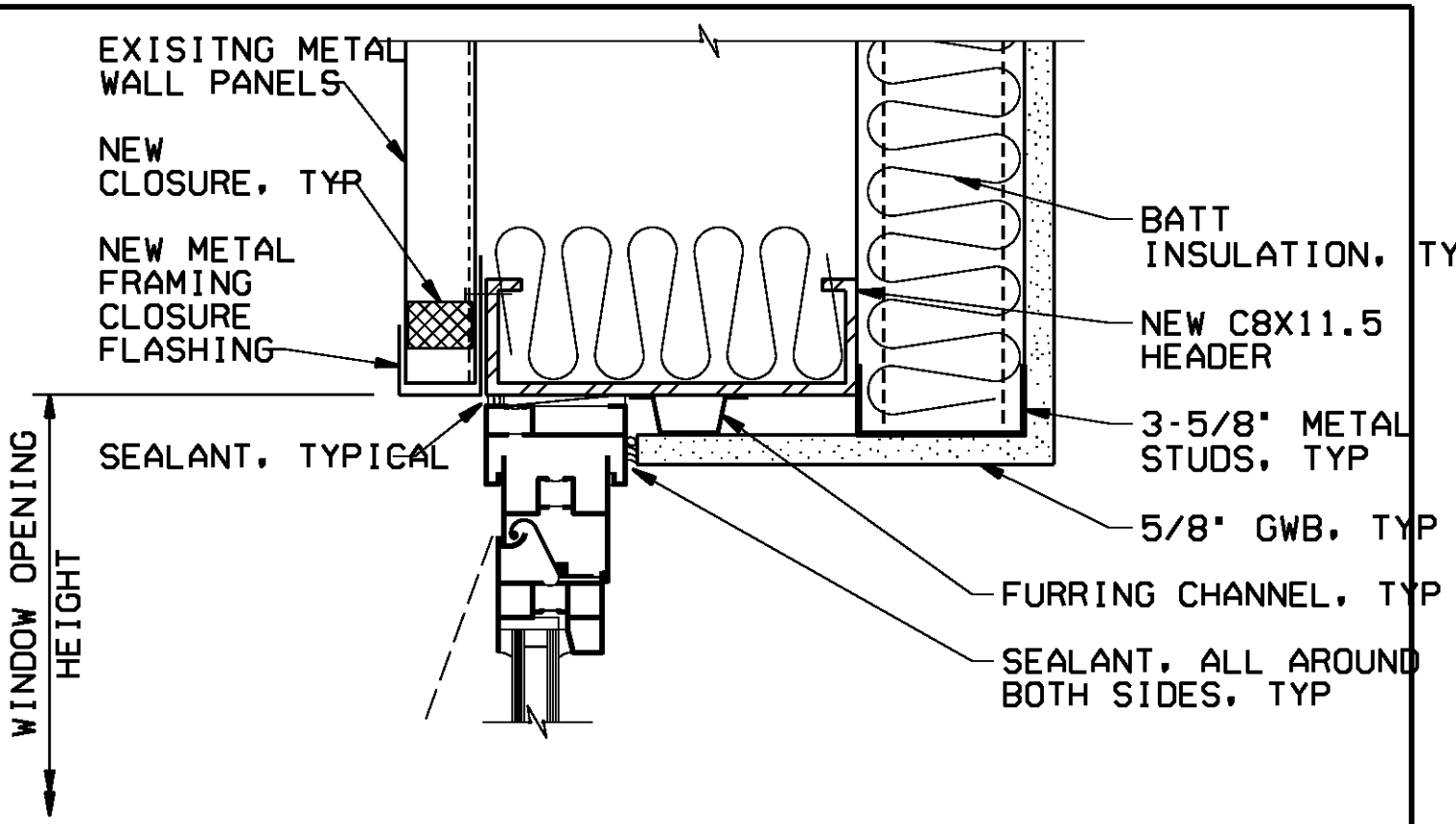

HEAD

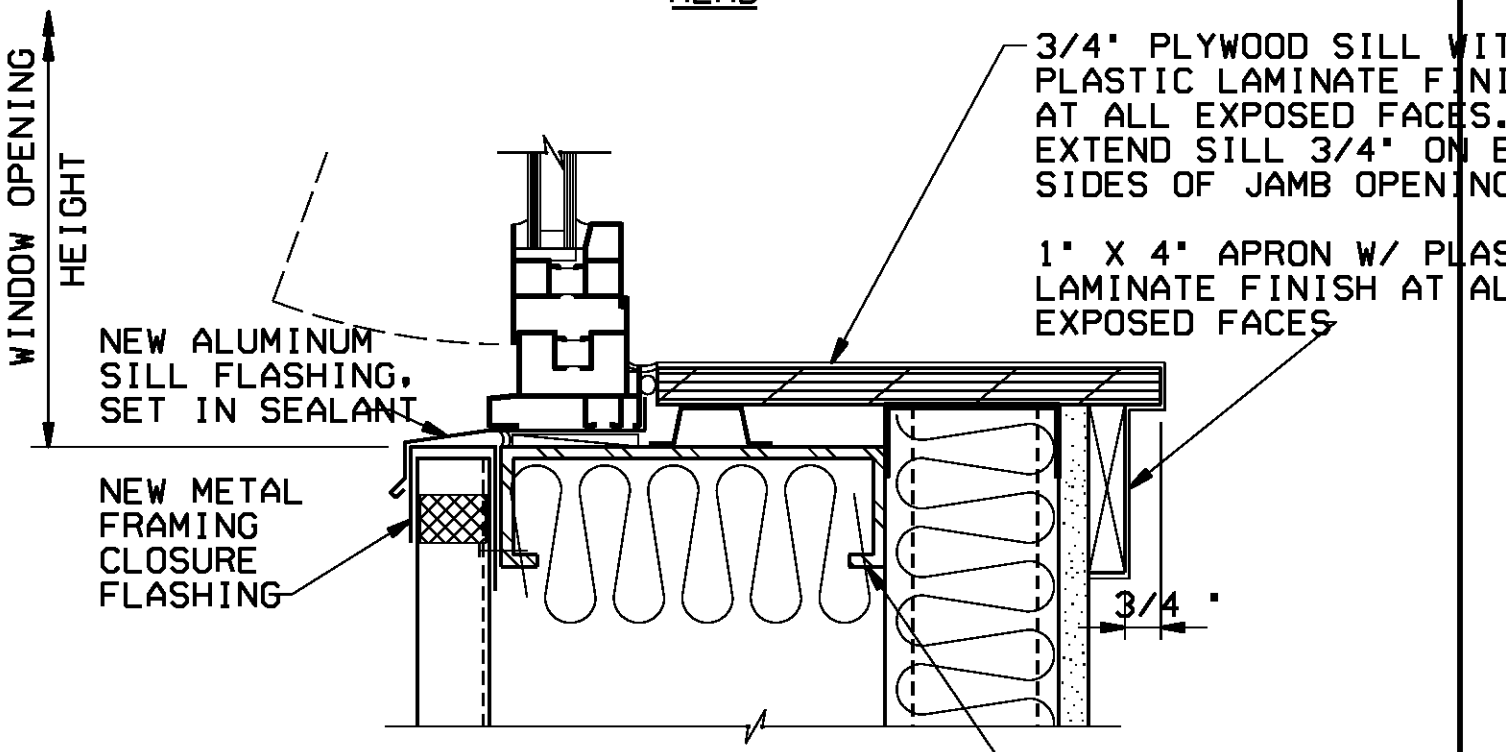

SILL

WINDOW HEAD AND SILL

NTS

WYCKOFF GROUNDWATER TREATMENT PLANT

BAINBRIDGE ISLAND, WA

8503

CH2MHILL

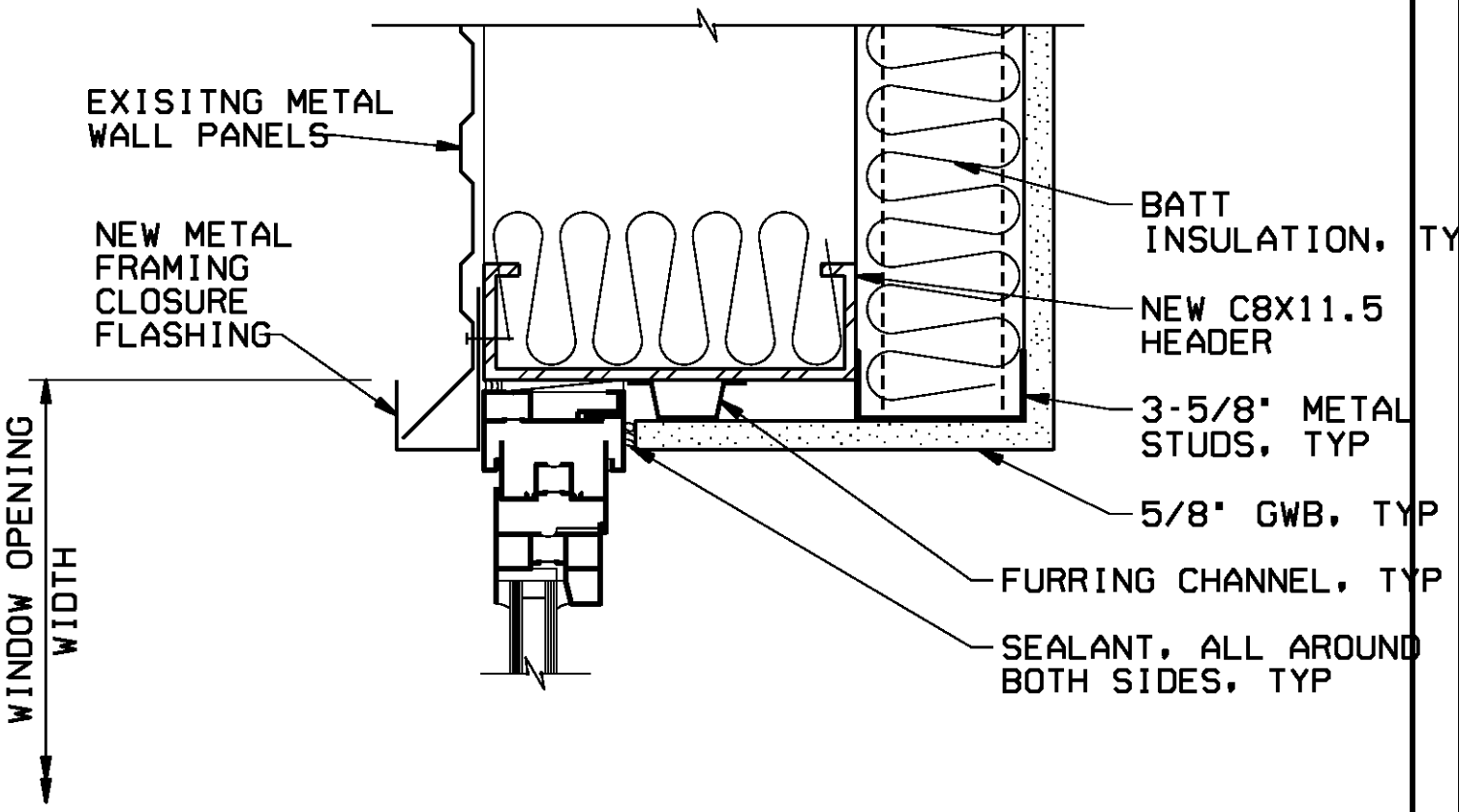

WINDOW JAMB

NTS

WYCKOFF GROUNDWATER
TREATMENT PLANT

BAINBRIDGE ISLAND, WA

8504

CH2MHILL

FOR PROJECT DESIGN DETAILS
TURN OFF LV=SHBD,SHBD-DTL, SHBD-TITL AND SHBD-OTLN IN THE ACTIVE FILE WHEN PLOTTING

$FILENAME $PLOTDATE

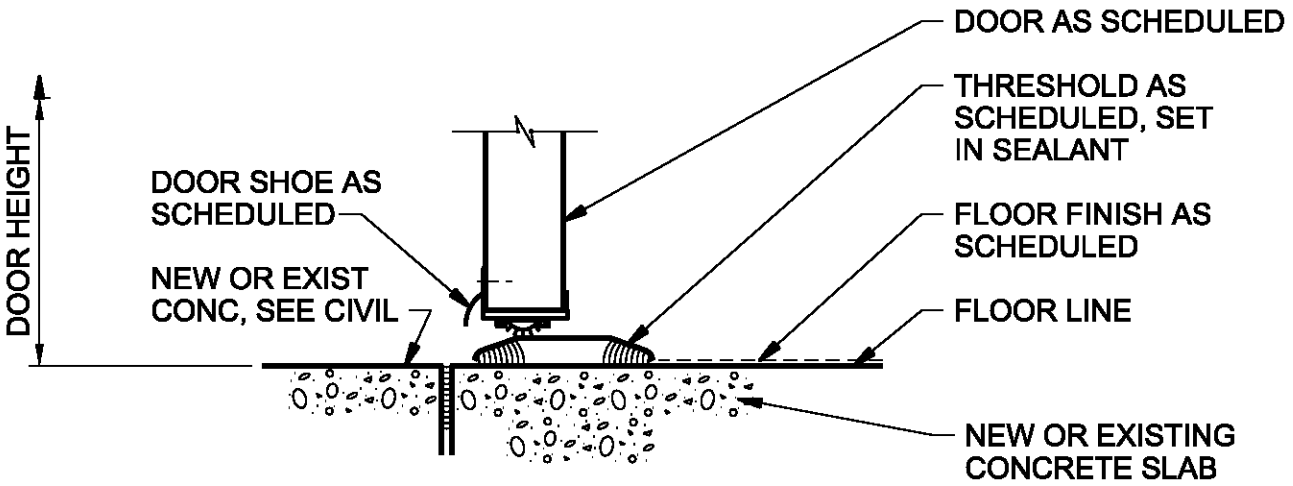

DOOR SILL

NTS

WYCKOFF GROUNDWATER TREATMENT PLANT

BAINBRIDGE ISLAND, WA

8701

CH2MHILL

FOR PROJECT DESIGN DETAILS
TURN OFF LV=SHBD,SHBD-DTL, SHBD-TITL AND SHBD-OTLN IN THE ACTIVE FILE WHEN PLOTTING

$FILENAME $PLOTDATE

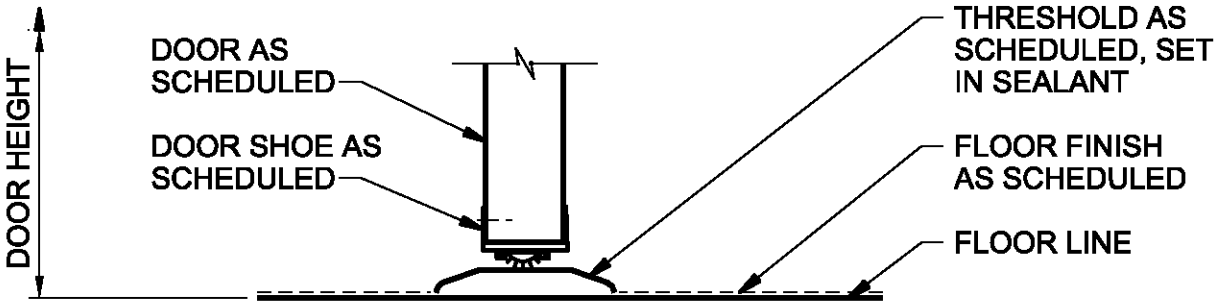

DOOR SILL

NTS

WYCKOFF GROUNDWATER TREATMENT PLANT

BAINBRIDGE ISLAND, WA

8702

CH2MHILL

FOR PROJECT DESIGN DETAILS
TURN OFF LV=SHBD,SHBD-DTL, SHBD-TITL AND SHBD-OTLN IN THE ACTIVE FILE WHEN PLOTTING

$FILENAME $PLOTDATE

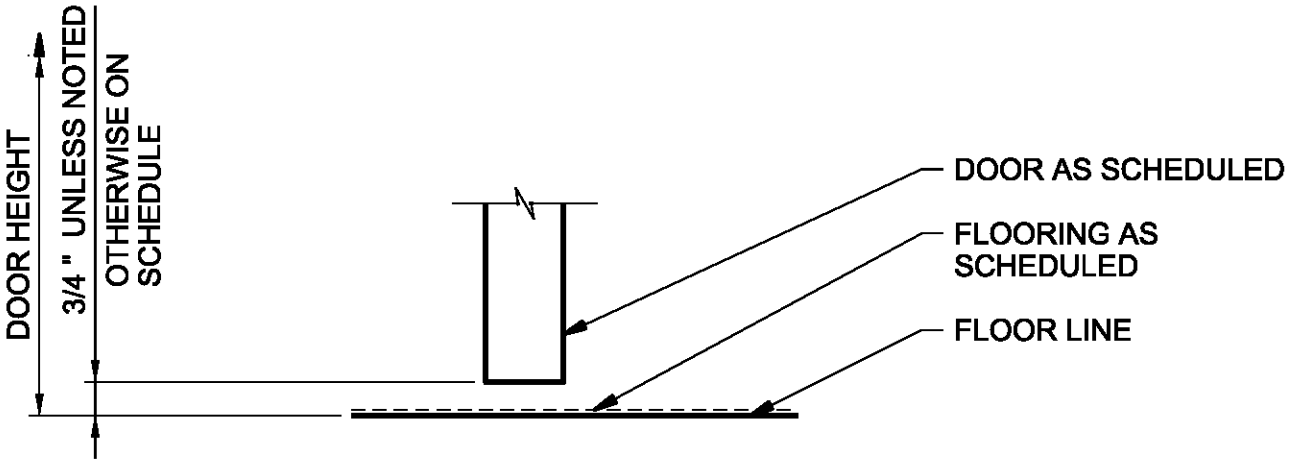

DOOR SILL

NTS

WYCKOFF GROUNDWATER TREATMENT PLANT

BAINBRIDGE ISLAND, WA

8703

CH2MHILL

FOR PROJECT DESIGN DETAILS
TURN OFF LV=SHBD,SHBD-DTL, SHBD-TITL AND SHBD-OTLN IN THE ACTIVE FILE WHEN PLOTTING

$FILENAME $PLOTDATE

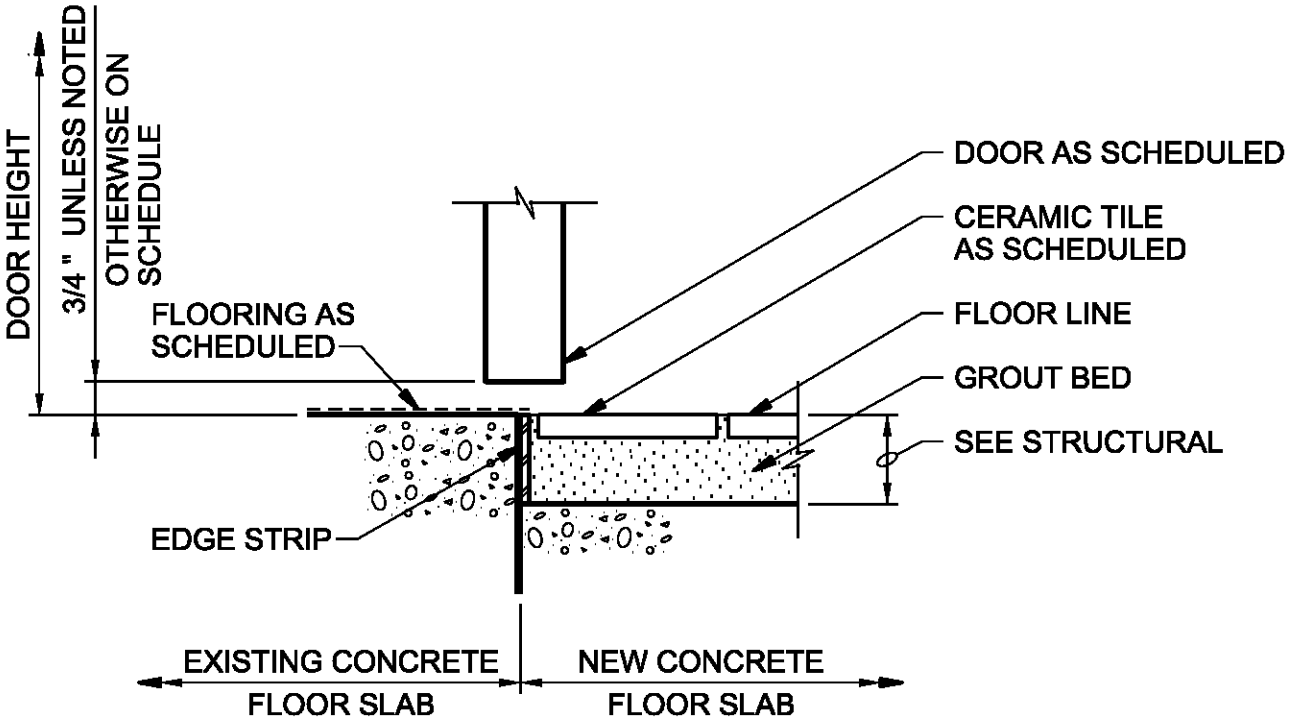

DOOR SILL

NTS

WYCKOFF GROUNDWATER
TREATMENT PLANT

BAINBRIDGE ISLAND, WA

8704

CH2MHILL

$FILENAME $PLOTTIME

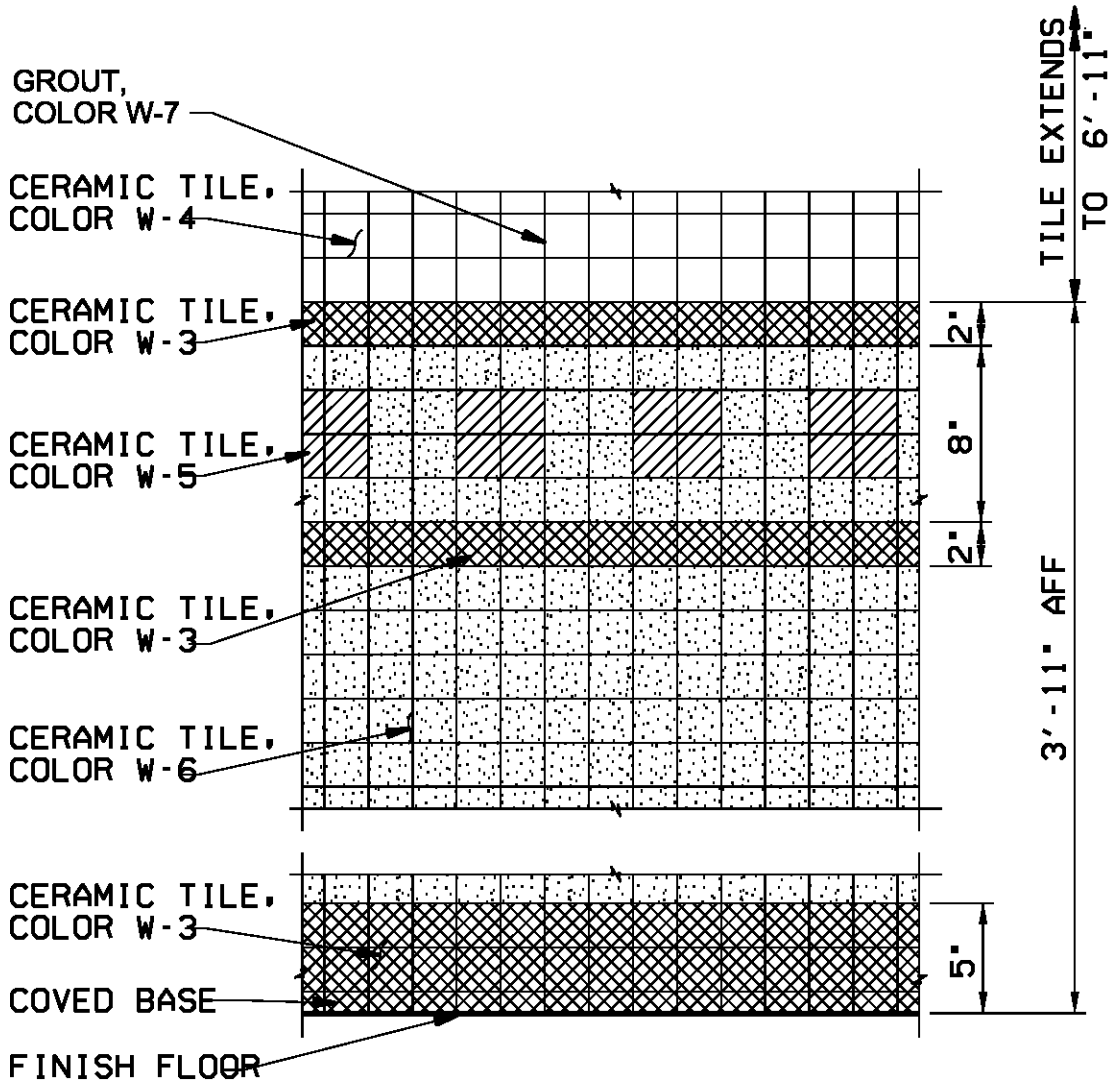

NOTES:

1. SEE COLOR LIST IN SPECIFICATION SECTION 09000 FOR LETTER-NUMBER DESIGNATIONS

2. PATTERN SHOWN SIMILAR TO DAL-TILE PATTERN NUMBER 3502

WALL TILE PATTERN DETAIL

NTS

WYCKOFF GROUNDWATER TREATMENT PLANT

BAINBRIDGE ISLAND, WA

9301

CH2MHILL

FOR PROJECT DESIGN DETAILS
TURN OFF LV=SHBD,SHBD-DTL AND SHBD-OTLN IN THE ACTIVE FILE WHEN PLOTTING

$FILENAME $PLOTTIME

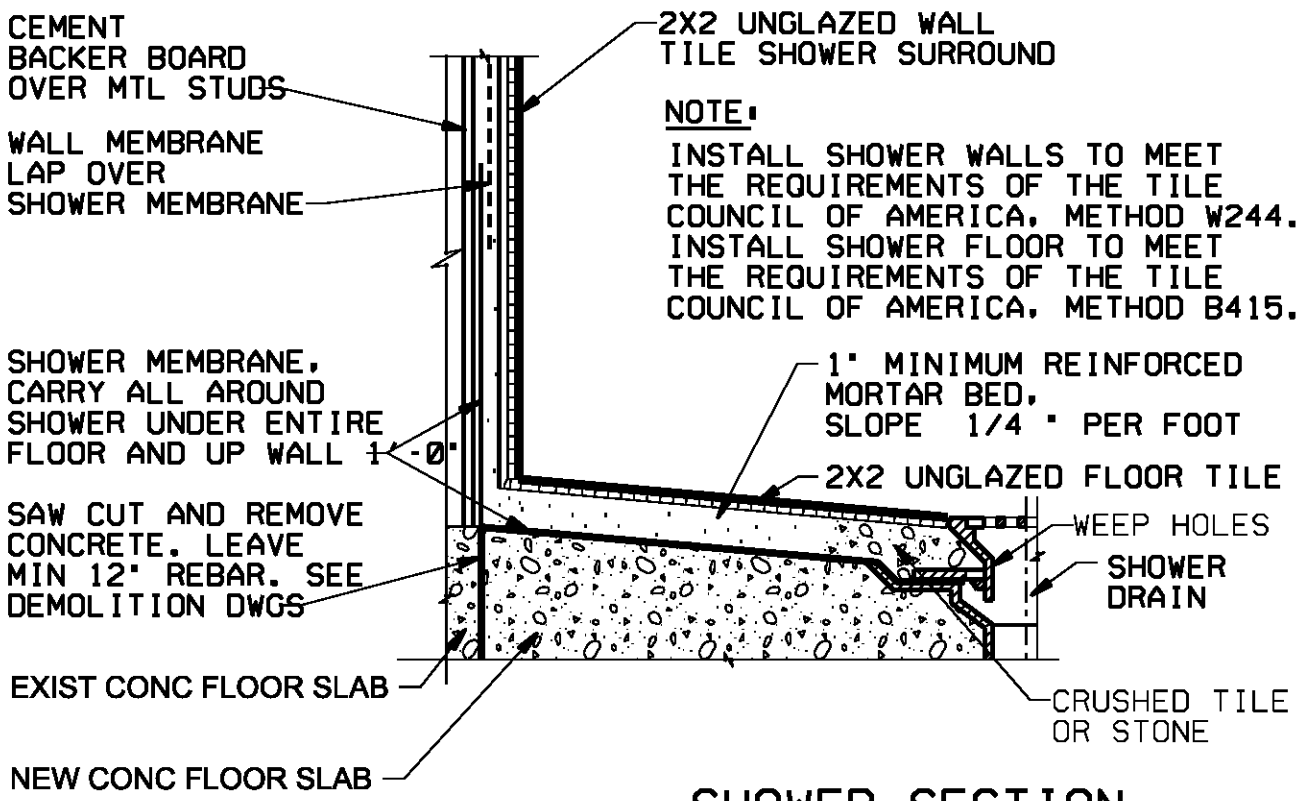

NOTE:
INSTALL SHOWER WALLS TO MEET THE REQUIREMENTS OF THE TILE COUNCIL OF AMERICA, METHOD W244. INSTALL SHOWER FLOOR TO MEET THE REQUIREMENTS OF THE TILE COUNCIL OF AMERICA, METHOD B415.

SHOWER SECTION

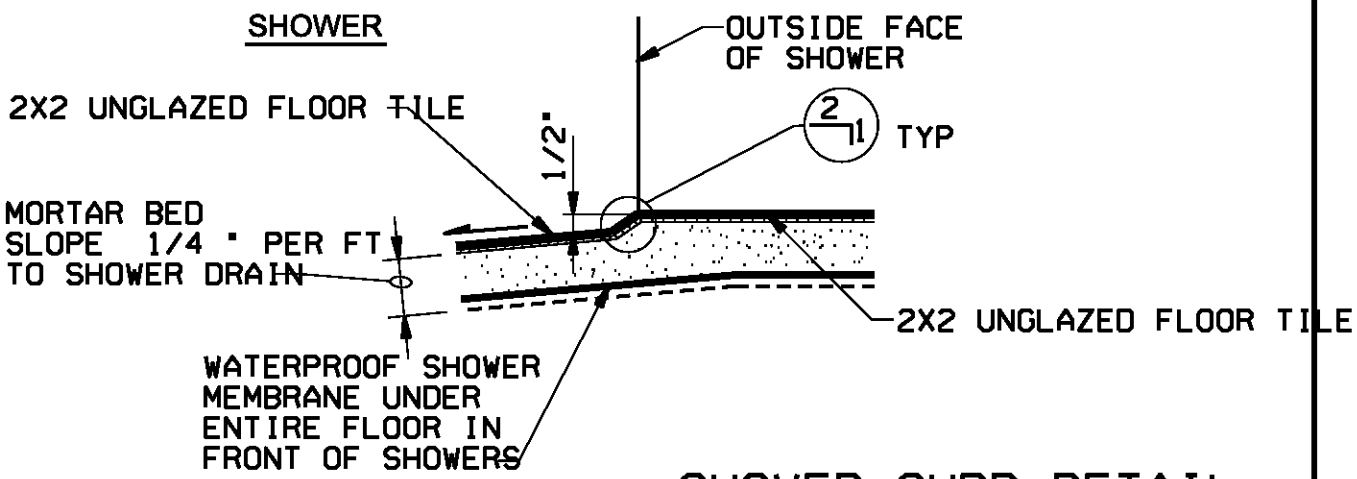

SHOWER CURB DETAIL

SHOWER STALL

WYCKOFF GROUNDWATER TREATMENT PLANT
BAINBRIDGE ISLAND, WA

9305

CH2MHILL

FOR PROJECT DESIGN DETAILS
TURN OFF LV=SHBD,SHBD-DTL AND SHBD-OTLN IN THE ACTIVE FILE WHEN PLOTTING

$FILENAME $PLOTTIME

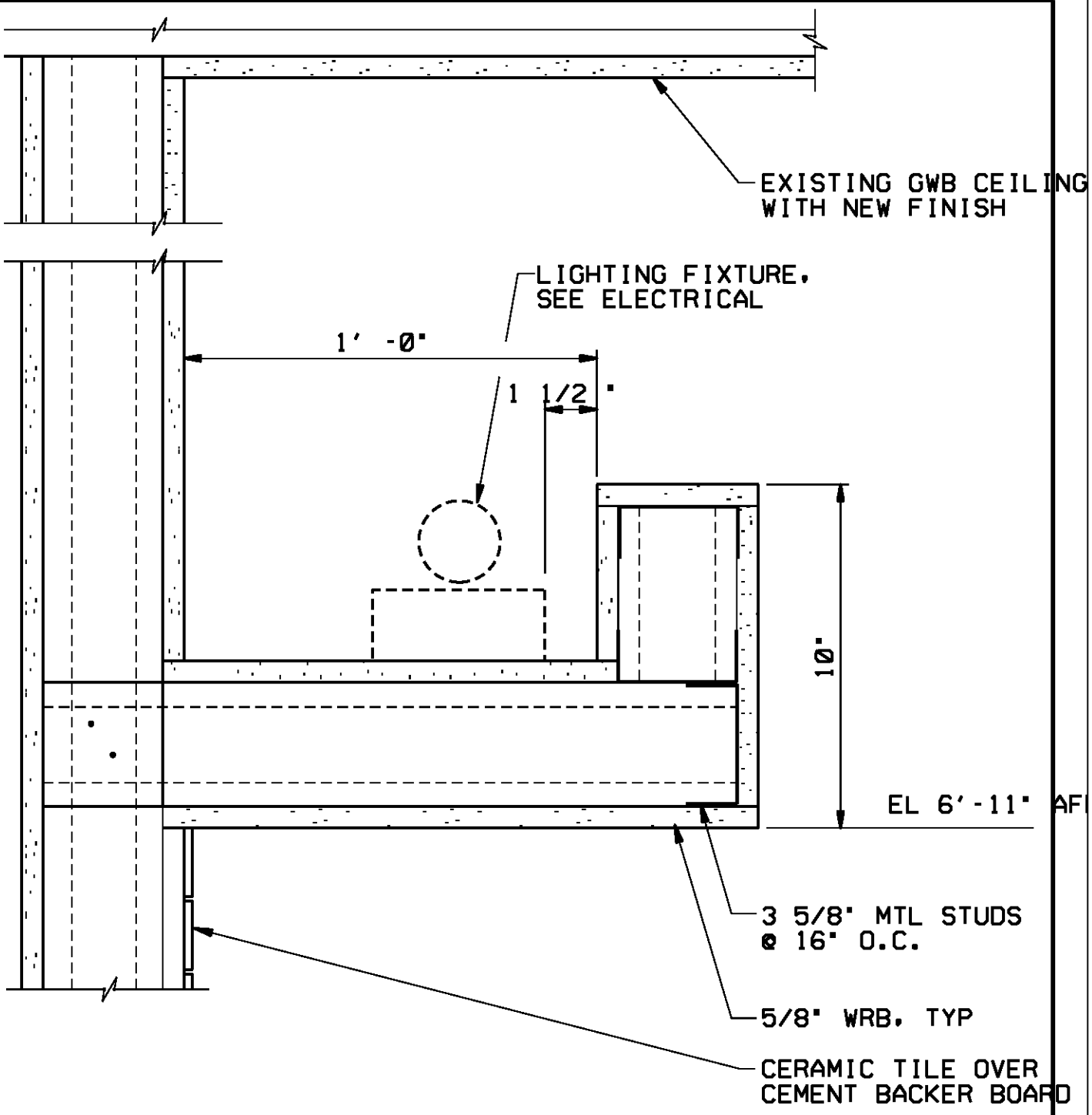

VALENCE LIGHTING DETAIL

NTS

WYCKOFF GROUNDWATER
TREATMENT PLANT

BAINBRIDGE ISLAND, WA

9503

CH2MHILL

I10208.DGN 10-MAR-2005

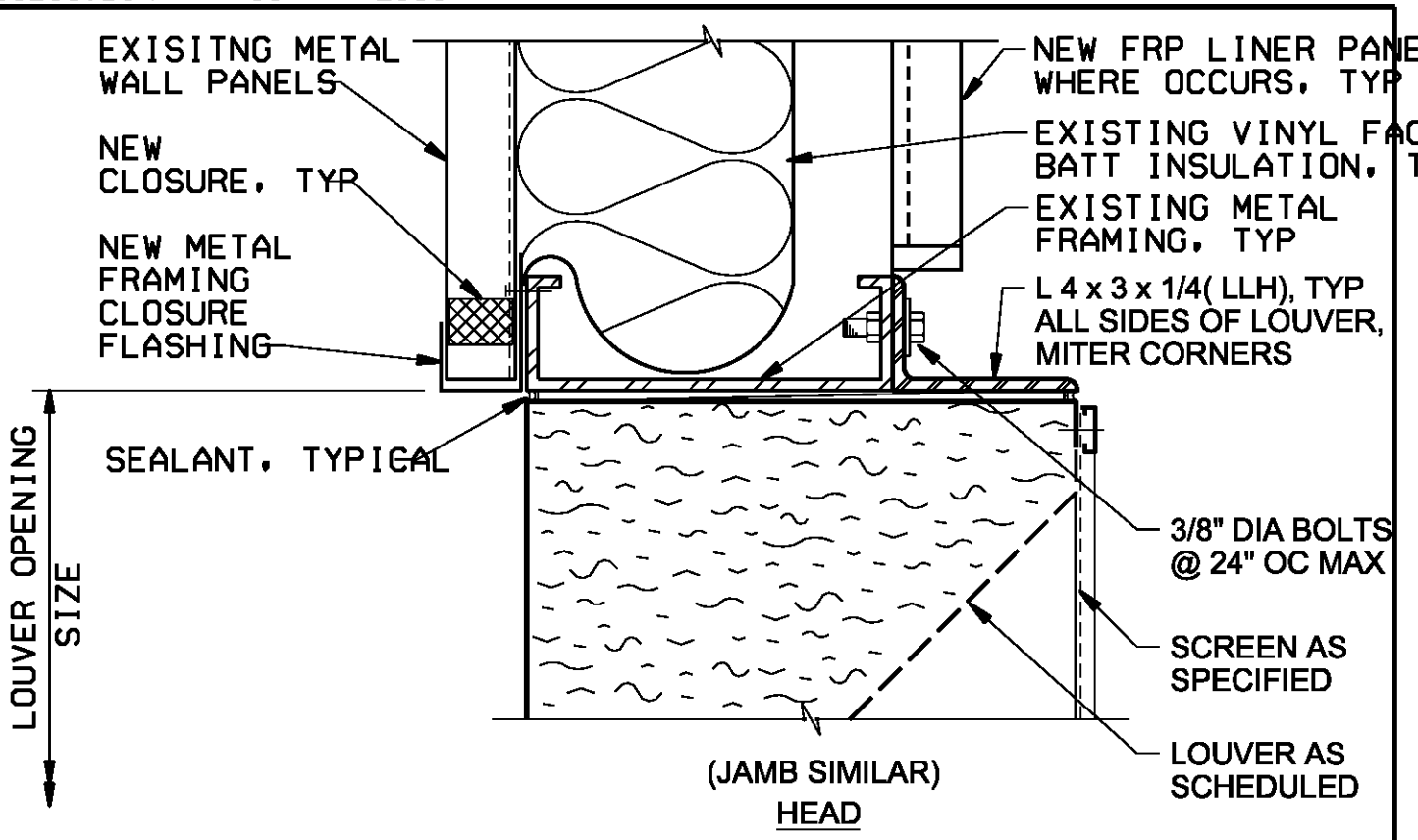

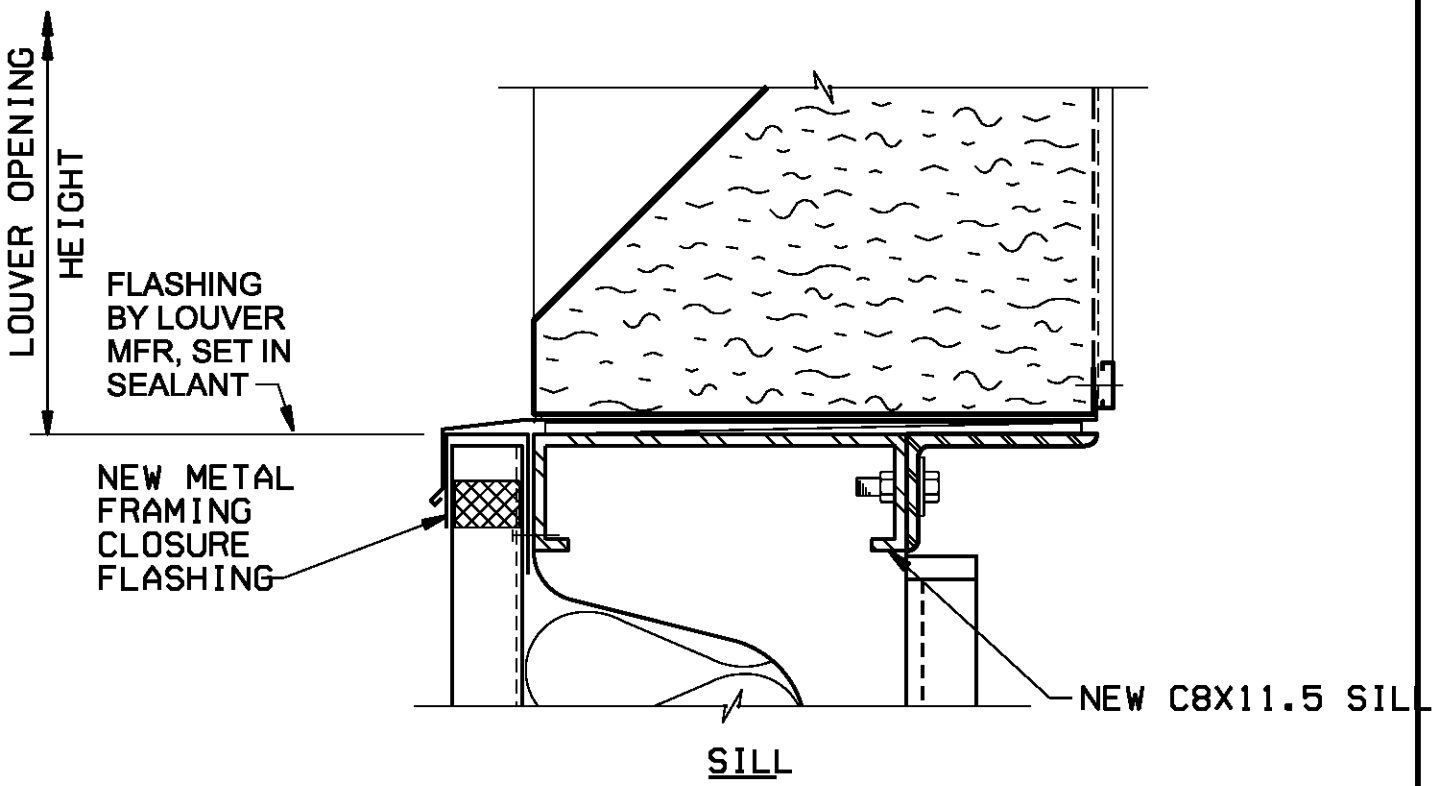

LOUVER HEAD AND SILL

NTS

WYCKOFF GROUNDWATER TREATMENT PLANT

BAINBRIDGE ISLAND, WA

10207

CH2MHILL

I10208.DGN 31-JAN-2005

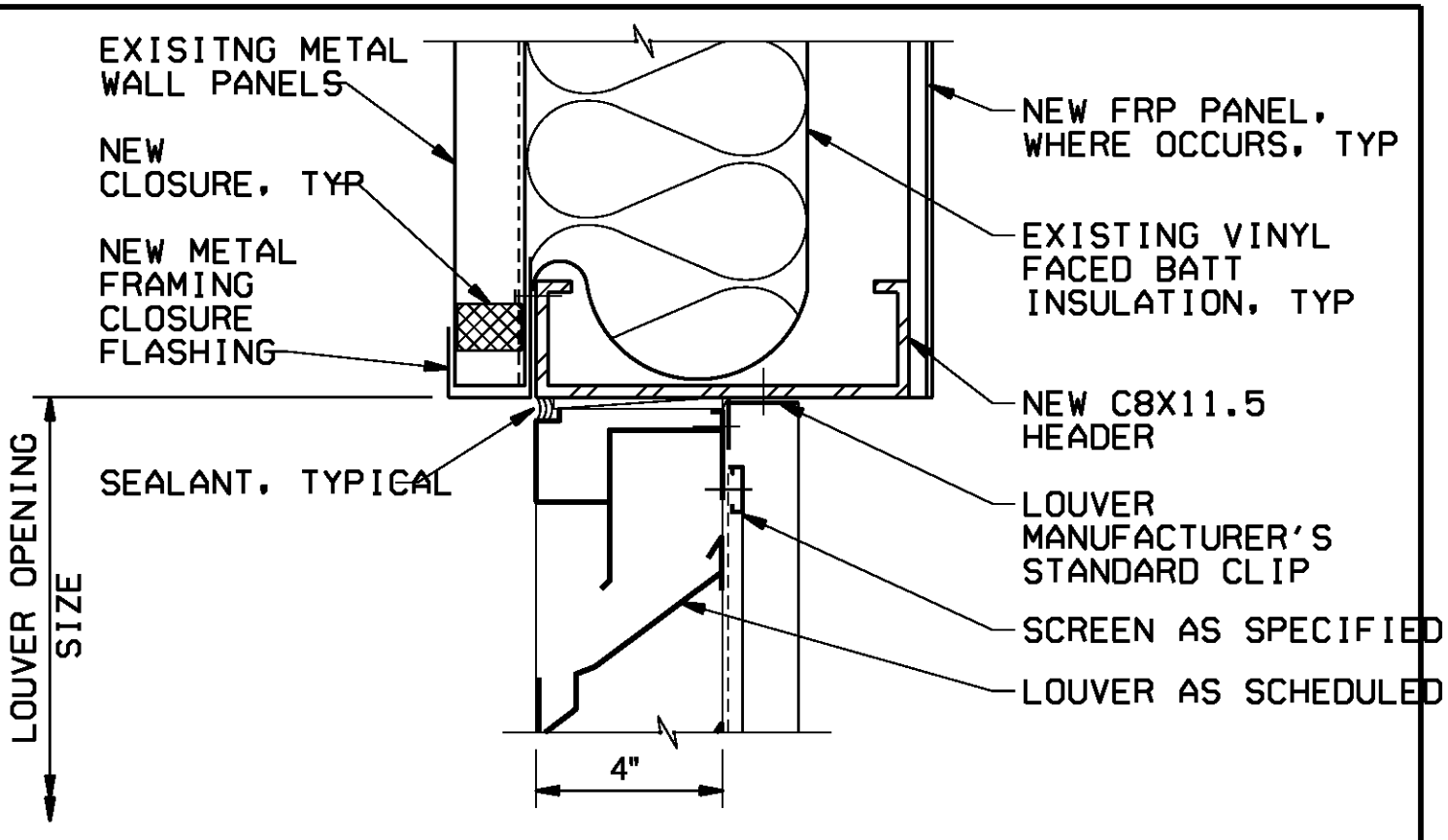

HEAD
(JAMB SIMILAR TO 8110)

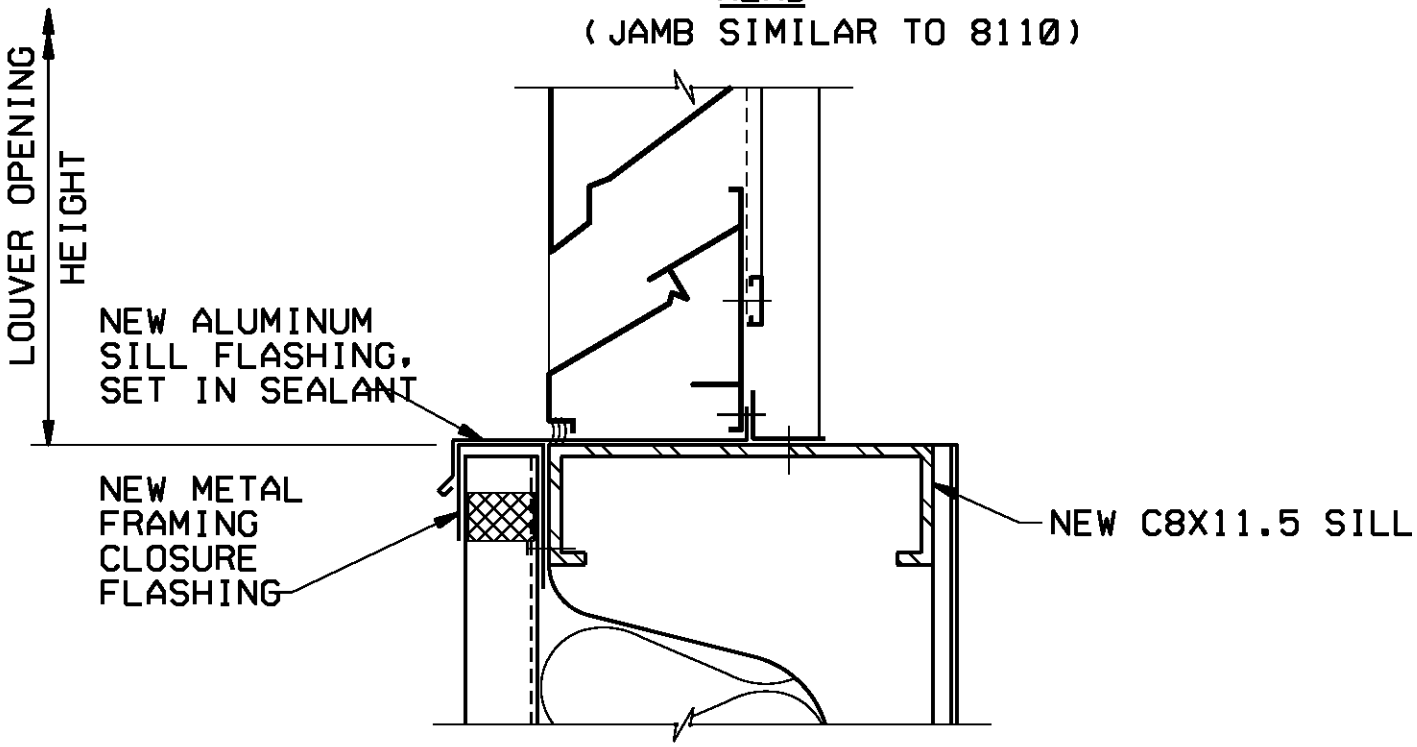

SILL

LOUVER HEAD AND SILL

NTS

WYCKOFF GROUNDWATER TREATMENT PLANT

BAINBRIDGE ISLAND, WA

10208

CH2MHILL

I10209.DGN 10-MAR-2005

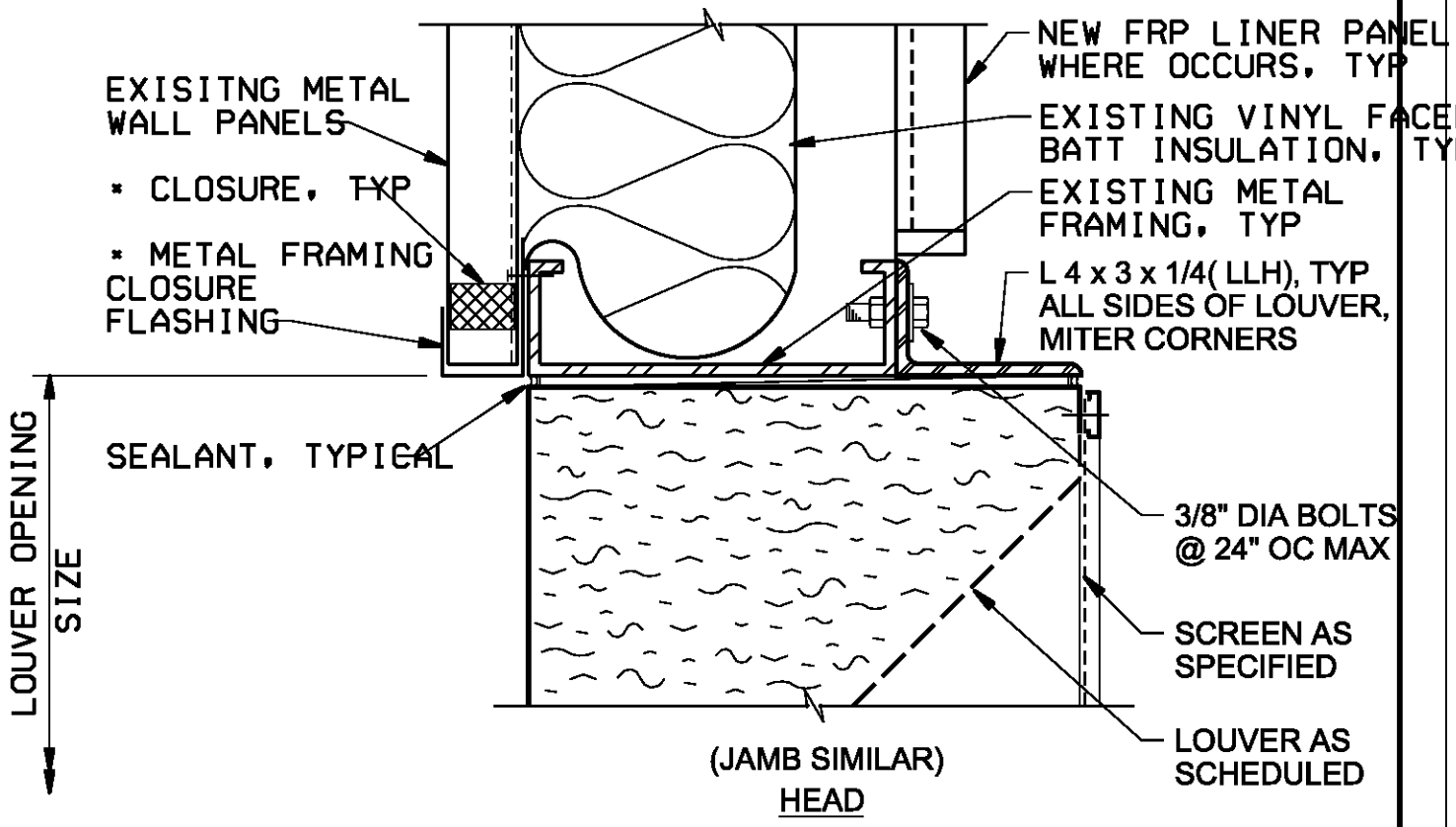

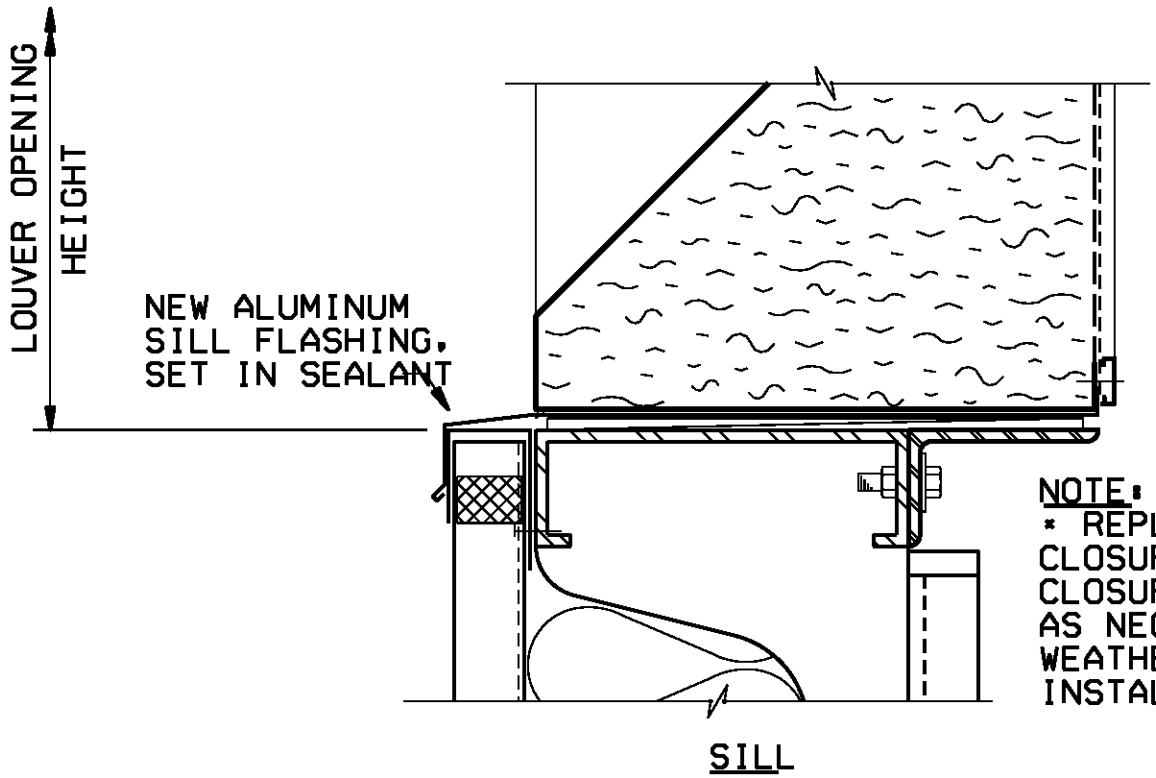

NOTE:
* REPLACE EXISTING CLOSURE AND FRAMING CLOSURE FLASHING AS NECESSARY FOR WEATHER TIGHT INSTALLATION.

LOUVER HEAD AND SILL

NTS

WYCKOFF GROUNDWATER TREATMENT PLANT

BAINBRIDGE ISLAND, WA

10209

CH2MHILL

I10210.DGN 20-JAN-2005

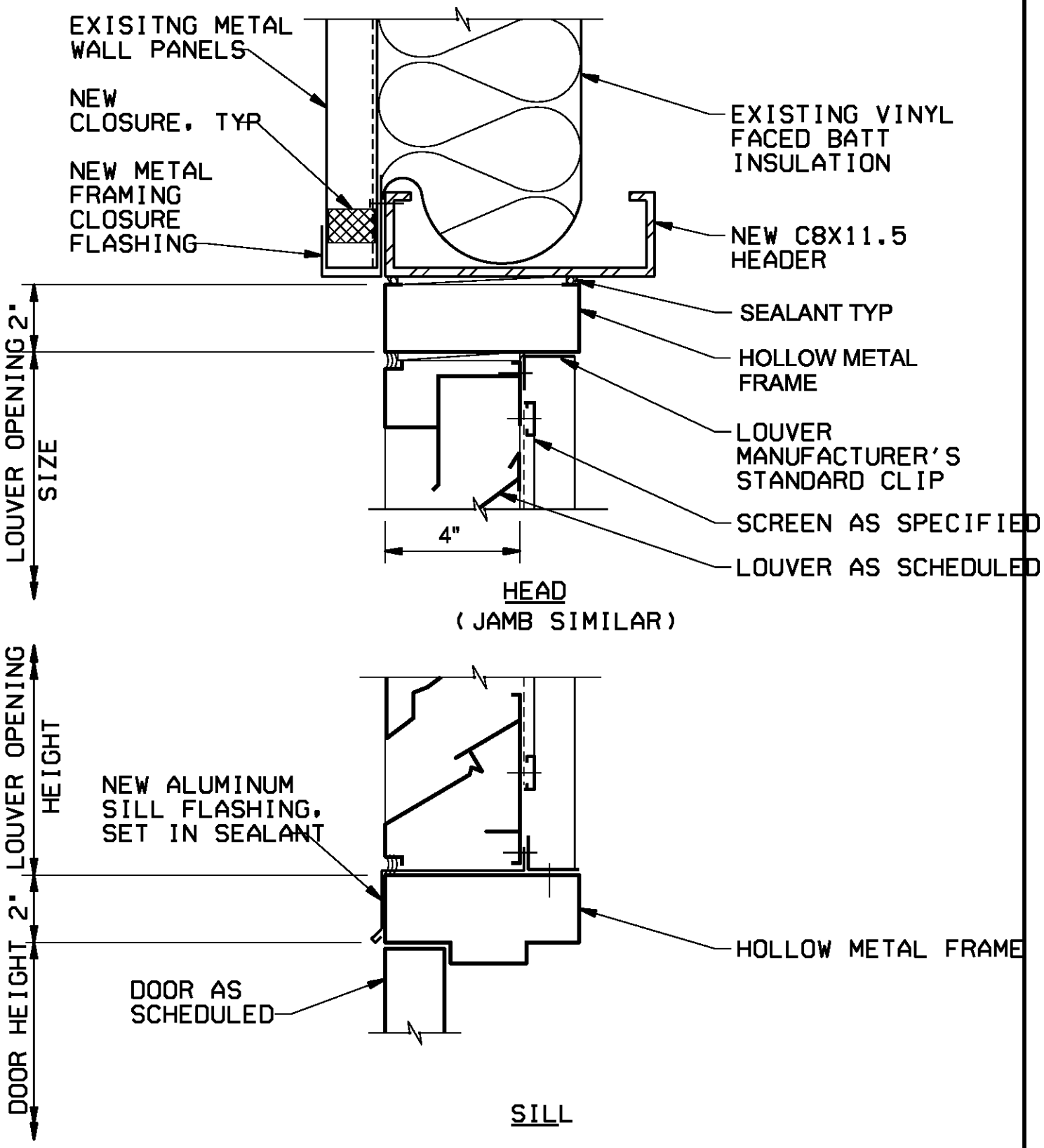

LOUVER HEAD AND SILL

NTS

WYCKOFF GROUNDWATER TREATMENT PLANT

BAINBRIDGE ISLAND, WA

10210

CH2MHILL

FOR PROJECT DESIGN DETAILS
TURN OFF LV=SHBD,SHBD-DTL, SHBD-TITL AND SHBD-OTLN IN THE ACTIVE FILE WHEN PLOTTING

$FILENAME $PLOTDATE

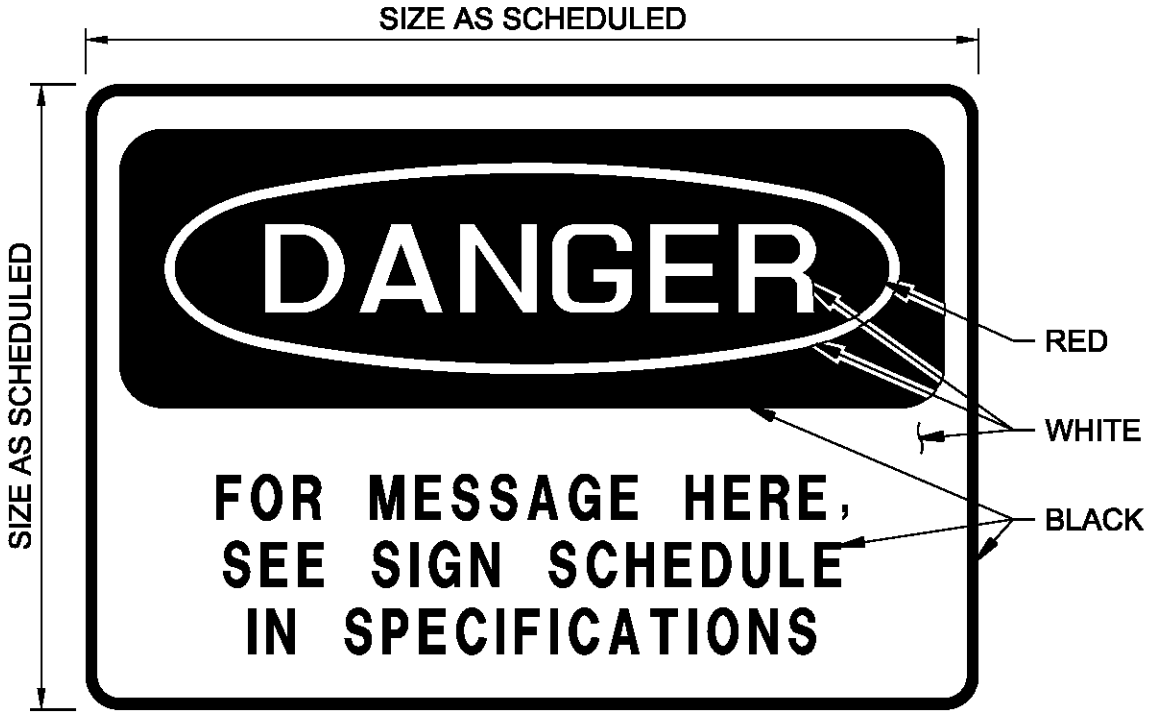

DANGER SIGN
NTS

WYCKOFF GROUNDWATER
TREATMENT PLANT
BAINBRIDGE ISLAND, WA

10401

CH2MHILL

FOR PROJECT DESIGN DETAILS
TURN OFF LV=SHBD,SHBD-DTL, SHBD-TITL AND SHBD-OTLN IN THE ACTIVE FILE WHEN PLOTTING

$FILENAME $PLOTDATE

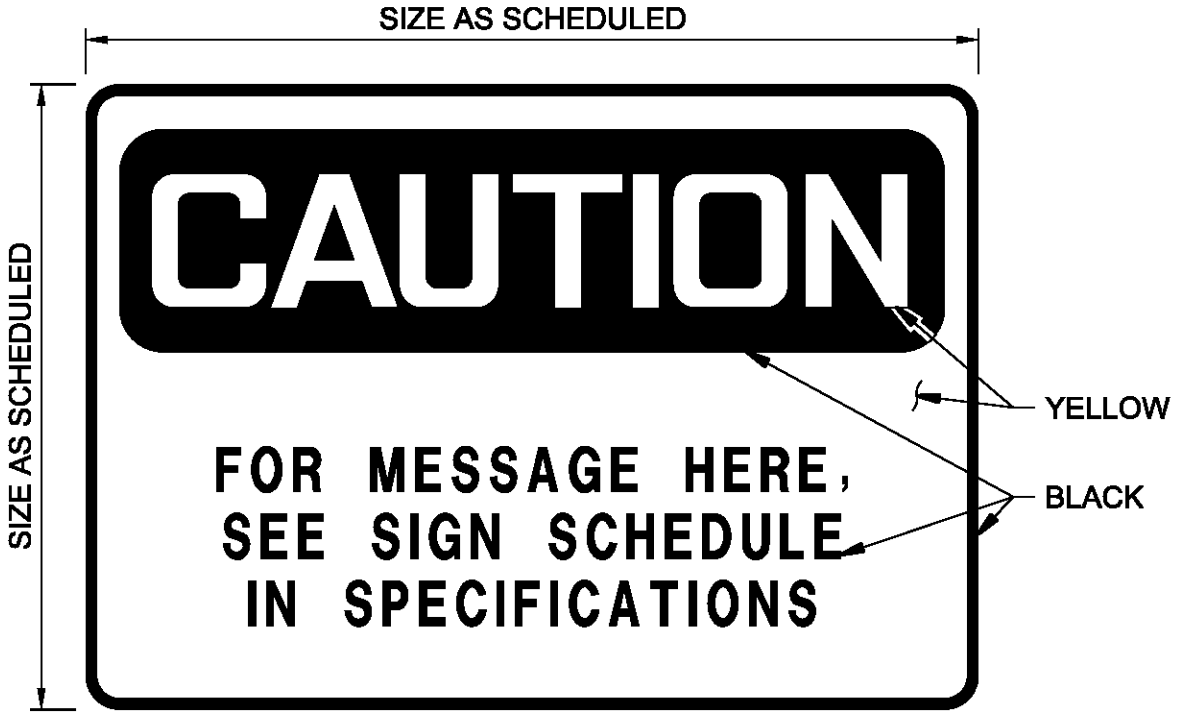

CAUTION SIGN
NTS

WYCKOFF GROUNDWATER
TREATMENT PLANT
BAINBRIDGE ISLAND, WA

10402

CH2MHILL

FOR PROJECT DESIGN DETAILS
TURN OFF LV=SHBD,SHBD-DTL, SHBD-TITL AND SHBD-OTLN IN THE ACTIVE FILE WHEN PLOTTING

$FILENAME $PLOTDATE

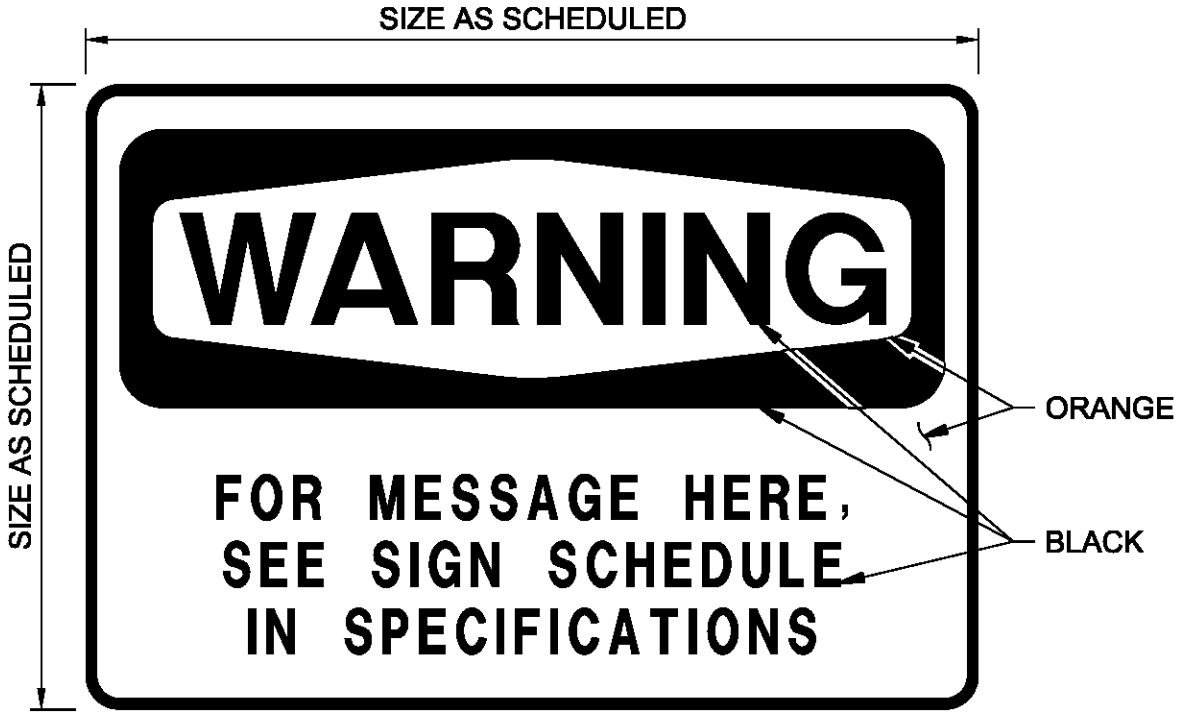

WARNING SIGN
NTS

WYCKOFF GROUNDWATER
TREATMENT PLANT
BAINBRIDGE ISLAND, WA

10403

CH2MHILL

FOR PROJECT DESIGN DETAILS
TURN OFF LV=SHBD,SHBD-DTL, SHBD-TITL AND SHBD-OTLN IN THE ACTIVE FILE WHEN PLOTTING

$FILENAME $PLOTDATE

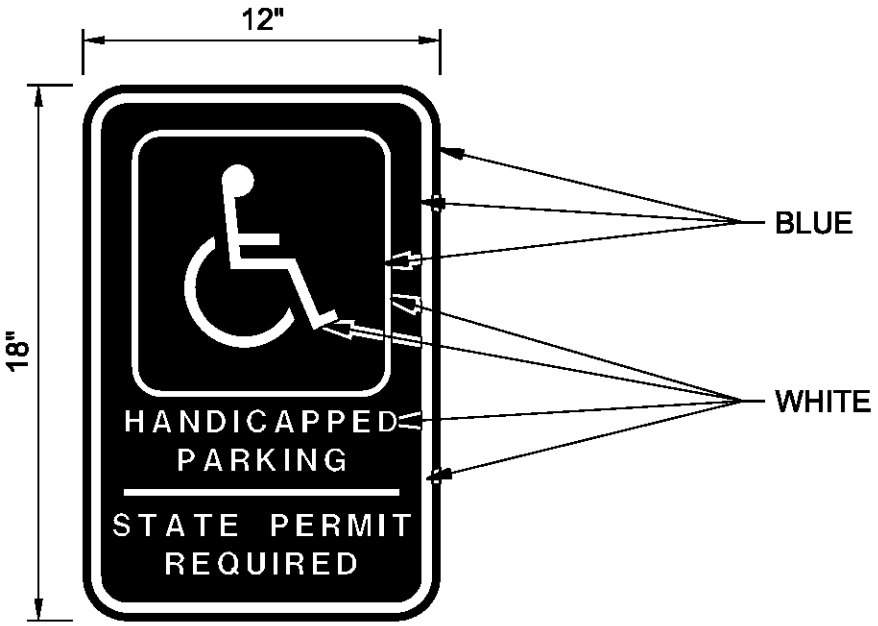

HANDICAPPED PARKING SIGN

NTS

WYCKOFF GROUNDWATER
TREATMENT PLANT

BAINBRIDGE ISLAND, WA

10404

CH2MHILL

FOR PROJECT DESIGN DETAILS
TURN OFF LV=SHBD,SHBD-DTL, SHBD-TITL AND SHBD-OTLN IN THE ACTIVE FILE WHEN PLOTTING

$FILENAME $PLOTDATE

HEALTH HAZARD -
BLUE BACKGROUND

4 DEADLY
3 EXTREME DANGER
2 HAZARDOUS
1 SLIGHTLY HAZARDOUS
0 NORMAL MATERIALS

FLAMMABILITY HAZARD -
RED BACKGROUND

FLASH POINTS
4 BELOW 73 F
3 BELOW 100 F
2 BELOW 200 F
1 ABOVE 200 F
0 WILL NOT BURN

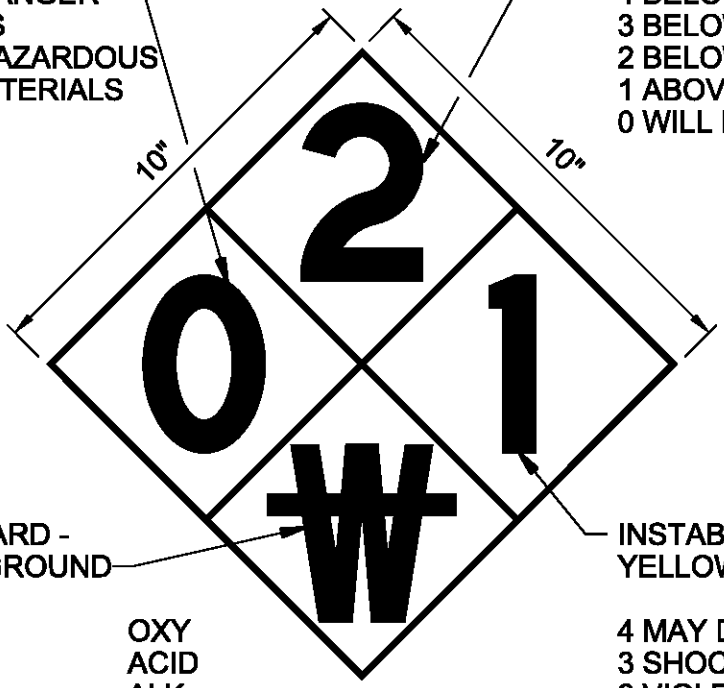

SPECIAL HAZARD -
WHITE BACKGROUND

OXIDIZER	OXY
ACID	ACID
ALKALI	ALK
CORROSIVE	COR
USE NO WATER	W
RADIATION HAZARD	☢

INSTABILITY HAZARD -
YELLOW BACKGROUND

4 MAY DETONATE
3 SHOCK & HEAT MAY DETONATE
2 VIOLENT CHEMICAL CHANGE
1 UNSTABLE IF HEATED
0 STABLE

NOTES:

1. LETTER HEIGHT: 4"
   LETTER COLOR: BLACK
2. NUMBERS AND LETTERS ON ABOVE SIGNAL DETAIL ARE EXAMPLES ONLY. SEE SPECIFICATION 10400 FOR REQUIREMENTS ON THIS PROJECT.

HAZARDOUS MATERIAL SIGNAL

NTS

WYCKOFF GROUNDWATER
TREATMENT PLANT

BAINBRIDGE ISLAND, WA

10406

CH2MHILL

FOR PROJECT DESIGN DETAILS
TURN OFF LV=SHBD,SHBD-DTL, SHBD-TITL AND SHBD-OTLN IN THE ACTIVE FILE WHEN PLOTTING

i10504.dgn 1.7.2010

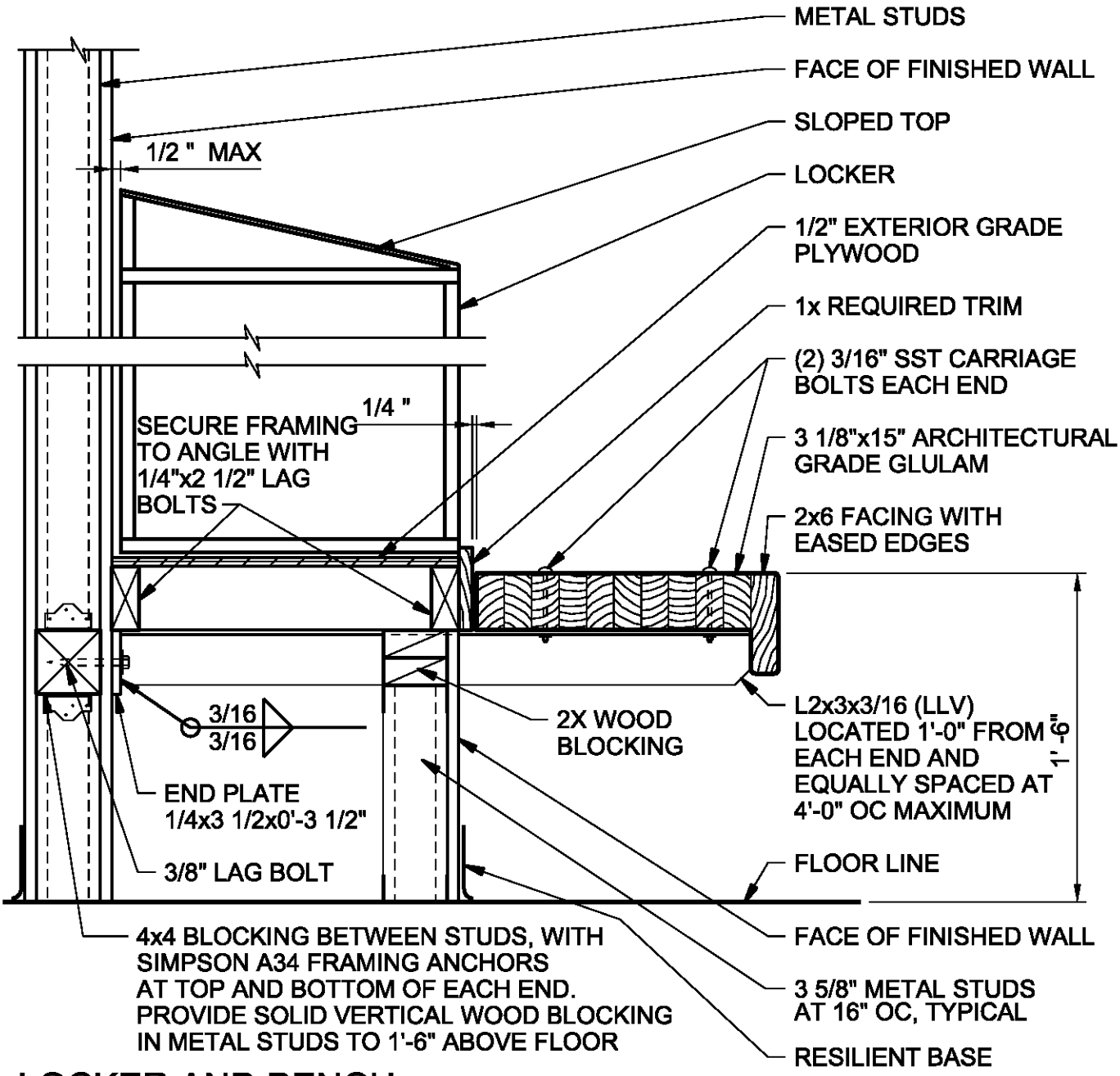

LOCKER AND BENCH

NTS

10504a

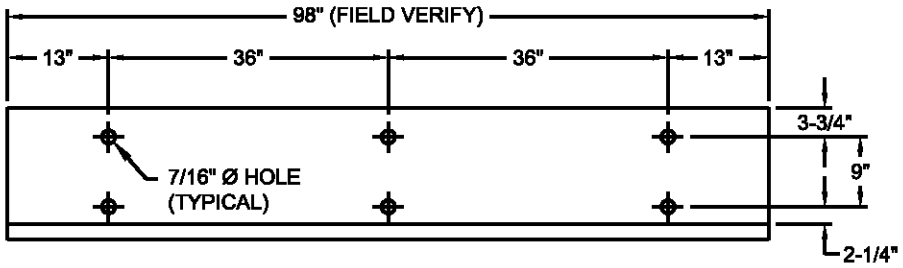

PLAN VIEW

NTS

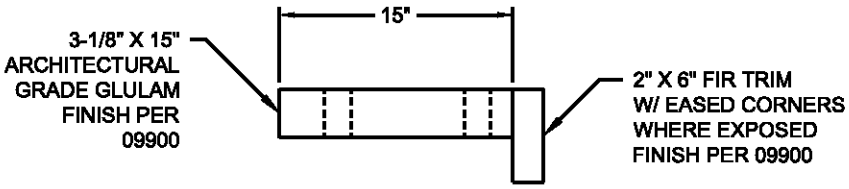

SECTION

NTS

GLULAM LOCKER BENCH

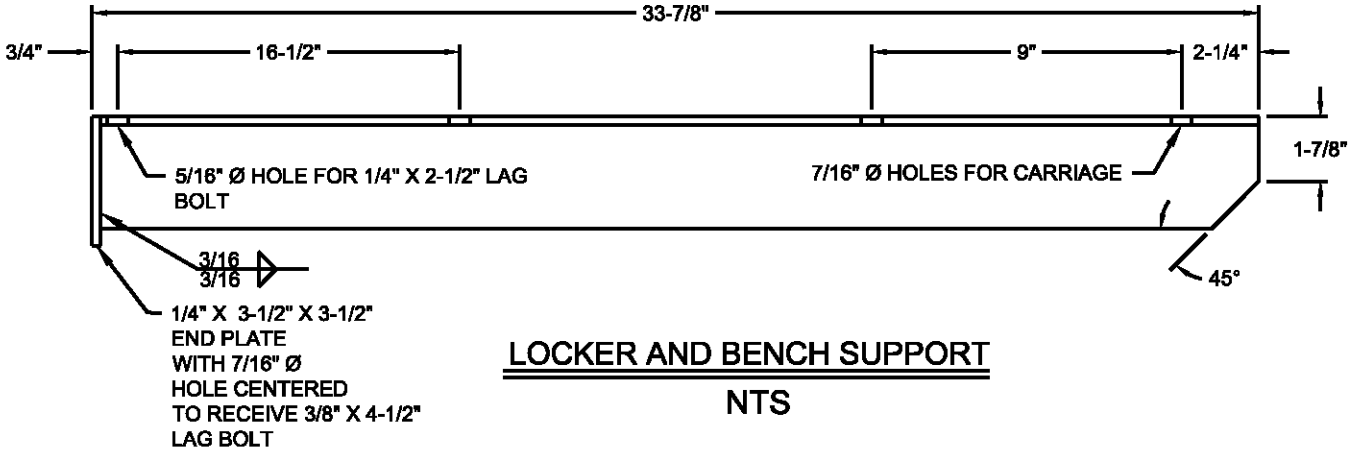

LOCKER AND BENCH SUPPORT

NTS

WYCKOFF GROUNDWATER
TREATMENT PLANT

BAINBRIDGE ISLAND, WA

i10504b.dgn

CH2MHILL

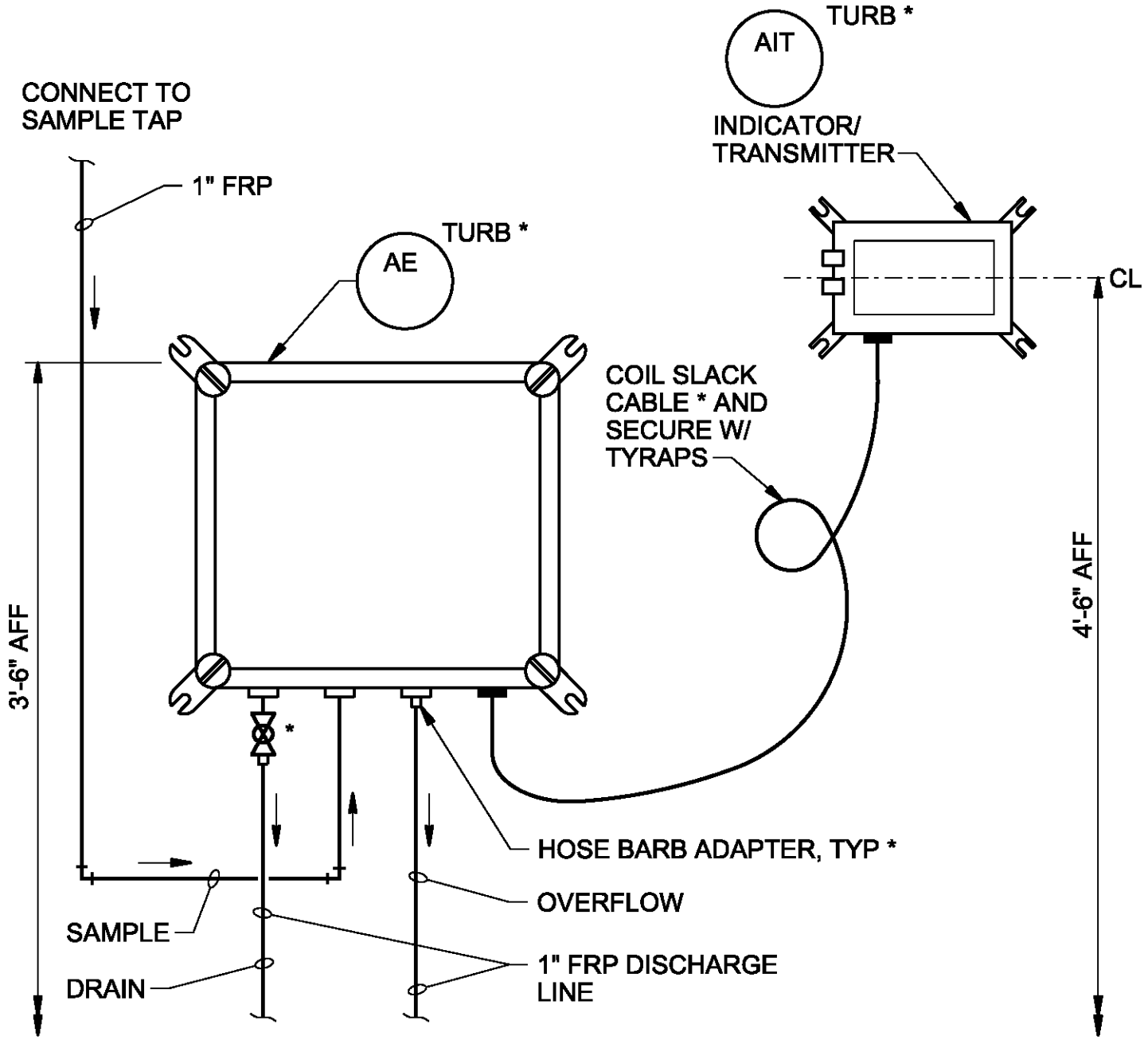

NOTES:

1. FOR INSTRUMENT MOUNTING DETAILS SEE 13700 .
2. COMPONENTS DESIGNATED BY * ARE SUPPLIED BY INSTRUMENT MANUFACTURER.

HIGH RANGE TURBIDIMETER INSTALLATION

WYCKOFF GROUNDWATER
TREATMENT PLANT
BAINBRIDGE ISLAND, WA

13143

CH2MHILL

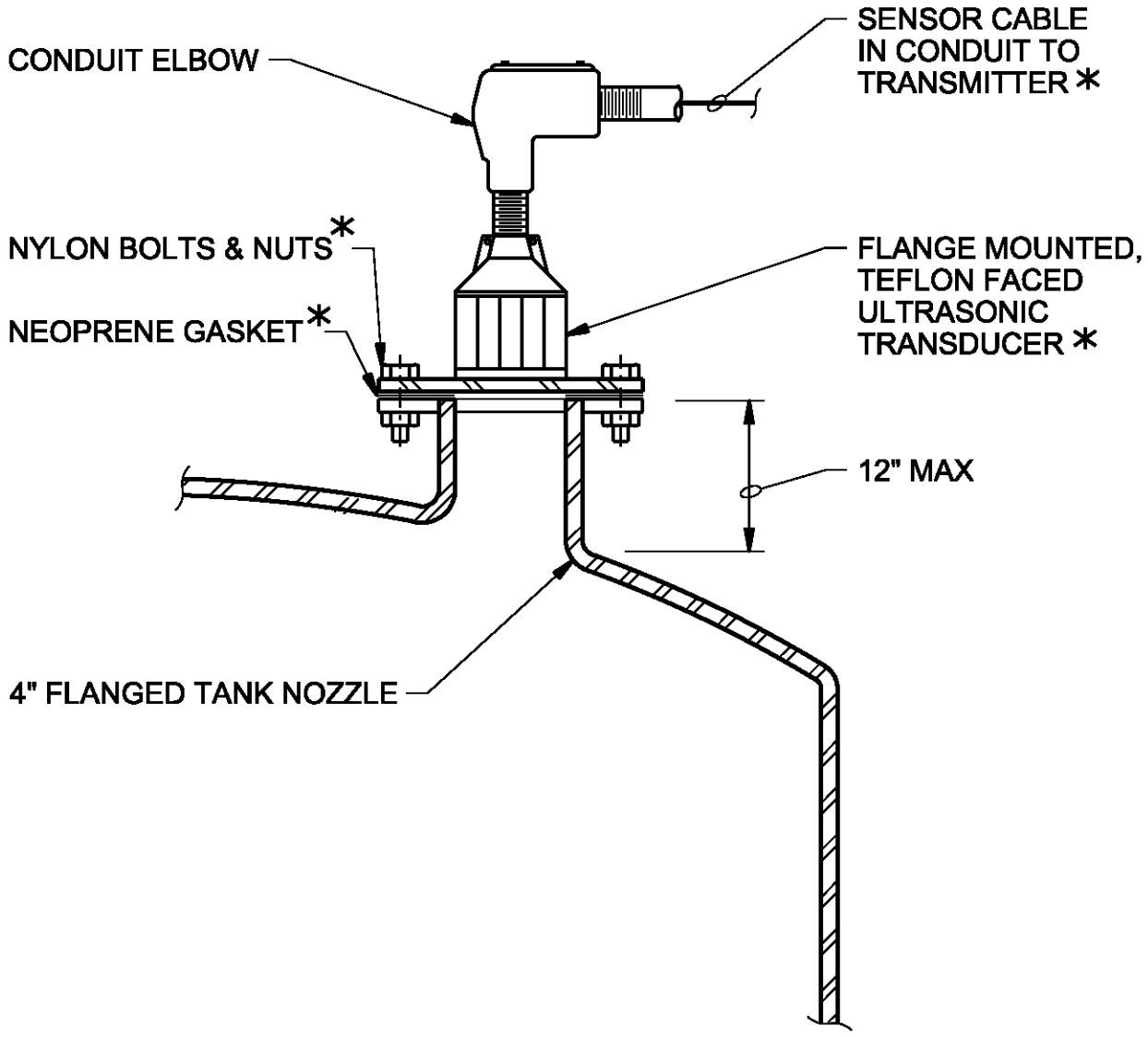

NOTES:

1. COMPONENTS DESIGNATED BY (*) ARE SUPPLIED BY INSTRUMENT MANUFACTURER.

ULTRASONIC LEVEL ELEMENT INSTALLATION - TANK

WYCKOFF GROUNDWATER TREATMENT PLANT

BAINBRIDGE ISLAND, WA

13252

CH2MHILL

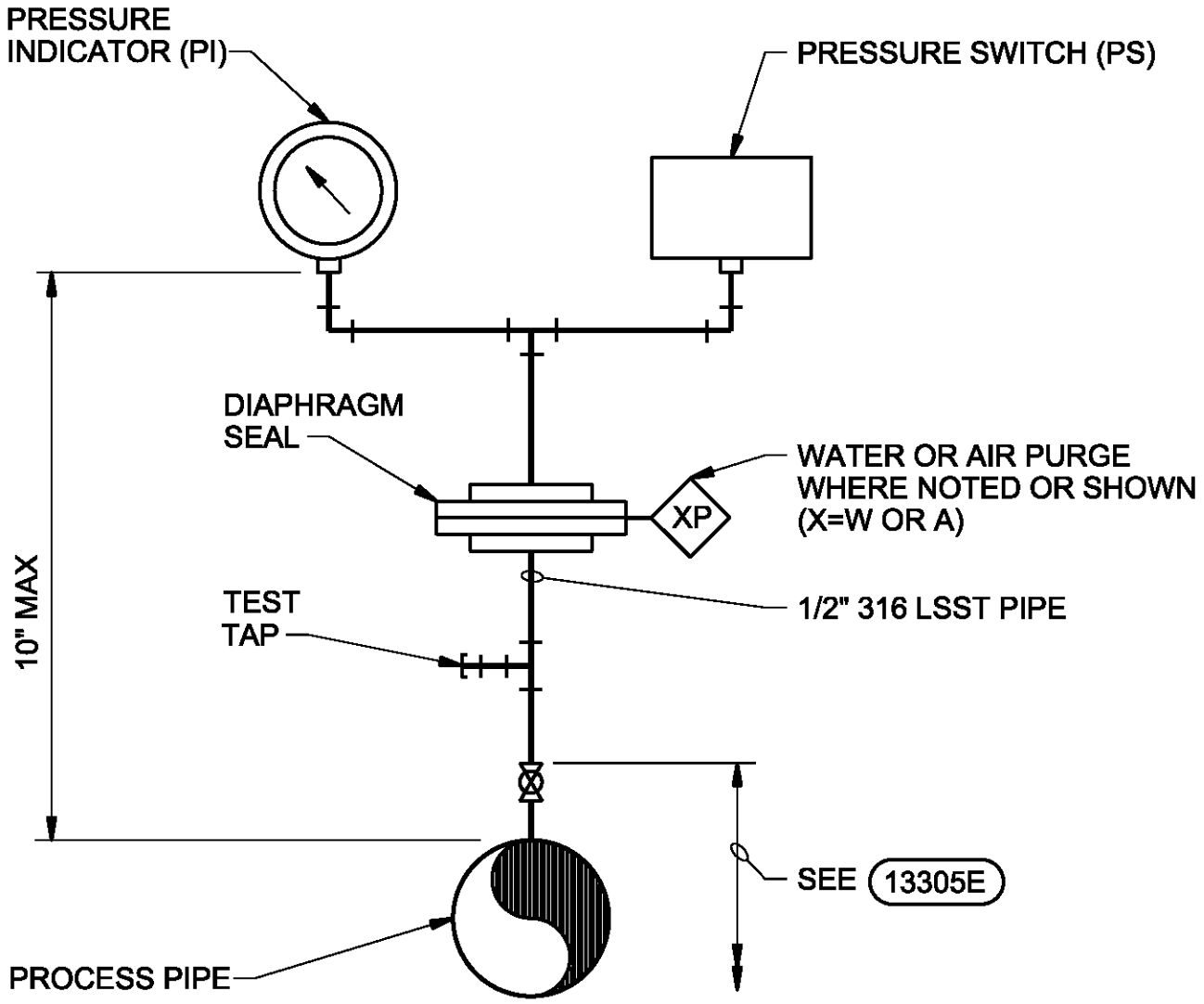

DIRECT MOUNTING WITH DIAPHRAGM SEAL

NOTES:

1. INDICATOR AND SWITCH INSTALLATION SHOWN. FOR SINGLE INSTRUMENT INSTALLATIONS, MOUNT DEVICE DIRECTLY ABOVE DIAPHRAGM SEAL.

PRESSURE SWITCH & INDICATOR INSTALLATION

WYCKOFF GROUNDWATER
TREATMENT PLANT

BAINBRIDGE ISLAND, WA

13304B

CH2MHILL

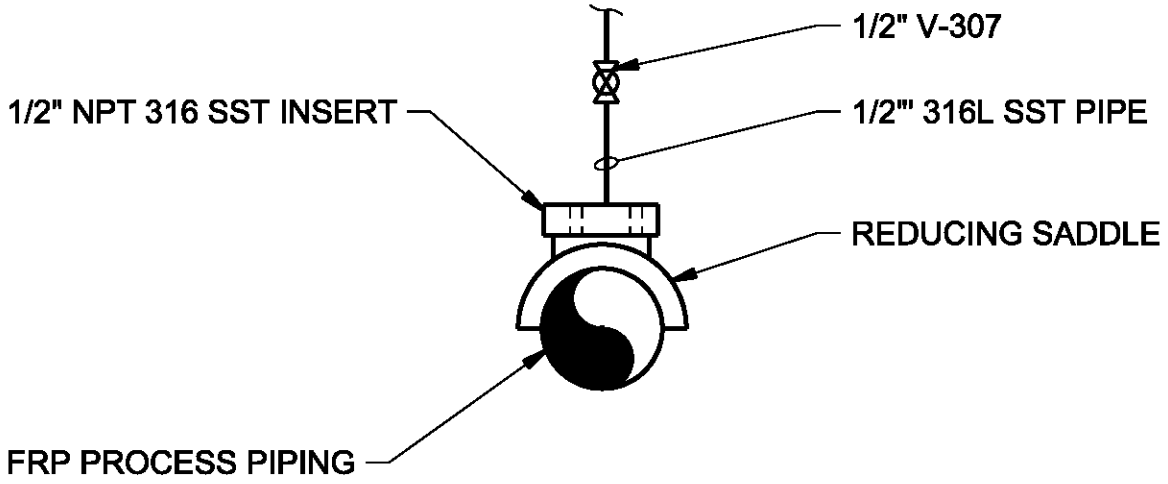

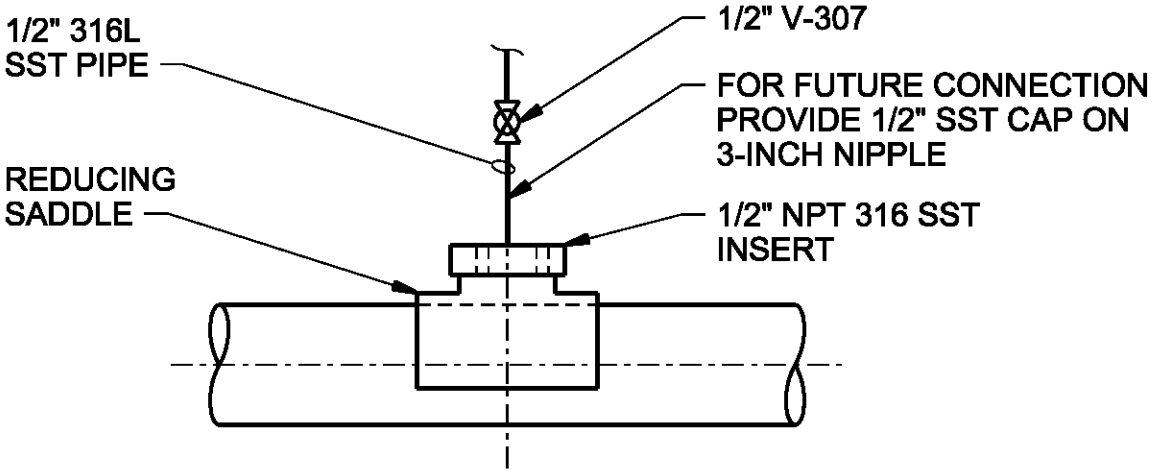

PRESSURE CONNECTION INSTALLATION - FRP PIPE

WYCKOFF GROUNDWATER
TREATMENT PLANT

BAINBRIDGE ISLAND, WA

13305E

CH2MHILL

FOR PROJECT DESIGN DETAILS
TURN OFF LV=SHBD,SHBD-DTL AND SHBD-OTLN IN THE ACTIVE FILE WHEN PLOTTING

$FILENAME $PLOTTIME

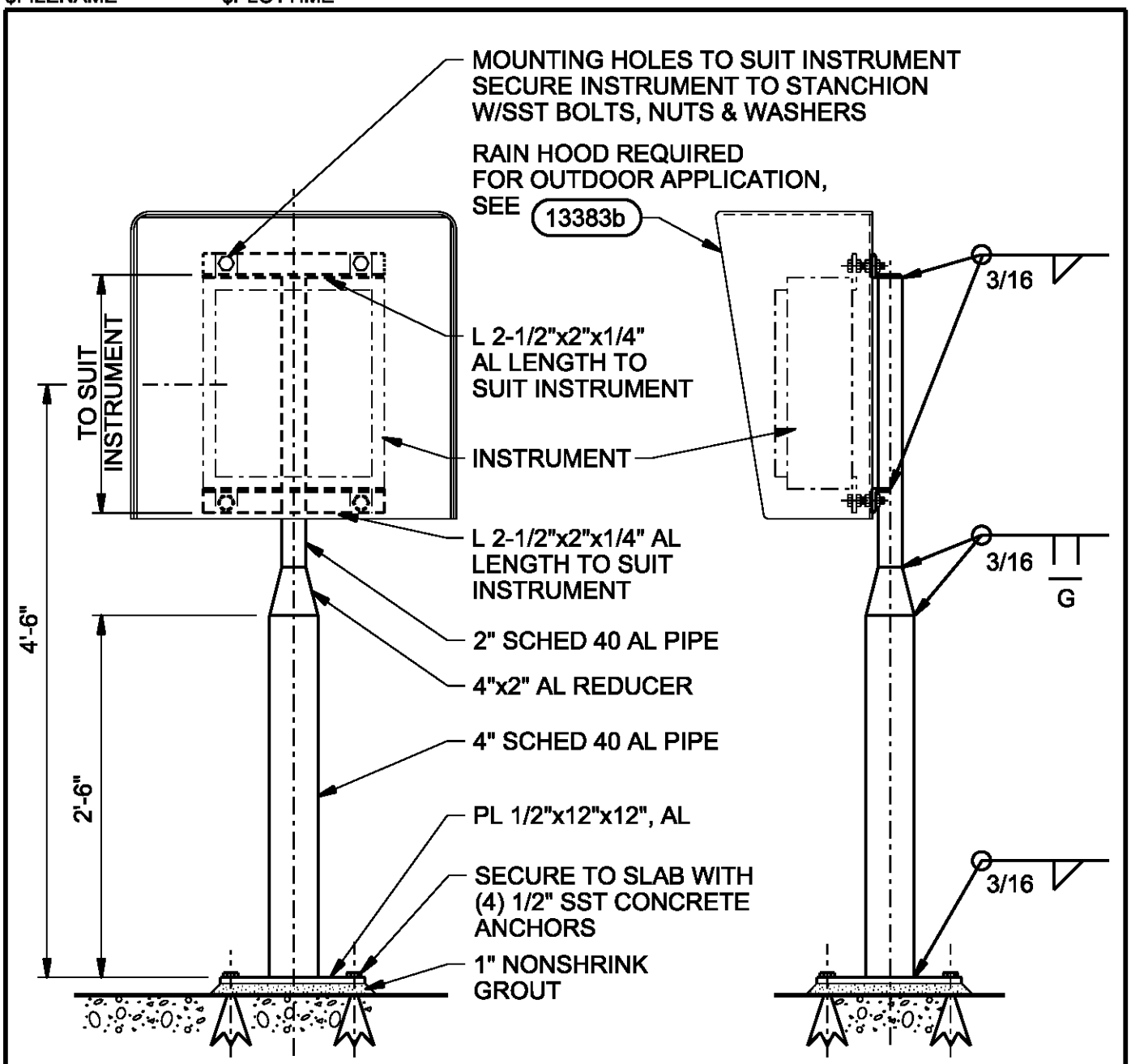

NOTES:

1. ROUND OFF ALL EXPOSED EDGES AND CORNERS.
2. PAINT ALUMINUM IN CONTACT WITH CONCRETE ACCORDING TO SPECIFICATIONS FOR PAINTING.

STANCHION SUPPORT FOR CASE MOUNTED INSTRUMENTS

WYCKOFF GROUNDWATER
TREATMENT PLANT
BAINBRIDGE ISLAND, WA

13383a

CH2MHILL

FOR PROJECT DESIGN DETAILS
TURN OFF LV=SHBD,SHBD-DTL AND SHBD-OTLN IN THE ACTIVE FILE WHEN PLOTTING

$FILENAME $PLOTTIME

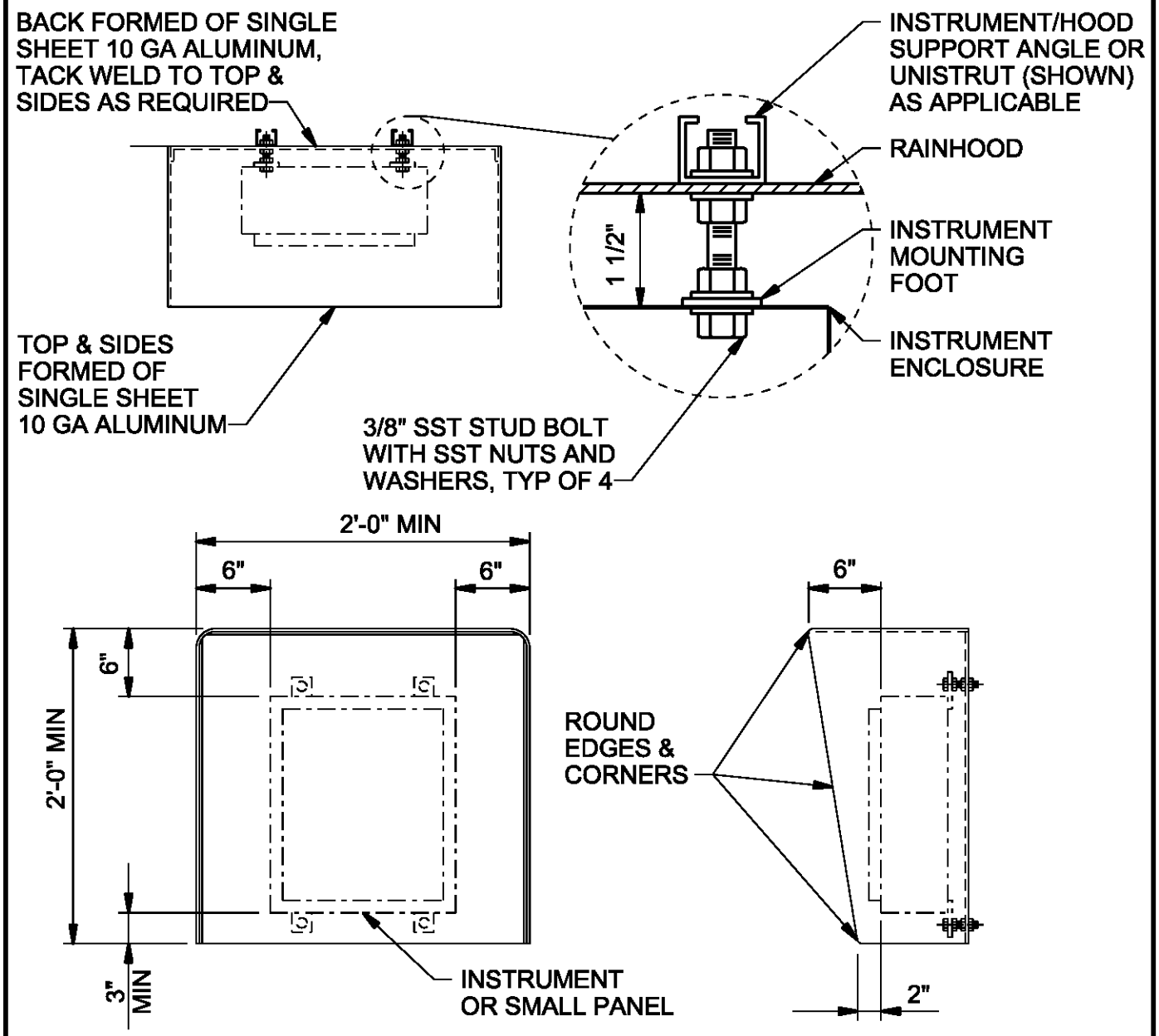

NOTES:

1. ALL EXPOSED EDGES TO BE GROUND SMOOTH AND BURR FREE.
2. MOUNT RAIN HOOD BETWEEN INSTRUMENT AND MOUNTING BRACKET. DRILL HOLES IN RAIN HOOD AS PER MOUNTING HOLES FOR INSTRUMENT.

RAIN HOOD INSTALLATION

WYCKOFF GROUNDWATER TREATMENT PLANT

BAINBRIDGE ISLAND, WA

13383b

CH2MHILL

FOR PROJECT DESIGN DETAILS
TURN OFF LV=SHBD,SHBD-DTL AND SHBD-OTLN IN THE ACTIVE FILE WHEN PLOTTING

$FILENAME $PLOTTIME

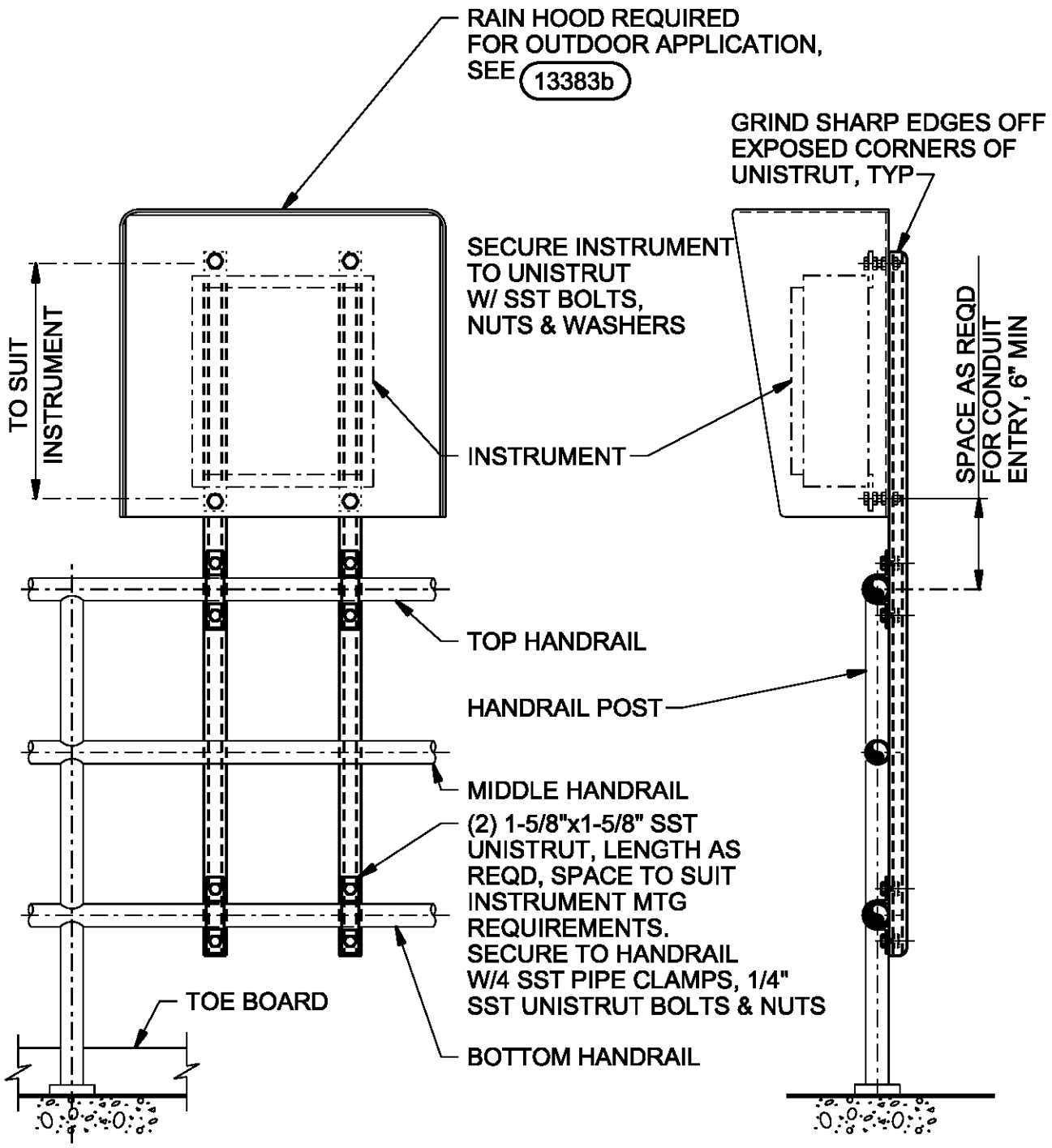

TYPICAL HANDRAIL MOUNTING FOR CASE MOUNTED INSTRUMENTS

WYCKOFF GROUNDWATER
TREATMENT PLANT
BAINBRIDGE ISLAND, WA

13383c

CH2MHILL

FOR PROJECT DESIGN DETAILS
TURN OFF LV=SHBD,SHBD-DTL AND SHBD-OTLN IN THE ACTIVE FILE WHEN PLOTTING

$FILENAME $PLOTTIME

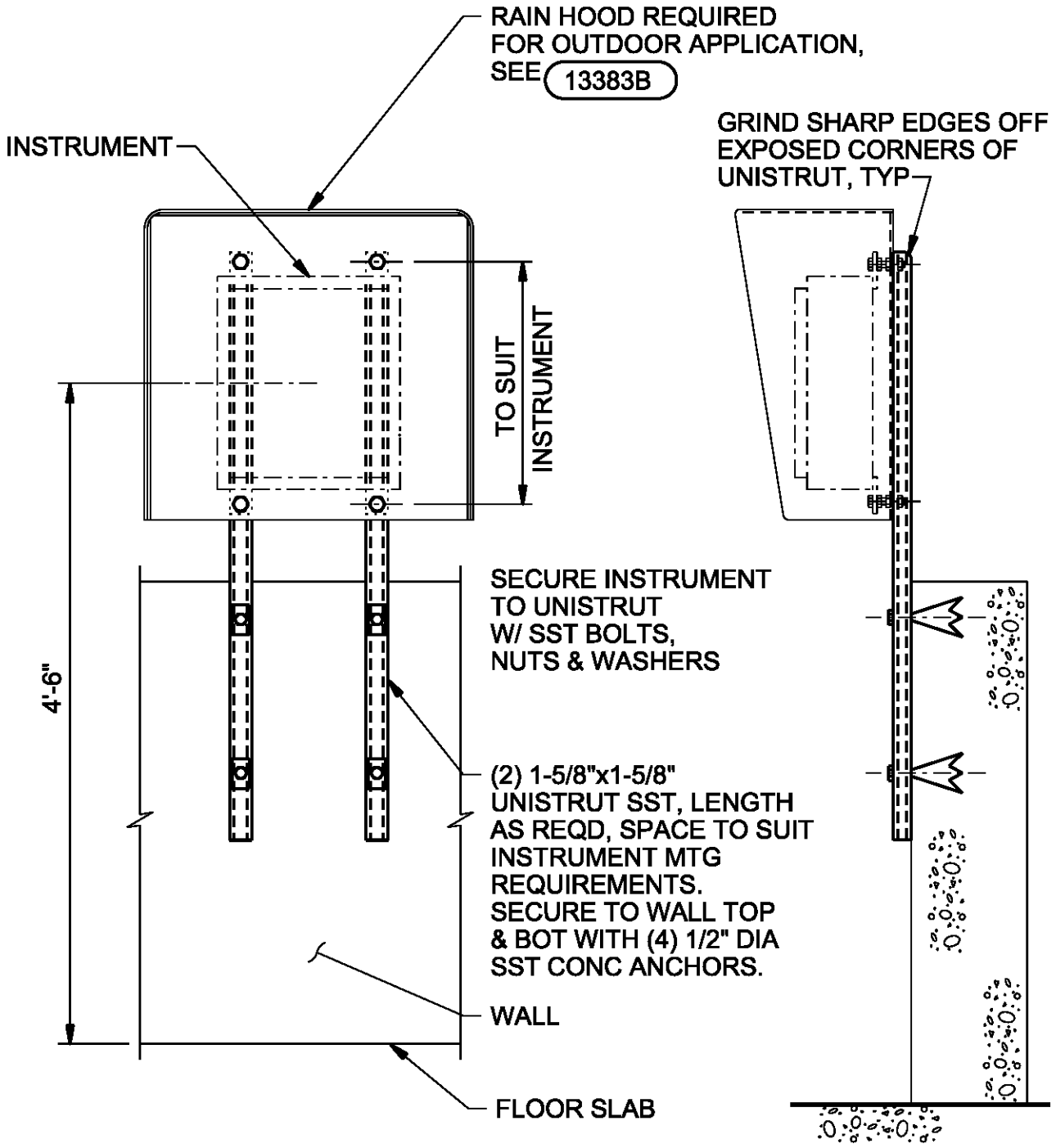

SHORT WALL MOUNTED PANEL INSTRUMENT INSTALLATION

WYCKOFF GROUNDWATER
TREATMENT PLANT
BAINBRIDGE ISLAND, WA

13383d

CH2MHILL

FOR PROJECT DESIGN DETAILS
TURN OFF LV=SHBD,SHBD-DTL AND SHBD-OTLN IN THE ACTIVE FILE WHEN PLOTTING

$FILENAME $PLOTTIME

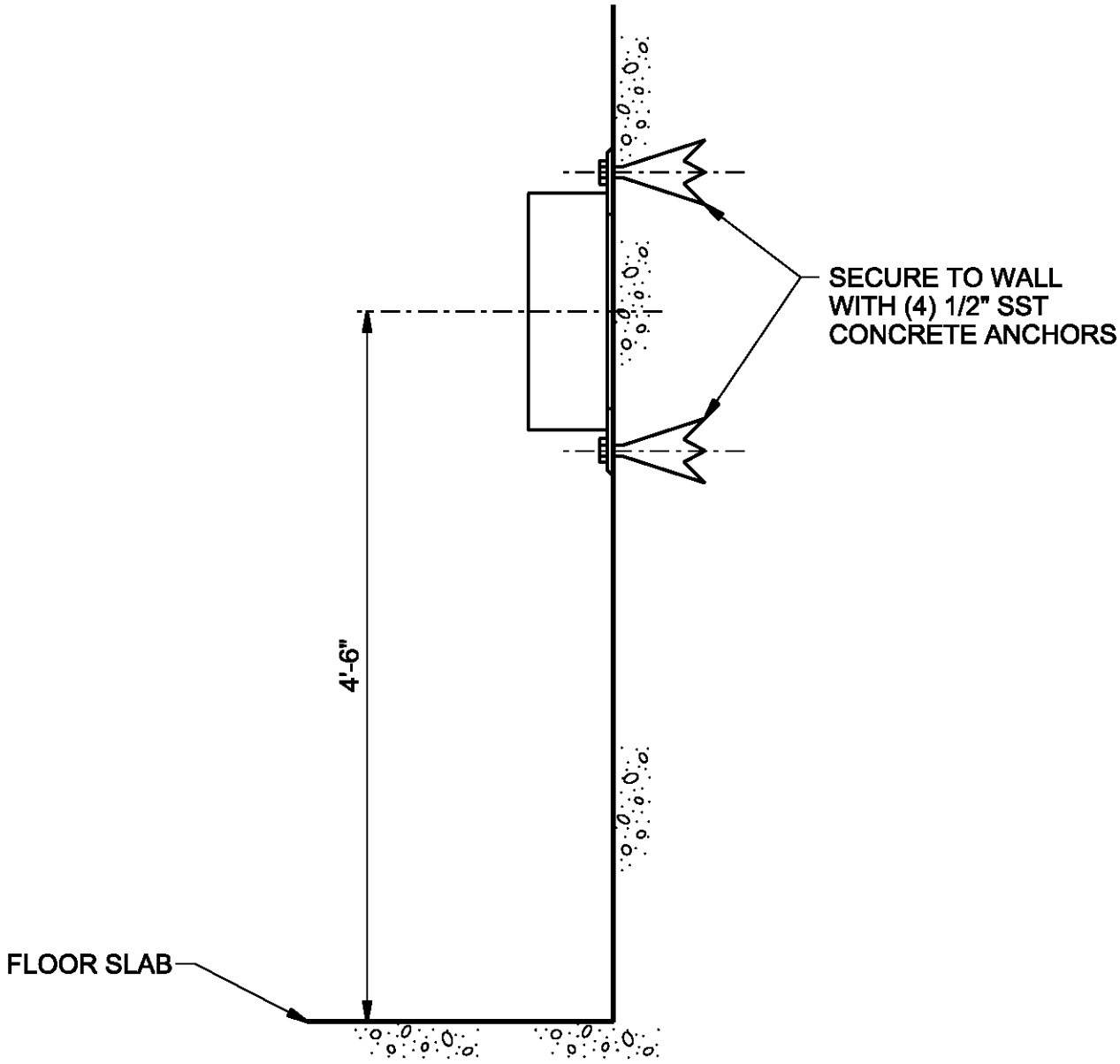

WALL MOUNTED PANEL OR INSTRUMENT INSTALLATION

WYCKOFF GROUNDWATER
TREATMENT PLANT

BAINBRIDGE ISLAND, WA

13388

CH2MHILL

$FILENAME $PLOTTIME

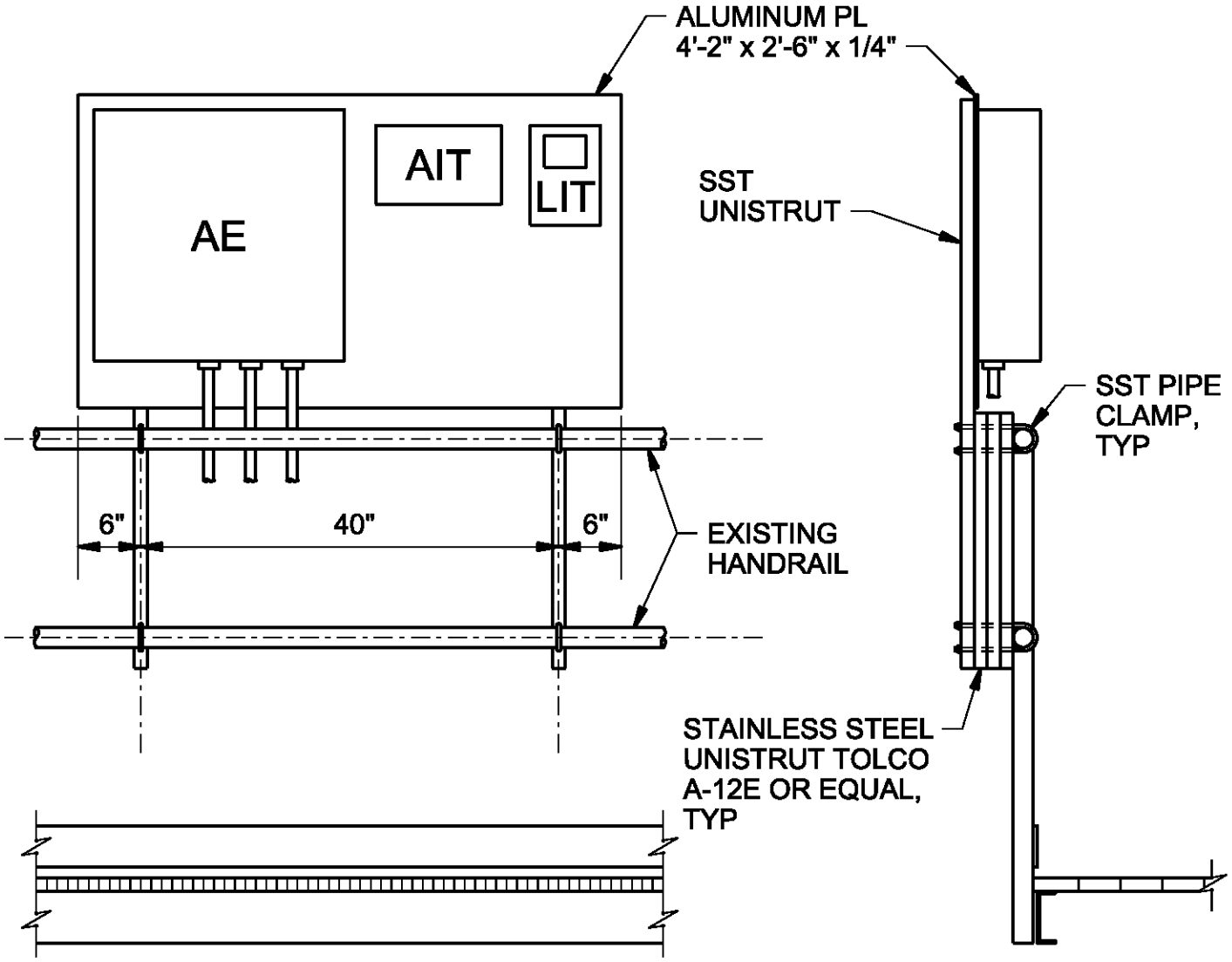

INSTRUMENT SUPPORT - HANDRAIL MOUNTED

WYCKOFF GROUNDWATER
TREATMENT PLANT

BAINBRIDGE ISLAND, WA

13700

CH2MHILL

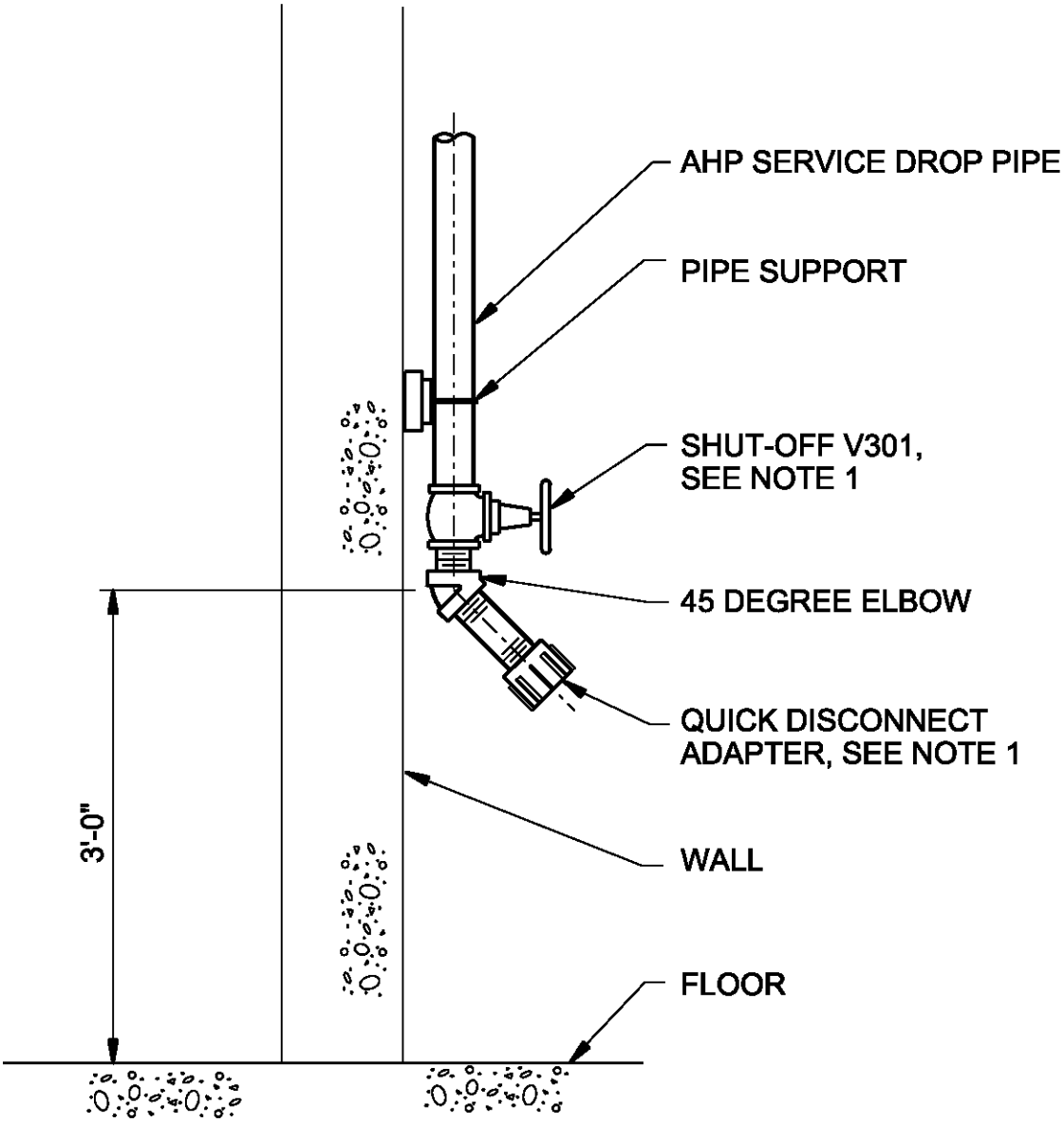

NOTES:

1. PROVIDE SIZE AS INDICATED ON THE DRAWINGS. 1/2-INCH IS TYPICAL EXCEPT FOR AIR STATIONS SERVING THE GAC'S WHICH ARE 1-INCH.

AIR STATION

NTS

WYCKOFF GROUNDWATER TREATMENT PLANT

BAINBRIDGE ISLAND, WA

15100

CH2MHILL

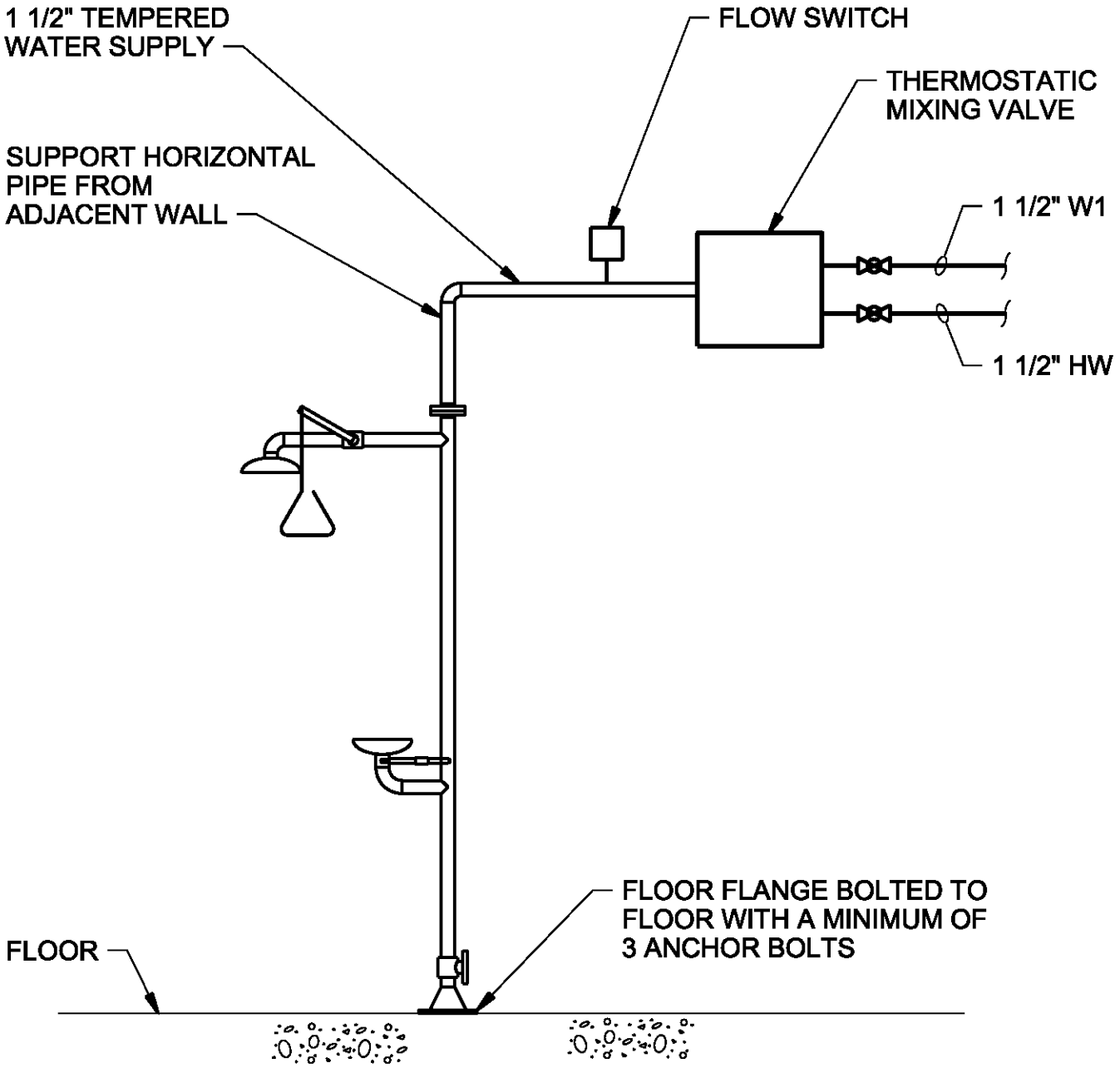

EMERGENCY SAFETY SHOWER/EYEWASH UNIT

NTS

WYCKOFF GROUNDWATER
TREATMENT PLANT

BAINBRIDGE ISLAND, WA

15130

CH2MHILL

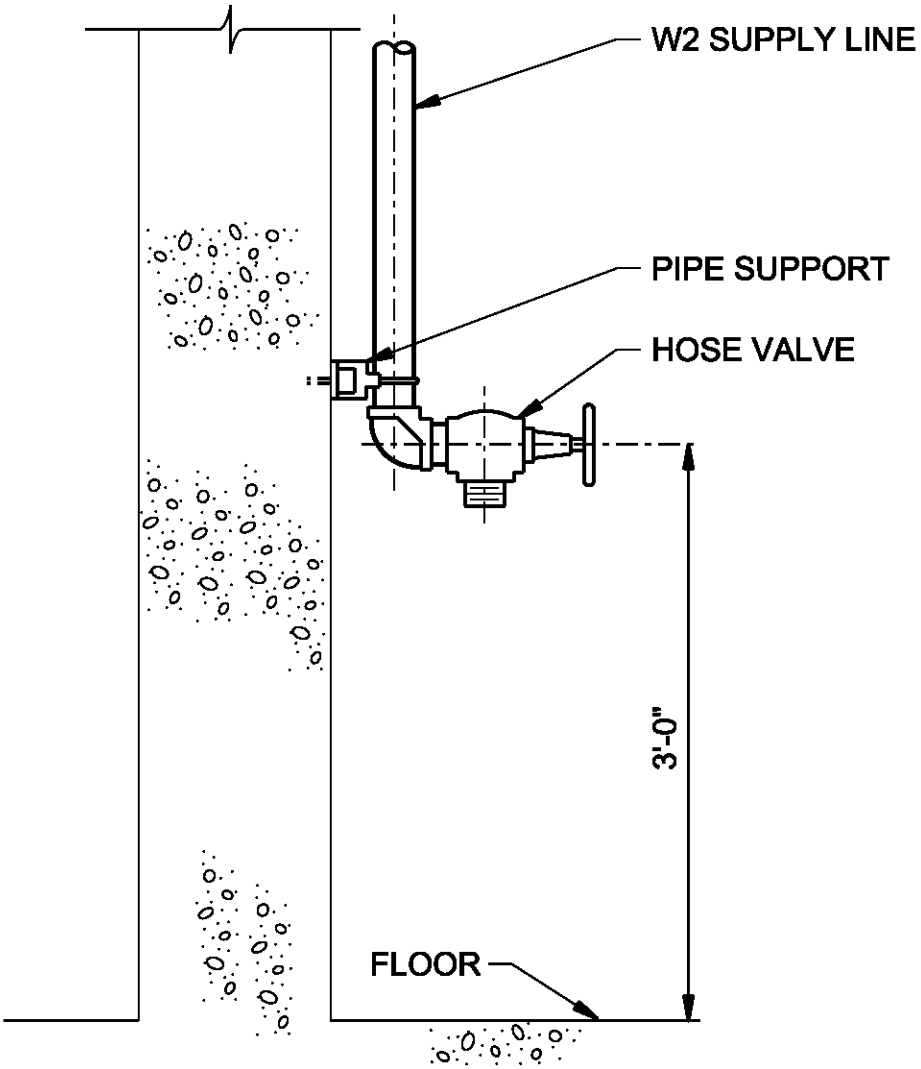

NOTES:

1. ROTATE HOSE VALVE 30° OFF WALL.

INTERIOR HOSE VALVE

NTS

WYCKOFF GROUNDWATER TREATMENT PLANT

BAINBRIDGE ISLAND, WA

15164

CH2MHILL

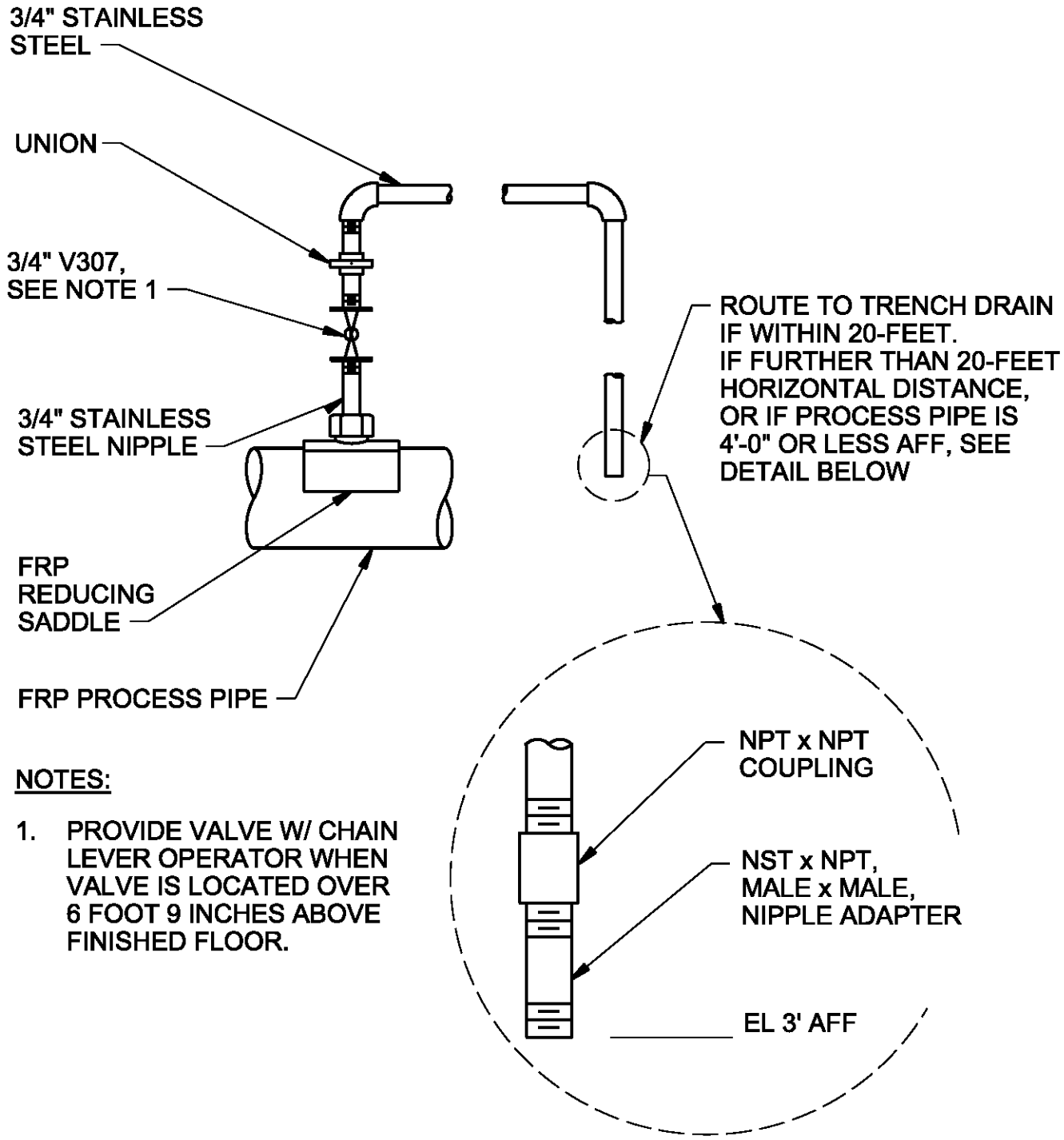

NOTES:

1. PROVIDE VALVE W/ CHAIN LEVER OPERATOR WHEN VALVE IS LOCATED OVER 6 FOOT 9 INCHES ABOVE FINISHED FLOOR.

PIPE HIGH POINT VENT

WYCKOFF GROUNDWATER TREATMENT PLANT

BAINBRIDGE ISLAND, WA

15184

CH2MHILL

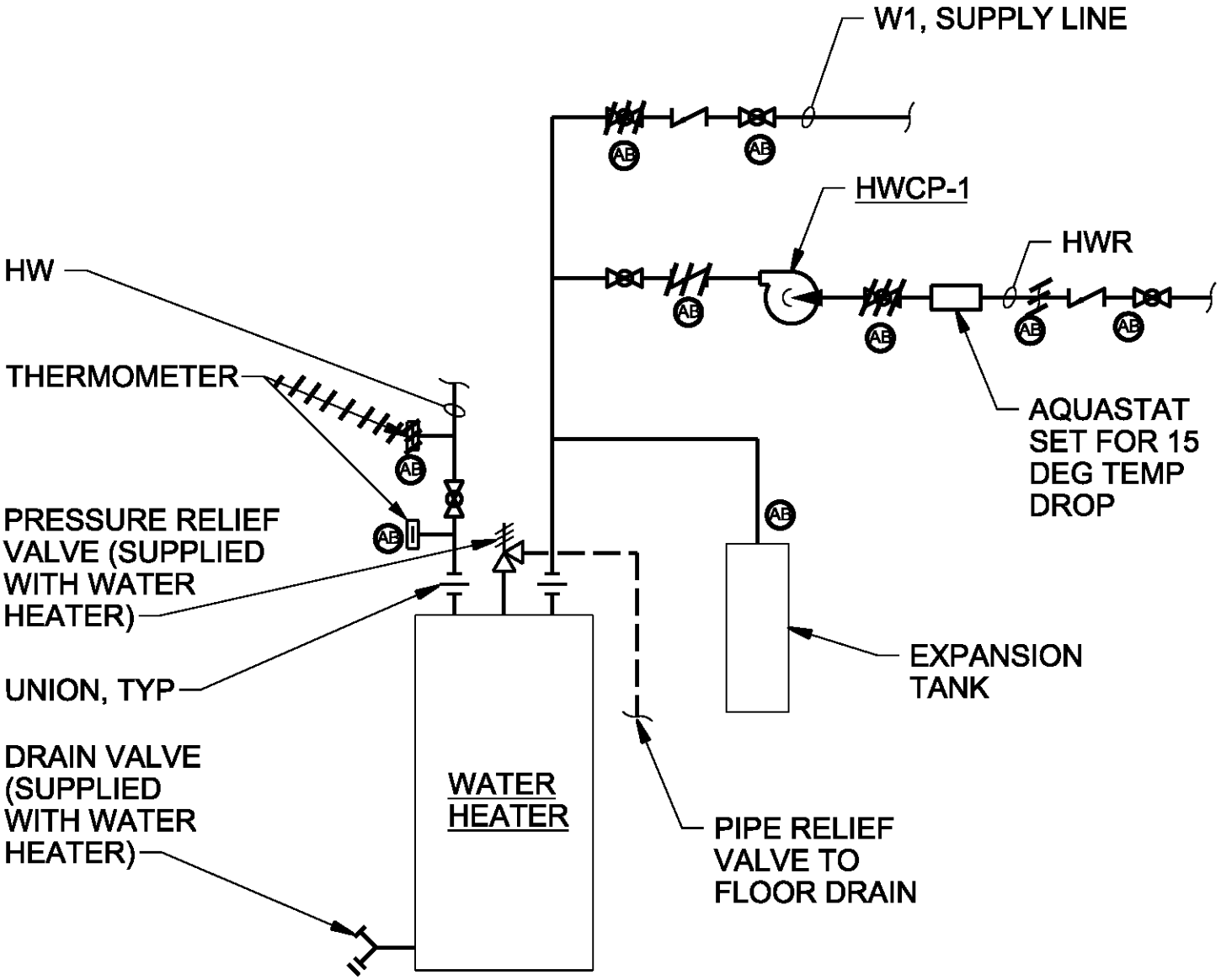

WATER HEATER

NTS

15189

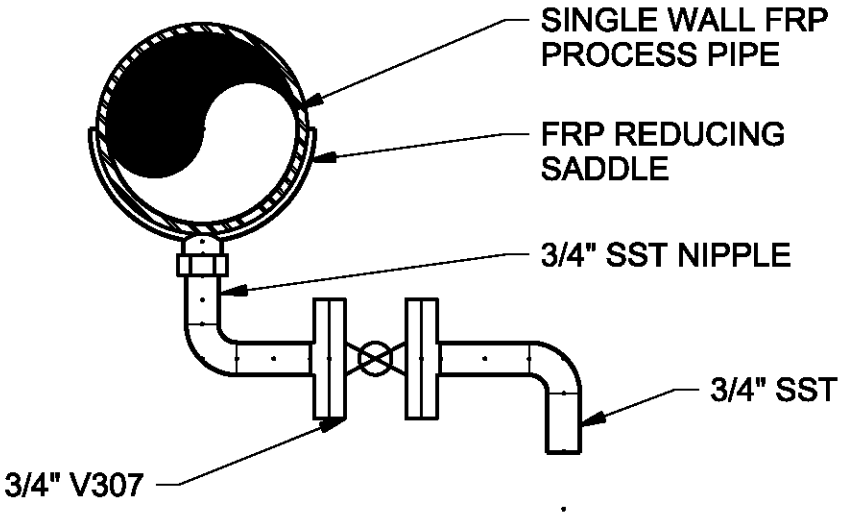

HORIZONTAL PIPE

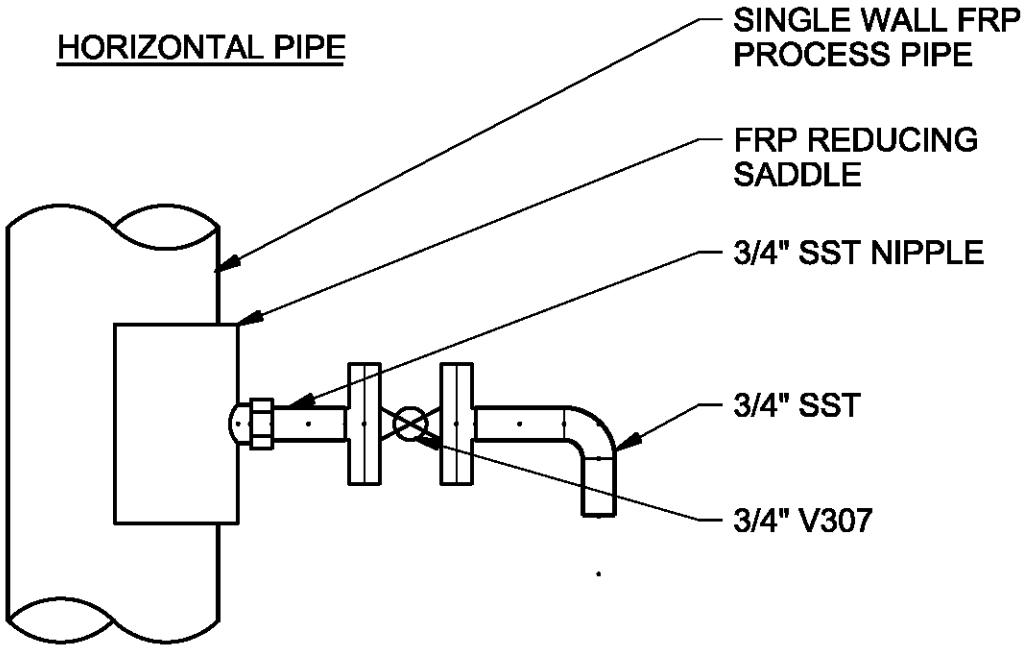

VERTICAL PIPE

SAMPLE PORT / DRAIN DETAIL

NTS

WYCKOFF GROUNDWATER
TREATMENT PLANT

BAINBRIDGE ISLAND, WA

15191

CH2MHILL

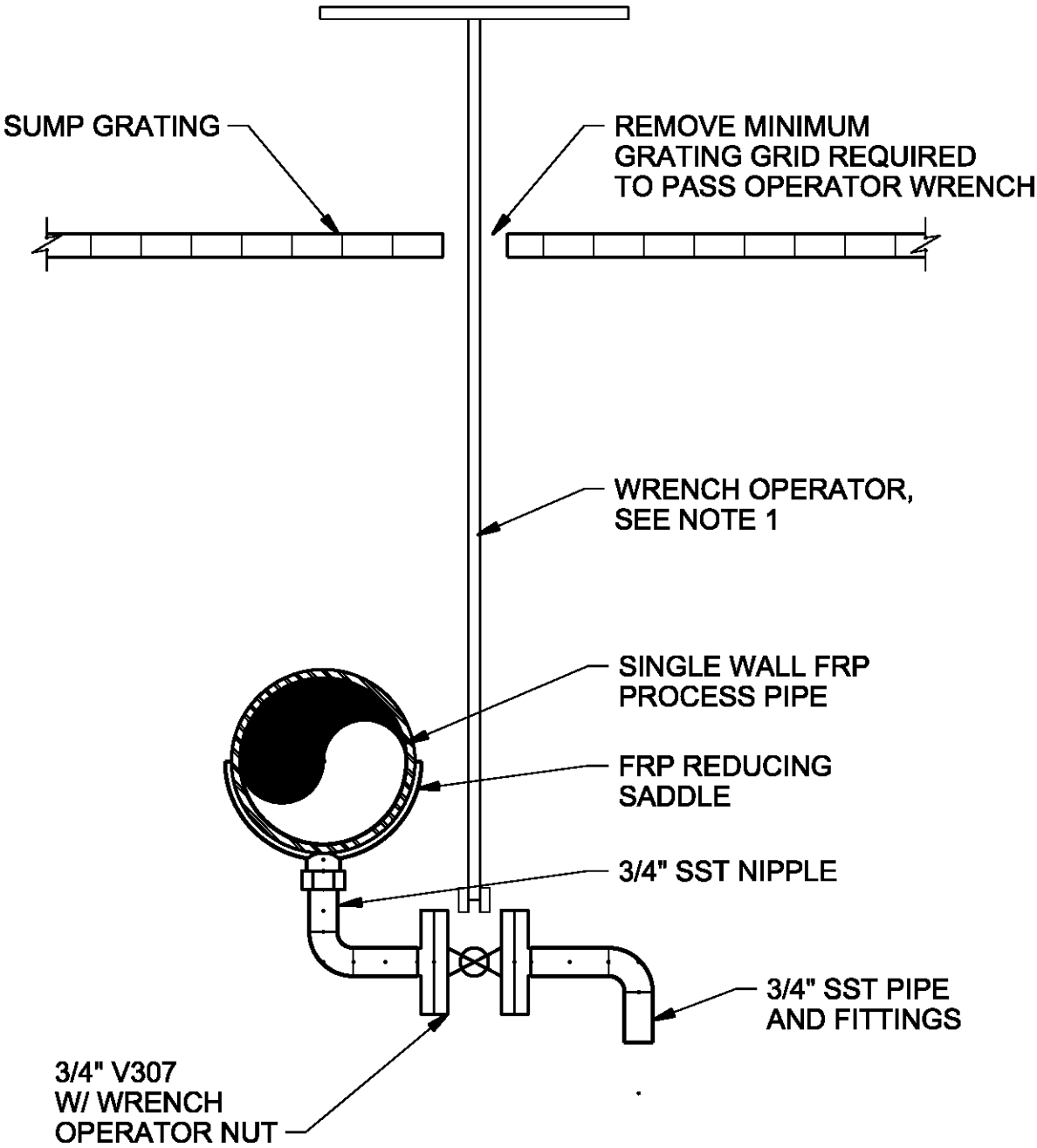

NOTES:

1. PROVIDE OR FABRICATE 2 GALVANIZED OPERATOR WRENCHES. WRENCH OPERATOR SHALL ENGAGE OPERATOR NUT PROVIDED ON VALVE. WRENCH LENGTH SHALL BE AS REQUIRED TO OPERATE THE LOWEST DRAIN VALVE IN SUMP.

PIPE DRAIN DETAIL SUMP

NTS

WYCKOFF GROUNDWATER TREATMENT PLANT

BAINBRIDGE ISLAND, WA

15192

CH2MHILL

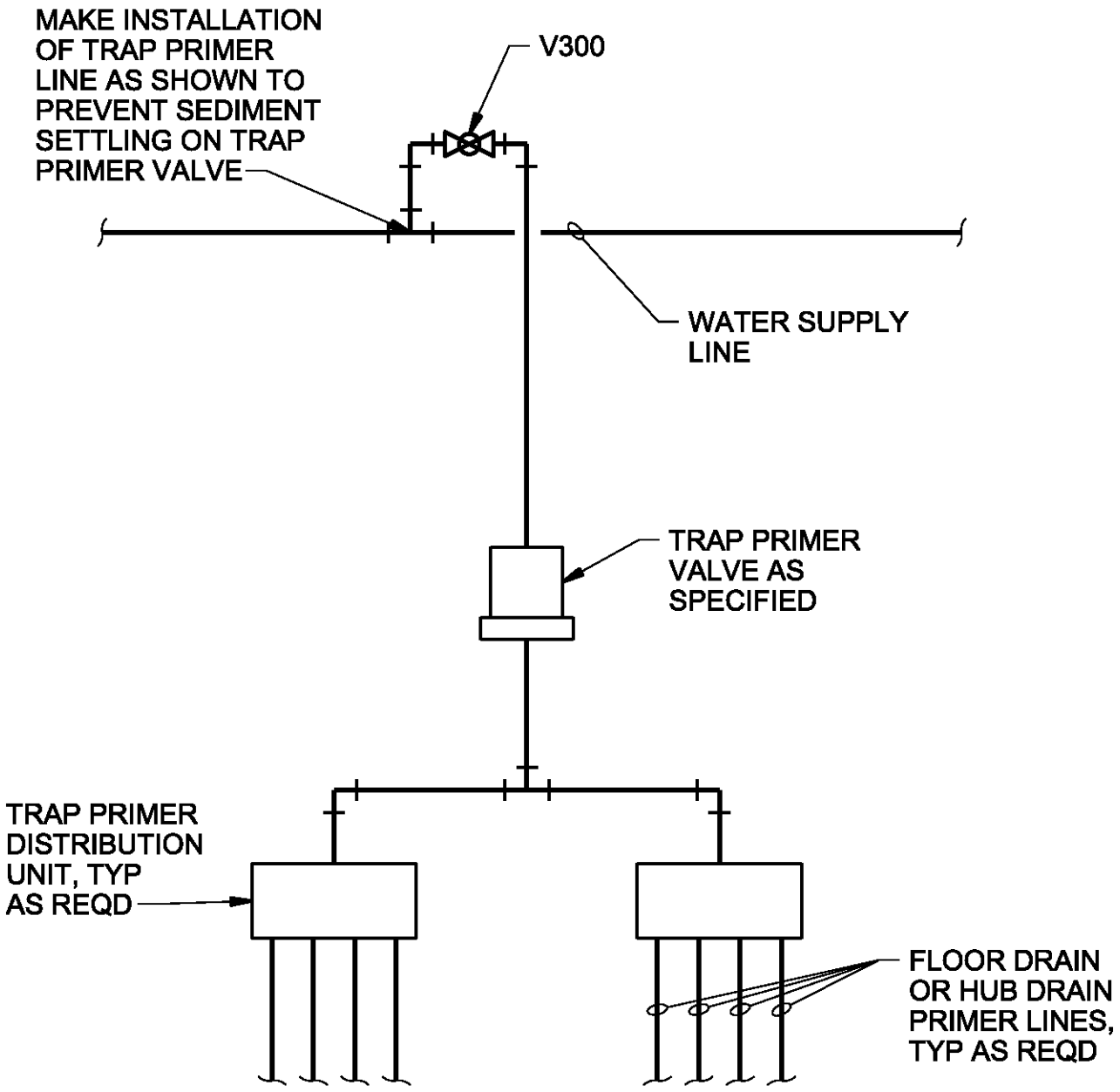

FLOOR DRAIN TRAP PRIMER VALVE

NTS

WYCKOFF GROUNDWATER TREATMENT PLANT

BAINBRIDGE ISLAND, WA

15200

CH2MHILL

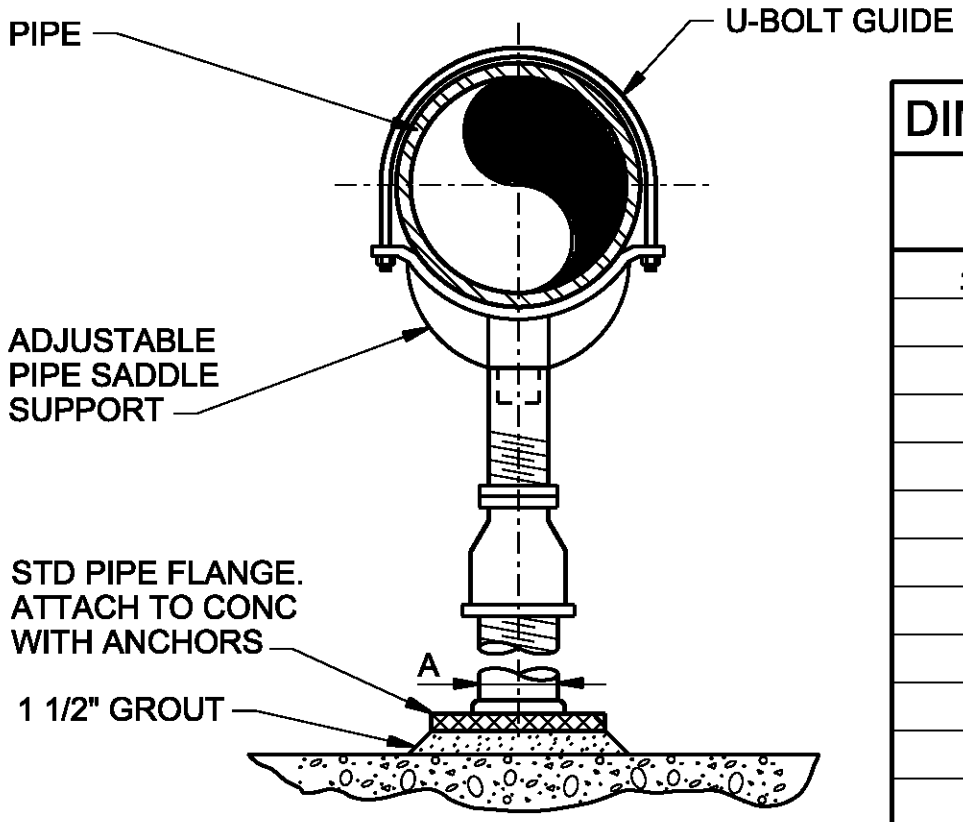

DIMENSION TABLE	
PIPE SIZE	A
≤ 2-1/2"	2-1/2"
3"	2-1/2"
4"	3"
6"	3"
8"	3"
10"	3"
12"	3"
14"	4"
16"	4"
20"	6"
24"	6"
30"	6"
36"	6"

NOTES:

1. PROVIDE PIPE PROTECTIVE BARRIER AS SPECIFIED.

PIPE SUPPORT

WYCKOFF GROUNDWATER
TREATMENT PLANT

BAINBRIDGE ISLAND, WA

15500

CH2MHILL

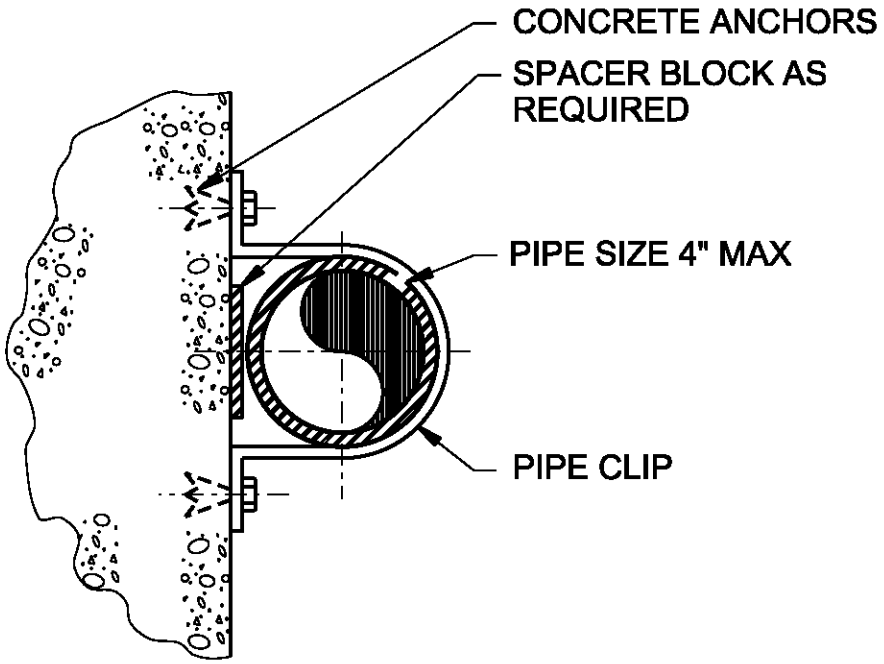

NOTES:

1. PROVIDE PIPE PROTECTION BARRIER AS SPECIFIED. FABRICATE OVERSIZE STRAP WHERE REQUIRED.

PIPE HANGER

WYCKOFF GROUNDWATER TREATMENT PLANT

BAINBRIDGE ISLAND, WA

15503

CH2MHILL

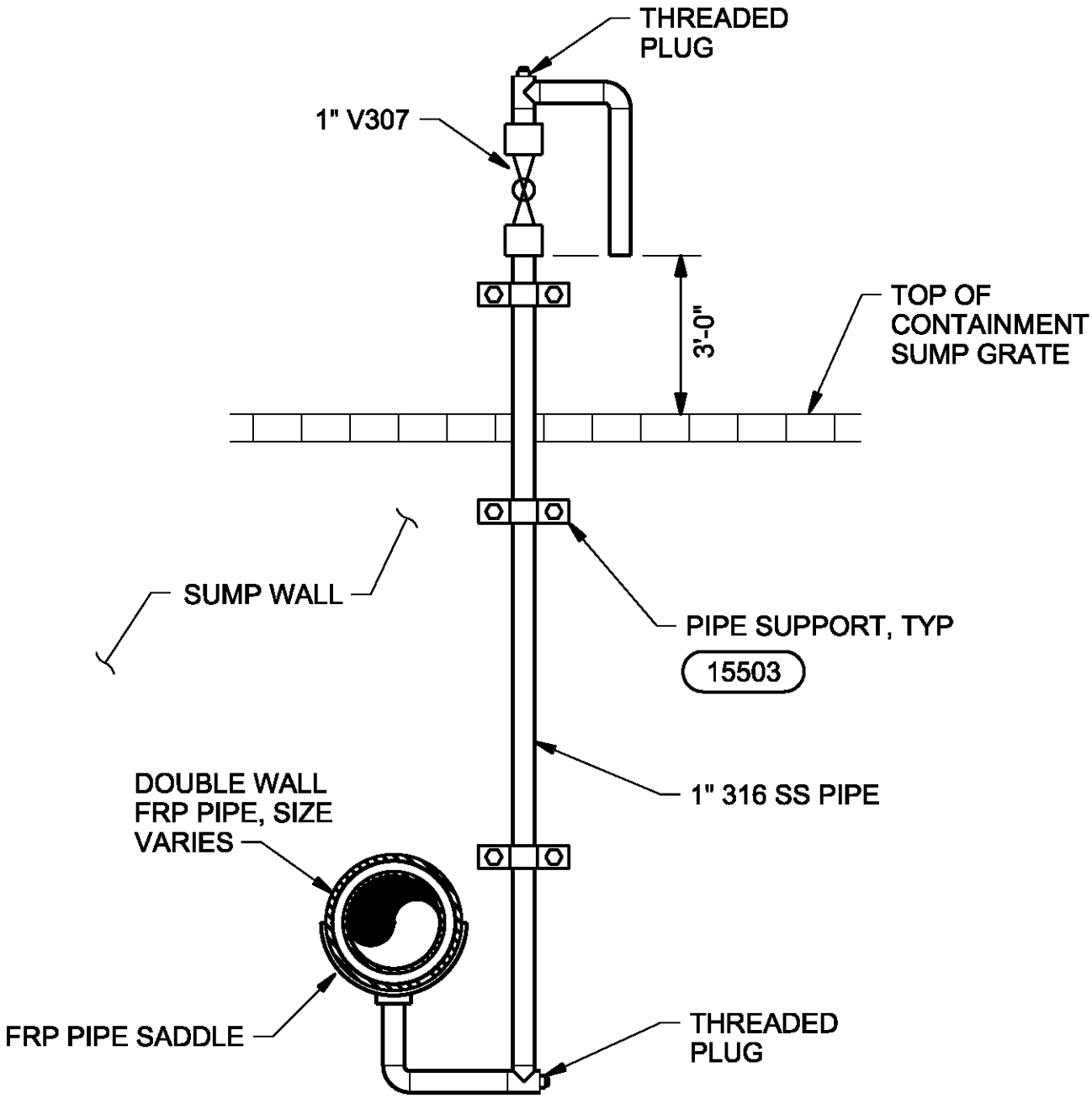

NOTES:

1. SIZE AND INSTALL PIPE SADDLE PER MANUFACTURER'S INSTRUCTIONS.

DOUBLE WALL PIPE LEAK DETECTION

WYCKOFF GROUNDWATER TREATMENT PLANT

BAINBRIDGE ISLAND, WA

15510

CH2MHILL

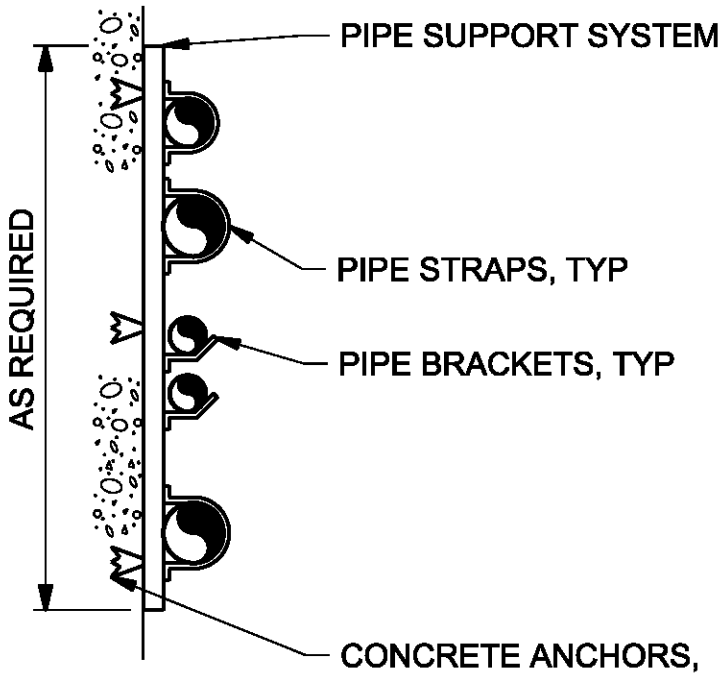

NOTES:

1. PROVIDE PIPE PROTECTION BARRIER AS SPECIFIED.

STACKED PIPE WALL SYSTEM

WYCKOFF GROUNDWATER TREATMENT PLANT

BAINBRIDGE ISLAND, WA

15521

CH2MHILL

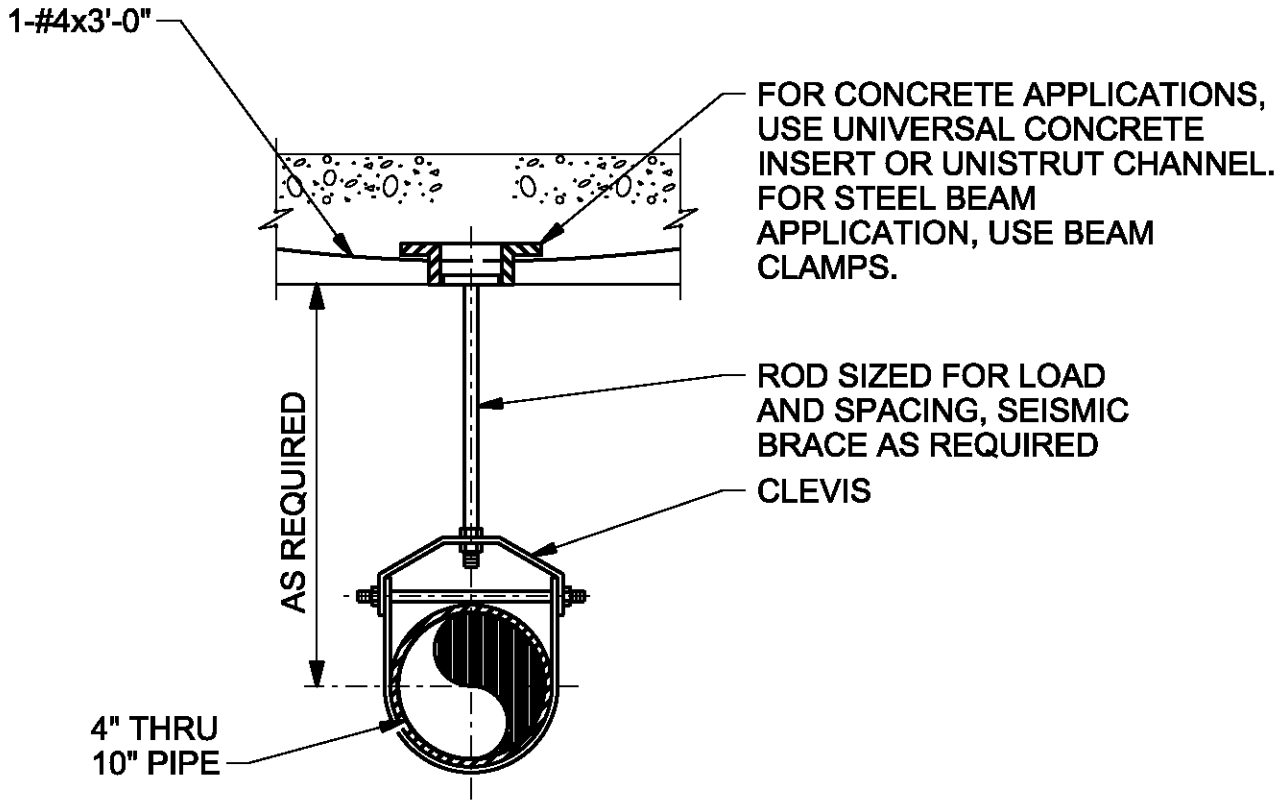

NOTES:

1. PROVIDE PIPE PROTECTION BARRIER AS SPECIFIED.

PIPE HANGER

WYCKOFF GROUNDWATER TREATMENT PLANT

BAINBRIDGE ISLAND, WA

15550

CH2MHILL

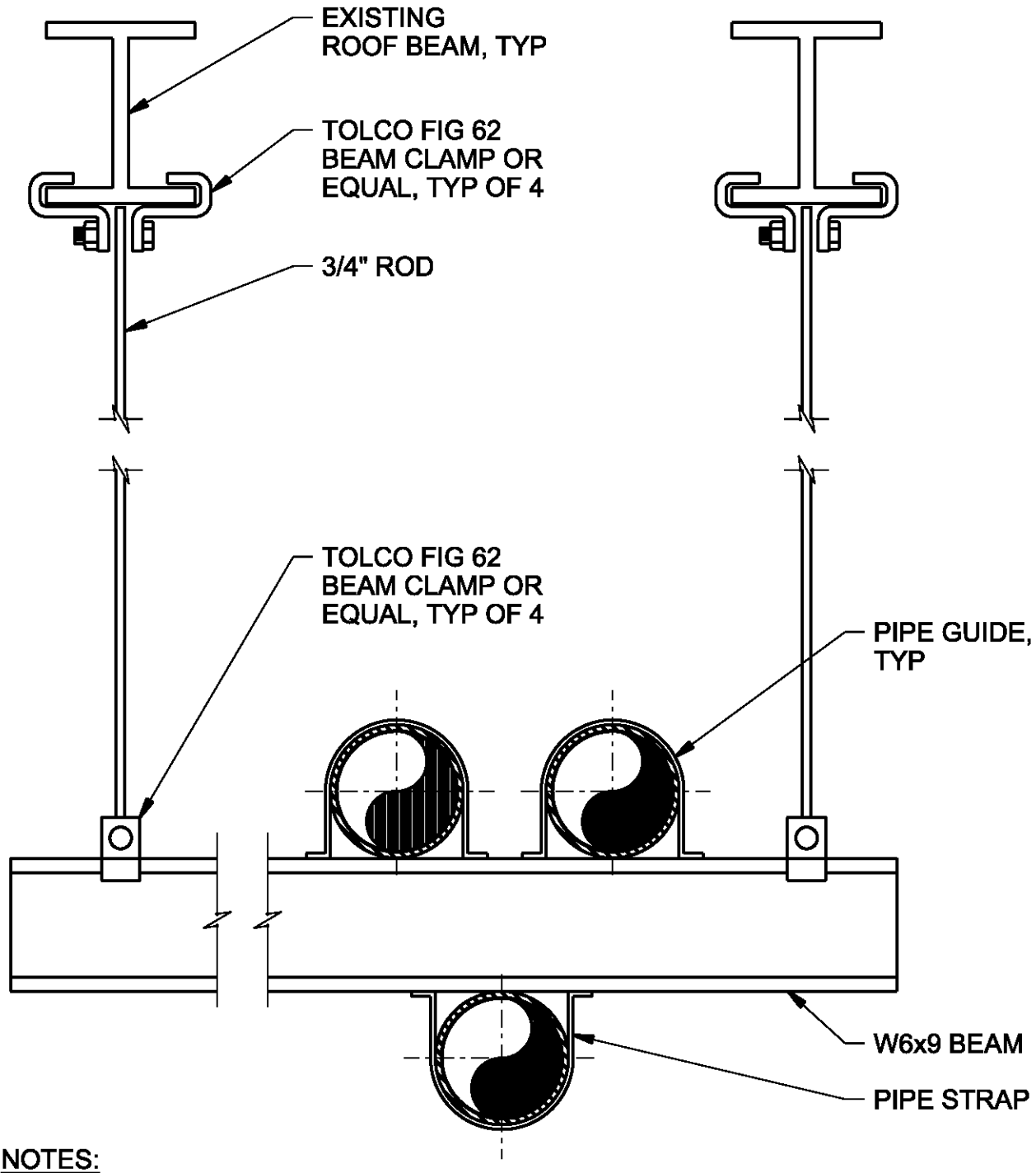

NOTES:

1. PROVIDE TRANSVERSE AND LONGITUDINAL SEISMIC BRACING TO ROOF BEAMS AND ROOF PURLIN, RESPECTIVELY AS REQUIRED BY PIPE SUPPORT CALCULATIONS.

PIPE HANGER

WYCKOFF GROUNDWATER
TREATMENT PLANT

BAINBRIDGE ISLAND, WA

15555

CH2MHILL

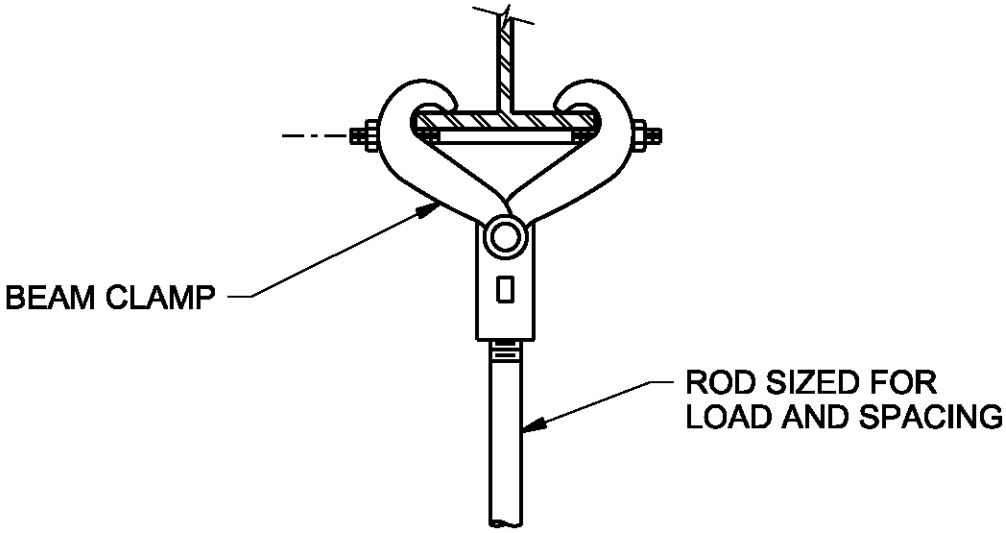

BEAM CLAMP

WYCKOFF GROUNDWATER
TREATMENT PLANT

BAINBRIDGE ISLAND, WA

15556

CH2MHILL

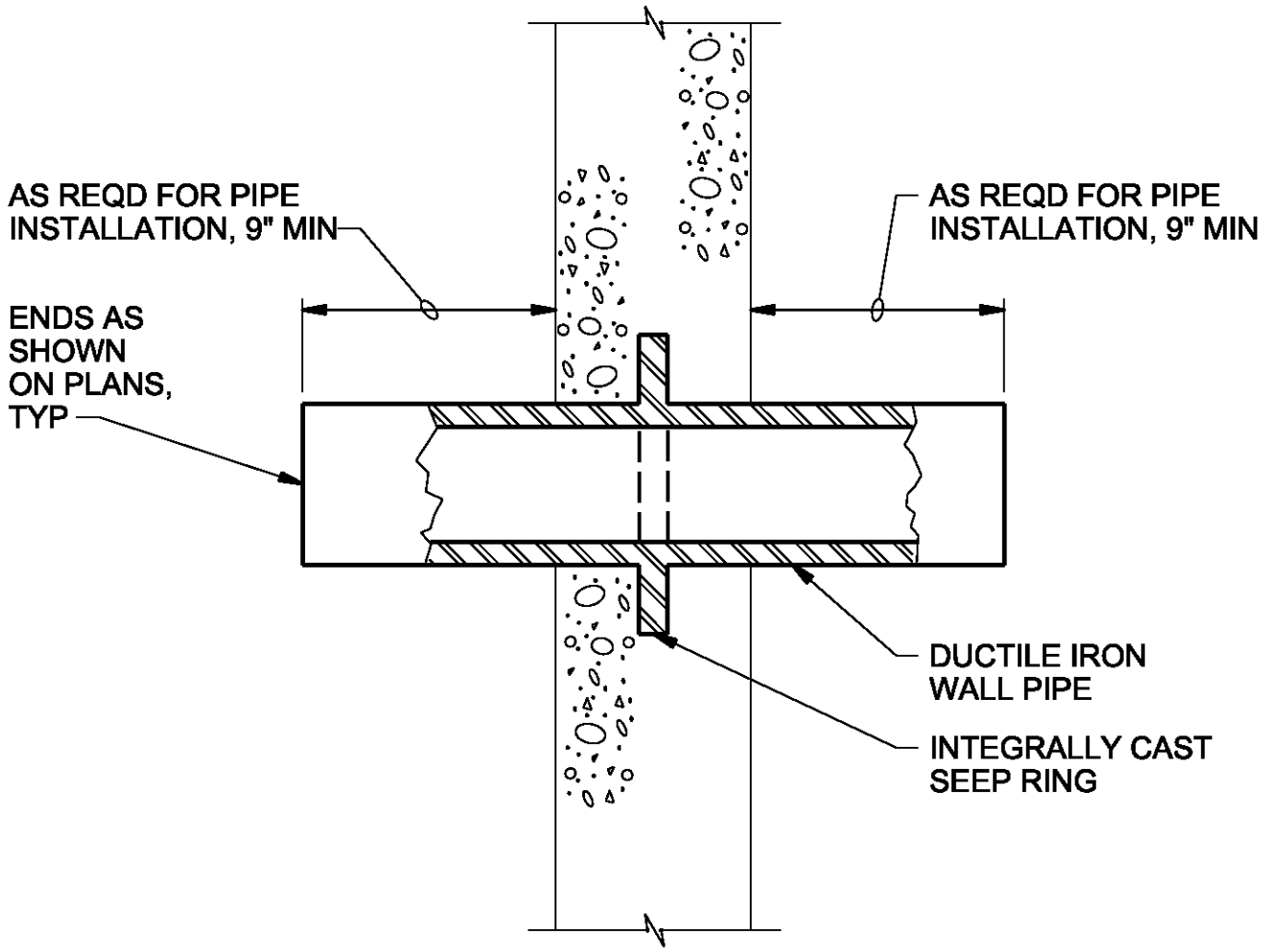

NOTES:

1. COAT WALL PIPE WITH SPECIFIED PAINT SYSTEM PRIOR TO CONCRETE PLACEMENT.

DUCTILE IRON WALL PIPE

WYCKOFF GROUNDWATER TREATMENT PLANT

BAINBRIDGE ISLAND, WA

15600

CH2MHILL

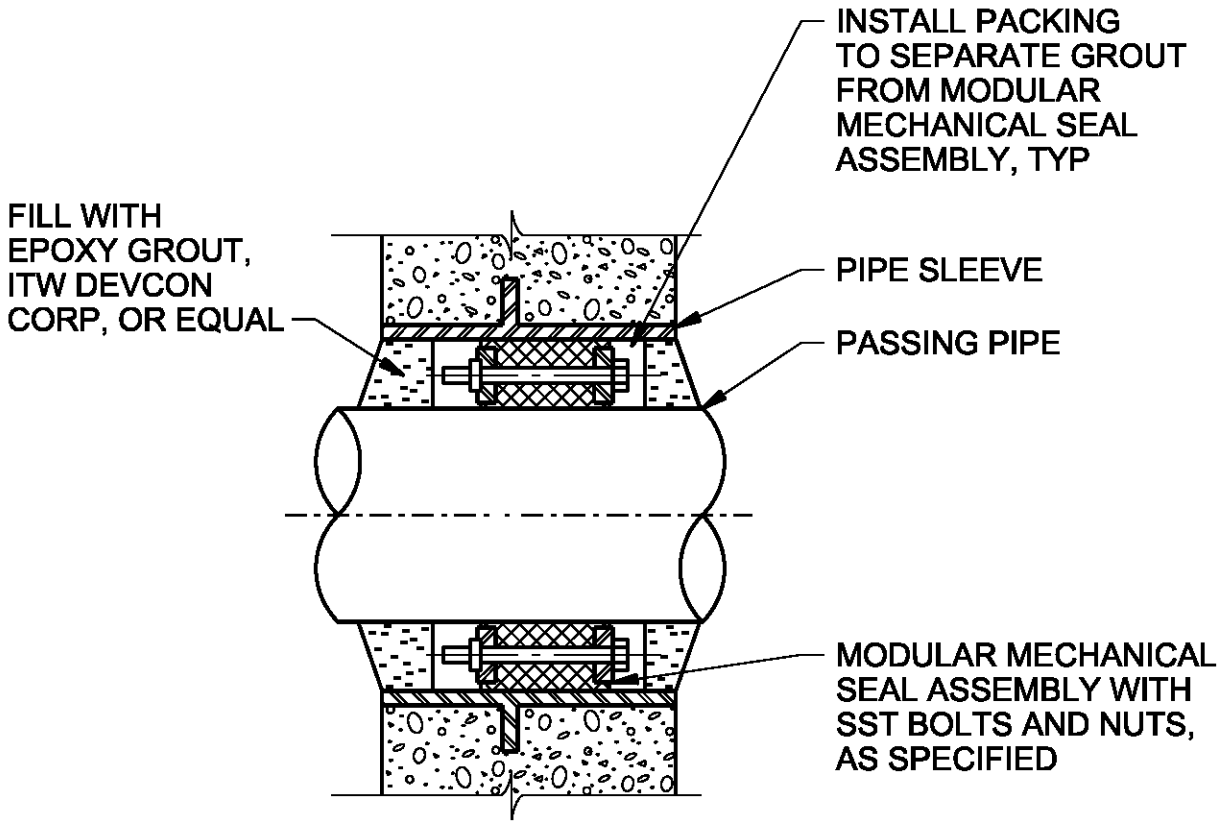

WALL PIPE PENETRATION SEAL

NTS

WYCKOFF GROUNDWATER TREATMENT PLANT

BAINBRIDGE ISLAND, WA

15607

CH2MHILL

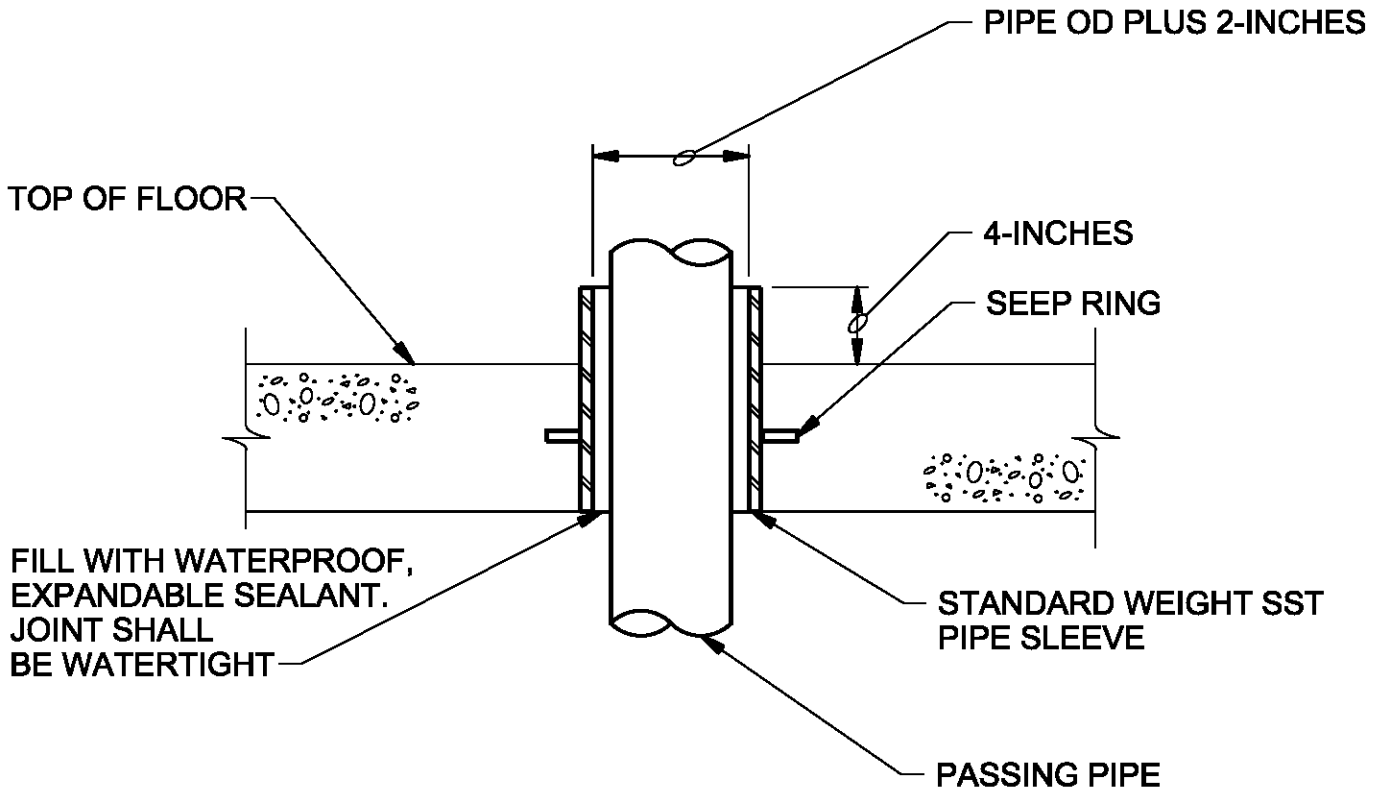

FLOOR SLEEVE

WYCKOFF GROUNDWATER
TREATMENT PLANT

BAINBRIDGE ISLAND, WA

15620

CH2MHILL

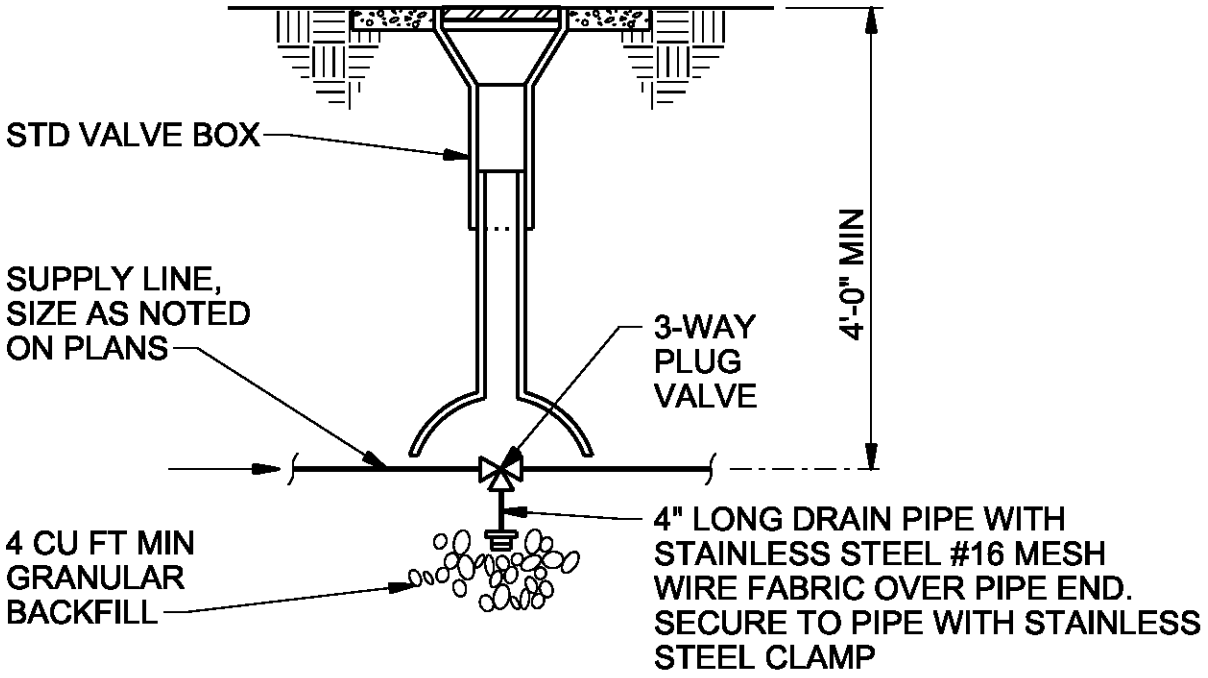

STOP AND DRAIN VALVE BOX

NTS

WYCKOFF GROUNDWATER
TREATMENT PLANT

BAINBRIDGE ISLAND, WA

15642

CH2MHILL

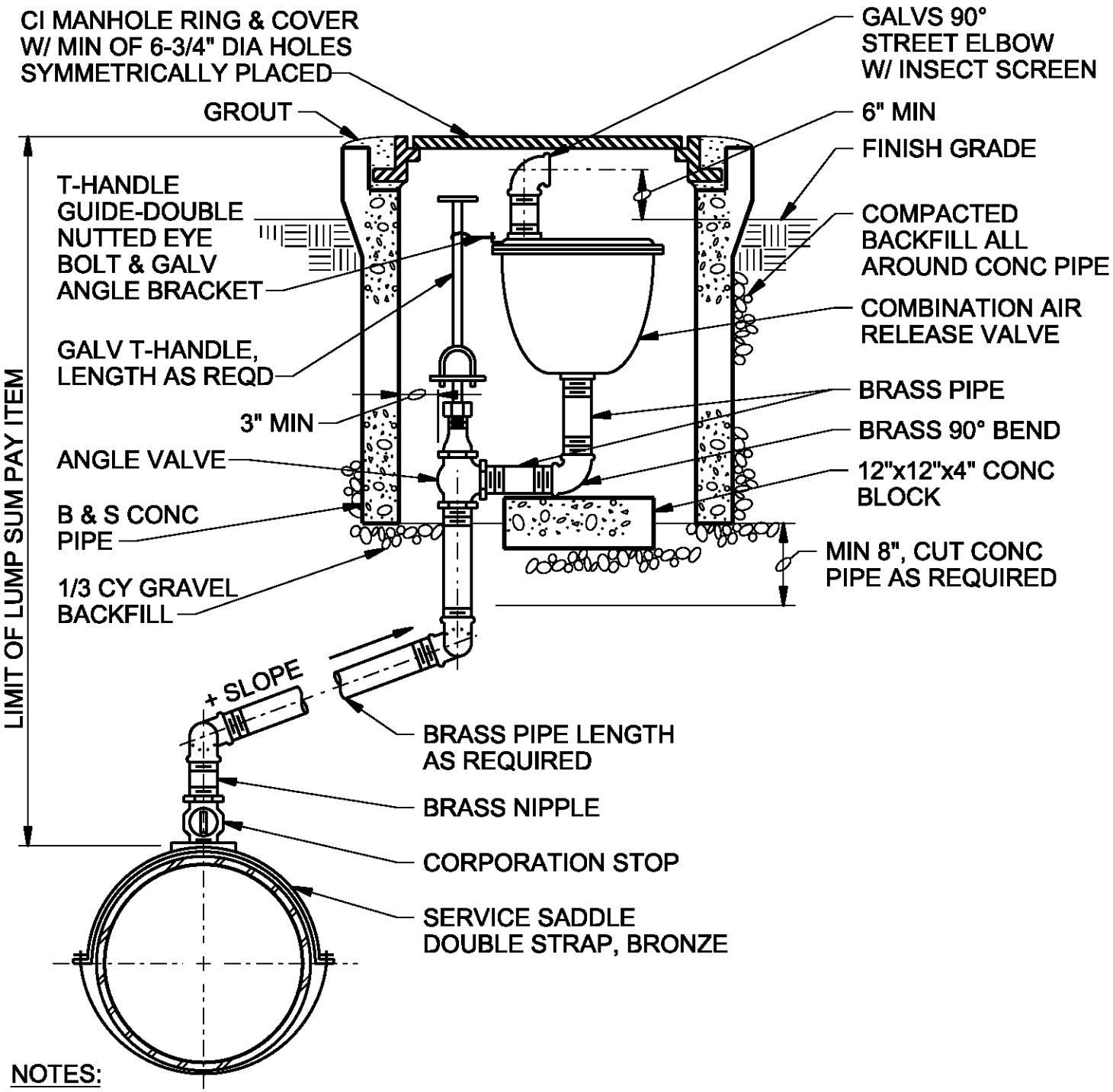

NOTES:

1. CORPORATION STOP, PIPE AND ACCESSORIES AND ANGLE VALVE TO BE SAME DIAMETER AS COMBINATION AIR RELEASE VALVE INLET.
2. PAY ITEM INCLUDES SERVICE SADDLE.

TYPE B COMBINATION AIR RELEASE VALVE ASSEMBLY - UP TO AND INCLUDING 2"

NTS

WYCKOFF GROUNDWATER TREATMENT PLANT

BAINBRIDGE ISLAND, WA

15651

CH2MHILL

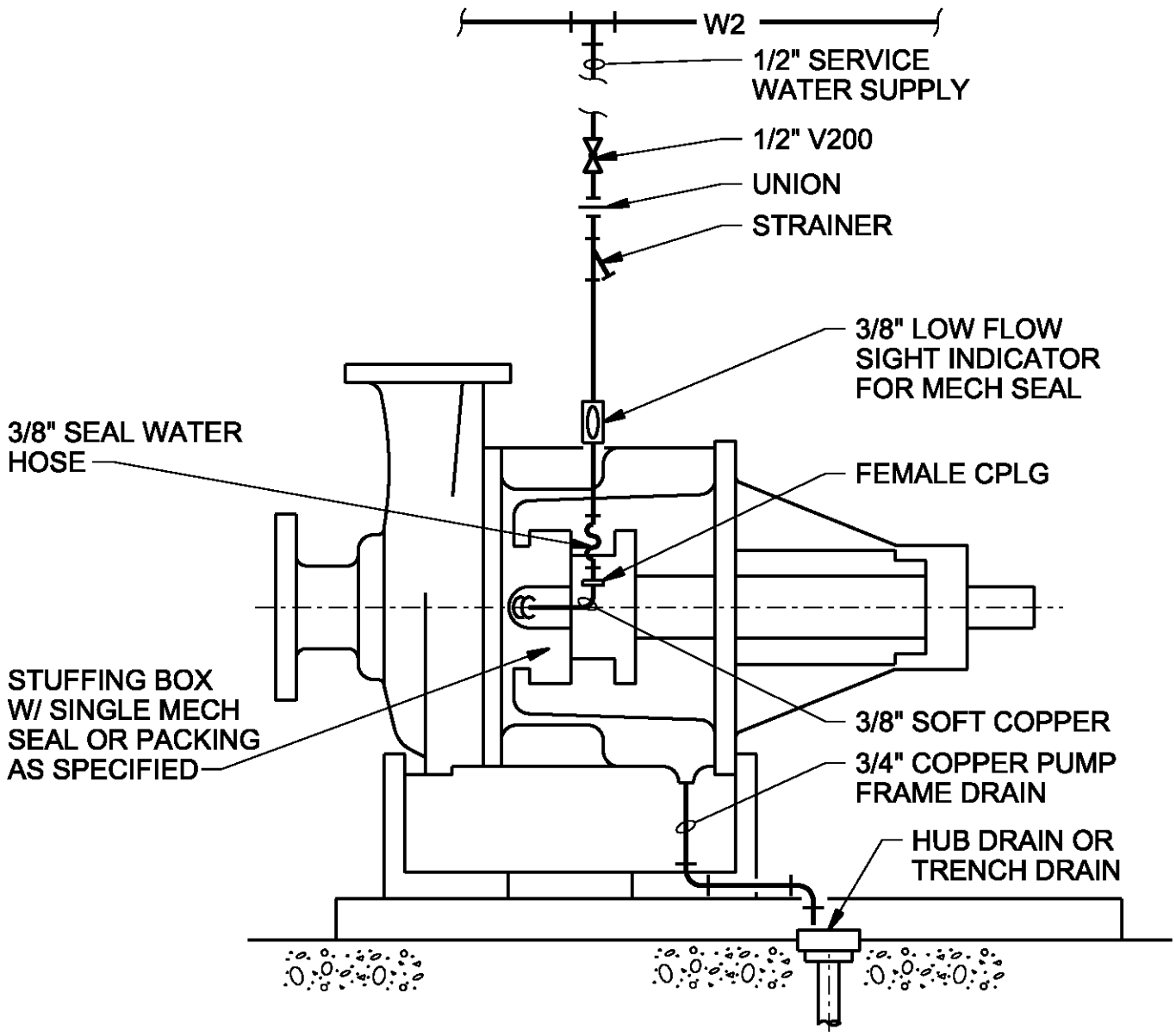

NOTES:

1. USE COPPER TUBE ADAPTERS AND BUSHINGS AS REQUIRED FOR ALL CONNECTIONS TO PUMP.

HORIZONTAL CENTRIFUGAL END SUCTION PUMP SEAL WATER PIPING

WYCKOFF GROUNDWATER TREATMENT PLANT

BAINBRIDGE ISLAND, WA

15664

CH2MHILL

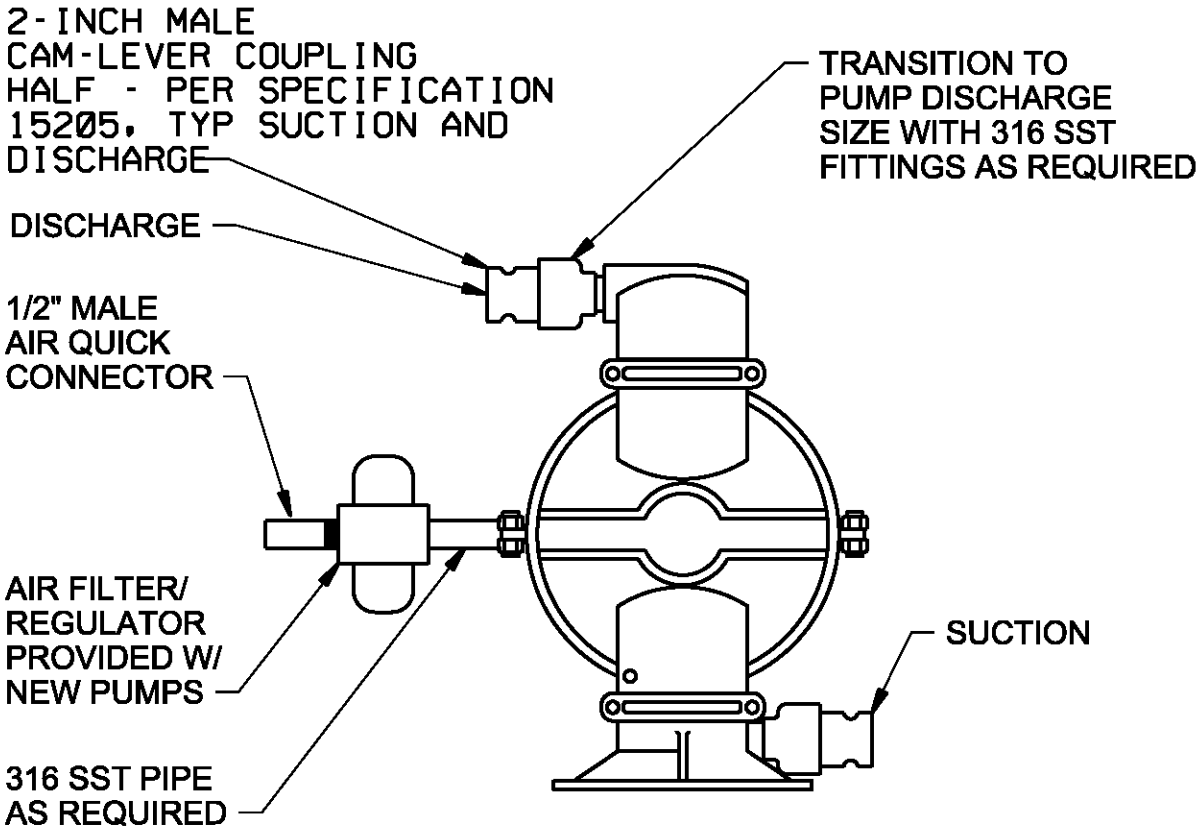

NOTES:

1. NEW 1.5" PUMP SHOWN. EXISTING 1.5" AND 3" PUMPS REQUIRE REPLACEMENT OF THE 1/2" MALE AIR QUICK CONNECTOR ONLY.
2. PROVIDE 2-INCH PUMP SUCTION AND DISCHARGE HOSE AS SPECIFIED IN SECTION 15205.

AIR OPERATED DIAPHRAGM PUMP DETAIL

WYCKOFF GROUNDWATER
TREATMENT PLANT

BAINBRIDGE ISLAND, WA

15668

CH2MHILL

$FILENAME $PLOTDATE

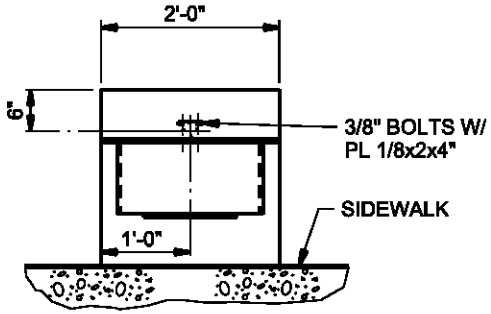

PLAN-POST MOUNT

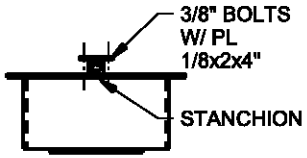

STANCHION MOUNTED

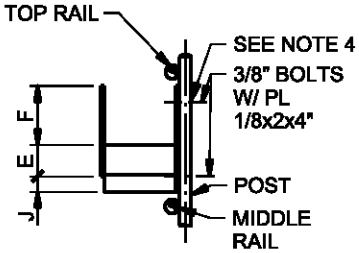

HANDRAIL POST MOUNTED

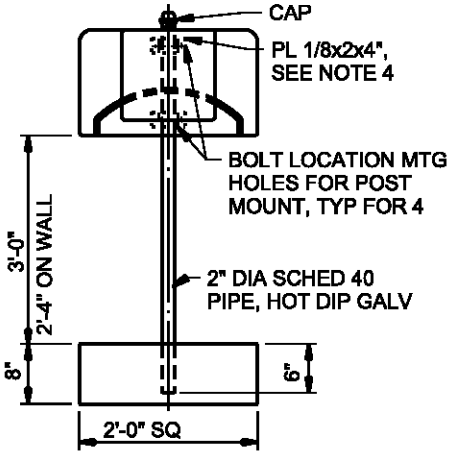

SECTION

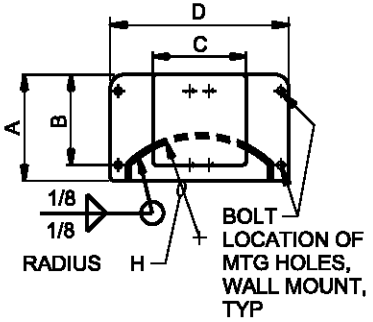

WALL MOUNTED

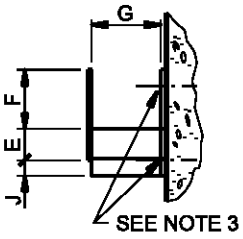

DIMENSION IN INCHES

RACK TYPE	A	B	C	D	E	F	G	H	J
TYPE A-3/4" HOSE	10-1/2	9	9	18	3	6	7-1/2	9-3/4	1-1/2

NOTES:

1. INTERIOR UNITS SHALL BE FABRICATED FROM 1/8" A-36 STEEL PLATE AND ENTIRE UNIT SHALL BE HOT DIP GALVANIZED AFTER FABRICATION.
2. EXTERIOR UNITS SHALL BE FABRICATED FROM 3/16" 6061-T6 ALUMINUM ALLOY PLATE.
3. ATTACH TO CONCRETE WALL WITH (4) - 3/8" STAINLESS STEEL STUD TYPE WEDGE ANCHORS.
4. ATTACH TO VERTICAL HANDRAIL OR INDIVIDUAL POST WITH PLATES AND (4)- 3/8" STAINLESS STEEL BOLTS.
5. ATTACH TO STEEL COLUMN WITH (4)- 3/8" ROUND HEAD BOLTS, ONE IN EACH CORNER. INSERT DOUBLE SPACER NUTS BETWEEN COLUMN AND HOSE RACK.

HOSE RACKS

WYCKOFF GROUNDWATER
TREATMENT PLANT
BAINBRIDGE ISLAND, WA

15720

CH2MHILL

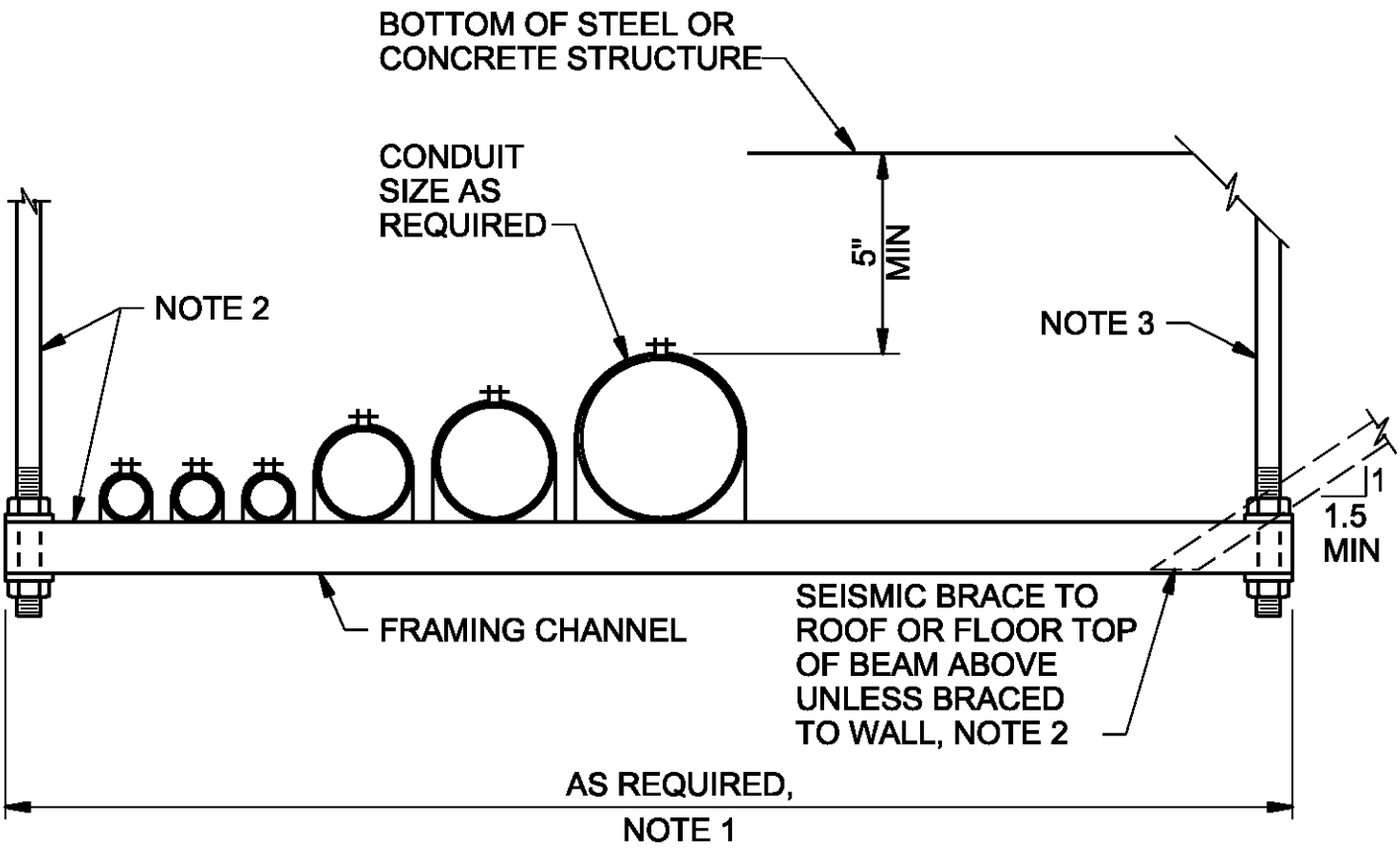

SINGLE RACK

NOTES:

1. LENGTH VARIES WITH NUMBER OF CONDUITS TO BE SUPPORTED AND SPACING BETWEEN CONDUITS.

2. DETERMINE SPAN AND TYPE OF SUPPORTS, LOCATE SUPPORTS, AND SIZE SUPPORT RODS, CONNECTIONS AND BRACES PER MANUFACTURER'S RECOMMENDATIONS AND SEISMIC REQUIREMENTS.

3. AT STEEL STRUCTURE, USE GRINNEL MALLEABLE BEAM CLAMP. AT CONCRETE STRUCTURE, USE UNIVERSAL CONCRETE INSERT, UNISTRUT CHANNEL WITH #4 x 3'-0" BELOW, OR GRINNEL FIGURE 52 ATTACHMENT PLATE, SIMILAR. TYPE AND SIZE AS REQUIRED BY TOTAL LOADS.

4. USE STAINLESS STEEL HARDWARE IN WET AND/OR CORROSIVE AREAS.

5. SPACE CONDUIT SUFFICIENTLY TO ALLOW REMOVAL OF ONE CONDUIT WITHOUT DISTURBING ADJACENT CONDUITS.

CONDUIT RACKING SYSTEM

WYCKOFF GROUNDWATER
TREATMENT PLANT

BAINBRIDGE ISLAND, WA

16100

CH2MHILL

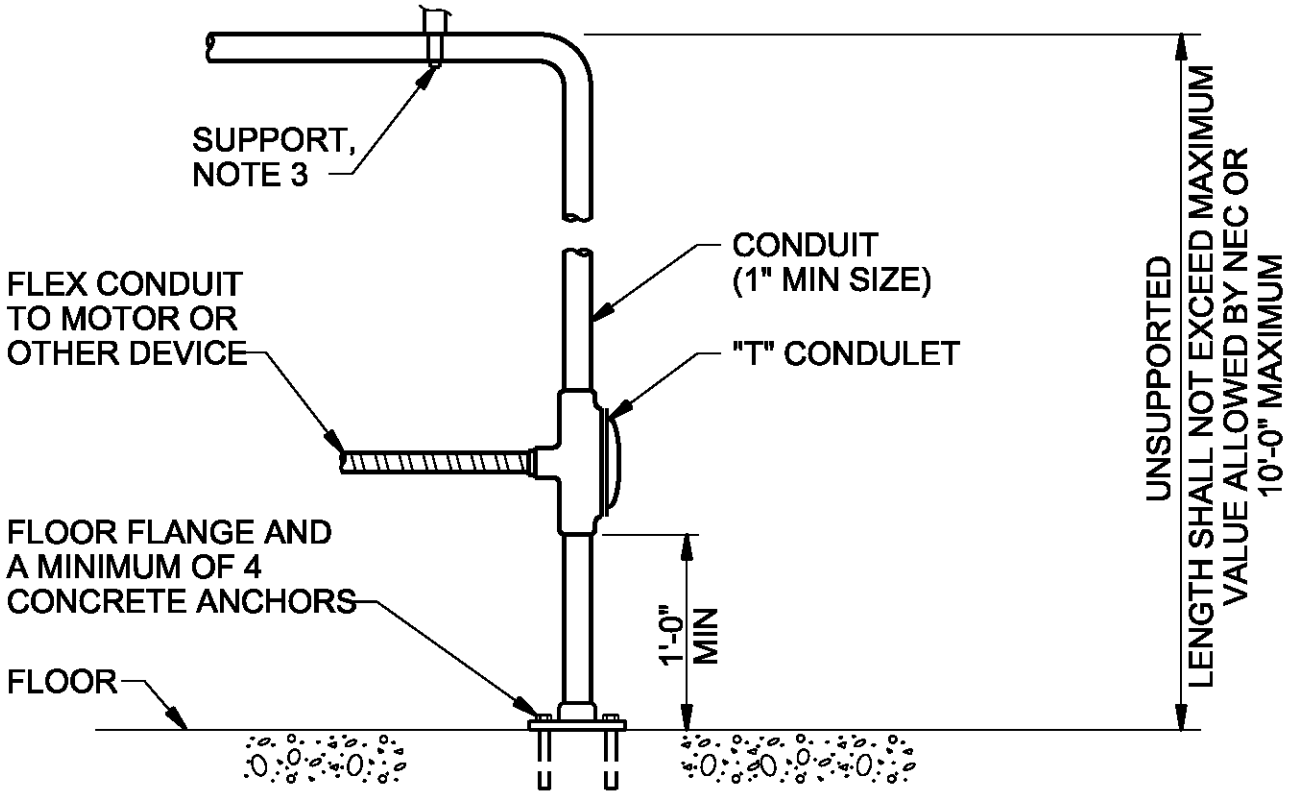

NOTES:

1. INSTALLATION OF CONDUIT TO A MOTOR OR OTHER DEVICE WHERE A FLEXIBLE CONNECTION IS REQUIRED AND NO JUNCTION BOXES OR CONTROL DEVICES ARE REQUIRED SHALL BE MADE IN ACCORDANCE WITH THIS DETAIL.

2. ALL HARDWARE SHALL BE STAINLESS STEEL.

3. SIZE TOP AND ANY INTERMEDIATE LATERAL SUPPORTS AS REQUIRED FOR STABILITY AND SEISMIC LOADS. SEE GENERAL ELECTRICAL CONSTRUCTION NOTES ON DRAWINGS.

CONDUIT RACKING SYSTEM

WYCKOFF GROUNDWATER TREATMENT PLANT

BAINBRIDGE ISLAND, WA

16103

CH2MHILL

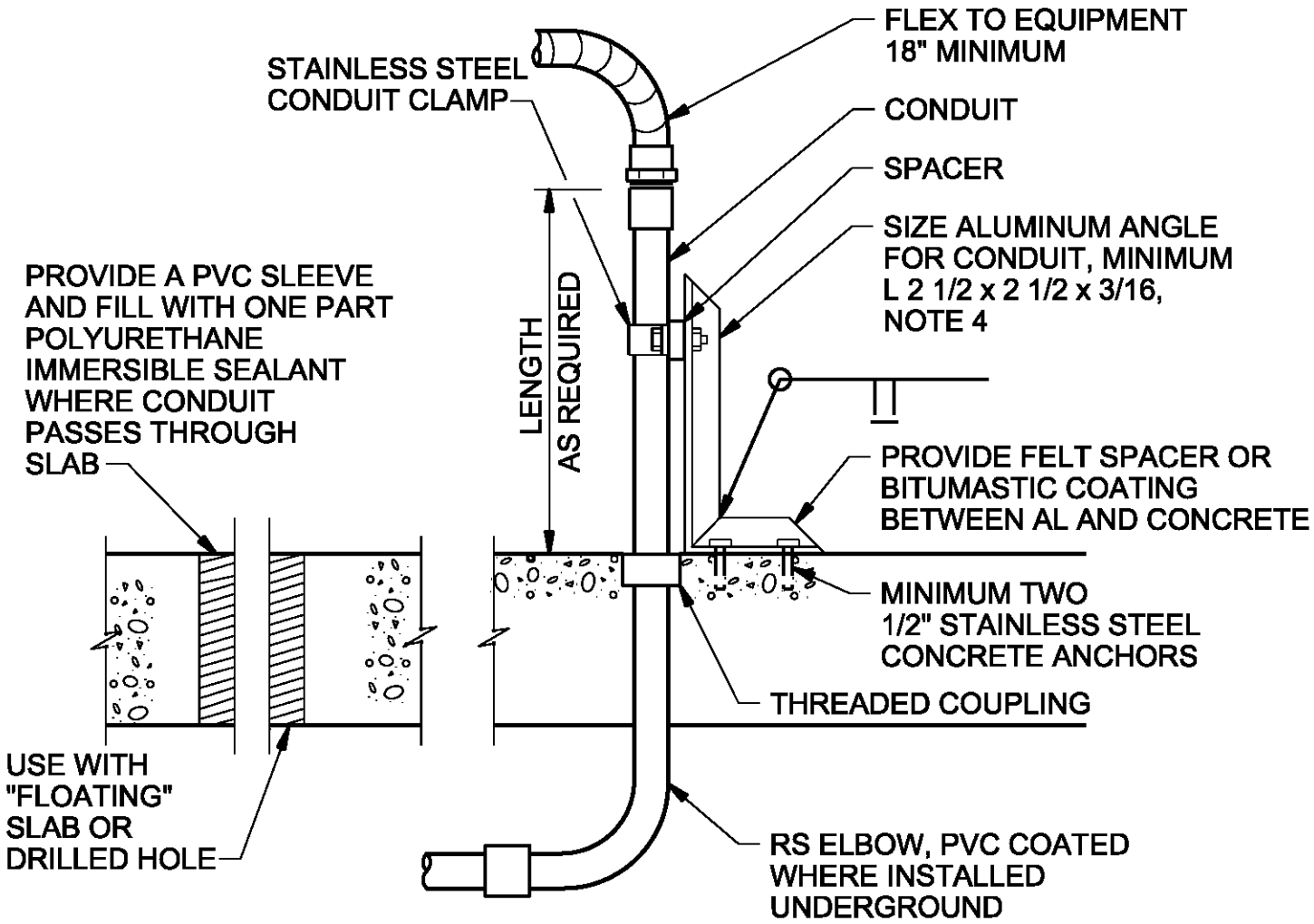

NOTES:

1. PROVIDE SUPPORT FOR ALL METAL CONDUITS WHICH EXTEND MORE THAN 18 INCHES OUT OF THE SLAB WITHIN 3 INCHES OF THE END OF THE CONDUIT.

2. PROVIDE SUPPORT FOR ALL PVC CONDUIT WITHIN 3 INCHES OF THE END OF THE CONDUIT.

3. THIS DETAIL SHALL BE USED FOR SUPPORT OF ALL CONDUITS WHICH ARE NOT OTHERWISE SUPPORTED IN A RIGID MANNER SUCH AS AGAINST AN EQUIPMENT BASE, WALL, COLUMN, ETC, AS REQUIRED ABOVE.

4. FOR ANY ANGLE GREATER THAN 2'-6" TALL, SIZE ANGLE SUPPORT AND ANCHORS FOR SEISMIC LOADS.

CONDUIT TRANSITION AND SUPPORT

WYCKOFF GROUNDWATER
TREATMENT PLANT

BAINBRIDGE ISLAND, WA

16105

CH2MHILL

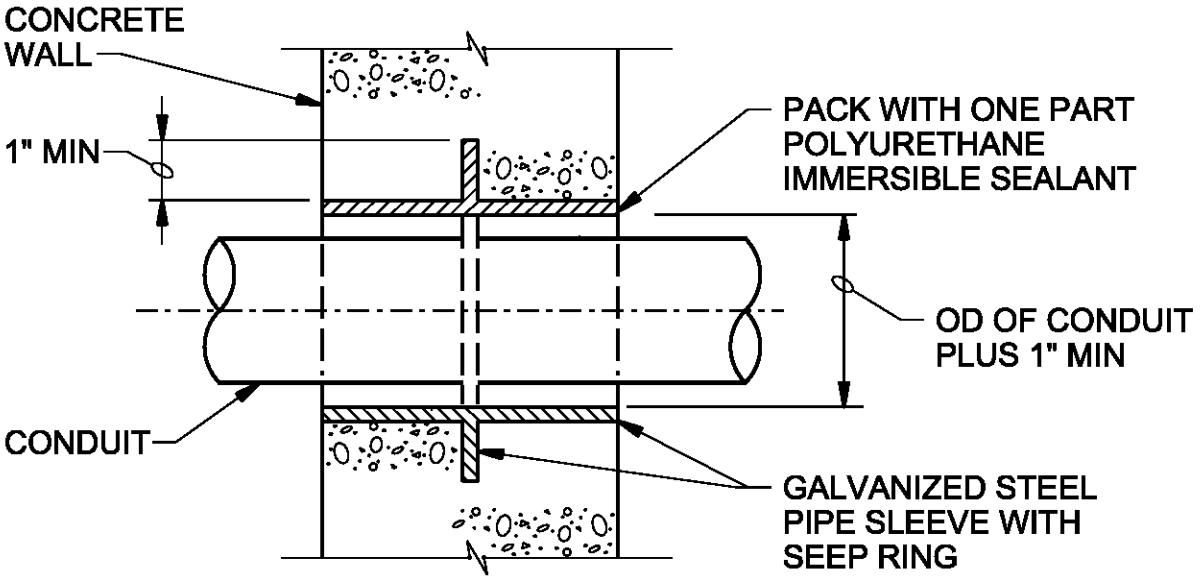

CONDUIT UNDERGROUND ENTRANCE

WYCKOFF GROUNDWATER TREATMENT PLANT

BAINBRIDGE ISLAND, WA

16107

CH2MHILL

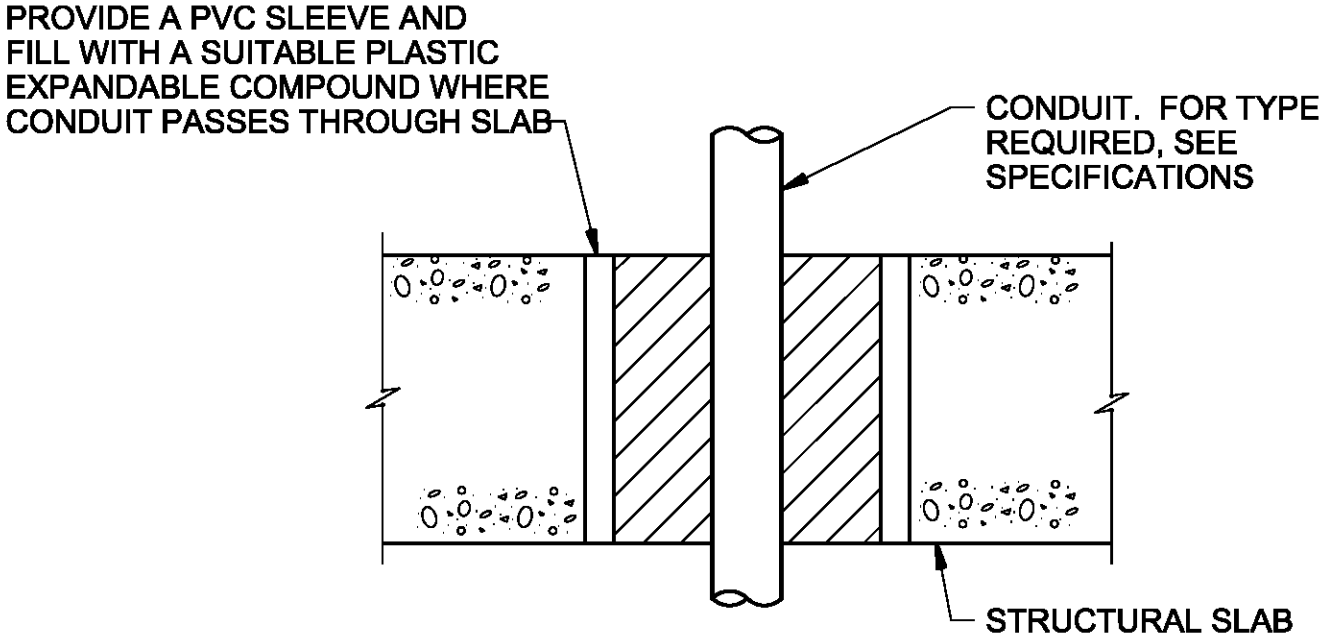

NOTE:

ALL CONDUITS THROUGH CONCRETE FLOOR SLABS AND EQUIPMENT PADS SHALL BE INSTALLED IN ACCORDANCE WITH THIS DETAIL.

SLAB PENETRATION

WYCKOFF GROUNDWATER TREATMENT PLANT

BAINBRIDGE ISLAND, WA

16110

CH2MHILL

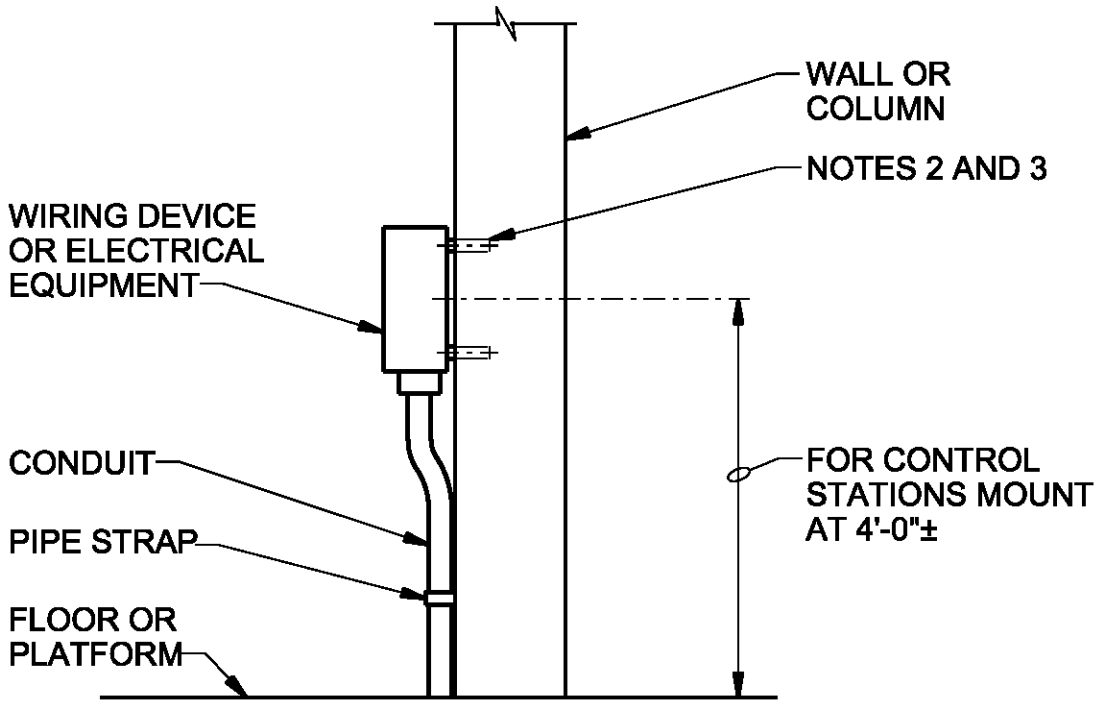

NOTES:

1. ALL MOUNTING HARDWARE SHALL BE STAINLESS STEEL. USE WASHER AND SPLIT-LOCK WASHERS UNDER ALL NUTS.

2. ON CONCRETE WALLS USE STAINLESS STEEL CONCRETE ANCHORS. MOUNT ENCLOSURE ON 1/2" SPACERS OF 1/2" SCHEDULE 80 PVC CONDUIT.

3. BOXES 6 INCHES SQUARE AND LESS SHALL BE SUPPORTED BY TWO ANCHORS. LARGER BOXES SHALL BE SUPPORTED BY AT LEAST FOUR.

WALL OR COLUMN MOUNTED DEVICE

WYCKOFF GROUNDWATER
TREATMENT PLANT

BAINBRIDGE ISLAND, WA

16152

CH2MHILL

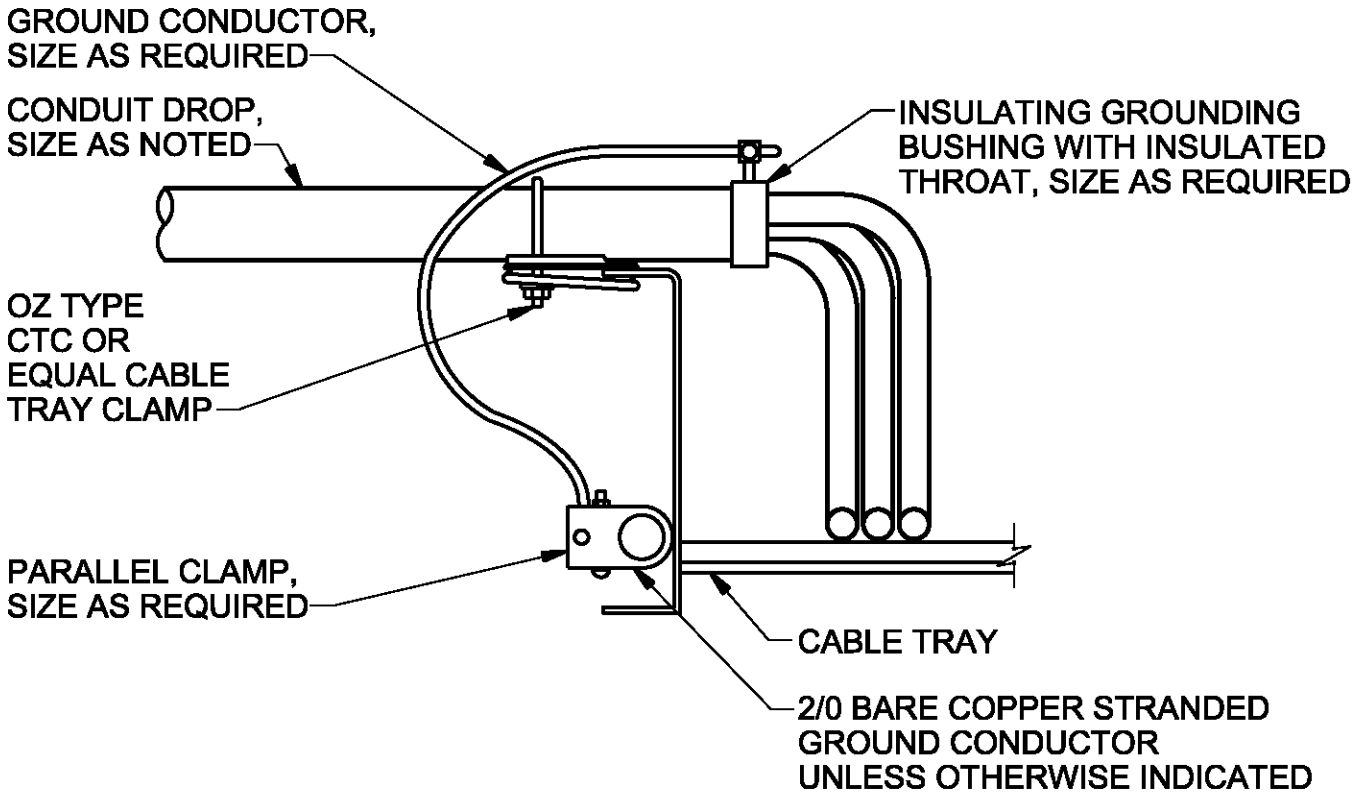

NOTE:

FASTENING HARDWARE IN TRAY SHALL BE ROUNDED AND HAVE NO SHARP CORNERS.

CONDUIT DROP INTO CABLE TRAY

WYCKOFF GROUNDWATER TREATMENT PLANT

BAINBRIDGE ISLAND, WA

16192

CH2MHILL

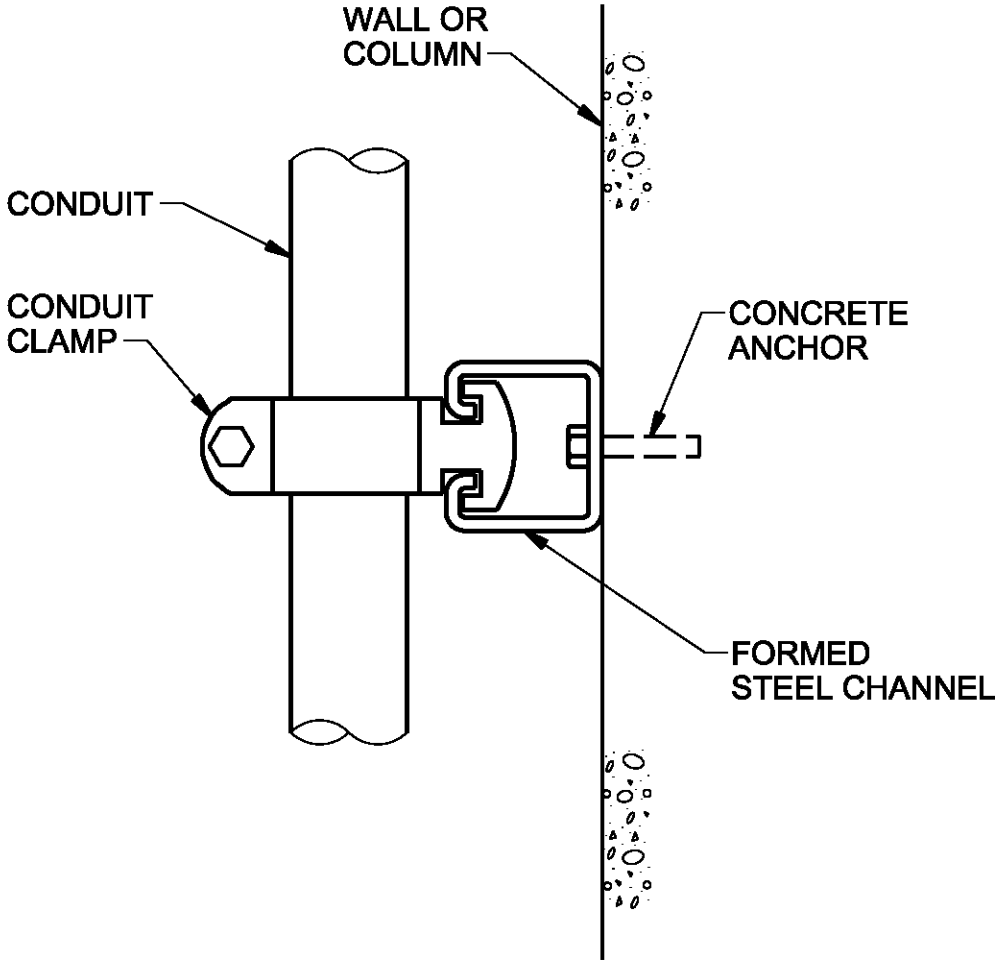

NOTE:
SUPPORT ALL EXPOSED CONDUITS ON FORMED STEEL CHANNELS.

CONDUIT SUPPORT ON STRUCTURE

WYCKOFF GROUNDWATER
TREATMENT PLANT
BAINBRIDGE ISLAND, WA

16195

CH2MHILL

$FILENAME $PLOTTIME

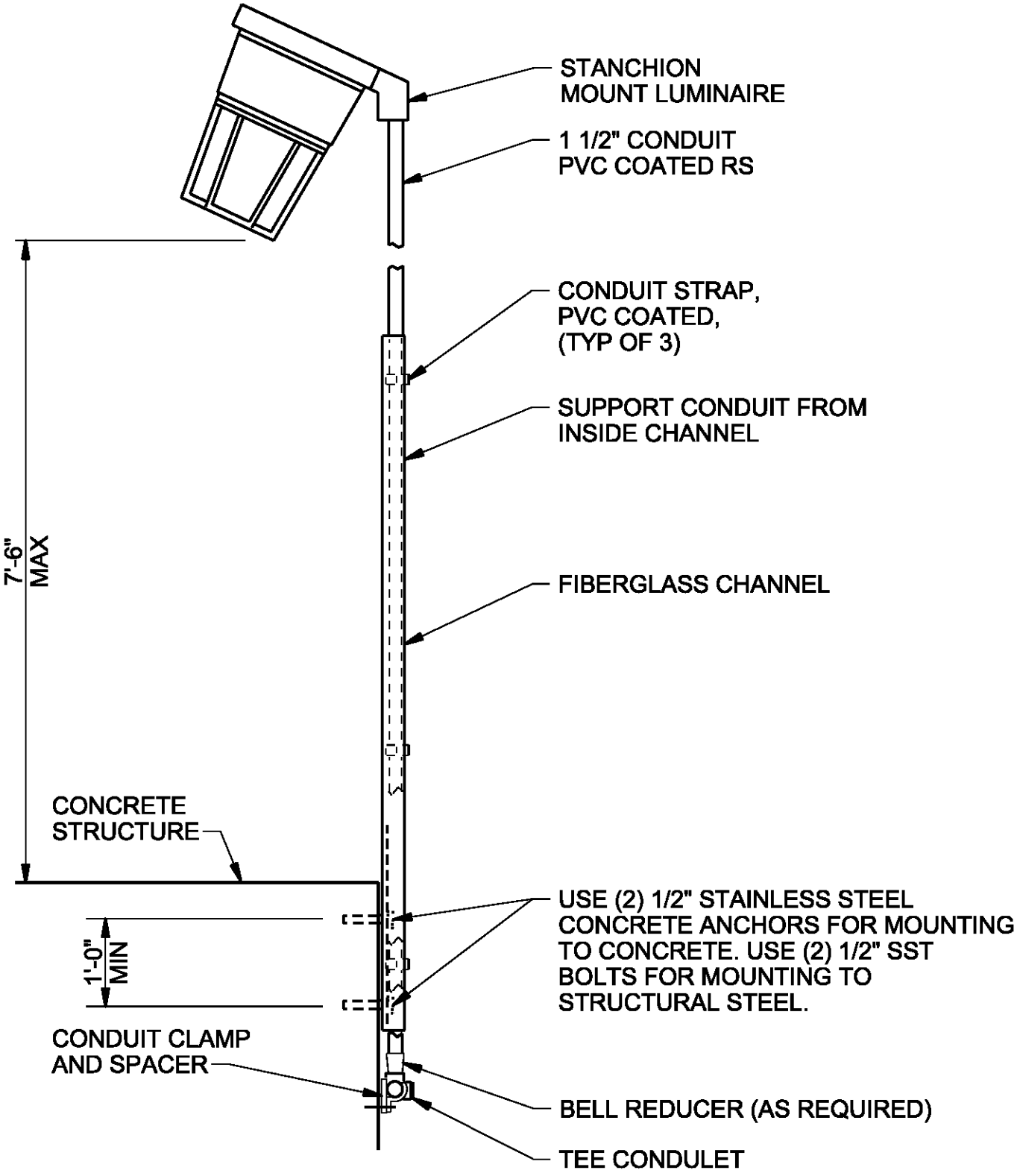

STANCHION MOUNTED LUMINAIRE

WYCKOFF GROUNDWATER
TREATMENT PLANT

BAINBRIDGE ISLAND, WA

16211

CH2MHILL

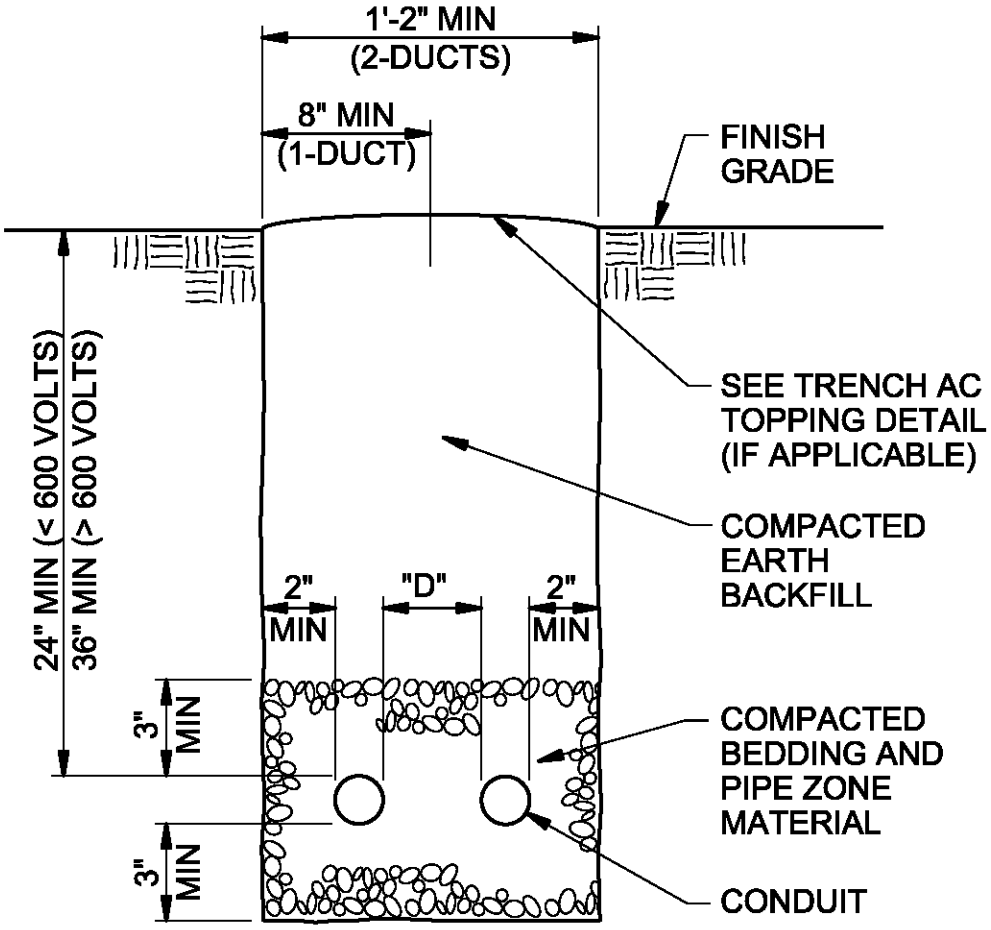

D = 3" MIN FOR 2" AND
LARGER CONDUIT

D = 2" MIN FOR 1 1/2" AND
SMALLER CONDUIT

TRENCH AND CONDUIT PLACEMENT

WYCKOFF GROUNDWATER
TREATMENT PLANT

BAINBRIDGE ISLAND, WA

16325A

CH2MHILL

$FILENAME $PLOTTIME

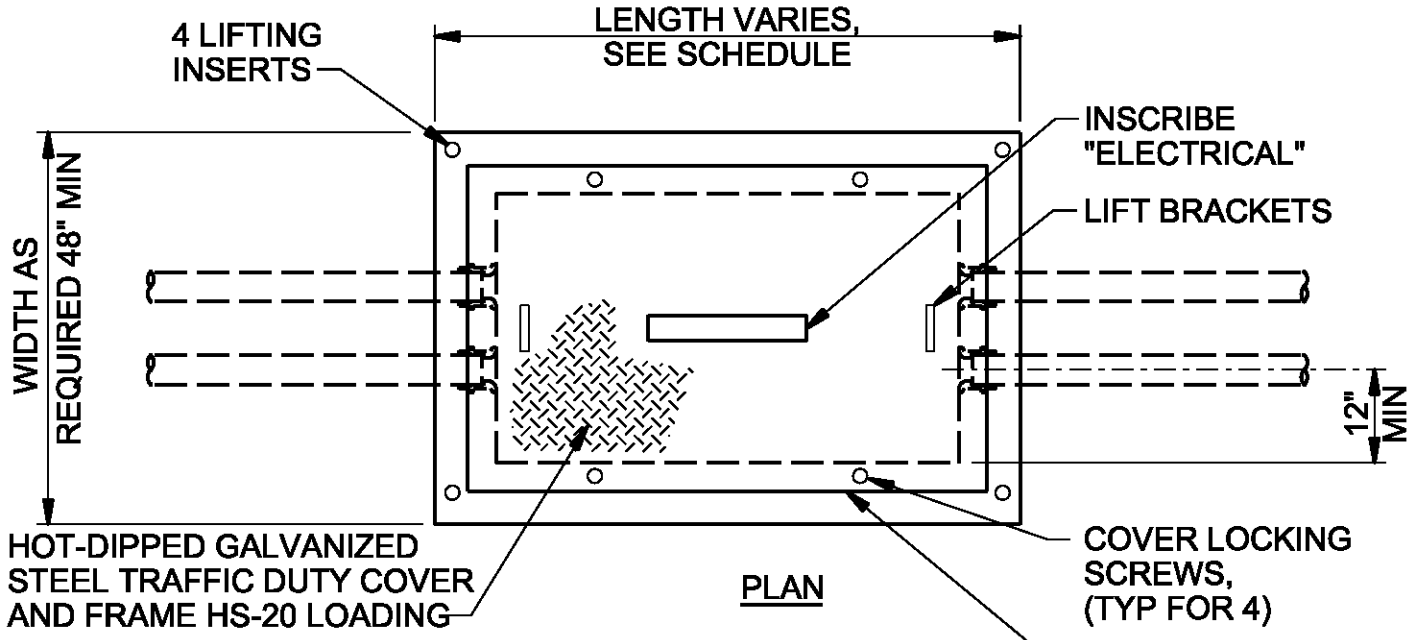

PLAN

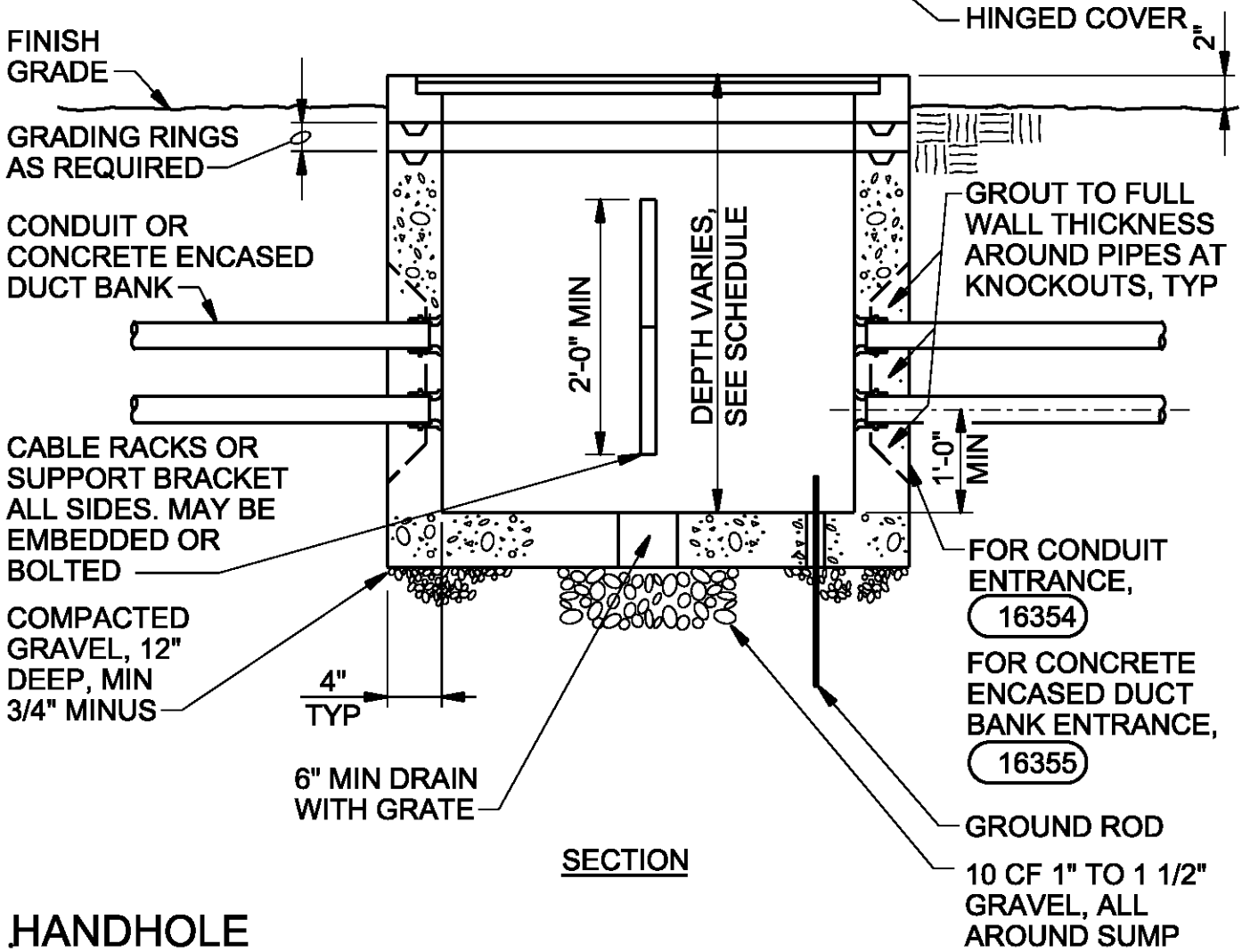

SECTION

HANDHOLE

WYCKOFF GROUNDWATER TREATMENT PLANT

BAINBRIDGE ISLAND, WA

16353

CH2MHILL

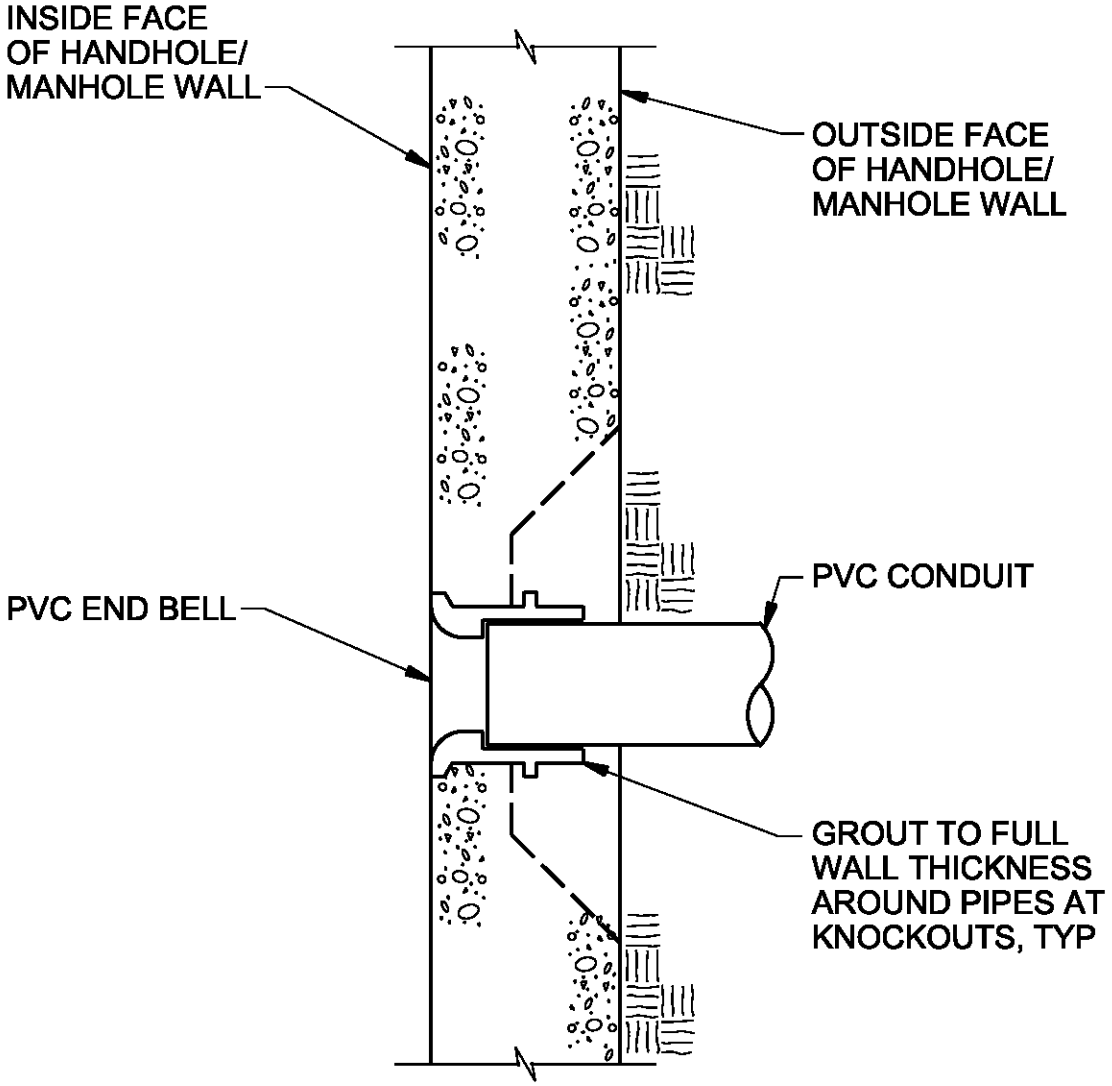

CONDUIT HANDHOLE/MANHOLE ENTRANCE

WYCKOFF GROUNDWATER
TREATMENT PLANT

BAINBRIDGE ISLAND, WA

16354

CH2MHILL

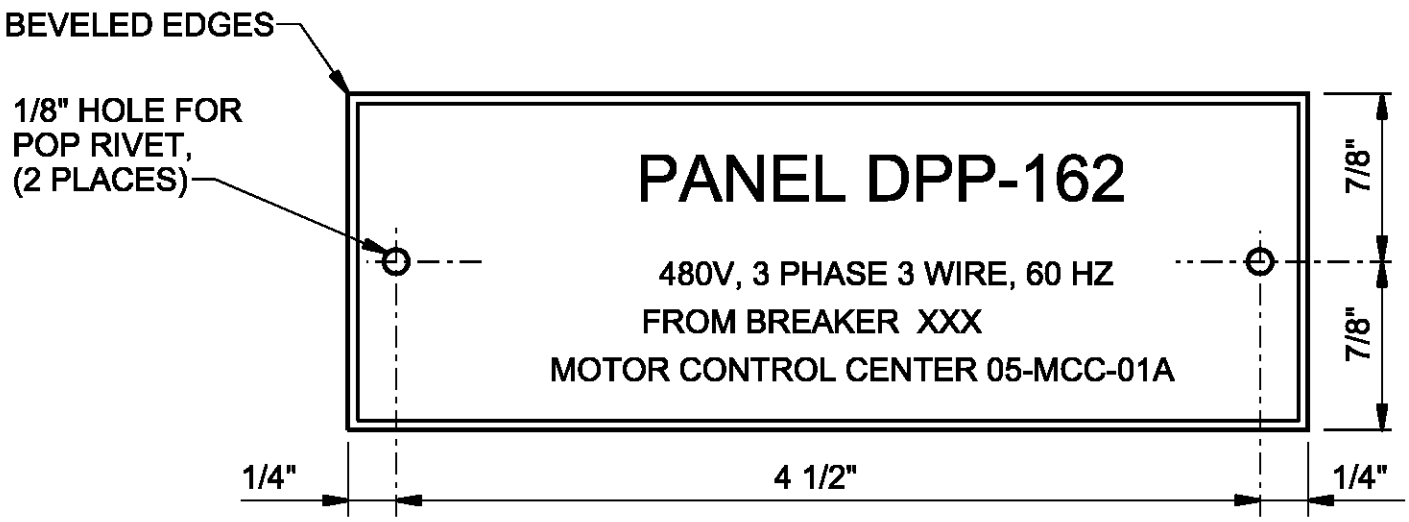

TOP ROW: 3/8 " LETTERS
OTHER ROWS: 1/8 " LETTERS
1/4 " SPACING BETWEEN FIRST 2 ROWS
1/8 " SPACING BETWEEN OTHER ROWS

COLOR SCHEDULE		
PANEL TYPE	BACKGROUND	LETTERING
208/120 VOLT, 60 HZ	BLACK	WHITE
480 VOLT, 60 HZ	BLACK	WHITE
EMERGENCY SERVICES	RED	WHITE

REQUIRED DATA

FIRST LINE: PANEL DESIGNATION
SECOND LINE: PHASE, VOLTAGE, FREQUENCY
THIRD AND FOURTH LINES: POWER SOURCE AND BREAKER

XXX = BASED ON FINAL DESIGN SHOP DRAWING

PANELBOARD NAMEPLATE

WYCKOFF GROUNDWATER
TREATMENT PLANT
BAINBRIDGE ISLAND, WA

16714

CH2MHILL

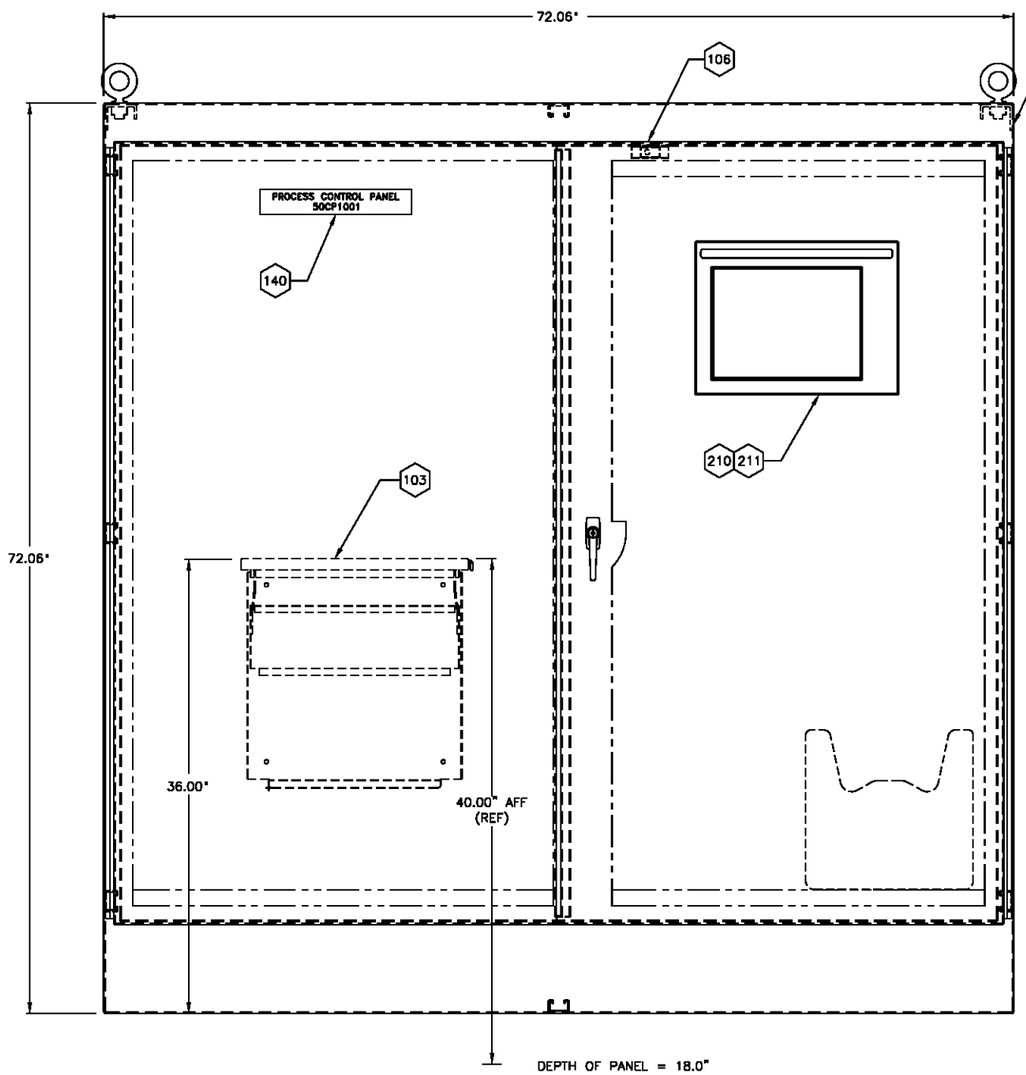

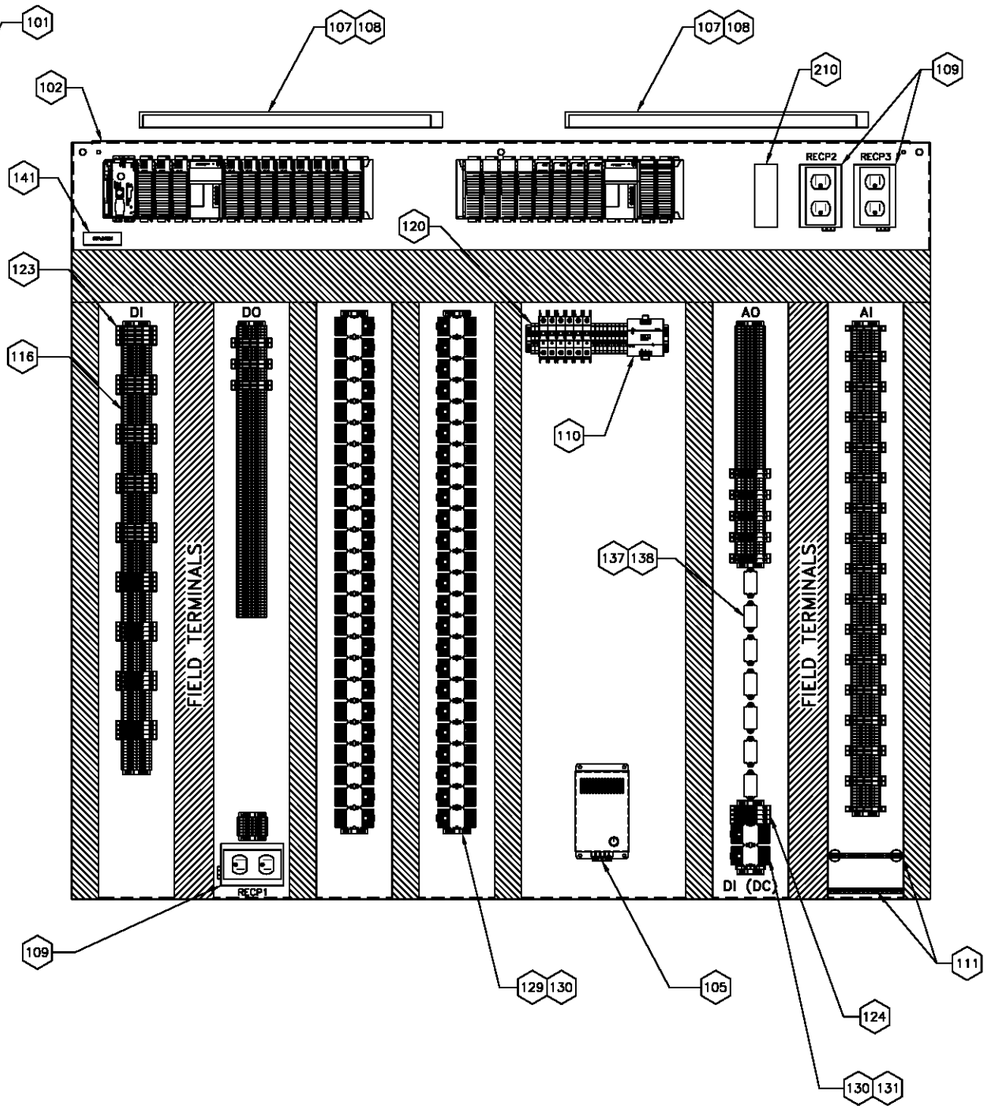

NOTE:
FOR ITEM DESCRIPTIONS SEE THE TECHNICAL SYSTEMS, INC. (TSI) BILL OF MATERIALS (VOL 3,DEVICE OPERATION AND MAINTENANCE DATA) IN VOLUME VIII OF THE OPERATION ANDMAINTENANCE DATA (MANUAL).

AS-BUILT

4	4/27/10	REVISED AS-BUILT	JB	ROW
3	12/15/09	PRELININARY AS-BUILT	JB	ROW

INSTRUMENTATION AND CONTROL

35b

PROCESS CONTROL PANEL No. 1 (50CP1001)
PANEL LAYOUT

J-01 New.dgn 4/30/2010 10:16:31 AM

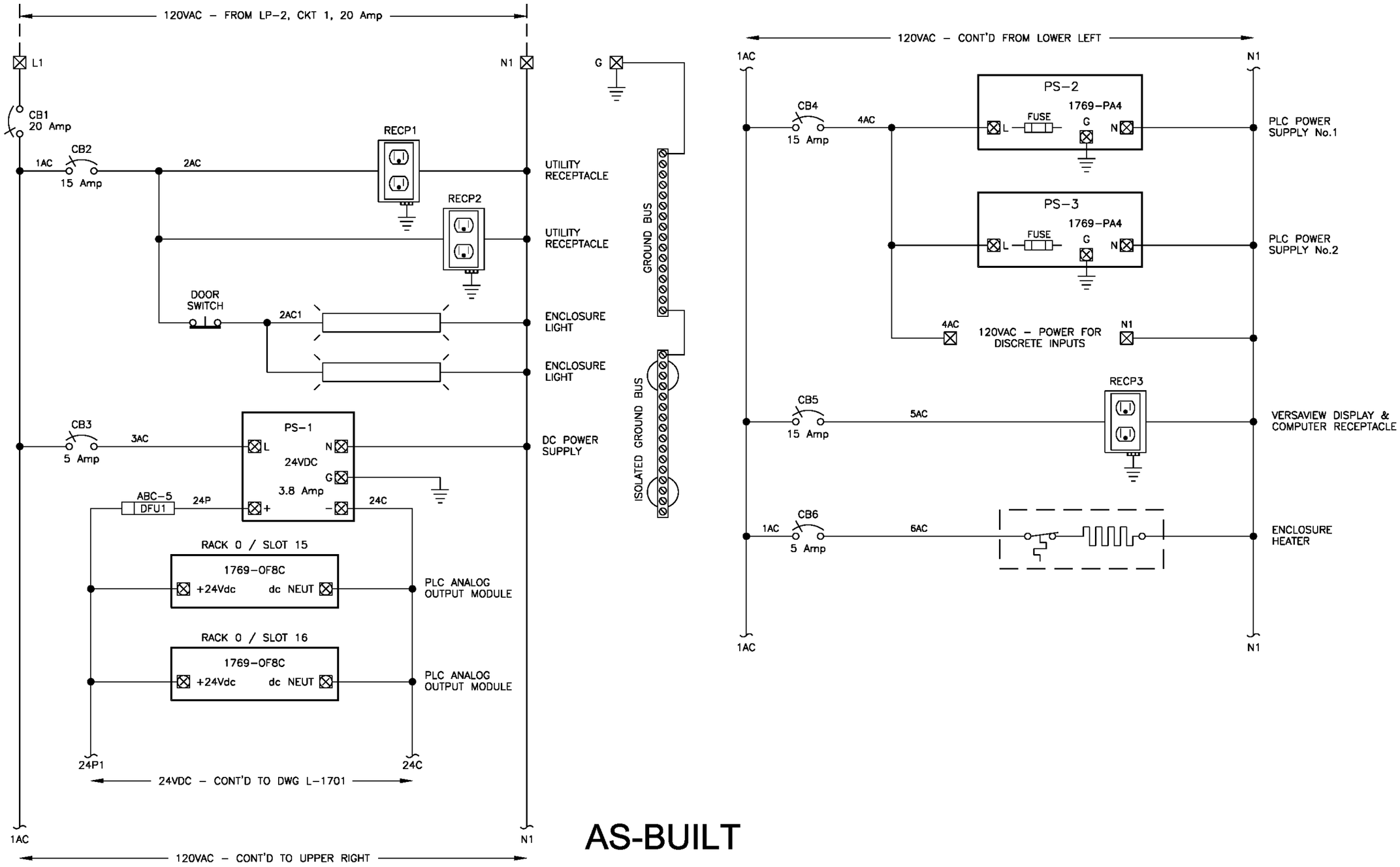

AS-BUILT

4	4/27/10	REVISED AS-BUILT	JB	ROW
3	12/15/09	PRELIMINARY AS-BUILT	JB	ROW

INSTRUMENTATION AND CONTROL

35a

PROCESS CONTROL PANEL No. 1 (50CP1001)
CONTROL POWER DISTRIBUTION

P-01 New.dgn 4/30/2010 10:05:09 AM

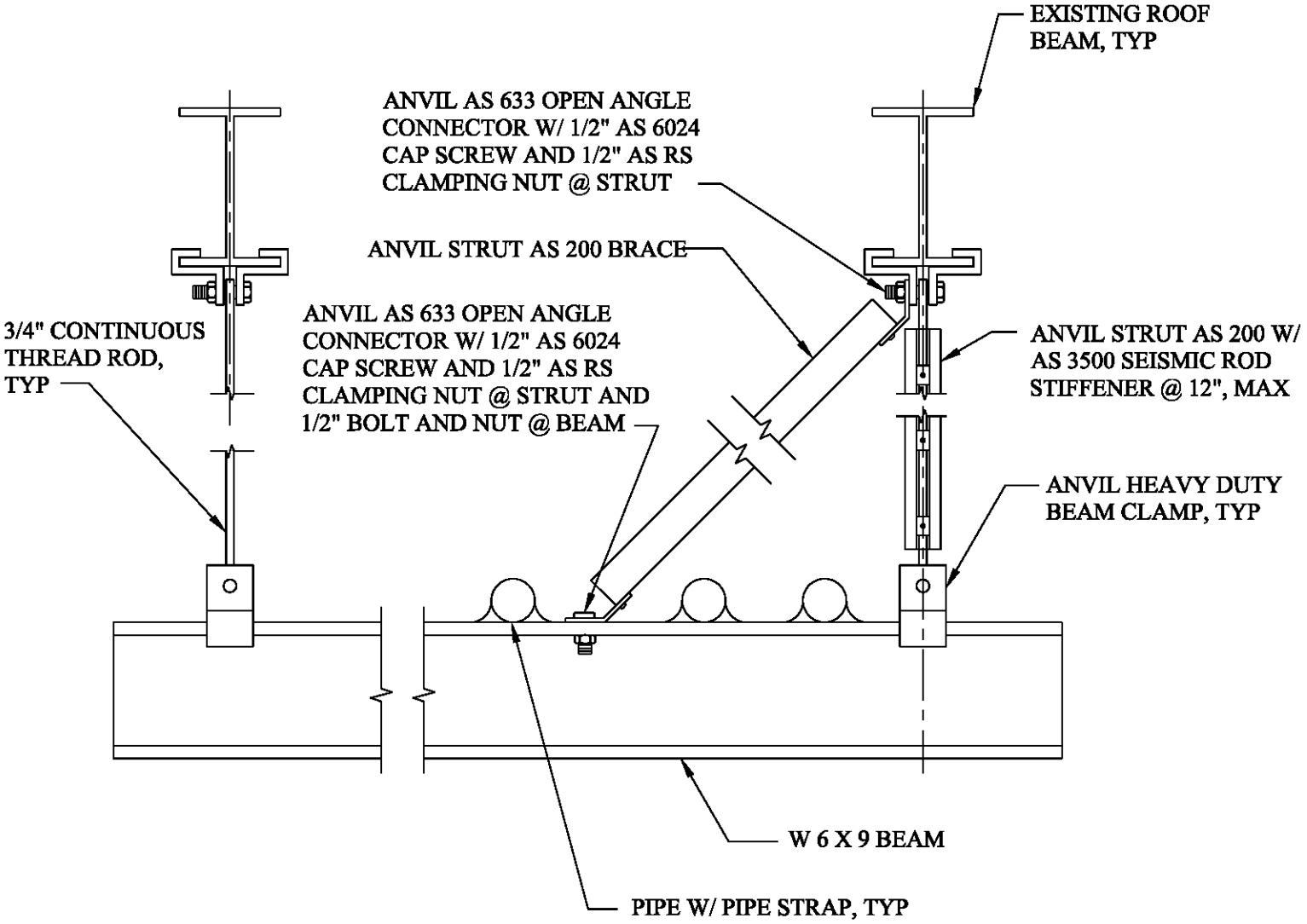

NOTES:

1. LIMIT BRACE LENGTH TO 9'-0" MAX
2. TRANSVERSE BRACE REQ'D @ ALL GRAVITY SUPPORTS

SK-1 TRAPEZE TRANSVERSE LATERAL SUPPORT

WYCKOFF GROUNDWATER TREATMENT PLANT

BAINBRIDGE ISLAND ,WA

ECC

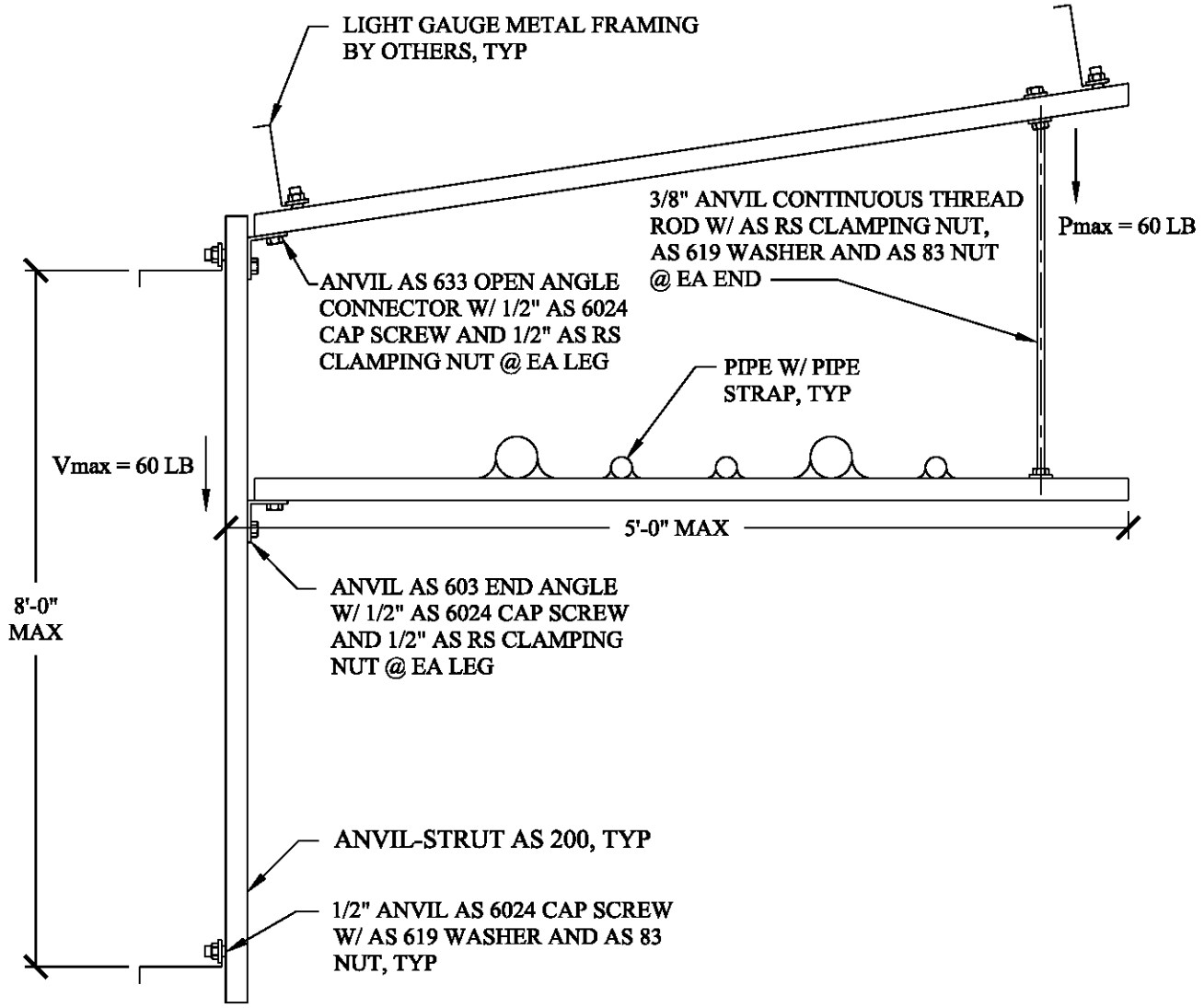

NOTES:

1. EOR TO VERIFY THAT SHOWN CONNECTIONS AND LOADS ARE COMPATIBLE W/ STRUCTURE

SK-10 NOTH/ SOUTH WALL COPPER PIPE SUPPORT

WYCKOFF GROUNDWATER TREATMENT PLANT

BAINBRIDGE ISLAND ,WA

ECC

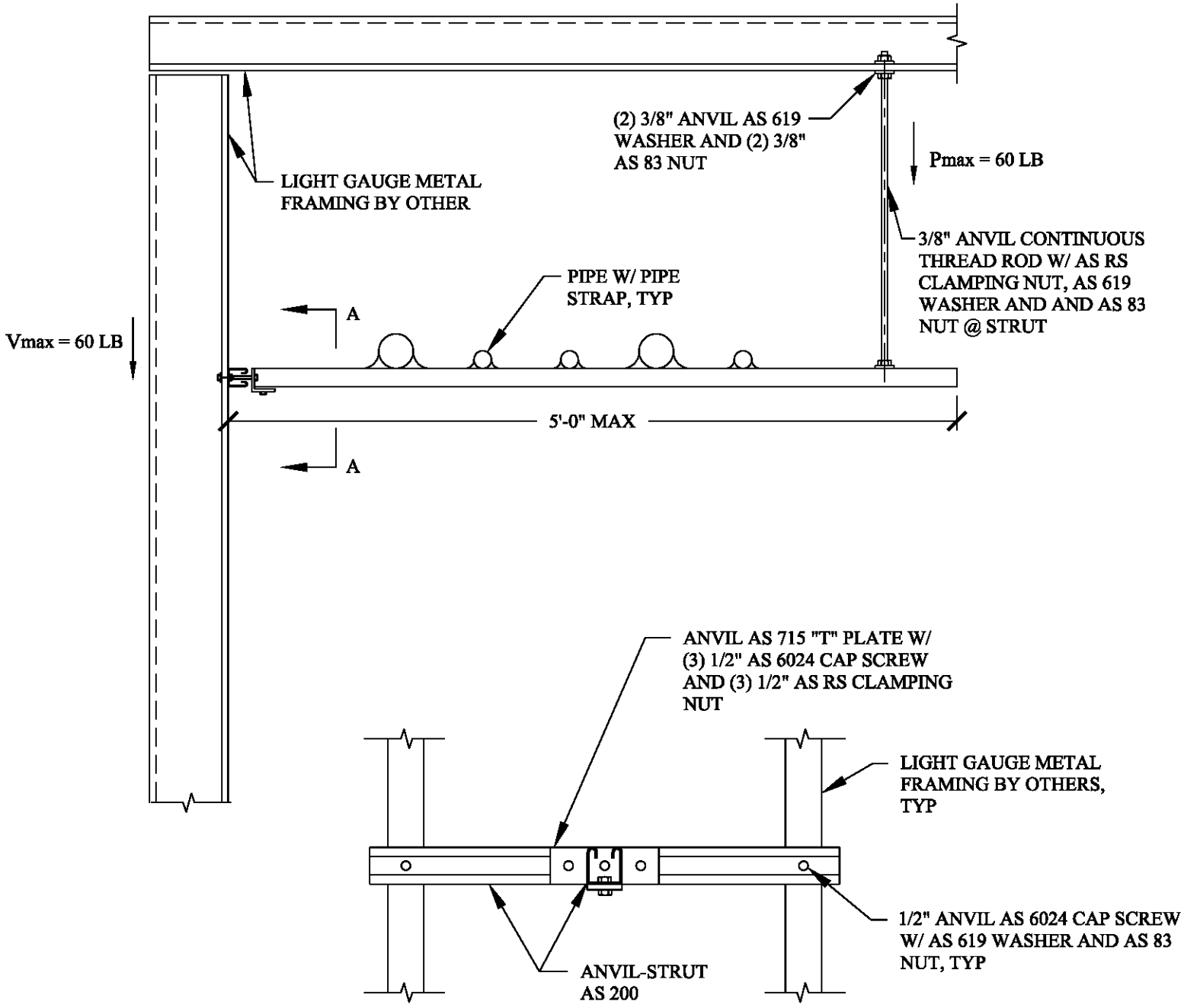

NOTES:

1. EOR TO VERIFY THAT SHOWN CONNECTIONS AND LOADS ARE COMPATIBLE W/ STRUCTURE

SECTION A-A

SK-11 EAST WALL COPPER PIPE SUPPORT

WYCKOFF GROUNDWATER TREATMENT PLANT

BAINBRIDGE ISLAND ,WA

ECC

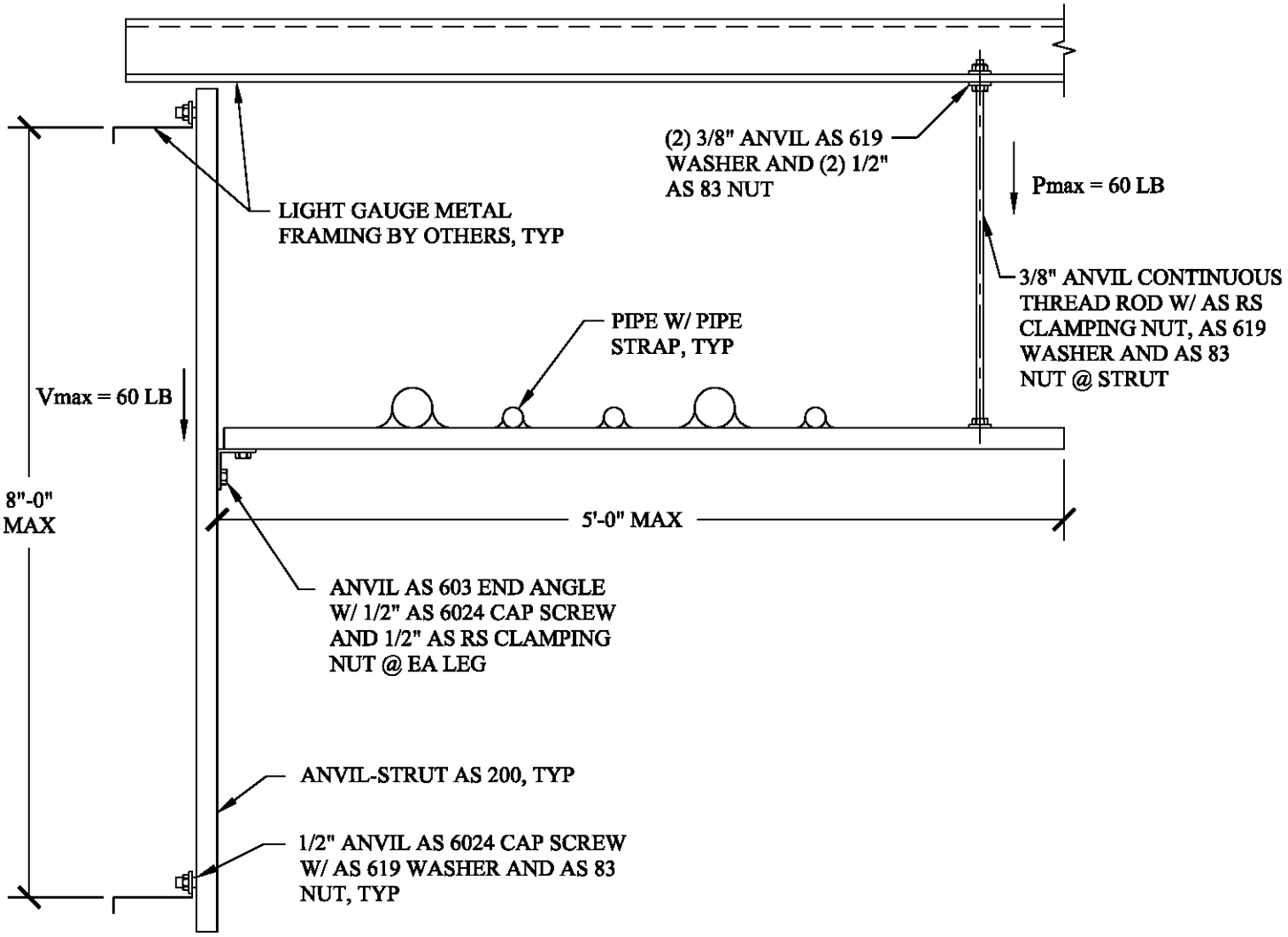

NOTES:

1. EOR TO VERIFY THAT SHOWN CONNECTIONS AND LOADS ARE COMPATIBLE W/ STRUCTURE

SK-12 WEST WALL COPPER PIPE SUPPORT

WYCKOFF GROUNDWATER TREATMENT PLANT

BAINBRIDGE ISLAND ,WA

ECC

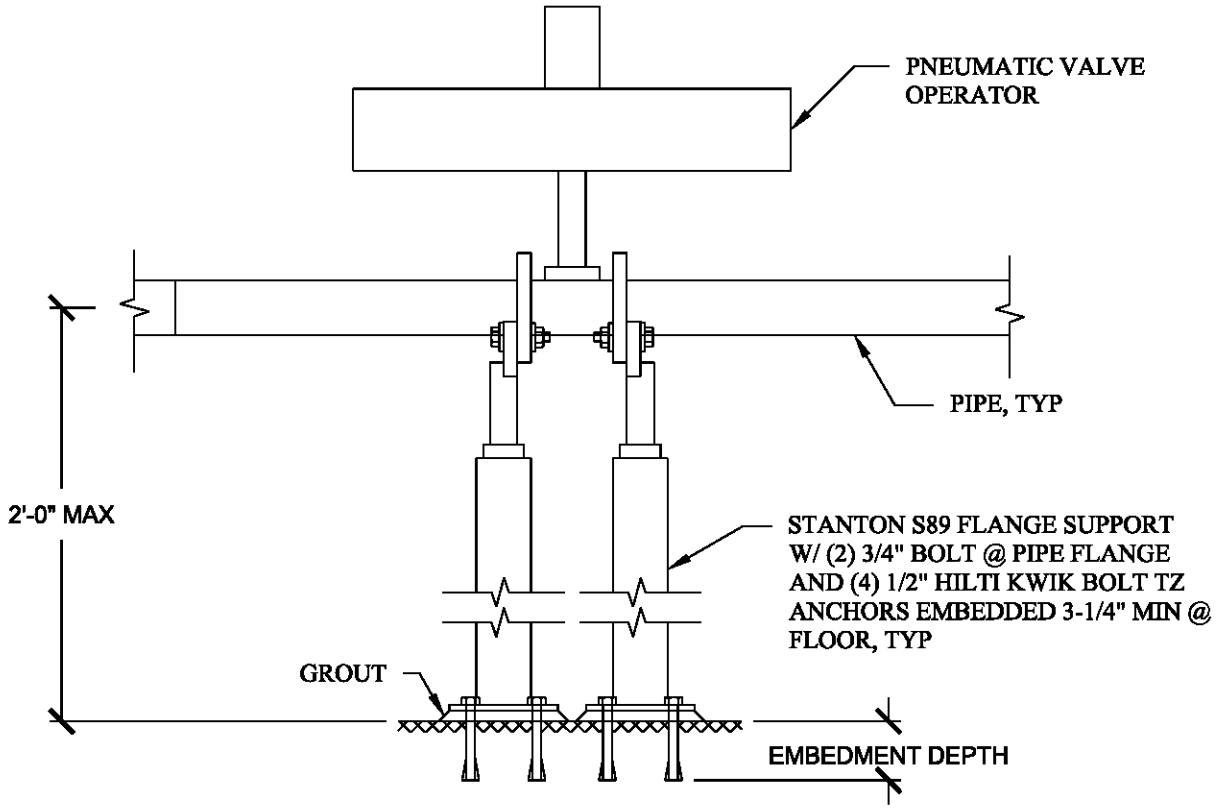

NOTES:

1. GROUT ONLY REQ'D WHERE NEEDED IN ORDER TO LEVEL GROUND

SK-13 PNEUMATIC VALVE OPERATOR SUPPORT

WYCKOFF GROUNDWATER TREATMENT PLANT

BAINBRIDGE ISLAND ,WA

ECC

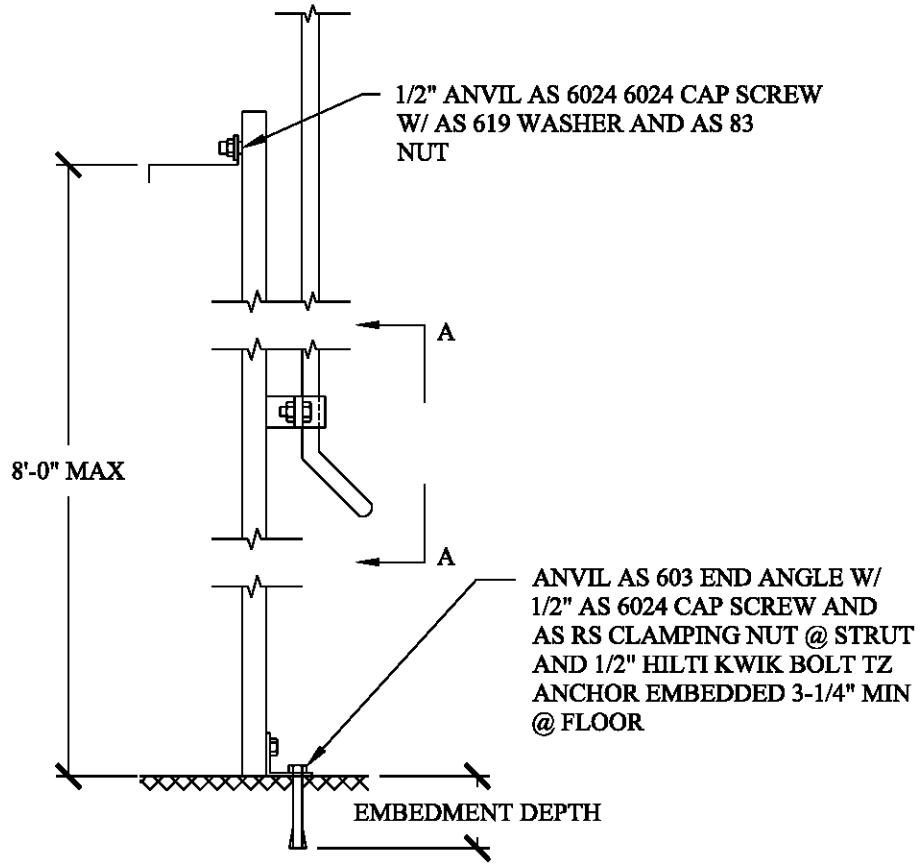

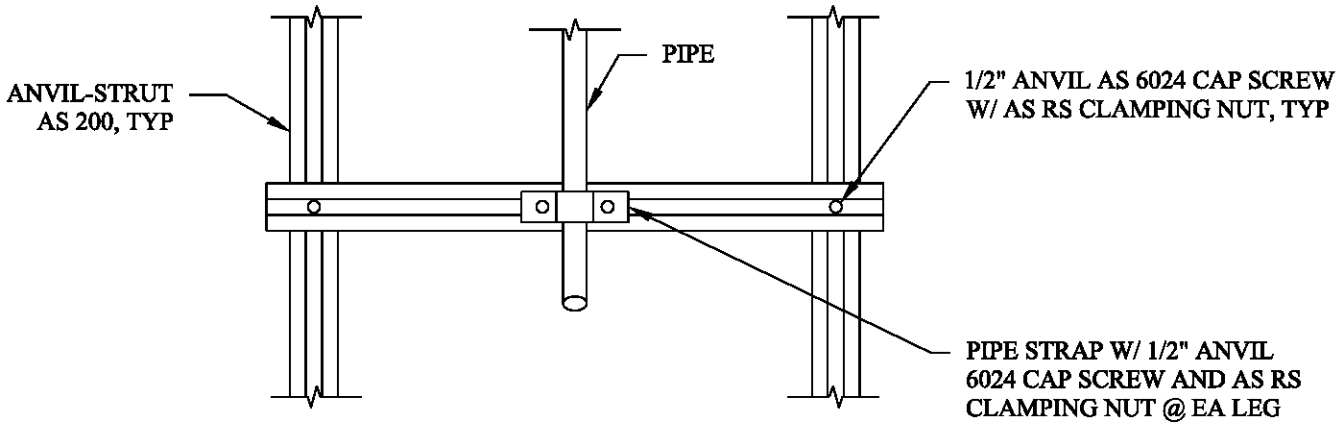

SECTION A-A

SK-14 PIPE DROP SUPPORT

WYCKOFF GROUNDWATER TREATMENT PLANT

BAINBRIDGE ISLAND ,WA

ECC

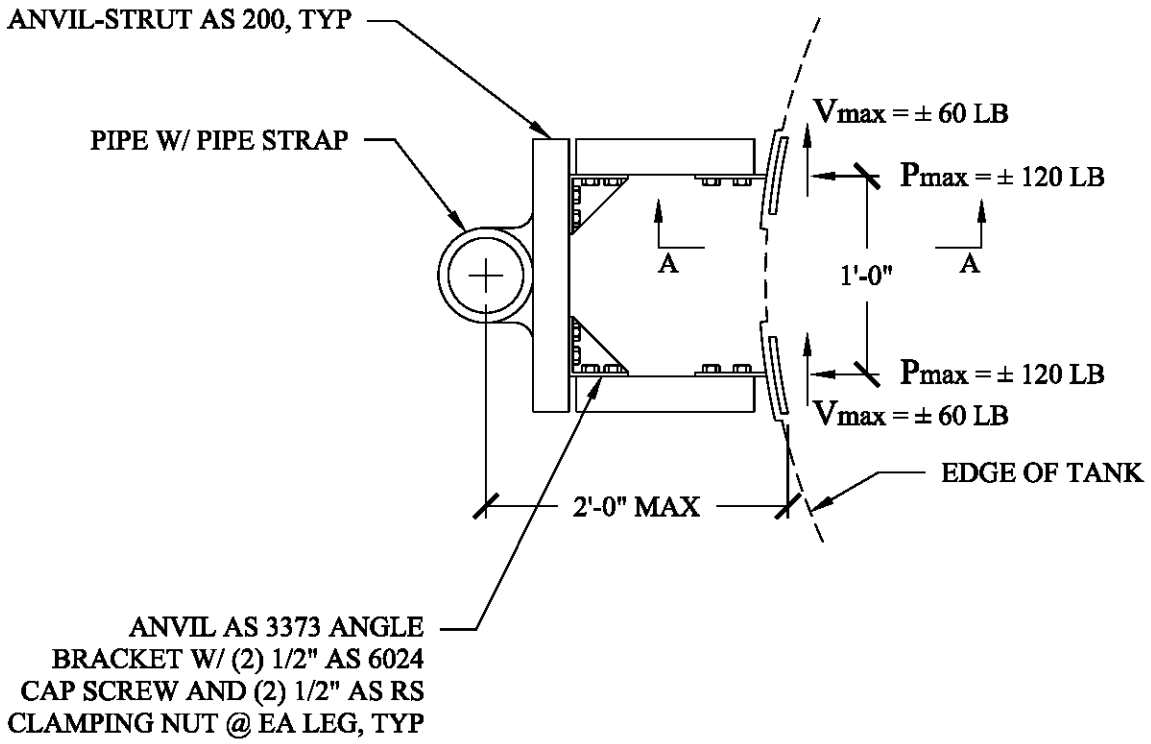

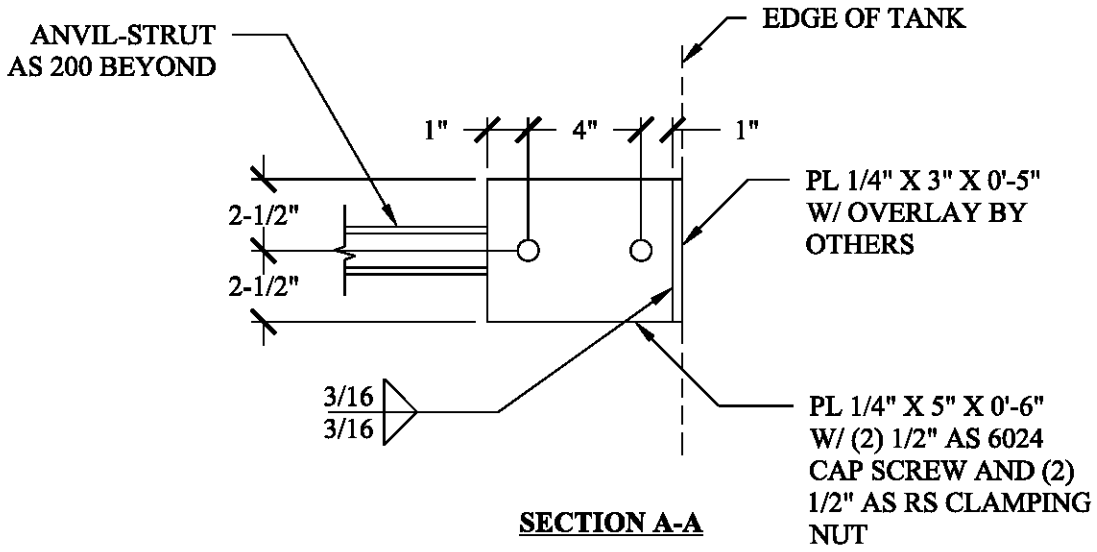

SECTION A-A

SK-16 PIPE SUPPORT @ TANK

WYCKOFF GROUNDWATER
TREATMENT PLANT
BAINBRIDGE ISLAND ,WA

ECC

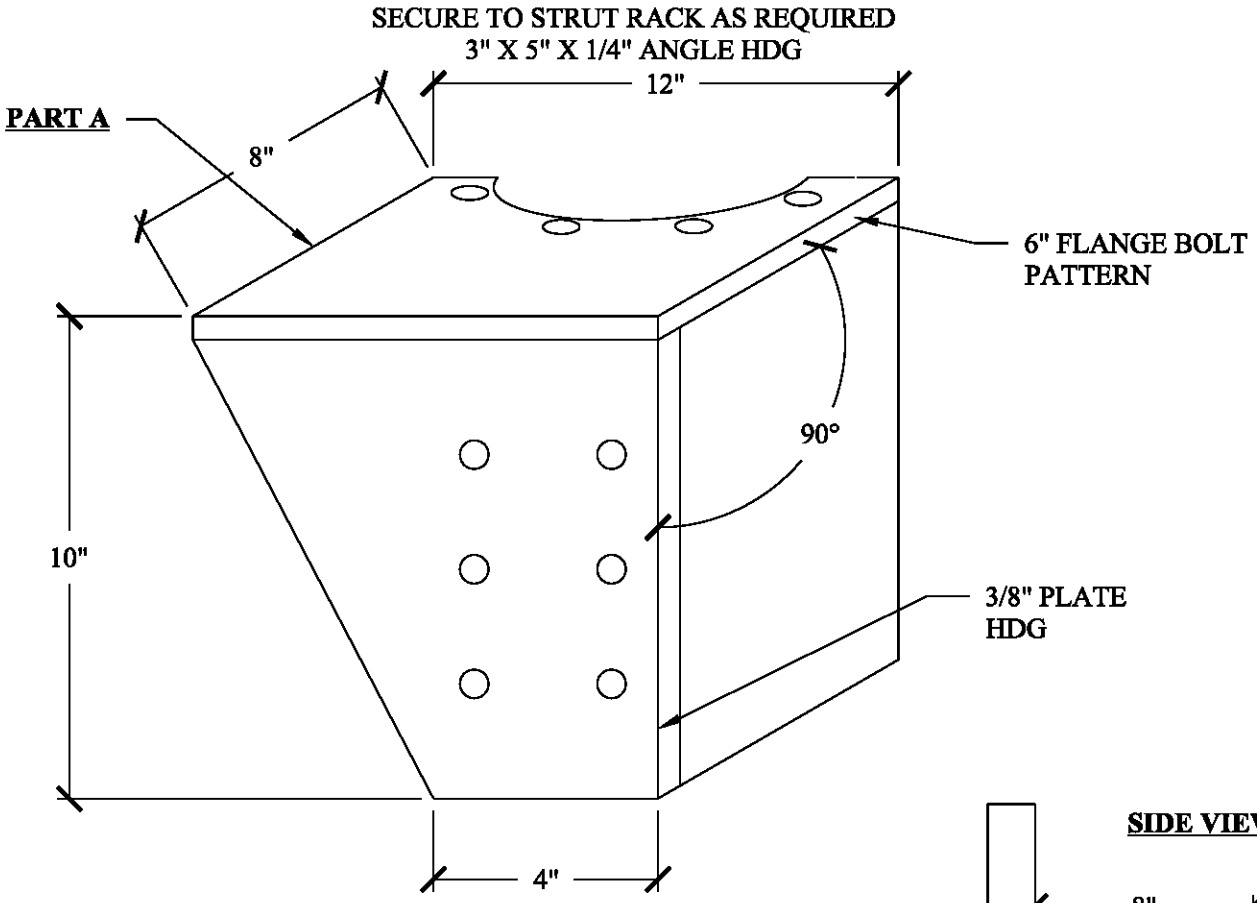

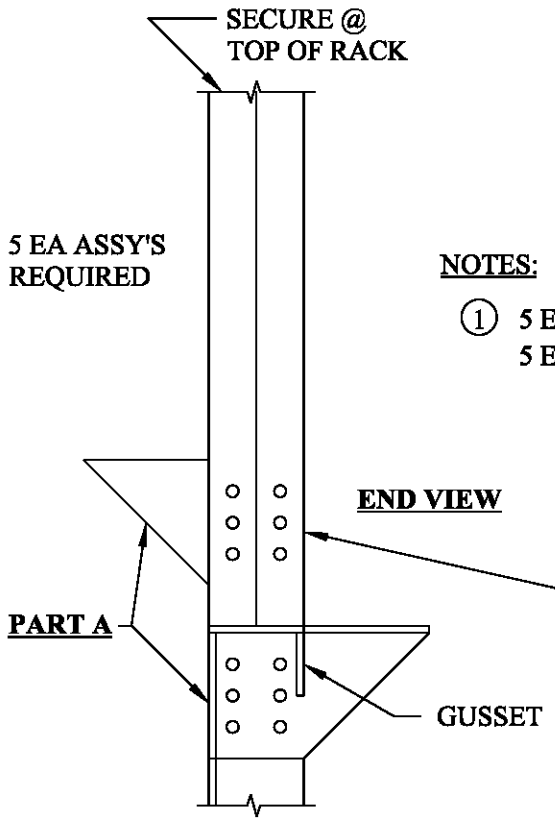

NOTES:

1. 5 EA RIGHT HAND REQUIRED
   5 EA LEFT HAND REQUIRED

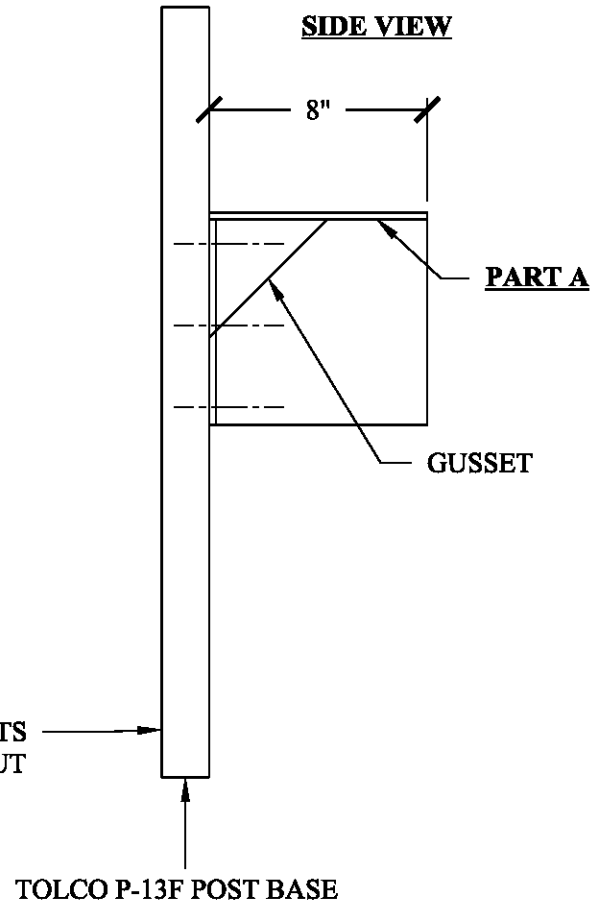

SK-17 TYPICAL 6" VALVE SUPPORT GAC 1-5

WYCKOFF GROUNDWATER TREATMENT PLANT

BAINBRIDGE ISLAND ,WA

ECC

SECURE TO STRUT RACK AS REQUIRED
3" X 5" X 1/4" ANGLE HDG

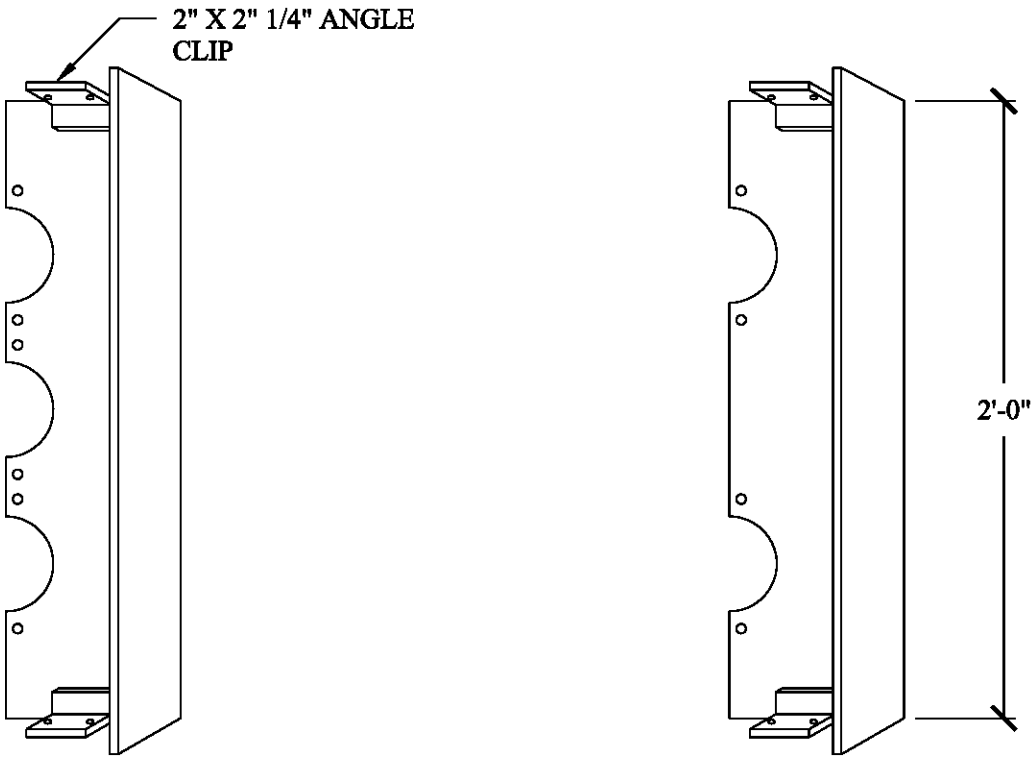

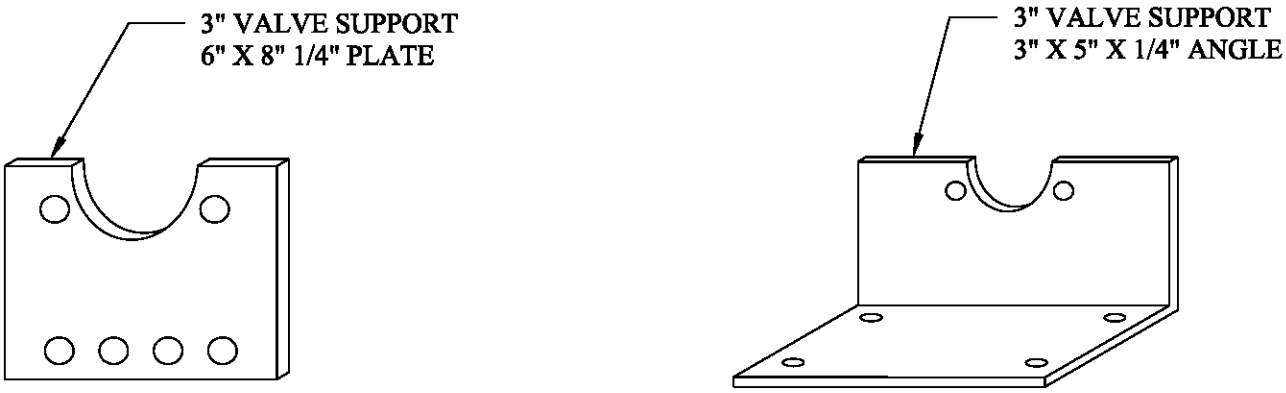

SK-19 3" VALVE SUPPORT GAC 1-5

WYCKOFF GROUNDWATER TREATMENT PLANT

BAINBRIDGE ISLAND ,WA

ECC

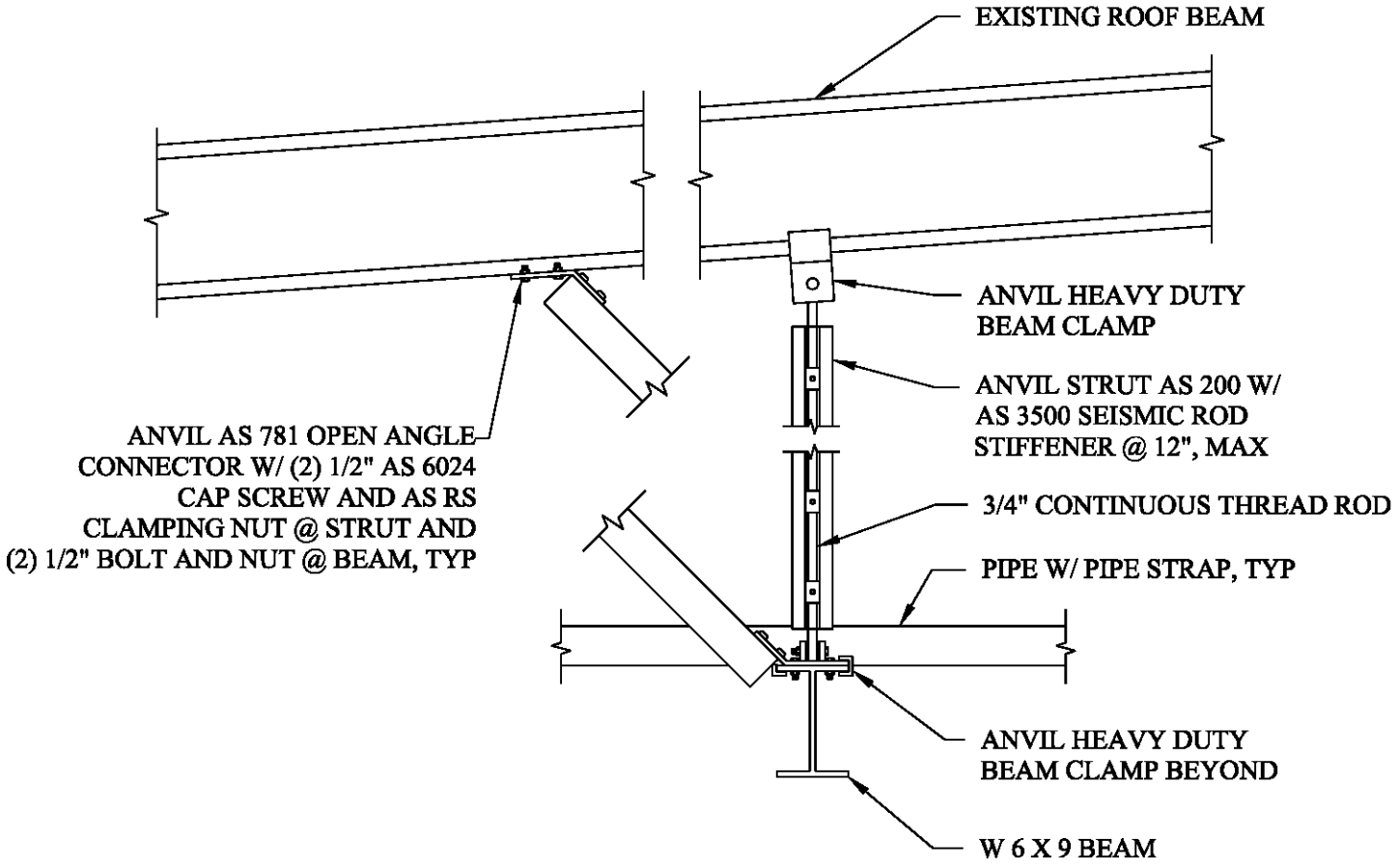

NOTE:

1. LIMIT BRACE LENGTH TO 9'-0" MAX
2. LONGITUDINAL BRACE ONLY REQ'D @ ONE GRAVITY SUPPORT
3. LOCATE LONGITUDINAL BRACE @ BOTH SIDES OF TRAPEZE
4. PIPE STRAP REQ'D TO BE ABLE TO PREVENT SLIPPING OF PIPE RELATIVE TO TRAPEZE

SK-2 TRAPEZE LONGITUDINAL LATERAL SUPPORT

WYCKOFF GROUNDWATER TREATMENT PLANT

BAINBRIDGE ISLAND ,WA

ECC

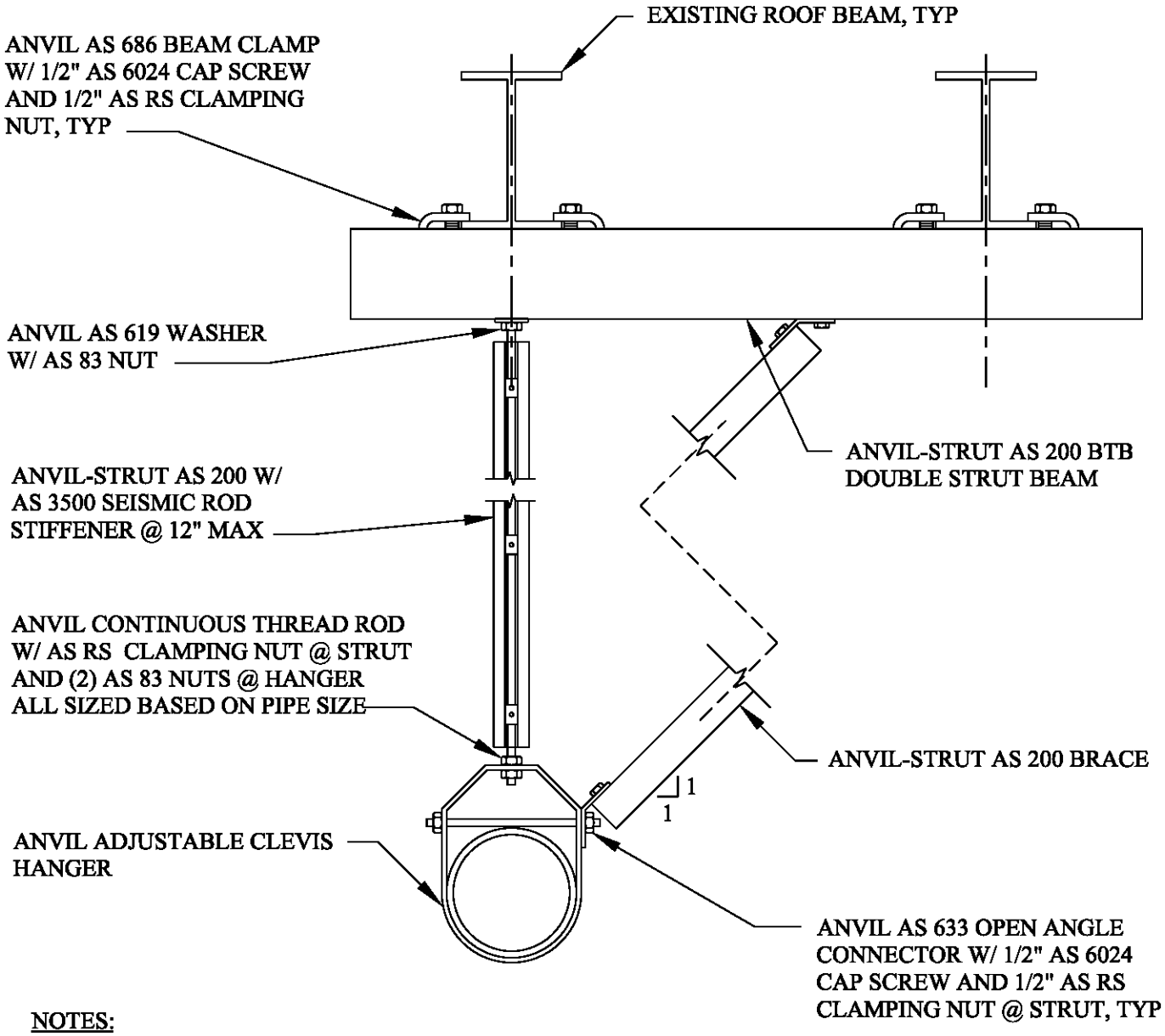

NOTES:

1. LIMIT BRACE LENGTH TO 9'-0" MAX
2. TRANSVERSE BRACE REQ'D @ ALL GRAVITY SUPPORTS

SK-3 SINGLE PIPE TRANSVERSE LATERAL SUPPORT

WYCKOFF GROUNDWATER TREATMENT PLANT

BAINBRIDGE ISLAND ,WA

ECC

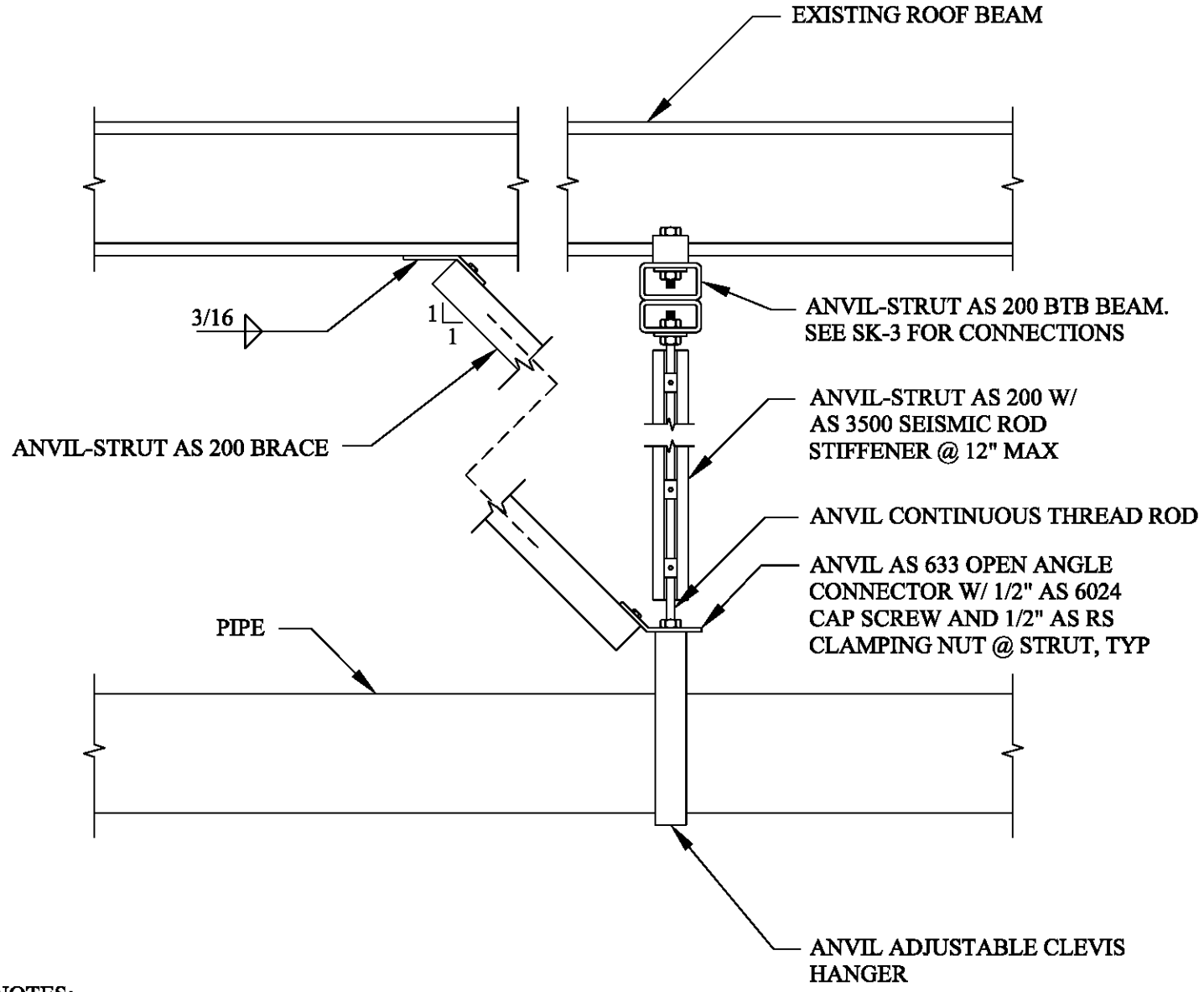

NOTES:

1. LIMIT BRACE LENGTH TO 9'-0" MAX
2. LONGITUDINAL BRACE ONLY REQ'D @ ONE GRAVITY SUPPORT FOR ANY STRAIGHT SEGMENT OF A PIPE
3. PIPE STRAP REQ'D TO BE ABLE TO PREVENT SLIPPING OF PIPE RELATIVE TO SUPPORT

SK-4 SINGLE PIPE LONGITUDINAL LATERAL SUPPORT

WYCKOFF GROUNDWATER TREATMENT PLANT

BAINBRIDGE ISLAND ,WA

ECC

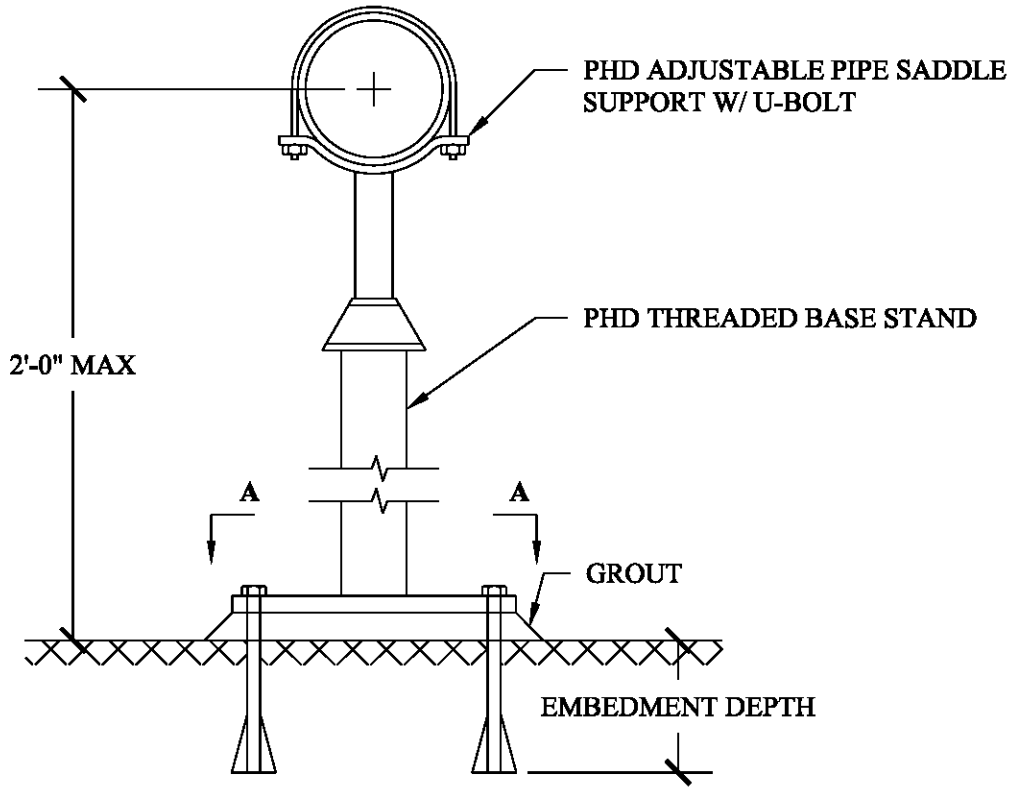

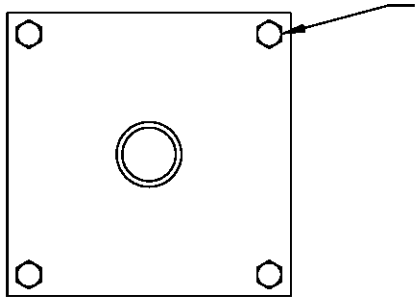

SECTION A-A

NOTES:

1. FOR USE W/ 8" PIPES AND SMALLER
2. GROUT ONLY REQ'D WHERE NEEDED IN ORDER TO LEVEL GROUND

SK-5 PIPE LATERAL SUPPORT

WYCKOFF GROUNDWATER TREATMENT PLANT

BAINBRIDGE ISLAND ,WA

ECC

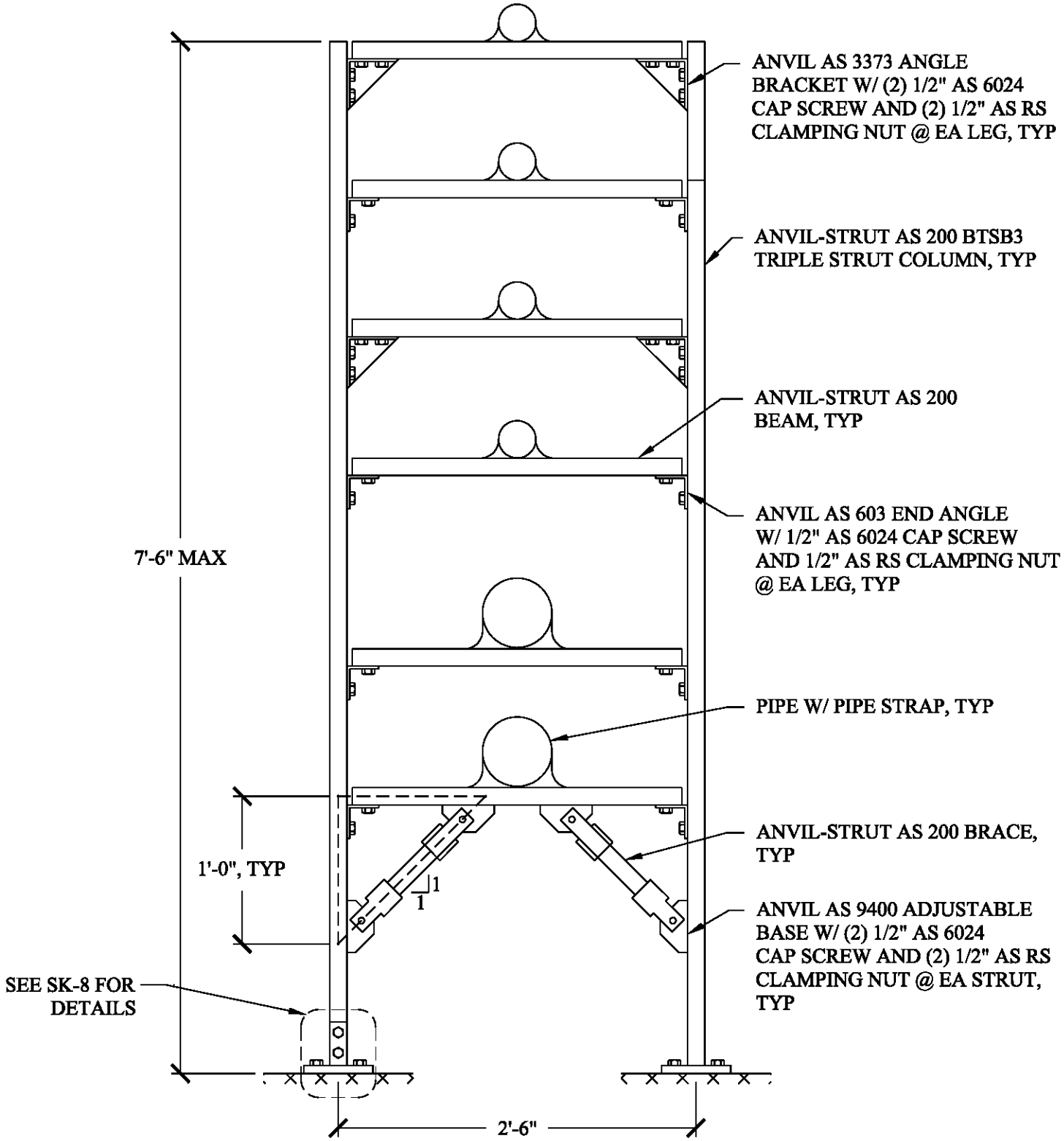

SK-6 PIPE FRAME TRANSVERSE LATERAL SUPPORT

WYCKOFF GROUNDWATER TREATMENT PLANT

BAINBRIDGE ISLAND ,WA

ECC

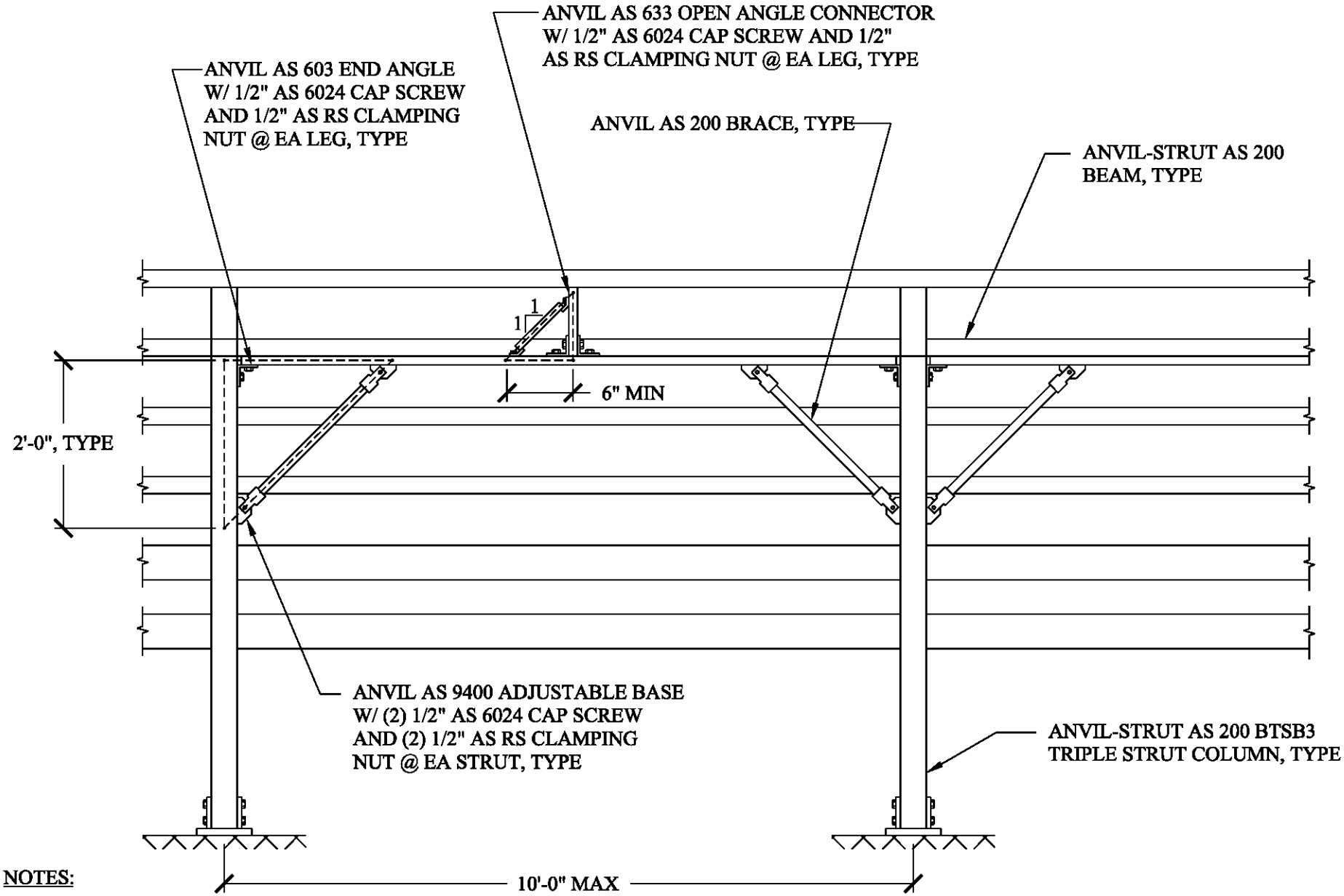

NOTES:

(1) PIPE STRAP REQ'D TO BE ABLE TO PREVENT SLIPPING OF PIPE RELATIVE TO FRAME @ ONE LOCATION FOR EA PIPE

SK-7 PIPE FRAME LONGITUDINAL LATERAL SUPPORT

WYCKOFF GROUNDWATER TREATMENT PLANT

BAINBRIDGE ISLAND ,WA

ECC

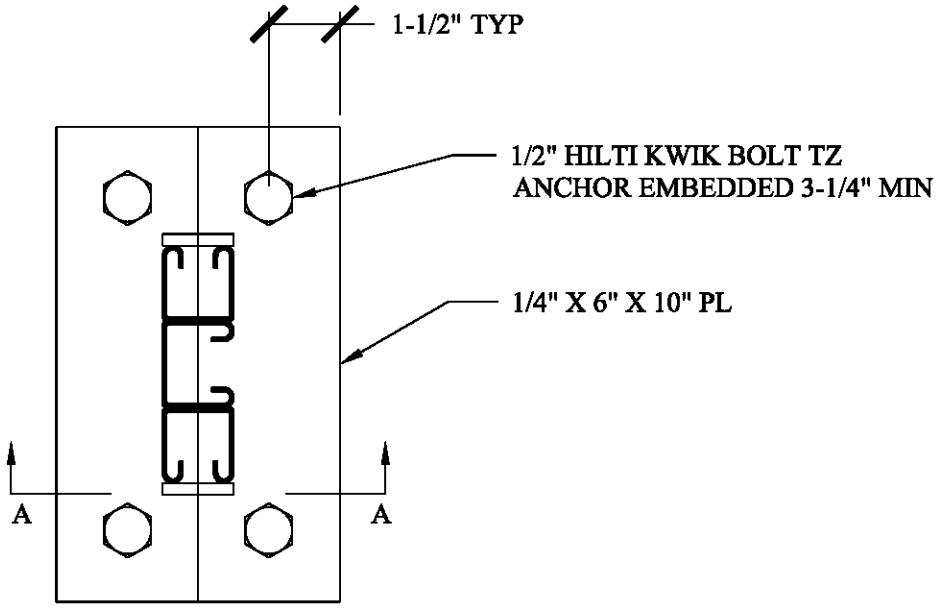

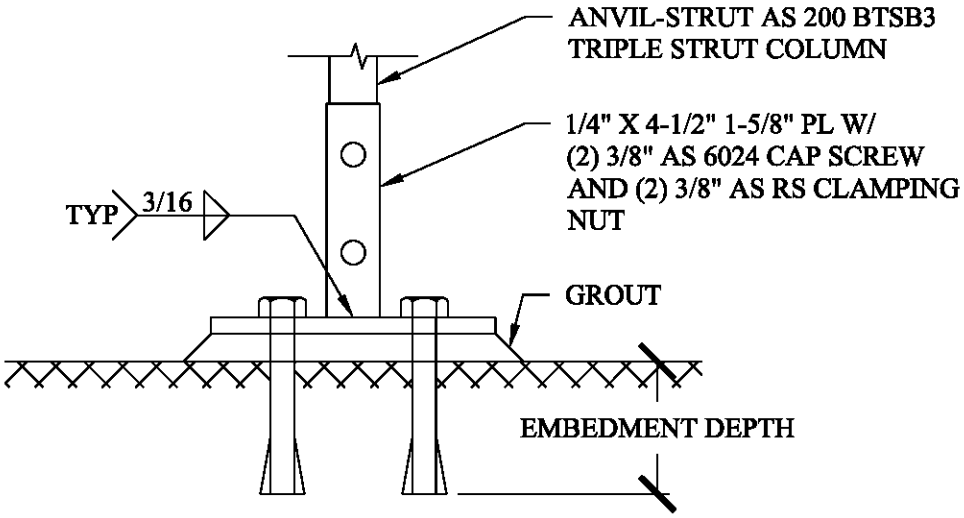

SECTION A-A

NOTES:

1. GROUT ONLY REQ'D WHERE NEEDED IN ORDER TO LEVEL GROUND

SK-8 PIPE FRAME BASE DETAIL

WYCKOFF GROUNDWATER TREATMENT PLANT

BAINBRIDGE ISLAND ,WA

ECC

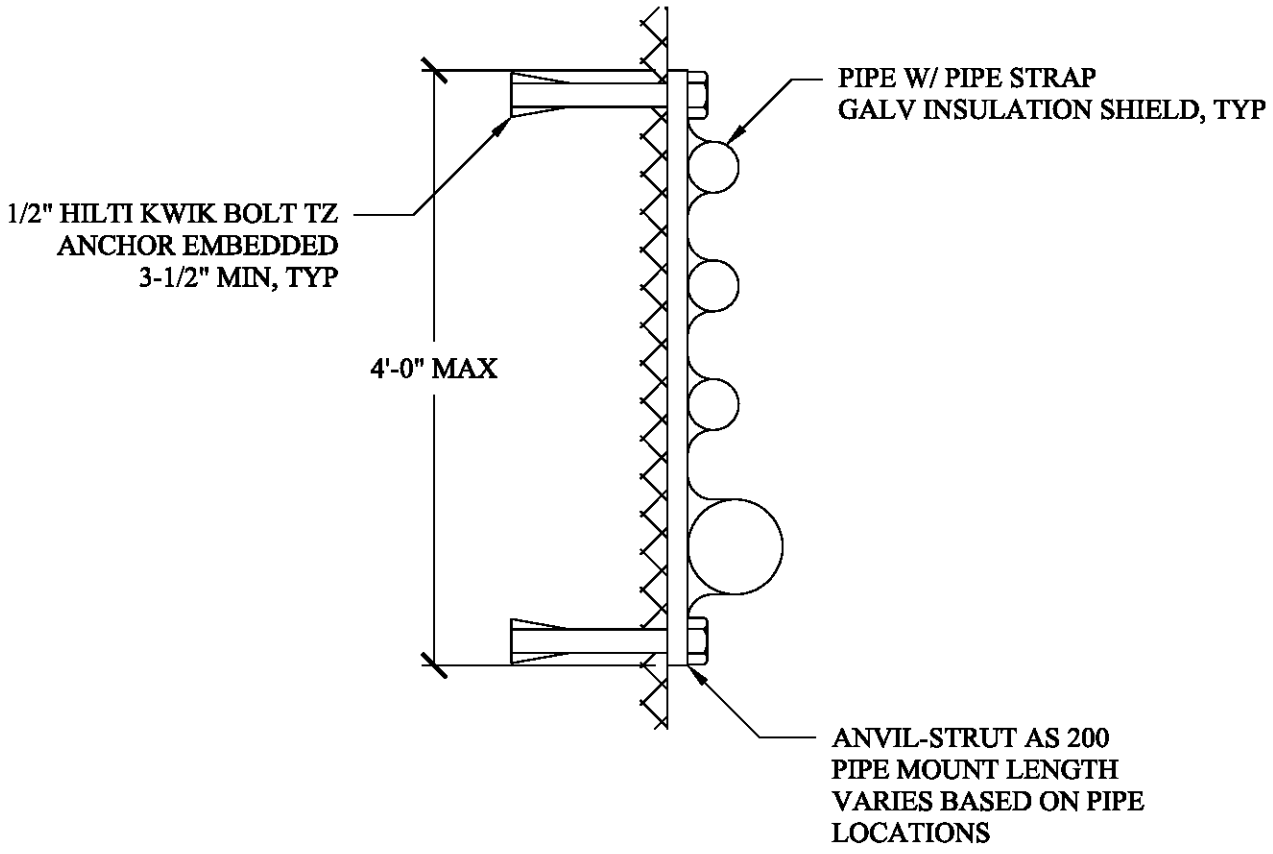

SK-9 PIPE WALL MOUNT SUPPORT

WYCKOFF GROUNDWATER TREATMENT PLANT

BAINBRIDGE ISLAND ,WA

ECC