Annual Performance Evaluation Report
Long-Term Stormwater Treatment - 2014-2015
North Boeing Field
Seattle, Washington

February 2, 2016

Prepared for

The Boeing Company
Seattle, Washington

LANDAU ASSOCIATES
130 2nd Avenue South
Edmonds, WA 98020
(425) 778-0907

TABLE OF CONTENTS

		Page
1.0	INTRODUCTION	1-1
1.1	PROJECT SITE DESCRIPTION	1-2
1.2	PROJECT BACKGROUND	1-2
1.3	LTST TREATMENT SYSTEM DESIGN	1-3
1.4	PERFORMANCE STANDARDS AND CLEANUP GOALS	1-4
1.4.1	LTST System Performance Standards	1-5
1.4.2	LTST Treatment Goals	1-5
2.0	SAMPLE AND DATA COLLECTION METHODOLOGY	2-1
2.1	SAMPLING OBJECTIVES	2-1
2.2	SAMPLING LOCATIONS	2-1
2.3	LIFT STATION (LS431)	2-2
2.3.1	Sampling Frequency	2-2
2.3.2	Sampling and Data Collection Methods	2-3
2.3.3	Laboratory Analyses	2-4
2.4	LONG-TERM STORMWATER TREATMENT SYSTEM SAMPLING	2-4
2.4.1	Sampling Frequency	2-4
2.4.2	Sampling and Data Collection Methods – Whole Water	2-4
2.4.3	Sampling and Data Collection Methods – Filtered Solids	2-5
2.4.4	Laboratory Analyses	2-6
2.5	WEIR TANK, STORAGE TANK, AND SAND FILTER MEDIA MONITORING AND SAMPLING	2-7
2.6	SEDIMENT TRAPS	2-8
2.6.1	Sampling Frequency	2-8
2.6.2	Sampling Methods	2-8
2.6.3	Laboratory Analyses	2-9
2.7	RE-ROUTED KING COUNTY STORMWATER	2-9
2.8	CATCH BASIN INSERT FILTER REPLACEMENT	2-9
3.0	MONITORING RESULTS	3-1
3.1	LS431 AND LTST PERFORMANCE ANALYTICAL RESULTS	3-1
3.1.1	PCBs in Whole Water	3-1
3.1.2	TSS and PSD in Whole Water	3-2
3.1.3	SVOCs in Whole Water	3-2
3.1.4	Metals in Whole Water	3-2
3.1.5	PCBs in Filtered Solids	3-3
3.2	SUMMARY OF FLOW MEASUREMENTS AND PRECIPITATION DATA	3-3
3.3	SEDIMENT TRAP SAMPLING RESULTS	3-4
3.4	CATCH BASIN INSERT FILTER SOLIDS SAMPLING RESULTS	3-5
4.0	EVALUATION OF LTST PERFORMANCE	4-1
4.1	LTST SYSTEM AND POINT OF COMPLIANCE	4-1
4.2	VALIDITY OF ASSUMPTIONS	4-2
4.2.1	Non-Detect Results	4-2
4.2.2	Other Assumptions Used to Calculate the Alternative Interim Goal	4-2
5.0	USE OF THIS REPORT	5-1
6.0	REFERENCES	6-1

FIGURES

Figure	Title
1	Vicinity Map
2	North Boeing Field Stormwater Drainage Basins
3	LSIV Section Showing Pump On/Off Settings
4	Schematic Diagram of LTST System Components
5	Storm Drain System and LTST Sampling Locations
6	LTST Sampling Locations

TABLES

Table	Title
1	Summary of 2014-2015 LTST Stormwater Sampling Events
2	LS431 Whole Water Sampling Analytical Results
3	MH130A Whole Water Sampling Analytical Results
4	LSIV Whole Water Sampling Analytical Results
5	Effluent Whole Water Sampling Analytical Results
6	MH130A Stormwater Filtration and PCB Testing Results
7	LSIV Stormwater Filtration and PCB Testing Results
8	Effluent Stormwater Filtration and PCB Testing Results
9	Bypass During 2014-2015 Sampling Events
10	Monthly Precipitation and Flow Volumes
11	Storm Drain Manhole Solids and Sediment Trap Analytical Data
12	Storm Drain Sediment Trap PCB Mass Loading Rate
13	PCB Analytical Results, Catch Basin Filtered Solids Samples

APPENDICES

Appendix	Title
A	Year 4 Monitoring (November 1, 2014 through October 31, 2015) and FWAAC Results and Recommendations for NBF LTST System

LIST OF ABBREVIATIONS AND ACRONYMS

µg/L	Micrograms per Liter
µm	Micron
AKART	All Known, Available, and Reasonable Methods of Prevention, Control, and Treatment
ASAOC	Administrative Settlement Agreement and Order on Consent
Boeing	The Boeing Company
CERCLA	Comprehensive Environmental Response, Compensation, and Liability Act
CESF	Chitosan-Enhanced Sand Filtration
City	City of Seattle
EAA	Early Action Area
Ecology	Washington State Department of Ecology
EOF	Emergency Overflow
EPA	U.S. Environmental Protection Agency
FS	Feasibility Study
FSP	Field Sampling Plan
FWAAC	Flow-Weighted Average Annual Concentration
ft	Feet
gpm	Gallons per Minute
GTSP	Georgetown Steam Plant
g/yr	Grams per Year
hp	Horsepower
ISGP	Industrial Stormwater General Permit
KBFI	Seattle Boeing Field-King County International Airport Rain Gauge
KCIA	King County International Airport
kWh	Kilowatt Hours
LDW	Lower Duwamish Waterway
ISGP	Industrial Stormwater General Permit
LOD	Limit of Detection
LOQ	Limit of Quantitation
LSIV	Lift Station Inlet Vault
LTST	Long-Term Stormwater Treatment
mg/kg	Milligrams per Kilogram
mg/L	Milligrams per Liter
mL	Milliliter
NBF	North Boeing Field
NPDES	National Pollutant Discharge Elimination System
NPL	National Priorities List
NTU	Nephelometric Turbidity Unit
PAHs	Polycyclic Aromatic Hydrocarbons
Panel	NBF Stormwater Expert Panel
PCBs	Polychlorinated Biphenyls
POC	Point of Compliance
ppb	Parts per Billion
ppm	Parts per Million
PSD	Particle Size Distribution
PSDDA	Puget Sound Dredged Disposal Analysis
PSEP	Puget Sound Estuary Program
QAPP	Quality Assurance Project Plan
RAWP	Removal Action Work Plan
RI	Remedial Investigation
SAP	Sampling and Analysis Plan

LIST OF ABBREVIATIONS AND ACRONYMS (Continued)

SIM	Selected Ion Monitoring
SM	Standard Method
STST	Short-Term Stormwater Treatment
SVOCs	Semivolatile Organic Compounds
TAPE	Technology Assessment Protocol - Ecology
TCLP	Toxicity Characteristic Leaching Procedure
TOC	Total Organic Carbon
TSS	Total Suspended Solids

1.0 INTRODUCTION

This document presents an annual performance evaluation of long-term stormwater treatment (LTST) at North Boeing Field (NBF) for the fourth year of system operation, covering the period from November 1, 2014 through October 31, 2015. This annual performance evaluation report follows the planned annual evaluation criteria described in the *Sampling and Analysis Plan for Long-Term Stormwater Treatment* (SAP; Landau Associates 2012a). The conclusion of this annual evaluation is that the monitoring procedures outlined in the SAP and the 2015 SAP Addendum (Appendix B, Landau Associates 2015) as approved by the U.S. Environmental Protection Agency (EPA 2015) were followed and the LTST system met the applicable interim goals for removal of polychlorinated biphenyls (PCBs) and discharge water quality, as described in detail in this report.

A figure showing the vicinity of the site is provided for reference as Figure 1. The EPA and Washington State Department of Ecology (Ecology) have been working with The Boeing Company (Boeing); the City of Seattle (City), Washington; and King County to eliminate sources of PCBs in stormwater discharges to Slip 4 of the Lower Duwamish Waterway (LDW). On September 23, 2010, the EPA issued an *Action Memorandum for the Time-Critical Removal Action at North Boeing Field near the Slip 4 Early Action Area of the Lower Duwamish Waterway Superfund Site* (Action Memorandum; EPA 2010). On September 29, 2010, Boeing entered into an Administrative Settlement Agreement and Order on Consent for Removal Action (ASAOC) with the EPA (EPA and Boeing 2010). The ASAOC required that Boeing address the discharge of PCBs to the Slip 4 Early Action Area (EAA) through short-term and long-term stormwater treatment removal actions.

The LTST system has been functional and operational since October 28, 2011, and consists of a chitosan-enhanced sand filtration (CESF) system that preferentially treats storm flows from the onsite NBF North Lateral, while also treating storm drain base flow and a portion of all the storm flow that drains to the lift station and to Slip 4 (Figure 2). For the 2014-2015 year of operations, monitoring of LTST system performance and compliance with LTST interim goals from the Action Memorandum (EPA 2010) has been conducted according to the 2015 SAP Addendum.

Indirectly related to NBF LTST, Boeing and Ecology are performing the North Boeing Field Georgetown Steam Plant Remedial Investigation[1] (NBF-GTSP RI). The current phase of the NBF-GTSP RI is as follows:

- Soil – Phase 1 and 2 complete.
- Groundwater – Phase 1 complete at most wells; Phase 2 is in progress.
- Soil Vapor – Phase 1 complete at most sample points.
- Anthropogenic media – Phase 1 completed (storm drain solids and surface debris); Phase 2 planning is in progress (anthropogenic materials).

[1] MTCA site ID 4765; Boeing/Ecology Agreed Order No. DE 5685.

Based on the current schedule for the NBF-GTSP-RI, the preliminary draft feasibility study (FS) will be submitted to Ecology about the end of April 2017. The Final FS report will be submitted to Ecology about the end of December 2017, although the FS schedule is dependent on the RI schedule and Ecology review periods.

1.1 PROJECT SITE DESCRIPTION

NBF is located east of East Marginal Way South, adjacent to the King County International Airport (KCIA) and the City's Georgetown Steam Plant (GTSP). The approximate street address is 7370 East Marginal Way South, Seattle, Washington. NBF is approximately 150 feet (ft) from the head of Slip 4, which is an EAA at approximately River Mile 2.8 on the Duwamish Waterway within the LDW Superfund Site. The location of the site is shown on Figure 1.

1.2 PROJECT BACKGROUND

Boeing has conducted operations at NBF since the 1940s. NBF is used for research, flight-testing, aircraft finishing, and delivery facilities. Stormwater from NBF is collected and conveyed by storm drains to Slip 4 of the LDW. In 2001, the LDW was placed on the National Priorities List (NPL: Superfund) pursuant to the Comprehensive Environmental Response, Compensation, and Liability Act (CERCLA). In 2003, the sediments and portions of the bank in Slip 4 were identified as an EAA due to the presence of PCBs in the sediment. Prior to cleanup of Slip 4, Ecology determined that ongoing sources of PCBs discharging to Slip 4 should be controlled to reduce the likelihood of recontamination of the sediment following cleanup. Previous investigations at the NBF site identified the presence of PCBs in solids in manholes, catch basins, and sediment traps, and in water in the NBF storm drain system, which discharges to Slip 4 via the KCIA Storm Drain #3 / PS44 Emergency Overflow (EOF).

As defined in the ASAOC, "stormwater" shall mean all liquids, including any particles dissolved therein, in the form of base flow, stormwater runoff, snowmelt runoff, and surface runoff and drainage, as well as all solids that enter the storm drainage system. "System," when used in the context of storm drainage, shall mean the combination of all manholes, catch basins, pipes, and other drainage devices and conveyances designed, constructed, and used for the purpose of carrying stormwater from NBF to Slip 4 of the LDW, and the drainage basin associated with these devices and conveyances.

The highest concentrations of PCBs in stormwater in the NBF storm drain system (which discharges to Slip 4) were previously identified to be from the North Lateral portion of the storm drain (SAIC 2011; Landau Associates 2011a). Under the ASAOC, Boeing installed a short-term stormwater treatment (STST) facility to remove PCBs from a large portion of the North Lateral of the NBF storm drain system prior to discharge to Slip 4 (Landau Associates 2010, 2011a). The STST facility, consisting of a 500-gallon per minute (gpm)-capacity CESF system, was placed into continuous operation on

September 15, 2010 and operation continued until the 1,500-gpm LTST facility was installed and operating. STST monitoring results, available in the November 2011 Progress Report (Landau Associates 2011b), demonstrate that CESF was very effective at reducing the mass of total suspended solids (TSS) and PCBs in stormwater. Therefore, the LTST facility was designed around a similar CESF system, although significantly larger in footprint and capacity.

Operation of the LTST facility officially began on October 28, 2011. To provide the estimated 200,000 kilowatt-hours (kWh) required to operate the LTST system for each year of operation, Boeing continues to purchase 100 percent renewable energy through the Seattle City Light *Green Up* program. Monitoring, as described in the 2015 SAP Addendum (Appendix B, Landau Associates 2015), is ongoing at the LTST facility. The 2011-2012, 2012-2013, and 2013-2014 Annual Evaluation Reports (Landau Associates 2013, 2014, and 2015) concluded that the LTST system met the LTST interim goals from the Action Memorandum (EPA 2010).

During the 2014-2015 period of operation, groundwater pumped from two dewatering wells was discharged to the storm drain system (downstream of MH130 and upstream of the LTST facility) during Boeing's installation of two new electrical substations at NBF. One substation was installed near the main guard gate entrance to NBF and a second substation was installed adjacent to the existing Willow Street substation. Dewatering for these substation installations occurred intermittently from June through early October. Information on these discharges of groundwater to the storm drain system are described in Section 2.9.

1.3 LTST TREATMENT SYSTEM DESIGN

The CESF treatment process starts by settling out coarse solids in an aboveground settling/storage tank, then the coagulated solids [via chitosan acetate dosage (less than 1 part per million {ppm} of chitosan acetate solution containing the natural biopolymer chitin)] settle out in additional aboveground settling/storage tanks and, finally, sand filtration (through a bank of sand filter units) removes the remaining coagulated solids. The sand filter units are automated to perform sequential backflushing. The backflush water discharges to a settling tank and the settled solids are removed periodically for disposal. Greater detail on the design of the LTST facility can be found in the *100% Design Report, Long-Term Stormwater Treatment* (Landau Associates 2011c).

Stormwater is preferentially pumped from MH130A (which drains a portion of the onsite North Lateral) directly into the inlet weir tank of the LTST system for treatment at a design capacity of 500 gpm. The remaining LTST capacity (after treating the flows from MH130A) is utilized by pumping available stormwater flow from the lift station inlet vault (LSIV). The location of the LSIV pump in relation to the four King County lift station pumps is provided on Figure 3 and in Appendix B of the *Removal Action/Stormwater Treatment Completion Report* (Landau Associates 2012b). All stormwater

from the four main NBF storm drain laterals and King County re-route storm line (with the exception of water pumped from MH130A) mixes together in the LSIV and is pumped to the LTST system (at a flow rate up to the 1,500 gpm treatment capacity of the LTST system). The LTST system operates at full capacity whenever sufficient stormwater is present. The LSIV submersible pump is set to produce the full design flow rate of 1,500 gpm at a level below which any of the four 50-horsepower (hp) King County pumps activate. Figure 3 shows the current on/off settings for both the LTST LSIV pump and the four King County lift station pumps. A schematic diagram of LTST system components is provided as Figure 4.

The CESF system was anticipated to achieve a long-term average volume capture at the lift station of 81 percent of runoff from only onsite drainage, and 59 percent of runoff from combined onsite and offsite drainage basins. As described in the LTST *Removal Action Work Plan* (RAWP) and RAWP Addendum (Geosyntec Consultants 2011a,b), the LTST system was predicted to achieve a total PCB load reduction of approximately 73 percent annually [or approximately 96 percent in dry weather, reduced from 6.7 to 0.24 grams per year (g/yr), and approximately 68 percent in wet weather, reduced from 32 to 10.4 g/yr]. See Section 4.1 for an analysis of PCB load reduction by the LTST system. It was also estimated that the LTST system would comply with the interim goal for PCBs for water [0.030 micrograms per liter (µg/L)] approximately 96 percent of the time during a "typical" year (or 100 percent of dry days and 90 percent of wet days per year) based on rough estimates using limited available water and filtered solids dry and wet weather monitoring data. A more detailed description of the interim goals for the LTST system is presented in Section 1.4.

Operation of the LTST system is automated, with the exception of weekly calibration, routine inspections, and troubleshooting. The CESF system is in continuous operation; maintenance, and other site activities sometimes require the CESF system to be shut down from time to time. The goal for operation of the LTST system is to achieve no more than 3 percent downtime on an annual basis. During the fourth year of operation, the percent downtime was less than 2.5 percent.

1.4 PERFORMANCE STANDARDS AND CLEANUP GOALS

LTST system performance standards were developed during the design process (including the 60% and 90% design report submittals); final performance standards are summarized in the 100% Design Report (Landau Associates 2011c). Treatment goals for LTST were listed in the ASAOC for PCB concentrations in both whole water and in solids discharged in stormwater. The treatment goal for PCBs in solids was actively reviewed and redeveloped with the EPA. LTST system performance standards and cleanup goals are described in more detail in the following sections.

1.4.1 LTST SYSTEM PERFORMANCE STANDARDS

As described in the *100% Design Report* (Landau Associates 2011c), the design basis and performance standards for the LTST system include:

- The system treats all dry weather base flows from the LSIV and from MH130A (which collects a portion of onsite North Lateral drainage) and preferentially treats wet weather storm flows from MH130A and, as capacity allows, additional flows from the LSIV (sometimes referred to in prior LTST documents as OWS421, based on Boeing's identification number). The LTST system was designed to capture and treat approximately 91 percent of onsite storm flows to MH130A (12.8 acres) and 100 percent of onsite and offsite dry weather base flows to the LSIV (approximately 106 acres onsite plus approximately 191 acres offsite). Additional treatment of low storm flows at the LSIV is provided, as capacity is available. The system is set to operate at full capacity (approximately 1,500 gpm) whenever sufficient stormwater is present.

- The submersible pump at MH130A is connected to a force main and routes base and wet weather storm flows from MH130A directly to the LTST system. When the LTST system has capacity beyond that which is required to treat the flows from MH130A, additional storm flows from the LSIV are pumped to the system.

- Offsite stormwater that formerly drained to the North Lateral (41.1 acres of King County drainage) was re-routed at a storm drain manhole that is located 16 ft upstream of MH178. The re-routed line is routed directly to the LSIV. The re-route minimizes overflow bypass at MH130A and allows preferential capture and treatment of onsite North Lateral storm flows. The re-route also allows some treatment of offsite North Lateral flows (as well as other laterals) at the LSIV when capacity allows.

- One hundred (100) percent of dry weather base flows from onsite and offsite laterals discharging to the LSIV are pumped to the LTST system.

- All treated flows from the LTST system are discharged to the Lift Station outlet structure, located downstream of the LSIV and the King County Lift Station pumps. The sampling location at the outlet structure is referred to as LS431.

NBF onsite and offsite drainage basins that drain to the LSIV (the inlet structure for both the King County Lift Station and for the LTST system) and are treated by the LTST system, up to its maximum 1,500 gpm, are shown on Figure 2. The boundary of the specific drainage basin that drains to MH130A and is preferentially treated at the LTST system is also shown on Figure 2.

1.4.2 LTST TREATMENT GOALS

Interim goals for the LTST facility were set by the EPA in the ASAOC as follows:

- Water discharged to Slip 4 must be below the Aquatic Life – Marine/Chronic water quality standard of 0.030 µg/L total PCBs. Boeing conducted (AMEC Geomatrix 2011) and EPA approved (EPA 2011) a salinity study in Slip 4 that demonstrates that the use of the Marine/Chronic water quality standard for total PCBs is appropriate.

- In-line storm drain solids discharged to Slip 4 must be below 100 parts per billion (ppb) dry weight total PCBs. This interim goal shall be used as a point of departure in considering whether the long-term interim goal for in-line storm drain solids discharged to Slip 4 should be modified in accordance with the all known, available, and reasonable methods of prevention, control, and treatment (AKART; Geosyntec Consultants 2011c).

However, a recommended alternative interim goal (replacing the storm drain solids interim goal above) was approved by the EPA in a letter dated January 19, 2012 (EPA 2012). Development of the alternative interim goal is described in a memorandum, *Amended Monitoring Approach Recommendations for North Boeing Field Long-Term Stormwater Treatment System* (Jones et al. 2012). The alternative interim goal for the LTST facility is as follows:

- A flow-weighted annual average concentration (FWAAC) for total PCBs in water of 0.018 µg/L.

Both the water quality and FWAAC goals are to be met at the Point of Compliance (POC), also referred to as LS431, which is shown on Figures 4, 5, and 6. Ecology has not approved the alternative interim goal identified in this report, and has not identified the POC for the NBF-GTSP Remedial Investigation (RI).

2.0 SAMPLE AND DATA COLLECTION METHODOLOGY

This section presents the sampling objectives, sample locations, and the sample collection methodologies, frequency, and laboratory analyses. Stormwater monitoring and sampling at NBF was conducted in general accordance with the 2015 SAP Addendum (Landau Associates 2015), which includes a Field Sampling Plan (FSP) and Quality Assurance Project Plan (QAPP).

2.1 SAMPLING OBJECTIVES

The objectives of LTST field sampling in 2014-2015 were to gather data to:

- Monitor stormwater discharges for comparison with the LTST interim goals.
- Evaluate the design assumptions for and performance of the LTST facility.
- Confirm that the interim goals are reasonably conservative and descriptive of site conditions, including the appropriateness of treating non-detect PCBs concentrations in water as zero when calculating the annual average PCB concentration.
- Evaluate individual lateral storm drain inputs, and monitor the effects of future source control actions.
- Characterize solids for disposal.

2.2 SAMPLING LOCATIONS

Stormwater and solids samples were collected at NBF at the following locations shown on Figures 4, 5, and 6:

- **Lift Station (LS431) – Compliance Monitoring Point**. The POC for the LTST interim goals is identified in the SAP as just downstream of the King County lift station pumps. This point is also downstream of the LTST system effluent discharge. Sampling at this location consisted of collecting flow-weighted whole water samples for laboratory analysis. In addition, continuous flow monitoring was conducted at LS431 to quantify the amount of stormwater discharged.
- **LTST System Influent and Effluent**. To monitor the performance of the LTST facility, whole water samples of the treatment facility influent and effluent were collected for laboratory analysis. The influent to the LTST facility from MH130A (the North Lateral) was sampled independently from the influent to the LTST facility from the LSIV (all other laterals). When the King County pumps operate and bypass of the LTST CESF system occurs, untreated stormwater from LSIV is what is discharged to Slip 4. LSIV samples provide characterization of bypass stormwater[2] as well as data on the influent to the CESF system.

[2] Collecting samples of LSIV water that is conveyed to the treatment system is an indirect method of sampling water that bypasses the treatment system. However, during precipitation events where bypass of the treatment system occurs, stormwater enters the LSIV at high, turbulent flow rates from three very large pipes. Both the King County pumps and the LTST LSIV pump have intake structures located near the bottom of the vault. Water within the LSIV is well mixed during these events, which is supported by visual observation through the grate at ground level. Therefore, LSIV samples are reasonably representative of bypass stormwater.

- **LTST Weir Tanks, Storage Tanks, and Sand Filters**. During the fourth year of operation, solids were removed from the backflush settling tank, and sand filter media was removed and replaced. Samples of solids retained in the backflush settling tank were collected to determine appropriate disposal options for the solids. Sampling of sand filter media was not necessary, as analytical data from prior waste sampling were sufficient to determine appropriate disposal options. No solids were removed and no samples were collected from the inlet weir tank or the storage tanks during the fourth year of operation.
- **Sediment Traps**. To continue to evaluate individual lateral storm drain inputs, Boeing continued the sediment trap monitoring program that began in 2005, with the modifications described in the SAP to account for changes in flow due to the stormwater re-route. This consisted of collecting solids from sediment traps at locations SL4-T1, SL4-T2, SL4-T3, SL4-T4, SL4-T5, SL4-T4A, and SL4-T5A(2). This monitoring program is overseen by Ecology.

The storm drain system, sampling location LS431, and sediment trap locations are shown on Figure 5. Figure 6 shows a more close-up plan view of the LTST system and the locations of the water sample ports and filtered solids housings for the LTST system influent (both MH130A and LSIV) and effluent.

2.3 LIFT STATION (LS431)

Sampling at LS431 consisted of collecting flow-weighted composite whole water samples from stormwater at the monitoring POC. The POC is in the King County lift station effluent vault (LS431 discharge outlet structure), at a point just downstream of the location at which the CESF effluent is discharged into that structure. Storm drain discharges here represent 94 percent of the NBF onsite drainage area. The remaining 6 percent of the area is primarily used for employee parking and is known to have relatively lower PCB solids concentrations (Landau Associates 2011c). LS431 is also the farthest downstream location in the storm drain system not impacted by tidal flushing. Figures 5 and 6 show the location of LS431.

2.3.1 SAMPLING FREQUENCY

Routine stormwater sampling at LS431 transitioned from monthly to quarterly between 2013 and 2014, in accordance with the 2014 SAP Addendum (Landau Associates 2014). These four sampling events took place over multiple days in order to obtain representative samples of water discharged to Slip 4 during a wide variety of precipitation conditions. Typically, setup took place and sampling commenced on the first Monday of the month. However, the first quarter routine event was postponed by one week due to a malfunctioning flow logger that required replacement, and the second quarter routine event was restarted on the first Tuesday of the month due to an error with sample aliquot collection. If the week of the month that included the first Monday also included a holiday, sampling instead took place the following week. Volume intervals for flow-weighted composite whole water sampling were calculated

based on weather forecasts for the period starting Monday and continuing through the following Thursday, a 3-day period.

In addition, to ensure that at least some monitoring of LS431 discharge took place during LTST system bypass conditions, five storm events were sampled. Requirements for these five events were precipitation of 0.5 inches or greater in the sampling event (24 hours or less), and indication that bypass of the LTST system occurred during the sampling event.

A matrix of sampling events, including the type of event, sample dates, precipitation data, and sampling location is provided in Table 1.

2.3.2 SAMPLING AND DATA COLLECTION METHODS

Flow-weighted composite samples of the stormwater at LS431 were collected using an ISCO 6712 automated sampler with a jumbo base holding a 5-gallon laboratory-cleaned glass carboy. Equal volume aliquots [500 milliliters (mL)] were collected more frequently at high flow rates and less frequently at low flow rates. The volume interval between aliquots for each sampling event was calculated using the anticipated volume of stormwater runoff and base flow[3] for the period to be sampled. A regression line using flow data at LS431 from past storm events was used to estimate runoff for an upcoming sampling event based on the inches of predicted rainfall. During periods of dry weather, flow data collected at LS431 provided an estimation of base flow rates, which change seasonally.

Flow measurements were taken with a Marsh-McBirney FLO-DAR® Radar Area/Velocity Sensor mounted above the flow at the entrance to the 48-inch LS431 outlet pipe, downstream of the CESF effluent discharge. The sensor was installed so that it is oriented in the center of the flow in the pipe. Flow was measured continuously at 1-minute intervals. Data from the sensor were collected and logged by a Hach FL900 Series Flow Logger, and the ISCO autosampler was programmed to collect aliquots of stormwater based on the predetermined volume interval programmed into the flow logger.

The stormwater collected for laboratory analysis is drawn from a point at the entrance to the 48-inch LS431 outlet pipe, downstream of the King County lift station pumps and the LTST system discharge. A peristaltic pump (attached to the autosampler) and a Teflon®-lined suction line are used to collect water from this location. The intake of the suction line is connected to a stainless-steel strainer to remove any large debris. The strainer is attached to an aluminum plate bolted to the floor of the outlet pipe entrance.

---

[3] For this project, base flow is defined as water that enters the NBF storm drain system, but is not a direct result of precipitation. Base flow primarily includes infiltrating groundwater, but may also contain small contributions from other sources (e.g., fire fighting-related water, offsite sources of landscape irrigation water, stormwater discharges allowed under the Industrial Stormwater General Permit, or other offsite stormwater discharges authorized by King County). Base flow rates are measured at LS431 during periods of zero precipitation. The rate fluctuates seasonally due to changes in groundwater elevation.

The sampling carboy was kept on ice for the entire sampling event. Within 24 hours after the sampling event concluded (i.e., the time the last aliquot was collected), the carboy was retrieved, capped with a Teflon®-lined cap, and submitted to the laboratory for the analyses required. Using a churn splitter or similar device, laboratory staff distributed proper volumes of homogenized stormwater to bottles for preservation or immediate analysis.

Precipitation was tracked through the Seattle Boeing Field-KCIA rain gauge (identified as "KBFI") at http://www.wrh.noaa.gov/mesowest/getobext.php?wfo=sew&sid=KBFI &num=48&raw=0&dbn=m. The KBFI rain gauge data were recorded to determine how much precipitation fell during sampling periods, as well as how much precipitation fell during the 2014-2015 season.

2.3.3 LABORATORY ANALYSES

Whole water samples were analyzed for PCBs using EPA Method 8082 and for TSS using Standard Method (SM) 2540D. To provide information for the RI being conducted by Ecology at NBF and the GTSP, samples were analyzed for total and dissolved metals (arsenic, cadmium, chromium, copper, lead, mercury, nickel, and zinc) using EPA Methods 200.8 and 7470; semivolatile organic compounds (SVOCs) using EPA Method 8270D; and polycyclic aromatic hydrocarbons (PAHs) using EPA Selected Ion Monitoring (SIM) Method 8270D, though these analyses were discontinued in early 2015 in accordance with the 2015 SAP Addendum (Landau Associates 2015). To provide data for compliance monitoring for the National Pollutant Discharge Elimination System (NPDES) stormwater permit visual observations were made for oil sheen, in accordance with permit conditions.

2.4 LONG-TERM STORMWATER TREATMENT SYSTEM SAMPLING

Sampling at the LTST facility consisted of collecting whole water grab samples of the treatment facility effluent, whole water grab samples of the treatment facility influent from the MH130A line, whole water composite or grab samples of the stormwater from the LSIV influent line, and samples of the solids entrained in the influent (both MH130A and LSIV) and effluent, though solids sampling was discontinued in early 2015, in accordance with the 2015 SAP Addendum (Landau Associates 2015).

2.4.1 SAMPLING FREQUENCY

Routine stormwater sampling of the treatment facility influent and effluent transitioned from monthly to quarterly between 2013 and 2014, in accordance with the 2014 SAP Addendum (Landau Associates 2014), with the exception of effluent water sampling, which continued on a monthly basis. In addition, five storm event samples were collected for LTST performance monitoring concurrent with LS431 storm event discharge compliance sampling. A matrix of sampling events, including the type of event, sample dates, precipitation data, and sampling location is provided in Table 1.

2.4.2 SAMPLING AND DATA COLLECTION METHODS – WHOLE WATER

Whole water grab samples were collected directly into laboratory bottles from sample ports on the MH130A influent line and the effluent line of the treatment system. To monitor the LTST system performance under a variety of conditions, efforts were taken to collect whole water grab samples from MH130A influent and effluent during both precipitation conditions and during base flow conditions. Reasonable efforts were made to sample at various times during a precipitation event (i.e., at the beginning of a storm and toward the end of a storm) and during various intensities of storms. Samples were collected in laboratory-supplied sample bottles after allowing water to purge from the sampling ports for a minimum of 20 seconds prior to collection of a sample.

Whole water grab samples from the LSIV influent line were collected either by autosampler or directly into laboratory bottles from a sample port. In March 2012, in order to better meet the goal of collecting samples representative of LSIV stormwater during periods of bypass of the CESF system, an ISCO model 1640 Liquid Level Actuator was installed in the Lift Station outlet structure that could enable the LSIV autosampler whenever bypass took place. During sampling events when LTST bypass occurred, a flow-weighted composite whole water sample was collected from the LSIV influent line. Sampling period duration generally matched that of LS431. The LSIV ISCO sampler was triggered from the flow logger used at LS431, as no reasonably feasible method of triggering sample collection based on flow rates into or out of the LSIV was identified. Although LS431 flow includes treated water and bypass water, triggering LSIV samples based on the LS431 flow logger still results in more aliquots being taken during higher flow rates (e.g., during bypass conditions) and less aliquots being taken during lower flow rates (e.g., discharge of treated stormwater only). Whenever there was no bypass during a sampling event, a grab sample of LSIV whole water during non-bypass conditions was collected directly into laboratory bottles from a sample port on the LSIV influent line at the end of the event, in order to provide water quality data on LTST system influent from the LSIV. The fifth and final storm sampling event of the 2014-2015 monitoring year did not include a flow-weighted composite sample of bypass stormwater and instead a grab sample of LSIV influent was taken. This deviation from normal procedures occurred because a replacement carboy compatible with the LSIV ISCO sampler could not be obtained on short notice after one of the carboys was accidentally broken by the laboratory after the fourth storm sampling event.

2.4.3 SAMPLING AND DATA COLLECTION METHODS – FILTERED SOLIDS

Though filtered solids sample collection ceased in early 2015, in accordance with the 2015 SAP Addendum (Landau Associates 2015), the first two storm sampling events and the first quarter 2015 routine sampling event included filtered solids sampling. To collect solids samples from the treatment

facility influent and effluent, stormwater solids were collected in filter bags using FSI model CBFP-11 carbon steel filter housings installed on the influent pipelines (MH130A and LSIV) and on the effluent pipeline. These locations are shown on Figure 6. A portion of each of the three streams passes through a filter bag where solids are captured. A flow totalizer downstream of each filter housing measures the total volume of stormwater flowing through the filter bag. Filter bags used were 16-inch-long, 7-inch-diameter, 1 micron (µm) nominal particle size rated polypropylene felt filter bags with a Polyloc® seal (to prevent bypass).

In early 2013, two filtered solids systems were installed in parallel on each of the three stormwater sampling locations, so that two bags for each location could be collected simultaneously during a sampling event. These upgrades were primarily to provide PAH and metals analyses for the RI being conducted by Ecology at NBF and the GTSP.

The amount of filtration time for each filter bag generally matched the duration of the LS431 water sampling (up to 24 hours for storm events, approximately 3 days for routine monthly events). Only clean, new filters were used. For bags being submitted for PCB and PAH analysis, filter bags were pre-weighed and numbered at the laboratory. After successful completion of filtration, the filter bags were removed, placed in a clean Ziploc® bag, sealed, labeled, and transported to the laboratory. Readings from the flow totalizers were collected at the start and end of filtration for each sampling event.

2.4.4 LABORATORY ANALYSES

All whole water samples were analyzed for PCBs using EPA Method 8082. During routine and storm sampling events, all whole water samples were analyzed for TSS using SM 2540D. To provide information on the effectiveness of the LTST system at removing metals, samples were analyzed for total and dissolved metals (arsenic, cadmium, chromium, copper, lead, mercury, nickel, and zinc) using EPA Methods 200.8 and 7470 at the LSIV and MH130A locations though metals analysis was discontinued in early 2015 in accordance with the 2015 SAP Addendum (Landau Associates 2015). To provide information for the RI being conducted by Ecology at NBF and the GTSP, samples were analyzed for SVOCs using EPA Method 8270D and PAHs using EPA SIM Method 8270D at LSIV during every event and at MH130A during alternating events, though this was discontinued in early 2015. All LTST samples were also analyzed for turbidity (except the effluent, which is continuously analyzed with a CESF system turbidity meter) using EPA Method 180.1, though this was discontinued in early 2015.

Filtered solids samples collected from the LTST facility influent and effluent were analyzed for PCBs by EPA Method 8082, though filtered solids sample collection was discontinued in early 2015 in accordance with the 2015 SAP Addendum (Landau Associates 2015). For PCB analysis, new filters were weighed and numbered prior to sample collection so that each sample was matched to a unique, clean-

filter weight. The used filter was dried, weighed, and processed by the laboratory. For each filter, the entire filter (not including the hard plastic ring, but including whatever material was collected) was extracted and the analytical results presented in units of total µg of PCBs. Knowing the full weight of the used dried filter (including collected material) and the pre-filtration weight, the estimated mass of PCBs per mass of total solids was calculated.

2.5 WEIR TANK, STORAGE TANK, AND SAND FILTER MEDIA MONITORING AND SAMPLING

The solids levels in the inlet weir tank, each storage tank, and the backflush settling tank were inspected at least once per month. Monitoring of the thickness of accumulated solids was performed with a Sludge Judge® inserted from the top of the tank to the tank floor. The device collects a solids sample that can be retrieved and visually inspected. The thickness of accumulated solids in the sampler was observed and recorded. Three or more readings, spread approximately equally along the length of the tank, were averaged and used to determine if the solids level was deep enough to require tank cleanout. Prior to 2014, solids in the three storage tanks were never deep enough to warrant sampling, cleaning, and disposal. In August of 2014, the three storage tanks were cleaned after approximately 2 ft of solids were observed to have accumulated in the bottom of the tanks. The storage tanks did not require cleaning during the 2014-2015 monitoring year. Solids from the backflush settling tank were sampled on March 12, 2015, and were analyzed for PCBs using EPA Method 8082; SVOCs using EPA Method 8270D; diesel-range and motor oil-range petroleum hydrocarbons using Ecology Method NWTPH-Dx; gasoline-range petroleum hydrocarbons using Ecology Method NWTPH-Gx; and metals using EPA Methods 6010, 7471, and 1311 [the toxicity characteristic leaching procedure (TCLP; Technology Assessment Protocol {Tape}]. Approximately 116,584 gallons of sludge was removed from the pretreatment and backflush tanks during the 2014-2015 monitoring year.

The sand filter media was removed and replaced on all three systems between May 12, 2015 through July 1, 2015, approximately 1 year since the prior replacement. Media filter replacement took approximately 7 weeks because the filter pods exhibited rust and required reapplication of epoxy and gasket replacement. Sampling of sand filter media was not necessary, as analytical data from prior waste sampling were sufficient to determine appropriate disposal options. Observation of sand filter operation by Clear Water Services, LLC (Clear Water) since the media was replaced has indicated that the sand filters are still filtering and backflushing effectively, and Clear Water expects that the filter media will not need to be replaced prior to summer of 2016.

2.6 SEDIMENT TRAPS

The sediment trap monitoring program that began in 2005 at the NBF site, and is overseen by Ecology, was continued during operation of the LTST facility to evaluate stormwater quality from the individual NBF lateral storm drains prior to combining at the LSIV and treatment at the LTST facility. Sediment trap sampling locations are shown on Figure 5. Solids were collected by sediment traps at locations SL4-T1, SL4-T2, SL4-T3, SL4-T4, SL4-T5, and SL4-T4A. Locations SL4-T2A, SL4-T3A, and SL4-T6 are monitored separately by the City or King County, and analytical data for these locations are not presented in this report. At location SL4-T5A(2), a sediment trap is not used; instead, solids are collected from the bottom of the wet well, which collects solids behind a permanent weir.

2.6.1 SAMPLING FREQUENCY

The established frequency for sediment trap sampling is annually, currently once per year in the spring. Sediment trap samples were most recently collected on April 28, 2015, and sediment trap bottles were redeployed the same day for collection in spring 2015.

2.6.2 SAMPLING METHODS

Each sediment trap [with the exception of SL4-T5A(2)] consists of two stainless-steel brackets and housings that each holds a Teflon® sample container. Once the containers are securely placed on the bracket, the container lids are removed and placed in a plastic sealable bag and labeled with the sample location. After the desired sample duration has elapsed, the lids are placed back on the containers and the containers removed. The solids in SL4-T5A(2) were collected from the bottom of the compartment of the wet well behind the weir using a new, clean, laboratory-supplied glass soil sampling jar affixed to the end of a decontaminated telescoping sampling pole. Water was decanted from the jar, to the extent possible, and the solids from each “pass” were combined and homogenized in a clean stainless-steel bowl using a clean stainless-steel spoon, and placed into a separate sample jar.

2.6.3 LABORATORY ANALYSES

Sediment trap solids samples were analyzed for PCBs using EPA Method 8082; SVOCs using Puget Sound Dredged Disposal Analysis (PSDDA) Method SW8270D; total metals (arsenic, copper, lead, mercury, and zinc) using EPA Methods 6010 and 7471; diesel-range and motor oil-range petroleum hydrocarbons using Ecology Method NWTPH-Dx; total organic carbon (TOC) using Puget Sound Estuary Protocols (PSEP) 1986, and particle size distribution (PSD) using PSEP Method PS. Depending on the quantity of solids collected, the laboratory might not have been able to analyze all parameters, in which case, the analysis of parameters was prioritized in the order listed above.

2.7 RE-ROUTED KING COUNTY STORMWATER

Continuous flow rate monitoring of re-routed stormwater from King County took place through June 2014 at the wet well near the LTST, as discussed in the Completion Report (Landau Associates 2012b), using a weir and pressure transducer. In July 2014, inaccurate (falsely high) water level and flow rate readings were recorded due to accumulation of biological growth in the wet well. Since almost 3 years of re-routed King County stormwater flow monitoring data have been collected (which could be used to establish general annual stormwater flow patterns and volumes, if necessary), EPA approved discontinuation of this flow monitoring in September 2014. Sediment trap sampling will continue to include analysis of solids from the King County wet well on the re-route line annually.

2.8 CATCH BASIN INSERT FILTER REPLACEMENT

Although not directly related to CESF system treatment and LTST system monitoring, this source control action directly reduces the amount of solids and associated contaminants that enter the storm drain system and that the LTST system would need to filter out. Catch basin insert filters were initially installed and tested at three locations in March 2011. Catch basin insert filters were installed at 25 more catch basins in April 2012, with 14 of those locations being large catch basins that required two separate insert filter bag structures. Therefore, there are a total of 28 catch basin locations that have insert filter structures and a total of 42 individual insert filter bags used.

In May 2015, captured solids were collected from 24 out of 28 catch basin insert filters and submitted to the laboratory for PCB analysis by EPA Method 8082. The remaining 4 catch basin filter insert locations were either inaccessible due to construction or did not have enough sediment for sample collection. Twenty-four insert filters were observed to be clogged with solids and 35 of 42 filter bags were concurrently replaced. It is planned that filter inspection will continue to occur twice per year, and filters will be replaced whenever they are observed to be clogged with solids. It is also planned that catch basin filtered solids will continue to be sampled for PCBs once per year.

2.9 DEWATERING ACTIVITIES

As described in Section 1.2, installation of two new electrical substations during the 2014-2015 operational period required dewatering of groundwater, with the groundwater being discharged to the storm drain system upstream of the LTST system influent (but not upstream of the MH130A pump). Dewatering of excavations for these installations was accomplished by the installation and subsequent use of dewatering wells near the excavation. Prior to dewatering activities, extracted water from these dewatering wells was tested to demonstrate compliance with state surface water quality standards, in

accordance with conditionally authorized non-stormwater discharges as outlined in the Industrial Stormwater General Permit.

Although extracted groundwater demonstrated compliance with state water quality standards, it had higher concentrations of dissolved iron compared to typical stormwater runoff. Once this discharged groundwater entered the storm drain system and comingled with site stormwater, the dissolved iron oxygenated and precipitated, which resulted in higher than normal TSS concentrations in LTST system influent.

Clear Water operators, who were notified by Boeing of the incoming groundwater discharged into the storm drain system, were able to identify the higher influent turbidity through remote notification alarms and were able to adjust the CESF system logic to avoid issues that could lead to unwanted treatment system bypass. Specifically, the effluent turbidity setpoint for the LTST system logic controller at times has been temporarily increased from 5 nephelometric turbidity units (NTU) up to 20 NTU (the Industrial Stormwater General Permit [ISGP] benchmark is 25 NTU). Prior experiences with site dewatering activities have shown that it is difficult to achieve 5 NTU in system effluent when the influent turbidity and TSS is significantly higher than that of normal stormwater. The high influent turbidity and TSS could have led to excessive recirculation in the CESF system, as treated water that was still above 5 NTU would be recirculated through the treatment system. Extended periods of recirculation would have reduced the capacity of the LTST system to take in more incoming stormwater, leading to higher water levels in the LSIV that would eventually trigger one of the King County lift station pumps and cause bypass of untreated stormwater. However, the temporary adjustment of the CESF system effluent turbidity setpoint reduced the amount of untreated stormwater that would have bypassed treatment.

This procedure for temporarily adjusting the effluent turbidity setpoint during some periods of dewatering has been in place, but has not always been implemented immediately or up to the full value of 20 NTU. The procedure for adjusting the effluent turbidity setpoint to 20 NTU during times of dewatering and significant iron precipitation has now been formally adopted as standard practice during dewatering. Carl Bach or Ray Power are notified by other Boeing staff of any upcoming construction dewatering activities, and they in turn notify Clear Water staff so that they are aware in advance of the upcoming dewatering activity.

3.0 MONITORING RESULTS

The results from monitoring of the NBF storm drain system and LTST performance evaluation have been provided to the EPA on a regular basis as part of the detailed quarterly and brief monthly progress reports. These monitoring results are provided in this section. The results from sampling solids collected from the sediment traps and from the catch basin insert filters are also discussed.

3.1 LS431 AND LTST PERFORMANCE ANALYTICAL RESULTS

Cumulative laboratory analytical results are provided in Tables 2 through 8. Whole water results are provided in Table 2 for the LS431 point of compliance, Table 3 for MH130A, Table 4 for LSIV, and Table 5 for CESF system treated effluent. Filtered solids results are provided in Table 6 for MH130A, Table 7 for LSIV, and Table 8 for treated effluent.

3.1.1 PCBs IN WHOLE WATER

Analytical Resources Inc. evaluates PCBs in whole water between the Limit of Detection (LOD) and the Limit of Quantitation (LOQ) for each Aroclor. Since the target LOQ for PCBs in whole water is 0.010 µg/L, the LOD for PCBs in whole water is 0.005 µg/L unless the LOQ is elevated. PCB concentrations below the LOD are specified as non-detect in this report.

In the 2014-2015 reporting period, 16 out of 17 water samples of the LTST CESF system effluent were non-detect for PCBs. The one sample that was above the LOD had a measured PCB concentration of 0.006 µg/L, which is still below the LOQ; this represents the first instance of a measured CESF effluent concentration above the LOD at the NBF LTST. Concentrations of total PCBs at the influent to the CESF system have ranged from 0.047 µg/L to 0.22 µg/L at MH130A, and from non-detect to 0.020 µg/L at LSIV. At LSIV, PCBs were detected in three of four flow-weighted composite LSIV samples of bypass, ranging from 0.012 µg/L to 0.020 µg/L, but were not detected in any of the four grab samples of LSIV water during non-bypass conditions. At the POC, LS431, PCBs were not detected in any of the four quarterly routine event samples and three of five storm event samples in the 2014-2015 reporting period. When detected, PCBs at LS431 ranged from 0.007 µg/L to 0.008 µg/L. The two detections in the 2014-2015 reporting period coincided with either large amounts or a high intensity of precipitation during the sampling event, similar to what was observed in previous years (Landau Associates 2013, 2014, 2015). All PCB detections in water samples in the 2014-2015 reporting period have been Aroclor 1242, Aroclor 1248, Aroclor 1254 or Aroclor 1260. Aroclor 1254 has been the most common Aroclor detected in previous years. Aroclor 1260 was detected more frequently in 2013-2014 compared to previous years. Aroclor 1242 and Aroclor 1248 were detected only in influent from MH130A and were not detected prior to the 2014-2015 reporting period.

3.1.2 TSS IN WHOLE WATER

In the 2014-2015 reporting period, TSS in water samples ranged from non-detect [at a LOQ of 1.0 milligrams per liter (mg/L)] to 12.2 mg/L at the LTST CESF system effluent (prior to discontinuation of TSS analysis at this location); from 2.3 to 35.0 mg/L at MH130A; and from 3.1 to 66.5 mg/L at LSIV. In general, TSS was higher in flow-weighted composite LSIV samples of LTST bypass and lower in grab samples at LSIV during non-bypass conditions. At LS431, TSS in water samples ranged from 3.1 to 107.0 mg/L in the 2014-2015 reporting period. It is believed that higher TSS at LS431 on June 25, 2015 (100 mg/L) and on August 14, 2015 (107 mg/L) was associated with nearby temporary dewatering activities and iron precipitation from groundwater discharge to the storm drain system(as described in Section 2.9).

3.1.3 SVOCS IN WHOLE WATER

At LS431 and LSIV, SVOCs in water (other than PAHs) were non-detect during the reporting period for all constituents. There was one detection of di-n-octyl phthalate at MH130A in the reporting period, with a concentration of 1.4 µg/L. Sampling for SVOCs was discontinued in early 2015 in accordance with the 2015 SAP Addendum (Landau Associates 2015).

Due to the lower LOQs used, PAHs were more frequently detected at all sampling locations. Sampling for PAHs was discontinued in early 2015 in accordance with the 2015 SAP Addendum (Landau Associates 2015). Data indicate a strong correlation between the amount of precipitation (and corresponding percentage of treatment system bypass) during the sampling event and detections of PAHs. The routine events with little or no precipitation (and little to no CESF system bypass) had fewer detected constituents and generally lower PAH concentrations. As high molecular weight compounds with generally low solubility, similar to PCBs, PAHs in stormwater are known to be associated with the suspended solids rather than being present in a dissolved form. Therefore, it is not unexpected that the data suggest that the CESF treatment system is effective at reducing concentration of PAHs.

3.1.4 METALS IN WHOLE WATER

Though metals analysis was discontinued in early 2015, three sampling events included metals analysis that were consistent with prior water quality characteristics. High concentrations of iron and manganese continued to be routinely detected in LTST CESF system influent and LS431 water samples, consistent with the observation of base flow due to groundwater infiltration into the storm drain system and associated iron bacterial growth in many elements of the LTST system and storm drain system. Of the other metals analyzed for, arsenic, cadmium, chromium, copper, lead, nickel, and zinc were detected at

various concentrations at MH130A, LSIV, and LS431in the reporting period. Mercury was not detected at any sampling location in the reporting period.

In the 2014-2015 reporting period, for total arsenic in water samples, concentrations at the CESF system influent ranged from 0.5 to 1.1 µg/L at MH130A and from 0.6 to 1.2 µg/L at LSIV; for total cadmium in water samples, concentrations at the CESF system influent ranged from 0.2 to 0.4 µg/L at MH130A and from non-detect (at a LOQ of 0.1 µg/L) to 0.2 µg/L at LSIV; for total chromium in water samples, concentrations at the CESF system influent ranged from non-detect (at a LOQ of 0.5 µg/L) to 0.9 µg/L at MH130A and from non-detect (at a LOQ of 1 µg/L) to 1.4 µg/L at LSIV; for total copper in water samples, concentrations at the CESF system influent ranged from 4.1 to 5.8 µg/L at MH130A and from 1.2 to 5.3 µg/L at LSIV; for total lead in water samples, concentrations at the CESF system influent ranged from 0.3 to 3.9 µg/L at MH130A and from 0.1 to 2.9 µg/L at LSIV; for total nickel in water samples, concentrations at the CESF system influent ranged from 0.7 to 1.4 µg/L at MH130A and from 0.8 to 1.4 µg/L at LSIV; for total zinc in water samples, concentrations at the CESF system influent ranged from 36 to 85 µg/L at MH130A and from non-detect (at a LOQ of 4 µg/L) to 43 µg/L at LSIV.

As a point of comparison for the metals concentrations, the metals listed above (except nickel and chromium) have a benchmark value established in the Industrial Stormwater General Permit applicable to various industry categories. All of the LS431 POC samples at NBF were well below the listed benchmark values for those metals.

3.1.5 PCBs in Filtered Solids

In the 2014-2015 reporting period, calculated concentrations of PCBs in filtered solids (using filter bag weights and mass of solids collected) ranged from 4.75 to 6.01 milligrams per kilogram (mg/kg) at MH130A, from 0.03to 1.03 mg/kg at LSIV, and from 0.31 to 1.25 mg/kg at the CESF effluent. Calculated concentrations of PCBs in whole water (using PCBs in filtered solids data and filtered solids flow totalizer data) in the reporting period ranged from 0.024 to 0.101 µg/L at MH130A, from 0.001 to 0.024 µg/L at LSIV, and from 0.0002 to 0.0005 µg/L at the CESF effluent.

3.2 SUMMARY OF FLOW MEASUREMENTS AND PRECIPITATION DATA

During the period from November 1, 2014 through October 31, 2015, approximately 195 million gallons of water were treated and discharged by the CESF system. Flow rate measurements collected by the Flo-Dar sensor and Hach flow logger at the lift station discharge (LS431) indicated that 290 million gallons of stormwater were discharged from the lift station to Slip 4 in the same period. This volume includes both treated water and any water discharged by King County pumps that bypassed treatment. Therefore, an estimated 67 percent of stormwater flowing to the lift station was treated by the LTST system.

Accordingly, 75 to 96 million gallons of stormwater bypassed treatment at the LTST system and directly discharged to Slip 4. Periods of bypass of the treatment system can be determined from the flow data collected at LS431, as evidenced by a sharp increase in flow rate of discharge when a King County pump turns on and a sharp decrease in flow rate of discharge when a King County pump turns off. A summary of the 2014-2015 LTST sampling events and information on the times and durations of bypass during each event is included in Table 9.

As described in the 2011-2012 Annual Performance Evaluation Report (Landau Associates 2013), the vast majority of LTST system bypass occurs with just one of the four King County pumps on. The Flo-Dar meter was not calibrated for more than one King County pump on, so the accuracy of the data when more than one pump is on has not been confirmed. However, due to the low frequency and short duration of these occurrences, any error in flow data is deemed to be negligible when considering volumes for the entire year.

During the 1-year period from November 2014 through October 2015, approximately 29 inches of precipitation fell in the drainage area, as measured at the Boeing Field weather station (identified as KBFI); 6.4 million gallons were pumped directly from MH130A to the LTST system; and 0.21million gallons were measured to have bypassed the MH130A pump (by overtopping the adjacent MH130B weir) and flowed to the LSIV. This estimate of volume that overtopped the MH130B weir is likely an underestimate because data from January 2015 through March 2015 is not available due to a malfunction with the transducer located inside MH130B. An estimated percentage capture at MH130A of 94.2 percent is based on influent totalizer data and transducer measurements that omits the period from January 2015 through March 2015. Approximately 94.2 percent of stormwater at MH130A was captured and pumped directly to the treatment system (with an additional portion of the volume bypassed picked up for treatment at the LSIV). Since the start of LTST operation on November 1, 2011, the cumulative percent capture at MH130A is 93.8 percent, above the design average long-term capture of 91 percent.

Raw flow data collected at 1-minute intervals of discharge at LS431, at 15-minute intervals for CESF discharge, and at 30-second intervals at the King County re-route wet well weir and MH130B weir, are not presented in this report due to the large number of readings collected, but are available in electronic form upon EPA or Ecology's request. Precipitation totals and stormwater flow volumes by month are listed in Table 10.

3.3 SEDIMENT TRAP SAMPLING RESULTS

Sediment trap samples were most recently collected on April 28, 2015. Sediment trap sample analytical results for total PCBs for this most recent sampling event and for previous sediment trap sampling events are provided in Table 11.

The results of evaluating historical trends in PCB concentrations at each of the sampling locations are somewhat inconclusive because of the periodic instances when not enough solids had accumulated in the traps to allow the laboratory to present the PCB result on a dry weight basis; instead, the concentrations were presented "as received." It is also not possible to draw firm conclusions about reductions in PCB mass loading following source control activities using only sediment trap solids PCBs concentration data, because of the potential reduction in total solids mass loading (e.g., from catch basin insert filters, surface sweeping, catch basin cleanout, and/or storm drain pipe repair). Therefore, for the past few sediment trap sampling events, we have requested the laboratory record the total mass of solids collected in the traps.

Evaluation of both sets of data together reveals that PCBs mass deposition rates at sediment trap locations SL4-T5 and SL4-T1 over the past 4 monitoring years remain lower than the period prior to STST and LTST system installation, as shown in Table 12. The reduction in PCBs mass loading rates at T5 and T1 are likely primarily attributable to the capture and treatment of stormwater in the North Lateral storm drain line at MH130A during both STST and LTST system operations.

At sediment trap locations SL4-T2, SL4-T3, and SL4-T4, PCB mass loading rates appear to have increased somewhat compared to the previous few years. If this trend were to continue, and if the PCBs discharge loading at the LS431 POC were to approach the 0.018 µg/L FWAAC alternative interim goal for PCBs in the future, then additional source control actions in the south, south-central, and north-central laterals might need to be considered.

3.4 CATCH BASIN INSERT FILTER SOLIDS SAMPLING RESULTS

As part of continued PCBs source evaluation, samples of filtered solids from 24 of the 28 catch basins with insert filters were analyzed for PCBs (see information in Section 2.8). Laboratory data from the May 2015 catch basin insert filter solids sampling are provided in Table 13. PCB concentrations in solids ranged from 0.40 to 5 mg/kg, with one PCB concentration in solids at 40.6 mg/kg[4] (this catch basin is located within the drainage basin of MH130) It is planned that filter inspection will continue to occur twice per year, and filters will be replaced whenever they are observed to be clogged with solids. It is also planned that catch basin filtered solids will continue to be sampled for PCBs once per year.

[4] The source of PCBs may be associated with building paint. During 2010, paint was sampled from the 3-626 building and was found to contain PCBs ranging from 9.4 to 16.9 ppm, which is the reason that this location was selected for installation of one of the catch basin insert filters. Ecology (Mark Edens) indicated that this location will be included in the forthcoming Phase 2 RI anthropogenic sampling program.

4.0 EVALUATION OF LTST PERFORMANCE

This section provides an evaluation of the NBF LTST monitoring results for the period of November 2014 through October 2015.

4.1 LTST SYSTEM AND POINT OF COMPLIANCE

Results from the fourth year of LTST system operation confirm the continued ability of the LTST system to meet the interim goals as described in Section 1.4.2. At the POC (LS431), all flow-weighted composite whole water samples had PCBs concentrations that were below the marine chronic water quality criterion interim goal of 0.030 µg/L. Four out of four routine 3-day quarterly event composite samples and two out of five composite storm event samples at LS431 were non-detect for PCBs. For the two events where PCBs were detected during the 2014-2015 reporting period, concentrations ranged from 0.012 to 0.020 µg/L. These two detections, as well as the seven previous detections during the 2011-2012, 2012-2013, and 2013-2014 reporting periods, were recorded during very large or very intense precipitation events. This is not unexpected because more untreated stormwater will bypass the treatment system and be discharged during heavy or intense storm events.

The FWAAC at the LS431 POC, representing discharge to Slip 4, has been calculated for comparison to the 0.018 µg/L alternative interim goal. A memorandum describing the FWAAC evaluation and providing the associated calculations was prepared by Geosyntec and the NBF Stormwater Expert Panel and is provided in Appendix A. For the fourth year of LTST system operation, the FWAAC for total PCBs was calculated to be 0.0025 µg/L, assuming that non-detect results for PCBs are taken to be zero. The calculated FWAAC, if it is conservatively assumed that non-detect values were equal to the target LOD, was 0.0066 µg/L. The FWAAC values using both calculation methods are well below the alternative interim goal of 0.018 µg/L PCBs.

LTST flow monitoring indicates that the LTST system treated approximately 195 million gallons, which is 67 percent of measured stormwater volume discharged from the lift station to Slip 4 during the fourth year of LTST system operation. The 4-year cumulative capture and treatment of 66 percent of stormwater exceeds the original design basis of 59 percent (Geosyntec Consultants and Landau Associates 2011), indicating the capacity of the treatment system remains appropriate.

Calibration of the Flo-Dar flow meter for high-flow conditions (conducted during bypass of the treatment system during a period of intense precipitation) was not conducted in the 2014-2015 monitoring period. This calibration requires intense precipitation (difficult to predict) to occur outside of a sampling event (intense precipitation events are often targeted for sampling), and requires the coordination of Landau Associates personnel, Clear Water personnel, and King County personnel, which is difficult to

accomplish, especially during nighttime and weekend hours. The high-flow calibration was previously conducted in October 2014, and prior to that in April 2012. The two high-flow calibrations generated very similar high-flow correction factors (which are applied to LS431 flow data whenever one or more King County pumps are operating and bypassing the treatment system). Calibration of the Flo-Dar flow meter for low-flow conditions (conducted during discharge of treated water only, up to the design treatment flow rate of 1,500 gpm) was conducted on June 19, 2015. The previous low-flow calibration was most recently conducted in July 2013. The two low-flow calibrations generated very similar low-flow correction factors. We will continue to plan for one low-flow and one high-flow calibration every year, when possible.

Although not explicitly part of the LTST design or part of the SAP, it is worth noting that NBF is also covered under the Ecology ISGP. Since the LTST system has been in place, LS431 is also the designated sampling point for ISGP compliance. All LTST effluent and LS431 sampling results have met the numeric benchmark criteria for ISGP monitoring parameters (i.e., turbidity, pH, copper, and zinc).

4.2 VALIDITY OF ASSUMPTIONS

The alternative solids interim goal of a FWAAC for total PCBs in water of 0.018 µg/L at the LS431 POC was developed using certain estimates and assumptions (Jones et al. 2011). These assumptions were confirmed as appropriate for the first 3 years of operation, but it is worth comparing actual measured results from the fourth year of LTST system operation to values assumed in that evaluation.

4.2.1 NON-DETECT RESULTS

The assumption to use zero for non-detect PCBs results when calculating the FWAAC was evaluated and validated during the 2013-2014 monitoring year and is documented in the 2013-2014 LTST Annual Report (Landau Associates 2015). Table 8 shows the data from evaluation including three additional sampling events, which occurred during the 2014-2015 monitoring year prior to adoption of the 2015 SAP.

4.2.2 OTHER ASSUMPTIONS USED TO CALCULATE THE ALTERNATIVE INTERIM GOAL

Based on hydrologic modeling, a total volume for annual stormwater discharge from the lift station to Slip 4 of 352 million gallons was estimated (Geosyntec Consultants 2011a). The measured annual discharge of 290 million gallons of stormwater in the fourth year was 82 percent of the expected average volume, which coincides with measured precipitation of 29.38 inches, which was 82 percent of the historical annual average precipitation for the site vicinity of approximately 36 inches. This is similar

to the first 3 years of LTST operation, and the measured discharge volume indicates that the original estimate of average annual runoff volume still appears to be conservative.

During LTST system design, the annual average percentage of stormwater that was estimated to be treated was 59 percent. The measured volume of stormwater treated in the fourth year of operation was 195 million gallons, corresponding to 67 percent of the volume discharged to Slip 4. Therefore, the assumption of average percentage of stormwater that will be treated still appears to have been conservative and suggests that the 0.018 µg/L PCBs FWAAC would not need to be adjusted downward based on the actual measurements.

The forecast during LTST design was that the average TSS concentration at the LSIV would be 27 mg/L. The measured average LSIV TSS concentration has been variable during the 4 years of operation - 23.3 mg/L in the first year, 86.7 mg/L in the second year, 66.1 mg/L in the third year, and 25.2 mg/L in the fourth year. The average TSS concentration at the point of discharge, LS431, was 11.6 mg/L in the first year, 9.3 mg/L in the second year, 14.2 mg/L in the third year, and 28.7 mg/L in the fourth year. The high average TSS concentration at LS431 is heavily weighted by two sampling events (which resulted in TSS measurements of 100 mg/L in June and 107 mg/L in August, respectively) that are thought to be anomalous and related to site dewatering activities (see Section 1.2) that are believed to have caused elevated dissolved iron concentrations that impacted CESF system performance (see Section 2.9 for procedures to minimize adverse impacts to CESF system performance). Omitting these larger than normal values yields an average TSS concentration of 7.33 mg/L at LS431.

The average CESF system effluent TSS concentration was projected during LTST system design to be approximately 0.5 mg/L based on the performance of the STST system. The measured average TSS concentration in LTST system treated effluent was 3.2 mg/L during the 2014 to 2015 monitoring year. Similar to the first 3 years of operation, this higher than initially projected TSS concentration in the treated effluent is believed to be the result of the higher concentration of iron solids generated by the greater proportion of infiltrating groundwater to the LTST system compared to the STST stormwater source at MH130A. Overall, the relatively low TSS concentrations measured at LS431 and the system effluent suggest a similar solids mass loading to Slip 4 compared to what was originally estimated, again suggesting that no adjustment to the 0.018 µg/L PCBs FWAAC evaluation criterion would need to be made.

5.0 USE OF THIS REPORT

This report has been prepared for the exclusive use of The Boeing Company and applicable regulatory agencies for performance evaluation of a long-term stormwater treatment facility for removal of PCBs from stormwater in the storm drain system at NBF. No other party is entitled to rely on the information, conclusions, and recommendations included in this document without the express written consent of Landau Associates. Further, the reuse of information, conclusions, and recommendations provided herein for extensions of the project or for any other project, without review and authorization by Landau Associates, shall be at the user's sole risk. Landau Associates warrants that within the limitations of scope, schedule, and budget, our services have been provided in a manner consistent with that level of care and skill ordinarily exercised by members of the profession currently practicing in the same locality under similar conditions as this project. We make no other warranty, either express or implied.

This document has been prepared under the supervision and direction of the following key staff.

LANDAU ASSOCIATES, INC.

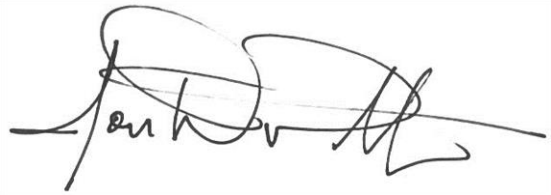

Jon Polka, EIT
Senior Staff EIT

Joseph A. Kalmar, P.E.
Principal

JAK/JDP/tam

6.0 REFERENCES

AMEC Geomatrix. 2011. *Slip 4 Salinity Monitoring Data Report, North Boeing Field, Seattle/Tukwila, Washington*. Submitted to The Boeing Company. June.

EPA. 2015. Email message from Karen Keeley, U.S. Environmental Protection Agency, to Carl M. Bach, The Boeing Company; Joe Kalmar and Kris Hendrickson, Landau Associates. Re: NBF Draft Annual Performance Evaluation Report, Long-Term Stormwater Treatment, 2013-2014. January 29..

EPA. 2012. Letter: *EPA Approval of Final Memorandum, Amended Monitoring Approach Recommendations for North Boeing Field Long-Term Stormwater Treatment System, North Boeing Field, Seattle, Washington, prepared for The Boeing Company by Geosyntec Consultants and NBF Stormwater Expert Panel, dated January 10, 2012, ASAOC for Removal Action, CERCLA-10-2010-0242.* From Karen Keeley, Project Manager, U.S. Environmental Protection Agency, to Carl Bach, Project Manager, The Boeing Company. January 19.

EPA. 2011. Letter: *EPA Approval of Slip 4 Salinity Monitoring Data Report, North Boeing Field, Seattle, Washington, prepared for The Boeing Company by AMEC Geomatrix, Inc., dated June 2011; ASAOC for Removal Action, CERCLA-10-2010-0242.* From Karen Keeley, Project Manager, U.S. Environmental Protection Agency, Region 10, to Brian Anderson, The Boeing Company. June 20.

EPA. 2010. Memorandum: *Action Memorandum for the Time-Critical Removal Action at North Boeing Field near the Slip 4 Early Action Area of the Lower Duwamish Waterway Superfund Site, Seattle, King County, Washington.* From Karen Keeley, Remedial Project Manager, U.S. Environmental Protection Agency, Region 10, to Daniel D. Opalski, Director, Office of Environmental Cleanup. September 23.

EPA and Boeing. 2010. *Administrative Settlement Agreement and Order on Consent for Removal Action, North Boeing Field and the Slip 4 Early Action Area of the Lower Duwamish Waterway Superfund Site, Seattle, Washington*. U.S. Environmental Protection Agency Region 10 Docket No. CERCLA-10-2010-0242. September 29.

Geosyntec Consultants. 2011a. *Final Removal Action Work Plan: Long-Term Stormwater Treatment Addendum, North Boeing Field*. March 3.

Geosyntec Consultants. 2011b. *Final Removal Action Work Plan: Long-Term Stormwater Treatment, North Boeing Field*. January 26.

Geosyntec Consultants. 2011c. *AKART Analysis Report for North Boeing Field Long-Term Stormwater Treatment*. February 9.

Geosyntec and Landau Associates. 2011. *Final Pre-Design Technical Memorandum: Long-Term Stormwater Treatment*. North Boeing Field. April 6.

Jones, J., M. Stenstrom, R. Pitt, and Geosyntec Consultants. 2012. Memorandum: *Amended Monitoring Approach Recommendations for North Boeing Field Long-Term Stormwater Treatment System.* From Jon Jones, Michael Stenstrom, and Robert Pitt, NBF Stormwater Expert Panel; jointly with Geosyntec Consultants, to Karen Keeley, U.S.EPA. January 10.

Jones, J., Stenstrom, M., Pitt, R., and Geosyntec Consultants. 2011. Memorandum: *Alternative Interim Goal Recommendations for Protection of Slip 4 Sediment Recontamination*. December 12.

Landau Associates 2015. *Annual Performance Evaluation Report, Long-Term Stormwater Treatment, 2013-2014, North Boeing Field, Seattle, Washington*. Prepared for The Boeing Company. February 19.

Landau Associates 2014. *Annual Performance Evaluation Report, Long-Term Stormwater Treatment, 2012-2013, North Boeing Field, Seattle, Washington*. Prepared for The Boeing Company. March 7.

Landau Associates 2013. *Annual Performance Evaluation Report, Long-Term Stormwater Treatment, 2011-2012, North Boeing Field, Seattle, Washington*. Prepared for The Boeing Company. March 28.

Landau Associates 2012a. *Sampling and Analysis Plan, Long-Term Stormwater Treatment, North Boeing Field, Seattle, Washington*. Prepared for The Boeing Company. March 21.

Landau Associates. 2012b. *Removal Action/Stormwater Treatment Completion Report, North Boeing Field, Seattle, Washington*. Prepared for The Boeing Company. March 23.

Landau Associates. 2011a. *Removal Action Work Plan, Short-Term Stormwater Treatment, North Boeing Field, Seattle, Washington*. Prepared for The Boeing Company. January 7.

Landau Associates. 2011b. *Technical Memorandum: November 2011 Progress Report, North Boeing Field Stormwater Treatment, Lower Duwamish Waterway Superfund Site, EPA Docket No. CERCLA-10-2010-0242*. From Kristi Hendrickson and Joseph Kalmar, Landau Associates, to Karen Keeley, U.S. Environmental Protection Agency. December 5.

Landau Associates. 2011c. *100% Design Report, Long-Term Stormwater Treatment, North Boeing Field, Seattle, Washington*. Prepared for The Boeing Company. June 24.

Landau Associates. 2010. *Proposed Design, Short-Term Stormwater Treatment Facility, North Boeing Field, Seattle, Washington*. Prepared for The Boeing Company. July 15.

SAIC. 2011. *North Boeing Field/Georgetown Steam Plant Site Remedial Investigation/ Feasibility Study: Assessment of Infiltration and Inflow to North Boeing Field Storm Drain System*. Prepared for the Washington State Department of Ecology. Science Applications International Corporation. February.

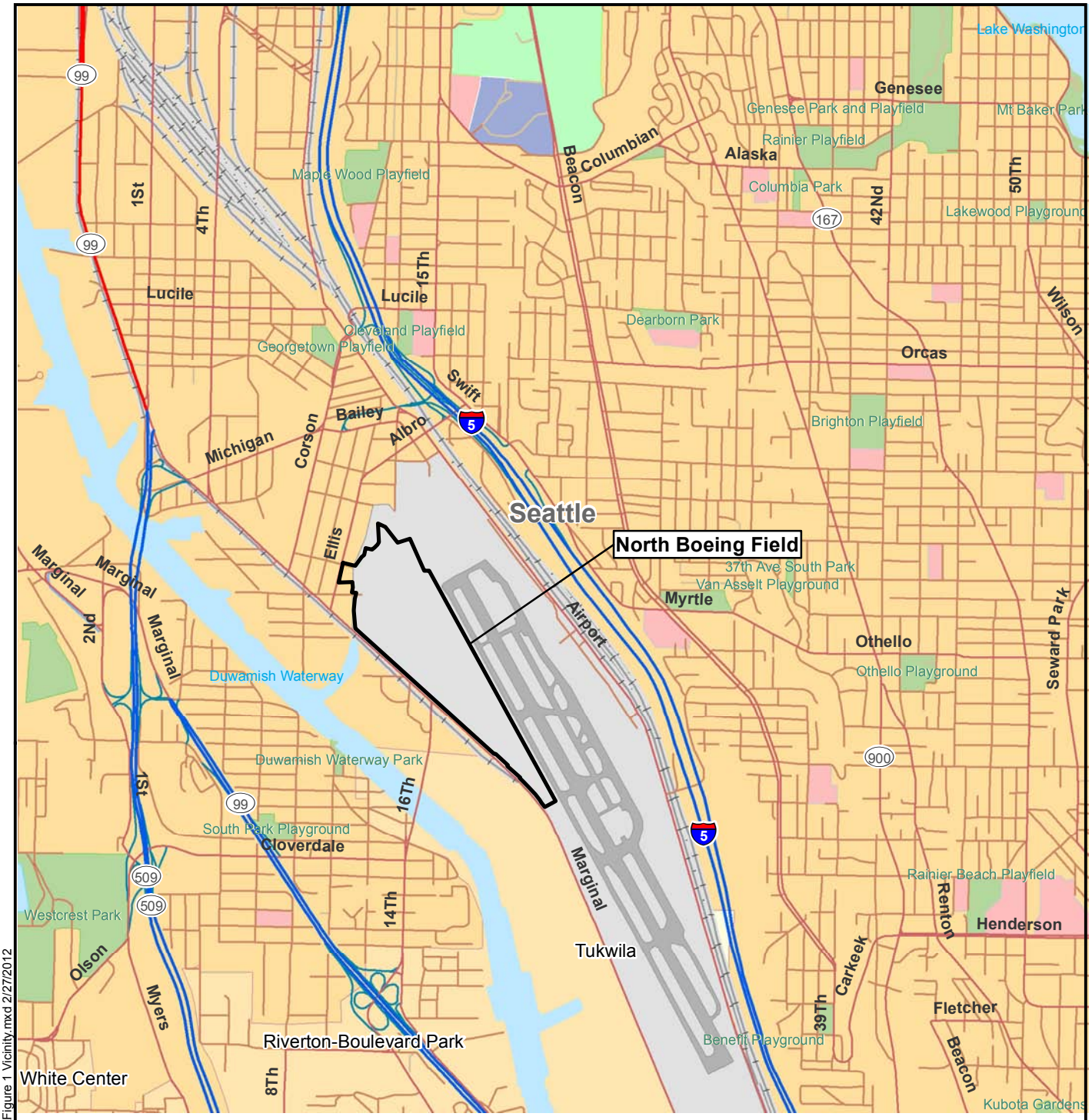

N

0 0.5 1
Miles

Data Source: ESRI 2008

Y:\Projects\025082\MapDocs\311\Completion Report\Figure 1 Vicinity.mxd 2/27/2012

LANDAU ASSOCIATES

North Boeing Field Seattle, Washington	**Vicinity Map**	Figure 1

G:\Projects\025\082\214\LTST Treatment\Figure 2-On_Offsite_Basins.mxd NAD 1983 StatePlane Washington North FIPS 4601 Feet

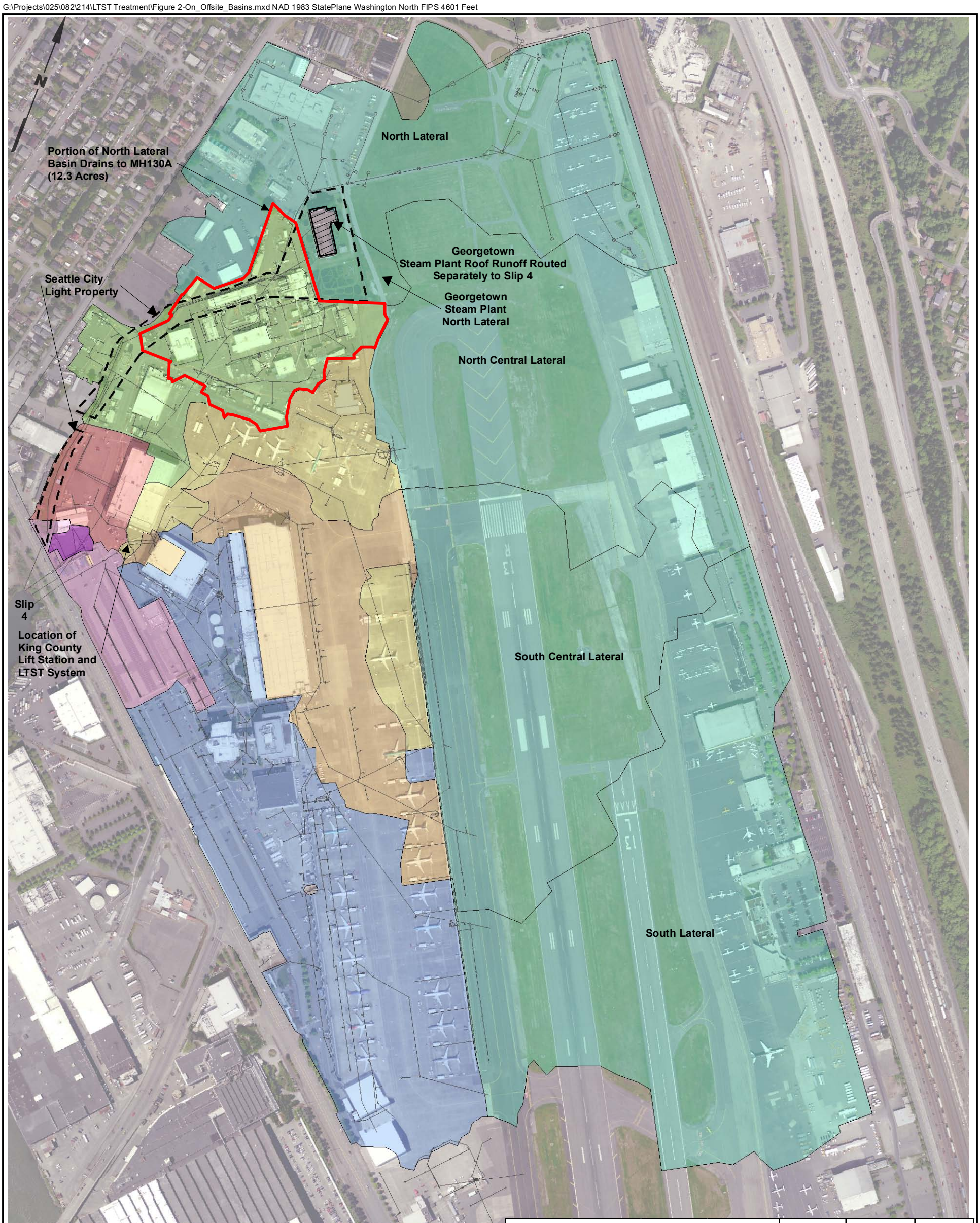

Legend

- MH130 Drainage Basin
- Off-site
- Building 3-380 Area
- North-Central Lateral
- North Lateral
- Parking Lot Area (Downstream of King County Lift Station, LS431)
- South-Central Lateral
- South Lateral
- Area Re-Routed to Combine with 3-380 Drainage Area

North Boeing Field Stormwater Drainage Basin Areas	Onsite Area (Acres)	Offsite Area (Acres)	Total Area (Acres)
North Lateral (Excluding Steam Plant Area)	18.1	37.0	55.1
North Lateral Steam Plant Only - No Roof	0.0	4.1	4.1
North-Central Lateral	14.7	42.6	57.3
South-Central Lateral	21.9	42.7	64.6
South Lateral	46.3	64.3	110.6
Bldg 3-380 Area	4.6	0.0	4.6
Re-Routed to Combine with 3-380 Drainage Area	0.5	0.0	0.5
Total Drainage Area to Lift Station (LS431)	106.1	190.7	296.8
Parking Lot Area (Downstream of KC Lift Station)	6.8	0.0	6.8

0 450 900

Scale in Feet

Data Source: Aerial - SAIC 2009; Conveyance System - The Boeing Company (On-site) and SAIC 2009 (Off-site); Basin Boundaries - The Boeing Company (On-site), SAIC 2009 (Off-site) Figure 2-1 "Storm Drain Lines in the Vicinity of NBF-GTSP Site", and City of Seattle Map "Lower Duwamish Waterway Areas Draining to Slip 4"

Note
1. Black and white reproduction of this color original may reduce its effectiveness and lead to incorrect interpretation.

LANDAU ASSOCIATES

North Boeing Field
Seattle, Washington

North Boeing Field Stormwater Drainage Basins

Figure 2

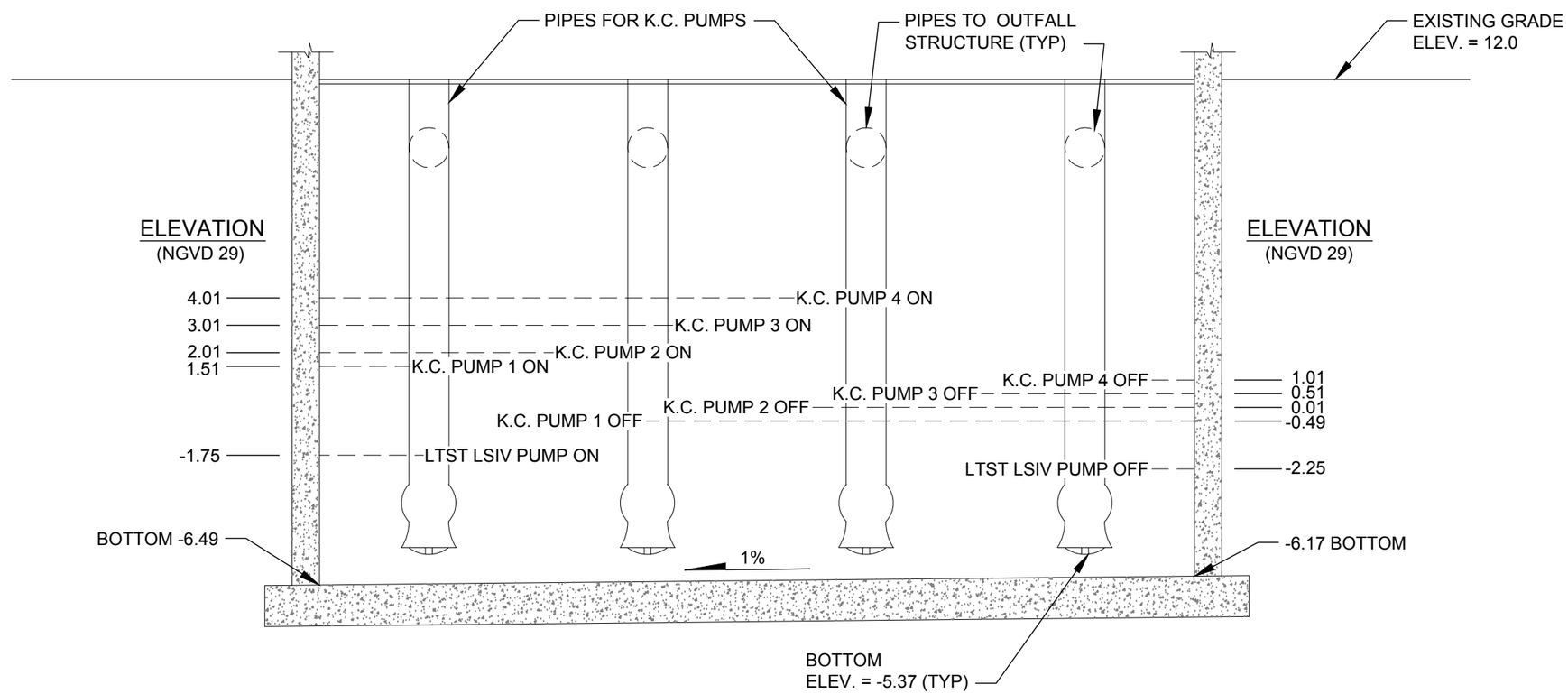

Notes

1. K.C. = King County
2. LTST LSIV pump is on a VFD. The pump on setting at elevation -1.75 triggers a flow rate of approximately 500 gpm. Flow rate is increased with rising water level, up to max LTST system capacity at approximate elevation 0.67.
3. On/Off settings as of February 2013. Settings may be adjusted to optimize treatment system operation.

SOURCE: 1944 AS-BUILT DRAWING PUMPING PLANT NO. 2 PROVIDED BY KING COUNTY

0 5 10
Scale in Feet

LANDAU ASSOCIATES

North Boeing Field Seattle, Washington	**LSIV Section Showing Pump On/Off Settings**	Figure 3

LANDAU ASSOCIATES, INC. | G:\Projects\025\082\2214\004\F03_DETAIL.dwg (A) "Figure 3" 2/27/2014

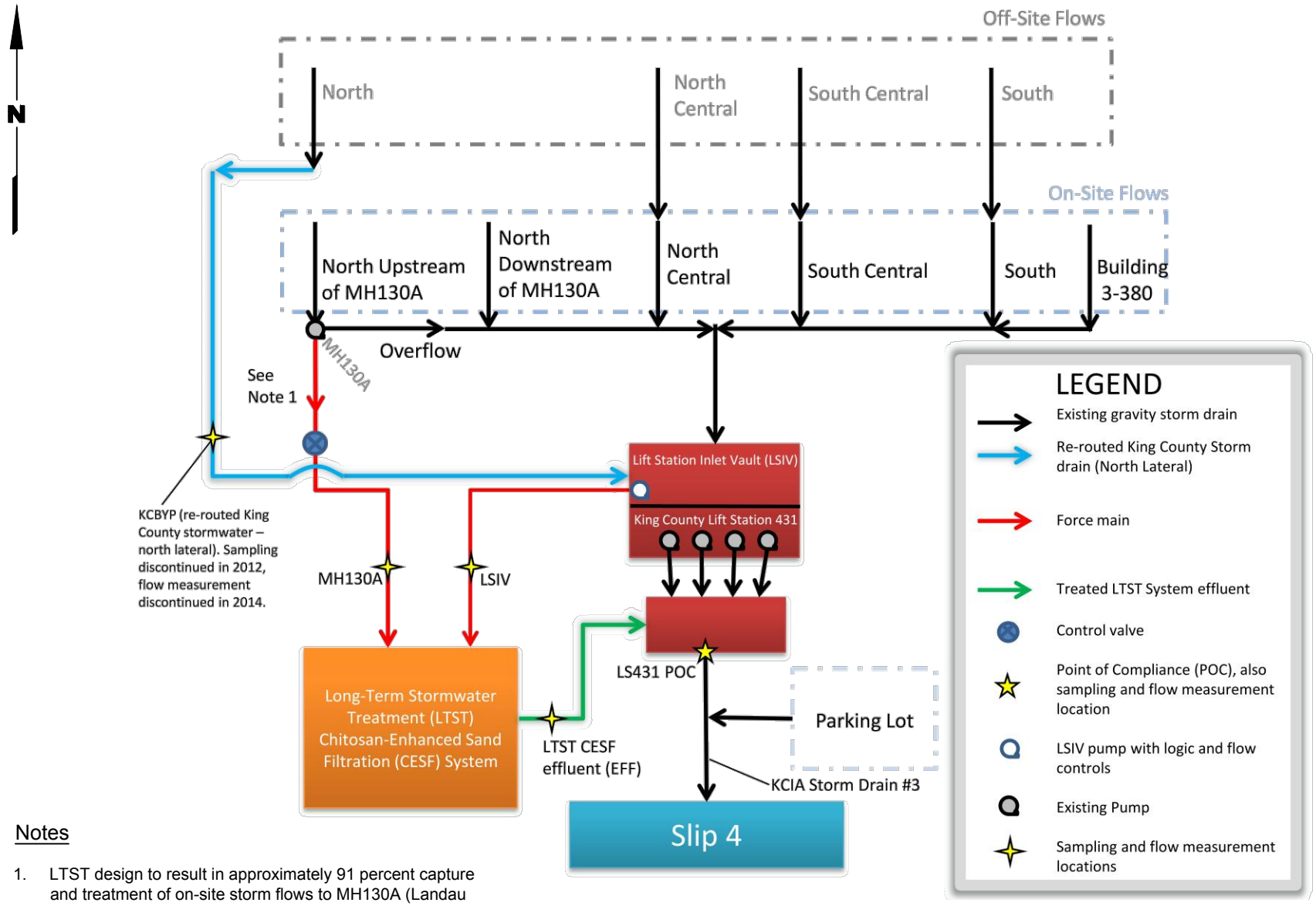

Notes

1. LTST design to result in approximately 91 percent capture and treatment of on-site storm flows to MH130A (Landau Associates 2011a).
2. Black and white reproduction of this color original may reduce its effectiveness and lead to incorrect interpretation.

Source: Adapted from Figure 1 (Jones et. al 2012)

LANDAU ASSOCIATES

North Boeing Field
Seattle, Washington

Schematic Diagram of LTST System Components

Figure 4

G:\Projects\025\082\214\LTST Treatment\Figure 5.mxd 12/4/2013 NAD 1983 StatePlane Washington North FIPS 4601 Feet

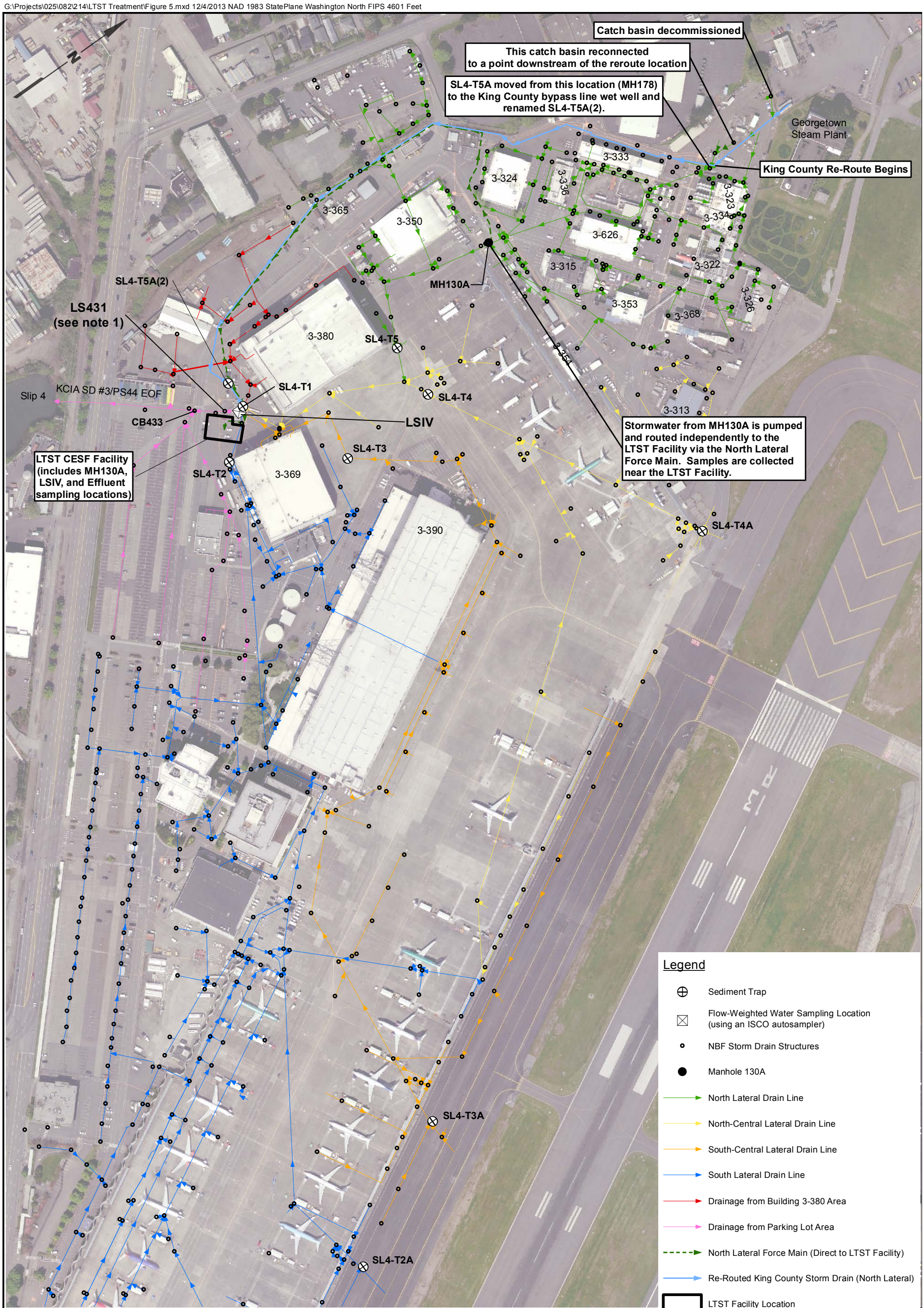

Notes:

1. LS431 is the Point of Compliance (POC).
2. Black and white reproduction of this color original may reduce its effectiveness and lead to incorrect interpretation.

Storm Drain System Data Source: SAIC

0 250 500
Scale in Feet

LANDAU ASSOCIATES

North Boeing Field
Seattle, Washington

Storm Drain System and LTST Sampling Locations

Figure 5

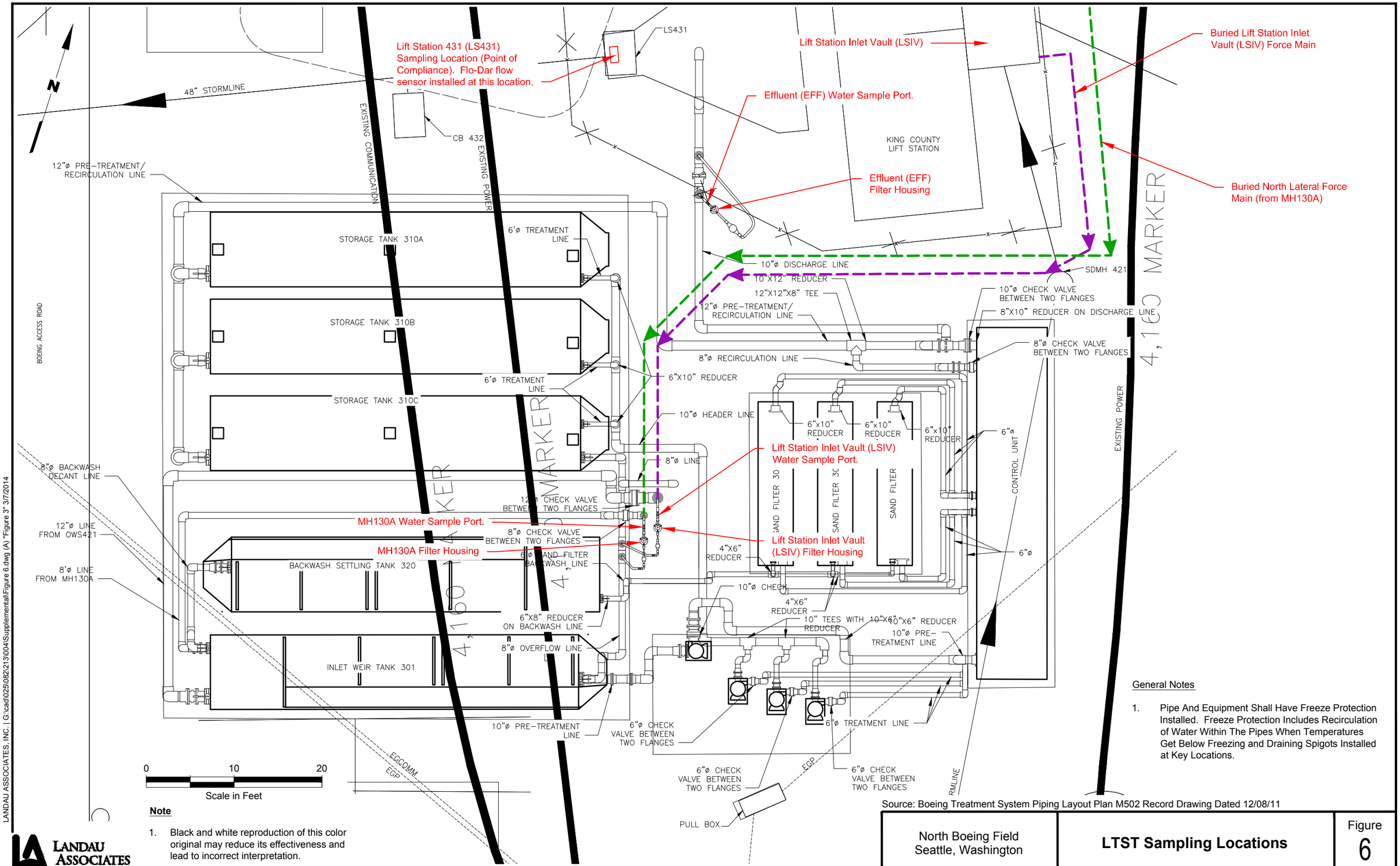

Source: Boeing Treatment System Piping Layout Plan M502 Record Drawing Dated 12/08/11

Note

1. Black and white reproduction of this color original may reduce its effectiveness and lead to incorrect interpretation.

General Notes

1. Pipe And Equipment Shall Have Freeze Protection Installed. Freeze Protection Includes Recirculation of Water Within The Pipes When Temperatures Get Below Freezing and Draining Spigots Installed at Key Locations.

LANDAU ASSOCIATES

North Boeing Field Seattle, Washington	**LTST Sampling Locations**	Figure 6

LANDAU ASSOCIATES, INC. | G:\cad\025\082\213\004\Supplemental\Figure 6.dwg (A) "Figure 3" 3/7/2014

TABLE 1
SUMMARY OF 2014-2015 LTST STORMWATER SAMPLING EVENTS
LONG-TERM STORMWATER TREATMENT SYSTEM
NORTH BOEING FIELD - SEATTLE, WASHINGTON

Location	Sample Type	Sample Media	Frequency (a)	Parameters	Dates Sampled
Lift Station (LS431) (Compliance Monitoring Point)	Whole Water (flow-weighted composite)	Stormwater (b)	Quarterly routine sampling in 2015; Five additional 24-hour storm events of ≥0.5 inch precipitation, November 1, 2014 - October 31, 2015	PCBs	Routine Events: 1/15/15, 4/10/15, 7/9/15, 10/8/15 Storm Events: 12/10/14, 12/24/14, 2/6/15, 10/11/15, 10/31/15
	Whole Water (grab)		Quarterly sampling in 2015	TSS	Quarterly Grab Sample: 2/2/15, 6/25/15, 6/30/2015, 8/14/2015, 9/1/2015, 10/8/15
				Total Copper and Total Zinc (c)	Consistent Attainment
				Turbidity (c)	
				pH (c)	
Long-Term Stormwater Treatment System	Whole Water Influent from Lift Station Inlet Vault: Flow-weighted composite of treatment system bypass (preferred) or grab (if insufficient bypass occurs for flow-weighted sample collection)	Stormwater (b)	Quarterly routine sampling (d) in 2015; Five additional 24-hour storm events (d) of ≥0.5 inch precipitation, November 1, 2014 - October 31, 2015	PCBs	Routine Events: 1/15/15, 4/10/15, 7/9/15, 10/8/15 Storm Events: 12/9/14, 12/23/14, 2/6/15, 10/11/15, 10/31/15
				TSS	
	Whole Water Influent from MH130A (grab)	Stormwater (b)	Quarterly routine sampling (d) in 2015; Five additional 24-hour storm events (d) of ≥0.5 inch precipitation, November 1, 2014 - October 31, 2015	PCBs	Routine Events: 1/15/15, 4/10/15, 7/9/15, 10/7/15 Storm Events: 12/9/14, 12/23/14, 2/6/15, 10/11/15, 10/31/15
				TSS	
	Whole Water Effluent (grab) (e)	Stormwater (b)	Twice monthly (f)	Residual Chitosan	
	Whole Water Effluent (grab)	Stormwater (b)	Five 24-hour storm events (d) of ≥0.5 inch precipitation, November 1, 2014 - October 31, 2015; and monthly sampling (d) in 2015	PCBs	Monthly Events: 1/15/15, 2/6/15, 3/10/15 4/15/15, 5/5/15, 6/2/15, 7/9/15, 8/4/15, 9/1/15, 10/7/15 Storm Events: 12/10/14, 12/24/14, 2/6/15, 10/11/15, 10/31/15
				TSS	
Sediment Traps [SL4-T1, SL4-T2, SL4-T3, SL4-T4, SL4-T4A, SL4-T5, SL4-T5A(2) (g)] (SL4-T5A moved from MH178 to King County bypass line wet well)	Annual Composite, Homogenized	Stormwater Solids	Annually (h)	PCBs	Sampling Event: 4/28/2015
				SVOCs	
				Total Metals (i)	
				NWTPH-Dx	
				TOC	
				Percent Total Solids	
				PSD	
Weir and Storage Tanks, Sand Filter Media	Composite from 3 or More Grab Samples from Tank or Filter Vessel (grab locations to result in both horizontal and vertical compositing)	Settled Solids	As Needed (j)	PCBs	Sampling Event: 3/12/2015
				SVOCs	
				Metals (k)	
				Petroleum Hydrocarbons	

TABLE 1
SUMMARY OF 2014-2015 LTST STORMWATER SAMPLING EVENTS
LONG-TERM STORMWATER TREATMENT SYSTEM
NORTH BOEING FIELD - SEATTLE, WASHINGTON

PCBs = polycholorinated biphenyls
TSS = total suspended solids
PSD = particle size distribution
TOC = total organic carbon

SVOCs = semivolatile organic compounds
TCLP = toxicity characteristic leaching procedure
PAH = polycyclic aromatic hydrocarbon
NWTPH-Dx = Total Petroleum Hydrocarbons Diesel Range

EPA = U.S. Environmental Protection Agency
PSEP = Puget Sound Estuary Protocols
LTST = long-term stormwater treatment
STST = short-term stormwater treatment

(a) Monitoring plan beginning November 2014. All sampling and analysis performed by Boeing/Landau Associates and Boeing's contract laboratory, unless otherwise noted.
(b) Stormwater is defined as all liquids, including any particles dissolved therein, in the form of base flow, stormwater runoff, snow melt runoff, and drainage, as well as all solids that enter the storm drain system.
(c) Quarterly sampling for total copper and total zinc, turbidity, and pH at LS431 was suspended due to consistent attainment of Industrial Stormwater General Permit benchmarks, in accordance with permit conditions.
(d) LTST system influent/effluent sampling events was performed concurrent with lift station (LS431) sampling events unless no LS431 sample was collected.
(e) Whole water effluent grab samples for Residual Chitosan testing was collected from the treatment facility effluent sample port by Clear Water Services.
(f) Residual chitosan was never detected in twice monthly effluent samples from the LTST facility in the first 3 years of monitoring, or in weekly effluent samples from the STST facility. There is extremely low probability of chitosan being able to pass through the sand filters.
(g) Location SL4-T5A(2) does not have a bracket and Teflon container like other sediment trap locations; SL4-T5A(2) was sampled by collecting solids from the bottom of the wet well, which collects solids behind a permanent weir.
(h) Particle size distribution for sediment trap solids samples was conducted using PSEP method. When low volumes of sample are collected, particle size distribution was accomplished using sedigraph for material less than 62.5 µm.
(i) Metals arsenic, copper, lead, and zinc was analyzed using EPA Method 6010; Hg was analyzed using EPA Method 7471.
(j) The thickness of accumulated solids (sludge) in the weir tanks was checked at least once per month to determine if solids should be removed. Waste characterization was not deemed necessary due to available appropriate prior waste characterization data. Sand filter media was r emoved and replaced on all three systems between May 12, 2015 through July 1, 2015. Sampling of filter media was not necessary as analytical data from prior waste sampling were sufficient to determine appropriate disposal options.
(k) Metals arsenic, barium, cadmium, chromium, lead, selenium, and silver was analyzed according to EPA Method 6010; mercury was analyzed using EPA Method 7471; TCLP analysis was by EPA Method 1311.

Note: The LTST 2015 SAP Addendum was approved on 2/24/15, which discontinued analysis of samples taken at LS431 of SVOCs, PAHs and metals (arsenic, cadmium, chromium, copper, lead, mercury, nickel, and zinc) in 2015, with the exception of total copper and zinc, which continue to be monitored as required under the ISGP. Additionally, monitoring of SVOCs, PAHs and metals were discontinued for MH130A and LSIV samples. Filtered solids sampling for PCBs also ceased for MH130A, LSIV, and LTST system effluent. Some sampling events (12/10/14, 12/24/14, 1/15/15) were based on the LTST 2014 SAP Addendum and, thus, include analyses for these discontinued constituents and are included in the appropriate data tables.

TABLE 2
LS431 WHOLE WATER SAMPLING ANALYTICAL RESULTS
LONG-TERM STORMWATER TREATMENT SYSTEM
NORTH BOEING FIELD - SEATTLE, WASHINGTON

Sample Location ID	LS431-W	LS431-W	LS431-W	LS431-W	LS431-W	LS431-W	LS431-W	LS431-W	LS431-W	LS431-W
Laboratory Data ID	TW50A/TW50F/TW54A	TX90A/TX90D/TX91A	TY96A/TY96D/TY98A	UA56A/UA56D/UA57A	UC78A/UC78D/UC80A	UE10A/UE10D/UE11A	UE68A/UE68D/UE73A	UH75A/UH75F/UH76A	UL49A/UL49D/UL50A	UM18A/UM18C/UM19A
Sample Start Date	11/8/2011	11/16/2011	11/22/2011	12/5/2011	12/27/2011	1/9/2012	1/20/2012	2/6/2012	3/5/2012	3/12/2012
Sample End Date	11/11/2011	11/17/2011	11/23/2011	12/8/2011	12/28/2011	1/12/2012	1/21/2012	2/8/2012	3/8/2012	3/13/2012
Event Type	Monthly	Storm	Storm	Monthly	Storm	Monthly	Storm	Monthly	Monthly	Storm
Sample Type					Flow-weighted composite					
PCBs (µg/L) (a)										
Method SW8082A										
Aroclor 1016	0.010 U	0.010 U	0.010 U	0.010 U	0.010 U	0.010 U	0.010 U	0.010 U	0.010 U	0.010 U
Aroclor 1242	0.010 U	0.010 U	0.010 U	0.010 U	0.010 U	0.010 U	0.010 U	0.010 U	0.010 U	0.010 U
Aroclor 1248	0.010 U	0.010 U	0.010 U	0.010 U	0.010 U	0.010 U	0.010 U	0.010 U	0.010 U	0.010 U
Aroclor 1254	0.010 U	0.010 U	**0.025**	0.010 U	0.010 U	0.010 U	0.010 U	0.010 U	0.010 U	0.010 U
Aroclor 1260	0.010 U	0.010 U	0.010 U	0.010 U	0.010 U	0.010 U	0.010 U	0.010 U	0.010 U	0.010 U
Aroclor 1221	0.010 U	0.010 U	0.010 U	0.010 U	0.010 U	0.010 U	0.010 U	0.010 U	0.010 U	0.010 U
Aroclor 1232	0.010 U	0.010 U	0.010 U	0.030 U	0.010 U	0.012 U	0.010 U	0.010 U	0.010 U	0.010 U
Aroclor 1262	0.010 U	0.010 U	0.010 U	0.010 U	0.010 U	0.010 U	0.010 U	0.010 U	0.010 U	0.010 U
Total PCBs (b)	ND	ND	**0.025**	ND	ND	ND	ND	ND	ND	ND
SEMIVOLATILES (µg/L)										
Method SW8270D										
Phenol	**1.8**	**1.5**	1.0 U	1.0 U	1.0 U	1.0 U	1.0 U	1.0 U	1.0 U	1.0 U
Bis-(2-Chloroethyl) Ether	NA	NA	NA	NA	NA	1.0 U	NA	NA	NA	NA
2-Chlorophenol	NA	NA	NA	NA	NA	1.0 U	NA	NA	NA	NA
1,3-Dichlorobenzene	NA	1.0 U	1.0 U	1.0 U	NA	1.0 U	NA	1.0 U	1.0 U	1.0 U
1,4-Dichlorobenzene	1.0 U	1.0 U	1.0 U	1.0 U	1.0 U	1.0 U	1.0 U	1.0 U	1.0 U	1.0 U
Benzyl Alcohol	5.0 U	5.0 U	5.0 U	5.0 U	5.0 U	5.0 U	5.0 U	5.0 U	5.0 U	5.0 U
1,2-Dichlorobenzene	1.0 U	1.0 U	1.0 U	1.0 U	1.0 U	1.0 U	1.0 U	1.0 U	1.0 U	1.0 U
2-Methylphenol	1.0 U	1.0 U	1.0 U	1.0 U	1.0 U	1.0 U	1.0 U	1.0 U	1.0 U	1.0 U
2,2'-Oxybis(1-Chloropropane)	NA	NA	NA	NA	NA	1.0 U	NA	NA	NA	NA
4-Methylphenol	1.0 U	1.0 U	1.0 U	1.0 U	1.0 U	1.0 U	1.0 U	1.0 U	1.0 U	1.0 U
N-Nitroso-Di-N-Propylamine	NA	NA	NA	NA	NA	1.0 U	NA	NA	NA	NA
Hexachloroethane	NA	1.0 U	1.0 U	1.0 U	NA	1.0 U	NA	1.0 U	1.0 U	1.0 U
Nitrobenzene	NA	NA	NA	NA	NA	1.0 U	NA	NA	NA	NA
Isophorone	NA	NA	NA	NA	NA	1.0 U	NA	NA	NA	NA
2-Nitrophenol	NA	NA	NA	NA	NA	5.0 U	NA	NA	NA	NA
2,4-Dimethylphenol	1.0 U	1.0 U	1.0 U	1.0 U	1.0 U	1.0 U	1.0 U	1.0 U	1.0 U	1.0 U
Benzoic Acid	10 U	10 U	10 U	10 U	10 U	10 U	10 U	10 U	10 U	10 U
bis(2-Chloroethoxy) Methane	NA	NA	NA	NA	NA	1.0 U	NA	NA	NA	NA
2,4-Dichlorophenol	NA	NA	NA	NA	NA	5.0 U	NA	NA	NA	NA
1,2,4-Trichlorobenzene	1.0 U	1.0 U	1.0 U	1.0 U	1.0 U	1.0 U	1.0 U	1.0 U	1.0 U	1.0 U
Naphthalene	1.0 U	1.0 U	1.0 U	1.0 U	1.0 U	1.0 U	1.0 U	1.0 U	1.0 U	1.0 U
4-Chloroaniline	NA	NA	NA	NA	NA	5.0 U	NA	NA	NA	NA
Hexachlorobutadiene	1.0 U	1.0 U	1.0 U	1.0 U	1.0 U	1.0 U	1.0 U	1.0 U	1.0 U	1.0 U
4-Chloro-3-methylphenol	NA	NA	NA	NA	NA	5.0 U	NA	NA	NA	NA
2-Methylnaphthalene	1.0 U	1.0 U	1.0 U	1.0 U	1.0 U	1.0 U	1.0 U	1.0 U	1.0 U	1.0 U
Hexachlorocyclopentadiene	NA	NA	NA	NA	NA	5.0 U	NA	NA	NA	NA
2,4,6-Trichlorophenol	NA	NA	NA	NA	NA	5.0 U	NA	NA	NA	NA
2,4,5-Trichlorophenol	NA	NA	NA	NA	NA	5.0 U	NA	NA	NA	NA
2-Chloronaphthalene	NA	NA	NA	NA	NA	1.0 U	NA	NA	NA	NA
2-Nitroaniline	NA	NA	NA	NA	NA	5.0 U	NA	NA	NA	NA
Dimethylphthalate	1.0 U	1.0 U	1.0 U	1.0 U	1.0 U	1.0 U	1.0 U	1.0 U	1.0 U	1.0 U
Acenaphthylene	1.0 U	1.0 U	1.0 U	1.0 U	1.0 U	1.0 U	1.0 U	1.0 U	1.0 U	1.0 U
3-Nitroaniline	NA	NA	NA	NA	NA	5.0 U	NA	NA	NA	NA
Acenaphthene	1.0 U	1.0 U	1.0 U	1.0 U	1.0 U	1.0 U	1.0 U	1.0 U	1.0 U	1.0 U

TABLE 2
LS431 WHOLE WATER SAMPLING ANALYTICAL RESULTS
LONG-TERM STORMWATER TREATMENT SYSTEM
NORTH BOEING FIELD - SEATTLE, WASHINGTON

Sample Location ID	LS431-W	LS431-W	LS431-W	LS431-W	LS431-W	LS431-W	LS431-W	LS431-W	LS431-W	LS431-W
Laboratory Data ID	TW50A/TW50F/TW54A	TX90A/TX90D/TX91A	TY96A/TY96D/TY98A	UA56A/UA56D/UA57A	UC78A/UC78D/UC80A	UE10A/UE10D/UE11A	UE68A/UE68D/UE73A	UH75A/UH75F/UH76A	UL49A/UL49D/UL50A	UM18A/UM18C/UM19A
Sample Start Date	11/8/2011	11/16/2011	11/22/2011	12/5/2011	12/27/2011	1/9/2012	1/20/2012	2/6/2012	3/5/2012	3/12/2012
Sample End Date	11/11/2011	11/17/2011	11/23/2011	12/8/2011	12/28/2011	1/12/2012	1/21/2012	2/8/2012	3/8/2012	3/13/2012
Event Type	Monthly	Storm	Storm	Monthly	Storm	Monthly	Storm	Monthly	Monthly	Storm
Sample Type					Flow-weighted composite					
2,4-Dinitrophenol	NA	NA	NA	NA	NA	10 U	NA	NA	NA	NA
4-Nitrophenol	NA	NA	NA	NA	NA	5.0 U	NA	NA	NA	NA
Dibenzofuran	1.0 U	1.0 U	1.0 U	1.0 U	1.0 U	1.0 U	1.0 U	1.0 U	1.0 U	1.0 U
2,6-Dinitrotoluene	NA	NA	NA	NA	NA	5.0 U	NA	NA	NA	NA
2,4-Dinitrotoluene	NA	NA	NA	NA	NA	5.0 U	NA	NA	NA	NA
Diethylphthalate	1.0 U	1.0 U	1.0 U	1.0 U	1.0 U	1.0 U	1.0 U	1.0 U	1.0 U	1.0 U
4-Chlorophenyl-phenylether	NA	NA	NA	NA	NA	1.0 U	NA	NA	NA	NA
Fluorene	1.0 U	1.0 U	1.0 U	1.0 U	1.0 U	1.0 U	1.0 U	1.0 U	1.0 U	1.0 U
4-Nitroaniline	NA	NA	NA	NA	NA	5.0 U	NA	NA	NA	NA
4,6-Dinitro-2-Methylphenol	NA	NA	NA	NA	NA	10 U	NA	NA	NA	NA
N-Nitrosodiphenylamine	1.0 U	1.0 U	1.0 U	1.0 U	1.0 U	1.0 U	1.0 U	1.0 U	1.0 U	1.0 U
4-Bromophenyl-phenylether	NA	NA	NA	NA	NA	1.0 U	NA	NA	NA	NA
Hexachlorobenzene	1.0 U	1.0 U	1.0 U	1.0 U	1.0 U	1.0 U	1.0 U	1.0 U	1.0 U	1.0 U
Pentachlorophenol	5.0 U	5.0 U	5.0 U	5.0 U	5.0 U	5.0 U	5.0 U	5.0 U	5.0 U	5.0 U
Phenanthrene	1.0 U	1.0 U	1.0 U	1.0 U	1.0 U	1.0 U	1.0 U	1.0 U	1.0 U	1.0 U
Carbazole	NA	NA	NA	NA	NA	1.0 U	NA	NA	NA	NA
Anthracene	1.0 U	1.0 U	1.0 U	1.0 U	1.0 U	1.0 U	1.0 U	1.0 U	1.0 U	1.0 U
Di-n-Butylphthalate	1.0 U	1.0 U	1.0 U	1.0 U	1.0 U	1.0 U	1.0 U	1.0 U	1.0 U	1.0 U
Fluoranthene	1.0 U	1.0 U	1.0 U	1.0 U	1.0 U	1.0 U	1.0 U	1.0 U	1.0 U	1.0 U
Pyrene	1.0 U	1.0 U	1.0 U	1.0 U	1.0 U	1.0 U	1.0 U	1.0 U	1.0 U	1.0 U
Butylbenzylphthalate	1.0 U	1.0 U	1.0 U	1.0 U	1.0 U	1.0 U	1.0 U	1.0 U	1.0 U	1.0 U
3,3'-Dichlorobenzidine	NA	NA	NA	NA	NA	5.0 U	NA	NA	NA	NA
Benzo(a)anthracene	1.0 U	1.0 U	1.0 U	1.0 U	1.0 U	1.0 U	1.0 U	1.0 U	1.0 U	1.0 U
bis(2-Ethylhexyl)phthalate	1.0 U	1.0 U	**1.0**	1.0 U	**2.3**	1.0 U	1.0 U	1.0 U	1.0 U	1.0 U
Chrysene	1.0 U	1.0 U	1.0 U	1.0 U	1.0 U	1.0 U	1.0 U	1.0 U	1.0 U	1.0 U
Di-n-Octyl phthalate	1.0 U	1.0 U	1.0 U	1.0 U	1.0 U	1.0 U	1.0 U	1.0 U	1.0 U	1.0 U
Benzo(a)pyrene	1.0 U	1.0 U	1.0 U	1.0 U	1.0 U	1.0 U	1.0 U	1.0 U	1.0 U	1.0 U
Indeno(1,2,3-cd)pyrene	1.0 U	1.0 U	1.0 U	1.0 U	1.0 U	1.0 U	1.0 U	1.0 U	1.0 U	1.0 U
Dibenz(a,h)anthracene	1.0 U	1.0 U	1.0 U	1.0 U	1.0 U	1.0 U	1.0 U	1.0 U	1.0 U	1.0 U
Benzo(g,h,i)perylene	1.0 U	1.0 U	1.0 U	1.0 U	1.0 U	1.0 U	1.0 U	1.0 U	1.0 U	1.0 U
1-Methylnaphthalene	NA	1.0 U	1.0 U	1.0 U	NA	1.0 U	NA	1.0 U	1.0 U	1.0 U
Total Benzofluoranthenes	1.0 U	1.0 U	1.0 U	1.0 U	1.0 U	1.0 U	1.0 U	1.0 U	1.0 U	1.0 U
PAHs (µg/L)										
Method SW8270D-SIM										
Naphthalene	**0.022**	**0.032**	**0.044**	**0.018** U	**0.021**	**0.012**	**0.080**	0.021 U	**0.012**	**0.014**
2-Methylnaphthalene	**0.011**	**0.038**	**0.025**	0.010 U	**0.013**	**0.0099** J	**0.10**	**0.014**	0.010 U	**0.014**
1-Methylnaphthalene	0.010 U	**0.028**	**0.016**	0.010 U	**0.0091** J	**0.0070** J	**0.075**	**0.011**	0.010 U	**0.012**
Acenaphthylene	0.010 U	0.010 U	0.010 U	0.010 U	0.010 U	0.010 U	**0.010**	0.010 U	0.010 U	0.010 U
Acenaphthene	**0.087**	**0.030**	**0.0088** J	**0.092**	**0.015**	**0.041**	**0.013**	**0.088**	**0.045**	**0.011**
Fluorene	0.010 U	**0.010**	**0.0093** J	0.010 U	**0.0068** J	0.010 U	**0.019**	0.010 U	0.010 U	0.010 U
Phenanthrene	0.010 U	**0.032**	**0.094**	**0.010**	**0.081**	**0.014** J	**0.078**	**0.022**	**0.018**	**0.031**
Anthracene	0.010 U	0.010 U	**0.013**	0.010 U	**0.0096** J	0.010 U	**0.0070** J	0.010 U	0.010 U	0.010 U
Fluoranthene	0.012 U	**0.056** B	**0.28** B	0.010 U	**0.24**	**0.032**	**0.17**	**0.041**	**0.041**	**0.078**
Pyrene	0.010 U	**0.029**	**0.19**	0.010 U	**0.18**	**0.019**	**0.12**	**0.038** J	**0.024**	**0.048**
Benzo(a)anthracene	0.010 U	0.010 U	**0.057**	0.010 U	**0.043**	0.010 U	**0.026**	0.010 U	0.010 U	**0.0093** J
Chrysene	0.010 U	**0.020**	**0.17** B	0.010 U	**0.14**	**0.011**	**0.11**	**0.019**	**0.017**	**0.043**
Benzo(a)pyrene	0.010 U	0.010 U	**0.10**	0.010 U	**0.072**	0.010 U	**0.048**	0.010 U	0.010 U	**0.015**
Indeno(1,2,3-cd)pyrene	0.010 U	0.010 U	**0.10**	0.010 U	**0.070**	0.010 U	**0.048**	0.010 U	0.010 U	**0.012**
Dibenz(a,h)anthracene	0.010 U	0.010 U	**0.035**	0.010 U	**0.020**	0.010 U	**0.014**	0.010 U	0.010 U	0.010 U
Benzo(g,h,i)perylene	0.010 U	0.010 U	**0.12**	0.010 U	**0.086**	0.010 U	**0.068**	**0.010**	0.010 U	**0.013**
Dibenzofuran	0.010 U	0.010 U	**0.0067** J	0.010 U	**0.0063** J	0.010 U	**0.010**	0.010 U	0.010 U	0.010 U
Total Benzofluoranthenes	0.020 U	**0.029**	**0.30**	0.020 U	**0.23**	**0.011** J	**0.17**	**0.028**	**0.022**	**0.062**
CPAH TEQ	ND	**0.0031**	**0.151**	ND	**0.110**	**0.001**	**0.075**	**0.003**	**0.002**	**0.0238**

TABLE 2
LS431 WHOLE WATER SAMPLING ANALYTICAL RESULTS
LONG-TERM STORMWATER TREATMENT SYSTEM
NORTH BOEING FIELD - SEATTLE, WASHINGTON

Sample Location ID	LS431-W	LS431-W	LS431-W	LS431-W	LS431-W	LS431-W	LS431-W	LS431-W	LS431-W	LS431-W
Laboratory Data ID	TW50A/TW50F/TW54A	TX90A/TX90D/TX91A	TY96A/TY96D/TY98A	UA56A/UA56D/UA57A	UC78A/UC78D/UC80A	UE10A/UE10D/UE11A	UE68A/UE68D/UE73A	UH75A/UH75F/UH76A	UL49A/UL49D/UL50A	UM18A/UM18C/UM19A
Sample Start Date	11/8/2011	11/16/2011	11/22/2011	12/5/2011	12/27/2011	1/9/2012	1/20/2012	2/6/2012	3/5/2012	3/12/2012
Sample End Date	11/11/2011	11/17/2011	11/23/2011	12/8/2011	12/28/2011	1/12/2012	1/21/2012	2/8/2012	3/8/2012	3/13/2012
Event Type	Monthly	Storm	Storm	Monthly	Storm	Monthly	Storm	Monthly	Monthly	Storm
Sample Type					Flow-weighted composite					
TOTAL METALS (µg/L)										
Method EPA200.8/6010B,C/7470A										
Arsenic	**0.6**	**0.5**	**0.7**	**0.8**	**0.7**	**0.7**	**0.5**	**0.8**	**0.7**	**0.4**
Cadmium	0.1 U	0.1 U	**0.6**	0.1 U	**0.2**	0.1 U	**0.3**	0.1 U	0.1 U	0.1 U
Chromium	0.5 U	0.5 U	**1.7**	0.5 U	**1.2**	1 U	**1.1**	1 U	1 U	0.5 U
Copper	0.5 U	**1.8**	**5.1**	**0.6**	**4.3**	**1.2**	**4.0**	**0.8**	**1.1**	**1.9**
Iron	NA	NA	NA	**760**	**3890**	**2480**	**1970**	**2110**	**2230**	**860**
Lead	0.1 U	**0.5**	**4.9**	**0.3**	**2.5**	**0.2**	**1.9**	**0.4**	**0.2**	**0.6**
Manganese	NA	NA	NA	**833**	**132**	**593**	**84**	**639**	**540**	**69**
Mercury	0.1 U	0.1 U	0.1 U	0.1 U	0.1 U	0.1 U	0.1 U	0.1 U	0.1 U	0.1 U
Nickel	**0.5**	**0.6**	**1.2**	**1.3**	**1.1**	**1.4**	**2.4**	**1.4**	**1.8**	**0.8**
Silver	NA	NA	NA	NA	NA	NA	NA	NA	NA	NA
Zinc	**7**	**20**	**48**	**8**	**38**	**16**	**50**	**7**	**9**	**24**
DISSOLVED METALS (µg/L)										
Method EPA200.8/6010C										
Arsenic	**0.6**	**0.4**	**0.3**	**0.8**	**0.3**	**0.5**	**0.2**	**0.6**	**0.4**	**0.3**
Cadmium	0.1 U	0.1 U	0.1 U	0.1 U	0.1 U	0.1 U	**0.2**	0.1 U	0.1 U	**0.1**
Chromium	0.5 U	0.5 U	0.5 U	0.5 U	0.5 U	0.5 U	0.5 U	0.5 U	1 U	0.5 U
Copper	0.5 U	**1.3**	**1.4**	**0.8**	**1.3**	**0.9**	**1.3**	**1.0**	**0.7**	**1.1**
Iron	NA	NA	NA	NA	**150**	**170**	**220**	50 U	**360**	**230**
Lead	0.1 U	0.1 U	**0.2**	0.1 U	**0.2**	0.1 U	**0.2**	0.1 U	0.1 U	0.1 U
Manganese	NA	NA	NA	NA	**90**	**552**	**76**	**621**	**509**	**65**
Nickel	**0.6**	**0.6**	**0.5**	**1.2**	**0.7**	**1.3**	**1.8**	**1.3**	**1.8**	**0.9**
Silver	NA	NA	NA	NA	NA	NA	NA	NA	NA	NA
Zinc	**7**	**16**	**21**	**6**	**17**	**13**	**37**	**8**	4 U	**17**
DISSOLVED METALS (ng/L)										
Method SW7470A										
Mercury	20.0 U	20.0 U	20.0 U	20.0 U	20.0 U	20.0 U	20.0 U	20.0 U	20.0 U	20.0 U
CONVENTIONALS										
pH (SU; EPA 150.1; SM 4500H)	NA	NA	NA	**7.05**	**6.40**	**7.06**	**6.78**	**7.17**	**7.35**	**6.41**
Total Suspended Solids (mg/L; EPA 160.2; SM2540D)	1.0 U	**3.4**	**110**	**1.4**	**16.6**	**6.2**	**6.1**	**5.8**	**6.4**	**4.4**
Turbidity (NTU; EPA 180.1)	**1.33** J	**4.30**	**6.60**	**2.00**	**29.0**	**14.6**	**14.4**	**7.80**	**8.00**	**4.20**
PARTICLE/GRAIN SIZE (mg/L)										
Method ASTM-D3977C										
Sediment Conc. > 500 µm	0.01 U	**0.1**	**62.1**	0.01 U	**1.3**	**1.8**	**0.4**	**5.1**	**0.9**	**0.5**
Sediment Conc. 500 to 250 µm	**0.4**	**1.1**	**33.9**	0.01 U	**2.3**	**1.5**	**0.4**	**0.7**	**0.4**	**1.4**
Sediment Conc. 250 to 125 µm	0.01 U	0.01 U	0.01 U	0.01 U	0.01 U	0.01 U	0.01 U	0.01 U	0.01 U	0.01 U
Sediment Conc. 125 to 62.5 µm	0.01 U	0.01 U	0.01 U	0.01 U	0.01 U	0.01 U	0.01 U	0.01 U	0.01 U	0.01 U
Sediment Conc. 62.5 to 3.9 µm	0.01 U	0.01 U	**16.0**	0.01 U	**11.8**	0.01 U	**7.1**	0.01 U	0.01 U	0.01 U
Sediment Conc. 3.9 to 1 µm	**0.3**	**2.0**	**4.0**	**0.9**	**2.4**	**4.9**	**1.4**	**3.3**	**0.3**	**1.2**
Sediment Conc. < 1 µm	**0.3**	**2.3**	**2.2**	**1.9**	**1.0**	**13.4**	**1.2**	**2.4**	**0.4**	**2.7**
PRECIPITATION (c)										
Amount During Test (inches)	0.0	0.38	1.99	0.0	0.86	0.23	0.85	0.10	0.06	0.76

TABLE 2
LS431 WHOLE WATER SAMPLING ANALYTICAL RESULTS
LONG-TERM STORMWATER TREATMENT SYSTEM
NORTH BOEING FIELD - SEATTLE, WASHINGTON

Sample Location ID	LS431-W	LS431-W	LS431-W	LS431-W	LS431-W	LS431-W	LS431-W	LS431-W	LS431-W	LS431-W
Laboratory Data ID	UO82A/UO82D/UO83A	UP29A/UP29E/UP30A	UU03A/UU03F/UU04A	UX69A/UX69C/UX70A	VB89A/VB89D/VB90A	VF37A/VF37D/VF38A	VJ50A/VJ50G/VJ52A	VL90A/VL90D/VL91A	VN17A/VN17B/VN18A	VR68A/VR68D/VR69A
Sample Start Date	3/31/2012	4/2/2012	5/7/2012	6/4/2012	7/9/2012	8/6/2012	9/10/2012	10/1/2012	10/12/2012	11/5/2012
Sample End Date	4/1/2012	4/5/2012	5/10/2012	6/7/2012	7/11/2012	8/9/2012	9/13/2012	10/4/2012	10/13/2012	11/8/2012
Event Type	Storm	Monthly	Monthly	Monthly	Monthly	Monthly	Monthly	Monthly	Storm	Monthly
Sample Type	Flow-weighted composite									
PCBs (µg/L) (a)										
Method SW8082A										
Aroclor 1016	0.010 U	0.010 U	0.010 U	0.010 U	0.012 U	0.010 U	0.010 U	0.010 U	0.010 U	0.010 U
Aroclor 1242	0.010 U	0.010 U	0.010 U	0.010 U	0.010 U	0.010 U	0.010 U	0.010 U	0.010 U	0.010 U
Aroclor 1248	0.010 U	0.010 U	0.010 U	0.010 U	0.010 U	0.010 U	0.010 U	0.010 U	0.010 U	0.010 U
Aroclor 1254	0.010 U	0.010 U	0.010 U	0.010 U	0.010 U	0.010 U	0.010 U	0.010 U	0.010 U	0.010 U
Aroclor 1260	0.010 U	0.010 U	0.010 U	0.010 U	0.010 U	0.010 U	0.010 U	0.010 U	0.010 U	0.010 U
Aroclor 1221	0.010 U	0.010 U	0.010 U	0.010 U	0.010 U	0.010 U	0.010 U	0.010 U	0.010 U	0.010 U
Aroclor 1232	0.015 U	0.010 U	0.018 U	0.015 U	0.010 U	0.020 U	0.010 U	0.010 U	0.015 U	0.010 U
Aroclor 1262	0.010 U	0.010 U	0.010 U	0.010 U	0.010 U	0.010 U	0.010 U	0.010 U	0.010 U	0.010 U
Total PCBs (b)	ND	ND	ND	ND	ND	ND	ND	ND	ND	ND
SEMIVOLATILES (µg/L)										
Method SW8270D										
Phenol	1.0 U	1.0 U	1.0 U	1.0 U	1.0 U	1.0 U	1.0 U	1.0 U	1.0 U	1.0 U
Bis-(2-Chloroethyl) Ether	NA	NA	NA	NA	NA	NA	NA	NA	NA	NA
2-Chlorophenol	NA	NA	NA	NA	NA	NA	NA	NA	NA	NA
1,3-Dichlorobenzene	NA	NA	1.0 U	1.0 U	1.0 U	1.0 U	1.0 U	1.0 U	1.0 U	1.0 U
1,4-Dichlorobenzene	1.0 U	1.0 U	1.0 U	1.0 U	1.0 U	1.0 U	1.0 U	1.0 U	1.0 U	1.0 U
Benzyl Alcohol	5.0 U	5.0 U	5.0 U	5.0 U	5.0 U	5.0 U	2.0 U	2.0 UJ	2.0 U	2.0 U
1,2-Dichlorobenzene	1.0 U	1.0 U	1.0 U	1.0 U	1.0 U	1.0 U	1.0 U	1.0 U	1.0 U	1.0 U
2-Methylphenol	1.0 U	1.0 U	1.0 U	1.0 U	1.0 U	1.0 U	1.0 U	1.0 U	1.0 U	1.0 U
2,2'-Oxybis(1-Chloropropane)	NA	NA	NA	NA	NA	NA	NA	NA	NA	NA
4-Methylphenol	1.0 U	1.0 U	1.0 U	1.0 U	1.0 U	1.0 U	2.0 U	2.0 U	2.0 U	2.0 U
N-Nitroso-Di-N-Propylamine	NA	NA	NA	NA	NA	NA	NA	NA	NA	NA
Hexachloroethane	NA	NA	1.0 U	1.0 U	1.0 U	1.0 U	2.0 U	2.0 U	2.0 U	2.0 U
Nitrobenzene	NA	NA	NA	NA	NA	NA	NA	NA	NA	NA
Isophorone	NA	NA	NA	NA	NA	NA	NA	NA	NA	NA
2-Nitrophenol	NA	NA	NA	NA	NA	NA	NA	NA	NA	NA
2,4-Dimethylphenol	1.0 U	1.0 U	1.0 U	1.0 U	1.0 U	1.0 U	3.0 U	3.0 U	3.0 U	3.0 U
Benzoic Acid	10 U	10 U	10 U	10 U	10 U	10 U	20 U	20 U	20 U	20 U
bis(2-Chloroethoxy) Methane	NA	NA	NA	NA	NA	NA	NA	NA	NA	NA
2,4-Dichlorophenol	NA	NA	NA	NA	NA	NA	NA	NA	NA	NA
1,2,4-Trichlorobenzene	1.0 U	1.0 U	1.0 U	1.0 U	1.0 U	1.0 U	1.0 U	1.0 U	1.0 U	1.0 U
Naphthalene	1.0 U	1.0 U	1.0 U	1.0 U	1.0 U	1.0 U	1.0 U	1.0 U	1.0 U	1.0 U
4-Chloroaniline	NA	NA	NA	NA	NA	NA	NA	NA	NA	NA
Hexachlorobutadiene	1.0 U	1.0 U	1.0 U	1.0 U	1.0 U	1.0 U	3.0 U	3.0 U	3.0 U	3.0 U
4-Chloro-3-methylphenol	NA	NA	NA	NA	NA	NA	NA	NA	NA	NA
2-Methylnaphthalene	1.0 U	1.0 U	1.0 U	1.0 U	1.0 U	1.0 U	1.0 U	1.0 U	1.0 U	1.0 U
Hexachlorocyclopentadiene	NA	NA	NA	NA	NA	NA	NA	NA	NA	NA
2,4,6-Trichlorophenol	NA	NA	NA	NA	NA	NA	NA	NA	NA	NA
2,4,5-Trichlorophenol	NA	NA	NA	NA	NA	NA	NA	NA	NA	NA
2-Chloronaphthalene	NA	NA	NA	NA	NA	NA	NA	NA	NA	NA
2-Nitroaniline	NA	NA	NA	NA	NA	NA	NA	NA	NA	NA
Dimethylphthalate	1.0 U	1.0 U	1.0 U	1.0 U	1.0 U	1.0 U	1.0 U	1.0 U	1.0 U	1.0 U
Acenaphthylene	1.0 U	1.0 U	1.0 U	1.0 U	1.0 U	1.0 U	1.0 U	1.0 U	1.0 U	1.0 U
3-Nitroaniline	NA	NA	NA	NA	NA	NA	NA	NA	NA	NA
Acenaphthene	1.0 U	1.0 U	1.0 U	1.0 U	1.0 U	1.0 U	1.0 U	1.0 U	1.0 U	1.0 U

TABLE 2
LS431 WHOLE WATER SAMPLING ANALYTICAL RESULTS
LONG-TERM STORMWATER TREATMENT SYSTEM
NORTH BOEING FIELD - SEATTLE, WASHINGTON

Sample Location ID	LS431-W	LS431-W	LS431-W	LS431-W	LS431-W	LS431-W	LS431-W	LS431-W	LS431-W	LS431-W
Laboratory Data ID	UO82A/UO82D/UO83A	UP29A/UP29E/UP30A	UU03A/UU03F/UU04A	UX69A/UX69C/UX70A	VB89A/VB89D/VB90A	VF37A/VF37D/VF38A	VJ50A/VJ50G/VJ52A	VL90A/VL90D/VL91A	VN17A/VN17B/VN18A	VR68A/VR68D/VR69A
Sample Start Date	3/31/2012	4/2/2012	5/7/2012	6/4/2012	7/9/2012	8/6/2012	9/10/2012	10/1/2012	10/12/2012	11/5/2012
Sample End Date	4/1/2012	4/5/2012	5/10/2012	6/7/2012	7/11/2012	8/9/2012	9/13/2012	10/4/2012	10/13/2012	11/8/2012
Event Type	Storm	Monthly	Monthly	Monthly	Monthly	Monthly	Monthly	Monthly	Storm	Monthly
Sample Type	Flow-weighted composite									
2,4-Dinitrophenol	NA	NA	NA	NA	NA	NA	NA	NA	NA	NA
4-Nitrophenol	NA	NA	NA	NA	NA	NA	NA	NA	NA	NA
Dibenzofuran	1.0 U	1.0 U	1.0 U	1.0 U	1.0 U	1.0 U	1.0 U	1.0 U	1.0 U	1.0 U
2,6-Dinitrotoluene	NA	NA	NA	NA	NA	NA	NA	NA	NA	NA
2,4-Dinitrotoluene	NA	NA	NA	NA	NA	NA	NA	NA	NA	NA
Diethylphthalate	1.0 U	1.0 U	1.0 U	1.0 U	1.0 U	1.0 U	1.0 U	1.0 U	1.0 U	1.0 U
4-Chlorophenyl-phenylether	NA	NA	NA	NA	NA	NA	NA	NA	NA	NA
Fluorene	1.0 U	1.0 U	1.0 U	1.0 U	1.0 U	1.0 U	1.0 U	1.0 U	1.0 U	1.0 U
4-Nitroaniline	NA	NA	NA	NA	NA	NA	NA	NA	NA	NA
4,6-Dinitro-2-Methylphenol	NA	NA	NA	NA	NA	NA	NA	NA	NA	NA
N-Nitrosodiphenylamine	1.0 U	1.0 U	1.0 U	1.0 U	1.0 U	1.0 U	1.0 U	1.0 UJ	1.0 U	1.0 U
4-Bromophenyl-phenylether	NA	NA	NA	NA	NA	NA	NA	NA	NA	NA
Hexachlorobenzene	1.0 U	1.0 U	1.0 U	1.0 U	1.0 U	1.0 U	1.0 U	1.0 U	1.0 U	1.0 U
Pentachlorophenol	5.0 U	5.0 U	5.0 U	5.0 U	5.0 U	5.0 U	10 U	10 U	10 U	10 U
Phenanthrene	1.0 U	1.0 U	1.0 U	1.0 U	1.0 U	1.0 U	1.0 U	1.0 U	1.0 U	1.0 U
Carbazole	NA	NA	NA	NA	NA	NA	NA	NA	NA	NA
Anthracene	1.0 U	1.0 U	1.0 U	1.0 U	1.0 U	1.0 U	1.0 U	1.0 U	1.0 U	1.0 U
Di-n-Butylphthalate	1.0 U	1.0 U	1.0 U	1.0 U	1.0 U	1.0 U	1.0 U	1.0 U	1.0 U	1.0 U
Fluoranthene	1.0 U	1.0 U	1.0 U	1.0 U	1.0 U	1.0 U	1.0 U	1.0 U	1.0 U	1.0 U
Pyrene	1.0 U	1.0 U	1.0 U	1.0 U	1.0 U	1.0 U	1.0 U	1.0 U	1.0 U	1.0 U
Butylbenzylphthalate	1.0 U	1.0 U	1.0 U	1.0 U	1.0 U	1.0 U	1.0 U	1.0 U	1.0 U	1.0 U
3,3'-Dichlorobenzidine	NA	NA	NA	NA	NA	NA	NA	NA	NA	NA
Benzo(a)anthracene	1.0 U	1.0 U	1.0 U	1.0 U	1.0 U	1.0 U	1.0 U	1.0 U	1.0 U	1.0 U
bis(2-Ethylhexyl)phthalate	1.0 U	1.0 U	**2.5**	1.0 U	1.0 U	1.0 U	3.0 U	3.0 U	3.0 U	3.0 U
Chrysene	1.0 U	1.0 U	1.0 U	1.0 U	1.0 U	1.0 U	1.0 U	1.0 U	1.0 U	1.0 U
Di-n-Octyl phthalate	1.0 U	1.0 U	1.0 U	1.0 U	1.0 U	1.0 U	1.0 U	1.0 U	1.0 U	1.0 U
Benzo(a)pyrene	1.0 U	1.0 U	1.0 U	1.0 U	1.0 U	1.0 U	1.0 U	1.0 U	1.0 U	1.0 U
Indeno(1,2,3-cd)pyrene	1.0 U	1.0 U	1.0 U	1.0 U	1.0 U	1.0 U	1.0 U	1.0 U	1.0 U	1.0 U
Dibenz(a,h)anthracene	1.0 U	1.0 U	1.0 U	1.0 U	1.0 U	1.0 U	1.0 U	1.0 U	1.0 U	1.0 U
Benzo(g,h,i)perylene	1.0 U	1.0 U	1.0 U	1.0 U	1.0 U	1.0 U	1.0 UJ	1.0 U	1.0 U	1.0 U
1-Methylnaphthalene	NA	NA	1.0 U	1.0 U	1.0 U	1.0 U	1.0 U	1.0 U	1.0 U	1.0 U
Total Benzofluoranthenes	1.0 U	1.0 U	1.0 U	1.0 U	1.0 U	1.0 U	5.0 U	5.0 U	5.0 U	5.0 U
PAHs (µg/L)										
Method SW8270D-SIM										
Naphthalene	**0.010**	**0.012**	**0.035**	**0.011**	0.011 U	**0.010**	0.010 U	0.010 U	0.010 U	0.010 U
2-Methylnaphthalene	**0.010**	**0.010**	**0.0080** J	**0.011**	0.010 U	0.010 U	0.010 U	0.010 U	0.010 U	0.010 U
1-Methylnaphthalene	**0.012**	0.010 U	0.010 U	0.010 U	0.010 U	0.010 U	0.010 U	0.010 U	0.010 U	0.010 U
Acenaphthylene	0.010 U	0.010 U	0.010 U	0.010 U	0.010 U	0.010 U	0.010 U	0.010 U	0.010 U	0.010 U
Acenaphthene	**0.016**	**0.043**	**0.054**	**0.035**	**0.066**	**0.090**	**0.080**	**0.10**	**0.081**	**0.046**
Fluorene	0.010 U	0.010 U	0.010 U	0.010 U	0.010 U	0.010 U	0.010 U	0.010 U	0.010 U	0.010 U
Phenanthrene	**0.026**	**0.011**	**0.0088** J	**0.040**	0.010 U	**0.010**	0.010 U	0.010 U	**0.014**	0.010 U
Anthracene	0.010 U	0.010 U	0.010 U	0.010 U	0.010 U	0.010 U	0.010 U	0.010 U	0.010 U	0.010 U
Fluoranthene	**0.073**	**0.014**	**0.020**	**0.093**	**0.013**	**0.012**	0.010 U	0.010 U	**0.010**	**0.013**
Pyrene	**0.046**	0.010 U	**0.016**	**0.044**	0.010 U	0.010 U	0.010 U	0.010 U	0.010 U	**0.012**
Benzo(a)anthracene	**0.016**	0.010 U	0.010 U	**0.012**	0.010 U	0.010 U	0.010 U	0.010 U	0.010 U	0.010 U
Chrysene	**0.036**	0.010 U	**0.0089** J	**0.049**	0.010 U	0.010 U	0.010 U	0.010 U	0.010 U	0.010 U
Benzo(a)pyrene	**0.020**	0.010 U	0.010 U	**0.018**	0.010 U	0.010 U	0.010 U	0.010 U	0.010 U	0.010 U
Indeno(1,2,3-cd)pyrene	**0.021**	0.010 U	0.010 U	**0.022** J	0.010 U	0.010 U	0.010 U	0.010 U	0.010 U	0.010 U
Dibenz(a,h)anthracene	0.010 U	0.010 UJ	0.010 U	0.010 U	0.010 U	0.010 U	0.010 U	0.010 U	0.010 U	0.010 U
Benzo(g,h,i)perylene	**0.025**	0.010 U	0.010 U	**0.025**	0.010 U	0.010 U	0.010 U	0.010 U	0.010 U	0.010 U
Dibenzofuran	0.010 U	0.010 U	0.010 U	0.010 U	0.010 U	0.010 U	0.010 U	0.010 U	0.010 U	0.010 U
Total Benzofluoranthenes	**0.056**	0.020 U	0.020 U	**0.069**	0.020 U	0.020 U	0.020 U	0.020 U	0.020 U	0.020 U
CPAH TEQ	**0.030**	ND	**0.0001**	**0.029**	ND	ND	ND	ND	ND	ND

TABLE 2
LS431 WHOLE WATER SAMPLING ANALYTICAL RESULTS
LONG-TERM STORMWATER TREATMENT SYSTEM
NORTH BOEING FIELD - SEATTLE, WASHINGTON

Sample Location ID	LS431-W	LS431-W	LS431-W	LS431-W	LS431-W	LS431-W	LS431-W	LS431-W	LS431-W	LS431-W
Laboratory Data ID	UO82A/UO82D/UO83A	UP29A/UP29E/UP30A	UU03A/UU03F/UU04A	UX69A/UX69C/UX70A	VB89A/VB89D/VB90A	VF37A/VF37D/VF38A	VJ50A/VJ50G/VJ52A	VL90A/VL90D/VL91A	VN17A/VN17B/VN18A	VR68A/VR68D/VR69A
Sample Start Date	3/31/2012	4/2/2012	5/7/2012	6/4/2012	7/9/2012	8/6/2012	9/10/2012	10/1/2012	10/12/2012	11/5/2012
Sample End Date	4/1/2012	4/5/2012	5/10/2012	6/7/2012	7/11/2012	8/9/2012	9/13/2012	10/4/2012	10/13/2012	11/8/2012
Event Type	Storm	Monthly	Monthly	Monthly	Monthly	Monthly	Monthly	Monthly	Storm	Monthly
Sample Type	Flow-weighted composite									
TOTAL METALS (µg/L)										
Method EPA200.8/6010B,C/7470A										
Arsenic	**0.4**	**0.5**	**0.8**	**0.7**	**0.7**	**0.7**	**0.9**	**0.6**	**1.0**	**0.7**
Cadmium	0.1 U	0.1 U	0.1 U	**0.1**	0.1 U	0.1 U	0.1 U	0.1 U	0.1 U	0.1 U
Chromium	0.5 U	0.5 U	0.5 U	**0.6**	1 U	0.5 U	1 U	0.5 U	**0.6**	**0.5**
Copper	**1.7**	**1.1**	**0.6**	**2.7**	0.5 U	0.5 U	**1.0**	0.5 U	**4.2**	**0.9** J
Iron	**1090**	**890**	**1890**	**2690**	**1320**	**1850**	**2490**	**1260**	**2180**	**1720**
Lead	**0.5**	0.1 U	0.1 U	**0.7**	0.1 U	0.1 U	0.1 U	**0.1**	**0.5**	**0.2**
Manganese	**178**	**482**	**752**	**344**	**660**	**779**	**960**	**872**	**606**	**728**
Mercury	0.1 U	0.1 U	0.1 U	0.1 U	0.1 U	0.1 U	0.1 U	0.1 U	0.1 U	0.1 U
Nickel	**1.2**	**1.9** J	**2.1**	**1.2**	**0.7**	**1.2**	**1.1**	**0.8**	**1.6**	**1.0**
Silver	0.2 U	NA	NA	NA	NA	NA	NA	NA	NA	NA
Zinc	**24**	**11**	**8**	**19**	**6**	**4**	**4**	4 U	**9**	**13**
DISSOLVED METALS (µg/L)										
Method EPA200.8/6010C										
Arsenic	**0.3**	**0.4**	**0.6**	**0.5**	**0.5**	**0.5**	**0.6**	**0.5**	**0.9**	**0.6**
Cadmium	0.1 U	0.1 U	0.1 U	0.1 U	0.1 U	0.1 U	0.1 U	0.1 U	0.1 U	0.1 U
Chromium	0.5 U	0.5 U	0.5 U	0.5 U	1 U	0.5 U	0.5 U	0.5 U	0.5 U	0.5 U
Copper	**1.1**	**0.9**	0.5 U	**2.0**	0.5 U	0.5 U	**0.8**	0.5 U	**3.6**	1.4 U
Iron	**190**	50 U	**100**	**230**	**120**	**60**	**60**	**190**	**690**	50 U
Lead	0.1 U	0.1 U	0.1 U	0.1 U	0.1 U	0.1 U	0.1 U	0.1 U	**0.3**	0.1 U
Manganese	**163**	**472**	**703**	**295**	**622**	**749**	**870**	**855**	**568**	**679**
Nickel	**1.2**	**1.7**	**2.0**	**1.1**	**0.7**	**0.6**	**1.0**	**0.8**	**1.5**	**1.0**
Silver	0.2 U	NA	NA	NA	NA	NA	NA	NA	NA	NA
Zinc	**19**	**9**	**5**	**14**	4 U	**4**	4 U	4 U	**6**	**6**
DISSOLVED METALS (ng/L)										
Method SW7470A										
Mercury	20.0 U	20.0 U	20.0 U	20.0 U	20.0 U	20.0 U	20.0 U	20.0 U	20.0 U	20.0 U
CONVENTIONALS										
pH (SU; EPA 150.1; SM 4500H)	**6.94**	**7.03**	**7.20**	**7.33**	**7.14**	**7.21**	**7.31**	**7.59**	**7.06**	**7.07**
Total Suspended Solids (mg/L; EPA 160.2; SM2540D)	**6.8**	**1.9**	**8.4**	**15.9**	**3.2**	**6.0**	**7.0**	**5.8**	**4.7**	**6.9**
Turbidity (NTU; EPA 180.1)	**3.60**	**5.00**	**7.30**	**14.1**	**8.50**	**8.20**	**15.0**	**6.20**	**8.40**	**9.30**
PARTICLE/GRAIN SIZE (mg/L)										
Method ASTM-D3977C										
Sediment Conc. > 500 µm	**3.5**	**7.6**	**0.9**	**0.59**	**3.14**	**0.42**	**4.77**	**3.99**	**0.60**	**0.21**
Sediment Conc. 500 to 250 µm	**1.3**	**8.9**	**1.5**	**2.85**	**3.66**	**0.53**	**0.20**	**0.53**	**0.60**	**0.75**
Sediment Conc. 250 to 125 µm	0.01 U	0.01 U	0.01 U	0.01 U	0.01 U	0.01 U	0.01 U	0.01 U	0.01 U	0.01 U
Sediment Conc. 125 to 62.5 µm	0.01 U	0.01 U	0.01 U	0.01 U	0.01 U	0.01 U	0.01 U	0.01 U	0.01 U	0.01 U
Sediment Conc. 62.5 to 3.9 µm	**4.7**	**1.7**	0.01 U	**9.95**	0.01 U	**5.27**	0.01 U	**2.74**	0.01 U	0.01 U
Sediment Conc. 3.9 to 1 µm	**0.4**	**0.5**	**4.2**	**1.42**	**0.70**	**1.32**	**2.61**	**0.80**	**2.19**	**0.15**
Sediment Conc. < 1 µm	0.01 U	**0.3**	**4.8**	**0.33**	**2.70**	**0.93**	**12.12**	**0.39**	**5.10**	**7.01**
PRECIPITATION (c)										
Amount During Test (inches)	0.50	0.29	0.01	0.87	0.00	0.00	0.01	0.00	0.08	0.01

TABLE 2
LS431 WHOLE WATER SAMPLING ANALYTICAL RESULTS
LONG-TERM STORMWATER TREATMENT SYSTEM
NORTH BOEING FIELD - SEATTLE, WASHINGTON

Sample Location ID	LS431-W	LS431-W	LS431-W	LS431-W	LS431-W	LS431-W	LS431-W	LS431-W	LS431-W	LS431-W	LS431-W
Laboratory Data ID	VS17A/VS17E/VS30A	VV27A/VV27E/VV28A	VW75C/VW75G/VW76C	VZ15A/VZ15C/VZ16A	WC96A/WC96E/WC97A	WG51A/WG51E/WG56A	WI40C/WI40G/WI41C	WK37A/WK37E/WK38A	WK74A/WK74E/WK81A	WP40A/WP40E/WP39A	WS97A/WS97B/WS98A
Sample Start Date	11/11/2012	12/3/2012	12/16/2012	1/7/2013	2/4/2013	3/4/2013	3/19/2013	4/1/2013	4/5/2013	5/6/2013	6/3/2013
Sample End Date	11/12/2012	12/6/2012	12/17/2012	1/10/2013	2/7/2013	3/7/2013	3/20/2013	4/4/2013	4/6/2013	5/8/2013	6/6/2013
Event Type	Storm	Monthly	Storm	Monthly	Monthly	Monthly	Storm	Monthly	Storm	Monthly	Monthly
Sample Type		Flow-weighted composite									
PCBs (µg/L) (a)											
Method SW8082A											
Aroclor 1016	0.010 U	0.010 U	0.005 U	0.005 U	0.005 U	0.005 U	0.005 U	0.005 U	0.005 U	0.005 U	0.005 U
Aroclor 1242	0.010 U	0.010 U	0.005 U	0.005 U	0.005 U	0.005 U	0.005 U	0.005 U	0.005 U	0.005 U	0.005 U
Aroclor 1248	0.010 U	0.010 U	0.005 U	0.005 U	0.005 U	0.005 U	0.005 U	0.005 U	0.005 U	0.005 U	0.005 U
Aroclor 1254	0.010 U	0.010 U	0.005 U	0.005 U	0.005 U	0.005 U	0.005 U	0.005 U	0.005 U	0.005 U	0.005 U
Aroclor 1260	0.010 U	0.010 U	0.005 U	0.005 U	0.005 U	0.005 U	0.005 U	0.005 U	0.005 U	0.005 U	0.005 U
Aroclor 1221	0.010 U	0.010 U	0.005 U	0.005 U	0.005 U	0.005 U	0.005 U	0.005 U	0.005 U	0.005 U	0.005 U
Aroclor 1232	0.015 U	0.010 U	0.005 U	0.006 U	0.008 U	0.008 U	0.008 U	0.008 U	0.005 U	0.008 U	0.010 U
Aroclor 1262	0.010 U	0.010 U	0.005 U	0.005 U	0.005 U	0.005 U	0.005 U	0.005 U	0.005 U	0.005 U	0.005 U
Total PCBs (b)	ND	ND	ND	ND	ND	ND	ND	ND	ND	ND	ND
SEMIVOLATILES (µg/L)											
Method SW8270D											
Phenol	1.0 U	1.0 U	1.0 U	1.0 U	1.0 U	1.0 U	1.0 U	1.0 U	1.0 U	1.0 U	1.0 U
Bis-(2-Chloroethyl) Ether	NA	NA	NA	NA	NA	NA	NA	NA	NA	NA	NA
2-Chlorophenol	NA	NA	NA	NA	NA	NA	NA	NA	NA	NA	NA
1,3-Dichlorobenzene	1.0 U	1.0 U	1.0 U	1.0 U	1.0 U	1.0 U	1.0 U	1.0 U	1.0 U	1.0 U	1.0 U
1,4-Dichlorobenzene	1.0 U	1.0 U	1.0 U	1.0 U	1.0 U	1.0 U	1.0 U	1.0 U	1.0 U	1.0 U	1.0 U
Benzyl Alcohol	2.0 U	2.0 U	2.0 U	2.0 U	2.0 U	2.0 UJ	2.0 U	2.0 U	2.0 U	2.0 U	2.0 U
1,2-Dichlorobenzene	1.0 U	1.0 U	1.0 U	1.0 U	1.0 U	1.0 U	1.0 U	1.0 U	1.0 U	1.0 U	1.0 U
2-Methylphenol	1.0 U	1.0 U	1.0 U	1.0 U	1.0 U	1.0 U	1.0 U	1.0 U	1.0 U	1.0 U	1.0 U
2,2'-Oxybis(1-Chloropropane)	NA	NA	NA	NA	NA	NA	NA	NA	NA	NA	NA
4-Methylphenol	2.0 U	2.0 U	2.0 U	2.0 U	2.0 U	2.0 U	2.0 U	2.0 U	2.0 U	2.0 U	2.0 U
N-Nitroso-Di-N-Propylamine	NA	NA	NA	NA	NA	NA	NA	NA	NA	NA	NA
Hexachloroethane	2.0 U	2.0 U	2.0 U	2.0 U	2.0 U	2.0 U	2.0 U	2.0 U	2.0 U	2.0 U	2.0 U
Nitrobenzene	NA	NA	NA	NA	NA	NA	NA	NA	NA	NA	NA
Isophorone	NA	NA	NA	NA	NA	NA	NA	NA	NA	NA	NA
2-Nitrophenol	NA	NA	NA	NA	NA	NA	NA	NA	NA	NA	NA
2,4-Dimethylphenol	3.0 U	3.0 U	3.0 U	3.0 U	3.0 U	3.0 U	3.0 U	3.0 U	3.0 U	3.0 U	3.0 U
Benzoic Acid	20 U	20 U	20 U	20 U	20 U	20 U	20 U	20 U	20 U	20 U	20 U
bis(2-Chloroethoxy) Methane	NA	NA	NA	NA	NA	NA	NA	NA	NA	NA	NA
2,4-Dichlorophenol	NA	NA	NA	NA	NA	NA	NA	NA	NA	NA	NA
1,2,4-Trichlorobenzene	1.0 U	1.0 U	1.0 U	1.0 U	1.0 U	1.0 U	1.0 U	1.0 U	1.0 U	1.0 U	1.0 U
Naphthalene	1.0 U	1.0 U	1.0 U	1.0 U	1.0 U	1.0 U	1.0 U	1.0 U	1.0 U	1.0 U	1.0 U
4-Chloroaniline	NA	NA	NA	NA	NA	NA	NA	NA	NA	NA	NA
Hexachlorobutadiene	3.0 U	3.0 U	3.0 U	3.0 U	3.0 U	3.0 U	3.0 U	3.0 U	3.0 U	3.0 U	3.0 U
4-Chloro-3-methylphenol	NA	NA	NA	NA	NA	NA	NA	NA	NA	NA	NA
2-Methylnaphthalene	1.0 U	1.0 U	1.0 U	1.0 U	1.0 U	1.0 U	1.0 U	1.0 U	1.0 U	1.0 U	1.0 U
Hexachlorocyclopentadiene	NA	NA	NA	NA	NA	NA	NA	NA	NA	NA	NA
2,4,6-Trichlorophenol	NA	NA	NA	NA	NA	NA	NA	NA	NA	NA	NA
2,4,5-Trichlorophenol	NA	NA	NA	NA	NA	NA	NA	NA	NA	NA	NA
2-Chloronaphthalene	NA	NA	NA	NA	NA	NA	NA	NA	NA	NA	NA
2-Nitroaniline	NA	NA	NA	NA	NA	NA	NA	NA	NA	NA	NA
Dimethylphthalate	1.0 U	1.0 U	1.0 U	1.0 U	1.0 U	1.0 U	1.0 U	1.0 U	1.0 U	1.0 U	1.0 U
Acenaphthylene	1.0 U	1.0 U	1.0 U	1.0 U	1.0 U	1.0 U	1.0 U	1.0 U	1.0 U	1.0 U	1.0 U
3-Nitroaniline	NA	NA	NA	NA	NA	NA	NA	NA	NA	NA	NA
Acenaphthene	1.0 U	1.0 U	1.0 U	1.0 U	1.0 U	1.0 U	1.0 U	1.0 U	1.0 U	1.0 U	1.0 U

TABLE 2
LS431 WHOLE WATER SAMPLING ANALYTICAL RESULTS
LONG-TERM STORMWATER TREATMENT SYSTEM
NORTH BOEING FIELD - SEATTLE, WASHINGTON

Sample Location ID	LS431-W	LS431-W	LS431-W	LS431-W	LS431-W	LS431-W	LS431-W	LS431-W	LS431-W	LS431-W	LS431-W
Laboratory Data ID	VS17A/VS17E/VS30A	VV27A/VV27E/VV28A	VW75C/VW75G/VW76C	VZ15A/VZ15C/VZ16A	WC96A/WC96E/WC97A	WG51A/WG51E/WG56A	WI40C/WI40G/WI41C	WK37A/WK37E/WK38A	WK74A/WK74E/WK81A	WP40A/WP40E/WP39A	WS97A/WS97B/WS98A
Sample Start Date	11/11/2012	12/3/2012	12/16/2012	1/7/2013	2/4/2013	3/4/2013	3/19/2013	4/1/2013	4/5/2013	5/6/2013	6/3/2013
Sample End Date	11/12/2012	12/6/2012	12/17/2012	1/10/2013	2/7/2013	3/7/2013	3/20/2013	4/4/2013	4/6/2013	5/8/2013	6/6/2013
Event Type	Storm	Monthly	Storm	Monthly	Monthly	Monthly	Storm	Monthly	Storm	Monthly	Monthly
Sample Type		Flow-weighted composite									
2,4-Dinitrophenol	NA	NA	NA	NA	NA	NA	NA	NA	NA	NA	NA
4-Nitrophenol	NA	NA	NA	NA	NA	NA	NA	NA	NA	NA	NA
Dibenzofuran	1.0 U	1.0 U	1.0 U	1.0 U	1.0 U	1.0 U	1.0 U	1.0 U	1.0 U	1.0 U	1.0 U
2,6-Dinitrotoluene	NA	NA	NA	NA	NA	NA	NA	NA	NA	NA	NA
2,4-Dinitrotoluene	NA	NA	NA	NA	NA	NA	NA	NA	NA	NA	NA
Diethylphthalate	1.0 U	1.0 U	1.0 U	1.0 U	1.0 U	1.0 U	1.0 U	1.0 U	1.0 U	1.0 U	1.0 U
4-Chlorophenyl-phenylether	NA	NA	NA	NA	NA	NA	NA	NA	NA	NA	NA
Fluorene	1.0 U	1.0 U	1.0 U	1.0 U	1.0 U	1.0 U	1.0 U	1.0 U	1.0 U	1.0 U	1.0 U
4-Nitroaniline	NA	NA	NA	NA	NA	NA	NA	NA	NA	NA	NA
4,6-Dinitro-2-Methylphenol	NA	NA	NA	NA	NA	NA	NA	NA	NA	NA	NA
N-Nitrosodiphenylamine	1.0 U	1.0 U	1.0 U	1.0 U	1.0 U	1.0 U	1.0 U	1.0 U	1.0 U	1.0 U	1.0 U
4-Bromophenyl-phenylether	NA	NA	NA	NA	NA	NA	NA	NA	NA	NA	NA
Hexachlorobenzene	1.0 U	1.0 U	1.0 U	1.0 U	1.0 U	1.0 U	1.0 U	1.0 U	1.0 U	1.0 U	1.0 U
Pentachlorophenol	10 U	10 U	10 U	10 UJ	10 UJ	10 U	10 U	10 U	10 U	10 U	10 U
Phenanthrene	1.0 U	1.0 U	1.0 UJ	1.0 U	1.0 U	1.0 U	1.0 U	1.0 U	1.0 U	1.0 U	1.0 U
Carbazole	NA	NA	NA	NA	NA	NA	NA	NA	NA	NA	NA
Anthracene	1.0 U	1.0 U	1.0 UJ	1.0 U	1.0 U	1.0 U	1.0 U	1.0 U	1.0 U	1.0 U	1.0 U
Di-n-Butylphthalate	1.0 U	1.0 U	1.0 U	1.0 U	1.0 U	1.0 U	1.0 U	1.0 U	1.0 U	1.0 U	1.0 U
Fluoranthene	1.0 U	1.0 U	1.0 U	1.0 U	1.0 U	1.0 U	1.0 U	1.0 U	1.0 U	1.0 U	1.0 U
Pyrene	1.0 U	1.0 U	1.0 UJ	1.0 U	1.0 U	1.0 U	1.0 U	1.0 U	1.0 U	1.0 U	1.0 U
Butylbenzylphthalate	1.0 U	1.0 U	1.0 U	1.0 U	1.0 U	1.0 U	1.0 U	1.0 U	1.0 U	1.0 U	1.0 U
3,3'-Dichlorobenzidine	NA	NA	NA	NA	NA	NA	NA	NA	NA	NA	NA
Benzo(a)anthracene	1.0 U	1.0 U	1.0 U	1.0 U	1.0 U	1.0 U	1.0 U	1.0 U	1.0 U	1.0 U	1.0 U
bis(2-Ethylhexyl)phthalate	3.0 U	3.0 U	3.0 U	3.0 U	1.0 U	1.0 U	1.0 U	1.0 U	**1.2**	3.0 U	3.0 U
Chrysene	1.0 U	1.0 U	1.0 U	1.0 U	1.0 U	1.0 U	1.0 U	1.0 U	1.0 U	1.0 U	1.0 U
Di-n-Octyl phthalate	1.0 U	1.0 U	1.0 U	1.0 U	1.0 U	1.0 U	1.0 U	1.0 U	1.0 U	1.0 U	1.0 U
Benzo(a)pyrene	1.0 U	1.0 U	1.0 U	1.0 U	1.0 U	1.0 U	1.0 U	1.0 U	1.0 U	1.0 U	1.0 U
Indeno(1,2,3-cd)pyrene	1.0 U	1.0 U	1.0 U	1.0 U	1.0 U	1.0 U	1.0 U	1.0 U	1.0 U	1.0 U	1.0 U
Dibenz(a,h)anthracene	1.0 U	1.0 U	1.0 U	1.0 U	1.0 U	1.0 U	1.0 U	1.0 U	1.0 U	1.0 U	1.0 U
Benzo(g,h,i)perylene	1.0 U	1.0 U	1.0 U	1.0 U	1.0 U	1.0 U	1.0 U	1.0 U	1.0 U	1.0 U	1.0 U
1-Methylnaphthalene	1.0 U	1.0 U	1.0 U	1.0 U	1.0 U	1.0 U	1.0 U	1.0 U	1.0 U	1.0 U	1.0 U
Total Benzofluoranthenes	5.0 U	5.0 U	5.0 U	5.0 U	5.0 U	5.0 U	5.0 U	5.0 U	5.0 U	5.0 U	5.0 U
PAHs (µg/L)											
Method SW8270D-SIM											
Naphthalene	0.018 U	0.010 U	**0.022**	0.010 U	**0.012**	**0.012**	**0.041**	0.010 U	**0.021**	0.015 U	0.010 U
2-Methylnaphthalene	**0.013**	0.010 U	**0.035**	0.010 U	**0.019**	**0.016**	**0.055**	0.010 U	**0.026**	0.010 U	0.010 U
1-Methylnaphthalene	**0.011**	0.010 U	**0.030**	0.010 U	**0.017**	**0.011**	**0.041**	0.010 U	**0.022**	0.010 U	0.010 U
Acenaphthylene	0.010 U	0.010 U	0.010 U	0.010 U	0.010 U	0.010 U	0.010 U	0.010 U	0.010 U	0.010 U	0.010 U
Acenaphthene	**0.018**	0.010 U	0.010 U	0.010 U	**0.029**	**0.016**	0.010 U	**0.033**	**0.012**	**0.044**	**0.055**
Fluorene	0.0063 U	0.010 U	0.010 U	0.010 U	0.010 U	0.010 U	0.010 U	0.010 U	0.010 U	0.010 U	0.010 U
Phenanthrene	**0.032**	**0.014**	**0.040**	**0.013**	0.010 U	**0.014**	**0.027**	0.010 U	**0.018**	0.010 U	0.010 U
Anthracene	0.010 U	0.010 UJ	0.010 U	0.010 U	0.010 U	0.010 U	0.010 U	0.010 U	0.010 U	0.010 U	0.010 U
Fluoranthene	**0.060**	**0.049**	**0.13**	**0.050**	**0.014**	**0.022**	**0.058**	0.010 U	**0.042**	0.010 U	0.010 U
Pyrene	**0.033**	**0.043**	**0.095**	**0.040**	**0.012**	**0.014**	**0.038**	0.010 U	**0.024**	0.010 U	0.010 U
Benzo(a)anthracene	0.0059 U	**0.013**	**0.028**	**0.011**	0.010 U	0.010 U	0.010 U	0.010 U	0.010 U	0.010 U	0.010 U
Chrysene	**0.026**	**0.027**	**0.077**	**0.034**	0.010 U	**0.010**	**0.035**	0.010 U	**0.019**	0.010 U	0.010 U
Benzo(a)pyrene	0.0080 U	**0.016**	**0.042**	**0.017**	0.010 U	0.010 U	**0.017**	0.010 U	0.010 U	0.010 U	0.010 U
Indeno(1,2,3-cd)pyrene	0.0085 U	**0.010**	**0.038**	**0.014**	0.010 U	0.010 U	**0.018**	0.010 U	0.010 U	0.010 U	0.010 U
Dibenz(a,h)anthracene	0.010 U	0.010 U	0.010 U	0.010 U	0.010 U	0.010 U	0.010 U	0.010 U	0.010 U	0.010 U	0.010 U
Benzo(g,h,i)perylene	**0.011**	**0.013**	**0.044**	**0.017**	0.010 U	0.010 U	**0.022**	0.010 U	0.010 U	0.010 U	0.010 U
Dibenzofuran	0.010 U	0.010 U	**0.011**	0.010 U	0.010 U	0.010 U	0.010 U	0.010 U	0.010 U	0.010 U	0.010 U
Total Benzofluoranthenes	**0.032**	**0.046**	**0.14**	**0.064**	0.020 U	0.020 UJ	**0.060**	0.020 U	0.020 U	0.020 U	0.020 U
CPAH TEQ	**0.003**	**0.023**	**0.063**	**0.026**	ND	**0.0001**	**0.025**	ND	**0.0002**	ND	ND

TABLE 2
LS431 WHOLE WATER SAMPLING ANALYTICAL RESULTS
LONG-TERM STORMWATER TREATMENT SYSTEM
NORTH BOEING FIELD - SEATTLE, WASHINGTON

Sample Location ID	LS431-W	LS431-W	LS431-W	LS431-W	LS431-W	LS431-W	LS431-W	LS431-W	LS431-W	LS431-W	LS431-W
Laboratory Data ID	VS17A/VS17E/VS30A	VV27A/VV27E/VV28A	VW75C/VW75G/VW76C	VZ15A/VZ15C/VZ16A	WC96A/WC96E/WC97A	WG51A/WG51E/WG56A	WI40C/WI40G/WI41C	WK37A/WK37E/WK38A	WK74A/WK74E/WK81A	WP40A/WP40E/WP39A	WS97A/WS97B/WS98A
Sample Start Date	11/11/2012	12/3/2012	12/16/2012	1/7/2013	2/4/2013	3/4/2013	3/19/2013	4/1/2013	4/5/2013	5/6/2013	6/3/2013
Sample End Date	11/12/2012	12/6/2012	12/17/2012	1/10/2013	2/7/2013	3/7/2013	3/20/2013	4/4/2013	4/6/2013	5/8/2013	6/6/2013
Event Type	Storm	Monthly	Storm	Monthly	Monthly	Monthly	Storm	Monthly	Storm	Monthly	Monthly
Sample Type		Flow-weighted composite									
TOTAL METALS (µg/L)											
Method EPA200.8/6010B,C/7470A											
Arsenic	**0.6**	**0.6**	**0.4**	**0.6**	**0.6**	**0.5**	**0.5**	**0.6**	**0.4**	**0.6**	**0.6**
Cadmium	**0.1**	**0.1**	**0.1**	**0.1**	0.1 U	0.1 U	**0.1**	0.1 U	0.1 U	0.1 U	0.1 U
Chromium	**0.5**	**0.5**	0.5 U	0.5 U	1 U	0.5 U	**0.6**	0.5 U	**0.6**	1 U	0.5 U
Copper	**3.6** J	**4.6**	**2.1**	**2.3**	**1.4**	**1.6**	**2.5**	0.5 U	**2.6**	0.5 U	**0.6**
Iron	**2660**	**1610**	**1540**	**1320**	**1070**	**1220**	**2230**	**410**	**870**	**1060**	**600**
Lead	**0.5**	**0.7**	**1.0**	**0.8**	0.1 U	**0.3**	**0.8**	0.1 U	**0.4**	0.1 U	0.1 U
Manganese	**143**	**268**	**77**	**129**	**673**	**247**	**115**	**756**	**121**	**848**	**781**
Mercury	0.1 U	0.1 U	0.1 U	0.1 U	0.1 U	0.1 U	0.1 U	0.1 U	0.1 U	0.1 U	0.1 U
Nickel	**1.3**	**1.2**	**1.0**	**0.7**	**1.7**	**1.7**	**0.8**	**1.0**	0.5 U	**1.0**	**1.0**
Silver	NA	NA	NA	NA	NA	NA	NA	NA	NA	NA	NA
Zinc	**26**	**23**	**29**	**26**	**14**	**14**	**20**	**6**	**20**	**8**	**6**
DISSOLVED METALS (µg/L)											
Method EPA200.8/6010C											
Arsenic	**0.3**	**0.4**	**0.2**	**0.4**	**0.5**	**0.9**	**0.3**	**0.5**	**0.3**	**0.6**	**0.5**
Cadmium	0.1 U	0.1 U	0.1 U	0.1 U	0.1 U	0.1 U	0.1 U	0.1 U	0.1 U	0.1 U	0.1 U
Chromium	0.5 U	0.5 U	0.5 U	0.5 U	1 U	**0.6**	0.5 U	0.5 U	0.5 U	0.5 U	0.5 U
Copper	**2.4** J	**2.8** J	**1.0**	**1.1**	**1.1**	**1.1**	**1.2**	0.5 U	**2.0**	0.5 U	0.5 U
Iron	**70**	**480**	**200**	**120**	50 U	**100**	**200**	50 U	**290**	**170**	**120**
Lead	0.1 U	**0.1**	0.1 U	0.1 U	0.1 U	0.1 U	0.1 U	0.1 U	**0.1**	0.1 U	0.1 U
Manganese	**137**	**239**	**67**	**113**	**445**	**233**	**89**	**742**	**117**	**842**	**736**
Nickel	**1.2**	**1.1**	**0.8**	**0.6**	**1.6**	**1.6**	**0.6**	**1.2**	0.5 U	**1.0**	**0.8**
Silver	NA	NA	NA	NA	NA	NA	NA	NA	NA	NA	NA
Zinc	**15**	**15**	**21**	**18**	**9**	**8**	**10**	4 U	**16**	**4**	**4**
DISSOLVED METALS (ng/L)											
Method SW7470A											
Mercury	20.0 U	20.0 U	20.0 U	20.0 U	20.0 U	20.0 U	20.0 U	20.0 U	20.0 U	20.0 U	20.0 U
CONVENTIONALS											
pH (SU; EPA 150.1; SM 4500H)	**6.72**	**6.60**	**6.56**	**6.88**	**7.10**	**6.97**	**6.81**	**7.35**	**6.70**	**7.58**	**7.64**
Total Suspended Solids (mg/L; EPA 160.2; SM2540D)	**10.0**	**13.1**	**9.0**	**8.4**	**4.1**	**9.3**	**13.4**	**1.0**	**5.0**	**3.1**	**3.9**
Turbidity (NTU; EPA 180.1)	**20.0**	**6.70**	**8.60**	**6.50**	**2.20**	**7.80**	**13.7**	**1.66**	**4.10**	**2.80**	**2.5**
PARTICLE/GRAIN SIZE (mg/L)											
Method ASTM-D3977C											
Sediment Conc. > 500 µm	**64.08**	**0.21**	**0.54**	**0.94**	**0.43**	**0.85**	**4.59**	**5.62**	**7.85**	**4.52**	**17.25**
Sediment Conc. 500 to 250 µm	**0.79**	**1.69**	**1.29**	**0.31**	**0.85**	**2.01**	**3.34**	**5.81**	0.01 U	**6.53**	**8.68**
Sediment Conc. 250 to 125 µm	0.01 U	0.01 U	0.01 U	0.01 U	0.01 U	0.01 U	0.01 U	0.01 U	0.01 U	0.01 U	0.01 U
Sediment Conc. 125 to 62.5 µm	**8.02**	0.01 U	0.01 U	0.01 U	0.01 U	0.01 U	0.01 U	0.01 U	0.01 U	0.01 U	0.01 U
Sediment Conc. 62.5 to 3.9 µm	**11.91**	0.01 U	0.01 U	0.01 U	0.01 U	0.01 U	0.01 U	0.01 U	0.01 U	0.01 U	0.01 U
Sediment Conc. 3.9 to 1 µm	**0.79**	**1.40**	**3.50**	**1.98**	**4.15**	**3.68**	**4.77**	**4.59**	**2.67**	**2.07**	**1.27**
Sediment Conc. < 1 µm	**2.28**	**3.70**	**5.52**	**3.90**	**3.12**	**3.20**	**8.23**	**3.84**	**6.07**	**5.52**	**2.41**
PRECIPITATION (c)											
Amount During Test (inches)	0.63	0.68	0.94	1.68	0.35	0.87	0.92	0.00	0.64	0.00	0.00

TABLE 2
LS431 WHOLE WATER SAMPLING ANALYTICAL RESULTS
LONG-TERM STORMWATER TREATMENT SYSTEM
NORTH BOEING FIELD - SEATTLE, WASHINGTON

Sample Location ID	LS431-W	LS431-W	LS431-W	LS431-W	LS431-W	LS431-W	LS431-W	LS431-W	LS431-W	LS431-W	LS431-W
Laboratory Data ID	WX01A/WX01E/WX02A	XA11A/XA11E/XA14A	XE07A/XE07E/XE22A	XE91A/XE91E/XE92A	XJ12A/XJ12E/XJ36A	XN18A/XN18E/XN19A	XO76A/XO76C/XO77A	XQ44A/XQ44E/XQ45A	XT98A/XT98E/XT99A	XU48A/XU48C/XU49A	XZ68A/XZ68E/XZ69A
Sample Start Date	7/8/2013	8/5/2013	9/5/2013	9/9/2013	10/7/2013	11/4/2013	11/18/2013	12/2/2013	1/6/2014	1/10/2014	2/16/2014
Sample End Date	7/9/2013	8/8/2013	9/6/2013	9/12/2013	10/9/2013	11/7/2013	11/19/2013	12/5/2013	1/9/2014	1/11/2014	2/17/2014
Event Type	Monthly	Monthly	Storm	Monthly	Monthly	Monthly	Storm	Monthly	Quarterly	Storm	Storm
Sample Type	Flow-weighted composite										
PCBs (µg/L) (a)											
Method SW8082A											
Aroclor 1016	0.005 U	0.005 U	0.005 U	0.005 U	0.005 U	0.005 U	0.005 U	0.005 U	0.005 U	0.005 U	0.005 U
Aroclor 1242	0.005 U	0.005 U	0.005 U	0.005 U	0.005 U	0.005 U	0.005 U	0.005 U	0.005 U	0.005 U	0.005 U
Aroclor 1248	0.005 U	0.005 U	0.005 U	0.005 U	0.005 U	0.005 U	0.005 U	0.005 U	0.005 U	0.005 U	0.005 U
Aroclor 1254	0.005 U	0.005 U	**0.015**	0.005 U	**0.015**	**0.013**	0.005 U	0.005 U	0.005 U	**0.012**	**0.010**
Aroclor 1260	0.005 U	0.005 U	0.005 U	0.005 U	0.005 U	0.005 U	0.005 U	0.005 U	0.005 U	0.005 U	0.005 U
Aroclor 1221	0.005 U	0.005 U	0.005 U	0.005 U	0.005 U	0.005 U	0.005 U	0.005 U	0.005 U	0.005 U	0.005 U
Aroclor 1232	0.015 U	0.008 U	0.005 U	0.005 U	0.005 U	0.005 U	0.005 U	0.005 U	0.015 U	0.005 U	0.005 U
Aroclor 1262	0.005 U	0.005 U	0.005 U	0.005 U	0.005 U	0.005 U	0.005 U	0.005 U	0.005 U	0.005 U	0.005 U
Total PCBs (b)	ND	ND	**0.015**	ND	**0.015**	**0.013**	ND	ND	ND	**0.012**	**0.010**
SEMIVOLATILES (µg/L)											
Method SW8270D											
Phenol	1.0 U	1.0 U	**1.0**	**1.7**	1.0 U	1.0 U	1.0 U	1.0 U	1.0 U	1.0 U	1.0 U
Bis-(2-Chloroethyl) Ether	NA	NA	NA	NA	NA	NA	NA	NA	NA	NA	NA
2-Chlorophenol	NA	NA	NA	NA	NA	NA	NA	NA	NA	NA	NA
1,3-Dichlorobenzene	1.0 U	1.0 U	1.0 U	1.0 U	1.0 U	1.0 U	1.0 U	1.0 U	1.0 U	1.0 U	1.0 U
1,4-Dichlorobenzene	1.0 U	1.0 U	1.0 U	1.0 U	1.0 U	1.0 U	1.0 U	1.0 U	1.0 U	1.0 U	1.0 U
Benzyl Alcohol	2.0 U	2.0 U	2.0 UJ	2.0 U	2.0 U	2.0 U	2.0 U	2.0 UJ	2.0 U	2.0 U	2.0 U
1,2-Dichlorobenzene	1.0 U	1.0 U	1.0 U	1.0 U	1.0 U	1.0 U	1.0 U	1.0 U	1.0 U	1.0 U	1.0 U
2-Methylphenol	1.0 U	1.0 U	1.0 U	1.0 U	1.0 U	1.0 U	1.0 U	1.0 U	1.0 U	1.0 U	1.0 U
2,2'-Oxybis(1-Chloropropane)	NA	NA	NA	NA	NA	NA	NA	NA	NA	NA	NA
4-Methylphenol	2.0 U	2.0 U	2.0 U	2.0 U	2.0 U	2.0 U	2.0 U	2.0 U	2.0 U	2.0 U	2.0 U
N-Nitroso-Di-N-Propylamine	NA	NA	NA	NA	NA	NA	NA	NA	NA	NA	NA
Hexachloroethane	2.0 U	2.0 U	2.0 U	2.0 U	2.0 U	2.0 U	2.0 U	2.0 U	2.0 U	2.0 U	2.0 U
Nitrobenzene	NA	NA	NA	NA	NA	NA	NA	NA	NA	NA	NA
Isophorone	NA	NA	NA	NA	NA	NA	NA	NA	NA	NA	NA
2-Nitrophenol	NA	NA	NA	NA	NA	NA	NA	NA	NA	NA	NA
2,4-Dimethylphenol	3.0 U	3.0 U	3.0 U	3.0 U	3.0 U	3.0 U	3.0 U	3.0 U	3.0 U	3.0 U	3.0 U
Benzoic Acid	20 U	20 U	20 U	20 U	20 U	20 U	20 U	20 UJ	20 UJ	20 UJ	20 U
bis(2-Chloroethoxy) Methane	NA	NA	NA	NA	NA	NA	NA	NA	NA	NA	NA
2,4-Dichlorophenol	NA	NA	NA	NA	NA	NA	NA	NA	NA	NA	NA
1,2,4-Trichlorobenzene	1.0 U	1.0 U	1.0 U	1.0 U	1.0 U	1.0 U	1.0 U	1.0 U	1.0 U	1.0 U	1.0 U
Naphthalene	1.0 U	1.0 U	**4.4**	1.0 U	1.0 U	1.0 U	1.0 U	1.0 U	1.0 U	1.0 U	1.0 U
4-Chloroaniline	NA	NA	NA	NA	NA	NA	NA	NA	NA	NA	NA
Hexachlorobutadiene	3.0 U	3.0 U	3.0 U	3.0 U	3.0 U	3.0 U	3.0 U	3.0 U	3.0 U	3.0 U	3.0 U
4-Chloro-3-methylphenol	NA	NA	NA	NA	NA	NA	NA	NA	NA	NA	NA
2-Methylnaphthalene	1.0 U	1.0 U	**7.0**	1.0 U	1.0 U	1.0 U	1.0 U	1.0 U	1.0 U	1.0 U	1.0 U
Hexachlorocyclopentadiene	NA	NA	NA	NA	NA	NA	NA	NA	NA	NA	NA
2,4,6-Trichlorophenol	NA	NA	NA	NA	NA	NA	NA	NA	NA	NA	NA
2,4,5-Trichlorophenol	NA	NA	NA	NA	NA	NA	NA	NA	NA	NA	NA
2-Chloronaphthalene	NA	NA	NA	NA	NA	NA	NA	NA	NA	NA	NA
2-Nitroaniline	NA	NA	NA	NA	NA	NA	NA	NA	NA	NA	NA
Dimethylphthalate	1.0 U	1.0 U	1.0 U	1.0 U	1.0 U	1.0 U	1.0 U	1.0 U	1.0 U	1.0 U	1.0 U
Acenaphthylene	1.0 U	1.0 U	1.0 U	1.0 U	1.0 U	1.0 U	1.0 U	1.0 U	1.0 U	1.0 U	1.0 U
3-Nitroaniline	NA	NA	NA	NA	NA	NA	NA	NA	NA	NA	NA
Acenaphthene	1.0 U	1.0 U	1.0 U	1.0 U	1.0 U	1.0 U	1.0 U	1.0 U	1.0 U	1.0 U	1.0 U

TABLE 2
LS431 WHOLE WATER SAMPLING ANALYTICAL RESULTS
LONG-TERM STORMWATER TREATMENT SYSTEM
NORTH BOEING FIELD - SEATTLE, WASHINGTON

Sample Location ID	LS431-W	LS431-W	LS431-W	LS431-W	LS431-W	LS431-W	LS431-W	LS431-W	LS431-W	LS431-W	LS431-W
Laboratory Data ID	WX01A/WX01E/WX02A	XA11A/XA11E/XA14A	XE07A/XE07E/XE22A	XE91A/XE91E/XE92A	XJ12A/XJ12E/XJ36A	XN18A/XN18E/XN19A	XO76A/XO76C/XO77A	XQ44A/XQ44E/XQ45A	XT98A/XT98E/XT99A	XU48A/XU48C/XU49A	XZ68A/XZ68E/XZ69A
Sample Start Date	7/8/2013	8/5/2013	9/5/2013	9/9/2013	10/7/2013	11/4/2013	11/18/2013	12/2/2013	1/6/2014	1/10/2014	2/16/2014
Sample End Date	7/9/2013	8/8/2013	9/6/2013	9/12/2013	10/9/2013	11/7/2013	11/19/2013	12/5/2013	1/9/2014	1/11/2014	2/17/2014
Event Type	Monthly	Monthly	Storm	Monthly	Monthly	Monthly	Storm	Monthly	Quarterly	Storm	Storm
Sample Type	Flow-weighted composite										
2,4-Dinitrophenol	NA	NA	NA	NA	NA	NA	NA	NA	NA	NA	NA
4-Nitrophenol	NA	NA	NA	NA	NA	NA	NA	NA	NA	NA	NA
Dibenzofuran	1.0 U	1.0 U	1.0 U	1.0 U	1.0 U	1.0 U	1.0 U	1.0 U	1.0 U	1.0 U	1.0 U
2,6-Dinitrotoluene	NA	NA	NA	NA	NA	NA	NA	NA	NA	NA	NA
2,4-Dinitrotoluene	NA	NA	NA	NA	NA	NA	NA	NA	NA	NA	NA
Diethylphthalate	1.0 U	1.0 U	1.0 U	1.0 U	1.0 U	1.0 U	1.0 U	1.0 U	1.0 U	1.0 U	1.0 U
4-Chlorophenyl-phenylether	NA	NA	NA	NA	NA	NA	NA	NA	NA	NA	NA
Fluorene	1.0 U	1.0 U	1.0 U	1.0 U	1.0 U	1.0 U	1.0 U	1.0 U	1.0 U	1.0 U	1.0 U
4-Nitroaniline	NA	NA	NA	NA	NA	NA	NA	NA	NA	NA	NA
4,6-Dinitro-2-Methylphenol	NA	NA	NA	NA	NA	NA	NA	NA	NA	NA	NA
N-Nitrosodiphenylamine	1.0 U	1.0 U	1.0 U	1.0 U	1.0 U	1.0 U	1.0 U	1.0 U	1.0 U	1.0 U	1.0 U
4-Bromophenyl-phenylether	NA	NA	NA	NA	NA	NA	NA	NA	NA	NA	NA
Hexachlorobenzene	1.0 U	1.0 U	1.0 U	1.0 U	1.0 U	1.0 U	1.0 U	1.0 U	1.0 U	1.0 U	1.0 U
Pentachlorophenol	10 U	10 U	10 U	10 U	10 U	10 U	10 U	10 UJ	10 UJ	10 U	10 U
Phenanthrene	1.0 U	1.0 U	1.0 U	1.0 U	1.0 U	1.0 U	1.0 U	1.0 U	1.0 U	1.0 U	1.0 U
Carbazole	NA	NA	NA	NA	NA	NA	NA	NA	NA	NA	NA
Anthracene	1.0 U	1.0 U	1.0 U	1.0 U	1.0 U	1.0 U	1.0 U	1.0 U	1.0 U	1.0 U	1.0 U
Di-n-Butylphthalate	1.0 U	1.0 U	1.0 U	1.0 U	1.0 U	1.0 U	1.0 U	1.0 U	1.0 U	1.0 U	1.0 U
Fluoranthene	1.0 U	1.0 U	1.0 U	1.0 U	1.0 U	1.0 U	1.0 U	1.0 U	1.0 U	1.0 U	1.0 U
Pyrene	1.0 U	1.0 U	1.0 U	1.0 U	1.0 U	1.0 U	1.0 U	1.0 U	1.0 U	1.0 U	1.0 U
Butylbenzylphthalate	1.0 U	1.0 U	1.0 U	1.0 U	1.0 U	1.0 U	1.0 U	1.0 U	1.0 U	1.0 U	**1.5**
3,3'-Dichlorobenzidine	NA	NA	NA	NA	NA	NA	NA	NA	NA	NA	NA
Benzo(a)anthracene	1.0 U	1.0 U	1.0 U	1.0 U	1.0 U	1.0 U	1.0 U	1.0 U	1.0 U	1.0 U	1.0 U
bis(2-Ethylhexyl)phthalate	**8.1**	3.0 U	3.0 U	3.0 U	3.0 U	3.0 U	3.0 U	**6.1**	3.0 U	3.0 U	3.0 U
Chrysene	1.0 U	1.0 U	1.0 U	1.0 U	1.0 U	1.0 U	1.0 U	1.0 U	1.0 U	1.0 U	1.0 U
Di-n-Octyl phthalate	1.0 U	1.0 U	1.0 U	1.0 U	1.0 U	1.0 U	1.0 U	1.0 U	1.0 U	1.0 U	1.0 U
Benzo(a)pyrene	1.0 U	1.0 U	1.0 U	1.0 U	1.0 U	1.0 U	1.0 U	1.0 U	1.0 U	1.0 U	1.0 U
Indeno(1,2,3-cd)pyrene	1.0 U	1.0 U	1.0 U	1.0 U	1.0 U	1.0 U	1.0 U	1.0 U	1.0 U	1.0 U	1.0 U
Dibenz(a,h)anthracene	1.0 U	1.0 U	1.0 U	1.0 U	1.0 U	1.0 U	1.0 U	1.0 U	1.0 U	1.0 U	1.0 U
Benzo(g,h,i)perylene	1.0 U	1.0 U	1.0 U	1.0 U	1.0 U	1.0 U	1.0 U	1.0 U	1.0 UJ	1.0 U	1.0 U
1-Methylnaphthalene	1.0 U	1.0 U	**5.9**	1.0 U	1.0 U	1.0 U	1.0 U	1.0 U	1.0 U	1.0 U	1.0 U
Total Benzofluoranthenes	5.0 U	5.0 U	5.0 U	5.0 U	5.0 U	5.0 U	5.0 U	5.0 U	5.0 U	5.0 U	5.0 U
PAHs (µg/L)											
Method SW8270D-SIM											
Naphthalene	**0.014**	**0.015**	**4.2**	**0.098**	**0.010**	**0.017**	0.010 U	**0.010**	**0.018**	**0.046**	**0.043**
2-Methylnaphthalene	0.010 U	0.010 U	**6.0**	**0.11**	0.010 U	**0.016**	0.010 U	0.010 U	**0.026**	**0.021**	**0.047**
1-Methylnaphthalene	0.010 U	0.010 U	**4.8**	**0.11**	0.010 U	**0.022**	**0.012**	**0.011**	**0.030**	**0.030**	**0.039**
Acenaphthylene	0.010 U	0.010 U	0.010 U	0.010 U	0.010 U	0.010 U	0.010 U	0.010 U	0.010 U	0.010 U	0.010 U
Acenaphthene	**0.060**	**0.073**	**0.049**	**0.071**	**0.017**	0.010 U	0.010 U	**0.022**	**0.013**	**0.011**	**0.057**
Fluorene	0.010 U	0.010 U	**0.14**	0.010 U	0.010 U	0.010 U	0.010 U	0.010 U	0.010 U	0.010 U	**0.058**
Phenanthrene	0.010 U	0.010 U	**0.12**	0.010 U	**0.15**	**0.046**	**0.013**	0.010 U	**0.025**	**0.067**	**0.49**
Anthracene	0.010 U	0.010 U	**0.013**	0.010 U	**0.032**	0.010 U	0.010 U	0.010 U	0.010 U	0.010 U	**0.062**
Fluoranthene	0.010 U	0.010 U	**0.26**	**0.012**	**0.38**	**0.11**	**0.042**	**0.010**	**0.050**	**0.19**	**0.83**
Pyrene	0.010 U	0.010 U	**0.18**	0.010 U	**0.48**	**0.14**	**0.045**	0.010 U	**0.038** J	**0.17**	**0.67**
Benzo(a)anthracene	0.010 U	0.010 U	**0.067**	0.010 U	**0.26**	**0.041**	0.010 U	0.010 U	0.010 U	**0.054**	**0.20**
Chrysene	0.010 U	0.010 U	**0.17**	0.010 U	**0.41**	**0.12**	**0.041**	0.010 U	**0.030**	**0.14**	**0.38**
Benzo(a)pyrene	0.010 U	0.010 U	**0.096**	0.010 U	**0.28**	**0.065**	**0.015**	0.010 U	**0.013**	**0.088**	**0.23**
Indeno(1,2,3-cd)pyrene	0.010 U	0.010 U	**0.11**	0.010 U	**0.20**	**0.080**	**0.022**	0.010 U	**0.017**	**0.12**	**0.20**
Dibenz(a,h)anthracene	0.010 U	0.010 U	**0.021**	0.010 U	**0.039**	**0.016**	0.010 U	0.010 U	0.010 U	**0.026**	**0.045** J
Benzo(g,h,i)perylene	0.010 U	0.010 U	**0.14**	0.010 U	**0.25**	**0.11**	**0.031**	0.010 U	**0.022**	**0.14** J	**0.20**
Dibenzofuran	0.010 U	0.010 U	**0.16**	0.010 U	0.010 U	0.010 U	0.010 U	0.010 U	0.010 U	0.010 U	**0.038**
Total Benzofluoranthenes	0.020 U	0.020 U	**0.29**	0.020 U	**0.61**	**0.18**	**0.051**	0.020 U	**0.044** J	**0.24**	**0.57**
CPAH TEQ	ND	ND	**0.147**	ND	**0.395**	**0.098**	**0.023**	ND	**0.019**	**0.133**	**0.335**

TABLE 2
LS431 WHOLE WATER SAMPLING ANALYTICAL RESULTS
LONG-TERM STORMWATER TREATMENT SYSTEM
NORTH BOEING FIELD - SEATTLE, WASHINGTON

Sample Location ID	LS431-W	LS431-W	LS431-W	LS431-W	LS431-W	LS431-W	LS431-W	LS431-W	LS431-W	LS431-W	LS431-W
Laboratory Data ID	WX01A/WX01E/WX02A	XA11A/XA11E/XA14A	XE07A/XE07E/XE22A	XE91A/XE91E/XE92A	XJ12A/XJ12E/XJ36A	XN18A/XN18E/XN19A	XO76A/XO76C/XO77A	XQ44A/XQ44E/XQ45A	XT98A/XT98E/XT99A	XU48A/XU48C/XU49A	XZ68A/XZ68E/XZ69A
Sample Start Date	7/8/2013	8/5/2013	9/5/2013	9/9/2013	10/7/2013	11/4/2013	11/18/2013	12/2/2013	1/6/2014	1/10/2014	2/16/2014
Sample End Date	7/9/2013	8/8/2013	9/6/2013	9/12/2013	10/9/2013	11/7/2013	11/19/2013	12/5/2013	1/9/2014	1/11/2014	2/17/2014
Event Type	Monthly	Monthly	Storm	Monthly	Monthly	Monthly	Storm	Monthly	Quarterly	Storm	Storm
Sample Type	Flow-weighted composite										
TOTAL METALS (µg/L)											
Method EPA200.8/6010B,C/7470A											
Arsenic	**0.6**	**0.6**	**0.7**	**0.5**	**0.7**	**0.5**	**0.4**	**0.9**	**0.4**	**0.4**	**0.5**
Cadmium	0.1 U	0.1 U	**0.3**	0.1 U	**0.4**	**0.2**	**0.1**	**0.3**	0.1 U	**0.2**	**0.2**
Chromium	0.5 U	1 U	**1.7**	0.5 U	**2.0**	1 U	**0.7**	**0.7**	**0.6**	**0.8**	**1.8** J
Copper	**0.5**	**1.2**	**6.5**	0.5 U	**7.2**	**3.6**	**2.5**	**2.8**	**2.4**	**4.4**	**4.8**
Iron	**750**	**930**	**2400**	**600**	**2880**	**2060**	**2510**	**5130**	**790**	**1350**	**1210**
Lead	0.1 U	0.1 U	**6.1**	0.1 U	**6.0**	**2.0**	**1.0**	**1.0**	**0.6**	**2.1**	**2.4**
Manganese	**829**	**849**	**127**	**885**	**344**	**276**	**68**	**2120**	**242**	**101**	**44**
Mercury	0.1 U	0.1 U	0.1 U	0.1 U	0.1 U	0.1 U	0.1 U	0.1 U	0.1 U	0.1 U	0.1 U
Nickel	**0.7**	**1.0**	**2.0** J	**0.9**	**1.4**	**0.9**	**0.7**	**2.3**	**1.0**	**0.5**	**3.3**
Silver	NA	NA	NA	NA	NA	NA	NA	NA	NA	NA	NA
Zinc	**5**	**4**	**42**	**9**	**42**	**27**	**22**	**59**	**21**	**34**	**33**
DISSOLVED METALS (µg/L)											
Method EPA200.8/6010C											
Arsenic	**0.5**	**0.5**	**0.3**	**0.5**	**0.3**	**0.3**	**0.2**	**0.5**	**0.2**	**0.2**	**0.2**
Cadmium	0.1 U	0.1 U	0.1 U	0.1 U	0.1 U	0.1 U	0.1 U	0.1 U	0.1 U	0.1 U	0.1 U
Chromium	0.5 U	1 U	0.5 U	0.5 U	0.5 U	0.5 U	0.5 U	0.5 U	0.5 U	0.5 U	**1.1** J
Copper	**0.7**	**0.6**	**2.0**	**0.5**	**1.7**	**1.6**	**1.3**	**0.8**	**1.3**	**1.4**	**1.6** J
Iron	**80**	**140**	**80**	50 U	**160**	**110**	**180**	50 U	50 U	**190**	**130**
Lead	0.1 U	0.1 U	0.1 U	0.1 U	**0.1**	**0.3**	**0.1**	0.1 U	0.1 U	**0.1**	0.1 U
Manganese	**796**	**817**	**25**	**860**	**298**	**245**	**55**	**674**	**219**	**79**	**22**
Nickel	**0.7**	**1.0**	0.5 U	**1.0**	**0.6**	**0.7**	0.5 U	**1.2**	**0.9**	0.5 U	**2.4**
Silver	NA	NA	NA	NA	NA	NA	NA	NA	NA	NA	NA
Zinc	4 U	4 U	**13**	**8**	**12**	**11**	**11**	**8**	**13**	**19**	**16**
DISSOLVED METALS (ng/L)											
Method SW7470A											
Mercury	20.0 U	20.0 U	20.0 U	20.0 U	20.0 U	20.0 U	20.0 U	20.0 U	20.0 U	20.0 U	20.0 U
CONVENTIONALS											
pH (SU; EPA 150.1; SM 4500H)	**7.26**	**7.31**	**6.85**	**7.26**	**7.11**	**7.18**	**6.53**	**7.35**	**6.83**	NA	NA
Total Suspended Solids (mg/L; EPA 160.2; SM2540D)	**3.9**	**3.4**	**35.5**	**1.9**	**27.0**	**14.0**	**10.4**	**8.6**	**6.9**	**15.9**	**43.3**
Turbidity (NTU; EPA 180.1)	**3.90**	**4.20**	**4.38**	**3.06**	**7.88**	**6.08**	**11.2**	**4.26**	**3.03**	**3.33**	**2.35**
PARTICLE/GRAIN SIZE (mg/L)											
Method ASTM-D3977C											
Sediment Conc. > 500 µm	**5.66**	**0.65**	**6.27**	**8.23**	**11.31**	**9.78**	0.01 U	**3.52**	**1.71**	**1.18**	NA
Sediment Conc. 500 to 250 µm	**5.13**	**0.43**	**4.89**	**10.58**	**8.22**	**11.17**	**1.52**	**3.09**	**3.21**	**1.94**	NA
Sediment Conc. 250 to 125 µm	0.01 U	**0.01**	0.01 U	0.01 U	0.01 U	0.01 U	0.01 U	**3.49**	0.01 U	0.01 U	NA
Sediment Conc. 125 to 62.5 µm	0.01 U	**0.98**	0.01 U	0.01 U	0.01 U	0.01 U	0.01 U	**2.32**	0.01 U	0.01 U	NA
Sediment Conc. 62.5 to 3.9 µm	0.01 U	**0.36**	**22.21**	0.01 U	**13.85**	**15.31**	**7.47**	**0.75**	0.01 U	**8.35**	NA
Sediment Conc. 3.9 to 1 µm	**0.93**	**0.01**	**1.85**	**0.56**	**3.44**	**1.43**	**1.28**	**0.24**	**1.72**	**1.17**	NA
Sediment Conc. < 1 µm	**2.29**	0.01 U	**2.13**	**1.99**	**1.81**	**1.96**	**1.10**	0.01 U	**11.20**	**1.59**	NA
PRECIPITATION (c)											
Amount During Test (inches)	0.00	0.00	1.36	0.00	0.40	0.78	0.71	0.12	0.78	1.06	1.61

TABLE 2
LS431 WHOLE WATER SAMPLING ANALYTICAL RESULTS
LONG-TERM STORMWATER TREATMENT SYSTEM
NORTH BOEING FIELD - SEATTLE, WASHINGTON

Sample Location ID	LS431-W	LS431-W	LS431-W	LS431-W	LS431-W	LS431-W	LS431-W	LS431-W	LS431-W	LS431-W	LS431-W
Laboratory Data ID	YB86A/YB86C/YB88A	YG17A/YG17C/YG18A	YR11A/YR11E/YR12A	ZE23A/ZE23E/ZE24A	ZF08A/ZF08E/ZF09A	ZO34A/ZO34E/ZO35A	ZQ78A/ZQ78E/ZQ79A	ZS95A/ZS95E/ZS96A	ZU80A	ZV55A	AEB1A
Sample Start Date	3/5/2014	4/7/2014	7/7/2014	10/6/2014	10/13/2014	12/9/2014	12/23/2014	1/12/2015	--	2/5/2015	4/7/2015
Sample End Date	3/6/2014	4/10/2014	7/10/2014	10/9/2014	10/14/2014	12/10/2014	12/24/2014	1/15/2015	2/2/2015	2/6/2015	4/10/2015
Event Type	Storm	Quarterly	Quarterly	Quarterly	Storm	Storm	Storm	Quarterly	Quarterly	Storm	Quarterly
Sample Type	Flow-weighted composite								Grab	Flow-weighted composite	Flow-weighted composite
PCBs (µg/L) (a)											
Method SW8082A											
Aroclor 1016	0.005 U	0.005 U	0.005 U	0.005 U	0.005 U	0.005 U	0.005 U	0.005 U	NA	0.005 U	0.005 U
Aroclor 1242	0.005 U	0.005 U	0.005 U	0.008 U	0.005 U	0.005 U	0.005 U	0.005 U	NA	0.005 U	0.005 U
Aroclor 1248	0.005 U	0.005 U	0.005 U	0.005 U	0.005 U	0.005 U	0.005 U	0.005 U	NA	0.005 U	0.005 U
Aroclor 1254	0.005 U	0.005 U	0.005 U	0.005 U	**0.011**	0.005 U	**0.0080** J	0.005 U	NA	0.005 U	0.005 U
Aroclor 1260	0.005 U	0.005 U	0.005 U	0.005 U	**0.011**	0.005 U	0.005 U	0.005 U	NA	0.005 U	0.005 U
Aroclor 1221	0.005 U	0.005 U	0.005 U	0.005 U	0.005 U	0.005 U	0.005 U	0.005 U	NA	0.005 U	0.005 U
Aroclor 1232	0.005 U	0.005 U	0.010 U	0.005 U	0.005 U	0.005 U	0.005 U	0.005 U	NA	0.005 U	0.005 U
Aroclor 1262	0.005 U	0.005 U	0.005 U	0.005 U	0.005 U	0.005 U	0.005 U	0.005 U	NA	0.005 U	0.005 U
Total PCBs (b)	ND	ND	ND	ND	**0.022**	ND	**0.008** J	ND	NA	ND	ND
SEMIVOLATILES (µg/L)											
Method SW8270D											
Phenol	1.0 U	NA	1.0 U	1.0 U	1.0 U	1.0 U	1.0 U	1.0 U	NA	NA	NA
Bis-(2-Chloroethyl) Ether	NA	NA	NA	NA	NA	NA	NA	NA	NA	NA	NA
2-Chlorophenol	NA	NA	NA	NA	NA	NA	NA	NA	NA	NA	NA
1,3-Dichlorobenzene	1.0 U	NA	1.0 U	1.0 U	1.0 U	1.0 U	1.0 U	1.0 U	NA	NA	NA
1,4-Dichlorobenzene	1.0 U	NA	1.0 U	1.0 U	1.0 U	1.0 U	1.0 U	1.0 U	NA	NA	NA
Benzyl Alcohol	2.0 U	NA	2.0 U	2.0 U	2.0 UJ	2.0 U	2.0 U	2.0 U	NA	NA	NA
1,2-Dichlorobenzene	1.0 U	NA	1.0 U	1.0 U	1.0 U	1.0 U	1.0 U	1.0 U	NA	NA	NA
2-Methylphenol	1.0 U	NA	1.0 UJ	1.0 U	1.0 U	1.0 U	1.0 U	1.0 U	NA	NA	NA
2,2'-Oxybis(1-Chloropropane)	NA	NA	NA	NA	NA	NA	NA	NA	NA	NA	NA
4-Methylphenol	2.0 U	NA	2.0 UJ	2.0 U	2.0 U	2.0 U	2.0 U	2.0 U	NA	NA	NA
N-Nitroso-Di-N-Propylamine	NA	NA	NA	NA	NA	NA	NA	NA	NA	NA	NA
Hexachloroethane	2.0 U	NA	2.0 UJ	2.0 U	2.0 U	2.0 U	2.0 U	2.0 U	NA	NA	NA
Nitrobenzene	NA	NA	NA	NA	NA	NA	NA	NA	NA	NA	NA
Isophorone	NA	NA	NA	NA	NA	NA	NA	NA	NA	NA	NA
2-Nitrophenol	NA	NA	NA	NA	NA	NA	NA	NA	NA	NA	NA
2,4-Dimethylphenol	3.0 U	NA	3.0 U	3.0 U	3.0 U	3.0 U	3.0 U	3.0 U	NA	NA	NA
Benzoic Acid	20 U	NA	20 UJ	20 UJ	20 U	20 U	20 U	20 U	NA	NA	NA
bis(2-Chloroethoxy) Methane	NA	NA	NA	NA	NA	NA	NA	NA	NA	NA	NA
2,4-Dichlorophenol	NA	NA	NA	NA	NA	NA	NA	NA	NA	NA	NA
1,2,4-Trichlorobenzene	1.0 U	NA	1.0 U	1.0 U	1.0 U	1.0 U	1.0 U	1.0 U	NA	NA	NA
Naphthalene	1.0 U	NA	1.0 UJ	1.0 U	1.0 U	1.0 U	1.0 U	1.0 U	NA	NA	NA
4-Chloroaniline	NA	NA	NA	NA	NA	NA	NA	NA	NA	NA	NA
Hexachlorobutadiene	3.0 U	NA	3.0 U	3.0 U	3.0 U	3.0 U	3.0 U	3.0 U	NA	NA	NA
4-Chloro-3-methylphenol	NA	NA	NA	NA	NA	NA	NA	NA	NA	NA	NA
2-Methylnaphthalene	1.0 U	NA	1.0 U	1.0 U	1.0 U	1.0 U	1.0 U	1.0 U	NA	NA	NA
Hexachlorocyclopentadiene	NA	NA	NA	NA	NA	NA	NA	NA	NA	NA	NA
2,4,6-Trichlorophenol	NA	NA	NA	NA	NA	NA	NA	NA	NA	NA	NA
2,4,5-Trichlorophenol	NA	NA	NA	NA	NA	NA	NA	NA	NA	NA	NA
2-Chloronaphthalene	NA	NA	NA	NA	NA	NA	NA	NA	NA	NA	NA
2-Nitroaniline	NA	NA	NA	NA	NA	NA	NA	NA	NA	NA	NA
Dimethylphthalate	1.0 U	NA	1.0 UJ	1.0 U	1.0 U	1.0 U	1.0 U	1.0 U	NA	NA	NA
Acenaphthylene	1.0 U	NA	1.0 U	1.0 U	1.0 U	1.0 U	1.0 U	1.0 U	NA	NA	NA
3-Nitroaniline	NA	NA	NA	NA	NA	NA	NA	NA	NA	NA	NA
Acenaphthene	1.0 U	NA	1.0 UJ	1.0 U	1.0 U	1.0 U	1.0 U	1.0 U	NA	NA	NA

TABLE 2
LS431 WHOLE WATER SAMPLING ANALYTICAL RESULTS
LONG-TERM STORMWATER TREATMENT SYSTEM
NORTH BOEING FIELD - SEATTLE, WASHINGTON

Sample Location ID	LS431-W	LS431-W	LS431-W	LS431-W	LS431-W	LS431-W	LS431-W	LS431-W	LS431-W	LS431-W	LS431-W
Laboratory Data ID	YB86A/YB86C/YB88A	YG17A/YG17C/YG18A	YR11A/YR11E/YR12A	ZE23A/ZE23E/ZE24A	ZF08A/ZF08E/ZF09A	ZO34A/ZO34E/ZO35A	ZQ78A/ZQ78E/ZQ79A	ZS95A/ZS95E/ZS96A	ZU80A	ZV55A	AEB1A
Sample Start Date	3/5/2014	4/7/2014	7/7/2014	10/6/2014	10/13/2014	12/9/2014	12/23/2014	1/12/2015	--	2/5/2015	4/7/2015
Sample End Date	3/6/2014	4/10/2014	7/10/2014	10/9/2014	10/14/2014	12/10/2014	12/24/2014	1/15/2015	2/2/2015	2/6/2015	4/10/2015
Event Type	Storm	Quarterly	Quarterly	Quarterly	Storm	Storm	Storm	Quarterly	Quarterly	Storm	Quarterly
Sample Type	Flow-weighted composite								Grab	Flow-weighted composite	Flow-weighted composite
2,4-Dinitrophenol	NA	NA	NA	NA	NA	NA	NA	NA	NA	NA	NA
4-Nitrophenol	NA	NA	NA	NA	NA	NA	NA	NA	NA	NA	NA
Dibenzofuran	1.0 U	NA	1.0 U	1.0 U	1.0 U	1.0 U	1.0 U	1.0 U	NA	NA	NA
2,6-Dinitrotoluene	NA	NA	NA	NA	NA	NA	NA	NA	NA	NA	NA
2,4-Dinitrotoluene	NA	NA	NA	NA	NA	NA	NA	NA	NA	NA	NA
Diethylphthalate	1.0 U	NA	1.0 UJ	1.0 U	1.0 U	1.0 U	1.0 U	1.0 U	NA	NA	NA
4-Chlorophenyl-phenylether	NA	NA	NA	NA	NA	NA	NA	NA	NA	NA	NA
Fluorene	1.0 U	NA	1.0 UJ	1.0 U	1.0 U	1.0 U	1.0 U	1.0 U	NA	NA	NA
4-Nitroaniline	NA	NA	NA	NA	NA	NA	NA	NA	NA	NA	NA
4,6-Dinitro-2-Methylphenol	NA	NA	NA	NA	NA	NA	NA	NA	NA	NA	NA
N-Nitrosodiphenylamine	1.0 U	NA	1.0 U	1.0 U	1.0 U	1.0 U	1.0 U	1.0 U	NA	NA	NA
4-Bromophenyl-phenylether	NA	NA	NA	NA	NA	NA	NA	NA	NA	NA	NA
Hexachlorobenzene	1.0 U	NA	1.0 U	1.0 U	1.0 U	1.0 U	1.0 U	1.0 U	NA	NA	NA
Pentachlorophenol	10 U	NA	10 U	10 UJ	10 UJ	10 U	10 UJ	10 UJ	NA	NA	NA
Phenanthrene	1.0 U	NA	1.0 UJ	1.0 U	1.0 U	1.0 U	1.0 U	1.0 U	NA	NA	NA
Carbazole	NA	NA	NA	NA	NA	NA	NA	NA	NA	NA	NA
Anthracene	1.0 U	NA	1.0 U	1.0 U	1.0 U	1.0 U	1.0 U	1.0 U	NA	NA	NA
Di-n-Butylphthalate	1.0 U	NA	1.0 UJ	1.0 U	1.0 U	1.0 U	1.0 U	1.0 U	NA	NA	NA
Fluoranthene	1.0 U	NA	1.0 U	1.0 U	1.0 U	1.0 U	1.0 U	1.0 U	NA	NA	NA
Pyrene	1.0 U	NA	1.0 U	1.0 U	1.0 U	1.0 U	1.0 U	1.0 U	NA	NA	NA
Butylbenzylphthalate	1.0 U	NA	1.0 UJ	1.0 U	1.0 U	1.0 U	1.0 U	1.0 U	NA	NA	NA
3,3'-Dichlorobenzidine	NA	NA	NA	NA	NA	NA	NA	NA	NA	NA	NA
Benzo(a)anthracene	1.0 U	NA	1.0 U	1.0 U	1.0 U	1.0 U	1.0 U	1.0 U	NA	NA	NA
bis(2-Ethylhexyl)phthalate	3.0 U	NA	3.0 U	3.0 U	3.0 U	3.0 U	3.0 U	3.0 U	NA	NA	NA
Chrysene	1.0 U	NA	1.0 U	1.0 U	1.0 U	1.0 U	1.0 U	1.0 U	NA	NA	NA
Di-n-Octyl phthalate	1.0 U	NA	1.0 U	1.0 U	1.0 U	1.0 U	1.0 U	1.0 U	NA	NA	NA
Benzo(a)pyrene	1.0 U	NA	1.0 U	1.0 U	1.0 U	1.0 U	1.0 U	1.0 U	NA	NA	NA
Indeno(1,2,3-cd)pyrene	1.0 U	NA	1.0 UJ	1.0 U	1.0 U	1.0 U	1.0 U	1.0 U	NA	NA	NA
Dibenz(a,h)anthracene	1.0 U	NA	1.0 UJ	1.0 U	1.0 U	1.0 U	1.0 U	1.0 U	NA	NA	NA
Benzo(g,h,i)perylene	1.0 U	NA	1.0 UJ	1.0 U	1.0 U	1.0 U	1.0 U	1.0 U	NA	NA	NA
1-Methylnaphthalene	1.0 U	NA	1.0 U	1.0 U	1.0 U	1.0 U	1.0 U	1.0 U	NA	NA	NA
Total Benzofluoranthenes	5.0 U	NA	2.0 U	2.0 U	2.0 U	2.0 U	2.0 U	2.0 U	NA	NA	NA
PAHs (µg/L)											
Method SW8270D-SIM											
Naphthalene	**0.012**	NA	0.010 U	**0.010**	**0.012**	**0.011**	0.060 UJ	0.010 U	NA	NA	NA
2-Methylnaphthalene	0.010 U	NA	0.010 U	0.010 U	**0.018**	**0.016**	**0.098** J	0.010 U	NA	NA	NA
1-Methylnaphthalene	0.010 U	NA	0.010 U	0.010 U	**0.021**	**0.019**	**0.083** J	0.010 U	NA	NA	NA
Acenaphthylene	0.010 U	NA	0.010 U	0.010 U	0.010 U	0.010 U	0.010 UJ	0.010 U	NA	NA	NA
Acenaphthene	0.010 U	NA	0.010 U	**0.088**	**0.010**	**0.012**	0.010 UJ	**0.031**	NA	NA	NA
Fluorene	0.010 U	NA	0.010 U	0.010 U	0.010 U	0.010 U	0.010 UJ	0.010 U	NA	NA	NA
Phenanthrene	0.013 U	NA	0.010 U	0.010 U	**0.048**	**0.16**	**0.028** J	0.010 U	NA	NA	NA
Anthracene	0.010 U	NA	0.010 U	0.010 U	0.010 U	**0.017**	0.010 UJ	0.010 U	NA	NA	NA
Fluoranthene	0.041 U	NA	0.010 U	0.010 U	**0.11**	**0.54**	**0.046** J	0.010 U	NA	NA	NA
Pyrene	**0.030**	NA	0.010 U	0.010 U	**0.083**	**0.66** J	**0.055** J	0.010 U	NA	NA	NA
Benzo(a)anthracene	0.010 U	NA	0.010 U	0.010 U	**0.018**	**0.30**	**0.013** J	0.010 U	NA	NA	NA
Chrysene	**0.026**	NA	0.010 U	0.010 U	**0.082**	**0.43**	**0.042** J	0.010 U	NA	NA	NA
Benzo(a)pyrene	**0.012**	NA	0.010 U	0.010 U	**0.033**	**0.35**	**0.018** J	0.010 U	NA	NA	NA
Indeno(1,2,3-cd)pyrene	**0.015**	NA	0.010 U	0.010 U	**0.050**	**0.29**	**0.027** J	0.010 U	NA	NA	NA
Dibenz(a,h)anthracene	0.010 U	NA	0.010 U	0.010 UJ	0.010 U	**0.066**	0.010 UJ	0.010 U	NA	NA	NA
Benzo(g,h,i)perylene	**0.016**	NA	0.010 U	0.010 U	**0.066**	**0.33**	**0.037** J	0.010 U	NA	NA	NA
Dibenzofuran	0.010 U	NA	0.010 U	0.010 U	0.010 U	0.010 U	0.010 UJ	0.010 U	NA	NA	NA
Total Benzofluoranthenes	**0.043**	NA	0.020 U	0.020 U	**0.14**	**0.74**	**0.058** J	0.020 U	NA	NA	NA
CPAH TEQ	**0.018**	NA	ND	ND	**0.055**	**0.494**	**0.028** J	ND	NA	NA	NA

TABLE 2
LS431 WHOLE WATER SAMPLING ANALYTICAL RESULTS
LONG-TERM STORMWATER TREATMENT SYSTEM
NORTH BOEING FIELD - SEATTLE, WASHINGTON

Sample Location ID	LS431-W	LS431-W	LS431-W	LS431-W	LS431-W	LS431-W	LS431-W	LS431-W	LS431-W	LS431-W	LS431-W
Laboratory Data ID	YB86A/YB86C/YB88A	YG17A/YG17C/YG18A	YR11A/YR11E/YR12A	ZE23A/ZE23E/ZE24A	ZF08A/ZF08E/ZF09A	ZO34A/ZO34E/ZO35A	ZQ78A/ZQ78E/ZQ79A	ZS95A/ZS95E/ZS96A	ZU80A	ZV55A	AEB1A
Sample Start Date	3/5/2014	4/7/2014	7/7/2014	10/6/2014	10/13/2014	12/9/2014	12/23/2014	1/12/2015	--	2/5/2015	4/7/2015
Sample End Date	3/6/2014	4/10/2014	7/10/2014	10/9/2014	10/14/2014	12/10/2014	12/24/2014	1/15/2015	2/2/2015	2/6/2015	4/10/2015
Event Type	Storm	Quarterly	Quarterly	Quarterly	Storm	Storm	Storm	Quarterly	Quarterly	Storm	Quarterly
Sample Type	Flow-weighted composite								Grab	Flow-weighted composite	Flow-weighted composite
TOTAL METALS (µg/L)											
Method EPA200.8/6010B,C/7470A											
Arsenic	**0.4**	**0.7**	**0.7**	**0.8**	**0.8**	**0.5**	**0.4**	**0.7**	NA	NA	NA
Cadmium	**0.1**	**0.1**	0.1 U	0.1 U	**0.2**	**0.1**	**0.1**	0.1 U	NA	NA	NA
Chromium	**0.8**	**0.6**	**2**	**0.6**	**1.3**	**0.5**	**0.6**	1 U	NA	NA	NA
Copper	**3.3**	**3.8**	**2.5**	0.5 U	**4.8**	**2.6**	**2.3**	**0.7**	NA	NA	NA
Iron	**1110**	**5870**	**5040**	**1570**	**3450**	**1520**	**1740**	**2220**	NA	NA	NA
Lead	**0.8**	**0.7**	**0.2**	0.1 U	**2.3**	**0.7**	**0.6**	0.1 U	NA	NA	NA
Manganese	**81**	**820**	**450**	**1010**	**63**	**164**	**115**	**1320**	NA	NA	NA
Mercury	0.1 U	0.1 U	0.1 U	0.1 U	0.1 U	0.1 U	0.1 U	0.1 U	NA	NA	NA
Nickel	**2.7**	**1.2**	**1.7**	**2.0**	**1.0**	**1.0**	**0.6**	**1.4**	NA	NA	NA
Silver	NA	NA	NA	NA	NA	NA	NA	NA	NA	NA	NA
Zinc	**24**	**19**	**4**	4 U	**33**	**24**	**19**	**7**	NA	NA	NA
DISSOLVED METALS (µg/L)											
Method EPA200.8/6010C											
Arsenic	**0.3**	**0.3**	**0.6**	**0.6**	**0.3**	**0.3**	**0.2**	**0.5**	NA	NA	NA
Cadmium	0.1 U	0.1 U	0.1 U	0.1 U	0.1 U	0.1 U	0.1 U	0.1 U	NA	NA	NA
Chromium	0.5 U	1 U	**2**	0.5 U	0.5 U	0.5 U	0.5 U	1 U	NA	NA	NA
Copper	**2.3**	**2.4**	**2.2**	0.5 U	**1.4**	**1.7**	**1.2**	**0.6**	NA	NA	NA
Iron	**430**	**230**	**3760**	**110**	**160**	**450**	**230**	**110**	NA	NA	NA
Lead	**0.2**	0.1 U	**0.1**	0.1 U	0.1 U	**0.1**	0.1 U	0.1 U	NA	NA	NA
Manganese	**62**	**322**	**398**	**862**	**35**	**72**	**44**	**991**	NA	NA	NA
Nickel	**2.4**	**0.8**	**1.2**	**1.7**	0.5 U	**0.8**	0.5 U	**1.2**	NA	NA	NA
Silver	NA	NA	NA	NA	NA	NA	NA	NA	NA	NA	NA
Zinc	**19**	**8**	4 U	4 U	**9**	**17**	**12**	**4**	NA	NA	NA
DISSOLVED METALS (ng/L)											
Method SW7470A											
Mercury	20.0 U	20.0 U	20.0 U	20.0 U	20.0 U	20.0 U	20.0 U	20.0 U	NA	NA	NA
CONVENTIONALS											
pH (SU; EPA 150.1; SM 4500H)	NA	NA	NA	NA	NA	NA	NA	NA	NA	NA	NA
Total Suspended Solids (mg/L; EPA 160.2; SM2540D)	**9.0**	**13.2**	**2.1**	**12.6**	**20.4**	**8.9**	**7.1**	**9.1**	**8.4**	NA	NA
Turbidity (NTU; EPA 180.1)	**3.77**	**14.1**	**15.0**	**8.19**	**16.1**	**4.75**	**5.23**	**8.50**	NA	NA	NA
PARTICLE/GRAIN SIZE (mg/L)											
Method ASTM-D3977C											
Sediment Conc. > 500 µm	NA	NA	NA	NA	NA	NA	NA	NA	NA	NA	NA
Sediment Conc. 500 to 250 µm	NA	NA	NA	NA	NA	NA	NA	NA	NA	NA	NA
Sediment Conc. 250 to 125 µm	NA	NA	NA	NA	NA	NA	NA	NA	NA	NA	NA
Sediment Conc. 125 to 62.5 µm	NA	NA	NA	NA	NA	NA	NA	NA	NA	NA	NA
Sediment Conc. 62.5 to 3.9 µm	NA	NA	NA	NA	NA	NA	NA	NA	NA	NA	NA
Sediment Conc. 3.9 to 1 µm	NA	NA	NA	NA	NA	NA	NA	NA	NA	NA	NA
Sediment Conc. < 1 µm	NA	NA	NA	NA	NA	NA	NA	NA	NA	NA	NA
PRECIPITATION (c)											
Amount During Test (inches)	0.55	0.38	0.00	0.00	0.63	0.54	0.71	0.00	0.03	0.72	0.01

TABLE 2
LS431 WHOLE WATER SAMPLING ANALYTICAL RESULTS
LONG-TERM STORMWATER TREATMENT SYSTEM
NORTH BOEING FIELD - SEATTLE, WASHINGTON

Sample Location ID	LS431-W	LS431-W	LS431-W	LS431-W	LS431-W	LS431-W	LS431-W	LS431-W
Laboratory Data ID	AIH9A	AIO4A	AIY6A	AKV0A	ALR5A	AOB4A	AOJ7A	APT0A
Sample Start Date	--	--	--	--	--	10/5/2015	10/10/2015	10/30/2015
Sample End Date	6/25/2015	6/30/2015	7/9/2015	8/14/15	9/1/2015	10/8/2015	10/11/2015	10/31/2015
Event Type	Quarterly	Quarterly	Quarterly	Quarterly	Quarterly	Quarterly	Storm	Storm
Sample Type	Grab	Grab	Flow-weighted composite	Grab	Grab	Flow-weighted composite	Flow-weighted composite	Flow-weighted composite
PCBs (µg/L) (a)								
Method SW8082A								
Aroclor 1016	NA	NA	0.005 U	NA	NA	0.005 U	0.005 U	0.005 U
Aroclor 1242	NA	NA	0.005 U	NA	NA	0.005 U	0.005 U	0.005 U
Aroclor 1248	NA	NA	0.005 U	NA	NA	0.005 U	0.005 U	0.005 U
Aroclor 1254	NA	NA	0.005 U	NA	NA	0.005 U	**0.0070** J	0.005 U
Aroclor 1260	NA	NA	0.005 U	NA	NA	0.005 U	0.005 U	0.005 U
Aroclor 1221	NA	NA	0.005 U	NA	NA	0.005 U	0.005 U	0.005 U
Aroclor 1232	NA	NA	0.005 U	NA	NA	0.005 U	0.005 U	0.005 U
Aroclor 1262	NA	NA	0.005 U	NA	NA	0.005 U	0.005 U	0.005 U
Total PCBs (b)	NA	NA	ND	NA	NA	ND	**0.0070** J	ND
SEMIVOLATILES (µg/L)								
Method SW8270D								
Phenol	NA	NA	NA	NA	NA	NA	NA	NA
Bis-(2-Chloroethyl) Ether	NA	NA	NA	NA	NA	NA	NA	NA
2-Chlorophenol	NA	NA	NA	NA	NA	NA	NA	NA
1,3-Dichlorobenzene	NA	NA	NA	NA	NA	NA	NA	NA
1,4-Dichlorobenzene	NA	NA	NA	NA	NA	NA	NA	NA
Benzyl Alcohol	NA	NA	NA	NA	NA	NA	NA	NA
1,2-Dichlorobenzene	NA	NA	NA	NA	NA	NA	NA	NA
2-Methylphenol	NA	NA	NA	NA	NA	NA	NA	NA
2,2'-Oxybis(1-Chloropropane)	NA	NA	NA	NA	NA	NA	NA	NA
4-Methylphenol	NA	NA	NA	NA	NA	NA	NA	NA
N-Nitroso-Di-N-Propylamine	NA	NA	NA	NA	NA	NA	NA	NA
Hexachloroethane	NA	NA	NA	NA	NA	NA	NA	NA
Nitrobenzene	NA	NA	NA	NA	NA	NA	NA	NA
Isophorone	NA	NA	NA	NA	NA	NA	NA	NA
2-Nitrophenol	NA	NA	NA	NA	NA	NA	NA	NA
2,4-Dimethylphenol	NA	NA	NA	NA	NA	NA	NA	NA
Benzoic Acid	NA	NA	NA	NA	NA	NA	NA	NA
bis(2-Chloroethoxy) Methane	NA	NA	NA	NA	NA	NA	NA	NA
2,4-Dichlorophenol	NA	NA	NA	NA	NA	NA	NA	NA
1,2,4-Trichlorobenzene	NA	NA	NA	NA	NA	NA	NA	NA
Naphthalene	NA	NA	NA	NA	NA	NA	NA	NA
4-Chloroaniline	NA	NA	NA	NA	NA	NA	NA	NA
Hexachlorobutadiene	NA	NA	NA	NA	NA	NA	NA	NA
4-Chloro-3-methylphenol	NA	NA	NA	NA	NA	NA	NA	NA
2-Methylnaphthalene	NA	NA	NA	NA	NA	NA	NA	NA
Hexachlorocyclopentadiene	NA	NA	NA	NA	NA	NA	NA	NA
2,4,6-Trichlorophenol	NA	NA	NA	NA	NA	NA	NA	NA
2,4,5-Trichlorophenol	NA	NA	NA	NA	NA	NA	NA	NA
2-Chloronaphthalene	NA	NA	NA	NA	NA	NA	NA	NA
2-Nitroaniline	NA	NA	NA	NA	NA	NA	NA	NA
Dimethylphthalate	NA	NA	NA	NA	NA	NA	NA	NA
Acenaphthylene	NA	NA	NA	NA	NA	NA	NA	NA
3-Nitroaniline	NA	NA	NA	NA	NA	NA	NA	NA
Acenaphthene	NA	NA	NA	NA	NA	NA	NA	NA

TABLE 2
LS431 WHOLE WATER SAMPLING ANALYTICAL RESULTS
LONG-TERM STORMWATER TREATMENT SYSTEM
NORTH BOEING FIELD - SEATTLE, WASHINGTON

Sample Location ID	LS431-W	LS431-W	LS431-W	LS431-W	LS431-W	LS431-W	LS431-W	LS431-W
Laboratory Data ID	AIH9A	AIO4A	AIY6A	AKV0A	ALR5A	AOB4A	AOJ7A	APT0A
Sample Start Date	--	--	--	--	--	10/5/2015	10/10/2015	10/30/2015
Sample End Date	6/25/2015	6/30/2015	7/9/2015	8/14/15	9/1/2015	10/8/2015	10/11/2015	10/31/2015
Event Type	Quarterly	Quarterly	Quarterly	Quarterly	Quarterly	Quarterly	Storm	Storm
Sample Type	Grab	Grab	Flow-weighted composite	Grab	Grab	Flow-weighted composite	Flow-weighted composite	Flow-weighted composite
2,4-Dinitrophenol	NA	NA	NA	NA	NA	NA	NA	NA
4-Nitrophenol	NA	NA	NA	NA	NA	NA	NA	NA
Dibenzofuran	NA	NA	NA	NA	NA	NA	NA	NA
2,6-Dinitrotoluene	NA	NA	NA	NA	NA	NA	NA	NA
2,4-Dinitrotoluene	NA	NA	NA	NA	NA	NA	NA	NA
Diethylphthalate	NA	NA	NA	NA	NA	NA	NA	NA
4-Chlorophenyl-phenylether	NA	NA	NA	NA	NA	NA	NA	NA
Fluorene	NA	NA	NA	NA	NA	NA	NA	NA
4-Nitroaniline	NA	NA	NA	NA	NA	NA	NA	NA
4,6-Dinitro-2-Methylphenol	NA	NA	NA	NA	NA	NA	NA	NA
N-Nitrosodiphenylamine	NA	NA	NA	NA	NA	NA	NA	NA
4-Bromophenyl-phenylether	NA	NA	NA	NA	NA	NA	NA	NA
Hexachlorobenzene	NA	NA	NA	NA	NA	NA	NA	NA
Pentachlorophenol	NA	NA	NA	NA	NA	NA	NA	NA
Phenanthrene	NA	NA	NA	NA	NA	NA	NA	NA
Carbazole	NA	NA	NA	NA	NA	NA	NA	NA
Anthracene	NA	NA	NA	NA	NA	NA	NA	NA
Di-n-Butylphthalate	NA	NA	NA	NA	NA	NA	NA	NA
Fluoranthene	NA	NA	NA	NA	NA	NA	NA	NA
Pyrene	NA	NA	NA	NA	NA	NA	NA	NA
Butylbenzylphthalate	NA	NA	NA	NA	NA	NA	NA	NA
3,3'-Dichlorobenzidine	NA	NA	NA	NA	NA	NA	NA	NA
Benzo(a)anthracene	NA	NA	NA	NA	NA	NA	NA	NA
bis(2-Ethylhexyl)phthalate	NA	NA	NA	NA	NA	NA	NA	NA
Chrysene	NA	NA	NA	NA	NA	NA	NA	NA
Di-n-Octyl phthalate	NA	NA	NA	NA	NA	NA	NA	NA
Benzo(a)pyrene	NA	NA	NA	NA	NA	NA	NA	NA
Indeno(1,2,3-cd)pyrene	NA	NA	NA	NA	NA	NA	NA	NA
Dibenz(a,h)anthracene	NA	NA	NA	NA	NA	NA	NA	NA
Benzo(g,h,i)perylene	NA	NA	NA	NA	NA	NA	NA	NA
1-Methylnaphthalene	NA	NA	NA	NA	NA	NA	NA	NA
Total Benzofluoranthenes	NA	NA	NA	NA	NA	NA	NA	NA
PAHs (µg/L)								
Method SW8270D-SIM								
Naphthalene	NA	NA	NA	NA	NA	NA	NA	NA
2-Methylnaphthalene	NA	NA	NA	NA	NA	NA	NA	NA
1-Methylnaphthalene	NA	NA	NA	NA	NA	NA	NA	NA
Acenaphthylene	NA	NA	NA	NA	NA	NA	NA	NA
Acenaphthene	NA	NA	NA	NA	NA	NA	NA	NA
Fluorene	NA	NA	NA	NA	NA	NA	NA	NA
Phenanthrene	NA	NA	NA	NA	NA	NA	NA	NA
Anthracene	NA	NA	NA	NA	NA	NA	NA	NA
Fluoranthene	NA	NA	NA	NA	NA	NA	NA	NA
Pyrene	NA	NA	NA	NA	NA	NA	NA	NA
Benzo(a)anthracene	NA	NA	NA	NA	NA	NA	NA	NA
Chrysene	NA	NA	NA	NA	NA	NA	NA	NA
Benzo(a)pyrene	NA	NA	NA	NA	NA	NA	NA	NA
Indeno(1,2,3-cd)pyrene	NA	NA	NA	NA	NA	NA	NA	NA
Dibenz(a,h)anthracene	NA	NA	NA	NA	NA	NA	NA	NA
Benzo(g,h,i)perylene	NA	NA	NA	NA	NA	NA	NA	NA
Dibenzofuran	NA	NA	NA	NA	NA	NA	NA	NA
Total Benzofluoranthenes	NA	NA	NA	NA	NA	NA	NA	NA
CPAH TEQ	NA	NA	NA	NA	NA	NA	NA	NA

TABLE 2
LS431 WHOLE WATER SAMPLING ANALYTICAL RESULTS
LONG-TERM STORMWATER TREATMENT SYSTEM
NORTH BOEING FIELD - SEATTLE, WASHINGTON

Sample Location ID	LS431-W	LS431-W	LS431-W	LS431-W	LS431-W	LS431-W	LS431-W	LS431-W
Laboratory Data ID	AIH9A	AIO4A	AIY6A	AKV0A	ALR5A	AOB4A	AOJ7A	APT0A
Sample Start Date	--	--	--	--	--	10/5/2015	10/10/2015	10/30/2015
Sample End Date	6/25/2015	6/30/2015	7/9/2015	8/14/15	9/1/2015	10/8/2015	10/11/2015	10/31/2015
Event Type	Quarterly	Quarterly	Quarterly	Quarterly	Quarterly	Quarterly	Storm	Storm
Sample Type	Grab	Grab	Flow-weighted composite	Grab	Grab	Flow-weighted composite	Flow-weighted composite	Flow-weighted composite
TOTAL METALS (µg/L)								
Method EPA200.8/6010B,C/7470A								
Arsenic	NA	NA	NA	NA	NA	NA	NA	NA
Cadmium	NA	NA	NA	NA	NA	NA	NA	NA
Chromium	NA	NA	NA	NA	NA	NA	NA	NA
Copper	NA	NA	NA	NA	NA	NA	NA	NA
Iron	NA	NA	NA	NA	NA	NA	NA	NA
Lead	NA	NA	NA	NA	NA	NA	NA	NA
Manganese	NA	NA	NA	NA	NA	NA	NA	NA
Mercury	NA	NA	NA	NA	NA	NA	NA	NA
Nickel	NA	NA	NA	NA	NA	NA	NA	NA
Silver	NA	NA	NA	NA	NA	NA	NA	NA
Zinc	NA	NA	NA	NA	NA	NA	NA	NA
DISSOLVED METALS (µg/L)								
Method EPA200.8/6010C								
Arsenic	NA	NA	NA	NA	NA	NA	NA	NA
Cadmium	NA	NA	NA	NA	NA	NA	NA	NA
Chromium	NA	NA	NA	NA	NA	NA	NA	NA
Copper	NA	NA	NA	NA	NA	NA	NA	NA
Iron	NA	NA	NA	NA	NA	NA	NA	NA
Lead	NA	NA	NA	NA	NA	NA	NA	NA
Manganese	NA	NA	NA	NA	NA	NA	NA	NA
Nickel	NA	NA	NA	NA	NA	NA	NA	NA
Silver	NA	NA	NA	NA	NA	NA	NA	NA
Zinc	NA	NA	NA	NA	NA	NA	NA	NA
DISSOLVED METALS (ng/L)								
Method SW7470A								
Mercury	NA	NA	NA	NA	NA	NA	NA	NA
CONVENTIONALS								
pH (SU; EPA 150.1; SM 4500H)	NA	NA	NA	NA	NA	NA	NA	NA
Total Suspended Solids (mg/L; EPA 160.2; SM2540D)	**100**	**3.1**	NA	**107**	**9.4**	**5.3**	NA	NA
Turbidity (NTU; EPA 180.1)	NA	**8.88**	NA	NA	NA	NA	NA	NA
PARTICLE/GRAIN SIZE (mg/L)								
Method ASTM-D3977C								
Sediment Conc. > 500 µm	NA	NA	NA	NA	NA	NA	NA	NA
Sediment Conc. 500 to 250 µm	NA	NA	NA	NA	NA	NA	NA	NA
Sediment Conc. 250 to 125 µm	NA	NA	NA	NA	NA	NA	NA	NA
Sediment Conc. 125 to 62.5 µm	NA	NA	NA	NA	NA	NA	NA	NA
Sediment Conc. 62.5 to 3.9 µm	NA	NA	NA	NA	NA	NA	NA	NA
Sediment Conc. 3.9 to 1 µm	NA	NA	NA	NA	NA	NA	NA	NA
Sediment Conc. < 1 µm	NA	NA	NA	NA	NA	NA	NA	NA
PRECIPITATION (c)								
Amount During Test (inches)	0.00	0.00	0.00	0.13	0.12	0.39	0.53	0.98

TABLE 2
LS431 WHOLE WATER SAMPLING ANALYTICAL RESULTS
LONG-TERM STORMWATER TREATMENT SYSTEM
NORTH BOEING FIELD - SEATTLE, WASHINGTON

TEQ = Total Equivalency Quotient
cPAH = Carcinogenic Polycyclic Aromatic Hydrocarbon
PCB = Polychlorinated Biphenyl
SIM = Select Ion Monitoring
-- = Not applicable (grab sample does not require start/end date).
NA = Not Analyzed.
ND = Not Detected.
Bold = Detected compound.

EPA = U.S. Environmental Protection Agency
ASTM = American Society for Testing and Materials
ARI = Analytical Resources Inc.
NOAA = National Oceanic and Atmospheric Administration
µg/L = micrograms per liter
mg/L = milligrams per liter
µm = micrometer
ng/L = nanograms per liter

SU = Standard Units
NTU = Nephelometric Turbidity Units

B = Analyte detected in an associated Method Blank at a concentration greater than one-half of ARI's limit of quantitation or 5% of the regulatory limit or 5% of the analyte concentration in the sample.
J = Indicates the analyte was positively identified; the associated numerical value is the approximate concentration of the analyte in the sample.
U = Indicates the compound was not detected at the reported concentration.

(a) Starting in December 2012, ARI evaluated PCBs in whole water between the Limit of Detection (LOD) and the Limit of Quantitation (LOQ). For these non-detect results, the reported concentration shown is the LOD (1/2 the LOQ).
(b) Total PCBs is the sum of detected aroclors or, if no aroclors are detected, is reported as non-detect (ND).
(c) Precipitation data is from the NOAA Quality Controlled Local Climatological Data for Station 24234/BFI - SEATTLE: BOEING FIELD/KING COUNTY INTERNATIONAL AIRPORT.

TABLE 3
MH130A WHOLE WATER SAMPLING ANALYTICAL RESULTS
LONG-TERM STORMWATER TREATMENT SYSTEM
NORTH BOEING FIELD - SEATTLE, WASHINGTON

Sample Location ID	LTST-W-MH130A	LTST-W-MH130A	LTST-W-MH130A	LTST-W-MH130A	LTST-W-MH130A	LTST-W-MH130A	LTST-W-MH130A	LTST-W-MH130A	LTST-W-MH130A
Laboratory Data ID	TW17B	TX51B	TY77B	TZ89A	UC19B/UC19E/UC20B	UC67A/UC67C/UC68A	UD94B/UD94E/UD95B	UE63A/UE63C/UE64A	UH75D/UH75I/UH76D
Sample Date	11/08/2011	11/16/2011	11/22/2011	12/5/2011	12/21/2011	12/27/2011	1/10/2012	1/20/2012	02/09/2012
Event Type	Monthly	Storm	Storm	Monthly	2nd Monthly	Storm	Monthly	Storm	Monthly
Sample Type	Grab	Grab	Grab	Grab	Grab	Grab	Grab	Grab	Grab
PCBs (µg/L) (a)									
Method SW8082A									
Aroclor 1016	0.010 U	0.010 U	0.010 U	0.010 U	0.010 U	0.010 U	0.010 U	0.010 U	0.010 U
Aroclor 1242	0.010 U	0.010 U	0.010 U	0.010 U	0.010 U	0.010 U	0.010 U	0.010 U	0.010 U
Aroclor 1248	0.010 U	0.10 U	0.010 U	0.050 U	0.20 U	0.075 U	0.10 U	0.050 U	0.15 U
Aroclor 1254	0.010 U	**0.088**	0.010 U	**0.046**	**0.063**	**0.090** J	**0.069**	**0.059**	**0.12**
Aroclor 1260	0.010 U	0.010 U	0.010 U	0.010 U	0.010 U	**0.023** J	0.010 U	**0.021**	0.010 U
Aroclor 1221	0.010 U	0.010 U	0.010 U	0.010 U	0.010 U	0.010 U	0.010 U	0.010 U	0.010 U
Aroclor 1232	0.010 U	0.010 U	0.010 U	0.010 U	0.010 U	0.010 U	0.010 U	0.010 U	0.010 U
Aroclor 1262	0.010 U	0.010 U	0.010 U	0.010 U	0.010 U	0.010 U	0.010 U	0.010 U	0.010 U
Total PCBs (b)	ND	**0.088**	ND	**0.046**	**0.063**	**0.113** J	**0.069**	**0.08**	**0.12**
SEMIVOLATILES (µg/L)									
Method SW8270D									
Phenol	NA	NA	NA	NA	1.0 U	NA	NA	NA	NA
1,3-Dichlorobenzene	NA	NA	NA	NA	1.0 U	NA	NA	NA	NA
1,4-Dichlorobenzene	NA	NA	NA	NA	1.0 U	NA	NA	NA	NA
Benzyl Alcohol	NA	NA	NA	NA	5.0 U	NA	NA	NA	NA
1,2-Dichlorobenzene	NA	NA	NA	NA	1.0 U	NA	NA	NA	NA
2-Methylphenol	NA	NA	NA	NA	1.0 U	NA	NA	NA	NA
4-Methylphenol	NA	NA	NA	NA	1.0 U	NA	NA	NA	NA
Hexachloroethane	NA	NA	NA	NA	1.0 U	NA	NA	NA	NA
2,4-Dimethylphenol	NA	NA	NA	NA	1.0 U	NA	NA	NA	NA
Benzoic Acid	NA	NA	NA	NA	10 U	NA	NA	NA	NA
1,2,4-Trichlorobenzene	NA	NA	NA	NA	1.0 U	NA	NA	NA	NA
Naphthalene	NA	NA	NA	NA	1.0 U	NA	NA	NA	NA
Hexachlorobutadiene	NA	NA	NA	NA	1.0 U	NA	NA	NA	NA
2-Methylnaphthalene	NA	NA	NA	NA	1.0 U	NA	NA	NA	NA
Dimethylphthalate	NA	NA	NA	NA	1.0 U	NA	NA	NA	NA
Acenaphthylene	NA	NA	NA	NA	1.0 U	NA	NA	NA	NA
Acenaphthene	NA	NA	NA	NA	1.0 U	NA	NA	NA	NA
Dibenzofuran	NA	NA	NA	NA	1.0 U	NA	NA	NA	NA
Diethylphthalate	NA	NA	NA	NA	1.0 U	NA	NA	NA	NA
Fluorene	NA	NA	NA	NA	1.0 U	NA	NA	NA	NA
N-Nitrosodiphenylamine	NA	NA	NA	NA	1.0 U	NA	NA	NA	NA
Hexachlorobenzene	NA	NA	NA	NA	1.0 U	NA	NA	NA	NA
Pentachlorophenol	NA	NA	NA	NA	5.0 U	NA	NA	NA	NA
Phenanthrene	NA	NA	NA	NA	1.0 U	NA	NA	NA	NA
Anthracene	NA	NA	NA	NA	1.0 U	NA	NA	NA	NA
Di-n-Butylphthalate	NA	NA	NA	NA	1.0 U	NA	NA	NA	NA
Fluoranthene	NA	NA	NA	NA	1.0 U	NA	NA	NA	NA
Pyrene	NA	NA	NA	NA	1.0 U	NA	NA	NA	NA
Butylbenzylphthalate	NA	NA	NA	NA	1.0 U	NA	NA	NA	NA
Benzo(a)anthracene	NA	NA	NA	NA	1.0 U	NA	NA	NA	NA
bis(2-Ethylhexyl)phthalate	NA	NA	NA	NA	1.0 U	NA	NA	NA	NA
Chrysene	NA	NA	NA	NA	1.0 U	NA	NA	NA	NA
Di-n-Octyl phthalate	NA	NA	NA	NA	1.0 U	NA	NA	NA	NA
Benzo(a)pyrene	NA	NA	NA	NA	1.0 U	NA	NA	NA	NA
Indeno(1,2,3-cd)pyrene	NA	NA	NA	NA	1.0 U	NA	NA	NA	NA
Dibenz(a,h)anthracene	NA	NA	NA	NA	1.0 U	NA	NA	NA	NA
Benzo(g,h,i)perylene	NA	NA	NA	NA	1.0 U	NA	NA	NA	NA
1-Methylnaphthalene	NA	NA	NA	NA	1.0 U	NA	NA	NA	NA
Total Benzofluoranthenes	NA	NA	NA	NA	1.0 U	NA	NA	NA	NA

TABLE 3
MH130A WHOLE WATER SAMPLING ANALYTICAL RESULTS
LONG-TERM STORMWATER TREATMENT SYSTEM
NORTH BOEING FIELD - SEATTLE, WASHINGTON

Sample Location ID	LTST-W-MH130A	LTST-W-MH130A	LTST-W-MH130A	LTST-W-MH130A	LTST-W-MH130A	LTST-W-MH130A	LTST-W-MH130A	LTST-W-MH130A	LTST-W-MH130A
Laboratory Data ID	TW17B	TX51B	TY77B	TZ89A	UC19B/UC19E/UC20B	UC67A/UC67C/UC68A	UD94B/UD94E/UD95B	UE63A/UE63C/UE64A	UH75D/UH75I/UH76D
Sample Date	11/08/2011	11/16/2011	11/22/2011	12/5/2011	12/21/2011	12/27/2011	1/10/2012	1/20/2012	02/09/2012
Event Type	Monthly	Storm	Storm	Monthly	2nd Monthly	Storm	Monthly	Storm	Monthly
Sample Type	Grab	Grab	Grab	Grab	Grab	Grab	Grab	Grab	Grab
PAHs (µg/L)									
Method SW8270D-SIM									
Naphthalene	NA	NA	NA	NA	0.010 U	NA	NA	NA	NA
2-Methylnaphthalene	NA	NA	NA	NA	0.010 U	NA	NA	NA	NA
1-Methylnaphthalene	NA	NA	NA	NA	0.010 U	NA	NA	NA	NA
Acenaphthylene	NA	NA	NA	NA	0.010 U	NA	NA	NA	NA
Acenaphthene	NA	NA	NA	NA	**0.024**	NA	NA	NA	NA
Fluorene	NA	NA	NA	NA	0.010 U	NA	NA	NA	NA
Phenanthrene	NA	NA	NA	NA	0.010 U	NA	NA	NA	NA
Anthracene	NA	NA	NA	NA	0.010 U	NA	NA	NA	NA
Fluoranthene	NA	NA	NA	NA	**0.011**	NA	NA	NA	NA
Pyrene	NA	NA	NA	NA	**0.014**	NA	NA	NA	NA
Benzo(a)anthracene	NA	NA	NA	NA	0.010 U	NA	NA	NA	NA
Chrysene	NA	NA	NA	NA	0.010 U	NA	NA	NA	NA
Benzo(a)pyrene	NA	NA	NA	NA	0.010 U	NA	NA	NA	NA
Indeno(1,2,3-cd)pyrene	NA	NA	NA	NA	0.010 U	NA	NA	NA	NA
Dibenz(a,h)anthracene	NA	NA	NA	NA	0.010 U	NA	NA	NA	NA
Benzo(g,h,i)perylene	NA	NA	NA	NA	0.010 U	NA	NA	NA	NA
Dibenzofuran	NA	NA	NA	NA	0.010 U	NA	NA	NA	NA
Total Benzofluoranthenes	NA	NA	NA	NA	0.020 U	NA	NA	NA	NA
CPAH TEQ	NA	NA	NA	NA	ND	NA	NA	NA	NA
TOTAL METALS (µg/L)									
Method EPA200.8/6010B,C/7470A									
Arsenic	NA	NA	NA	NA	**1.2**	**1.1**	**0.8**	**0.9**	**1.1**
Cadmium	NA	NA	NA	NA	**0.2**	**0.5**	**0.4**	**0.8**	**0.2**
Chromium	NA	NA	NA	NA	0.5 U	**2.2**	**0.7**	**4.8**	**0.5**
Copper	NA	NA	NA	NA	**2.9**	**8.7**	**6.1**	**10.0**	**4.7**
Iron	NA	NA	NA	NA	**6180**	**3770**	**1360**	**3070**	**3700**
Lead	NA	NA	NA	NA	**6.8**	**6.5**	**1.4**	**12.9**	**0.7**
Manganese	NA	NA	NA	NA	**366**	**45**	**76**	**60**	**210**
Mercury	NA	NA	NA	NA	0.1 U	0.1 U	0.1 U	0.1 U	0.1 U
Nickel	NA	NA	NA	NA	**2.2**	**1.7**	**1.6**	**2.4**	**1.3**
Silver	NA	NA	NA	NA	NA	NA	NA	NA	NA
Zinc	NA	NA	NA	NA	**52**	**127**	**81**	**141**	**34**
DISSOLVED METALS (µg/L)									
Method EPA200.8/6010B,C									
Arsenic	NA	NA	NA	NA	**0.6**	**0.3**	**0.5**	**0.2**	**0.6**
Cadmium	NA	NA	NA	NA	0.1 U	**0.1**	**0.3**	**0.3**	**0.1**
Chromium	NA	NA	NA	NA	0.5 U	0.5 U	0.5 U	0.5 U	0.5 U
Copper	NA	NA	NA	NA	**0.9**	**2.4**	**2.6**	**2.0**	**2.2**
Iron	NA	NA	NA	NA	**100**	50 U	**160**	50 U	**90**
Lead	NA	NA	NA	NA	**0.3**	0.1 U	**0.2**	**0.2**	0.1 U
Manganese	NA	NA	NA	NA	**380**	**7**	**77**	**19**	**205**
Nickel	NA	NA	NA	NA	**1.3**	**0.6**	**1.4**	**0.6**	**1.1**
Silver	NA	NA	NA	NA	NA	NA	NA	NA	NA
Zinc	NA	NA	NA	NA	**37**	**73**	**66**	**74**	**33**
DISSOLVED METALS (ng/L)									
Method SW7470A									
Mercury	NA	NA	NA	NA	20.0 U	20.0 U	20.0 U	20.0 U	20.0 U
CONVENTIONALS									
pH (SU; EPA 150.1; SM 4500H)	NA	NA	NA	NA	**6.65**	**6.55**	**6.54**	**6.52**	**6.72**
Total Suspended Solids (mg/L; EPA 160.2; SM2540D)	**13.2** J	**13.2**	**10.4**	**28.0**	**17.3**	**23.8**	**5.4**	**38.4**	**7.6**
Turbidity (NTU; EPA 180.1)	**78.0**	**26.0**	**13.6**	NA	**64.6**	**21.0**	**11.6**	**37.0**	**22.0**

TABLE 3
MH130A WHOLE WATER SAMPLING ANALYTICAL RESULTS
LONG-TERM STORMWATER TREATMENT SYSTEM
NORTH BOEING FIELD - SEATTLE, WASHINGTON

Sample Location ID	LTST-W-MH130A	LTST-W-MH130A	LTST-W-MH130A	LTST-W-MH130A	LTST-W-MH130A	LTST-W-MH130A	LTST-W-MH130A	LTST-W-MH130A	LTST-W-MH130A
Laboratory Data ID	TW17B	TX51B	TY77B	TZ89A	UC19B/UC19E/UC20B	UC67A/UC67C/UC68A	UD94B/UD94E/UD95B	UE63A/UE63C/UE64A	UH75D/UH75I/UH76D
Sample Date	11/08/2011	11/16/2011	11/22/2011	12/5/2011	12/21/2011	12/27/2011	1/10/2012	1/20/2012	02/09/2012
Event Type	Monthly	Storm	Storm	Monthly	2nd Monthly	Storm	Monthly	Storm	Monthly
Sample Type	Grab	Grab	Grab	Grab	Grab	Grab	Grab	Grab	Grab
PARTICLE/GRAIN SIZE (mg/L)									
Method ASTM-D3977C									
Sediment Conc. > 500 µm	**0.6**	**0.6**	0.01 U	**0.4**	**1.7**	**2.3**	**0.4**	**0.5**	**6.6**
Sediment Conc. 500 to 250 µm	**0.4**	**2.4**	0.01 U	**1.3**	**1.3**	**2.3**	**0.1**	**1.4**	**0.7**
Sediment Conc. 250 to 125 µm	0.01 U	0.01 U	0.01 U	0.01 U	0.01 U	0.01 U	0.01 U	0.01 U	0.01 U
Sediment Conc. 125 to 62.5 µm	0.01 U	0.01 U	0.01 U	0.01 U	0.01 U	0.01 U	0.01 U	0.01 U	0.01 U
Sediment Conc. 62.5 to 3.9 µm	**4.2**	**11.8**	0.01 U	**25.2**	**10.6**	**20.8**	0.01 U	**41.4**	0.01 U
Sediment Conc. 3.9 to 1 µm	**7.1**	**4.1**	**2.9**	**6.5**	**3.0**	**4.6**	**3.5**	**4.8**	**1.9**
Sediment Conc. < 1 µm	**6.3**	**2.7**	**5.8**	**3.1**	**1.8**	**2.1**	**9.6**	**4.4**	**6.7**
Previous 1 Hour Precip. (inches) (c)	0.0	0.0	0.0	0.0	0.0	0.04	0.0	0.09	0.03
Previous 12 Hours Precip. (inches) (c)	0.0	0.0	0.7	0.0	0.0	0.17	0.23	0.27	0.03

TABLE 3
MH130A WHOLE WATER SAMPLING ANALYTICAL RESULTS
LONG-TERM STORMWATER TREATMENT SYSTEM
NORTH BOEING FIELD - SEATTLE, WASHINGTON

Sample Location ID	LTST-W-MH130A	LTST-W-MH130A	LTST-W-MH130A	LTST-W-MH130A	LTST-W-MH130A	LTST-W-MH130A	LTST-W-MH130A	LTST-W-MH130A	LTST-W-MH130A	LTST-W-MH130A
Laboratory Data ID	UK69A/UK69C/UK70A	UL81A/UL81C/UL82A	UO82B/UO82E/UO83B	UP29C/UP29G/UP30C	UU03D/UU03I/UU04D	UX30B/UX30E/UX31B	VB89B/VB89E/VB90B	VF37B/VF37E/VF38B	VJ50B/VJ50H/VJ52B	VL90B/VL90E/VL91B
Sample Date	03/05/2012	03/12/2012	03/31/2012	04/05/2012	5/10/2012	6/5/2012	7/11/2012	8/9/2012	9/13/2012	10/4/2012
Event Type	Monthly	Storm	Storm	Monthly	Monthly	Monthly	Monthly	Monthly	Monthly	Monthly
Sample Type	Grab	Grab	Grab	Grab	Grab	Grab	Grab	Grab	Grab	Grab
PCBs (µg/L) (a)										
Method SW8082A										
Aroclor 1016	0.010 U	0.010 U	0.010 U	0.010 U	0.010 U	0.010 U	0.010 U	0.010 U	0.050 U	0.010 U
Aroclor 1242	0.010 U	0.010 U	0.10 U	0.010 U	0.010 U	0.010 U	0.010 U	0.010 U	0.050 U	0.010 U
Aroclor 1248	0.045 U	0.10 U	0.010 U	0.15 U	0.15 U	0.15 U	0.30 U	0.15 U	0.30 U	0.075 U
Aroclor 1254	**0.044**	**0.048**	**0.030**	**0.20**	**0.10**	**0.12**	**0.081**	**0.098**	**1.1** J	**0.081**
Aroclor 1260	0.010 U	0.010 U	0.010 U	0.018 U	0.010 U	0.012 U	0.010 U	0.010 U	0.10 U	0.010 U
Aroclor 1221	0.010 U	0.010 U	0.010 U	0.010 U	0.010 U	0.010 U	0.010 U	0.010 U	0.050 U	0.010 U
Aroclor 1232	0.010 U	0.010 U	0.010 U	0.010 U	0.010 U	0.010 U	0.010 U	0.010 U	0.050 U	0.010 U
Aroclor 1262	0.010 U	0.010 U	0.010 U	0.010 U	0.010 U	0.010 U	0.010 U	0.010 U	0.050 U	0.010 U
Total PCBs (b)	**0.044**	**0.048**	**0.030**	**0.20**	**0.10**	**0.12**	**0.081**	**0.098**	**1.1** J	**0.081**
SEMIVOLATILES (µg/L)										
Method SW8270D										
Phenol	NA	NA	NA	NA	NA	NA	NA	NA	NA	NA
1,3-Dichlorobenzene	NA	NA	NA	NA	NA	NA	NA	NA	NA	NA
1,4-Dichlorobenzene	NA	NA	NA	NA	NA	NA	NA	NA	NA	NA
Benzyl Alcohol	NA	NA	NA	NA	NA	NA	NA	NA	NA	NA
1,2-Dichlorobenzene	NA	NA	NA	NA	NA	NA	NA	NA	NA	NA
2-Methylphenol	NA	NA	NA	NA	NA	NA	NA	NA	NA	NA
4-Methylphenol	NA	NA	NA	NA	NA	NA	NA	NA	NA	NA
Hexachloroethane	NA	NA	NA	NA	NA	NA	NA	NA	NA	NA
2,4-Dimethylphenol	NA	NA	NA	NA	NA	NA	NA	NA	NA	NA
Benzoic Acid	NA	NA	NA	NA	NA	NA	NA	NA	NA	NA
1,2,4-Trichlorobenzene	NA	NA	NA	NA	NA	NA	NA	NA	NA	NA
Naphthalene	NA	NA	NA	NA	NA	NA	NA	NA	NA	NA
Hexachlorobutadiene	NA	NA	NA	NA	NA	NA	NA	NA	NA	NA
2-Methylnaphthalene	NA	NA	NA	NA	NA	NA	NA	NA	NA	NA
Dimethylphthalate	NA	NA	NA	NA	NA	NA	NA	NA	NA	NA
Acenaphthylene	NA	NA	NA	NA	NA	NA	NA	NA	NA	NA
Acenaphthene	NA	NA	NA	NA	NA	NA	NA	NA	NA	NA
Dibenzofuran	NA	NA	NA	NA	NA	NA	NA	NA	NA	NA
Diethylphthalate	NA	NA	NA	NA	NA	NA	NA	NA	NA	NA
Fluorene	NA	NA	NA	NA	NA	NA	NA	NA	NA	NA
N-Nitrosodiphenylamine	NA	NA	NA	NA	NA	NA	NA	NA	NA	NA
Hexachlorobenzene	NA	NA	NA	NA	NA	NA	NA	NA	NA	NA
Pentachlorophenol	NA	NA	NA	NA	NA	NA	NA	NA	NA	NA
Phenanthrene	NA	NA	NA	NA	NA	NA	NA	NA	NA	NA
Anthracene	NA	NA	NA	NA	NA	NA	NA	NA	NA	NA
Di-n-Butylphthalate	NA	NA	NA	NA	NA	NA	NA	NA	NA	NA
Fluoranthene	NA	NA	NA	NA	NA	NA	NA	NA	NA	NA
Pyrene	NA	NA	NA	NA	NA	NA	NA	NA	NA	NA
Butylbenzylphthalate	NA	NA	NA	NA	NA	NA	NA	NA	NA	NA
Benzo(a)anthracene	NA	NA	NA	NA	NA	NA	NA	NA	NA	NA
bis(2-Ethylhexyl)phthalate	NA	NA	NA	NA	NA	NA	NA	NA	NA	NA
Chrysene	NA	NA	NA	NA	NA	NA	NA	NA	NA	NA
Di-n-Octyl phthalate	NA	NA	NA	NA	NA	NA	NA	NA	NA	NA
Benzo(a)pyrene	NA	NA	NA	NA	NA	NA	NA	NA	NA	NA
Indeno(1,2,3-cd)pyrene	NA	NA	NA	NA	NA	NA	NA	NA	NA	NA
Dibenz(a,h)anthracene	NA	NA	NA	NA	NA	NA	NA	NA	NA	NA
Benzo(g,h,i)perylene	NA	NA	NA	NA	NA	NA	NA	NA	NA	NA
1-Methylnaphthalene	NA	NA	NA	NA	NA	NA	NA	NA	NA	NA
Total Benzofluoranthenes	NA	NA	NA	NA	NA	NA	NA	NA	NA	NA

TABLE 3
MH130A WHOLE WATER SAMPLING ANALYTICAL RESULTS
LONG-TERM STORMWATER TREATMENT SYSTEM
NORTH BOEING FIELD - SEATTLE, WASHINGTON

Sample Location ID	LTST-W-MH130A	LTST-W-MH130A	LTST-W-MH130A	LTST-W-MH130A	LTST-W-MH130A	LTST-W-MH130A	LTST-W-MH130A	LTST-W-MH130A	LTST-W-MH130A	LTST-W-MH130A
Laboratory Data ID	UK69A/UK69C/UK70A	UL81A/UL81C/UL82A	UO82B/UO82E/UO83B	UP29C/UP29G/UP30C	UU03D/UU03I/UU04D	UX30B/UX30E/UX31B	VB89B/VB89E/VB90B	VF37B/VF37E/VF38B	VJ50B/VJ50H/VJ52B	VL90B/VL90E/VL91B
Sample Date	03/05/2012	03/12/2012	03/31/2012	04/05/2012	5/10/2012	6/5/2012	7/11/2012	8/9/2012	9/13/2012	10/4/2012
Event Type	Monthly	Storm	Storm	Monthly	Monthly	Monthly	Monthly	Monthly	Monthly	Monthly
Sample Type	Grab	Grab	Grab	Grab	Grab	Grab	Grab	Grab	Grab	Grab
PAHs (µg/L)										
Method SW8270D-SIM										
Naphthalene	NA	NA	NA	NA	NA	NA	NA	NA	NA	NA
2-Methylnaphthalene	NA	NA	NA	NA	NA	NA	NA	NA	NA	NA
1-Methylnaphthalene	NA	NA	NA	NA	NA	NA	NA	NA	NA	NA
Acenaphthylene	NA	NA	NA	NA	NA	NA	NA	NA	NA	NA
Acenaphthene	NA	NA	NA	NA	NA	NA	NA	NA	NA	NA
Fluorene	NA	NA	NA	NA	NA	NA	NA	NA	NA	NA
Phenanthrene	NA	NA	NA	NA	NA	NA	NA	NA	NA	NA
Anthracene	NA	NA	NA	NA	NA	NA	NA	NA	NA	NA
Fluoranthene	NA	NA	NA	NA	NA	NA	NA	NA	NA	NA
Pyrene	NA	NA	NA	NA	NA	NA	NA	NA	NA	NA
Benzo(a)anthracene	NA	NA	NA	NA	NA	NA	NA	NA	NA	NA
Chrysene	NA	NA	NA	NA	NA	NA	NA	NA	NA	NA
Benzo(a)pyrene	NA	NA	NA	NA	NA	NA	NA	NA	NA	NA
Indeno(1,2,3-cd)pyrene	NA	NA	NA	NA	NA	NA	NA	NA	NA	NA
Dibenz(a,h)anthracene	NA	NA	NA	NA	NA	NA	NA	NA	NA	NA
Benzo(g,h,i)perylene	NA	NA	NA	NA	NA	NA	NA	NA	NA	NA
Dibenzofuran	NA	NA	NA	NA	NA	NA	NA	NA	NA	NA
Total Benzofluoranthenes	NA	NA	NA	NA	NA	NA	NA	NA	NA	NA
CPAH TEQ	NA	NA	NA	NA	NA	NA	NA	NA	NA	NA
TOTAL METALS (µg/L)										
Method EPA200.8/6010B,C/7470A										
Arsenic	**0.7**	**1.1**	**0.7**	**1.8**	**4.6**	**1.1**	**3.4**	**2.8**	**2.4**	**5.3**
Cadmium	**0.3**	**0.3**	**0.4**	**0.5**	**0.3**	**0.4**	**0.2**	0.1 U	**0.2**	**0.2**
Chromium	**1.4**	1 U	0.5 U	**1.6**	**1.1**	**1.0**	1 U	1 U	0.5 U	**0.8**
Copper	**5.2**	**2.7**	**3.4**	**8.1**	**5.5**	**5.8**	**4.3**	**1.6**	**2.0**	**4.2**
Iron	**1820**	**4440**	**1370**	**5140**	**21,900**	**2710**	**14,100**	**11,300**	**6140**	**19,300**
Lead	**3.4**	**0.2**	**0.5**	**3.1**	**3.0**	**1.9**	**1.9**	**0.7**	**0.4**	**1.3**
Manganese	**59**	**380**	**91**	**146**	**548**	**76**	**497**	**492**	**326**	**203**
Mercury	0.1 U	0.1 U	0.1 U	0.1 U	0.1 U	0.1 U	0.1 U	0.1 U	0.1 U	0.1 U
Nickel	**1.1**	**1.0**	**1.1**	**2.0**	**1.9**	**1.2**	**2.3**	**1.1**	**0.9**	**1.6**
Silver	NA	NA	0.2 U	NA	NA	NA	NA	NA	NA	NA
Zinc	**89**	**71**	**126**	**124**	**48**	**97**	**30**	**25**	**18**	**40**
DISSOLVED METALS (µg/L)										
Method EPA200.8/6010B,C										
Arsenic	**0.3**	**0.8**	**0.4**	**0.6**	**0.8**	**0.6**	**0.9**	**0.8**	**1.2**	**0.4**
Cadmium	**0.1**	**0.2**	**0.4**	**0.2**	0.1 U	**0.2**	0.1 U	0.1 U	0.1 U	0.1 U
Chromium	0.5 U	1 U	0.5 U	0.5 U	0.5 U	0.5 U	0.5 U	0.5 U	0.5 U	0.5 U
Copper	**1.8**	**1.2**	**2.0**	**3.0**	**0.8**	**3.0**	**0.9**	**0.5**	**1.1**	**1.5**
Iron	**230**	**2480**	**260**	**250**	50 U	**410**	50 U	50 U	50 U	50 U
Lead	**0.1**	0.1 U	0.1 U	**0.1**	0.1 U	**0.2**	0.1 U	0.1 U	0.1 U	0.1 U
Manganese	**49**	**363**	**74**	**128**	**518**	**70**	**445**	**436**	**303**	**23**
Nickel	**0.6**	**0.8**	**1.0**	**1.3**	**1.2**	**0.8**	**1.6**	**1.0**	**0.8**	**1.3**
Silver	NA	NA	0.2 U	NA	NA	NA	NA	NA	NA	NA
Zinc	**64**	**61**	**120**	**98**	**11**	**81**	**7**	**10**	**9**	**5**
DISSOLVED METALS (ng/L)										
Method SW7470A										
Mercury	20.0 U	20.0 U	20.0 U	20.0 U	20.0 U	20.0 U	20.0 U	20.0 U	20.0 U	20.0 U
CONVENTIONALS										
pH (SU; EPA 150.1; SM 4500H)	**6.59**	**6.79**	**6.62**	**6.81**	**6.64**	**6.74**	**6.86**	**6.84**	**6.81**	**7.11**
Total Suspended Solids (mg/L; EPA 160.2; SM2540D)	**12.3**	**11.8**	**3.0**	**17.1**	**28.8**	**6.6**	**32.0**	**32.0**	**12.9**	**53.2**
Turbidity (NTU; EPA 180.1)	**13.5**	**33.0**	**6.80**	**37.0**	**42.0**	**9.40**	**82.5**	**74.0**	**16.0**	**130**

TABLE 3
MH130A WHOLE WATER SAMPLING ANALYTICAL RESULTS
LONG-TERM STORMWATER TREATMENT SYSTEM
NORTH BOEING FIELD - SEATTLE, WASHINGTON

Sample Location ID	LTST-W-MH130A	LTST-W-MH130A	LTST-W-MH130A	LTST-W-MH130A	LTST-W-MH130A	LTST-W-MH130A	LTST-W-MH130A	LTST-W-MH130A	LTST-W-MH130A	LTST-W-MH130A
Laboratory Data ID	UK69A/UK69C/UK70A	UL81A/UL81C/UL82A	UO82B/UO82E/UO83B	UP29C/UP29G/UP30C	UU03D/UU03I/UU04D	UX30B/UX30E/UX31B	VB89B/VB89E/VB90B	VF37B/VF37E/VF38B	VJ50B/VJ50H/VJ52B	VL90B/VL90E/VL91B
Sample Date	03/05/2012	03/12/2012	03/31/2012	04/05/2012	5/10/2012	6/5/2012	7/11/2012	8/9/2012	9/13/2012	10/4/2012
Event Type	Monthly	Storm	Storm	Monthly	Monthly	Monthly	Monthly	Monthly	Monthly	Monthly
Sample Type	Grab	Grab	Grab	Grab	Grab	Grab	Grab	Grab	Grab	Grab
PARTICLE/GRAIN SIZE (mg/L)										
Method ASTM-D3977C										
Sediment Conc. > 500 µm	**6.0**	**5.1**	**5.8**	**11.8**	**9.8**	**0.99**	**5.13**	**1.48**	**2.26**	**1.60**
Sediment Conc. 500 to 250 µm	**4.6**	**6.8**	**7.6**	**9.7**	**3.0**	**1.18**	**2.76**	**2.53**	**2.47**	**2.30**
Sediment Conc. 250 to 125 µm	0.01 U	0.01 U	0.01 U	0.01 U	0.01 U	0.01 U	0.01 U	0.01 U	0.01 U	0.01 U
Sediment Conc. 125 to 62.5 µm	0.01 U	0.01 U	0.01 U	0.01 U	0.01 U	0.01 U	0.01 U	0.01 U	0.01 U	0.01 U
Sediment Conc. 62.5 to 3.9 µm	**7.8**	**5.4**	0.01 U	**14.4**	**23.8**	**9.73**	**25.36**	**17.04**	**16.85**	**35.12**
Sediment Conc. 3.9 to 1 µm	**1.9**	**1.2**	**1.3**	**4.1**	**3.9**	**0.65**	**6.66**	**6.33**	**4.05**	**9.68**
Sediment Conc. < 1 µm	**1.0**	**1.3**	**2.3**	**1.3**	**2.1**	**0.77**	**2.85**	**2.89**	**1.70**	**2.70**
Previous 1 Hour Precip. (inches) (c)	0.0	0.01	0.0	0.0	0.0	0.01	0.0	0.0	0.0	0.0
Previous 12 Hours Precip. (inches) (c)	0.36	0.02	0.43	0.12	0.0	0.44	0.0	0.0	0.0	0.0

TABLE 3
MH130A WHOLE WATER SAMPLING ANALYTICAL RESULTS
LONG-TERM STORMWATER TREATMENT SYSTEM
NORTH BOEING FIELD - SEATTLE, WASHINGTON

Sample Location ID	LTST-W-MH130A	LTST-W-MH130A	LTST-W-MH130A	LTST-W-MH130A	LTST-W-MH130A	LTST-W-MH130A	LTST-W-MH130A	LTST-W-MH130A	LTST-W-MH130A	LTST-W-MH130A
Laboratory Data ID	VR68B/VR68E/VR69B	VS17C/VS17G/VS30C	VV27C/VV27G/VV28C	VW75A/VW75E/VW76A	VY68A/VY68C/VY69A/VY69C	WC96C/WC96G/WC97C	WG51C/WG51G/WG56C	WI40A/WI40E/WI41A	WK37C/WK37G/WK38C	WK74C/WK74G/WK81C
Sample Date	11/8/2012	11/12/2012	12/6/2012	12/16/2012	1/8/2013	2/7/2013	3/7/2013	3/19/2013	4/4/2013	4/5/2013
Event Type	Monthly	Storm	Monthly	Storm	Monthly	Monthly	Monthly	Storm	Monthly	Storm
Sample Type	Grab	Grab	Grab	Grab	Grab	Grab	Grab	Grab	Grab	Grab
PCBs (µg/L) (a)										
Method SW8082A										
Aroclor 1016	0.010 U	0.010 U	0.010 U	0.005 U	0.005 U	0.005 U	0.005 U	0.005 U	0.005 U	0.005 U
Aroclor 1242	0.010 U	0.10 U	0.010 U	0.005 U	0.005 U	0.005 U	0.005 U	0.005 U	0.005 U	0.005 U
Aroclor 1248	0.15 U	0.010 U	0.10 U	0.05 U	0.05 U	0.038 U	0.025 U	0.25 U	0.075 U	0.031 U
Aroclor 1254	**0.079**	**0.030**	**0.090**	**0.041**	**0.052**	**0.054**	**0.034**	**0.30**	**0.11**	**0.044**
Aroclor 1260	0.010 U	0.010 U	0.010 U	0.005 U	0.005 U	0.005 U	0.005 U	0.008 U	0.005 U	0.005 U
Aroclor 1221	0.010 U	0.010 U	0.010 U	0.005 U	0.005 U	0.005 U	0.005 U	0.005 U	0.005 U	0.005 U
Aroclor 1232	0.010 U	0.010 U	0.010 U	0.005 U	0.005 U	0.005 U	0.005 U	0.005 U	0.005 U	0.005 U
Aroclor 1262	0.010 U	0.010 U	0.010 U	0.005 U	0.005 U	0.005 U	0.005 U	0.005 U	0.005 U	0.005 U
Total PCBs (b)	**0.079**	**0.030**	**0.090**	**0.041**	**0.052**	**0.054**	**0.034**	**0.30**	**0.11**	**0.044**
SEMIVOLATILES (µg/L)										
Method SW8270D										
Phenol	NA	NA	NA	NA	NA	NA	1.0 U	1.0 U	NA	NA
1,3-Dichlorobenzene	NA	NA	NA	NA	NA	NA	1.0 U	1.0 U	NA	NA
1,4-Dichlorobenzene	NA	NA	NA	NA	NA	NA	1.0 U	1.0 U	NA	NA
Benzyl Alcohol	NA	NA	NA	NA	NA	NA	2.0 UJ	2.0 U	NA	NA
1,2-Dichlorobenzene	NA	NA	NA	NA	NA	NA	1.0 U	1.0 U	NA	NA
2-Methylphenol	NA	NA	NA	NA	NA	NA	1.0 U	1.0 U	NA	NA
4-Methylphenol	NA	NA	NA	NA	NA	NA	2.0 U	2.0 U	NA	NA
Hexachloroethane	NA	NA	NA	NA	NA	NA	2.0 U	2.0 U	NA	NA
2,4-Dimethylphenol	NA	NA	NA	NA	NA	NA	3.0 U	3.0 U	NA	NA
Benzoic Acid	NA	NA	NA	NA	NA	NA	20 U	20 U	NA	NA
1,2,4-Trichlorobenzene	NA	NA	NA	NA	NA	NA	1.0 U	1.0 U	NA	NA
Naphthalene	NA	NA	NA	NA	NA	NA	1.0 U	1.0 U	NA	NA
Hexachlorobutadiene	NA	NA	NA	NA	NA	NA	3.0 U	3.0 U	NA	NA
2-Methylnaphthalene	NA	NA	NA	NA	NA	NA	1.0 U	1.0 U	NA	NA
Dimethylphthalate	NA	NA	NA	NA	NA	NA	1.0 U	1.0 U	NA	NA
Acenaphthylene	NA	NA	NA	NA	NA	NA	1.0 U	1.0 U	NA	NA
Acenaphthene	NA	NA	NA	NA	NA	NA	1.0 U	1.0 U	NA	NA
Dibenzofuran	NA	NA	NA	NA	NA	NA	1.0 U	1.0 U	NA	NA
Diethylphthalate	NA	NA	NA	NA	NA	NA	1.0 U	1.0 U	NA	NA
Fluorene	NA	NA	NA	NA	NA	NA	1.0 U	1.0 U	NA	NA
N-Nitrosodiphenylamine	NA	NA	NA	NA	NA	NA	1.0 U	1.0 U	NA	NA
Hexachlorobenzene	NA	NA	NA	NA	NA	NA	1.0 U	1.0 U	NA	NA
Pentachlorophenol	NA	NA	NA	NA	NA	NA	10 U	10 U	NA	NA
Phenanthrene	NA	NA	NA	NA	NA	NA	1.0 U	1.0 U	NA	NA
Anthracene	NA	NA	NA	NA	NA	NA	1.0 U	1.0 U	NA	NA
Di-n-Butylphthalate	NA	NA	NA	NA	NA	NA	1.0 U	1.0 U	NA	NA
Fluoranthene	NA	NA	NA	NA	NA	NA	1.0 U	1.0 U	NA	NA
Pyrene	NA	NA	NA	NA	NA	NA	1.0 U	1.0 U	NA	NA
Butylbenzylphthalate	NA	NA	NA	NA	NA	NA	1.0 U	1.0 U	NA	NA
Benzo(a)anthracene	NA	NA	NA	NA	NA	NA	1.0 U	1.0 U	NA	NA
bis(2-Ethylhexyl)phthalate	NA	NA	NA	NA	NA	NA	1.0 U	1.0 U	NA	NA
Chrysene	NA	NA	NA	NA	NA	NA	1.0 U	1.0 U	NA	NA
Di-n-Octyl phthalate	NA	NA	NA	NA	NA	NA	1.0 U	1.0 U	NA	NA
Benzo(a)pyrene	NA	NA	NA	NA	NA	NA	1.0 U	1.0 U	NA	NA
Indeno(1,2,3-cd)pyrene	NA	NA	NA	NA	NA	NA	1.0 U	1.0 U	NA	NA
Dibenz(a,h)anthracene	NA	NA	NA	NA	NA	NA	1.0 U	1.0 U	NA	NA
Benzo(g,h,i)perylene	NA	NA	NA	NA	NA	NA	1.0 U	1.0 U	NA	NA
1-Methylnaphthalene	NA	NA	NA	NA	NA	NA	1.0 U	1.0 U	NA	NA
Total Benzofluoranthenes	NA	NA	NA	NA	NA	NA	5.0 U	5.0 U	NA	NA

TABLE 3
MH130A WHOLE WATER SAMPLING ANALYTICAL RESULTS
LONG-TERM STORMWATER TREATMENT SYSTEM
NORTH BOEING FIELD - SEATTLE, WASHINGTON

Sample Location ID	LTST-W-MH130A	LTST-W-MH130A	LTST-W-MH130A	LTST-W-MH130A	LTST-W-MH130A	LTST-W-MH130A	LTST-W-MH130A	LTST-W-MH130A	LTST-W-MH130A	LTST-W-MH130A
Laboratory Data ID	VR68B/VR68E/VR69B	VS17C/VS17G/VS30C	VV27C/VV27G/VV28C	VW75A/VW75E/VW76A	VY68A/VY68C/VY69A/VY69C	WC96C/WC96G/WC97C	WG51C/WG51G/WG56C	WI40A/WI40E/WI41A	WK37C/WK37G/WK38C	WK74C/WK74G/WK81C
Sample Date	11/8/2012	11/12/2012	12/6/2012	12/16/2012	1/8/2013	2/7/2013	3/7/2013	3/19/2013	4/4/2013	4/5/2013
Event Type	Monthly	Storm	Monthly	Storm	Monthly	Monthly	Monthly	Storm	Monthly	Storm
Sample Type	Grab	Grab	Grab	Grab	Grab	Grab	Grab	Grab	Grab	Grab
PAHs (µg/L)										
Method SW8270D-SIM										
Naphthalene	NA	NA	NA	NA	NA	NA	0.010 U	**0.011**	NA	NA
2-Methylnaphthalene	NA	NA	NA	NA	NA	NA	0.010 U	**0.011**	NA	NA
1-Methylnaphthalene	NA	NA	NA	NA	NA	NA	0.010 U	**0.016**	NA	NA
Acenaphthylene	NA	NA	NA	NA	NA	NA	0.010 U	0.010 U	NA	NA
Acenaphthene	NA	NA	NA	NA	NA	NA	0.010 U	**0.026**	NA	NA
Fluorene	NA	NA	NA	NA	NA	NA	0.010 U	0.010 U	NA	NA
Phenanthrene	NA	NA	NA	NA	NA	NA	0.010 U	0.010 U	NA	NA
Anthracene	NA	NA	NA	NA	NA	NA	0.010 U	0.010 U	NA	NA
Fluoranthene	NA	NA	NA	NA	NA	NA	0.010 U	0.010 U	NA	NA
Pyrene	NA	NA	NA	NA	NA	NA	0.010 U	0.010 U	NA	NA
Benzo(a)anthracene	NA	NA	NA	NA	NA	NA	0.010 U	0.010 U	NA	NA
Chrysene	NA	NA	NA	NA	NA	NA	0.010 U	0.010 U	NA	NA
Benzo(a)pyrene	NA	NA	NA	NA	NA	NA	0.010 U	0.010 U	NA	NA
Indeno(1,2,3-cd)pyrene	NA	NA	NA	NA	NA	NA	0.010 U	0.010 U	NA	NA
Dibenz(a,h)anthracene	NA	NA	NA	NA	NA	NA	0.010 U	0.010 U	NA	NA
Benzo(g,h,i)perylene	NA	NA	NA	NA	NA	NA	0.010 U	0.010 U	NA	NA
Dibenzofuran	NA	NA	NA	NA	NA	NA	0.010 U	0.010 U	NA	NA
Total Benzofluoranthenes	NA	NA	NA	NA	NA	NA	0.020 UJ	0.020 U	NA	NA
CPAH TEQ	NA	NA	NA	NA	NA	NA	ND	ND	NA	NA
TOTAL METALS (µg/L)										
Method EPA200.8/6010B,C/7470A										
Arsenic	**2.3**	**0.6**	**1.2**	**0.7**	**0.8**	**1.3**	**0.8**	**3.1**	**2.0**	**0.8**
Cadmium	**0.5**	**0.5**	**0.3**	**0.2**	**0.3**	**0.2**	**0.2**	**0.2**	**0.2**	**0.3**
Chromium	0.5 U	**0.5**	0.5 U	0.5 U	**0.7**	1 U	**0.5**	1 U	0.5 U	**0.7**
Copper	**2.7**	**3.9**	**9.2**	**2.9**	**4.4**	**2.2**	**2.3**	**6.8**	**3.2**	**3.5**
Iron	**13,300**	**1400**	**2870**	**1520**	**1530**	**5750**	**3030**	**19,900**	**10,300**	**1960**
Lead	**0.6**	**0.4**	**0.4**	**0.4**	**0.7**	**0.2**	**0.2**	**1.4**	**0.3**	**0.4**
Manganese	**530**	**62**	**217**	**67**	**59**	**390**	**184**	**484**	**543**	**110**
Mercury	0.1 U	0.1 U	0.1 U	0.1 U	20.0 U (d)	0.1 U	0.1 U	0.1 U	0.1 U	0.1 U
Nickel	**1.7**	**0.6**	**2.4**	**0.6**	**1.0**	**1.3**	**1.0**	**1.9**	**1.9**	**0.7**
Silver	NA	NA	NA	NA	NA	NA	NA	NA	NA	NA
Zinc	**45**	**154**	**45**	**52**	**89**	**57**	**76**	**30**	**17**	**91**
DISSOLVED METALS (µg/L)										
Method EPA200.8/6010B,C										
Arsenic	**0.7**	**0.5**	**0.7**	0.5 U	**0.5**	**0.8**	**0.7**	**0.7**	**0.7**	**0.5**
Cadmium	**0.2**	**0.5**	**0.2**	**0.2**	**0.2**	**0.2**	**0.2**	0.1 U	0.1 U	**0.2**
Chromium	0.5 U	0.5 U	0.5 U	0.5 U	1 U	1 U	0.5 U	0.5 U	0.5 U	0.5 U
Copper	1.6 U	**2.2**	**3.6**	**2.0**	**2.3**	**0.8**	**0.8**	**1.8**	**0.9**	**2.4**
Iron	50 U	**950**	**120**	**170**	**360**	**2200**	**2480**	50 U	50 U	**410**
Lead	0.1 U	**0.2**	0.1 U	0.1 U	**0.1**	0.1 U	0.1 U	0.1 U	0.1 U	0.1 U
Manganese	**498**	**59**	**200**	**64**	**57**	**341**	**193**	**437**	**531**	**99**
Nickel	**0.8**	**0.6**	**2.2**	**0.6**	1 U	**1.3**	**1.1**	**1.5**	**1.7**	**0.6**
Silver	NA	NA	NA	NA	NA	NA	NA	NA	NA	NA
Zinc	**30**	**151**	**38**	**49**	**80**	**47**	**71**	**12**	**8**	**77**
DISSOLVED METALS (ng/L)										
Method SW7470A										
Mercury	20.0 U	20.0 U	20.0 U	20.0 U	20.0 U	20.0 U	20.0 U	20.0 U	20.0 U	20.0 U
CONVENTIONALS										
pH (SU; EPA 150.1; SM 4500H)	**6.66**	**6.63**	**6.50**	**6.27**	**6.65**	**6.63**	**6.51**	**6.72**	**6.94**	**6.47**
Total Suspended Solids (mg/L; EPA 160.2; SM2540D)	**34.4**	**2.7**	**7.9**	**3.8**	**6.9**	**11.8**	**3.5**	**67.0**	**34.6**	**5.4**
Turbidity (NTU; EPA 180.1)	**100**	**2.60**	**21.0**	**8.80**	**10.7**	**22.0**	**13.4**	**220**	**105**	**8.50**

TABLE 3
MH130A WHOLE WATER SAMPLING ANALYTICAL RESULTS
LONG-TERM STORMWATER TREATMENT SYSTEM
NORTH BOEING FIELD - SEATTLE, WASHINGTON

Sample Location ID	LTST-W-MH130A	LTST-W-MH130A	LTST-W-MH130A	LTST-W-MH130A	LTST-W-MH130A	LTST-W-MH130A	LTST-W-MH130A	LTST-W-MH130A	LTST-W-MH130A	LTST-W-MH130A
Laboratory Data ID	VR68B/VR68E/VR69B	VS17C/VS17G/VS30C	VV27C/VV27G/VV28C	VW75A/VW75E/VW76A	VY68A/VY68C/VY69A/VY69C	WC96C/WC96G/WC97C	WG51C/WG51G/WG56C	WI40A/WI40E/WI41A	WK37C/WK37G/WK38C	WK74C/WK74G/WK81C
Sample Date	11/8/2012	11/12/2012	12/6/2012	12/16/2012	1/8/2013	2/7/2013	3/7/2013	3/19/2013	4/4/2013	4/5/2013
Event Type	Monthly	Storm	Monthly	Storm	Monthly	Monthly	Monthly	Storm	Monthly	Storm
Sample Type	Grab	Grab	Grab	Grab	Grab	Grab	Grab	Grab	Grab	Grab
PARTICLE/GRAIN SIZE (mg/L)										
Method ASTM-D3977C										
Sediment Conc. > 500 µm	0.01 U	**0.21**	**1.30**	**0.54**	0.01 U	**1.35**	**1.42**	**10.31**	**6.79**	**6.39**
Sediment Conc. 500 to 250 µm	**0.40**	**0.84**	**1.90**	**0.65**	0.01 U	**1.56**	**1.09**	**10.52**	**11.81**	**8.69**
Sediment Conc. 250 to 125 µm	0.01 U	0.01 U	0.01 U	0.01 U	0.01 U	0.01 U	0.01 U	0.01 U	0.01 U	0.01 U
Sediment Conc. 125 to 62.5 µm	0.01 U	0.01 U	0.01 U	0.01 U	0.01 U	0.01 U	0.01 U	**1.68**	0.01 U	0.01 U
Sediment Conc. 62.5 to 3.9 µm	**13.47**	0.01 U	0.01 U	0.01 U	0.01 U	0.01 U	0.01 U	**70.06**	**21.71**	0.01 U
Sediment Conc. 3.9 to 1 µm	**10.16**	0.01 U	**2.10**	**2.02**	**2.36**	**4.55**	**3.03**	**16.08**	**5.95**	**1.50**
Sediment Conc. < 1 µm	**14.00**	**6.31**	**5.48**	**4.78**	**5.02**	**7.81**	**6.87**	**12.66**	**3.81**	**3.24**
Previous 1 Hour Precip. (inches) (c)	0.0	0.01	0.01	0.03	0.02	0.00	0.00	0.04	0.00	0.00
Previous 12 Hours Precip. (inches) (c)	0.0	0.26	0.04	0.06	0.22	0.09	0.25	0.07	0.01	0.23

TABLE 3
MH130A WHOLE WATER SAMPLING ANALYTICAL RESULTS
LONG-TERM STORMWATER TREATMENT SYSTEM
NORTH BOEING FIELD - SEATTLE, WASHINGTON

Sample Location ID	LTST-W-MH130A	LTST-W-MH130A	LTST-W-MH130A	LTST-W-MH130A	LTST-W-MH130A	LTST-W-MH130A	LTST-W-MH130A	LTST-W-MH130A	LTST-W-MH130A	LTST-W-MH130A
Laboratory Data ID	WP40C/WP40G/WP39C	WT15B/WT15E/WT16B	WX01C/WX01G/WX02C	XA11C/XA11G/XA14C	XE07C/XE07G/XE22C	XF13A/XF13B/XF14A/XE91C	XJ12C/XJ12G/XJ36C	XN18C/XN18G/XN19C	XO61A/XO61C/XO79A	XQ44C/XQ44G/XQ45C
Sample Date	5/9/2013	6/7/2013	7/10/2013	8/8/2013	9/6/2013	9/12-9/13/2013	10/9/2013	11/7/2013	11/18/2013	12/5/2013
Event Type	Monthly	Monthly	Monthly	Monthly	Storm	Monthly	Monthly	Monthly	Storm	Monthly
Sample Type	Grab	Grab	Grab	Grab	Grab	Grab	Grab	Grab	Grab	Grab
PCBs (µg/L) (a)										
Method SW8082A										
Aroclor 1016	0.005 U	0.005 U	0.005 U	0.005 U	0.005 U	0.005 U	0.005 U	0.005 U	0.005 U	0.005 U
Aroclor 1242	0.005 U	0.005 U	0.005 U	0.005 U	0.005 U	0.005 U	0.005 U	0.005 U	0.005 U	0.13 U
Aroclor 1248	0.10 U	0.10 U	0.075 U	0.125 U	0.042 U	0.041 U	0.008 U	0.025 U	0.013 U	0.005 U
Aroclor 1254	**0.13**	**0.14**	**0.089**	**0.31**	**0.043**	**0.12**	**0.23**	**0.030**	**0.037**	**0.059**
Aroclor 1260	0.005 U	0.005 U	0.005 U	0.015 U	0.005 U	0.005 U	**0.059**	**0.013**	**0.0080** J1	0.005 U
Aroclor 1221	0.005 U	0.005 U	0.005 U	0.005 U	0.005 U	0.005 U	0.005 U	0.005 U	0.005 U	0.005 U
Aroclor 1232	0.005 U	0.005 U	0.005 U	0.005 U	0.005 U	0.005 U	0.005 U	0.005 U	0.005 U	0.005 U
Aroclor 1262	0.005 U	0.005 U	0.005 U	0.005 U	0.005 U	0.005 U	0.005 U	0.005 U	0.005 U	0.005 U
Total PCBs (b)	**0.13**	**0.14**	**0.089**	**0.31**	**0.043**	**0.12**	**0.289**	**0.043**	**0.045**	**0.059**
SEMIVOLATILES (µg/L)										
Method SW8270D										
Phenol	1.0 U	NA	1.0 U	NA	1.0 U	1.0 U	NA	1.0 U	NA	NA
1,3-Dichlorobenzene	1.0 U	NA	1.0 U	NA	1.0 U	1.0 U	NA	1.0 U	NA	NA
1,4-Dichlorobenzene	1.0 U	NA	1.0 U	NA	1.0 U	1.0 U	NA	1.0 U	NA	NA
Benzyl Alcohol	2.0 U	NA	2.0 U	NA	2.0 UJ	2.0 U	NA	2.0 U	NA	NA
1,2-Dichlorobenzene	1.0 U	NA	1.0 U	NA	1.0 U	1.0 U	NA	1.0 U	NA	NA
2-Methylphenol	1.0 U	NA	1.0 U	NA	1.0 U	1.0 U	NA	1.0 U	NA	NA
4-Methylphenol	2.0 U	NA	2.0 U	NA	2.0 U	2.0 U	NA	2.0 U	NA	NA
Hexachloroethane	2.0 U	NA	2.0 U	NA	2.0 U	2.0 U	NA	2.0 U	NA	NA
2,4-Dimethylphenol	3.0 U	NA	3.0 U	NA	3.0 U	3.0 U	NA	3.0 U	NA	NA
Benzoic Acid	20 U	NA	20 U	NA	20 U	20 U	NA	20 U	NA	NA
1,2,4-Trichlorobenzene	1.0 U	NA	1.0 U	NA	1.0 U	1.0 U	NA	1.0 U	NA	NA
Naphthalene	1.0 U	NA	1.0 U	NA	1.0 U	1.0 U	NA	1.0 U	NA	NA
Hexachlorobutadiene	3.0 U	NA	3.0 U	NA	3.0 U	3.0 U	NA	3.0 U	NA	NA
2-Methylnaphthalene	1.0 U	NA	1.0 U	NA	1.0 U	1.0 U	NA	1.0 U	NA	NA
Dimethylphthalate	1.0 U	NA	1.0 U	NA	1.0 U	1.0 U	NA	1.0 U	NA	NA
Acenaphthylene	1.0 U	NA	1.0 U	NA	1.0 U	1.0 U	NA	1.0 U	NA	NA
Acenaphthene	1.0 U	NA	1.0 U	NA	1.0 U	1.0 U	NA	1.0 U	NA	NA
Dibenzofuran	1.0 U	NA	1.0 U	NA	1.0 U	1.0 U	NA	1.0 U	NA	NA
Diethylphthalate	1.0 U	NA	1.0 U	NA	1.0 U	1.0 U	NA	1.0 U	NA	NA
Fluorene	1.0 U	NA	1.0 U	NA	1.0 U	1.0 U	NA	1.0 U	NA	NA
N-Nitrosodiphenylamine	1.0 U	NA	1.0 U	NA	1.0 U	1.0 U	NA	1.0 U	NA	NA
Hexachlorobenzene	1.0 U	NA	1.0 U	NA	1.0 U	1.0 U	NA	1.0 U	NA	NA
Pentachlorophenol	10 U	NA	10 U	NA	10 U	10 U	NA	10 U	NA	NA
Phenanthrene	1.0 U	NA	1.0 U	NA	1.0 U	1.0 U	NA	1.0 U	NA	NA
Anthracene	1.0 U	NA	1.0 U	NA	1.0 U	1.0 U	NA	1.0 U	NA	NA
Di-n-Butylphthalate	1.0 U	NA	1.0 U	NA	1.0 U	1.0 U	NA	1.0 U	NA	NA
Fluoranthene	1.0 U	NA	1.0 U	NA	1.0 U	1.0 U	NA	1.0 U	NA	NA
Pyrene	1.0 U	NA	1.0 U	NA	1.0 U	1.0 U	NA	1.0 U	NA	NA
Butylbenzylphthalate	1.0 U	NA	1.0 U	NA	1.0 U	1.0 U	NA	**4.5**	NA	NA
Benzo(a)anthracene	1.0 U	NA	1.0 U	NA	1.0 U	1.0 U	NA	1.0 U	NA	NA
bis(2-Ethylhexyl)phthalate	3.0 U	NA	3.0 U	NA	3.0 U	3.0 U	NA	3.0 U	NA	NA
Chrysene	1.0 U	NA	1.0 U	NA	1.0 U	1.0 U	NA	1.0 U	NA	NA
Di-n-Octyl phthalate	1.0 U	NA	1.0 U	NA	**1.4**	1.0 U	NA	1.0 U	NA	NA
Benzo(a)pyrene	1.0 U	NA	1.0 U	NA	1.0 U	1.0 U	NA	1.0 U	NA	NA
Indeno(1,2,3-cd)pyrene	1.0 U	NA	1.0 U	NA	1.0 U	1.0 U	NA	1.0 U	NA	NA
Dibenz(a,h)anthracene	1.0 U	NA	1.0 U	NA	1.0 U	1.0 U	NA	1.0 U	NA	NA
Benzo(g,h,i)perylene	1.0 U	NA	1.0 U	NA	1.0 U	1.0 U	NA	1.0 U	NA	NA
1-Methylnaphthalene	1.0 U	NA	1.0 U	NA	1.0 U	1.0 U	NA	1.0 U	NA	NA
Total Benzofluoranthenes	5.0 U	NA	5.0 U	NA	5.0 U	5.0 U	NA	5.0 U	NA	NA

TABLE 3
MH130A WHOLE WATER SAMPLING ANALYTICAL RESULTS
LONG-TERM STORMWATER TREATMENT SYSTEM
NORTH BOEING FIELD - SEATTLE, WASHINGTON

Sample Location ID	LTST-W-MH130A	LTST-W-MH130A	LTST-W-MH130A	LTST-W-MH130A	LTST-W-MH130A	LTST-W-MH130A	LTST-W-MH130A	LTST-W-MH130A	LTST-W-MH130A	LTST-W-MH130A
Laboratory Data ID	WP40C/WP40G/WP39C	WT15B/WT15E/WT16B	WX01C/WX01G/WX02C	XA11C/XA11G/XA14C	XE07C/XE07G/XE22C	XF13A/XF13B/XF14A/XE91C	XJ12C/XJ12G/XJ36C	XN18C/XN18G/XN19C	XO61A/XO61C/XO79A	XQ44C/XQ44G/XQ45C
Sample Date	5/9/2013	6/7/2013	7/10/2013	8/8/2013	9/6/2013	9/12-9/13/2013	10/9/2013	11/7/2013	11/18/2013	12/5/2013
Event Type	Monthly	Monthly	Monthly	Monthly	Storm	Monthly	Monthly	Monthly	Storm	Monthly
Sample Type	Grab	Grab	Grab	Grab	Grab	Grab	Grab	Grab	Grab	Grab
PAHs (µg/L)										
Method SW8270D-SIM										
Naphthalene	0.012 U	NA	0.010 U	NA	**0.012**	0.010 U	NA	**0.054**	NA	NA
2-Methylnaphthalene	0.010 U	NA	0.010 U	NA	**0.010**	0.010 U	NA	0.010 U	NA	NA
1-Methylnaphthalene	0.010 U	NA	0.010 U	NA	0.010 U	0.010 U	NA	**0.041** M	NA	NA
Acenaphthylene	0.010 U	NA	0.010 U	NA	0.010 U	0.010 U	NA	0.010 U	NA	NA
Acenaphthene	**0.024**	NA	**0.044**	NA	0.010 U	0.0072 U	NA	0.010 U	NA	NA
Fluorene	0.010 U	NA	0.010 U	NA	0.010 U	0.010 U	NA	0.010 U	NA	NA
Phenanthrene	0.010 U	NA	0.010 U	NA	**0.016**	0.0067 U	NA	**0.031**	NA	NA
Anthracene	0.010 U	NA	0.010 U	NA	0.010 U	0.010 U	NA	0.010 U	NA	NA
Fluoranthene	0.010 U	NA	0.010 U	NA	**0.016**	0.0085 U	NA	**0.039**	NA	NA
Pyrene	**0.012**	NA	**0.014**	NA	**0.021**	**0.012**	NA	**0.087**	NA	NA
Benzo(a)anthracene	0.010 U	NA	0.010 U	NA	0.010 U	0.010 U	NA	**0.021**	NA	NA
Chrysene	0.010 U	NA	0.010 U	NA	**0.012**	0.0056 U	NA	**0.050**	NA	NA
Benzo(a)pyrene	0.010 U	NA	0.010 U	NA	0.010 U	0.010 U	NA	**0.030**	NA	NA
Indeno(1,2,3-cd)pyrene	0.010 U	NA	0.010 U	NA	0.010 U	0.010 U	NA	**0.027**	NA	NA
Dibenz(a,h)anthracene	0.010 U	NA	0.010 U	NA	0.010 U	0.010 U	NA	0.010 U	NA	NA
Benzo(g,h,i)perylene	0.010 U	NA	0.010 U	NA	0.010 U	0.010 U	NA	**0.050**	NA	NA
Dibenzofuran	0.010 U	NA	0.010 U	NA	0.010 U	0.010 U	NA	0.010 U	NA	NA
Total Benzofluoranthenes	0.020 U	NA	0.020 U	NA	0.020 U	0.020 U	NA	**0.060**	NA	NA
CPAH TEQ	ND	NA	ND	NA	**0.0001**	ND	NA	**0.041**	NA	NA
TOTAL METALS (µg/L)										
Method EPA200.8/6010B,C/7470A										
Arsenic	**2.5**	**3.2**	**2.1**	**2.5**	**0.7**	**2.9**	**1.0**	**0.7**	**0.6**	**0.9**
Cadmium	**0.2**	**0.2**	0.1 U	**0.3**	**4.1**	**3.2**	**1.5**	**0.9**	**0.6**	**0.4**
Chromium	0.5 U	0.5 U	0.5 U	**2**	**1.9**	**0.7**	0.5 U	**1.2**	**1.0**	1 U
Copper	**3.8**	**4.0**	**1.1**	**8.9**	**7.5**	**6.4**	**4.2**	**5.9**	**3.2**	**111**
Iron	**12,500**	**14,800**	**6780**	**42600**	**1260**	**6730**	**3120**	**1200**	**610**	**4990**
Lead	**0.6**	**0.6**	**0.2**	**2.3**	**3.3**	**2.6**	**0.6**	**1.7**	**1.0**	**6.4**
Manganese	**503**	**531**	**516**	**769**	**28**	**1070**	**245**	**27**	**15**	**115**
Mercury	0.1 U	0.1 U	0.1 U	0.1 U	0.1 U	0.1 U	0.1 U	0.1 U	0.1 U	0.1 U
Nickel	**1.6**	**1.7**	**1.3**	**4.7**	**14.2**	**6.7**	**3.4**	**1.9**	**1.0**	**1.7**
Silver	NA	NA	NA	NA	NA	NA	NA	NA	NA	NA
Zinc	**23**	**41**	**19**	**56**	**137**	**101**	**120**	**106**	**74**	**146**
DISSOLVED METALS (µg/L)										
Method EPA200.8/6010B,C										
Arsenic	**0.8**	**0.5**	**0.8**	**0.9**	**0.7**	**1.4**	**0.4**	**0.4**	**0.3**	**0.2**
Cadmium	0.1 U	0.1 U	0.1 U	0.1 U	**2.8**	**0.1**	**1.0**	**0.5**	**0.3**	**0.2**
Chromium	0.5 U	0.5 U	0.5 U	0.5 U	**0.8**	0.5 U	0.5 U	**0.6**	**0.6**	0.5 U
Copper	**0.8**	**1.4**	**0.6**	**1.7**	**3.9**	**0.9**	**2.4**	**2.8**	**1.7**	**14.9**
Iron	50 U	50 U	50 U	50 U	50 U	**90**	**80**	**80**	**50**	50 U
Lead	0.1 U	0.1 U	0.1 U	**0.3**	**0.2**	0.1 U	0.1 U	**0.2**	0.1 U	0.1 U
Manganese	**507**	**417**	**495**	**556**	**8**	**905**	**208**	**12**	**6**	**105**
Nickel	**1.5**	**0.8**	**0.5**	**2.3**	**11.4**	**4.9**	**2.8**	**1.3**	**0.7**	**1.8**
Silver	NA	NA	NA	NA	NA	NA	NA	NA	NA	NA
Zinc	**9**	**13**	**10**	**17**	**96**	**32**	**92**	**75**	**54**	**80**
DISSOLVED METALS (ng/L)										
Method SW7470A										
Mercury	20.0 U	20.0 U	20.0 U	20.0 U	20.0 U	20.0 U	20.0 U	20.0 U	20.0 U	20.0 U
CONVENTIONALS										
pH (SU; EPA 150.1; SM 4500H)	**6.76**	**6.65**	**6.84**	**6.95**	**6.41**	**6.70**	**6.53**	**6.81**	**6.36**	**6.89**
Total Suspended Solids (mg/L; EPA 160.2; SM2540D)	**40.2**	**38.0**	**39.3**	**168**	**14.3**	**36.0**	**7.8**	**10.3**	**4.4**	**14.6**
Turbidity (NTU; EPA 180.1)	**38.0**	**48.0**	**62.5**	**62.0**	**3.38**	**60.0**	**7.21**	**3.91**	**3.65**	**25.0**

TABLE 3
MH130A WHOLE WATER SAMPLING ANALYTICAL RESULTS
LONG-TERM STORMWATER TREATMENT SYSTEM
NORTH BOEING FIELD - SEATTLE, WASHINGTON

Sample Location ID	LTST-W-MH130A	LTST-W-MH130A	LTST-W-MH130A	LTST-W-MH130A	LTST-W-MH130A	LTST-W-MH130A	LTST-W-MH130A	LTST-W-MH130A	LTST-W-MH130A	LTST-W-MH130A
Laboratory Data ID	WP40C/WP40G/WP39C	WT15B/WT15E/WT16B	WX01C/WX01G/WX02C	XA11C/XA11G/XA14C	XE07C/XE07G/XE22C	XF13A/XF13B/XF14A/XE91C	XJ12C/XJ12G/XJ36C	XN18C/XN18G/XN19C	XO61A/XO61C/XO79A	XQ44C/XQ44G/XQ45C
Sample Date	5/9/2013	6/7/2013	7/10/2013	8/8/2013	9/6/2013	9/12-9/13/2013	10/9/2013	11/7/2013	11/18/2013	12/5/2013
Event Type	Monthly	Monthly	Monthly	Monthly	Storm	Monthly	Monthly	Monthly	Storm	Monthly
Sample Type	Grab	Grab	Grab	Grab	Grab	Grab	Grab	Grab	Grab	Grab
PARTICLE/GRAIN SIZE (mg/L)										
Method ASTM-D3977C										
Sediment Conc. > 500 µm	**13.42**	**23.71**	**4.70**	**20.72**	**4.06**	**1.48**	**12.71**	**8.58**	**3.63**	**2.33**
Sediment Conc. 500 to 250 µm	**12.61**	**11.54**	**5.12**	**25.29**	**4.79**	**9.18**	**11.55**	**11.05**	**14.30**	**1.17**
Sediment Conc. 250 to 125 µm	0.01 U	0.01 U	0.01 U	0.01 U	0.01 U	0.01 U	0.01 U	0.01 U	0.01 U	0.01 U
Sediment Conc. 125 to 62.5 µm	**0.47**	0.01 U	0.01 U	**0.01**	0.01 U	**4.82**	0.01 U	0.01 U	0.01 U	0.01 U
Sediment Conc. 62.5 to 3.9 µm	**41.58**	**34.19**	**0.06**	**103.68**	0.01 U	**30.58**	**7.04**	**6.15**	0.01 U	**7.90**
Sediment Conc. 3.9 to 1 µm	**7.25**	**6.80**	**15.12**	**14.15**	**3.62**	**2.03**	**0.90**	**0.28**	**4.88**	**3.11**
Sediment Conc. < 1 µm	**5.21**	**4.34**	**21.01**	**7.34**	**9.93**	**0.83**	**0.68**	**2.22**	**7.86**	**1.73**
Previous 1 Hour Precip. (inches) (c)	0.00	0.00	0.00	0.00	0.02	0.00	0.00	0.03	0.08	0.00
Previous 12 Hours Precip. (inches) (c)	0.00	0.00	0.00	0.00	1.23	0.00	0.00	0.71	0.38	0.00

TABLE 3
MH130A WHOLE WATER SAMPLING ANALYTICAL RESULTS
LONG-TERM STORMWATER TREATMENT SYSTEM
NORTH BOEING FIELD - SEATTLE, WASHINGTON

Sample Location ID	LTST-W-MH130A	LTST-W-MH130A	LTST-W-MH130A	LTST-W-MH130A	LTST-W-MH130A	LTST-W-MH130A
Laboratory Data ID	XT98C/XT98G/XT99C	XU37A/XU37C/XU42A	XZ68C/XZ68G/XZ69C	YB46A/YB46C/YB47A	YF79A/YF79C/YF80A	YR11C/YR11G/YR12C
Sample Date	1/9/2014	1/10/2014	2/16/2014	3/5/2014	4/8/2014	7/10/2014
Event Type	Quarterly	Storm	Storm	Storm	Quarterly	Quarterly
Sample Type	Grab	Grab	Grab	Grab	Grab	Grab
PCBs (µg/L) (a)						
Method SW8082A						
Aroclor 1016	0.005 U	0.005 U	0.005 U	0.005 U	0.005 U	0.005 U
Aroclor 1242	0.005 U	0.005 U	0.005 U	0.005 U	0.005 U	0.005 U
Aroclor 1248	0.013 U	0.025 U	0.05 U	0.13 U	0.13 U	0.18 U
Aroclor 1254	**0.034**	**0.041**	**0.049**	**0.37**	**0.10**	**0.098**
Aroclor 1260	**0.011** J	**0.014**	**0.014**	0.019 U	0.005 U	0.005 U
Aroclor 1221	0.005 U	0.005 U	0.005 U	0.005 U	0.005 U	0.005 U
Aroclor 1232	0.005 U	0.005 U	0.005 U	0.005 U	0.005 U	0.005 U
Aroclor 1262	0.005 U	0.005 U	0.005 U	0.005 U	0.005 U	0.005 U
Total PCBs (b)	**0.045**	**0.055**	**0.063**	**0.37**	**0.10**	**0.098**
SEMIVOLATILES (µg/L)						
Method SW8270D						
Phenol	1.0 U	1.0 U	NA	1.0 U	NA	1.0 U
1,3-Dichlorobenzene	1.0 U	1.0 U	NA	1.0 U	NA	1.0 U
1,4-Dichlorobenzene	1.0 U	1.0 U	NA	1.0 U	NA	1.0 U
Benzyl Alcohol	2.0 U	2.0 U	NA	2.0 U	NA	2.0 U
1,2-Dichlorobenzene	1.0 U	1.0 U	NA	1.0 U	NA	1.0 U
2-Methylphenol	1.0 U	1.0 U	NA	1.0 U	NA	1.0 UJ
4-Methylphenol	2.0 U	2.0 U	NA	2.0 U	NA	2.0 UJ
Hexachloroethane	2.0 U	2.0 U	NA	2.0 U	NA	2.0 UJ
2,4-Dimethylphenol	3.0 U	3.0 U	NA	3.0 U	NA	3.0 U
Benzoic Acid	20 UJ	20 UJ	NA	20 U	NA	20 UJ
1,2,4-Trichlorobenzene	1.0 U	1.0 U	NA	1.0 U	NA	1.0 U
Naphthalene	1.0 U	1.0 U	NA	1.0 U	NA	1.0 UJ
Hexachlorobutadiene	3.0 U	3.0 U	NA	3.0 U	NA	3.0 U
2-Methylnaphthalene	1.0 U	1.0 U	NA	1.0 U	NA	1.0 U
Dimethylphthalate	1.0 U	1.0 U	NA	1.0 U	NA	1.0 UJ
Acenaphthylene	1.0 U	1.0 U	NA	1.0 U	NA	1.0 U
Acenaphthene	1.0 U	1.0 U	NA	1.0 U	NA	1.0 UJ
Dibenzofuran	1.0 U	1.0 U	NA	1.0 U	NA	1.0 U
Diethylphthalate	1.0 U	1.0 U	NA	1.0 U	NA	1.0 UJ
Fluorene	1.0 U	1.0 U	NA	1.0 U	NA	1.0 UJ
N-Nitrosodiphenylamine	1.0 U	1.0 U	NA	1.0 U	NA	1.0 U
Hexachlorobenzene	1.0 U	1.0 U	NA	1.0 U	NA	1.0 U
Pentachlorophenol	10 UJ	10 U	NA	10 U	NA	10 U
Phenanthrene	1.0 U	1.0 U	NA	1.0 U	NA	1.0 UJ
Anthracene	1.0 U	1.0 U	NA	1.0 U	NA	1.0 U
Di-n-Butylphthalate	1.0 U	1.0 U	NA	1.0 U	NA	1.0 UJ
Fluoranthene	1.0 U	1.0 U	NA	1.0 U	NA	1.0 U
Pyrene	1.0 U	1.0 U	NA	1.0 U	NA	1.0 U
Butylbenzylphthalate	1.0 U	1.0 U	NA	1.0 U	NA	1.0 UJ
Benzo(a)anthracene	1.0 U	1.0 U	NA	1.0 U	NA	1.0 U
bis(2-Ethylhexyl)phthalate	3.0 U	3.0 U	NA	3.0 U	NA	3.0 U
Chrysene	1.0 U	1.0 U	NA	1.0 U	NA	1.0 U
Di-n-Octyl phthalate	1.0 U	1.0 U	NA	1.0 U	NA	1.0 U
Benzo(a)pyrene	1.0 U	1.0 U	NA	1.0 U	NA	1.0 U
Indeno(1,2,3-cd)pyrene	1.0 U	1.0 U	NA	1.0 U	NA	1.0 UJ
Dibenz(a,h)anthracene	1.0 U	1.0 U	NA	1.0 U	NA	1.0 UJ
Benzo(g,h,i)perylene	1.0 UJ	1.0 U	NA	1.0 U	NA	1.0 UJ
1-Methylnaphthalene	1.0 U	1.0 U	NA	1.0 U	NA	1.0 U
Total Benzofluoranthenes	5.0 U	5.0 U	NA	5.0 U	NA	2.0 U

TABLE 3
MH130A WHOLE WATER SAMPLING ANALYTICAL RESULTS
LONG-TERM STORMWATER TREATMENT SYSTEM
NORTH BOEING FIELD - SEATTLE, WASHINGTON

Sample Location ID	LTST-W-MH130A	LTST-W-MH130A	LTST-W-MH130A	LTST-W-MH130A	LTST-W-MH130A	LTST-W-MH130A
Laboratory Data ID	XT98C/XT98G/XT99C	XU37A/XU37C/XU42A	XZ68C/XZ68G/XZ69C	YB46A/YB46C/YB47A	YF79A/YF79C/YF80A	YR11C/YR11G/YR12C
Sample Date	1/9/2014	1/10/2014	2/16/2014	3/5/2014	4/8/2014	7/10/2014
Event Type	Quarterly	Storm	Storm	Storm	Quarterly	Quarterly
Sample Type	Grab	Grab	Grab	Grab	Grab	Grab
PAHs (µg/L)						
Method SW8270D-SIM						
Naphthalene	0.010 U	0.010 U	NA	0.010 U	NA	0.010 U
2-Methylnaphthalene	0.010 U	0.010 U	NA	0.010 U	NA	0.010 U
1-Methylnaphthalene	0.010 U	**0.037**	NA	**0.083**	NA	0.010 U
Acenaphthylene	0.010 U	0.010 U	NA	0.010 U	NA	0.010 U
Acenaphthene	0.010 U	0.010 U	NA	0.010 U	NA	**0.017**
Fluorene	0.010 U	0.010 U	NA	0.010 U	NA	0.010 U
Phenanthrene	0.010 U	0.010 U	NA	**0.015**	NA	0.010 U
Anthracene	0.010 U	0.010 U	NA	0.010 U	NA	0.010 U
Fluoranthene	0.010 U	0.010 U	NA	**0.017**	NA	0.010 U
Pyrene	**0.013** J	**0.010**	NA	**0.020**	NA	**0.011**
Benzo(a)anthracene	0.010 U	0.010 U	NA	0.010 U	NA	0.010 U
Chrysene	0.010 U	0.010 U	NA	**0.011**	NA	0.010 U
Benzo(a)pyrene	0.010 U	0.010 U	NA	0.010 U	NA	0.010 U
Indeno(1,2,3-cd)pyrene	0.010 U	0.010 U	NA	0.010 U	NA	0.010 U
Dibenz(a,h)anthracene	0.010 U	0.010 U	NA	0.010 U	NA	0.010 U
Benzo(g,h,i)perylene	0.010 U	0.010 U	NA	0.010 U	NA	0.010 U
Dibenzofuran	0.010 U	0.010 U	NA	0.010 U	NA	0.010 U
Total Benzofluoranthenes	0.020 UJ	0.020 U	NA	0.020 U	NA	0.020 U
CPAH TEQ	ND	ND	NA	**0.0001**	NA	ND
TOTAL METALS (µg/L)						
Method EPA200.8/6010B,C/7470A						
Arsenic	**0.5**	**0.6**	**0.8**	**0.7**	**1.4**	**2.2**
Cadmium	**0.8**	**0.9**	**0.4**	**0.5**	**0.2**	**0.1**
Chromium	**0.8**	0.5 U	**1.7**	**0.6**	0.5 U	1 U
Copper	**3.9**	**3.4**	**3.6**	**7.3**	**4.6**	**4.7**
Iron	**870**	**2990**	**2230**	**1220**	**7310**	**7590**
Lead	**0.9**	**0.4**	**0.6**	**0.8**	**0.1**	**0.3**
Manganese	**29**	**138**	**92**	**53**	**478**	**290**
Mercury	0.1 U	0.1 U	0.1 U	0.1 U	0.1 U	0.1 U
Nickel	**1.1**	**1.5**	**1.3**	**1.6**	**1.7**	**1.4**
Silver	NA	NA	NA	NA	NA	NA
Zinc	**136**	**136**	**91**	**122**	**16**	**17**
DISSOLVED METALS (µg/L)						
Method EPA200.8/6010B,C						
Arsenic	**0.3**	**0.2**	**0.5**	**0.4**	**0.6**	**0.6**
Cadmium	**0.6**	**0.6**	**0.3**	**0.4**	0.1 U	0.1 U
Chromium	0.5 U	0.5 U	0.5 U	0.5 U	0.5 U	1 U
Copper	**1.6**	**1.4**	**2.0**	**4.7**	**1.3** J	**1.9**
Iron	**240**	**130**	**820**	**340**	50 U	50 U
Lead	**0.2**	0.1 U	0.1 U	**0.1**	0.1 U	0.1 U
Manganese	**25**	**111**	**91**	**60**	**453**	**241**
Nickel	**1.2**	**1.5**	**0.9**	**1.4**	**1.7** J	**1.3**
Silver	NA	NA	NA	NA	NA	NA
Zinc	**144**	**120**	**75**	**92**	**11**	**7**
DISSOLVED METALS (ng/L)						
Method SW7470A						
Mercury	20.0 U	20.0 U	20.0 U	20.0 U	20.0 U	20.0 U
CONVENTIONALS						
pH (SU; EPA 150.1; SM 4500H)	**6.49**	NA	NA	NA	NA	NA
Total Suspended Solids (mg/L; EPA 160.2; SM2540D)	**3.2**	**14.3**	**18.1**	**17.1**	**26.8**	**32.1**
Turbidity (NTU; EPA 180.1)	**2.67**	**13.2**	**10.1**	**6.65**	**7.8**	**19.4**

TABLE 3
MH130A WHOLE WATER SAMPLING ANALYTICAL RESULTS
LONG-TERM STORMWATER TREATMENT SYSTEM
NORTH BOEING FIELD - SEATTLE, WASHINGTON

Sample Location ID	LTST-W-MH130A	LTST-W-MH130A	LTST-W-MH130A	LTST-W-MH130A	LTST-W-MH130A	LTST-W-MH130A
Laboratory Data ID	XT98C/XT98G/XT99C	XU37A/XU37C/XU42A	XZ68C/XZ68G/XZ69C	YB46A/YB46C/YB47A	YF79A/YF79C/YF80A	YR11C/YR11G/YR12C
Sample Date	1/9/2014	1/10/2014	2/16/2014	3/5/2014	4/8/2014	7/10/2014
Event Type	Quarterly	Storm	Storm	Storm	Quarterly	Quarterly
Sample Type	Grab	Grab	Grab	Grab	Grab	Grab
PARTICLE/GRAIN SIZE (mg/L)						
Method ASTM-D3977C						
Sediment Conc. > 500 µm	**9.63**	**42.85**	NA	NA	NA	NA
Sediment Conc. 500 to 250 µm	**18.27**	**44.00**	NA	NA	NA	NA
Sediment Conc. 250 to 125 µm	0.01 U	0.01 U	NA	NA	NA	NA
Sediment Conc. 125 to 62.5 µm	0.01 U	0.01 U	NA	NA	NA	NA
Sediment Conc. 62.5 to 3.9 µm	0.01 U	**0.47**	NA	NA	NA	NA
Sediment Conc. 3.9 to 1 µm	**0.06**	0.01 U	NA	NA	NA	NA
Sediment Conc. < 1 µm	**2.88**	**0.14**	NA	NA	NA	NA
Previous 1 Hour Precip. (inches) (c)	0.00	0.01	0.04	0.04	0.00	0.00
Previous 12 Hours Precip. (inches) (c)	0.01	0.01	0.1	0.29	0.00	0.00

TABLE 3
MH130A WHOLE WATER SAMPLING ANALYTICAL RESULTS
LONG-TERM STORMWATER TREATMENT SYSTEM
NORTH BOEING FIELD - SEATTLE, WASHINGTON

Sample Location ID	LTST-W-MH130A	LTST-W-MH130A	LTST-W-MH130A	LTST-W-MH130A	LTST-W-MH130A	LTST-W-MH130A	LTST-W-MH130A	LTST-W-MH130A	LTST-W-MH130A	LTST-W-MH130A	LTST-W-MH130A
Laboratory Data ID	ZE23C/ZE23G/ZE24C	ZF08C/ZF08G/ZF09C	ZO34C/ZO34G/ZO35C	ZQ78C/ZQ78G/ZQ79C	ZS95C/ZS95G/ZS96C	ZV55C	AEB1C	AIY6C	AOB4C	AOJ7C	APT0B
Sample Date	10/9/2014	10/13/2014	12/9/2014	12/23/2014	1/15/2015	2/6/2015	4/10/2015	7/9/2015	10/7/2015	10/10/2015	10/31/2015
Event Type	Quarterly	Storm	Storm	Storm	Quarterly	Storm	Quarterly	Quarterly	Quarterly	Storm	Storm
Sample Type	Grab	Grab	Grab	Grab	Grab	Grab	Grab	Grab	Grab	Grab	Grab
PCBs (µg/L) (a)											
Method SW8082A											
Aroclor 1016	0.005 U	0.005 U	0.005 U	0.005 U	0.005 U	0.005 U	0.005 U	0.005 U	0.005 U	0.005 U	0.005 U
Aroclor 1242	0.005 U	0.005 U	**0.22**	0.005 U	**0.10**	0.005 U	**0.10**	**0.043**	0.005 U	0.005 U	0.005 U
Aroclor 1248	0.08 U	0.18 U	0.005 U	0.03 U	0.005 U	**0.033**	0.005 U	0.005 U	**0.039**	0.013 U	0.005 U
Aroclor 1254	**0.098**	**0.14**	0.005 U	**0.094**	**0.081**	**0.033**	**0.089**	**0.042**	**0.042**	**0.036** P	**0.012**
Aroclor 1260	0.005 U	**0.023**	0.005 U	**0.016**	0.005 U	0.005 U	0.005 U	0.005 U	**0.0060** J	**0.011**	0.005 U
Aroclor 1221	0.005 U	0.005 U	0.005 U	0.005 U	0.005 U	0.005 U	0.005 U	0.005 U	0.005 U	0.005 U	0.005 U
Aroclor 1232	0.005 U	0.005 U	0.005 U	0.005 U	0.005 U	0.005 U	0.005 U	0.005 U	0.005 U	0.005 U	0.005 U
Aroclor 1262	0.005 U	0.005 U	0.005 U	0.005 U	0.005 U	0.005 U	0.005 U	0.005 U	0.005 U	0.005 U	0.005 U
Total PCBs (b)	**0.098**	**0.163**	**0.22**	**0.110**	**0.181**	**0.066**	**0.189**	**0.085**	**0.087**	**0.047**	**0.012**
SEMIVOLATILES (µg/L)											
Method SW8270D											
Phenol	NA	NA	1.0 U	NA	1.0 U	NA	NA	NA	NA	NA	NA
1,3-Dichlorobenzene	NA	NA	1.0 U	NA	1.0 U	NA	NA	NA	NA	NA	NA
1,4-Dichlorobenzene	NA	NA	1.0 U	NA	1.0 U	NA	NA	NA	NA	NA	NA
Benzyl Alcohol	NA	NA	2.0 U	NA	2.0 U	NA	NA	NA	NA	NA	NA
1,2-Dichlorobenzene	NA	NA	1.0 U	NA	1.0 U	NA	NA	NA	NA	NA	NA
2-Methylphenol	NA	NA	1.0 U	NA	1.0 U	NA	NA	NA	NA	NA	NA
4-Methylphenol	NA	NA	2.0 U	NA	2.0 U	NA	NA	NA	NA	NA	NA
Hexachloroethane	NA	NA	2.0 U	NA	2.0 U	NA	NA	NA	NA	NA	NA
2,4-Dimethylphenol	NA	NA	3.0 U	NA	3.0 U	NA	NA	NA	NA	NA	NA
Benzoic Acid	NA	NA	20 U	NA	20 U	NA	NA	NA	NA	NA	NA
1,2,4-Trichlorobenzene	NA	NA	1.0 U	NA	1.0 U	NA	NA	NA	NA	NA	NA
Naphthalene	NA	NA	1.0 U	NA	1.0 U	NA	NA	NA	NA	NA	NA
Hexachlorobutadiene	NA	NA	3.0 U	NA	3.0 U	NA	NA	NA	NA	NA	NA
2-Methylnaphthalene	NA	NA	1.0 U	NA	1.0 U	NA	NA	NA	NA	NA	NA
Dimethylphthalate	NA	NA	1.0 U	NA	1.0 U	NA	NA	NA	NA	NA	NA
Acenaphthylene	NA	NA	1.0 U	NA	1.0 U	NA	NA	NA	NA	NA	NA
Acenaphthene	NA	NA	1.0 U	NA	1.0 U	NA	NA	NA	NA	NA	NA
Dibenzofuran	NA	NA	1.0 U	NA	1.0 U	NA	NA	NA	NA	NA	NA
Diethylphthalate	NA	NA	1.0 U	NA	1.0 U	NA	NA	NA	NA	NA	NA
Fluorene	NA	NA	1.0 U	NA	1.0 U	NA	NA	NA	NA	NA	NA
N-Nitrosodiphenylamine	NA	NA	1.0 U	NA	1.0 U	NA	NA	NA	NA	NA	NA
Hexachlorobenzene	NA	NA	1.0 U	NA	1.0 U	NA	NA	NA	NA	NA	NA
Pentachlorophenol	NA	NA	10 U	NA	10 UJ	NA	NA	NA	NA	NA	NA
Phenanthrene	NA	NA	1.0 U	NA	1.0 U	NA	NA	NA	NA	NA	NA
Anthracene	NA	NA	1.0 U	NA	1.0 U	NA	NA	NA	NA	NA	NA
Di-n-Butylphthalate	NA	NA	1.0 U	NA	1.0 U	NA	NA	NA	NA	NA	NA
Fluoranthene	NA	NA	1.0 U	NA	1.0 U	NA	NA	NA	NA	NA	NA
Pyrene	NA	NA	1.0 U	NA	1.0 U	NA	NA	NA	NA	NA	NA
Butylbenzylphthalate	NA	NA	1.0 U	NA	1.0 U	NA	NA	NA	NA	NA	NA
Benzo(a)anthracene	NA	NA	1.0 U	NA	1.0 U	NA	NA	NA	NA	NA	NA
bis(2-Ethylhexyl)phthalate	NA	NA	3.0 U	NA	3.0 U	NA	NA	NA	NA	NA	NA
Chrysene	NA	NA	1.0 U	NA	1.0 U	NA	NA	NA	NA	NA	NA
Di-n-Octyl phthalate	NA	NA	**1.4**	NA	1.0 U	NA	NA	NA	NA	NA	NA
Benzo(a)pyrene	NA	NA	1.0 U	NA	1.0 U	NA	NA	NA	NA	NA	NA
Indeno(1,2,3-cd)pyrene	NA	NA	1.0 U	NA	1.0 U	NA	NA	NA	NA	NA	NA
Dibenz(a,h)anthracene	NA	NA	1.0 U	NA	1.0 U	NA	NA	NA	NA	NA	NA
Benzo(g,h,i)perylene	NA	NA	1.0 U	NA	1.0 U	NA	NA	NA	NA	NA	NA
1-Methylnaphthalene	NA	NA	1.0 U	NA	1.0 U	NA	NA	NA	NA	NA	NA
Total Benzofluoranthenes	NA	NA	2.0 U	NA	2.0 U	NA	NA	NA	NA	NA	NA

TABLE 3
MH130A WHOLE WATER SAMPLING ANALYTICAL RESULTS
LONG-TERM STORMWATER TREATMENT SYSTEM
NORTH BOEING FIELD - SEATTLE, WASHINGTON

Sample Location ID	LTST-W-MH130A	LTST-W-MH130A	LTST-W-MH130A	LTST-W-MH130A	LTST-W-MH130A	LTST-W-MH130A	LTST-W-MH130A	LTST-W-MH130A	LTST-W-MH130A	LTST-W-MH130A	LTST-W-MH130A
Laboratory Data ID	ZE23C/ZE23G/ZE24C	ZF08C/ZF08G/ZF09C	ZO34C/ZO34G/ZO35C	ZQ78C/ZQ78G/ZQ79C	ZS95C/ZS95G/ZS96C	ZV55C	AEB1C	AIY6C	AOB4C	AOJ7C	APT0B
Sample Date	10/9/2014	10/13/2014	12/9/2014	12/23/2014	1/15/2015	2/6/2015	4/10/2015	7/9/2015	10/7/2015	10/10/2015	10/31/2015
Event Type	Quarterly	Storm	Storm	Storm	Quarterly	Storm	Quarterly	Quarterly	Quarterly	Storm	Storm
Sample Type	Grab	Grab	Grab	Grab	Grab	Grab	Grab	Grab	Grab	Grab	Grab
PAHs (µg/L)											
Method SW8270D-SIM											
Naphthalene	NA	NA	0.010 U	NA	0.010 U	NA	NA	NA	NA	NA	NA
2-Methylnaphthalene	NA	NA	0.010 U	NA	0.010 U	NA	NA	NA	NA	NA	NA
1-Methylnaphthalene	NA	NA	**0.042**	NA	0.010 U	NA	NA	NA	NA	NA	NA
Acenaphthylene	NA	NA	0.010 U	NA	0.010 U	NA	NA	NA	NA	NA	NA
Acenaphthene	NA	NA	**0.011**	NA	**0.078**	NA	NA	NA	NA	NA	NA
Fluorene	NA	NA	0.010 U	NA	0.010 U	NA	NA	NA	NA	NA	NA
Phenanthrene	NA	NA	0.010 U	NA	0.010 U	NA	NA	NA	NA	NA	NA
Anthracene	NA	NA	0.010 U	NA	0.010 U	NA	NA	NA	NA	NA	NA
Fluoranthene	NA	NA	0.010 U	NA	0.010 U	NA	NA	NA	NA	NA	NA
Pyrene	NA	NA	**0.017** J	NA	0.010 U	NA	NA	NA	NA	NA	NA
Benzo(a)anthracene	NA	NA	0.010 U	NA	0.010 U	NA	NA	NA	NA	NA	NA
Chrysene	NA	NA	0.010 U	NA	0.010 U	NA	NA	NA	NA	NA	NA
Benzo(a)pyrene	NA	NA	0.010 U	NA	0.010 U	NA	NA	NA	NA	NA	NA
Indeno(1,2,3-cd)pyrene	NA	NA	0.010 U	NA	0.010 U	NA	NA	NA	NA	NA	NA
Dibenz(a,h)anthracene	NA	NA	0.010 U	NA	0.010 U	NA	NA	NA	NA	NA	NA
Benzo(g,h,i)perylene	NA	NA	0.010 U	NA	0.010 U	NA	NA	NA	NA	NA	NA
Dibenzofuran	NA	NA	0.010 U	NA	0.010 U	NA	NA	NA	NA	NA	NA
Total Benzofluoranthenes	NA	NA	0.020 U	NA	0.020 U	NA	NA	NA	NA	NA	NA
CPAH TEQ	NA	NA	ND	NA	ND	NA	NA	NA	NA	NA	NA
TOTAL METALS (µg/L)											
Method EPA200.8/6010B,C/7470A											
Arsenic	**2.2**	**2.3**	**0.8**	**0.5**	**1.1**	NA	NA	NA	NA	NA	NA
Cadmium	**0.2**	**0.4**	**0.3**	**0.4**	**0.2**	NA	NA	NA	NA	NA	NA
Chromium	0.5 U	**1.4**	**0.5**	**0.9**	1 U	NA	NA	NA	NA	NA	NA
Copper	**1.8**	**10.7**	**4.1**	**5.8**	**4.2**	NA	NA	NA	NA	NA	NA
Iron	**9890**	**5950**	**1430**	**1410**	**7560**	NA	NA	NA	NA	NA	NA
Lead	**0.6**	**3.3**	**0.7**	**3.9**	**0.3**	NA	NA	NA	NA	NA	NA
Manganese	**524**	**90**	**68**	**18**	**420**	NA	NA	NA	NA	NA	NA
Mercury	0.1 U	0.1 U	0.1 U	0.1 U	0.1 U	NA	NA	NA	NA	NA	NA
Nickel	**1.4**	**1.7**	**1.0**	**0.7**	**1.4**	NA	NA	NA	NA	NA	NA
Silver	NA	NA	NA	NA	NA	NA	NA	NA	NA	NA	NA
Zinc	**26**	**73**	**73**	**85**	**36**	NA	NA	NA	NA	NA	NA
DISSOLVED METALS (µg/L)											
Method EPA200.8/6010B,C											
Arsenic	**0.6**	**0.7**	**0.4**	0.2 U	**0.3**	NA	NA	NA	NA	NA	NA
Cadmium	0.1 U	0.1 U	**0.2**	**0.1**	0.1 U	NA	NA	NA	NA	NA	NA
Chromium	0.5 U	0.5 U	0.5 U	0.5 U	1 U	NA	NA	NA	NA	NA	NA
Copper	**0.6**	**4.9**	**2.2**	**0.9**	**1.3**	NA	NA	NA	NA	NA	NA
Iron	50 U	**290**	**360**	50 U	50 U	NA	NA	NA	NA	NA	NA
Lead	0.1 U	**0.1**	0.1 U	0.1 U	0.1 U	NA	NA	NA	NA	NA	NA
Manganese	**493**	**67**	**69**	**6**	**382**	NA	NA	NA	NA	NA	NA
Nickel	**0.6**	**1.0**	**0.8**	0.5 U	**0.9**	NA	NA	NA	NA	NA	NA
Silver	NA	NA	NA	NA	NA	NA	NA	NA	NA	NA	NA
Zinc	**11**	**33**	**66**	**47**	**25**	NA	NA	NA	NA	NA	NA
DISSOLVED METALS (ng/L)											
Method SW7470A											
Mercury	20.0 U	20.0 U	20.0 U	20.0 U	20.0 U	NA	NA	NA	NA	NA	NA
CONVENTIONALS											
pH (SU; EPA 150.1; SM 4500H)	NA	NA	NA	NA	NA	NA	NA	NA	NA	NA	NA
Total Suspended Solids (mg/L; EPA 160.2; SM2540D)	**32.7**	**34.3**	**16.8**	**35.0**	**22.1**	**3.8**	**10.5**	**31.4**	**11.8**	**2.3**	**3.2**
Turbidity (NTU; EPA 180.1)	**114**	**14.5**	**5.17**	**3.70**	**34.6**	NA	NA	NA	NA	NA	NA

TABLE 3
MH130A WHOLE WATER SAMPLING ANALYTICAL RESULTS
LONG-TERM STORMWATER TREATMENT SYSTEM
NORTH BOEING FIELD - SEATTLE, WASHINGTON

Sample Location ID	LTST-W-MH130A	LTST-W-MH130A	LTST-W-MH130A	LTST-W-MH130A	LTST-W-MH130A	LTST-W-MH130A	LTST-W-MH130A	LTST-W-MH130A	LTST-W-MH130A	LTST-W-MH130A	LTST-W-MH130A
Laboratory Data ID	ZE23C/ZE23G/ZE24C	ZF08C/ZF08G/ZF09C	ZO34C/ZO34G/ZO35C	ZQ78C/ZQ78G/ZQ79C	ZS95C/ZS95G/ZS96C	ZV55C	AEB1C	AIY6C	AOB4C	AOJ7C	APT0B
Sample Date	10/9/2014	10/13/2014	12/9/2014	12/23/2014	1/15/2015	2/6/2015	4/10/2015	7/9/2015	10/7/2015	10/10/2015	10/31/2015
Event Type	Quarterly	Storm	Storm	Storm	Quarterly	Storm	Quarterly	Quarterly	Quarterly	Storm	Storm
Sample Type	Grab	Grab	Grab	Grab	Grab	Grab	Grab	Grab	Grab	Grab	Grab
PARTICLE/GRAIN SIZE (mg/L)											
Method ASTM-D3977C											
Sediment Conc. > 500 µm	NA	NA	NA	NA	NA	NA	NA	NA	NA	NA	NA
Sediment Conc. 500 to 250 µm	NA	NA	NA	NA	NA	NA	NA	NA	NA	NA	NA
Sediment Conc. 250 to 125 µm	NA	NA	NA	NA	NA	NA	NA	NA	NA	NA	NA
Sediment Conc. 125 to 62.5 µm	NA	NA	NA	NA	NA	NA	NA	NA	NA	NA	NA
Sediment Conc. 62.5 to 3.9 µm	NA	NA	NA	NA	NA	NA	NA	NA	NA	NA	NA
Sediment Conc. 3.9 to 1 µm	NA	NA	NA	NA	NA	NA	NA	NA	NA	NA	NA
Sediment Conc. < 1 µm	NA	NA	NA	NA	NA	NA	NA	NA	NA	NA	NA
Previous 1 Hour Precip. (inches) (c)	0.00	0.00	0.04	0.13	0.00	0.04	0.00	0.00	0.00	0.23	0.25
Previous 12 Hours Precip. (inches) (c)	0.00	0.00	0.09	0.21	0.00	0.52	0.00	0.00	0.01	0.47	0.66

TEQ = Total Equivalency Quotient
cPAH = Carcinogenic Polycyclic Aromatic Hydrocarbon
PCB = Polychlorinated Biphenyl
SIM = Select Ion Monitoring
-- = Not applicable (grab sample does not require start/end date).
NA = Not Analyzed.
ND = Not Detected.
Bold = Detected compound.

EPA = U.S. Environmental Protection Agency
ASTM = American Society for Testing and Materials
ARI = Analytical Resources Inc.
NOAA = National Oceanic and Atmospheric Administration
µg/L = micrograms per liter
mg/L = milligrams per liter
µm = micrometer
ng/L = nanograms per liter

SU = Standard Units
NTU = Nephelometric Turbidity Units

U = Indicates the compound was not detected at the reported concentration.
J = Indicates the analyte was positively identified; the associated numerical value is the approximate concentration of the analyte in the sample.
J1 = Indicates the analyte was detected at a concentration less than the reporting limit but greater than the method detection limit.
M = Indicates an estimated value of analyte found and confirmed by analyst but with low spectral match.

(a) Starting in December 2012, ARI evaluated PCBs in whole water between the Limit of Detection (LOD) and the Limit of Quantitation (LOQ). For these non-detect results, the reported concentration shown is the LOD (1/2 the LOQ).
(b) Total PCBs is the sum of detected aroclors or, if no aroclors are detected, is reported as non-detect (ND).
(c) Precipitation data is from the NOAA Quality Controlled Local Climatological Data for Station 24234/BFI - SEATTLE: BOEING FIELD/KING COUNTY INTERNATIONAL AIRPORT.
(d) Due to a laboratory receipt login error, total metals were analyzed by low level (ng/L); the client was notified and results were reported per client request.

TABLE 4
LSIV WHOLE WATER SAMPLING ANALYTICAL RESULTS
LONG-TERM STORMWATER TREATMENT SYSTEM
NORTH BOEING FIELD - SEATTLE, WASHINGTON

Sample Location ID	LTST-W-LSIV	LTST-W-LSIV	LTST-W-LSIV	LTST-W-LSIV	LTST-W-LSIV	LTST-W-LSIV	LTST-W-LSIV	LTST-W-LSIV	LSTS-W-LSIV	LTST-W-LSIV	LTST-W-LSIV
Laboratory Data ID	TW50B	TX90C	TY96C	UA56C	UC19C/UC19F/UC20C	UC78C/UC78F/UC80C	UE10B/UE10C/UE11B	UE68B/UE68E/UE73B	UH75B/UH75G/UH76B	UL49B/UL49E/UL50B	UM18B/UM18D/UM19B
Sample Start Date	11/8/2011	11/16/2011	11/22/2011	12/5/2011	12/20/2011	12/27/2011	1/9/2012	1/20/2012	2/6/2012	3/5/2012	3/12/2012
Sample End Date or Grab Date	11/11/2011	11/17/2011	11/23/2011	12/8/2011	12/21/2011	12/28/2011	1/12/2012	1/21/2012	2/8/2012	3/8/2012	3/13/2012
Event Type	Monthly	Storm	Storm	Monthly	2nd Monthly	Storm	Monthly	Storm	Monthly	Monthly	Storm
Sample Type	Time-weighted composite, consisting of bypass and non-bypass flows						Flow-weighted composite, consisting of bypass and non-bypass flows				
PCBs (µg/L) (a)											
Method SW8082A											
Aroclor 1016	0.010 U	0.010 U	0.010 U	0.010 U	0.010 U	0.010 U	0.010 U	0.010 U	0.010 U	0.010 U	0.010 U
Aroclor 1242	0.010 U	0.010 U	0.010 U	0.010 U	0.010 U	0.010 U	0.010 U	0.010 U	0.010 U	0.010 U	0.010 U
Aroclor 1248	0.010 U	0.010 U	0.010 U	0.010 U	0.010 U	0.010 U	0.010 U	0.010 U	0.010 U	0.010 U	0.010 U
Aroclor 1254	0.010 U	0.010 U	0.010 U	0.010 U	0.010 U	0.010 U	0.010 U	**0.016**	0.010 U	0.010 U	0.010 U
Aroclor 1260	0.010 U	0.010 U	0.010 U	0.010 U	0.010 U	0.010 U	0.010 U	0.010 U	0.010 U	0.010 U	0.010 U
Aroclor 1221	0.010 U	0.010 U	0.010 U	0.010 U	0.010 U	0.010 U	0.010 U	0.010 U	0.010 U	0.010 U	0.010 U
Aroclor 1232	0.010 U	0.010 U	0.010 U	0.010 U	0.010 U	0.010 U	0.010 U	0.010 U	0.010 U	0.010 U	0.010 U
Aroclor 1262	0.010 U	0.010 U	0.010 U	0.010 U	0.010 U	0.010 U	0.010 U	0.010 U	0.010 U	0.010 U	0.010 U
Total PCBs (b)	ND	ND	ND	ND	ND	ND	ND	**0.016**	ND	ND	ND
SEMIVOLATILES (µg/L)											
Method SW8270D											
Phenol	NA	NA	NA	NA	1.0 U	NA	NA	NA	NA	NA	NA
1,3-Dichlorobenzene	NA	NA	NA	NA	1.0 U	NA	NA	NA	NA	NA	NA
1,4-Dichlorobenzene	NA	NA	NA	NA	1.0 U	NA	NA	NA	NA	NA	NA
Benzyl Alcohol	NA	NA	NA	NA	5.0 U	NA	NA	NA	NA	NA	NA
1,2-Dichlorobenzene	NA	NA	NA	NA	1.0 U	NA	NA	NA	NA	NA	NA
2-Methylphenol	NA	NA	NA	NA	1.0 U	NA	NA	NA	NA	NA	NA
4-Methylphenol	NA	NA	NA	NA	1.0 U	NA	NA	NA	NA	NA	NA
Hexachloroethane	NA	NA	NA	NA	1.0 U	NA	NA	NA	NA	NA	NA
2,4-Dimethylphenol	NA	NA	NA	NA	1.0 U	NA	NA	NA	NA	NA	NA
Benzoic Acid	NA	NA	NA	NA	10 U	NA	NA	NA	NA	NA	NA
1,2,4-Trichlorobenzene	NA	NA	NA	NA	1.0 U	NA	NA	NA	NA	NA	NA
Naphthalene	NA	NA	NA	NA	1.0 U	NA	NA	NA	NA	NA	NA
Hexachlorobutadiene	NA	NA	NA	NA	1.0 U	NA	NA	NA	NA	NA	NA
2-Methylnaphthalene	NA	NA	NA	NA	1.0 U	NA	NA	NA	NA	NA	NA
Dimethylphthalate	NA	NA	NA	NA	1.0 U	NA	NA	NA	NA	NA	NA
Acenaphthylene	NA	NA	NA	NA	1.0 U	NA	NA	NA	NA	NA	NA
Acenaphthene	NA	NA	NA	NA	1.0 U	NA	NA	NA	NA	NA	NA
Dibenzofuran	NA	NA	NA	NA	1.0 U	NA	NA	NA	NA	NA	NA
Diethylphthalate	NA	NA	NA	NA	1.0 U	NA	NA	NA	NA	NA	NA
Fluorene	NA	NA	NA	NA	1.0 U	NA	NA	NA	NA	NA	NA
N-Nitrosodiphenylamine	NA	NA	NA	NA	1.0 U	NA	NA	NA	NA	NA	NA
Hexachlorobenzene	NA	NA	NA	NA	1.0 U	NA	NA	NA	NA	NA	NA
Pentachlorophenol	NA	NA	NA	NA	5.0 U	NA	NA	NA	NA	NA	NA
Phenanthrene	NA	NA	NA	NA	1.0 U	NA	NA	NA	NA	NA	NA
Anthracene	NA	NA	NA	NA	1.0 U	NA	NA	NA	NA	NA	NA
Di-n-Butylphthalate	NA	NA	NA	NA	1.0 U	NA	NA	NA	NA	NA	NA
Fluoranthene	NA	NA	NA	NA	1.0 U	NA	NA	NA	NA	NA	NA
Pyrene	NA	NA	NA	NA	1.0 U	NA	NA	NA	NA	NA	NA
Butylbenzylphthalate	NA	NA	NA	NA	1.0 U	NA	NA	NA	NA	NA	NA
Benzo(a)anthracene	NA	NA	NA	NA	1.0 U	NA	NA	NA	NA	NA	NA
bis(2-Ethylhexyl)phthalate	NA	NA	NA	NA	**1.6**	NA	NA	NA	NA	NA	NA
Chrysene	NA	NA	NA	NA	1.0 U	NA	NA	NA	NA	NA	NA
Di-n-Octyl phthalate	NA	NA	NA	NA	1.0 U	NA	NA	NA	NA	NA	NA
Benzo(a)pyrene	NA	NA	NA	NA	1.0 U	NA	NA	NA	NA	NA	NA
Indeno(1,2,3-cd)pyrene	NA	NA	NA	NA	1.0 U	NA	NA	NA	NA	NA	NA
Dibenz(a,h)anthracene	NA	NA	NA	NA	1.0 U	NA	NA	NA	NA	NA	NA
Benzo(g,h,i)perylene	NA	NA	NA	NA	1.0 U	NA	NA	NA	NA	NA	NA
1-Methylnaphthalene	NA	NA	NA	NA	1.0 U	NA	NA	NA	NA	NA	NA
Total Benzofluoranthenes	NA	NA	NA	NA	1.0 U	NA	NA	NA	NA	NA	NA

TABLE 4
LSIV WHOLE WATER SAMPLING ANALYTICAL RESULTS
LONG-TERM STORMWATER TREATMENT SYSTEM
NORTH BOEING FIELD - SEATTLE, WASHINGTON

Sample Location ID	LTST-W-LSIV	LTST-W-LSIV	LTST-W-LSIV	LTST-W-LSIV	LTST-W-LSIV	LTST-W-LSIV	LTST-W-LSIV	LTST-W-LSIV	LSTS-W-LSIV	LTST-W-LSIV	LTST-W-LSIV
Laboratory Data ID	TW50B	TX90C	TY96C	UA56C	UC19C/UC19F/UC20C	UC78C/UC78F/UC80C	UE10B/UE10C/UE11B	UE68B/UE68E/UE73B	UH75B/UH75G/UH76B	UL49B/UL49E/UL50B	UM18B/UM18D/UM19B
Sample Start Date	11/8/2011	11/16/2011	11/22/2011	12/5/2011	12/20/2011	12/27/2011	1/9/2012	1/20/2012	2/6/2012	3/5/2012	3/12/2012
Sample End Date or Grab Date	11/11/2011	11/17/2011	11/23/2011	12/8/2011	12/21/2011	12/28/2011	1/12/2012	1/21/2012	2/8/2012	3/8/2012	3/13/2012
Event Type	Monthly	Storm	Storm	Monthly	2nd Monthly	Storm	Monthly	Storm	Monthly	Monthly	Storm
Sample Type	Time-weighted composite, consisting of bypass and non-bypass flows						Flow-weighted composite, consisting of bypass and non-bypass flows				
PAHs (µg/L)											
Method SW8270D-SIM											
Naphthalene	NA	NA	NA	NA	0.010 U	NA	NA	NA	NA	NA	NA
2-Methylnaphthalene	NA	NA	NA	NA	0.010 U	NA	NA	NA	NA	NA	NA
1-Methylnaphthalene	NA	NA	NA	NA	0.010 U	NA	NA	NA	NA	NA	NA
Acenaphthylene	NA	NA	NA	NA	0.010 U	NA	NA	NA	NA	NA	NA
Acenaphthene	NA	NA	NA	NA	**0.19**	NA	NA	NA	NA	NA	NA
Fluorene	NA	NA	NA	NA	0.010 U	NA	NA	NA	NA	NA	NA
Phenanthrene	NA	NA	NA	NA	**0.028**	NA	NA	NA	NA	NA	NA
Anthracene	NA	NA	NA	NA	0.010 U	NA	NA	NA	NA	NA	NA
Fluoranthene	NA	NA	NA	NA	**0.042**	NA	NA	NA	NA	NA	NA
Pyrene	NA	NA	NA	NA	**0.031**	NA	NA	NA	NA	NA	NA
Benzo(a)anthracene	NA	NA	NA	NA	0.010 U	NA	NA	NA	NA	NA	NA
Chrysene	NA	NA	NA	NA	**0.029**	NA	NA	NA	NA	NA	NA
Benzo(a)pyrene	NA	NA	NA	NA	**0.014**	NA	NA	NA	NA	NA	NA
Indeno(1,2,3-cd)pyrene	NA	NA	NA	NA	**0.013**	NA	NA	NA	NA	NA	NA
Dibenz(a,h)anthracene	NA	NA	NA	NA	0.010 U	NA	NA	NA	NA	NA	NA
Benzo(g,h,i)perylene	NA	NA	NA	NA	**0.016**	NA	NA	NA	NA	NA	NA
Dibenzofuran	NA	NA	NA	NA	0.010 U	NA	NA	NA	NA	NA	NA
Total Benzofluoranthenes	NA	NA	NA	NA	**0.046**	NA	NA	NA	NA	NA	NA
CPAH TEQ	NA	NA	NA	NA	**0.020**	NA	NA	NA	NA	NA	NA
TOTAL METALS (µg/L)											
Method EPA200.8/6010B,C/7470A											
Arsenic	NA	NA	NA	**1.2**	**1.4**	**0.9**	**1.0**	**1.6**	**1.2**	**1.0**	**0.7**
Cadmium	NA	NA	NA	0.1 U	0.1 U	**0.3**	**0.2**	**0.7**	**0.1**	**0.1**	**0.2**
Chromium	NA	NA	NA	**1.0**	**2**	**1.6**	1 U	**3.6**	1 U	1 U	**0.9**
Copper	NA	NA	NA	**1.2**	**3.7**	**8.8**	**3.6**	**11.4**	**2.1**	**2.6**	**3.7**
Iron	NA	NA	NA	**10,200**	**14,300**	**5860**	**9010**	**14,800**	**8330**	**8520**	**3490**
Lead	NA	NA	NA	**0.2**	**1.5**	**26.1**	**1.2**	**8.0**	**0.5**	**0.9**	**1.5**
Manganese	NA	NA	NA	**898**	**999**	**221**	**502**	**187**	**739**	**549**	**110**
Mercury	NA	NA	NA	0.1 U	0.1 U	0.1 U	0.1 U	0.1 U	0.1 U	0.1 U	0.1 U
Nickel	NA	NA	NA	**1.0**	**1.2**	**1.4**	**1.3**	**3.5**	**1.4**	**4.1**	**1.1**
Zinc	NA	NA	NA	**8**	**15**	**52**	**34**	**87**	**18**	**21**	**27**
DISSOLVED METALS (µg/L)											
Method EPA200.8/SW6010B,C											
Arsenic	NA	NA	NA	NA	**0.9**	**0.4**	**0.5**	**0.2**	**0.6**	**0.4**	**0.4**
Cadmium	NA	NA	NA	NA	0.1 U	0.1 U	0.1 U	**0.1**	0.1 U	0.1 U	0.1 U
Chromium	NA	NA	NA	NA	**0.5**	0.5 U	1 U	0.5 U	0.5 U	0.5 U	0.5 U
Copper	NA	NA	NA	NA	0.5 U	**1.8**	**1.7**	**2.2**	**0.9**	**1.1**	**1.5**
Iron	NA	NA	NA	NA	**4260**	**620**	**1030**	**190**	**680**	**670**	**460**
Lead	NA	NA	NA	NA	**0.2**	**1.5**	**0.2**	**0.2**	0.1 U	0.1 U	**0.1**
Manganese	NA	NA	NA	NA	**936**	**130**	**440**	**98**	**693**	**484**	**93**
Nickel	NA	NA	NA	NA	**0.8**	0.5 U	**1.0**	**1.3**	**1.3**	**3.5**	**0.7**
Zinc	NA	NA	NA	NA	**5**	**19**	**14**	**27**	**9**	**8**	**15**
DISSOLVED METALS (ng/L)											
Method SW7470A											
Mercury	NA	NA	NA	NA	20.0 U	20.0 U	20.0 U	20.0 U	20.0 U	20.0 U	20.0 U
CONVENTIONALS											
pH (SU; EPA 150.1; SM 4500H)	NA	NA	NA	**7.06**	**6.66**	**6.39**	**6.98**	**6.68**	**7.08**	**7.13**	**6.47**
Total Suspended Solids (mg/L; EPA 160.2; SM2540D)	**16.7**	**9.4**	**7.7**	**20.3**	**19.4**	**23.4**	**21.1**	**35.9**	**17.5**	**26.6**	**14.2**
Turbidity (NTU; EPA 180.1)	**80.0**	**38.2**	**9.30**	**76.0**	**61.2**	**20.0**	**66.0**	**37.0**	**66.0**	**52.0**	**14.0**

TABLE 4
LSIV WHOLE WATER SAMPLING ANALYTICAL RESULTS
LONG-TERM STORMWATER TREATMENT SYSTEM
NORTH BOEING FIELD - SEATTLE, WASHINGTON

Sample Location ID	LTST-W-LSIV	LTST-W-LSIV	LTST-W-LSIV	LTST-W-LSIV	LTST-W-LSIV	LTST-W-LSIV	LTST-W-LSIV	LTST-W-LSIV	LSTS-W-LSIV	LTST-W-LSIV	LTST-W-LSIV
Laboratory Data ID	TW50B	TX90C	TY96C	UA56C	UC19C/UC19F/UC20C	UC78C/UC78F/UC80C	UE10B/UE10C/UE11B	UE68B/UE68E/UE73B	UH75B/UH75G/UH76B	UL49B/UL49E/UL50B	UM18B/UM18D/UM19B
Sample Start Date	11/8/2011	11/16/2011	11/22/2011	12/5/2011	12/20/2011	12/27/2011	1/9/2012	1/20/2012	2/6/2012	3/5/2012	3/12/2012
Sample End Date or Grab Date	11/11/2011	11/17/2011	11/23/2011	12/8/2011	12/21/2011	12/28/2011	1/12/2012	1/21/2012	2/8/2012	3/8/2012	3/13/2012
Event Type	Monthly	Storm	Storm	Monthly	2nd Monthly	Storm	Monthly	Storm	Monthly	Monthly	Storm
Sample Type	Time-weighted composite, consisting of bypass and non-bypass flows						Flow-weighted composite, consisting of bypass and non-bypass flows				
PARTICLE/GRAIN SIZE (mg/L)											
Method ASTM-D3977C											
Sediment Conc. > 500 µm	0.01 U	**0.1**	**0.6**	**0.1**	**1.0**	**1.3**	**0.7**	**22.7**	**2.1**	**4.1**	**3.0**
Sediment Conc. 500 to 250 µm	**2.0**	**0.2**	**1.0**	**0.6**	**1.0**	**3.6**	**3.5**	**8.6**	**1.3**	**2.0**	**2.3**
Sediment Conc. 250 to 125 µm	0.01 U	0.01 U	0.01 U	0.01 U	0.01 U	0.01 U	0.01 U	0.01 U	0.01 U	0.01 U	0.01 U
Sediment Conc. 125 to 62.5 µm	0.01 U	0.01 U	0.01 U	0.01 U	0.01 U	0.01 U	0.01 U	0.01 U	0.01 U	0.01 U	0.01 U
Sediment Conc. 62.5 to 3.9 µm	**15.1**	**6.7**	**11.2**	**14.4**	**12.7**	**14.5**	**13.6**	**51.7**	0.01 U	**14.2**	**10.3**
Sediment Conc. 3.9 to 1 µm	**8.3**	**3.6**	**2.2**	**8.0**	**4.7**	**3.0**	**5.2**	**6.3**	**4.4**	**3.3**	**1.6**
Sediment Conc. < 1 µm	**8.8**	**3.5**	**1.2**	**6.7**	**3.4**	**1.3**	**4.0**	**4.3**	**17.8**	**3.8**	**1.0**
PRECIPITATION (c)											
Amount During Test (inches)	0.0	0.38	1.99	0.0	0.0	0.86	0.23	0.85	0.10	0.06	0.76

TABLE 4
LSIV WHOLE WATER SAMPLING ANALYTICAL RESULTS
LONG-TERM STORMWATER TREATMENT SYSTEM
NORTH BOEING FIELD - SEATTLE, WASHINGTON

Sample Location ID	LTST-W-LSIV	LTST-W-LSIV	LTST-W-LSIV	LTST-W-LSIV	LTST-W-LSIV	LTST-W-LSIV	LTST-W-LSIV	LTST-W-LSIV	LTST-W-LSIV	LTST-W-LSIV
Laboratory Data ID	UU03B/UU03G/UU04B	UX69B/UX69D/UX70B	VS17B/VS17F/VS30B	VV27B/VV27F/VV28B	VW75D/VW75H/VW76D	WC96B/WC96F/WC97B	WG51B/WG51F/WG56B	WI40D/WI40H/WI41D	WK37B/WK37F/WK38B	WK74B/WK74F/WK81B
Sample Start Date	5/7/2012	6/5/2012	11/11/2012	--	12/16/2012	--	3/4/2013	3/19/2013	--	4/5/2013
Sample End Date or Grab Date	5/10/2012	6/7/2012	11/11/2012	12/6/2012	12/17/2012	2/7/2013	3/7/2013	3/20/2013	4/4/2013	4/6/2013
Event Type	Monthly	Monthly	Storm	Monthly	Storm	Monthly	Monthly	Storm	Monthly	Storm
Sample Type	Flow-weighted composite, bypass only			Grab, non-bypass flow	Flow-weighted composite, bypass only	Grab, non-bypass flow	Flow-weighted composite, bypass only		Grab, non-bypass flow	Flow-weighted composite, bypass only
PCBs (µg/L) (a)										
Method SW8082A										
Aroclor 1016	0.010 U	0.010 U	0.010 U	0.010 U	0.005 U	0.005 U	0.005 U	0.005 U	0.005 U	0.005 U
Aroclor 1242	0.010 U	0.010 U	0.010 U	0.010 U	0.005 U	0.005 U	0.005 U	0.005 U	0.005 U	0.005 U
Aroclor 1248	0.010 U	0.010 U	0.010 U	0.010 U	0.005 U	0.005 U	0.005 U	0.005 U	0.005 U	0.005 U
Aroclor 1254	0.010 U	**0.017**	**0.014**	**0.010**	0.005 U	0.005 U	**0.015**	**0.014**	0.005 U	**0.014**
Aroclor 1260	0.010 U	0.010 U	0.010 U	0.010 U	0.005 U	0.005 U	0.005 U	0.005 U	0.005 U	0.005 U
Aroclor 1221	0.010 U	0.010 U	0.010 U	0.010 U	0.005 U	0.005 U	0.005 U	0.005 U	0.005 U	0.005 U
Aroclor 1232	0.010 U	0.010 U	0.010 U	0.010 U	0.005 U	0.005 U	0.005 U	0.005 U	0.005 U	0.005 U
Aroclor 1262	0.010 U	0.010 U	0.010 U	0.010 U	0.005 U	0.005 U	0.005 U	0.005 U	0.005 U	0.005 U
Total PCBs (b)	ND	**0.017**	**0.014**	**0.010**	ND	ND	**0.015**	**0.014**	ND	**0.014**
SEMIVOLATILES (µg/L)										
Method SW8270D										
Phenol	NA	NA	NA	NA	NA	1.0 U	1.0 U	1.0 U	1.0 U	1.0 U
1,3-Dichlorobenzene	NA	NA	NA	NA	NA	1.0 U	1.0 U	1.0 U	1.0 U	1.0 U
1,4-Dichlorobenzene	NA	NA	NA	NA	NA	1.0 U	1.0 U	1.0 U	1.0 U	1.0 U
Benzyl Alcohol	NA	NA	NA	NA	NA	2.0 U	2.0 UJ	2.0 U	2.0 U	2.0 U
1,2-Dichlorobenzene	NA	NA	NA	NA	NA	1.0 U	1.0 U	1.0 U	1.0 U	1.0 U
2-Methylphenol	NA	NA	NA	NA	NA	1.0 U	1.0 U	1.0 U	1.0 U	1.0 U
4-Methylphenol	NA	NA	NA	NA	NA	2.0 U	2.0 U	2.0 U	2.0 U	2.0 U
Hexachloroethane	NA	NA	NA	NA	NA	2.0 U	2.0 U	2.0 U	2.0 U	2.0 U
2,4-Dimethylphenol	NA	NA	NA	NA	NA	3.0 U	3.0 U	3.0 U	3.0 U	3.0 U
Benzoic Acid	NA	NA	NA	NA	NA	20 U	20 U	20 U	20 U	20 U
1,2,4-Trichlorobenzene	NA	NA	NA	NA	NA	1.0 U	1.0 U	1.0 U	1.0 U	1.0 U
Naphthalene	NA	NA	NA	NA	NA	1.0 U	1.0 U	1.0 U	1.0 U	1.0 U
Hexachlorobutadiene	NA	NA	NA	NA	NA	3.0 U	3.0 U	3.0 U	3.0 U	3.0 U
2-Methylnaphthalene	NA	NA	NA	NA	NA	1.0 U	1.0 U	1.0 U	1.0 U	1.0 U
Dimethylphthalate	NA	NA	NA	NA	NA	1.0 U	1.0 U	1.0 U	1.0 U	1.0 U
Acenaphthylene	NA	NA	NA	NA	NA	1.0 U	1.0 U	1.0 U	1.0 U	1.0 U
Acenaphthene	NA	NA	NA	NA	NA	1.0 U	1.0 U	1.0 U	1.0 U	1.0 U
Dibenzofuran	NA	NA	NA	NA	NA	1.0 U	1.0 U	1.0 U	1.0 U	1.0 U
Diethylphthalate	NA	NA	NA	NA	NA	1.0 U	1.0 U	1.0 U	1.0 U	1.0 U
Fluorene	NA	NA	NA	NA	NA	1.0 U	1.0 U	1.0 U	1.0 U	1.0 U
N-Nitrosodiphenylamine	NA	NA	NA	NA	NA	1.0 U	1.0 U	1.0 U	1.0 U	1.0 U
Hexachlorobenzene	NA	NA	NA	NA	NA	1.0 U	1.0 U	1.0 U	1.0 U	1.0 U
Pentachlorophenol	NA	NA	NA	NA	NA	10 UJ	10 U	10 U	10 U	10 U
Phenanthrene	NA	NA	NA	NA	NA	1.0 U	1.0 U	1.0 U	1.0 U	1.0 U
Anthracene	NA	NA	NA	NA	NA	1.0 U	1.0 U	1.0 U	1.0 U	1.0 U
Di-n-Butylphthalate	NA	NA	NA	NA	NA	1.0 U	1.0 U	1.0 U	1.0 U	1.0 U
Fluoranthene	NA	NA	NA	NA	NA	1.0 U	1.0 U	1.0 U	1.0 U	1.0 U
Pyrene	NA	NA	NA	NA	NA	1.0 U	1.0 U	1.0 U	1.0 U	1.0 U
Butylbenzylphthalate	NA	NA	NA	NA	NA	1.0 U	1.0 U	1.0 U	1.0 U	**1.2**
Benzo(a)anthracene	NA	NA	NA	NA	NA	1.0 U	1.0 U	1.0 U	1.0 U	1.0 U
bis(2-Ethylhexyl)phthalate	NA	NA	NA	NA	NA	1.0 U	1.0 U	1.0 U	1.0 U	**3.1**
Chrysene	NA	NA	NA	NA	NA	1.0 U	1.0 U	1.0 U	1.0 U	1.0 U
Di-n-Octyl phthalate	NA	NA	NA	NA	NA	1.0 U	**1.0**	1.0 U	1.0 U	1.0 U
Benzo(a)pyrene	NA	NA	NA	NA	NA	1.0 U	1.0 U	1.0 U	1.0 U	1.0 U
Indeno(1,2,3-cd)pyrene	NA	NA	NA	NA	NA	1.0 U	1.0 U	1.0 U	1.0 U	1.0 U
Dibenz(a,h)anthracene	NA	NA	NA	NA	NA	1.0 U	1.0 U	1.0 U	1.0 U	1.0 U
Benzo(g,h,i)perylene	NA	NA	NA	NA	NA	1.0 U	1.0 U	1.0 U	1.0 U	1.0 U
1-Methylnaphthalene	NA	NA	NA	NA	NA	1.0 U	1.0 U	1.0 U	1.0 U	1.0 U
Total Benzofluoranthenes	NA	NA	NA	NA	NA	5.0 U	5.0 U	5.0 U	5.0 U	5.0 U

TABLE 4
LSIV WHOLE WATER SAMPLING ANALYTICAL RESULTS
LONG-TERM STORMWATER TREATMENT SYSTEM
NORTH BOEING FIELD - SEATTLE, WASHINGTON

Sample Location ID	LTST-W-LSIV	LTST-W-LSIV	LTST-W-LSIV	LTST-W-LSIV	LTST-W-LSIV	LTST-W-LSIV	LTST-W-LSIV	LTST-W-LSIV	LTST-W-LSIV	LTST-W-LSIV
Laboratory Data ID	UU03B/UU03G/UU04B	UX69B/UX69D/UX70B	VS17B/VS17F/VS30B	VV27B/VV27F/VV28B	VW75D/VW75H/VW76D	WC96B/WC96F/WC97B	WG51B/WG51F/WG56B	WI40D/WI40H/WI41D	WK37B/WK37F/WK38B	WK74B/WK74F/WK81B
Sample Start Date	5/7/2012	6/5/2012	11/11/2012	--	12/16/2012	--	3/4/2013	3/19/2013	--	4/5/2013
Sample End Date or Grab Date	5/10/2012	6/7/2012	11/11/2012	12/6/2012	12/17/2012	2/7/2013	3/7/2013	3/20/2013	4/4/2013	4/6/2013
Event Type	Monthly	Monthly	Storm	Monthly	Storm	Monthly	Monthly	Storm	Monthly	Storm
Sample Type	Flow-weighted composite, bypass only			Grab, non-bypass flow	Flow-weighted composite, bypass only	Grab, non-bypass flow	Flow-weighted composite, bypass only		Grab, non-bypass flow	Flow-weighted composite, bypass only
PAHs (µg/L)										
Method SW8270D-SIM										
Naphthalene	NA	NA	NA	NA	NA	**0.012**	**0.021**	**0.034**	0.010 U	**0.035**
2-Methylnaphthalene	NA	NA	NA	NA	NA	**0.018**	**0.032**	**0.049**	0.010 U	**0.043**
1-Methylnaphthalene	NA	NA	NA	NA	NA	**0.016**	**0.024**	**0.035**	0.010 U	**0.036**
Acenaphthylene	NA	NA	NA	NA	NA	0.010 U	0.010 U	0.010 U	0.010 U	0.010 U
Acenaphthene	NA	NA	NA	NA	NA	**0.13**	0.010 U	0.010 U	**0.042**	0.010 U
Fluorene	NA	NA	NA	NA	NA	0.010 U	0.010 U	0.010 U	0.010 U	0.010 U
Phenanthrene	NA	NA	NA	NA	NA	**0.017**	**0.062**	**0.066**	0.010 U	**0.079**
Anthracene	NA	NA	NA	NA	NA	0.010 U	0.010 U	0.010 U	0.010 U	0.010 U
Fluoranthene	NA	NA	NA	NA	NA	**0.030**	**0.14**	**0.17**	0.010 U	**0.26**
Pyrene	NA	NA	NA	NA	NA	**0.022**	**0.11**	**0.12**	0.010 U	**0.17**
Benzo(a)anthracene	NA	NA	NA	NA	NA	0.010 U	**0.031**	**0.034**	0.010 U	**0.046**
Chrysene	NA	NA	NA	NA	NA	**0.015**	**0.10**	**0.12**	0.010 U	**0.18**
Benzo(a)pyrene	NA	NA	NA	NA	NA	0.010 U	**0.054**	**0.063**	0.010 U	**0.090**
Indeno(1,2,3-cd)pyrene	NA	NA	NA	NA	NA	0.010 U	**0.055**	**0.064**	0.010 U	**0.10**
Dibenz(a,h)anthracene	NA	NA	NA	NA	NA	0.010 U	**0.011**	**0.013**	0.010 U	**0.019**
Benzo(g,h,i)perylene	NA	NA	NA	NA	NA	0.010 U	**0.073**	**0.078**	0.010 U	**0.12**
Dibenzofuran	NA	NA	NA	NA	NA	0.010 U	0.010 U	0.010 U	0.010 U	0.010 U
Total Benzofluoranthenes	NA	NA	NA	NA	NA	0.020 U	**0.17** J	**0.20**	0.020 U	**0.32**
CPAH TEQ	NA	NA	NA	NA	NA	**0.0002**	**0.082**	**0.095**	ND	**0.140**
TOTAL METALS (µg/L)										
Method EPA200.8/6010B,C/7470A										
Arsenic	**1.5**	**1.8**	**3.8**	**1.1**	**1.2**	**1.3**	**2.4**	**2.0**	**1.4**	**1.8**
Cadmium	0.1 U	**0.4**	**0.6**	**0.1**	**0.3**	0.1 U	**0.4**	**0.4**	0.1 U	**0.4**
Chromium	**1.0**	**3.6**	**4.0**	**0.7**	**1.2**	1 U	**2.9**	**2.6**	**0.8**	**3.2**
Copper	**1.9**	**8.9**	**10.8**	**3.0**	**4.7**	**1.9**	**9.2**	**8.2**	**1.6**	**9.3**
Iron	**14,400**	**14,200**	**42,500**	**5610**	**7110**	**9340**	**20,600**	**16,900**	**10,700**	**11,300**
Lead	**0.4**	**3.2**	**5.3**	**0.4**	**2.9**	**0.3**	**3.7**	**3.3**	**0.1**	**4.3**
Manganese	**813**	**216**	**454**	**457**	**133**	**750**	**232**	**194**	**973**	**183**
Mercury	0.1 U	0.1 U	0.1 U	0.1 U	0.1 U	0.1 U	0.1 U	0.1 U	0.1 U	0.1 U
Nickel	**1.8**	**1.4**	**2.0**	**1.3**	**0.9**	**0.8**	**1.9**	**1.7**	**1.1**	**1.7**
Zinc	**9**	**56**	**81**	**37**	**35**	**11**	**64**	**51**	**6**	**104**
DISSOLVED METALS (µg/L)										
Method EPA200.8/SW6010B,C										
Arsenic	**0.6**	**0.4**	**0.3**	**0.8**	**0.3**	**0.8**	**0.4**	**0.3**	**0.6**	**0.4**
Cadmium	0.1 U	0.1 U	0.1 U	0.1 U	0.1 U	0.1 U	0.1 U	0.1 U	0.1 U	0.1 U
Chromium	0.5 U	**0.5**	0.5 U	0.5 U	0.5 U	1 U	**0.8**	0.5 U	1 U	**0.6**
Copper	**0.5**	**2.8**	**1.8**	**1.6**	**1.2**	**0.9**	**1.6**	**1.5**	0.5 U	**2.9**
Iron	**830**	**350**	**480**	**2490**	**350**	**3430**	**280**	**390**	**1470**	**480**
Lead	0.1 U	**0.2**	**0.1**	**0.1**	**0.1** U	0.1 U	**0.1**	0.1 U	0.1 U	**0.2**
Manganese	**730**	**83**	**109**	**433**	**97**	**687**	**68**	**90**	**923**	**94**
Nickel	**1.4**	**0.6**	0.5 U	**1.3**	**0.5** U	**0.8**	0.5 U	0.5 U	**1.1**	0.5 U
Zinc	**4** U	**11**	**5**	**30**	**16**	**8**	**9**	**9**	4 U	**44**
DISSOLVED METALS (ng/L)										
Method SW7470A										
Mercury	20.0 U	20.0 U	20.0 U	20.0 U	20.0 U	20.0 U	20.0 U	20.0 U	20.0 U	20.0 U
CONVENTIONALS										
pH (SU; EPA 150.1; SM 4500H)	**6.99**	**7.20**	**6.90**	**6.46**	**6.44**	**6.64**	**6.79**	**6.80**	**6.78**	**6.73**
Total Suspended Solids (mg/L; EPA 160.2; SM2540D)	**34.5**	**56.4** J	**176**	**9.0**	**30.3**	**8.6**	**141**	**109**	**20.0**	**65.0**
Turbidity (NTU; EPA 180.1)	**76.0**	**50.5**	**260**	**25.0**	**47.5**	**38.0**	**130**	**95.5**	**77.0**	**56.0**

TABLE 4
LSIV WHOLE WATER SAMPLING ANALYTICAL RESULTS
LONG-TERM STORMWATER TREATMENT SYSTEM
NORTH BOEING FIELD - SEATTLE, WASHINGTON

Sample Location ID	LTST-W-LSIV	LTST-W-LSIV	LTST-W-LSIV	LTST-W-LSIV	LTST-W-LSIV	LTST-W-LSIV	LTST-W-LSIV	LTST-W-LSIV	LTST-W-LSIV	LTST-W-LSIV
Laboratory Data ID	UU03B/UU03G/UU04B	UX69B/UX69D/UX70B	VS17B/VS17F/VS30B	VV27B/VV27F/VV28B	VW75D/VW75H/VW76D	WC96B/WC96F/WC97B	WG51B/WG51F/WG56B	WI40D/WI40H/WI41D	WK37B/WK37F/WK38B	WK74B/WK74F/WK81B
Sample Start Date	5/7/2012	6/5/2012	11/11/2012	--	12/16/2012	--	3/4/2013	3/19/2013	--	4/5/2013
Sample End Date or Grab Date	5/10/2012	6/7/2012	11/11/2012	12/6/2012	12/17/2012	2/7/2013	3/7/2013	3/20/2013	4/4/2013	4/6/2013
Event Type	Monthly	Monthly	Storm	Monthly	Storm	Monthly	Monthly	Storm	Monthly	Storm
Sample Type	Flow-weighted composite, bypass only			Grab, non-bypass flow	Flow-weighted composite, bypass only	Grab, non-bypass flow	Flow-weighted composite, bypass only		Grab, non-bypass flow	Flow-weighted composite, bypass only
PARTICLE/GRAIN SIZE (mg/L)										
Method ASTM-D3977C										
Sediment Conc. > 500 µm	**5.9**	**26.88**	**39.89**	**0.74**	**5.98**	**0.98**	**29.37**	**6.67**	**6.00**	**11.49**
Sediment Conc. 500 to 250 µm	**3.3**	**13.69**	**60.18**	**1.06**	**3.31**	**2.51**	**20.60**	**22.61**	**11.68**	**7.15**
Sediment Conc. 250 to 125 µm	0.01 U	0.01 U	0.01 U	0.01 U	0.01 U	0.01 U	0.01 U	0.01 U	0.01 U	0.01 U
Sediment Conc. 125 to 62.5 µm	0.01 U	0.01 U	**36.53**	0.01 U	0.01 U	0.01 U	0.01 U	0.01 U	0.01 U	0.01 U
Sediment Conc. 62.5 to 3.9 µm	**19.9**	**30.53**	**96.30**	0.01 U	**25.47**	0.01 U	**79.47**	**78.37**	0.01 U	**3.47**
Sediment Conc. 3.9 to 1 µm	**6.1**	**3.80**	**25.52**	**3.14**	**4.66**	**3.32**	**18.63**	**19.43**	**8.43**	**0.55**
Sediment Conc. < 1 µm	**3.0**	**1.18**	**16.45**	**7.83**	**2.23**	**10.45**	**9.59**	**8.98**	**16.23**	**0.30**
PRECIPITATION (c)										
Amount During Test (inches)	0.01	0.48	0.63	0.69	0.94	0.35	0.87	0.51	0.00	0.64

TABLE 4
LSIV WHOLE WATER SAMPLING ANALYTICAL RESULTS
LONG-TERM STORMWATER TREATMENT SYSTEM
NORTH BOEING FIELD - SEATTLE, WASHINGTON

Sample Location ID	LTST-W-LSIV	LTST-W-LSIV	LTST-W-LSIV	LTST-W-LSIV	LTST-W-LSIV	LTST-W-LSIV	LTST-W-LSIV	LTST-W-LSIV	LTST-W-LSIV	LTST-W-LSIV
Laboratory Data ID	WP40B/WP40F/WP39B	WT15A/WT15D/WT16A	WX01B/WX01F/WX02B	XA11B/XA11F/XA14B	XE07B/XE07F/XE22B	XE91B/XE91F/XE92B	XJ12B/XJ12F/XJ36B	XN18B/XN18F/XN19B	XO76B/XO76D/XO77B	XQ44B/XQ44F/XQ45B
Sample Start Date	--	--	--	--	9/5/2013	--	10/7/2013	11/4/2013	11/18/2013	--
Sample End Date or Grab Date	5/9/2013	6/7/2013	7/10/2013	8/8/2013	9/6/2013	9/12/2013	10/8/2013	11/7/2013	11/18/2013	12/5/2013
Event Type	Monthly	Monthly	Monthly	Monthly	Storm	Monthly	Monthly	Monthly	Storm	Monthly
Sample Type	Grab, non-bypass flow				Flow-weighted composite, bypass only	Grab, non-bypass flow	Flow-weighted composite, bypass only			Grab, non-bypass flow
PCBs (µg/L) (a)										
Method SW8082A										
Aroclor 1016	0.005 U	0.005 U	0.005 U	0.005 U	0.005 U	0.005 U	0.005 U	0.005 U	0.005 U	0.005 U
Aroclor 1242	0.005 U	0.005 U	0.005 U	0.005 U	0.005 U	0.005 U	0.005 U	0.005 U	0.005 U	0.005 U
Aroclor 1248	0.005 U	0.005 U	0.005 U	0.005 U	0.005 U	0.005 U	0.020 U	0.005 U	0.005 U	0.005 U
Aroclor 1254	0.005 U	0.005 U	0.005 U	0.005 U	**0.030**	0.005 U	**0.13**	**0.015**	**0.011**	0.005 U
Aroclor 1260	0.005 U	0.005 U	0.005 U	0.005 U	0.005 U	0.005 U	**0.052**	0.005 U	**0.0050** J1	0.005 U
Aroclor 1221	0.005 U	0.005 U	0.005 U	0.005 U	0.005 U	0.005 U	0.005 U	0.005 U	0.005 U	0.005 U
Aroclor 1232	0.005 U	0.005 U	0.005 U	0.008 U	0.005 U	0.005 U	0.005 U	0.005 U	0.013 U	0.005 U
Aroclor 1262	0.005 U	0.005 U	0.005 U	0.005 U	0.005 U	0.005 U	0.005 U	0.005 U	0.005 U	0.005 U
Total PCBs (b)	ND	ND	ND	ND	**0.030**	ND	**0.182**	**0.015**	**0.016**	ND
SEMIVOLATILES (µg/L)										
Method SW8270D										
Phenol	1.0 U	1.0 U	1.0 U	1.0 U	1.0 U	1.0 U	1.0 U	1.0 U	1.0 U	1.0 U
1,3-Dichlorobenzene	1.0 U	1.0 U	1.0 U	1.0 U	1.0 U	1.0 U	1.0 U	1.0 U	1.0 U	1.0 U
1,4-Dichlorobenzene	1.0 U	1.0 U	1.0 U	1.0 U	1.0 U	1.0 U	1.0 U	1.0 U	1.0 U	1.0 U
Benzyl Alcohol	2.0 U	2.0 U	2.0 U	2.0 U	2.0 UJ	2.0 U	2.0 U	2.0 U	2.0 U	2.0 UJ
1,2-Dichlorobenzene	1.0 U	1.0 U	1.0 U	1.0 U	1.0 U	1.0 U	1.0 U	1.0 U	1.0 U	1.0 U
2-Methylphenol	1.0 U	1.0 U	1.0 U	1.0 U	1.0 U	1.0 U	1.0 U	1.0 U	1.0 U	1.0 U
4-Methylphenol	2.0 U	2.0 U	2.0 U	2.0 U	2.0 U	2.0 U	2.0 U	2.0 U	2.0 U	2.0 U
Hexachloroethane	2.0 U	2.0 U	2.0 U	2.0 U	2.0 U	2.0 U	2.0 U	2.0 U	2.0 U	2.0 U
2,4-Dimethylphenol	3.0 U	3.0 U	3.0 U	3.0 U	3.0 U	3.0 U	3.0 U	3.0 U	3.0 U	3.0 U
Benzoic Acid	20 U	20 U	20 U	20 U	20 U	20 U	20 U	20 U	20 U	20 UJ
1,2,4-Trichlorobenzene	1.0 U	1.0 U	1.0 U	1.0 U	1.0 U	1.0 U	1.0 U	1.0 U	1.0 U	1.0 U
Naphthalene	1.0 U	1.0 U	1.0 U	1.0 U	**9.6**	1.0 U	1.0 U	1.0 U	1.0 U	1.0 U
Hexachlorobutadiene	3.0 U	3.0 U	3.0 U	3.0 U	3.0 U	3.0 U	3.0 U	3.0 U	3.0 U	3.0 U
2-Methylnaphthalene	1.0 U	1.0 U	1.0 U	1.0 U	**17**	1.0 U	1.0 U	1.0 U	1.0 U	1.0 U
Dimethylphthalate	1.0 U	1.0 U	1.0 U	1.0 U	1.0 U	1.0 U	1.0 U	1.0 U	1.0 U	1.0 U
Acenaphthylene	1.0 U	1.0 U	1.0 U	1.0 U	1.0 U	1.0 U	1.0 U	1.0 U	1.0 U	1.0 U
Acenaphthene	1.0 U	1.0 U	1.0 U	1.0 U	1.0 U	1.0 U	1.0 U	1.0 U	1.0 U	1.0 U
Dibenzofuran	1.0 U	1.0 U	1.0 U	1.0 U	1.0 U	1.0 U	1.0 U	1.0 U	1.0 U	1.0 U
Diethylphthalate	1.0 U	1.0 U	1.0 U	1.0 U	1.0 U	1.0 U	**1.0**	1.0 U	1.0 U	1.0 U
Fluorene	1.0 U	1.0 U	1.0 U	1.0 U	1.0 U	1.0 U	1.0 U	1.0 U	1.0 U	1.0 U
N-Nitrosodiphenylamine	1.0 U	1.0 U	1.0 U	1.0 U	1.0 U	1.0 U	1.0 U	1.0 U	1.0 U	1.0 U
Hexachlorobenzene	1.0 U	1.0 U	1.0 U	1.0 U	1.0 U	1.0 U	1.0 U	1.0 U	1.0 U	1.0 U
Pentachlorophenol	10 U	10 U	10 U	10 U	10 U	10 U	10 U	10 U	10 U	10 UJ
Phenanthrene	1.0 U	1.0 U	1.0 U	1.0 U	1.0 U	1.0 U	1.0 U	1.0 U	1.0 U	1.0 U
Anthracene	1.0 U	1.0 U	1.0 U	1.0 U	1.0 U	1.0 U	1.0 U	1.0 U	1.0 U	1.0 U
Di-n-Butylphthalate	1.0 U	1.0 U	1.0 U	1.0 U	1.0 U	1.0 U	1.0 U	1.0 U	1.0 U	1.0 U
Fluoranthene	1.0 U	1.0 U	1.0 U	1.0 U	1.0 U	1.0 U	**1.5**	1.0 U	1.0 U	1.0 U
Pyrene	1.0 U	1.0 U	1.0 U	1.0 U	1.0 U	1.0 U	**1.5**	1.0 U	1.0 U	1.0 U
Butylbenzylphthalate	1.0 U	1.0 U	1.0 U	1.0 U	1.0 U	1.0 U	1.0 U	1.0 U	**2.1**	1.0 U
Benzo(a)anthracene	1.0 U	1.0 U	1.0 U	1.0 U	1.0 U	1.0 U	1.0 U	1.0 U	1.0 U	1.0 U
bis(2-Ethylhexyl)phthalate	3.0 U	3.0 U	3.0 U	3.0 U	3.0 U	3.0 U	3.0 U	3.0 U	3.0 U	3.0 U
Chrysene	1.0 U	1.0 U	1.0 U	1.0 U	1.0 U	1.0 U	**1.2**	1.0 U	1.0 U	1.0 U
Di-n-Octyl phthalate	1.0 U	1.0 U	1.0 U	1.0 U	**2.0**	1.0 U	**1.7**	**1.3**	1.0 U	1.0 U
Benzo(a)pyrene	1.0 U	1.0 U	1.0 U	1.0 U	1.0 U	1.0 U	1.0 U	1.0 U	1.0 U	1.0 U
Indeno(1,2,3-cd)pyrene	1.0 U	1.0 U	1.0 U	1.0 U	1.0 U	1.0 U	1.0 U	1.0 U	1.0 U	1.0 U
Dibenz(a,h)anthracene	1.0 U	1.0 U	1.0 U	1.0 U	1.0 U	1.0 U	1.0 U	1.0 U	1.0 U	1.0 U
Benzo(g,h,i)perylene	1.0 U	1.0 U	1.0 U	1.0 U	1.0 U	1.0 U	1.0 U	1.0 U	1.0 U	1.0 U
1-Methylnaphthalene	1.0 U	1.0 U	1.0 U	1.0 U	**14**	1.0 U	1.0 U	1.0 U	1.0 U	1.0 U
Total Benzofluoranthenes	5.0 U	5.0 U	5.0 U	5.0 U	5.0 U	5.0 U	5.0 U	5.0 U	5.0 U	5.0 U

TABLE 4
LSIV WHOLE WATER SAMPLING ANALYTICAL RESULTS
LONG-TERM STORMWATER TREATMENT SYSTEM
NORTH BOEING FIELD - SEATTLE, WASHINGTON

Sample Location ID	LTST-W-LSIV	LTST-W-LSIV	LTST-W-LSIV	LTST-W-LSIV	LTST-W-LSIV	LTST-W-LSIV	LTST-W-LSIV	LTST-W-LSIV	LTST-W-LSIV	LTST-W-LSIV
Laboratory Data ID	WP40B/WP40F/WP39B	WT15A/WT15D/WT16A	WX01B/WX01F/WX02B	XA11B/XA11F/XA14B	XE07B/XE07F/XE22B	XE91B/XE91F/XE92B	XJ12B/XJ12F/XJ36B	XN18B/XN18F/XN19B	XO76B/XO76D/XO77B	XQ44B/XQ44F/XQ45B
Sample Start Date	--	--	--	--	9/5/2013	--	10/7/2013	11/4/2013	11/18/2013	--
Sample End Date or Grab Date	5/9/2013	6/7/2013	7/10/2013	8/8/2013	9/6/2013	9/12/2013	10/8/2013	11/7/2013	11/18/2013	12/5/2013
Event Type	Monthly	Monthly	Monthly	Monthly	Storm	Monthly	Monthly	Monthly	Storm	Monthly
Sample Type	Grab, non-bypass flow				Flow-weighted composite, bypass only	Grab, non-bypass flow	Flow-weighted composite, bypass only			Grab, non-bypass flow
PAHs (µg/L)										
Method SW8270D-SIM										
Naphthalene	0.013 U	0.010 U	0.010 U	0.010 U	**10**	**0.030**	**0.076**	0.010 U	**0.014**	0.010 U
2-Methylnaphthalene	0.010 U	0.010 U	0.010 U	0.010 U	**18**	**0.023**	**0.039**	**0.0052** J	**0.017**	0.010 U
1-Methylnaphthalene	0.010 U	0.010 U	0.010 U	0.010 U	**14**	**0.032**	**0.027**	**0.0061** J	**0.016**	0.010 U
Acenaphthylene	0.010 U	0.010 U	0.010 U	0.010 U	0.010 U	0.010 U	**0.011**	0.010 U	0.010 U	0.010 U
Acenaphthene	**0.12**	**0.054**	**0.052**	**0.11**	**0.12**	**0.13**	**0.21**	**0.0063** J	**0.014**	**0.068**
Fluorene	0.010 U	0.010 U	0.010 U	0.010 U	**0.38**	0.010 U	**0.10**	**0.0075** J	**0.015**	0.010 U
Phenanthrene	0.010 U	0.010 U	0.010 U	**0.013**	**0.21**	0.010 U	**1.4**	**0.089**	**0.12**	0.010 U
Anthracene	0.010 U	0.010 U	0.010 U	0.010 U	**0.016**	0.010 U	**0.27**	**0.013**	**0.018**	0.010 U
Fluoranthene	0.010 U	0.010 U	0.010 U	**0.012**	**0.40**	0.010 U	**2.8**	**0.18**	**0.19**	0.010 U
Pyrene	0.010 U	0.010 U	0.010 U	**0.011**	**0.27**	0.010 U	**4.3** J	**0.25**	**0.22**	0.010 U
Benzo(a)anthracene	0.010 U	0.010 U	0.010 U	0.010 U	**0.080**	0.010 U	**2.2**	**0.082**	**0.081**	0.010 U
Chrysene	0.010 U	0.010 U	0.010 U	0.010 U	**0.30**	0.010 U	**3.0**	**0.17**	**0.16**	0.010 U
Benzo(a)pyrene	0.010 U	0.010 U	0.010 U	0.010 U	**0.14**	0.010 U	**2.2**	**0.11**	**0.11**	0.010 U
Indeno(1,2,3-cd)pyrene	0.010 U	0.010 U	0.010 U	0.010 U	**0.19**	0.010 U	**0.93**	**0.12**	**0.12**	0.010 U
Dibenz(a,h)anthracene	0.010 U	0.010 U	0.010 U	0.010 U	**0.034**	0.010 U	**0.24**	**0.022**	**0.025**	0.010 U
Benzo(g,h,i)perylene	0.010 U	0.010 U	0.010 U	0.010 U	**0.23**	0.010 U	**1.6**	**0.15**	**0.15**	0.010 U
Dibenzofuran	0.010 U	0.010 U	0.010 U	0.010 U	**0.40**	0.010 U	**0.068**	0.010 U	**0.013**	0.010 U
Total Benzofluoranthenes	0.020 U	0.020 U	0.020 U	0.020 U	**0.35**	0.020 U	**4.2**	**0.28**	**0.25**	0.020 U
CPAH TEQ	ND	ND	ND	ND	**0.208**	ND	**2.987**	**0.162**	**0.159**	ND
TOTAL METALS (µg/L)										
Method EPA200.8/6010B,C/7470A										
Arsenic	**1.2**	**1.1**	**1.2**	**1.6**	**1.8**	**1.0**	**5.5**	**1.0**	**1.1**	**1.0**
Cadmium	0.1 U	0.1 U	0.1 U	0.1 U	**0.8**	0.1 U	**2.0**	**0.3**	**0.3**	0.1 U
Chromium	**0.8**	**1.0**	**1.1**	**2**	**3.3**	**1.0**	**12.8**	**1.5**	**1.6**	1 U
Copper	**1.0**	**1.3**	**1.1**	**2.3**	**13.8**	**1.0**	**51.0**	**5.6**	**5.7**	**10.7**
Iron	**9710**	**11,300**	**10,800**	**39,100**	**21,900**	**9060**	**26,800**	**9160**	**13,000**	**9050**
Lead	**0.2**	**0.2**	**0.1**	**0.5**	**10.7**	**0.2**	**43.1**	**3.2**	**2.9**	**0.1**
Manganese	**926**	**978**	**1,110**	**1070**	**268**	**978**	**345**	**124**	**114**	**972**
Mercury	0.1 U	0.1 U	0.1 U	0.1 U	0.1 U	0.1 U	0.1 U	0.1 U	0.1 U	0.1 U
Nickel	**0.9**	**0.8**	**0.6**	**0.8**	**1.8**	**0.7**	**8.6**	**1.0**	**1.5**	**0.9**
Zinc	**6**	4 U	4 U	**10**	**98**	**6**	**292**	**48**	**48**	**7**
DISSOLVED METALS (µg/L)										
Method EPA200.8/SW6010B,C										
Arsenic	**0.8**	**0.5**	**0.6**	**0.5**	**0.4**	**0.6**	**0.3**	**0.2**	**0.2**	**0.5**
Cadmium	0.1 U	0.1 U	0.1 U	0.1 U	0.1 U	0.1 U	0.1 U	0.1 U	0.1 U	0.1 U
Chromium	0.5 U	0.5 U	0.5 U	1 U	0.5 U	**0.6**	0.5 U	0.5 U	0.5 U	0.5 U
Copper	**0.6**	**0.5**	**0.6**	0.5 U	**2.1**	0.5 U	**2.9**	**1.3**	**1.4**	**0.6**
Iron	**1920**	**650**	**740**	**680**	**360**	**970**	**310**	**330**	**190**	**780**
Lead	0.1 U	0.1 U	0.1 U	0.1 U	**0.2**	0.1 U	**0.2**	**0.1**	**0.1**	0.1 U
Manganese	**920**	**861**	**975**	**867**	**6**	**915**	**47**	**67**	**46**	**891**
Nickel	**0.9**	**0.7**	**0.6**	**0.7**	0.5 U	**0.7**	0.5 U	0.5 U	**0.6**	0.5 U
Zinc	4 U	4 U	4 U	4 U	**13**	4 U	**12**	**13**	**11**	4 U
DISSOLVED METALS (ng/L)										
Method SW7470A										
Mercury	20.0 U	20.0 U	20.0 U	20.0 U	20.0 U	20.0 U	20.0 U	20.0 U	20.0 U	20.0 U
CONVENTIONALS										
pH (SU; EPA 150.1; SM 4500H)	**6.77**	**6.70**	**6.77**	**6.74**	**6.51**	**6.76**	**6.86** J	**7.00**	**6.48**	**6.94**
Total Suspended Solids (mg/L; EPA 160.2; SM2540D)	**15.8**	**73.0**	**20.2**	**114**	**206**	**15.1**	**298**	**44.6**	**80.8**	**13.1**
Turbidity (NTU; EPA 180.1)	**56.0**	**90.0**	**86.5**	**240**	**20.0**	**74.4**	**22.0**	**17.5**	**26.3**	**53.0**

TABLE 4
LSIV WHOLE WATER SAMPLING ANALYTICAL RESULTS
LONG-TERM STORMWATER TREATMENT SYSTEM
NORTH BOEING FIELD - SEATTLE, WASHINGTON

Sample Location ID	LTST-W-LSIV	LTST-W-LSIV	LTST-W-LSIV	LTST-W-LSIV	LTST-W-LSIV	LTST-W-LSIV	LTST-W-LSIV	LTST-W-LSIV	LTST-W-LSIV	LTST-W-LSIV
Laboratory Data ID	WP40B/WP40F/WP39B	WT15A/WT15D/WT16A	WX01B/WX01F/WX02B	XA11B/XA11F/XA14B	XE07B/XE07F/XE22B	XE91B/XE91F/XE92B	XJ12B/XJ12F/XJ36B	XN18B/XN18F/XN19B	XO76B/XO76D/XO77B	XQ44B/XQ44F/XQ45B
Sample Start Date	--	--	--	--	9/5/2013	--	10/7/2013	11/4/2013	11/18/2013	--
Sample End Date or Grab Date	5/9/2013	6/7/2013	7/10/2013	8/8/2013	9/6/2013	9/12/2013	10/8/2013	11/7/2013	11/18/2013	12/5/2013
Event Type	Monthly	Monthly	Monthly	Monthly	Storm	Monthly	Monthly	Monthly	Storm	Monthly
Sample Type	Grab, non-bypass flow				Flow-weighted composite, bypass only	Grab, non-bypass flow	Flow-weighted composite, bypass only			Grab, non-bypass flow
PARTICLE/GRAIN SIZE (mg/L)										
Method ASTM-D3977C										
Sediment Conc. > 500 µm	**5.37**	**20.18**	**8.01**	**8.19**	**54.41**	**0.11**	**131.84**	**5.06**	**15.31**	**3.21**
Sediment Conc. 500 to 250 µm	**8.15**	**18.59**	**10.22**	**47.97**	**24.45**	**10.25**	**128.76**	**10.87**	**46.62**	**1.44**
Sediment Conc. 250 to 125 µm	0.01 U	0.01 U	0.01 U	0.01 U	0.01 U	0.01 U	0.01 U	0.01 U	0.01 U	0.01 U
Sediment Conc. 125 to 62.5 µm	0.01 U	0.01 U	0.01 U	**0.51**	**0.07**	0.01 U	**0.31**	**0.01**	0.01 U	0.01 U
Sediment Conc. 62.5 to 3.9 µm	0.01 U	0.01 U	0.01 U	**65.13**	**41.27**	**39.00**	**162.08**	**4.07**	**48.78**	**6.01**
Sediment Conc. 3.9 to 1 µm	**9.23**	**8.67**	**6.57**	**24.61**	**3.95**	**11.66**	**13.37**	**0.52**	**12.36**	**3.05**
Sediment Conc. < 1 µm	**18.07**	**22.87**	**16.32**	**9.76**	**1.51**	**11.04**	**6.01**	**0.28**	**3.24**	**2.75**
PRECIPITATION (c)										
Amount During Test (inches)	0.00	0.00	0.00	0.00	0.83	0.00	0.34	0.61	0.61	0.12

TABLE 4
LSIV WHOLE WATER SAMPLING ANALYTICAL RESULTS
LONG-TERM STORMWATER TREATMENT SYSTEM
NORTH BOEING FIELD - SEATTLE, WASHINGTON

Sample Location ID	LTST-W-LSIV	LTST-W-LSIV	LTST-W-LSIV	LTST-W-LSIV	LTST-W-LSIV	LTST-W-LSIV	LTST-W-LSIV	LTST-W-LSIV	LTST-W-LSIV	LTST-W-LSIV	LTST-W-LSIV
Laboratory Data ID	XT98B/XT98F/XT99B	XU48B/XU48D/XU49B	XZ68B/XZ68F/XZ69B	YB86B/YB86D/YB88B	YG17B/YG17D/YG18B	YR11B/YR11F/YR12B	ZE23B/ZE23F/ZE24B	ZF08B/ZF08F/ZF09B	ZO34B/ZO34F/ZO35B	ZQ78B/ZQ78F/ZQ79B	ZS95B/ZS95F/ZS96B
Sample Start Date	1/6/2014	1/10/2014	2/16/2014	3/5/2014	4/7/2014	--	--	10/13/2014	12/9/2014	12/23/2014	--
Sample End Date or Grab Date	1/8/2014	1/11/2014	2/16/2014	3/6/2014	4/8/2014	7/10/2014	10/9/2014	10/14/2014	12/10/2014	12/24/2014	1/15/2015
Event Type	Quarterly	Storm	Storm	Storm	Quarterly	Quarterly	Quarterly	Storm	Storm	Storm	Quarterly
Sample Type	Flow-weighted composite, bypass only					Grab, non-bypass flow		Flow-weighted composite, bypass only			Grab, non-bypass flow
PCBs (µg/L) (a)											
Method SW8082A											
Aroclor 1016	0.005 U	0.005 U	0.005 U	0.005 U	0.005 U	0.005 U	0.005 U	0.005 U	0.005 U	0.005 U	0.005 U
Aroclor 1242	0.005 U	0.005 U	0.005 U	0.005 U	0.005 U	0.005 U	0.005 U	0.005 U	0.005 U	0.005 U	0.005 U
Aroclor 1248	0.005 U	0.005 U	0.005 U	0.005 U	0.005 U	0.005 U	0.005 U	0.005 U	0.005 U	0.005 U	0.005 U
Aroclor 1254	**0.021**	**0.018**	**0.021**	0.005 U	**0.017**	0.005 U	0.005 U	**0.019**	**0.012**	**0.012**	0.005 U
Aroclor 1260	**0.015** J	**0.013**	**0.0090** J	0.005 U	0.005 U	0.005 U	0.005 U	**0.013**	0.005 U	**0.0080** J	0.005 U
Aroclor 1221	0.005 U	0.005 U	0.005 U	0.005 U	0.005 U	0.005 U	0.005 U	0.005 U	0.005 U	0.005	0.005 U
Aroclor 1232	0.013 U	0.005 U	0.005 U	0.005 U	0.005 U	0.005 U	0.038 U	0.005 U	0.005 U	0.005	0.005 U
Aroclor 1262	0.005 U	0.005 U	0.005 U	0.005 U	0.005 U	0.005 U	0.005 U	0.005 U	0.005 U	0.005	0.005 U
Total PCBs (b)	**0.036**	**0.031**	**0.030**	ND	**0.017**	ND	ND	**0.032**	**0.012**	**0.020**	ND
SEMIVOLATILES (µg/L)											
Method SW8270D											
Phenol	1.0 U	1.0 U	1.0 U	1.0 U	1.0 U	1.0 U	10 U	1.0 U	1.0 U	1.0 U	1.0 U
1,3-Dichlorobenzene	1.0 U	1.0 U	1.0 U	1.0 U	1.0 U	1.0 U	10 U	1.0 U	1.0 U	1.0 U	1.0 U
1,4-Dichlorobenzene	1.0 U	1.0 U	1.0 U	1.0 U	1.0 U	1.0 U	10 U	1.0 U	1.0 U	1.0 U	1.0 U
Benzyl Alcohol	2.0 U	2.0 U	2.0 U	2.0 U	2.0 U	2.0 U	20 U	2.0 UJ	2.0 U	2.0 U	2.0 U
1,2-Dichlorobenzene	1.0 U	1.0 U	1.0 U	1.0 U	1.0 U	1.0 U	10 U	1.0 U	1.0 U	1.0 U	1.0 U
2-Methylphenol	1.0 U	1.0 U	1.0 U	1.0 U	1.0 U	1.0 UJ	10 U	1.0 U	1.0 U	1.0 U	1.0 U
4-Methylphenol	2.0 U	2.0 U	2.0 U	2.0 U	2.0 U	2.0 UJ	20 U	2.0 U	2.0 U	2.0 U	2.0 U
Hexachloroethane	2.0 U	2.0 U	2.0 U	2.0 U	2.0 U	2.0 UJ	20 U	2.0 U	2.0 U	2.0 U	2.0 U
2,4-Dimethylphenol	3.0 U	3.0 U	3.0 U	3.0 U	3.0 U	3.0 U	30 U	3.0 U	3.0 U	3.0 U	3.0 U
Benzoic Acid	20 UJ	20 UJ	20 U	20 U	20 U	20 UJ	200 UJ	20 U	20 U	20 U	20 U
1,2,4-Trichlorobenzene	1.0 U	1.0 U	1.0 U	1.0 U	1.0 U	1.0 U	10 U	1.0 U	1.0 U	1.0 U	1.0 U
Naphthalene	1.0 U	1.0 U	1.0 U	1.0 U	1.0 U	1.0 UJ	10 U	1.0 U	1.0 U	1.0 U	1.0 U
Hexachlorobutadiene	3.0 U	3.0 U	3.0 U	3.0 U	3.0 U	3.0 U	30 U	3.0 U	3.0 U	3.0 U	3.0 U
2-Methylnaphthalene	1.0 U	1.0 U	1.0 U	1.0 U	1.0 U	1.0 U	10 U	1.0 U	1.0 U	1.0 U	1.0 U
Dimethylphthalate	1.0 U	1.0 U	1.0 U	1.0 U	1.0 U	1.0 UJ	10 U	1.0 U	1.0 U	1.0 U	1.0 U
Acenaphthylene	1.0 U	1.0 U	1.0 U	1.0 U	1.0 U	1.0 U	10 U	1.0 U	1.0 U	1.0 U	1.0 U
Acenaphthene	1.0 U	1.0 U	1.0 U	1.0 U	1.0 U	1.0 UJ	10 U	1.0 U	1.0 U	1.0 U	1.0 U
Dibenzofuran	1.0 U	1.0 U	1.0 U	1.0 U	1.0 U	1.0 U	10 U	1.0 U	1.0 U	1.0 U	1.0 U
Diethylphthalate	1.0 U	1.0 U	1.0 U	1.0 U	1.0 U	1.0 UJ	10 U	1.0 U	1.0 U	1.0 U	1.0 U
Fluorene	1.0 U	1.0 U	1.0 U	1.0 U	1.0 U	1.0 UJ	10 U	1.0 U	1.0 U	1.0 U	1.0 U
N-Nitrosodiphenylamine	1.0 U	1.0 U	1.0 U	1.0 U	1.0 U	1.0 U	10 U	1.0 U	1.0 U	1.0 U	1.0 U
Hexachlorobenzene	1.0 U	1.0 U	1.0 U	1.0 U	1.0 U	1.0 U	10 U	1.0 U	1.0 U	1.0 U	1.0 U
Pentachlorophenol	10 UJ	10 U	10 U	10 U	10 U	10 U	100 UJ	10 UJ	10 U	10 UJ	10 UJ
Phenanthrene	1.0 U	1.0 U	1.0 U	1.0 U	1.0 U	1.0 UJ	10 U	1.0 U	1.0 U	1.0 U	1.0 U
Anthracene	1.0 U	1.0 U	1.0 U	1.0 U	1.0 U	1.0 U	10 U	1.0 U	1.0 U	1.0 U	1.0 U
Di-n-Butylphthalate	1.0 U	1.0 U	1.0 U	1.0 U	1.0 U	1.0 UJ	10 U	1.0 U	1.0 U	1.0 U	1.0 U
Fluoranthene	1.0 U	1.0 U	1.0 U	1.0 U	1.0 U	1.0 U	10 U	1.0 U	1.0 U	1.0 U	1.0 U
Pyrene	1.0 U	1.0 U	1.0 U	1.0 U	1.0 U	1.0 U	10 U	1.0 U	1.0 U	1.0 U	1.0 U
Butylbenzylphthalate	1.0 U	1.0 U	**1.5**	1.0 U	1.0 U	1.0 UJ	10 U	1.0 U	1.0 U	1.0 U	1.0 U
Benzo(a)anthracene	1.0 U	1.0 U	1.0 U	1.0 U	1.0 U	1.0 U	10 U	1.0 U	1.0 U	1.0 U	1.0 U
bis(2-Ethylhexyl)phthalate	3.0 U	3.0 U	3.0 U	3.0 U	3.0 U	3.0 U	30 U	3.0 U	3.0 U	3.0 U	3.0 U
Chrysene	1.0 U	1.0 U	1.0 U	1.0 U	1.0 U	1.0 U	10 U	1.0 U	1.0 U	1.0 U	1.0 U
Di-n-Octyl phthalate	**1.1**	**2.2**	1.0 U	1.0 U	1.0 U	1.0 U	10 U	1.0 U	1.0 U	1.0 U	1.0 U
Benzo(a)pyrene	1.0 U	1.0 U	1.0 U	1.0 U	1.0 U	1.0 U	10 U	1.0 U	1.0 U	1.0 U	1.0 U
Indeno(1,2,3-cd)pyrene	1.0 U	1.0 U	1.0 U	1.0 U	1.0 U	1.0 UJ	10 U	1.0 U	1.0 U	1.0 U	1.0 U
Dibenz(a,h)anthracene	1.0 U	1.0 U	1.0 U	1.0 U	1.0 U	1.0 UJ	10 U	1.0 U	1.0 U	1.0 U	1.0 U
Benzo(g,h,i)perylene	1.0 UJ	1.0 U	1.0 U	1.0 U	1.0 U	1.0 UJ	10 U	1.0 U	1.0 U	1.0 U	1.0 U
1-Methylnaphthalene	1.0 U	1.0 U	1.0 U	1.0 U	1.0 U	1.0 U	10 U	1.0 U	1.0 U	1.0 U	1.0 U
Total Benzofluoranthenes	5.0 U	5.0 U	5.0 U	5.0 U	2.0 U	2.0 U	20 U	2.0 U	2.0 U	2.0 U	2.0 U

TABLE 4
LSIV WHOLE WATER SAMPLING ANALYTICAL RESULTS
LONG-TERM STORMWATER TREATMENT SYSTEM
NORTH BOEING FIELD - SEATTLE, WASHINGTON

Sample Location ID	LTST-W-LSIV	LTST-W-LSIV	LTST-W-LSIV	LTST-W-LSIV	LTST-W-LSIV	LTST-W-LSIV	LTST-W-LSIV	LTST-W-LSIV	LTST-W-LSIV	LTST-W-LSIV	LTST-W-LSIV
Laboratory Data ID	XT98B/XT98F/XT99B	XU48B/XU48D/XU49B	XZ68B/XZ68F/XZ69B	YB86B/YB86D/YB88B	YG17B/YG17D/YG18B	YR11B/YR11F/YR12B	ZE23B/ZE23F/ZE24B	ZF08B/ZF08F/ZF09B	ZO34B/ZO34F/ZO35B	ZQ78B/ZQ78F/ZQ79B	ZS95B/ZS95F/ZS96B
Sample Start Date	1/6/2014	1/10/2014	2/16/2014	3/5/2014	4/7/2014	--	--	10/13/2014	12/9/2014	12/23/2014	--
Sample End Date or Grab Date	1/8/2014	1/11/2014	2/16/2014	3/6/2014	4/8/2014	7/10/2014	10/9/2014	10/14/2014	12/10/2014	12/24/2014	1/15/2015
Event Type	Quarterly	Storm	Storm	Storm	Quarterly	Quarterly	Quarterly	Storm	Storm	Storm	Quarterly
Sample Type	Flow-weighted composite, bypass only					Grab, non-bypass flow		Flow-weighted composite, bypass only			Grab, non-bypass flow
PAHs (µg/L)											
Method SW8270D-SIM											
Naphthalene	**0.018**	**0.018**	**0.037**	**0.014**	0.010 U	0.010 U	**0.011**	**0.013**	**0.016** J	0.058 UJ	0.010 U
2-Methylnaphthalene	**0.027**	**0.025**	**0.027**	**0.014**	0.010 U	0.010 U	0.010 U	**0.014**	**0.025** J	**0.086** J	0.010 U
1-Methylnaphthalene	**0.032**	**0.027**	**0.028**	**0.012**	0.010 U	0.010 U	0.010 U	**0.012**	**0.024** J	**0.075** J	0.010 U
Acenaphthylene	**0.010**	0.010 U	0.010 U	0.010 U	0.010 U	0.010 U	0.010 U	0.010 U	0.010 UJ	0.010 UJ	0.010 U
Acenaphthene	0.010 U	**0.011**	**0.014**	0.010 U	0.010 U	**0.032**	**0.11**	0.010 U	0.010 UJ	0.010 UJ	**0.018**
Fluorene	**0.012**	**0.014**	**0.017**	0.010 U	0.010 U	0.010 U	0.010 U	0.010 U	0.010 UJ	0.010 UJ	0.010 U
Phenanthrene	**0.15**	**0.15**	**0.19**	0.034 U	**0.071**	0.010 U	**0.021**	**0.13**	**0.063** J	**0.037** J	0.010 U
Anthracene	**0.018**	**0.018**	**0.022**	0.010 U	0.010 U	0.010 U	0.010 U	**0.010**	0.010 UJ	0.010 UJ	0.010 U
Fluoranthene	**0.41**	**0.40**	**0.52**	**0.10**	**0.19**	0.010 U	0.010 U	**0.33**	**0.13** J	**0.056** J	0.010 U
Pyrene	**0.32** J	**0.39**	**0.42**	**0.076**	**0.19**	0.010 U	0.010 U	**0.27**	**0.16** J	**0.072** J	**0.010**
Benzo(a)anthracene	**0.10**	**0.11**	**0.16**	**0.021**	**0.054**	0.010 U	0.010 U	**0.071**	**0.046** J	**0.016** J	0.010 U
Chrysene	**0.31**	**0.34**	**0.36**	**0.068**	**0.17**	0.010 U	0.010 U	**0.25**	**0.13** J	**0.056** J	0.010 U
Benzo(a)pyrene	**0.17**	**0.20**	**0.24**	**0.036**	**0.1**	0.010 U	0.010 U	**0.13**	**0.064** J	**0.025** J	0.010 U
Indeno(1,2,3-cd)pyrene	**0.20**	**0.27**	**0.26**	**0.042**	**0.1**	0.010 U	0.010 U	**0.17**	**0.080** J	**0.046** J	0.010 U
Dibenz(a,h)anthracene	**0.040**	**0.063**	**0.061** J	0.010 U	**0.018**	0.010 U	0.010 UJ	**0.028**	**0.015** J	0.010 UJ	0.010 U
Benzo(g,h,i)perylene	**0.27**	**0.36** J	**0.27**	**0.046**	**0.13**	0.010 U	0.010 U	**0.22**	**0.10** J	**0.065** J	0.010 U
Dibenzofuran	**0.011**	**0.012**	**0.011**	0.010 U	0.010 U	0.010 U	0.010 U	**0.011**	0.010 UJ	0.010 UJ	0.010 U
Total Benzofluoranthenes	**0.51** J	**0.57**	**0.65**	**0.12**	**0.33**	0.020 U	0.020 U	**0.46**	**0.19** J	**0.094** J	0.020 U
CPAH TEQ	**0.258**	**0.305**	**0.357**	**0.055**	**0.15**	ND	ND	**0.205**	**0.098**	**0.041** J	ND
TOTAL METALS (µg/L)											
Method EPA200.8/6010B,C/7470A											
Arsenic	**1.7**	**0.7**	**2.2**	**0.6**	**2.8**	**0.7**	**1.1**	**2.6**	**0.9**	**0.6**	**1.2**
Cadmium	**0.5**	**0.4**	**0.4**	**0.2**	**0.8**	0.1 U	0.1 U	**0.6**	**0.2**	**0.2**	0.1 U
Chromium	**4.2**	**1.6**	**3.4**	**1.0**	**3.5**	**1**	**2.2**	**4.0**	**1.4**	**0.7**	1 U
Copper	**12.1**	**8.8**	**10.5**	**4.1**	**16.6**	**2.7**	**1.8**	**12.5**	**5.3**	**3.7**	**1.2**
Iron	**14,500**	**7510**	**6650**	**2550**	**29,500**	**4340**	**7030**	**22800**	**3970**	**4510**	**11700**
Lead	**7.6**	**6.2**	**6.4**	**1.4**	**5.0**	**0.1**	**0.2**	**8.4**	**2.9**	**1.4**	**0.1**
Manganese	**187**	**130**	**84**	**105**	**278**	**377**	**671**	**263**	**151**	**71**	**1140**
Mercury	0.1 U	0.1 U	0.1 U	0.1 U	0.1 U	0.1 U	0.1 U	0.1 U	0.1 U	0.1 U	0.1 U
Nickel	**3.2**	**2.7**	**2.3**	**0.9**	**2.2**	**1.3**	**9.4**	**2.3**	**1.4**	**1.1**	**0.8**
Zinc	**91**	**67**	**61**	**34**	**83**	4 U	**6**	**85**	**43**	**30**	4 U
DISSOLVED METALS (µg/L)											
Method EPA200.8/SW6010B,C											
Arsenic	0.2 U	**0.2**	0.2 U	**0.4**	**0.4**	**0.6**	**0.6**	**0.3**	**0.3**	**0.2** U	**0.6**
Cadmium	0.1 U	0.1 U	0.1 U	**0.1**	0.1 U	0.1 U	0.1 U	0.1 U	0.1 U	0.1 U	0.1 U
Chromium	0.5 U	0.5 U	0.5 U	**0.5**	0.5 U	**3**	**1.7**	0.5 U	0.5 U	0.5 U	1 U
Copper	**2.3**	**2.6**	**1.3**	**2.4**	**4.1**	**2.3**	0.5 U	**1.5**	**1.6**	**1.1**	**0.7**
Iron	**120**	**400**	**180**	**830**	**550**	**5230**	**70**	**220**	**620**	**140**	**1840**
Lead	**0.1**	**0.2**	**0.1**	**0.2**	**0.1**	**0.1**	0.1 U	0.1 U	**0.2**	0.1 U	0.1 U
Manganese	**34**	**70**	**29**	**99**	**76**	**535**	**516**	**48**	**120**	**47**	**1040**
Nickel	**0.9**	**1.6**	**0.6**	**0.8**	**0.6**	**1.1**	**7.8**	0.5 U	**0.7**	**0.6**	**0.8**
Zinc	**13**	**26**	**20**	**26**	**8**	4 U	4 U	**5**	**24**	**14**	4 U
DISSOLVED METALS (ng/L)											
Method SW7470A											
Mercury	20.0 U	20.0 U	20.0 U	20.0 U	20.0 U	20.0 U	20.0 U	20.0 U	20.0 U	20.0 U	20.0 U
CONVENTIONALS											
pH (SU; EPA 150.1; SM 4500H)	**6.83**	NA	NA	NA	NA	NA	NA	NA	NA	NA	NA
Total Suspended Solids (mg/L; EPA 160.2; SM2540D)	**94.0**	**69.2**	**115**	**14.9**	**115**	**3.2**	**32.7**	**145**	**32.8**	**32.5**	**19.2**
Turbidity (NTU; EPA 180.1)	**13.4**	**13.2**	**3.87**	**6.48**	**86.7**	**13.5**	**50.4**	**37.2**	**8.77**	**12.9**	**54.6**

TABLE 4
LSIV WHOLE WATER SAMPLING ANALYTICAL RESULTS
LONG-TERM STORMWATER TREATMENT SYSTEM
NORTH BOEING FIELD - SEATTLE, WASHINGTON

Sample Location ID	LTST-W-LSIV	LTST-W-LSIV	LTST-W-LSIV	LTST-W-LSIV	LTST-W-LSIV	LTST-W-LSIV	LTST-W-LSIV	LTST-W-LSIV	LTST-W-LSIV	LTST-W-LSIV	LTST-W-LSIV
Laboratory Data ID	XT98B/XT98F/XT99B	XU48B/XU48D/XU49B	XZ68B/XZ68F/XZ69B	YB86B/YB86D/YB88B	YG17B/YG17D/YG18B	YR11B/YR11F/YR12B	ZE23B/ZE23F/ZE24B	ZF08B/ZF08F/ZF09B	ZO34B/ZO34F/ZO35B	ZQ78B/ZQ78F/ZQ79B	ZS95B/ZS95F/ZS96B
Sample Start Date	1/6/2014	1/10/2014	2/16/2014	3/5/2014	4/7/2014	--	--	10/13/2014	12/9/2014	12/23/2014	--
Sample End Date or Grab Date	1/8/2014	1/11/2014	2/16/2014	3/6/2014	4/8/2014	7/10/2014	10/9/2014	10/14/2014	12/10/2014	12/24/2014	1/15/2015
Event Type	Quarterly	Storm	Storm	Storm	Quarterly	Quarterly	Quarterly	Storm	Storm	Storm	Quarterly
Sample Type	Flow-weighted composite, bypass only					Grab, non-bypass flow		Flow-weighted composite, bypass only			Grab, non-bypass flow
PARTICLE/GRAIN SIZE (mg/L)											
Method ASTM-D3977C											
Sediment Conc. > 500 µm	**33.68**	**5.73**	NA	NA	NA	NA	NA	NA	NA	NA	NA
Sediment Conc. 500 to 250 µm	**42.32**	**19.36**	NA	NA	NA	NA	NA	NA	NA	NA	NA
Sediment Conc. 250 to 125 µm	0.01 U	0.01 U	NA	NA	NA	NA	NA	NA	NA	NA	NA
Sediment Conc. 125 to 62.5 µm	**0.55**	**0.08**	NA	NA	NA	NA	NA	NA	NA	NA	NA
Sediment Conc. 62.5 to 3.9 µm	**62.61**	**45.31**	NA	NA	NA	NA	NA	NA	NA	NA	NA
Sediment Conc. 3.9 to 1 µm	**6.70**	**5.25**	NA	NA	NA	NA	NA	NA	NA	NA	NA
Sediment Conc. < 1 µm	**2.26**	**2.41**	NA	NA	NA	NA	NA	NA	NA	NA	NA
PRECIPITATION (c)											
Amount During Test (inches)	0.78	1.06	0.88	0.55	0.38	0.00	0.00	0.55	0.52	0.28	0.00

TABLE 4
LSIV WHOLE WATER SAMPLING ANALYTICAL RESULTS
LONG-TERM STORMWATER TREATMENT SYSTEM
NORTH BOEING FIELD - SEATTLE, WASHINGTON

Sample Location ID	LTST-W-LSIV	LTST-W-LSIV	LTST-W-LSIV	LTST-W-LSIV	LTST-W-LSIV	LTST-W-LSIV
Laboratory Data ID	ZV55B	AEB1B	AIY6B	AOB4B	AOJ7B	APT0D
Sample Start Date	2/5/2015	--	--	--	--	--
Sample End Date or Grab Date	2/6/2015	4/10/2015	7/9/2015	10/8/2015	10/10/2015	10/31/2015
Event Type	Storm	Quarterly	Quarterly	Quarterly	Storm	Storm
Sample Type	Flow-weighted composite, bypass only	Grab, non-bypass flow	Grab, non-bypass flow	Grab, non-bypass flow	Flow-weighted composite, bypass only	Grab, bypass flow
PCBs (µg/L) (a)						
Method SW8082A						
Aroclor 1016	0.005 U	0.005 U	0.005 U	0.005 U	0.005 U	0.005 U
Aroclor 1242	0.005 U	0.005 U	0.005 U	0.005 U	0.005 U	0.005 U
Aroclor 1248	0.005 U	0.005 U	0.005 U	0.005 U	0.005 U	0.005 U
Aroclor 1254	0.005 U	0.005 U	0.005 U	0.005 U	**0.0090** J	0.005 U
Aroclor 1260	0.005 U	0.005 U	0.005 U	0.005 U	**0.0070** J	0.005 U
Aroclor 1221	0.005 U	0.005 U	0.005 U	0.005 U	0.005 U	0.005 U
Aroclor 1232	0.005 U	0.005 U	0.005 U	0.005 U	0.005 U	0.005 U
Aroclor 1262	0.005 U	0.005 U	0.005 U	0.005 U	0.005 U	0.005 U
Total PCBs (b)	ND	ND	ND	ND	**0.0160** J	ND
SEMIVOLATILES (µg/L)						
Method SW8270D						
Phenol	NA	NA	NA	NA	NA	NA
1,3-Dichlorobenzene	NA	NA	NA	NA	NA	NA
1,4-Dichlorobenzene	NA	NA	NA	NA	NA	NA
Benzyl Alcohol	NA	NA	NA	NA	NA	NA
1,2-Dichlorobenzene	NA	NA	NA	NA	NA	NA
2-Methylphenol	NA	NA	NA	NA	NA	NA
4-Methylphenol	NA	NA	NA	NA	NA	NA
Hexachloroethane	NA	NA	NA	NA	NA	NA
2,4-Dimethylphenol	NA	NA	NA	NA	NA	NA
Benzoic Acid	NA	NA	NA	NA	NA	NA
1,2,4-Trichlorobenzene	NA	NA	NA	NA	NA	NA
Naphthalene	NA	NA	NA	NA	NA	NA
Hexachlorobutadiene	NA	NA	NA	NA	NA	NA
2-Methylnaphthalene	NA	NA	NA	NA	NA	NA
Dimethylphthalate	NA	NA	NA	NA	NA	NA
Acenaphthylene	NA	NA	NA	NA	NA	NA
Acenaphthene	NA	NA	NA	NA	NA	NA
Dibenzofuran	NA	NA	NA	NA	NA	NA
Diethylphthalate	NA	NA	NA	NA	NA	NA
Fluorene	NA	NA	NA	NA	NA	NA
N-Nitrosodiphenylamine	NA	NA	NA	NA	NA	NA
Hexachlorobenzene	NA	NA	NA	NA	NA	NA
Pentachlorophenol	NA	NA	NA	NA	NA	NA
Phenanthrene	NA	NA	NA	NA	NA	NA
Anthracene	NA	NA	NA	NA	NA	NA
Di-n-Butylphthalate	NA	NA	NA	NA	NA	NA
Fluoranthene	NA	NA	NA	NA	NA	NA
Pyrene	NA	NA	NA	NA	NA	NA
Butylbenzylphthalate	NA	NA	NA	NA	NA	NA
Benzo(a)anthracene	NA	NA	NA	NA	NA	NA
bis(2-Ethylhexyl)phthalate	NA	NA	NA	NA	NA	NA
Chrysene	NA	NA	NA	NA	NA	NA
Di-n-Octyl phthalate	NA	NA	NA	NA	NA	NA
Benzo(a)pyrene	NA	NA	NA	NA	NA	NA
Indeno(1,2,3-cd)pyrene	NA	NA	NA	NA	NA	NA
Dibenz(a,h)anthracene	NA	NA	NA	NA	NA	NA
Benzo(g,h,i)perylene	NA	NA	NA	NA	NA	NA
1-Methylnaphthalene	NA	NA	NA	NA	NA	NA
Total Benzofluoranthenes	NA	NA	NA	NA	NA	NA

TABLE 4
LSIV WHOLE WATER SAMPLING ANALYTICAL RESULTS
LONG-TERM STORMWATER TREATMENT SYSTEM
NORTH BOEING FIELD - SEATTLE, WASHINGTON

Sample Location ID	LTST-W-LSIV	LTST-W-LSIV	LTST-W-LSIV	LTST-W-LSIV	LTST-W-LSIV	LTST-W-LSIV
Laboratory Data ID	ZV55B	AEB1B	AIY6B	AOB4B	AOJ7B	APT0D
Sample Start Date	2/5/2015	--	--	--	--	--
Sample End Date or Grab Date	2/6/2015	4/10/2015	7/9/2015	10/8/2015	10/10/2015	10/31/2015
Event Type	Storm	Quarterly	Quarterly	Quarterly	Storm	Storm
Sample Type	Flow-weighted composite, bypass only	Grab, non-bypass flow	Grab, non-bypass flow	Grab, non-bypass flow	Flow-weighted composite, bypass only	Grab, bypass flow
PAHs (µg/L)						
Method SW8270D-SIM						
Naphthalene	NA	NA	NA	NA	NA	NA
2-Methylnaphthalene	NA	NA	NA	NA	NA	NA
1-Methylnaphthalene	NA	NA	NA	NA	NA	NA
Acenaphthylene	NA	NA	NA	NA	NA	NA
Acenaphthene	NA	NA	NA	NA	NA	NA
Fluorene	NA	NA	NA	NA	NA	NA
Phenanthrene	NA	NA	NA	NA	NA	NA
Anthracene	NA	NA	NA	NA	NA	NA
Fluoranthene	NA	NA	NA	NA	NA	NA
Pyrene	NA	NA	NA	NA	NA	NA
Benzo(a)anthracene	NA	NA	NA	NA	NA	NA
Chrysene	NA	NA	NA	NA	NA	NA
Benzo(a)pyrene	NA	NA	NA	NA	NA	NA
Indeno(1,2,3-cd)pyrene	NA	NA	NA	NA	NA	NA
Dibenz(a,h)anthracene	NA	NA	NA	NA	NA	NA
Benzo(g,h,i)perylene	NA	NA	NA	NA	NA	NA
Dibenzofuran	NA	NA	NA	NA	NA	NA
Total Benzofluoranthenes	NA	NA	NA	NA	NA	NA
CPAH TEQ	NA	NA	NA	NA	NA	NA
TOTAL METALS (µg/L)						
Method EPA200.8/6010B,C/7470A						
Arsenic	NA	NA	NA	NA	NA	NA
Cadmium	NA	NA	NA	NA	NA	NA
Chromium	NA	NA	NA	NA	NA	NA
Copper	NA	NA	NA	NA	NA	NA
Iron	NA	NA	NA	NA	NA	NA
Lead	NA	NA	NA	NA	NA	NA
Manganese	NA	NA	NA	NA	NA	NA
Mercury	NA	NA	NA	NA	NA	NA
Nickel	NA	NA	NA	NA	NA	NA
Zinc	NA	NA	NA	NA	NA	NA
DISSOLVED METALS (µg/L)						
Method EPA200.8/SW6010B,C						
Arsenic	NA	NA	NA	NA	NA	NA
Cadmium	NA	NA	NA	NA	NA	NA
Chromium	NA	NA	NA	NA	NA	NA
Copper	NA	NA	NA	NA	NA	NA
Iron	NA	NA	NA	NA	NA	NA
Lead	NA	NA	NA	NA	NA	NA
Manganese	NA	NA	NA	NA	NA	NA
Nickel	NA	NA	NA	NA	NA	NA
Zinc	NA	NA	NA	NA	NA	NA
DISSOLVED METALS (ng/L)						
Method SW7470A						
Mercury	NA	NA	NA	NA	NA	NA
CONVENTIONALS						
pH (SU; EPA 150.1; SM 4500H)	NA	NA	NA	NA	NA	NA
Total Suspended Solids (mg/L; EPA 160.2; SM2540D)	**18.8**	**28.7**	**10.8**	**12.5**	**66.5**	**4.8**
Turbidity (NTU; EPA 180.1)	NA	NA	NA	NA	NA	NA

TABLE 4
LSIV WHOLE WATER SAMPLING ANALYTICAL RESULTS
LONG-TERM STORMWATER TREATMENT SYSTEM
NORTH BOEING FIELD - SEATTLE, WASHINGTON

Sample Location ID	LTST-W-LSIV	LTST-W-LSIV	LTST-W-LSIV	LTST-W-LSIV	LTST-W-LSIV	LTST-W-LSIV
Laboratory Data ID	ZV55B	AEB1B	AIY6B	AOB4B	AOJ7B	APT0D
Sample Start Date	2/5/2015	--	--	--	--	--
Sample End Date or Grab Date	2/6/2015	4/10/2015	7/9/2015	10/8/2015	10/10/2015	10/31/2015
Event Type	Storm	Quarterly	Quarterly	Quarterly	Storm	Storm
Sample Type	Flow-weighted composite, bypass only	Grab, non-bypass flow	Grab, non-bypass flow	Grab, non-bypass flow	Flow-weighted composite, bypass only	Grab, bypass flow
PARTICLE/GRAIN SIZE (mg/L)						
Method ASTM-D3977C						
Sediment Conc. > 500 µm	NA	NA	NA	NA	NA	NA
Sediment Conc. 500 to 250 µm	NA	NA	NA	NA	NA	NA
Sediment Conc. 250 to 125 µm	NA	NA	NA	NA	NA	NA
Sediment Conc. 125 to 62.5 µm	NA	NA	NA	NA	NA	NA
Sediment Conc. 62.5 to 3.9 µm	NA	NA	NA	NA	NA	NA
Sediment Conc. 3.9 to 1 µm	NA	NA	NA	NA	NA	NA
Sediment Conc. < 1 µm	NA	NA	NA	NA	NA	NA
PRECIPITATION (c)						
Amount During Test (inches)	0.66	0.01	0.00	0.39	0.36	0.04

TEQ = Total Equivalency Quotient
cPAH = Carcinogenic Polycyclic Aromatic Hydrocarbon
PCB = Polychlorinated Biphenyl
SIM = Select Ion Monitoring
-- = Not applicable (grab sample does not require start/end date).
NA = Not Analyzed.
ND = Not Detected.
Bold = Detected compound.

EPA = U.S. Environmental Protection Agency
ASTM = American Society for Testing and Materials
ARI = Analytical Resources Inc.
NOAA = National Oceanic and Atmospheric Administration
µg/L = micrograms per liter
mg/L = milligrams per liter
µm = micrometer
ng/L = nanograms per liter

SU = Standard Units
NTU = Nephelometric Turbidity Units

U = Indicates the compound was not detected at the reported concentration.
J1 = Indicates the analyte was detected at a concentration less than the reporting limit but greater than the method detection limit.

(a) Starting in December 2012, ARI evaluated PCBs in whole water between the Limit of Detection (LOD) and the Limit of Quantitation (LOQ). For these non-detect results, the reported concentration shown is the LOD (1/2 the LOQ).
(b) Total PCBs is the sum of detected aroclors or, if no aroclors are detected, is reported as non-detect (ND).
(c) Precipitation data is from the NOAA Quality Controlled Local Climatological Data for Station 24234/BFI - SEATTLE: BOEING FIELD/KING COUNTY INTERNATIONAL AIRPORT.

TABLE 5
EFFLUENT WHOLE WATER SAMPLING ANALYTICAL RESULTS
LONG-TERM STORMWATER TREATMENT SYSTEM
NORTH BOEING FIELD - SEATTLE, WASHINGTON

Sample Location ID	LTST-W-EFF	LTST-W-EFF	LTST-W-EFF	LTST-W-EFF	LTST-W-EFF	LTST-W-EFF	LTST-W-EFF	LTST-W-EFF	LTST-W-EFF	LTST-W-EFF	LTST-W-EFF
Laboratory Data ID	TW17A	TX51A	TY77A	TZ89B	UC19A/UC19D/UC20A	UC67B/UC67D/UC68B	UD94C/UD94F/UD95C	UE63B/UE63D/UE64B	UH75E/UH75J/UH76E	UK69B/UK69D/UK70B	UL81B/UL81D/UL82B
Sample Date	11/08/2011	11/16/2011	11/22/2011	12/5/2011	12/20/2011	12/27/2011	1/10/2012	1/20/2012	02/09/2012	03/05/2012	03/12/2012
Event Type	Monthly	Storm	Storm	Monthly	2nd Monthly	Storm	Monthly	Storm	Monthly	Monthly	Storm
Sample Type	Grab	Grab	Grab	Grab	Grab	Grab	Grab	Grab	Grab	Grab	Grab
PCBs (µg/L) (a)											
Method SW8082A											
Aroclor 1016	0.010 U	0.010 U	0.010 U	0.010 U	0.010 U	0.010 U	0.010 U	0.010 U	0.010 U	0.010 U	0.012 U
Aroclor 1242	0.010 U	0.010 U	0.010 U	0.010 U	0.010 U	0.010 U	0.010 U	0.010 U	0.010 U	0.010 U	0.010 U
Aroclor 1248	0.010 U	0.010 U	0.010 U	0.010 U	0.010 U	0.010 U	0.010 U	0.010 U	0.012 U	0.010 U	0.010 U
Aroclor 1254	0.010 U	0.010 U	0.010 U	0.010 U	0.010 U	0.010 U	0.010 U	0.010 U	0.010 U	0.010 U	0.010 U
Aroclor 1260	0.010 U	0.010 U	0.010 U	0.010 U	0.010 U	0.010 U	0.010 U	0.010 U	0.010 U	0.010 U	0.010 U
Aroclor 1221	0.010 U	0.010 U	0.010 U	0.010 U	0.010 U	0.010 U	0.010 U	0.010 U	0.010 U	0.010 U	0.010 U
Aroclor 1232	0.010 U	0.010 U	0.010 U	0.019 U	0.010 U	0.010 U	0.015 U	0.010 U	0.010 U	0.010 U	0.010 U
Aroclor 1262	0.010 U	0.010 U	0.010 U	0.010 U	0.010 U	0.010 U	0.010 U	0.010 U	0.010 U	0.010 U	0.010 U
Total PCBs (b)	ND	ND	ND	ND	ND	ND	ND	ND	ND	ND	ND
SEMIVOLATILES (µg/L)											
Method SW8270D											
Phenol	NA	NA	NA	NA	1.0 U	NA	NA	NA	NA	NA	NA
1,3-Dichlorobenzene	NA	NA	NA	NA	1.0 U	NA	NA	NA	NA	NA	NA
1,4-Dichlorobenzene	NA	NA	NA	NA	1.0 U	NA	NA	NA	NA	NA	NA
Benzyl Alcohol	NA	NA	NA	NA	5.0 U	NA	NA	NA	NA	NA	NA
1,2-Dichlorobenzene	NA	NA	NA	NA	1.0 U	NA	NA	NA	NA	NA	NA
2-Methylphenol	NA	NA	NA	NA	1.0 U	NA	NA	NA	NA	NA	NA
4-Methylphenol	NA	NA	NA	NA	1.0 U	NA	NA	NA	NA	NA	NA
Hexachloroethane	NA	NA	NA	NA	1.0 U	NA	NA	NA	NA	NA	NA
2,4-Dimethylphenol	NA	NA	NA	NA	1.0 U	NA	NA	NA	NA	NA	NA
Benzoic Acid	NA	NA	NA	NA	10 U	NA	NA	NA	NA	NA	NA
1,2,4-Trichlorobenzene	NA	NA	NA	NA	1.0 U	NA	NA	NA	NA	NA	NA
Naphthalene	NA	NA	NA	NA	1.0 U	NA	NA	NA	NA	NA	NA
Hexachlorobutadiene	NA	NA	NA	NA	1.0 U	NA	NA	NA	NA	NA	NA
2-Methylnaphthalene	NA	NA	NA	NA	1.0 U	NA	NA	NA	NA	NA	NA
Dimethylphthalate	NA	NA	NA	NA	1.0 U	NA	NA	NA	NA	NA	NA
Acenaphthylene	NA	NA	NA	NA	1.0 U	NA	NA	NA	NA	NA	NA
Acenaphthene	NA	NA	NA	NA	1.0 U	NA	NA	NA	NA	NA	NA
Dibenzofuran	NA	NA	NA	NA	1.0 U	NA	NA	NA	NA	NA	NA
Diethylphthalate	NA	NA	NA	NA	1.0 U	NA	NA	NA	NA	NA	NA
Fluorene	NA	NA	NA	NA	1.0 U	NA	NA	NA	NA	NA	NA
N-Nitrosodiphenylamine	NA	NA	NA	NA	1.0 U	NA	NA	NA	NA	NA	NA
Hexachlorobenzene	NA	NA	NA	NA	1.0 U	NA	NA	NA	NA	NA	NA
Pentachlorophenol	NA	NA	NA	NA	5.0 U	NA	NA	NA	NA	NA	NA
Phenanthrene	NA	NA	NA	NA	1.0 U	NA	NA	NA	NA	NA	NA
Anthracene	NA	NA	NA	NA	1.0 U	NA	NA	NA	NA	NA	NA
Di-n-Butylphthalate	NA	NA	NA	NA	1.0 U	NA	NA	NA	NA	NA	NA
Fluoranthene	NA	NA	NA	NA	1.0 U	NA	NA	NA	NA	NA	NA
Pyrene	NA	NA	NA	NA	1.0 U	NA	NA	NA	NA	NA	NA
Butylbenzylphthalate	NA	NA	NA	NA	1.0 U	NA	NA	NA	NA	NA	NA
Benzo(a)anthracene	NA	NA	NA	NA	1.0 U	NA	NA	NA	NA	NA	NA
bis(2-Ethylhexyl)phthalate	NA	NA	NA	NA	1.0 U	NA	NA	NA	NA	NA	NA
Chrysene	NA	NA	NA	NA	1.0 U	NA	NA	NA	NA	NA	NA
Di-n-Octyl phthalate	NA	NA	NA	NA	1.0 U	NA	NA	NA	NA	NA	NA
Benzo(a)pyrene	NA	NA	NA	NA	1.0 U	NA	NA	NA	NA	NA	NA
Indeno(1,2,3-cd)pyrene	NA	NA	NA	NA	1.0 U	NA	NA	NA	NA	NA	NA
Dibenz(a,h)anthracene	NA	NA	NA	NA	1.0 U	NA	NA	NA	NA	NA	NA
Benzo(g,h,i)perylene	NA	NA	NA	NA	1.0 U	NA	NA	NA	NA	NA	NA
1-Methylnaphthalene	NA	NA	NA	NA	1.0 U	NA	NA	NA	NA	NA	NA
Total Benzofluoranthenes	NA	NA	NA	NA	1.0 U	NA	NA	NA	NA	NA	NA

TABLE 5
EFFLUENT WHOLE WATER SAMPLING ANALYTICAL RESULTS
LONG-TERM STORMWATER TREATMENT SYSTEM
NORTH BOEING FIELD - SEATTLE, WASHINGTON

Sample Location ID	LTST-W-EFF	LTST-W-EFF	LTST-W-EFF	LTST-W-EFF	LTST-W-EFF	LTST-W-EFF	LTST-W-EFF	LTST-W-EFF	LTST-W-EFF	LTST-W-EFF	LTST-W-EFF
Laboratory Data ID	TW17A	TX51A	TY77A	TZ89B	UC19A/UC19D/UC20A	UC67B/UC67D/UC68B	UD94C/UD94F/UD95C	UE63B/UE63D/UE64B	UH75E/UH75J/UH76E	UK69B/UK69D/UK70B	UL81B/UL81D/UL82B
Sample Date	11/08/2011	11/16/2011	11/22/2011	12/5/2011	12/20/2011	12/27/2011	1/10/2012	1/20/2012	02/09/2012	03/05/2012	03/12/2012
Event Type	Monthly	Storm	Storm	Monthly	2nd Monthly	Storm	Monthly	Storm	Monthly	Monthly	Storm
Sample Type	Grab	Grab	Grab	Grab	Grab	Grab	Grab	Grab	Grab	Grab	Grab
PAHs (µg/L)											
Method SW8270D-SIM											
Naphthalene	NA	NA	NA	NA	0.010 U	NA	NA	NA	NA	NA	NA
2-Methylnaphthalene	NA	NA	NA	NA	0.010 U	NA	NA	NA	NA	NA	NA
1-Methylnaphthalene	NA	NA	NA	NA	0.010 U	NA	NA	NA	NA	NA	NA
Acenaphthylene	NA	NA	NA	NA	0.010 U	NA	NA	NA	NA	NA	NA
Acenaphthene	NA	NA	NA	NA	**0.15**	NA	NA	NA	NA	NA	NA
Fluorene	NA	NA	NA	NA	0.010 U	NA	NA	NA	NA	NA	NA
Phenanthrene	NA	NA	NA	NA	**0.023**	NA	NA	NA	NA	NA	NA
Anthracene	NA	NA	NA	NA	0.010 U	NA	NA	NA	NA	NA	NA
Fluoranthene	NA	NA	NA	NA	**0.032**	NA	NA	NA	NA	NA	NA
Pyrene	NA	NA	NA	NA	**0.021**	NA	NA	NA	NA	NA	NA
Benzo(a)anthracene	NA	NA	NA	NA	0.010 U	NA	NA	NA	NA	NA	NA
Chrysene	NA	NA	NA	NA	0.010 U	NA	NA	NA	NA	NA	NA
Benzo(a)pyrene	NA	NA	NA	NA	0.010 U	NA	NA	NA	NA	NA	NA
Indeno(1,2,3-cd)pyrene	NA	NA	NA	NA	0.010 U	NA	NA	NA	NA	NA	NA
Dibenz(a,h)anthracene	NA	NA	NA	NA	0.010 U	NA	NA	NA	NA	NA	NA
Benzo(g,h,i)perylene	NA	NA	NA	NA	0.010 U	NA	NA	NA	NA	NA	NA
Dibenzofuran	NA	NA	NA	NA	0.010 U	NA	NA	NA	NA	NA	NA
Total Benzofluoranthenes	NA	NA	NA	NA	0.020 U	NA	NA	NA	NA	NA	NA
CPAH TEQ	NA	NA	NA	NA	ND	NA	NA	NA	NA	NA	NA
TOTAL METALS (µg/L)											
Method EPA200.8/6010B,C/7470A											
Arsenic	NA	NA	NA	NA	**1.0**	**0.4**	**0.4**	**0.4**	**0.8**	**0.2**	**0.7**
Cadmium	NA	NA	NA	NA	0.1 U	0.1 U	0.1 U	0.1 U	0.1 U	0.1 U	0.1 U
Chromium	NA	NA	NA	NA	0.5 U	0.5 U	0.5 U	**0.8**	0.5 U	0.5 U	1 U
Copper	NA	NA	NA	NA	0.5 U	**4.3**	**2.8**	**1.9**	**1.5**	**0.7**	**0.7**
Iron	NA	NA	NA	NA	**2950**	**1000**	**290**	**930**	**3080**	**210**	**2500**
Lead	NA	NA	NA	NA	**0.8**	**18.6**	**0.2**	**0.6**	0.1 U	0.1 U	0.1 U
Manganese	NA	NA	NA	NA	**787**	**112**	**379**	**140**	**493**	**30**	**866**
Mercury	NA	NA	NA	NA	0.1 U	0.1 U	0.1 U	0.1 U	0.1 U	0.1 U	0.1 U
Nickel	NA	NA	NA	NA	**1.0**	**0.6**	**0.7**	**0.8**	**1.3**	0.5 U	**0.7**
Silver	NA	NA	NA	NA	NA	NA	NA	NA	NA	NA	NA
Zinc	NA	NA	NA	NA	**8**	**18**	**31**	**29**	**8**	**6**	**19**
DISSOLVED METALS (µg/L)											
Method EPA200.8/6010B,C											
Arsenic	NA	NA	NA	NA	**0.9**	**0.3**	**0.4**	**0.3**	**0.5**	**0.2**	**0.6**
Cadmium	NA	NA	NA	NA	0.1 U	0.1 U	0.1 U	0.1 U	0.1 U	0.1 U	0.1 U
Chromium	NA	NA	NA	NA	0.5 U	0.5 U	0.5 U	**0.6**	0.5 U	0.5 U	1 U
Copper	NA	NA	NA	NA	0.5 U	**1.5**	**0.9**	**1.0**	**1.3**	**0.6**	**0.6**
Iron	NA	NA	NA	NA	**2690**	50 U	**150**	**70**	**130**	50 U	**480**
Lead	NA	NA	NA	NA	**0.6**	**1.7**	**0.1**	0.1 U	0.1 U	0.1 U	**0.1**
Manganese	NA	NA	NA	NA	**790**	**94**	**370**	**130**	**386**	**30**	**814**
Nickel	NA	NA	NA	NA	**0.8**	0.5 U	**0.7**	**0.8**	**1.4**	0.5 U	**0.7**
Silver	NA	NA	NA	NA	NA	NA	NA	NA	NA	NA	NA
Zinc	NA	NA	NA	NA	**7**	**13**	**24**	**23**	**9**	**6**	**17**
DISSOLVED METALS (ng/L)											
Method SW7470A											
Mercury	NA	NA	NA	NA	20.0 U	20.0 U	20.0 U	20.0 U	20.0 U	20.0 U	20.0 U
CONVENTIONALS											
pH (SU; EPA 150.1; SM 4500H)	NA	NA	NA	NA	**6.63**	**6.63**	**6.54**	**6.58**	**6.74**	**6.79**	**6.91**
Total Suspended Solids (mg/L; EPA 160.2; SM2540D)	1.0 U	**10.4**	1.0 U	1.1 U	**6.6**	**2.2**	1.0 U	**1.2**	1.0 U	**1.5**	**3.3**
Turbidity (NTU; EPA 180.1)	NA	NA	NA	NA	**6.70**	NA	NA	NA	NA	NA	NA

TABLE 5
EFFLUENT WHOLE WATER SAMPLING ANALYTICAL RESULTS
LONG-TERM STORMWATER TREATMENT SYSTEM
NORTH BOEING FIELD - SEATTLE, WASHINGTON

Sample Location ID	LTST-W-EFF	LTST-W-EFF	LTST-W-EFF	LTST-W-EFF	LTST-W-EFF	LTST-W-EFF	LTST-W-EFF	LTST-W-EFF	LTST-W-EFF	LTST-W-EFF	LTST-W-EFF
Laboratory Data ID	TW17A	TX51A	TY77A	TZ89B	UC19A/UC19D/UC20A	UC67B/UC67D/UC68B	UD94C/UD94F/UD95C	UE63B/UE63D/UE64B	UH75E/UH75J/UH76E	UK69B/UK69D/UK70B	UL81B/UL81D/UL82B
Sample Date	11/08/2011	11/16/2011	11/22/2011	12/5/2011	12/20/2011	12/27/2011	1/10/2012	1/20/2012	02/09/2012	03/05/2012	03/12/2012
Event Type	Monthly	Storm	Storm	Monthly	2nd Monthly	Storm	Monthly	Storm	Monthly	Monthly	Storm
Sample Type	Grab	Grab	Grab	Grab	Grab	Grab	Grab	Grab	Grab	Grab	Grab
PARTICLE/GRAIN SIZE (mg/L)											
Method ASTM-D3977C											
Sediment Conc. > 500 µm	0.01 U	**0.2**	0.01 U	**0.4**	**0.7**	**1.8**	0.01 U	0.01 U	**0.4**	**4.7**	**5.4**
Sediment Conc. 500 to 250 µm	0.01 U	**0.2**	0.01 U	**0.3**	**0.9**	**3.0**	0.01 U	**0.7**	**0.6**	**5.1**	**6.1**
Sediment Conc. 250 to 125 µm	0.01 U	0.01 U	0.01 U	0.01 U	0.01 U	0.01 U	0.01 U	0.01 U	0.01 U	0.01 U	0.01 U
Sediment Conc. 125 to 62.5 µm	0.01 U	0.01 U	0.01 U	0.01 U	0.01 U	0.01 U	0.01 U	0.01 U	0.01 U	0.01 U	0.01 U
Sediment Conc. 62.5 to 3.9 µm	0.01 U	0.01 U	0.01 U	0.01 U	0.01 U	**1.40**	0.01 U	0.01 U	0.01 U	0.01 U	0.01 U
Sediment Conc. 3.9 to 1 µm	**0.7**	**8.3**	**0.9**	**0.8**	**2.4**	**0.2**	**0.4**	**1.4**	**4.7**	0.01 U	**1.1**
Sediment Conc. < 1 µm	**0.3**	**9.8**	**4.5**	**0.3**	**5.1**	**0.1**	**0.4**	**2.0**	**4.3**	0.01 U	**1.7**
Previous 1 Hour Precip. (inches) (c)	0.0	0.0	0.01	0.0	0.0	0.04	0.0	0.09	0.03	0.0	0.01
Previous 12 Hours Precip. (inches) (c)	0.0	0.0	0.7	0.0	0.0	0.17	0.23	0.27	0.03	0.36	0.02

TABLE 5
EFFLUENT WHOLE WATER SAMPLING ANALYTICAL RESULTS
LONG-TERM STORMWATER TREATMENT SYSTEM
NORTH BOEING FIELD - SEATTLE, WASHINGTON

Sample Location ID	LTST-W-EFF	LTST-W-EFF	LTST-W-EFF	LTST-W-EFF	LTST-W-EFF	LTST-W-EFF	LTST-W-EFF	LTST-W-EFF	LTST-W-EFF	LTST-W-EFF
Laboratory Data ID	UO82C/UO82F/UO83C	UP29D/UP29H/UP30D	UU03E/UU03J/UU04E	UX30C/UX30F/UX31C	VB89C/VB89F/VB90C	VF37C/VF37F/VF38C	VJ50C/VJ50I/VJ52C	VL90C/VL90F/VL91C	VR68C/VR68F/VR69C	VS17D/VS17H/VS30D
Sample Date	03/31/2012	04/05/2012	5/10/2012	6/5/2012	7/11/2012	8/9/2012	9/13/2012	10/4/2012	11/8/2012	11/12/2012
Event Type	Storm	Monthly	Monthly	Monthly	Monthly	Monthly	Monthly	Monthly	Monthly	Storm
Sample Type	Grab	Grab	Grab	Grab	Grab	Grab	Grab	Grab	Grab	Grab
PCBs (µg/L) (a)										
Method SW8082A										
Aroclor 1016	0.010 U	0.012 U	0.010 U	0.010 U	0.015 U	0.010 U	0.012 U	0.010 U	0.010 U	0.010 U
Aroclor 1242	0.010 U	0.010 U	0.010 U	0.010 U	0.010 U	0.010 U	0.010 U	0.010 U	0.012 U	0.010 U
Aroclor 1248	0.010 U	0.010 U	0.010 U	0.010 U	0.010 U	0.010 U	0.010 U	0.010 U	0.010 U	0.010 U
Aroclor 1254	0.010 U	0.010 U	0.010 U	0.010 U	0.010 U	0.010 U	0.010 U	0.010 U	0.010 U	0.010 U
Aroclor 1260	0.010 U	0.010 U	0.010 U	0.010 U	0.010 U	0.010 U	0.010 U	0.010 U	0.010 U	0.010 U
Aroclor 1221	0.010 U	0.010 U	0.010 U	0.010 U	0.010 U	0.010 U	0.010 U	0.010 U	0.010 U	0.010 U
Aroclor 1232	0.020 U	0.010 U	0.020 U	0.015 U	0.010 U	0.025 U	0.010 U	0.010 U	0.010 U	0.010 U
Aroclor 1262	0.010 U	0.010 U	0.010 U	0.010 U	0.010 U	0.010 U	0.010 U	0.010 U	0.010 U	0.010 U
Total PCBs (b)	ND	ND	ND	ND	ND	ND	ND	ND	ND	ND
SEMIVOLATILES (µg/L)										
Method SW8270D										
Phenol	NA	NA	NA	NA	NA	NA	NA	NA	NA	NA
1,3-Dichlorobenzene	NA	NA	NA	NA	NA	NA	NA	NA	NA	NA
1,4-Dichlorobenzene	NA	NA	NA	NA	NA	NA	NA	NA	NA	NA
Benzyl Alcohol	NA	NA	NA	NA	NA	NA	NA	NA	NA	NA
1,2-Dichlorobenzene	NA	NA	NA	NA	NA	NA	NA	NA	NA	NA
2-Methylphenol	NA	NA	NA	NA	NA	NA	NA	NA	NA	NA
4-Methylphenol	NA	NA	NA	NA	NA	NA	NA	NA	NA	NA
Hexachloroethane	NA	NA	NA	NA	NA	NA	NA	NA	NA	NA
2,4-Dimethylphenol	NA	NA	NA	NA	NA	NA	NA	NA	NA	NA
Benzoic Acid	NA	NA	NA	NA	NA	NA	NA	NA	NA	NA
1,2,4-Trichlorobenzene	NA	NA	NA	NA	NA	NA	NA	NA	NA	NA
Naphthalene	NA	NA	NA	NA	NA	NA	NA	NA	NA	NA
Hexachlorobutadiene	NA	NA	NA	NA	NA	NA	NA	NA	NA	NA
2-Methylnaphthalene	NA	NA	NA	NA	NA	NA	NA	NA	NA	NA
Dimethylphthalate	NA	NA	NA	NA	NA	NA	NA	NA	NA	NA
Acenaphthylene	NA	NA	NA	NA	NA	NA	NA	NA	NA	NA
Acenaphthene	NA	NA	NA	NA	NA	NA	NA	NA	NA	NA
Dibenzofuran	NA	NA	NA	NA	NA	NA	NA	NA	NA	NA
Diethylphthalate	NA	NA	NA	NA	NA	NA	NA	NA	NA	NA
Fluorene	NA	NA	NA	NA	NA	NA	NA	NA	NA	NA
N-Nitrosodiphenylamine	NA	NA	NA	NA	NA	NA	NA	NA	NA	NA
Hexachlorobenzene	NA	NA	NA	NA	NA	NA	NA	NA	NA	NA
Pentachlorophenol	NA	NA	NA	NA	NA	NA	NA	NA	NA	NA
Phenanthrene	NA	NA	NA	NA	NA	NA	NA	NA	NA	NA
Anthracene	NA	NA	NA	NA	NA	NA	NA	NA	NA	NA
Di-n-Butylphthalate	NA	NA	NA	NA	NA	NA	NA	NA	NA	NA
Fluoranthene	NA	NA	NA	NA	NA	NA	NA	NA	NA	NA
Pyrene	NA	NA	NA	NA	NA	NA	NA	NA	NA	NA
Butylbenzylphthalate	NA	NA	NA	NA	NA	NA	NA	NA	NA	NA
Benzo(a)anthracene	NA	NA	NA	NA	NA	NA	NA	NA	NA	NA
bis(2-Ethylhexyl)phthalate	NA	NA	NA	NA	NA	NA	NA	NA	NA	NA
Chrysene	NA	NA	NA	NA	NA	NA	NA	NA	NA	NA
Di-n-Octyl phthalate	NA	NA	NA	NA	NA	NA	NA	NA	NA	NA
Benzo(a)pyrene	NA	NA	NA	NA	NA	NA	NA	NA	NA	NA
Indeno(1,2,3-cd)pyrene	NA	NA	NA	NA	NA	NA	NA	NA	NA	NA
Dibenz(a,h)anthracene	NA	NA	NA	NA	NA	NA	NA	NA	NA	NA
Benzo(g,h,i)perylene	NA	NA	NA	NA	NA	NA	NA	NA	NA	NA
1-Methylnaphthalene	NA	NA	NA	NA	NA	NA	NA	NA	NA	NA
Total Benzofluoranthenes	NA	NA	NA	NA	NA	NA	NA	NA	NA	NA

TABLE 5
EFFLUENT WHOLE WATER SAMPLING ANALYTICAL RESULTS
LONG-TERM STORMWATER TREATMENT SYSTEM
NORTH BOEING FIELD - SEATTLE, WASHINGTON

Sample Location ID	LTST-W-EFF	LTST-W-EFF	LTST-W-EFF	LTST-W-EFF	LTST-W-EFF	LTST-W-EFF	LTST-W-EFF	LTST-W-EFF	LTST-W-EFF	LTST-W-EFF
Laboratory Data ID	UO82C/UO82F/UO83C	UP29D/UP29H/UP30D	UU03E/UU03J/UU04E	UX30C/UX30F/UX31C	VB89C/VB89F/VB90C	VF37C/VF37F/VF38C	VJ50C/VJ50I/VJ52C	VL90C/VL90F/VL91C	VR68C/VR68F/VR69C	VS17D/VS17H/VS30D
Sample Date	03/31/2012	04/05/2012	5/10/2012	6/5/2012	7/11/2012	8/9/2012	9/13/2012	10/4/2012	11/8/2012	11/12/2012
Event Type	Storm	Monthly	Monthly	Monthly	Monthly	Monthly	Monthly	Monthly	Monthly	Storm
Sample Type	Grab	Grab	Grab	Grab	Grab	Grab	Grab	Grab	Grab	Grab
PAHs (µg/L)										
Method SW8270D-SIM										
Naphthalene	NA	NA	NA	NA	NA	NA	NA	NA	NA	NA
2-Methylnaphthalene	NA	NA	NA	NA	NA	NA	NA	NA	NA	NA
1-Methylnaphthalene	NA	NA	NA	NA	NA	NA	NA	NA	NA	NA
Acenaphthylene	NA	NA	NA	NA	NA	NA	NA	NA	NA	NA
Acenaphthene	NA	NA	NA	NA	NA	NA	NA	NA	NA	NA
Fluorene	NA	NA	NA	NA	NA	NA	NA	NA	NA	NA
Phenanthrene	NA	NA	NA	NA	NA	NA	NA	NA	NA	NA
Anthracene	NA	NA	NA	NA	NA	NA	NA	NA	NA	NA
Fluoranthene	NA	NA	NA	NA	NA	NA	NA	NA	NA	NA
Pyrene	NA	NA	NA	NA	NA	NA	NA	NA	NA	NA
Benzo(a)anthracene	NA	NA	NA	NA	NA	NA	NA	NA	NA	NA
Chrysene	NA	NA	NA	NA	NA	NA	NA	NA	NA	NA
Benzo(a)pyrene	NA	NA	NA	NA	NA	NA	NA	NA	NA	NA
Indeno(1,2,3-cd)pyrene	NA	NA	NA	NA	NA	NA	NA	NA	NA	NA
Dibenz(a,h)anthracene	NA	NA	NA	NA	NA	NA	NA	NA	NA	NA
Benzo(g,h,i)perylene	NA	NA	NA	NA	NA	NA	NA	NA	NA	NA
Dibenzofuran	NA	NA	NA	NA	NA	NA	NA	NA	NA	NA
Total Benzofluoranthenes	NA	NA	NA	NA	NA	NA	NA	NA	NA	NA
CPAH TEQ	NA	NA	NA	NA	NA	NA	NA	NA	NA	NA
TOTAL METALS (µg/L)										
Method EPA200.8/6010B,C/7470A										
Arsenic	**0.3**	**0.5**	**0.8**	**0.4**	**0.7**	**0.7**	**1.2**	**0.6**	**0.6**	**0.5**
Cadmium	0.1 U	0.1 U	0.1 U	0.1 U	0.1 U	0.1 U	0.1 U	0.1 U	0.1 U	**0.1**
Chromium	0.5 U	0.5 U	0.5 U	0.5 U	0.5 U	1 U	0.5 U	**0.5**	1 U	0.5 U
Copper	**1.0**	**1.3**	0.5 U	**1.7**	0.5 U	0.5 U	**0.7**	0.5 U	0.5 U	**2.2**
Iron	**210**	**400**	**1740**	**170**	**700**	**1110**	**8130**	**690**	**260**	**1180**
Lead	0.1 U	0.1 U	0.1 U	0.1 U	0.1 U	0.1 U	**0.1**	0.1 U	0.1 U	**0.2**
Manganese	**73**	**265**	**798**	**40**	**870**	**781**	**1120**	**958**	**720**	**371**
Mercury	0.1 U	0.1 U	0.1 U	0.1 U	0.1 U	0.1 U	0.1 U	0.1 U	0.1 U	0.1 U
Nickel	**0.6**	**0.7**	**0.8**	**0.6**	**1.2**	**0.9**	**1.0**	**0.9**	0.5 U	**0.7**
Silver	0.2 U	NA	NA	NA	NA	NA	NA	NA	NA	NA
Zinc	**27**	**16**	**7**	**14**	**6**	4 U	4 U	4 U	4 U	**36**
DISSOLVED METALS (µg/L)										
Method EPA200.8/6010B,C										
Arsenic	**0.2**	**0.4**	**0.7**	**0.3**	**0.7**	**0.6**	**0.7**	**0.6**	**0.6**	**0.4**
Cadmium	0.1 U	0.1 U	0.1 U	0.1 U	0.1 U	0.1 U	0.1 U	0.1 U	0.1 U	**0.1**
Chromium	0.5 U	0.5 U	0.5 U	0.5 U	0.5 U	0.5 U	0.5 U	0.5 U	0.5 U	0.5 U
Copper	**0.8**	**1.1**	0.5 U	**1.4**	0.5 U	0.5 U	**0.6**	0.5 U	0.5 U	**1.6**
Iron	50 U	**90**	**650**	50 U	**310**	**290**	**260**	**160**	**110**	**50** U
Lead	0.1 U	0.1 U	0.1 U	0.1 U	0.1 U	0.1 U	0.1 U	0.1 U	0.1 U	**0.1**
Manganese	**72**	**258**	**760**	**38**	**876**	**798**	**1050**	**928**	**708**	**408**
Nickel	**0.6**	**1.2**	**0.7**	**0.5**	**1.2**	**1.0**	**1.0**	**0.9**	**0.8**	**0.7**
Silver	0.2 U	NA	NA	NA	NA	NA	NA	NA	NA	NA
Zinc	**26**	**15**	**7**	**13**	**5**	4 U	4 U	4 U	4 U	**32**
DISSOLVED METALS (ng/L)										
Method SW7470A										
Mercury	20.0 U	20.0 U	20.0 U	20.0 U	20.0 U	20.0 U	20.0 U	20.0 U	20.0 U	20.0 U
CONVENTIONALS										
pH (SU; EPA 150.1; SM 4500H)	**6.56**	**6.72**	**6.77**	**6.77**	6.93	**6.86**	**6.74**	**7.01**	**6.82**	**6.56**
Total Suspended Solids (mg/L; EPA 160.2; SM2540D)	1.0 U	**1.8**	**1.3**	1.0 U	1.0 U	1.0 U	**8.2**	**5.1**	1.0 U	**3.1**
Turbidity (NTU; EPA 180.1)	NA	NA	NA	NA	NA	NA	NA	NA	NA	NA

TABLE 5
EFFLUENT WHOLE WATER SAMPLING ANALYTICAL RESULTS
LONG-TERM STORMWATER TREATMENT SYSTEM
NORTH BOEING FIELD - SEATTLE, WASHINGTON

Sample Location ID	LTST-W-EFF	LTST-W-EFF	LTST-W-EFF	LTST-W-EFF	LTST-W-EFF	LTST-W-EFF	LTST-W-EFF	LTST-W-EFF	LTST-W-EFF	LTST-W-EFF
Laboratory Data ID	UO82C/UO82F/UO83C	UP29D/UP29H/UP30D	UU03E/UU03J/UU04E	UX30C/UX30F/UX31C	VB89C/VB89F/VB90C	VF37C/VF37F/VF38C	VJ50C/VJ50I/VJ52C	VL90C/VL90F/VL91C	VR68C/VR68F/VR69C	VS17D/VS17H/VS30D
Sample Date	03/31/2012	04/05/2012	5/10/2012	6/5/2012	7/11/2012	8/9/2012	9/13/2012	10/4/2012	11/8/2012	11/12/2012
Event Type	Storm	Monthly	Monthly	Monthly	Monthly	Monthly	Monthly	Monthly	Monthly	Storm
Sample Type	Grab	Grab	Grab	Grab	Grab	Grab	Grab	Grab	Grab	Grab
PARTICLE/GRAIN SIZE (mg/L)										
Method ASTM-D3977C										
Sediment Conc. > 500 µm	**5.3**	**7.1**	**0.4**	**2.68**	**4.72**	0.01 U	0.01 U	0.01 U	0.01 U	0.01 U
Sediment Conc. 500 to 250 µm	**7.5**	**6.2**	**0.5**	**3.78**	**3.44**	**0.32**	0.01 U	**0.73**	0.01 U	0.01 U
Sediment Conc. 250 to 125 µm	0.01 U	0.01 U	0.01 U	0.01 U	0.01 U	0.01 U	0.01 U	0.01 U	0.01 U	0.01 U
Sediment Conc. 125 to 62.5 µm	0.01 U	0.01 U	0.01 U	0.01 U	0.01 U	0.01 U	0.01 U	0.01 U	0.01 U	0.01 U
Sediment Conc. 62.5 to 3.9 µm	0.01 U	0.01 U	0.01 U	0.01 U	0.01 U	**1.13**	0.01 U	0.01 U	0.01 U	0.01 U
Sediment Conc. 3.9 to 1 µm	**0.6**	0.01 U	**4.0**	**0.22**	**0.18**	**0.27**	**8.77**	**0.25**	**0.64**	**3.93**
Sediment Conc. < 1 µm	**0.8**	**0.5**	**2.8**	**1.25**	**0.62**	**0.42**	**18.14**	**16.25**	**0.96**	**5.87**
Previous 1 Hour Precip. (inches) (c)	0.0	0.0	0.0	0.01	0.0	0.0	0.0	0.0	0.0	0.01
Previous 12 Hours Precip. (inches) (c)	0.43	0.12	0.0	0.44	0.0	0.0	0.0	0.0	0.0	0.26

TABLE 5
EFFLUENT WHOLE WATER SAMPLING ANALYTICAL RESULTS
LONG-TERM STORMWATER TREATMENT SYSTEM
NORTH BOEING FIELD - SEATTLE, WASHINGTON

Sample Location ID	LTST-W-EFF	LTST-W-EFF	LTST-W-EFF	LTST-W-EFF	LTST-W-EFF	LTST-W-EFF	LTST-W-EFF	LTST-W-EFF	LTST-W-EFF	LTST-W-EFF
Laboratory Data ID	VV27D/VV27H/VV28D	VW75B/VW75F/VW76B	VY68B/VY68D/VY69B/VY69D	WC96D/WC96H/WC97D	WG51D/WG51H/WG56D	WI40B/WI40F/WI41B	WK37D/WK37H/WK38D	WK74D/WK74H/WK81D	WP40D/WP40H/WP39D	WT15C/WT15F/WT16C
Sample Date	12/6/2012	12/16/2012	1/8/2013	2/7/2013	3/7/2013	3/19/2013	4/4/2013	4/5/2013	5/9/2013	6/7/2013
Event Type	Monthly	Storm	Monthly	Monthly	Monthly	Storm	Monthly	Storm	Monthly	Monthly
Sample Type	Grab	Grab	Grab	Grab	Grab	Grab	Grab	Grab	Grab	Grab
PCBs (µg/L) (a)										
Method SW8082A										
Aroclor 1016	0.010 U	0.005 U	0.005 U	0.005 U	0.005 U	0.005 U	0.005 U	0.005 U	0.005 U	0.005 U
Aroclor 1242	0.010 U	0.005 U	0.008 U	0.008 U	0.005 U	0.005 U	0.005 U	0.005 U	0.010 U	0.008 U
Aroclor 1248	0.010 U	0.005 U	0.005 U	0.005 U	0.005 U	0.005 U	0.005 U	0.005 U	0.005 U	0.005 U
Aroclor 1254	0.010 U	0.005 U	0.005 U	0.005 U	0.005 U	0.005 U	0.005 U	0.005 U	0.005 U	0.005 U
Aroclor 1260	0.010 U	0.005 U	0.005 U	0.005 U	0.005 U	0.005 U	0.005 U	0.005 U	0.005 U	0.005 U
Aroclor 1221	0.010 U	0.005 U	0.005 U	0.005 U	0.005 U	0.005 U	0.005 U	0.005 U	0.005 U	0.005 U
Aroclor 1232	0.010 U	0.008 U	0.005 U	0.005 U	0.013 U	0.010 U	0.013 U	0.005 U	0.005 U	0.005 U
Aroclor 1262	0.010 U	0.005 U	0.005 U	0.005 U	0.005 U	0.005 U	0.005 U	0.005 U	0.005 U	0.005 U
Total PCBs (b)	ND	ND	ND	ND	ND	ND	ND	ND	ND	ND
SEMIVOLATILES (µg/L)										
Method SW8270D										
Phenol	NA	NA	NA	NA	1.0 U	1.0 U	NA	NA	NA	NA
1,3-Dichlorobenzene	NA	NA	NA	NA	1.0 U	1.0 U	NA	NA	NA	NA
1,4-Dichlorobenzene	NA	NA	NA	NA	1.0 U	1.0 U	NA	NA	NA	NA
Benzyl Alcohol	NA	NA	NA	NA	2.0 UJ	2.0 U	NA	NA	NA	NA
1,2-Dichlorobenzene	NA	NA	NA	NA	1.0 U	1.0 U	NA	NA	NA	NA
2-Methylphenol	NA	NA	NA	NA	1.0 U	1.0 U	NA	NA	NA	NA
4-Methylphenol	NA	NA	NA	NA	2.0 U	2.0 U	NA	NA	NA	NA
Hexachloroethane	NA	NA	NA	NA	2.0 U	2.0 U	NA	NA	NA	NA
2,4-Dimethylphenol	NA	NA	NA	NA	3.0 U	3.0 U	NA	NA	NA	NA
Benzoic Acid	NA	NA	NA	NA	20 U	20 U	NA	NA	NA	NA
1,2,4-Trichlorobenzene	NA	NA	NA	NA	1.0 U	1.0 U	NA	NA	NA	NA
Naphthalene	NA	NA	NA	NA	1.0 U	1.0 U	NA	NA	NA	NA
Hexachlorobutadiene	NA	NA	NA	NA	3.0 U	3.0 U	NA	NA	NA	NA
2-Methylnaphthalene	NA	NA	NA	NA	1.0 U	1.0 U	NA	NA	NA	NA
Dimethylphthalate	NA	NA	NA	NA	1.0 U	1.0 U	NA	NA	NA	NA
Acenaphthylene	NA	NA	NA	NA	1.0 U	1.0 U	NA	NA	NA	NA
Acenaphthene	NA	NA	NA	NA	1.0 U	1.0 U	NA	NA	NA	NA
Dibenzofuran	NA	NA	NA	NA	1.0 U	1.0 U	NA	NA	NA	NA
Diethylphthalate	NA	NA	NA	NA	1.0 U	1.0 U	NA	NA	NA	NA
Fluorene	NA	NA	NA	NA	1.0 U	1.0 U	NA	NA	NA	NA
N-Nitrosodiphenylamine	NA	NA	NA	NA	1.0 U	1.0 U	NA	NA	NA	NA
Hexachlorobenzene	NA	NA	NA	NA	1.0 U	1.0 U	NA	NA	NA	NA
Pentachlorophenol	NA	NA	NA	NA	10 U	10 U	NA	NA	NA	NA
Phenanthrene	NA	NA	NA	NA	1.0 U	1.0 U	NA	NA	NA	NA
Anthracene	NA	NA	NA	NA	1.0 U	1.0 U	NA	NA	NA	NA
Di-n-Butylphthalate	NA	NA	NA	NA	1.0 U	1.0 U	NA	NA	NA	NA
Fluoranthene	NA	NA	NA	NA	1.0 U	1.0 U	NA	NA	NA	NA
Pyrene	NA	NA	NA	NA	1.0 U	1.0 U	NA	NA	NA	NA
Butylbenzylphthalate	NA	NA	NA	NA	1.0 U	1.0 U	NA	NA	NA	NA
Benzo(a)anthracene	NA	NA	NA	NA	1.0 U	1.0 U	NA	NA	NA	NA
bis(2-Ethylhexyl)phthalate	NA	NA	NA	NA	1.0 U	1.0 U	NA	NA	NA	NA
Chrysene	NA	NA	NA	NA	1.0 U	1.0 U	NA	NA	NA	NA
Di-n-Octyl phthalate	NA	NA	NA	NA	1.0 U	1.0 U	NA	NA	NA	NA
Benzo(a)pyrene	NA	NA	NA	NA	1.0 U	1.0 U	NA	NA	NA	NA
Indeno(1,2,3-cd)pyrene	NA	NA	NA	NA	1.0 U	1.0 U	NA	NA	NA	NA
Dibenz(a,h)anthracene	NA	NA	NA	NA	1.0 U	1.0 U	NA	NA	NA	NA
Benzo(g,h,i)perylene	NA	NA	NA	NA	1.0 U	1.0 U	NA	NA	NA	NA
1-Methylnaphthalene	NA	NA	NA	NA	1.0 U	1.0 U	NA	NA	NA	NA
Total Benzofluoranthenes	NA	NA	NA	NA	5.0 U	5.0 U	NA	NA	NA	NA

TABLE 5
EFFLUENT WHOLE WATER SAMPLING ANALYTICAL RESULTS
LONG-TERM STORMWATER TREATMENT SYSTEM
NORTH BOEING FIELD - SEATTLE, WASHINGTON

Sample Location ID	LTST-W-EFF	LTST-W-EFF	LTST-W-EFF	LTST-W-EFF	LTST-W-EFF	LTST-W-EFF	LTST-W-EFF	LTST-W-EFF	LTST-W-EFF	LTST-W-EFF
Laboratory Data ID	VV27D/VV27H/VV28D	VW75B/VW75F/VW76B	VY68B/VY68D/VY69B/VY69D	WC96D/WC96H/WC97D	WG51D/WG51H/WG56D	WI40B/WI40F/WI41B	WK37D/WK37H/WK38D	WK74D/WK74H/WK81D	WP40D/WP40H/WP39D	WT15C/WT15F/WT16C
Sample Date	12/6/2012	12/16/2012	1/8/2013	2/7/2013	3/7/2013	3/19/2013	4/4/2013	4/5/2013	5/9/2013	6/7/2013
Event Type	Monthly	Storm	Monthly	Monthly	Monthly	Storm	Monthly	Storm	Monthly	Monthly
Sample Type	Grab	Grab	Grab	Grab	Grab	Grab	Grab	Grab	Grab	Grab
PAHs (µg/L)										
Method SW8270D-SIM										
Naphthalene	NA	NA	NA	NA	0.010 U	**0.014**	NA	NA	NA	NA
2-Methylnaphthalene	NA	NA	NA	NA	**0.011**	**0.019**	NA	NA	NA	NA
1-Methylnaphthalene	NA	NA	NA	NA	0.010 U	**0.016**	NA	NA	NA	NA
Acenaphthylene	NA	NA	NA	NA	0.010 U	0.010 U	NA	NA	NA	NA
Acenaphthene	NA	NA	NA	NA	0.010 U	**0.055**	NA	NA	NA	NA
Fluorene	NA	NA	NA	NA	0.010 U	0.010 U	NA	NA	NA	NA
Phenanthrene	NA	NA	NA	NA	0.010 U	0.010 U	NA	NA	NA	NA
Anthracene	NA	NA	NA	NA	0.010 U	0.010 U	NA	NA	NA	NA
Fluoranthene	NA	NA	NA	NA	**0.016**	0.010 U	NA	NA	NA	NA
Pyrene	NA	NA	NA	NA	**0.011**	0.010 U	NA	NA	NA	NA
Benzo(a)anthracene	NA	NA	NA	NA	0.010 U	0.010 U	NA	NA	NA	NA
Chrysene	NA	NA	NA	NA	0.010 U	0.010 U	NA	NA	NA	NA
Benzo(a)pyrene	NA	NA	NA	NA	0.010 U	0.010 U	NA	NA	NA	NA
Indeno(1,2,3-cd)pyrene	NA	NA	NA	NA	0.010 U	0.010 U	NA	NA	NA	NA
Dibenz(a,h)anthracene	NA	NA	NA	NA	0.010 U	0.010 U	NA	NA	NA	NA
Benzo(g,h,i)perylene	NA	NA	NA	NA	0.010 U	0.010 U	NA	NA	NA	NA
Dibenzofuran	NA	NA	NA	NA	0.010 U	0.010 U	NA	NA	NA	NA
Total Benzofluoranthenes	NA	NA	NA	NA	0.020 UJ	0.020 U	NA	NA	NA	NA
CPAH TEQ	NA	NA	NA	NA	NA	NA	NA	NA	NA	NA
TOTAL METALS (µg/L)										
Method EPA200.8/6010B,C/7470A										
Arsenic	**0.5**	**0.3**	**0.5**	**0.5**	**0.5**	**0.6**	**0.5**	**0.4**	**0.6**	**0.7**
Cadmium	0.1 U	0.1 U	0.1 U	0.1 U	0.1 U	0.1 U	0.1 U	0.1 U	0.1 U	0.1 U
Chromium	0.5 U	0.5 U	0.5 U	1 U	0.5 U	1 U	0.5 U	0.5 U	0.5 U	0.5 U
Copper	**1.2**	**1.3**	1.8	**1.0**	**0.6**	**1.0**	0.5 U	**2.0**	**0.5**	0.5 U
Iron	**100**	**60**	**120**	**960**	**50**	**400**	**390**	**350**	**640**	**2400**
Lead	0.1 U	0.1 U	**0.2**	0.1 U	0.1 U	0.1 U	0.1 U	**0.1**	0.1 U	0.1 U
Manganese	**424**	**156**	**143**	**510**	**69**	**622**	**767**	**133**	**833**	**1190**
Mercury	0.1 U	0.1 U	20.0 U (d)	0.1 U	0.1 U	0.1 U	0.1 U	0.1 U	0.1 U	0.1 U
Nickel	**1.1**	**0.6**	**0.6**	**0.8**	0.5 U	**1.0**	**1.1**	0.5 U	**0.9**	**0.9**
Silver	NA	NA	NA	NA	NA	NA	NA	NA	NA	NA
Zinc	**11**	**10**	**14**	**17**	**13**	**7**	**5**	**10**	**6**	**6**
DISSOLVED METALS (µg/L)										
Method EPA200.8/6010B,C										
Arsenic	**0.5**	**0.3**	**0.4**	**0.5**	**0.2**	**0.5**	**0.5**	**0.3**	**0.6**	**0.5**
Cadmium	0.1 U	0.1 U	0.1 U	0.1 U	0.1 U	0.1 U	0.1 U	0.1 U	0.1 U	0.1 U
Chromium	0.5 U	0.5 U	1 U	1 U	0.5 U	0.5 U	0.5 U	0.5 U	0.5 U	0.5 U
Copper	**2.3**	**1.1**	**1.5**	**0.7**	**0.6**	**0.8**	0.5 U	**1.6**	**0.8**	0.5 U
Iron	50 U	50 U	50 U	**70**	50 U	**150**	**130**	**50**	**280**	**480**
Lead	0.1 U	0.1 U	**0.2**	0.1 U	0.1 U	0.1 U	0.1 U	0.1 U	0.1 U	0.1 U
Manganese	**405**	**161**	**138**	**492**	**68**	**614**	**759**	**130**	**857**	**1140**
Nickel	**1.3**	**0.6**	1 U	**0.9**	0.5 U	**0.9**	**0.7**	0.5 U	**0.9**	**0.8**
Silver	NA	NA	NA	NA	NA	NA	NA	NA	NA	NA
Zinc	**12**	**10**	**14**	**17**	**16**	**6**	**6**	**10**	**6**	**5**
DISSOLVED METALS (ng/L)										
Method SW7470A										
Mercury	20.0 U	20.0 U	20.0 U	20.0 U	20.0 U	20.0 U	20.0 U	20.0 U	20.0 U	20.0 U
CONVENTIONALS										
pH (SU; EPA 150.1; SM 4500H)	**6.61**	**6.62**	**6.63**	**6.79**	**6.55**	**6.83**	**6.95**	**6.59**	**6.92**	**6.77**
Total Suspended Solids (mg/L; EPA 160.2; SM2540D)	1.0 U	**3.4**	1.0 U	**3.2**	1.0 U	1.0 U	1.0 U	**1.2**	**1.0**	**1.0**
Turbidity (NTU; EPA 180.1)	NA	NA	NA	NA	NA	NA	NA	NA	**2.10**	NA

TABLE 5
EFFLUENT WHOLE WATER SAMPLING ANALYTICAL RESULTS
LONG-TERM STORMWATER TREATMENT SYSTEM
NORTH BOEING FIELD - SEATTLE, WASHINGTON

Sample Location ID	LTST-W-EFF	LTST-W-EFF	LTST-W-EFF	LTST-W-EFF	LTST-W-EFF	LTST-W-EFF	LTST-W-EFF	LTST-W-EFF	LTST-W-EFF	LTST-W-EFF
Laboratory Data ID	VV27D/VV27H/VV28D	VW75B/VW75F/VW76B	VY68B/VY68D/VY69B/VY69D	WC96D/WC96H/WC97D	WG51D/WG51H/WG56D	WI40B/WI40F/WI41B	WK37D/WK37H/WK38D	WK74D/WK74H/WK81D	WP40D/WP40H/WP39D	WT15C/WT15F/WT16C
Sample Date	12/6/2012	12/16/2012	1/8/2013	2/7/2013	3/7/2013	3/19/2013	4/4/2013	4/5/2013	5/9/2013	6/7/2013
Event Type	Monthly	Storm	Monthly	Monthly	Monthly	Storm	Monthly	Storm	Monthly	Monthly
Sample Type	Grab	Grab	Grab	Grab	Grab	Grab	Grab	Grab	Grab	Grab
PARTICLE/GRAIN SIZE (mg/L)										
Method ASTM-D3977C										
Sediment Conc. > 500 µm	**0.52**	**0.11**	0.01 U	**0.11**	**1.11**	**6.63**	**6.19**	**3.55**	**5.72**	**14.52**
Sediment Conc. 500 to 250 µm	0.01 U	**0.32**	0.01 U	0.01 U	**0.55**	**3.76**	**5.56**	**5.96**	**4.81**	**12.52**
Sediment Conc. 250 to 125 µm	0.01 U	0.01 U	0.01 U	0.01 U	1.30 U	0.01 U	0.01 U	0.01 U	0.01 U	0.01 U
Sediment Conc. 125 to 62.5 µm	0.01 U	0.01 U	0.01 U	0.01 U	1.30 U	0.01 U	0.01 U	0.01 U	0.01 U	0.01 U
Sediment Conc. 62.5 to 3.9 µm	0.01 U	0.01 U	0.01 U	0.01 U	1.30 U	0.01 U	0.01 U	0.01 U	0.01 U	0.01 U
Sediment Conc. 3.9 to 1 µm	**0.06**	**0.04**	0.01 U	**1.51**	1.30 U	**0.11**	**2.37**	**0.25**	**0.66**	**0.41**
Sediment Conc. < 1 µm	**0.18**	**0.08**	**0.97**	**2.57**	1.30 U	**0.28**	**6.57**	**0.60**	**1.59**	**1.19**
Previous 1 Hour Precip. (inches) (c)	0.01	0.03	0.02	0.00	0.00	0.04	0.00	0.00	0.00	0.00
Previous 12 Hours Precip. (inches) (c)	0.04	0.06	0.22	0.09	0.25	0.07	0.01	0.23	0.00	0.00

TABLE 5
EFFLUENT WHOLE WATER SAMPLING ANALYTICAL RESULTS
LONG-TERM STORMWATER TREATMENT SYSTEM
NORTH BOEING FIELD - SEATTLE, WASHINGTON

Sample Location ID	LTST-W-EFF	LTST-W-EFF	LTST-W-EFF	LTST-W-EFF	LTST-W-EFF	LTST-W-EFF	LTST-W-EFF	LTST-W-EFF	LTST-W-EFF	LTST-W-EFF
Laboratory Data ID	WX01D/WX01H/WX02D	XA11D/XA11H/XA14D	XE07D/XE07H/XE22D	XE91D/XE91G/XE92C	XJ12D/XJ12H/XJ36D	XN18D/XN18H/XN19D	XO61B/XO61D/XO79B	XQ44D/XQ44H/XQ45D	XT98D/XT98H/XT99D	XU37B/XU37D/XU42B
Sample Date	7/10/2013	8/8/2013	9/6/2013	9/12/2013	10/9/2013	11/7/2013	11/18/2013	12/5/2013	1/9/2014	1/10/2014
Event Type	Monthly	Monthly	Storm	Monthly	Monthly	Monthly	Storm	Monthly	Monthly	Storm
Sample Type	Grab	Grab	Grab	Grab	Grab	Grab	Grab	Grab	Grab	Grab
PCBs (µg/L) (a)										
Method SW8082A										
Aroclor 1016	0.005 U	0.005 U	0.005 U	0.005 U	0.005 U	0.005 U	0.005 U	0.005 U	0.005 U	0.005 U
Aroclor 1242	0.005 U	0.005 U	0.005 U	0.005 U	0.005 U	0.005 U	0.005 U	0.005 U	0.005 U	0.005 U
Aroclor 1248	0.005 U	0.005 U	0.005 U	0.005 U	0.005 U	0.005 U	0.005 U	0.005 U	0.005 U	0.005 U
Aroclor 1254	0.005 U	0.005 U	0.005 U	0.005 U	0.005 U	0.005 U	0.005 U	0.005 U	0.005 U	0.005 U
Aroclor 1260	0.005 U	0.005 U	0.005 U	0.005 U	0.005 U	0.005 U	0.005 U	0.005 U	0.005 U	0.005 U
Aroclor 1221	0.005 U	0.005 U	0.005 U	0.005 U	0.005 U	0.005 U	0.005 U	0.005 U	0.005 U	0.005 U
Aroclor 1232	0.018 U	0.013 U	0.005 U	0.005 U	0.005 U	0.005 U	0.013 U	0.005 U	0.013 U	0.005 U
Aroclor 1262	0.005 U	0.005 U	0.005 U	0.005 U	0.005 U	0.005 U	0.005 U	0.005 U	0.005 U	0.005 U
Total PCBs (b)	ND	ND	ND	ND	ND	ND	ND	ND	ND	ND
SEMIVOLATILES (µg/L)										
Method SW8270D										
Phenol	NA	NA	1.0 U	NA	NA	NA	NA	NA	NA	NA
1,3-Dichlorobenzene	NA	NA	1.0 U	NA	NA	NA	NA	NA	NA	NA
1,4-Dichlorobenzene	NA	NA	1.0 U	NA	NA	NA	NA	NA	NA	NA
Benzyl Alcohol	NA	NA	2.0 UJ	NA	NA	NA	NA	NA	NA	NA
1,2-Dichlorobenzene	NA	NA	1.0 U	NA	NA	NA	NA	NA	NA	NA
2-Methylphenol	NA	NA	1.0 U	NA	NA	NA	NA	NA	NA	NA
4-Methylphenol	NA	NA	2.0 U	NA	NA	NA	NA	NA	NA	NA
Hexachloroethane	NA	NA	2.0 U	NA	NA	NA	NA	NA	NA	NA
2,4-Dimethylphenol	NA	NA	3.0 U	NA	NA	NA	NA	NA	NA	NA
Benzoic Acid	NA	NA	20 U	NA	NA	NA	NA	NA	NA	NA
1,2,4-Trichlorobenzene	NA	NA	1.0 U	NA	NA	NA	NA	NA	NA	NA
Naphthalene	NA	NA	**1.5**	NA	NA	NA	NA	NA	NA	NA
Hexachlorobutadiene	NA	NA	3.0 U	NA	NA	NA	NA	NA	NA	NA
2-Methylnaphthalene	NA	NA	**1.8**	NA	NA	NA	NA	NA	NA	NA
Dimethylphthalate	NA	NA	1.0 U	NA	NA	NA	NA	NA	NA	NA
Acenaphthylene	NA	NA	1.0 U	NA	NA	NA	NA	NA	NA	NA
Acenaphthene	NA	NA	1.0 U	NA	NA	NA	NA	NA	NA	NA
Dibenzofuran	NA	NA	1.0 U	NA	NA	NA	NA	NA	NA	NA
Diethylphthalate	NA	NA	1.0 U	NA	NA	NA	NA	NA	NA	NA
Fluorene	NA	NA	1.0 U	NA	NA	NA	NA	NA	NA	NA
N-Nitrosodiphenylamine	NA	NA	1.0 U	NA	NA	NA	NA	NA	NA	NA
Hexachlorobenzene	NA	NA	1.0 U	NA	NA	NA	NA	NA	NA	NA
Pentachlorophenol	NA	NA	10 U	NA	NA	NA	NA	NA	NA	NA
Phenanthrene	NA	NA	1.0 U	NA	NA	NA	NA	NA	NA	NA
Anthracene	NA	NA	1.0 U	NA	NA	NA	NA	NA	NA	NA
Di-n-Butylphthalate	NA	NA	1.0 U	NA	NA	NA	NA	NA	NA	NA
Fluoranthene	NA	NA	1.0 U	NA	NA	NA	NA	NA	NA	NA
Pyrene	NA	NA	1.0 U	NA	NA	NA	NA	NA	NA	NA
Butylbenzylphthalate	NA	NA	1.0 U	NA	NA	NA	NA	NA	NA	NA
Benzo(a)anthracene	NA	NA	1.0 U	NA	NA	NA	NA	NA	NA	NA
bis(2-Ethylhexyl)phthalate	NA	NA	3.0 U	NA	NA	NA	NA	NA	NA	NA
Chrysene	NA	NA	1.0 U	NA	NA	NA	NA	NA	NA	NA
Di-n-Octyl phthalate	NA	NA	1.0 U	NA	NA	NA	NA	NA	NA	NA
Benzo(a)pyrene	NA	NA	1.0 U	NA	NA	NA	NA	NA	NA	NA
Indeno(1,2,3-cd)pyrene	NA	NA	1.0 U	NA	NA	NA	NA	NA	NA	NA
Dibenz(a,h)anthracene	NA	NA	1.0 U	NA	NA	NA	NA	NA	NA	NA
Benzo(g,h,i)perylene	NA	NA	1.0 U	NA	NA	NA	NA	NA	NA	NA
1-Methylnaphthalene	NA	NA	**1.6**	NA	NA	NA	NA	NA	NA	NA
Total Benzofluoranthenes	NA	NA	5.0 U	NA	NA	NA	NA	NA	NA	NA

TABLE 5
EFFLUENT WHOLE WATER SAMPLING ANALYTICAL RESULTS
LONG-TERM STORMWATER TREATMENT SYSTEM
NORTH BOEING FIELD - SEATTLE, WASHINGTON

Sample Location ID	LTST-W-EFF	LTST-W-EFF	LTST-W-EFF	LTST-W-EFF	LTST-W-EFF	LTST-W-EFF	LTST-W-EFF	LTST-W-EFF	LTST-W-EFF	LTST-W-EFF
Laboratory Data ID	WX01D/WX01H/WX02D	XA11D/XA11H/XA14D	XE07D/XE07H/XE22D	XE91D/XE91G/XE92C	XJ12D/XJ12H/XJ36D	XN18D/XN18H/XN19D	XO61B/XO61D/XO79B	XQ44D/XQ44H/XQ45D	XT98D/XT98H/XT99D	XU37B/XU37D/XU42B
Sample Date	7/10/2013	8/8/2013	9/6/2013	9/12/2013	10/9/2013	11/7/2013	11/18/2013	12/5/2013	1/9/2014	1/10/2014
Event Type	Monthly	Monthly	Storm	Monthly	Monthly	Monthly	Storm	Monthly	Monthly	Storm
Sample Type	Grab	Grab	Grab	Grab	Grab	Grab	Grab	Grab	Grab	Grab
PAHs (µg/L)										
Method SW8270D-SIM										
Naphthalene	NA	NA	**1.7**	NA	NA	NA	NA	NA	NA	NA
2-Methylnaphthalene	NA	NA	**1.8**	NA	NA	NA	NA	NA	NA	NA
1-Methylnaphthalene	NA	NA	**1.5**	NA	NA	NA	NA	NA	NA	NA
Acenaphthylene	NA	NA	0.010 U	NA	NA	NA	NA	NA	NA	NA
Acenaphthene	NA	NA	**0.019**	NA	NA	NA	NA	NA	NA	NA
Fluorene	NA	NA	**0.034**	NA	NA	NA	NA	NA	NA	NA
Phenanthrene	NA	NA	**0.030**	NA	NA	NA	NA	NA	NA	NA
Anthracene	NA	NA	0.010 U	NA	NA	NA	NA	NA	NA	NA
Fluoranthene	NA	NA	**0.041**	NA	NA	NA	NA	NA	NA	NA
Pyrene	NA	NA	**0.020**	NA	NA	NA	NA	NA	NA	NA
Benzo(a)anthracene	NA	NA	0.010 U	NA	NA	NA	NA	NA	NA	NA
Chrysene	NA	NA	**0.011**	NA	NA	NA	NA	NA	NA	NA
Benzo(a)pyrene	NA	NA	0.010 U	NA	NA	NA	NA	NA	NA	NA
Indeno(1,2,3-cd)pyrene	NA	NA	0.010 U	NA	NA	NA	NA	NA	NA	NA
Dibenz(a,h)anthracene	NA	NA	0.010 U	NA	NA	NA	NA	NA	NA	NA
Benzo(g,h,i)perylene	NA	NA	0.010 U	NA	NA	NA	NA	NA	NA	NA
Dibenzofuran	NA	NA	**0.039**	NA	NA	NA	NA	NA	NA	NA
Total Benzofluoranthenes	NA	NA	0.020 U	NA	NA	NA	NA	NA	NA	NA
CPAH TEQ	NA	NA	**0.0001**	NA	NA	NA	NA	NA	NA	NA
TOTAL METALS (µg/L)										
Method EPA200.8/6010B,C/7470A										
Arsenic	**0.6**	**0.6**	**0.4**	**0.6**	**0.6**	0.2 U	**0.2**	**0.4**	**0.4**	**0.5**
Cadmium	0.1 U	0.1 U	0.1 U	0.1 U	0.1 U	0.1 U	0.1 U	0.1 U	0.1 U	**0.1**
Chromium	**0.5**	1 U	**0.7**	**0.6**	0.5 U	**0.6**	0.5 U	0.5 U	0.5 U	0.5 U
Copper	**0.9**	**0.7**	**2.3**	**0.7**	**0.6**	**1.8**	**1.3**	**0.7**	**0.6**	0.5 U
Iron	**640**	**570**	**70**	**610**	**840**	**130**	**190**	**610**	**690**	**580**
Lead	**0.2**	0.1 U	**0.2**	0.1 U	0.1 U	**0.2**	**0.2**	0.1 U	**0.2**	0.1 U
Manganese	**929**	**927**	**56**	**958**	**788**	**42**	**57**	**778**	**627**	**726**
Mercury	0.1 U	0.1 U	0.1 U	0.1 U	0.1 U	0.1 U	0.1 U	0.1 U	0.1 U	0.1 U
Nickel	**0.9**	**0.8**	**0.5**	**1.1**	**1.1**	0.5 U	0.5 U	0.5 U	**1.2**	**0.8**
Silver	NA	NA	NA	NA	NA	NA	NA	NA	NA	NA
Zinc	**7**	4 U	**10**	**9**	**15**	**5**	**6**	**9**	**25**	**18**
DISSOLVED METALS (µg/L)										
Method EPA200.8/6010B,C										
Arsenic	**0.6**	**0.5**	**0.3**	**0.5**	**0.4**	0.2 U	0.2 U	**0.4**	**0.4**	**0.4**
Cadmium	0.1 U	0.1 U	0.1 U	0.1 U	0.1 U	0.1 U	0.1 U	0.1 U	0.1 U	0.1 U
Chromium	0.5 U	0.5 U	**0.5**	0.5 U	0.5 U	0.5 U	0.5 U	0.5 U	0.5 U	0.5 U
Copper	0.5 U	0.5 U	**1.8**	0.5 U	0.5 U	**1.1**	**0.8**	**0.6**	0.5 U	0.5 U
Iron	**120**	**180**	50 U	50 U	**90**	50 U	50 U	50 U	**240**	**160**
Lead	0.1 U	0.1 U	**0.1**	0.1 U	0.1 U	0.1 U	0.1 U	0.1 U	0.1 U	0.1 U
Manganese	**908**	**903**	**37**	**923**	**771**	**52**	**57**	**725**	**608**	**693**
Nickel	**0.7**	**0.9**	**0.6**	**1.0**	**0.9**	0.5 U	0.5 U	**0.6**	**0.8**	**0.7**
Silver	NA	NA	NA	NA	NA	NA	NA	NA	NA	NA
Zinc	**5**	4 U	**8**	**8**	**15**	**8**	**5**	**9**	**26**	**16**
DISSOLVED METALS (ng/L)										
Method SW7470A										
Mercury	20.0 U	20.0 U	20.0 U	20.0 U	20.0 U	20.0 U	20.0 U	20.0 U	20.0 U	20.0 U
CONVENTIONALS										
pH (SU; EPA 150.1; SM 4500H)	**6.98**	**6.88**	**6.53**	**6.85**	**7.08**	**6.66**	**6.80**	**7.05**	**6.88**	NA
Total Suspended Solids (mg/L; EPA 160.2; SM2540D)	1.0 U	**1.7**	**1.5**	1.0 U	**1.2**	**1.1**	**2.6**	**9.5**	1.0 U	**2.0**
Turbidity (NTU; EPA 180.1)	NA	NA	NA	NA	NA	NA	NA	NA	NA	**1.81**

TABLE 5
EFFLUENT WHOLE WATER SAMPLING ANALYTICAL RESULTS
LONG-TERM STORMWATER TREATMENT SYSTEM
NORTH BOEING FIELD - SEATTLE, WASHINGTON

Sample Location ID	LTST-W-EFF	LTST-W-EFF	LTST-W-EFF	LTST-W-EFF	LTST-W-EFF	LTST-W-EFF	LTST-W-EFF	LTST-W-EFF	LTST-W-EFF	LTST-W-EFF
Laboratory Data ID	WX01D/WX01H/WX02D	XA11D/XA11H/XA14D	XE07D/XE07H/XE22D	XE91D/XE91G/XE92C	XJ12D/XJ12H/XJ36D	XN18D/XN18H/XN19D	XO61B/XO61D/XO79B	XQ44D/XQ44H/XQ45D	XT98D/XT98H/XT99D	XU37B/XU37D/XU42B
Sample Date	7/10/2013	8/8/2013	9/6/2013	9/12/2013	10/9/2013	11/7/2013	11/18/2013	12/5/2013	1/9/2014	1/10/2014
Event Type	Monthly	Monthly	Storm	Monthly	Monthly	Monthly	Storm	Monthly	Monthly	Storm
Sample Type	Grab	Grab	Grab	Grab	Grab	Grab	Grab	Grab	Grab	Grab
PARTICLE/GRAIN SIZE (mg/L)										
Method ASTM-D3977C										
Sediment Conc. > 500 µm	**0.63**	**0.21**	**6.75**	**0.65**	**6.82**	**11.37**	0.01 U	**1.10**	**0.96**	0.01 U
Sediment Conc. 500 to 250 µm	**0.53**	**0.52**	**0.42**	**10.17**	**8.10**	**9.65**	**0.64**	**0.88**	**1.5**	**0.11**
Sediment Conc. 250 to 125 µm	0.01 U	0.01 U	0.01 U	0.01 U	0.01 U	0.01 U	0.01 U	0.01 U	0.01 U	0.01 U
Sediment Conc. 125 to 62.5 µm	0.01 U	0.01 U	0.01 U	0.01 U	0.01 U	0.01 U	0.01 U	0.01 U	0.01 U	0.01 U
Sediment Conc. 62.5 to 3.9 µm	0.01 U	0.01 U	0.01 U	0.01 U	0.01 U	0.01 U	0.01 U	**1.48**	0.01 U	0.01 U
Sediment Conc. 3.9 to 1 µm	**0.28**	**0.02**	0.01 U	**0.50**	**0.04**	0.01 U	0.01 U	**0.22**	**0.44**	0.01 U
Sediment Conc. < 1 µm	**5.80**	**0.82**	0.01 U	**1.93**	**1.00**	**0.51**	0.01 U	**0.27**	**3.03**	**8.32**
Previous 1 Hour Precip. (inches) (c)	0.00	0.00	0.02	0.00	0.00	0.03	0.08	0.00	0.00	0.01
Previous 12 Hours Precip. (inches) (c)	0.00	0.00	1.23	0.00	0.00	0.71	0.38	0.00	0.01	0.01

TABLE 5
EFFLUENT WHOLE WATER SAMPLING ANALYTICAL RESULTS
LONG-TERM STORMWATER TREATMENT SYSTEM
NORTH BOEING FIELD - SEATTLE, WASHINGTON

Sample Location ID	LTST-W-EFF	LTST-W-EFF	LTST-W-EFF	LTST-W-EFF	LTST-W-EFF	LTST-W-EFF	LTST-W-EFF	LTST-W-EFF	LTST-W-EFF	LTST-W-EFF
Laboratory Data ID	XZ09A	XZ68D	YB09A	YB46B	YF79B	YI62A	YM12A	YR11D	YU82A	YY45A
Sample Date	2/12/2014	2/16/2014	3/3/2014	3/5/2014	4/8/2014	5/1/2014	6/2/2014	7/10/2014	8/1/2014	9/2/2014
Event Type	Monthly	Storm	Monthly	Storm	Monthly	Monthly	Monthly	Monthly	Monthly	Monthly
Sample Type	Grab	Grab	Grab	Grab	Grab	Grab	Grab	Grab	Grab	Grab
PCBs (µg/L) (a)										
Method SW8082A										
Aroclor 1016	0.005 U	0.005 U	0.005 U	0.005 U	0.005 U	0.005 U	0.005 U	0.005 U	0.005 U	0.005 U
Aroclor 1242	0.005 U	0.005 U	0.005 U	0.005 U	0.005 U	0.005 U	0.005 U	0.005 U	0.005 U	0.008 U
Aroclor 1248	0.005 U	0.005 U	0.005 U	0.005 U	0.008 U	0.005 U	0.005 U	0.010 U	0.005 U	0.005 U
Aroclor 1254	0.005 U	0.005 U	0.005 U	0.005 U	0.005 U	0.005 U	0.005 U	0.005 U	0.004 U	0.005 U
Aroclor 1260	0.005 U	0.005 U	0.005 U	0.005 U	0.005 U	0.005 U	0.005 U	0.005 U	0.005 U	0.005 U
Aroclor 1221	0.005 U	0.005 U	0.005 U	0.005 U	0.005 U	0.005 U	0.005 U	0.005 U	0.005 U	0.005 U
Aroclor 1232	0.005 U	0.008 U	0.005 U	0.005 U	0.005 U	0.013 U	0.013 U	0.005 U	0.013 U	0.005 U
Aroclor 1262	0.005 U	0.010 U	0.010 U	0.010 U	0.005 U	0.005 U	0.005 U	0.005 U	0.005 U	0.005 U
Total PCBs (b)	ND	ND	ND	ND	ND	ND	ND	ND	ND	ND
SEMIVOLATILES (µg/L)										
Method SW8270D										
Phenol	NA	NA	NA	NA	NA	NA	NA	NA	NA	NA
1,3-Dichlorobenzene	NA	NA	NA	NA	NA	NA	NA	NA	NA	NA
1,4-Dichlorobenzene	NA	NA	NA	NA	NA	NA	NA	NA	NA	NA
Benzyl Alcohol	NA	NA	NA	NA	NA	NA	NA	NA	NA	NA
1,2-Dichlorobenzene	NA	NA	NA	NA	NA	NA	NA	NA	NA	NA
2-Methylphenol	NA	NA	NA	NA	NA	NA	NA	NA	NA	NA
4-Methylphenol	NA	NA	NA	NA	NA	NA	NA	NA	NA	NA
Hexachloroethane	NA	NA	NA	NA	NA	NA	NA	NA	NA	NA
2,4-Dimethylphenol	NA	NA	NA	NA	NA	NA	NA	NA	NA	NA
Benzoic Acid	NA	NA	NA	NA	NA	NA	NA	NA	NA	NA
1,2,4-Trichlorobenzene	NA	NA	NA	NA	NA	NA	NA	NA	NA	NA
Naphthalene	NA	NA	NA	NA	NA	NA	NA	NA	NA	NA
Hexachlorobutadiene	NA	NA	NA	NA	NA	NA	NA	NA	NA	NA
2-Methylnaphthalene	NA	NA	NA	NA	NA	NA	NA	NA	NA	NA
Dimethylphthalate	NA	NA	NA	NA	NA	NA	NA	NA	NA	NA
Acenaphthylene	NA	NA	NA	NA	NA	NA	NA	NA	NA	NA
Acenaphthene	NA	NA	NA	NA	NA	NA	NA	NA	NA	NA
Dibenzofuran	NA	NA	NA	NA	NA	NA	NA	NA	NA	NA
Diethylphthalate	NA	NA	NA	NA	NA	NA	NA	NA	NA	NA
Fluorene	NA	NA	NA	NA	NA	NA	NA	NA	NA	NA
N-Nitrosodiphenylamine	NA	NA	NA	NA	NA	NA	NA	NA	NA	NA
Hexachlorobenzene	NA	NA	NA	NA	NA	NA	NA	NA	NA	NA
Pentachlorophenol	NA	NA	NA	NA	NA	NA	NA	NA	NA	NA
Phenanthrene	NA	NA	NA	NA	NA	NA	NA	NA	NA	NA
Anthracene	NA	NA	NA	NA	NA	NA	NA	NA	NA	NA
Di-n-Butylphthalate	NA	NA	NA	NA	NA	NA	NA	NA	NA	NA
Fluoranthene	NA	NA	NA	NA	NA	NA	NA	NA	NA	NA
Pyrene	NA	NA	NA	NA	NA	NA	NA	NA	NA	NA
Butylbenzylphthalate	NA	NA	NA	NA	NA	NA	NA	NA	NA	NA
Benzo(a)anthracene	NA	NA	NA	NA	NA	NA	NA	NA	NA	NA
bis(2-Ethylhexyl)phthalate	NA	NA	NA	NA	NA	NA	NA	NA	NA	NA
Chrysene	NA	NA	NA	NA	NA	NA	NA	NA	NA	NA
Di-n-Octyl phthalate	NA	NA	NA	NA	NA	NA	NA	NA	NA	NA
Benzo(a)pyrene	NA	NA	NA	NA	NA	NA	NA	NA	NA	NA
Indeno(1,2,3-cd)pyrene	NA	NA	NA	NA	NA	NA	NA	NA	NA	NA
Dibenz(a,h)anthracene	NA	NA	NA	NA	NA	NA	NA	NA	NA	NA
Benzo(g,h,i)perylene	NA	NA	NA	NA	NA	NA	NA	NA	NA	NA
1-Methylnaphthalene	NA	NA	NA	NA	NA	NA	NA	NA	NA	NA
Total Benzofluoranthenes	NA	NA	NA	NA	NA	NA	NA	NA	NA	NA

TABLE 5
EFFLUENT WHOLE WATER SAMPLING ANALYTICAL RESULTS
LONG-TERM STORMWATER TREATMENT SYSTEM
NORTH BOEING FIELD - SEATTLE, WASHINGTON

Sample Location ID	LTST-W-EFF	LTST-W-EFF	LTST-W-EFF	LTST-W-EFF	LTST-W-EFF	LTST-W-EFF	LTST-W-EFF	LTST-W-EFF	LTST-W-EFF	LTST-W-EFF
Laboratory Data ID	XZ09A	XZ68D	YB09A	YB46B	YF79B	YI62A	YM12A	YR11D	YU82A	YY45A
Sample Date	2/12/2014	2/16/2014	3/3/2014	3/5/2014	4/8/2014	5/1/2014	6/2/2014	7/10/2014	8/1/2014	9/2/2014
Event Type	Monthly	Storm	Monthly	Storm	Monthly	Monthly	Monthly	Monthly	Monthly	Monthly
Sample Type	Grab	Grab	Grab	Grab	Grab	Grab	Grab	Grab	Grab	Grab
PAHs (µg/L)										
Method SW8270D-SIM										
Naphthalene	NA	NA	NA	NA	NA	NA	NA	NA	NA	NA
2-Methylnaphthalene	NA	NA	NA	NA	NA	NA	NA	NA	NA	NA
1-Methylnaphthalene	NA	NA	NA	NA	NA	NA	NA	NA	NA	NA
Acenaphthylene	NA	NA	NA	NA	NA	NA	NA	NA	NA	NA
Acenaphthene	NA	NA	NA	NA	NA	NA	NA	NA	NA	NA
Fluorene	NA	NA	NA	NA	NA	NA	NA	NA	NA	NA
Phenanthrene	NA	NA	NA	NA	NA	NA	NA	NA	NA	NA
Anthracene	NA	NA	NA	NA	NA	NA	NA	NA	NA	NA
Fluoranthene	NA	NA	NA	NA	NA	NA	NA	NA	NA	NA
Pyrene	NA	NA	NA	NA	NA	NA	NA	NA	NA	NA
Benzo(a)anthracene	NA	NA	NA	NA	NA	NA	NA	NA	NA	NA
Chrysene	NA	NA	NA	NA	NA	NA	NA	NA	NA	NA
Benzo(a)pyrene	NA	NA	NA	NA	NA	NA	NA	NA	NA	NA
Indeno(1,2,3-cd)pyrene	NA	NA	NA	NA	NA	NA	NA	NA	NA	NA
Dibenz(a,h)anthracene	NA	NA	NA	NA	NA	NA	NA	NA	NA	NA
Benzo(g,h,i)perylene	NA	NA	NA	NA	NA	NA	NA	NA	NA	NA
Dibenzofuran	NA	NA	NA	NA	NA	NA	NA	NA	NA	NA
Total Benzofluoranthenes	NA	NA	NA	NA	NA	NA	NA	NA	NA	NA
CPAH TEQ	NA	NA	NA	NA	NA	NA	NA	NA	NA	NA
TOTAL METALS (µg/L)										
Method EPA200.8/6010B,C/7470A										
Arsenic	NA	NA	NA	NA	NA	NA	NA	NA	NA	NA
Cadmium	NA	NA	NA	NA	NA	NA	NA	NA	NA	NA
Chromium	NA	NA	NA	NA	NA	NA	NA	NA	NA	NA
Copper	NA	NA	NA	NA	NA	NA	NA	NA	NA	NA
Iron	NA	NA	NA	NA	NA	NA	NA	NA	NA	NA
Lead	NA	NA	NA	NA	NA	NA	NA	NA	NA	NA
Manganese	NA	NA	NA	NA	NA	NA	NA	NA	NA	NA
Mercury	NA	NA	NA	NA	NA	NA	NA	NA	NA	NA
Nickel	NA	NA	NA	NA	NA	NA	NA	NA	NA	NA
Silver	NA	NA	NA	NA	NA	NA	NA	NA	NA	NA
Zinc	NA	NA	NA	NA	NA	NA	NA	NA	NA	NA
DISSOLVED METALS (µg/L)										
Method EPA200.8/6010B,C										
Arsenic	NA	NA	NA	NA	NA	NA	NA	NA	NA	NA
Cadmium	NA	NA	NA	NA	NA	NA	NA	NA	NA	NA
Chromium	NA	NA	NA	NA	NA	NA	NA	NA	NA	NA
Copper	NA	NA	NA	NA	NA	NA	NA	NA	NA	NA
Iron	NA	NA	NA	NA	NA	NA	NA	NA	NA	NA
Lead	NA	NA	NA	NA	NA	NA	NA	NA	NA	NA
Manganese	NA	NA	NA	NA	NA	NA	NA	NA	NA	NA
Nickel	NA	NA	NA	NA	NA	NA	NA	NA	NA	NA
Silver	NA	NA	NA	NA	NA	NA	NA	NA	NA	NA
Zinc	NA	NA	NA	NA	NA	NA	NA	NA	NA	NA
DISSOLVED METALS (ng/L)										
Method SW7470A										
Mercury	NA	NA	NA	NA	NA	NA	NA	NA	NA	NA
CONVENTIONALS										
pH (SU; EPA 150.1; SM 4500H)	NA	NA	NA	NA	NA	NA	NA	NA	NA	NA
Total Suspended Solids (mg/L; EPA 160.2; SM2540D)	NA	NA	NA	NA	NA	NA	NA	NA	NA	NA
Turbidity (NTU; EPA 180.1)	NA	NA	NA	NA	NA	NA	NA	NA	NA	NA

TABLE 5
EFFLUENT WHOLE WATER SAMPLING ANALYTICAL RESULTS
LONG-TERM STORMWATER TREATMENT SYSTEM
NORTH BOEING FIELD - SEATTLE, WASHINGTON

Sample Location ID	LTST-W-EFF	LTST-W-EFF	LTST-W-EFF	LTST-W-EFF	LTST-W-EFF	LTST-W-EFF	LTST-W-EFF	LTST-W-EFF	LTST-W-EFF	LTST-W-EFF
Laboratory Data ID	XZ09A	XZ68D	YB09A	YB46B	YF79B	YI62A	YM12A	YR11D	YU82A	YY45A
Sample Date	2/12/2014	2/16/2014	3/3/2014	3/5/2014	4/8/2014	5/1/2014	6/2/2014	7/10/2014	8/1/2014	9/2/2014
Event Type	Monthly	Storm	Monthly	Storm	Monthly	Monthly	Monthly	Monthly	Monthly	Monthly
Sample Type	Grab	Grab	Grab	Grab	Grab	Grab	Grab	Grab	Grab	Grab
PARTICLE/GRAIN SIZE (mg/L)										
Method ASTM-D3977C										
Sediment Conc. > 500 µm	NA	NA	NA	NA	NA	NA	NA	NA	NA	NA
Sediment Conc. 500 to 250 µm	NA	NA	NA	NA	NA	NA	NA	NA	NA	NA
Sediment Conc. 250 to 125 µm	NA	NA	NA	NA	NA	NA	NA	NA	NA	NA
Sediment Conc. 125 to 62.5 µm	NA	NA	NA	NA	NA	NA	NA	NA	NA	NA
Sediment Conc. 62.5 to 3.9 µm	NA	NA	NA	NA	NA	NA	NA	NA	NA	NA
Sediment Conc. 3.9 to 1 µm	NA	NA	NA	NA	NA	NA	NA	NA	NA	NA
Sediment Conc. < 1 µm	NA	NA	NA	NA	NA	NA	NA	NA	NA	NA
Previous 1 Hour Precip. (inches) (c)	0.00	0.04	0.02	0.04	0.00	0.00	0.00	0.00	0.00	0.00
Previous 12 Hours Precip. (inches) (c)	0.00	0.1	0.32	0.29	0.00	0.00	0.00	0.00	0.00	0.00

TABLE 5
EFFLUENT WHOLE WATER SAMPLING ANALYTICAL RESULTS
LONG-TERM STORMWATER TREATMENT SYSTEM
NORTH BOEING FIELD - SEATTLE, WASHINGTON

Sample Location ID	LTST-W-EFF	LTST-W-EFF	LTST-W-EFF	LTST-W-EFF	LTST-W-EFF	LITST-W-EFF	LTST-W-EFF	LTST-W-EFF	LTST-W-EFF	LTST-W-EFF
Laboratory Data ID	ZE23D	ZF08D	ZJ35A	ZM68A	ZO34D	ZQ78D	ZR46A	ZS95D	ZV55D	ZZ51A
Sample Date	10/9/2014	10/13/2014	11/6/2014	12/1/2014	12/9/2014	12/23/2014	1/5/2015	1/15/2015	2/6/2015	3/10/2015
Event Type	Monthly	Storm	Monthly	Monthly	Storm	Storm	Monthly	Monthly	Storm	Monthly
Sample Type	Grab	Grab	Grab	Grab	Grab	Grab	Grab	Grab	Grab	Grab
PCBs (µg/L) (a)										
Method SW8082A										
Aroclor 1016	0.005 U	0.005 U	0.005 U	0.005 U	0.005 U	0.005 U	0.005 U	0.005 U	0.005 U	0.005 U
Aroclor 1242	0.008 U	0.005 U	0.005 U	0.005 U	0.005 U	0.005 U	**0.006** J	0.005 U	0.005 U	0.005 U
Aroclor 1248	0.005 U	0.005 U	0.005 U	0.005 U	0.005 U	0.005 U	0.005 U	0.005 U	0.005 U	0.005 U
Aroclor 1254	0.005 U	0.005 U	0.005 U	0.005 U	0.005 U	0.005 U	0.005 U	0.005 U	0.005 U	0.005 U
Aroclor 1260	0.005 U	0.005 U	0.005 U	0.005 U	0.005 U	0.005 U	0.005 U	0.005 U	0.005 U	0.005 U
Aroclor 1221	0.005 U	0.005 U	0.005 U	0.005 U	0.005 U	0.005 U	0.005 U	0.005 U	0.005 U	0.005 U
Aroclor 1232	0.005 U	0.005 U	0.005 U	0.005 U	0.005 U	0.005 U	0.005 U	0.005 U	0.005 U	0.005 U
Aroclor 1262	0.005 U	0.005 U	0.005 U	0.005 U	0.005 U	0.005 U	0.005 U	0.005 U	0.005 U	0.005 U
Total PCBs (b)	ND	ND	ND	ND	ND	ND	**0.006** J	ND	ND	ND
SEMIVOLATILES (µg/L)										
Method SW8270D										
Phenol	NA	NA	NA	NA	NA	NA	NA	NA	NA	NA
1,3-Dichlorobenzene	NA	NA	NA	NA	NA	NA	NA	NA	NA	NA
1,4-Dichlorobenzene	NA	NA	NA	NA	NA	NA	NA	NA	NA	NA
Benzyl Alcohol	NA	NA	NA	NA	NA	NA	NA	NA	NA	NA
1,2-Dichlorobenzene	NA	NA	NA	NA	NA	NA	NA	NA	NA	NA
2-Methylphenol	NA	NA	NA	NA	NA	NA	NA	NA	NA	NA
4-Methylphenol	NA	NA	NA	NA	NA	NA	NA	NA	NA	NA
Hexachloroethane	NA	NA	NA	NA	NA	NA	NA	NA	NA	NA
2,4-Dimethylphenol	NA	NA	NA	NA	NA	NA	NA	NA	NA	NA
Benzoic Acid	NA	NA	NA	NA	NA	NA	NA	NA	NA	NA
1,2,4-Trichlorobenzene	NA	NA	NA	NA	NA	NA	NA	NA	NA	NA
Naphthalene	NA	NA	NA	NA	NA	NA	NA	NA	NA	NA
Hexachlorobutadiene	NA	NA	NA	NA	NA	NA	NA	NA	NA	NA
2-Methylnaphthalene	NA	NA	NA	NA	NA	NA	NA	NA	NA	NA
Dimethylphthalate	NA	NA	NA	NA	NA	NA	NA	NA	NA	NA
Acenaphthylene	NA	NA	NA	NA	NA	NA	NA	NA	NA	NA
Acenaphthene	NA	NA	NA	NA	NA	NA	NA	NA	NA	NA
Dibenzofuran	NA	NA	NA	NA	NA	NA	NA	NA	NA	NA
Diethylphthalate	NA	NA	NA	NA	NA	NA	NA	NA	NA	NA
Fluorene	NA	NA	NA	NA	NA	NA	NA	NA	NA	NA
N-Nitrosodiphenylamine	NA	NA	NA	NA	NA	NA	NA	NA	NA	NA
Hexachlorobenzene	NA	NA	NA	NA	NA	NA	NA	NA	NA	NA
Pentachlorophenol	NA	NA	NA	NA	NA	NA	NA	NA	NA	NA
Phenanthrene	NA	NA	NA	NA	NA	NA	NA	NA	NA	NA
Anthracene	NA	NA	NA	NA	NA	NA	NA	NA	NA	NA
Di-n-Butylphthalate	NA	NA	NA	NA	NA	NA	NA	NA	NA	NA
Fluoranthene	NA	NA	NA	NA	NA	NA	NA	NA	NA	NA
Pyrene	NA	NA	NA	NA	NA	NA	NA	NA	NA	NA
Butylbenzylphthalate	NA	NA	NA	NA	NA	NA	NA	NA	NA	NA
Benzo(a)anthracene	NA	NA	NA	NA	NA	NA	NA	NA	NA	NA
bis(2-Ethylhexyl)phthalate	NA	NA	NA	NA	NA	NA	NA	NA	NA	NA
Chrysene	NA	NA	NA	NA	NA	NA	NA	NA	NA	NA
Di-n-Octyl phthalate	NA	NA	NA	NA	NA	NA	NA	NA	NA	NA
Benzo(a)pyrene	NA	NA	NA	NA	NA	NA	NA	NA	NA	NA
Indeno(1,2,3-cd)pyrene	NA	NA	NA	NA	NA	NA	NA	NA	NA	NA
Dibenz(a,h)anthracene	NA	NA	NA	NA	NA	NA	NA	NA	NA	NA
Benzo(g,h,i)perylene	NA	NA	NA	NA	NA	NA	NA	NA	NA	NA
1-Methylnaphthalene	NA	NA	NA	NA	NA	NA	NA	NA	NA	NA
Total Benzofluoranthenes	NA	NA	NA	NA	NA	NA	NA	NA	NA	NA

TABLE 5
EFFLUENT WHOLE WATER SAMPLING ANALYTICAL RESULTS
LONG-TERM STORMWATER TREATMENT SYSTEM
NORTH BOEING FIELD - SEATTLE, WASHINGTON

Sample Location ID	LTST-W-EFF	LTST-W-EFF	LTST-W-EFF	LTST-W-EFF	LTST-W-EFF	LITST-W-EFF	LTST-W-EFF	LTST-W-EFF	LTST-W-EFF	LTST-W-EFF
Laboratory Data ID	ZE23D	ZF08D	ZJ35A	ZM68A	ZO34D	ZQ78D	ZR46A	ZS95D	ZV55D	ZZ51A
Sample Date	10/9/2014	10/13/2014	11/6/2014	12/1/2014	12/9/2014	12/23/2014	1/5/2015	1/15/2015	2/6/2015	3/10/2015
Event Type	Monthly	Storm	Monthly	Monthly	Storm	Storm	Monthly	Monthly	Storm	Monthly
Sample Type	Grab	Grab	Grab	Grab	Grab	Grab	Grab	Grab	Grab	Grab
PAHs (µg/L)										
Method SW8270D-SIM										
Naphthalene	NA	NA	NA	NA	NA	NA	NA	NA	NA	NA
2-Methylnaphthalene	NA	NA	NA	NA	NA	NA	NA	NA	NA	NA
1-Methylnaphthalene	NA	NA	NA	NA	NA	NA	NA	NA	NA	NA
Acenaphthylene	NA	NA	NA	NA	NA	NA	NA	NA	NA	NA
Acenaphthene	NA	NA	NA	NA	NA	NA	NA	NA	NA	NA
Fluorene	NA	NA	NA	NA	NA	NA	NA	NA	NA	NA
Phenanthrene	NA	NA	NA	NA	NA	NA	NA	NA	NA	NA
Anthracene	NA	NA	NA	NA	NA	NA	NA	NA	NA	NA
Fluoranthene	NA	NA	NA	NA	NA	NA	NA	NA	NA	NA
Pyrene	NA	NA	NA	NA	NA	NA	NA	NA	NA	NA
Benzo(a)anthracene	NA	NA	NA	NA	NA	NA	NA	NA	NA	NA
Chrysene	NA	NA	NA	NA	NA	NA	NA	NA	NA	NA
Benzo(a)pyrene	NA	NA	NA	NA	NA	NA	NA	NA	NA	NA
Indeno(1,2,3-cd)pyrene	NA	NA	NA	NA	NA	NA	NA	NA	NA	NA
Dibenz(a,h)anthracene	NA	NA	NA	NA	NA	NA	NA	NA	NA	NA
Benzo(g,h,i)perylene	NA	NA	NA	NA	NA	NA	NA	NA	NA	NA
Dibenzofuran	NA	NA	NA	NA	NA	NA	NA	NA	NA	NA
Total Benzofluoranthenes	NA	NA	NA	NA	NA	NA	NA	NA	NA	NA
CPAH TEQ	NA	NA	NA	NA	NA	NA	NA	NA	NA	NA
TOTAL METALS (µg/L)										
Method EPA200.8/6010B,C/7470A										
Arsenic	NA	NA	NA	NA	NA	NA	NA	NA	NA	NA
Cadmium	NA	NA	NA	NA	NA	NA	NA	NA	NA	NA
Chromium	NA	NA	NA	NA	NA	NA	NA	NA	NA	NA
Copper	NA	NA	NA	NA	NA	NA	NA	NA	NA	NA
Iron	NA	NA	NA	NA	NA	NA	NA	NA	NA	NA
Lead	NA	NA	NA	NA	NA	NA	NA	NA	NA	NA
Manganese	NA	NA	NA	NA	NA	NA	NA	NA	NA	NA
Mercury	NA	NA	NA	NA	NA	NA	NA	NA	NA	NA
Nickel	NA	NA	NA	NA	NA	NA	NA	NA	NA	NA
Silver	NA	NA	NA	NA	NA	NA	NA	NA	NA	NA
Zinc	NA	NA	NA	NA	NA	NA	NA	NA	NA	NA
DISSOLVED METALS (µg/L)										
Method EPA200.8/6010B,C										
Arsenic	NA	NA	NA	NA	NA	NA	NA	NA	NA	NA
Cadmium	NA	NA	NA	NA	NA	NA	NA	NA	NA	NA
Chromium	NA	NA	NA	NA	NA	NA	NA	NA	NA	NA
Copper	NA	NA	NA	NA	NA	NA	NA	NA	NA	NA
Iron	NA	NA	NA	NA	NA	NA	NA	NA	NA	NA
Lead	NA	NA	NA	NA	NA	NA	NA	NA	NA	NA
Manganese	NA	NA	NA	NA	NA	NA	NA	NA	NA	NA
Nickel	NA	NA	NA	NA	NA	NA	NA	NA	NA	NA
Silver	NA	NA	NA	NA	NA	NA	NA	NA	NA	NA
Zinc	NA	NA	NA	NA	NA	NA	NA	NA	NA	NA
DISSOLVED METALS (ng/L)										
Method SW7470A										
Mercury	NA	NA	NA	NA	NA	NA	NA	NA	NA	NA
CONVENTIONALS										
pH (SU; EPA 150.1; SM 4500H)	NA	NA	NA	NA	NA	NA	NA	NA	NA	NA
Total Suspended Solids (mg/L; EPA 160.2; SM2540D)	NA	NA	NA	NA	NA	NA	NA	NA	1.0 U	NA
Turbidity (NTU; EPA 180.1)	NA	NA	NA	NA	NA	NA	NA	NA	NA	NA

TABLE 5
EFFLUENT WHOLE WATER SAMPLING ANALYTICAL RESULTS
LONG-TERM STORMWATER TREATMENT SYSTEM
NORTH BOEING FIELD - SEATTLE, WASHINGTON

Sample Location ID	LTST-W-EFF	LTST-W-EFF	LTST-W-EFF	LTST-W-EFF	LTST-W-EFF	LITST-W-EFF	LTST-W-EFF	LTST-W-EFF	LTST-W-EFF	LTST-W-EFF
Laboratory Data ID	ZE23D	ZF08D	ZJ35A	ZM68A	ZO34D	ZQ78D	ZR46A	ZS95D	ZV55D	ZZ51A
Sample Date	10/9/2014	10/13/2014	11/6/2014	12/1/2014	12/9/2014	12/23/2014	1/5/2015	1/15/2015	2/6/2015	3/10/2015
Event Type	Monthly	Storm	Monthly	Monthly	Storm	Storm	Monthly	Monthly	Storm	Monthly
Sample Type	Grab	Grab	Grab	Grab	Grab	Grab	Grab	Grab	Grab	Grab
PARTICLE/GRAIN SIZE (mg/L)										
Method ASTM-D3977C										
Sediment Conc. > 500 µm	NA	NA	NA	NA	NA	NA	NA	NA	NA	NA
Sediment Conc. 500 to 250 µm	NA	NA	NA	NA	NA	NA	NA	NA	NA	NA
Sediment Conc. 250 to 125 µm	NA	NA	NA	NA	NA	NA	NA	NA	NA	NA
Sediment Conc. 125 to 62.5 µm	NA	NA	NA	NA	NA	NA	NA	NA	NA	NA
Sediment Conc. 62.5 to 3.9 µm	NA	NA	NA	NA	NA	NA	NA	NA	NA	NA
Sediment Conc. 3.9 to 1 µm	NA	NA	NA	NA	NA	NA	NA	NA	NA	NA
Sediment Conc. < 1 µm	NA	NA	NA	NA	NA	NA	NA	NA	NA	NA
Previous 1 Hour Precip. (inches) (c)	0.00	0.00	0.00	0.00	0.04	0.13	0.00	0.00	0.04	0.00
Previous 12 Hours Precip. (inches) (c)	0.00	0.00	0.17	0.00	0.09	0.21	0.07	0.00	0.52	0.00

TABLE 5
EFFLUENT WHOLE WATER SAMPLING ANALYTICAL RESULTS
LONG-TERM STORMWATER TREATMENT SYSTEM
NORTH BOEING FIELD - SEATTLE, WASHINGTON

Sample Location ID	LTST-W-EFF	LTST-W-EFF	LTST-W-EFF	LTST-W-EFF	LTST-W-EFF	LTST-W-EFF	LTST-W-EFF	LTST-W-EFF	LTST-W-EFF
Laboratory Data ID	AEB1D	AFK8	AHB4A	AIY6D	AFK2A	ALR4A	AOB4D	AOJ7D	APT0C
Sample Date	4/10/2015	5/5/2015	6/2/2015	7/9/15	8/4/15	9/1/15	10/7/2015	10/10/2015	10/31/2015
Event Type	Monthly	Monthly	Monthly	Monthly	Monthly	Monthly	Monthly	Monthly	Monthly
Sample Type	Grab	Grab	Grab	Grab	Grab	Grab	Grab	Grab	Grab
PCBs (µg/L) (a)									
Method SW8082A									
Aroclor 1016	0.005 U	0.005 U	0.005 U	0.005 U	0.005 U	0.005 U	0.005 U	0.005 U	0.005 U
Aroclor 1242	0.005 U	0.005 U	0.005 U	0.005 U	0.005 U	0.005 U	0.005 U	0.005 U	0.005 U
Aroclor 1248	0.005 U	0.005 U	0.005 U	0.005 U	0.005 U	0.005 U	0.005 U	0.005 U	0.005 U
Aroclor 1254	0.005 U	0.005 U	0.005 U	0.005 U	0.005 U	0.005 U	0.005 U	0.005 U	0.005 U
Aroclor 1260	0.005 U	0.005 U	0.005 U	0.005 U	0.005 U	0.005 U	0.005 U	0.005 U	0.005 U
Aroclor 1221	0.005 U	0.005 U	0.005 U	0.005 U	0.005 U	0.005 U	0.005 U	0.005 U	0.005 U
Aroclor 1232	0.005 U	0.005 U	0.005 U	0.005 U	0.005 U	0.005 U	0.005 U	0.005 U	0.005 U
Aroclor 1262	0.005 U	0.005 U	0.005 U	0.005 U	0.005 U	0.005 U	0.005 U	0.005 U	0.005 U
Total PCBs (b)	ND	ND	ND	ND	ND	ND	ND	ND	ND
SEMIVOLATILES (µg/L)									
Method SW8270D									
Phenol	NA	NA	NA	NA	NA	NA	NA	NA	NA
1,3-Dichlorobenzene	NA	NA	NA	NA	NA	NA	NA	NA	NA
1,4-Dichlorobenzene	NA	NA	NA	NA	NA	NA	NA	NA	NA
Benzyl Alcohol	NA	NA	NA	NA	NA	NA	NA	NA	NA
1,2-Dichlorobenzene	NA	NA	NA	NA	NA	NA	NA	NA	NA
2-Methylphenol	NA	NA	NA	NA	NA	NA	NA	NA	NA
4-Methylphenol	NA	NA	NA	NA	NA	NA	NA	NA	NA
Hexachloroethane	NA	NA	NA	NA	NA	NA	NA	NA	NA
2,4-Dimethylphenol	NA	NA	NA	NA	NA	NA	NA	NA	NA
Benzoic Acid	NA	NA	NA	NA	NA	NA	NA	NA	NA
1,2,4-Trichlorobenzene	NA	NA	NA	NA	NA	NA	NA	NA	NA
Naphthalene	NA	NA	NA	NA	NA	NA	NA	NA	NA
Hexachlorobutadiene	NA	NA	NA	NA	NA	NA	NA	NA	NA
2-Methylnaphthalene	NA	NA	NA	NA	NA	NA	NA	NA	NA
Dimethylphthalate	NA	NA	NA	NA	NA	NA	NA	NA	NA
Acenaphthylene	NA	NA	NA	NA	NA	NA	NA	NA	NA
Acenaphthene	NA	NA	NA	NA	NA	NA	NA	NA	NA
Dibenzofuran	NA	NA	NA	NA	NA	NA	NA	NA	NA
Diethylphthalate	NA	NA	NA	NA	NA	NA	NA	NA	NA
Fluorene	NA	NA	NA	NA	NA	NA	NA	NA	NA
N-Nitrosodiphenylamine	NA	NA	NA	NA	NA	NA	NA	NA	NA
Hexachlorobenzene	NA	NA	NA	NA	NA	NA	NA	NA	NA
Pentachlorophenol	NA	NA	NA	NA	NA	NA	NA	NA	NA
Phenanthrene	NA	NA	NA	NA	NA	NA	NA	NA	NA
Anthracene	NA	NA	NA	NA	NA	NA	NA	NA	NA
Di-n-Butylphthalate	NA	NA	NA	NA	NA	NA	NA	NA	NA
Fluoranthene	NA	NA	NA	NA	NA	NA	NA	NA	NA
Pyrene	NA	NA	NA	NA	NA	NA	NA	NA	NA
Butylbenzylphthalate	NA	NA	NA	NA	NA	NA	NA	NA	NA
Benzo(a)anthracene	NA	NA	NA	NA	NA	NA	NA	NA	NA
bis(2-Ethylhexyl)phthalate	NA	NA	NA	NA	NA	NA	NA	NA	NA
Chrysene	NA	NA	NA	NA	NA	NA	NA	NA	NA
Di-n-Octyl phthalate	NA	NA	NA	NA	NA	NA	NA	NA	NA
Benzo(a)pyrene	NA	NA	NA	NA	NA	NA	NA	NA	NA
Indeno(1,2,3-cd)pyrene	NA	NA	NA	NA	NA	NA	NA	NA	NA
Dibenz(a,h)anthracene	NA	NA	NA	NA	NA	NA	NA	NA	NA
Benzo(g,h,i)perylene	NA	NA	NA	NA	NA	NA	NA	NA	NA
1-Methylnaphthalene	NA	NA	NA	NA	NA	NA	NA	NA	NA
Total Benzofluoranthenes	NA	NA	NA	NA	NA	NA	NA	NA	NA

TABLE 5
EFFLUENT WHOLE WATER SAMPLING ANALYTICAL RESULTS
LONG-TERM STORMWATER TREATMENT SYSTEM
NORTH BOEING FIELD - SEATTLE, WASHINGTON

Sample Location ID	LTST-W-EFF	LTST-W-EFF	LTST-W-EFF	LTST-W-EFF	LTST-W-EFF	LTST-W-EFF	LTST-W-EFF	LTST-W-EFF	LTST-W-EFF
Laboratory Data ID	AEB1D	AFK8	AHB4A	AIY6D	AFK2A	ALR4A	AOB4D	AOJ7D	APT0C
Sample Date	4/10/2015	5/5/2015	6/2/2015	7/9/15	8/4/15	9/1/15	10/7/2015	10/10/2015	10/31/2015
Event Type	Monthly	Monthly	Monthly	Monthly	Monthly	Monthly	Monthly	Monthly	Monthly
Sample Type	Grab	Grab	Grab	Grab	Grab	Grab	Grab	Grab	Grab
PAHs (µg/L)									
Method SW8270D-SIM									
Naphthalene	NA	NA	NA	NA	NA	NA	NA	NA	NA
2-Methylnaphthalene	NA	NA	NA	NA	NA	NA	NA	NA	NA
1-Methylnaphthalene	NA	NA	NA	NA	NA	NA	NA	NA	NA
Acenaphthylene	NA	NA	NA	NA	NA	NA	NA	NA	NA
Acenaphthene	NA	NA	NA	NA	NA	NA	NA	NA	NA
Fluorene	NA	NA	NA	NA	NA	NA	NA	NA	NA
Phenanthrene	NA	NA	NA	NA	NA	NA	NA	NA	NA
Anthracene	NA	NA	NA	NA	NA	NA	NA	NA	NA
Fluoranthene	NA	NA	NA	NA	NA	NA	NA	NA	NA
Pyrene	NA	NA	NA	NA	NA	NA	NA	NA	NA
Benzo(a)anthracene	NA	NA	NA	NA	NA	NA	NA	NA	NA
Chrysene	NA	NA	NA	NA	NA	NA	NA	NA	NA
Benzo(a)pyrene	NA	NA	NA	NA	NA	NA	NA	NA	NA
Indeno(1,2,3-cd)pyrene	NA	NA	NA	NA	NA	NA	NA	NA	NA
Dibenz(a,h)anthracene	NA	NA	NA	NA	NA	NA	NA	NA	NA
Benzo(g,h,i)perylene	NA	NA	NA	NA	NA	NA	NA	NA	NA
Dibenzofuran	NA	NA	NA	NA	NA	NA	NA	NA	NA
Total Benzofluoranthenes	NA	NA	NA	NA	NA	NA	NA	NA	NA
CPAH TEQ	NA	NA	NA	NA	NA	NA	NA	NA	NA
TOTAL METALS (µg/L)									
Method EPA200.8/6010B,C/7470A									
Arsenic	NA	NA	NA	NA	NA	NA	NA	NA	NA
Cadmium	NA	NA	NA	NA	NA	NA	NA	NA	NA
Chromium	NA	NA	NA	NA	NA	NA	NA	NA	NA
Copper	NA	NA	NA	NA	NA	NA	NA	NA	NA
Iron	NA	NA	NA	NA	NA	NA	NA	NA	NA
Lead	NA	NA	NA	NA	NA	NA	NA	NA	NA
Manganese	NA	NA	NA	NA	NA	NA	NA	NA	NA
Mercury	NA	NA	NA	NA	NA	NA	NA	NA	NA
Nickel	NA	NA	NA	NA	NA	NA	NA	NA	NA
Silver	NA	NA	NA	NA	NA	NA	NA	NA	NA
Zinc	NA	NA	NA	NA	NA	NA	NA	NA	NA
DISSOLVED METALS (µg/L)									
Method EPA200.8/6010B,C									
Arsenic	NA	NA	NA	NA	NA	NA	NA	NA	NA
Cadmium	NA	NA	NA	NA	NA	NA	NA	NA	NA
Chromium	NA	NA	NA	NA	NA	NA	NA	NA	NA
Copper	NA	NA	NA	NA	NA	NA	NA	NA	NA
Iron	NA	NA	NA	NA	NA	NA	NA	NA	NA
Lead	NA	NA	NA	NA	NA	NA	NA	NA	NA
Manganese	NA	NA	NA	NA	NA	NA	NA	NA	NA
Nickel	NA	NA	NA	NA	NA	NA	NA	NA	NA
Silver	NA	NA	NA	NA	NA	NA	NA	NA	NA
Zinc	NA	NA	NA	NA	NA	NA	NA	NA	NA
DISSOLVED METALS (ng/L)									
Method SW7470A									
Mercury	NA	NA	NA	NA	NA	NA	NA	NA	NA
CONVENTIONALS									
pH (SU; EPA 150.1; SM 4500H)	NA	NA	NA	NA	NA	NA	NA	NA	NA
Total Suspended Solids (mg/L; EPA 160.2; SM2540D)	**2.4**	NA	NA	**2.1**	NA	NA	**12.2**	**1.2**	1.0 U
Turbidity (NTU; EPA 180.1)	NA	NA	NA	NA	NA	NA	NA	NA	NA

TABLE 5
EFFLUENT WHOLE WATER SAMPLING ANALYTICAL RESULTS
LONG-TERM STORMWATER TREATMENT SYSTEM
NORTH BOEING FIELD - SEATTLE, WASHINGTON

Sample Location ID	LTST-W-EFF	LTST-W-EFF	LTST-W-EFF	LTST-W-EFF	LTST-W-EFF	LTST-W-EFF	LTST-W-EFF	LTST-W-EFF	LTST-W-EFF
Laboratory Data ID	AEB1D	AFK8	AHB4A	AIY6D	AFK2A	ALR4A	AOB4D	AOJ7D	APT0C
Sample Date	4/10/2015	5/5/2015	6/2/2015	7/9/15	8/4/15	9/1/15	10/7/2015	10/10/2015	10/31/2015
Event Type	Monthly	Monthly	Monthly	Monthly	Monthly	Monthly	Monthly	Monthly	Monthly
Sample Type	Grab	Grab	Grab	Grab	Grab	Grab	Grab	Grab	Grab
PARTICLE/GRAIN SIZE (mg/L)									
Method ASTM-D3977C									
Sediment Conc. > 500 µm	NA	NA	NA	NA	NA	NA	NA	NA	NA
Sediment Conc. 500 to 250 µm	NA	NA	NA	NA	NA	NA	NA	NA	NA
Sediment Conc. 250 to 125 µm	NA	NA	NA	NA	NA	NA	NA	NA	NA
Sediment Conc. 125 to 62.5 µm	NA	NA	NA	NA	NA	NA	NA	NA	NA
Sediment Conc. 62.5 to 3.9 µm	NA	NA	NA	NA	NA	NA	NA	NA	NA
Sediment Conc. 3.9 to 1 µm	NA	NA	NA	NA	NA	NA	NA	NA	NA
Sediment Conc. < 1 µm	NA	NA	NA	NA	NA	NA	NA	NA	NA
Previous 1 Hour Precip. (inches) (c)	0.00	0.00	0.00	0.00	0.00	0.00	0.00	0.23	0.25
Previous 12 Hours Precip. (inches) (c)	0.00	0.13	0.00	0.00	0.00	0.01	0.01	0.47	0.66

TEQ = Total Equivalency Quotient
cPAH = Carcinogenic Polycyclic Aromatic Hydrocarbon
PCB = Polychlorinated Biphenyl
SIM = Select Ion Monitoring
-- = Not applicable (grab sample does not require start/end date).
NA = Not Analyzed.
ND = Not Detected.
Bold = Detected compound.
U = Indicates the compound was not detected at the reported concentration.

EPA = U.S. Environmental Protection Agency
ARI = Analytical Resources Inc.
ASTM = American Society for Testing and Materials
NOAA = National Oceanic and Atmospheric Administration
µg/L = micrograms per liter
mg/L = milligrams per liter
µm = micrometer
ng/L = nanograms per liter

SU = Standard Units
NTU = Nephelometric Turbidity Units

(a) Starting in December 2012, ARI evaluated PCBs in whole water between the Limit of Detection (LOD) and the Limit of Quantitation (LOQ). For these non-detect results, the reported concentration shown is the LOD (1/2 the LOQ).
(b) Total PCBs is the sum of detected aroclors or, if no aroclors are detected, is reported as non-detect (ND).
(c) Precipitation data is from the NOAA Quality Controlled Local Climatological Data for Station 24234/BFI - SEATTLE: BOEING FIELD/KING COUNTY INTERNATIONAL AIRPORT.
(d) Due to a laboratory receipt login error, total metals were analyzed by low level (ng/L); the client was notified and results were reported per client request.

TABLE 6
MH130A STORMWATER FILTRATION AND PCB TESTING RESULTS
LONG-TERM STORMWATER TREATMENT SYSTEM
NORTH BOEING FIELD - SEATTLE, WASHINGTON

	LTST-F-MH130A	LTST-F-MH130A	LTST-F-MH130A	LTST-F-MH130A	LTST-F-MH130A	LTST-F-MH130A	LTST-F-MH130A	LTST-F-MH130A	LTST-F-MH130A	LTST-F-MH130A	LTST-F-MH130A	LTST-F-MH130A	LTST-F-MH130A	LTST-F-MH130A	LTST-F-MH130A	LTST-F-MH130A
Laboratory Data ID	TW50D	TX25B	TX90G	TY96G	UA56F	UB55B	UC78I	UE10F	UE68G	UF88A	UH75K	UI57A	UK14D	UL49H	UL81E	UM18E
Filtration Start Date	11/8/2011	11/11/2011	11/16/2011	11/22/2011	12/5/2011	12/08/2011	12/27/2012	1/9/2012	1/20/2012	1/21/2012	2/6/2012	2/9/2012	2/23/2012	3/5/2012	3/8/2012	3/12/2012
Filtration End Date	11/11/2011	11/16/2011	11/17/2011	11/23/2011	12/08/2011	12/15/2011	12/28/2011	1/12/2012	1/21/2012	1/26/2012	2/9/2012	2/17/2012	2/29/2012	3/8/2012	3/12/2012	3/13/2012
Event Type	Monthly	Interim	Storm	Storm	Monthly	Interim	Storm	Monthly	Storm	Interim	Monthly	Interim	Interim	Monthly	Interim	Storm
Measured Mass in Filter																
Aroclor 1016 (µg)	0.5 UJ	NA	2.5 U	0.5 U	10 U	NA	1.0 U	2.0 U	5.0 U	NA	5.0 U	NA	NA	2.0 U	NA	2.5 U
Aroclor 1242 (µg)	0.5 UJ	NA	2.5 U	0.5 U	10 U	NA	1.0 U	2.0 U	5.0 U	NA	5.0 U	NA	NA	2.0 U	NA	2.5 U
Aroclor 1248 (µg)	5.0 UJ	NA	15 U	**6.0**	30 U	NA	25 U	50 U	62 U	NA	**100**	NA	NA	60 U	NA	50 U
Aroclor 1254 (µg)	**6.0** J	NA	**17**	**10**	**27**	NA	**35**	**59**	**63**	NA	**89**	NA	NA	**68**	NA	**64**
Aroclor 1260 (µg)	0.8 UJ	NA	2.5 U	**8.0**	10 U	NA	**13**	5.0 U	**12**	NA	5.0 U	NA	NA	**12**	NA	**14**
Aroclor 1221 (µg)	0.5 UJ	NA	2.5 U	0.5 U	10 U	NA	1.0 U	2.0 U	5.0 U	NA	5.0 U	NA	NA	2.0 U	NA	2.5 U
Aroclor 1232 (µg)	0.5 UJ	NA	2.5 U	0.5 U	10 U	NA	1.0 U	2.0 U	5.0 U	NA	5.0 U	NA	NA	2.0 U	NA	2.5 U
Aroclor 1262 (µg)	0.5 UJ	NA	2.5 U	0.5 U	10 U	NA	1.0 U	2.0 U	5.0 U	NA	5.0 U	NA	NA	2.0 U	NA	2.5 U
Total PCBs (a) (µg)	**6.0** J	NA	**17**	**24.0**	**27**	NA	**48**	**59**	**75**	NA	**189**	NA	NA	**80**	NA	**78**
Mass of Filtered Solids:																
Bag Number	76	NA	94	105	74	NA	95	96	104	NA	135	NA	NA	145	NA	150
Filter Micron Rating (µm)	1	NA	1	1	1	NA	1	1	1	NA	1	NA	NA	1	NA	1
Unused Filter Bag (grams)	142.57	NA	138.63	140.33	138.76	NA	149.81	137.46	143.94	NA	149.50	NA	NA	157.86	NA	149.10
Dried Filter Bag with Filtered Solids (grams)	157.9	NA	148.22	153.38	176.64	NA	171.06	153.17	171.19	NA	165.71	NA	NA	175.71	NA	167.40
Total Solids Filtered, Dry Weight (grams)	15.33	NA	9.59	13.05	37.88	NA	21.25	15.71	27.25	NA	16.21	NA	NA	17.85	NA	18.30
Calculated Concentration of Total PCBs in Filtered Solids, Dry Weight (mg/kg)	**0.39**	NA	**1.77**	**1.84**	**0.71**	NA	**2.26**	**3.76**	**2.75**	NA	**11.66**	NA	NA	**4.48**	NA	**4.26**
Volume of Stormwater Filtered:																
Flow Totalizer at Start of Filtration (gallons)	1,010,105	NA	1,010,775	1,011,514	1,012,698	NA	1,012,981	1,013,670	1,013,962	NA	1,016,921	NA	NA	1,018,042	NA	1,018,681
Flow Totalizer at Sample Collection (gallons)	1,010,394	NA	1,011,104	1,012,698	1,012,839	NA	1,013,670	1,013,962	1,014,442	NA	1,017,377	NA	NA	1,018,469	NA	1,019,809
Volume of Stormwater Filtered (gallons)	289	NA	329	1,184	142	NA	689	291	480	NA	457	NA	NA	426	NA	1,127
Calculated Concentration of Total PCBs in Whole Water using flow totalizer data, (µg/L)	**0.005**	NA	**0.014**	**0.005**	**0.050**	NA	**0.018**	**0.054**	**0.041**	NA	**0.109**	NA	NA	**0.050**	NA	**0.018**
PAHs (µg)																
Method SW8270D																
Naphthalene	NA	NA	NA	NA	NA	NA	NA	NA	NA	NA	NA	NA	NA	NA	NA	NA
2-Methylnaphthalene	NA	NA	NA	NA	NA	NA	NA	NA	NA	NA	NA	NA	NA	NA	NA	NA
1-Methylnaphthalene	NA	NA	NA	NA	NA	NA	NA	NA	NA	NA	NA	NA	NA	NA	NA	NA
Acenaphthylene	NA	NA	NA	NA	NA	NA	NA	NA	NA	NA	NA	NA	NA	NA	NA	NA
Acenaphthene	NA	NA	NA	NA	NA	NA	NA	NA	NA	NA	NA	NA	NA	NA	NA	NA
Fluorene	NA	NA	NA	NA	NA	NA	NA	NA	NA	NA	NA	NA	NA	NA	NA	NA
Phenanthrene	NA	NA	NA	NA	NA	NA	NA	NA	NA	NA	NA	NA	NA	NA	NA	NA
Anthracene	NA	NA	NA	NA	NA	NA	NA	NA	NA	NA	NA	NA	NA	NA	NA	NA
Fluoranthene	NA	NA	NA	NA	NA	NA	NA	NA	NA	NA	NA	NA	NA	NA	NA	NA
Pyrene	NA	NA	NA	NA	NA	NA	NA	NA	NA	NA	NA	NA	NA	NA	NA	NA
Benzo(a)anthracene	NA	NA	NA	NA	NA	NA	NA	NA	NA	NA	NA	NA	NA	NA	NA	NA
Chrysene	NA	NA	NA	NA	NA	NA	NA	NA	NA	NA	NA	NA	NA	NA	NA	NA
Benzo(a)pyrene	NA	NA	NA	NA	NA	NA	NA	NA	NA	NA	NA	NA	NA	NA	NA	NA
Indeno(1,2,3-cd)pyrene	NA	NA	NA	NA	NA	NA	NA	NA	NA	NA	NA	NA	NA	NA	NA	NA
Dibenz(a,h)anthracene	NA	NA	NA	NA	NA	NA	NA	NA	NA	NA	NA	NA	NA	NA	NA	NA
Benzo(g,h,i)perylene	NA	NA	NA	NA	NA	NA	NA	NA	NA	NA	NA	NA	NA	NA	NA	NA
Dibenzofuran	NA	NA	NA	NA	NA	NA	NA	NA	NA	NA	NA	NA	NA	NA	NA	NA
Total Benzofluoranthenes	NA	NA	NA	NA	NA	NA	NA	NA	NA	NA	NA	NA	NA	NA	NA	NA
cPAH TEQ	NA	NA	NA	NA	NA	NA	NA	NA	NA	NA	NA	NA	NA	NA	NA	NA

TABLE 6
MH130A STORMWATER FILTRATION AND PCB TESTING RESULTS
LONG-TERM STORMWATER TREATMENT SYSTEM
NORTH BOEING FIELD - SEATTLE, WASHINGTON

		LTST-F-MH130A	LTST-F-MH130A	LTST-F-MH130A	LTST-F-MH130A	LTST-F-MH130A	LTST-F-MH130A	LTST-F-MH130A	LTST-F-MH130A	LTST-F-MH130A	LTST-F-MH130A	LTST-F-MH130A	LTST-F-MH130A	LTST-F-MH130A	LTST-F-MH130A	LTST-F-MH130A	LTST-F-MH130A
Laboratory Data ID		TW50D	TX25B	TX90G	TY96G	UA56F	UB55B	UC78I	UE10F	UE68G	UF88A	UH75K	UI57A	UK14D	UL49H	UL81E	UM18E
Filtration Start Date		11/8/2011	11/11/2011	11/16/2011	11/22/2011	12/5/2011	12/08/2011	12/27/2012	1/9/2012	1/20/2012	1/21/2012	2/6/2012	2/9/2012	2/23/2012	3/5/2012	3/8/2012	3/12/2012
Filtration End Date		11/11/2011	11/16/2011	11/17/2011	11/23/2011	12/08/2011	12/15/2011	12/28/2011	1/12/2012	1/21/2012	1/26/2012	2/9/2012	2/17/2012	2/29/2012	3/8/2012	3/12/2012	3/13/2012
Event Type		Monthly	Interim	Storm	Storm	Monthly	Interim	Storm	Monthly	Storm	Interim	Monthly	Interim	Interim	Monthly	Interim	Storm
TOTAL METALS (mg/kg)																	
Method EPA200.8/6010B.C/7470A/7471A																	
Arsenic		NA	30 U	NA	NA	NA	120 U	NA	NA	NA	NA	NA	80 U	NA	NA	90 U	NA
Cadmium		NA	**8**	NA	NA	NA	**6**	NA	NA	NA	NA	NA	**8**	NA	NA	**11**	NA
Chromium		NA	**63**	NA	NA	NA	**20**	NA	NA	NA	NA	NA	**62**	NA	NA	**52**	NA
Copper		NA	**124**	NA	NA	NA	**38**	NA	NA	NA	NA	NA	**183**	NA	NA	**190**	NA
Iron		NA	NA	NA	NA	NA	**370,000**	NA	NA	NA	NA	NA	**259,000**	NA	NA	**311000**	NA
Lead		NA	**130**	NA	NA	NA	50 U	NA	NA	NA	NA	NA	**90**	NA	NA	**90**	NA
Manganese		NA	NA	NA	NA	NA	**761**	NA	NA	NA	NA	NA	**537**	NA	NA	**658**	NA
Mercury		NA	**0.9**	NA	NA	NA	**0.2**	NA	NA	NA	NA	NA	**0.9**	NA	NA	**0.7**	NA
Nickel		NA	**20**	NA	NA	NA	20 U	NA	NA	NA	NA	NA	**40**	NA	NA	**20**	NA
Zinc		NA	**1140**	NA	NA	NA	**490**	NA	NA	NA	NA	NA	**920**	NA	NA	**1830**	NA
PARTICLE/GRAIN SIZE (percent)																	
Method PSEP-PS																	
Particle/Grain Size, Phi Scale >-1	(2,000 microns)	NA	2.7	NA	NA	NA	0.1	NA	NA	NA	0.3	NA	NA	0.1 U	NA	NA	NA
Particle/Grain Size, Phi Scale -1 to 0	(2,000-1,000 microns)	NA	8.5	NA	NA	NA	6.1	NA	NA	NA	13.8	NA	NA	10.1	NA	NA	NA
Particle/Grain Size, Phi Scale 0 to 1	(1,000-500 microns)	NA	2.1	NA	NA	NA	3.0	NA	NA	NA	7.1	NA	NA	5.7	NA	NA	NA
Particle/Grain Size, Phi Scale 1 to 2	(500-250 microns)	NA	1.1	NA	NA	NA	1.0	NA	NA	NA	8.5	NA	NA	4.3	NA	NA	NA
Particle/Grain Size, Phi Scale 2 to 3	(250-125 microns)	NA	0.8	NA	NA	NA	0.5	NA	NA	NA	6.0	NA	NA	3.7	NA	NA	NA
Particle/Grain Size, Phi Scale 3 to 4	(125-62 microns)	NA	1.1	NA	NA	NA	0.2	NA	NA	NA	4.2	NA	NA	4.7	NA	NA	NA
Particle/Grain Size, Phi Scale 4 to 5	(62.5-31.0 microns)	NA	30.9	NA	NA	NA	18.0	NA	NA	NA	5.0	NA	NA	50.5	NA	NA	NA
Particle/Grain Size, Phi Scale 5 to 6	(31.0-15.6 microns)	NA	18.1	NA	NA	NA	21.3	NA	NA	NA	30.1	NA	NA	6.1	NA	NA	NA
Particle/Grain Size, Phi Scale 6 to 7	(15.6-7.8 microns)	NA	8.4	NA	NA	NA	13.2	NA	NA	NA	7.0	NA	NA	4.1	NA	NA	NA
Particle/Grain Size, Phi Scale 7 to 8	(7.8-3.9 microns)	NA	8.9	NA	NA	NA	11.2	NA	NA	NA	8.3	NA	NA	4.7	NA	NA	NA
Particle/Grain Size, Phi Scale 8 to 9	(3.9-2.0 microns)	NA	6.6	NA	NA	NA	5.6	NA	NA	NA	4.1	NA	NA	2.7	NA	NA	NA
Particle/Grain Size, Phi Scale 9 to 10	(2.0-1.0 microns)	NA	6.7	NA	NA	NA	14.3	NA	NA	NA	1.8	NA	NA	1.9	NA	NA	NA
Particle/Grain Size, Phi Scale <10	(<1.0 micron)	NA	4.2	NA	NA	NA	5.5	NA	NA	NA	3.8	NA	NA	1.7	NA	NA	NA
Particle/Grain Size, Fines (Silt/Clay)	(<62 microns)	NA	83.8	NA	NA	NA	89.1	NA	NA	NA	60.0	NA	NA	71.5	NA	NA	NA
PRECIPITATION (b)																	
Amount During Test (inches)		0.0	0.38	0.38	2.46	0.0	0.07	0.91	0.23	0.85	1.24	0.16	0.71	0.73	0.06	1.01	0.76

TABLE 6
MH130A STORMWATER FILTRATION AND PCB TESTING RESULTS
LONG-TERM STORMWATER TREATMENT SYSTEM
NORTH BOEING FIELD - SEATTLE, WASHINGTON

	LTST-F-MH130A	LTST-F-MH130A	LTST-F-MH130A	LTST-F-MH130A	LTST-F-MH130A	LTST-F-MH130A	LTST-F-MH130A	LTST-F-MH130A	LTST-F-MH130A	LTST-F-MH130A	LTST-F-MH130A	LTST-F-MH130A	LTST-F-MH130A	LTST-F-MH130A	LTST-F-MH130A	LTST-F-MH130A
Laboratory Data ID	UN75A	UO82H	UP34B	UQ03B	US05A	UU03M	UW21A	UX77C	UZ02A	VB89I	VC63A	VF37I	VF92A	VJ50F	VK18B	VL90I
Filtration Start Date	3/22/2012	3/31/2012	4/2/2012	4/6/2012	4/20/2012	5/7/2012	5/18/2012	6/4/2012	6/7/2012	7/9/2012	7/11/2012	8/6/2012	8/9/2012	9/10/2012	9/13/2012	10/1/2012
Filtration End Date	3/23/2012	4/1/2012	4/5/2012	4/11/2012	4/27/2012	5/10/2012	5/25/2012	6/7/2012	6/15/2012	7/11/2012	7/19/2012	8/9/2012	8/16/2012	9/13/2012	9/20/2012	10/4/2012
Event Type	Interim	Storm	Monthly	Interim	Interim	Monthly	Interim	Monthly	Interim	Monthly	Interim	Monthly	Interim	Monthly	Interim	Monthly
Measured Mass in Filter																
Aroclor 1016 (µg)	NA	5.0 U	0.5 U	NA	NA	5.0 U	NA	4.0 U	NA	1.0 U	NA	1.0 U	NA	5.0 U	NA	1.0 U
Aroclor 1242 (µg)	NA	5.0 U	0.5 U	NA	NA	5.0 U	NA	4.0 U	NA	1.0 U	NA	1.0 U	NA	5.0 U	NA	1.0 U
Aroclor 1248 (µg)	NA	100 U	12 U	NA	NA	47 U	NA	100 U	NA	50 U	NA	100 U	NA	38 U	NA	15 U
Aroclor 1254 (µg)	NA	**110**	**15**	NA	NA	**49**	NA	**120**	NA	**31**	NA	**86**	NA	**56**	NA	**26**
Aroclor 1260 (µg)	NA	12 U	1.2 U	NA	NA	**5.2**	NA	10 U	NA	2.5 U	NA	6.2 U	NA	5.0 U	NA	2.2 U
Aroclor 1221 (µg)	NA	5.0 U	0.5 U	NA	NA	5.0 U	NA	4.0 U	NA	1.0 U	NA	1.0 U	NA	5.0 U	NA	1.0 U
Aroclor 1232 (µg)	NA	5.0 U	0.5 U	NA	NA	5.0 U	NA	4.0 U	NA	1.0 U	NA	1.0 U	NA	5.0 U	NA	1.0 U
Aroclor 1262 (µg)	NA	5.0 U	0.5 U	NA	NA	5.0 U	NA	4.0 U	NA	1.0 U	NA	1.0 U	NA	5.0 U	NA	1.0 U
Total PCBs (a) (µg)	NA	**110**	**15**	NA	NA	**54.2**	NA	**120**	NA	**31**	NA	**86**	NA	**56**	NA	**26**
Mass of Filtered Solids:																
Bag Number	NA	118	134	NA	NA	117	NA	146	NA	152	NA	140	NA	155	NA	163
Filter Micron Rating (µm)	NA	1	1	NA	NA	1	NA	1	NA	1	NA	1	NA	1	NA	1
Unused Filter Bag (grams)	NA	149.93	152.14	NA	NA	159.11	NA	155.02	NA	156.81	NA	153.94	NA	143.76	NA	137.46
Dried Filter Bag with Filtered Solids (grams)	NA	167.25	173.81	NA	NA	179.41	NA	190.91	NA	175.35	NA	175.23	NA	151.99	NA	146.54
Total Solids Filtered, Dry Weight (grams)	NA	17.32	21.67	NA	NA	20.30	NA	35.89	NA	18.54	NA	21.29	NA	8.23	NA	9.08
Calculated Concentration of Total PCBs in Filtered Solids, Dry Weight (mg/kg)	NA	**6.35**	**0.69**	NA	NA	**2.67**	NA	**3.34**	NA	**1.67**	NA	**4.04**	NA	**6.80**	NA	**2.86**
Volume of Stormwater Filtered:																
Flow Totalizer at Start of Filtration (gallons)	NA	1,020,723	1,021,709	NA	NA	1,023,772	NA	1,024,550	NA	1,025,496	NA	1,025,919	NA	1,026,296	NA	1,026,598
Flow Totalizer at Sample Collection (gallons)	NA	1,021,708	1,022,314	NA	NA	1,024,046	NA	1,024,884	NA	1,025,659	NA	1,026,076	NA	1,026,422	NA	1,026,664
Volume of Stormwater Filtered (gallons)	NA	985	606	NA	NA	274	NA	335	NA	163	NA	157	NA	126	NA	66
Calculated Concentration of Total PCBs in Whole Water using flow totalizer data, (µg/L)	NA	**0.029**	**0.007**	NA	NA	**0.052**	NA	**0.095**	NA	**0.050**	NA	**0.145**	NA	**0.117**	NA	**0.104**
PAHs (µg)																
Method SW8270D																
Naphthalene	NA	NA	NA	NA	NA	NA	NA	NA	NA	NA	NA	NA	NA	NA	NA	NA
2-Methylnaphthalene	NA	NA	NA	NA	NA	NA	NA	NA	NA	NA	NA	NA	NA	NA	NA	NA
1-Methylnaphthalene	NA	NA	NA	NA	NA	NA	NA	NA	NA	NA	NA	NA	NA	NA	NA	NA
Acenaphthylene	NA	NA	NA	NA	NA	NA	NA	NA	NA	NA	NA	NA	NA	NA	NA	NA
Acenaphthene	NA	NA	NA	NA	NA	NA	NA	NA	NA	NA	NA	NA	NA	NA	NA	NA
Fluorene	NA	NA	NA	NA	NA	NA	NA	NA	NA	NA	NA	NA	NA	NA	NA	NA
Phenanthrene	NA	NA	NA	NA	NA	NA	NA	NA	NA	NA	NA	NA	NA	NA	NA	NA
Anthracene	NA	NA	NA	NA	NA	NA	NA	NA	NA	NA	NA	NA	NA	NA	NA	NA
Fluoranthene	NA	NA	NA	NA	NA	NA	NA	NA	NA	NA	NA	NA	NA	NA	NA	NA
Pyrene	NA	NA	NA	NA	NA	NA	NA	NA	NA	NA	NA	NA	NA	NA	NA	NA
Benzo(a)anthracene	NA	NA	NA	NA	NA	NA	NA	NA	NA	NA	NA	NA	NA	NA	NA	NA
Chrysene	NA	NA	NA	NA	NA	NA	NA	NA	NA	NA	NA	NA	NA	NA	NA	NA
Benzo(a)pyrene	NA	NA	NA	NA	NA	NA	NA	NA	NA	NA	NA	NA	NA	NA	NA	NA
Indeno(1,2,3-cd)pyrene	NA	NA	NA	NA	NA	NA	NA	NA	NA	NA	NA	NA	NA	NA	NA	NA
Dibenz(a,h)anthracene	NA	NA	NA	NA	NA	NA	NA	NA	NA	NA	NA	NA	NA	NA	NA	NA
Benzo(g,h,i)perylene	NA	NA	NA	NA	NA	NA	NA	NA	NA	NA	NA	NA	NA	NA	NA	NA
Dibenzofuran	NA	NA	NA	NA	NA	NA	NA	NA	NA	NA	NA	NA	NA	NA	NA	NA
Total Benzofluoranthenes	NA	NA	NA	NA	NA	NA	NA	NA	NA	NA	NA	NA	NA	NA	NA	NA
cPAH TEQ	NA	NA	NA	NA	NA	NA	NA	NA	NA	NA	NA	NA	NA	NA	NA	NA

TABLE 6
MH130A STORMWATER FILTRATION AND PCB TESTING RESULTS
LONG-TERM STORMWATER TREATMENT SYSTEM
NORTH BOEING FIELD - SEATTLE, WASHINGTON

		LTST-F-MH130A	LTST-F-MH130A	LTST-F-MH130A	LTST-F-MH130A	LTST-F-MH130A	LTST-F-MH130A	LTST-F-MH130A	LTST-F-MH130A	LTST-F-MH130A	LTST-F-MH130A	LTST-F-MH130A	LTST-F-MH130A	LTST-F-MH130A	LTST-F-MH130A	LTST-F-MH130A	LTST-F-MH130A
Laboratory Data ID		UN75A	UO82H	UP34B	UQ03B	US05A	UU03M	UW21A	UX77C	UZ02A	VB89I	VC63A	VF37I	VF92A	VJ50F	VK18B	VL90I
Filtration Start Date		3/22/2012	3/31/2012	4/2/2012	4/6/2012	4/20/2012	5/7/2012	5/18/2012	6/4/2012	6/7/2012	7/9/2012	7/11/2012	8/6/2012	8/9/2012	9/10/2012	9/13/2012	10/1/2012
Filtration End Date		3/23/2012	4/1/2012	4/5/2012	4/11/2012	4/27/2012	5/10/2012	5/25/2012	6/7/2012	6/15/2012	7/11/2012	7/19/2012	8/9/2012	8/16/2012	9/13/2012	9/20/2012	10/4/2012
Event Type		Interim	Storm	Monthly	Interim	Interim	Monthly	Interim	Monthly	Interim	Monthly	Interim	Monthly	Interim	Monthly	Interim	Monthly
TOTAL METALS (mg/kg)																	
Method EPA200.8/6010B.C/7470A/7471A																	
Arsenic		NA	NA	NA	80 U	NA	NA	100 U	NA	60 U	NA	130 U	NA	60 U	NA	120 U	NA
Cadmium		NA	NA	NA	**4**	NA	NA	**9**	NA	**13**	NA	5 U	NA	**6**	NA	**5**	NA
Chromium		NA	NA	NA	**30**	NA	NA	**60**	NA	**63**	NA	**50**	NA	**59**	NA	10 U	NA
Copper		NA	NA	NA	**128**	NA	NA	**133**	NA	**151**	NA	**96**	NA	**141**	NA	**52**	NA
Iron		NA	NA	NA	**357,000**	NA	NA	**273,000**	NA	**248,000**	NA	**338,000**	NA	**226,000**	NA	**393,000**	NA
Lead		NA	NA	NA	**50**	NA	NA	**80**	NA	**110**	NA	**60**	NA	**150**	NA	50 U	NA
Manganese		NA	NA	NA	**551**	NA	NA	**854**	NA	**616**	NA	**698**	NA	**660** J	NA	**1730**	NA
Mercury		NA	NA	NA	**1.0** J	NA	NA	**10.8**	NA	**5.4**	NA	**0.8**	NA	**1.20** J	NA	**1.0**	NA
Nickel		NA	NA	NA	20 U	NA	NA	**30**	NA	**30**	NA	**30**	NA	**40**	NA	20 U	NA
Zinc		NA	NA	NA	**580**	NA	NA	**1420**	NA	**1350**	NA	**620**	NA	**980**	NA	**580**	NA
PARTICLE/GRAIN SIZE (percent)																	
Method PSEP-PS																	
Particle/Grain Size, Phi Scale >-1	(2,000 microns)	9.2	NA	NA	NA	0.1 U	NA	0.1 U	NA	0.3	NA	0.1 U	NA	NA	NA	NA	NA
Particle/Grain Size, Phi Scale -1 to 0	(2,000-1,000 microns)	13.0	NA	NA	NA	7.5	NA	1.0	NA	2.6	NA	2.5	NA	NA	NA	NA	NA
Particle/Grain Size, Phi Scale 0 to 1	(1,000-500 microns)	3.7	NA	NA	NA	7.2	NA	4.0	NA	3.6	NA	3.3	NA	NA	NA	NA	NA
Particle/Grain Size, Phi Scale 1 to 2	(500-250 microns)	3.0	NA	NA	NA	6.5	NA	5.2	NA	6.0	NA	3.6	NA	NA	NA	NA	NA
Particle/Grain Size, Phi Scale 2 to 3	(250-125 microns)	2.5	NA	NA	NA	7.2	NA	6.7	NA	9.1	NA	4.8	NA	NA	NA	NA	NA
Particle/Grain Size, Phi Scale 3 to 4	(125-62 microns)	2.2	NA	NA	NA	7.2	NA	9.4	NA	9.6	NA	5.8	NA	NA	NA	NA	NA
Particle/Grain Size, Phi Scale 4 to 5	(62.5-31.0 microns)	38.0	NA	NA	NA	43.2	NA	15.2	NA	48.3	NA	8.0	NA	NA	NA	NA	NA
Particle/Grain Size, Phi Scale 5 to 6	(31.0-15.6 microns)	6.1	NA	NA	NA	3.3	NA	42.6	NA	6.3	NA	15.3	NA	NA	NA	NA	NA
Particle/Grain Size, Phi Scale 6 to 7	(15.6-7.8 microns)	4.7	NA	NA	NA	3.0	NA	2.2	NA	4.3	NA	7.4	NA	NA	NA	NA	NA
Particle/Grain Size, Phi Scale 7 to 8	(7.8-3.9 microns)	6.5	NA	NA	NA	4.7	NA	4.5	NA	5.1	NA	13.2	NA	NA	NA	NA	NA
Particle/Grain Size, Phi Scale 8 to 9	(3.9-2.0 microns)	3.1	NA	NA	NA	4.1	NA	3.2	NA	2.7	NA	10.5	NA	NA	NA	NA	NA
Particle/Grain Size, Phi Scale 9 to 10	(2.0-1.0 microns)	2.1	NA	NA	NA	3.5	NA	3.5	NA	0.2	NA	16.9	NA	NA	NA	NA	NA
Particle/Grain Size, Phi Scale <10	(<1.0 micron)	6.0	NA	NA	NA	2.7	NA	2.5	NA	1.9	NA	9.0	NA	NA	NA	NA	NA
Particle/Grain Size, Fines (Silt/Clay)	(<62 microns)	66.4	NA	NA	NA	64.5	NA	73.7	NA	68.7	NA	80.1	NA	NA	NA	NA	NA
PRECIPITATION (b)																	
Amount During Test (inches)		0.35	0.50	0.29	0.08	0.78	0.01	0.73	0.94	0.23	0.00	0.00	0.00	0.00	0.01	0.00	0.00

TABLE 6
MH130A STORMWATER FILTRATION AND PCB TESTING RESULTS
LONG-TERM STORMWATER TREATMENT SYSTEM
NORTH BOEING FIELD - SEATTLE, WASHINGTON

	LTST-F-MH130A	LTST-F-MH130A	LTST-F-MH130A	LTST-F-MH130A	LTST-F-MH130A	LTST-F-MH130A	LTST-F-MH130A	LTST-F-MH130A	LTST-F-MH130A	LTST-F-MH130A	LTST-F-MH130A	LTST-F-MH130A	LTST-F-MH130A	LTST-F-MH130A	LTST-F-MH130A	LTST-F-MH130A
Laboratory Data ID	VM55A	VR68I	VS17J/VS28A	VS17J/VS28A	VV27K	VW78A	VW75J	VZ15G	WC96J/WC96L	WG51K/WG51L	WI40J/WI40M	WK37J/WM37M	WK74J/WK74M	WP40J/WP40M	WS97D/WS97F	WX01L
Filtration Start Date	10/4/2012	11/5/2012	11/8/2012	11/11/2012	12/3/2012	12/6/2012	12/16/2012	1/7/2013	2/4/2013	3/4/2013	3/19/2013	4/1/2013	4/5/2013	5/6/2013	6/3/2013	7/8/2013
Filtration End Date	10/9/2012	11/8/2012	11/11/2012	11/12/2012	12/6/2012	12/16/2012	12/17/2012	1/10/2013	2/7/2013	3/7/2013	3/20/2013	4/4/2013	4/6/2013	5/9/2013	6/6/2013	7/10/2013
Event Type	Interim	Monthly	Interim	Storm	Monthly	Interim	Storm	Monthly	Monthly	Monthly	Storm	Monthly	Storm	Monthly	Monthly	Monthly
Measured Mass in Filter																
Aroclor 1016 (µg)	NA	2.5 U	NA	5.0 U	10 U	NA	2.0 U	4.0 U	2.0 U	10 U	1.0 U	0.5 U	1.0 U	2.0 U	2.0 U	1.0 U
Aroclor 1242 (µg)	NA	2.5 U	NA	5.0 U	10 U	NA	2.0 U	4.0 U	2.0 U	10 U	1.0 U	0.5 U	1.0 U	2.0 U	2.0 U	1.0 U
Aroclor 1248 (µg)	NA	38 U	NA	75 U	150 U	NA	62 U	100 U	80 U	150 U	25 U	**85**	**130**	60 U	60 U	35 U
Aroclor 1254 (µg)	NA	**33**	NA	**96**	**120**	NA	**60**	**110**	**86** P	**110**	**34**	**48**	**94**	**69**	**61**	**34**
Aroclor 1260 (µg)	NA	2.5 U	NA	**11**	20 U	NA	**11**	10 U	5.0 U	10 U	3.5 U	0.5 U	10 U	3.0 U	**8.8**	3.0 U
Aroclor 1221 (µg)	NA	2.5 U	NA	5.0 U	10 U	NA	2.0 U	4.0 U	2.0 U	10 U	1.0 U	0.5 U	1.0 U	2.0 U	2.0 U	1.0 U
Aroclor 1232 (µg)	NA	2.5 U	NA	5.0 U	10 U	NA	2.0 U	4.0 U	2.0 U	10 U	1.0 U	0.5 U	1.0 U	2.0 U	2.0 U	1.0 U
Aroclor 1262 (µg)	NA	2.5 U	NA	5.0 U	10 U	NA	2.0 U	4.0 U	2.0 U	10 U	1.0 U	0.5 U	1.0 U	2.0 U	2.0 U	1.0 U
Total PCBs (a) (µg)	NA	**33**	NA	**107**	**120**	NA	**71**	**110**	**86**	**110**	**34**	**133**	**224**	**69**	**69.8**	**34**
Mass of Filtered Solids:																
Bag Number	NA	165	NA	156	153	NA	198	178	174	193	183	180	175	203	201	249
Filter Micron Rating (µm)	NA	1	NA	1	1	NA	1	1	1	1	1	1	1	1	1	1
Unused Filter Bag (grams)	NA	143.65	NA	136.86	135.22	NA	146.66	139.53	141.73	140.01	140.75	136.41	140.47	140.50	142.21	151.11
Dried Filter Bag with Filtered Solids (grams)	NA	149.80	NA	153.52	150.61	NA	158.2	163.20	165.96	165.17	154.41	157.68	159.64	167.00	169.43	164.07
Total Solids Filtered, Dry Weight (grams)	NA	6.15	NA	16.66	15.39	NA	11.54	23.67	24.23	25.16	13.66	21.27	19.17	26.50	27.22	12.96
Calculated Concentration of Total PCBs in Filtered Solids, Dry Weight (mg/kg)	NA	**5.37**	NA	**6.42**	**7.80**	NA	**6.15**	**4.65**	**3.55**	**4.37**	**2.49**	**6.25**	**11.68**	**2.60**	**2.56**	**2.62**
Volume of Stormwater Filtered:																
Flow Totalizer at Start of Filtration (gallons)	NA	1,026,795	NA	1,027,071	1,028,390	NA	1,030,728	1,031,443	47	423	928	1,180	1,343	1,646	1,821	1,946
Flow Totalizer at Sample Collection (gallons)	NA	1,026,876	NA	1,027,430	1,029,676	NA	1,031,443	1,032,028	423	928	1,180	1,343	1,646	1,821	1,946	2,034
Volume of Stormwater Filtered (gallons)	NA	80	NA	360	1,286	NA	716	585	376	505	253	163	302	175	125	89
Calculated Concentration of Total PCBs in Whole Water using flow totalizer data, (µg/L)	NA	**0.109**	NA	**0.079**	**0.025**	NA	**0.026**	**0.050**	**0.060**	**0.058**	**0.036**	**0.216**	**0.196**	**0.104**	**0.148**	**0.101**
PAHs (µg)																
Method SW8270D																
Naphthalene	NA	NA	NA	NA	NA	NA	NA	NA	NA	5.0 U	1.5 U	NA	NA	5.0 U	NA	NA
2-Methylnaphthalene	NA	NA	NA	NA	NA	NA	NA	NA	NA	5.0 U	1.5 U	NA	NA	5.0 U	NA	NA
1-Methylnaphthalene	NA	NA	NA	NA	NA	NA	NA	NA	NA	5.0 U	**4.2**	NA	NA	5.0 U	NA	NA
Acenaphthylene	NA	NA	NA	NA	NA	NA	NA	NA	NA	5.0 U	1.5 U	NA	NA	5.0 U	NA	NA
Acenaphthene	NA	NA	NA	NA	NA	NA	NA	NA	NA	5.0 U	1.5 U	NA	NA	5.0 U	NA	NA
Fluorene	NA	NA	NA	NA	NA	NA	NA	NA	NA	5.0 U	1.5 U	NA	NA	5.0 U	NA	NA
Phenanthrene	NA	NA	NA	NA	NA	NA	NA	NA	NA	5.0 U	**4.6**	NA	NA	5.0 U	NA	NA
Anthracene	NA	NA	NA	NA	NA	NA	NA	NA	NA	5.0 U	1.5 U	NA	NA	5.0 U	NA	NA
Fluoranthene	NA	NA	NA	NA	NA	NA	NA	NA	NA	**6.6**	**7.2**	NA	NA	5.0 U	NA	NA
Pyrene	NA	NA	NA	NA	NA	NA	NA	NA	NA	**7.2**	**6.2**	NA	NA	**5.2**	NA	NA
Benzo(a)anthracene	NA	NA	NA	NA	NA	NA	NA	NA	NA	5.0 U	**1.7**	NA	NA	5.0 U	NA	NA
Chrysene	NA	NA	NA	NA	NA	NA	NA	NA	NA	5.0 U	**4.1**	NA	NA	5.0 U	NA	NA
Benzo(a)pyrene	NA	NA	NA	NA	NA	NA	NA	NA	NA	5.0 U	**2.1**	NA	NA	5.0 U	NA	NA
Indeno(1,2,3-cd)pyrene	NA	NA	NA	NA	NA	NA	NA	NA	NA	5.0 U	**1.8**	NA	NA	5.0 U	NA	NA
Dibenz(a,h)anthracene	NA	NA	NA	NA	NA	NA	NA	NA	NA	5.0 U	1.5 U	NA	NA	5.0 U	NA	NA
Benzo(g,h,i)perylene	NA	NA	NA	NA	NA	NA	NA	NA	NA	5.0 U	**3.2**	NA	NA	5.0 U	NA	NA
Dibenzofuran	NA	NA	NA	NA	NA	NA	NA	NA	NA	5.0 U	1.5 U	NA	NA	5.0 U	NA	NA
Total Benzofluoranthenes	NA	NA	NA	NA	NA	NA	NA	NA	NA	**5.4**	**4.9**	NA	NA	5.0 U	NA	NA
cPAH TEQ	NA	NA	NA	NA	NA	NA	NA	NA	NA	**0.54**	**3.0**	NA	NA	NA	NA	NA

TABLE 6
MH130A STORMWATER FILTRATION AND PCB TESTING RESULTS
LONG-TERM STORMWATER TREATMENT SYSTEM
NORTH BOEING FIELD - SEATTLE, WASHINGTON

		LTST-F-MH130A	LTST-F-MH130A	LTST-F-MH130A	LTST-F-MH130A	LTST-F-MH130A	LTST-F-MH130A	LTST-F-MH130A	LTST-F-MH130A	LTST-F-MH130A	LTST-F-MH130A	LTST-F-MH130A	LTST-F-MH130A	LTST-F-MH130A	LTST-F-MH130A	LTST-F-MH130A	LTST-F-MH130A
Laboratory Data ID		VM55A	VR68I	VS17J/VS28A	VS17J/VS28A	VV27K	VW78A	VW75J	VZ15G	WC96J/WC96L	WG51K/WG51L	WI40J/WI40M	WK37J/WM37M	WK74J/WK74M	WP40J/WP40M	WS97D/WS97F	WX01L
Filtration Start Date		10/4/2012	11/5/2012	11/8/2012	11/11/2012	12/3/2012	12/6/2012	12/16/2012	1/7/2013	2/4/2013	3/4/2013	3/19/2013	4/1/2013	4/5/2013	5/6/2013	6/3/2013	7/8/2013
Filtration End Date		10/9/2012	11/8/2012	11/11/2012	11/12/2012	12/6/2012	12/16/2012	12/17/2012	1/10/2013	2/7/2013	3/7/2013	3/20/2013	4/4/2013	4/6/2013	5/9/2013	6/6/2013	7/10/2013
Event Type		Interim	Monthly	Interim	Storm	Monthly	Interim	Storm	Monthly	Monthly	Monthly	Storm	Monthly	Storm	Monthly	Monthly	Monthly
TOTAL METALS (mg/kg)																	
Method EPA200.8/6010B.C/7470A/7471A																	
Arsenic		120 U	NA	120 U	NA		80 U	NA	NA	130 U	NA	NA	80 U	60 U	NA	90 U	NA
Cadmium		**17**	NA	**8**	NA		**9**	NA	NA	**11**	NA	NA	**8**	**14**	NA	**16**	NA
Chromium		**30**	NA	**20**	NA		**37**	NA	NA	**50**	NA	NA	**10**	**35**	NA	**39**	NA
Copper		**117**	NA	**63**	NA		**200**	NA	NA	**174**	NA	NA	**101**	**129**	NA	**186**	NA
Iron		**411,000**	NA	**339,000**	NA		**262,000**	NA	NA	**400,000**	NA	NA	**344,000**	**197,000**	NA	**320,000**	NA
Lead		**90**	NA	50 U	NA		**70**	NA	NA	50 U	NA	NA	30 U	**60**	NA	**80**	NA
Manganese		**5070**	NA	**1420**	NA		**1310**	NA	NA	**651**	NA	NA	**791**	**618**	NA	**848**	NA
Mercury		**1.5**	NA	**0.3**	NA		**0.7**	NA	NA	**0.6**	NA	NA	**0.4**	**0.8**	NA	**3.6**	NA
Nickel		20 U	NA	20 U	NA		**20**	NA	NA	30 U	NA	NA	20 U	**20**	NA	**20**	NA
Zinc		**2930**	NA	**920**	NA		**1150**	NA	NA	**1120**	NA	NA	**400**	**1380**	NA	**2130**	NA
PARTICLE/GRAIN SIZE (percent)																	
Method PSEP-PS																	
Particle/Grain Size, Phi Scale >-1	(2,000 microns)	NA	NA	NA	NA	NA	NA	NA	NA	NA	NA	NA	NA	NA	NA	NA	NA
Particle/Grain Size, Phi Scale -1 to 0	(2,000-1,000 microns)	NA	NA	NA	NA	NA	NA	NA	NA	NA	NA	NA	NA	NA	NA	NA	NA
Particle/Grain Size, Phi Scale 0 to 1	(1,000-500 microns)	NA	NA	NA	NA	NA	NA	NA	NA	NA	NA	NA	NA	NA	NA	NA	NA
Particle/Grain Size, Phi Scale 1 to 2	(500-250 microns)	NA	NA	NA	NA	NA	NA	NA	NA	NA	NA	NA	NA	NA	NA	NA	NA
Particle/Grain Size, Phi Scale 2 to 3	(250-125 microns)	NA	NA	NA	NA	NA	NA	NA	NA	NA	NA	NA	NA	NA	NA	NA	NA
Particle/Grain Size, Phi Scale 3 to 4	(125-62 microns)	NA	NA	NA	NA	NA	NA	NA	NA	NA	NA	NA	NA	NA	NA	NA	NA
Particle/Grain Size, Phi Scale 4 to 5	(62.5-31.0 microns)	NA	NA	NA	NA	NA	NA	NA	NA	NA	NA	NA	NA	NA	NA	NA	NA
Particle/Grain Size, Phi Scale 5 to 6	(31.0-15.6 microns)	NA	NA	NA	NA	NA	NA	NA	NA	NA	NA	NA	NA	NA	NA	NA	NA
Particle/Grain Size, Phi Scale 6 to 7	(15.6-7.8 microns)	NA	NA	NA	NA	NA	NA	NA	NA	NA	NA	NA	NA	NA	NA	NA	NA
Particle/Grain Size, Phi Scale 7 to 8	(7.8-3.9 microns)	NA	NA	NA	NA	NA	NA	NA	NA	NA	NA	NA	NA	NA	NA	NA	NA
Particle/Grain Size, Phi Scale 8 to 9	(3.9-2.0 microns)	NA	NA	NA	NA	NA	NA	NA	NA	NA	NA	NA	NA	NA	NA	NA	NA
Particle/Grain Size, Phi Scale 9 to 10	(2.0-1.0 microns)	NA	NA	NA	NA	NA	NA	NA	NA	NA	NA	NA	NA	NA	NA	NA	NA
Particle/Grain Size, Phi Scale <10	(<1.0 micron)	NA	NA	NA	NA	NA	NA	NA	NA	NA	NA	NA	NA	NA	NA	NA	NA
Particle/Grain Size, Fines (Silt/Clay)	(<62 microns)	NA	NA	NA	NA	NA	NA	NA	NA	NA	NA	NA	NA	NA	NA	NA	NA
PRECIPITATION (b)																	
Amount During Test (inches)		0.00	0.01	0.00	0.63	0.69	1.30	0.94	1.68	0.35	0.87	0.92	0.00	0.59	0.00	0.00	0.00

TABLE 6
MH130A STORMWATER FILTRATION AND PCB TESTING RESULTS
LONG-TERM STORMWATER TREATMENT SYSTEM
NORTH BOEING FIELD - SEATTLE, WASHINGTON

	LTST-F-MH130A	LTST-F-MH130A	LTST-F-MH130A	LTST-F-MH130A	LTST-F-MH130A	LTST-F-MH130A	LTST-F-MH130A	LTST-F-MH130A	LTST-F-MH130A	LTST-F-MH130A	LTST-F-MH130A	LTST-F-MH130A	LTST-F-MH130A	LTST-F-MH130A	LTST-F-MH130A	LTST-F-MH130A
Laboratory Data ID	XA11J/XA11L	XE07J/XE07M	XE91I/XE91L	XJ12J/XJ12M	XN18J/XN18M	XO76F/XO76H	XQ44J/XQ44M	XT98J/XT98M	XU48F/XU48I	XZ68I	YB86F	YG17F	YR11I	ZE23I	ZF08I	ZO34I
Filtration Start Date	8/5/2013	9/5/2013	9/9/2013	10/7/2013	11/4/2013	11/18/2013	12/2/2013	1/6/2014	1/10/2014	2/16/2014	3/5/2014	4/7/2014	7/7/2014	10/6/2014	10/13/2014	12/9/2014
Filtration End Date	8/8/2013	9/6/2013	9/12/2013	10/9/2013	11/7/2013	11/19/2013	12/5/2013	1/9/2014	1/11/2014	2/17/2014	3/6/2014	4/10/2014	7/10/2014	10/9/2014	10/14/2014	12/10/2014
Event Type	Monthly	Storm	Monthly	Monthly	Monthly	Storm	Monthly	Quarterly	Storm	Storm	Storm	Quarterly	Quarterly	Quarterly	Storm	Storm
Measured Mass in Filter																
Aroclor 1016 (µg)	5.0 U	5.0 U	0.50 U	1.0 U	2.5 U	0.50 U	0.50 U	2.0 U	2.0 U	0.50 U (d)	1.0 U	0.50 U	5.0 U	10 U	1.0 U	1.0 U
Aroclor 1242 (µg)	5.0 U	5.0 U	0.50 U	1.0 U	2.5 U	0.50 U	0.50 U	2.0 U	2.0 U	0.50 U (d)	1.0 U	0.50 U	5.0 U	10 U	1.0 U	**39**
Aroclor 1248 (µg)	62 U	140 U	25 U	25 U	62 U	30 U	30 U	70 U	60 U	75 U (d)	100 U	75 U	50 U	100 U	75 U	1.0 U
Aroclor 1254 (µg)	**150**	**110**	**23**	**37**	**53**	**55**	**48**	**97**	**110**	**88** (d)	**120**	**59**	**61**	**89**	**32**	**81**
Aroclor 1260 (µg)	**24**	**29**	2.5 U	**12**	**14**	**16**	**8.5**	**13**	**25**	**20** (d)	**28**	**9.5**	5.0 U	**15**	3.0 U	**16**
Aroclor 1221 (µg)	5.0 U	5.0 U	0.50 U	1.0 U	2.5 U	0.50 U	0.50 U	2.0 U	2.0 U	0.50 U (d)	1.0 U	0.50 U	5.0 U	10 U	1.0 U	1.0 U
Aroclor 1232 (µg)	5.0 U	5.0 U	0.50 U	1.0 U	2.5 U	0.50 U	0.50 U	2.0 U	2.0 U	0.50 U (d)	1.0 U	0.50 U	5.0 U	10 U	1.0 U	1.0 U
Aroclor 1262 (µg)	5.0 U	5.0 U	0.50 U	1.0 U	2.5 U	0.50 U	0.50 U	2.0 U	2.0 U	0.50 U (d)	1.0 U	0.50 U	5.0 U	10 U	1.0 U	1.0 U
Total PCBs (a) (µg)	**174**	**139**	**23**	**49**	**67**	**71**	**56.5**	**110**	**135**	**108** (d)	**148**	**68.5**	**61**	**104**	**32**	**136**
Mass of Filtered Solids:																
Bag Number	245	237	242	235	241	233	246	223	215	273	293	258	282	261	291	283
Filter Micron Rating (µm)	1	1	1	1	1	1	1	1	1	1	1	1	1	1	1	1
Unused Filter Bag (grams)	134.80	141.78	141.85	132.75	143.46	139.22	131.67	143.38	135.33	143.25	143.9	137.75	139.53	140.76	146.38	144.31
Dried Filter Bag with Filtered Solids (grams)	153.83	181.04	137.75	155.89	159.42	173.26	148.77	166.44	205.66	190.64	184.99	160.94	157.36	154.97	166.63	172.95
Total Solids Filtered, Dry Weight (grams)	19.03	39.26	N/A (c)	23.14	15.96	34.04	17.10	23.06	70.33	47.39	41.09	23.19	17.83	14.21	20.25	28.64
Calculated Concentration of Total PCBs in Filtered Solids, Dry Weight (mg/kg)	**9.14**	**3.54**	N/A (c)	**2.12**	**4.20**	**2.09**	**3.30**	**4.77**	**1.92**	**2.28**	**3.60**	**2.95**	**3.42**	**7.32**	**1.58**	**4.75**
Volume of Stormwater Filtered:																
Flow Totalizer at Start of Filtration (gallons)	2,034	2,070	2,430	2,511	2,676	2,922	3,229	3,368	3,746	4,418	5,230	6,130	6,418	6,665	6,765	8,222
Flow Totalizer at Sample Collection (gallons)	2,070	2,430	2,508	2,652	2,922	3,229	3,368	3,736	4,418	5,230	6,130	6,418	6,665	6,765	6,914	9,215
Volume of Stormwater Filtered (gallons)	36	360	78	141	246	307	139	368	672	812	900	288	247	99	149	993
Calculated Concentration of Total PCBs in Whole Water using flow totalizer data, (µg/L)	**1.284**	**0.102**	**0.078**	**0.092**	**0.072**	**0.061**	**0.107**	**0.079**	**0.053**	**0.035**	**0.043**	**0.063**	**0.065**	**0.277**	**0.057**	**0.036**
PAHs (µg)																
Method SW8270D																
Naphthalene	NA	5.0 U	2.5 U	NA	**1.1**	NA	NA	2.5 U	2.5 U	NA	NA	NA	NA	NA	NA	NA
2-Methylnaphthalene	NA	**16**	2.5 U	NA	**1.1**	NA	NA	2.5 U	2.5 U	NA	NA	NA	NA	NA	NA	NA
1-Methylnaphthalene	NA	5.0 U	**5.2**	NA	0.5 U	NA	NA	7.2 M	**5.0**	NA	NA	NA	NA	NA	NA	NA
Acenaphthylene	NA	5.0 U	2.5 U	NA	0.5 U	NA	NA	2.5 U	2.5 U	NA	NA	NA	NA	NA	NA	NA
Acenaphthene	NA	5.0 U	2.5 U	NA	0.5 U	NA	NA	2.5 U	2.5 U	NA	NA	NA	NA	NA	NA	NA
Fluorene	NA	5.0 U	2.5 U	NA	**1.0**	NA	NA	2.5 U	2.5 U	NA	NA	NA	NA	NA	NA	NA
Phenanthrene	NA	**23**	2.5 U	NA	**9.2**	NA	NA	**9.7**	**19**	NA	NA	NA	NA	NA	NA	NA
Anthracene	NA	5.0 U	2.5 U	NA	0.5 U	NA	NA	2.5 U	2.5 U	NA	NA	NA	NA	NA	NA	NA
Fluoranthene	NA	**43**	2.5 U	NA	**23**	NA	NA	**18**	**60**	NA	NA	NA	NA	NA	NA	NA
Pyrene	NA	**36**	**3.0**	NA	**23**	NA	NA	**19**	**37**	NA	NA	NA	NA	NA	NA	NA
Benzo(a)anthracene	NA	**10**	2.5 U	NA	**8.4**	NA	NA	**5.5**	**13**	NA	NA	NA	NA	NA	NA	NA
Chrysene	NA	**27**	2.5 U	NA	**16**	NA	NA	**14**	**44**	NA	NA	NA	NA	NA	NA	NA
Benzo(a)pyrene	NA	**14**	2.5 U	NA	**9.9**	NA	NA	**7.0**	**18**	NA	NA	NA	NA	NA	NA	NA
Indeno(1,2,3-cd)pyrene	NA	**11**	2.5 U	NA	**7.5**	NA	NA	**4.8**	**17**	NA	NA	NA	NA	NA	NA	NA
Dibenz(a,h)anthracene	NA	5.0 U	2.5 U	NA	**4.1**	NA	NA	2.5 U	**5.7**	NA	NA	NA	NA	NA	NA	NA
Benzo(g,h,i)perylene	NA	**19**	2.5 U	NA	**7.1**	NA	NA	**7.6** J	**20** J	NA	NA	NA	NA	NA	NA	NA
Dibenzofuran	NA	5.0 U	2.5 U	NA	0.5 U	NA	NA	2.5 U	2.5 U	NA	NA	NA	NA	NA	NA	NA
Total Benzofluoranthenes	NA	**26**	2.5 U	NA	**19**	NA	NA	**17**	**63**	NA	NA	NA	NA	NA	NA	NA
cPAH TEQ	NA	**19**	NA	NA	**14.0**	NA	NA	**9.9**	**28.3**	NA	NA	NA	NA	NA	NA	NA

TABLE 6
MH130A STORMWATER FILTRATION AND PCB TESTING RESULTS
LONG-TERM STORMWATER TREATMENT SYSTEM
NORTH BOEING FIELD - SEATTLE, WASHINGTON

		LTST-F-MH130A	LTST-F-MH130A	LTST-F-MH130A	LTST-F-MH130A	LTST-F-MH130A	LTST-F-MH130A	LTST-F-MH130A	LTST-F-MH130A	LTST-F-MH130A	LTST-F-MH130A	LTST-F-MH130A	LTST-F-MH130A	LTST-F-MH130A	LTST-F-MH130A	LTST-F-MH130A	LTST-F-MH130A
Laboratory Data ID		XA11J/XA11L	XE07J/XE07M	XE91I/XE91L	XJ12J/XJ12M	XN18J/XN18M	XO76F/XO76H	XQ44J/XQ44M	XT98J/XT98M	XU48F/XU48I	XZ68I	YB86F	YG17F	YR11I	ZE23I	ZF08I	ZO34I
Filtration Start Date		8/5/2013	9/5/2013	9/9/2013	10/7/2013	11/4/2013	11/18/2013	12/2/2013	1/6/2014	1/10/2014	2/16/2014	3/5/2014	4/7/2014	7/7/2014	10/6/2014	10/13/2014	12/9/2014
Filtration End Date		8/8/2013	9/6/2013	9/12/2013	10/9/2013	11/7/2013	11/19/2013	12/5/2013	1/9/2014	1/11/2014	2/17/2014	3/6/2014	4/10/2014	7/10/2014	10/9/2014	10/14/2014	12/10/2014
Event Type		Monthly	Storm	Monthly	Monthly	Monthly	Storm	Monthly	Quarterly	Storm	Storm	Storm	Quarterly	Quarterly	Quarterly	Storm	Storm
TOTAL METALS (mg/kg)																	
Method EPA200.8/6010B.C/7470A/7471A																	
Arsenic		**60**	NA	NA	**20**	NA	**20**	60 U	NA	NA	NA	NA	NA	NA	NA	NA	NA
Cadmium		**11**	NA	NA	**20.5**	NA	**9.9**	**23**	NA	NA	NA	NA	NA	NA	NA	NA	NA
Chromium		**37**	NA	NA	**100**	NA	**33**	**63**	NA	NA	NA	NA	NA	NA	NA	NA	NA
Copper		**163**	NA	NA	**201**	NA	**96.4**	**130**	NA	NA	NA	NA	NA	NA	NA	NA	NA
Iron		**251,000**	NA	NA	**60,700**	NA	**49,700**	**176,000**	NA	NA	NA	NA	NA	NA	NA	NA	NA
Lead		**60**	NA	NA	**197**	NA	**49**	**90**	NA	NA	NA	NA	NA	NA	NA	NA	NA
Manganese		**1700**	NA	NA	**522**	NA	**395**	**6240**	NA	NA	NA	NA	NA	NA	NA	NA	NA
Mercury		**3.3**	NA	NA	**1.20**	NA	**2.04**	**1.71**	NA	NA	NA	NA	NA	NA	NA	NA	NA
Nickel		**20**	NA	NA	**62**	NA	**22**	**50**	NA	NA	NA	NA	NA	NA	NA	NA	NA
Zinc		**1320**	NA	NA	**1960**	NA	**905**	**2320**	NA	NA	NA	NA	NA	NA	NA	NA	NA
PARTICLE/GRAIN SIZE (percent)																	
Method PSEP-PS																	
Particle/Grain Size, Phi Scale >-1	(2,000 microns)	NA	NA	NA	NA	NA	NA	NA	NA	NA	NA	NA	NA	NA	NA	NA	NA
Particle/Grain Size, Phi Scale -1 to 0	(2,000-1,000 microns)	NA	NA	NA	NA	NA	NA	NA	NA	NA	NA	NA	NA	NA	NA	NA	NA
Particle/Grain Size, Phi Scale 0 to 1	(1,000-500 microns)	NA	NA	NA	NA	NA	NA	NA	NA	NA	NA	NA	NA	NA	NA	NA	NA
Particle/Grain Size, Phi Scale 1 to 2	(500-250 microns)	NA	NA	NA	NA	NA	NA	NA	NA	NA	NA	NA	NA	NA	NA	NA	NA
Particle/Grain Size, Phi Scale 2 to 3	(250-125 microns)	NA	NA	NA	NA	NA	NA	NA	NA	NA	NA	NA	NA	NA	NA	NA	NA
Particle/Grain Size, Phi Scale 3 to 4	(125-62 microns)	NA	NA	NA	NA	NA	NA	NA	NA	NA	NA	NA	NA	NA	NA	NA	NA
Particle/Grain Size, Phi Scale 4 to 5	(62.5-31.0 microns)	NA	NA	NA	NA	NA	NA	NA	NA	NA	NA	NA	NA	NA	NA	NA	NA
Particle/Grain Size, Phi Scale 5 to 6	(31.0-15.6 microns)	NA	NA	NA	NA	NA	NA	NA	NA	NA	NA	NA	NA	NA	NA	NA	NA
Particle/Grain Size, Phi Scale 6 to 7	(15.6-7.8 microns)	NA	NA	NA	NA	NA	NA	NA	NA	NA	NA	NA	NA	NA	NA	NA	NA
Particle/Grain Size, Phi Scale 7 to 8	(7.8-3.9 microns)	NA	NA	NA	NA	NA	NA	NA	NA	NA	NA	NA	NA	NA	NA	NA	NA
Particle/Grain Size, Phi Scale 8 to 9	(3.9-2.0 microns)	NA	NA	NA	NA	NA	NA	NA	NA	NA	NA	NA	NA	NA	NA	NA	NA
Particle/Grain Size, Phi Scale 9 to 10	(2.0-1.0 microns)	NA	NA	NA	NA	NA	NA	NA	NA	NA	NA	NA	NA	NA	NA	NA	NA
Particle/Grain Size, Phi Scale <10	(<1.0 micron)	NA	NA	NA	NA	NA	NA	NA	NA	NA	NA	NA	NA	NA	NA	NA	NA
Particle/Grain Size, Fines (Silt/Clay)	(<62 microns)	NA	NA	NA	NA	NA	NA	NA	NA	NA	NA	NA	NA	NA	NA	NA	NA
PRECIPITATION (b)																	
Amount During Test (inches)		0.00	1.36	0.00	0.40	0.82	0.77	0.12	0.78	1.06	1.64	0.55	0.38	0.00	0.00	0.63	0.54

TABLE 6
MH130A STORMWATER FILTRATION AND PCB TESTING RESULTS
LONG-TERM STORMWATER TREATMENT SYSTEM
NORTH BOEING FIELD - SEATTLE, WASHINGTON

	LTST-F-MH130A	LTST-F-MH130A
Laboratory Data ID	ZQ78I	ZS95I
Filtration Start Date	12/23/2014	1/12/2015
Filtration End Date	12/24/2014	1/15/2015
Event Type	Storm	Quarterly
Measured Mass in Filter		
Aroclor 1016 (µg)	2.5 U	1.0 U
Aroclor 1242 (µg)	2.5 U	**35**
Aroclor 1248 (µg)	**48**	1.0 U
Aroclor 1254 (µg)	**91**	**32**
Aroclor 1260 (µg)	**26** P	1.0 U
Aroclor 1221 (µg)	2.5 U	1.0 U
Aroclor 1232 (µg)	2.5 U	1.0 U
Aroclor 1262 (µg)	2.5 U	1.0 U
Total PCBs (a) (µg)	**165**	**67**
Mass of Filtered Solids:		
Bag Number	271	267
Filter Micron Rating (µm)	1	1
Unused Filter Bag (grams)	139.03	141.65
Dried Filter Bag with Filtered Solids (grams)	166.48	152.87
Total Solids Filtered, Dry Weight (grams)	27.45	11.22
Calculated Concentration of Total PCBs in Filtered Solids, Dry Weight (mg/kg)	**6.01**	**5.97**
Volume of Stormwater Filtered:		
Flow Totalizer at Start of Filtration (gallons)	9,215	11,048
Flow Totalizer at Sample Collection (gallons)	11,048	11,222
Volume of Stormwater Filtered (gallons)	1,833	175
Calculated Concentration of Total PCBs in Whole Water using flow totalizer data, (µg/L)	**0.024**	**0.101**
PAHs (µg)		
Method SW8270D		
Naphthalene	NA	NA
2-Methylnaphthalene	NA	NA
1-Methylnaphthalene	NA	NA
Acenaphthylene	NA	NA
Acenaphthene	NA	NA
Fluorene	NA	NA
Phenanthrene	NA	NA
Anthracene	NA	NA
Fluoranthene	NA	NA
Pyrene	NA	NA
Benzo(a)anthracene	NA	NA
Chrysene	NA	NA
Benzo(a)pyrene	NA	NA
Indeno(1,2,3-cd)pyrene	NA	NA
Dibenz(a,h)anthracene	NA	NA
Benzo(g,h,i)perylene	NA	NA
Dibenzofuran	NA	NA
Total Benzofluoranthenes	NA	NA
cPAH TEQ	NA	NA

TABLE 6
MH130A STORMWATER FILTRATION AND PCB TESTING RESULTS
LONG-TERM STORMWATER TREATMENT SYSTEM
NORTH BOEING FIELD - SEATTLE, WASHINGTON

		LTST-F-MH130A	LTST-F-MH130A
	Laboratory Data ID	ZQ78I	ZS95I
	Filtration Start Date	12/23/2014	1/12/2015
	Filtration End Date	12/24/2014	1/15/2015
	Event Type	Storm	Quarterly
TOTAL METALS (mg/kg)			
Method EPA200.8/6010B.C/7470A/7471A			
Arsenic		NA	NA
Cadmium		NA	NA
Chromium		NA	NA
Copper		NA	NA
Iron		NA	NA
Lead		NA	NA
Manganese		NA	NA
Mercury		NA	NA
Nickel		NA	NA
Zinc		NA	NA
PARTICLE/GRAIN SIZE (percent)			
Method PSEP-PS			
Particle/Grain Size, Phi Scale >-1	(2,000 microns)	NA	NA
Particle/Grain Size, Phi Scale -1 to 0	(2,000-1,000 microns)	NA	NA
Particle/Grain Size, Phi Scale 0 to 1	(1,000-500 microns)	NA	NA
Particle/Grain Size, Phi Scale 1 to 2	(500-250 microns)	NA	NA
Particle/Grain Size, Phi Scale 2 to 3	(250-125 microns)	NA	NA
Particle/Grain Size, Phi Scale 3 to 4	(125-62 microns)	NA	NA
Particle/Grain Size, Phi Scale 4 to 5	(62.5-31.0 microns)	NA	NA
Particle/Grain Size, Phi Scale 5 to 6	(31.0-15.6 microns)	NA	NA
Particle/Grain Size, Phi Scale 6 to 7	(15.6-7.8 microns)	NA	NA
Particle/Grain Size, Phi Scale 7 to 8	(7.8-3.9 microns)	NA	NA
Particle/Grain Size, Phi Scale 8 to 9	(3.9-2.0 microns)	NA	NA
Particle/Grain Size, Phi Scale 9 to 10	(2.0-1.0 microns)	NA	NA
Particle/Grain Size, Phi Scale <10	(<1.0 micron)	NA	NA
Particle/Grain Size, Fines (Silt/Clay)	(<62 microns)	NA	NA
PRECIPITATION (b)			
Amount During Test (inches)		0.71	0.00

µg/L = micrograms per liter
mg/kg = milligrams per kilogram
µm = micrometer
µg = microgram
NA = Not Analyzed
Bold = Detected compound.

PAH = Polycyclic Aromatic Hydrocarbon
Biphenyl
TEQ = Toxicity Equivalency Quotient
EPA = U.S. Environmental Protection Agency
NOAA = National Oceanic and Atmospheric Administration
PSEP = Puget Sound Estuary Program

J = Indicates the analyte was positively identified; the associated numerical value is the approximate concentration of the analyte in the sample.
U = Indicates the compound was not detected at the reported concentration.
UJ = The analyte was not detected in the sample; the reported sample reporting limit is an estimate.
P = The analyte was detected on both chromatographic columns but the quantified values differ by 40% RPD with no obvious chromatographic interference.
The higher of the two values is reported by the laboratory.

(a) Total PCBs is the sum of detected aroclors or, if no aroclors are detected, is reported as non-detect (ND).
(b) Precipitation data is from the NOAA Quality Controlled Local Climatological Data for Station 24234/BFI - SEATTLE: BOEING FIELD/KING COUNTY INTERNATIONAL AIRPORT
(c) Because the filter bag mass was weighed less after filtration than before filtration, the amount of solids filtered or PCB concentration cannot be estimated
(d) After reviewing the analytical results for samples LTST-MH130A-021714 and LTST-F-EFF-021714, it was determined that there was a strong indication that the filter bags were inadvertently switched prior to analysis, based on long-standing data trends. The results have been reported on the tables switched from what is reported in the laboratory analytical data.

TABLE 7
LSIV STORMWATER FILTRATION AND PCB TESTING RESULTS
LONG-TERM STORMWATER TREATMENT SYSTEM
NORTH BOEING FIELD - SEATTLE, WASHINGTON

Sample Location ID	LTST-F-LSIV	LTST-F-LSIV	LTST-F-LSIV	LTST-F-LSIV	LTST-F-LSIV	LTST-F-LSIV	LTST-F-LSIV	LTST-F-LSIV	LTST-F-LSIV	LTST-F-LSIV	LTST-F-LSIV	LTST-F-LSIV	LTST-F-LSIV	LTST-F-LSIV
Laboratory Data ID	TW50C	TX25A	TX90F	TY96F	UA56E	UB55A	UC19G	UC78G	UE10G	UE68H	UF88B	UH75L	UI57B	UK14E
Filtration Start Date	11/8/2011	11/11/2011	11/16/2011	11/22/2011	12/5/2011	12/08/2011	12/20/2011	12/27/2011	1/9/2012	1/20/2012	1/21/2012	2/6/2012	2/9/2012	2/23/2012
Filtration End Date	11/11/11	11/16/11	11/17/2011	11/23/2011	12/08/2011	12/15/2011	12/21/2011	12/28/2011	1/12/2012	1/21/2012	1/26/2012	2/9/2012	2/17/2012	2/29/2012
Event Type	Monthly	Interim	Storm	Storm	Monthly	Interim	2nd Monthly	Storm	Monthly	Storm	Interim	Monthly	Interim	Interim
Measured Mass in Filter														
Aroclor 1016 (µg)	0.5 U	NA	0.5 U	0.5 U	0.5 UJ	NA	0.5 UJ	0.5 U	0.5 U	0.5 U	NA	0.5 U	NA	NA
Aroclor 1242 (µg)	0.5 U	NA	0.5 U	0.5 U	0.6 UJ	NA	0.5 UJ	0.5 U	0.5 U	0.5 U	NA	0.5 U	NA	NA
Aroclor 1248 (µg)	1.8 U	NA	**0.9**	**3.2**	0.5 UJ	NA	0.5 UJ	**0.5**	**1.1**	**2.6**	NA	**1.5**	NA	NA
Aroclor 1254 (µg)	**2.4**	NA	**1.9**	**6.4**	0.5 UJ	NA	0.5 UJ	**1.1**	**1.5**	**6.7**	NA	**1.9**	NA	NA
Aroclor 1260 (µg)	0.5 U	NA	**1.0**	**7.1**	0.5 UJ	NA	0.5 UJ	**0.7**	**0.6**	**5.9**	NA	0.5 U	NA	NA
Aroclor 1221 (µg)	0.5 U	NA	0.5 U	0.5 U	0.5 UJ	NA	0.5 UJ	0.5 U	0.5 U	0.5 U	NA	0.5 U	NA	NA
Aroclor 1232 (µg)	0.5 U	NA	0.5 U	0.5 U	0.5 UJ	NA	0.5 UJ	0.5 U	0.5 U	0.5 U	NA	0.5 U	NA	NA
Aroclor 1262 (µg)	0.5 U	NA	0.5 U	0.5 U	0.5 UJ	NA	0.5 UJ	0.5 U	0.5 U	0.5 U	NA	0.5 U	NA	NA
Total PCBs (a) (µg)	**2.4**	NA	**3.8**	**16.7**	0.5 UJ	NA	0.5 UJ	**2.3**	**3.2**	**15.2**	NA	**3.4**	NA	NA
Mass of Filtered Solids:														
Bag Number	89	NA	85	115	71	NA	107	106	99	131	NA	119	NA	NA
Filter Micron Rating (µm)	1	NA	1	1	1	NA	1	1	1	1	NA	1	NA	NA
Unused Filter Bag (grams)	140.87	NA	126.30	141.42	146.52	NA	131.19	135.85	144.15	161.18	NA	152.85	NA	NA
Dried Filter Bag with Filtered Solids (grams)	164.16	NA	138.69	160.17	170.66	NA	180.20	146.66	159.96	194.35	NA	176.59	NA	NA
Total Solids Filtered, Dry Weight (grams)	23.29	NA	12.39	18.75	24.14	NA	49.01	10.81	15.81	33.17	NA	23.74	NA	NA
Calculated Concentration of Total PCBs in Filtered Solids, Dry Weight (mg/kg)	**0.10**	NA	**0.31**	**0.89**	**0.02**	NA	**0.01**	**0.21**	**0.20**	**0.46**	NA	**0.14**	NA	NA
Volume of Stormwater Filtered:														
Flow Totalizer at Start of Filtration (gallons)	29,485	NA	29,732	30,178	31,021	NA	31,454	31,530	31,591	31,688	NA	34,765	NA	NA
Flow Totalizer at Sample Collection (gallons)	29,631	NA	29,921	31,021	31,112	NA	31,530	31,592	31,687	31,986	NA	35,049	NA	NA
Volume of Stormwater Filtered (gallons)	146	NA	189	843	91	NA	76	62	97	299	NA	284	NA	NA
Calculated Concentration of Total PCBs in Whole Water using flow totalizer data, (µg/L)	**0.004**	NA	**0.005**	**0.005**	0.001 U	NA	0.002 U	**0.010**	**0.009**	**0.013**	NA	**0.003**	NA	NA
PAHs (µg)														
Method SW8270D														
Naphthalene	NA	NA	NA	NA	NA	NA	NA	NA	NA	NA	NA	NA	NA	NA
2-Methylnaphthalene	NA	NA	NA	NA	NA	NA	NA	NA	NA	NA	NA	NA	NA	NA
1-Methylnaphthalene	NA	NA	NA	NA	NA	NA	NA	NA	NA	NA	NA	NA	NA	NA
Acenaphthylene	NA	NA	NA	NA	NA	NA	NA	NA	NA	NA	NA	NA	NA	NA
Acenaphthene	NA	NA	NA	NA	NA	NA	NA	NA	NA	NA	NA	NA	NA	NA
Fluorene	NA	NA	NA	NA	NA	NA	NA	NA	NA	NA	NA	NA	NA	NA
Phenanthrene	NA	NA	NA	NA	NA	NA	NA	NA	NA	NA	NA	NA	NA	NA
Anthracene	NA	NA	NA	NA	NA	NA	NA	NA	NA	NA	NA	NA	NA	NA
Fluoranthene	NA	NA	NA	NA	NA	NA	NA	NA	NA	NA	NA	NA	NA	NA
Pyrene	NA	NA	NA	NA	NA	NA	NA	NA	NA	NA	NA	NA	NA	NA
Benzo(a)anthracene	NA	NA	NA	NA	NA	NA	NA	NA	NA	NA	NA	NA	NA	NA
Chrysene	NA	NA	NA	NA	NA	NA	NA	NA	NA	NA	NA	NA	NA	NA
Benzo(a)pyrene	NA	NA	NA	NA	NA	NA	NA	NA	NA	NA	NA	NA	NA	NA
Indeno(1,2,3-cd)pyrene	NA	NA	NA	NA	NA	NA	NA	NA	NA	NA	NA	NA	NA	NA
Dibenz(a,h)anthracene	NA	NA	NA	NA	NA	NA	NA	NA	NA	NA	NA	NA	NA	NA
Benzo(g,h,i)perylene	NA	NA	NA	NA	NA	NA	NA	NA	NA	NA	NA	NA	NA	NA
Dibenzofuran	NA	NA	NA	NA	NA	NA	NA	NA	NA	NA	NA	NA	NA	NA
Total Benzofluoranthenes	NA	NA	NA	NA	NA	NA	NA	NA	NA	NA	NA	NA	NA	NA
cPAH TEQ	NA	NA	NA	NA	NA	NA	NA	NA	NA	NA	NA	NA	NA	NA

TABLE 7
LSIV STORMWATER FILTRATION AND PCB TESTING RESULTS
LONG-TERM STORMWATER TREATMENT SYSTEM
NORTH BOEING FIELD - SEATTLE, WASHINGTON

Sample Location ID		LTST-F-LSIV	LTST-F-LSIV	LTST-F-LSIV	LTST-F-LSIV	LTST-F-LSIV	LTST-F-LSIV	LTST-F-LSIV	LTST-F-LSIV	LTST-F-LSIV	LTST-F-LSIV	LTST-F-LSIV	LTST-F-LSIV	LTST-F-LSIV	LTST-F-LSIV
Laboratory Data ID		TW50C	TX25A	TX90F	TY96F	UA56E	UB55A	UC19G	UC78G	UE10G	UE68H	UF88B	UH75L	UI57B	UK14E
Filtration Start Date		11/8/2011	11/11/2011	11/16/2011	11/22/2011	12/5/2011	12/08/2011	12/20/2011	12/27/2011	1/9/2012	1/20/2012	1/21/2012	2/6/2012	2/9/2012	2/23/2012
Filtration End Date		11/11/11	11/16/11	11/17/2011	11/23/2011	12/08/2011	12/15/2011	12/21/2011	12/28/2011	1/12/2012	1/21/2012	1/26/2012	2/9/2012	2/17/2012	2/29/2012
Event Type		Monthly	Interim	Storm	Storm	Monthly	Interim	2nd Monthly	Storm	Monthly	Storm	Interim	Monthly	Interim	Interim
TOTAL METALS (mg/kg)															
Method EPA200.8/6010B,C/7470A															
Arsenic		NA	80 U	NA	NA	NA	110 U	NA	NA	NA	NA	NA	NA	110 U	NA
Cadmium		NA	**4**	NA	NA	NA	4 U	NA	NA	NA	NA	NA	NA	**7**	NA
Chromium		NA	**52** J	NA	NA	NA	**20**	NA	NA	NA	NA	NA	NA	**40**	NA
Copper		NA	**116** J	NA	NA	NA	**22**	NA	NA	NA	NA	NA	NA	**92**	NA
Iron		NA	NA	NA	NA	NA	**354,000**	NA	NA	NA	NA	NA	NA	**335,000**	NA
Lead		NA	**90**	NA	NA	NA	40 U	NA	NA	NA	NA	NA	NA	40 U	NA
Manganese		NA	NA	NA	NA	NA	**1970**	NA	NA	NA	NA	NA	NA	**1250**	NA
Mercury		NA	0.1 U	NA	NA	NA	0.2 U	NA	NA	NA	NA	NA	NA	0.2 U	NA
Nickel		NA	**20** J	NA	NA	NA	20 U	NA	NA	NA	NA	NA	NA	**30**	NA
Zinc		NA	**630** J	NA	NA	NA	**160**	NA	NA	NA	NA	NA	NA	**630**	NA
PARTICLE/GRAIN SIZE (percent)															
Method PSEP-PS															
Particle/Grain Size, Phi Scale >-1	(2,000 microns)	NA	7.8	NA	NA	NA	0.1 U	NA	NA	NA	NA	0.1	NA	NA	0.1
Particle/Grain Size, Phi Scale -1 to 0	(2,000-1,000 microns)	NA	7.2	NA	NA	NA	14.3	NA	NA	NA	NA	7.6	NA	NA	18.8
Particle/Grain Size, Phi Scale 0 to 1	(1,000-500 microns)	NA	2.3	NA	NA	NA	3.2	NA	NA	NA	NA	8.7	NA	NA	6.5
Particle/Grain Size, Phi Scale 1 to 2	(500-250 microns)	NA	1.1	NA	NA	NA	1.8	NA	NA	NA	NA	15.7	NA	NA	4.6
Particle/Grain Size, Phi Scale 2 to 3	(250-125 microns)	NA	1.0	NA	NA	NA	1.2	NA	NA	NA	NA	15.1	NA	NA	3.6
Particle/Grain Size, Phi Scale 3 to 4	(125-62 microns)	NA	0.9	NA	NA	NA	0.9	NA	NA	NA	NA	7.0	NA	NA	3.1
Particle/Grain Size, Phi Scale 4 to 5	(62.5-31.0 microns)	NA	34.7	NA	NA	NA	15.7	NA	NA	NA	NA	30.4	NA	NA	15.0
Particle/Grain Size, Phi Scale 5 to 6	(31.0-15.6 microns)	NA	15.1	NA	NA	NA	1.7	NA	NA	NA	NA	5.6	NA	NA	12.8
Particle/Grain Size, Phi Scale 6 to 7	(15.6-7.8 microns)	NA	4.3	NA	NA	NA	9.2	NA	NA	NA	NA	1.2	NA	NA	3.0
Particle/Grain Size, Phi Scale 7 to 8	(7.8-3.9 microns)	NA	7.5	NA	NA	NA	12.6	NA	NA	NA	NA	2.0	NA	NA	5.6
Particle/Grain Size, Phi Scale 8 to 9	(3.9-2.0 microns)	NA	4.4	NA	NA	NA	9.7	NA	NA	NA	NA	1.6	NA	NA	7.2
Particle/Grain Size, Phi Scale 9 to 10	(2.0-1.0 microns)	NA	5.4	NA	NA	NA	8.7	NA	NA	NA	NA	4.4	NA	NA	5.9
Particle/Grain Size, Phi Scale <10	(<1.0 micron)	NA	8.4	NA	NA	NA	20.9	NA	NA	NA	NA	0.7	NA	NA	13.8
Particle/Grain Size, Fines (Silt/Clay)	(<62 microns)	NA	79.7	NA	NA	NA	78.6	NA	NA	NA	NA	45.9	NA	NA	63.4
PRECIPITATION (c)															
Amount During Test (inches)		0.0	0.38	0.38	1.99	0.0	0.07	0.0	0.91	0.23	0.85	1.24	0.16	0.71	0.73

TABLE 7
LSIV STORMWATER FILTRATION AND PCB TESTING RESULTS
LONG-TERM STORMWATER TREATMENT SYSTEM
NORTH BOEING FIELD - SEATTLE, WASHINGTON

Sample Location ID	LTST-F-LSIV	LTST-F-LSIV	LTST-F-LSIV	LTST-F-LSIV	LTST-F-LSIV	LTST-F-LSIV	LTST-F-LSIV	LTST-F-LSIV	LTST-F-LSIV	LTST-F-LSIV	LTST-F-LSIV	LTST-F-LSIV	LTST-F-LSIV	LTST-F-LSIV
Laboratory Data ID	UL49G	UL81F	UM18F	UN75B	UO82G	UP34C	UP34D	UQ03A	UU03K	UX77A/UX77B	VB89G/VB89H	VF37G/VF37H	VJ50D/VJ50E	VL90G/VL90H
Filtration Start Date	3/5/2012	3/8/2012	3/12/2012	3/22/2012	3/31/2012	4/2/2012	4/2/2012	4/6/2012	5/7/2012	6/4/2012	7/9/2012	8/6/2012	9/10/2012	10/1/2012
Filtration End Date	3/8/2012	3/12/2012	3/13/2012	3/23/2012	4/1/2012	4/5/2012	4/5/2012	4/10/2012	5/10/2012	6/7/2012	7/11/2012	8/9/2012	9/13/2012	10/4/2012
Event Type	Monthly	Interim	Storm	Interim	Storm	Monthly	Monthly	Interim	Monthly	Monthly	Monthly	Monthly	Monthly	Monthly
Measured Mass in Filter														
Aroclor 1016 (µg)	0.5 U	NA	0.5 U	NA	0.5 U	1.0 U	NA	NA	0.1 U	0.5 U	0.1 U	0.1 U	0.1 U	0.1 U
Aroclor 1242 (µg)	0.5 U	NA	0.5 U	NA	0.5 U	1.0 U	NA	NA	0.1 U	0.5 U	0.1 U	0.1 U	0.1 U	0.1 U
Aroclor 1248 (µg)	3.8 U	NA	**3.8**	NA	6.2 U	50 U	NA	NA	**0.9**	5.0 U	1.5 U	1.5 U	1.0 U	0.5 U
Aroclor 1254 (µg)	**7.5**	NA	**7.2**	NA	**13**	**48**	NA	NA	**1.6**	**5.7**	**1.3**	**1.5**	**1.1**	**0.8**
Aroclor 1260 (µg)	**5.7**	NA	**2.6**	NA	**3.2**	4.0 U	NA	NA	**0.5**	**2.9**	**0.3**	**0.3**	**0.6**	**0.3**
Aroclor 1221 (µg)	0.5 U	NA	0.5 U	NA	0.5 U	1.0 U	NA	NA	0.1 U	0.5 U	0.1 U	0.1 U	0.1 U	0.1 U
Aroclor 1232 (µg)	0.5 U	NA	0.5 U	NA	0.5 U	1.0 U	NA	NA	0.1 U	0.5 U	0.1 U	0.1 U	0.1 U	0.1 U
Aroclor 1262 (µg)	0.5 U	NA	0.5 U	NA	0.5 U	1.0 U	NA	NA	0.1 U	0.5 U	0.1 U	0.1 U	0.1 U	0.1 U
Total PCBs (a) (µg)	**13.2**	NA	**13.6**	NA	**16.2**	**48**	NA	NA	**3**	**8.6**	**1.6**	**1.8**	**1.7**	**1.1**
Mass of Filtered Solids:														
Bag Number	143	NA	141	NA	147	139	NA	NA	149	130	136	138	161	158
Filter Micron Rating (µm)	1	NA	1	NA	1	1	NA	NA	1	1	1	1	1	1
Unused Filter Bag (grams)	156.04	NA	152.98	NA	158.56	154.60	NA	NA	156.88	154.73	155.52	146.98	136.93	141.36
Dried Filter Bag with Filtered Solids (grams)	186.21	NA	171.18	NA	190.29	174.87	NA	NA	159.29	185.71	183.45	185.15	172.14	178.87
Total Solids Filtered, Dry Weight (grams)	30.17	NA	18.20	NA	31.73	20.27	NA	NA	2.41	30.98	27.93	38.17	35.21	37.51
Calculated Concentration of Total PCBs in Filtered Solids, Dry Weight (mg/kg)	**0.44**	NA	**0.75**	NA	**0.51**	**2.37**	NA	NA	**1.24**	**0.28**	**0.06**	**0.05**	**0.05**	**0.03**
Volume of Stormwater Filtered:														
Flow Totalizer at Start of Filtration (gallons)	3,663	NA	36,209	NA	6,166	8,068	NA	NA	9,194	39,171	40,092	39,894	39,374	39,596
Flow Totalizer at Sample Collection (gallons)	3,987	NA	37,097	NA	8,068	8,952	NA	NA	9,332	39,573	40,340	39,374	39,596	39,736
Volume of Stormwater Filtered (gallons)	324	NA	889	NA	1,902	884	NA	NA	138	402	248	(b)	222	140
Calculated Concentration of Total PCBs in Whole Water using flow totalizer data, (µg/L)	**0.011**	NA	**0.004**	NA	**0.002**	**0.014**	NA	NA	**0.006**	**0.006**	**0.002**	(b)	**0.002**	**0.002**
PAHs (µg)														
Method SW8270D														
Naphthalene	NA	NA	NA	NA	NA	NA	NA	NA	NA	NA	NA	NA	NA	NA
2-Methylnaphthalene	NA	NA	NA	NA	NA	NA	NA	NA	NA	NA	NA	NA	NA	NA
1-Methylnaphthalene	NA	NA	NA	NA	NA	NA	NA	NA	NA	NA	NA	NA	NA	NA
Acenaphthylene	NA	NA	NA	NA	NA	NA	NA	NA	NA	NA	NA	NA	NA	NA
Acenaphthene	NA	NA	NA	NA	NA	NA	NA	NA	NA	NA	NA	NA	NA	NA
Fluorene	NA	NA	NA	NA	NA	NA	NA	NA	NA	NA	NA	NA	NA	NA
Phenanthrene	NA	NA	NA	NA	NA	NA	NA	NA	NA	NA	NA	NA	NA	NA
Anthracene	NA	NA	NA	NA	NA	NA	NA	NA	NA	NA	NA	NA	NA	NA
Fluoranthene	NA	NA	NA	NA	NA	NA	NA	NA	NA	NA	NA	NA	NA	NA
Pyrene	NA	NA	NA	NA	NA	NA	NA	NA	NA	NA	NA	NA	NA	NA
Benzo(a)anthracene	NA	NA	NA	NA	NA	NA	NA	NA	NA	NA	NA	NA	NA	NA
Chrysene	NA	NA	NA	NA	NA	NA	NA	NA	NA	NA	NA	NA	NA	NA
Benzo(a)pyrene	NA	NA	NA	NA	NA	NA	NA	NA	NA	NA	NA	NA	NA	NA
Indeno(1,2,3-cd)pyrene	NA	NA	NA	NA	NA	NA	NA	NA	NA	NA	NA	NA	NA	NA
Dibenz(a,h)anthracene	NA	NA	NA	NA	NA	NA	NA	NA	NA	NA	NA	NA	NA	NA
Benzo(g,h,i)perylene	NA	NA	NA	NA	NA	NA	NA	NA	NA	NA	NA	NA	NA	NA
Dibenzofuran	NA	NA	NA	NA	NA	NA	NA	NA	NA	NA	NA	NA	NA	NA
Total Benzofluoranthenes	NA	NA	NA	NA	NA	NA	NA	NA	NA	NA	NA	NA	NA	NA
cPAH TEQ	NA	NA	NA	NA	NA	NA	NA	NA	NA	NA	NA	NA	NA	NA

TABLE 7
LSIV STORMWATER FILTRATION AND PCB TESTING RESULTS
LONG-TERM STORMWATER TREATMENT SYSTEM
NORTH BOEING FIELD - SEATTLE, WASHINGTON

Sample Location ID		LTST-F-LSIV	LTST-F-LSIV	LTST-F-LSIV	LTST-F-LSIV	LTST-F-LSIV	LTST-F-LSIV	LTST-F-LSIV	LTST-F-LSIV	LTST-F-LSIV	LTST-F-LSIV	LTST-F-LSIV	LTST-F-LSIV	LTST-F-LSIV	LTST-F-LSIV
Laboratory Data ID		UL49G	UL81F	UM18F	UN75B	UO82G	UP34C	UP34D	UQ03A	UU03K	UX77A/UX77B	VB89G/VB89H	VF37G/VF37H	VJ50D/VJ50E	VL90G/VL90H
Filtration Start Date		3/5/2012	3/8/2012	3/12/2012	3/22/2012	3/31/2012	4/2/2012	4/2/2012	4/6/2012	5/7/2012	6/4/2012	7/9/2012	8/6/2012	9/10/2012	10/1/2012
Filtration End Date		3/8/2012	3/12/2012	3/13/2012	3/23/2012	4/1/2012	4/5/2012	4/5/2012	4/10/2012	5/10/2012	6/7/2012	7/11/2012	8/9/2012	9/13/2012	10/4/2012
Event Type		Monthly	Interim	Storm	Interim	Storm	Monthly	Monthly	Interim	Monthly	Monthly	Monthly	Monthly	Monthly	Monthly
TOTAL METALS (mg/kg)															
Method EPA200.8/6010B,C/7470A															
Arsenic		NA	90 U	NA	NA	NA	NA	90 U	NA	80 U	90 U	80 U	110 U	80 U	90 U
Cadmium		NA	**6**	NA	NA	NA	NA	4 U	NA	3 U	**7**	3 U	4 U	**5**	4 U
Chromium		NA	**46**	NA	NA	NA	NA	**42**	NA	**24**	**42**	**26**	**20**	**26**	**23**
Copper		NA	**98**	NA	NA	NA	NA	**79**	NA	**29**	**92**	**33**	**22**	**30**	**52**
Iron		NA	**325000**	NA	NA	NA	NA	**319,000**	NA	**368,000**	**251,000**	**323,000**	**297,000**	**313,000**	**357,000**
Lead		NA	40 U	NA	NA	NA	NA	40 U	NA	30 U	50	30 U	40 U	30 U	40 U
Manganese		NA	**1630**	NA	NA	NA	NA	**1210**	NA	**1850**	**1480**	**2010**	**1780**	**2000**	**2880**
Mercury		NA	0.2 U	NA	NA	NA	NA	**0.2**	NA	0.1 U	0.1 U	0.1 U	0.1 U	0.1 U	0.1 U
Nickel		NA	**30**	NA	NA	NA	NA	20 U	NA	20 U	20	20 U	20 U	20 U	20 U
Zinc		NA	**770**	NA	NA	NA	NA	**420**	NA	**110**	**760**	**120**	**90**	**210**	**100**
PARTICLE/GRAIN SIZE (percent)															
Method PSEP-PS															
Particle/Grain Size, Phi Scale >-1	(2,000 microns)	NA	NA	NA	0.1 U	NA	NA	NA	0.1 U	0.1 U	0.1 U	NA	NA	NA	NA
Particle/Grain Size, Phi Scale -1 to 0	(2,000-1,000 microns)	NA	NA	NA	7.3	NA	NA	NA	7.8	1.3	10.9	NA	NA	NA	NA
Particle/Grain Size, Phi Scale 0 to 1	(1,000-500 microns)	NA	NA	NA	5.5	NA	NA	NA	2.7	1.5	9.1	NA	NA	NA	NA
Particle/Grain Size, Phi Scale 1 to 2	(500-250 microns)	NA	NA	NA	5.0	NA	NA	NA	3.2	1.1	6.0	NA	NA	NA	NA
Particle/Grain Size, Phi Scale 2 to 3	(250-125 microns)	NA	NA	NA	4.2	NA	NA	NA	2.6	0.9	6.0	NA	NA	NA	NA
Particle/Grain Size, Phi Scale 3 to 4	(125-62 microns)	NA	NA	NA	4.3	NA	NA	NA	2.2	1.0	6.8	NA	NA	NA	NA
Particle/Grain Size, Phi Scale 4 to 5	(62.5-31.0 microns)	NA	NA	NA	12.7	NA	NA	NA	16.7	2.2	13.4	NA	NA	NA	NA
Particle/Grain Size, Phi Scale 5 to 6	(31.0-15.6 microns)	NA	NA	NA	16.1	NA	NA	NA	17.4	20.7	13.2	NA	NA	NA	NA
Particle/Grain Size, Phi Scale 6 to 7	(15.6-7.8 microns)	NA	NA	NA	4.9	NA	NA	NA	9.2	20.9	6.1	NA	NA	NA	NA
Particle/Grain Size, Phi Scale 7 to 8	(7.8-3.9 microns)	NA	NA	NA	8.4	NA	NA	NA	12.8	24.5	8.7	NA	NA	NA	NA
Particle/Grain Size, Phi Scale 8 to 9	(3.9-2.0 microns)	NA	NA	NA	7.2	NA	NA	NA	7.5	10.2	3.4	NA	NA	NA	NA
Particle/Grain Size, Phi Scale 9 to 10	(2.0-1.0 microns)	NA	NA	NA	13.6	NA	NA	NA	9.7	8.4	6.8	NA	NA	NA	NA
Particle/Grain Size, Phi Scale <10	(<1.0 micron)	NA	NA	NA	10.7	NA	NA	NA	8.0	7.1	9.6	NA	NA	NA	NA
Particle/Grain Size, Fines (Silt/Clay)	(<62 microns)	NA	NA	NA	73.6	NA	NA	NA	81.4	94.2	61.2	NA	NA	NA	NA
PRECIPITATION (c)															
Amount During Test (inches)		0.06	1.01	0.76	0.35	0.50	0.29	0.29	0.00	0.01	0.94	0.00	0.00	0.01	0.00

TABLE 7
LSIV STORMWATER FILTRATION AND PCB TESTING RESULTS
LONG-TERM STORMWATER TREATMENT SYSTEM
NORTH BOEING FIELD - SEATTLE, WASHINGTON

Sample Location ID	LTST-F-LSIV	LTST-F-LSIV	LTST-F-LSIV	LTST-F-LSIV	LTST-F-LSIV	LTST-F-LSIV	LTST-F-LSIV	LTST-F-LSIV	LTST-F-LSIV	LTST-F-LSIV	LTST-F-LSIV	LTST-F-LSIV	LTST-F-LSIV	LTST-F-LSIV
Laboratory Data ID	VR68G/VR68H	VS17I	VV27I/VV27J	VW75I	VZ15E/VZ15F	WC96I/WC96K	WG51I/WG51J	WI40I/WI40L	WK37I/WK37L	WK74I/WK74L	WP40I/WP40L	WS97E	WX01K	XA11I/XA11K
Filtration Start Date	11/5/2012	11/11/2012	12/3/2012	12/16/2012	1/7/2013	2/4/2013	3/4/2013	3/19/2013	4/1/2013	4/5/2013	5/6/2013	6/3/2013	7/8/2013	8/5/2013
Filtration End Date	11/8/2012	11/12/2012	12/6/2012	12/17/2012	1/10/2013	2/7/2013	3/7/2013	3/20/2013	4/4/2013	4/6/2013	5/9/2013	6/6/2013	7/10/2013	8/8/2013
Event Type	Monthly	Storm	Monthly	Storm	Monthly	Monthly	Monthly	Storm	Monthly	Storm	Monthly	Monthly	Monthly	Monthly
Measured Mass in Filter														
Aroclor 1016 (µg)	0.1 U	0.1 U	1.0 U	0.5 U	0.5 U	0.5 U	0.5 U	0.1 U	0.5 U	1.0 U	0.1 U	0.1 U	0.1 U	0.10 U
Aroclor 1242 (µg)	0.1 U	0.1 U	1.0 U	0.5 U	0.5 U	0.5 U	0.5 U	0.1 U	0.5 U	1.0 U	0.1 U	0.1 U	0.1 U	0.10 U
Aroclor 1248 (µg)	1.0 U	1.5 U	5.0 U	1.6 U	2.5 U	1.2 U	2.0 U	1.2 U	**1.0**	3.0 U	1.5 U	1 U	1.2 U	0.40 U
Aroclor 1254 (µg)	**1.9**	**3.5**	**17**	**3.7**	**4.6**	**2.4**	**2.0**	**1.3**	**1.6**	**6.8**	**1.9**	**0.8**	**0.8**	**0.93**
Aroclor 1260 (µg)	**0.4**	**1.5**	**7.1**	**1.6**	**1.4**	**0.8**	0.5 U	**0.6**	0.5 U	2.5 U	**0.4**	0.1 U	**0.2**	**0.47**
Aroclor 1221 (µg)	0.1 U	0.1 U	1.0 U	0.5 U	0.5 U	0.5 U	0.5 U	0.1 U	0.5 U	1.0 U	0.1 U	0.1 U	0.1 U	0.10 U
Aroclor 1232 (µg)	0.1 U	0.1 U	1.0 U	0.5 U	0.5 U	0.5 U	0.5 U	0.1 U	0.5 U	1.0 U	0.1 U	0.1 U	0.1 U	0.10 U
Aroclor 1262 (µg)	0.1 U	0.1 U	1.0 U	0.5 U	0.5 U	0.5 U	0.5 U	0.1 U	0.5 U	1.0 U	0.1 U	0.1 U	0.1 U	0.10 U
Total PCBs (a) (µg)	**2.3**	**5.0**	**24.1**	**5.3**	**6.0**	**3.2**	**2.0**	**1.9**	**2.6**	**6.8**	**2.3**	**0.8**	**1.0**	**1.4**
Mass of Filtered Solids:														
Bag Number	160	157	159	176	169	191	194	196	172	177	205	171	250	238
Filter Micron Rating (µm)	1	1	1	1	1	1	1	1	1	1	1	1	1	1
Unused Filter Bag (grams)	142.16	139.65	134.39	137.06	139.83	131.69	134.7	144.81	149.16	142.26	138.88	138.77	133.28	140.01
Dried Filter Bag with Filtered Solids (grams)	163.97	165.29	163.70	144.9	181.29	151.44	162.42	188.49	185.75	155.18	187.31	142.16	152.93	162.33
Total Solids Filtered, Dry Weight (grams)	21.81	25.64	29.31	7.84	41.46	19.75	27.72	43.68	36.59	12.92	48.43	3.39	19.65	22.32
Calculated Concentration of Total PCBs in Filtered Solids, Dry Weight (mg/kg)	**0.11**	**0.20**	**0.82**	**0.68**	**0.14**	**0.16**	**0.07**	**0.04**	**0.07**	**0.53**	**0.05**	**0.24**	**0.05**	**0.06**
Volume of Stormwater Filtered:														
Flow Totalizer at Start of Filtration (gallons)	37,810	38,767	42,201	45,064	45,471	16,522	16,415	16,106	16,214	16,424	16,837	17,080	17,178	16,719
Flow Totalizer at Sample Collection (gallons)	38,767	38,791	46,781	45,490	45,625	16,596	16,737	16,207	16,424	16,737	17,180	17,178	17,308	16,843
Volume of Stormwater Filtered (gallons)	957	24	4,579	427	154	75	322	101	211	313	343	98	130	124
Calculated Concentration of Total PCBs in Whole Water using flow totalizer data, (µg/L)	**0.001**	**0.054**	**0.001**	**0.003**	**0.010**	**0.011**	**0.002**	**0.005**	**0.003**	**0.006**	**0.002**	**0.002**	**0.002**	**0.003**
PAHs (µg)														
Method SW8270D														
Naphthalene	NA	NA	NA	NA	5.0 U	NA	2.5 U	**1.6**	NA	NA	5.0 U	NA	NA	NA
2-Methylnaphthalene	NA	NA	NA	NA	5.0 U	NA	2.5 U	**5.9**	NA	NA	5.0 U	NA	NA	NA
1-Methylnaphthalene	NA	NA	NA	NA	5.0 U	NA	**4.5**	**5.0**	NA	NA	5.0 U	NA	NA	NA
Acenaphthylene	NA	NA	NA	NA	5.0 U	NA	2.5 U	1.5 U	NA	NA	5.0 U	NA	NA	NA
Acenaphthene	NA	NA	NA	NA	5.0 U	NA	2.5 U	1.5 U	NA	NA	**25**	NA	NA	NA
Fluorene	NA	NA	NA	NA	5.0 U	NA	2.5 U	**1.7**	NA	NA	5.0 U	NA	NA	NA
Phenanthrene	NA	NA	NA	NA	**8.0**	NA	**6.7**	**9.0**	NA	NA	**5.0**	NA	NA	NA
Anthracene	NA	NA	NA	NA	5.0 U	NA	2.5 U	1.5 U	NA	NA	5.0 U	NA	NA	NA
Fluoranthene	NA	NA	NA	NA	**25**	NA	**20**	**26**	NA	NA	5.0 U	NA	NA	NA
Pyrene	NA	NA	NA	NA	**19**	NA	**11**	**14**	NA	NA	5.0 U	NA	NA	NA
Benzo(a)anthracene	NA	NA	NA	NA	**5.0**	NA	**2.8**	**4.2**	NA	NA	5.0 U	NA	NA	NA
Chrysene	NA	NA	NA	NA	**19**	NA	**12**	**16**	NA	NA	5.0 U	NA	NA	NA
Benzo(a)pyrene	NA	NA	NA	NA	**8.0**	NA	**4.4**	**6.6**	NA	NA	5.0 U	NA	NA	NA
Indeno(1,2,3-cd)pyrene	NA	NA	NA	NA	**9.0**	NA	**6.0**	**9.2**	NA	NA	5.0 U	NA	NA	NA
Dibenz(a,h)anthracene	NA	NA	NA	NA	5.0 U	NA	2.5 U	**3.0**	NA	NA	5.0 U	NA	NA	NA
Benzo(g,h,i)perylene	NA	NA	NA	NA	**11**	NA	**7.3**	**11**	NA	NA	5.0 U	NA	NA	NA
Dibenzofuran	NA	NA	NA	NA	5.0 U	NA	2.5 U	1.5 U	NA	NA	5.0 U	NA	NA	NA
Total Benzofluoranthenes	NA	NA	NA	NA	**30**	NA	**17**	**26**	NA	NA	5.0 U	NA	NA	NA
cPAH TEQ	NA	NA	NA	NA	**12.6**	NA	**7.1**	**11**	NA	NA	NA	NA	NA	NA

TABLE 7
LSIV STORMWATER FILTRATION AND PCB TESTING RESULTS
LONG-TERM STORMWATER TREATMENT SYSTEM
NORTH BOEING FIELD - SEATTLE, WASHINGTON

	Sample Location ID	LTST-F-LSIV	LTST-F-LSIV	LTST-F-LSIV	LTST-F-LSIV	LTST-F-LSIV	LTST-F-LSIV	LTST-F-LSIV	LTST-F-LSIV	LTST-F-LSIV	LTST-F-LSIV	LTST-F-LSIV	LTST-F-LSIV	LTST-F-LSIV	LTST-F-LSIV
	Laboratory Data ID	VR68G/VR68H	VS17I	VV27I/VV27J	VW75I	VZ15E/VZ15F	WC96I/WC96K	WG51I/WG51J	WI40I/WI40L	WK37I/WK37L	WK74I/WK74L	WP40I/WP40L	WS97E	WX01K	XA11I/XA11K
	Filtration Start Date	11/5/2012	11/11/2012	12/3/2012	12/16/2012	1/7/2013	2/4/2013	3/4/2013	3/19/2013	4/1/2013	4/5/2013	5/6/2013	6/3/2013	7/8/2013	8/5/2013
	Filtration End Date	11/8/2012	11/12/2012	12/6/2012	12/17/2012	1/10/2013	2/7/2013	3/7/2013	3/20/2013	4/4/2013	4/6/2013	5/9/2013	6/6/2013	7/10/2013	8/8/2013
	Event Type	Monthly	Storm	Monthly	Storm	Monthly	Monthly	Monthly	Storm	Monthly	Storm	Monthly	Monthly	Monthly	Monthly
TOTAL METALS (mg/kg)															
Method EPA200.8/6010B,C/7470A															
Arsenic		110 U	NA	50 U	NA	NA	60 U	NA	NA	70 U	30 U	NA	NA	NA	80 U
Cadmium		4 U	NA	**2**	NA	NA	**7**	NA	NA	**5**	**10**	NA	NA	NA	**4**
Chromium		**20**	NA	**38**	NA	NA	**39**	NA	NA	**14**	**49**	NA	NA	NA	**23**
Copper		**38**	NA	**117**	NA	NA	**95**	NA	NA	**25**	**144**	NA	NA	NA	**33**
Iron		**346,000**	NA	**246,000**	NA	NA	**229,000**	NA	NA	**272,000**	**109,000**	NA	NA	NA	**315,000**
Lead		40 U	NA	**40**	NA	NA	**50**	NA	NA	30 U	**90**	NA	NA	NA	30 U
Manganese		**2240**	NA	**1300**	NA	NA	**1370**	NA	NA	**1340**	**675**	NA	NA	NA	**2420**
Mercury		0.2 U	NA	0.3 U	NA	NA	**0.1**	NA	NA	0.1 U	**0.2**	NA	NA	NA	0.1 U
Nickel		20 U	NA	**20**	NA	NA	**20**	NA	NA	10 U	**24**	NA	NA	NA	20 U
Zinc		**150**	NA	**370**	NA	NA	**650**	NA	NA	**70**	**1000**	NA	NA	NA	**170**
PARTICLE/GRAIN SIZE (percent)															
Method PSEP-PS															
Particle/Grain Size, Phi Scale >-1	(2,000 microns)	NA	NA	NA	NA	NA	NA	NA	NA	NA	NA	NA	NA	NA	NA
Particle/Grain Size, Phi Scale -1 to 0	(2,000-1,000 microns)	NA	NA	NA	NA	NA	NA	NA	NA	NA	NA	NA	NA	NA	NA
Particle/Grain Size, Phi Scale 0 to 1	(1,000-500 microns)	NA	NA	NA	NA	NA	NA	NA	NA	NA	NA	NA	NA	NA	NA
Particle/Grain Size, Phi Scale 1 to 2	(500-250 microns)	NA	NA	NA	NA	NA	NA	NA	NA	NA	NA	NA	NA	NA	NA
Particle/Grain Size, Phi Scale 2 to 3	(250-125 microns)	NA	NA	NA	NA	NA	NA	NA	NA	NA	NA	NA	NA	NA	NA
Particle/Grain Size, Phi Scale 3 to 4	(125-62 microns)	NA	NA	NA	NA	NA	NA	NA	NA	NA	NA	NA	NA	NA	NA
Particle/Grain Size, Phi Scale 4 to 5	(62.5-31.0 microns)	NA	NA	NA	NA	NA	NA	NA	NA	NA	NA	NA	NA	NA	NA
Particle/Grain Size, Phi Scale 5 to 6	(31.0-15.6 microns)	NA	NA	NA	NA	NA	NA	NA	NA	NA	NA	NA	NA	NA	NA
Particle/Grain Size, Phi Scale 6 to 7	(15.6-7.8 microns)	NA	NA	NA	NA	NA	NA	NA	NA	NA	NA	NA	NA	NA	NA
Particle/Grain Size, Phi Scale 7 to 8	(7.8-3.9 microns)	NA	NA	NA	NA	NA	NA	NA	NA	NA	NA	NA	NA	NA	NA
Particle/Grain Size, Phi Scale 8 to 9	(3.9-2.0 microns)	NA	NA	NA	NA	NA	NA	NA	NA	NA	NA	NA	NA	NA	NA
Particle/Grain Size, Phi Scale 9 to 10	(2.0-1.0 microns)	NA	NA	NA	NA	NA	NA	NA	NA	NA	NA	NA	NA	NA	NA
Particle/Grain Size, Phi Scale <10	(<1.0 micron)	NA	NA	NA	NA	NA	NA	NA	NA	NA	NA	NA	NA	NA	NA
Particle/Grain Size, Fines (Silt/Clay)	(<62 microns)	NA	NA	NA	NA	NA	NA	NA	NA	NA	NA	NA	NA	NA	NA
PRECIPITATION (c)															
Amount During Test (inches)		0.01	0.63	0.69	0.94	1.68	0.35	0.87	0.92	0.00	0.59	0.00	0.00	0.00	0.00

TABLE 7
LSIV STORMWATER FILTRATION AND PCB TESTING RESULTS
LONG-TERM STORMWATER TREATMENT SYSTEM
NORTH BOEING FIELD - SEATTLE, WASHINGTON

Sample Location ID	LTST-F-LSIV	LTST-F-LSIV	LTST-F-LSIV	LTST-F-LSIV	LTST-F-LSIV	LTST-F-LSIV	LTST-F-LSIV	LTST-F-LSIV	LTST-F-LSIV	LTST-F-LSIV	LTST-F-LSIV	LTST-F-LSIV	LTST-F-LSIV	LTST-F-LSIV
Laboratory Data ID	XE07I/XE07L	XE91H/XE91K	XJ21I/XJ12L	XN18I/XN18L	XO76E/XO76G	XQ44I/XQ44L	XT98I/XT98L	XU48E/XU48H	XZ68H	YB86E	YG17E	YR11H	ZE23H	ZF08H
Filtration Start Date	9/5/2013	9/9/2013	10/7/2013	11/4/2013	11/18/2013	12/2/2013	1/6/2014	1/10/2014	2/16/2014	3/5/2014	4/7/2014	7/7/2014	10/6/2014	10/13/2014
Filtration End Date	9/6/2013	9/12/2013	10/9/2013	11/7/2013	11/19/2013	12/5/2013	1/9/2014	1/11/2014	2/17/2014	3/6/2014	4/10/2014	7/10/2014	10/9/2014	10/14/2014
Event Type	Storm	Monthly	Monthly	Monthly	Storm	Monthly	Quarterly	Storm	Storm	Storm	Quarterly	Quarterly	Quarterly	Storm
Measured Mass in Filter														
Aroclor 1016 (µg)	0.50 U	0.50 U	0.50 U	0.10 U	0.10 U	0.50 U	0.10 U	0.10 U	0.50 U	0.50 U	0.10 U	0.10 U	0.10 U	0.10 U
Aroclor 1242 (µg)	0.50 U	0.50 U	0.50 U	0.10 U	0.10 U	0.50 U	0.10 U	0.10 U	0.50 U	0.50 U	0.10 U	0.10 U	0.10 U	0.10 U
Aroclor 1248 (µg)	2.8 U	1.2 U	2.0 U	0.75 U	1.5 U	0.75 U	1.0 U	1.5 U	2.5 U	2.5 U	1.5 U	0.75 U	1.5 U	2.5 U
Aroclor 1254 (µg)	**6.7**	**2.3**	**4.2**	**1.1**	**3.2**	**1.8**	**2.4**	**3.8**	**13**	**11**	**1.7**	**1.4**	**1.0**	**4.0**
Aroclor 1260 (µg)	**3.1**	**1.2**	**1.8**	**0.49**	**2.4**	**0.70**	**1.9**	**2.6**	**5.5**	**5.1**	**0.52**	**0.48**	**0.25**	**1.2** P
Aroclor 1221 (µg)	0.50 U	0.50 U	0.50 U	0.10 U	0.10 U	0.50 U	0.10 U	0.10 U	0.50 U	0.50 U	0.10 U	0.10 U	0.10 U	0.10 U
Aroclor 1232 (µg)	0.50 U	0.50 U	0.50 U	0.10 U	0.10 U	0.50 U	0.10 U	0.10 U	0.50 U	0.50 U	0.10 U	0.10 U	0.10 U	0.10 U
Aroclor 1262 (µg)	0.50 U	0.50 U	0.50 U	0.10 U	0.10 U	0.50 U	0.10 U	0.10 U	0.50 U	0.50 U	0.10 U	0.10 U	0.10 U	0.10 U
Total PCBs (a) (µg)	**9.8**	**3.5**	**6.0**	**1.59**	**5.6**	**2.5**	**4.3**	**6.4**	**18.5**	**16.1**	**2.22**	**1.88**	**1.3**	**5.2** P
Mass of Filtered Solids:														
Bag Number	225	211	217	239	253	222	224	220	256	288	265	277	272	294
Filter Micron Rating (µm)	1	1	1	1	1	1	1	1	1	1	1	1	1	1
Unused Filter Bag (grams)	145.03	137.30	147.12	141.17	137.37	149.01	141.89	148.09	140.50	138.51	139.90	140.1	135.9	143.19
Dried Filter Bag with Filtered Solids (grams)	199.08	167.79	179.42	159.34	171.73	181.57	172.12	160.15	171.12	159.22	161.08	161.22	153.95	165.57
Total Solids Filtered, Dry Weight (grams)	54.05	30.49	32.30	18.17	34.36	32.56	30.23	12.06	30.62	20.71	21.18	21.12	18.05	22.38
Calculated Concentration of Total PCBs in Filtered Solids, Dry Weight (mg/kg)	**0.18**	**0.11**	**0.19**	**0.09**	**0.16**	**0.08**	**0.14**	**0.53**	**0.60**	**0.78**	**0.10**	**0.09**	**0.07**	**0.23**
Volume of Stormwater Filtered:														
Flow Totalizer at Start of Filtration (gallons)	14,741	14,832	13,205	9,019	5,486	5,218	5,324	5,591	5,281	838	1,834	308	380	2,021
Flow Totalizer at Sample Collection (gallons)	14,832	15,064	13,516	8,976	5,497	5,324	5,591	6,032	5,965	1,862	1,968	404	2,021	2,080
Volume of Stormwater Filtered (gallons)	91	231	311	(b)	11 (b)	106	267	441	685	1,024	134	97	1,640	60
Calculated Concentration of Total PCBs in Whole Water using flow totalizer data, (µg/L)	**0.028**	**0.004**	**0.005**	(b)	**0.134 (b)**	**0.006**	**0.004**	**0.004**	**0.007**	**0.004**	**0.004**	**0.005**	**0.0002**	**0.023**
PAHs (µg)														
Method SW8270D														
Naphthalene	**60**	**3.0**	NA	2.5 U	NA	NA	2.5 U	2.5 U	NA	NA	NA	NA	NA	NA
2-Methylnaphthalene	**260**	**8.2**	NA	2.5 U	NA	NA	2.5 U	**2.6**	NA	NA	NA	NA	NA	NA
1-Methylnaphthalene	**200**	**10**	NA	2.5 U	NA	NA	**7.6** M	**8.0**	NA	NA	NA	NA	NA	NA
Acenaphthylene	**12**	2.5 U	NA	2.5 U	NA	NA	2.5 U	2.5 U	NA	NA	NA	NA	NA	NA
Acenaphthene	**7.7**	**9.6**	NA	2.5 U	NA	NA	2.5 U	2.5 U	NA	NA	NA	NA	NA	NA
Fluorene	**13**	2.5 U	NA	2.5 U	NA	NA	2.5 U	2.5 U	NA	NA	NA	NA	NA	NA
Phenanthrene	**33**	**3.8**	NA	**4.9**	NA	NA	**14**	**22**	NA	NA	NA	NA	NA	NA
Anthracene	5.0 U	2.5 U	NA	2.5 U	NA	NA	2.5 U	2.5 U	NA	NA	NA	NA	NA	NA
Fluoranthene	**93**	**5.9**	NA	**14**	NA	NA	**42**	**91**	NA	NA	NA	NA	NA	NA
Pyrene	**53**	**4.8**	NA	**12**	NA	NA	**32**	**47**	NA	NA	NA	NA	NA	NA
Benzo(a)anthracene	**11**	2.5 U	NA	**3.1**	NA	NA	**9.0**	**17**	NA	NA	NA	NA	NA	NA
Chrysene	**61**	**3.7**	NA	**11**	NA	NA	**36**	**68**	NA	NA	NA	NA	NA	NA
Benzo(a)pyrene	**20**	2.5 U	NA	**5.0**	NA	NA	**16**	**28**	NA	NA	NA	NA	NA	NA
Indeno(1,2,3-cd)pyrene	**25**	2.5 U	NA	**5.7**	NA	NA	**15**	**27**	NA	NA	NA	NA	NA	NA
Dibenz(a,h)anthracene	5.0 U	2.5 U	NA	2.5 U	NA	NA	**4.8**	**8.5**	NA	NA	NA	NA	NA	NA
Benzo(g,h,i)perylene	**31**	2.5 U	NA	**7.1**	NA	NA	**18** J	**29** J	NA	NA	NA	NA	NA	NA
Dibenzofuran	**13**	2.5 U	NA	2.5 U	NA	NA	2.5 U	**2.5**	NA	NA	NA	NA	NA	NA
Total Benzofluoranthenes	**70**	**4.6**	NA	**18**	NA	NA	**59**	**110**	NA	NA	NA	NA	NA	NA
cPAH TEQ	**31**	**0.50**	NA	**7.8**	NA	NA	**25.1**	**44.9**	NA	NA	NA	NA	NA	NA

TABLE 7
LSIV STORMWATER FILTRATION AND PCB TESTING RESULTS
LONG-TERM STORMWATER TREATMENT SYSTEM
NORTH BOEING FIELD - SEATTLE, WASHINGTON

Sample Location ID		LTST-F-LSIV	LTST-F-LSIV	LTST-F-LSIV	LTST-F-LSIV	LTST-F-LSIV	LTST-F-LSIV	LTST-F-LSIV	LTST-F-LSIV	LTST-F-LSIV	LTST-F-LSIV	LTST-F-LSIV	LTST-F-LSIV	LTST-F-LSIV	LTST-F-LSIV
Laboratory Data ID		XE07I/XE07L	XE91H/XE91K	XJ21I/XJ12L	XN18I/XN18L	XO76E/XO76G	XQ44I/XQ44L	XT98I/XT98L	XU48E/XU48H	XZ68H	YB86E	YG17E	YR11H	ZE23H	ZF08H
Filtration Start Date		9/5/2013	9/9/2013	10/7/2013	11/4/2013	11/18/2013	12/2/2013	1/6/2014	1/10/2014	2/16/2014	3/5/2014	4/7/2014	7/7/2014	10/6/2014	10/13/2014
Filtration End Date		9/6/2013	9/12/2013	10/9/2013	11/7/2013	11/19/2013	12/5/2013	1/9/2014	1/11/2014	2/17/2014	3/6/2014	4/10/2014	7/10/2014	10/9/2014	10/14/2014
Event Type		Storm	Monthly	Monthly	Monthly	Storm	Monthly	Quarterly	Storm	Storm	Storm	Quarterly	Quarterly	Quarterly	Storm
TOTAL METALS (mg/kg)															
Method EPA200.8/6010B,C/7470A															
Arsenic		NA	NA	40 U	NA	50 U	40 U	NA	NA	NA	NA	NA	NA	NA	NA
Cadmium		NA	NA	**7**	NA	**3**	**2**	NA	NA	NA	NA	NA	NA	NA	NA
Chromium		NA	NA	**63**	NA	**34**	**31** J	NA	NA	NA	NA	NA	NA	NA	NA
Copper		NA	NA	**162**	NA	**64** J	**50** J	NA	NA	NA	NA	NA	NA	NA	NA
Iron		NA	NA	**94,800**	NA	**103,000**	**195,000**	NA	NA	NA	NA	NA	NA	NA	NA
Lead		NA	NA	**140**	NA	**50**	**40**	NA	NA	NA	NA	NA	NA	NA	NA
Manganese		NA	NA	**868**	NA	**686** J	**1300**	NA	NA	NA	NA	NA	NA	NA	NA
Mercury		NA	NA	**0.19**	NA	**0.12**	**0.08**	NA	NA	NA	NA	NA	NA	NA	NA
Nickel		NA	NA	**35**	NA	**20**	**11**	NA	NA	NA	NA	NA	NA	NA	NA
Zinc		NA	NA	**907**	NA	**520** J	**415**	NA	NA	NA	NA	NA	NA	NA	NA
PARTICLE/GRAIN SIZE (percent)															
Method PSEP-PS															
Particle/Grain Size, Phi Scale >-1	(2,000 microns)	NA	NA	NA	NA	NA	NA	NA	NA	NA	NA	NA	NA	NA	NA
Particle/Grain Size, Phi Scale -1 to 0	(2,000-1,000 microns)	NA	NA	NA	NA	NA	NA	NA	NA	NA	NA	NA	NA	NA	NA
Particle/Grain Size, Phi Scale 0 to 1	(1,000-500 microns)	NA	NA	NA	NA	NA	NA	NA	NA	NA	NA	NA	NA	NA	NA
Particle/Grain Size, Phi Scale 1 to 2	(500-250 microns)	NA	NA	NA	NA	NA	NA	NA	NA	NA	NA	NA	NA	NA	NA
Particle/Grain Size, Phi Scale 2 to 3	(250-125 microns)	NA	NA	NA	NA	NA	NA	NA	NA	NA	NA	NA	NA	NA	NA
Particle/Grain Size, Phi Scale 3 to 4	(125-62 microns)	NA	NA	NA	NA	NA	NA	NA	NA	NA	NA	NA	NA	NA	NA
Particle/Grain Size, Phi Scale 4 to 5	(62.5-31.0 microns)	NA	NA	NA	NA	NA	NA	NA	NA	NA	NA	NA	NA	NA	NA
Particle/Grain Size, Phi Scale 5 to 6	(31.0-15.6 microns)	NA	NA	NA	NA	NA	NA	NA	NA	NA	NA	NA	NA	NA	NA
Particle/Grain Size, Phi Scale 6 to 7	(15.6-7.8 microns)	NA	NA	NA	NA	NA	NA	NA	NA	NA	NA	NA	NA	NA	NA
Particle/Grain Size, Phi Scale 7 to 8	(7.8-3.9 microns)	NA	NA	NA	NA	NA	NA	NA	NA	NA	NA	NA	NA	NA	NA
Particle/Grain Size, Phi Scale 8 to 9	(3.9-2.0 microns)	NA	NA	NA	NA	NA	NA	NA	NA	NA	NA	NA	NA	NA	NA
Particle/Grain Size, Phi Scale 9 to 10	(2.0-1.0 microns)	NA	NA	NA	NA	NA	NA	NA	NA	NA	NA	NA	NA	NA	NA
Particle/Grain Size, Phi Scale <10	(<1.0 micron)	NA	NA	NA	NA	NA	NA	NA	NA	NA	NA	NA	NA	NA	NA
Particle/Grain Size, Fines (Silt/Clay)	(<62 microns)	NA	NA	NA	NA	NA	NA	NA	NA	NA	NA	NA	NA	NA	NA
PRECIPITATION (c)															
Amount During Test (inches)		1.36	0.00	0.40	0.82	0.77	0.12	0.78	1.06	1.64	0.55	0.38	0.00	0.00	0.63

TABLE 7
LSIV STORMWATER FILTRATION AND PCB TESTING RESULTS
LONG-TERM STORMWATER TREATMENT SYSTEM
NORTH BOEING FIELD - SEATTLE, WASHINGTON

Sample Location ID	LTST-F-LSIV	LTST-F-LSIV	LTST-F-LSIV
Laboratory Data ID	ZO34H	ZQ78H	ZS95H
Filtration Start Date	12/9/2014	12/23/2014	1/12/2015
Filtration End Date	12/10/2014	12/24/2014	1/15/2015
Event Type	Storm	Storm	Quarterly
Measured Mass in Filter			
Aroclor 1016 (µg)	0.50 U	0.50 U	0.50 U
Aroclor 1242 (µg)	0.50 U	0.50 U	0.50 U
Aroclor 1248 (µg)	**2.2**	2.5 U	0.50 U
Aroclor 1254 (µg)	**8.2**	**8.4**	**1.0**
Aroclor 1260 (µg)	**3.0**	**9.1** P	0.50 U
Aroclor 1221 (µg)	0.50 U	0.50 U	0.50 U
Aroclor 1232 (µg)	0.50 U	0.50 U	0.50 U
Aroclor 1262 (µg)	0.50 U	0.50 U	0.50 U
Total PCBs (a) (µg)	**13.4**	**17.5**	**1.0**
Mass of Filtered Solids:			
Bag Number	279	290	257
Filter Micron Rating (µm)	1	1	1
Unused Filter Bag (grams)	139.17	140.98	130.20
Dried Filter Bag with Filtered Solids (grams)	161.65	157.98	160.29
Total Solids Filtered, Dry Weight (grams)	22.48	17.00	30.09
Calculated Concentration of Total PCBs in Filtered Solids, Dry Weight (mg/kg)	**0.60**	**1.03**	**0.03**
Volume of Stormwater Filtered:			
Flow Totalizer at Start of Filtration (gallons)	2,061	2,636	2,826
Flow Totalizer at Sample Collection (gallons)	2,660	2,826	3,114
Volume of Stormwater Filtered (gallons)	599	190	288
Calculated Concentration of Total PCBs in Whole Water using flow totalizer data, (µg/L)	**0.006**	**0.024**	**0.001**
PAHs (µg)			
Method SW8270D			
Naphthalene	NA	NA	NA
2-Methylnaphthalene	NA	NA	NA
1-Methylnaphthalene	NA	NA	NA
Acenaphthylene	NA	NA	NA
Acenaphthene	NA	NA	NA
Fluorene	NA	NA	NA
Phenanthrene	NA	NA	NA
Anthracene	NA	NA	NA
Fluoranthene	NA	NA	NA
Pyrene	NA	NA	NA
Benzo(a)anthracene	NA	NA	NA
Chrysene	NA	NA	NA
Benzo(a)pyrene	NA	NA	NA
Indeno(1,2,3-cd)pyrene	NA	NA	NA
Dibenz(a,h)anthracene	NA	NA	NA
Benzo(g,h,i)perylene	NA	NA	NA
Dibenzofuran	NA	NA	NA
Total Benzofluoranthenes	NA	NA	NA
cPAH TEQ	NA	NA	NA

TABLE 7
LSIV STORMWATER FILTRATION AND PCB TESTING RESULTS
LONG-TERM STORMWATER TREATMENT SYSTEM
NORTH BOEING FIELD - SEATTLE, WASHINGTON

	Sample Location ID	LTST-F-LSIV	LTST-F-LSIV	LTST-F-LSIV
	Laboratory Data ID	ZO34H	ZQ78H	ZS95H
	Filtration Start Date	12/9/2014	12/23/2014	1/12/2015
	Filtration End Date	12/10/2014	12/24/2014	1/15/2015
	Event Type	Storm	Storm	Quarterly
TOTAL METALS (mg/kg)				
Method EPA200.8/6010B,C/7470A				
Arsenic		NA	NA	NA
Cadmium		NA	NA	NA
Chromium		NA	NA	NA
Copper		NA	NA	NA
Iron		NA	NA	NA
Lead		NA	NA	NA
Manganese		NA	NA	NA
Mercury		NA	NA	NA
Nickel		NA	NA	NA
Zinc		NA	NA	NA
PARTICLE/GRAIN SIZE (percent)				
Method PSEP-PS				
Particle/Grain Size, Phi Scale >-1	(2,000 microns)	NA	NA	NA
Particle/Grain Size, Phi Scale -1 to 0	(2,000-1,000 microns)	NA	NA	NA
Particle/Grain Size, Phi Scale 0 to 1	(1,000-500 microns)	NA	NA	NA
Particle/Grain Size, Phi Scale 1 to 2	(500-250 microns)	NA	NA	NA
Particle/Grain Size, Phi Scale 2 to 3	(250-125 microns)	NA	NA	NA
Particle/Grain Size, Phi Scale 3 to 4	(125-62 microns)	NA	NA	NA
Particle/Grain Size, Phi Scale 4 to 5	(62.5-31.0 microns)	NA	NA	NA
Particle/Grain Size, Phi Scale 5 to 6	(31.0-15.6 microns)	NA	NA	NA
Particle/Grain Size, Phi Scale 6 to 7	(15.6-7.8 microns)	NA	NA	NA
Particle/Grain Size, Phi Scale 7 to 8	(7.8-3.9 microns)	NA	NA	NA
Particle/Grain Size, Phi Scale 8 to 9	(3.9-2.0 microns)	NA	NA	NA
Particle/Grain Size, Phi Scale 9 to 10	(2.0-1.0 microns)	NA	NA	NA
Particle/Grain Size, Phi Scale <10	(<1.0 micron)	NA	NA	NA
Particle/Grain Size, Fines (Silt/Clay)	(<62 microns)	NA	NA	NA
PRECIPITATION (c)				
Amount During Test (inches)		0.54	0.77	0.00

µg/L = micrograms per liter
mg/kg = milligrams per kilogram
µm = micrometer
µg = microgram
NA = Not Analyzed
Bold = Detected compound.

PAH = Polycyclic Aromatic Hydrocarbon
PCB = Polychlorinated Biphenyl
TEQ = Toxicity Equivalency Quotient
EPA = U.S. Environmental Protection Agency
NOAA = National Oceanic and Atmospheric Administration
PSEP = Puget Sound Estuary Program

J = Indicates the analyte was positively identified; the associated numerical value is the approximate concentration of the analyte in the sample.
U = Indicates the compound was not detected at the reported concentration.
UJ = The analyte was not detected in the sample; the reported sample reporting limit is an estimate.
P = The analyte was detected on both chromatographic columns but the quantified values differ by 40% RPD with no obvious chromatographic interference. The higher of the two values is reported by the laboratory.

(a) Total PCBs is the sum of detected aroclors or, if no aroclors are detected, is the largest reporting limit.
(b) It has been observed that system vibration has intermittently caused the flow meter totalizer to move in reverse.
Therefore, where indicated, the flow volume either could not be determined or was likely falsely low, and whole water concentration of PCBs either could not be determined or was likely falsely high.
(c) Precipitation data is from the NOAA Quality Controlled Local Climatological Data for Station 24234/BFI - SEATTLE: BOEING FIELD/KING COUNTY INTERNATIONAL AIRPORT.

TABLE 8
EFFLUENT STORMWATER FILTRATION AND PCB TESTING RESULTS
LONG-TERM STORMWATER TREATMENT SYSTEM
NORTH BOEING FIELD - SEATTLE, WASHINGTON

Sample Location ID	LTST-F-EFF	LTST-F-EFF	LTST-F-EFF	LTST-F-EFF	LTST-F-EFF	LTST-F-EFF	LTST-F-EFF	LTST-F-EFF	LTST-F-EFF	LTST-F-EFF	LTST-F-EFF	LTST-F-EFF	LTST-F-EFF
Laboratory Data ID	TW50E	TX90H	TY96H	UA56G	UC78K	UE10E	UE68I	UH75M	UL49F	UM18G	UO82I	UP34A	UU03N
Filtration Start Date	11/8/2011	11/16/2011	11/22/2011	12/5/2011	12/27/2011	1/9/2012	1/20/2012	2/6/2012	3/5/12	3/12/2012	3/31/2012	4/2/2012	5/7/2012
Filtration End Date	11/11/2011	11/17/2011	11/23/2011	12/08/2011	12/28/2011	1/12/2012	1/21/2012	2/9/2012	3/8/2012	3/13/2012	4/1/2012	4/5/2012	5/10/2012
Event Type	Monthly	Storm	Storm	Monthly	Storm	Monthly	Storm	Monthly	Monthly	Storm	Storm	Monthly	Monthly
Measured Mass in Filter													
Aroclor 1016 (µg)	0.5 U	0.5 U	0.1 U	0.5 U	0.5 U	0.5 U	0.5 U	0.5 U	0.5 U	0.5 U	5.0 U	0.5 U	0.5 U
Aroclor 1242 (µg)	0.5 U	0.5 U	0.1 U	0.5 U	0.5 U	0.5 U	0.5 U	0.5 U	0.5 U	0.5 U	5.0 U	0.5 U	0.5 U
Aroclor 1248 (µg)	1.0 U	**1.3**	**1.3**	1.2 U	2.0 U	15 U	6.2 U	**9.6**	15 U	7.5 U	62 U	7.5 U	5.6 U
Aroclor 1254 (µg)	**0.9**	**2.1**	**2.2**	**1.3**	**2.4**	**12**	**7.6**	**8.2**	**18**	**6.9**	**82**	**8.4**	**7.0**
Aroclor 1260 (µg)	0.5 U	**0.6**	**1.4** P	0.5 U	**0.9**	1.2 U	**2.7**	1.0 U	**3.5**	**2.0**	10 U	0.8 U	**0.7** P
Aroclor 1221 (µg)	0.5 U	0.5 U	0.1 U	0.5 U	0.5 U	0.5 U	0.5 U	0.5 U	0.5 U	0.5 U	5.0 U	0.5 U	0.5 U
Aroclor 1232 (µg)	0.5 U	0.5 U	0.1 U	0.5 U	0.5 U	0.5 U	0.5 U	0.5 U	0.5 U	0.5 U	5.0 U	0.5 U	0.5 U
Aroclor 1262 (µg)	0.5 U	0.5 U	0.1 U	0.5 U	0.5 U	0.5 U	0.5 U	0.5 U	0.5 U	0.5 U	5.0 U	0.5 U	0.5 U
Total PCBs (a) (µg)	**0.9**	**4**	**4.9** P	**1.3**	**3.3**	**12**	**10.3**	**17.8**	**21.5**	**8.9**	**82**	**8.4**	**7.7**
Mass of Filtered Solids:													
Bag Number	88	81	79	93	92	75	151	144	148	128	121	123	132
Filter Micron Rating (µm)	1	1	1	1	1	1	1	1	1	1	1	1	1
Unused Filter Bag (grams)	126.48	131.11	132.90	138.64	132.09	152.04	151.56	157.27	152.48	158.60	159.76	155.99	152.12
Dried Filter Bag with Filtered Solids (grams)	126.31	144.78	140.60	133.23	142.17	165.33	169.18	175.81	171.54	178.25	177.98	180.68	170.35
Total Solids Filtered, Dry Weight (grams)	N/A (b)	13.67	7.70	N/A (b)	10.08	13.29	17.62	18.54	19.06	19.65	18.22	24.69	18.23
Calculated Concentration of Total PCBs in Filtered Solids, Dry Weight (mg/kg)	N/A (b)	**0.29**	**0.64**	N/A (b)	**0.33**	**0.90**	**0.58**	**0.96**	**1.13**	**0.45**	**4.50**	**0.34**	**0.42**
Volume of Stormwater Filtered:													
Flow Totalizer at Start of Filtration (gallons)	8,997	20,446	36,069	48,298	52,436	59,481	63,494	67,914	70,731	76,764	81,002	90,276	95,759
Flow Totalizer at Sample Collection (gallons)	9,375	36,068	48,297	52,429	59,475	63,491	67,912	70,732	76,765	81,045	90,275	95,759	99,924
Volume of Stormwater Filtered (gallons)	378	15,622	12,228	4,132	7,039	4,009	4,418	2,818	6,033	4,280	9,273	5,483	4,165
Calculated Concentration of Total PCBs in Whole Water using flow totalizer data, (µg/L)	**0.0006**	**0.0001**	**0.0001** P	**0.0001**	**0.0001**	**0.0008**	**0.0006**	**0.0017**	**0.0009**	**0.0005**	**0.0023**	**0.0004**	**0.0005**
PAHs (µg)													
Method SW8270D													
Naphthalene	NA	NA	NA	NA	NA	NA	NA	NA	NA	NA	NA	NA	NA
2-Methylnaphthalene	NA	NA	NA	NA	NA	NA	NA	NA	NA	NA	NA	NA	NA
1-Methylnaphthalene	NA	NA	NA	NA	NA	NA	NA	NA	NA	NA	NA	NA	NA
Acenaphthylene	NA	NA	NA	NA	NA	NA	NA	NA	NA	NA	NA	NA	NA
Acenaphthene	NA	NA	NA	NA	NA	NA	NA	NA	NA	NA	NA	NA	NA
Fluorene	NA	NA	NA	NA	NA	NA	NA	NA	NA	NA	NA	NA	NA
Phenanthrene	NA	NA	NA	NA	NA	NA	NA	NA	NA	NA	NA	NA	NA
Anthracene	NA	NA	NA	NA	NA	NA	NA	NA	NA	NA	NA	NA	NA
Fluoranthene	NA	NA	NA	NA	NA	NA	NA	NA	NA	NA	NA	NA	NA
Pyrene	NA	NA	NA	NA	NA	NA	NA	NA	NA	NA	NA	NA	NA
Benzo(a)anthracene	NA	NA	NA	NA	NA	NA	NA	NA	NA	NA	NA	NA	NA
Chrysene	NA	NA	NA	NA	NA	NA	NA	NA	NA	NA	NA	NA	NA
Benzo(a)pyrene	NA	NA	NA	NA	NA	NA	NA	NA	NA	NA	NA	NA	NA
Indeno(1,2,3-cd)pyrene	NA	NA	NA	NA	NA	NA	NA	NA	NA	NA	NA	NA	NA
Dibenz(a,h)anthracene	NA	NA	NA	NA	NA	NA	NA	NA	NA	NA	NA	NA	NA
Benzo(g,h,i)perylene	NA	NA	NA	NA	NA	NA	NA	NA	NA	NA	NA	NA	NA
Dibenzofuran	NA	NA	NA	NA	NA	NA	NA	NA	NA	NA	NA	NA	NA
Total Benzofluoranthenes	NA	NA	NA	NA	NA	NA	NA	NA	NA	NA	NA	NA	NA
cPAH TEQ	NA	NA	NA	NA	NA	NA	NA	NA	NA	NA	NA	NA	NA
PRECIPITATION (c)													
Amount During Test (inches)	0.0	0.38	2.46	0.0	0.91	0.23	0.85	0.16	0.06	0.76	0.50	0.29	0.01

TABLE 8
EFFLUENT STORMWATER FILTRATION AND PCB TESTING RESULTS
LONG-TERM STORMWATER TREATMENT SYSTEM
NORTH BOEING FIELD - SEATTLE, WASHINGTON

Sample Location ID	LTST-F-EFF	LTST-F-EFF	LTST-F-EFF	LTST-F-EFF	LTST-F-EFF	LTST-F-EFF	LTST-F-EFF	LTST-F-EFF	LTST-F-EFF	LTST-F-EFF	LTST-F-EFF	LTST-F-EFF
Laboratory Data ID	UX77D	VB89J	VF37J	VL90J	VR68J	VS17K	VV27L	VW75K	VZ15H	WC96M	WG51M/WG51N	WI40K/WI40N
Filtration Start Date	6/4/2012	7/9/2012	8/6/2012	10/1/12	11/5/12	11/11/2012	12/3/2012	12/16/12	1/7/2013	2/4/2013	3/4/2013	3/19/2013
Filtration End Date	6/7/2012	7/11/2012	8/9/2012	10/4/2012	11/8/2012	11/12/2012	12/6/2012	12/17/2012	1/10/2013	2/7/2013	3/7/2013	3/20/2013
Event Type	Monthly	Monthly	Monthly	Monthly	Monthly	Storm	Monthly	Storm	Monthly	Monthly	Monthly	Storm
Measured Mass in Filter												
Aroclor 1016 (µg)	1.0 U	0.5 U	0.5 U	0.5 U	0.5 U	0.5 U	1.0 U	2.0 U	0.5 U	0.5 U	0.5 U	0.1 U
Aroclor 1242 (µg)	1.0 U	0.5 U	0.5 U	0.5 U	0.5 U	0.5 U	1.0 U	2.0 U	0.5 U	0.5 U	0.5 U	0.1 U
Aroclor 1248 (µg)	15 U	10 U	12 U	1.2 U	10 U	7.5 U	15 U	13 U	12 U	7.5 U	10 U	2.5 U
Aroclor 1254 (µg)	**13**	**7.9**	**11**	**1.4**	**8.0**	**11**	**17**	**14**	**9.2**	**8.5**	**9.2**	**2.7**
Aroclor 1260 (µg)	1.5 U	0.5 U	1.0 U	0.5 U	0.6 U	**1.7**	**3.1**	**5.1** P	0.8 U	0.8 U	0.5 U	0.2 U
Aroclor 1221 (µg)	1.0 U	0.5 U	0.5 U	0.5 U	0.5 U	0.5 U	1.0 U	2.0 U	0.5 U	0.5 U	0.5 U	0.1 U
Aroclor 1232 (µg)	1.0 U	0.5 U	0.5 U	0.5 U	0.5 U	0.5 U	1.0 U	2.0 U	0.5 U	0.5 U	0.5 U	0.1 U
Aroclor 1262 (µg)	1.0 U	0.5 U	0.5 U	0.5 U	0.5 U	0.5 U	1.0 U	2.0 U	0.5 U	0.5 U	0.5 U	0.1 U
Total PCBs (a) (µg)	**13**	**7.9**	**11**	**1.4**	**8.0**	**12.7**	**20.1**	**19.1**	**9.2**	**8.5**	**9.2**	**2.7**
Mass of Filtered Solids:												
Bag Number	122	120	142	167	164	186	166	129	181	200	192	185
Filter Micron Rating (µm)	1	1	1	1	1	1	1	1	1	1	1	1
Unused Filter Bag (grams)	153.52	155.61	156.94	141.95	140.56	131.71	141.70	155.31	142.34	144.16	138.42	134.99
Dried Filter Bag with Filtered Solids (grams)	170.31	171.26	177.54	143.39	167.48	148.51	167.18	170.24	156.98	157.88	154.34	146.78
Total Solids Filtered, Dry Weight (grams)	16.79	15.65	20.60	1.44	26.92	16.80	25.48	14.93	14.64	13.72	15.92	11.79
Calculated Concentration of Total PCBs in Filtered Solids, Dry Weight (mg/kg)	**0.77**	**0.50**	**0.53**	**0.97**	**0.30**	**0.76**	**0.79**	**1.28**	**0.63**	**0.62**	**0.58**	**0.23**
Volume of Stormwater Filtered:												
Flow Totalizer at Start of Filtration (gallons)	99,927	102,867	107,127	113,620	113,906	119,469	153,126	210,243	224,214	386	6,663	13,112
Flow Totalizer at Sample Collection (gallons)	102,867	107,130	111,402	113,906	119,470	129,453	210,243	224,214	227,497	6,663	13,112	15,063
Volume of Stormwater Filtered (gallons)	2,940	4,263	4,275	286	5,564	9,984	57,116	13,971	3,283	6,277	6,449	1,951
Calculated Concentration of Total PCBs in Whole Water using flow totalizer data, (µg/L)	**0.0012**	**0.0005**	**0.0007**	**0.0013**	**0.0004**	**0.0003**	**0.0001**	**0.0004**	**0.0007**	**0.0004**	**0.0004**	**0.0004**
PAHs (µg)												
Method SW8270D												
Naphthalene	NA	NA	NA	NA	NA	NA	NA	NA	NA	NA	5.0 U	1.5 U
2-Methylnaphthalene	NA	NA	NA	NA	NA	NA	NA	NA	NA	NA	5.0 U	**3.9**
1-Methylnaphthalene	NA	NA	NA	NA	NA	NA	NA	NA	NA	NA	5.0 U	**5.7**
Acenaphthylene	NA	NA	NA	NA	NA	NA	NA	NA	NA	NA	5.0 U	1.5 U
Acenaphthene	NA	NA	NA	NA	NA	NA	NA	NA	NA	NA	5.0 U	1.5 U
Fluorene	NA	NA	NA	NA	NA	NA	NA	NA	NA	NA	5.0 U	1.5 U
Phenanthrene	NA	NA	NA	NA	NA	NA	NA	NA	NA	NA	**5.0**	**3.3**
Anthracene	NA	NA	NA	NA	NA	NA	NA	NA	NA	NA	5.0 U	1.5 U
Fluoranthene	NA	NA	NA	NA	NA	NA	NA	NA	NA	NA	**14**	**8.4**
Pyrene	NA	NA	NA	NA	NA	NA	NA	NA	NA	NA	**11**	**4.6**
Benzo(a)anthracene	NA	NA	NA	NA	NA	NA	NA	NA	NA	NA	5.0 U	1.5 U
Chrysene	NA	NA	NA	NA	NA	NA	NA	NA	NA	NA	**13**	**5.4**
Benzo(a)pyrene	NA	NA	NA	NA	NA	NA	NA	NA	NA	NA	5.0 U	1.5 U
Indeno(1,2,3-cd)pyrene	NA	NA	NA	NA	NA	NA	NA	NA	NA	NA	5.0 U	**1.6**
Dibenz(a,h)anthracene	NA	NA	NA	NA	NA	NA	NA	NA	NA	NA	5.0 U	1.5 U
Benzo(g,h,i)perylene	NA	NA	NA	NA	NA	NA	NA	NA	NA	NA	5.0 U	**1.9**
Dibenzofuran	NA	NA	NA	NA	NA	NA	NA	NA	NA	NA	5.0 U	1.5 U
Total Benzofluoranthenes	NA	NA	NA	NA	NA	NA	NA	NA	NA	NA	**15**	**5.0**
cPAH TEQ	NA	NA	NA	NA	NA	NA	NA	NA	NA	NA	**1.63**	**0.7**
PRECIPITATION (c)												
Amount During Test (inches)	0.94	0.00	0.00	0.00	0.01	0.63	0.69	0.94	1.68	0.35	0.87	0.92

TABLE 8
EFFLUENT STORMWATER FILTRATION AND PCB TESTING RESULTS
LONG-TERM STORMWATER TREATMENT SYSTEM
NORTH BOEING FIELD - SEATTLE, WASHINGTON

Sample Location ID	LTST-F-EFF	LTST-F-EFF	LTST-F-EFF	LTST-F-EFF	LTST-F-EFF	LTST-F-EFF	LTST-F-EFF	LTST-F-EFF	LTST-F-EFF	LTST-F-EFF	LTST-F-EFF	LTST-F-EFF
Laboratory Data ID	WK37K	WK74K	WP40K	WS97G	WX01M	XA11M	XE07K/XE07N	XE91J	XK12K	XN18K	XO76I	XQ44K
Filtration Start Date	4/1/2013	4/5/2013	5/6/2013	6/3/2013	7/8/2013	8/5/2013	9/5/2013	9/9/2013	10/7/2013	11/4/2013	11/18/2013	12/2/2013
Filtration End Date	4/4/2013	4/6/2013	5/9/2013	6/6/2013	7/10/2013	8/8/2013	9/6/2013	9/12/2013	10/9/2013	11/7/2013	11/19/2013	12/5/2013
Event Type	Monthly	Storm	Monthly	Monthly	Monthly	Monthly	Storm	Monthly	Monthly	Monthly	Storm	Monthly
Measured Mass in Filter												
Aroclor 1016 (µg)	0.5 U	1.0 U	0.5 U	1.0 U	0.5 U	0.50 U	0.50 U	0.50 U	0.50 U	1.0 U	0.50 U	0.50 U
Aroclor 1242 (µg)	0.5 U	1.0 U	0.5 U	1.0 U	0.5 U	0.50 U	0.50 U	0.50 U	0.50 U	1.0 U	0.50 U	0.50 U
Aroclor 1248 (µg)	**13**	**21** P	12 U	25 U	7.5 U	7.5 U	13 U	12 U	5.0 U	7.5 U	3.8 U	3.1 U
Aroclor 1254 (µg)	**8.5**	**15**	**12**	**12**	**8.6**	**11**	**8.3**	**10**	**6.9**	**6.9**	**5.4**	**5.3**
Aroclor 1260 (µg)	0.5 U	2.5 U	0.8 U	1.0 U	**0.9**	1.5 U	3.3 U	1.5 U	**2.1**	**1.8**	**2.1**	**1.8**
Aroclor 1221 (µg)	0.5 U	1.0 U	0.5 U	1.0 U	0.5 U	0.50 U	0.50 U	0.50 U	0.50 U	1.0 U	0.50 U	0.50 U
Aroclor 1232 (µg)	0.5 U	1.0 U	0.5 U	1.0 U	0.5 U	0.50 U	0.50 U	0.50 U	0.50 U	1.0 U	0.50 U	0.50 U
Aroclor 1262 (µg)	0.5 U	1.0 U	0.5 U	1.0 U	0.5 U	0.50 U	0.50 U	0.50 U	0.50 U	1.0 U	0.50 U	0.50 U
Total PCBs (a) (µg)	**21.5**	**36**	**12**	**12**	**9.5**	**11**	**8.3**	**10**	**9.0**	**8.7**	**7.5**	**7.1**
Mass of Filtered Solids:												
Bag Number	179	170	226	202	251	244	231	230	243	209	216	234
Filter Micron Rating (µm)	1	1	1	1	1	1	1	1	1	1	1	1
Unused Filter Bag (grams)	131.41	145.67	134.6	121.14	132.95	134.36	132.02	133.30	138.14	134.3	146.63	131.35
Dried Filter Bag with Filtered Solids (grams)	148.20	159.12	150.35	136.99	148.81	148.99	145.31	152.26	155.89	153.58	160.18	151.06
Total Solids Filtered, Dry Weight (grams)	16.79	13.45	15.75	15.85	15.86	14.63	13.29	18.96	17.75	19.28	13.55	19.71
Calculated Concentration of Total PCBs in Filtered Solids, Dry Weight (mg/kg)	**1.28**	**2.68**	**0.76**	**0.76**	**0.60**	**0.75**	**0.62**	**0.53**	**0.51**	**0.45**	**0.55**	**0.36**
Volume of Stormwater Filtered:												
Flow Totalizer at Start of Filtration (gallons)	15,063	23,257	33,492	42,446	45,963	51,230	57,817	63,822	72,359	79,444	87,864	99,166
Flow Totalizer at Sample Collection (gallons)	23,257	33,492	42,446	45,963	51,230	57,817	63,821	72,218	79,273	87,864	99,166	105,894
Volume of Stormwater Filtered (gallons)	8,194	10,234	8,955	3,517	5,267	6,587	6,004	8,396	6,913	8,419	11,302	6,728
Calculated Concentration of Total PCBs in Whole Water using flow totalizer data, (µg/L)	**0.0007**	**0.0009**	**0.0004**	**0.0009**	**0.0005**	**0.0004**	**0.0004**	**0.0003**	**0.0003**	**0.0003**	**0.0002**	**0.0003**
PAHs (µg)												
Method SW8270D												
Naphthalene	NA	NA	NA	NA	NA	NA	**28**	NA	NA	NA	NA	NA
2-Methylnaphthalene	NA	NA	NA	NA	NA	NA	**120**	NA	NA	NA	NA	NA
1-Methylnaphthalene	NA	NA	NA	NA	NA	NA	**73**	NA	NA	NA	NA	NA
Acenaphthylene	NA	NA	NA	NA	NA	NA	5.0 U	NA	NA	NA	NA	NA
Acenaphthene	NA	NA	NA	NA	NA	NA	5.0 U	NA	NA	NA	NA	NA
Fluorene	NA	NA	NA	NA	NA	NA	**5.2**	NA	NA	NA	NA	NA
Phenanthrene	NA	NA	NA	NA	NA	NA	**11**	NA	NA	NA	NA	NA
Anthracene	NA	NA	NA	NA	NA	NA	5.0 U	NA	NA	NA	NA	NA
Fluoranthene	NA	NA	NA	NA	NA	NA	**30**	NA	NA	NA	NA	NA
Pyrene	NA	NA	NA	NA	NA	NA	**17**	NA	NA	NA	NA	NA
Benzo(a)anthracene	NA	NA	NA	NA	NA	NA	5.0 U	NA	NA	NA	NA	NA
Chrysene	NA	NA	NA	NA	NA	NA	**18**	NA	NA	NA	NA	NA
Benzo(a)pyrene	NA	NA	NA	NA	NA	NA	5.0 U	NA	NA	NA	NA	NA
Indeno(1,2,3-cd)pyrene	NA	NA	NA	NA	NA	NA	5.0 U	NA	NA	NA	NA	NA
Dibenz(a,h)anthracene	NA	NA	NA	NA	NA	NA	5.0 U	NA	NA	NA	NA	NA
Benzo(g,h,i)perylene	NA	NA	NA	NA	NA	NA	5.0 U	NA	NA	NA	NA	NA
Dibenzofuran	NA	NA	NA	NA	NA	NA	**5.8**	NA	NA	NA	NA	NA
Total Benzofluoranthenes	NA	NA	NA	NA	NA	NA	**12**	NA	NA	NA	NA	NA
cPAH TEQ	NA	NA	NA	NA	NA	NA	**1.4**	NA	NA	NA	NA	NA
PRECIPITATION (c)												
Amount During Test (inches)	0.00	0.59	0.00	0.00	0.00	0.00	1.36	0.00	0.40	0.82	0.77	0.12

TABLE 8
EFFLUENT STORMWATER FILTRATION AND PCB TESTING RESULTS
LONG-TERM STORMWATER TREATMENT SYSTEM
NORTH BOEING FIELD - SEATTLE, WASHINGTON

Sample Location ID	LTST-F-EFF	LTST-F-EFF	LTST-F-EFF	LTST-F-EFF	LTST-F-EFF	LTST-F-EFF	LTST-F-EFF	LTST-F-EFF	LTST-F-EFF	LTST-F-EFF
Laboratory Data ID	XT98K	XU48G	XZ68J	YG17G	YR11J	ZE23J	ZF08J	ZO34J	ZQ78J	ZS95J
Filtration Start Date	1/6/2014	1/10/2014	2/16/14	4/7/14	7/7/14	10/6/14	10/13/14	12/9/14	12/23/2014	1/12/2015
Filtration End Date	1/9/2014	1/11/2014	2/17/2014	4/10/2014	7/10/2014	10/9/2014	10/14/2014	12/10/2014	12/24/14	1/15/15
Event Type	Quarterly	Storm	Storm	Quarterly	Quarterly	Quarterly	Storm	Storm	Storm	Quarterly
Measured Mass in Filter										
Aroclor 1016 (µg)	0.10 U	0.10 U	1.0 U (d)	0.50 U	1.0 U	0.10 U	0.10 U	0.50 U	0.50 U	0.50 U
Aroclor 1242 (µg)	0.10 U	0.10 U	1.0 U (d)	0.50 U	1.0 U	0.10 U	0.10 U	**5.8**	0.50 U	**3.8**
Aroclor 1248 (µg)	2.5 U	5.0 U	4.0 U (d)	12 U	15 U	10 U	10 U	0.50 U	**4.6**	0.50 U
Aroclor 1254 (µg)	**4.0**	**5.4**	**6.2** (d)	**10**	**18**	**6.4**	**7.2**	**10**	**7.9**	**2.9**
Aroclor 1260 (µg)	**0.95**	**3.1** P	**2.3** (d)	1.2 U	1.0 U	0.50 U	**1.1**	**5.2**	**5.0** P	0.50 U
Aroclor 1221 (µg)	0.10 U	0.10 U	1.0 U (d)	0.50 U	1.0 U	0.10 U	0.10 U	0.50 U	0.50 U	0.50 U
Aroclor 1232 (µg)	0.10 U	0.10 U	1.0 U (d)	0.50 U	1.0 U	0.10 U	0.10 U	0.50 U	0.50 U	0.50 U
Aroclor 1262 (µg)	0.10 U	0.10 U	1.0 U (d)	0.50 U	1.0 U	0.10 U	0.10 U	0.50 U	0.50 U	0.50 U
Total PCBs (a) (µg)	**4.95**	**8.5**	**8.5** (d)	**10**	**18**	**6.4**	**8.3**	**21**	**17.5**	**6.7**
Mass of Filtered Solids:										
Bag Number	248	206	280	268	276	285	289	269	287	266
Filter Micron Rating (µm)	1	1	1	1	1	1	1	1	1	1
Unused Filter Bag (grams)	147.90	139.40	135.77	143.66	138.53	139.07	138.02	137.24	139.49	140.85
Dried Filter Bag with Filtered Solids (grams)	166.06	157.16	149.14	161.73	153.39	151.43	153.63	157.15	153.51	162.54
Total Solids Filtered, Dry Weight (grams)	18.16	17.76	13.37	18.07	14.86	12.36	15.61	19.91	14.02	21.69
Calculated Concentration of Total PCBs in Filtered Solids, Dry Weight (mg/kg)	**0.27**	**0.48**	**0.64**	**0.55**	**1.21**	**0.52**	**0.53**	**1.05**	**1.25**	**0.31**
Volume of Stormwater Filtered:										
Flow Totalizer at Start of Filtration (gallons)	105,894	113,157	124,095	148,544	158,116	169,380	175,074	194,756	213,153	242,732
Flow Totalizer at Sample Collection (gallons)	113,156	124,095	148,787	158,116	169,380	175,074	180,745	213,153	242,731	246,451
Volume of Stormwater Filtered (gallons)	7,263	10,938	24,693	9,572	11,263	5,695	5,671	18,397	29,578	3,719
Calculated Concentration of Total PCBs in Whole Water using flow totalizer data, (µg/L)	**0.0002**	**0.0002**	**0.0001**	**0.0003**	**0.0004**	**0.0003**	**0.0004**	**0.0003**	**0.0002**	**0.0005**
PAHs (µg)										
Method SW8270D										
Naphthalene	NA	NA	NA	NA	NA	NA	NA	NA	NA	NA
2-Methylnaphthalene	NA	NA	NA	NA	NA	NA	NA	NA	NA	NA
1-Methylnaphthalene	NA	NA	NA	NA	NA	NA	NA	NA	NA	NA
Acenaphthylene	NA	NA	NA	NA	NA	NA	NA	NA	NA	NA
Acenaphthene	NA	NA	NA	NA	NA	NA	NA	NA	NA	NA
Fluorene	NA	NA	NA	NA	NA	NA	NA	NA	NA	NA
Phenanthrene	NA	NA	NA	NA	NA	NA	NA	NA	NA	NA
Anthracene	NA	NA	NA	NA	NA	NA	NA	NA	NA	NA
Fluoranthene	NA	NA	NA	NA	NA	NA	NA	NA	NA	NA
Pyrene	NA	NA	NA	NA	NA	NA	NA	NA	NA	NA
Benzo(a)anthracene	NA	NA	NA	NA	NA	NA	NA	NA	NA	NA
Chrysene	NA	NA	NA	NA	NA	NA	NA	NA	NA	NA
Benzo(a)pyrene	NA	NA	NA	NA	NA	NA	NA	NA	NA	NA
Indeno(1,2,3-cd)pyrene	NA	NA	NA	NA	NA	NA	NA	NA	NA	NA
Dibenz(a,h)anthracene	NA	NA	NA	NA	NA	NA	NA	NA	NA	NA
Benzo(g,h,i)perylene	NA	NA	NA	NA	NA	NA	NA	NA	NA	NA
Dibenzofuran	NA	NA	NA	NA	NA	NA	NA	NA	NA	NA
Total Benzofluoranthenes	NA	NA	NA	NA	NA	NA	NA	NA	NA	NA
cPAH TEQ	NA	NA	NA	NA	NA	NA	NA	NA	NA	NA
PRECIPITATION (c)										
Amount During Test (inches)	0.78	1.06	1.64	0.38	0.00	0.00	0.63	0.54	0.71	0.00

TABLE 8
EFFLUENT STORMWATER FILTRATION AND PCB TESTING RESULTS
LONG-TERM STORMWATER TREATMENT SYSTEM
NORTH BOEING FIELD - SEATTLE, WASHINGTON

µg/L = micrograms per liter
mg/kg = milligrams per kilogram
µm = micrometer
µg = microgram
NA = Not Analyzed
PCB = Polychlorinated Biphenyl
TEQ =Toxicity Equivalency Quotient
NOAA = National Oceanic and Atmospheric Administration
cPAH = Carcinogenic Polycyclic Aromatic Hydrocarbon
Bold = Detected compound.

U = Indicates the compound was not detected at the reported concentration
P = The analyte was detected on both chromatographic columns but the quantified values differ by 40% RPD with no obvious chromatographic interference. The higher of the two values is reported by the laborator

(a) Total PCBs is the sum of detected aroclors or, if no aroclors are detected, is the largest reporting limit
(b) Because the filter bag mass was weighed less after filtration than before filtration, the amount of solids filtered or PCB concentration cannot be estimated
(c) Precipitation data is from the NOAA Quality Controlled Local Climatological Data for Station 24234/BFI - SEATTLE: BOEING FIELD/KING COUNTY INTERNATIONAL AIRPORT
(d) After reviewing the analytical results for samples LTST-MH130A-021714 and LTST-F-EFF-021714, it was determined that there was a strong indication that the filter bags were inadvertently switched prior to analysis, based on lon standing data trends. The results have been reported on the tables switched from what is reported in the laboratory analytical data

TABLE 9
BYPASS DURING 2013-2014 SAMPLING EVENTS
LONG-TERM STORMWATER TREATMENT SYSTEM
NORTH BOEING FIELD - SEATTLE, WASHINGTON

Event	Event Begin Date	Event End Date	Precipitation during LS431 Sampling Period (inches)	Approximate Start of Bypass	Approximate End of Bypass	Comments
January Quarterly	1/12/2015	1/15/2015	0.00	NA	NA	No bypass occurred during sampling event.
April Quarterly	4/7/2015	4/10/2015	0.01	NA	NA	No bypass occurred during sampling event.
July Quarterly	7/6/2015	7/9/2015	0.00	NA	NA	No bypass occurred during sampling event.
October Quarterly	10/5/2015	10/8/2015	0.38	NA	NA	No bypass occurred during sampling event.
Storm Events	12/9/2014	12/10/2014	0.54	12/10/14 01:06	12/10/14 01:55	
				12/10/14 02:13	12/10/14 02:44	
				12/10/14 03:43	12/10/14 04:01	
				12/10/14 17:50	10/10/14 18:06	
	12/23/2014	12/24/2014	0.74	12/23/14 17:10	12/23/14 19:47	
				12/23/14 20:10	12/23/15 20:36	
				12/23/14 21:02	12/23/14 21:38	
				12/23/14 22:02	12/23/14 22:31	
				12/23/14 23:09	12/23/14 23:38	
				12/24/14 00:00	12/24/14 00:32	
				12/24/14 01:15	12/24/14 01:33	
				12/24/14 03:22	12/24/14 03:37	
	2/5/2015	2/6/2015	0.72	2/5/15 07:59	2/5/15 08:18	
				2/5/15 09:43	2/5/15 09:58	
				2/5/15 19:58	2/5/15 20:15	
				2/5/15 21:12	2/5/15 21:42	
				2/5/15 22:07	2/5/15 22:33	
				2/5/15 23:10	2/5/15 23:28	
				2/6/15 02:00	2/6/15 02:34	
				2/6/15 03:04	2/6/15 03:36	
				2/6/15 04:46	2/6/15 04:54	Actual bypass ended at 5:01 (after the sampling event)
	10/10/2015	10/11/0215	0.53	10/10/15 08:46	10/10/15 09:47	
				10/10/15 10:10	10/10/15 10:39	
				10/10/15 13:34	10/10/15 14:20	
	10/30/2015	10/31/2015	0.98	10/30/15 23:00	10/31/15 02:10	
				10/31/15 07:46	10/31/15 08:14	
				10/31/15 09:16	10/31/15 09:44	

TABLE 10
MONTHLY PRECIPITATION AND FLOW VOLUMES
LONG-TERM STORMWATER TREATMENT SYSTEM
NORTH BOEING FIELD - SEATTLE, WASHINGTON

Data Source:	KBFI Gauge	Flo-Dar data from LS431	CESF Effluent Data from Clear Water	Calculated	Transducer Data from MH130B Weir
	Precipitation (in)	Stormwater Discharge (Mgal)	Stormwater Treated (Mgal)	% Stormwater Treated	MH130A Stormwater Flowing to LSIV (Mgal)
November 2014	4.29	33.80	22.56	67%	0.09
December 2014	4.65	39.58	26.63	67%	0.03
January 2015	2.29	26.74	20.96	78%	(a)
February 2015	4.63	37.34	24.36	65%	(a)
March 2015	4.33	35.65	19.31	54%	(a)
April 2015	1.81	25.08	15.38	61%	0.02
May 2015	0.51	14.74	13.38	91%	0.00
June 2015	0.17	11.36	10.53	93%	0.00
July 2015	0.27	11.20	9.60	86%	0.00
August 2015	1.41	18.76	10.77	57%	0.03
September 2015	1.23	12.52	6.66	53%	0.01
October 2015	3.79	23.44	14.52	62%	0.03
Yearly Total	**29.38**	**290.21**	**194.66**	67%	**0.21**

(a) Data from MH130B weir not available because transducer was stopped functioning and then was removed and sent to the manufacturer for troubleshooting and repair.

TABLE 11
STORM DRAIN MANHOLE SOLIDS AND SEDIMENT TRAP ANALYTICAL DATA
NORTH BOEING FIELD

SPU Sample ID:		**SL4-T1**	SL4-T1	SL4-T1	SL4-T1	SL4-T1	SL4-T1	SL4-T1	SL4-T1	SL4-T1	SL4-T1	SL4-T1	SL4-T1	SL4-T1	SL4-T1	SL4-T1	SL4-T1
Boeing Manhole No.	MH100	MH422	MH422	MH422	MH422	MH422	MH422	MH422	MH422	MH422	MH422	MH422	MH422	MH422	MH422	MH422	MH422
Lab ID:	HS89A	IK38A	JE01B	KA63E	KK75A/KL08A	KY79C	LV54A	MN63B	NI22A	OC25C	OU11B	QS17A	SQ45A	UR61B	WP79A	YI11A	AFC4A
Sample Type:	Grab	Sed. Trap	Sed. Trap	Sed. Trap	Sed. Trap	Sed. Trap	Sed. Trap	Sed. Trap	Sed. Trap	Sed. Trap	Sed. Trap	Sed. Trap	Sed. Trap	Sed. Trap	Sed. Trap	Sed. Trap	Sed. Trap
Date Deployed:		3/7/2005	8/11/2005	3/16/2006	10/11/2006	1/8/2007	5/14/2007	10/29/2007	3/18/2008	7/30/2008	12/3/2008	4/6/2009	11/12/2010	4/5/2011	4/24/2012	5/13/2013	4/25/2014
Date Collected:	2/16/2005	8/11/2005	3/16/2006	10/11/2006	1/8/2007	5/14/2007	10/29/2007	3/18/2008	7/30/2008	12/3/2008	4/6/2009	4/8/2010	4/5/2011	4/24/2012	5/13/2013	4/25/2014	4/28/2015
TOTAL METALS (mg/kg-dry)																	
(Method 6000-7000 series)																	
Arsenic	20	11	10	30	9	20	6	19	10	9 U	NA	15	NA	10 U	10	20	10
Copper	102	83.6	110	325	133 J	123	79.3	80.1	142	168	NA	140	NA	97.5	99.2	157 J	88.8
Lead	142	140	97 J	216	159	227	84	90	190	215	NA	309	NA	117	141	162	198
Mercury	0.2	1.10	0.93 J	8.3	3.65	2.66	1.16 J	0.43	2.64	0.33	NA	0.36	NA	0.15	0.18	0.25 J	0.15
Zinc	411	368	435	1,140	382	474	313	717	563	518	NA	554	NA	487	538	833	499
NWTPH-Dx (mg/kg)																	
Diesel-Range Hydrocarbons	40	230	490	NA	350	710	NA	300	99 U	71	NA	100	NA	100	NA	260	NA
Motor Oil-Range Hydrocarbons	190	970	1,800	NA	930	3,500	NA	1,100	470	450	NA	720	NA	460	NA	1,500	NA
PCBs (µg/kg)																	
(PSDDA PCB SW8082)																	
Aroclor 1016	95 U	29 U	6,200 U	21,000 U	51,000 U	87,000 U	4,700 U	3,100 U	740 U	2,200 U	250 U	160 U	390 U	96 U	46 U	94 U	40 U
Aroclor 1242	95 U	29 U	6,200 U	21,000 U	51,000 U	87,000 U	4,700 U	3,100 U	740 U	2,200 U	250 U	160 U	390 U	96 U	46 U	240 U	40 U
Aroclor 1248	95 U	29 U	41,000	110,000 U	100,000 U	240,000	12,000	3,100 U	3,700 U	4,400 U	380 U	1,600 U	970 U	110	180 U	94 U	200 U
Aroclor 1254	1,600	10,000	55,000	110,000	260,000	180,000	9,800	7,600	10,000	19,000	680	3,400	3,400	350	770	1,300	500
Aroclor 1260	380 P	1,200 U	11,000	21,000 U	51,000 U	87,000 U	4,700 U	3,100 U	990 U	2,200 U	250 U	550	690	160	260	210 U	140
Aroclor 1221	95 U	29 U	6,200 U	21,000 U	26,000 U	87,000 U	4,700 U	3,100 U	740 U	2,200 U	250 U	160 U	390 U	96 U	46 U	94 U	40 U
Aroclor 1232	95 U	29 U	6,200 U	21,000 U	51,000 U	87,000 U	4,700 U	3,100 U	740 U	2,200 U	250 U	160 U	390 U	96 U	46 U	94 U	40 U
Aroclor 1262	NA	NA	NA	NA	NA	NA	NA	NA	740 U	NA	NA	NA	NA	96 U	46 U	94 U	40 U
Aroclor 1268	NA	NA	NA	NA	NA	NA	NA	NA	740 U	NA	NA	NA	NA	NA	NA	NA	NA
Total PCBs	1,980	10,000	107,000	110,000	260,000	420,000	21,800 *	7,600	10,000 *	19,000 *	680 *	3,950	4,090	620	1,030	1,300	640
SEMIVOLATILES (µg/kg-dry)																	
(PSDDA SVOCS SW8270D)																	
Phenol	59 U	100 U	340 U	260	79 U	480 U	87 UJ	160 U	200 U	82 U	330 U	200 U	NA	130	530	870 U	330
Bis-(2-Chloroethyl) Ether	59 U	100 U	340 U	NA	NA	NA	87 UJ	NA	NA	82 U	NA	NA	NA	NA	NA	NA	NA
2-Chlorophenol	59 U	100 U	340 U	NA	NA	NA	87 UJ	NA	NA	82 U	NA	NA	NA	NA	NA	NA	NA
1,3-Dichlorobenzene	59 U	100 U	340 U	240 U	79 U	480 U	87 UJ	160 U	200 U	82 U	330 U	200 U	NA	98 U	460 U	870 U	300 U
1,4-Dichlorobenzene	59 U	100 U	340 U	240 U	79 U	480 U	87 UJ	160 U	200 U	82 U	330 U	200 U	NA	98 U	460 U	870 U	300 U
Benzyl Alcohol	59 U	100 U	340 U	240 U	79 U	480 U	87 UJ	160 U	200 U	200	330 U	200 U	NA	83 J	460 U	870 U	300 U
1,2-Dichlorobenzene	59 U	100 U	340 U	240 U	79 U	480 U	87 UJ	160 U	200 U	82 U	330 U	200 U	NA	98 U	460 U	870 U	300 U
2-Methylphenol	59 U	100 U	340 U	240 U	79 U	480 U	87 UJ	160 U	200 U	82 U	330 U	200 U	NA	98 U	460 U	870 U	300 U
2,2'-Oxybis(1-Chloropropane)	59 U	100 U	340 U	NA	NA	NA	87 UJ	NA	NA	82 U	NA	NA	NA	NA	NA	NA	NA
4-Methylphenol	59 U	100 U	340 U	420	170	480 U	87 UJ	160 U	200 U	82 U	330 U	200 U	NA	220	460 U	870 U	300 U
N-Nitroso-Di-N-Propylamine	300 U	510 U	1,700 U	NA	NA	NA	430 UJ	NA	NA	410 U	NA	NA	NA	NA	NA	NA	NA
Hexachloroethane	59 U	100 U	340 U	240 U	79 U	480 U	87 UJ	160 U	200 U	82 U	330 U	200 U	NA	98 U	460 U	870 U	300 U
Nitrobenzene	59 U	100 U	340 U	NA	NA	NA	87 UJ	NA	NA	82 U	NA	NA	NA	NA	NA	NA	NA
Isophorone	59 U	100 U	340 U	NA	NA	NA	87 UJ	NA	NA	82 U	NA	NA	NA	NA	NA	NA	NA
2-Nitrophenol	300 U	510 U	1,700 U	NA	NA	NA	430 UJ	NA	NA	410 U	NA	NA	NA	NA	NA	NA	NA
2,4-Dimethylphenol	59 U	100 U	340 U	240 U	210	480 U	87 UJ	160 U	200 U	82 U	330 U	200 U	NA	200 U	920 U	4300 U	1500 U
Benzoic Acid	590 U	1,000 U	3,400 U	2,400 U	790 U	4,800 U	870 UJ	1,600 U	2,000 U	2,600	3,300 U	2,000 U	NA	2,000 UJ	9200 U	8700 UJ	1200 J
bis(2-Chloroethoxy) Methane	59 U	100 U	340 U	NA	NA	NA	87 UJ	NA	NA	82 U	NA	NA	NA	NA	NA	NA	NA
2,4-Dichlorophenol	300 U	510 U	1,700 U	NA	NA	NA	430 UJ	NA	NA	410 U	NA	NA	NA	NA	NA	NA	NA
1,2,4-Trichlorobenzene	59 U	100 U	340 U	240 U	79 U	480 U	87 UJ	160 U	200 U	82 U	330 U	200 U	NA	98 U	460 U	870 U	300 U
Naphthalene	59 U	100 U	340 U	240 U	79 U	480 U	87 UJ	160 U	200 U	82 U	330 U	200 U	NA	160	460 U	870 U	300 U
4-Chloroaniline	300 U	510 U	1,700 U	NA	NA	NA	430 UJ	NA	NA	410 U	NA	NA	NA	NA	NA	NA	NA
Hexachlorobutadiene	59 U	100 U	340 U	240 U	79 U	480 U	87 UJ	160 U	200 U	82 U	330 U	200 U	NA	490 U	460 U	870 U	300 U
4-Chloro-3-methylphenol	300 U	510 U	1,700 U	NA	NA	NA	430 UJ	NA	NA	410 U	NA	NA	NA	NA	NA	NA	NA
2-Methylnaphthalene	59 U	120	340 U	240 U	79 U	480 U	87 UJ	160 U	200 U	82 U	330 U	200 U	NA	200	460 U	870 U	100 J
Hexachlorocyclopentadiene	300 U	510 U	1,700 U	NA	NA	NA	430 UJ	NA	NA	410 U	NA	NA	NA	NA	NA	NA	NA
2,4,6-Trichlorophenol	300 U	510 U	1,700 U	NA	NA	NA	430 UJ	NA	NA	410 U	NA	NA	NA	NA	NA	NA	NA
2,4,5-Trichlorophenol	300 U	510 U	1,700 U	NA	NA	NA	430 UJ	NA	NA	410 U	NA	NA	NA	NA	NA	NA	NA
2-Chloronaphthalene	59 U	100 U	340 U	NA	NA	NA	87 UJ	NA	NA	82 U	NA	NA	NA	NA	NA	NA	NA
2-Nitroaniline	300 U	510 U	1,700 U	NA	NA	NA	430 UJ	NA	NA	410 U	NA	NA	NA	NA	NA	NA	NA
Dimethylphthalate	59 U	100 U	340 U	240 U	79 U	480 U	87 UJ	160 U	200 U	82 U	330 U	200 U	NA	98 U	460 U	870 U	300 U
Acenaphthylene	59 U	100 U	340 U	240 U	79 U	480 U	87 UJ	160 U	200 U	82 U	330 U	200 U	NA	98 U	460 U	870 U	300 U
3-Nitroaniline	300 U	510 U	1,700 U	NA	NA	NA	430 UJ	NA	NA	410 U	NA	NA	NA	NA	NA	NA	NA
Acenaphthene	59 U	210	340 U	240 U	90	480 U	87 UJ	370	200 U	82 U	330 U	200 J	NA	360	460 U	430 J	90 J
2,4-Dinitrophenol	590 U	1,000 U	3,400 U	NA	NA	NA	870 UJ	NA	NA	820 U	NA	NA	NA	NA	NA	NA	NA
4-Nitrophenol	300 U	510 U	1,700 U	NA	NA	NA	430 UJ	NA	NA	410 U	NA	NA	NA	NA	NA	NA	NA
Dibenzofuran	59 U	150	340 U	240 U	79 U	480 U	87 UJ	260	200 U	82 U	330 U	240	NA	330	460 U	870 U	140 J
2,6-Dinitrotoluene	300 U	510 U	1,700 U	NA	NA	NA	430 UJ	NA	NA	410 U	NA	NA	NA	NA	NA	NA	NA
2,4-Dinitrotoluene	300 U	510 U	1,700 U	NA	NA	NA	430 UJ	NA	NA	410 U	NA	NA	NA	NA	NA	NA	NA
Diethylphthalate	59 U	100 U	340 U	240 U	79 U	480 U	87 UJ	160 U	200 U	82 U	330 U	200 U	NA	240 U	1200 U	870 U	300 U
4-Chlorophenyl-phenylether	59 U	100 U	340 U	NA	NA	NA	87 UJ	NA	NA	82 U	NA	NA	NA	NA	NA	NA	NA
Fluorene	59 U	190	340 U	240 U	130	480 U	87 UJ	490	200 U	82 U	330 U	260	NA	420	460 U	870 U	140 J
4-Nitroaniline	300 U	510 U	1,700 U	NA	NA	NA	430 UJ	NA	NA	410 U	NA	NA	NA	NA	NA	NA	NA

TABLE 11
STORM DRAIN MANHOLE SOLIDS AND SEDIMENT TRAP ANALYTICAL DATA
NORTH BOEING FIELD

SPU Sample ID:		**SL4-T1**	SL4-T1	SL4-T1	SL4-T1	SL4-T1	SL4-T1	SL4-T1	SL4-T1	SL4-T1	SL4-T1	SL4-T1	SL4-T1	SL4-T1	SL4-T1	SL4-T1	SL4-T1
Boeing Manhole No.	MH100	MH422	MH422	MH422	MH422	MH422	MH422	MH422	MH422	MH422	MH422	MH422	MH422	MH422	MH422	MH422	MH422
Lab ID:	HS89A	IK38A	JE01B	KA63E	KK75A/KL08A	KY79C	LV54A	MN63B	NI22A	OC25C	OU11B	QS17A	SQ45A	UR61B	WP79A	YI11A	AFC4A
Sample Type:	Grab	Sed. Trap	Sed. Trap	Sed. Trap	Sed. Trap	Sed. Trap	Sed. Trap	Sed. Trap	Sed. Trap	Sed. Trap	Sed. Trap	Sed. Trap	Sed. Trap	Sed. Trap	Sed. Trap	Sed. Trap	Sed. Trap
Date Deployed:		3/7/2005	8/11/2005	3/16/2006	10/11/2006	1/8/2007	5/14/2007	10/29/2007	3/18/2008	7/30/2008	12/3/2008	4/6/2009	11/12/2010	4/5/2011	4/24/2012	5/13/2013	4/25/2014
Date Collected:	2/16/2005	8/11/2005	3/16/2006	10/11/2006	1/8/2007	5/14/2007	10/29/2007	3/18/2008	7/30/2008	12/3/2008	4/6/2009	4/8/2010	4/5/2011	4/24/2012	5/13/2013	4/25/2014	4/28/2015
4,6-Dinitro-2-Methylphenol	590 U	1,000 U	3,400 U	NA	NA	NA	870 UJ	NA	NA	820 U	NA	NA	NA	NA	NA	NA	NA
N-Nitrosodiphenylamine	59 U	100 U	340 U	240 U	79 U	480 U	87 UJ	160 U	200 U	82 U	330 U	200 U	NA	98 U	460 U	870 U	300 U
4-Bromophenyl-phenylether	59 U	100 U	340 U	NA	NA	NA	87 UJ	NA	NA	82 U	NA	NA	NA	NA	NA	NA	NA
Hexachlorobenzene	59 U	100 U	340 U	240 U	79 U	480 U	87 UJ	160 U	200 U	82 U	330 U	200 U	NA	98 U	460 U	870 U	300 U
Pentachlorophenol	300 U	510 U	1,700 U	1,200 U	400 U	2,400 U	430 UJ	770 U	1,000 U	410 U	1,700 U	1,000 U	NA	980 UJ	4600 U	4300 UJ	1500 U
Phenanthrene	250	2,800	2,500	2,900	1,200	2,700	950 J	4,300	2,000	770	1,100	4,000	NA	5,200	3400	4300	1900
Carbazole	110	390	480	NA	NA	NA	240 J	NA	NA	210	NA	NA	NA	NA	NA	NA	NA
Anthracene	140	360	380	290	220	480 U	120 J	510	200 U	85	330 U	560	NA	330	410 J	690 J	250 J
Di-n-Butylphthalate	59 U	130	360	240 U	250 U	480 U	220 J	200	200 U	82 U	330 U	6,900	NA	120	460 U	870 U	450
Fluoranthene	880	4,100	6,600	7,700	2,400	5,800	2,200 J	5,600	3,400	1,900	2,500	9,900	NA	7,000	7200	8700	4400
Pyrene	810	3,000	3,400	4,700	2,100	3,900	1,700 J	3,800	2,600	1,200	1,900	5,400	NA	5,700	5400	7600	3300
Butylbenzylphthalate	86	120	340 U	1,200	79 U	480 U	390 J	430	480	100	240 J	330	NA	370 J	970	1000	610
3,3'-Dichlorobenzidine	300 U	510 U	1,700 U	NA	NA	NA	430 UJ	NA	NA	410 U	NA	NA	NA	NA	NA	NA	NA
Benzo(a)anthracene	380	1,400	1,800	1,600	1,100	1,900	570 J	1,600	860	540	820	3,100	NA	1,700	2100	3600	1300
bis(2-Ethylhexyl)phthalate	2,000	2,400	2,600	10,000	1,200	9,800	2,900 J	2,200	1,700	2,300	7,300	7,400	NA	4,400	9600	8600	6900
Chrysene	620	1,900	2,700	4,300	1,600	3,000	1,200 J	2,500	1,600	970	1,500	5,100	NA	3,300	4100	5900	2700
Di-n-Octyl phthalate	71	440	1,000	1,500	240	2,700	980 J	470	550	440	1,900	1,900	NA	790	1700	1900	1200
Benzo(b)fluoranthene	760	2,400	2,400	3,200	1,700	3,600	1,600 J	2,500	1,600	840	1,400	4,300	NA	NA	NA	NA	NA
Benzo(k)fluoranthene	460	1,300	2,300	4,100	1,600	3,400	1,100 J	1,800	1,100	920	1,500	4,300	NA	NA	NA	NA	NA
Total Benzofluoranthenes	NA	NA	NA	NA	NA	NA	NA	NA	NA	NA	NA	NA	NA	5,500	8100	8800	4800
Benzo(a)pyrene	480	1,700	2,000	2,800	1,400	2,600	830 J	1,900	1,100	760	1,300	4,600	NA	2,200	3200	4200	1800
Indeno(1,2,3-cd)pyrene	180	810	930	2,000	530	1,300	300 J	1,200	940	560	1,000	3,100	NA	1,900	2800	2200	1400
Dibenz(a,h)anthracene	59 U	260	340 U	700	120	480 U	87 UJ	490	230	200	340	1,300	NA	650	850	650 J	400
Benzo(g,h,i)perylene	200	720	890	2,000	530	1,300	120 J	1,300	1,100	600	1,200	3,600	NA	2,100	3200	2400 J	1600
1-Methylnaphthalene	NA	NA	NA	NA	NA	NA	87 U	160 U	200 U	82 U	330 U	200 U	NA	120	460 U	870 U	300 U
CONVENTIONAL PARAMETERS (%)																	
Total Solids (EPA 160.3, SM2540G) (%)	38.80	72.80 J	71.30 J	37.60	75.00	NA	NA	67.70	NA	49.60	NA	59.50	59.50	50.70	43.52	44.22	43.60
Total Organic Carbon (EPA 9060M, Plumb 1981) (%)	6.60	4.29	7.86	NA	3.45	NA	NA	3.83	NA	3.98	NA	5.65	4.64	3.10	8	6.21	7.20
Reported as Dry Wt		P,S,T,M	P,S,T,M	P,S,M	P,S,T,M	P,S,T,M		P,S,T,M	M	M		P,S,T,M	P	P,S,T,M	P,S,T,M	P,S,T,M	P,S,M
Reported as As Received							P,S,M		P,S,T	P,S,T	P,S						
Not Analyzed Due to Low Sample Volume				T			T				T,M		S,T,M				

TABLE 11
STORM DRAIN MANHOLE SOLIDS AND SEDIMENT TRAP ANALYTICAL DATA
NORTH BOEING FIELD

SPU Sample ID:	**SL4-T2**	SL4-T2	SL4-T2	SL4-T2	SL4-T2	SL4-T2	SL4-T2	SL4-T2	SL4-T2	SL4-T2	SL4-T2	SL4-T2	SL4-T2	SL4-T2	SL4-T2	SL4-T2
Boeing Manhole No.	MH356	MH356	MH356	MH356	MH356	MH356	MH356	MH356	MH356	MH356	MH356	MH356	MH356	MH356	MH356	MH356
Lab ID:	IK38F	JE01A	KA63D	KK75B	KY79D	LV54B	MN63A	NI22B	OC25A	OU11A	QS17B	SQ45B	UR61C	WP79B	YI11B	AFC4B
Sample Type:	Sed. Trap	Sed. Trap	Sed. Trap	Sed. Trap	Sed. Trap	Sed. Trap	Sed. Trap	Sed. Trap	Sed. Trap	Sed. Trap	Sed. Trap	Sed. Trap	Sed. Trap	Sed. Trap	Sed. Trap	Sed. Trap
Date Deployed:	3/7/2005	8/11/2005	3/16/2006	10/11/2006	1/8/2007	5/14/2007	10/29/2007	3/18/2008	7/30/2008	12/3/2008	4/6/2009	11/12/2010	4/5/2011	4/24/2012	5/13/2013	4/25/2014
Date Collected:	8/11/2005	3/16/2006	10/11/2006	1/8/2007	5/14/2007	10/29/2007	3/18/2008	7/30/2008	12/3/2008	4/6/2009	4/8/2010	4/5/2011	04/24/2012	5/13/2013	4/25/2014	4/28/2015
TOTAL METALS (mg/kg-dry)																
(Method 6000-7000 series)																
Arsenic	NA	NA	50 U	NA	NA	5 U	NA	NA	NA	NA	NA	NA	20 U	10 U	20	40 U
Copper	NA	NA	276	NA	NA	40.9	NA	NA	NA	NA	NA	NA	249	139	205	216
Lead	NA	NA	300	NA	NA	43	NA	NA	NA	NA	NA	NA	272	132	231	200
Mercury	NA	NA	0.6	NA	NA	0.08	NA	NA	NA	NA	NA	NA	0.42	0.28	0.29	0.61
Zinc	NA	NA	1,560	NA	NA	222	NA	NA	NA	NA	NA	NA	1,470	879	1,500	1430
NWTPH-Dx (mg/kg)																
Diesel-Range Hydrocarbons	NA	NA	NA	NA	NA	NA	NA	NA	NA	NA	NA	NA	770	NA	1,700	1800
Motor Oil-Range Hydrocarbons	NA	NA	NA	NA	NA	NA	NA	NA	NA	NA	NA	NA	2,800	NA	3,100	5500
PCBs (µg/kg)																
(PSDDA PCB SW8082)																
Aroclor 1016	21 U	210 U	300 U	27 U	19 U	35 U	13 U	24 U	9.9 U	34 U	79 U	26 U	340 U	47 U	48 U	40 U
Aroclor 1242	21 U	210 U	230 U	27 U	19 U	35 U	13 U	24 U	9.9 U	34 U	79 U	26 U	340 U	47 U	48 U	40 U
Aroclor 1248	21 U	210 U	300 U	13 U	19 U	35 U	19 U	24 U	9.9 U	34 U	120 U	100 U	340 U	47 U	72 U	120 U
Aroclor 1254	500 P	890	760	180	70	90	47	24	10	48	260	370	400	250	390	340
Aroclor 1260	340	570	470	130	58	43	38	24 U	9.9 U	34 U	200	310	350	190	230	280
Aroclor 1221	21 U	210 U	75 U	13 U	19 U	35 U	13 U	24 U	9.9 U	34 U	79 U	26 U	340 U	47 U	48 U	40 U
Aroclor 1232	21 U	210 U	380 U	13 U	19 U	35 U	13 U	24 U	9.9 U	34 U	79 U	26 U	340 U	47 U	48 U	40 U
Aroclor 1262	NA	NA	NA	NA	NA	NA	NA	24 U	NA	NA	NA	NA	340 U	47 U	48 U	40 U
Aroclor 1268	NA	NA	NA	NA	NA	NA	NA	24 U	NA	NA	NA	NA	NA	NA	NA	NA
Total PCBs	840	1460	1230	310	128	133 *	85 *	24 *	10 *	48 *	460	680	750	440	620	620
SEMIVOLATILES (µg/kg-dry)																
(PSDDA SVOCS SW8270D)																
Phenol	NA	1,300 U	NA	NA	NA	NA	NA	NA	88 U	NA	470 U	NA	730	880 U	1500 U	770
Bis-(2-Chloroethyl) Ether	NA	1,300 U	NA	NA	NA	NA	NA	NA	88 U	NA	NA	NA	NA	NA	NA	NA
2-Chlorophenol	NA	1,300 U	NA	NA	NA	NA	NA	NA	88 U	NA	NA	NA	NA	NA	NA	NA
1,3-Dichlorobenzene	NA	1,300 U	NA	NA	NA	NA	NA	NA	88 U	NA	470 U	NA	280 U	880 U	1500 U	620 U
1,4-Dichlorobenzene	NA	1,300 U	NA	NA	NA	NA	NA	NA	88 U	NA	470 U	NA	280 U	880 U	1500 U	620 U
Benzyl Alcohol	NA	1,300 U	NA	NA	NA	NA	NA	NA	88 U	NA	470 U	NA	280 U	880 U	1500 U	620 U
1,2-Dichlorobenzene	NA	1,300 U	NA	NA	NA	NA	NA	NA	88 U	NA	470 U	NA	280 U	880 U	1500 U	620 U
2-Methylphenol	NA	1,300 U	NA	NA	NA	NA	NA	NA	88 U	NA	470 U	NA	280 U	880 U	1500 U	620 U
2,2'-Oxybis(1-Chloropropane)	NA	1,300 U	NA	NA	NA	NA	NA	NA	88 U	NA	NA	NA	NA	NA	NA	NA
4-Methylphenol	NA	1,300 U	NA	NA	NA	NA	NA	NA	88 U	NA	470 U	NA	2,100	880 U	1500 U	560 J
N-Nitroso-Di-N-Propylamine	NA	6,600 U	NA	NA	NA	NA	NA	NA	440 U	NA	NA	NA	NA	NA	NA	NA
Hexachloroethane	NA	1,300 U	NA	NA	NA	NA	NA	NA	88 U	NA	470 U	NA	280 U	880 U	1500 U	620 U
Nitrobenzene	NA	1,300 U	NA	NA	NA	NA	NA	NA	88 U	NA	NA	NA	NA	NA	NA	NA
Isophorone	NA	1,300 U	NA	NA	NA	NA	NA	NA	88 U	NA	NA	NA	NA	NA	NA	NA
2-Nitrophenol	NA	6,600 U	NA	NA	NA	NA	NA	NA	440 U	NA	NA	NA	NA	NA	NA	NA
2,4-Dimethylphenol	NA	1,300 U	NA	NA	NA	NA	NA	NA	88 U	NA	470 U	NA	550 U	1800 U	7500 U	3100 U
Benzoic Acid	NA	13,000 U	NA	NA	NA	NA	NA	NA	880 U	NA	4,700 U	NA	5,500 U	18000 U	15000 UJ	2100 J
bis(2-Chloroethoxy) Methane	NA	1,300 U	NA	NA	NA	NA	NA	NA	88 U	NA	NA	NA	NA	NA	NA	NA
2,4-Dichlorophenol	NA	6,600 U	NA	NA	NA	NA	NA	NA	440 U	NA	NA	NA	NA	NA	NA	NA
1,2,4-Trichlorobenzene	NA	1,300 U	NA	NA	NA	NA	NA	NA	88 U	NA	470 U	NA	280 U	880 U	1500 U	620 U
Naphthalene	NA	1,300 U	NA	NA	NA	NA	NA	NA	88 U	NA	470 U	NA	290	880 U	1500 U	280 J
4-Chloroaniline	NA	6,600 U	NA	NA	NA	NA	NA	NA	440 U	NA	NA	NA	NA	NA	NA	NA
Hexachlorobutadiene	NA	1,300 U	NA	NA	NA	NA	NA	NA	88 U	NA	470 U	NA	1,400 U	880 U	1500 U	620 U
4-Chloro-3-methylphenol	NA	6,600 U	NA	NA	NA	NA	NA	NA	440 U	NA	NA	NA	NA	NA	NA	NA
2-Methylnaphthalene	NA	1,300 U	NA	NA	NA	NA	NA	NA	88 U	NA	470 U	NA	220 J	880 U	1200 J	280 J
Hexachlorocyclopentadiene	NA	6,600 U	NA	NA	NA	NA	NA	NA	440 U	NA	NA	NA	NA	NA	NA	NA
2,4,6-Trichlorophenol	NA	6,600 U	NA	NA	NA	NA	NA	NA	440 U	NA	NA	NA	NA	NA	NA	NA
2,4,5-Trichlorophenol	NA	6,600 U	NA	NA	NA	NA	NA	NA	440 U	NA	NA	NA	NA	NA	NA	NA
2-Chloronaphthalene	NA	1,300 U	NA	NA	NA	NA	NA	NA	88 U	NA	NA	NA	NA	NA	NA	NA
2-Nitroaniline	NA	6,600 U	NA	NA	NA	NA	NA	NA	440 U	NA	NA	NA	NA	NA	NA	NA
Dimethylphthalate	NA	1,300 U	NA	NA	NA	NA	NA	NA	88 U	NA	470 U	NA	280 U	880 U	1500 U	620 U
Acenaphthylene	NA	1,300 U	NA	NA	NA	NA	NA	NA	88 U	NA	470 U	NA	280 U	880 U	1500 U	220 J
3-Nitroaniline	NA	6,600 U	NA	NA	NA	NA	NA	NA	440 U	NA	NA	NA	NA	NA	NA	NA
Acenaphthene	NA	1,300 U	NA	NA	NA	NA	NA	NA	88 U	NA	430 J	NA	480	880 U	1500 U	310 J
2,4-Dinitrophenol	NA	13,000 U	NA	NA	NA	NA	NA	NA	880 U	NA	NA	NA	NA	NA	NA	NA
4-Nitrophenol	NA	6,600 U	NA	NA	NA	NA	NA	NA	440 U	NA	NA	NA	NA	NA	NA	NA
Dibenzofuran	NA	1,300 U	NA	NA	NA	NA	NA	NA	88 U	NA	430 J	NA	440	880 U	1500 U	340 J
2,6-Dinitrotoluene	NA	6,600 U	NA	NA	NA	NA	NA	NA	440 U	NA	NA	NA	NA	NA	NA	NA
2,4-Dinitrotoluene	NA	6,600 U	NA	NA	NA	NA	NA	NA	440 U	NA	NA	NA	NA	NA	NA	NA
Diethylphthalate	NA	1,300 U	NA	NA	NA	NA	NA	NA	100 U	NA	470 U	NA	690 U	2200 U	1500 U	620 U
4-Chlorophenyl-phenylether	NA	1,300 U	NA	NA	NA	NA	NA	NA	88 U	NA	NA	NA	NA	NA	NA	NA
Fluorene	NA	1,300 U	NA	NA	NA	NA	NA	NA	88 U	NA	570	NA	480	880 U	1500 U	310 J
4-Nitroaniline	NA	6,600 U	NA	NA	NA	NA	NA	NA	440 U	NA	NA	NA	NA	NA	NA	NA

TABLE 11
STORM DRAIN MANHOLE SOLIDS AND SEDIMENT TRAP ANALYTICAL DATA
NORTH BOEING FIELD

SPU Sample ID:	**SL4-T2**	SL4-T2	SL4-T2	SL4-T2	SL4-T2	SL4-T2	SL4-T2	SL4-T2	SL4-T2	SL4-T2	SL4-T2	SL4-T2	SL4-T2	SL4-T2	SL4-T2	SL4-T2
Boeing Manhole No.	MH356	MH356	MH356	MH356	MH356	MH356	MH356	MH356	MH356	MH356	MH356	MH356	MH356	MH356	MH356	MH356
Lab ID:	IK38F	JE01A	KA63D	KK75B	KY79D	LV54B	MN63A	NI22B	OC25A	OU11A	QS17B	SQ45B	UR61C	WP79B	YI11B	AFC4B
Sample Type:	Sed. Trap	Sed. Trap	Sed. Trap	Sed. Trap	Sed. Trap	Sed. Trap	Sed. Trap	Sed. Trap	Sed. Trap	Sed. Trap	Sed. Trap	Sed. Trap	Sed. Trap	Sed. Trap	Sed. Trap	Sed. Trap
Date Deployed:	3/7/2005	8/11/2005	3/16/2006	10/11/2006	1/8/2007	5/14/2007	10/29/2007	3/18/2008	7/30/2008	12/3/2008	4/6/2009	11/12/2010	4/5/2011	4/24/2012	5/13/2013	4/25/2014
Date Collected:	8/11/2005	3/16/2006	10/11/2006	1/8/2007	5/14/2007	10/29/2007	3/18/2008	7/30/2008	12/3/2008	4/6/2009	4/8/2010	4/5/2011	04/24/2012	5/13/2013	4/25/2014	4/28/2015
4,6-Dinitro-2-Methylphenol	NA	13,000 U	NA	NA	NA	NA	NA	NA	880 U	NA	NA	NA	NA	NA	NA	NA
N-Nitrosodiphenylamine	NA	1,300 U	NA	NA	NA	NA	NA	NA	88 U	NA	470 U	NA	280 U	880 U	1500 U	620 U
4-Bromophenyl-phenylether	NA	1,300 U	NA	NA	NA	NA	NA	NA	88 U	NA	NA	NA	NA	NA	NA	NA
Hexachlorobenzene	NA	1,300 U	NA	NA	NA	NA	NA	NA	88 U	NA	470 U	NA	280 U	880 U	1500 U	620 U
Pentachlorophenol	NA	6,600 U	NA	NA	NA	NA	NA	NA	440 U	NA	2,300 U	NA	2,800 UJ	8800 U	7500 UJ	3100 U
Phenanthrene	NA	15,000	NA	NA	NA	NA	NA	NA	390	NA	11,000	NA	11,000	6200	5800	4800
Carbazole	NA	3,600	NA	NA	NA	NA	NA	NA	100	NA	NA	NA	NA	NA	NA	NA
Anthracene	NA	1,700	NA	NA	NA	NA	NA	NA	88 U	NA	1,300	NA	1,100	750 J	1500 U	620
Di-n-Butylphthalate	NA	1,300 U	NA	NA	NA	NA	NA	NA	88 U	NA	1,600	NA	460	880 U	1500 U	620 U
Fluoranthene	NA	45,000	NA	NA	NA	NA	NA	NA	1,100	NA	28,000	NA	26,000	16000	14000	12000
Pyrene	NA	23,000	NA	NA	NA	NA	NA	NA	810	NA	15,000	NA	19,000	12000	11000	8600
Butylbenzylphthalate	NA	1,600	NA	NA	NA	NA	NA	NA	88 U	NA	530	NA	1,000 J	480 J	1500 U	650
3,3'-Dichlorobenzidine	NA	6,600 U	NA	NA	NA	NA	NA	NA	440 U	NA	NA	NA	NA	NA	NA	NA
Benzo(a)anthracene	NA	11,000	NA	NA	NA	NA	NA	NA	330	NA	7,200	NA	7,700	4700	4000	3500
bis(2-Ethylhexyl)phthalate	NA	34,000	NA	NA	NA	NA	NA	NA	1,500	NA	19,000	NA	37,000	31000	31000	30000
Chrysene	NA	23,000	NA	NA	NA	NA	NA	NA	850	NA	16,000	NA	19,000	11000	9100	9300
Di-n-Octyl phthalate	NA	9,800	NA	NA	NA	NA	NA	NA	280	NA	27,000	NA	8,300	7100	5800	5600
Benzo(b)fluoranthene	NA	26,000	NA	NA	NA	NA	NA	NA	820	NA	13,000	NA	NA	NA	NA	NA
Benzo(k)fluoranthene	NA	17,000	NA	NA	NA	NA	NA	NA	860	NA	13,000	NA	NA	NA	NA	NA
Total Benzofluoranthenes	NA	NA	NA	NA	NA	NA	NA	NA	NA	NA	NA	NA	34,000	23000	19000	17000
Benzo(a)pyrene	NA	15,000	NA	NA	NA	NA	NA	NA	520	NA	12,000	NA	12,000	7400	6300	4800
Indeno(1,2,3-cd)pyrene	NA	9,200	NA	NA	NA	NA	NA	NA	530	NA	8,500	NA	12,000	7300	4600	4900
Dibenz(a,h)anthracene	NA	2,100	NA	NA	NA	NA	NA	NA	88 U	NA	3,500	NA	4,700	2200	1200 J	1500
Benzo(g,h,i)perylene	NA	9,000	NA	NA	NA	NA	NA	NA	600	NA	9,400	NA	13,000	8500	5100 J	4800
1-Methylnaphthalene	NA	NA	NA	NA	NA	NA	NA	NA	88 U	NA	470 U	NA	280 U	880 U	830 J	620 U
CONVENTIONAL PARAMETERS (%)																
Total Solids (EPA 160.3, SM2540G) (%)	NA	NA	8.93	NA	NA	NA	NA	NA	NA	NA	25.00	28.10	27.60	37.65	37.04	29.41
Total Organic Carbon (EPA 9060M, Plumb 1981) (%)	NA	NA	NA	NA	NA	NA	NA	NA	NA	NA	NA	16.1	17.7	8.57	12.3	17.3
Reported as Dry Wt	P	P,S	P,S,M	P,S	P						P,S	P	P,S,T,M	P,S,T,M	P,S,T,M	P,S,T,M
Reported as As Received						P,M	P	P	P,S	P						
Not Analyzed Due to Low Sample Volume	S,T,M	T,M	T	T,M	S,T,M	S,T	S,T,M	S,T,M	T,M	S,T,M	T,M	S,T,M				

TABLE 11
STORM DRAIN MANHOLE SOLIDS AND SEDIMENT TRAP ANALYTICAL DATA
NORTH BOEING FIELD

SPU Sample ID:	**SL4-T3**	SL4-T3	SL4-T3	SL4-T3	SL4-T3	SL4-T3	SL4-T3	SL4-T3	SL4-T3	SL4-T3	SL4-T3	SL4-T3	SL4-T3	SL4-T3	SL4-T3	SL4-T3
Boeing Manhole No.	MH364	MH364	MH364	MH364	MH364	MH364	MH364	MH364	MH364	MH364	MH364	MH364	MH364	MH364	MH364	MH364
Lab ID:	IK38G	JE01C	KA63A	KK75C/KL08B	KY79E	LV54C	MN63D	NI22D	OC25B	OU11D	QS17C	SQ45C	UR61D	WP79C	YI11C	AFC4C
Sample Type:	Sed. Trap	Sed. Trap	Sed. Trap	Sed. Trap	Sed. Trap	Sed. Trap	Sed. Trap	Sed. Trap	Sed. Trap	Sed. Trap	Sed. Trap	Sed. Trap	Sed. Trap	Sed. Trap	Sed. Trap	Sed. Trap
Date Deployed:	3/7/2005	8/11/2005	3/16/2006	10/11/2006	1/8/2007	5/14/2007	10/29/2007	3/18/2008	7/30/2008	12/3/2008	4/6/2009	11/12/2010	4/5/2011	4/24/2012	5/13/2013	4/25/2014
Date Collected:	8/11/2005	3/16/2006	10/11/2006	1/8/2007	5/14/2007	10/29/2007	3/18/2008	7/30/2008	12/3/2008	4/6/2009	4/8/2010	4/5/2011	04/24/2012	5/13/2013	4/25/2014	4/28/2015
TOTAL METALS (mg/kg-dry)																
(Method 6000-7000 series)																
Arsenic	NA	30 U	100 U	10 U	NA	5 U	NA	NA	NA	NA	NA	NA	70 U	50 U	40 U	30 U
Copper	NA	99	106	72.2	NA	4.3	NA	NA	NA	NA	NA	NA	110	58	82	53
Lead	NA	120	100	97	NA	4	NA	NA	NA	NA	NA	NA	90	50	60	30
Mercury	NA	0.3	0.7 U	0.09 U	NA	0.03 U	NA	NA	NA	NA	NA	NA	0.1	0.08	0.11	0.07
Zinc	NA	448	660	293	NA	30	NA	NA	NA	NA	NA	NA	640	393	508	252
NWTPH-Dx (mg/kg)																
Diesel-Range Hydrocarbons	NA	320	NA	NA	NA	NA	NA	NA	NA	NA	NA	NA	150	NA	190	120 U
Motor Oil-Range Hydrocarbons	NA	1,200	NA	NA	NA	NA	NA	NA	NA	NA	NA	NA	540	NA	610	460
PCBs (µg/kg)																
(PSDDA PCB SW8082)																
Aroclor 1016	20 U	160 U	78 U	49 U	(a)	34 U	10 U	13 U	10 U	21 U	110 U	20 U	270 U	48 U	9.7 U	40 U
Aroclor 1242	20 U	160 U	78 U	49 U	(a)	34 U	10 U	13 U	10 U	21 U	110 U	20 U	270 U	48 U	9.7 U	40 U
Aroclor 1248	20 U	270 U	160 U	120 U	(a)	34 U	20 U	13 U	10 U	21 U	110 U	99 U	270 U	48 U	48 U	60 U
Aroclor 1254	1,400	1,300	480	430	(a)	34 U	65	32	26	28	250	370	420	210	400	260
Aroclor 1260	380 U	510	150	140	(a)	34 U	25	13 U	10 U	21 U	110 U	180	280	110	170	110
Aroclor 1221	20 U	160 U	39 U	49 U	(a)	34 U	10 U	13 U	10 U	21 U	110 U	20 U	270 U	48 U	9.7 U	40 U
Aroclor 1232	20 U	310 U	160 U	49 U	(a)	34 U	10 U	13 U	10 U	21 U	110 U	20 U	270 U	48 U	9.7 U	40 U
Aroclor 1262	NA	NA	NA	NA	NA	NA	NA	13 U	NA	NA	NA	NA	270 U	48 U	9.7 U	40 U
Aroclor 1268	NA	NA	NA	NA	NA	NA	NA	13 U	NA	NA	NA	NA	NA	NA	NA	NA
Total PCBs	1,400	1810	630	570	(a)	34 * U	90 *	32 *	26 *	28 *	250	550	700	320	570	370
SEMIVOLATILES (µg/kg-dry)																
(PSDDA SVOCS SW8270D)																
Phenol	NA	530 U	NA	480 U	NA	NA	59 U	NA	82 U	NA	180 U	NA	620	440 U	820 U	500 U
Bis-(2-Chloroethyl) Ether	NA	530 U	NA	NA	NA	NA	NA	NA	82 U	NA	NA	NA	NA	NA	NA	NA
2-Chlorophenol	NA	530 U	NA	NA	NA	NA	NA	NA	82 U	NA	NA	NA	NA	NA	NA	NA
1,3-Dichlorobenzene	NA	530 U	NA	480 U	NA	NA	59 U	NA	82 U	NA	180 U	NA	250 U	440 U	820 U	500 U
1,4-Dichlorobenzene	NA	530 U	NA	480 U	NA	NA	59 U	NA	82 U	NA	180 U	NA	250 U	440 U	820 U	500 U
Benzyl Alcohol	NA	530 U	NA	480 U	NA	NA	59 U	NA	82 U	NA	180 U	NA	250 U	440 U	820 U	500 U
1,2-Dichlorobenzene	NA	530 U	NA	480 U	NA	NA	59 U	NA	82 U	NA	180 U	NA	250 U	440 U	820 U	500 U
2-Methylphenol	NA	530 U	NA	480 U	NA	NA	59 U	NA	82 U	NA	180 U	NA	250 U	440 U	820 U	500 U
2,2'-Oxybis(1-Chloropropane)	NA	530 U	NA	NA	NA	NA	NA	NA	82 U	NA	NA	NA	NA	NA	NA	NA
4-Methylphenol	NA	530 U	NA	480 U	NA	NA	59 U	NA	82 U	NA	180 U	NA	6,000	440 U	820 U	500 U
N-Nitroso-Di-N-Propylamine	NA	2,700 U	NA	NA	NA	NA	NA	NA	410 U	NA	NA	NA	NA	NA	NA	NA
Hexachloroethane	NA	530 U	NA	480 U	NA	NA	59 U	NA	82 U	NA	180 U	NA	250 U	440 U	820 U	500 U
Nitrobenzene	NA	530 U	NA	NA	NA	NA	NA	NA	82 U	NA	NA	NA	NA	NA	NA	NA
Isophorone	NA	530 U	NA	NA	NA	NA	NA	NA	82 U	NA	NA	NA	NA	NA	NA	NA
2-Nitrophenol	NA	2,700 U	NA	NA	NA	NA	NA	NA	410 U	NA	NA	NA	NA	NA	NA	NA
2,4-Dimethylphenol	NA	530 U	NA	480 U	NA	NA	59 U	NA	82 U	NA	180 U	NA	500 U	880 U	4100 U	2500 U
Benzoic Acid	NA	5,300 U	NA	4,800 U	NA	NA	590 U	NA	820 U	NA	1,800 U	NA	5,000 U	8800 U	8200 UJ	5000 U
bis(2-Chloroethoxy) Methane	NA	530 U	NA	NA	NA	NA	NA	NA	82 U	NA	NA	NA	NA	NA	NA	NA
2,4-Dichlorophenol	NA	2,700 U	NA	NA	NA	NA	NA	NA	410 U	NA	NA	NA	NA	NA	NA	NA
1,2,4-Trichlorobenzene	NA	530 U	NA	480 U	NA	NA	59 U	NA	82 U	NA	180 U	NA	250 U	440 U	820 U	500 U
Naphthalene	NA	530 U	NA	480 U	NA	NA	59 U	NA	82 U	NA	180 U	NA	250 U	440 U	820 U	500 U
4-Chloroaniline	NA	2,700 U	NA	NA	NA	NA	NA	NA	410 U	NA	NA	NA	NA	NA	NA	NA
Hexachlorobutadiene	NA	530 U	NA	480 U	NA	NA	59 U	NA	82 U	NA	180 U	NA	1,200 U	440 U	820 U	500 U
4-Chloro-3-methylphenol	NA	2,700 U	NA	NA	NA	NA	NA	NA	410 U	NA	NA	NA	NA	NA	NA	NA
2-Methylnaphthalene	NA	530 U	NA	480 U	NA	NA	59 U	NA	82 U	NA	180 U	NA	250 U	440 U	820 U	500 U
Hexachlorocyclopentadiene	NA	2,700 U	NA	NA	NA	NA	NA	NA	410 U	NA	NA	NA	NA	NA	NA	NA
2,4,6-Trichlorophenol	NA	2,700 U	NA	NA	NA	NA	NA	NA	410 U	NA	NA	NA	NA	NA	NA	NA
2,4,5-Trichlorophenol	NA	2,700 U	NA	NA	NA	NA	NA	NA	410 U	NA	NA	NA	NA	NA	NA	NA
2-Chloronaphthalene	NA	530 U	NA	NA	NA	NA	NA	NA	82 U	NA	NA	NA	NA	NA	NA	NA
2-Nitroaniline	NA	2,700 U	NA	NA	NA	NA	NA	NA	410 U	NA	NA	NA	NA	NA	NA	NA
Dimethylphthalate	NA	530 U	NA	480 U	NA	NA	59 U	NA	82 U	NA	180 U	NA	250 U	440 U	820 U	500 U
Acenaphthylene	NA	530 U	NA	480 U	NA	NA	59 U	NA	82 U	NA	180 U	NA	250 U	440 U	820 U	500 U
3-Nitroaniline	NA	2,700 U	NA	NA	NA	NA	NA	NA	410 U	NA	NA	NA	NA	NA	NA	NA
Acenaphthene	NA	530 U	NA	480 U	NA	NA	59 U	NA	82 U	NA	180 U	NA	250 U	440 U	820 U	500 U
2,4-Dinitrophenol	NA	5,300 U	NA	NA	NA	NA	NA	NA	820 U	NA	NA	NA	NA	NA	NA	NA
4-Nitrophenol	NA	2,700 U	NA	NA	NA	NA	NA	NA	410 U	NA	NA	NA	NA	NA	NA	NA
Dibenzofuran	NA	530 U	NA	480 U	NA	NA	59 U	NA	82 U	NA	180 U	NA	250 U	440 U	820 U	500 U
2,6-Dinitrotoluene	NA	2,700 U	NA	NA	NA	NA	NA	NA	410 U	NA	NA	NA	NA	NA	NA	NA
2,4-Dinitrotoluene	NA	2,700 U	NA	NA	NA	NA	NA	NA	410 U	NA	NA	NA	NA	NA	NA	NA
Diethylphthalate	NA	530 U	NA	480 U	NA	NA	59 U	NA	82 U	NA	180 U	NA	620 U	1100 U	820 U	500 U
4-Chlorophenyl-phenylether	NA	530 U	NA	NA	NA	NA	NA	NA	82 U	NA	NA	NA	NA	NA	NA	NA
Fluorene	NA	530 U	NA	480 U	NA	NA	59 U	NA	82 U	NA	180 U	NA	250 U	440 U	820 U	500 U
4-Nitroaniline	NA	2,700 U	NA	NA	NA	NA	NA	NA	410 U	NA	NA	NA	NA	NA	NA	NA

TABLE 11
STORM DRAIN MANHOLE SOLIDS AND SEDIMENT TRAP ANALYTICAL DATA
NORTH BOEING FIELD

SPU Sample ID:	**SL4-T3**	SL4-T3	SL4-T3	SL4-T3	SL4-T3	SL4-T3	SL4-T3	SL4-T3	SL4-T3	SL4-T3	SL4-T3	SL4-T3	SL4-T3	SL4-T3	SL4-T3	SL4-T3
Boeing Manhole No.	MH364	MH364	MH364	MH364	MH364	MH364	MH364	MH364	MH364	MH364	MH364	MH364	MH364	MH364	MH364	MH364
Lab ID:	IK38G	JE01C	KA63A	KK75C/KL08B	KY79E	LV54C	MN63D	NI22D	OC25B	OU11D	QS17C	SQ45C	UR61D	WP79C	YI11C	AFC4C
Sample Type:	Sed. Trap	Sed. Trap	Sed. Trap	Sed. Trap	Sed. Trap	Sed. Trap	Sed. Trap	Sed. Trap	Sed. Trap	Sed. Trap	Sed. Trap	Sed. Trap	Sed. Trap	Sed. Trap	Sed. Trap	Sed. Trap
Date Deployed:	3/7/2005	8/11/2005	3/16/2006	10/11/2006	1/8/2007	5/14/2007	10/29/2007	3/18/2008	7/30/2008	12/3/2008	4/6/2009	11/12/2010	4/5/2011	4/24/2012	5/13/2013	4/25/2014
Date Collected:	8/11/2005	3/16/2006	10/11/2006	1/8/2007	5/14/2007	10/29/2007	3/18/2008	7/30/2008	12/3/2008	4/6/2009	4/8/2010	4/5/2011	04/24/2012	5/13/2013	4/25/2014	4/28/2015
4,6-Dinitro-2-Methylphenol	NA	5,300 U	NA	NA	NA	NA	NA	NA	820 U	NA	NA	NA	NA	NA	NA	NA
N-Nitrosodiphenylamine	NA	530 U	NA	480 U	NA	NA	59 U	NA	82 U	NA	180 U	NA	250 U	440 U	820 U	500 U
4-Bromophenyl-phenylether	NA	530 U	NA	NA	NA	NA	NA	NA	82 U	NA	NA	NA	NA	NA	NA	NA
Hexachlorobenzene	NA	530 U	NA	480 U	NA	NA	59 U	NA	82 U	NA	180 U	NA	250 U	440 U	820 U	500 U
Pentachlorophenol	NA	2,700 U	NA	2,400 U	NA	NA	300 U	NA	410 U	NA	910 U	NA	2,500 UJ	4400 U	4100 UJ	2500 U
Phenanthrene	NA	1,800	NA	2,000	NA	NA	300	NA	82 U	NA	760	NA	1,200	630	820	400 J
Carbazole	NA	530 U	NA	NA	NA	NA	NA	NA	82 U	NA	NA	NA	NA	NA	NA	NA
Anthracene	NA	530 U	NA	480 U	NA	NA	63	NA	82 U	NA	180 U	NA	250 U	440 U	820 U	500 U
Di-n-Butylphthalate	NA	530 U	NA	480 U	NA	NA	59 U	NA	82 U	NA	660	NA	170 J	440 U	820 U	500 U
Fluoranthene	NA	4,800	NA	4,700	NA	NA	690	NA	100	NA	1,800	NA	2,500	1100	1600	750
Pyrene	NA	2,700	NA	2,900	NA	NA	480	NA	90	NA	1,100	NA	2,100	900	1500	650
Butylbenzylphthalate	NA	530 U	NA	480 U	NA	NA	59 U	NA	82 U	NA	180 U	NA	170 J	440 U	820 U	500 U
3,3'-Dichlorobenzidine	NA	2,700 U	NA	NA	NA	NA	NA	NA	410 U	NA	NA	NA	NA	NA	NA	NA
Benzo(a)anthracene	NA	1,200	NA	1,300	NA	NA	210	NA	82 U	NA	440	NA	670	330 J	500 J	170 J
bis(2-Ethylhexyl)phthalate	NA	4,800	NA	3,600	NA	NA	490	NA	340	NA	4,000	NA	5,700	4900	13000	3200
Chrysene	NA	2,600	NA	2,600	NA	NA	390	NA	84	NA	1,100	NA	1,900	790	1300	620
Di-n-Octyl phthalate	NA	23,000	NA	11,000	NA	NA	1,600	NA	2,000	NA	20,000	NA	17,000	18000	20000	10000
Benzo(b)fluoranthene	NA	2,600	NA	3,000	NA	NA	500	NA	82 U	NA	810	NA	NA	NA	NA	NA
Benzo(k)fluoranthene	NA	1,700	NA	1,700	NA	NA	240	NA	82 U	NA	810	NA	NA	NA	NA	NA
Total Benzofluoranthenes	NA	NA	NA	NA	NA	NA	NA	NA	NA	NA	NA	NA	3,000	1300	2,300	840 J
Benzo(a)pyrene	NA	1,500	NA	1,900	NA	NA	310	NA	82 U	NA	670	NA	1,100	460	950	270 J
Indeno(1,2,3-cd)pyrene	NA	930	NA	1,400	NA	NA	220	NA	82 U	NA	480	NA	1,000	440	500 J	270 J
Dibenz(a,h)anthracene	NA	530 U	NA	480 U	NA	NA	60	NA	82 U	NA	180 J	NA	360	440 U	820 U	500 U
Benzo(g,h,i)perylene	NA	950	NA	1,500	NA	NA	220	NA	82 U	NA	550	NA	1,100	610	620 J	270 J
1-Methylnaphthalene	NA	NA	NA	NA	NA	NA	59 U	NA	82 U	NA	180 U	NA	250 U	440 U	820 U	500 U
CONVENTIONAL PARAMETERS (%)																
Total Solids (EPA 160.3, SM2540G) (%)	NA	13.40 J	4.93	40.80	NA	NA	NA	NA	NA	NA	17.50	31.90	18.00	27.42	30.30	41.89
Total Organic Carbon (EPA 9060M, Plumb 1981) (%)	NA	5.80	NA	2.38	NA	NA	NA	NA	NA	NA	NA	3.14	7.67	6.13	3.57	3.37
Reported as Dry Wt	P	P,S,T,M	P,M	P,S,M	P						P,S	P	P,S,T,M	P,S,T,M	P,S,T,M	P,S,T,M
Reported as As Received						P,M	P,S	P	P,S	P						
Not Analyzed Due to Low Sample Volume	S,T,M		S,T	T	S,T,M	S,T	T,M	S,T,M	T,M	S,T,M	T,M	S,T,M				

TABLE 11
STORM DRAIN MANHOLE SOLIDS AND SEDIMENT TRAP ANALYTICAL DATA
NORTH BOEING FIELD

SPU Sample ID:	**SL4-T4**	SL4-T4	SL4-T4	SL4-T4	SL4-T4	SL4-T4	SL4-T4	SL4-T4	SL4-T4	SL4-T4	SL4-T4	SL4-T4	SL4-T4	SL4-T4	SL4-T4	SL4-T4	SL4-T4
Boeing Manhole No.	MH221A	MH221A	MH221A	MH221A	MH221A	MH221A	MH221A	MH221A	MH221A	MH221A	MH221A	MH221A	MH221A	MH221A	MH221A	MH221A	MH221A
Lab ID:	HS89B	IK38B	JE01D	KA63B	KK75D/KL08C	KY79F	LV54D	MN63E	NI22E	OC25E	OU11E	QS17D	SQ45D	UR61F	WP79E	YI11D	AFC4D
Sample Type:	Grab	Sed. Trap	Sed. Trap	Sed. Trap	Sed. Trap	Sed. Trap	Sed. Trap	Sed. Trap	Sed. Trap	Sed. Trap	Sed. Trap	Sed. Trap	Sed. Trap	Sed. Trap	Sed. Trap	Sed. Trap	Sed. Trap
Date Deployed:		3/8/2005	8/11/2005	3/16/2006	10/11/2006	1/8/2007	5/14/2007	10/29/2007	3/18/2008	7/30/2008	12/3/2008	4/6/2009	11/12/2010	4/5/2011	4/24/2012	5/13/2013	4/25/2014
Date Collected:	2/16/2005	8/11/2005	3/16/2006	10/11/2006	1/8/2007	5/14/2007	10/29/2007	3/18/2008	7/30/2008	12/3/2008	4/6/2009	4/8/2010	4/5/2011	04/24/2012	5/13/2013	04/25/2014	4/28/2015
TOTAL METALS (mg/kg-dry)																	
(Method 6000-7000 series)																	
Arsenic	12	NA	20	70	10	NA	50	18	NA	NA	5.0 U	30	NA	30	20	30	20
Copper	38.5	NA	134	271	125	NA	329	85.8	NA	NA	61.4	334	NA	408	365	425	419
Lead	50	NA	190	330	175	NA	288	115	NA	NA	83	382	NA	399	288	347	331
Mercury	0.09	NA	0.4	0.6	0.4	NA	0.5	0.21	NA	NA	0.11	0.37	NA	0.47	0.33	0.46	0.4
Zinc	332	NA	733	2,460	828	NA	1,990	1,080	NA	NA	317	1,880	NA	1,920	1460	2030	2010
NWTPH-Dx (mg/kg)																	
Diesel-Range Hydrocarbons	120	NA	580	NA	1,200	NA	NA	100	NA	NA	1,300	380	NA	540	NA	950	NA
Motor Oil-Range Hydrocarbons	210	NA	1,800	NA	1,300	NA	NA	420	NA	NA	3,400	1,900	NA	1,700	NA	3200	NA
PCBs (µg/kg)																	
(PSDDA PCB SW8082)																	
Aroclor 1016	120 U	9.8 U	95 U	94 U	96 U	160 U	45 U	75 U	30 U	50 U	82 U	70 U	28 U	400 U	47 U	98 U	80 U
Aroclor 1242	120 U	9.8 U	95 U	120 U	96 U	160 U	45 U	75 U	30 U	50 U	82 U	70 U	28 U	400 U	47 U	98 U	80 U
Aroclor 1248	120 U	9.8 U	100 U	140 U	96 U	160 U	45 U	75 U	200 U	50 U	82 U	210 U	110 U	400 U	47 U	120 U	200 U
Aroclor 1254	960	1,900 P	750	580	1,000	790	1,200	240	510 J	100	160	640	430	690	520	930	730
Aroclor 1260	530	850	340	360	700	800	680	200	270 J	140	180	430	340	690	290	560	450
Aroclor 1221	120 U	9.8 U	95 U	23 U	96 U	160 U	45 U	75 U	30 U	50 U	82 U	70 U	28 U	400 U	47 U	98 U	80 U
Aroclor 1232	120 U	9.8 U	95 U	94 U	96 U	160 U	45 U	75 U	30 U	50 U	82 U	70 U	28 U	400 U	47 U	98 U	80 U
Aroclor 1262	NA	NA	NA	NA	NA	NA	NA	NA	30 U	NA	NA	NA	NA	400 U	47 U	98 U	80 U
Aroclor 1268	NA	NA	NA	NA	NA	NA	NA	NA	30 U	NA	NA	NA	NA	NA	NA	NA	NA
Total PCBs	1490	2750	1090	940	1700	1590	1,880	440 *	780 * J	240 *	340 *	1070	770	1380	810	1490	1180
SEMIVOLATILES (µg/kg-dry)																	
(PSDDA SVOCS SW8270D)																	
Phenol	58 U	220	550 U	NA	280 U	NA	NA	98 U	470 U	260 U	390	390 U	NA	470	1400 U	1800 U	2000 U
Bis-(2-Chloroethyl) Ether	58 U	210 U	550 U	NA	NA	NA	NA	NA	NA	260 U	NA	NA	NA	NA	NA	NA	NA
2-Chlorophenol	58 U	210 U	550 U	NA	NA	NA	NA	NA	NA	260 U	NA	NA	NA	NA	NA	NA	NA
1,3-Dichlorobenzene	58 U	210 U	550 U	NA	280 U	NA	NA	98 U	470 U	260 U	370 U	390 U	NA	450 U	1400 U	1800 U	2000 U
1,4-Dichlorobenzene	58 U	210 U	550 U	NA	280 U	NA	NA	98 U	470 U	260 U	370 U	390 U	NA	450 U	1400 U	1800 U	2000 U
Benzyl Alcohol	58 U	210 U	550 U	NA	280 U	NA	NA	98 U	470 U	260 U	370 U	390 U	NA	450	1400 U	1800 U	2000 U
1,2-Dichlorobenzene	58 U	210 U	550 U	NA	280 U	NA	NA	98 U	470 U	260 U	370 U	390 U	NA	450 U	1400 U	1800 U	2000 U
2-Methylphenol	58 U	240	550 U	NA	280 U	NA	NA	98 U	470 U	260 U	370 U	390 U	NA	450 U	1400 U	1800 U	2000 U
2,2'-Oxybis(1-Chloropropane)	58 U	210 U	550 U	NA	NA	NA	NA	NA	NA	260 U	NA	NA	NA	NA	NA	NA	NA
4-Methylphenol	58 U	210 U	550 U	NA	280 U	NA	NA	98 U	470 U	260 U	520	390 U	NA	450 J	1400 U	1800 U	2000 U
N-Nitroso-Di-N-Propylamine	290 U	1,000 U	2800 U	NA	NA	NA	NA	NA	NA	1,300 U	NA	NA	NA	NA	NA	NA	NA
Hexachloroethane	58 U	210 U	550 U	NA	280 U	NA	NA	98 U	470 U	260 U	370 U	390 U	NA	450 U	1400 U	1800 U	2000 U
Nitrobenzene	58 U	210 U	550 U	NA	NA	NA	NA	NA	NA	260 U	NA	NA	NA	NA	NA	NA	NA
Isophorone	58 U	210 U	550 U	NA	NA	NA	NA	NA	NA	260 U	NA	NA	NA	NA	NA	NA	NA
2-Nitrophenol	290 U	1,000 U	2,800 U	NA	NA	NA	NA	NA	NA	1,300 U	NA	NA	NA	NA	NA	NA	NA
2,4-Dimethylphenol	58 U	210 U	550 U	NA	280 U	NA	NA	98 U	470 U	260 U	370 U	390 U	NA	900 U	2800 U	9200 U	9900 U
Benzoic Acid	580 U	2,100 U	5,500 U	NA	2,800 U	NA	NA	980 U	4,700 U	2,600 U	3,400 J	3,900 U	NA	9,000 UJ	28000 U	18000 UJ	20000 U
bis(2-Chloroethoxy) Methane	58 U	210 U	550 U	NA	NA	NA	NA	NA	NA	260 U	NA	NA	NA	NA	NA	NA	NA
2,4-Dichlorophenol	290 U	1,000 U	2,800 U	NA	NA	NA	NA	NA	NA	1,300 U	NA	NA	NA	NA	NA	NA	NA
1,2,4-Trichlorobenzene	58 U	210 U	550 U	NA	280 U	NA	NA	98 U	470 U	260 U	370 U	390 U	NA	450 U	1400 U	1800 U	2000 U
Naphthalene	58 U	670	550 U	NA	280 U	NA	NA	98 U	470 U	260 U	370 U	390 U	NA	450 U	1400 U	1800 U	2000 U
4-Chloroaniline	290 U	1,000 U	2,800 U	NA	NA	NA	NA	NA	NA	1,300 U	NA	NA	NA	NA	NA	NA	NA
Hexachlorobutadiene	58 U	210 U	550 U	NA	280 U	NA	NA	98 U	470 U	260 U	370 U	390 U	NA	2,200 U	1400 U	1800 U	2000 U
4-Chloro-3-methylphenol	290 U	1,000 U	2,800 U	NA	NA	NA	NA	NA	NA	1,300 U	NA	NA	NA	NA	NA	NA	NA
2-Methylnaphthalene	58 U	4,000	550 U	NA	280 U	NA	NA	98 U	470 U	260 U	370 U	390 U	NA	450 U	1400 U	1800 U	2000 U
Hexachlorocyclopentadiene	290 U	1,000 U	2,800 U	NA	NA	NA	NA	NA	NA	1,300 U	NA	NA	NA	NA	NA	NA	NA
2,4,6-Trichlorophenol	290 U	1,000 U	2,800 U	NA	NA	NA	NA	NA	NA	1,300 U	NA	NA	NA	NA	NA	NA	NA
2,4,5-Trichlorophenol	290 U	1,000 U	2,800 U	NA	NA	NA	NA	NA	NA	1,300 U	NA	NA	NA	NA	NA	NA	NA
2-Chloronaphthalene	58 U	210 U	550 U	NA	NA	NA	NA	NA	NA	260 U	NA	NA	NA	NA	NA	NA	NA
2-Nitroaniline	290 U	1,000 U	2,800 U	NA	NA	NA	NA	NA	NA	1,300 U	NA	NA	NA	NA	NA	NA	NA
Dimethylphthalate	58 U	210 U	550 U	NA	280 U	NA	NA	98 U	470 U	260 U	370 U	390 U	NA	450 U	1400 U	1800 U	2000 U
Acenaphthylene	58 U	210 U	550 U	NA	280 U	NA	NA	98 U	470 U	260 U	370 U	390 U	NA	450 U	1400 U	1800 U	2000 U
3-Nitroaniline	290 U	1,000 U	2,800 U	NA	NA	NA	NA	NA	NA	1,300 U	NA	NA	NA	NA	NA	NA	NA
Acenaphthene	58 U	1,300	550 U	NA	280 U	NA	NA	98 U	470 U	260 U	370 U	390 U	NA	450 U	1400 U	2800	2000 U
2,4-Dinitrophenol	580 U	2,100 U	5,500 U	NA	NA	NA	NA	NA	NA	2,600 U	NA	NA	NA	NA	NA	NA	NA
4-Nitrophenol	290 U	1,000 U	2,800 U	NA	NA	NA	NA	NA	NA	1,300 U	NA	NA	NA	NA	NA	NA	NA
Dibenzofuran	58 U	740	550 U	NA	280 U	NA	NA	98 U	470 U	260 U	370 U	390 U	NA	290 J	1400 U	1800 U	2000 U
2,6-Dinitrotoluene	290 U	1,000 U	2,800 U	NA	NA	NA	NA	NA	NA	1,300 U	NA	NA	NA	NA	NA	NA	NA
2,4-Dinitrotoluene	290 U	1,000 U	2,800 U	NA	NA	NA	NA	NA	NA	1,300 U	NA	NA	NA	NA	NA	NA	NA
Diethylphthalate	58 U	210 U	550 U	NA	280 U	NA	NA	98 U	470 U	260 U	370 U	390 U	NA	1,100 U	3500 U	1800 U	2000 U
4-Chlorophenyl-phenylether	58 U	210 U	550 U	NA	NA	NA	NA	NA	NA	260 U	NA	NA	NA	NA	NA	NA	NA
Fluorene	73	1,000	550 U	NA	340	NA	NA	98 U	470 U	260 U	370 U	240 J	NA	270 J	1400 U	1000 J	2000 U
4-Nitroaniline	290 U	1,000 U	2,800 U	NA	NA	NA	NA	NA	NA	1,300 U	NA	NA	NA	NA	NA	NA	NA

TABLE 11
STORM DRAIN MANHOLE SOLIDS AND SEDIMENT TRAP ANALYTICAL DATA
NORTH BOEING FIELD

SPU Sample ID:	**SL4-T4**	SL4-T4	SL4-T4	SL4-T4	SL4-T4	SL4-T4	SL4-T4	SL4-T4	SL4-T4	SL4-T4	SL4-T4	SL4-T4	SL4-T4	SL4-T4	SL4-T4	SL4-T4	SL4-T4
Boeing Manhole No.	MH221A	MH221A	MH221A	MH221A	MH221A	MH221A	MH221A	MH221A	MH221A	MH221A	MH221A	MH221A	MH221A	MH221A	MH221A	MH221A	MH221A
Lab ID:	HS89B	IK38B	JE01D	KA63B	KK75D/KL08C	KY79F	LV54D	MN63E	NI22E	OC25E	OU11E	QS17D	SQ45D	UR61F	WP79E	YI11D	AFC4D
Sample Type:	Grab	Sed. Trap	Sed. Trap	Sed. Trap	Sed. Trap	Sed. Trap	Sed. Trap	Sed. Trap	Sed. Trap	Sed. Trap	Sed. Trap	Sed. Trap	Sed. Trap	Sed. Trap	Sed. Trap	Sed. Trap	Sed. Trap
Date Deployed:		3/8/2005	8/11/2005	3/16/2006	10/11/2006	1/8/2007	5/14/2007	10/29/2007	3/18/2008	7/30/2008	12/3/2008	4/6/2009	11/12/2010	4/5/2011	4/24/2012	5/13/2013	4/25/2014
Date Collected:	2/16/2005	8/11/2005	3/16/2006	10/11/2006	1/8/2007	5/14/2007	10/29/2007	3/18/2008	7/30/2008	12/3/2008	4/6/2009	4/8/2010	4/5/2011	04/24/2012	5/13/2013	04/25/2014	4/28/2015
4,6-Dinitro-2-Methylphenol	580 U	2,100 U	5,500 U	NA	NA	NA	NA	NA	NA	2,600 U	NA	NA	NA	NA	NA	NA	NA
N-Nitrosodiphenylamine	58 U	210 U	550 U	NA	280 U	NA	NA	98 U	470 U	260 U	370 U	390 U	NA	450 U	1400 U	1800 U	2000 U
4-Bromophenyl-phenylether	58 U	210 U	550 U	NA	NA	NA	NA	NA	NA	260 U	NA	NA	NA	NA	NA	NA	NA
Hexachlorobenzene	58 U	210 U	550 U	NA	280 U	NA	NA	98 U	470 U	260 U	370 U	390 U	NA	450 U	1400 U	1800 U	2000 U
Pentachlorophenol	290 U	1,000 U	2,800 U	NA	1,400 U	NA	NA	490 U	2,300 U	1,300 U	1,900 U	2,000 U	NA	4,500 UJ	14000 U	9200 UJ	9900 U
Phenanthrene	300	8,600	2,800	NA	4,100	NA	NA	560	820	2,800	1,800	4,300	NA	5,700	4000	14000	3700
Carbazole	58 U	1,000	570	NA	NA	NA	NA	NA	NA	390	NA	NA	NA	NA	NA	NA	NA
Anthracene	71	1,500	550 U	NA	500	NA	NA	98 U	470 U	260 U	370 U	420	NA	450	1400 U	3700	2000 U
Di-n-Butylphthalate	58 U	260	550 U	NA	340	NA	NA	98 U	470 U	260 U	370 U	890	NA	810	1400 U	1000 J	1900 J
Fluoranthene	920	8,900	6,100	NA	8,700	NA	NA	1,300	1,900	3,800	4,200	11,000	NA	12,000	8000	38000	8000
Pyrene	870	6,800	3,500	NA	5,600	NA	NA	860	1,400	2,500	2,600	5,200	NA	10,000	6100	42000	7000
Butylbenzylphthalate	58 U	210 U	550 U	NA	440	NA	NA	98 U	470 U	260 U	370 U	320 J	NA	490 J	770 J	1800 U	2000 U
3,3'-Dichlorobenzidine	290 U	1,000 U	2,800 U	NA	NA	NA	NA	NA	NA	1,300 U	NA	NA	NA	NA	NA	NA	NA
Benzo(a)anthracene	280	3,000	1,600	NA	2,300	NA	NA	340	470 U	550	700	2,300	NA	2,600	2000	27000	3000
bis(2-Ethylhexyl)phthalate	760	6,000	7,400	NA	9,000	NA	NA	2,300	2,800	5,500	19,000	18,000	NA	30,000	27000	51000	21000
Chrysene	490	4,100	3,100	NA	4,400	NA	NA	770	1,100	1,800	2,600	6,200	NA	8,300	5400	34000	6900
Di-n-Octyl phthalate	120	3,700	6,900	NA	11,000	NA	NA	2,400	3,300	3,600	22,000	22,000	NA	38,000	41000	47000	41000
Benzo(b)fluoranthene	710	4,600	2,800	NA	5,200	NA	NA	1,000	1,400	1,100	2,200	4,900	NA	NA	NA	NA	NA
Benzo(k)fluoranthene	400	2,600	2,200	NA	4,400	NA	NA	570	910	1,600	2,200	4,900	NA	NA	NA	NA	NA
Total Benzofluoranthenes	NA	NA	NA	NA	NA	NA	NA	NA	NA	NA	NA	NA	NA	14,000	11000	44000	8800
Benzo(a)pyrene	400	3,400	2,000	NA	3,300	NA	NA	600	830	920	1,500	4,200	NA	5,000	3600	28000	3300
Indeno(1,2,3-cd)pyrene	260	1,900	1,000	NA	1,400	NA	NA	450	830	730	1,400	2,800	NA	4,900	3400	9400	2500
Dibenz(a,h)anthracene	58 U	730	550 U	NA	280 U	NA	NA	200	470 U	260 U	410	1,000	NA	1,700	1000 J	3300	2000 U
Benzo(g,h,i)perylene	230	1,600	990	NA	1,400	NA	NA	470	960	810	1,600	3,000	NA	5,600	4400	9500 J	2300
1-Methylnaphthalene	NA	NA	NA	NA	NA	NA	NA	98 U	470 U	260 U	370 U	390 U	NA	450 U	1400 U	1800 U	2000 U
CONVENTIONAL PARAMETERS (%)																	
Total Solids (EPA 160.3, SM2540G) (%)	75.70	NA	41.60 J	16.2	42.30	NA	NA	50.40	NA	NA	NA	28.10	29.60	24.50	26.78	30.01	25.07
Total Organic Carbon (EPA 9060M, Plumb 1981) (%)	1.00	NA	5.41	NA	4.34	NA	NA	4.38	NA	NA	NA	12.1	19.3	17.6	7.46	11.2	17.7
Reported as Dry Wt		P,S	P,S,T,M	P,M	P,S,T,M	P	P,M	M				P,S,T,M	P	P,S,T,M	P,S,T,M	P,S,T,M	P,S,M
Reported as As Received								P,S,T	P,S	P,S	P,S,T,M						
Not Analyzed Due to Low Sample Volume		T,M		S,T		S,T,M	S,T		T,M	T,M			S,T,M				

TABLE 11
STORM DRAIN MANHOLE SOLIDS AND SEDIMENT TRAP ANALYTICAL DATA
NORTH BOEING FIELD

SPU Sample ID:	**SL4-T4A**	SL4-T4A	SL4-T4A	SL4-T4A	SL4-T4A	SL4-T4A	SL4-T4A	SL4-T4A	SL4-T4A	SL4-T4A	SL4-T4A	SL4-T4A	SL4-T4A	SL4-T4A	SL4-T4A	SL4-T4A	SL4-T4A
Boeing Manhole No.	MH229A	MH229A	MH229A	MH229A	MH229A	MH229A	MH229A	MH229A	MH229A	MH229A	MH229A	MH229A	MH229A	MH229A	MH229A	MH229A	MH229A
Lab ID:	HS89D	IK38D	JE01F	KA63G	KK75E/KL08D	KY79G	LV54E	MN63G	NI22G	OC25G	OU11G	QS17F	SQ45G	UR61G	WP79D	YI11E	AFC4E
Sample Type:	Grab	Sed. Trap	Sed. Trap	Sed. Trap	Sed. Trap	Sed. Trap	Sed. Trap	Sed. Trap	Sed. Trap	Sed. Trap	Sed. Trap	Sed. Trap	Sed. Trap	Sed. Trap	Sed. Trap	Sed. Trap	Sed. Trap
Date Deployed:		3/8/2005	8/11/2005	3/16/2006	10/11/2006	1/8/2007	5/14/2007	10/29/2007	3/18/2008	7/30/2008	12/3/2008	4/6/2009	11/12/2010	4/5/2011	4/24/2012	5/13/2013	4/25/2014
Date Collected:	2/16/2005	8/11/2005	3/16/2006	10/11/2006	1/8/2007	5/14/2007	10/29/2007	3/18/2008	7/30/2008	12/3/2008	4/6/2009	4/8/2010	4/5/2011	4/24/2012	5/13/2013	04/25/2014	4/28/2015
TOTAL METALS (mg/kg-dry)																	
(Method 6000-7000 series)																	
Arsenic	30	16	13	20	12	NA	6	NA	NA	NA	NA	14	NA	20	20	30	20 U
Copper	85.5	94.3	75.2	262	76.0	NA	61.0	NA	NA	NA	NA	248 J	NA	419	356	367	375
Lead	155	144	116	414	121	NA	77	NA	NA	NA	NA	376 J	NA	506	313	403	322
Mercury	0.07	0.19	0.10	0.3	0.09	NA	0.07	NA	NA	NA	NA	0.23	NA	0.34	0.25	0.32	0.30
Zinc	1,130	460	337	1,220	433	NA	309	NA	NA	NA	NA	551	NA	1,430	1210	1590	1430
NWTPH-Dx (mg/kg)																	
Diesel-Range Hydrocarbons	200	100	180	NA	140	NA	NA	NA	NA	NA	NA	210	NA	250	NA	450	NA
Motor Oil-Range Hydrocarbons	1,100	410	1,100	NA	600	NA	NA	NA	NA	NA	NA	1,400	NA	1,200	NA	2100	NA
PCBs (µg/kg)																	
(PSDDA PCB SW8082)																	
Aroclor 1016	140 U	9.8 U	9.9 U	81 U	9.8 U	(a)	11 U	10 U	15 U	11 U	10 U	53 U	22 U	46 U	9.6 U	10 U	87 U
Aroclor 1242	140 U	9.8 U	9.9 U	81 U	9.8 U	(a)	11 U	10 U	15 U	11 U	10 U	53 U	22 U	46 U	9.6 U	10 U	87 U
Aroclor 1248	140 U	9.8 U	9.9 U	81 U	9.8 U	(a)	22	10 U	15 U	11 U	10 U	270 U	22 U	46 U	19 U	35 U	87 U
Aroclor 1254	3,700	290 P	39	83	41	(a)	49	16	28	11 U	10 U	510	67	100	80	120	170 P
Aroclor 1260	1,900	160	75	160	62	(a)	28	26	30	11 U	10 U	170	87	160	76	120	170 P
Aroclor 1221	140 U	9.8 U	9.9 U	81 U	9.8 U	(a)	11 U	10 U	15 U	11 U	10 U	53 U	22 U	46 U	9.6 U	10 U	87 U
Aroclor 1232	140 U	9.8 U	9.9 U	81 U	9.8 U	(a)	11 U	10 U	15 U	11 U	10 U	53 U	28 U	46 U	9.6 U	10 U	87 U
Aroclor 1262	NA	NA	NA	NA	NA	NA	NA	NA	15 U	NA	NA	NA	NA	46 U	9.6 U	10 U	87 U
Aroclor 1268	NA	NA	NA	NA	NA	NA	NA	NA	15 U	NA	NA	NA	NA	NA	NA	NA	NA
Total PCBs	5600	450	114	243	103	(a)	99 *	42 *	58 *	11 * U	10 * U	680	154	260	156	240	340 P
SEMIVOLATILES (µg/kg-dry)																	
(PSDDA SVOCS SW8270D)																	
Phenol	220 U	160 U	600 U	NA	160 U	NA	NA	61 U	530 U	NA	500 U	250 U	NA	340 J	1500 U	1400 U	2000 U
Bis-(2-Chloroethyl) Ether	220 U	160 U	600 U	NA	NA	NA	NA	NA	NA	NA	NA	NA	NA	NA	NA	NA	NA
2-Chlorophenol	220 U	160 U	600 U	NA	NA	NA	NA	NA	NA	NA	NA	NA	NA	NA	NA	NA	NA
1,3-Dichlorobenzene	220 U	160 U	600 U	NA	160 U	NA	NA	61 U	530 U	NA	500 U	250 U	NA	480 U	1500 U	1400 U	2000 U
1,4-Dichlorobenzene	220 U	160 U	600 U	NA	160 U	NA	NA	61 U	530 U	NA	500 U	250 U	NA	480 U	1500 U	1400 U	2000 U
Benzyl Alcohol	220 U	160 U	600 U	NA	160 U	NA	NA	61 U	530 U	NA	500 U	250 U	NA	480 U	1500 U	1400 U	2000 U
1,2-Dichlorobenzene	220 U	160 U	600 U	NA	160 U	NA	NA	61 U	530 U	NA	500 U	250 U	NA	480 U	1500 U	1400 U	2000 U
2-Methylphenol	220 U	160 U	600 U	NA	160 U	NA	NA	61 U	530 U	NA	500 U	250 U	NA	480 U	1500 U	1400 U	2000 U
2,2'-Oxybis(1-Chloropropane)	220 U	160 U	600 U	NA	NA	NA	NA	NA	NA	NA	NA	NA	NA	NA	NA	NA	NA
4-Methylphenol	220 U	160 U	600 U	NA	160 U	NA	NA	61 U	530 U	NA	380 J	270	NA	1,200	1500 U	1400 U	2000 U
N-Nitroso-Di-N-Propylamine	1,100 U	790 U	3,000 U	NA	NA	NA	NA	NA	NA	NA	NA	NA	NA	NA	NA	NA	NA
Hexachloroethane	220 U	160 U	600 U	NA	160 U	NA	NA	61 U	530 U	NA	500 U	250 U	NA	480 U	1500 U	1400 U	2000 U
Nitrobenzene	220 U	160 U	600 U	NA	NA	NA	NA	NA	NA	NA	NA	NA	NA	NA	NA	NA	NA
Isophorone	220 U	160 U	600 U	NA	NA	NA	NA	NA	NA	NA	NA	NA	NA	NA	NA	NA	NA
2-Nitrophenol	1,100 U	790 U	3,000 U	NA	NA	NA	NA	NA	NA	NA	NA	NA	NA	NA	NA	NA	NA
2,4-Dimethylphenol	220 U	160 U	600 U	NA	160 U	NA	NA	61 U	530 U	NA	500 U	250 U	NA	960 U	3000 U	6800 U	9800 U
Benzoic Acid	2,200 U	1,600 U	6,000 U	NA	1,600 U	NA	NA	610 U	5,300 U	NA	5,000 U	2,500 U	NA	9,600 UJ	30000 U	14000 UJ	20000 U
bis(2-Chloroethoxy) Methane	220 U	160 U	600 U	NA	NA	NA	NA	NA	NA	NA	NA	NA	NA	NA	NA	NA	NA
2,4-Dichlorophenol	1,100 U	790 U	3,000 U	NA	NA	NA	NA	NA	NA	NA	NA	NA	NA	NA	NA	NA	NA
1,2,4-Trichlorobenzene	220 U	160 U	600 U	NA	160 U	NA	NA	61 U	530 U	NA	500 U	250 U	NA	480 U	1500 U	1400 U	2000 U
Naphthalene	220 U	160 U	600 U	NA	160 U	NA	NA	61 U	530 U	NA	500 U	250 U	NA	480 U	1500 U	1400 U	2000 U
4-Chloroaniline	1,100 U	790 U	3,000 U	NA	NA	NA	NA	NA	NA	NA	NA	NA	NA	NA	NA	NA	NA
Hexachlorobutadiene	220 U	160 U	600 U	NA	160 U	NA	NA	61 U	530 U	NA	500 U	250 U	NA	2,400 U	1500 U	1400 U	2000 U
4-Chloro-3-methylphenol	1,100 U	790 U	3,000 U	NA	NA	NA	NA	NA	NA	NA	NA	NA	NA	NA	NA	NA	NA
2-Methylnaphthalene	660	160 U	600 U	NA	160 U	NA	NA	61 U	530 U	NA	500 U	250 U	NA	480 U	1500 U	1400 U	2000 U
Hexachlorocyclopentadiene	1,100 U	790 U	3,000 U	NA	NA	NA	NA	NA	NA	NA	NA	NA	NA	NA	NA	NA	NA
2,4,6-Trichlorophenol	1,100 U	790 U	3,000 U	NA	NA	NA	NA	NA	NA	NA	NA	NA	NA	NA	NA	NA	NA
2,4,5-Trichlorophenol	1,100 U	790 U	3,000 U	NA	NA	NA	NA	NA	NA	NA	NA	NA	NA	NA	NA	NA	NA
2-Chloronaphthalene	220 U	160 U	600 U	NA	NA	NA	NA	NA	NA	NA	NA	NA	NA	NA	NA	NA	NA
2-Nitroaniline	1,100 U	790 U	3,000 U	NA	NA	NA	NA	NA	NA	NA	NA	NA	NA	NA	NA	NA	NA
Dimethylphthalate	220 U	160 U	600 U	NA	160 U	NA	NA	61 U	530 U	NA	500 U	250 U	NA	480 U	1500 U	1400 U	2000 U
Acenaphthylene	220 U	160 U	600 U	NA	160 U	NA	NA	61 U	530 U	NA	500 U	250 U	NA	480 U	1500 U	1400 U	2000 U
3-Nitroaniline	1,100 U	790 U	3,000 U	NA	NA	NA	NA	NA	NA	NA	NA	NA	NA	NA	NA	NA	NA
Acenaphthene	930	160 U	600 U	NA	160 U	NA	NA	61 U	530 U	NA	500 U	170 J	NA	480 U	1500 U	1400 U	2000 U
2,4-Dinitrophenol	2,200 U	1,600 U	6,000 U	NA	NA	NA	NA	NA	NA	NA	NA	NA	NA	NA	NA	NA	NA
4-Nitrophenol	1,100 U	790 U	3,000 U	NA	NA	NA	NA	NA	NA	NA	NA	NA	NA	NA	NA	NA	NA
Dibenzofuran	560	160 U	600 U	NA	160 U	NA	NA	61 U	530 U	NA	500 U	200 J	NA	340 J	1500 U	1400 U	2000 U
2,6-Dinitrotoluene	1,100 U	790 U	3,000 U	NA	NA	NA	NA	NA	NA	NA	NA	NA	NA	NA	NA	NA	NA
2,4-Dinitrotoluene	1,100 U	790 U	3,000 U	NA	NA	NA	NA	NA	NA	NA	NA	NA	NA	NA	NA	NA	NA
Diethylphthalate	220 U	160 U	600 U	NA	160 U	NA	NA	61 U	530 U	NA	500 U	250 U	NA	1,200 U	3700 U	1400 U	2000 U
4-Chlorophenyl-phenylether	220 U	160 U	600 U	NA	NA	NA	NA	NA	NA	NA	NA	NA	NA	NA	NA	NA	NA
Fluorene	1,100	160 U	600 U	NA	160 U	NA	NA	61 U	530 U	NA	500 U	260	NA	260 J	1500 U	1400 U	2000 U
4-Nitroaniline	1,100 U	790 U	3,000 U	NA	NA	NA	NA	NA	NA	NA	NA	NA	NA	NA	NA	NA	NA

TABLE 11
STORM DRAIN MANHOLE SOLIDS AND SEDIMENT TRAP ANALYTICAL DATA
NORTH BOEING FIELD

SPU Sample ID:	**SL4-T4A**	SL4-T4A	SL4-T4A	SL4-T4A	SL4-T4A	SL4-T4A	SL4-T4A	SL4-T4A	SL4-T4A	SL4-T4A	SL4-T4A	SL4-T4A	SL4-T4A	SL4-T4A	SL4-T4A	SL4-T4A	SL4-T4A
Boeing Manhole No.	MH229A	MH229A	MH229A	MH229A	MH229A	MH229A	MH229A	MH229A	MH229A	MH229A	MH229A	MH229A	MH229A	MH229A	MH229A	MH229A	MH229A
Lab ID:	HS89D	IK38D	JE01F	KA63G	KK75E/KL08D	KY79G	LV54E	MN63G	NI22G	OC25G	OU11G	QS17F	SQ45G	UR61G	WP79D	YI11E	AFC4E
Sample Type:	Grab	Sed. Trap	Sed. Trap	Sed. Trap	Sed. Trap	Sed. Trap	Sed. Trap	Sed. Trap	Sed. Trap	Sed. Trap	Sed. Trap	Sed. Trap	Sed. Trap	Sed. Trap	Sed. Trap	Sed. Trap	Sed. Trap
Date Deployed:		3/8/2005	8/11/2005	3/16/2006	10/11/2006	1/8/2007	5/14/2007	10/29/2007	3/18/2008	7/30/2008	12/3/2008	4/6/2009	11/12/2010	4/5/2011	4/24/2012	5/13/2013	4/25/2014
Date Collected:	2/16/2005	8/11/2005	3/16/2006	10/11/2006	1/8/2007	5/14/2007	10/29/2007	3/18/2008	7/30/2008	12/3/2008	4/6/2009	4/8/2010	4/5/2011	4/24/2012	5/13/2013	04/25/2014	4/28/2015
4,6-Dinitro-2-Methylphenol	2,200 U	1,600 U	6,000 U	NA	NA	NA	NA	NA	NA	NA	NA	NA	NA	NA	NA	NA	NA
N-Nitrosodiphenylamine	220 U	160 U	600 U	NA	160 U	NA	NA	61 U	530 U	NA	500 U	250 U	NA	480 U	1500 U	1400 U	2000 U
4-Bromophenyl-phenylether	220 U	160 U	600 U	NA	NA	NA	NA	NA	NA	NA	NA	NA	NA	NA	NA	NA	NA
Hexachlorobenzene	220 U	160 U	600 U	NA	160 U	NA	NA	61 U	530 U	NA	500 U	250 U	NA	480 U	1500 U	1400 U	2000 U
Pentachlorophenol	1,100 U	790 U	3,000 U	NA	810 U	NA	NA	300 U	2,600 U	NA	2,500 U	1,300 U	NA	4,800 UJ	15000 U	6800 UJ	9800 U
Phenanthrene	8,900	1,700	1,600	NA	1,400	NA	NA	800	1,000	NA	2,300	4,900	NA	6,900	5800	3100	3200
Carbazole	1,500	370	600 U	NA	NA	NA	NA	NA	NA	NA	NA	NA	NA	NA	NA	NA	NA
Anthracene	1,200	180	600 U	NA	210	NA	NA	120	530 U	NA	500 U	680	NA	650	1500 U	1400 U	590 J
Di-n-Butylphthalate	220 U	350	600 U	NA	240	NA	NA	130	530 U	NA	420 J	320	NA	1,400	1500 U	1300 J	3200
Fluoranthene	11,000	3,100	4,200	NA	3,200	NA	NA	1,800	2,500	NA	4,800	13,000	NA	15,000	12000	6300	7000
Pyrene	7,600	2,100	2,400	NA	2,300	NA	NA	1,200	2,000	NA	3,900	7,100	NA	12,000	8900	5500	5000
Butylbenzylphthalate	220 U	160 U	600 U	NA	220	NA	NA	76	530 U	NA	500 U	630	NA	570 J	1500 U	1400 U	2000 U
3,3'-Dichlorobenzidine	1,100 U	790 U	3,000 U	NA	NA	NA	NA	NA	NA	NA	NA	NA	NA	NA	NA	NA	NA
Benzo(a)anthracene	3,000	860	1,000	NA	920	NA	NA	460	630	NA	1,100	3,900	NA	3,500	3200	1700	1500 J
bis(2-Ethylhexyl)phthalate	2,200	2,600	2,600	NA	3,700	NA	NA	1,400	1,700	NA	2,500	6,000	NA	8,100	20000	28000	33000
Chrysene	4,200	1,700	2,500	NA	2,000	NA	NA	1,100	1,600	NA	3,300	6,500	NA	9,700	7700	4700	4400
Di-n-Octyl phthalate	240	4,300	9,600	NA	7,200	NA	NA	2,600	5,900	NA	16,000	1,200	NA	30,000	50000	46000	40000
Benzo(b)fluoranthene	5,400	2,100	2,500	NA	2,300	NA	NA	1,200	2,000	NA	2,600	5,500	NA	NA	NA	NA	NA
Benzo(k)fluoranthene	3,600	1,300	1,900	NA	2,500	NA	NA	1,000	1,400	NA	3,500	5,500	NA	NA	NA	NA	NA
Total Benzofluoranthenes	NA	NA	NA	NA	NA	NA	NA	NA	NA	NA	NA	NA	NA	18,000	14000	8100	7400
Benzo(a)pyrene	3,400	1,400	1,600	NA	1,500	NA	NA	730	1,200	NA	2,100	5,700	NA	6,500	4900	3200	2600
Indeno(1,2,3-cd)pyrene	1,500	780	960	NA	670	NA	NA	560	1,200	NA	2,100	2,800	NA	6,300	4900	2200	2200
Dibenz(a,h)anthracene	220 U	160 U	600 U	NA	160 U	NA	NA	220	530 U	NA	320 J	1,200	NA	2,300	1300 J	1400 U	2000 U
Benzo(g,h,i)perylene	1,300	710	900	NA	690	NA	NA	590	1,200	NA	2,300	2,900	NA	7,000	5800	2400 J	2300
1-Methylnaphthalene	NA	NA	NA	NA	NA	NA	NA	61 U	530 U	NA	500 U	250 U	NA	480 U	1500 U	1400 U	2000 U
CONVENTIONAL PARAMETERS (%)																	
Total Solids (EPA 160.3, SM2540G) (%)	66.60	47.30 J	NA	27.8	50.50	NA	NA	NA	NA	NA	NA	62.10	31.90	21.70	25.28	26.34	23.08
Total Organic Carbon (EPA 9060M, Plumb 1981) (%)	3.88	5.35	NA	NA	4.06	NA	NA	NA	NA	NA	NA	9.17	10.6	17.6	10.8	5.21	17.6
Reported as Dry Wt		P,S,T,M	P,S,T,M	P,M	P,S,T,M	P						P,S,T,M	P	P,S,T,M	P,S,T,M	P,S,T,M	P,S,M
Reported as As Received							P,M	P,S	P,S	P	P,S						
Not Analyzed Due to Low Sample Volume				S,T		S,T,M	S,T	T,M	T,M	S,T,M	T,M		S,T,M				

TABLE 11
STORM DRAIN MANHOLE SOLIDS AND SEDIMENT TRAP ANALYTICAL DATA
NORTH BOEING FIELD

SPU Sample ID:	**SL4-T5**	SL4-T5	SL4-T5	SL4-T5	SL4-T5	SL4-T5	SL4-T5	SL4-T5	SL4-T5	SL4-T5	SL4-T5	SL4-T5	SL4-T5	SL4-T5	SL4-T5	SL4-T5	SL4-T5
Boeing Manhole No.	MH363	MH363	MH363	MH363	MH363	MH363	MH363	MH363	MH363	MH363	MH363	MH363	MH363	MH363	MH363	MH363	MH363
Lab ID:	HS89C	IK38C	JE01E	KA63C	KK75F/KL08E	KY79B	LV54F	MN63C	NI22C	OC25D	OU11C	QS17E	SQ45E	UR61E	WP79F	YI11F	AFC4F
Sample Type:	Grab	Sed. Trap	Sed. Trap	Sed. Trap	Sed. Trap	Sed. Trap	Sed. Trap	Sed. Trap	Sed. Trap	Sed. Trap	Sed. Trap	Sed. Trap	Sed. Trap	Sed. Trap	Sed. Trap	Sed. Trap	Sed. Trap
Date Deployed:		3/7/2005	8/11/2005	3/16/2006	10/11/2006	1/8/2007	5/14/2007	10/29/2007	3/18/2008	7/30/2008	12/3/2008	4/6/2009	11/12/2010	4/5/2011	4/24/2012	5/13/2013	4/25/2014
Date Collected:	2/16/2005	8/11/2005	3/16/2006	10/11/2006	1/8/2007	5/14/2007	10/29/2007	3/18/2008	7/30/2008	12/3/2008	4/6/2009	4/8/2010	4/5/2011	04/24/2012	5/13/2013	04/25/2014	4/28/2015
TOTAL METALS (mg/kg-dry)																	
(Method 6000-7000 series)																	
Arsenic	8	21	20 U	40 U	10	40 U	40 U	10	20	20	20	15	20	10	20	40	40 U
Copper	45.1	148	297	640	140	251	366	257	328	556	764	287	560	173	289	261	253
Lead	110	109	184	310	102	210	240	186	199	273	275	277	151	149	263	226	180
Mercury	0.7	1.12	2.02	2.9	5.11	1.8	4.4	1.07	0.6 J	1.0	0.7	0.34	0.85	0.40	0.88	0.66	0.52
Zinc	272	553	717	1,370	428	751	1,120	611	933	1,510	1280	705	670	1,040	2000	2030	1760
NWTPH-Dx (mg/kg)																	
Diesel-Range Hydrocarbons	47	390	1,200	1,200	840	580	460	1,500	220	120 J	3,900	340	470	250	NA	1600	1900
Motor Oil-Range Hydrocarbons	190	1,400	4,800	5,900	3,100	3,500	2900	6,900	1,100	710 J	12,000	1,800	1,400	720	NA	4200	5000
PCBs (µg/kg)																	
(PSDDA PCB SW8082)																	
Aroclor 1016	950 U	49 U	7,600 U	55,000 U	66,000 U	11,000 U	650 U	4,600 U	250 U	510 U	1,100 U	94 U	400 U	240 U	93 U	240 U	150 U
Aroclor 1242	950 U	49 U	7,600 U	55,000 U	66,000 U	11,000 U	650 U	4,600 U	250 U	510 U	1,100 U	94 U	400 U	240 U	93 U	1200 U	150 U
Aroclor 1248	1,900 U	49 U	48,000	660,000 U	130,000 U	90,000	25,000	7,000 U	1,700 U	1,000 U	1,600 U	940 U	1,200 U	850	1900 U	240 U	1500 U
Aroclor 1254	7,000	24,000	54,000	800,000	200,000	93,000	37,000	16,000	4,200 J	3,100	2,100	2,200	3,000	2,000	7100	4300	4100
Aroclor 1260	950 U	2,400 U	12,000	130,000 U	66,000 U	23,000 U	650 U	4,600 U	500 U	510 U	1,100 U	350	610	720	940	850 U	840
Aroclor 1221	480 U	49 U	7,600 U	55,000 U	66,000 U	11,000 U	650 U	4,600 U	250 U	510 U	1,100 U	94 U	400 U	240 U	93 U	240 U	150 U
Aroclor 1232	1,400 U	49 U	7,600 U	55,000 U	130,000 U	11,000 U	650 U	4,600 U	250 U	510 U	1,100 U	94 U	400 U	240 U	93 U	240 U	150 U
Aroclor 1262	NA	NA	NA	NA	NA	NA	NA	NA	250 U	NA	NA	NA	NA	240 U	93 U	240 U	150 U
Aroclor 1268	NA	NA	NA	NA	NA	NA	NA	NA	250 U	NA	NA	NA	NA	NA	NA	NA	NA
Total PCBs	7,000	24,000	114,000	800,000	200,000	183,000	62,000	16,000	4,200 * J	3,100	2,100	2,550	3,610	3,570	8,040	4300	4940
SEMIVOLATILES (µg/kg-dry)																	
(PSDDA SVOCS SW8270D)																	
Phenol	59 U	130 U	1,200 U	300	330	860	120 UJ	450 U	270 U	230 U	1,900	250 U	270 U	360	740 J	1500 U	1400 U
Bis-(2-Chloroethyl) Ether	59 U	130 U	1,200 U	NA	NA	NA	120 UJ	NA	NA	230 U	NA	NA	NA	NA	NA	NA	NA
2-Chlorophenol	59 U	130 U	1,200 U	NA	NA	NA	120 UJ	NA	NA	230 U	NA	NA	NA	NA	NA	NA	NA
1,3-Dichlorobenzene	59 U	130 U	1,200 U	260 U	220 U	420 U	120 UJ	450 U	270 U	230 U	470 U	250 U	270 U	240 U	1100 U	1500 U	1400 U
1,4-Dichlorobenzene	59 U	130 U	1,200 U	260 U	220 U	420 U	120 UJ	450 U	270 U	230 U	470 U	250 U	270 U	240 U	1100 U	1500 U	1400 U
Benzyl Alcohol	59 U	130 U	1,200 U	260 U	220 U	420 U	120 UJ	450 U	270 U	230 U	470 U	250 U	1,400 U	190 J	1100 U	1500 U	1400 U
1,2-Dichlorobenzene	59 U	130 U	1,200 U	260 U	220 U	420 U	120 UJ	450 U	270 U	230 U	470 U	250 U	270 U	240 U	1100 U	1500 U	1400 U
2-Methylphenol	59 U	130 U	1,200 U	260 U	220 U	420 U	120 UJ	450 U	270 U	230 U	470 U	250 U	270 U	240 U	1100 U	1500 U	1400 U
2,2'-Oxybis(1-Chloropropane)	59 U	130 U	1,200 U	NA	NA	NA	120 UJ	NA	NA	230 U	NA	NA	NA	NA	NA	NA	NA
4-Methylphenol	59 U	360	1,200 U	590	4,600	8,100	280 J	760	2,400	340	11,000	660	720	1,900	1100	1500 U	1400 U
N-Nitroso-Di-N-Propylamine	290 U	660 U	5,800 U	NA	NA	NA	600 UJ	NA	NA	1,200 U	NA	NA	NA	NA	NA	NA	NA
Hexachloroethane	59 U	130 U	1,200 U	260 U	220 U	420 U	120 UJ	450 U	270 U	230 U	470 U	250 U	270 U	240 U	1100 U	1500 U	1400 U
Nitrobenzene	59 U	130 U	1,200 U	NA	NA	NA	120 UJ	NA	NA	230 U	NA	NA	NA	NA	NA	NA	NA
Isophorone	59 U	130 U	1,200 U	NA	NA	NA	120 UJ	NA	NA	230 U	NA	NA	NA	NA	NA	NA	NA
2-Nitrophenol	290 U	660 U	5,800 U	NA	NA	NA	600 UJ	NA	NA	1,200 U	NA	NA	NA	NA	NA	NA	NA
2,4-Dimethylphenol	59 U	130 U	1,200 U	260 U	440	420 U	120 UJ	450 U	270 U	230 U	470 U	250 U	270 U	480 U	2100 U	7600 U	6800 U
Benzoic Acid	590 U	1,300 U	12,000 U	2,600 U	2,200 U	4,200 U	1,200 UJ	4,500 U	2,700 U	2,300 U	3,500 J	2,500 U	780 J	4,800 UJ	21000 U	15000 UJ	14000 U
bis(2-Chloroethoxy) Methane	59 U	130 U	1,200 U	NA	NA	NA	120 UJ	NA	NA	230 U	NA	NA	NA	NA	NA	NA	NA
2,4-Dichlorophenol	290 U	660 U	5,800 U	NA	NA	NA	600 UJ	NA	NA	1,200 U	NA	NA	NA	NA	NA	NA	NA
1,2,4-Trichlorobenzene	59 U	130 U	1,200 U	260 U	220 U	420 U	120 UJ	450 U	270 U	230 U	470 U	250 U	270 U	240 U	1100 U	1500 U	1400 U
Naphthalene	59 U	130 U	1,200 U	260 U	220 U	420 U	120 UJ	450 U	270 U	230 U	470 U	250 U	270 U	240 U	1100 U	1500 U	1400 U
4-Chloroaniline	290 U	660 U	5,800 U	NA	NA	NA	600 UJ	NA	NA	1,200 U	NA	NA	NA	NA	NA	NA	NA
Hexachlorobutadiene	59 U	130 U	1,200 U	260 U	220 U	420 U	120 UJ	450 U	270 U	230 U	470 U	250 U	270 U	1,200 U	1100 U	1500 U	1400 U
4-Chloro-3-methylphenol	290 U	660 U	5,800 U	NA	NA	NA	600 UJ	NA	NA	1,200 U	NA	NA	NA	NA	NA	NA	NA
2-Methylnaphthalene	59 U	130 U	1,200 U	260 U	220 U	420 U	120 UJ	650	270 U	230 U	270 J	250 U	270 U	240 U	1100	1500 U	1400 U
Hexachlorocyclopentadiene	290 U	660 U	5,800 U	NA	NA	NA	600 UJ	NA	NA	1,200 U	NA	NA	NA	NA	NA	NA	NA
2,4,6-Trichlorophenol	290 U	660 U	5,800 U	NA	NA	NA	600 UJ	NA	NA	1,200 U	NA	NA	NA	NA	NA	NA	NA
2,4,5-Trichlorophenol	290 U	660 U	5,800 U	NA	NA	NA	600 UJ	NA	NA	1,200 U	NA	NA	NA	NA	NA	NA	NA
2-Chloronaphthalene	59 U	130 U	1,200 U	NA	NA	NA	120 UJ	NA	NA	230 U	NA	NA	NA	NA	NA	NA	NA
2-Nitroaniline	290 U	660 U	5,800 U	NA	NA	NA	600 UJ	NA	NA	1,200 U	NA	NA	NA	NA	NA	NA	NA
Dimethylphthalate	59 U	130 U	1,200 U	260 U	220 U	420 U	120 UJ	450 U	270 U	230 U	470 U	250 U	270 U	240 U	1100 U	1500 U	1400 U
Acenaphthylene	59 U	130 U	1,200 U	260 U	220 U	NA	120 UJ	450 U	270 U	230 U	470 U	250 U	270 U	240 U	1100 U	1500 U	1400 U
3-Nitroaniline	290 U	660 U	5,800 U	NA	NA	420 U	600 UJ	NA	NA	1,200 U	NA	NA	NA	NA	NA	NA	NA
Acenaphthene	59 U	130 U	1,200 U	260 U	220 U	420 U	120 UJ	1,100	270 U	230 U	470 U	140 J	270 U	240 U	1100 U	1500 U	1400 U
2,4-Dinitrophenol	590 U	1,300 U	12,000 U	NA	NA	NA	1,200 UJ	NA	NA	2,300 U	NA	NA	NA	NA	NA	NA	NA
4-Nitrophenol	290 U	660 U	5,800 U	NA	NA	NA	600 UJ	NA	NA	1,200 U	NA	NA	NA	NA	NA	NA	NA
Dibenzofuran	59 U	130 U	1,200 U	260 U	220 U	420 U	120 UJ	600	270 U	230 U	470 U	200 J	270 U	240 U	1100 U	1500 U	1400 U
2,6-Dinitrotoluene	290 U	660 U	5,800 U	NA	NA	NA	600 UJ	NA	NA	1,200 U	NA	NA	NA	NA	NA	NA	NA
2,4-Dinitrotoluene	290 U	660 U	5,800 U	NA	NA	NA	600 UJ	NA	NA	1,200 U	NA	NA	NA	NA	NA	NA	NA
Diethylphthalate	59 U	130 U	1,200 U	260 U	220 U	420 U	120 UJ	450 U	270 U	230 U	470 U	250 U	270 UJ	590 U	2600 U	1500 U	1400 U
4-Chlorophenyl-phenylether	59 U	130 U	1,200 U	NA	NA	NA	120 UJ	NA	NA	230 U	NA	NA	NA	NA	NA	NA	NA
Fluorene	59 U	130 U	1,200 U	260 U	220 U	420 U	120 UJ	1,300	270 U	230 U	470 U	250	270 U	240 U	1100 U	1500 U	1400 U
4-Nitroaniline	290 U	660 U	5,800 U	NA	NA	NA	600 UJ	NA	NA	1,200 U	NA	NA	NA	NA	NA	NA	NA

TABLE 11
STORM DRAIN MANHOLE SOLIDS AND SEDIMENT TRAP ANALYTICAL DATA
NORTH BOEING FIELD

SPU Sample ID:	**SL4-T5**	SL4-T5	SL4-T5	SL4-T5	SL4-T5	SL4-T5	SL4-T5	SL4-T5	SL4-T5	SL4-T5	SL4-T5	SL4-T5	SL4-T5	SL4-T5	SL4-T5	SL4-T5	SL4-T5
Boeing Manhole No.	MH363	MH363	MH363	MH363	MH363	MH363	MH363	MH363	MH363	MH363	MH363	MH363	MH363	MH363	MH363	MH363	MH363
Lab ID:	HS89C	IK38C	JE01E	KA63C	KK75F/KL08E	KY79B	LV54F	MN63C	NI22C	OC25D	OU11C	QS17E	SQ45E	UR61E	WP79F	YI11F	AFC4F
Sample Type:	Grab	Sed. Trap	Sed. Trap	Sed. Trap	Sed. Trap	Sed. Trap	Sed. Trap	Sed. Trap	Sed. Trap	Sed. Trap	Sed. Trap	Sed. Trap	Sed. Trap	Sed. Trap	Sed. Trap	Sed. Trap	Sed. Trap
Date Deployed:		3/7/2005	8/11/2005	3/16/2006	10/11/2006	1/8/2007	5/14/2007	10/29/2007	3/18/2008	7/30/2008	12/3/2008	4/6/2009	11/12/2010	4/5/2011	4/24/2012	5/13/2013	4/25/2014
Date Collected:	2/16/2005	8/11/2005	3/16/2006	10/11/2006	1/8/2007	5/14/2007	10/29/2007	3/18/2008	7/30/2008	12/3/2008	4/6/2009	4/8/2010	4/5/2011	04/24/2012	5/13/2013	04/25/2014	4/28/2015
4,6-Dinitro-2-Methylphenol	590 U	1,300 U	12,000 U	NA	NA	NA	1,200 UJ	NA	NA	2,300 U	NA	NA	NA	NA	NA	NA	NA
N-Nitrosodiphenylamine	59 U	130 U	1,200 U	260 U	220 U	420 U	120 UJ	450 U	270 U	230 U	470 U	250 U	270 U	240 U	1100 U	1500 U	1400 U
4-Bromophenyl-phenylether	59 U	130 U	1,200 U	NA	NA	NA	120 UJ	NA	NA	230 U	NA	NA	NA	NA	NA	NA	NA
Hexachlorobenzene	59 U	130 U	1,200 U	260 U	220 U	420 U	120 UJ	450 U	270 U	230 U	470 U	250 U	270 U	240 U	1100 U	1500 U	1400 U
Pentachlorophenol	290 U	660 U	5,800 U	1,300 U	1,100 U	2,100 U	600 UJ	2,200 U	1,400 U	1,200 U	2,400 U	1,200 U	1,400 U	2,400 UJ	11000 U	7600 UJ	6800 U
Phenanthrene	260	1,600	3,700	2,400	1,800	1,600	840 J	9,200	780	1,400	2,600	4,200	950	830	1200	1100 J	550 J
Carbazole	68	310	1,200 U	NA	NA	NA	180 J	NA	NA	410	NA	NA	NA	NA	NA	NA	NA
Anthracene	59 U	210	1,200 U	260 U	270	420 U	120 UJ	1,800	270 U	230 U	250 J	540	100 J	240 U	1100 U	1500 U	1400 U
Di-n-Butylphthalate	59 U	130 U	1,200 U	360	450 U	420 U	160 J	470	270 U	230 U	470 U	1,200	920	310	1100 U	1500 U	1400 U
Fluoranthene	750	2,900	9,700	6,500	3,700	3,900	2,200 J	14,000	1,800	3,700	5,800	10,000	2,400	1,400	1600	1400 J	890 J
Pyrene	660	2,000	5,100	4,100	3,400	1,800	1,100 J	9,900	1,400	2,300	4,200	5,500	1,300	1,200	1700	1600	750 J
Butylbenzylphthalate	59 U	140	1,200 U	440	230	420 U	690 J	1,200	370	860	1,300	280 J	270 U	550 J	1100	2800	2300
3,3'-Dichlorobenzidine	290 U	660 U	5,800 U	NA	NA	NA	600 UJ	NA	NA	1,200 U	NA	NA	NA	NA	NA	NA	NA
Benzo(a)anthracene	280	940	2,500	1,300	1,400	1,100	440 J	4,000	420	900	1,500	2,800	600	460	580 J	1500 U	1400 U
bis(2-Ethylhexyl)phthalate	500	2,700	8,300	19,000	7,300	15,000	8,000 J	13,000	6,100	5,900	34,000	10,000	2,100	9,000	35000	30000	15000
Chrysene	400	1,400	4,300	3,700	2,700	2,100	1,200 J	7,000	1,100	2,100	3,700	5,500	1,200	970	1500	1500	820 J
Di-n-Octyl phthalate	69	1,200	5,500	7,200	2,300	8,800	4,400 J	4,400	2,300	1,600	11,000	2,500	270 U	1,300	2800	4800	1700
Benzo(b)fluoranthene	450	1,700	4,500	3,100	3,000	2,700	1,200 J	6,600	810	1,400	2,700	4,400	NA	NA	NA	NA	NA
Benzo(k)fluoranthene	310	970	2,900	3,000	2,900	2,400	1,400 J	4,400	1,100	2,000	3,700	4,400	NA	NA	NA	NA	NA
Total Benzofluoranthenes	NA	NA	NA	NA	NA	NA	NA	NA	NA	NA	NA	NA	2,000	1,300	1800 J	2200 J	1100 J
Benzo(a)pyrene	300	1,200	3,000	2,300	2,200	1,700	390 J	5,400	690	1,400	2,200	4,500	860	510	840 J	760 J	480 J
Indeno(1,2,3-cd)pyrene	180	680	1,600	1,400	840	1,100	170 J	3,300	600	1,100	2,000	2,700	740	430	580 J	1500 U	1400 U
Dibenz(a,h)anthracene	59 U	130 U	1,200 U	480	220 U	420 U	120 UJ	1,500	270 U	390	380 J	1,100	310	240 U	1100 U	1500 U	1400 U
Benzo(g,h,i)perylene	170	600	1,500	1,500	870	1,100	120 UJ	3,400	690	1,200	2,200	3,000	850	530	1000 J	1500 UJ	1400 U
1-Methylnaphthalene	NA	NA	NA	NA	NA	NA	120 UJ	470	270 U	230 U	470 U	250 U	270 U	240 U	790 J	1500 U	1400 U
CONVENTIONAL PARAMETERS (%)																	
Total Solids (EPA 160.3, SM2540G) (%)	79.90	NA	54.60 J	28.80	62.70	27.10	27.10	45.00	34.20	33.50	26.40	52.90	45.60	39.60	25.8	32.94	27.39
Total Organic Carbon (EPA 9060M, Plumb 1981) (%)	0.76	NA	7.59	11.0	4.76	8.76	9.95	11.4	NA	13.1	14.6	9.84	7.46	4.46	11	7.87	13.9
Reported as Dry Wt		P,S,T,M	P,S,T,M	P,S,T,M	P,S,T,M	P,S,T,M	P,S,T,M	P,S,T,M	M	P,S,T,M	P,S,T,M	P,S,T,M	P,S,T,M	P,S,T,M	P,S,T,M	P,S,T,M	P,S,T,M
Reported as As Received									P,S,T								
Not Analyzed Due to Low Sample Volume																	

TABLE 11
STORM DRAIN MANHOLE SOLIDS AND SEDIMENT TRAP ANALYTICAL DATA
NORTH BOEING FIELD

SPU Sample ID:	**SL4-T5A**	SL4-T5A	SL4-T5A	SL4-T5A	SL4-T5A	SL4-T5A	SL4-T5A	SL4-T5A	SL4-T5A	SL4-T5A	SL4-T5A	SL4-T5A	SL4-T5A	SL4-T5A(2) (b)	SL4-T5A(2) (b)	SL4-T5A(2) (b)	SL4-T5A(2)
Boeing Manhole No.	MH178	MH178	MH178	MH178	MH178	MH178	MH178	MH178	MH178	MH178	MH178	MH178	MH178	KC wet well (b)	KC wet well (b)	KC wet well (b)	KC wet well
Lab ID:	IK38E	JE01G	KA63F	KK75G/KL08F	KY79A	LV54G	MN63F	NI22F	OC25F	OU11F	QS17G	SQ45F	TV18A	UR61A	WP79G	YI11G	AFC4G
Sample Type:	Sed. Trap	Sed. Trap	Sed. Trap	Sed. Trap	Sed. Trap	Sed. Trap	Sed. Trap	Sed. Trap	Sed. Trap	Sed. Trap	Sed. Trap	Sed. Trap	Sed. Trap	Grab (b)	Grab (b)	Grab (b)	Grab
Date Deployed:	3/8/2005	8/11/2005	3/16/2006	10/11/2006	1/8/2007	5/14/2007	10/29/2007	3/18/2008	7/30/2008	12/3/2008	4/6/2009	11/12/2010	4/5/2011	NA (b)	4/24/2012	5/13/2013	NA
Date Collected:	8/11/2005	3/16/2006	10/11/2006	1/8/2007	5/14/2007	10/29/2007	3/18/2008	7/30/2008	12/3/2008	4/6/2009	4/8/2010	4/5/2011	11/3/2011	4/24/2012	5/13/2013	04/25/2014	4/28/2015
TOTAL METALS (mg/kg-dry)																	
(Method 6000-7000 series)																	
Arsenic	14	20	20	7 U	20	20	7 U	10	20	10 U	20	14	20	30 U	50 U	30	20
Copper	113	541	818	103	227	359	76.9	206	316 J	759	248	144	196	283	247	160	104
Lead	962	233	381	100	194	486	92	172	687 J	257	342	716 J	227 J	270	210	176	100
Mercury	0.86	0.27	0.4	0.15	0.38	0.4	0.14	0.21	0.58 J	0.42	0.31	0.21 J	0.31 J	0.2	0.28	0.20	0.20
Zinc	220	597	945	209	464	781	201	374	691	1000	1,380	356	555	790 J	730	591	373
NWTPH-Dx (mg/kg)																	
Diesel-Range Hydrocarbons	160	1,400	660	340	770	240	86	160	230 J	1,600	400	190	530	480	NA	450	360
Motor Oil-Range Hydrocarbons	570	7,500	4,800	1,600	6,800	2,300	760	900	1,600 J	5,800	1,600	1,500	2,600	1,900	NA	2100	2000
PCBs (µg/kg)																	
(PSDDA PCB SW8082)																	
Aroclor 1016	9.6 U	100 U	100 U	70 U	47 U	30 U	19 U	15 U	49 U	68 U	67 U	20 U	48 U	48 U	49 U	9.6 U	40 U
Aroclor 1242	9.6 U	100 U	100 U	70 U	47 U	30 U	19 U	15 U	49 U	68 U	67 U	20 U	48 U	48 U	49 U	9.6 U	40 U
Aroclor 1248	9.6 U	100 U	100 U	70 U	47 U	120 U	19 U	75 U	49 U	68 U	200 U	58 U	97 U	58 U	49 U	48 U	60 U
Aroclor 1254	72	320	430	86	240	490	85	160	190 J	130	270	240	260	260	280	230	260
Aroclor 1260	34	330	170	70 U	150	180	36	48	120 J	68 U	170	92	110	150	110	98	94 P
Aroclor 1221	9.6 U	100 U	100 U	70 U	47 U	30 U	19 U	15 U	49 U	68 U	67 U	20 U	48 U	48 U	49 U	9.6 U	40 U
Aroclor 1232	9.6 U	100 U	100 U	70 U	47 U	30 U	19 U	15 U	49 U	68 U	67 U	20 U	48 U	48 U	49 U	9.6 U	40 U
Aroclor 1262	NA	NA	NA	NA	NA	NA	NA	15 U	NA	NA	NA	NA	NA	48 U	49 U	9.6 U	40 U
Aroclor 1268	NA	NA	NA	NA	NA	NA	NA	15 U	NA	NA	NA	NA	NA	NA	NA	NA	NA
Total PCBs	106	650	600	86	390	670	121	208 *	310	130	440	332	370	410	390	328	354 P
SEMIVOLATILES (µg/kg-dry)																	
(PSDDA SVOCS SW8270D)																	
Phenol	110 U	680 U	380 U	180	1,100	560 UJ	160 U	290 U	230 U	640	360 U	320 U	1,300 U	1,100	510 J	1100 U	440 J
Bis-(2-Chloroethyl) Ether	110 U	680 U	NA	NA	NA	560 UJ	NA	NA	230 U	NA	NA	NA	NA	NA	NA	NA	NA
2-Chlorophenol	110 U	680 U	NA	NA	NA	560 UJ	NA	NA	230 U	NA	NA	NA	NA	NA	NA	NA	NA
1,3-Dichlorobenzene	110 U	680 U	380 U	170 U	370 U	560 UJ	160 U	290 U	230 U	250 U	360 U	320 U	1,300 U	300 U	730 U	1100 U	490 U
1,4-Dichlorobenzene	110 U	680 U	380 U	170 U	370 U	560 UJ	160 U	290 U	230 U	250 U	360 U	320 U	1,300 U	300 U	730 U	1100 U	490 U
Benzyl Alcohol	110 U	680 U	380 U	170 U	370 U	560 UJ	160 U	290 U	230 U	250 U	360 U	1,600 U	1,300 U	300 U	730 U	1100 U	490 U
1,2-Dichlorobenzene	110 U	680 U	380 U	170 U	370 U	560 UJ	160 U	290 U	230 U	250 U	360 U	320 U	1,300 U	300 U	730 U	1100 U	490 U
2-Methylphenol	110 U	680 U	380 U	170 U	370 U	560 UJ	160 U	290 U	230 U	250 U	360 U	320 U	1,300 U	300 U	730 U	1100 U	490 U
2,2'-Oxybis(1-Chloropropane)	110 U	680 U	NA	NA	NA	560 UJ	NA	NA	230 U	NA	NA	NA	NA	NA	NA	NA	NA
4-Methylphenol	410	830	530	2,000	9,400	1,600 J	160 U	310	1,300	12,000	360 U	1,000	5,100	15,000	730 U	1100 U	490 U
N-Nitroso-Di-N-Propylamine	560 U	3,400 U	NA	NA	NA	2,800 UJ	NA	NA	1,200 U	NA	NA	NA	NA	NA	NA	NA	NA
Hexachloroethane	110 U	680 U	380 U	170 U	370 U	560 UJ	160 U	290 U	230 U	250 U	360 U	320 U	1,300 U	300 U	730 U	1100 U	490 U
Nitrobenzene	110 U	680 U	NA	NA	NA	560 UJ	NA	NA	230 U	NA	NA	NA	NA	NA	NA	NA	NA
Isophorone	110 U	680 U	NA	NA	NA	560 UJ	NA	NA	230 U	NA	NA	NA	NA	NA	NA	NA	NA
2-Nitrophenol	560 U	3,400 U	NA	NA	NA	2,800 UJ	NA	NA	1,200 U	NA	NA	NA	NA	NA	NA	NA	NA
2,4-Dimethylphenol	110 U	680 U	380 U	170 U	370 U	560 UJ	160 U	290 U	230 U	250 U	360 U	320 U	2,600 U	590 U	1400 U	5400 U	2400 U
Benzoic Acid	1,100 U	6,800 U	3,800 U	1,700 U	3,700 U	5,600 UJ	1,600 U	2,900 U	2,300 U	2,500 U	3,600 U	390 J	26,000 UJ	5,900 U	14000 U	11000 UJ	4900 U
bis(2-Chloroethoxy) Methane	110 U	680 U	NA	NA	NA	560 UJ	NA	NA	230 U	NA	NA	NA	NA	NA	NA	NA	NA
2,4-Dichlorophenol	560 U	3,400 U	NA	NA	NA	2,800 UJ	NA	NA	1,200 U	NA	NA	NA	NA	NA	NA	NA	NA
1,2,4-Trichlorobenzene	110 U	680 U	380 U	170 U	370 U	560 UJ	160 U	290 U	230 U	250 U	360 U	320 U	1,300 U	300 U	730 U	1100 U	490 U
Naphthalene	110 U	680 U	380 U	170 U	370 U	560 UJ	160 U	290 U	230 U	250 U	360 U	320 U	1,300 U	300 U	730 U	1100 U	170 J
4-Chloroaniline	560 U	3,400 U	NA	NA	NA	2,800 UJ	NA	NA	1,200 U	NA	NA	NA	NA	NA	NA	NA	NA
Hexachlorobutadiene	110 U	680 U	380 U	170 U	370 U	560 UJ	160 U	290 U	230 U	250 U	360 U	320 U	6,400 U	1,500 U	730 U	1100 U	490 U
4-Chloro-3-methylphenol	560 U	3,400 U	NA	NA	NA	2,800 UJ	NA	NA	1,200 U	NA	NA	NA	NA	NA	NA	NA	NA
2-Methylnaphthalene	110 U	680 U	380 U	170 U	370 U	560 UJ	160 U	290 U	230 U	160 J	360 U	320 U	1,300 U	300 U	730 U	1100 U	490 U
Hexachlorocyclopentadiene	560 U	3,400 U	NA	NA	NA	2,800 UJ	NA	NA	1,200 U	NA	NA	NA	NA	NA	NA	NA	NA
2,4,6-Trichlorophenol	560 U	3,400 U	NA	NA	NA	2,800 UJ	NA	NA	1,200 U	NA	NA	NA	NA	NA	NA	NA	NA
2,4,5-Trichlorophenol	560 U	3,400 U	NA	NA	NA	2,800 UJ	NA	NA	1,200 U	NA	NA	NA	NA	NA	NA	NA	NA
2-Chloronaphthalene	110 U	680 U	NA	NA	NA	560 UJ	NA	NA	230 U	NA	NA	NA	NA	NA	NA	NA	NA
2-Nitroaniline	560 U	3,400 U	NA	NA	NA	2,800 UJ	NA	NA	1,200 U	NA	NA	NA	NA	NA	NA	NA	NA
Dimethylphthalate	110 U	680 U	380 U	170 U	370 U	560 UJ	160 U	290 U	230 U	250 U	360 U	320 U	1,300 U	300 U	730 U	1100 U	490 U
Acenaphthylene	110 U	680 U	380 U	170 U	NA	560 UJ	160 U	290 U	230 U	250 U	360 U	320 U	1,300 U	300 U	730 U	1100 U	490 U
3-Nitroaniline	560 U	3,400 U	NA	NA	370 U	2,800 UJ	NA	NA	1,200 U	NA	NA	NA	NA	NA	NA	NA	NA
Acenaphthene	110 U	680 U	380 U	170 U	370 U	560 UJ	160 U	290 U	230 U	150 J	350 J	320 U	1,300 U	300 U	730 U	1100 U	490 U
2,4-Dinitrophenol	1,100 U	6,800 U	NA	NA	NA	5,600 UJ	NA	NA	2,300 U	NA	NA	NA	NA	NA	NA	NA	NA
4-Nitrophenol	560 U	3,400 U	NA	NA	NA	2,800 UJ	NA	NA	1,200 U	NA	NA	NA	NA	NA	NA	NA	NA
Dibenzofuran	110 U	680 U	380 U	170 U	370 U	560 UJ	160 U	290 U	230 U	200 J	280 J	320 U	1,300 U	180 J	730 U	1100 U	490 U
2,6-Dinitrotoluene	560 U	3,400 U	NA	NA	NA	2,800 UJ	NA	NA	1,200 U	NA	NA	NA	NA	NA	NA	NA	NA
2,4-Dinitrotoluene	560 U	3,400 U	NA	NA	NA	2,800 UJ	NA	NA	1,200 U	NA	NA	NA	NA	NA	NA	NA	NA
Diethylphthalate	110 U	680 U	380 U	170 U	370 U	560 UJ	160 U	290 U	230 U	250 U	360 U	320 UJ	3,200 U	740 U	1800 U	1100 U	490 U
4-Chlorophenyl-phenylether	110 U	680 U	NA	NA	NA	560 UJ	NA	NA	230 U	NA	NA	NA	NA	NA	NA	NA	NA
Fluorene	110 U	680 U	380 U	170 U	370 U	560 UJ	160 U	290 U	230	190 J	400	320 U	1,300 U	160 J	730 U	1100 U	490 U
4-Nitroaniline	560 U	3,400 U	NA	NA	NA	2,800 UJ	NA	NA	1,200 U	NA	NA	NA	NA	NA	NA	NA	NA

TABLE 11
STORM DRAIN MANHOLE SOLIDS AND SEDIMENT TRAP ANALYTICAL DATA
NORTH BOEING FIELD

SPU Sample ID:	**SL4-T5A**	SL4-T5A	SL4-T5A	SL4-T5A	SL4-T5A	SL4-T5A	SL4-T5A	SL4-T5A	SL4-T5A	SL4-T5A	SL4-T5A	SL4-T5A	SL4-T5A	SL4-T5A(2) (b)	SL4-T5A(2) (b)	SL4-T5A(2) (b)	SL4-T5A(2)
Boeing Manhole No.	MH178	MH178	MH178	MH178	MH178	MH178	MH178	MH178	MH178	MH178	MH178	MH178	MH178	KC wet well (b)	KC wet well (b)	KC wet well (b)	KC wet well
Lab ID:	IK38E	JE01G	KA63F	KK75G/KL08F	KY79A	LV54G	MN63F	NI22F	OC25F	OU11F	QS17G	SQ45F	TV18A	UR61A	WP79G	YI11G	AFC4G
Sample Type:	Sed. Trap	Sed. Trap	Sed. Trap	Sed. Trap	Sed. Trap	Sed. Trap	Sed. Trap	Sed. Trap	Sed. Trap	Sed. Trap	Sed. Trap	Sed. Trap	Sed. Trap	Grab (b)	Grab (b)	Grab (b)	Grab
Date Deployed:	3/8/2005	8/11/2005	3/16/2006	10/11/2006	1/8/2007	5/14/2007	10/29/2007	3/18/2008	7/30/2008	12/3/2008	4/6/2009	11/12/2010	4/5/2011	NA (b)	4/24/2012	5/13/2013	NA
Date Collected:	8/11/2005	3/16/2006	10/11/2006	1/8/2007	5/14/2007	10/29/2007	3/18/2008	7/30/2008	12/3/2008	4/6/2009	4/8/2010	4/5/2011	11/3/2011	4/24/2012	5/13/2013	04/25/2014	4/28/2015
4,6-Dinitro-2-Methylphenol	1,100 U	6,800 U	NA	NA	NA	5,600 UJ	NA	NA	2,300 U	NA	NA	NA	NA	NA	NA	NA	NA
N-Nitrosodiphenylamine	110 U	680 U	380 U	170 U	370 U	560 UJ	160 U	290 U	230 U	250 U	360 U	320 U	1,300 U	300 U	730 U	1100 U	490 U
4-Bromophenyl-phenylether	110 U	680 U	NA	NA	NA	560 UJ	NA	NA	230 U	NA	NA	NA	NA	NA	NA	NA	NA
Hexachlorobenzene	110 U	680 U	380 U	170 U	370 U	560 UJ	160 U	290 U	230 U	250 U	360 U	320 U	1,300 U	300 U	730 U	1100 U	490 U
Pentachlorophenol	560 U	3,400 U	1,900 U	840 U	1,800 U	2,800 UJ	820 U	1,400 U	1,200 U	1,300 U	1,800 U	1,600 U	13,000 UJ	3,000 UJ	7300 U	5400 UJ	2400 U
Phenanthrene	1,300	4,600	2,900	2,200	2,100	2,300 J	1,300	1,700	3,800	3,500	7,800	1700	2,400	3,700	2800	3200	2800
Carbazole	260	1,400	NA	NA	NA	570 J	NA	NA	1,100	NA	NA	NA	NA	NA	NA	NA	NA
Anthracene	150	680 U	380 U	320	370 U	560 UJ	200	290 U	480	360	830	220 J	1,300 U	340	730 U	1100 U	320 J
Di-n-Butylphthalate	150	680 U	730	170 U	370 U	560 UJ	160 U	290 U	230 U	250 U	800	320 U	1,300 U	300	730 U	1100 U	490 U
Fluoranthene	2,400	13,000	6,900	5,000	5,600	5,800 J	3,100	4,100	9,500	8,100	20,000	4,800	5,000	9,800	6200	6800	6200
Pyrene	1,700	6,000	5,200	3,800	2,700	3000 J	2,000	3,200	5,500	5,800	11,000	2,500	3,700	6,300	4800	5400	4500
Butylbenzylphthalate	110 U	680 U	580	170 U	370 U	560 UJ	160 U	320	370	240 J	300 J	320 U	1,300 U	650 J	1600	8500	490 U
3,3'-Dichlorobenzidine	560 U	3,400 U	NA	NA	NA	2,800 UJ	NA	NA	1,200 U	NA	NA	NA	NA	NA	NA	NA	NA
Benzo(a)anthracene	840	3,200	2,000	1,700	1,400	1,500 J	950	1,200	2,700	2,200	5,200	1,200	1,400	2,200	1500	1800	1700
bis(2-Ethylhexyl)phthalate	1,800	10,000	10,000	3,800	13,000	13,000 J	990	5,800	9,800	24,000	16,000	2,000	9,000	23,000	26000	17000	11000
Chrysene	1,200	6,300	4,400	2,700	2,800	3,100 J	1,400	2,300	4,700	5,000	12,000	2,300	3,200	5,400	4000	4200	3700
Di-n-Octyl phthalate	220	2,500	4,800	1,300	3,700	2,800 J	180	530	3,500	2,000	16,000	320 U	1,300 U	3,600	4900	2100	1600
Benzo(b)fluoranthene	1,600	7,400	4,200	3,600	4,100	4,100 J	1,900	2,700	4,600	4,300	9,900	NA	NA	NA	NA	NA	NA
Benzo(k)fluoranthene	800	4,300	3,500	3,100	2,600	2,800 J	1,000	1,800	4,400	5,200	9,900	NA	NA	NA	NA	NA	NA
Total Benzofluoranthenes	NA	NA	NA	NA	NA	NA	NA	NA	NA	NA	NA	4,000	5,500	9,800	7200	8200	6100
Benzo(a)pyrene	1,100	4,500	3,000	2,300	2,200	1,200 J	1,300	1,900	4,000	3,500	8,400	1,700	2,200	3,700	2700	2900	2100
Indeno(1,2,3-cd)pyrene	520	2,200	2,000	1,000	1,200	560 UJ	810	1,400	2,400	2,400	4,700	1,400	2,200	3,300	2500	2200	1800
Dibenz(a,h)anthracene	110 U	680 U	640	220	370 U	560 UJ	290	300	890	630	2,000	610	710 J	1,400	870	1100 U	510
Benzo(g,h,i)perylene	450	2,100	2,000	1,000	1,200	560 UJ	850	1,500	2,500	2,200	4,600	1,500	2,200	3,900	2900	2200 J	1400
1-Methylnaphthalene	NA	NA	NA	NA	NA	560 UJ	160 U	290 U	230 U	250 U	360 U	320 U	1,300 U	300 U	730 U	1100 U	490 U
CONVENTIONAL PARAMETERS (%)																	
Total Solids (EPA 160.3, SM2540G) (%)	NA	50.80 J	39.20	69.90	45.40	40.20	74.40	40.70	49.80	41.70	29.50	54.90	35.70	13.7	29.46	30.77	38.01
Total Organic Carbon (EPA 9060M, Plumb 1981) (%)	NA	7.62	7.68	4.88 J	8.87	11.8	3.56	NA	13.2	14.9	12.8	10.7	8.98	16.0	12.8	4.86	7.75
Reported as Dry Wt	P,S,T,M	P,S,T,M	P,S,T,M	P,S,T,M	P,S,T,M	P,S,T,M	P,S,T,M	M	P,S,T,M	P,S,T,M	P,S,T,M	P,S,T,M	P,S,T,M	P,S,T,M	P,S,T,M	P,S,T,M	P,S,T,M
Reported as As Received								P,S,T									
Not Analyzed Due to Low Sample Volume																	

mg/kg = milligrams per kilogram
µg/kg = micrograms per kilogram
EPA = US Environmental Protection Agency
PSDDA = Puget Sound Dredged Disposal Analysis Program
PCB = polychlorinated biphenyl
SVOC - semivolatile organic compound
NA = not analyzed
* = Indicates PCB concentrations reported "as received," instead of by dry weight.

P=PCBs
S=SVOCs
T=TPH
M=Metals

U = Indicates the compound was not detected at the reported concentration.
UJ = Indicates the compound was not detected; the given reporting limit is an estimate.
J = Indicates the analyte was positively identified; the associated numerical value is the approximate concentration of the analyte in the sample.
P = Indicates the analyte was detected on both chromatographic columns, but the quantified values differ by ≥40% RPD with no obvious chromatographic interference.

(a) These samples were cross-contaminated during laboratory analysis. Due to limited sample volume, re-extraction and re-analysis could not be performed. As a result, measured PCB concentrations for these two samples are erroneous and are not shown.
(b) Location SL4-T5A was moved from MH178 to the King County bypass line wet well (installed in October 2011) and renamed SL4-T5A(2). SL4-T5A(2) does not have a bracket and Teflon container like the other sediment trap locations; SL4-T5A(2) is sampled by collecting solids from the bottom of the wet well, which collects solids behind a permanent weir. The line was put into service in October 2011, and solids have been accumulating behind the weir since that time.

Note:

The samples listed in this table were collected in coordination with Seattle Public Utilities (SPU). The 2/16/05 samples are grab samples of solids collected from the base of the manhole or catch basin. With the exception of the 2/16/05 grab samples, these sediment trap samples represent a composite of the sediment collected in the sediment trap bottles between the deployment and collection dates.

TABLE 12
STORM DRAIN SEDIMENT TRAP PCB MASS LOADING RATE
LONG-TERM STORMWATER TREATMENT SYSTEM
NORTH BOEING FIELD - SEATTLE, WASHINGTON

SPU Sample ID	Boeing Manhole No.	Lab ID	Date Deployed	Date Sampled	Mass of Solids after Centrifuging (g)	Rate of Solids Collection (g/day)	Total PCBs (µg/kg)	PCB Mass Loading (µg/day)
SL4-T1	MH422	OC25C	7/30/2008	12/3/2008	58.34	0.46	19,000 *	8.80 *
SL4-T1	MH422	OU11B	12/3/2008	4/6/2009	16.85	0.14	680 *	0.092 *
SL4-T1	MH422	QS17A	4/6/2009	4/8/2010	102.50	0.28	3,950	1.10
SL4-T1	MH422	UR61B	4/5/2011 (a)	4/24/2012	58.43	0.15	620	0.094
SL4-T1	MH422	WP79A	4/24/2012	5/13/2013	45.09	0.12	1,030	0.121
SL4-T1	MH422	YI11A	5/13/2013	4/25/2014	79.59	0.23	1,300	0.298
SL4-T1	MH422	AFC4A	4/25/2014	4/28/2015	71.56	0.19	640	0.124
SL4-T2	MH356	OC25A	7/30/2008	12/3/2008	39.34	0.31	10 *	0.003 *
SL4-T2	MH356	OU11A	12/3/2008	4/6/2009	8.05	0.06	48 *	0.003 *
SL4-T2	MH356	QS17B	4/6/2009	4/8/2010	65.70	0.18	460	0.082
SL4-T2	MH356	UR61C	4/5/2011 (a)	4/24/2012	107.66	0.28	750	0.210
SL4-T2	MH356	WP79B	4/24/2012	5/13/2013	188.89	0.49	440	0.216
SL4-T2	MH356	YI11B	5/13/2013	4/25/2014	168.43	0.49	620	0.301
SL4-T2	MH356	AFC4B	4/25/2014	4/28/2015	160.53	0.44	620	0.270
SL4-T3	MH364	OC25B	7/30/2008	12/3/2008	36.91	0.29	26 *	0.008 *
SL4-T3	MH364	OU11D	12/3/2008	4/6/2009	15.02	0.12	28 *	0.003 *
SL4-T3	MH364	QS17C	4/6/2009	4/8/2010	92.90	0.25	250	0.063
SL4-T3	MH364	UR61D	4/5/2011 (a)	4/24/2012	97.64	0.25	700	0.178
SL4-T3	MH364	WP79C	4/24/2012	5/13/2013	224.83	0.59	320	0.187
SL4-T3	MH364	YI11C	5/13/2013	4/25/2014	274.43	0.79	570	0.451
SL4-T3	MH364	AFC4C	4/25/2014	4/28/2015	208.94	0.57	370	0.210
SL4-T4	MH221A	OC25E	7/30/2008	12/3/2008	36.00	0.29	240 *	0.069 *
SL4-T4	MH221A	OU11E	12/3/2008	4/6/2009	35.14	0.28	340 *	0.096 *
SL4-T4	MH221A	QS17D	4/6/2009	4/8/2010	128.20	0.35	1070	0.374
SL4-T4	MH221A	UR61F	4/5/2011 (a)	4/24/2012	86.55	0.22	1380	0.310
SL4-T4	MH221A	WP79E	4/24/2012	5/13/2013	83.03	0.22	810	0.175
SL4-T4	MH221A	YI11D	5/13/2013	4/25/2014	100.87	0.29	1490	0.433
SL4-T4	MH221A	AFC4D	4/25/2014	4/28/2015	83.69	0.23	1180	0.268
SL4-T4A	MH229A	OC25G	7/30/2008	12/3/2008	52.42	0.42	11 *U	0.005 *U
SL4-T4A	MH229A	OU11G	12/3/2008	4/6/2009	32.17	0.26	10 *U	0.003 *U
SL4-T4A	MH229A	QS17F	4/6/2009	4/8/2010	951.80	2.59	680	1.76
SL4-T4A	MH229A	UR61G	4/5/2011 (a)	4/24/2012	71.82	0.19	260	0.049
SL4-T4A	MH229A	WP79D	4/24/2012	5/13/2013	76.50	0.20	156	0.031
SL4-T4A	MH229A	YI11E	5/13/2013	4/25/2014	97.10	0.28	240	0.067
SL4-T4A	MH229A	AFC4E	4/25/2014	4/28/2015	90.03	0.24	340 P	0.083
SL4-T5	MH363	OC25D	7/30/2008	12/3/2008	146.87	1.17	3,100	3.61
SL4-T5	MH363	OU11C	12/3/2008	4/6/2009	151.94	1.23	2,100	2.57
SL4-T5	MH363	QS17E	4/6/2009	4/8/2010	794.20	2.16	2,550	5.52
SL4-T5	MH363	UR61E	4/5/2011 (a)	4/24/2012	134.85	0.35	3,570	1.25
SL4-T5	MH363	WP79F	4/24/2012	5/13/2013	79.59	0.21	8,040	1.67
SL4-T5	MH363	YI11F	5/13/2013	4/25/2014	131.30	0.38	4,300	1.63
SL4-T5	MH363	AFC4F	4/25/2014	4/28/2015	96.88	0.26	4,940	1.30
SL4-T5A	MH178	OC25F	7/30/2008	12/3/2008	399.40	3.17	310	0.983
SL4-T5A	MH178	OU11F	12/3/2008	4/6/2009	164.48	1.33	130	0.172
SL4-T5A	MH178	QS17G	4/6/2009	4/8/2010 (a)	117.60	0.32	440	0.141
SL4-T5A(2)	KC wet well	UR61A	n/a	4/24/2012	(b)	(b)	410	(b)
SL4-T5A(2)	KC wet well	WP79G	n/a	5/13/2013	(b)	(b)	390	(b)
SL4-T5A(2)	KC wet well	YI11G	n/a	4/25/2014	(b)	(b)	328	(b)
SL4-T5A(2)	KC wet well	AFC4G	n/a	4/28/2015	(b)	(b)	354 P	(b)

U = Indicates the compound was not detected at the given limit of quantitation.
* = Indicates PCB concentrations reported "as received," instead of by dry weight.

(a) The sediment trap samples from deployment between 4/9/2010 and 4/5/2011 (11/3/2011 for SL4-T5A) were not weighed by the laboratory after centrifuging. Therefore, PCB loading could not be calculated for that timeframe.

(b) Location SL4-T5A was moved from MH178 to the King County bypass line wet well (installed in October 2011) and renamed SL4-T5A(2). SL4-T5A(2) does not have a bracket and Teflon container like the other sediment trap locations; SL4-T5A(2) is sampled by collecting solids from the bottom of the wet well. Because of the relatively unrestricted sediment trap volume at this location following the change, a loading calculation is not applicable.

TABLE 13
PCB ANALYTICAL RESULTS
CATCH BASIN FILTERED
SOLID SAMPLES
LONG-TERM STORMWATER TREATMENT SYSTEM
NORTH BOEING FIELD - SEATTLE, WASHINGTON

	CB113	CB159	CB221	CB224	CB225	CB252	CB253	CB254	CB255	CB256	CB257	CB259	CB260	CB364A	CB367A	CB372
	AFY3A	AFY3B	AFY3C	AFY3D	AFY3E	AFY3F	AFY3G	AFY3H	AFY3I	AFY3J	AFY3K	AFY3L	AFY3M	AFY3N	AFY3O	AFY3P
Filter Installation Date	11/25/2014	11/25/2014	11/26/2014	11/26/2014	11/26/2014	11/25/2014	11/25/2014	11/25/2014	11/25/2014	11/25/2014	11/25/2014	11/25/2014	11/25/2014	11/25/2014	11/25/2014	2/7/2014
Sample Collection Date	5/12/2015	5/12/2015	5/12/2015	5/12/2015	5/12/2015	5/12/2015	5/12/2015	5/12/2015	5/12/2015	5/12/2015	5/12/2015	5/12/2015	5/12/2015	5/12/2015	5/12/2015	5/12/2015
PCBs (mg/kg)																
Method SW8082A																
Aroclor 1016	0.019 U	0.02 U	0.019 U	0.02 U	0.094 U	0.019 U	0.019 U	0.019 U	0.019 U	0.02 U	0.019 U	0.02 U	0.02 U	0.019 U	0.019 U	0.019 U
Aroclor 1242	0.019 U	0.02 U	0.019 U	0.02 U	0.094 U	0.019 U	0.019 U	0.019 U	0.019 U	0.02 U	0.019 U	0.02 U	0.02 U	0.019 U	0.019 U	0.019 U
Aroclor 1248	**0.49**	**11**	0.39 U	0.29 U	0.28 U	0.096 U	0.096 U	0.095 U	0.096 U	0.12 U	0.19 U	0.098 U	0.099 U	0.095 U	0.096 U	0.14 U
Aroclor 1254	**1.5**	**8.6**	**3.3**	**2.3**	**2.0**	**0.6**	**0.63**	**0.61**	**0.68**	**0.86**	**1.4**	**0.85**	**0.74**	**0.63**	**0.57**	**1.4**
Aroclor 1260	**0.63**	**21** P	**0.54**	**0.73**	**0.68** P	**0.31**	**0.45**	**0.34**	**0.31**	**0.41**	**0.46**	**0.3**	**0.24**	**0.2**	**0.4**	**0.44**
Aroclor 1221	0.019 U	0.02 U	0.019 U	0.02 U	0.094 U	0.019 U	0.019 U	0.019 U	0.019 U	0.02 U	0.019 U	0.02 U	0.02 U	0.019 U	0.019 U	0.019 U
Aroclor 1232	0.019 U	0.02 U	0.019 U	0.02 U	0.094 U	0.019 U	0.019 U	0.019 U	0.019 U	0.02 U	0.019 U	0.02 U	0.02 U	0.019 U	0.019 U	0.019 U
Aroclor 1262	0.019 U	0.02 U	0.019 U	0.02 U	0.094 U	0.019 U	0.019 U	0.019 U	0.019 U	0.02 U	0.019 U	0.02 U	0.02 U	0.019 U	0.019 U	0.019 U
Total PCBs	**2.6**	**41**	**3.8**	**3.0**	**2.7**	**0.91**	**1.1**	**0.95**	**0.99**	**1.3**	**1.9**	**1.2**	**0.98**	**0.83**	**0.97**	**1.8**

	Max	40.6
	Min	**0.4**

TABLE 13
PCB ANALYTICAL RESULTS
CATCH BASIN FILTERED
SOLID SAMPLES
LONG-TERM STORMWATER TREATMENT SYSTEM
NORTH BOEING FIELD - SEATTLE, WASHINGTON

	CB372A	CB374	CB416	CB417	CB418	CB419	CB458	CB487
	AFY4A	AFY4B	AFY4C	AFY4D	AFY4E	AFY4F	AFY4G	AFY4H
Filter Installation Date	2/7/2014	11/26/2014	11/25/2014	11/25/2014	11/25/2014	11/25/2014	11/25/2014	11/25/2015
Sample Collection Date	5/12/2015	5/12/2015	5/12/2015	5/12/2015	5/12/2015	5/12/2015	5/12/2015	5/12/2015
PCBs (mg/kg)								
Method SW8082A								
Aroclor 1016	0.096 U	0.02 U	0.099 U	0.019 U	0.019 U	0.018 U	0.02 U	0.02 U
Aroclor 1242	0.096 U	0.02 U	0.099 U	0.019 U	0.019 U	0.018 U	0.02 U	0.02 U
Aroclor 1248	0.58 U	0.078 U	0.099 U	0.085 U	0.077 U	0.065 U	0.05 U	0.3 U
Aroclor 1254	**3.6**	**0.44**	**1.6**	**0.6**	**0.38**	**0.42**	**0.17**	**2.6**
Aroclor 1260	**1.4**	**0.3**	**0.44**	**0.21**	**0.19**	**0.15**	**0.19**	**0.44**
Aroclor 1221	0.096 U	0.02 U	0.099 U	0.019 U	0.019 U	0.018 U	0.02 U	0.02 U
Aroclor 1232	0.096 U	0.02 U	0.099 U	0.019 U	0.019 U	0.018 U	0.02 U	0.02 U
Aroclor 1262	0.096 U	0.02 U	0.099 U	0.019 U	0.019 U	0.018 U	0.02 U	0.02 U
Total PCBs	**5.0**	**0.74**	**2.0**	**0.81**	**0.57**	**0.57**	**0.36**	**3.0**

U = Indicates the compound was not detected at the reported concentration.

P = The analyte was detected on both chromatographic columns but the quantified values differ by 40% RPD with no obvious chromatographic interference. The higher of the two values is reported by the laboratory.

Bold = Detected compound.

APPENDIX A

Year 4 Monitoring (November 1, 2014 through October 31, 2015) and FWAAC Results and Recommendations for NBF LTST System

Memorandum

Date:	4 December 2015
To:	Karen Keeley, USEPA
Copies to:	Carl Bach, The Boeing Company; and Joe Kalmar, Landau Associates
From:	Jon Jones, Michael Stenstrom, and Robert Pitt, NBF Stormwater Expert Panel[1]; jointly with Geosyntec Consultants
Subject:	Year 4 Monitoring (November 1, 2014 through October 31, 2015) and Flow-Weighted Average Annual Concentration (FWAAC) Results and Recommendations for North Boeing Field (NBF) Long-Term Stormwater Treatment (LTST) System

---

INTRODUCTION AND BACKGROUND

To protect against sediment recontamination due to PCBs in Slip 4, a Long-Term Stormwater Treatment (LTST) system was installed at the North Boeing Field (NBF) site in 2011. The LTST system receives a combination of onsite (NBF) and offsite (King County airport) stormwater discharges, and the treated effluent discharges to Slip 4. The NBF Stormwater Expert Panel (Panel), along with Geosyntec Consultants, established a loading-based yearly average water concentration Interim Goal (IG) for the LTST system of 0.018 µg/L total PCBs for stormwater discharging to Slip 4 (NBF Stormwater Expert Panel and Geosyntec, 2011).

After it was determined that the previous solids concentration-based IG of 100 µg total PCBs per kg solids (100 ppb) and the associated recontamination modeling analysis of Slip 4 bed sediments (SAIC, 2010) did not account for changes in the NBF storm drain mass solids loading to Slip 4, a static mass balance analysis approach was proposed. This revised mass balance approach uses water quality and flow data from a number of monitoring points in the NBF storm drain system to yield a Flow-Weighted Average Annual Concentration (FWAAC) of PCBs in the water

---

[1] Jonathan Jones, P.E., D.WRE of Wright Water Engineers, Inc.; Michael Stenstrom, Ph.D., P.E., UCLA; and Robert Pitt, Ph.D., P.E., University of Alabama

discharging to Slip 4, or an average annual mass load normalized by the total discharge volume. The FWAAC calculation methodology is described in detail in the "Amended Monitoring Approach Recommendations for North Boeing Field Long-Term Stormwater Treatment System" memo (Geosyntec, 2012). This mass balance approach was approved by EPA in January 2012.

A monitoring approach was proposed to collect data for the FWAAC and was ultimately incorporated into the NBF LTST Sampling and Analysis Plan (SAP) (Landau Associates, 2011) and the Revised Final SAP (Landau Associates, 2012a). Water quality sampling and flow measurement locations were proposed at the Lift Station Inlet Vault (LSIV), the Chitosan-Enhanced Sand Filtration (CESF) system effluent, the North Lateral re-route influent to the Lift Station, and at the Lift Station (LS431) Point of Compliance (POC), as shown in Figure 1. This monitoring plan was approved by EPA on April 10, 2012.

As described in the SAP, the objectives of the field sampling were to gather data to:

1. Assess the LTST system for compliance with the proposed FWAAC IG;

2. Confirm that the data used and the assumptions made to arrive at the proposed FWAAC IG are reasonably conservative and descriptive of site conditions;

3. Confirm that treating non-detect (ND) results as zero (0) concentration values is appropriate (calculations using the range of zero and the detection value showed no important differences in mass discharges); and

4. Accurately characterize the off-site flow from the King County North Lateral Re-route in order to evaluate this load contribution to the Lift Station and LTST system.

The first three years of monitoring demonstrated that the LTST was in compliance with the IG from Year 1 through Year 3 (November 2011 through October 2014). Data, FWAAC results, assumptions, and recommendations were summarized in the appendices of the previous Annual Performance Evaluation Reports (Landau Associates, 2013, 2014, and 2015b). These documents were approved by EPA and the reported data and analyses confirmed the previously defined mass balance approach.

The third objective listed above was evaluated during the previous monitoring years to verify that assuming ND results are equal to zero does not affect the outcome of FWAAC compliance. To verify this assumption, the PCB concentrations for ND samples were estimated using PCB concentrations on filtered solids samples (i.e., µg of total PCBs per g of filtered solids) and TSS concentrations in water (i.e., mg of TSS per L water), the product of which are estimated PCB concentrations in water (i.e., µg of total PCBs per L of water). During all of the previous

monitoring years, the calculated FWAAC using this method (filtered solids and TSS data) was still well below the IG and resulted in a small difference between the FWAAC calculated assuming ND results equal to zero. As a result, it was determined that this assumption does not affect the outcome of FWAAC compliance. Therefore, assuming ND results are equal to zero when calculating the FWAAC is considered a reasonable assumption and will not be verified in this report or future reports. A proposal to discontinue sampling for filtered solids (i.e., solids captured by the filter) was included and approved in the 2015 SAP Addendum (Landau Associates, 2015).

The fourth objective listed above was met during Year 1 monitoring (November 2011 through October 2012)[2], as the overall PCBs load to the LTST from the King County North Lateral was not considered to be a large contributor to the total PCBs load. The maximum concentration of PCBs within the King County North Lateral was 0.015 µg/L and PCBs were not detected (limit of quantitation (LOQ) = 0.010 µg/L) in five out of seven monthly events and two out of four storm events. Due to the detected values being below the FWAAC IG and the overall success of the LTST system in meeting the IG, the Year 1 results indicated that diverting re-routed King County North lateral stormwater around the LTST system was not necessary (Landau Associates, 2013b). As a result, sampling at the King County North Lateral was not conducted during Year 2, Year 3, or Year 4.

[2] Year 1 monitoring (November 2011 through October 2012) was completed and the results were provided in Appendix A of the "Annual Performance Evaluation Report for Long-Term Stormwater Treatment (2011 – 2012) for North Boeing Field" (Landau Associates, 2013)

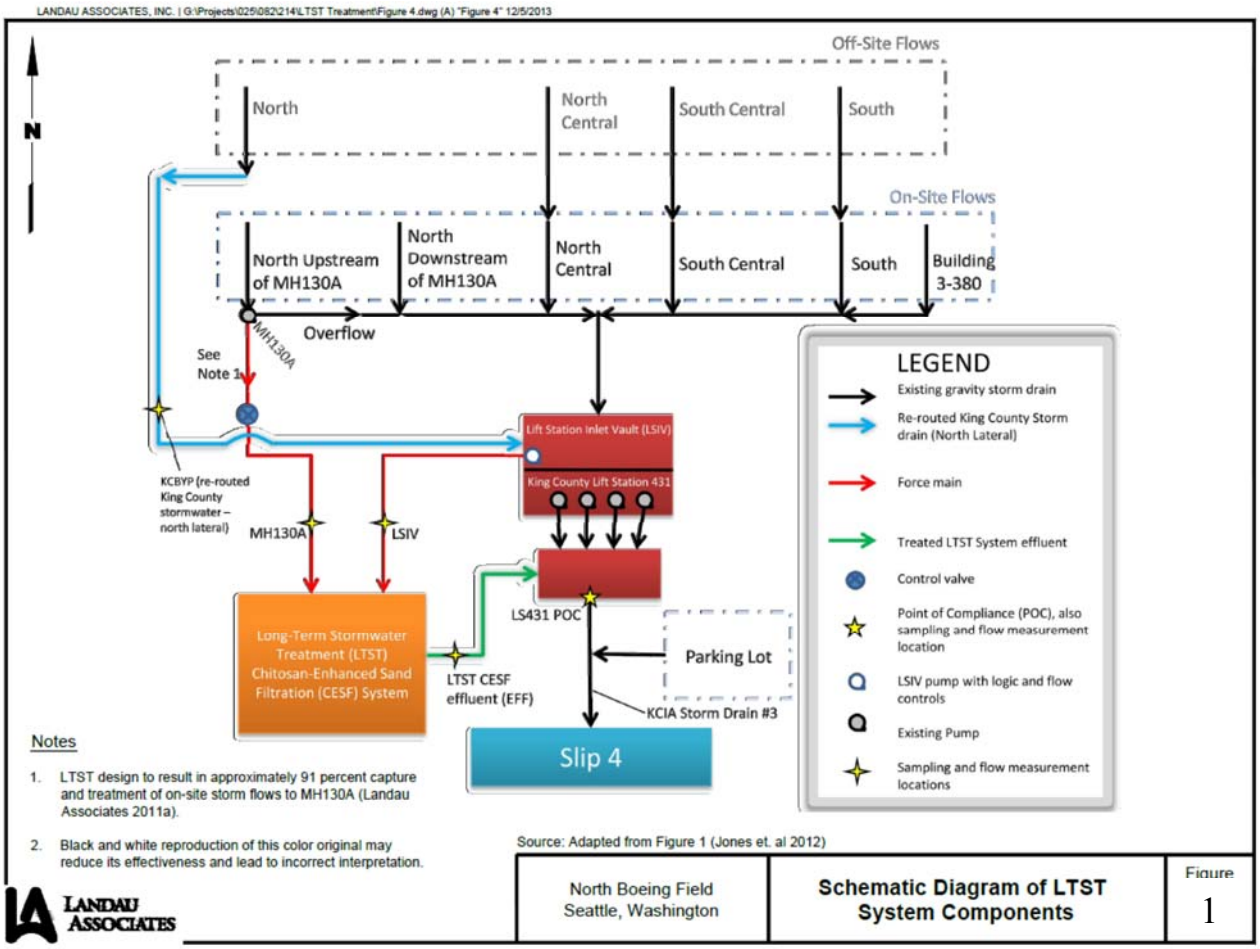

Figure 1. Schematic of flows to Slip 4 (Landau Associates, 2012)

PURPOSE AND ORGANIZATION

The purpose of this memo is to address the two remaining objectives described above (the third and fourth objectives were addressed earlier as described above, and will not be further discussed in this report) using the fourth year of data collected (November 2014 to October 2015) at NBF. This memo also describes all assumptions made.

The following is an outline of the sections within this memo:

- **Year 4 Data and FWAAC Calculations:** The raw data and calculations/methodology performed as well as the results are presented.
-

- **Discussion and Recommendations:** The results are compared to the monitoring objectives and recommendations are presented if needed for future monitoring.
- **Conclusion:** A summary of the results, discussion, and future actions is presented.

YEAR 4 DATA AND FWAAC CALCULATIONS

Using flow data at the LS431 discharge and whole water quality sampling[3] results, the FWAAC for total PCBs in water being discharged to Slip 4 was calculated to be between 0.0025 µg/L (assuming ND results are zero) and 0.0066 µg/L (assuming ND results are equal to the Limit of Detection [LOD][4]). This entire range is below the FWAAC IG of 0.018 µg/L. The EPA-approved methodology for calculating the FWAAC specifies that all NDs are assumed to be equal to zero for reporting purposes, and the resulting value of 0.0025 µg/L is 14% of the IG. The basis for this finding is provided below.

The FWAAC calculation methodology begins with analysis of flow monitoring results to determine the percent of total flows discharged at LS431 that were treated by the LTST system. Table 1 compares the predicted, measured, and calculated estimates of stormwater capture by the LTST system as a percent of total runoff volume from the drainage area. The following assumptions were used in these calculations:

- The flow was assumed to be treated if under 1500 gpm. During large events, the flow under 1500 gpm was assumed to be treated and the excess over 1500 gpm was assumed to be untreated, resulting in a blend of fully treated low flow volumes and untreated excess flows during large storms;

The Year 1, Year 2 and Year 3 calculated percent of stormwater treated values were 76%, 70%, and 71 % respectively; corresponding to annual precipitation depths of 37 inches, 37 inches, and 39 inches. As is shown in Table 1, Year 4 resulted in 29 inches of precipitation and the LTST achieved treatment percentages consistent with previous years.

---

[3] 'Whole water quality samples' refers to either grab or composite water samples, including all particulate and dissolved fractions contained therein.

[4] The LOD for PCBs in water was assumed to be 0.005 µg/L, which is half of the target limit of quantification (LOQ) (Analytical Resources, 2011). The laboratory has reported PCBs in whole water down to the LOD since December 2012.

Table 1: Predicted, Observed, and Calculated Values

	Long-Term Predicted[1]	Year 4 Observed[2]	Year 4 Calculated[3]
Precipitation (inches)	36	29	N/A
Total Discharge to Slip 4 (million gallons)[4]	350	290	N/A
Total Treated Stormwater (million gallons)[6]	N/A	195	214
% Stormwater Treated[5]	59%	67%	74%

Notes:
1. Based on long-term continuous simulation of flow conditions using EPA's Stormwater Management Model (SWMM) (Geosyntec, 2011).
2. Year 4 observed values are taken from the Landau Associates September 2015 quarterly progress report (Landau Associates, 2015a) and October 2015 data provided separately by Landau Associates, which include treated flow monitoring data recorded by the CESF system from November 2014 to October 2015.
3. Year 4 calculated values are the result of calculations performed by Geosyntec using LS431 flow meter data provided by Landau Associates between November 2014 and October 2015.
4. Total Discharge to Slip 4 includes stormwater (liquids and dissolved particles) in the form of baseflow, storm event runoff, snow melt runoff and drainage, as well as all solids that enter the storm drainage system.
5. The LTST system receives a combination of flows from the LSIV and the MH130A upstream diversion. Therefore, the percent stormwater treated value represents the overall percentage of all influent flows that are captured and treated. The system captures and treats a much higher percentage of the MH130A flows compared to the flows from the LSIV as documented in the previous annual evaluation reports (Landau Associates, 2013, 2014, and 2015b).
6. The discrepancy between Year 4 observed 'total treated stormwater' and Year 4 calculated 'total treated stormwater' shown in Table 1 is due to the use of two different sources of flow data (Clear Water data versus values calculated by Geosyntec using Flo Dar data and assuming 1500 gpm as a treatment flowrate).

To calculate the FWAAC using whole water samples, recorded flow (summarized in Tables 2 and 3) and water quality data (summarized in Tables 4 through 7) from the quarterly progress reports (Landau Associates, 2015a) were collected and synthesized to develop the total flow volumes and average total PCB concentrations for Year 4. The observed total treated results come from the progress reports, which rely on field measurements from the treatment system operator, Clear Water (CW), at the effluent of the CESF (reported in 15-minute increments). The calculated total treated results rely on evaluating the portion of the Flo Dar data, which reflects total flow measured at the LS431 POC, that are below 1500 gpm (the capacity of the CESF).

The CW data are not provided in a format consistent with the FWAAC methodology; however, an approximate calculation of the FWAAC using these data was performed for comparison purposes. The observed and calculated results were then compared to test the assumption that all flow recorded by the Flo Dar meter below 1500 gpm can be assumed to be treated in calculating the FWAAC. Table 1 shows that the Year 4 CW observed treated flow value (using CW measured data not available in a format consistent with the FWAAC calculation methodology) is 8.9% less

than the calculated treated flow. To test the FWAAC assumption that all treated flow equals the LS431 flow below 1500 gpm, the 1500 gpm value was adjusted in the FWAAC calculation spreadsheet until the calculated percent treated was equal to the CW observed percent treated. This adjustment resulted in a treated flow rate assumption equal to 1,025 gpm and a corresponding FWAAC of 0.0030 µg/L (17% of the IG).[5] The calculated treated flow percentage (assuming all flow under 1500 gpm is treated for purposes of the FWAAC calculation) is therefore not conservative when compared to the observed treated flow percentage; however, given that the FWAAC is still well below the IG when adjusting the calculated treated flow percentage to equal the observed treated flow percentage, this assumption will not be modified at this time. Additionally, as a result of the challenges of accurately measuring flow at LS431, the observed percent treated value may not accurately reflect the actual percent of flows treated on site. This analysis was performed solely to evaluate the sensitivity of the FWAAC calculation to the assumption of what volume of flows are treated, and is not intended to suggest that the actual treatment capacity of the LTST is below 1500 gpm. If future monitoring shows a larger discrepancy between observed and calculated values, the assumption of what percent of flow is treated for purposes of the FWAAC calculation will be revisited. The results using both data sources are shown in Table 8 and explained further below. Additionally, the spreadsheet that contains a summary of these data along with the FWAAC calculation is attached to this submittal as a separate document.

In order to calculate PCB loads based on the observed concentrations, the corresponding average concentrations were multiplied by the volume from each specific flow designation (based on whether the flow was baseflow or storm flow, treated or untreated, and whether or not the storm flow was sampled). Figure 2 displays a sample of recorded flow at the LS431 POC with the appropriate flow designations shaded. The legend also explains how the concentrations were used with each flow designation and the following discussion explains this relationship in greater detail. It should also be noted that the dramatic increase in flow from approximately 1,500 gpm to greater than 12,000 gpm is a result of the LSIV pump on/off setpoints. For example, when stormwater enters the LSIV and the vault level rises, the first pump to engage would be the pump which conveys stormwater to the LTST system, up to the treatment flowrate (1,500 gpm). If the vault depth continues to rise high enough (during periods of intense precipitation), one of the larger King County pumps in the lift station will then engage and begin bypassing the LTST system. When that occurs the discharge flow measured will increase from the lower flow which is all treated

[5] This calculation was performed assuming that ND results were zero.

(approximately 1,500 gpm) to the higher flow representing both treated (approximately 1,500 gpm) and untreated (greater than 10,500 gpm) designations.

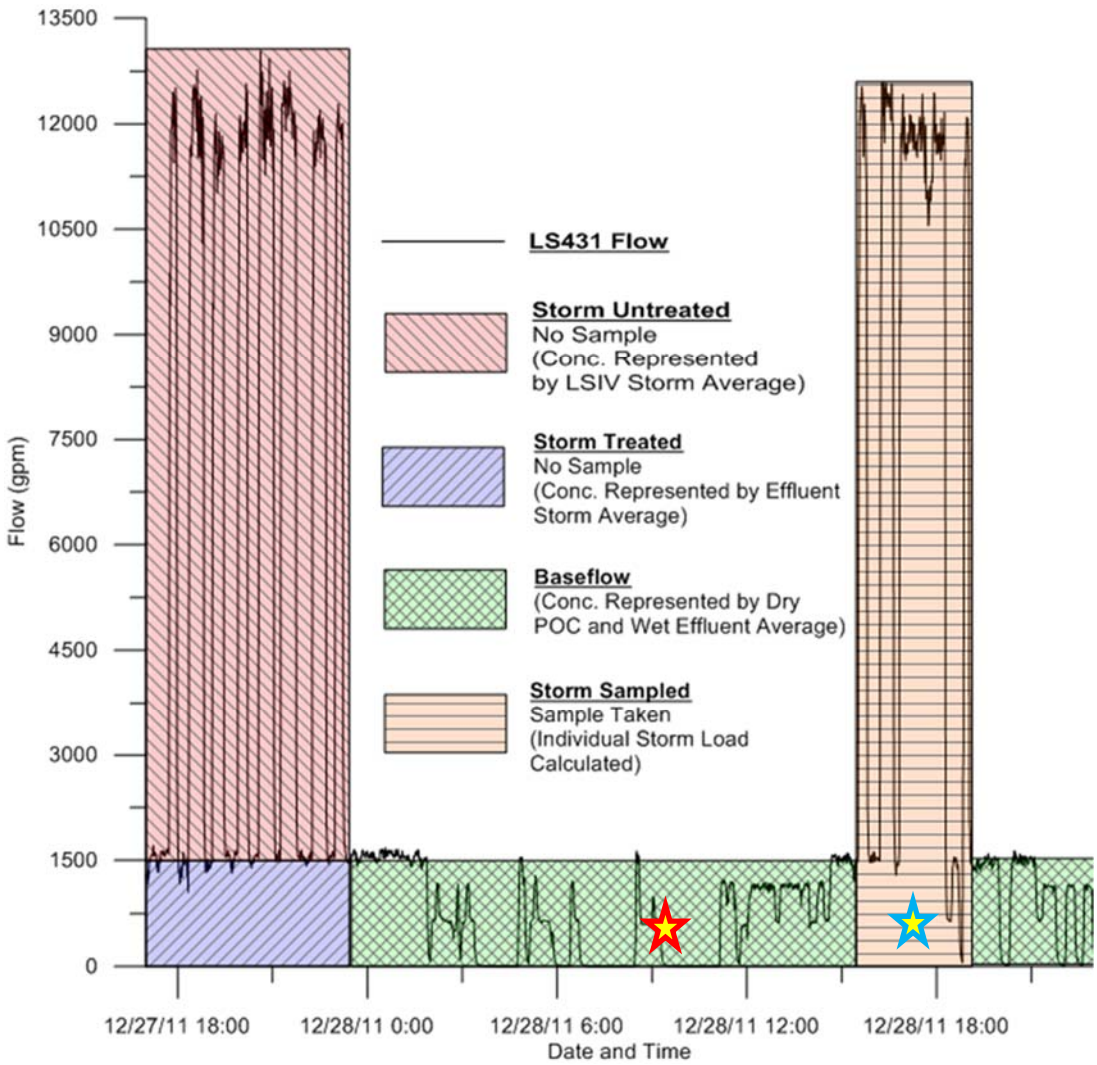

Represents hypothetical "routine" sampling event

Represents hypothetical "storm" sampling event

Figure 2. Observed Flow at the LS431 POC with Flow Designations for the representative time period only (for the purpose of assigning measured PCB concentrations to calculated volume bins in order to calculate the FWAAC)

- **Baseflow**. This represents the PCB load to Slip 4 associated with the volume completely treated by the LTST during dry weather events. The baseflow average total PCB concentration was calculated by averaging the water quality sampling results from the POC during dry weather without any bypass, or, during routine sampling events, from the CESF effluent. Due to the absence of effluent flow measurements with comparable time steps, the baseflow volumes were calculated by summing the recorded flow data that were less than or equal to 1500 gpm (the design capacity of the CESF system).

- **"Storm Sampled**." This represents the PCB load to Slip 4 for storms that were sampled. The storm sampled average total PCB concentration was not used, because each storm sampled was treated as a separate event. The storm sampled flow volumes were calculated by summing the total value of all recorded flow data that exceeded 1500 gpm and coincided with a water quality sampling event. During such an event, the entire volume (above and below 1500 gpm) was used in the summation. The storm sampled load was calculated based on the sampled PCB concentration and coinciding storm volume for each event and then summed for the entire year.

- **"Storm Treated**." This represents the PCB load to Slip 4 for the treated flow (less than 1500 gpm) during an unsampled storm event. The storm treated average total PCB concentration was calculated by averaging the water quality sampling results at the CESF effluent during wet weather events. The storm treated flow volumes were calculated by summing 1500 gpm (the capacity of the CESF system) of each recorded flow during a wet weather event in which a water quality sample was not taken (i.e., 1500 gpm from each flow measurement during an un-sampled storm was summed throughout Year 4).

- **"Storm Untreated**." This represents the PCB load to Slip 4 for the untreated flow (greater than 1500 gpm) during an unsampled storm event. The storm untreated average total PCB concentration was calculated by averaging the water quality sampling results at the LSIV during wet weather. The storm untreated flow volumes were calculated by summing the flow in excess of 1500 gpm of each recorded flow during a wet weather event in which a water quality sample was not taken (i.e., the portion of flow that exceeded 1500 gpm from each flow measurement during an unsampled storm was summed throughout Year 4).

Table 2: Year 4 Observed and Calculated Monthly Flow Volumes using Only Flo Dar Data (Observed data shown in italics; see following text for flow designation explanations)[6]

Date	Total Flow from Flo Dar (million gallons)	Treated Flow (million gallons)	Untreated Flow (million gallons)	Baseflow (million gallons)	Storm Sampled Flow (million gallons)	Storm Sampled Total PCB Load (µg)[7]	Storm Treated flow (million gallons)	Storm untreated flow (million gallons)
Nov-14	*33.8*	26.1	7.69	22.7	0.00	0.00	3.39	7.69
Dec-14	*39.6*	28.2	11.4	25.2	2.59	28,600 – 59,800	2.58	9.23
Jan-15	*26.7*	23.0	3.73	21.9	0.00	0.00	1.09	3.73
Feb-15	*37.3*	23.9	13.5	22.0	3.97	0.00 – 75,200	1.48	9.93
Mar-15	*35.7*	18.5	17.2	12.8	0.00	0.00	5.71	17.2
Apr-15	*25.1*	17.8	7.25	13.9	0.00	0.00	3.91	7.25
May-15	*14.7*	14.1	0.679	13.9	0.00	0.00	0.116	0.679
Jun-15	*11.4*	11.4	0.00171	11.4	0.00	0.00	0.00450	0.00171
Jul-15	*11.2*	11.2	0.00873	11.2	0.00	0.00	0.0120	0.00873
Aug-15	*18.8*	11.7	7.03	10.8	0.00	0.00	0.909	7.03
Sep-15	*12.5*	11.5	0.984	11.4	0.00	0.00	0.162	0.984
Oct-15	*23.4*	17.1	6.37	15.5	5.60	62,800 – 124,000	0.780	1.60
Total	*290*	214	75.8	193	12.2	91,400 – 259,000	20.2	65.3

[6] Providing all data used in the FWAAC calculation is not possible within this memorandum because the full calculation requires analyzing the data for sampled loads during individual time steps. Therefore, this table represents a summary of the monthly totals that resulted from the full calculation.

[7] If the whole water Total PCB sample result was ND, a range is presented that represents treating the ND result as zero (lower bound) and treating the ND result as the LOD (upper bound).

Table 3: Year 4 Observed and Calculated Monthly Flow Volumes using Flo Dar Data and CW Data for Treated Flow (CW replacement shown shaded blue and observed data shown in italics; see following text for flow designation explanations) [8]

Date	Total Flow from Flo Dar (million gallons)	Treated Flow (million gallons)	Untreated Flow (million gallons)	Baseflow (million gallons)[9]	Storm Sampled Flow (million gallons)	Storm Sampled Total PCB Load (µg)	Storm Treated flow (million gallons)[9]	Storm untreated flow (million gallons)
Nov-14	*33.8*	22.6	11.2	22.6	0.00	0.00	0.00	11.2
Dec-14	*39.6*	26.6	12.9	26.6	2.59	28,600 – 59,800	0.00	10.4
Jan-15	*26.7*	21.0	5.78	21.0	0.00	0.00	0.00	5.78
Feb-15	*37.3*	24.4	13.0	24.4	3.97	0.00 – 75,200	0.00	9.00
Mar-15	*35.7*	19.3	16.3	19.3	0.00	0.00	0.00	16.3
Apr-15	*25.1*	15.4	9.70	15.4	0.00	0.00	0.00	9.70
May-15	*14.7*	13.4	1.36	13.4	0.00	0.00	0.00	1.36
Jun-15	*11.4*	10.5	0.828	10.5	0.00	0.00	0.00	0.828
Jul-15	*11.2*	9.60	1.60	9.60	0.00	0.00	0.00	1.60
Aug-15	*18.8*	10.8	7.99	10.8	0.00	0.00	0.00	7.99
Sep-15	*12.5*	6.66	5.86	6.66	0.00	0.00	0.00	5.86
Oct-15	*23.4*	14.5	8.92	14.5	5.60	62,800 – 124,000	0.00	3.32
Total	*290*	195	95.6	195	12.2	91,400 – 259,000	0.00	83.4

[8] Providing all data used in the FWAAC calculation is not possible within this memorandum because the full calculation requires analyzing the data for sampled loads during individual time steps. Therefore, this table represents a summary of the monthly totals that resulted from the full calculation.

[9] The CW volume data do not discern between baseflow and storm treated flow, which is required to perform the FWAAC calculations according to the established methodology. The average concentration of PCBs in baseflow and storm treated flow is equal and therefore distinguishing between these two flow designations will not affect the final result. The CW "treated flow" is assumed to be entirely baseflow for calculation purposes.

Table 4. Year 4 Whole Water Sampling Results at the LS431 (Baseflow samples were taken during routine sampling and storm samples were taken during a wet-weather event or during routine sampling that occurred during a wet-weather event with bypass of the LTST system [shown in italics].)

	12/10/2014	12/24/2014	1/15/2015	2/6/2015	4/10/2015	7/9/2015	10/8/2015	10/10/2015	10/31/2015	Average
Total PCBs (µg/L) (baseflow sample)			<0.005		<0.005	<0.005	<0.005			**<0.005**
Total PCBs (µg/L) (storm sample)	<0.005	0.008		<0.005				0.007	<0.005	**<0.006**[1]

[1] Average result is calculated assuming ND results are equal to the Limit of Detection of 0.005.

Table 5. Year 4 Whole Water Sampling Results from MH130A (Baseflow samples were taken during routine sampling and storm samples were taken during a wet-weather event or during routine sampling that occurred during a wet-weather event with bypass of the LTST system [shown in italics])

	12/9/2014	12/23/2014	1/15/2015	2/6/2015	4/10/2015	7/9/2015	10/7/2015	10/10/2015	10/31/2015	Average
Total PCBs (µg/L) (baseflow sample)			0.181		0.189	0.085	0.087			**0.14**
Total PCBs (µg/L) (storm sample)	0.22	0.11		0.066				0.047	0.012	**0.091**

Table 6. Year 4 Whole Water Sampling Results at the LSIV (Baseflow samples were taken during routine sampling and storm samples were taken during a wet-weather event or during routine sampling that occurred during a wet-weather event with bypass of the LTST system [shown in italics])

	12/10/2014	12/24/2014	1/15/2015	2/6/2015	4/10/2015	7/9/2015	10/8/2015	10/10/2015	10/31/2015	Average
Total PCBs (µg/L) (baseflow sample)			<0.005		<0.005	<0.005	<0.005			**<0.005**
Total PCBs (µg/L) (storm sample)	0.012	0.02		<0.005				0.016	<0.005	**0.012**[1]

1. In order to evaluate the representativeness of this annual data, the flow-weighted average over all four years of monitoring at the LSIV was calculated. This cumulative average is 0.020 µg/L (assuming ND = LOD). Using this cumulative four year average instead of the single Year 4 average in the FWAAC calculation results in a FWAAC of 0.0089 (assuming ND = LOD), which is 49% of and still below the IG. This result is not being presented to determine compliance, but to evaluate the representativeness of these data and confirm that even if incorporating long term LSIV samples (representing untreated storm flow), the resulting FWAAC is still below the IG.

Table 7. Year 4 Whole Water Sampling Results from the CESF Effluent (Baseflow samples were taken during routine sampling and storm samples were taken during a wet-weather event or during routine sampling that occurred during a wet-weather event with bypass of the LTST system [shown in italics])

	11/6/2014	12/1/2014	12/9/2014	12/23/2014	1/5/2015	1/15/2015	2/6/2015	3/10/2015	4/10/2015	5/5/2015	6/2/2015	7/9/2015	8/4/2015	9/1/2015	10/7/2015	10/10/2015	10/31/2015	Average
Total PCBs (µg/L) (baseflow sample)	<0.005	<0.005			0.006	<0.005		<0.005	<0.005	<0.005	<0.005	<0.005	<0.005	<0.005	<0.005			**<0.0051**
Total PCBs (µg/L) (storm sample)			<0.005	<0.005			<0.005									*<0.005*	*<0.005*	**<0.005**

The Year 4 loads were calculated by multiplying the Year 4 average total PCB concentrations by the Year 4 flow volumes (including appropriate unit conversions) for baseflow, storm treated, and storm untreated loads separately. The storm sampled load was calculated as the sum of the individual loads from each recorded event throughout Year 4 (determined by multiplying the individual event flow volume by the concentration). The total Year 4 PCB load from the site, as shown in Table 8, was calculated to be <7.2 grams using Flo Dar data and <7.7 grams using CW data (assuming ND = LOD).

Table 8: Year 4 PCB Loading Calculation Parameters using Whole Water Samples (ND results assumed equal to the LOD)

	Average Total PCB Concentrations [Range if applicable] (µg/L)	Flow Volume (million Gallons) [Flo Dar data]	Flow Volume (million Gallons) [CW data][1]	Total PCB Load (g) [Flo Dar data]	Total PCB Load (g) [CW data]
Baseflow	<0.0051	193	195	<3.7	<3.7
Storm Sampled	-	12.2	12.2	<0.26	<0.26
Storm Treated	<0.0050	20.2	0.00	<0.38	0.0
Storm Untreated	<0.012 [<0.0050 - 0.020]	65.3	83.4	<2.9	<3.7
Total	-	290	290	<7.2	<7.7

Notes:

1. The CW volume data do not discern between baseflow and storm treated flow, which is required to perform the FWAAC calculations according to the established methodology. The average concentration of PCBs in baseflow and storm treated flow is equal and therefore distinguishing between these two flow designations will not affect the final result. The CW "treated flow" is assumed to be entirely baseflow for calculation purposes.

To better illustrate the flow allocation as shown in Table 8, Figures 3 and 4 represent the annual distribution of flows and PCB mass loads using only Flo Dar data, respectively. Figure 3 shows "treated flow" as the summation of baseflow and "storm treated" flow, untreated flow, and storm sampled flow as a combination of treated and untreated wet-weather flow during a sampling event (due to the methodology assumptions, this flow could not be distributed between treated and untreated flow). Figure 4 shows the breakdown of the PCB mass load in stormwater, with the assumption that all ND values are equal to zero.

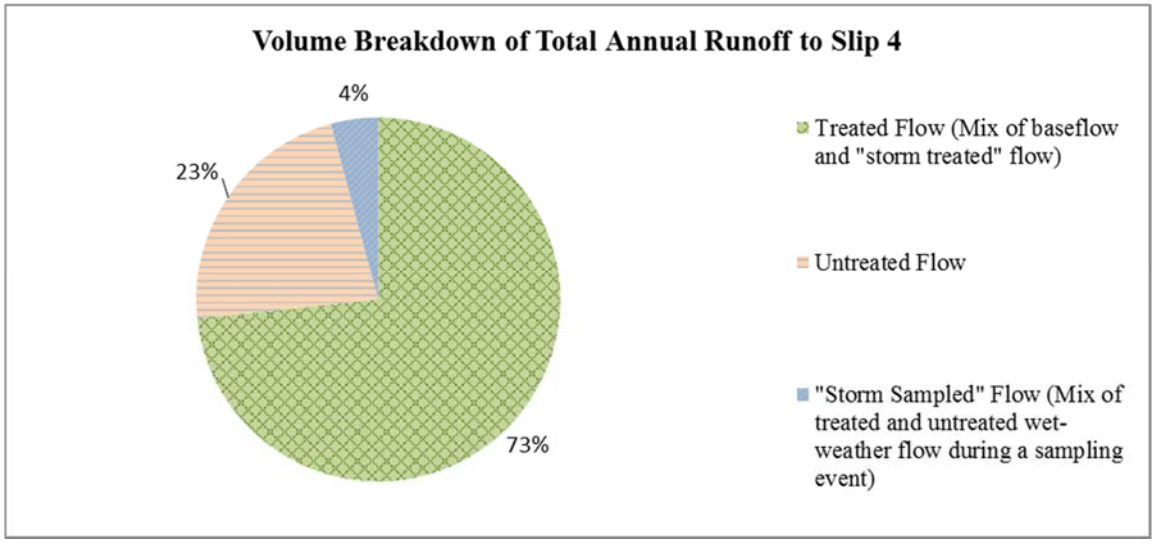

Figure 3. Annual Flow Volume Comparison (see preceding text for flow designation explanations)

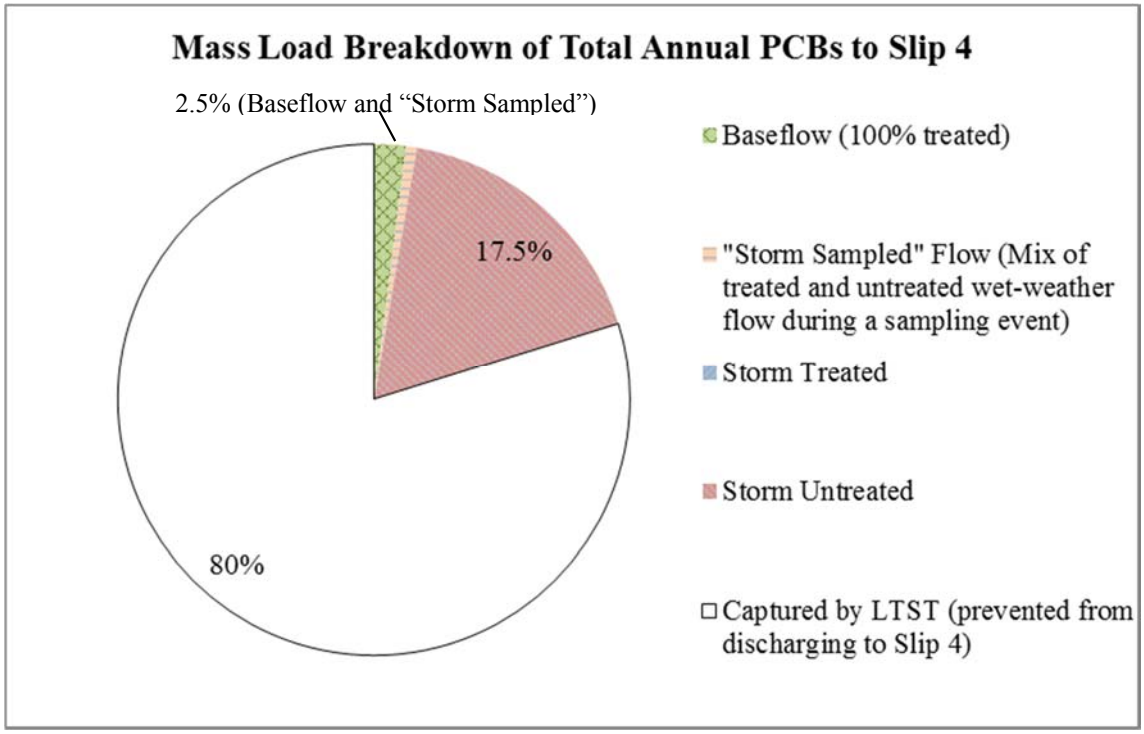

Note: Using the ND = 0 assumption, loads from 'storm treated' flow are 0.

Figure 4. Annual PCB Mass Load Comparison (ND values assumed equal to zero for reporting purposes; see following text for flow designation explanations)

The FWAAC was calculated by dividing the sum of all Year 4 loads by the sum of all Year 4 flow volumes. These results are presented in Table 9.

Table 9: Year 4 FWAAC Results

	Interim Goal	Discharge to Slip 4 (Assuming ND = 0) [Flo Dar data]	Discharge to Slip 4 (Assuming ND = LOD) [Flo Dar data]
FWAAC (total PCBs)	0.018 µg/L	**0.0025 µg/L [This value is used to determine compliance with the IG]**	0.0066 µg/L

DISCUSSION AND RECOMMENDATIONS

Year 4 monitoring results are discussed by program objective, as described in this memo's introduction. It should also be noted that, based on the estimated PCB mass load to the LTST system, between 54% (assuming ND = LOD) and 80% (assuming ND = 0) of the total PCB mass load has been captured and is prevented from being discharged to Slip 4. Due to the upstream diversion at MH130A, the LTST system captures and treats a higher percentage of flow from the MH130A line than it does from the LSIV, which includes flows from other stormdrain lines. Therefore, the existing LTST system is able to remove a greater PCB load than it would if it only pumped from the LSIV because the MH130A average whole water PCB concentration (0.091 µg/L during storms) is much higher than the average whole water PCB concentration in the LSIV (0.0096 µg/L during storms) during Year 4 (assuming ND = 0). The LTST system removed up to 80% of the PCB mass this year, however this result would have been less than the overall percent volume capture (i.e., <74%) if only treating flow from the LSIV given that LSIV baseflow PCB concentrations (which are fully captured by the LTST system) are less than LSIV stormflow concentrations (which are only partially captured by the LTST system).

Objective #1: Assess the LTST system for compliance with the proposed FWAAC IG

The calculated FWAAC (using the EPA-approved calculation methodology) at the POC over the reporting period (November 2014 to October 2015) is 0.0025 µg/L total PCBs assuming that ND results are equal to zero. As was also true for Year 1, 2, and 3 results, this Year 4 result is again substantially less than the EPA's FWAAC IG of 0.018 µg/L total PCBs. For additional comparison, the Year 4 FWAAC was also calculated to be 0.0066 µg/L total PCBs with the alternative assumption that ND results are equal to the LOD (this value is not to be used for compliance determination purposes). This alternative FWAAC result is also below the IG of 0.018 µg/L total PCBs.

Objective #2: Confirm that the data used and the assumptions made to arrive at the proposed FWAAC IG were reasonably conservative and descriptive of site conditions

- **Observed vs. predicted discharge volume.** In Table 1, the Year 4 observed discharge volume to Slip 4 (290 million gallons) was less than the long-term average predicted value (350 million gallons); however, the total precipitation during Year 4 (29 inches) is also below the long-term predicted precipitation depth (36 inches). The Year 4 precipitation depth is 81% of the long-term predicted precipitation depth and the Year 4 observed discharge volume to Slip 4 is 83% of the long-term predicted volume. These percentages suggest that, when accounting for the reduced observed precipitation, the observed discharge volumes are consistent with the predicted volumes. In addition, this comparison indicates that the annual discharge volume assumption that was used to set the FWAAC IG was reasonable Based on this, as well as the FWAAC results and the uncertainty of the feasibility of achieving an accurate recalibration, the Storm Water Management model (SWMM) will not be recalibrated at this time. Total discharged flow will continue to be monitored however.

- **Observed vs. predicted treatment rate.** Table 1 also shows that the observed and calculated 2015 percent stormwater treated (67% and 74%, respectively) are higher than the long-term average predicted value (59%). However, due to the precipitation depth and observed discharge volume to Slip 4 being lower than the long-term predicted precipitation depth (i.e., a lower quantity of volume was conveyed to the LTST, resulting in less bypass and higher treatment of discharge compared to the predicted volumes), these higher treatment percentages are expected. Additionally, these results confirm that the percent treated assumption used to set the FWAAC IG was reasonable.

- **Flow data corrections.** Landau Associates recalibrated the Flo-Dar meter at the POC under high flow conditions during an October 2014 storm event (performed in Year 3). This calibration resulted in a high-flow correction factor similar to the previous calibration performed, therefore all previously recorded flows were considered to be accurate. Landau Associates also recalibrated the Flo-Dar meter at the POC under low flow conditions in June 2015. As noted above, the Year 4 precipitation depth is 81% of the model-predicted depth, which resulted in the Year 4 observed discharge volume to Slip 4 being 83% of the model-predicted discharge volume. The precipitation depth largely determines the quantity of runoff and ultimately the volume discharged to Slip 4, suggesting that these percentages should be similar. The ratio of observed and model-predicted precipitation depths is within 2.4% of the ratio of observed and model-predicted volume discharged to Slip 4. This percentage (2.4%) is less than the Flo Dar measurement error (10% on average), suggesting that flow data corrections are not necessary at this time.

- **Additional Assumptions.** While the results suggest that the LTST treatment capacity assumptions made to arrive at the proposed FWAAC IG were reasonably conservative and descriptive of site conditions, additional assumptions, such as the assumption that bedload solids[10] constitute a very small percentage of the total transported solids mass in the storm drain system, cannot be verified at this time. However, the bedload at the POC is very likely to be small for several reasons, including the very flat stormdrain network profile (i.e., velocities are low, minimizing shear stresses that would foster bedload transport, with some sections of pipe possibly even being net depositional due to backwater), most or all of the upstream bedload being captured in the LSIV, and discharge samples at the POC being very well mixed because of the upstream pumps (from the LSIV and LTST), and rigorous source controls used in the drainage area.

CONCLUSION

The monitoring carried out in Year 4 (November 2014 to October 2015) at NBF was successful in obtaining data to evaluate the two monitoring program objectives:

1. The LTST system was in compliance with the FWAAC IG of 0.018 µg/L total PCBs.
2. Verifiable assumptions were confirmed to be reasonably conservative by evaluating the available predicted, observed, and calculated data.

It was also concluded that recalibration of the SWMM model and additional flow data adjustments are not necessary at this time.

These conclusions are consistent with those from Years 1, 2 and 3. **Therefore, 4 years of data further solidify the findings that the LTST is meeting the FWAAC IG and the discharge quantity and quality characterizations assumed in developing the FWAAC IG are appropriate in representing Site conditions.**

The monitoring objectives above will be reevaluated during the following year.

---

[10] Bedload is material that is transported along the bed of surface water conveyances, without resuspension into the water column as suspended solids. Bedload solids are generally larger and/or more dense than suspended solids, but typically represent a smaller total flux or load of solids in comparison to suspended solids. Bedload solids are typically not captured in grab water samples (like those used in this analysis for calculation of total solids loading) since they are located on or near the bed of the conveyance rather than suspended in the water column.

REFERENCES

Analytical Resources, Inc., 2011. *Quality Control Criteria for analysis of Aqueous and Tissue Samples for Aroclors (Polychlorinated Biphenyls – PCB): EPA Method 8082B (27 October 2011).*

Geosyntec Consultants, 2012. *Amended Monitoring Approach Recommendations for North Boeing Field Long-Term Stormwater Treatment System (10 January 2012).*

Geosyntec Consultants, 2011. *Addendum to Removal Action Work Plan: Long-Term Stormwater Treatment (26 January 2011)*. March.

Landau Associates, 2015a. *Third Quarter 2015 Progress Report North Boeing Field Stormwater Treatment Lower Duwamish Waterway Superfund Site EPA Docket No. CERCLA-10-2010-0242 (5 October 2015).*

Landau Associates, 2015b. *Annual Performance Evaluation Report for Long-Term Stormwater Treatment (2013 – 2014) for North Boeing Field.* Prepared for the Boeing Company, February.

Landau Associates, 2014. *Annual Performance Evaluation Report for Long-Term Stormwater Treatment (2012 – 2013) for North Boeing Field.* Prepared for the Boeing Company, March.

Landau Associates, 2013. *Annual Performance Evaluation Report for Long-Term Stormwater Treatment (2011 – 2012) for North Boeing Field.* Prepared for the Boeing Company, March.

Landau Associates, 2012. *Sampling and Analysis Plan, Long-Term Stormwater Treatment, North Boeing Field, Seattle, Washington*. March.

Landau Associates, 2011. *Sampling and Analysis Plan, Long-Term Stormwater Treatment, North Boeing Field, Seattle, Washington*. June.

NBF Stormwater Expert Panel and Geosyntec, 2011. *Alternative Interim Goal Recommendations for Protection of Slip 4 Sediment Recontamination*. October.

SAIC, 2010. *North Boeing Field/Georgetown Steam Plant Site Remedial Investigation/ Feasibility Study – Slip 4 Sediment Recontamination Modeling Report.* September.

* * * * *