APPENDIX B

HISTORICAL MONITORING WELL NETWORKS

DRAFT

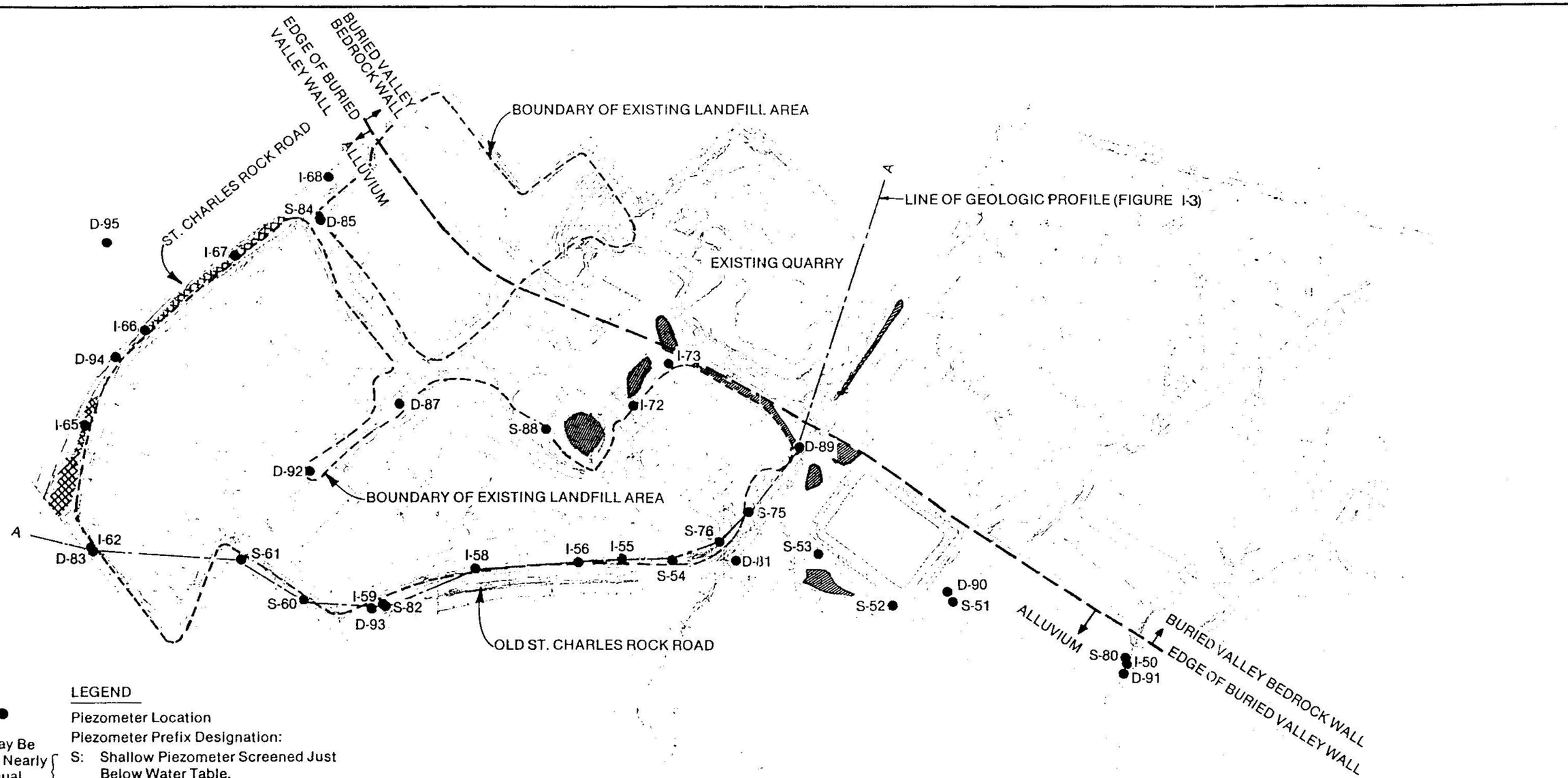

LEGEND

- ● Piezometer Location
- Piezometer Prefix Designation: (May Be At Nearly Equal Depths.)
  - S: Shallow Piezometer Screened Just Below Water Table.
  - I: Intermediate Depth Piezometer Screened In Zone Between Shallow And Deep Piezometers.
  - D: Deep Piezometer Screened At Or Near The Top Of Bedrock.
- → Predominant Direction Of Groundwater Flow.
- XXXXXX Surface Water In Drainage Ditch
- Surface Water Feature Which Is Probably Recharging Groundwater As Discussed In Text.

N

400 0 400 800

SCALE IN FEET

Burns & McDonnell
ENGINEERS - ARCHITECTS - CONSULTANTS

Figure I-2
SITE PLAN

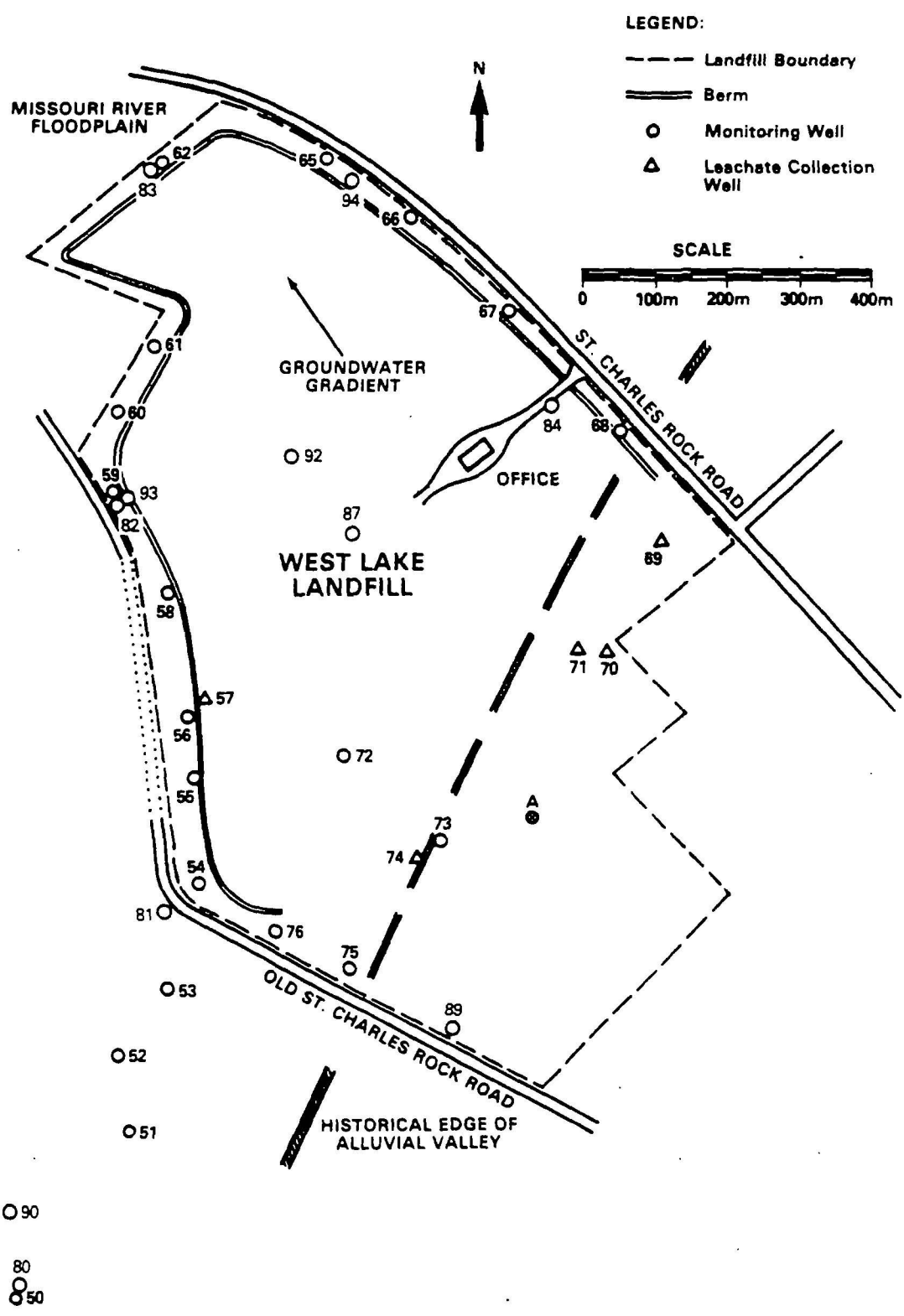

Figure 2.5 Location of monitoring wells

N 1071000 N 1070500 N 1070000 N 1069500 N 1069000 N 1068500 N 1068000 N 1067500 N 1067000 N 1066500

E 517000 E 516500 E 516000 E 515500 E 515000 E 514500 E 514000 E 513500

EDGE OF ALLUVIAL VALLEY

LAIDLAW OFFICE BUILDING

ST. CHARLES ROCK ROAD

AREA 1

AREA 2

NORTH SURFACE WATER

FORD PROPERTY FARMERS FIELD

FLOOD CONTROL CHANNEL

OLD ST. CHARLES ROCK ROAD

RETENTION POND

EDGE OF ALLUVIAL VALLEY

PZ-114-AS
I-68
D-14
I-67
S-84
D-85
PZ-207-AS
MW-F1S
MW-F1D
S-5
I-4
D-3
PZ-113-AS
PZ-113-AD
I-68
MW-F3
D-94 DAMAGED
D-13
GAGE-5
PZ-112-AS
D-87
PZ-305-AI
I-73
PZ-205-AS
S-88
PZ-302-AS
PZ-302-AI
GAGE-1
GAGE-2
GAGE-3
GAGE-4
S-8
I-62
D-83
S-10
I-11
D-12
S-61
D-6
MW-102
MW-101
I-7
S-82
I-9
D-93
S-1
I-2
GAGE-6
GAGE-7
PZ-304-AS
PZ-304-AI
MW-103
MW-F2
MW-104
D-81
PZ-303-AS
S-75
S-53
S-51/D-90
S-52 DAMAGED
PZ-300-AS
PZ-300-AD
S-80
I-50
D-91-M DAMAGED
MW-106
MW-107
MW-105 DAMAGED

LEGEND

- S-1 — REMEDIAL INVESTIGATION MONITORING WELL LOCATION — MONITORING WELL LOCATION NUMBER
- PZ-113-AD — EXISTING MONITORING WELL LOCATION — LOCATION NUMBER
- GAGE-6 — STAFF GAGE LOCATION — STAFF GAGE LOCATION NUMBER
- AREAL EXTENT OF OVERLAND GAMMA SURVEY
- ELEVATION CONTOUR LINES — FEET MSL

SCALE
0 300 600 1200 FEET

REMEDIAL AND PREVIOUS INVESTIGATIONS MONITORING WELL LOCATION PLAN WEST LAKE LANDFILL BRIDGETON, MISSOURI

PREPARED FOR
WEST LAKE RESPONDENT GROUP

McLaren Hart
ENVIRONMENTAL ENGINEERING CORPORATION

DATE: 11/05/96	FIGURE 2-1	DRAWING NUMBER 556-8018
SCALE: AS SHOWN		

DRAWN BY: KJP
UPDATED: 11/05/96
CHECKED BY
APPROVED BY
DRAWING NUMBER 556-8018

REVISIONS | No. | DESCR. | APPR. BY:

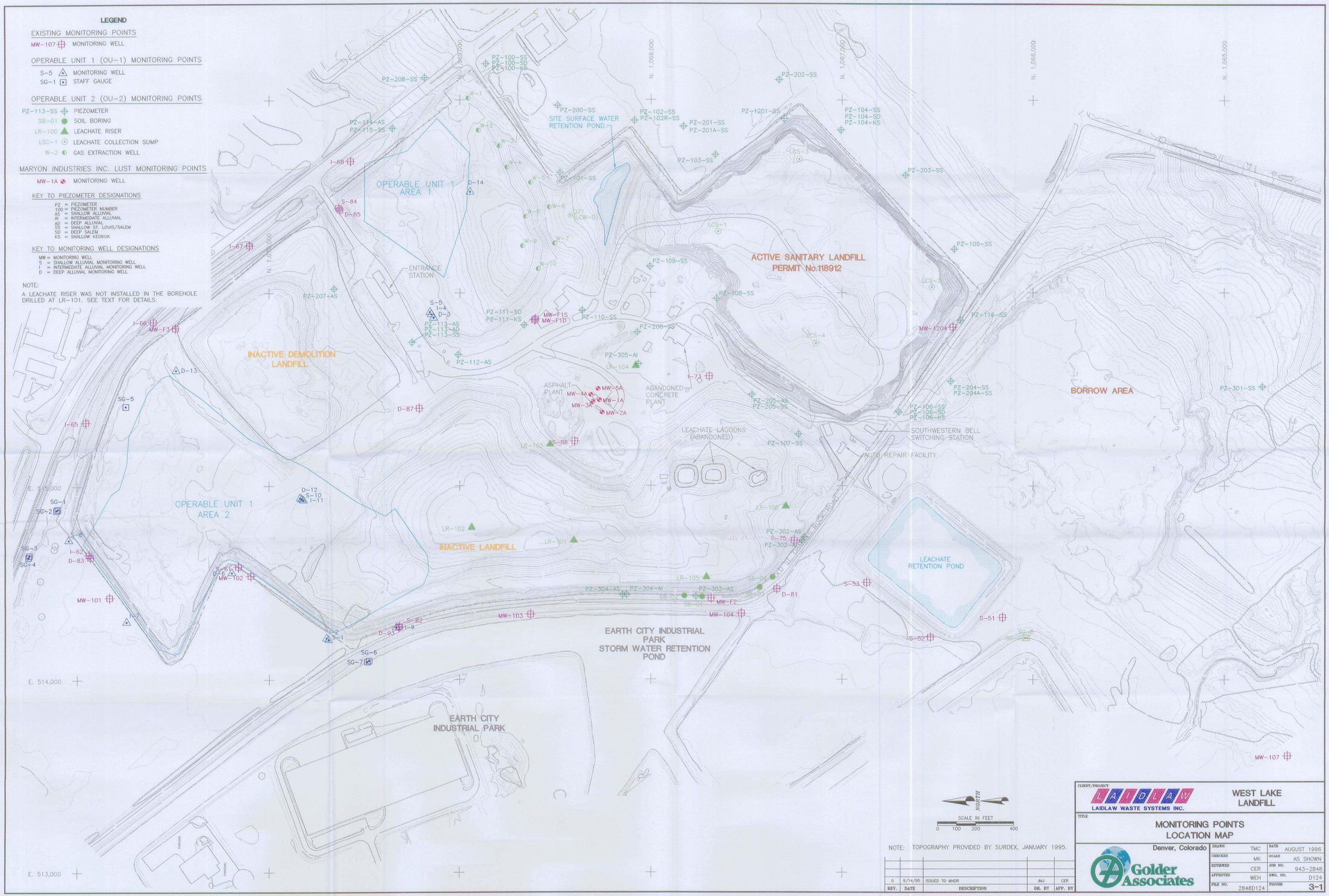
LEGEND
EXISTING MONITORING POINTS
MW-107 MONITORING WELL
OPERABLE UNIT 1 (OU-1) MONITORING POINTS
S-5 MONITORING WELL
SG-1 STAFF GAUGE
OPERABLE UNIT 2 (OU-2) MONITORING POINTS
PZ-113-SS PIEZOMETER
SB-01 SOIL BORING
LR-100 LEACHATE RISER
LSC-1 LEACHATE COLLECTION SUMP
W-2 GAS EXTRACTION WELL
MARYON INDUSTRIES INC. LUST MONITORING POINTS
MW-1A MONITORING WELL
KEY TO PIEZOMETER DESIGNATIONS
PZ = PIEZOMETER
100 = PIEZOMETER NUMBER
AS = SHALLOW ALLUVIAL
AI = INTERMEDIATE ALLUVIAL
AD = DEEP ALLUVIAL
SS = SHALLOW ST. LOUIS/SALEM
SD = DEEP SALEM
KS = SHALLOW KEOKUK
KEY TO MONITORING WELL DESIGNATIONS
MW = MONITORING WELL
S = SHALLOW ALLUVIAL MONITORING WELL
I = INTERMEDIATE ALLUVIAL MONITORING WELL
D = DEEP ALLUVIAL MONITORING WELL
NOTE:
A LEACHATE RISER WAS NOT INSTALLED IN THE BOREHOLE DRILLED AT LR-101. SEE TEXT FOR DETAILS.
OPERABLE UNIT 1 AREA 1
OPERABLE UNIT 1 AREA 2
INACTIVE DEMOLITION LANDFILL
INACTIVE LANDFILL
ACTIVE SANITARY LANDFILL PERMIT No.118912
BORROW AREA
SITE SURFACE WATER RETENTION POND
ENTRANCE STATION
ASPHALT PLANT
ABANDONED CONCRETE PLANT
LEACHATE LAGOONS (ABANDONED)
SOUTHWESTERN BELL SWITCHING STATION
AUTO REPAIR FACILITY
LEACHATE RETENTION POND
EARTH CITY INDUSTRIAL PARK STORM WATER RETENTION POND
EARTH CITY INDUSTRIAL PARK
N. 1,069,000
N. 1,068,000
N. 1,067,000
N. 1,066,000
N. 1,065,000
E. 515,000
E. 514,000
E. 513,000
NORTH
SCALE IN FEET
0 100 200 400
NOTE: TOPOGRAPHY PROVIDED BY SURDEX, JANUARY 1995.
0 9/14/95 ISSUED TO MNDR JMJ CER
REV. DATE DESCRIPTION DR. BY APP. BY
CLIENT/PROJECT
LAIDLAW
LAIDLAW WASTE SYSTEMS INC.
WEST LAKE LANDFILL
TITLE
MONITORING POINTS LOCATION MAP
Denver, Colorado
Golder Associates
DRAWN TMC
CHECKED MK
REVIEWED CER
APPROVED WEH
FILE NO. 2848D124
DATE AUGUST 1996
SCALE AS SHOWN
JOB NO. 943-2848
DWG. NO. D124
FIGURE 3-1

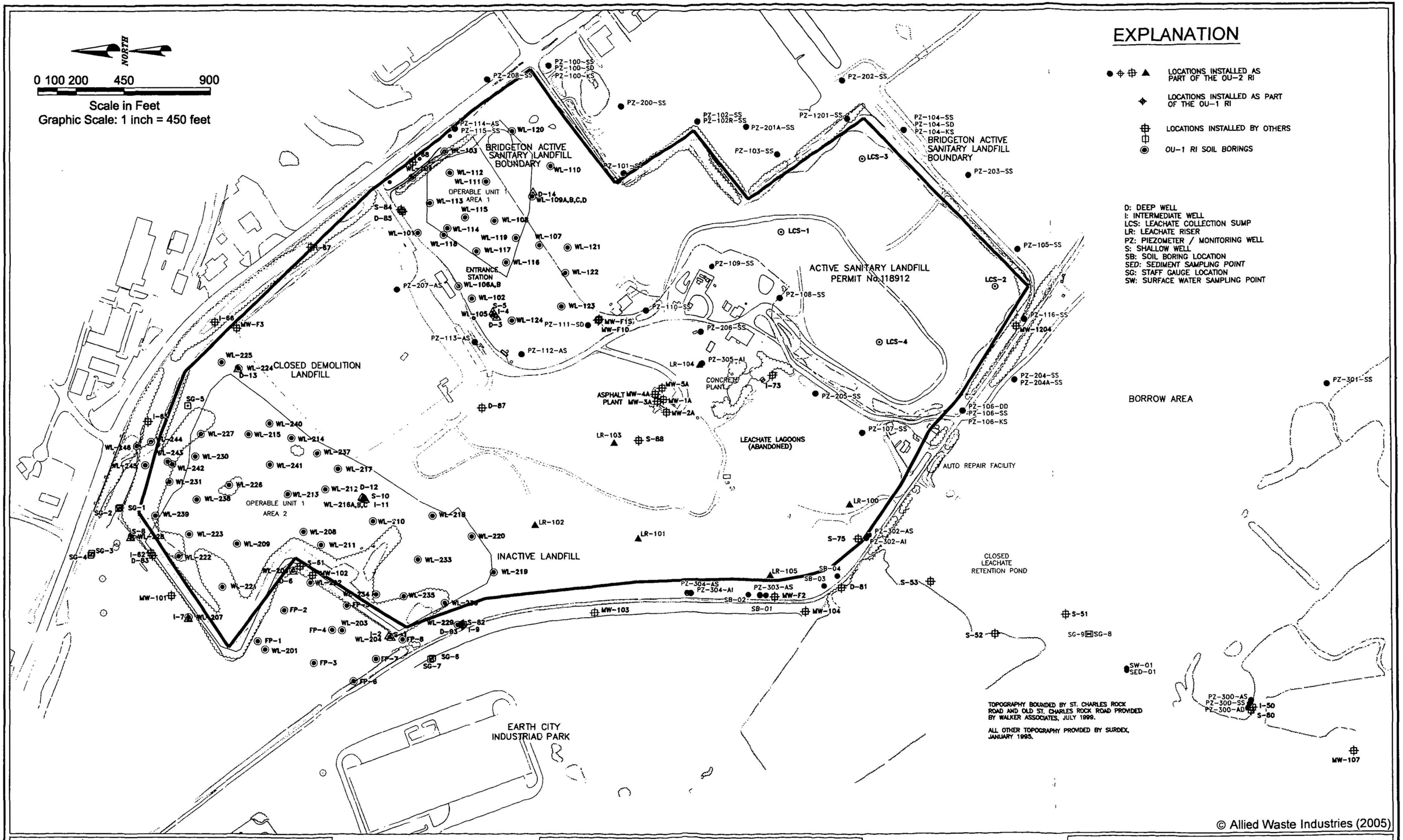

© Allied Waste Industries (2005)

4630 South Highway 94
North Outer Road
St. Charles, Missouri 63304
Phone (636) 939-9111
Fax (636) 939-9757
HERST & ASSOCIATES, INC.®

West Lake Landfill OU-2
Bridgeton, Missouri

Figure 3-1
Environmental
Sampling Locations

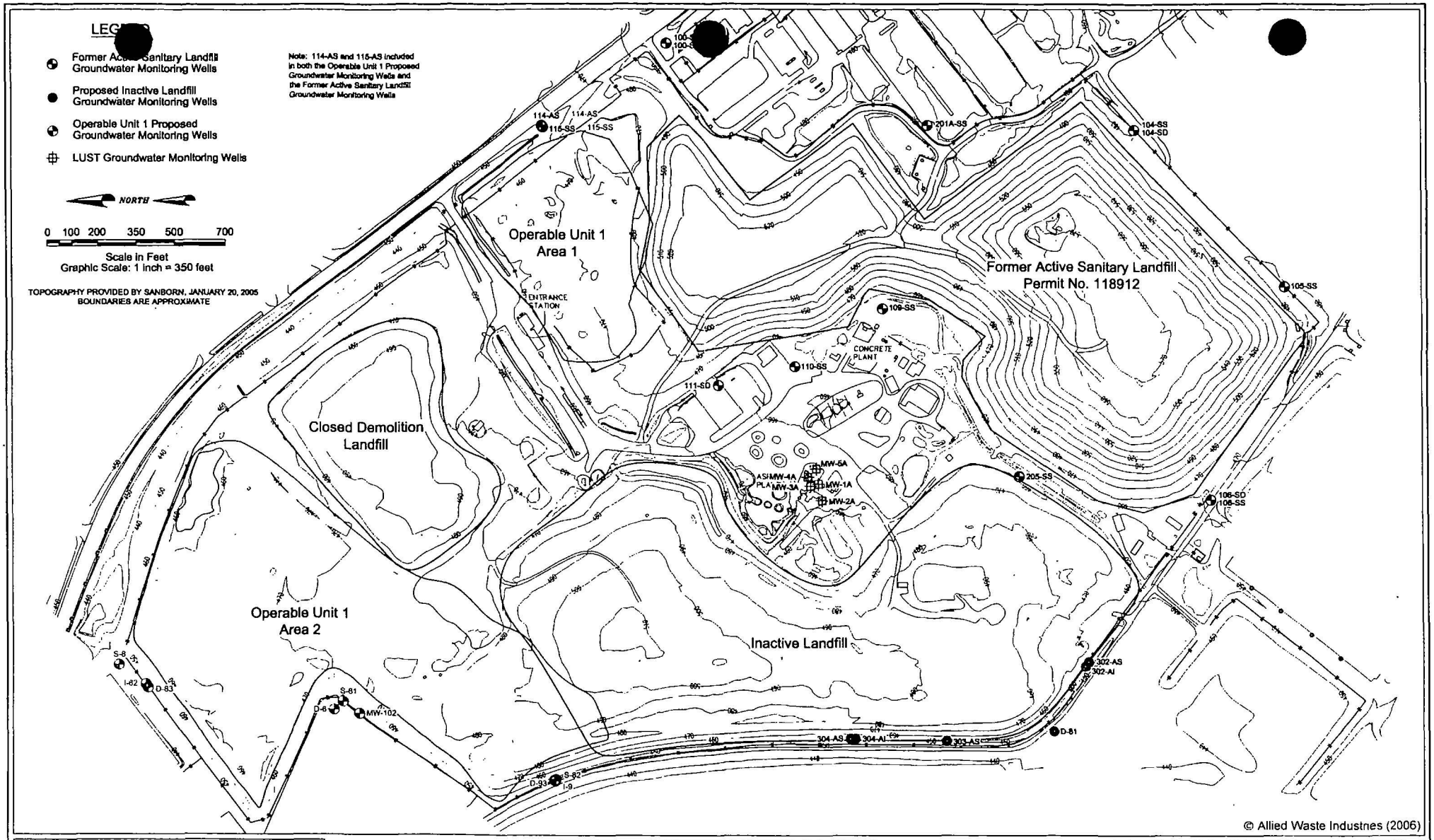

© Allied Waste Industries (2006)

HERST & ASSOCIATES, INC.
4630 South Highway 94
North Outer Road
St. Charles, Missouri 63304
Phone (636) 939-9111
Fax (636) 939-9757

West Lake Landfill OU-2
Bridgeton, Missouri

Figure 5-3
Site-Wide Groundwater Monitoring Well Locations

M:\clients\EMSI\westlake\2017\RI-Addendum-edits\Section-4\FIG-4-10-GW-Well-Locs.dwg 6/1/17

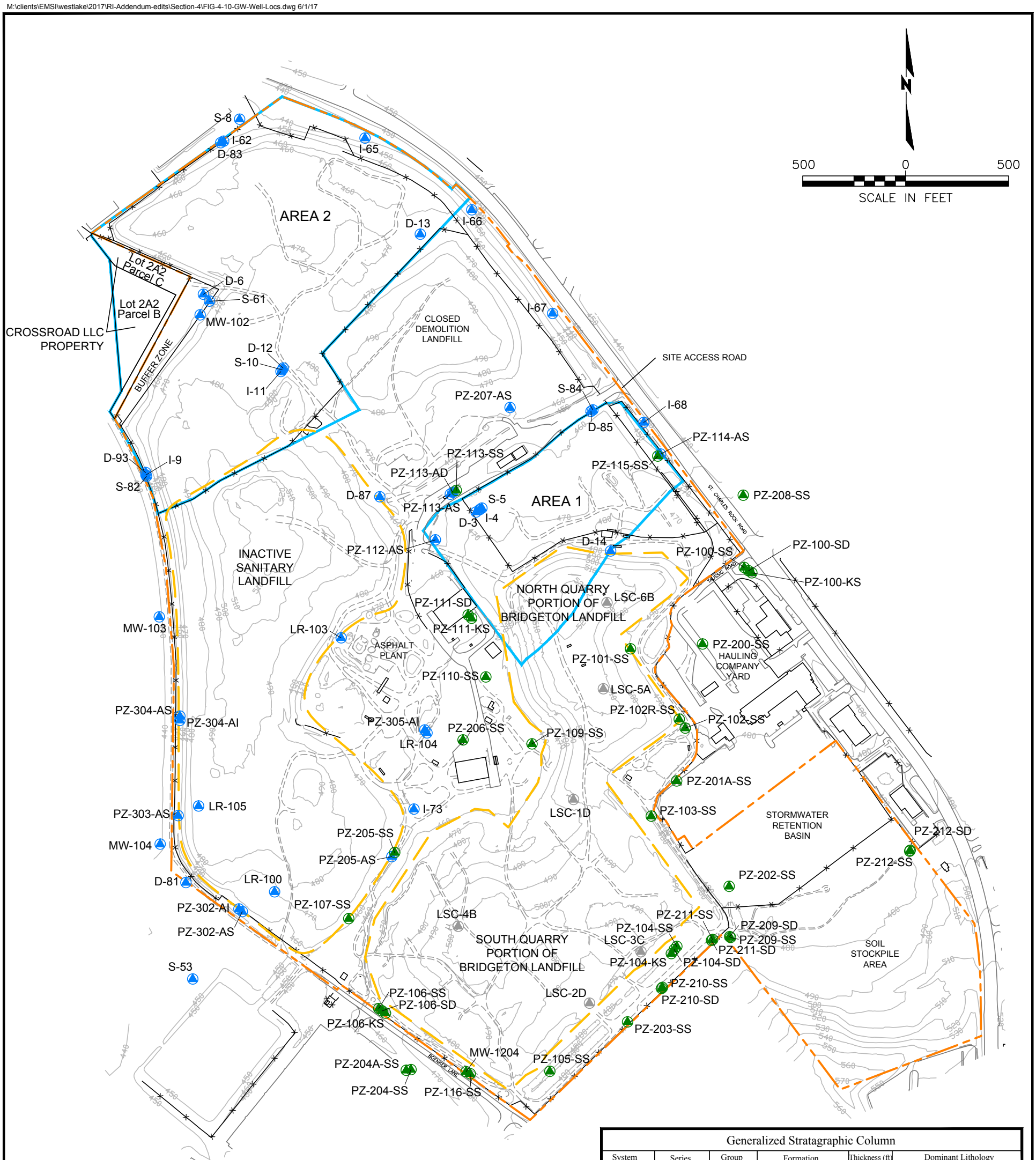

LEGEND

- Leachate Collection Sump
- Alluvium Groundwater Well
- Bedrock Groundwater Well
- Property Line
- OU-1 Area Boundary
- 490 Index Contour
- Building/Structure
- Paved Road
- Unpaved Road
- Fence
- Water Body/Stream

WELL FORMATION DESIGNATIONS

LR or MW: Undifferentiated
S or AS: Alluvial Shallow Well
I or AI: Alluvial Intermediate Well
D or AD: Alluvial Deep Well
SS: St. Louis Formation Well
SD: Salem Formation Well
KS: Keokuk Formation Well

NOTES:
- AERIAL TOPOGRAPHY PROVIDED BY COOPER AERIAL SURVEYS CO. AND IS DATED DECEMBER 2, 2016
- ALL ELEVATIONS ARE ABOVE MEAN SEA LEVEL (AMSL)

Generalized Stratagraphic Column

System	Series	Group	Formation	Thickness (ft)	Dominant Lithology
Quaternary	Holocene		Alluvium	0-150	Sand, gravel, silt, and clay.
	Pleistocene		Loess Glacial Till	1-110 0-55	Silt. Pebbly clay and silt.
Pennsylvanian	Missourian	Pleasanton	Undifferentiated	0-75	Shales, siltstones, "dirty" sandstones, coal beds and thin limestone beds.
	Desmoinesian	Marmaton	Undifferentiated	0-90	
		Cherokee	Undifferentiated	0-200	
	Atokan		Cheltenham Formation	unknown	
Mississippian	Meremacian		Ste. Genevieve Formation	0-160	Argillaceous to arenaceous limestone.
			St. Louis Limestone	0-180	
			Salem Formation	0-180	
			Warsaw Formation	0-110	Shales in upper portion, limestone in lower portions.
	Osagean		Burlington-Keokuk Formation	0-240	Cherty limestone.
			Fern Glen Formation	0-105	Red limestone and shale.

Source:
EMSI, 2014, Groundwater Monitoring Report, October 2013 Additional Groundwater Sampling Event, West Lake Landfill OU-1, February 21.

DRAFT

Figure 4-10
Location of Groundwater Monitoring Wells 2012-2013 Monitoring Events
West Lake Landfill OU-1 RI Addendum

EMSI Engineering Management Support, Inc.

APPENDIX C

REGIONAL GEOLOGIC CROSS SECTIONS

DRAFT

U.S. DEPARTMENT OF THE INTERIOR
U.S. GEOLOGICAL SURVEY

MISCELLANEOUS INVESTIGATIONS SERIES
MAP I–2533 (SHEET 2 OF 2)
Explanatory pamphlet accompanies map

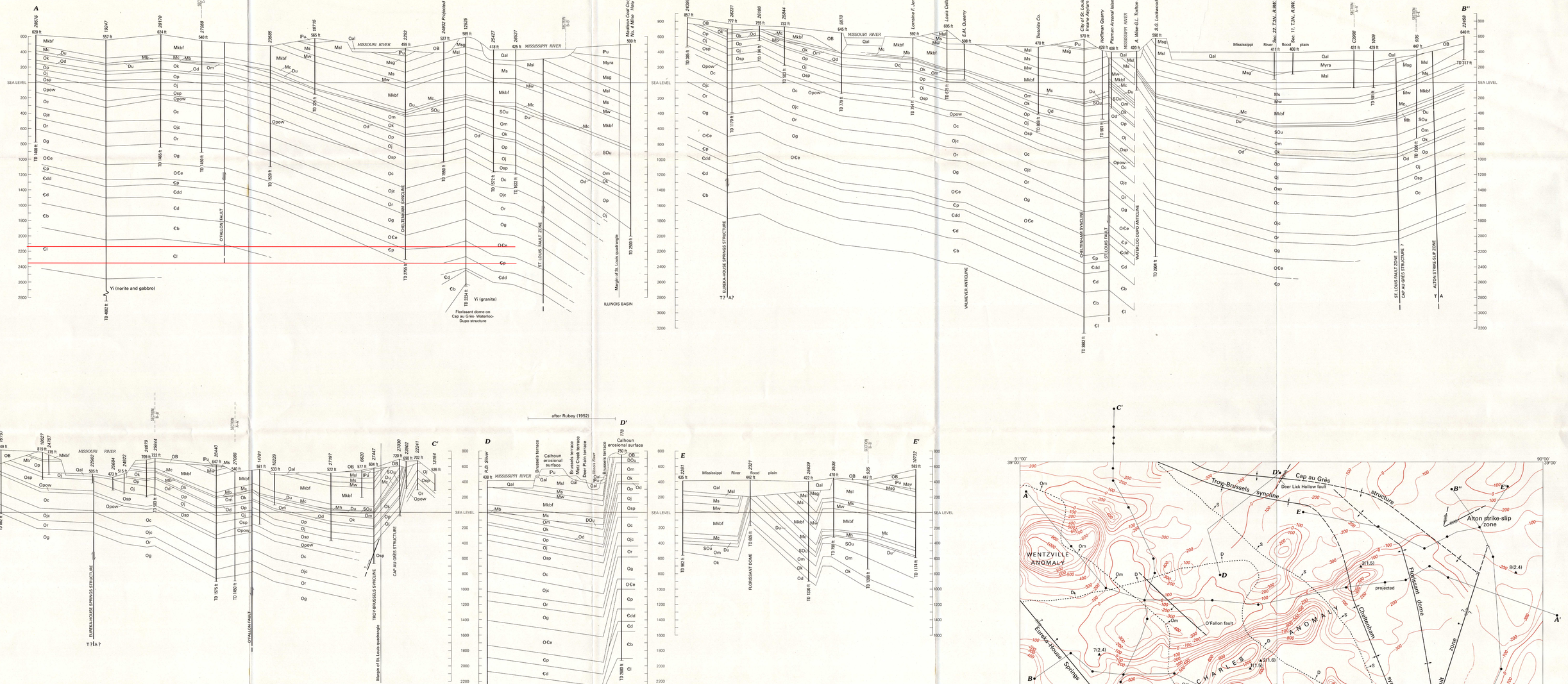

Regional magnetic anomaly map of the St. Louis 30′ X 60′ quadrangle, and generalized cross sections. Map shows major structural features, pinch-out lines related to major unconformities, and locations of recent earthquake epicenters. Approximate positions of cross sections and selected drill holes (solid dots along cross-section traces) are also indicated. On cross sections: OB, overburden (includes loess and surficial deposits); TD, total depth; T, toward observer; A, away from observer; vertical exaggeration x 42.

BEDROCK GEOLOGIC MAP OF THE ST. LOUIS 30′ × 60′ QUADRANGLE, MISSOURI AND ILLINOIS

Compiled by
Richard W. Harrison
1997

U.S. GEOLOGICAL SURVEY
RESTON, VA
JUN 18 1998
LIBRARY

USGS LIBRARY-RESTON
3 1818 00257420 8

M(200)
I
no. 2533
Sheet 2
c. 2

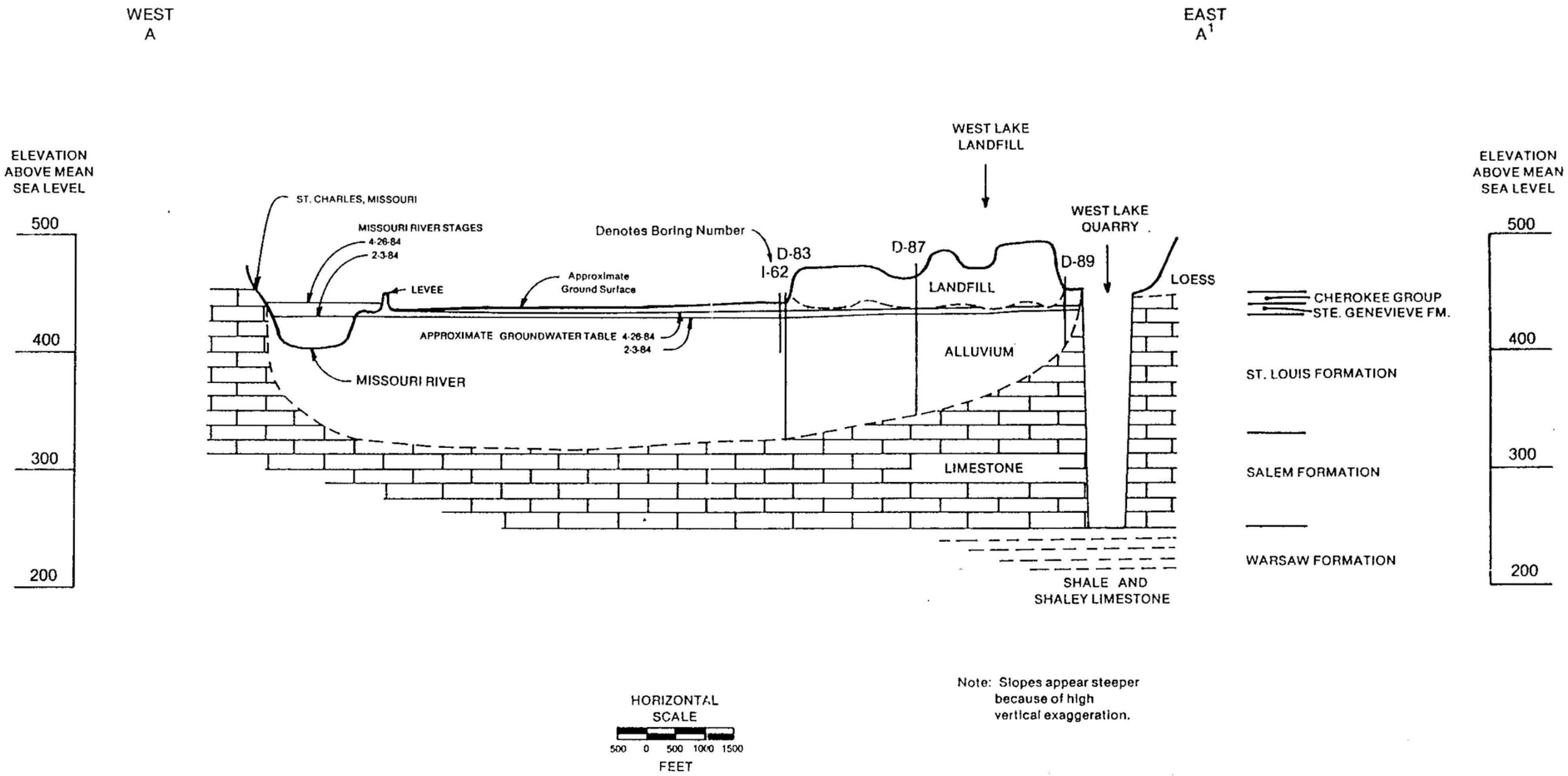

HORIZONTAL SCALE

500 0 500 1000 1500

FEET

Note: Slopes appear steeper because of high vertical exaggeration.

Burns & McDonnell

Figure I-1
GEOLOGIC PROFILE
ACROSS RIVER VALLEY

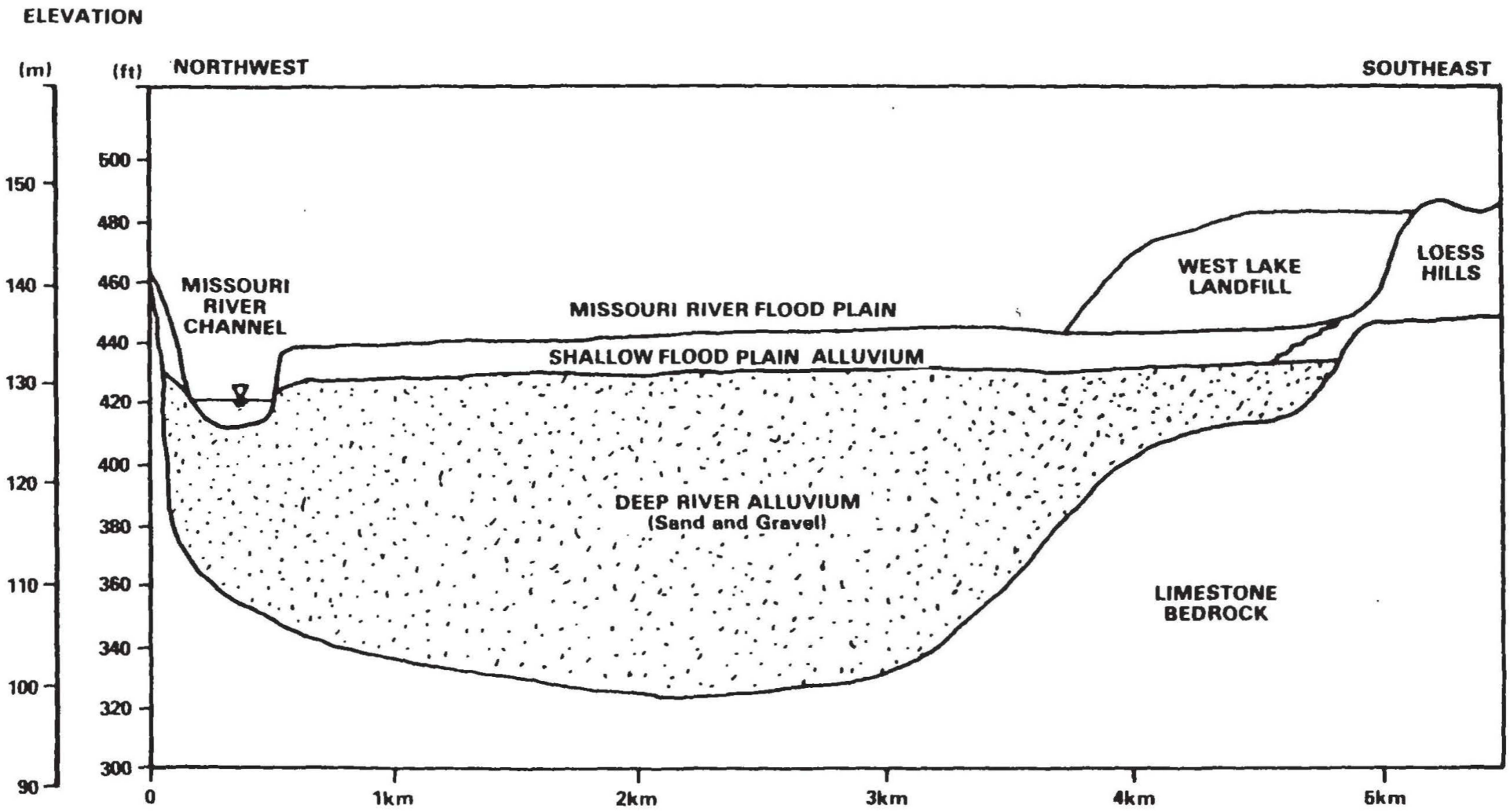

Figure 2.7 Cross-section of Missouri River alluvial valley

APPENDIX D

BOREHOLE LOGS AND WELL CONSTRUCTION DIAGRAMS

(ACRONYMS FROM HISTORICAL DOCUMENTS IF NOT DEFINED ARE NOT KNOWN)

DRAFT

INTERIOR LANDFILL GAS EXTRACTION WELLS

American Environmental Group Ltd.

Well Log

DATE: 7/8/2004

PROJECT NAME _____

PROJECT# _____

DRILLING

GEW 2 WELL NUMBER OR NAME

136' LINEAR FEET OF DRILLING

136' LINEAR FEET OF COMPLETION

0' LINEAR FEET OF ABANDONMENT

Time in: _____ Time out: _____

Weather conditions: Sunny

Site conditions: _____

Rig hrs: _____

Service: Oil/ OK Raidiator/ OK Grease/ OK

NOTES:

Well Asbuild

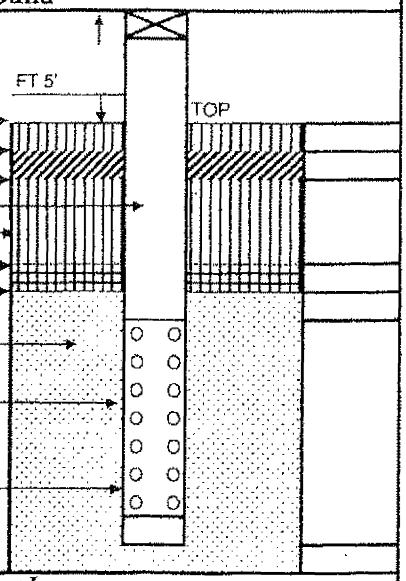

Top of ground elv.	511.63
Backfill Material	2'
Bentonite plug	2'
Length of Solid	25'
Backfill Material	16'
Isolation Layer	1'
Length of Gravel Pack	113'
Length of Perf. Pipe	111'
Style of Pipe	6"SCH80 PVC
Bottom of bore	
Bore diameter	36"

MONITORING LOG

Time	OXYGEN	H2S		LEL / CO
7:00	20.9	0	0	0 GEW 2
8:00	"	0	0	0
9:00	"	0	0	0
10:00	"	0	0	0
11:00	21.1	0	0	0
12:00	"	0	0	0
1:00	"	0	0	0
2:00	20.9	0	0	0
3:00	"	0	0	0
4:00	"	0	0	0
5:00	"	0	0	0
6:00	"	0	0	0

Notes

northing 1068816

easting 516765

Well Boring Log

Depth	Composition	Degree of Decomp	Degree of Moisture	Temp
0-10	DIRT-MSW	LIGHT	DRY	70
10-20	MSW	LIGHT	DRY	70
20-30	MSW	LIGHT	DRY	74
30-40	MSW	LIGHT	DRY	78
40-50	MSW	LIGHT	DRY	82
50-60	MSW	LIGHT	DRY	86
60-70	MSW	LIGHT	DRY	91
70-80	MSW	LIGHT	DRY	91
80-90	DIRT	LIGHT	DRY	95
90-100	DIRT	LIGHT	Moisture	98
100-110	MSW	HEAVY	WET	106
110-120	MSW	HEAVY	WET	110
120-130	MSW	HEAVY	WET	116
130-140	MSW	HEAVY	WET	TD 136
140-150				

_____ BRETT WILLIS 7/8/2004

CLIENT REPRESENTATIVE DATE AEGL SITE SUPERVISOR DATE

_____

NAME & TITLE

American Environmental Group Ltd.

Well Log

DATE: 6/25/2004

PROJECT NAME BRIDGETON

PROJECT# 1-04-028

DRILLING

GEW 3 WELL NUMBER OR NAME

115' LINEAR FEET OF DRILLING

100' LINEAR FEET OF COMPLETION

0' LINEAR FEET OF ABANDONMENT

Time in: Time out:

Weather conditions: Sunny

Site conditions:

Rig hrs:

Service: Oil/ OK Raidlator/ OK Grease/ OK

NOTES:

Well Asbuild

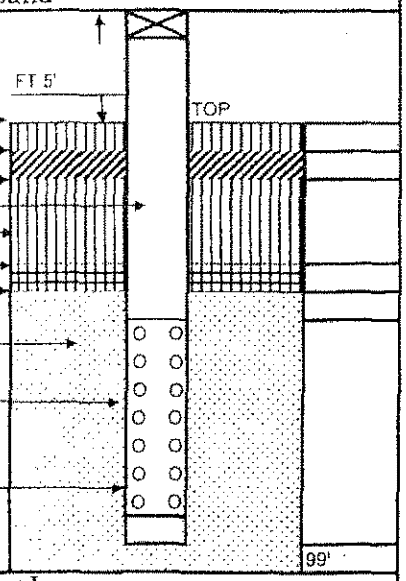

Top of ground elv.	517.98
Backfill Material	2'
Bentonite plug	2'
Length of Solid	25'
Backfill Material	15'
Bentonite plug	2'
Isolation Layer	1'
Length of Gravel Pack	77'
Length of Perf. Pipe	75'
Style of Pipe	6"SCH80 PVC
Bottom of bore	100'
Bore diameter	36"

MONITORING LOG

Time	OXYGEN	H2S	LEL / CO
7:00	20.9	0	0 0 GEW 52
8:00	20.9	0	0 0 GEW 4
9:00	"	0	0 0
10:00	"	0	0 0
11:00	"	0	0 0
12:00	20.9	0	0 0 GEW 3
1:00	"	0	0 0
2:00	"	0	0 0
3:00	"	0	0 0
4:00	20.9	0	0 0 GEW 2
5:00	20.9	0	0 0 6-24-04
6:00	"	0	0 0

Notes

northing 1068810

easting 516606

Well Boring Log

Depth	Composition	Degree of Decomp.	Degree of Moisture	Temp
0-10	DIRT-HHT	LIGHT	DRY	64
10-20	HHT	LIGHT	DRY	68
20-30	HHT	LIGHT	DRY	70
30-40	HHT	LIGHT	DRY	76
40-50	HHT	LIGHT	DRY	83
50-60	HHT	HEAVY	WET	88
60-70	HHT	HEAVY	WET	96
70-80	HHT	HEAVY	WET	101
80-90	HHT-WOOD	HEAVY	WET	108
90-100	"	HEAVY	WET	TD 100'
100-110				
110-120				
120-130				
130-140				
140-150				

CLIENT REPRESENTATIVE DATE

BRETT WILLIS 6/25/2004

AEGL SITE SUPERVISOR DATE

NAME & TITLE

American Environmental Group Ltd.

Well Log

DATE: 6/25/2004

PROJECT NAME BRIDGETON

PROJECT# 1-04-028

DRILLING

GEW 4 WELL NUMBER OR NAME

72' LINEAR FEET OF DRILLING

72' LINEAR FEET OF COMPLETION

0' LINEAR FEET OF ABANDONMENT

Time in: Time out:

Weather conditions: Sunny

Site conditions:

Rig hrs:

Service: Oil/ OK Raidiator/ OK Grease/ OK

NOTES:

Well Asbuild

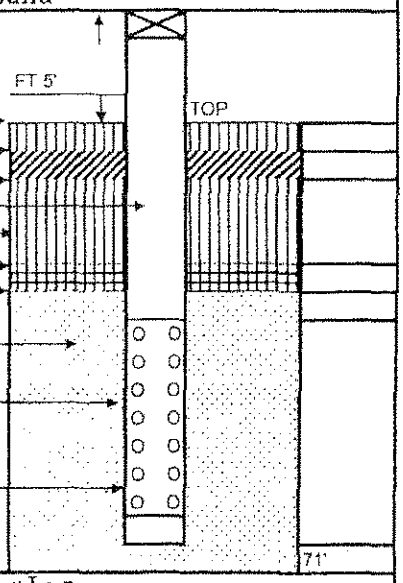

Top of ground elv.	522.11
Backfill Material	2'
Bentonite plug	2'
Length of Solid	22'
Backfill Material	18'
Bentonite plug	2'
Isolation Layer	1'
Length of Gravel Pack	51'
Length of Perf. Pipe	49'
Style of Pipe	6"SCH80 PVC
Bottom of bore	72'
Bore diameter	36"

MONITORING LOG

Time	OXYGEN	H2S		LEL / CO	
7:00	20.9	0	0	0	GEW 52
8:00	20.9	0	0	0	GEW 4
9:00	"	0	0	0	
10:00	"	0	0	0	
11:00	"	0	0	0	
12:00	20.9	0	0	0	GEW 3
1:00	"	0	0	0	
2:00	"	0	0	0	
3:00	"	0	0	0	
4:00	20.9	0	0	0	GEW 2
5:00	20.9	0	0	0	6-24-04
6:00	"	0	0	0	

Notes

northing 1068787

easting 516510

Well Boring Log

Depth	Composition	Degree of Decomp.	Degree of Moisture	Temp
0-10	DIRT-HHT	LIGHT	DRY	64
10-20	HHT	LIGHT	DRY	72
20-30	HHT	LIGHT	DRY	72
30-40	HHT	LIGHT	DRY	76
40-50	HHT	LIGHT	DRY	81
50-60	HHT	HEAVY	WET	85
60-70	HHT	HEAVY	WET	93
70-80	HHT	HEAVY	WET	TD 72'
80-90				
90-100				
100-110				
110-120				
120-130				
130-140				
140-150				

CLIENT REPRESENTATIVE DATE

BRETT WILLIS 6/25/2004

AEGL SITE SUPERVISOR DATE

NAME & TITLE

Aquaterra Drilling Log

HOLE NO.	SHEET 1 OF 1 SHEETS
GEW-5	

PROJECT NAME: 2005 LFG well/Header CQA	DRILLING SUBCONTRACTOR: AEG
PROJECT NUMBER: 652.10	NAME OF DRILLER(S): B. Willis
TO: Bridgeton	MANUFACTURER'S DESIGNATION OF DRILL: Caterpillar IMT AF10
HOLE LOCATION: GEW-5	SIZES AND TYPES OF DRILLING AND SAMPLING EQUIPMENT: 36 in. Bucket
SURFACE ELEVATION: 525.29	
OVERBURDEN THICKNESS: —	DRILLING START DATE: 8/1/05 — DRILLING END DATE: 8/1/05
DEPTH DRILLED INTO ROCK: —	DEPTH GROUNDWATER ENCOUNTERED: —
TOTAL DEPTH OF HOLE: —	DEPTH TO WATER AND ELAPSED TIME AFTER DRILLING COMPLETED: —

GEOTECHNICAL SAMPLES (TOTAL)	DISTURBED	UNDISTURBED	TOTAL NUMBER OF CORE BOXES
—	—	—	—

SAMPLES FOR CHEMICAL ANALYSIS (TOTAL)	(SPECIFY)	(SPECIFY)	(SPECIFY)	(SPECIFY)	(SPECIFY)	TOTAL CORE RECOVERY
—	—	—	—	—	—	—

DISPOSITION OF HOLE	BACKFILLED	MONITORING WELL	OTHER (SPEICFY)	SIGNATURE OF INSPECTOR
—	—	—	—	[signature]

DEPTH	DESCRIPTION OF MATERIALS	FIELD SCREENING RESULTS	GEOTECH SAMPLE RESULTS	ANALYTICAL SAMPLE NO	TIME	REMARKS
	1FT Soil				920	
10					985	
	waste					
30						End of Drilling
	waste				1025	8/1/05 Total Depth 37'
10						no ACM observed
0						

AQUATERRA ENVIRONMENTAL SOLUTIONS, INC.	PROJECT NAME	HOLE NO.
	2005 LFG well/header CQA	GEW-5

AQUATERRA
ENVIRONMENTAL SOLUTIONS, INC.
6980 West 153rd Street
Overland Park, Kansas 66223

GAS WELL CONSTRUCTION DIAGRAM

PROJECT NUMBER: 1652.10
PROJECT NAME: 2005 Bridgeton Gas System CQA
GAS WELL NO.: GEW-5
WELL LOCATION: Top of Landfill
INSTALLATION START DATE: 8/1/05
COMPLETION DATE: 8/1/05
DRILLER: AEG (B. Willis)
INSPECTOR: J. Jordan

COMMENTS: No PCM observed

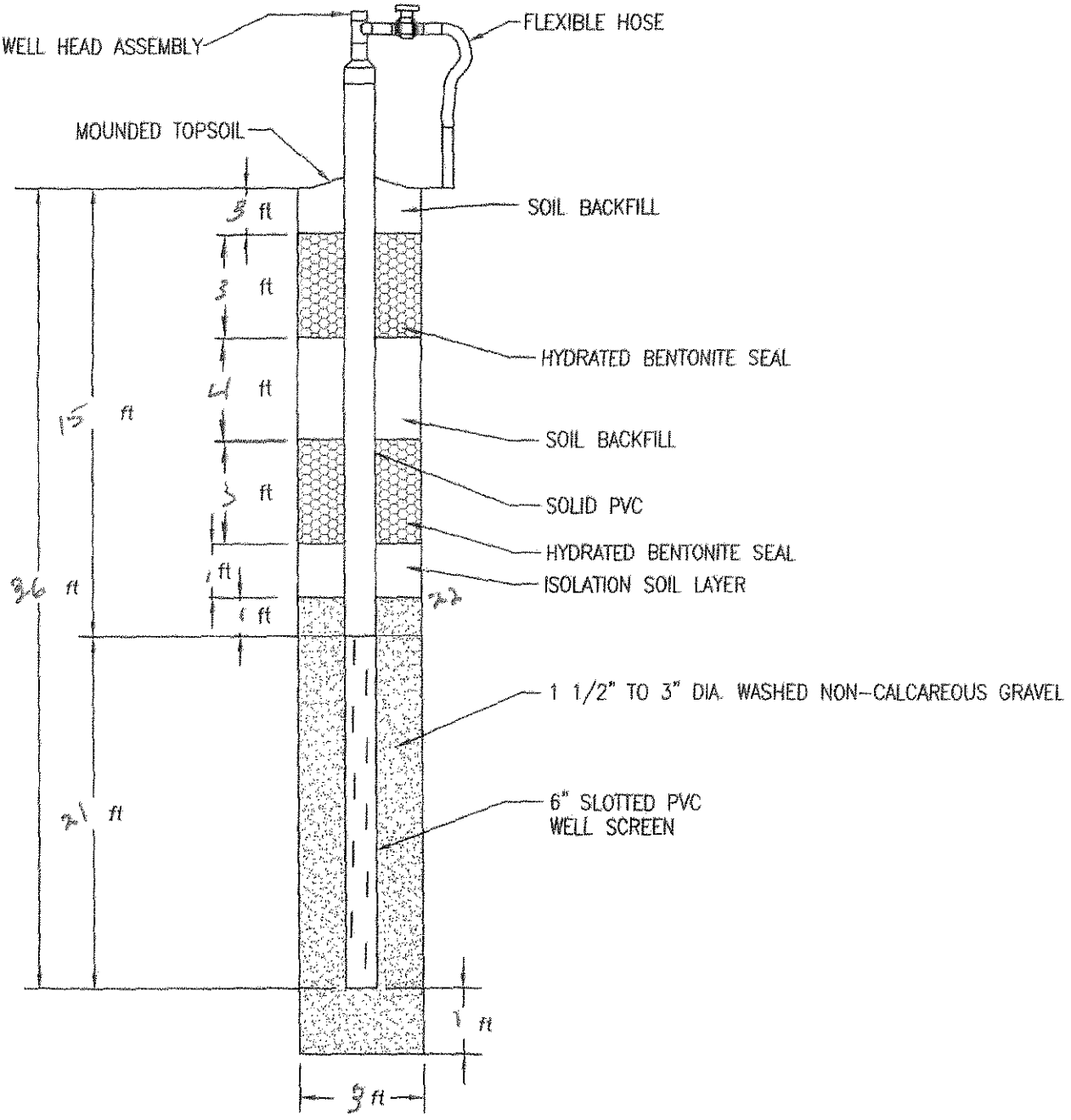

Aquaterra Drilling Log

HOLE NO.	SHEET 1 OF 1 SHEETS
GEW-6A	

PROJECT NAME: 2005 LFG Wells/Header CQA	DRILLING SUBCONTRACTOR: AEG
PROJECT NUMBER: 1652.10	NAME OF DRILLER(S): B. Willis
LOCATION: Bridgeton Landfill, LLC	MANUFACTURER'S DESIGNATION OF DRILL: Caterpillar IMT AF10
HOLE LOCATION: GEW-6A	SIZES AND TYPES OF DRILLING AND SAMPLING EQUIPMENT: 36 inch bucket
SURFACE ELEVATION:	
OVERBURDEN THICKNESS: —	DRILLING START DATE: 8/12/05 — DRILLING END DATE: 8/12/05
DEPTH DRILLED INTO ROCK: —	DEPTH GROUNDWATER ENCOUNTERED: —
TOTAL DEPTH OF HOLE: 45 ft	DEPTH TO WATER AND ELAPSED TIME AFTER DRILLING COMPLETED: —

GEOTECHNICAL SAMPLES (TOTAL)	DISTURBED	UNDISTURBED	TOTAL NUMBER OF CORE BOXES
—	—	—	—

SAMPLES FOR CHEMICAL ANALYSIS (TOTAL)	(SPECIFY)	(SPECIFY)	(SPECIFY)	(SPECIFY)	(SPECIFY)	TOTAL CORE RECOVERY
—	—	—	—	—	—	—

DISPOSITION OF HOLE	BACKFILLED	MONITORING WELL	OTHER (SPEICFY)	SIGNATURE OF INSPECTOR
—	—	—	—	[signature]

DEPTH	DESCRIPTION OF MATERIALS	FIELD SCREENING RESULTS	GEOTECH SAMPLE RESULTS	ANALYTICAL SAMPLE NO.	TIME	REMARKS
10	Waste — 2 ft soil				1400	Drilling begins 8/12/05
30	Waste					
40	Waste					Drilling was terminated at 45 ft.
50	End of boring at 45 ft					No asbestos containing materials observed

	PROJECT NAME	HOLE NO.
AQUATERRA ENVIRONMENTAL SOLUTIONS, INC.	2006 LFG Wells/Header CQA	GEW-6A

AQUATERRA
ENVIRONMENTAL SOLUTIONS, INC.
6980 West 153rd Street
Overland Park, Kansas 66223

GAS WELL CONSTRUCTION DIAGRAM

PROJECT NUMBER: 1652.10
PROJECT NAME: 2005 Bridgeton Gas System CQA
GAS WELL NO.: GEW-6A
WELL LOCATION:
INSTALLATION START DATE: 8/12/05
COMPLETION DATE: 8/12/05
DRILLER: AEG & Willis
INSPECTOR: Nathan Huggerson

COMMENTS:

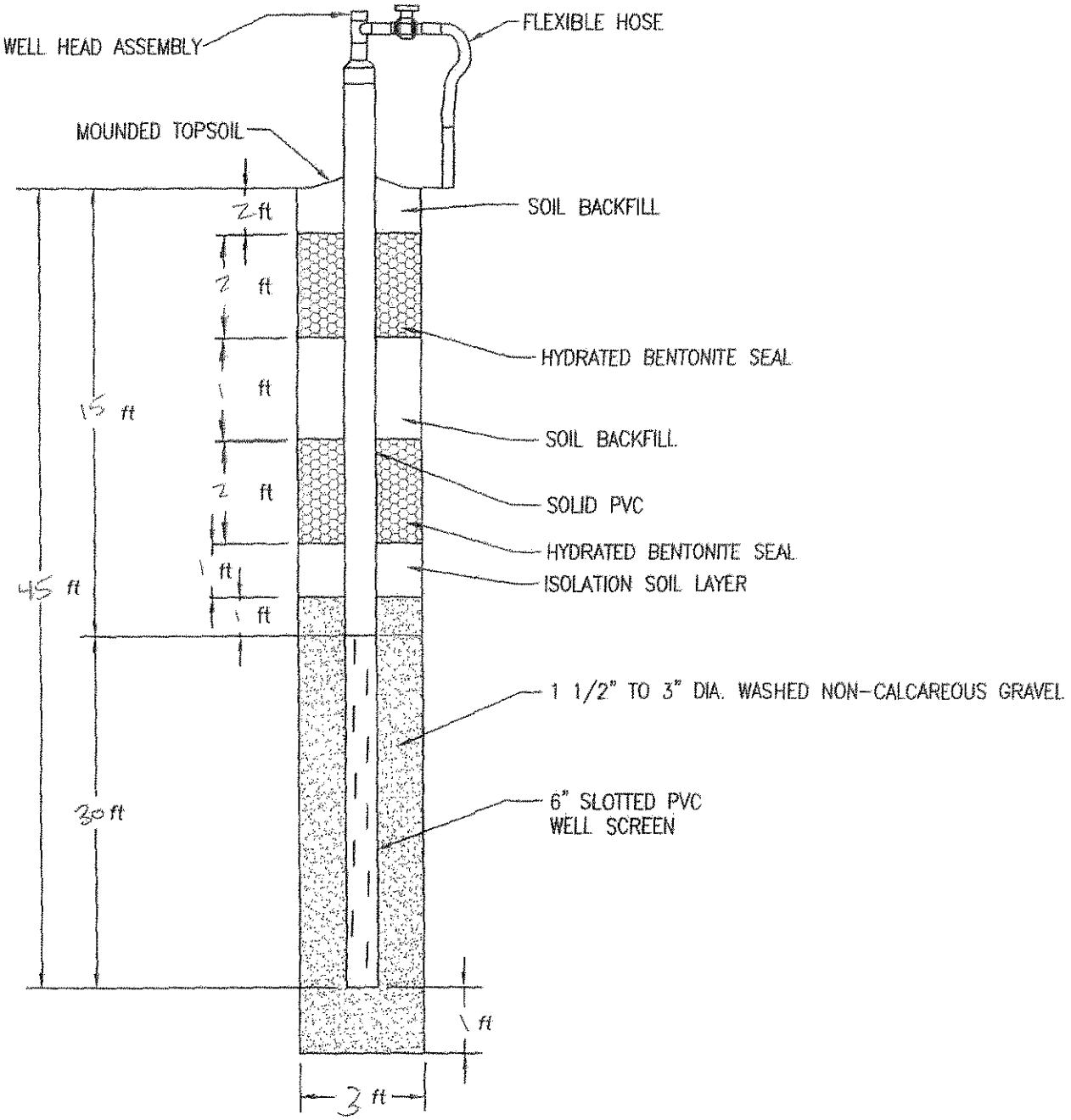

AQUATERRA
ENVIRONMENTAL SOLUTIONS, INC.
6980 West 153rd Street
Overland Park, Kansas 66223

GAS WELL CONSTRUCTION DIAGRAM

PROJECT NUMBER: 1652.10
PROJECT NAME: 2005 Bridgeton Gas System CQA
GAS WELL NO.: GEW-6A
WELL LOCATION:
INSTALLATION START DATE: 8/12/05
COMPLETION DATE: 8/12/05
DRILLER: AEG - D. Willis
INSPECTOR: Nathan Higgerson

COMMENTS:

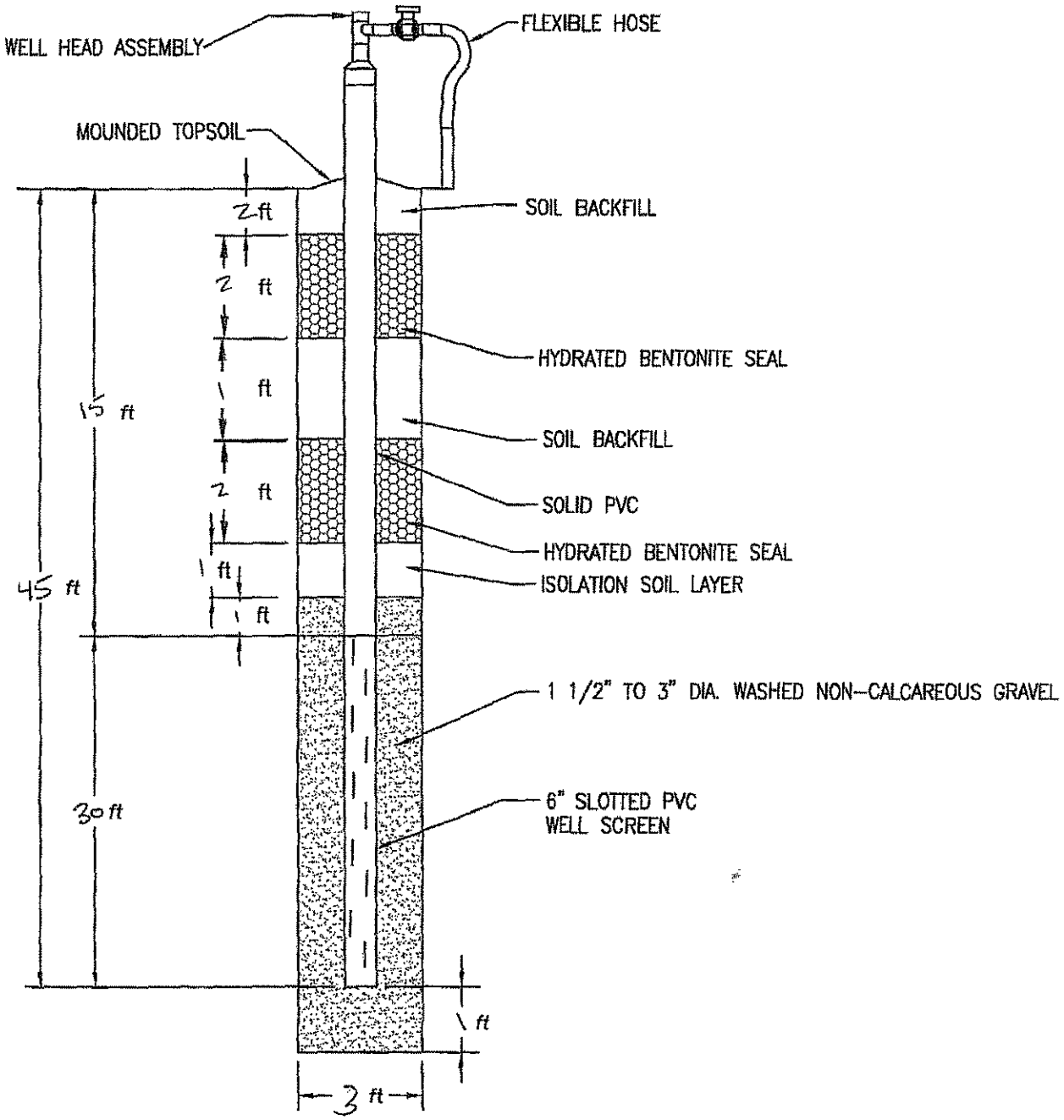

American Environmental Group Ltd.

Well Log

DATE: 7/14/2004

PROJECT NAME: BRIDGETON

PROJECT#: 1-04-028

DRILLING

GEW 7 — WELL NUMBER OR NAME

67' — LINEAR FEET OF DRILLING

67' — LINEAR FEET OF COMPLETION

0' — LINEAR FEET OF ABANDONMENT

Time in: _____ Time out: _____

Weather conditions: Sunny

Site conditions: _____

Rig hrs: _____

Service: Oil/ OK Raidiator/ OK Grease/ OK

NOTES:

Well Asbuild

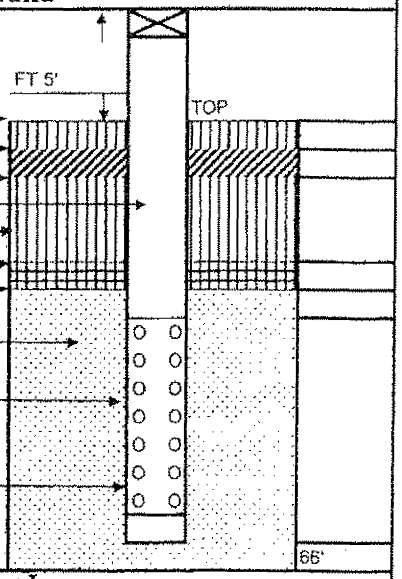

Top of ground elv.	479.04
Backfill Material	2'
Bentonite plug	2'
Length of Solid	19'
Backfill Material	10'
Bentonite plug	2'
Isolation Layer	1'
Length of Gravel Pack	50'
Length of Perf. Pipe	47'
Style of Pipe	6"SCH80 PVC
Bottom of bore	67'
Bore diameter	36"

MONITORING LOG

Time	OXYGEN	H2S		LEL / CO
7:00				
8:00	20.9	0	0	0 GEW 13
9:00	"	0	0	0
10:00	"	0	0	0
11:00	"	0	0	0
12:00	"	0	0	0
1:00	"	0	0	0
2:00	"	0	0	0
3:00	"	0	0	0
4:00	20.9	0	0	0 GEW 7
5:00	"	0	0	0
6:00	"	0	0	0

Notes

northing 1008231

easting 516129

Well Boring Log

Depth	Composition	Degree of Decomp.	Degree of Moisture	Temp
0-10	DIRT-MSW	LIGHT	DRY	64
10-20	MSW	LIGHT	DRY	64
20-30	MSW	LIGHT	DRY	72
30-40	MSW	LIGHT	DRY	87
40-50	MSW	LIGHT	DRY	91
50-60	MSW	LIGHT	DRY	94
60-70	MSW	LIGHT	DRY	TD 67'
70-80				
80-90				
90-100				
100-110				
110-120				
120-130				
130-140				
140-150				

CLIENT REPRESENTATIVE DATE

BRETT WILLIS 7-14-04

AEGL SITE SUPERVISOR DATE

NAME & TITLE

Aquaterra Drilling Log

HOLE NO: GEW-8 | SHEET 1 OF SHEETS

PROJECT NAME: 2005 LFG wells/Header CQA	DRILLING SUBCONTRACTOR: LFG
PROJECT NUMBER: 1652.10	NAME OF DRILLER(S): B. Willis
LOCATION: Bridgeton, Missouri	MANUFACTURER'S DESIGNATION OF DRILL: Caterpillar IMT AF10
HOLE LOCATION: GEW-8	SIZES AND TYPES OF DRILLING AND SAMPLING EQUIPMENT: 36 in bucket
SURFACE ELEVATION: 491.55	
OVERBURDEN THICKNESS: —	DRILLING START DATE: 7/30/05 — DRILLING END DATE: 7/30/05
DEPTH DRILLED INTO ROCK: —	DEPTH GROUNDWATER ENCOUNTERED: —
TOTAL DEPTH OF HOLE: 65 Ft	DEPTH TO WATER AND ELAPSED TIME AFTER DRILLING COMPLETED: —

GEOTECHNICAL SAMPLES (TOTAL)	DISTURBED	UNDISTURBED	TOTAL NUMBER OF CORE BOXES
—	—	—	—

SAMPLES FOR CHEMICAL ANALYSIS (TOTAL)	(SPECIFY)	(SPECIFY)	(SPECIFY)	(SPECIFY)	(SPECIFY)	TOTAL CORE RECOVERY
—	—	—	—	—	—	

DISPOSITION OF HOLE	BACKFILLED	MONITORING WELL	OTHER (SPECIFY)	SIGNATURE OF INSPECTOR
—	—	—	—	Darrick Hamrick

DEPTH	DESCRIPTION OF MATERIALS	FIELD SCREENING RESULTS	GEOTECH SAMPLE RESULTS	ANALYTICAL SAMPLE NO	TIME	REMARKS
0	~4ft of Soil				1130	
	Waste					
10						
20	Waste					Drilling stopped due to high temp
		153.5°F			1400	
30						No asbestos containing material found
40						
50						
60						
70						

AQUATERRA
ENVIRONMENTAL SOLUTIONS, INC.
6980 West 153rd Street
Overland Park, Kansas 66223

GAS WELL CONSTRUCTION DIAGRAM

PROJECT NUMBER: 1652.10
PROJECT NAME: 2005 Bridgeton Gas System CQA
GAS WELL NO.: GEW-8
WELL LOCATION: Bridgeton, Missouri
INSTALLATION START DATE: 7/30/05
COMPLETION DATE: 7/30/05
DRILLER: AFG B. Willis
INSPECTOR: Derrick Hermesch

COMMENTS:

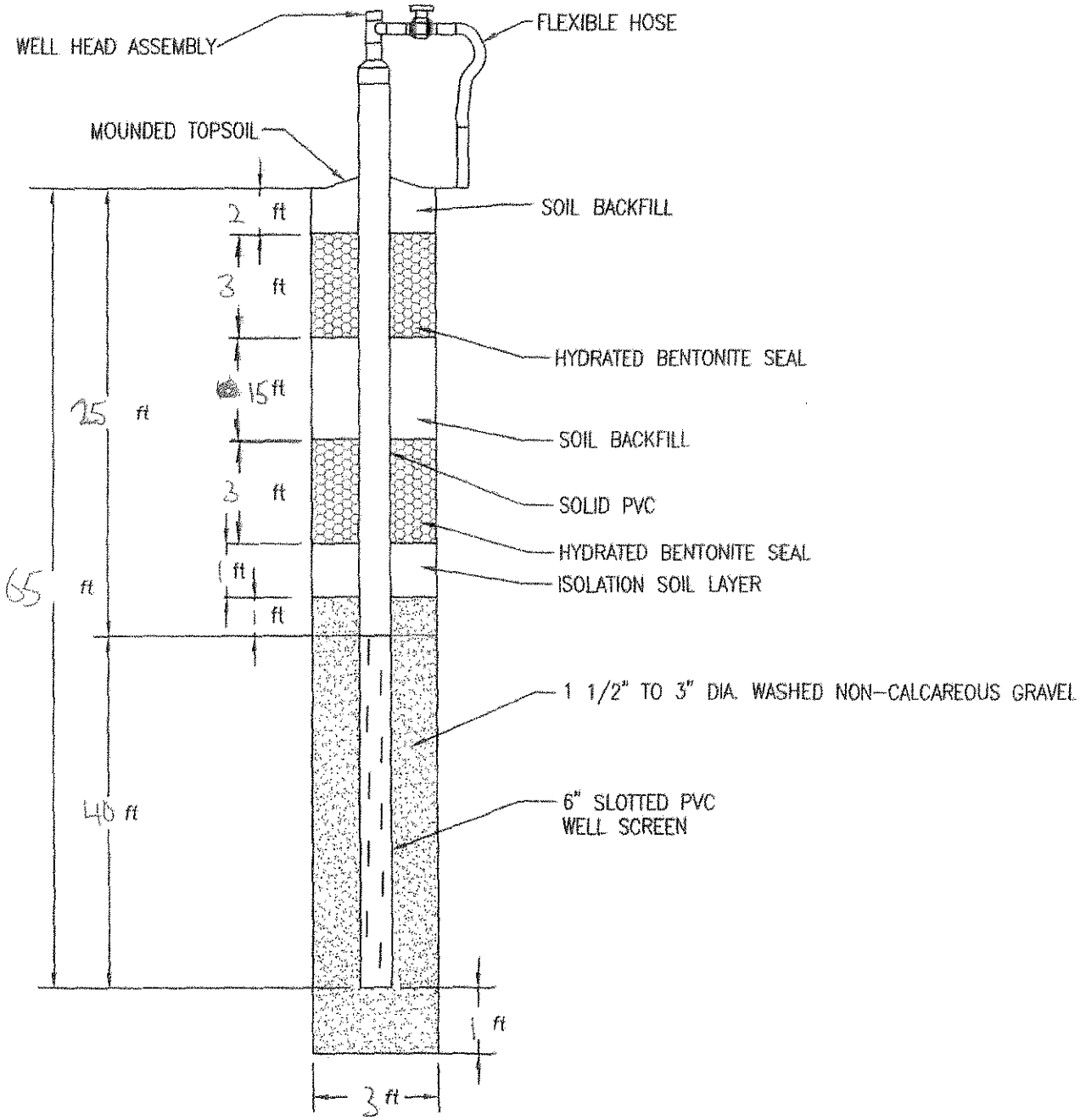

Aquaterra Drilling Log

HOLE NO. GEW-9 | SHEET 1 OF SHEETS

PROJECT NAME: 2005 LFG Wells/Header CQA	DRILLING SUBCONTRACTOR: AEG
CT NUMBER: 165.10	NAME OF DRILLER(S): B. Wills
LOCATION: Bridgeton, Missouri	MANUFACTURER'S DESIGNATION OF DRILL: Caterpillar IMT AF10
HOLE LOCATION: GEW-9	SIZES AND TYPES OF DRILLING AND SAMPLING EQUIPMENT: 36 in Bucket
SURFACE ELEVATION: 487.78	
OVERBURDEN THICKNESS: —	DRILLING START DATE: 7/30/05 — DRILLING END DATE: 7/30/05
DEPTH DRILLED INTO ROCK: —	DEPTH GROUNDWATER ENCOUNTERED: —
TOTAL DEPTH OF HOLE: 50 ft	DEPTH TO WATER AND ELAPSED TIME AFTER DRILLING COMPLETED: —

GEOTECHNICAL SAMPLES (TOTAL)	DISTURBED	UNDISTURBED	TOTAL NUMBER OF CORE BOXES
—	—	—	—

SAMPLES FOR CHEMICAL ANALYSIS (TOTAL)	(SPECIFY)	(SPECIFY)	(SPECIFY)	(SPECIFY)	(SPECIFY)	TOTAL CORE RECOVERY
—	—	—	—	—	—	

DISPOSITION OF HOLE	BACKFILLED	MONITORING WELL	OTHER (SPECIFY)	SIGNATURE OF INSPECTOR
—	—	—	—	David Hermsen

DEPTH	DESCRIPTION OF MATERIALS	FIELD SCREENING RESULTS	GEOTECH SAMPLE RESULTS	ANALYTICAL SAMPLE NO.	TIME	REMARKS
0	4 ft Soil				0815	
	Waste					
10	Waste	154° F		DH5		Drilling stopped due to high temp.
						No asbestos containing material observed

AQUATERRA
ENVIRONMENTAL SOLUTIONS, INC.
6980 West 153rd Street
Overland Park, Kansas 66223

GAS WELL CONSTRUCTION DIAGRAM

PROJECT NUMBER: 1652.10
PROJECT NAME: 2005 Bridgeton Gas System CQA
GAS WELL NO.: GEW-9
WELL LOCATION: Bridgeton, Missouri
INSTALLATION START DATE: 7/30/05
COMPLETION DATE: 7/30/05
DRILLER: AEG B. Willis
INSPECTOR: Derrick Hermesch

COMMENTS:

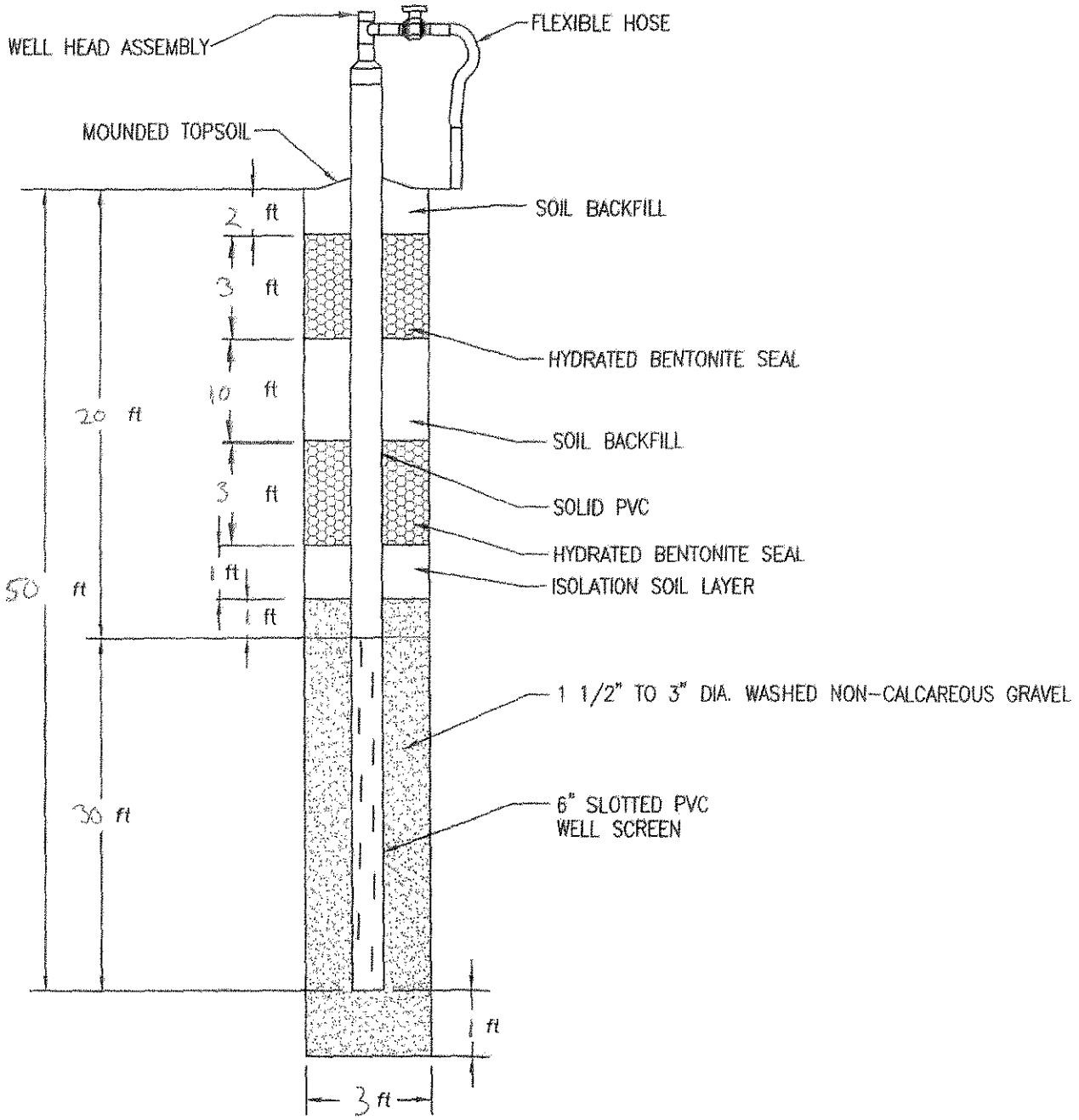

Aquaterra Drilling Log

HOLE NO. GEW-10 | SHEET 1 OF SHEETS

PROJECT NAME: 2005 LFG Wells/Header CQA	DRILLING SUBCONTRACTOR: AEG
CT NUMBER: 1652.10	NAME OF DRILLER(S): B Willis
LOCATION: Bridgeton Missouri	MANUFACTURER'S DESIGNATION OF DRILL: Caterpillar TMT 4F10
HOLE LOCATION: GEW-10	SIZES AND TYPES OF DRILLING AND SAMPLING EQUIPMENT: 36 in Bucket
SURFACE ELEVATION: HK 3.58	
OVERBURDEN THICKNESS: —	DRILLING START DATE: 7/28/05 — DRILLING END DATE: 7/30/05
DEPTH DRILLED INTO ROCK: —	DEPTH GROUNDWATER ENCOUNTERED: —
TOTAL DEPTH OF HOLE: 55 ft	DEPTH TO WATER AND ELAPSED TIME AFTER DRILLING COMPLETED: —

GEOTECHNICAL SAMPLES (TOTAL)	DISTURBED	UNDISTURBED	TOTAL NUMBER OF CORE BOXES
—	—	—	—

SAMPLES FOR CHEMICAL ANALYSIS (TOTAL)	(SPECIFY)	(SPECIFY)	(SPECIFY)	(SPECIFY)	(SPECIFY)	TOTAL CORE RECOVERY
—	—	—	—	—	—	

DISPOSITION OF HOLE	BACKFILLED	MONITORING WELL	OTHER (SPECIFY)	SIGNATURE OF INSPECTOR
—	—	—	—	Derrick Kennedy

DEPTH	DESCRIPTION OF MATERIALS	FIELD SCREENING RESULTS	GEOTECH SAMPLE RESULTS	ANALYTICAL SAMPLE NO.	TIME	REMARKS
0	2 ft soil				1330	
10	Waste					
20	Waste					
					1600	end of day 7/28/05
					0700	Drilling resumes 7/29/05
		161° F			0730	Drilling stopped due to high temp
						No asbestos materials observed

AQUATERRA
ENVIRONMENTAL SOLUTIONS, INC.
6980 West 153rd Street
Overland Park, Kansas 66223

GAS WELL CONSTRUCTION DIAGRAM

PROJECT NUMBER: 1652.10
PROJECT NAME: 2005 Bridgeton Gas System CQA
GAS WELL NO.: GEW-16
WELL LOCATION: Bridgeton, Missouri
INSTALLATION START DATE: 7/28/05
COMPLETION DATE: 7/28/05
DRILLER: AEG B. Wills
INSPECTOR: Derrick Hermesch

COMMENTS:

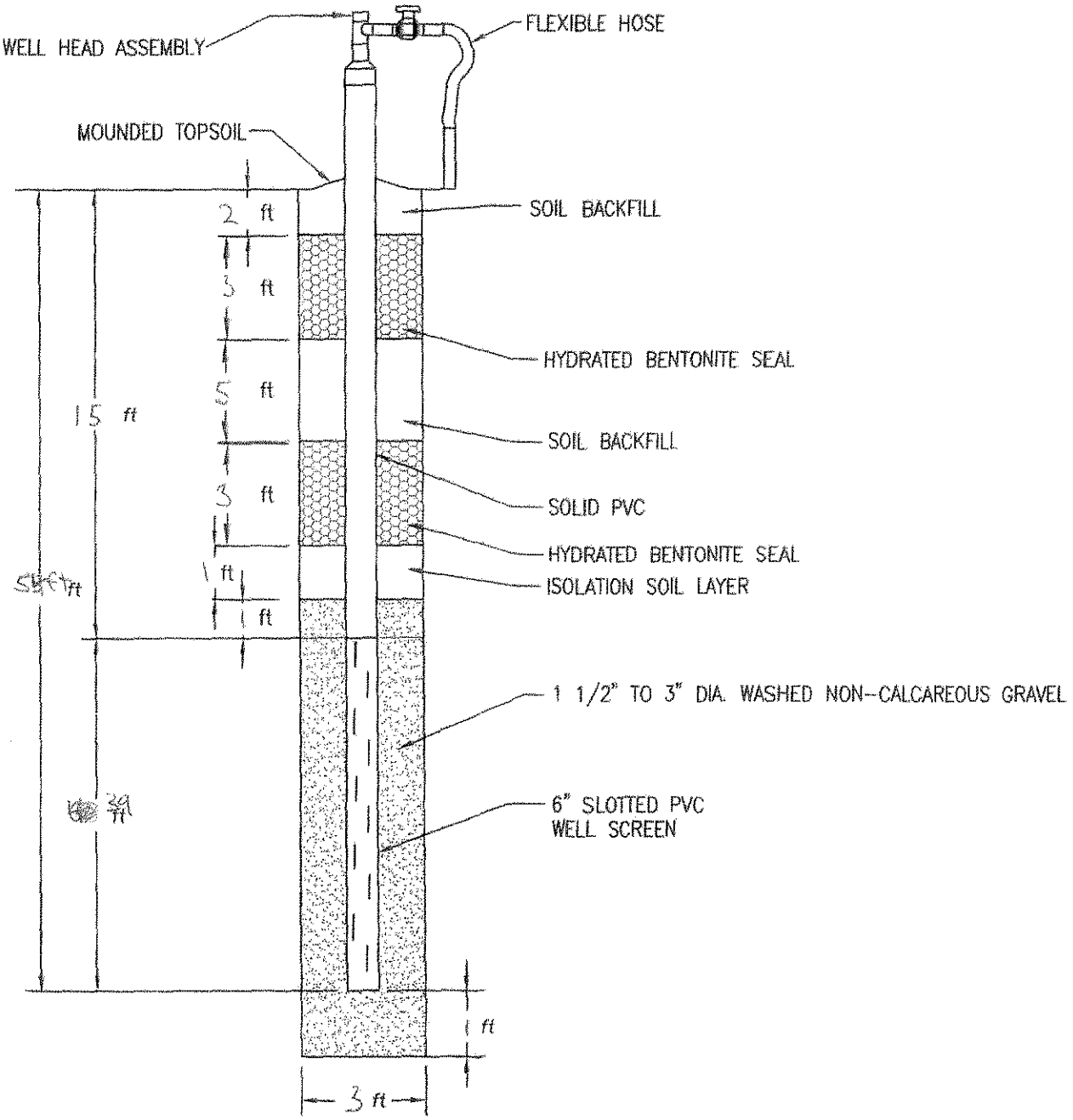

Aquaterra Drilling Log

HOLE NO. GEW-11 | SHEET 1 OF SHEETS

PROJECT NAME: 2005 LFG Wells / Header COA	DRILLING SUBCONTRACTOR: AEG
PCT NUMBER: 1652.10	NAME OF DRILLER(S): B Willis
LOCATION: Bideton Missouri	MANUFACTURER'S DESIGNATION OF DRILL: Caterpillar IMT AF10
HOLE LOCATION: GEW-11	SIZES AND TYPES OF DRILLING AND SAMPLING EQUIPMENT: 36 in Bucket
SURFACE ELEVATION: 465'	
OVERBURDEN THICKNESS: —	DRILLING START DATE: 7/28/05 / DRILLING END DATE:
DEPTH DRILLED INTO ROCK: —	DEPTH GROUNDWATER ENCOUNTERED: —
TOTAL DEPTH OF HOLE: 55 Ft	DEPTH TO WATER AND ELAPSED TIME AFTER DRILLING COMPLETED: —

GEOTECHNICAL SAMPLES (TOTAL)	DISTURBED	UNDISTURBED	TOTAL NUMBER OF CORE BOXES
—	—	—	—

SAMPLES FOR CHEMICAL ANALYSIS (TOTAL)	(SPECIFY)	(SPECIFY)	(SPECIFY)	(SPECIFY)	(SPECIFY)	TOTAL CORE RECOVERY
—	—	—	—	—	—	—

DISPOSITION OF HOLE	BACKFILLED	MONITORING WELL	OTHER (SPECIFY)	SIGNATURE OF INSPECTOR
—	—	—	—	Kenneth Howard

DEPTH	DESCRIPTION OF MATERIALS	FIELD SCREENING RESULTS	GEOTECH SAMPLE RESULTS	ANALYTICAL SAMPLE NO.	TIME	REMARKS
0	36" of soil				1030	
10	Waste					
20	waste					
30					1300	End of drilling on 7/28/05 55 ft (appropriate well depth reached)
40						No asbestos containing materials observed
50						

AQUATERRA
ENVIRONMENTAL SOLUTIONS, INC.
6980 West 153rd Street
Overland Park, Kansas 66223

GAS WELL CONSTRUCTION DIAGRAM

PROJECT NUMBER: 1652.10
PROJECT NAME: 2005 Bridgeton Gas System CQA
GAS WELL NO.: GEW 11
WELL LOCATION: Bridgeton Missouri
INSTALLATION START DATE: 7/28/05
COMPLETION DATE: 7/28/05
DRILLER: AEG - B. Wills
INSPECTOR: Derrick Hermesch

COMMENTS:

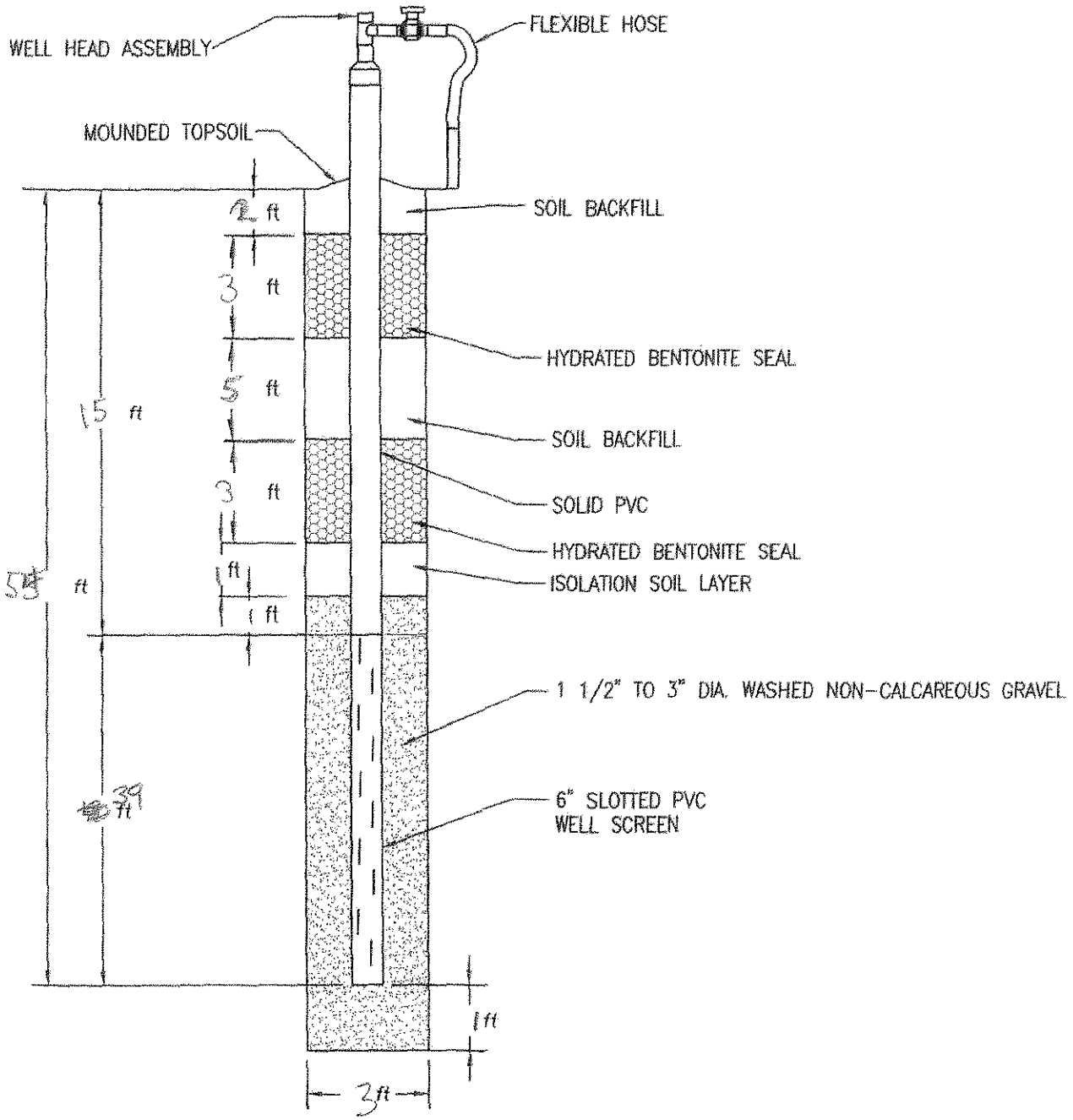

Aquaterra Drilling Log

HOLE NO. GEW-12A | SHEET 1 OF 2 SHEETS

PROJECT NAME: GEW-12A Installation CQA	DRILLING SUBCONTRACTOR: PDI
ECT NUMBER: 1944.10	NAME OF DRILLER(S): Mitch
LOCATION: Bridgeton, [redacted] Landfill	MANUFACTURER'S DESIGNATION OF DRILL: Western Bore 200
HOLE LOCATION: Near GEW-12	SIZES AND TYPES OF DRILLING AND SAMPLING EQUIPMENT: 3 4" core bucket
SURFACE ELEVATION:	
OVERBURDEN THICKNESS:	DRILLING START DATE: 6/13/06 — DRILLING END DATE:
DEPTH DRILLED INTO ROCK: —	DEPTH GROUNDWATER ENCOUNTERED:
TOTAL DEPTH OF HOLE:	DEPTH TO WATER AND ELAPSED TIME AFTER DRILLING COMPLETED: —

GEOTECHNICAL SAMPLES (TOTAL)	DISTURBED	UNDISTURBED	TOTAL NUMBER OF CORE BOXES
—	—	—	—

SAMPLES FOR CHEMICAL ANALYSIS (TOTAL)	(SPECIFY)	(SPECIFY)	(SPECIFY)	(SPECIFY)	(SPECIFY)	TOTAL CORE RECOVERY
—	—	—	—	—	—	—

DISPOSITION OF HOLE	BACKFILLED	MONITORING WELL	OTHER (SPECIFY)	SIGNATURE OF INSPECTOR
—	—	—	—	[signature]

DEPTH	DESCRIPTION OF MATERIALS	FIELD SCREENING RESULTS	GEOTECH SAMPLE RESULTS	ANALYTICAL SAMPLE NO.	TIME	REMARKS
	1½' soil cover				645	Drilling begins on 6/13/06
	Waste					
20						
30	Waste				800	
40					905	
50						
	Waste				1000	

AQUATERRA ENVIRONMENTAL SOLUTIONS, INC.

PROJECT NAME: GEW-12A Installation CQA | HOLE NO.: GEW-12A

Aquaterra Drilling Log

HOLE NO. GEW-12A | SHEET 2 OF 2 SHEETS

PROJECT NAME: GEW-12A Installation CQA

INSPECTOR: Nathan Higgerson

TH	DESCRIPTION OF MATERIALS	FIELD SCREENING RESULTS	GEOTECH SAMPLE RESULTS	ANALYTICAL SAMPLE NO.	TIME	REMARKS
60	Waste				1000	
70						
80	Waste				1105	
90					1220	
		135°F				
100	Waste - heavily decomposed				1300	
	Moist Waste	140°F				
110					1420	End of drilling 6/13/06
	End of Boring @ 111 ft					No asbestos containing materials observed during drilling
120						

AQUATERRA ENVIRONMENTAL SOLUTIONS, INC.

PROJECT NAME: GEW-12A Installation CQA

HOLE NO.: GEW-12A

AQUATERRA
ENVIRONMENTAL SOLUTIONS, INC.
141 Market Place Drive
Fairview Heights, Illinois 62208

GAS WELL CONSTRUCTION DIAGRAM

PROJECT NUMBER: 1944.10
PROJECT NAME: GEW-12A Installation
GAS WELL NO.: GEW-12A
WELL LOCATION: Near GEW-12
INSTALLATION START DATE: 6/13/06
COMPLETION DATE: 6/13/06
DRILLER: ~~Nature~~ PDI / Landmark
INSPECTOR: N. Higgerson

COMMENTS:

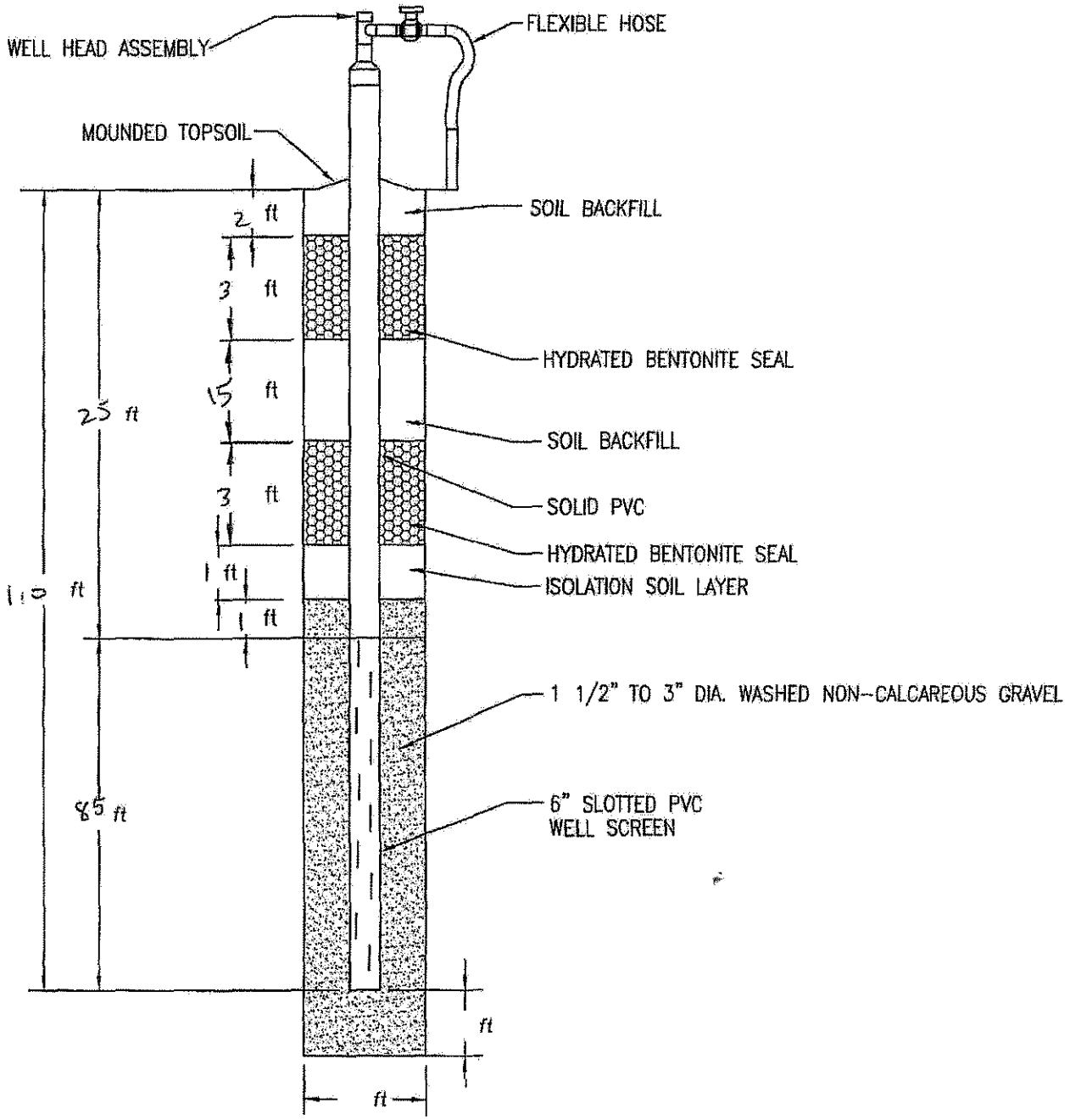

American Environmental Group Ltd.

Well Log

DATE: 7/14/2004

PROJECT NAME: BRIDGETON

PROJECT#: 1-04-028

DRILLING

GEW 13 — WELL NUMBER OR NAME

100' — LINEAR FEET OF DRILLING

100' — LINEAR FEET OF COMPLETION

0' — LINEAR FEET OF ABANDONMENT

Time in: _____ Time out: _____

Weather conditions: Sunny

Site conditions: _____

Rig hrs: _____

Service: Oil/ OK Raidiator/ OK Grease/ OK

NOTES:

Well Asbuild

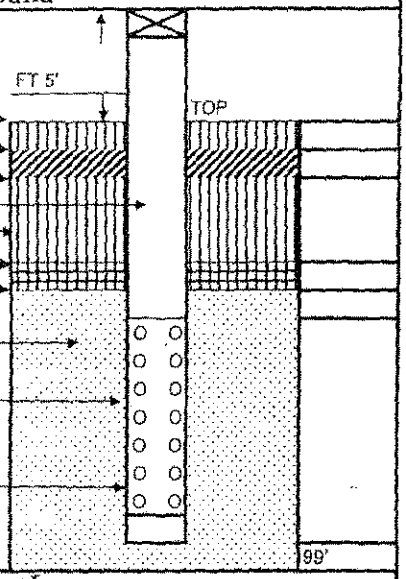

Top of ground elv.	504
Backfill Material	2'
Bentonite plug	2'
Length of Solid	25'
Backfill Material	13'
Bentonite plug	2'
Isolation Layer	1'
Length of Gravel Pack	80'
Length of Perf. Pipe	75'
Style of Pipe	6"SCH80 PVC
Bottom of bore	100'
Bore diameter	36"

MONITORING LOG

Time	OXYGEN	H2S	LEL / CO
7:00	20.9	0	0
8:00	"	0	0
9:00	"	0	0
10:00	"	0	0
11:00	"	0	0
12:00	"	0	0
1:00	"	0	0
2:00	"	0	0
3:00	"	0	0
4:00	"	0	0
5:00	"	0	0
6:00	"	0	0

Notes

northing 1067463

easting 515985

Well Boring Log

Depth	Composition	Degree of Decomp	Degree of Moisture	Temp
0-10	DIRT-MSW	LIGHT	DRY	70
10-20	MSW	LIGHT	DRY	71
20-30	MSW	LIGHT	DRY	78
30-40	MSW	LIGHT	DRY	82
40-50	MSW	LIGHT	DRY	88
50-60	MSW	LIGHT	DRY	92
60-70	MSW	LIGHT	DRY	99
70-80	MSW	LIGHT	DRY	108
80-90	SLUGE	HEAVY	WET	116
90-100	SLUGE	HEAVY	WET	TD 100'
100-110				
110-120				
120-130				
130-140				
140-150				

_____ CLIENT REPRESENTATIVE DATE

BRETT WILLIS 7/14/2004
AEGL SITE SUPERVISOR DATE

_____ NAME & TITLE

Aquaterra Drilling Log

HOLE NO. GEW 14A | SHEET 1 OF 1 SHEETS

PROJECT NAME: 2005 LFG well / Header C2A	DRILLING SUBCONTRACTOR: AEG
PROJECT NUMBER: 11650.10	NAME OF DRILLER(S): B Willis
LOCATION: Bridgeton MO	MANUFACTURER'S DESIGNATION OF DRILL: Caterpillar 1 mT AF10
HOLE LOCATION: GEW 14A	SIZES AND TYPES OF DRILLING AND SAMPLING EQUIPMENT: 36 in Bucket
SURFACE ELEVATION: 493 ft	
OVERBURDEN THICKNESS: —	DRILLING START DATE: 7/5/05 — DRILLING END DATE: 7/9/05
DEPTH DRILLED INTO ROCK: —	DEPTH GROUNDWATER ENCOUNTERED: —
TOTAL DEPTH OF HOLE: 85 ft	DEPTH TO WATER AND ELAPSED TIME AFTER DRILLING COMPLETED: —

GEOTECHNICAL SAMPLES (TOTAL)	DISTURBED	UNDISTURBED	TOTAL NUMBER OF CORE BOXES
—	—	—	—

SAMPLES FOR CHEMICAL ANALYSIS (TOTAL)	(SPECIFY)	(SPECIFY)	(SPECIFY)	(SPECIFY)	(SPECIFY)	TOTAL CORE RECOVERY
—	—	—	—	—	—	—

DISPOSITION OF HOLE	BACKFILLED	MONITORING WELL	OTHER (SPECIFY)	SIGNATURE OF INSPECTOR
—	—	—	—	

DEPTH	DESCRIPTION OF MATERIALS	FIELD SCREENING RESULTS	GEOTECH SAMPLE RESULTS	ANALYTICAL SAMPLE NO.	TIME	REMARKS
0	Soil 4ft				730	
10	Waste 15ft				815	Drilling stopped due to Rig Breakdown 7/6/05 815
30	Waste					7/9/05 1430 Drilling Resumes on GEW 14A.
40						
50	Waste					
60						
70	Waste					
80	Wet Waste					
90	~~Waste~~ End of boring at 85 ft				700 900 ~~700~~	End of drilling on 7/9/05 at 85 ft
100						Drilling Resumes 7/9/05 After 2 hours of drilling with no progress total depth was set. No rubber or containing materials observed.
110						

AQUATERRA ENVIRONMENTAL SOLUTIONS, INC.

PROJECT NAME: 2005 LFG well / Header C2A

HOLE NO.: 14A

AQUATERRA
ENVIRONMENTAL SOLUTIONS, INC.
6980 West 153rd Street
Overland Park, Kansas 66223

GAS WELL CONSTRUCTION DIAGRAM

PROJECT NUMBER: 1652.10
PROJECT NAME: 2005 Bridgeton Gas System CQA
GAS WELL NO.: GEW 14A
WELL LOCATION:
INSTALLATION START DATE: 7/6/05
COMPLETION DATE: 7/19/05
DRILLER: AEG B Willis
INSPECTOR: Nathan Higgerson

COMMENTS:

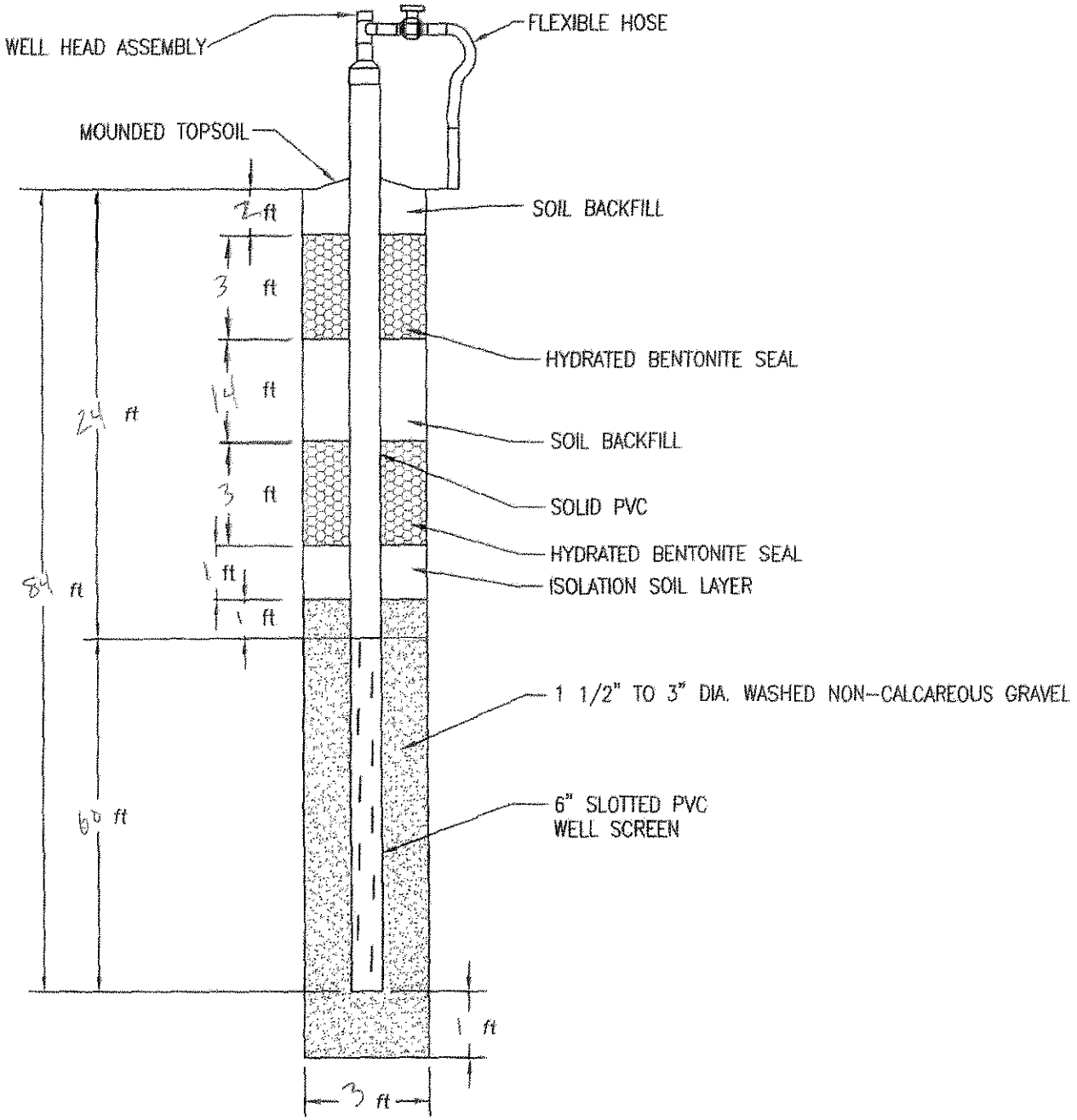

Aquaterra Drilling Log

HOLE NO: GEW-15 | SHEET 1 OF 1 SHEETS

PROJECT NAME: 2005 LFG Wells/Header CQA	DRILLING SUBCONTRACTOR: AEG
PT NUMBER: 165210	NAME OF DRILLER(S): B. Willis
LOC: Bridgeton, Missouri	MANUFACTURER'S DESIGNATION OF DRILL: Caterpillar IMT AF10
HOLE LOCATION: GEW-15	SIZES AND TYPES OF DRILLING AND SAMPLING EQUIPMENT: 36in bucket
SURFACE ELEVATION:	
OVERBURDEN THICKNESS: —	DRILLING START DATE: 7/26/05 — DRILLING END DATE: 7/27/05
DEPTH DRILLED INTO ROCK: —	DEPTH GROUNDWATER ENCOUNTERED: —
TOTAL DEPTH OF HOLE: 64 ft	DEPTH TO WATER AND ELAPSED TIME AFTER DRILLING COMPLETED: —

GEOTECHNICAL SAMPLES (TOTAL)	DISTURBED	UNDISTURBED	TOTAL NUMBER OF CORE BOXES
—	—	—	—

SAMPLES FOR CHEMICAL ANALYSIS (TOTAL)	(SPECIFY)	(SPECIFY)	(SPECIFY)	(SPECIFY)	(SPECIFY)	TOTAL CORE RECOVERY
—	—	—	—	—	—	—

DISPOSITION OF HOLE	BACKFILLED	MONITORING WELL	OTHER (SPECIFY)	SIGNATURE OF INSPECTOR
—	—	—	—	

DEPTH	DESCRIPTION OF MATERIALS	FIELD SCREENING RESULTS	GEOTECH SAMPLE RESULTS	ANALYTICAL SAMPLE NO.	TIME	REMARKS
10	Wash — 2 ft of soil				1530	Drilling begins 7/26/05
20	Wash					
40						
50	Wash					
60					1730	Drilling stopped for the day at 60 ft
	Wash				1038	Resume drilling on 7/27/05
70	Drilling stopped at 64 ft due to something undrillable in the hole					Moving over to redrill
80						
90						
100						

AQUATERRA ENVIRONMENTAL SOLUTIONS, INC.	PROJECT NAME: 2005 LFG Wells/Header CQA	HOLE NO.: GEW-15

Aquaterra Drilling Log

HOLE NO. GEW-15 | SHEET 1 OF 1 SHEETS

PROJECT NAME: 2005 LFG Wells/Header CQA	DRILLING SUBCONTRACTOR: AEG
JECT NUMBER: 1652.10	NAME OF DRILLER(S): B. Willis
ON: Bridgeton, Missouri	MANUFACTURER'S DESIGNATION OF DRILL: Caterpillar 3MT AP10
HOLE LOCATION: GEW-15	SIZES AND TYPES OF DRILLING AND SAMPLING EQUIPMENT: 36 in bucket
SURFACE ELEVATION:	
OVERBURDEN THICKNESS: —	DRILLING START DATE: 7/27/05 — DRILLING END DATE: 7/27/05
DEPTH DRILLED INTO ROCK: —	DEPTH GROUNDWATER ENCOUNTERED: —
TOTAL DEPTH OF HOLE: 80 ft	DEPTH TO WATER AND ELAPSED TIME AFTER DRILLING COMPLETED: —

GEOTECHNICAL SAMPLES (TOTAL)	DISTURBED	UNDISTURBED	TOTAL NUMBER OF CORE BOXES
—	—	—	—

SAMPLES FOR CHEMICAL ANALYSIS (TOTAL)	(SPECIFY)	(SPECIFY)	(SPECIFY)	(SPECIFY)	(SPECIFY)	TOTAL CORE RECOVERY
—	—	—	—	—	—	—

DISPOSITION OF HOLE	BACKFILLED	MONITORING WELL	OTHER (SPECIFY)	SIGNATURE OF INSPECTOR
—	—	—	—	Nathan Hogg

DEPTH	DESCRIPTION OF MATERIALS	FIELD SCREENING RESULTS	GEOTECH SAMPLE RESULTS	ANALYTICAL SAMPLE NO.	TIME	REMARKS
10	Waste 7 ft of Soil				1200	Drilling began 7/27/05
30	Waste					
40						
50	Waste					
60		130°F			1330	
70	Waste					
80		158°F 156°F			1430	End of drilling on 7/27/05 at 80ft due to high temperatures
	End of boring at 80ft					No asbestos containing materials observed
90						
100						

AQUATERRA ENVIRONMENTAL SOLUTIONS, INC.

PROJECT NAME: 2005 LFG Wells/Header CQA | HOLE NO.: GEW-15

AQUATERRA
ENVIRONMENTAL SOLUTIONS, INC.
6980 West 153rd Street
Overland Park, Kansas 66223

GAS WELL CONSTRUCTION DIAGRAM

PROJECT NUMBER: 1652.10
PROJECT NAME: 2005 Bridgeton Gas System CQA
GAS WELL NO.: GEW - 15
WELL LOCATION: Bridgeton, Missouri
INSTALLATION START DATE: 7/27/05
COMPLETION DATE: 7/27/05
DRILLER: AEG - B. Willis
INSPECTOR: Nathan Hyggerson

COMMENTS:

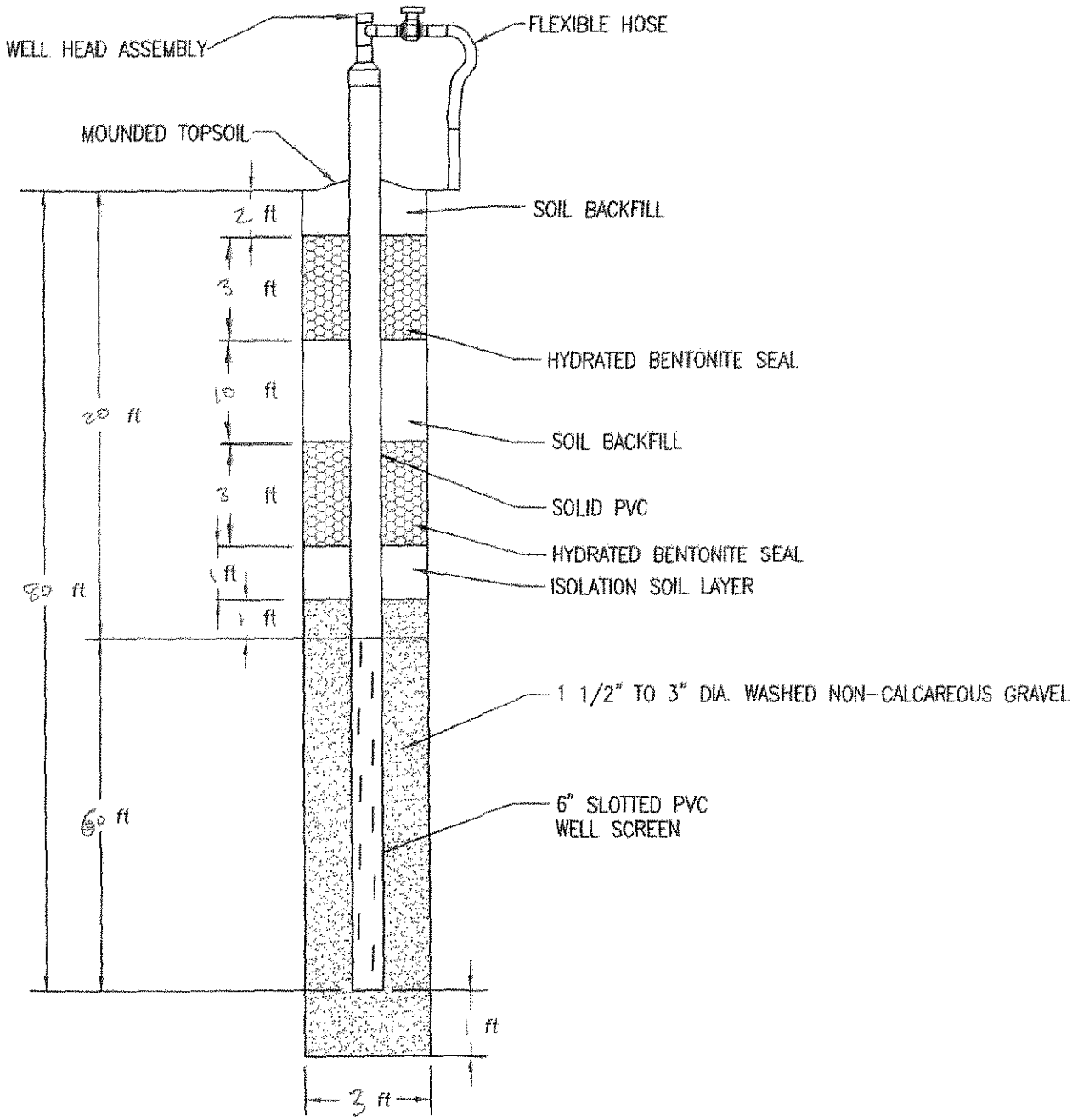

Gas Extraction Well Drilling Summary — Weaver Boos Consultants

Project Name: 2009 Gas System | Project Number: 0120-131-17

Project Location: Bridgeton Landfill | QA/QC Monitor: Joshua Ross

Well No.: 16R | Elevation: Ground 507.5

Exact Location (Coordinates): N:1067385.1 E:515724.6

Date Started: 9/12/2009 | Date Completed: 9/12/2009

Boring Size: 36 inch | Total Depth: 56

Length of Perforated Pipe: 35 | Length of Solid Pipe: 20

Comments:

Depth	Material Drilled	Temp.	Comment
0-2	soil/dry	94	
2-4	soil/dry	94	
4-6	soil/dry	97	
6-10	soil/dry	98	
10-15	soil/trash/dry	98	
15-20	trash/dry	98	
20-25	trash/dry	100	
25-30	trash/dry	101	
30-35	trash/dry	101	
35-40	trash/dry	104	
40-45	trash/dry	106	
45-50	trash/dry	109	
50-55	trash/dry	111	
55-60	trash/dry	115	
60-65			
65-70			
70-75			
75-80			
80-85			
85-90			
90-95			

Record of Gas Well Installation

Job Number: 0120-131-17 Job Name: 2009 gas system Well Number: 16R
Drilling Contractor: A.E.G.L Observed By: Joshua Ross
Started Install.: 9-12-09 Completed Install.: 9-12-09
Time: 12:30pm Time: 3:30pm

Top of Flange Elevation: _____
Ground Surface Elevation: 527.5 Location: N 1067385.1 E 515724.6

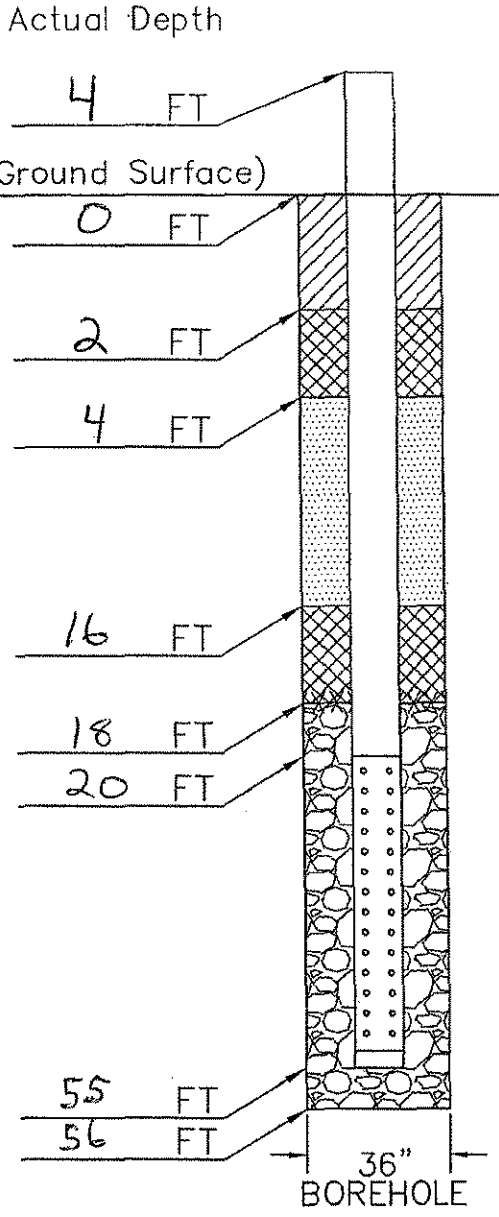

Materials

Intermediate or Final Cover:
Material: clay soil material

Top Seal:
Material: Granular bentonite
Quntity: 12 bags
Hydrated: yes

Backfill:
Material: clay soil material

Bottom Seal:
Material: Granular bentonite
Quntity: 12 bags
Hydrated: yes

Filter Pack:
Material: 1" to 3" gravel

Riser:
Material: CPVC
Quantity: 24 feet
Diameter: 6in

Screen:
Material: CPVC
Quantity: 35
Diameter: 6in
Plug: 6in cap

Weaver Boos Consultants

Gas Extraction Well Drilling Summary

Weaver Boos Consultants

Project Name: 2009 Gas System | Project Number: 0120-131-17

Project Location: Bridgeton Landfill | QA/QC Monitor: Joshua Ross

Well No.: 17R | Elevation: Ground 501.0

Exact Location (Coordinates): N:1067204.8 E:515576.6

Date Started: 9/15/2009 | Date Completed: 9/15/2009

Boring Size: 36 inch | Total Depth: 95

Length of Perforated Pipe: 74 | Length of Solid Pipe: 20

Comments: 15 feet NE of existing well

Depth	Material Drilled	Temp.	Comment
0-2	soil/dry	95	
2-4	soil/dry	95	
4-6	soil/dry	95	
6-10	soil/dry	95	
10-15	trash/dry	100	
15-20	trash/dry	101	
20-25	trash/dry	102	
25-30	trash/dry	104	
30-35	trash/dry	106	
35-40	trash/dry	108	
40-45	trash/dry	109	
45-50	trash/dry	111	
50-55	trash/dry	112	
55-60	trash/dry	112	
60-65	trash/dry	115	
65-70	trash/dry	116	
70-75	trash/dry	117	
75-80	trash/dry	117	
80-85	trash/dry	117	
85-90	trash/dry	119	
90-95	trash/dry	121	

Record of Gas Well Installation

Job Number: 0120-131-17 Job Name: 2009 gas system Well Number: 17R
Drilling Contractor: A.E.G.L Observed By: Joshua Ross
Started Install.: 9-15-09 Completed Install.: 9-15-09
Time: 6:00am Time: 10:00am

Top of Flange Elevation: _____
Ground Surface Elevation: 501.0 Location: N 1067209.8 E 515576.6

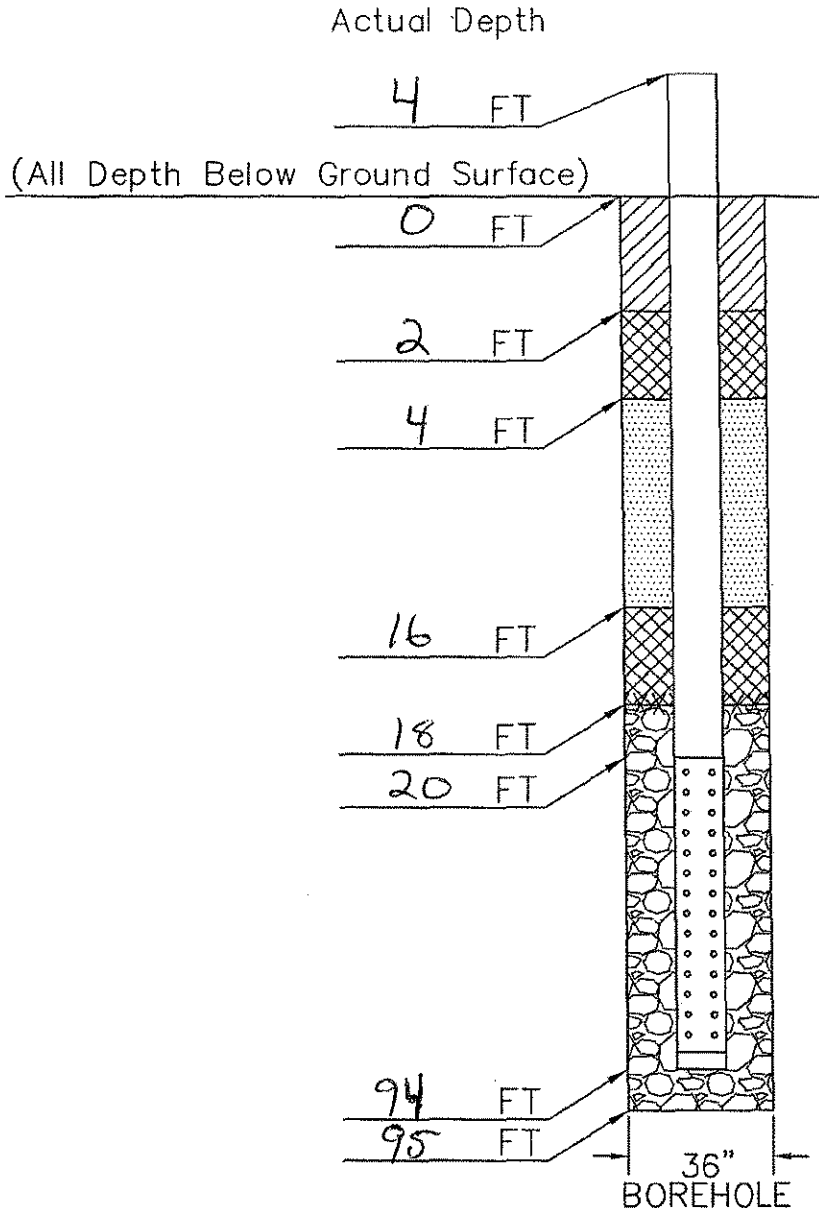

Materials

Intermediate or Final Cover:
- Material: clay soil material

Top Seal:
- Material: Granular bentonite
- Quntity: 12 bags
- Hydrated: yes

Backfill:
- Material: clay soil material

Bottom Seal:
- Material: Granular bentonite
- Quntity: 12 bags
- Hydrated: yes

Filter Pack:
- Material: 1" to 3" gravel

Riser:
- Material: CPVC
- Quantity: 24 Feet
- Diameter: 6in

Screen:
- Material: CPVC
- Quantity: 74
- Diameter: 6in
- Plug: 6in cap

Weaver Boos Consultants

Gas Extraction Well Drilling Summary

Weaver Boos Consultants

roject Name: 2009 Gas System | Project Number: 0120-131-17

Project Location: Bridgeton Landfill | QA/QC Monitor: Joshua Ross

Well No.: 18R | Elevation: Ground 483.3

Exact Location (Coordinates): N:1067089.9 E:515454.3

Date Started: 9/12/2009 | Date Completed: 9/12/2009

Boring Size: 36 inch | Total Depth: 94

Length of Perforated Pipe: 73 | Length of Solid Pipe: 20

Comments: 20 feet north of existing well

Depth	Material Drilled	Temp.	Comment
0-2	soil/dry	92	
2-4	soil/dry	92	
4-6	soil/dry	92	
6-10	soil/trash/dry	96	
10-15	soil/trash/dry	96	
15-20	trash/dry	97	
20-25	trash/dry	98	
25-30	trash/dry	98	
30-35	trash/dry	103	
35-40	trash/dry	104	
40-45	trash/dry	104	
45-50	trash/dry	107	
50-55	trash/damp	109	
55-60	trash/moist	109	
60-65	trash/sludge/wet	111	
65-70	sludge/wet	119	
70-75	sludge/wet	120	
75-80	sludge/wet	121	
80-85	sludge/wet	121	
85-90	sludge/wet	126	
90-95	sludge/wet	128	

Record of Gas Well Installation

Job Number: 0120-131-17 Job Name: 2009 gas system Well Number: 18R
Drilling Contractor: A.E.G.L Observed By: Joshua Ross
Started Install.: 9-12-09 Completed Install.: 9-12-09
Time: 6:00am Time: 12:00pm

Top of Flange Elevation: _____
Ground Surface Elevation: 483.3 Location: N 1067089.9 E 515454.3

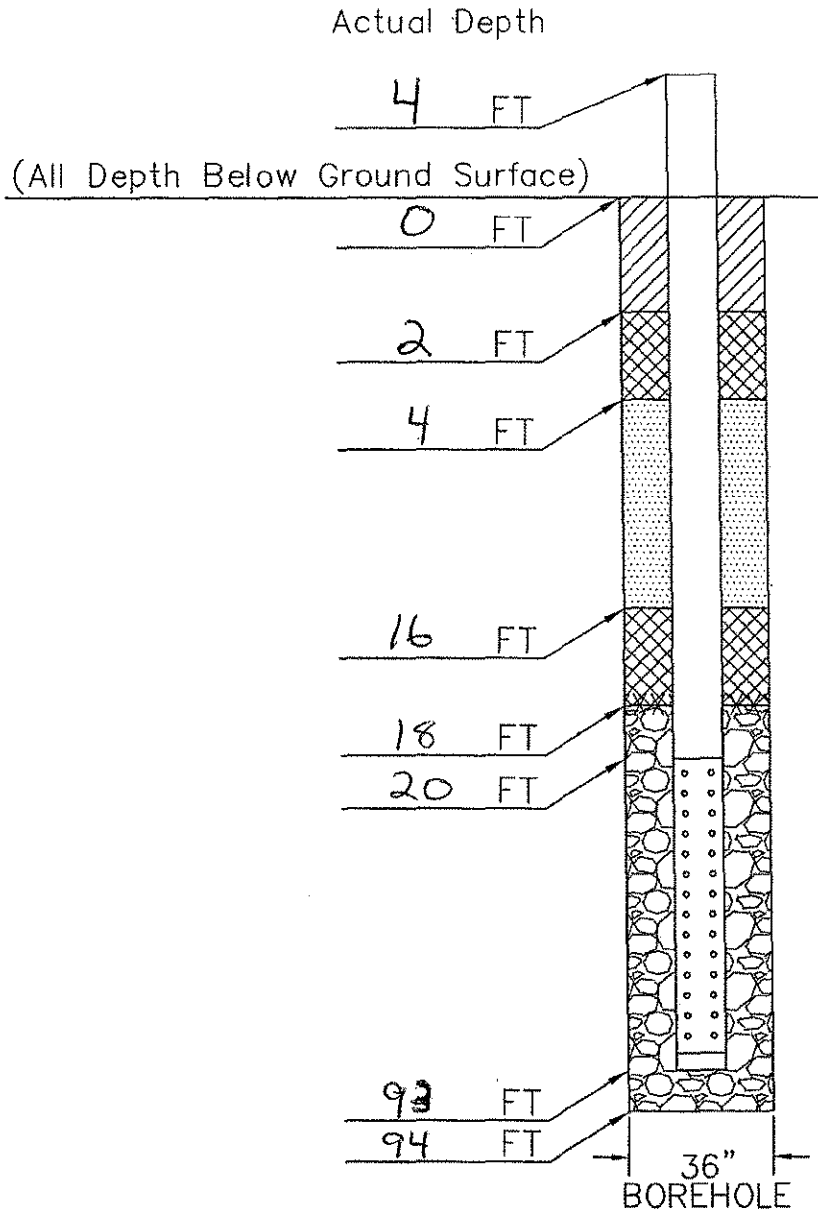

Materials

Intermediate or Final Cover:
- Material: clay soil material

Top Seal:
- Material: Granular bentonite
- Quntity: 12 bags
- Hydrated: yes

Backfill:
- Material: clay soil material

Bottom Seal:
- Material: Granular bentonite
- Quntity: 12 bags
- Hydrated: yes

Filter Pack:
- Material: 1" to 3" gravel

Riser:
- Material: CPVC
- Quantity: 24 Feet
- Diameter: 6in

Screen:
- Material: CPVC
- Quantity: 73
- Diameter: 6in
- Plug: 6in cap

Weaver Boos Consultants

Aquaterra Drilling Log

HOLE NO. GEW-19A | SHEET 1 OF 1 SHEETS

PROJECT NAME: 2005 LFG Wells/Header CQA	DRILLING SUBCONTRACTOR: AEG
PROJECT NUMBER: 1652.10	NAME OF DRILLER(S): B. Willis
LOCATION: Bridgeton, Missouri	MANUFACTURER'S DESIGNATION OF DRILL: Caterpillar IMT 4710
HOLE LOCATION: GEW-19A	SIZES AND TYPES OF DRILLING AND SAMPLING EQUIPMENT: 36in Bucket
SURFACE ELEVATION: 487 ft	
OVERBURDEN THICKNESS: —	DRILLING START DATE: 6/30/05 — DRILLING END DATE: 7/1/05
DEPTH DRILLED INTO ROCK: —	DEPTH GROUNDWATER ENCOUNTERED: —
TOTAL DEPTH OF HOLE: 85 ft	DEPTH TO WATER AND ELAPSED TIME AFTER DRILLING COMPLETED: —

GEOTECHNICAL SAMPLES (TOTAL)	DISTURBED	UNDISTURBED	TOTAL NUMBER OF CORE BOXES
—	—	—	—

SAMPLES FOR CHEMICAL ANALYSIS (TOTAL)	(SPECIFY)	(SPECIFY)	(SPECIFY)	(SPECIFY)	(SPECIFY)	TOTAL CORE RECOVERY
—	—	—	—	—	—	—

DISPOSITION OF HOLE	BACKFILLED	MONITORING WELL	OTHER (SPECIFY)	SIGNATURE OF INSPECTOR
✓	✓	—	—	Nathan Hogg

DEPTH	DESCRIPTION OF MATERIALS	FIELD SCREENING RESULTS	GEOTECH SAMPLE RESULTS	ANALYTICAL SAMPLE NO.	TIME	REMARKS
10	1.5 ft of soil				1430	Drilling begins on 6/30/05
	Waste					
30						
	Waste					
40						
50	Waste				1530	End of drilling on 6/30/05 at approximate depth of 55 ft
60	Wet Waste				700	Resume drilling on 7/1/05
						Waste is wet at this depth
70	Waste					End of borehole on 7/1/05 at approx. 85 ft.
	End of the boring at 85 ft.					No asbestos containing materials observed
80						
90						
100						

AQUATERRA ENVIRONMENTAL SOLUTIONS, INC.

PROJECT NAME: 2005 LFG Wells/Header CQA | HOLE NO.: GEW-19A

AQUATERRA
ENVIRONMENTAL SOLUTIONS, INC.
6980 West 153rd Street
Overland Park, Kansas 66223

GAS WELL CONSTRUCTION DIAGRAM

PROJECT NUMBER: 1652.10
PROJECT NAME: 2005 Bridgeton Gas System CQA
GAS WELL NO.: GEW-19A
WELL LOCATION:
INSTALLATION START DATE: 6/30/05
COMPLETION DATE: 7/1/05
DRILLER: B Willis
INSPECTOR: Nathan Higgerson

COMMENTS:

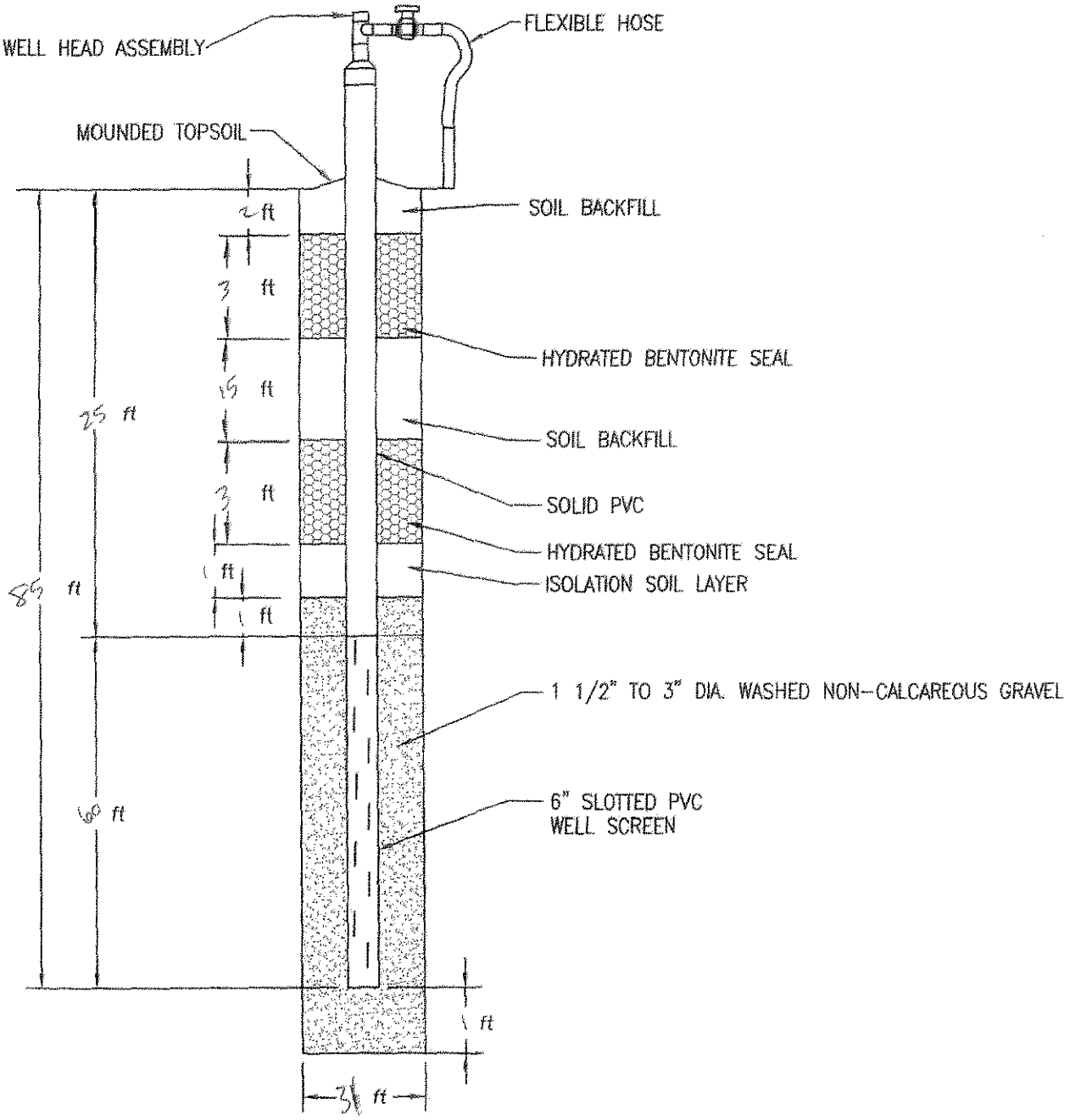

Aquaterra Drilling Log

HOLE NO.	SHEET 1 OF	SHEETS
GEW-20A	1	

PROJECT NAME: 2005 LFG Wells/Header CQA	DRILLING SUBCONTRACTOR: AEG
PROJECT NUMBER: 1652.10	NAME OF DRILLER(S): B. Willis
LOCATION: Bridgeton, Missouri	MANUFACTURER'S DESIGNATION OF DRILL: Caterpillar IMT AF10
HOLE LOCATION: GEW-20A	SIZES AND TYPES OF DRILLING AND SAMPLING EQUIPMENT: 36 in bucket
SURFACE ELEVATION: 480	
OVERBURDEN THICKNESS: —	DRILLING START DATE: 6/30/05 — DRILLING END DATE: 6/30/05
DEPTH DRILLED INTO ROCK: —	DEPTH GROUNDWATER ENCOUNTERED: —
TOTAL DEPTH OF HOLE: —	DEPTH TO WATER AND ELAPSED TIME AFTER DRILLING COMPLETED: —

GEOTECHNICAL SAMPLES (TOTAL)	DISTURBED	UNDISTURBED	TOTAL NUMBER OF CORE BOXES
—	—	—	—

SAMPLES FOR CHEMICAL ANALYSIS (TOTAL)	(SPECIFY)	(SPECIFY)	(SPECIFY)	(SPECIFY)	(SPECIFY)	TOTAL CORE RECOVERY
—	—	—	—	—	—	—

DISPOSITION OF HOLE	BACKFILLED	MONITORING WELL	OTHER (SPEICFY)	SIGNATURE OF INSPECTOR
—	—	—	—	Nathan R Figge

DEPTH	DESCRIPTION OF MATERIALS	FIELD SCREENING RESULTS	GEOTECH SAMPLE RESULTS	ANALYTICAL SAMPLE NO.	TIME	REMARKS
	3 ft of soil				730	Drilling begin on 6/30/05
10	Waste					
30	Waste					
40						
50						
60	Waste				930	
70	Wet					Wet Waste at approximately 70 ft.
80						
90	Waste				1130	End of the drilling on 6/30/05
100	End of the boring at 94 ft				1230	No asbestos containing materials observed.
110						

AQUATERRA ENVIRONMENTAL SOLUTIONS, INC.

PROJECT NAME	HOLE NO.
2005 LFG Wells/Header CQA	GEW-20A

AQUATERRA
ENVIRONMENTAL SOLUTIONS, INC.
6980 West 153rd Street
Overland Park, Kansas 66223

GAS WELL CONSTRUCTION DIAGRAM

PROJECT NUMBER: 1652.10
PROJECT NAME: 2005 Bridgeton Gas System CQA
GAS WELL NO.: GEW - 20A
WELL LOCATION:
INSTALLATION START DATE: 6/30/05
COMPLETION DATE: 6/30/05
DRILLER: AEG B Willis
INSPECTOR: Nathan Higgerson

COMMENTS:

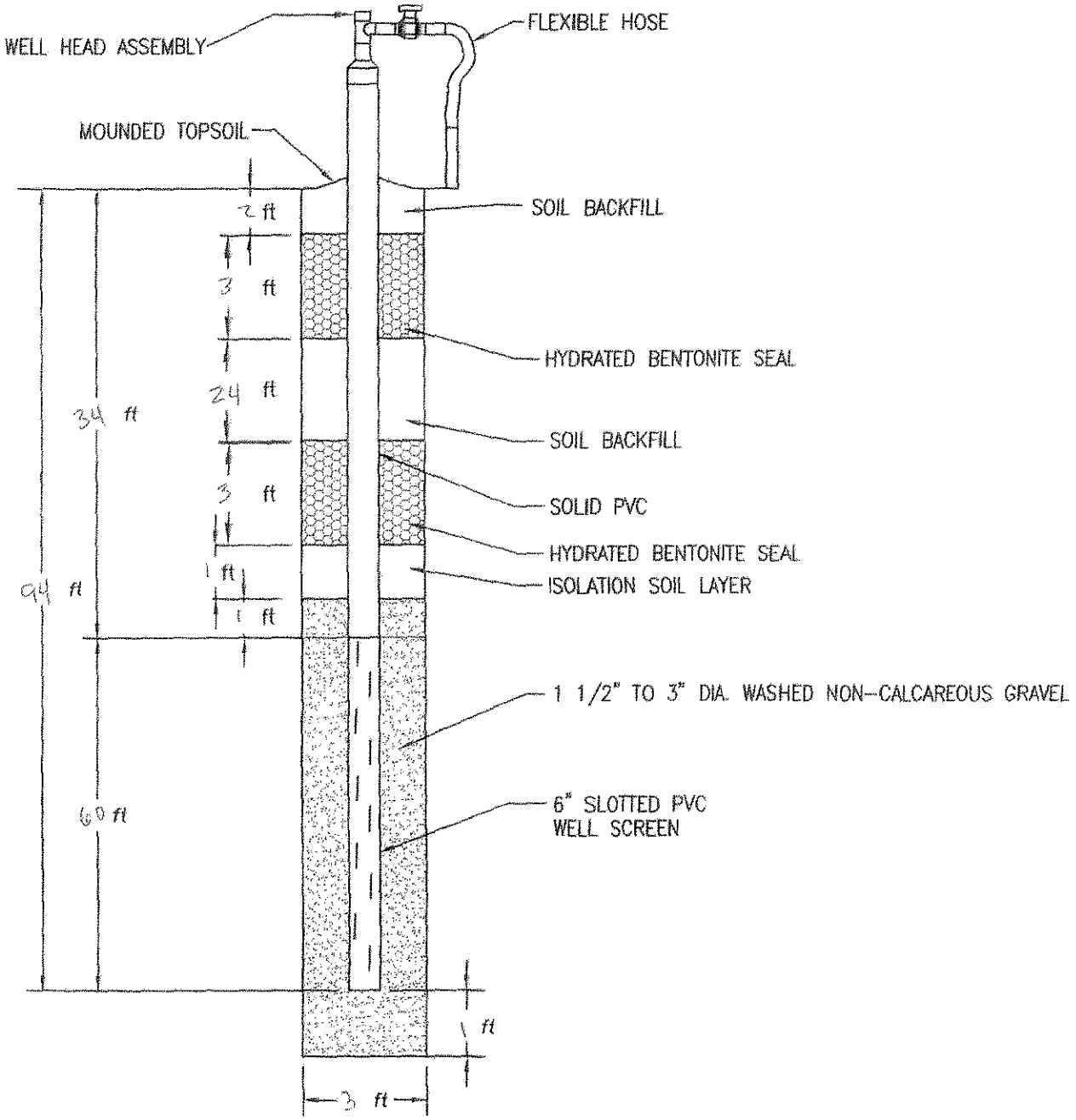

Aquaterra Drilling Log

HOLE NO. GEW-21A | SHEET 1 OF 1 SHEETS

PROJECT NAME: 2005 LFG well/Header CQA	DRILLING SUBCONTRACTOR: AEG
PROJECT NUMBER: 1652 10	NAME OF DRILLER(S): B. Willis
CITY: Bridgeton, Missouri	MANUFACTURER'S DESIGNATION OF DRILL: Caterpillar IMT AF10
HOLE LOCATION: GEW-21A	SIZES AND TYPES OF DRILLING AND SAMPLING EQUIPMENT: 36 in. Bucket
SURFACE ELEVATION: 506.47 CL	
OVERBURDEN THICKNESS: —	DRILLING START DATE: 7/2/05 — DRILLING END DATE: 7/5/05
DEPTH DRILLED INTO ROCK: —	DEPTH GROUNDWATER ENCOUNTERED: —
TOTAL DEPTH OF HOLE:	DEPTH TO WATER AND ELAPSED TIME AFTER DRILLING COMPLETED:

GEOTECHNICAL SAMPLES (TOTAL)	DISTURBED	UNDISTURBED	TOTAL NUMBER OF CORE BOXES
—	—	—	—

SAMPLES FOR CHEMICAL ANALYSIS (TOTAL)	(SPECIFY)	(SPECIFY)	(SPECIFY)	(SPECIFY)	(SPECIFY)	TOTAL CORE RECOVERY
—	—	—	—	—	—	—

DISPOSITION OF HOLE	BACKFILLED	MONITORING WELL	OTHER (SPECIFY)	SIGNATURE OF INSPECTOR
—	—	—	—	

DEPTH	DESCRIPTION OF MATERIALS	FIELD SCREENING RESULTS	GEOTECH SAMPLE RESULTS	ANALYTICAL SAMPLE NO.	TIME	REMARKS
10	Waste Fill 4 ft of soil				1515	
30	Waste					
40					1615	End of drilling on 7/2/05 at 40 ft. Drilling begins 7/5/05 1330
50						
60						
70						wet waste
80	Waste				1335	
90						
100						
110	Waste End of borehole 110 ft				1630	Drilled to depth in asbestos containing material observed

AQUATERRA
ENVIRONMENTAL SOLUTIONS, INC.
6980 West 153rd Street
Overland Park, Kansas 66223

GAS WELL CONSTRUCTION DIAGRAM

PROJECT NUMBER: 1652.10
PROJECT NAME: 2005 Bridgeton Gas System CQA
GAS WELL NO.: 21A
WELL LOCATION: South SWPE
INSTALLATION START DATE: 7/8/05
COMPLETION DATE: 7/5/05
DRILLER: AEG (B. Wills)
INSPECTOR: J. Jordan

COMMENTS: No ACM observed

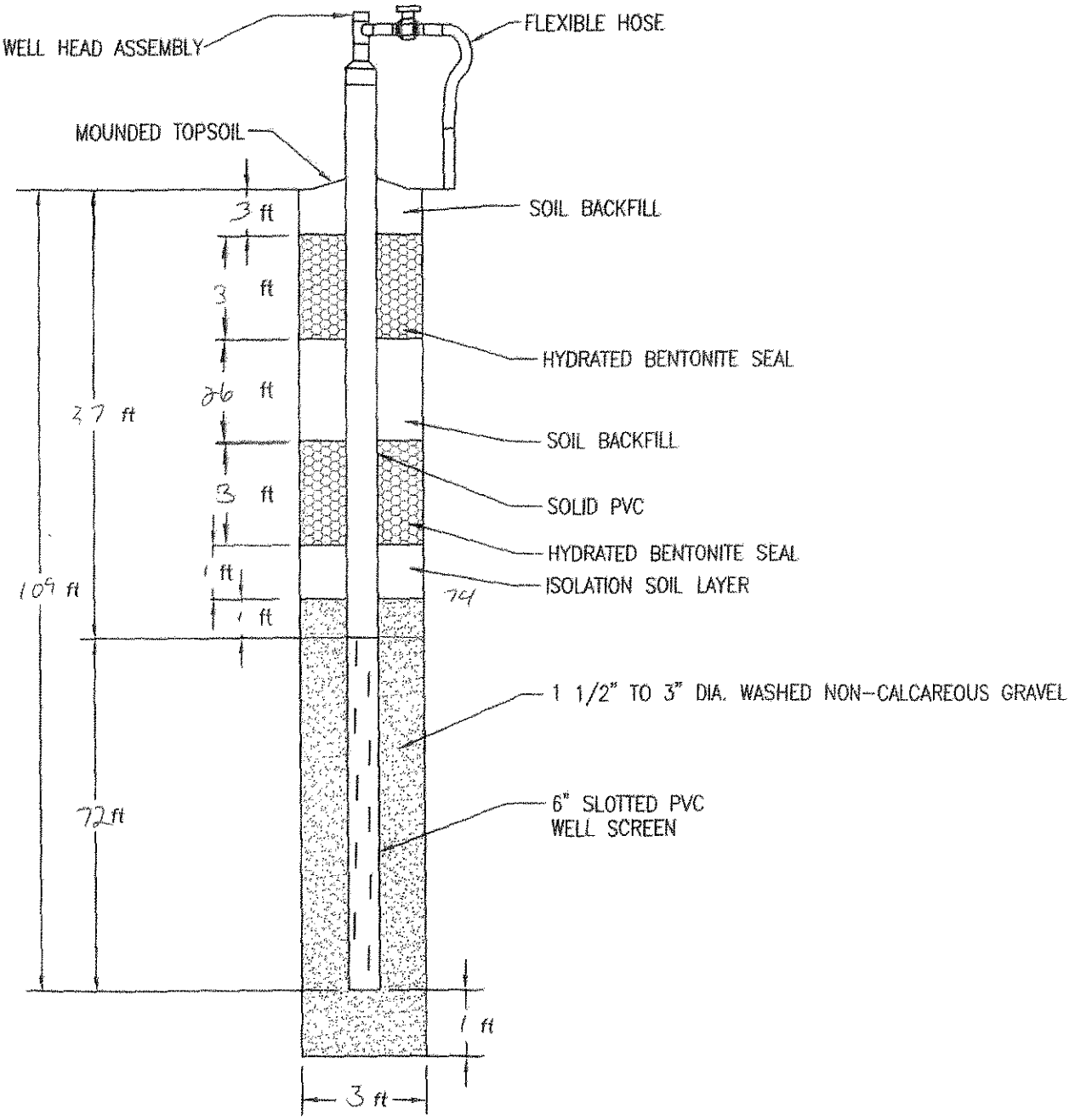

Gas Extraction Well Drilling Summary

Weaver Boos Consultants

Project Name: 2009 Gas System

Project Number: 0120-131-17

Project Location: Bridgeton Landfill

QA/QC Monitor: Joshua Ross

Well No.: 22R

Elevation: Ground 497.6

Exact Location (Coordinates): N:1066784.5 E:515579.1

Date Started: 9/11/2009

Date Completed: 9/11/2009

Boring Size: 36 inch

Total Depth: 94

Length of Perforated Pipe: 73

Length of Solid Pipe: 20

Comments:

Depth	Material Drilled	Temp.	Comment
0-2	soil/dry		
2-4	soil/dry		
4-6	soil/dry	94	
6-10	soil/dry	94	
10-15	soil/trash/dry	94	
15-20	trash/dry	97	
20-25	trash/dry	99	
25-30	trash/dry	99	
30-35	trash/dry	103	
35-40	trash/dry	105	
40-45	trash/dry	108	
45-50	trash/dry	108	
50-55	trash/dry	109	
55-60	trash/dry	113	
60-65	trash/dry	113	
65-70	trash/dry	113	
70-75	trash/damp	117	
75-80	trash/moist	118	
80-85	trash/sludge/wet	118	
85-90	sludge/wet	123	
90-95	sludge/wet	125	

Record of Gas Well Installation

Job Number: 0120-131-17 Job Name: 2009 gas system Well Number: 22R
Drilling Contractor: A.E.G.L Observed By: Joshua Ross
Started Install.: 9-11-09 Completed Install.: 9-11-09
Time: 6:00am Time: 5:30pm

Top of Flange Elevation: _____
Ground Surface Elevation: 497.6 Location: N1066784.5 E 515579.1

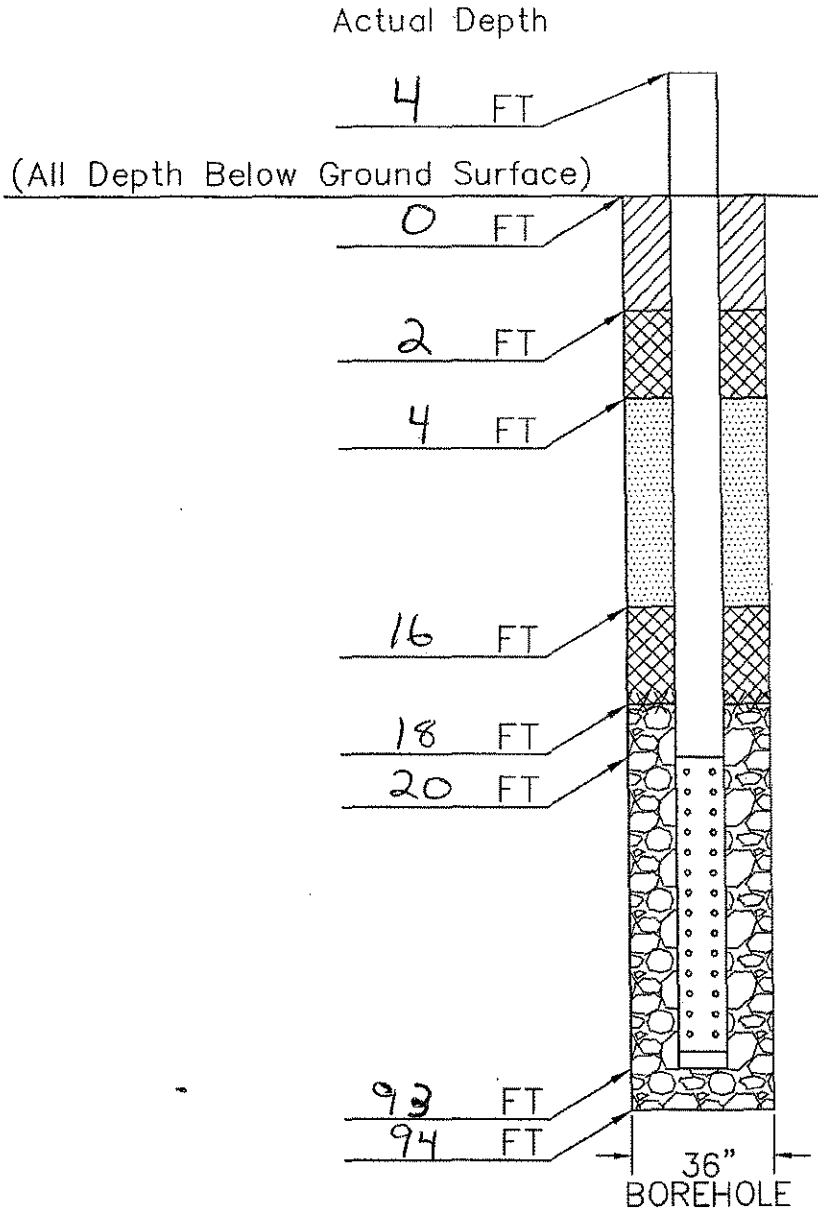

Materials

Intermediate or Final Cover:
Material: clay soil material

Top Seal:
Material: Granular bentonite
Quntity: 12 bags
Hydrated: yes

Backfill:
Material: clay soil material

Bottom Seal:
Material: Granular bentonite
Quntity: 12 bags
Hydrated: yes

Filter Pack:
Material: 1" to 3" gravel

Riser:
Material: CPVC
Quantity: 24 Feet
Diameter: 6in

Screen:
Material: CPVC
Quantity: 73
Diameter: 6in
Plug: 6in cap

Weaver Boos Consultants

Aquaterra Drilling Log

HOLE NO. GEW-23A | SHEET 1 OF 2 SHEETS

PROJECT NAME: GEW 23A & 27A CQA	DRILLING SUBCONTRACTOR: PDI
OJECT NUMBER: 2048.10	NAME OF DRILLER(S): MITCH WILKENSON
LOCATION: BRIDGETON, MISSOURI	MANUFACTURER'S DESIGNATION OF DRILL: WESTERN BORE 200 CRAWLER DRILL
HOLE LOCATION: 25' NORTH OF GEW 23 MIDDLE OF SOUTHWEST SLOPE OF 2006 FINAL COVER	SIZES AND TYPES OF DRILLING AND SAMPLING EQUIPMENT: 24" BUCKET; 2 CORRECTIONS FROM LANDMARK; 35" DIAMETER HOLE
SURFACE ELEVATION: 505 ±	
OVERBURDEN THICKNESS: 7' ±	DRILLING START DATE: 10-2-06 / DRILLING END DATE: 10-2-06
DEPTH DRILLED INTO ROCK: NO	DEPTH GROUNDWATER ENCOUNTERED: NO
TOTAL DEPTH OF HOLE: 103'	DEPTH TO WATER AND ELAPSED TIME AFTER DRILLING COMPLETED: NO

GEOTECHNICAL SAMPLES (TOTAL)	DISTURBED	UNDISTURBED	TOTAL NUMBER OF CORE BOXES
—	—	—	—

SAMPLES FOR CHEMICAL ANALYSIS (TOTAL)	(SPECIFY)	(SPECIFY)	(SPECIFY)	(SPECIFY)	(SPECIFY)	TOTAL CORE RECOVERY
—	—	—	—	—	—	—

DISPOSITION OF HOLE	BACKFILLED	MONITORING WELL	OTHER (SPECIFY)	SIGNATURE OF INSPECTOR
FILLED	GRAVEL, BENTONITE, SOIL	—	GAS WELL	TERRY L. MUELLER

DEPTH	DESCRIPTION OF MATERIALS	FIELD SCREENING RESULTS	GEOTECH SAMPLE RESULTS	ANALYTICAL SAMPLE NO.	TIME	REMARKS
0	0+00				0900	
	CL	0+02		SOIL		
	0+07	0+05	SOLID 6" PVC	BENTONITE	0910	
10				SOIL		
		0+17		BENTONITE		
20	WASTE	0+20 / 0+21		SOIL		↑ DRY ↓
				0+22		
30						WASTE TEMPERATURE 75°-80° F
	0+38		GRAVEL / PERFORATED 6" PVC / GRAVEL		1000	
40	WASTE					
50	0+53				1100	
	WASTE					
60						

AQUATERRA ENVIRONMENTAL SOLUTIONS, INC.

PROJECT NAME: GEW 23A & 27A CQA | HOLE NO.: GEW 23A

Aquaterra Drilling Log

HOLE NO. GEW-23A | SHEET 2 OF 2 SHEETS

PROJECT NAME: GEW 23A & 27A CQA

INSPECTOR: (TERRY L. MUELLER)

DEPTH	DESCRIPTION OF MATERIALS	FIELD SCREENING RESULTS	GEOTECH SAMPLE RESULTS	ANALYTICAL SAMPLE NO.	TIME	REMARKS
60	WASTE					
	0+64				1200	
70	WASTE					
	0+76				1300	WASTE TEMPERATURE 95°-100°F
80	WASTE					
	0+88				1400	DRY
						0+92 DAMP
90	WASTE					
	1+00				1500	0+98 WET
	1+03 WASTE		GRAVEL / PERFORATED 6" PVC / GRAVEL; 1+02		1515	1+03 SATURATED
	Bottom					COULD NOT REMOVE ANY MORE AS IT WAS TOO SOUPY.
110	WASTE					
						NO ASBESTOS MATERIALS OBSERVED

AQUATERRA ENVIRONMENTAL SOLUTIONS, INC.

PROJECT NAME: GEW 23A & 27A CQA

HOLE NO.: GEW-23A

AQUATERRA
ENVIRONMENTAL SOLUTIONS, INC.
141 Market Place Drive
Fairveiw Heights, Illinois 62208

GAS WELL CONSTRUCTION DIAGRAM

PROJECT NUMBER: 2048.10
PROJECT NAME: GEW 23A & 27A CDA
GAS WELL NO.: 23A
WELL LOCATION: 25' NORTH OF GEW 23 MIDDLE OF SOUTHWEST SLOPE OF 200% FINAL COVER
INSTALLATION START DATE: 10-2-06
COMPLETION DATE: 10-2-06
DRILLER: MITCH WILKENSON PDI
INSPECTOR: TERRY L. MUELLER

COMMENTS: SOUPY MATERIAL PAST 102 FOOT DEPTH.

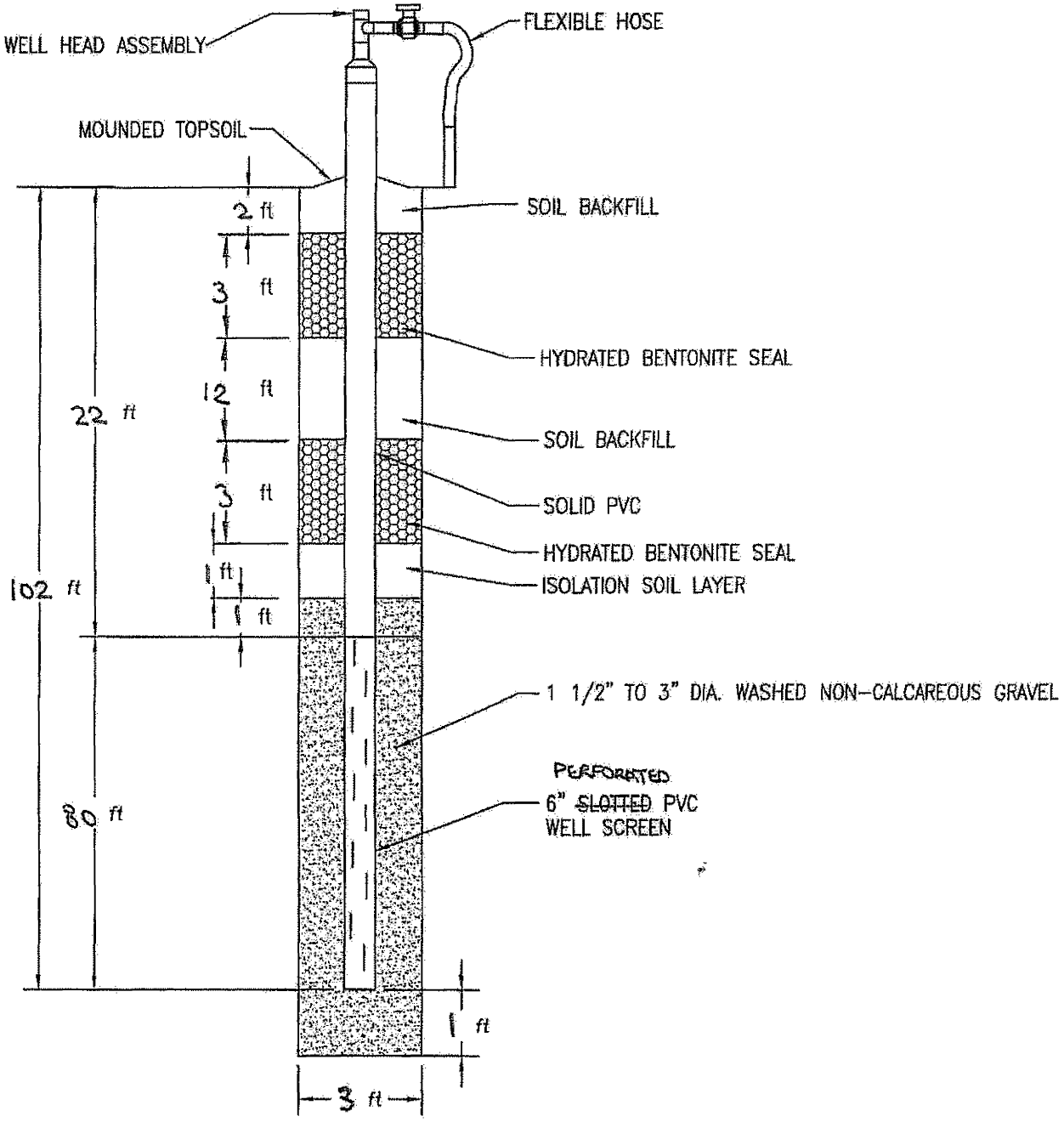

Aquaterra Drilling Log

HOLE NO. 24A | SHEET 1 OF 1 SHEETS

PROJECT NAME: 2005 Gas Wells / Leeder COA	DRILLING SUBCONTRACTOR: AEG
PROJECT NUMBER: 1652.10	NAME OF DRILLER(S): B. Willis
I N: Bridgeton Landfill, LLC	MANUFACTURER'S DESIGNATION OF DRILL: Caterpillar AF10 (IMT)
HOLE LOCATION: South Slope	SIZES AND TYPES OF DRILLING AND SAMPLING EQUIPMENT: 36in. bucket
SURFACE ELEVATION: 510.50	
OVERBURDEN THICKNESS: —	DRILLING START DATE: 6/27/05 — DRILLING END DATE: 6/27/05
DEPTH DRILLED INTO ROCK: —	DEPTH GROUNDWATER ENCOUNTERED: —
TOTAL DEPTH OF HOLE: —	DEPTH TO WATER AND ELAPSED TIME AFTER DRILLING COMPLETED: —

GEOTECHNICAL SAMPLES (TOTAL)	DISTURBED	UNDISTURBED	TOTAL NUMBER OF CORE BOXES
—	—	—	—

SAMPLES FOR CHEMICAL ANALYSIS (TOTAL)	(SPECIFY)	(SPECIFY)	(SPECIFY)	(SPECIFY)	(SPECIFY)	TOTAL CORE RECOVERY
—	—	—	—	—	—	—

DISPOSITION OF HOLE	BACKFILLED	MONITORING WELL	OTHER (SPEICFY)	SIGNATURE OF INSPECTOR
—	—	—	—	

DEPTH	DESCRIPTION OF MATERIALS	FIELD SCREENING RESULTS	GEOTECH SAMPLE RESULTS	ANALYTICAL SAMPLE NO.	TIME	REMARKS
0	Soil				745	Soil to 4'
	waste				800	Dry waste
60	waste				1030	wet waste
100	waste				1100	very wet waste
	Drilling Complete Bore hole 117'				1415	no ACM Observed

AQUATERRA
ENVIRONMENTAL SOLUTIONS, INC.
6980 West 153rd Street
Overland Park, Kansas 66223

GAS WELL CONSTRUCTION DIAGRAM

PROJECT NUMBER: 1652.10
PROJECT NAME: 2005 Bridgeton Gas System CQA
GAS WELL NO.: 24A
WELL LOCATION: South Slope
INSTALLATION START DATE: 6/27
COMPLETION DATE: 6/27
DRILLER: AEG (B. Wilis)
INSPECTOR: J. Jordan
COMMENTS: No ACM Observed

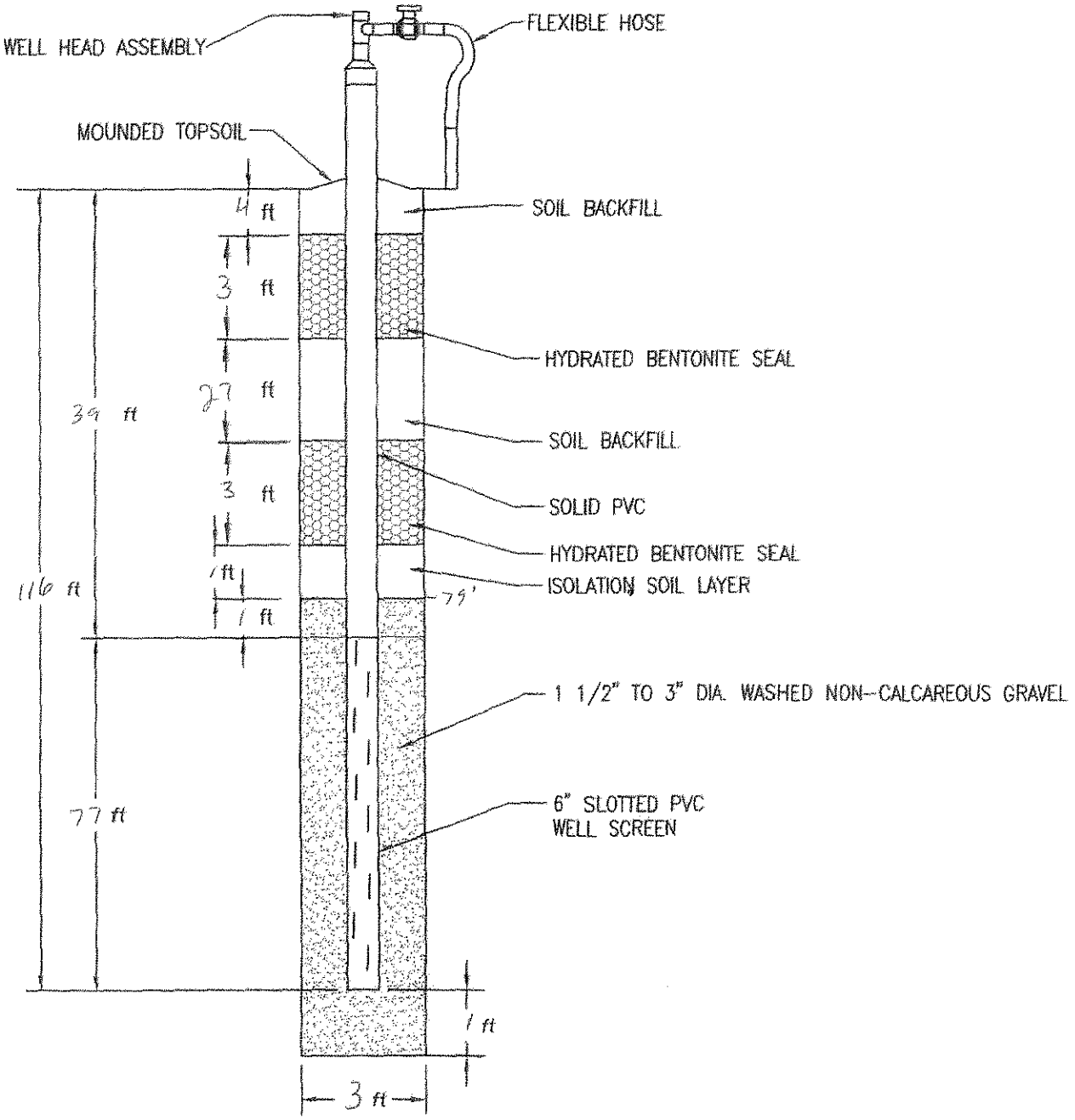

Aquaterra Drilling Log

HOLE NO. 25A | SHEET 1 OF 1 SHEETS

PROJECT NAME: 2005 Gas well / Header CQA	DRILLING SUBCONTRACTOR: AEG
PROJECT NUMBER: 1652.10	NAME OF DRILLER(S): B. Willis, K. Hickman
N	MANUFACTURER'S DESIGNATION OF DRILL: Caterpillar AE-10 (Ext)
HOLE LOCATION: Bridgeton Landfill; South Slope	SIZES AND TYPES OF DRILLING AND SAMPLING EQUIPMENT: 36" Bucket
SURFACE ELEVATION: 521.20	
OVERBURDEN THICKNESS: —	DRILLING START DATE: 6/27/05 — DRILLING END DATE:
DEPTH DRILLED INTO ROCK: —	DEPTH GROUNDWATER ENCOUNTERED: —
TOTAL DEPTH OF HOLE:	DEPTH TO WATER AND ELAPSED TIME AFTER DRILLING COMPLETED: —

GEOTECHNICAL SAMPLES (TOTAL)	DISTURBED	UNDISTURBED	TOTAL NUMBER OF CORE BOXES
—	—	—	—

SAMPLES FOR CHEMICAL ANALYSIS (TOTAL)	(SPECIFY)	(SPECIFY)	(SPECIFY)	(SPECIFY)	(SPECIFY)	TOTAL CORE RECOVERY
—	—	—	—	—	—	—

DISPOSITION OF HOLE	BACKFILLED	MONITORING WELL	OTHER (SPECIFY)	SIGNATURE OF INSPECTOR
—	—	—	—	

DEPTH	DESCRIPTION OF MATERIALS	FIELD SCREENING RESULTS	GEOTECH SAMPLE RESULTS	ANALYTICAL SAMPLE NO.	TIME	REMARKS
10	Soil				1600	4' Soil
					1620	Dry waste
	waste					
30						
40						
50						
	waste				1710	Drilling stopped
					1050	Drilling Resumed 6/28
70						
	Waste					
80						
						Wet waste
90	Waste					
					~~1050~~ 1430	
						End of boring on 6/28/05 due to
100	~~Waste~~ End of boring at 105 ft				~~1050~~	wet waste clogging the borehole.
						No asbestos containing materials
						observed.

AQUATERRA
ENVIRONMENTAL SOLUTIONS, INC.
6980 West 153rd Street
Overland Park, Kansas 66223

GAS WELL CONSTRUCTION DIAGRAM

PROJECT NUMBER: 1652.10
PROJECT NAME: 2005 Bridgeton Gas System CQA
GAS WELL NO.: GEW-25A
WELL LOCATION:
INSTALLATION START DATE: 6/28/05
COMPLETION DATE: 6/28/05
DRILLER: B. Willis
INSPECTOR: Nathan Higgerson

COMMENTS:

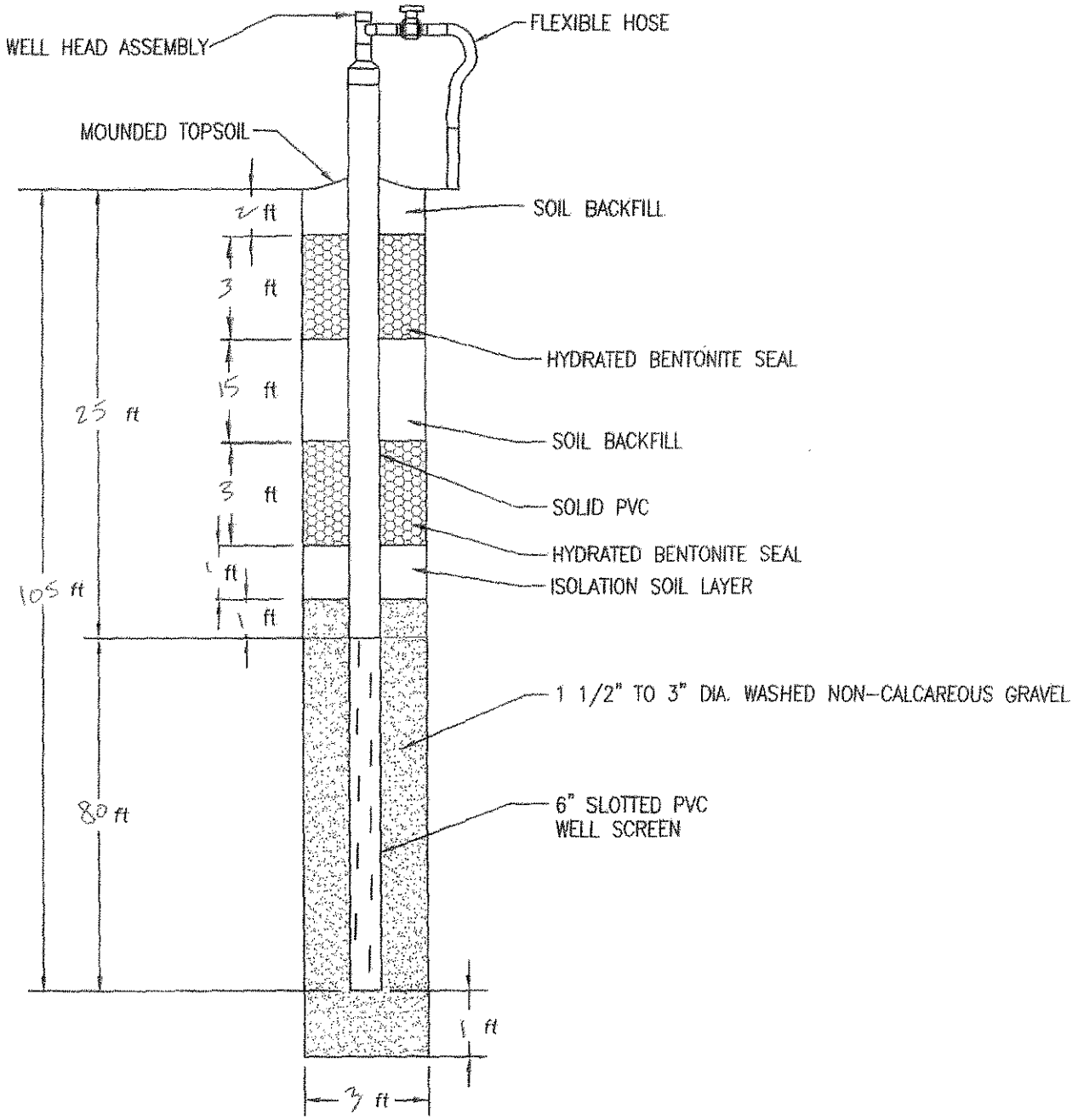

Gas Extraction Well Drilling Summary

Weaver Boos Consultants

Project Name: 2009 Gas System
Project Number: 0120-131-17
Project Location: Bridgeton Landfill
QA/QC Monitor: Joshua Ross

Well No.: 26R
Elevation: Ground 518.4
Exact Location (Coordinates): N:1066515.7 E:516006.9
Date Started: 9/1/2009
Date Completed: 9/1/2009
Boring Size: 36 inch
Total Depth: 105
Length of Perforated Pipe: 84
Length of Solid Pipe: 20
Comments: 20 feet East of existing well

Depth	Material Drilled	Temp.	Comment
0-2	soil/dry	95	
2-4	soil/dry	95	
4-6	soil/dry	95	
6-10	soil/dry	96	
10-15	trash/dry	99	
15-20	trash/dry	100	
20-25	trash/dry	102	
25-30	trash/dry	106	
30-35	trash/dry	107	
35-40	trash/dry	110	
40-45	trash/dry	115	
45-50	trash/dry	115	
50-55	trash/dry	115	
55-60	trash/dry	118	
60-65	trash/dry	119	
65-70	trash/dry	119	
70-75	trash/dry	121	
75-80	trash/dry	122	
80-85	trash/dry	124	
85-90	trash/dry	124	
90-95	trash/dry	128	

Gas Extraction Well Drilling Summary

Weaver Boos Consultants

Project Name:	2009 Gas System	Project Number:	0120-131-17
Project Location:	Bridgeton Landfill	QA/QC Monitor:	Joshua Ross

95-100	trash/dry	128	
100-105	trash/dry	129	
105-110			
110-115			
115-120			
120-125			
125-130			
130-135			
135-140			
140-145			
145-150			

Record of Gas Well Installation

Job Number: 0120-131-17 Job Name: 2009 gas system Well Number: 26R
Drilling Contractor: A.E.G.L Observed By: Joshua Ross
Started Install.: 9-1-09 Completed Install.: 9-1-09
Time: 10:00am Time: 4:00pm

Top of Flange Elevation: _____
Ground Surface Elevation: 518.4 Location: N 1066515.7 E 516006.9

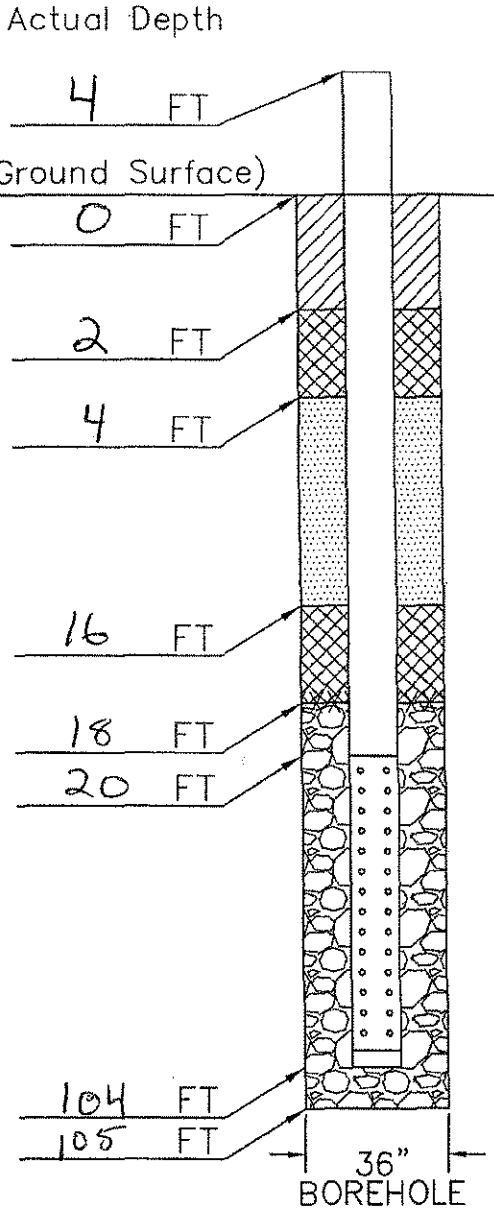

Materials

Intermediate or Final Cover:
- Material: clay soil material

Top Seal:
- Material: Granular bentonite
- Quntity: 12 bags
- Hydrated: yes

Backfill:
- Material: clay soil material

Bottom Seal:
- Material: Granular bentonite
- Quntity: 12 bags
- Hydrated: yes

Filter Pack:
- Material: 1" to 3" gravel

Riser:
- Material: CPVC
- Quantity: 24 Feet
- Diameter: 6in

Screen:
- Material: CPVC
- Quantity: 84
- Diameter: 6in
- Plug: 6in cap

Weaver Boos Consultants

Aquaterra Drilling Log

HOLE NO. GEW-27A | SHEET 1 OF 2 SHEETS

PROJECT NAME: GEW 23A & 27A CQA	DRILLING SUBCONTRACTOR: PDI
PROJECT NUMBER: 2048.10	NAME OF DRILLER(S): MITCH WILKERSON
LOCATION: BRIDGETON, MISSOURI	MANUFACTURER'S DESIGNATION OF DRILL: WESTERN BORE 200 CRAWLER DRILL
HOLE LOCATION: 25' WEST OF GEW 27 MIDDLE OF SOUTHWEST SLOPE OF 2006 FINAL COVER	SIZES AND TYPES OF DRILLING AND SAMPLING EQUIPMENT: 24" BUCKET; 2 OPERATORS FROM LANDMARK; 35" DIAMETER HOLE
SURFACE ELEVATION: 525 ±	
OVERBURDEN THICKNESS: 4'	DRILLING START DATE: 10-3-06 — DRILLING END DATE: 10-3-06
DEPTH DRILLED INTO ROCK: NA	DEPTH GROUNDWATER ENCOUNTERED: NA
TOTAL DEPTH OF HOLE: 107'	DEPTH TO WATER AND ELAPSED TIME AFTER DRILLING COMPLETED: NA

GEOTECHNICAL SAMPLES (TOTAL)	DISTURBED	UNDISTURBED	TOTAL NUMBER OF CORE BOXES
—	—	—	—

SAMPLES FOR CHEMICAL ANALYSIS (TOTAL)	(SPECIFY)	(SPECIFY)	(SPECIFY)	(SPECIFY)	(SPECIFY)	TOTAL CORE RECOVERY
—	—	—	—	—	—	—

DISPOSITION OF HOLE	BACKFILLED	MONITORING WELL	OTHER (SPECIFY)	SIGNATURE OF INSPECTOR
FILLED	SOIL, GRAVEL, BENTONITE	—	GAS WELL	TERRY L. MUELLER

DEPTH	DESCRIPTION OF MATERIALS	FIELD SCREENING RESULTS	GEOTECH SAMPLE RESULTS	ANALYTICAL SAMPLE NO.	TIME	REMARKS
0	0+00				0800	
	CL	0+02		SOIL		
	0+04			BENTONITE		
		0+05	SOIL / 6" SOLID PVC / SOIL			
20	WASTE	0+21		BENTONITE		
		0+24				
		0+25		SOIL		DRY
		0+26				
30						
	0+36				0900	
50	WASTE		GRAVEL / 6" PERFORATED PVC / GRAVEL			WASTE TEMPERATURE 85°-90°F
	0+54				1000	
60	WASTE					

AQUATERRA ENVIRONMENTAL SOLUTIONS, INC.

PROJECT NAME: GEW 23A & 27A CQA — HOLE NO.: GEW 27A

Aquaterra Drilling Log

HOLE NO. GEW 27A | SHEET 2 OF 2 SHEETS

PROJECT NAME: GEW 23A & 27A CQA

INSPECTOR: (Terry L. Mueller)

DEPTH	DESCRIPTION OF MATERIALS	FIELD SCREENING RESULTS	GEOTECH SAMPLE RESULTS	ANALYTICAL SAMPLE NO.	TIME	REMARKS
60	WASTE					
	0+67				1100	
70	WASTE					↑ DRY ↓
	0+80				1200	
80	WASTE		GRAVEL / 6" PERFORATED PVC / GRAVEL			
	0+90				1300	
90	WASTE					WASTE TEMPERATURE 95°-100°F
	0+99				1400	1400
100	WASTE					↑ MOIST ↓
	1+07	1+06			1500	
110	WASTE		UNABLE TO PENETRATE PAST 107'			
120						
130						NO ASBESTOS MATERIALS OBSERVED

AQUATERRA ENVIRONMENTAL SOLUTIONS, INC.

PROJECT NAME: GEW 23A & 27A CQA

HOLE NO.: GEW-27A

AQUATERRA
ENVIRONMENTAL SOLUTIONS, INC.
141 Market Place Drive
Fairview Heights, Illinois 62208

GAS WELL CONSTRUCTION DIAGRAM

PROJECT NUMBER: 2048.10
PROJECT NAME: GEW 23A & 27A CDA
GAS WELL NO.: 27A
WELL LOCATION: MIDDLE OF SOUTHEAST SLOPE OF SPOIL FINES COVER 25' WEST OF GEW 27
INSTALLATION START DATE: 10-3-06
COMPLETION DATE: 10-3-06
DRILLER: MITCH WILKERSON PDI
INSPECTOR: TERRY L. MUELLER

COMMENTS: UNABLE TO PENETRATE PAST 107 FEET.

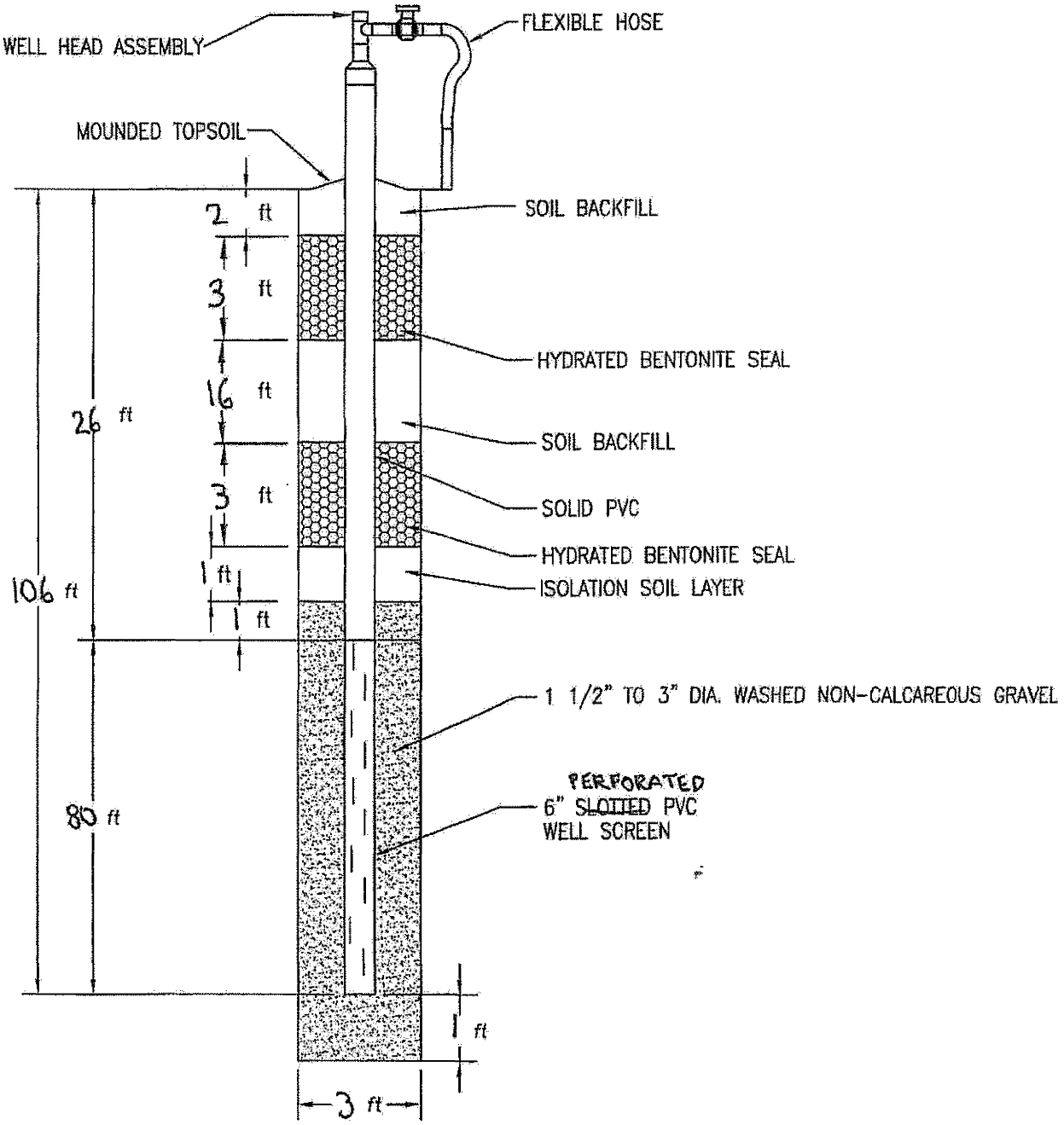

Gas Extraction Well Drilling Summary

Weaver Boos Consultants

Project Name: 2009 Gas System
Project Number: 0120-131-17
Project Location: Bridgeton Landfill
QA/QC Monitor: Joshua Ross

Well No.: 28R
Elevation: Ground 507.9
Exact Location (Coordinates): N:1066580.4 E:516154.9
Date Started: 8/25/2009
Date Completed: 8/25/2009
Boring Size: 36 inch
Total Depth: 84
Length of Perforated Pipe: 63
Length of Solid Pipe: 20
Comments: 15 feet west of existing

Depth	Material Drilled	Temp.	Comment
0-2	soil/dry	92	
2-4	soil/dry	92	
4-6	soil/dry	93	
6-10	soil/dry	94	
10-15	trash/dry	96	
15-20	trash/dry	96	
20-25	trash/dry	98	
25-30	trash/dry	99	
30-35	trash/dry	99	
35-40	trash/dry	99	
40-45	trash/dry	99	
45-50	trash/dry	105	
50-55	trash/dry	106	
55-60	trash/dry	106	
60-65	trash/damp	108	
65-70	trash/damp	109	
70-75	sludge/wet	111	
75-80	sludge/wet	113	
80-85	sludge/wet	115	
85-90			
90-95			

Record of Gas Well Installation

Job Number: 0120-131-17 Job Name: 2009 gas system Well Number: 28R
Drilling Contractor: A.E.G.L Observed By: Joshua Ross
Started Install.: 8-25-09 Completed Install.: 8-25-09
Time: 8:45 am Time: 12:00pm

Top of Flange Elevation: _____
Ground Surface Elevation: 507.9 Location: N 1066580.4 E 516154.9

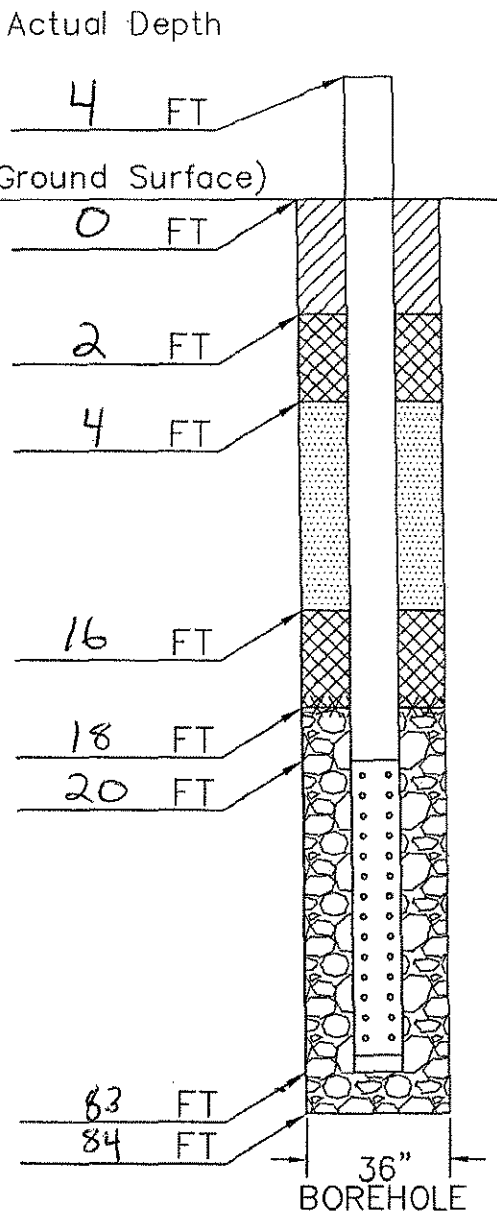

Materials

Intermediate or Final Cover:
Material: clay soil material

Top Seal:
Material: Granular bentonite
Quntity: 12 bags
Hydrated: yes

Backfill:
Material: clay soil material

Bottom Seal:
Material: Granular bentonite
Quntity: 12 bags
Hydrated: yes

Filter Pack:
Material: 1" to 3" gravel

Riser:
Material: CPVC
Quantity: 24 Feet
Diameter: 6in

Screen:
Material: CPVC
Quantity: 63
Diameter: 6in
Plug: 6in cap

Weaver Boos Consultants

Aquaterra Drilling Log

HOLE NO: GEW-29 | SHEET 1 OF | SHEETS

PROJECT NAME: 2005 LFG Wells/Header COA	DRILLING SUBCONTRACTOR: AEG
PCT NUMBER: 1652.10	NAME OF DRILLER(S): B. Willis
Bridgeton Missouri	MANUFACTURER'S DESIGNATION OF DRILL: Caterpillar IRNT AF10
HOLE LOCATION: GEW 29	SIZES AND TYPES OF DRILLING AND SAMPLING EQUIPMENT: 36 in Bucket
SURFACE ELEVATION: 530.04 ft	
OVERBURDEN THICKNESS: —	DRILLING START DATE: 7/26/05 — DRILLING END DATE: 7/26/05
DEPTH DRILLED INTO ROCK: —	DEPTH GROUNDWATER ENCOUNTERED:
TOTAL DEPTH OF HOLE: 70 ft	DEPTH TO WATER AND ELAPSED TIME AFTER DRILLING COMPLETED:

GEOTECHNICAL SAMPLES (TOTAL)	DISTURBED	UNDISTURBED	TOTAL NUMBER OF CORE BOXES
—	—	—	—

SAMPLES FOR CHEMICAL ANALYSIS (TOTAL)	(SPECIFY)	(SPECIFY)	(SPECIFY)	(SPECIFY)	(SPECIFY)	TOTAL CORE RECOVERY
—	—	—	—	—	—	—

DISPOSITION OF HOLE	BACKFILLED	MONITORING WELL	OTHER (SPECIFY)	SIGNATURE OF INSPECTOR
—	—	—	—	Nathan Hoppe

DEPTH	DESCRIPTION OF MATERIALS	FIELD SCREENING RESULTS	GEOTECH SAMPLE RESULTS	ANALYTICAL SAMPLE NO.	TIME	REMARKS
10	Waste — 25 ft of So. 1				1030	Drilling began 7/26/05
20						
30	Waste				1115	
40						
50	Waste					
60		153°F 156°F			1400	Drilling stopped on 7/26/05 at 70 ft due to high temperature
70	End of boring at 70 ft					No carbonate containing materials observed
80						
90						
0						

AQUATERRA
ENVIRONMENTAL SOLUTIONS, INC.
6980 West 153rd Street
Overland Park, Kansas 66223

GAS WELL CONSTRUCTION DIAGRAM

PROJECT NUMBER: 1652.10
PROJECT NAME: 2005 Bridgeton Gas System CQA
GAS WELL NO.: GEW-29
WELL LOCATION:
INSTALLATION START DATE: 7/26/05
COMPLETION DATE: 7/26/05
DRILLER: AEG - B Willis
INSPECTOR: Nathan Higgerson

COMMENTS:

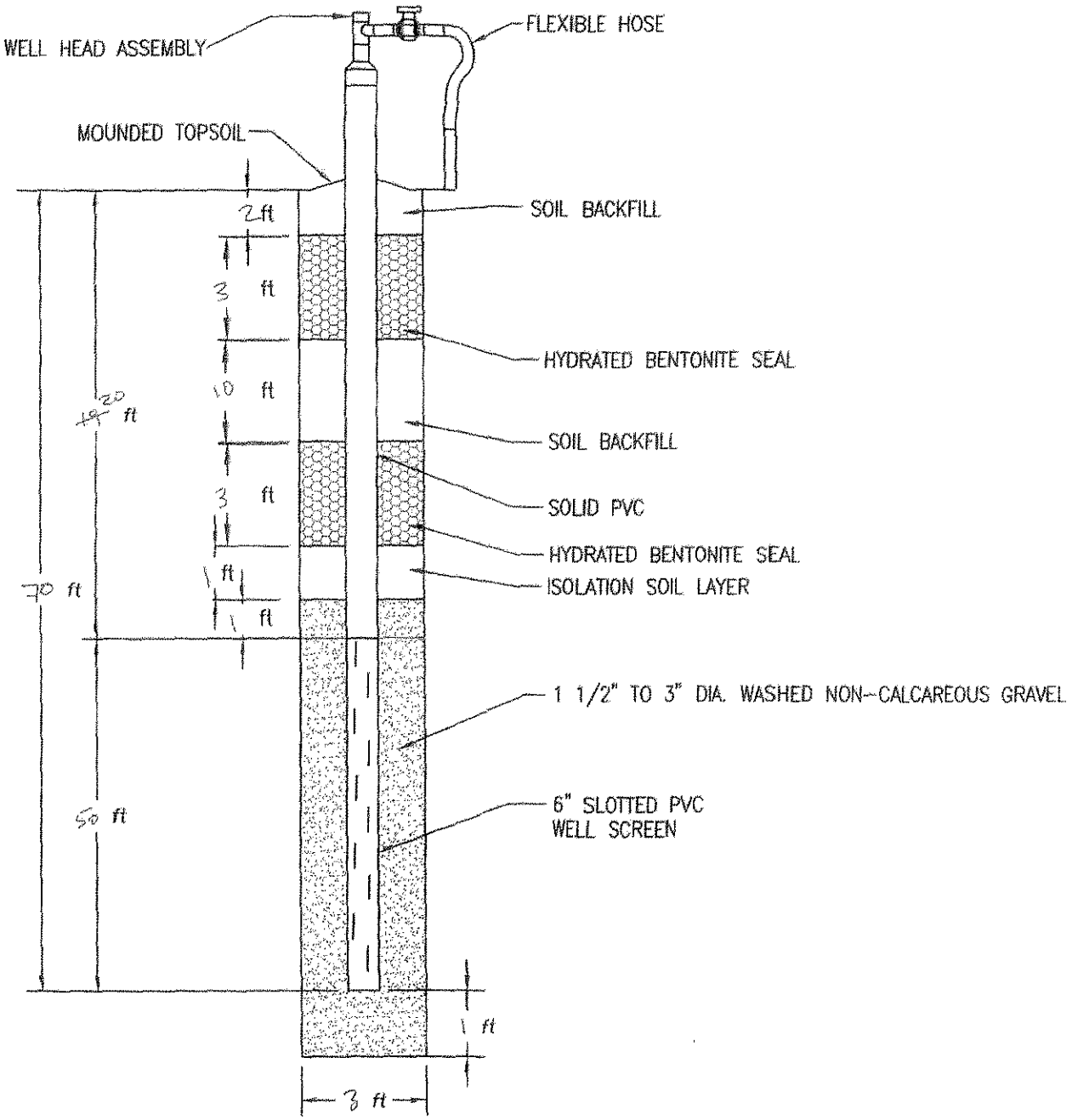

Gas Extraction Well Drilling Summary

Weaver Boos Consultants

Project Name: 2009 Gas System
Project Number: 0120-131-17
Project Location: Bridgeton Landfill
QA/QC Monitor: Joshua Ross

Well No.: 30R
Elevation: Ground 515.0
Exact Location (Coordinates): N:1066744.2 E:516286.8
Date Started: 8/24/2009
Date Completed: 8/24/2009
Boring Size: 36 inch
Total Depth: 97
Length of Perforated Pipe: 76
Length of Solid Pipe: 20
Comments:

Depth	Material Drilled	Temp.	Comment
0-2	soil/dry	93	
2-4	soil/dry	94	
4-6	soil/dry	93	
6-10	soil/dry	95	
10-15	trash/dry	99	
15-20	trash/dry	99	
20-25	trash/dry	101	
25-30	trash/dry	100	
30-35	trash/dry	102	
35-40	trash/dry	100	
40-45	trash/dry	104	
45-50	trash/dry	104	
50-55	trash/dry	104	
55-60	trash/dry	104	
60-65	trash/dry	107	
65-70	trash/dry	108	
70-75	trash/dry	111	
75-80	trash/dry	115	
80-85	trash/wet	118	
85-90	trash/dry	119	
90-95	trash/wet	119	

Gas Extraction Well Drilling Summary

Weaver Boos Consultants

Project Name: 2009 Gas System

Project Number: 0120-131-17

Project Location: Bridgeton Landfill

QA/QC Monitor: Joshua Ross

95-100	trash/dry	121	
100-105			
105-110			
110-115			
115-120			
120-125			
125-130			
130-135			
135-140			
140-145			
145-150			

Record of Gas Well Installation

Job Number: 0120-131-17 Job Name: 2009 gas system Well Number: 30R
Drilling Contractor: A.E.G.L Observed By: Joshua Ross
Started Install.: 8-24-09 Completed Install.: 8-24-09
Time: 6:00am Time: 4:00pm

Top of Flange Elevation: _____
Ground Surface Elevation: 515.0 Location: N 1066744.2 E 516286.8

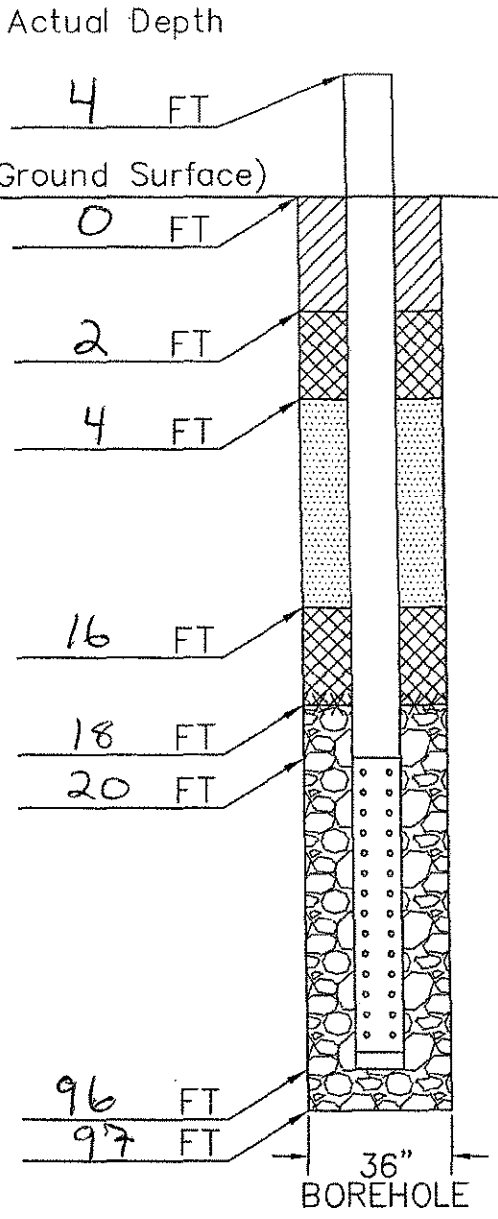

Materials

Intermediate or Final Cover:
- Material: clay soil material

Top Seal:
- Material: Granular bentonite
- Quntity: 12 bags
- Hydrated: yes

Backfill:
- Material: clay soil material

Bottom Seal:
- Material: Granular bentonite
- Quntity: 12 bags
- Hydrated: yes

Filter Pack:
- Material: 1" to 3" gravel

Riser:
- Material: CPVC
- Quantity: 24 Feet
- Diameter: 6in

Screen:
- Material: CPVC
- Quantity: 76
- Diameter: 6in
- Plug: 6in cap

Weaver Boos Consultants

Gas Extraction Well Drilling Summary

Weaver Boos Consultants

Project Name: 2009 Gas System
Project Number: 0120-131-17
Project Location: Bridgeton Landfill
QA/QC Monitor: Joshua Ross

Well No.: 31R
Elevation: Ground 511.4
Exact Location (Coordinates): N:1066860.6 E:516426.6
Date Started: 8/24/2009
Date Completed: 8/24/2009
Boring Size: 36 inch
Total Depth: 97 feet
Length of Perforated Pipe: 91
Length of Solid Pipe: 20
Comments: 15 feet west of existing

Depth	Material Drilled	Temp.	Comment
0-2	soil/dry	90	
2-4	soil/dry	91	
4-6	soil/dry	92	
6-10	soil/dry	95	
10-15	trash/dry	94	
15-20	trash/dry	95	
20-25	trash/dry	97	
25-30	trash/dry	99	
30-35	trash/dry	100	
35-40	trash/dry	101	
40-45	trash/dry	104	
45-50	trash/damp	106	
50-55	trash/damp	108	
55-60	trash/moist	108	
60-65	trash/moist	110	
65-70	trash/moist	111	
70-75	trash/moist	116	
75-80	trash/wet	114	
80-85	trash/wet	115	
85-90	trash/wet	115	
90-95	trash/wet	116	

Gas Extraction Well Drilling Summary

Weaver Boos Consultants

Project Name: 2009 Gas System

Project Number: 0120-131-17

Project Location: Bridgeton Landfill

QA/QC Monitor: Joshua Ross

95-100	trash/wet	118	
100-105			
105-110			
110-115			
115-120			
120-125			
125-130			
130-135			
135-140			
140-145			
145-150			

Record of Gas Well Installation

Job Number: 0120-131-17 Job Name: 2009 gas system Well Number: 31R
Drilling Contractor: A.E.G.L Observed By: Joshua Ross
Started Install.: 8-25-09 Completed Install.: 8-25-09
Time: 12:45pm Time: 7:30pm

Top of Flange Elevation: _____
Ground Surface Elevation: 511.4 Location: N 1066860.6 E 5164 26.6

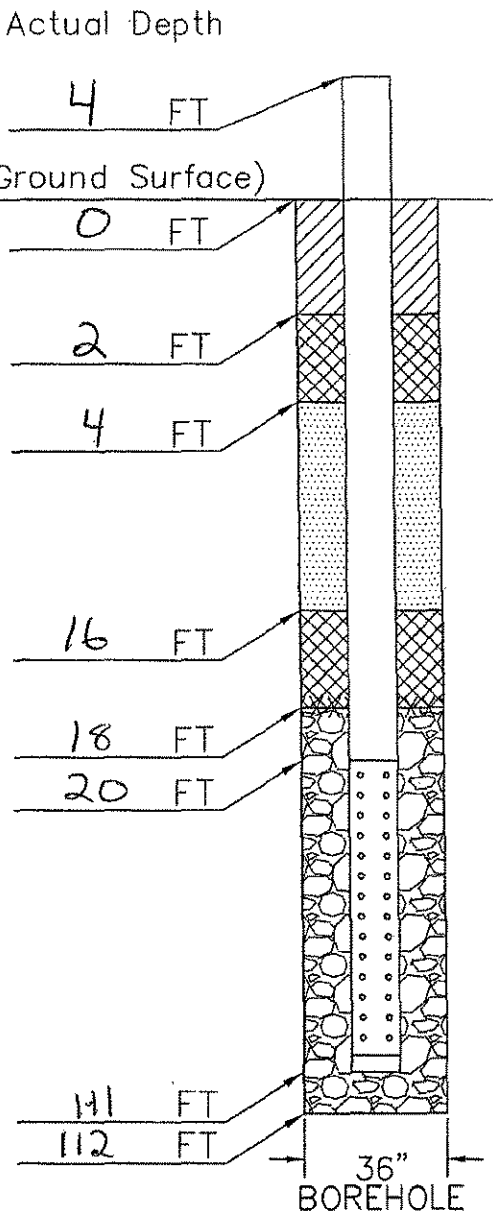

Materials

Intermediate or Final Cover:
Material: clay soil material

Top Seal:
Material: Granular bentonite
Quntity: 12 bags
Hydrated: yes

Backfill:
Material: clay soil material

Bottom Seal:
Material: Granular bentonite
Quntity: 12 bags
Hydrated: yes

Filter Pack:
Material: 1" to 3" gravel

Riser:
Material: CPVC
Quantity: 24 Feet
Diameter: 6in

Screen:
Material: CPVC
Quantity: 91
Diameter: 6in
Plug: 6in cap

Weaver Boos Consultants

Gas Extraction Well Drilling Summary

Weaver Boos Consultants

Project Name: 2009 Gas System | Project Number: 0120-131-17

Project Location: Bridgeton Landfill | QA/QC Monitor: Joshua Ross

Well No.: 32R | Elevation: Ground 522.6

Exact Location (Coordinates): N:1066994.2 E:516510.5

Date Started: 8/21/2009 | Date Completed: 8/21/2009

Boring Size: 36 inch | Total Depth: 75 feet

Length of Perforated Pipe: 54 | Length of Solid Pipe: 20

Comments: 15 feet west of existing well

Depth	Material Drilled	Temp.	Comment
0-2	soil/dry	92	
2-4	soil/dry	93	
4-6	soil/dry	92	
6-10	soil/dry	93	
10-15	trash/dry	96	
15-20	trash/dry	97	
20-25	trash/dry	96	
25-30	trash/dry	96	
30-35	trash/dry	98	
35-40	trash/dry	104	
40-45	trash/dry	102	
45-50	trash/dry	105	
50-55	trash/dry	108	
55-60	trash/dry	113	
60-65	trash/dry	112	
65-70	trash/dry	114	
70-75	trash/dry	116	
75-80			
80-85			
85-90			
90-95			

Record of Gas Well Installation

Job Number: 0120-131-17 Job Name: 2009 gas system Well Number: 32R
Drilling Contractor: A.E.G.L Observed By: Joshua Roos
Started Install.: 8-21-09 Completed Install.: 8-21-09
Time: 11:00pm Time: 5:00pm

Top of Flange Elevation: _____
Ground Surface Elevation: 522.6 Location: N 1066994.2 E 5965 10.5

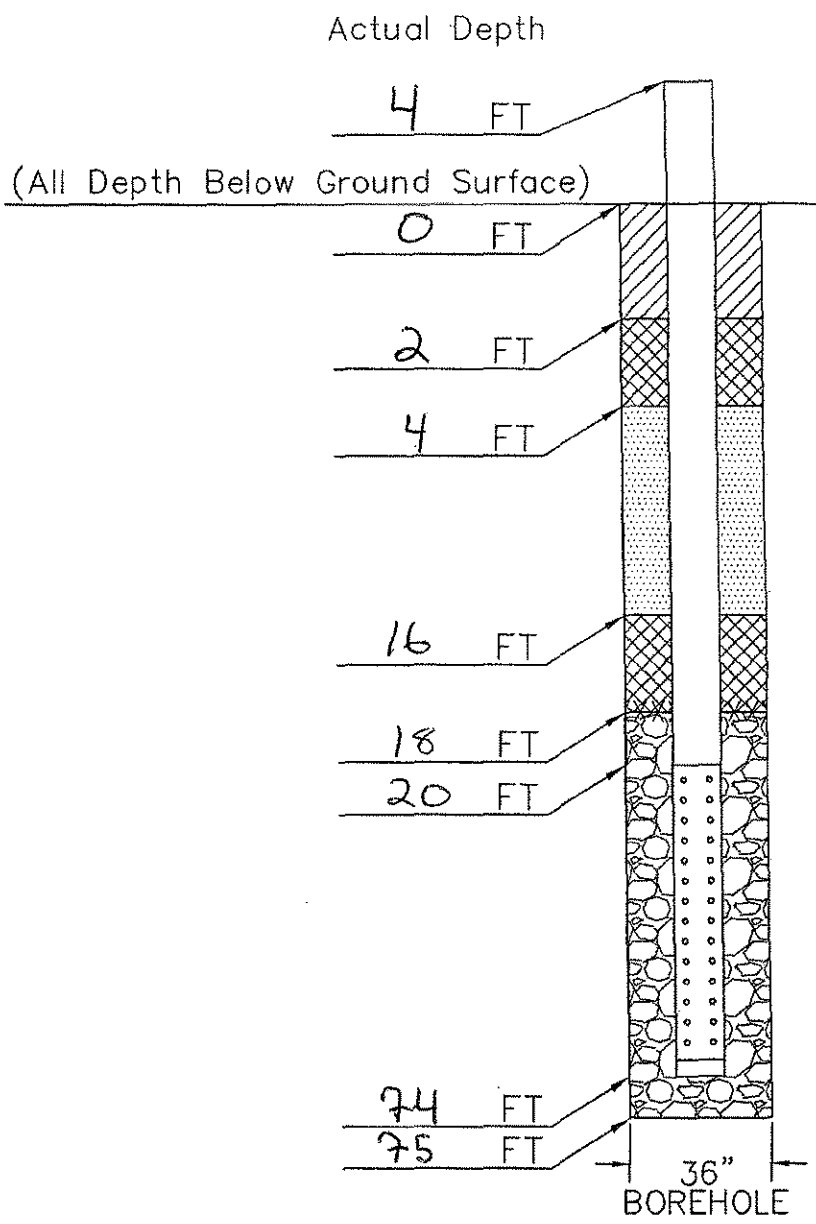

Materials

Intermediate or Final Cover:
Material: clay soil material

Top Seal:
Material: Granular bentonite
Quntity: 12 bags
Hydrated: yes

Backfill:
Material: clay soil material

Bottom Seal:
Material: Granular bentonite
Quntity: 12 bags
Hydrated: yes

Filter Pack:
Material: 1" to 3" gravel

Riser:
Material: CPVC
Quantity: 24 Feet
Diameter: 6in

Screen:
Material: CPVC
Quantity: 54
Diameter: 6in
Plug: 6in cap

Gas Extraction Well Drilling Summary

Weaver Boos Consultants

Project Name: 2009 Gas System
Project Number: 0120-131-17
Project Location: Bridgeton Landfill
QA/QC Monitor: Joshua Ross

Well No.: 33R
Elevation: Ground 513.4
Exact Location (Coordinates): N:1067105.9 E:516655.0
Date Started: 8/21/2009
Date Completed: 8/21/2009
Boring Size: 36 inch
Total Depth: 75 feet
Length of Perforated Pipe: 54
Length of Solid Pipe: 20
Comments: 15 feet north of existing

Depth	Material Drilled	Temp.	Comment
0-2	soil/dry	94	
2-4	soil/dry	93	
4-6	soil/dry	94	
6-10	soil/dry	97	
10-15	trash/dry	98	
15-20	trash/dry	100	
20-25	trash/dry	101	
25-30	trash/dry	103	
30-35	trash/dry	102	
35-40	trash/dry	104	
40-45	trash/dry	106	
45-50	trash/dry	109	
50-55	trash/dry	108	
55-60	trash/dry	107	
60-65	trash/dry	109	
65-70	trash/dry	109	
70-75	trash/dry	111	
75-80			
80-85			
85-90			
90-95			

Record of Gas Well Installation

Job Number: 0120-131-17 Job Name: 2009 gas system Well Number: 33R
Drilling Contractor: A.E.G.L Observed By: Joshua Ross
Started Install.: 8-21-09 Completed Install.: 8-21-09
Time: 9:00am Time: 12:00pm

Top of Flange Elevation: _____
Ground Surface Elevation: 513.4 Location: N 1067105.9 E 516655.0

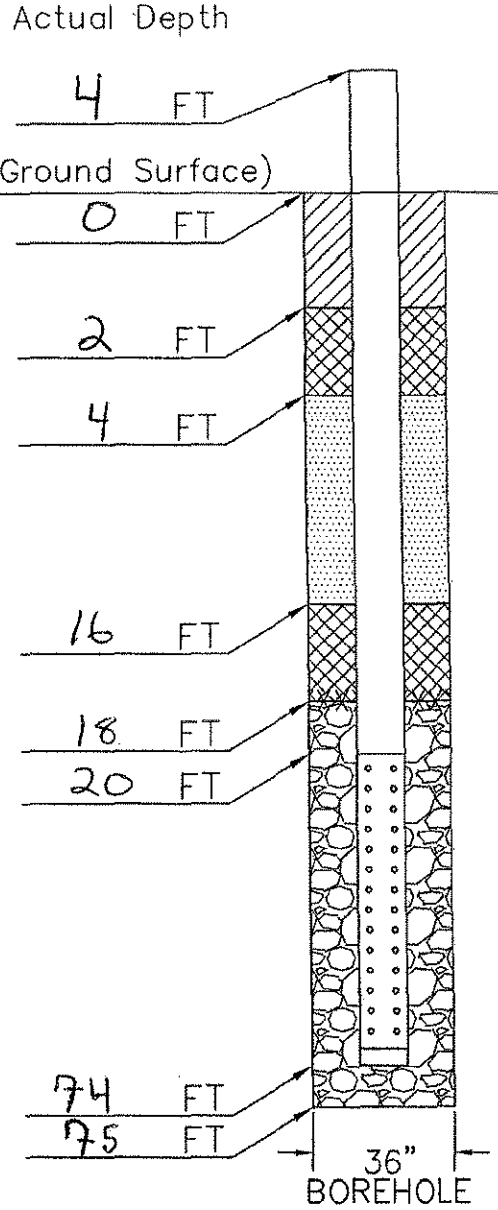

Materials

Intermediate or Final Cover:
- Material: clay soil material

Top Seal:
- Material: Granular bentonite
- Quntity: 12 bags
- Hydrated: yes

Backfill:
- Material: clay soil material

Bottom Seal:
- Material: Granular bentonite
- Quntity: 12 bags
- Hydrated: yes

Filter Pack:
- Material: 1" to 3" gravel

Riser:
- Material: CPVC
- Quantity: 24 feet
- Diameter: 6.n

Screen:
- Material: CPVC
- Quantity: 54
- Diameter: 6in
- Plug: 6in cap

Weaver Boos Consultants

Aquaterra Drilling Log

HOLE NO. GEW-35 | SHEET 1 OF 1 SHEETS

PROJECT NAME: 2005 LFG System Wells/Header CQA	DRILLING SUBCONTRACTOR: AEG
PROJECT NUMBER: 1652.10	NAME OF DRILLER(S): B. Willis
T N: Bridgeton, Missouri	MANUFACTURER'S DESIGNATION OF DRILL: Caterpillar IMT AF10
HOLE LOCATION: GEW-35	SIZES AND TYPES OF DRILLING AND SAMPLING EQUIPMENT: 36in Bucket
SURFACE ELEVATION: 513 ft	
OVERBURDEN THICKNESS: —	DRILLING START DATE: 7/25/05 — DRILLING END DATE: 7/26/05
DEPTH DRILLED INTO ROCK: —	DEPTH GROUNDWATER ENCOUNTERED: —
TOTAL DEPTH OF HOLE: 71 ft	DEPTH TO WATER AND ELAPSED TIME AFTER DRILLING COMPLETED: —

GEOTECHNICAL SAMPLES (TOTAL)	DISTURBED	UNDISTURBED	TOTAL NUMBER OF CORE BOXES
—	—	—	—

SAMPLES FOR CHEMICAL ANALYSIS (TOTAL)	(SPECIFY)	(SPECIFY)	(SPECIFY)	(SPECIFY)	(SPECIFY)	TOTAL CORE RECOVERY
—	—	—	—	—	—	—

DISPOSITION OF HOLE	BACKFILLED	MONITORING WELL	OTHER (SPEICFY)	SIGNATURE OF INSPECTOR
—	—	—	—	Nathan Hoyt

DEPTH	DESCRIPTION OF MATERIALS	FIELD SCREENING RESULTS	GEOTECH SAMPLE RESULTS	ANALYTICAL SAMPLE NO.	TIME	REMARKS
0	3 ft of soil				930	Began drilling on 7/25/05
10	Waste					
30	Waste				1100	
40					1230	Drilling stopped on 7/25/05 at an upper depth of 40ft.
					715	Resume drilling on 7/26/05
50	Waste					
70	Waste	151°F 157°F			900	Drilling stopped at 71ft due to the high waste temperatures
	End of boring at 71ft					No asbestos containing materials observed
80						
90						
100						

AQUATERRA ENVIRONMENTAL SOLUTIONS, INC.

PROJECT NAME: 2005 LFG System Wells/Header CQA

HOLE NO. GEW-35

AQUATERRA
ENVIRONMENTAL SOLUTIONS, INC.
6980 West 153rd Street
Overland Park, Kansas 66223

GAS WELL CONSTRUCTION DIAGRAM

PROJECT NUMBER: 1652.10
PROJECT NAME: 2005 Bridgeton Gas System CQA
GAS WELL NO.: GEW-35
WELL LOCATION: Bridgeton Landfill
INSTALLATION START DATE: 7/25/05
COMPLETION DATE: 7/26/05
DRILLER: AEG - B. Wood
INSPECTOR: Nathan Higgerson

COMMENTS:

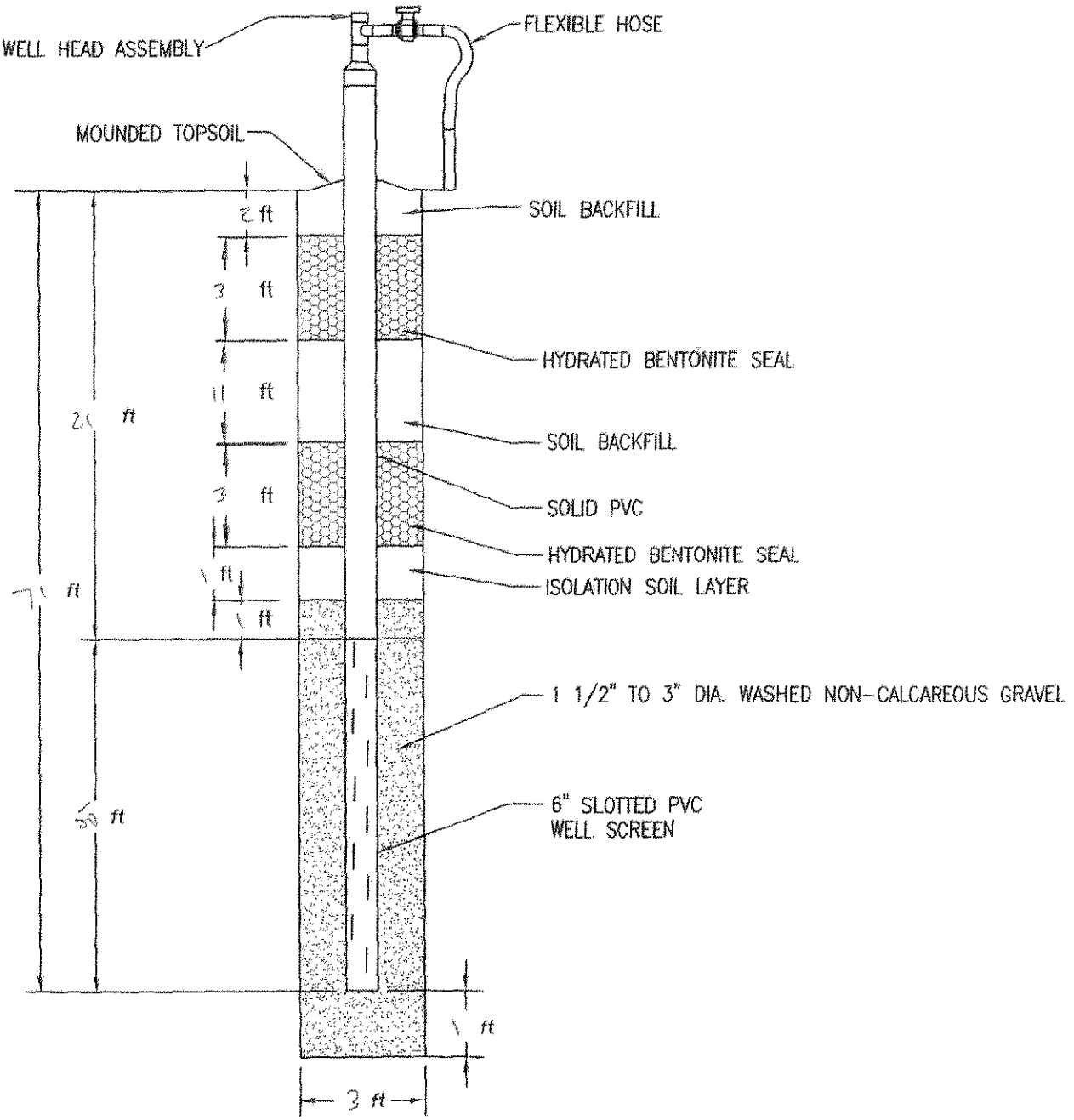

Aquaterra Drilling Log

HOLE NO. GEW-36 | SHEET 1 OF 1 SHEETS

PROJECT NAME: 2005 LFG System Wells/Header CQA	DRILLING SUBCONTRACTOR: AEG
JECT NUMBER: 1652.10	NAME OF DRILLER(S): B. Willis
ON: Bridgeton, Missouri	MANUFACTURER'S DESIGNATION OF DRILL: Caterpillar TMT AP10
HOLE LOCATION: GEW-36	SIZES AND TYPES OF DRILLING AND SAMPLING EQUIPMENT: 36" in Bucket
SURFACE ELEVATION: 520 ft	
OVERBURDEN THICKNESS: —	DRILLING START DATE: 7/23/05 — DRILLING END DATE: 7/25/05
DEPTH DRILLED INTO ROCK: —	DEPTH GROUNDWATER ENCOUNTERED: —
TOTAL DEPTH OF HOLE: 70 ft	DEPTH TO WATER AND ELAPSED TIME AFTER DRILLING COMPLETED: —

GEOTECHNICAL SAMPLES (TOTAL)	DISTURBED	UNDISTURBED	TOTAL NUMBER OF CORE BOXES
—	—	—	—

SAMPLES FOR CHEMICAL ANALYSIS (TOTAL)	(SPECIFY)	(SPECIFY)	(SPECIFY)	(SPECIFY)	(SPECIFY)	TOTAL CORE RECOVERY
—	—	—	—	—	—	—

DISPOSITION OF HOLE	BACKFILLED	MONITORING WELL	OTHER (SPEICFY)	SIGNATURE OF INSPECTOR
—	—	—	—	Kathleen Hogan

DEPTH	DESCRIPTION OF MATERIALS	FIELD SCREENING RESULTS	GEOTECH SAMPLE RESULTS	ANALYTICAL SAMPLE NO.	TIME	REMARKS
0	2 ft of Soil				1400	Drilling begins 7/22/05
10	Waste					
					1600	Drilling stopped due to depth at 20ft
					700	Drilling returns on 7/25/05
20	Waste					
40	Waste					
50						
60	Waste	145°F				Drilling stopped due to high waste temperature at 70ft
70		152°F				
	End of boring at 70 ft	156°F				No asbestos containing materials observed
80						
90						
100						
110						

AQUATERRA ENVIRONMENTAL SOLUTIONS, INC.

PROJECT NAME: 2005 LFG System Wells/Header CQA | HOLE NO: GEW-36

AQUATERRA
ENVIRONMENTAL SOLUTIONS, INC.
6980 West 153rd Street
Overland Park, Kansas 66223

GAS WELL CONSTRUCTION DIAGRAM

PROJECT NUMBER: 1652.10
PROJECT NAME: 2005 Bridgeton Gas System CQA
GAS WELL NO.: GEW-36
WELL LOCATION:
INSTALLATION START DATE: 7/25/05
COMPLETION DATE: 7/25/05
DRILLER: AEG - B Willis
INSPECTOR: Nathan Heggeseth

COMMENTS:

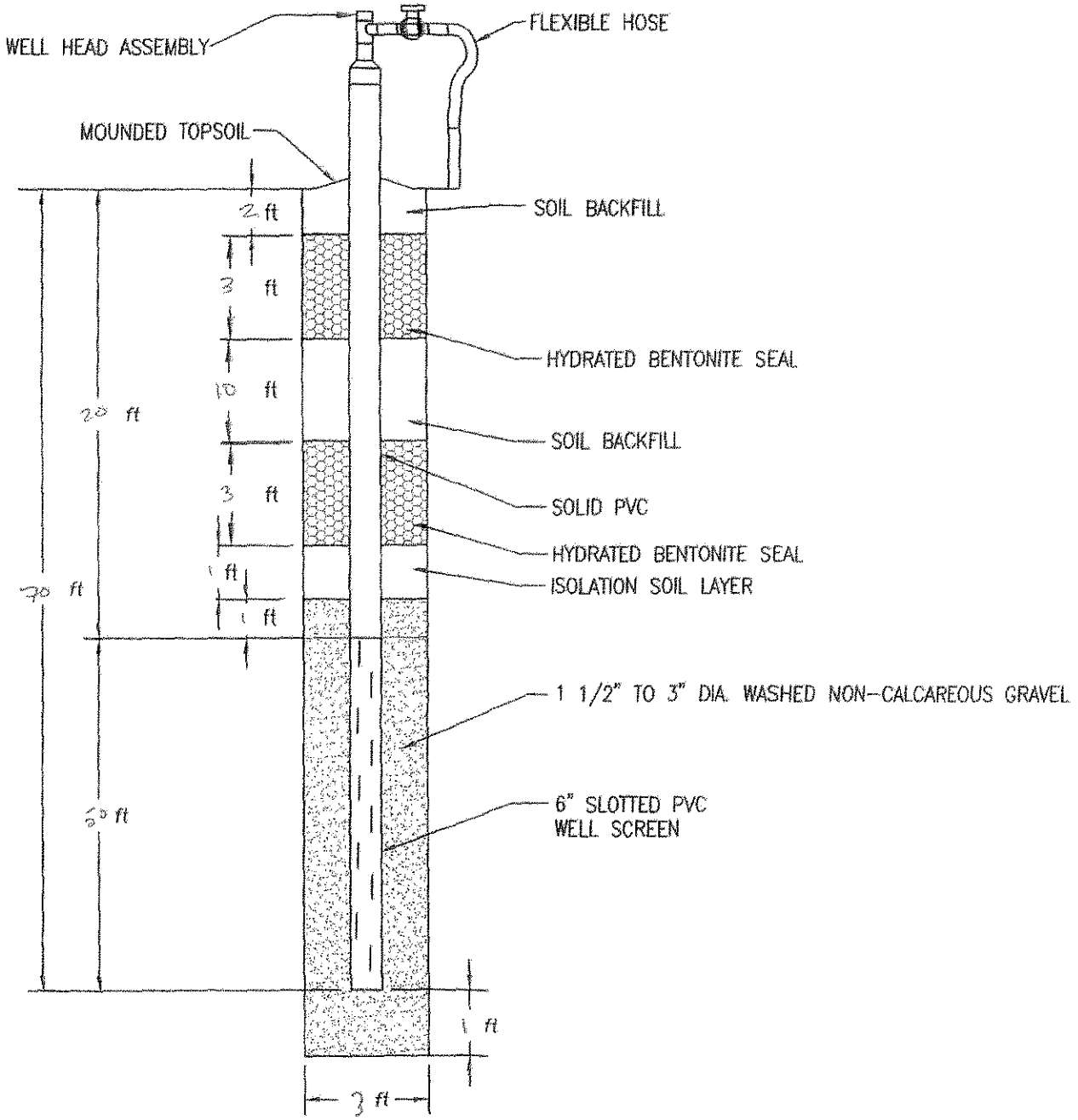

Aquaterra Drilling Log

HOLE NO.	SHEET 1 OF	SHEETS
GEW-37	1	

PROJECT NAME: 2005 LFG System Wells/Header CQA	DRILLING SUBCONTRACTOR: AEG
PROJECT NUMBER: 1652.10	NAME OF DRILLER(S): B. Willis
LOCATION: Bridgeton, Missouri	MANUFACTURER'S DESIGNATION OF DRILL: Caterpillar IMT AF10
HOLE LOCATION: GEW-37	SIZES AND TYPES OF DRILLING AND SAMPLING EQUIPMENT: 36 in Bucket
SURFACE ELEVATION: 510-ft	
OVERBURDEN THICKNESS: ----	DRILLING START DATE: 7/19/05 — DRILLING END DATE: 7/28/05
DEPTH DRILLED INTO ROCK: ----	DEPTH GROUNDWATER ENCOUNTERED: ----
TOTAL DEPTH OF HOLE: 77 ft	DEPTH TO WATER AND ELAPSED TIME AFTER DRILLING COMPLETED: ----

GEOTECHNICAL SAMPLES (TOTAL)	DISTURBED	UNDISTURBED	TOTAL NUMBER OF CORE BOXES
----	----	----	----

SAMPLES FOR CHEMICAL ANALYSIS (TOTAL)	(SPECIFY)	(SPECIFY)	(SPECIFY)	(SPECIFY)	(SPECIFY)	TOTAL CORE RECOVERY
----	----	----	----	----	----	----

DISPOSITION OF HOLE	BACKFILLED	MONITORING WELL	OTHER (SPECIFY)	SIGNATURE OF INSPECTOR
----	----	----	----	Nathan Hagan

DEPTH	DESCRIPTION OF MATERIALS	FIELD SCREENING RESULTS	GEOTECH SAMPLE RESULTS	ANALYTICAL SAMPLE NO.	TIME	REMARKS
0	~2ft of soil				1200	Drilling began on 7/19/05
10	Waste					
20	Waste					
30						
40	Waste					
50						
60	Waste					
70					1445	Drilling stopped on 7/26/05 at ~70 ft. Drilling resumed on 7/27/05
	Waste	156°F 155°F			1145 1230	Drilling stopped on 7/27/05 at an approximate depth of 77ft due to high waste temperatures. No asbestos containing materials observed.
80	End of boring at 77ft					
90						
100						
110						

AQUATERRA
ENVIRONMENTAL SOLUTIONS, INC.
6980 West 153rd Street
Overland Park, Kansas 66223

GAS WELL CONSTRUCTION DIAGRAM

PROJECT NUMBER: 1652.10
PROJECT NAME: 2005 Bridgeton Gas System CQA
GAS WELL NO.: GEW-37
WELL LOCATION:
INSTALLATION START DATE: 7/19/05
COMPLETION DATE: 7/23/05
DRILLER: AEG B. Willis
INSPECTOR: Nathan Higgerson

COMMENTS:

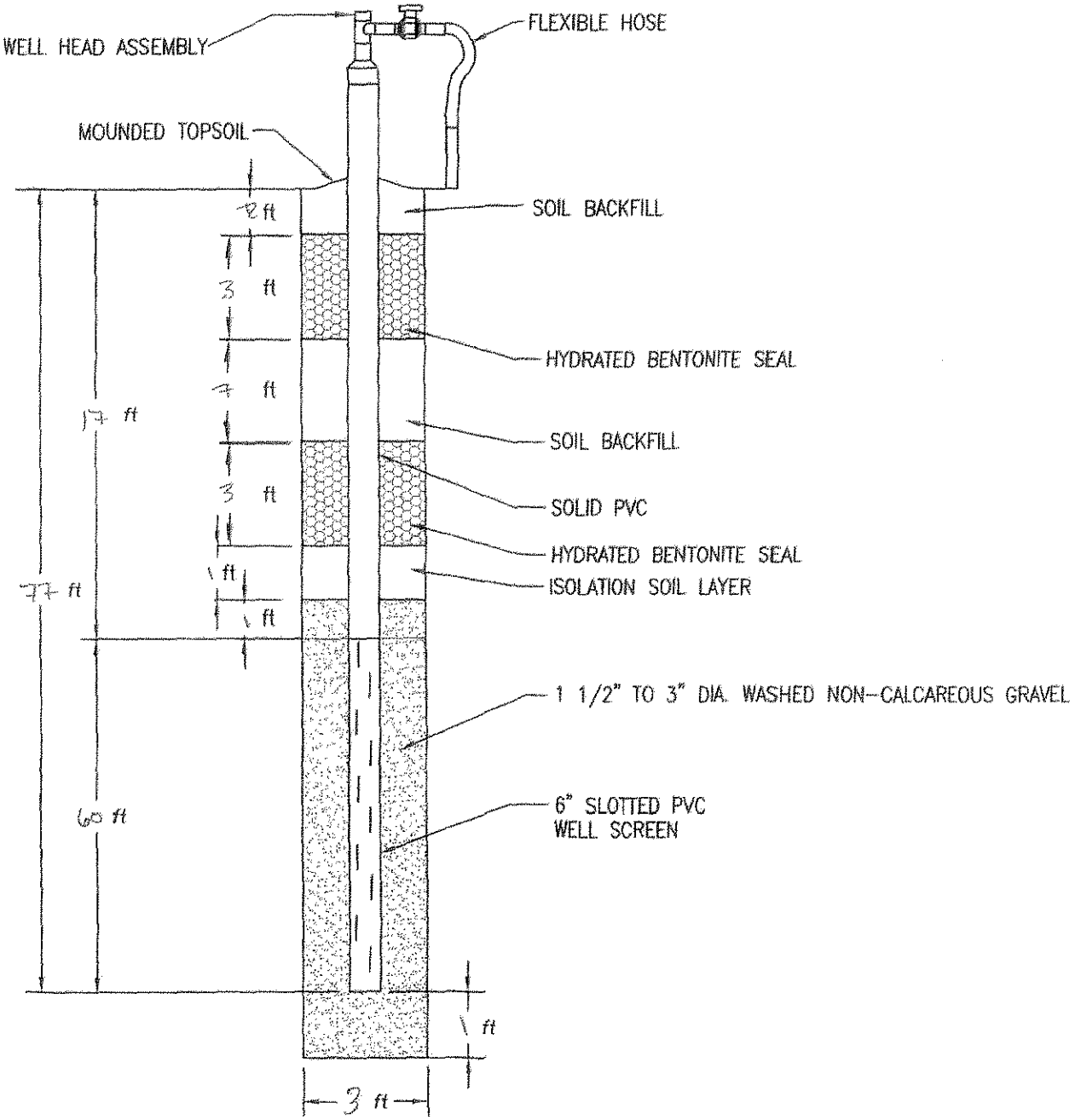

Aquaterra Drilling Log

HOLE NO.	SHEET 1 OF	SHEETS
GEW-38	1	

PROJECT NAME: 2005 LFG Wells/Header CQA	DRILLING SUBCONTRACTOR: AEG
ECT NUMBER: 1652.10	NAME OF DRILLER(S): B. Willis
N: Bridgeton, Missouri	MANUFACTURER'S DESIGNATION OF DRILL: Caterpillar IMT AF10
HOLE LOCATION: GEW 38	SIZES AND TYPES OF DRILLING AND SAMPLING EQUIPMENT: 36 in Bucket
SURFACE ELEVATION: 506.06	
OVERBURDEN THICKNESS: —	DRILLING START DATE: 7/18/05 — DRILLING END DATE: 7/19/05
DEPTH DRILLED INTO ROCK: —	DEPTH GROUNDWATER ENCOUNTERED: —
TOTAL DEPTH OF HOLE: 72 ft	DEPTH TO WATER AND ELAPSED TIME AFTER DRILLING COMPLETED: —

GEOTECHNICAL SAMPLES (TOTAL)	DISTURBED	UNDISTURBED	TOTAL NUMBER OF CORE BOXES
—	—	—	—

SAMPLES FOR CHEMICAL ANALYSIS (TOTAL)	(SPECIFY)	(SPECIFY)	(SPECIFY)	(SPECIFY)	(SPECIFY)	TOTAL CORE RECOVERY
—	—	—	—	—	—	—

DISPOSITION OF HOLE	BACKFILLED	MONITORING WELL	OTHER (SPEICFY)	SIGNATURE OF INSPECTOR
—	—	—	—	[signature]

DEPTH	DESCRIPTION OF MATERIALS	FIELD SCREENING RESULTS	GEOTECH SAMPLE RESULTS	ANALYTICAL SAMPLE NO.	TIME	REMARKS
	3 ft of Soil				1415	Drilling begins 7/18/05
10	Waste					
30	Waste					
40						
50	Waste					
60		113°F			1545	Drilling stopped on 7/18/05 at 65 ft approximately
70		150°F			730 915	Drilling stopped on 7/19/05 at 72 ft due to high temperatures
	End of boring at 72 ft					No asbestos containing materials observed
80						
90						
100						
110						

AQUATERRA ENVIRONMENTAL SOLUTIONS, INC.	PROJECT NAME	HOLE NO.
	2005 LFG Wells/Header CQA	GEW-38

AQUATERRA
ENVIRONMENTAL SOLUTIONS, INC.
6980 West 153rd Street
Overland Park, Kansas 66223

GAS WELL CONSTRUCTION DIAGRAM

PROJECT NUMBER: 1652.10
PROJECT NAME: 2005 Bridgeton Gas System CQA
GAS WELL NO.: GEW-38
WELL LOCATION:
INSTALLATION START DATE: 7/19/05
COMPLETION DATE: 7/19/05
DRILLER: AEG - B. Willis
INSPECTOR: Nathan Higgerson

COMMENTS:

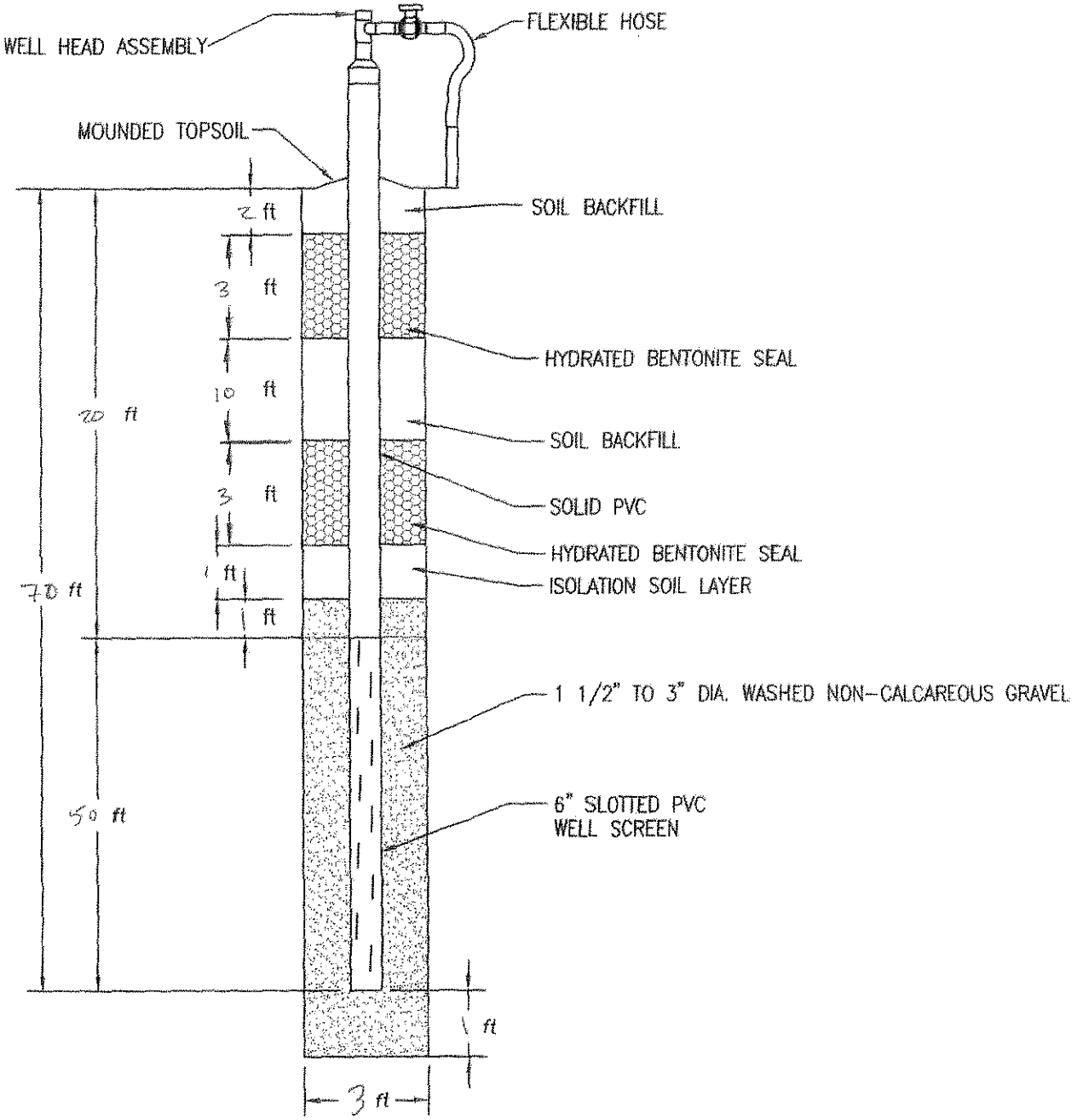

Aquaterra Drilling Log

HOLE NO. GEW-39 | SHEET 1 OF 1 SHEETS

PROJECT NAME: 2005 LFG Wells/Header CQA	DRILLING SUBCONTRACTOR: AEG
PROJECT NUMBER: 1652.10	NAME OF DRILLER(S): B. Willis
LOCATION: Bridgeton, Missouri	MANUFACTURER'S DESIGNATION OF DRILL: Caterpillar IMT AF10
HOLE LOCATION: GEW 39	SIZES AND TYPES OF DRILLING AND SAMPLING EQUIPMENT: 3/4in bucket
SURFACE ELEVATION: 507 ft	
OVERBURDEN THICKNESS: —	DRILLING START DATE: 7/13/05 — DRILLING END DATE: 7/13/05
DEPTH DRILLED INTO ROCK: —	DEPTH GROUNDWATER ENCOUNTERED: —
TOTAL DEPTH OF HOLE: 85 ft	DEPTH TO WATER AND ELAPSED TIME AFTER DRILLING COMPLETED: —

GEOTECHNICAL SAMPLES (TOTAL)	DISTURBED	UNDISTURBED	TOTAL NUMBER OF CORE BOXES
—	—	—	—

SAMPLES FOR CHEMICAL ANALYSIS (TOTAL)	(SPECIFY)	(SPECIFY)	(SPECIFY)	(SPECIFY)	(SPECIFY)	TOTAL CORE RECOVERY
—	—	—	—	—	—	—

DISPOSITION OF HOLE	BACKFILLED	MONITORING WELL	OTHER (SPECIFY)	SIGNATURE OF INSPECTOR
—	—	—	—	

DEPTH	DESCRIPTION OF MATERIALS	FIELD SCREENING RESULTS	GEOTECH SAMPLE RESULTS	ANALYTICAL SAMPLE NO.	TIME	REMARKS
10	4ft Soil Waste				700	
30	Waste					
40						
50	Waste					
60	Waste - Void at 65 ft				830	
70						
80	- Solid again					End of the drilling on 7/13/05 at 85 ft
90	End of the boring at 85 ft					No asbestos containing materials observed
100						
110						

AQUATERRA ENVIRONMENTAL SOLUTIONS, INC.

PROJECT NAME: 2005 LFG Wells/Header CQA | HOLE NO.: GEW-39

AQUATERRA
ENVIRONMENTAL SOLUTIONS, INC.
6980 West 153rd Street
Overland Park, Kansas 66223

GAS WELL CONSTRUCTION DIAGRAM

PROJECT NUMBER: 1652.10
PROJECT NAME: 2005 Bridgeton Gas System CQA
GAS WELL NO.: GEW-39
WELL LOCATION:
INSTALLATION START DATE: 7/13/05
COMPLETION DATE: 7/14/05
DRILLER: AEG B. Willis
INSPECTOR: Nathan Higgerson

COMMENTS:

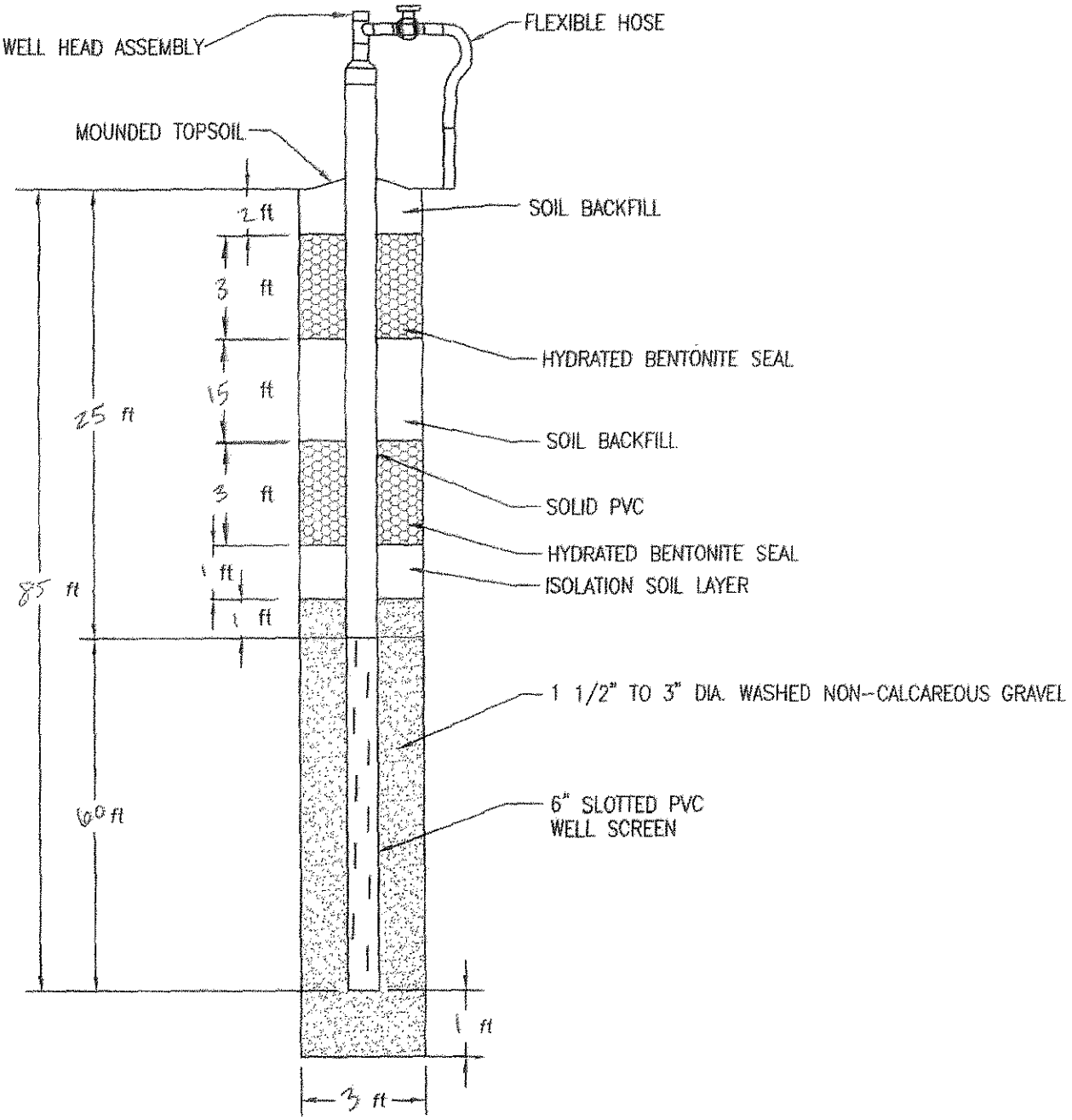

American Environmental Group Ltd.

Well Log

DATE: 6/26/2004

PROJECT NAME: BRIDGETON

PROJECT#: 1-04-028

DRILLING

GEW 40	WELL NUMBER OR NAME
31'	LINEAR FEET OF DRILLING
31'	LINEAR FEET OF COMPLETION
0'	LINEAR FEET OF ABANDONMENT

Time in: _____ Time out: _____

Weather conditions: Sunny

Site conditions: _____

Rig hrs: _____

Service: Oil/ OK Raidiator/ OK Grease/ OK

NOTES:

northing 1067960

easting 516561

Well Asbuild

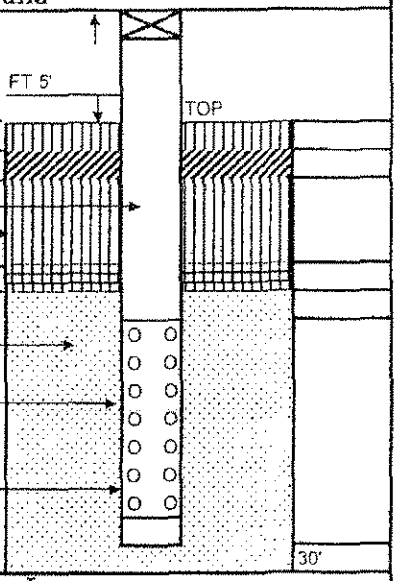

Top of ground elv.	496.74
Backfill Material	2'
Bentonite plug	2'
Length of Solid	14'
Backfill Material	5'
Bentonite plug	2'
Isolation Layer	1'
Length of Gravel Pack	18'
Length of Perf. Pipe	16'
Style of Pipe	6"SCH80 PVC
Bottom of bore	31'
Bore diameter	36"

MONITORING LOG

Time	OXYGEN	H2S	LEL / CO	
7:00	20.9	0	0 0	GEW 50
8:00	"	0	0 0	
9:00	20.9	0	0 0	GEW 40
10:00	"	0	0 0	
11:00	"	0	0 0	
12:00	20.9	0	0 0	GEW 41
1:00	"	0	0 0	
2:00	"	0	0 0	
3:00				
4:00				
5:00				
6:00				

Notes

Well Boring Log

Depth	Composition	Degree of Decomp.	Degree of Moisture	Temp
0-10	DIRT-HHT	LIGHT	DRY	64
10-20	"	LIGHT	DRY	73
20-30	HHT	LIGHT	DRY	79
30-40	HHT	LIGHT	DRY	TD 31'
40-50				
50-60				
60-70				
70-80				
80-90				
90-100				
100-110				
110-120				
120-130				
130-140				
140-150				

CLIENT REPRESENTATIVE DATE

BRETT WILLIS 6/26/2004

AEGL SITE SUPERVISOR DATE

NAME & TITLE

Gas Extraction Well Drilling Summary

Weaver Boos Consultants

Project Name: 2009 Gas System | Project Number: 0120-131-17

Project Location: Bridgeton Landfill | QA/QC Monitor: Joshua Ross

Well No.: 41R | Elevation Ground 507.0

Exact Location (Coordinates): N:1068086.2 E:516649.1

Date Started: 9/28/2009 | Date Completed: 9/28/2009

Boring Size: 36 inch | Total Depth: 109

Length of Perforated Pipe: 88 | Length of Solid Pipe: 20

Comments: 4 feet north of existing well

Depth	Material Drilled	Temp.	Comment
0-2	soil/dry	94	
2-4	soil/dry	94	
4-6	soil/dry	94	
6-10	soil/dry	94	
10-15	trash/dry	96	
15-20	trash/dry	96	
20-25	trash/dry	97	
25-30	trash/dry	98	
30-35	trash/dry	99	
35-40	trash/dry	101	
40-45	trash/dry	101	
45-50	trash/dry	104	
50-55	trash/dry	107	
55-60	trash/dry	110	
60-65	trash/dry	113	
65-70	trash/dry	113	
70-75	trash/dry	117	
75-80	trash/dry	118	
80-85	trash/dry	121	
85-90	trash/damp	124	
90-95	trash/wet	128	

Gas Extraction Well Drilling Summary

Weaver Boos Consultants

Project Name:	2009 Gas System	Project Number:	0120-131-17
Project Location:	Bridgeton Landfill	QA/QC Monitor:	Joshua Ross

95-100	trash/wet	129	
100-105	sludge/wet	136	
105-110	sludge/wet	136	
110-115			
115-120			
120-125			
125-130			
130-135			
135-140			
140-145			
145-150			

Record of Gas Well Installation

Job Number: 0120-131-17 Job Name: 2009 gas system Well Number: 41R
Drilling Contractor: A.E.G.L Observed By: Joshua Roos
Started Install.: 9-28-09 Completed Install.: 9-28-09
Time: 6:00am Time: 11:00am

Top of Flange Elevation: _____
Ground Surface Elevation: 507.0 Location: N 1068086.2 E 516689.7

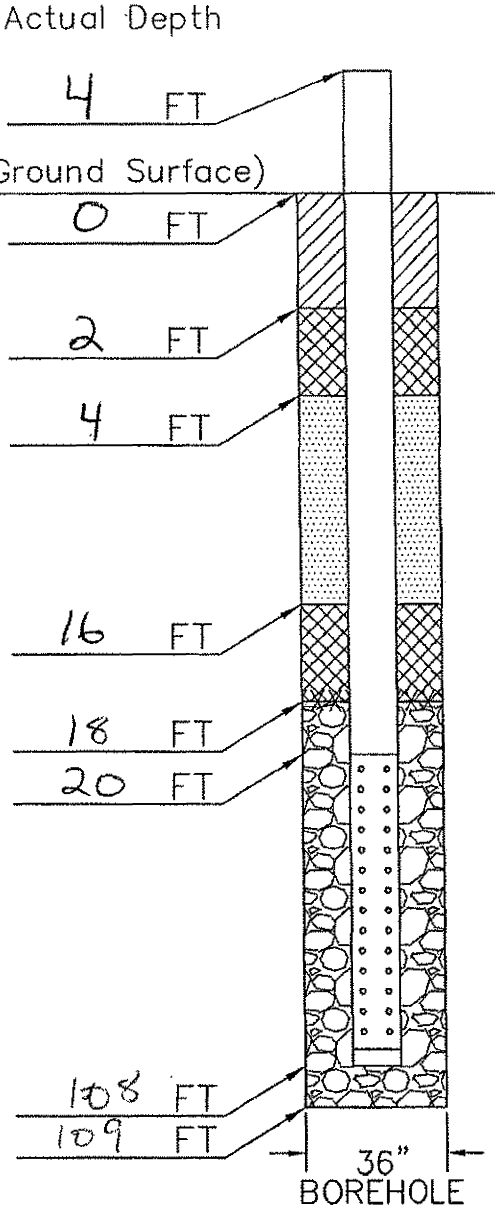

Materials

Intermediate or Final Cover:
- Material: clay soil material

Top Seal:
- Material: Granular bentonite
- Quntity: 12 bags
- Hydrated: yes

Backfill:
- Material: clay soil material

Bottom Seal:
- Material: Granular bentonite
- Quntity: 12 bags
- Hydrated: yes

Filter Pack:
- Material: 1" to 3" gravel

Riser:
- Material: CPVC
- Quantity: 24 Feet
- Diameter: 6in

Screen:
- Material: CPVC
- Quantity: 88
- Diameter: 6in
- Plug: 6in cap

Weaver Boos Consultants

Gas Extraction Well Drilling Summary

Weaver Boos Consultants

Project Name: 2009 Gas System
Project Number: 0120-131-17
Project Location: Bridgeton Landfill
QA/QC Monitor: Joshua Ross

Well No.: 42R
Elevation: Ground 507.1
Exact Location (Coordinates): N:1068161.5 E:516689.7
Date Started: 8/18/2009
Date Completed: 8/18/2009
Boring Size: 36in
Total Depth: 101 feet
Length of Perforated Pipe: 97
Length of Solid Pipe: 20
Comments:

Depth	Material Drilled	Temp.	Comment
0-2	soil/dry	90	
2-4	trash/dry	94	
4-6	trash/dry	95	
6-10	trash/dry	91	
10-15	trash/dry	94	
15-20	trash/dry	97	
20-25	trash/dry	96	
25-30	trash/dry	93	
30-35	trash/dry	91	
35-40	trash/dry	94	
40-45	trash/dry	96	
45-50	trash/dry	93	
50-55	trash/dry	98	
55-60	trash/dry	99	
60-65	trash/dry	102	
65-70	trash/dry	108	
70-75	trash/dry	104	
75-80	trash/dry	107	
80-85	trash/dry	109	
85-90	trash/damp	110	
90-95	trash/damp	119	

Gas Extraction Well Drilling Summary

Weaver Boos Consultants

Project Name: 2009 Gas System

Project Number: 0120-131-17

Project Location: Bridgeton Landfill

QA/QC Monitor: Joshua Ross

95-100	trash/damp	117	
100-105	trash/damp	118	
105-110			
110-115			
115-120			
120-125			
125-130			
130-135			
135-140			
140-145			
145-150			

Record of Gas Well Installation

Job Number: 0120-131-17 Job Name: 2009 gas system Well Number: 42R
Drilling Contractor: A.E.G.L. Observed By: Joshua Ross
Started Install.: 8-18-09 Completed Install.: 8-18-09
Time: 6:00am Time: 11:30am

Top of Flange Elevation: _____
Ground Surface Elevation: 507.1 Location: N1068161.5 E516689.7

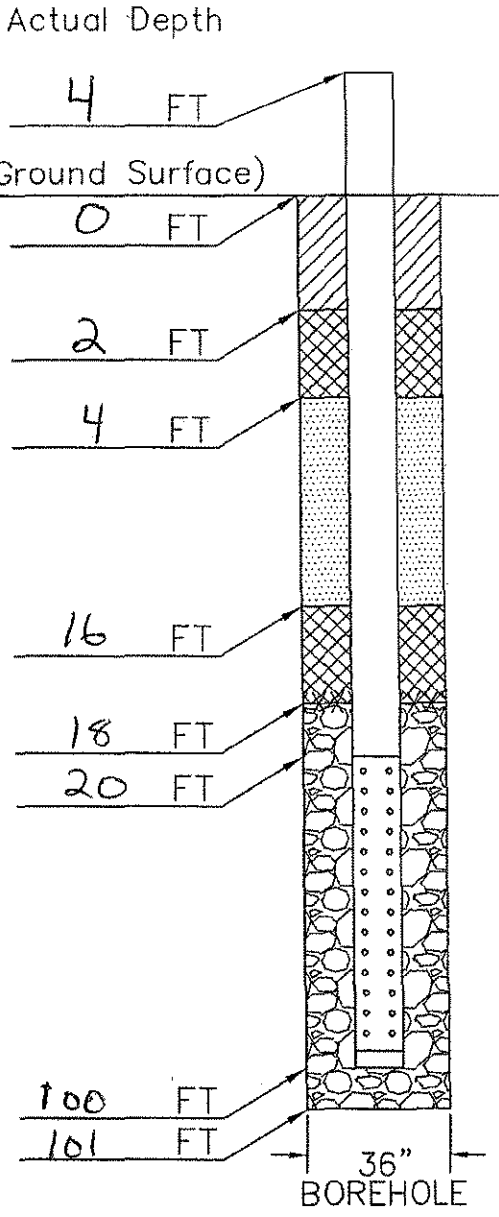

Materials

Intermediate or Final Cover:
Material: clay soil material

Top Seal:
Material: Granular bentonite
Quntity: 12 bags
Hydrated: yes

Backfill:
Material: clay soil material

Bottom Seal:
Material: Granular bentonite
Quntity: 12 bags
Hydrated: yes

Filter Pack:
Material: 1" to 3" gravel

Riser:
Material: CPVC
Quantity: 24 Feet
Diameter: 6in

Screen:
Material: CPVC
Quantity: 80
Diameter: 6in
Plug: 6in cap

Weaver Boos Consultants

Gas Extraction Well Drilling Summary

Weaver Boos Consultants

Project Name: 2009 Gas System
Project Number: 0120-131-17
Project Location: Bridgeton Landfill
QA/QC Monitor: Joshua Ross

Well No.: 43R
Elevation: Ground 511.6
Exact Location (Coordinates): N:1068294.8 E:516575.9
Date Started: 8/15/2009
Date Completed: 8/15/2009
Boring Size: 36in
Total Depth: 118
Length of Perforated Pipe: 97
Length of Solid Pipe: 20
Comments:

Depth	Material Drilled	Temp.	Comment
0-2	soil/dry	95	
2-4	soil/dry	95	
4-6	soil/dry	96	
6-10	soil/dry	94	
10-15	trash/dry	97	
15-20	trash/dry	96	
20-25	trash/dry	99	
25-30	trash/dry	97	
30-35	trash/dry	96	
35-40	trash/dry	99	
40-45	trash/dry	101	
45-50	trash/dry	99	
50-55	trash/dry	99	
55-60	trash/dry	104	
60-65	trash/dry	102	
65-70	trash/dry	103	
70-75	trash/dry	105	
75-80	trash/dry	108	
80-85	trash/dry	109	
85-90	trash/dry	110	
90-95	trash/dry	110	

Gas Extraction Well Drilling Summary

Weaver Boos Consultants

Project Name: 2009 Gas System

Project Number: 0120-131-17

Project Location: Bridgeton Landfill

QA/QC Monitor: Joshua Ross

95-100	trash/dry	107	
100-105	trash/damp	115	
105-110	trash/damp	112	
110-115	trash/damp	113	
115-120			
120-125			
125-130			
130-135			
135-140			
140-145			
145-150			

Record of Gas Well Installation

Job Number: 0120-131-17 Job Name: 2009 gas system Well Number: 43 R
Drilling Contractor: A.E.G.L Observed By: Joshua Ross
Started Install.: 8-15-09 Completed Install.: 8-15-09
Time: 6:00am Time: 11:30am

Top of Flange Elevation: _____
Ground Surface Elevation: 511.6 Location: N 1068294.8 E 516575.9

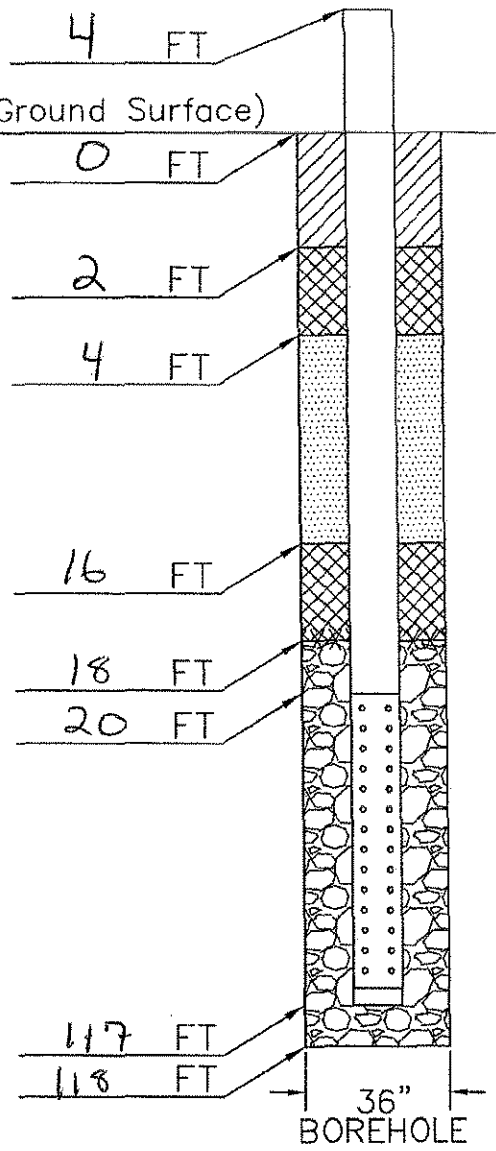

Materials

Intermediate or Final Cover:
- Material: clay soil material

Top Seal:
- Material: Granular bentonite
- Quntity: 12 bags
- Hydrated: yes

Backfill:
- Material: clay soil material

Bottom Seal:
- Material: Granular bentonite
- Quntity: 12 bags
- Hydrated: yes

Filter Pack:
- Material: 1" to 3" gravel

Riser:
- Material: CPVC
- Quantity: 24 Feet
- Diameter: 6in

Screen:
- Material: CPVC
- Quantity: 97
- Diameter: 6in
- Plug: 6in cap

Weaver Boos Consultants

American Environmental Group Ltd.

Well Log

DATE: 7/1/2004

PROJECT NAME BRIDGETON

PROJECT# 1-04-028

DRILLING

GEW 44 WELL NUMBER OR NAME

111' LINEAR FEET OF DRILLING

111' LINEAR FEET OF COMPLETION

0' LINEAR FEET OF ABANDONMENT

Time in: Time out:

Weather conditions: Sunny

Site conditions:

Rig hrs:

Service: Oil/ OK Raidiator/ OK Grease/ OK

NOTES:

Well Asbuild

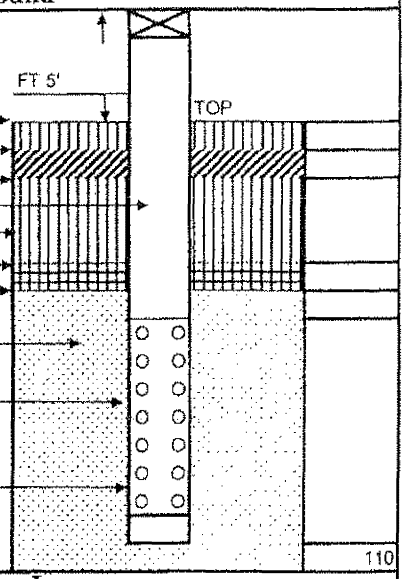

Top of ground elv	517.67
Backfill Material	2'
Bentonite plug	2'
Length of Solid	25'
Backfill Material	15'
Bentonite plug.	2'
Isolation Layer	1'
Length of Gravel Pack	89'
Length of Perf. Pipe	86'
Style of Pipe	6"SCH80 PVC
Bottom of bore	111'
Bore diameter	36"

MONITORING LOG

Time	OXYGEN	H2S		LEL / CO	
7:00	20.9	0	0	0	GEW 44
8:00	"	0	0	0	
9:00	"	0	0	0	
10:00	"	0	0	0	
11:00	"	0	0	0	
12:00	20.9	0	0	0	GEW 45
1:00					
2:00					
3:00					
4:00					
5:00					
6:00					

Notes

northing 1068434

easting 516497

Well Boring Log

Depth	Composition	Degree of Decomp.	Degree of Moisture	Temp
0-10	DIRT-MSW	LIGHT	DRY	62
10-20	MSW	LIGHT	DRY	66
20-30	MSW	LIGHT	DRY	71
30-40	MSW	LIGHT	DRY	71
40-50	WOOD-MSW	LIGHT	DRY	77
50-60	MSW	HEAVY	WET	79
60-70	MSW	HEAVY	WET	81
70-80	MSW	HEAVY	WET	86
80-90	MSW	HEAVY	WET	94
90-100	SLUGE	HEAVY	WET	96
100-110	SLUGE	HEAVY	WET	100
110-120	SLUGE	HEAVY	WET	102
120-130				
130-140				
140-150				

CLIENT REPRESENTATIVE DATE

BRETT WILLIS 7/1/2004

AEGL SITE SUPERVISOR DATE

NAME & TITLE

Gas Extraction Well Drilling Summary

Weaver Boos Consultants

Project Name:	2009 Gas System	Project Number:	0120-131-17
Project Location:	Bridgeton Landfill	QA/QC Monitor:	Joshua Ross
Well No.:	45R	Elevation:	Ground 501.2
Exact Location (Coordinates):	N:1068616.2	E:516560.5	
Date Started:	8/14/2009	Date Completed:	8/14/2009
Boring Size:	36in	Total Depth:	77
Length of Perforated Pipe:	60	Length of Solid Pipe:	20
Comments:	10 foot N of existing well		

Depth	Material Drilled	Temp.	Comment
0-2	soil	90	
2-4	soil	90	
4-6	soil	90	
6-10	soil	90	
10-15	soil	90	
15-20	soil	95	
20-25	soil/trash/moist	105	
25-30	soil/trash/moist	105	
30-35	trash/moist	108	
35-40	trash/moist	110	
40-45	trash/wet	110	
45-50	trash/wet	110	
50-55	trash/wet	115	
55-60	trash/wet	110	
60-65	trash/wet	115	
65-70	trash/wet	125	
70-75	trash/wet	120	
75-80	trash/wet	129	
80-85	trash/wet	128	
85-90			

Record of Gas Well Installation

Job Number: 0120-131-17 Job Name: 2009 gas system Well Number: 45R
Drilling Contractor: A.E.G.L Observed By: Joshua Ross
Started Install.: 8-14-09 Completed Install.: 8-14-09
Time: 6:00am Time: 11:00am

Top of Flange Elevation: _____
Ground Surface Elevation: 501.2 Location: N 1068616.2 E 516560.5

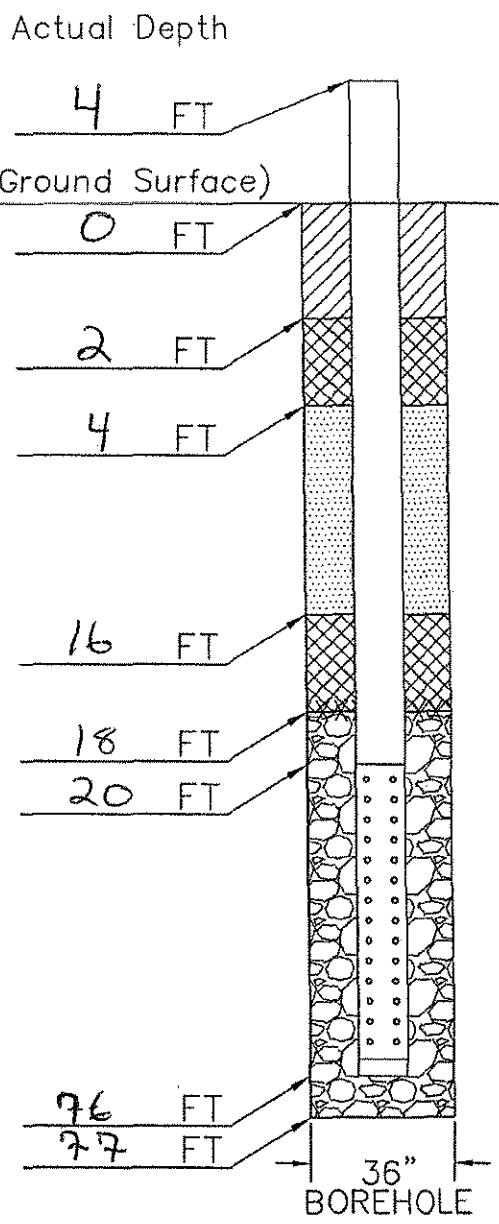

Materials

Intermediate or Final Cover:
Material: clay soil material

Top Seal:
Material: Granular bentonite
Quntity: 12 bags
Hydrated: yes

Backfill:
Material: clay soil material

Bottom Seal:
Material: Granular bentonite
Quntity: 12 bags
Hydrated: yes

Filter Pack:
Material: 1" to 3" gravel

Riser:
Material: CPVC
Quantity: 24 Feet
Diameter: 6.n

Screen:
Material: CPVC
Quantity: 56
Diameter: 6in
Plug: 6in cap

Weaver Boos Consultants

Gas Extraction Well Drilling Summary

Weaver Boos Consultants

Project Name:	2009 Gas System	Project Number:	0120-131-17
Project Location:	Bridgeton Landfill	QA/QC Monitor:	Joshua Ross

Well No.:	46R	Elevation:	Ground 506.2
Exact Location (Coordinates):	N:1068710.5	E:516665.6	
Date Started:	8/13/2009	Date Completed:	8/13/2009
Boring Size:	36in	Total Depth:	87
Length of Perforated Pipe:	70	Length of Solid Pipe:	20
Comments:	5 foot nw of existing		

Depth	Material Drilled	Temp.	Comment
0-2	soil/trash/moist	95	
2-4	soil/trash/moist	95	
4-6	soil/trash/moist	95	
6-10	soil/trash/moist	98	
10-15	trash/wet	115	
15-20	trash/wet	115	
20-25	trash/wet	115	
25-30	trash/wet	115	
30-35	trash/wet	115	
35-40	trash/wet	125	
40-45	trash/wet	125	
45-50	trash/wet	130	
50-55	trash/wet	127	
55-60	trash/wet	136	
60-65	trash/wet	137	
65-70	trash/wet	137	
70-75	trash/wet	135	
75-80	trash/wet	139	
80-85	trash/wet	139	
85-90			

Record of Gas Well Installation

Job Number: 0120-131-17 Job Name: 2009 gas system Well Number: 46R
Drilling Contractor: A.E.G.L Observed By: Joshua Ross
Started Install.: 8-13-09 Completed Install.: 8-13-09
Time: 8:45 am Time: 12:30pm

Top of Flange Elevation: _____
Ground Surface Elevation: 506.2 Location: N106876.5 E 51666.56

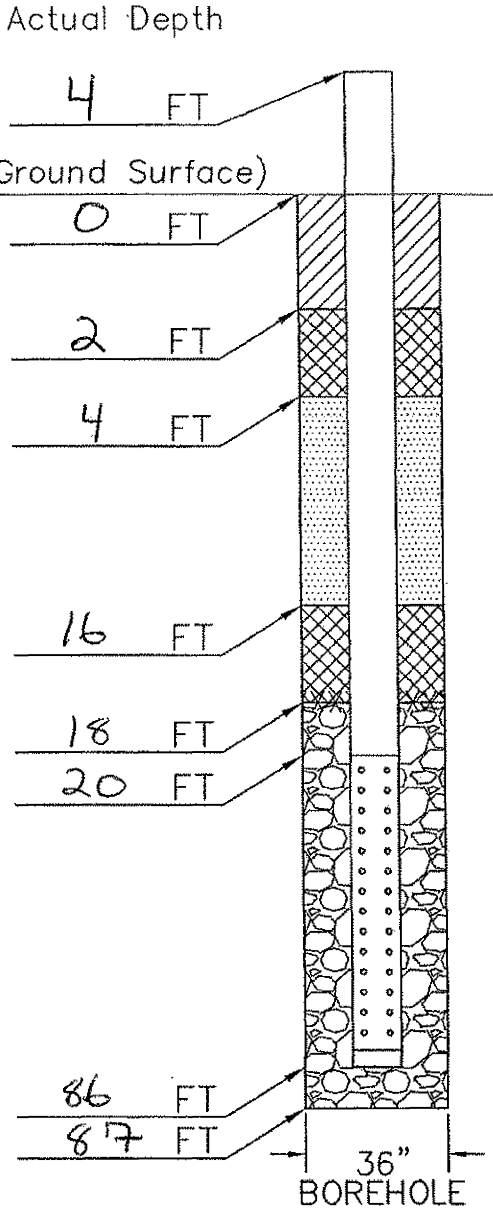

Materials

Intermediate or Final Cover:
Material: clay soil material

Top Seal:
Material: Granular bentonite
Quntity: 12 bags
Hydrated: yes

Backfill:
Material: clay soil material

Bottom Seal:
Material: Granular bentonite
Quntity: 12 bags
Hydrated: yes

Filter Pack:
Material: 1" to 3" gravel

Riser:
Material: CPVC
Quantity: 24 Feet
Diameter: 6in

Screen:
Material: CPVC
Quantity: 70
Diameter: 6in
Plug: 6in cap

Weaver Boos Consultants

Gas Extraction Well Drilling Summary

Weaver Boos Consultants

Project Name: 2009 Gas System

Project Number: 0120-131-17

Project Location: Bridgeton Landfill

QA/QC Monitor: Joshua Ross

Well No.: 47R

Elevation: Ground 521.9

Exact Location (Coordinates): N:1068692.6 E:516445.2

Date Started: 8/13/2009

Date Completed: 8/13/2009

Boring Size: 36

Total Depth: 65

Length of Perforated Pipe: 48

Length of Solid Pipe: 20

Comments: from existing well 10 foot sw

Depth	Material Drilled	Temp.	Comment
0-2	soil/dry	94	
2-4	soil/dry	94	
4-6	soil/dry	94	
6-10	soil/dry	94	
10-15	soil/dry	105	
15-20	soil/trash/moist	110	
20-25	soil/trash/moist	110	
25-30	soil/trash/moist	110	
30-35	soil/trash/moist	116	
35-40	soil/trash/moist	118	
40-45	trash/wet	120	
45-50	trash/wet	120	
50-55	trash/wet	125	
55-60	trash/wet	139	
60-65	trash/wet	137	
65-70			
70-75			
75-80			
80-85			
85-90			

Record of Gas Well Installation

Job Number: 0120-131-17 Job Name: 2009 gas system Well Number: 47R
Drilling Contractor: A.E.&L. Observed By: Joshua Ross
Started Install.: 8-13-09 Completed Install.: 8-13-09
Time: 6:00am Time: 8:30am

Top of Flange Elevation: ____
Ground Surface Elevation: 521.9 Location: N 1068692.6 E 516445.2

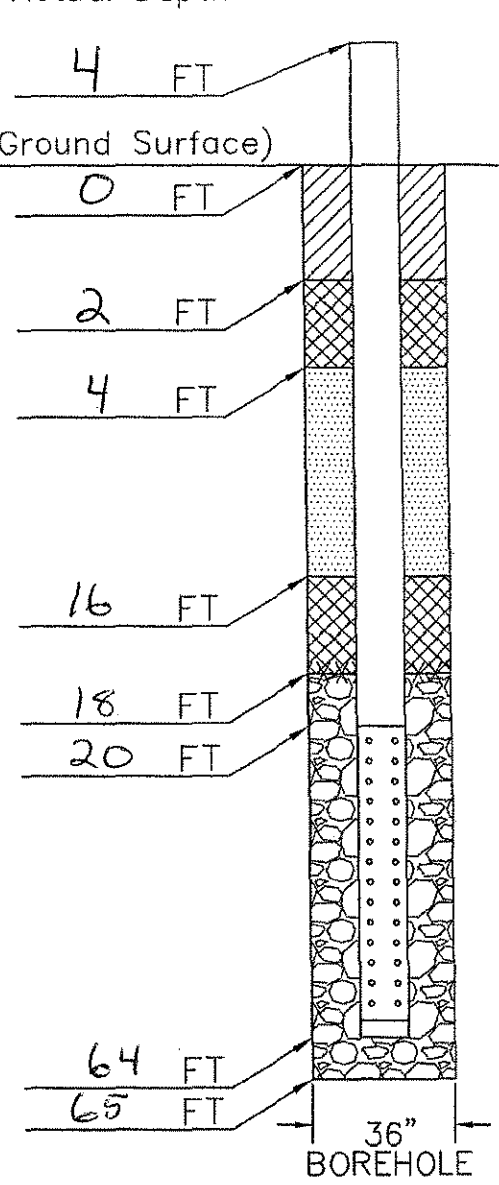

Materials

Intermediate or Final Cover:
Material: clay soil material

Top Seal:
Material: Granular bentonite
Quntity: 12 bags
Hydrated: yes

Backfill:
Material: clay soil material

Bottom Seal:
Material: Granular bentonite
Quntity: 12 bags
Hydrated: yes

Filter Pack:
Material: 1" to 3" gravel

Riser:
Material: CPVC
Quantity: 24 Feet
Diameter: 6in

Screen:
Material: CPVC
Quantity: 44
Diameter: 6in
Plug: 6in cap

Weaver Boos Consultants

Aquaterra Drilling Log

HOLE NO. GEW-48A | SHEET 1 OF | SHEETS

PROJECT NAME: 2005 LFG Wells/Header CQA	DRILLING SUBCONTRACTOR: AEG
PROJECT NUMBER: 1652.10	NAME OF DRILLER(S): B. Willis
LOCATION: Bridgeton, Missouri	MANUFACTURER'S DESIGNATION OF DRILL: Caterpillar IM7 AF10
HOLE LOCATION: GEW-48A	SIZES AND TYPES OF DRILLING AND SAMPLING EQUIPMENT: 36in Bucket
SURFACE ELEVATION: 526.78 ft	
OVERBURDEN THICKNESS: —	DRILLING START DATE: 7/16/05 — DRILLING END DATE: 7/16/05
DEPTH DRILLED INTO ROCK: —	DEPTH GROUNDWATER ENCOUNTERED: —
TOTAL DEPTH OF HOLE: 64 ft	DEPTH TO WATER AND ELAPSED TIME AFTER DRILLING COMPLETED: —

GEOTECHNICAL SAMPLES (TOTAL)	DISTURBED	UNDISTURBED	TOTAL NUMBER OF CORE BOXES
—	—	—	—

SAMPLES FOR CHEMICAL ANALYSIS (TOTAL)	(SPECIFY)	(SPECIFY)	(SPECIFY)	(SPECIFY)	(SPECIFY)	TOTAL CORE RECOVERY
—	—	—	—	—	—	—

DISPOSITION OF HOLE	BACKFILLED	MONITORING WELL	OTHER (SPEICFY)	SIGNATURE OF INSPECTOR
—	—	—	—	[signature]

DEPTH	DESCRIPTION OF MATERIALS	FIELD SCREENING RESULTS	GEOTECH SAMPLE RESULTS	ANALYTICAL SAMPLE NO.	TIME	REMARKS
0	Clean Soil				1245	Drilling begins 7/16/05
10	Waste					
20						
30	Waste					
40	Sand					
50		118°F			1340	
60	Waste	112°F			1430	End of the drilling on 7/16/05 at 64'F
70	End of boring at 64ft				1445	No asbestos containing materials observed
80						
90						
100						
110						

AQUATERRA
ENVIRONMENTAL SOLUTIONS, INC.
6980 West 153rd Street
Overland Park, Kansas 66223

GAS WELL CONSTRUCTION DIAGRAM

PROJECT NUMBER: 1652.10
PROJECT NAME: 2005 Bridgeton Gas System CQA
GAS WELL NO.: GGW-48A
WELL LOCATION:
INSTALLATION START DATE: 7/16/05
COMPLETION DATE: 7/16/05
DRILLER: AEG - B. Willis
INSPECTOR: Nathan Thyssen

COMMENTS:

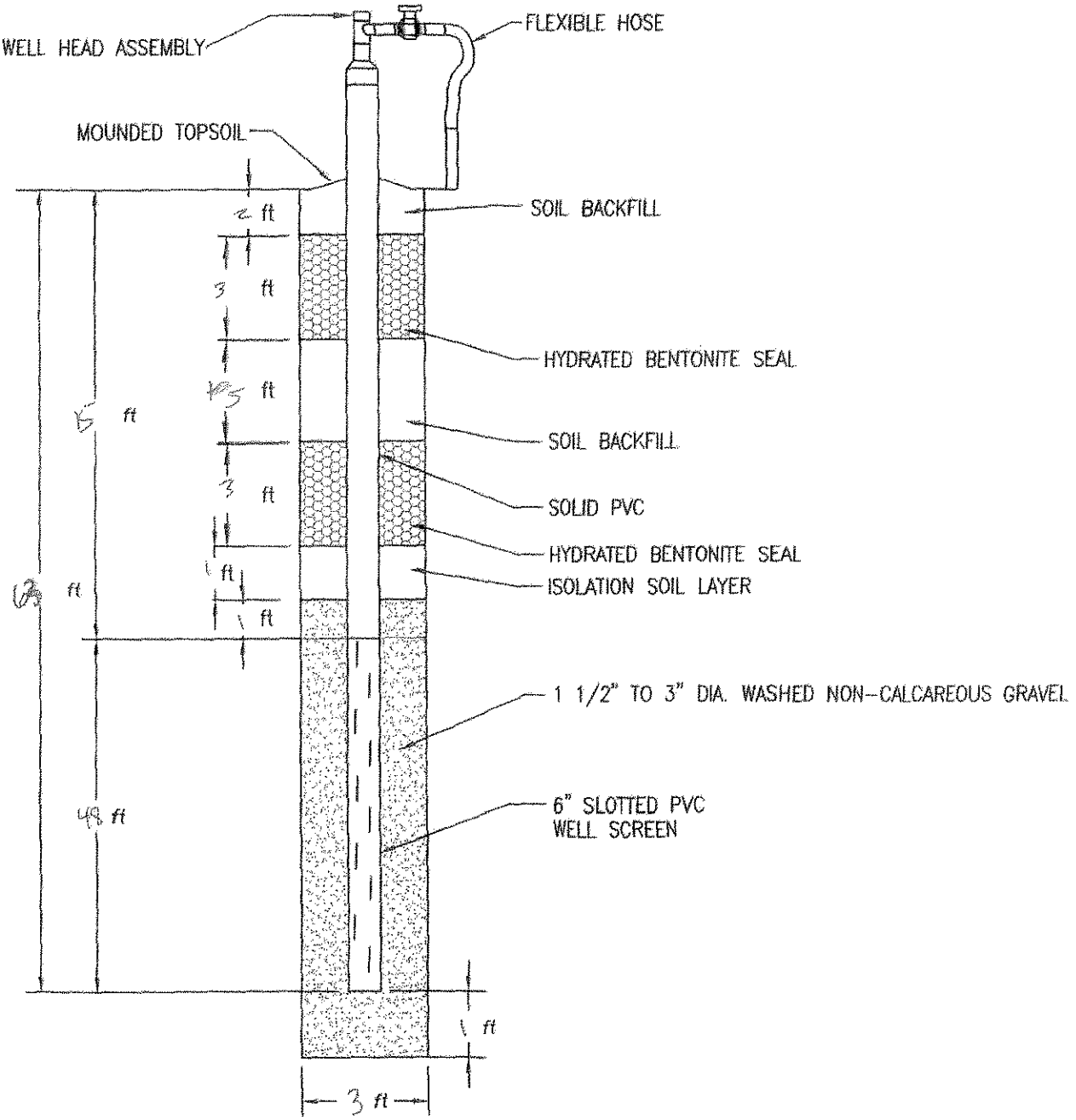

AQUATERRA
ENVIRONMENTAL SOLUTIONS, INC.
6980 West 153rd Street
verland Park, Kansas 66223

GAS WELL CONSTRUCTION DIAGRAM

PROJECT NUMBER: 1652.10
PROJECT NAME: 2005 Bridgeton Gas System CQA
GAS WELL NO.: GGW-48A
WELL LOCATION:
INSTALLATION START DATE: 7/16/05
COMPLETION DATE: 7/16/05
DRILLER: AEG - B. Willis
INSPECTOR: Nathan Higgerson

COMMENTS:

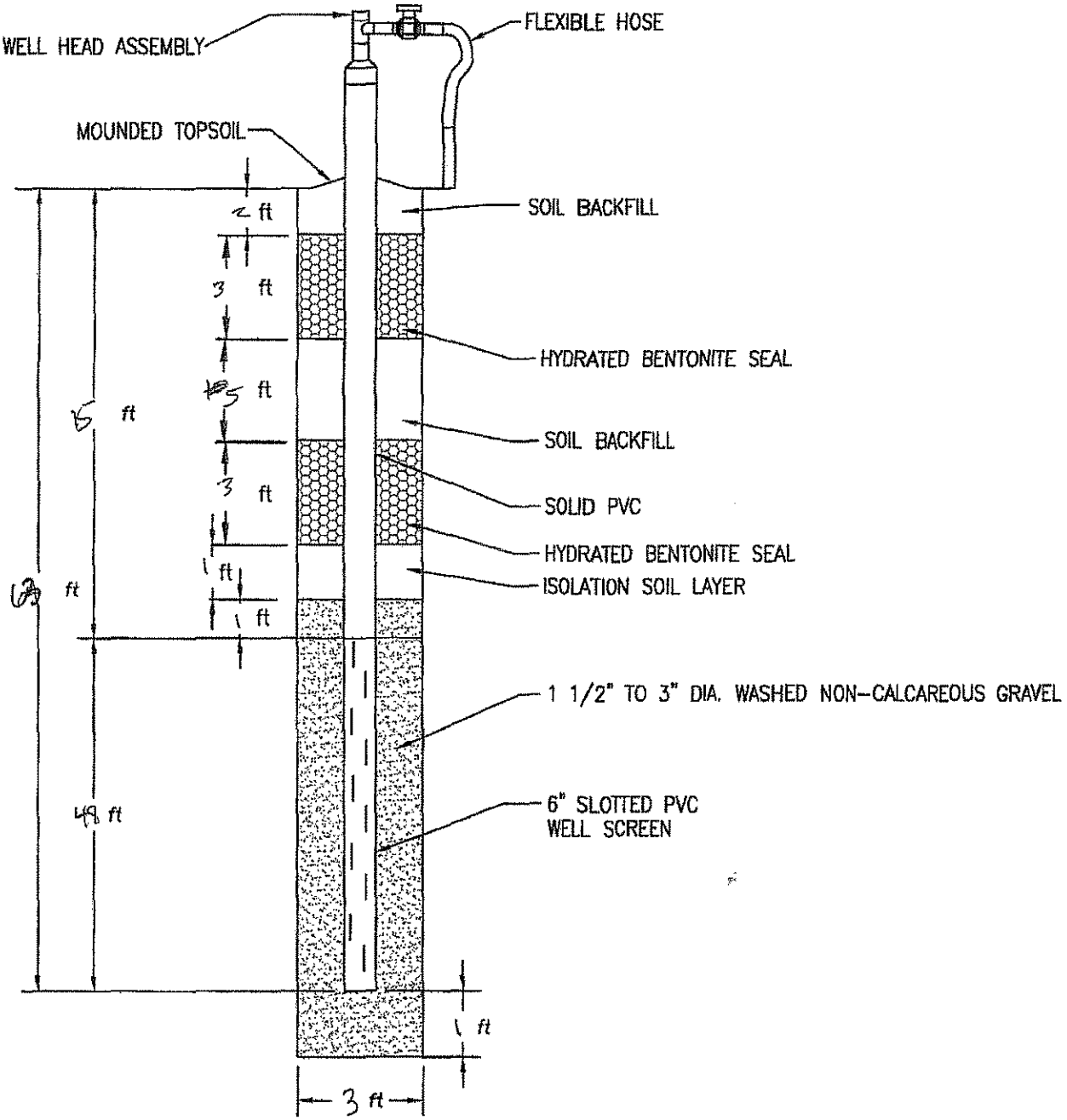

Aquaterra Drilling Log

HOLE NO.	SHEET 1 OF	SHEETS
GEW-49		1

PROJECT NAME: 2005 LFG Wells/Header CQA	DRILLING SUBCONTRACTOR: AEG
PROJECT NUMBER: 1652.10	NAME OF DRILLER(S): B. Willis
LOCATION: Bridgeton, Missouri	MANUFACTURER'S DESIGNATION OF DRILL: Caterpillar IMT AF10
HOLE LOCATION: GEW-49	SIZES AND TYPES OF DRILLING AND SAMPLING EQUIPMENT: 36 in Bucket
SURFACE ELEVATION: 525.80	
OVERBURDEN THICKNESS: —	DRILLING START DATE: 7/16/05 — DRILLING END DATE: 7/18/05
DEPTH DRILLED INTO ROCK: —	DEPTH GROUNDWATER ENCOUNTERED: —
TOTAL DEPTH OF HOLE: 66 ft	DEPTH TO WATER AND ELAPSED TIME AFTER DRILLING COMPLETED: —

GEOTECHNICAL SAMPLES (TOTAL)	DISTURBED	UNDISTURBED	TOTAL NUMBER OF CORE BOXES
—	—	—	—

SAMPLES FOR CHEMICAL ANALYSIS (TOTAL)	(SPECIFY)	(SPECIFY)	(SPECIFY)	(SPECIFY)	(SPECIFY)	TOTAL CORE RECOVERY
—	—	—	—	—	—	—

DISPOSITION OF HOLE	BACKFILLED	MONITORING WELL	OTHER (SPEICFY)	SIGNATURE OF INSPECTOR
—	—	—	—	Nathan Higgins

DEPTH	DESCRIPTION OF MATERIALS	FIELD SCREENING RESULTS	GEOTECH SAMPLE RESULTS	ANALYTICAL SAMPLE NO.	TIME	REMARKS
	1 ft of soil				1540	Drilling begin on 7/16/05
10	Waste					
	Waste					
30						
40	Waste				1700	Stopped drilling for the day at 45 ft on 7/16/05
					700	Resume drilling on 7/18/05
50	Waste					
60		152°F 153°F			900	Drilling stopped at 66 ft due to the temperature being so high
70	End of boring at 66 ft					No asbestos containing materials observed
80						
90						
100						
110						

AQUATERRA ENVIRONMENTAL SOLUTIONS, INC.	PROJECT NAME	HOLE NO.
	2005 LFG Wells/Header CQA	GEW-49

AQUATERRA
ENVIRONMENTAL SOLUTIONS, INC.
6980 West 153rd Street
Overland Park, Kansas 66223

GAS WELL CONSTRUCTION DIAGRAM

PROJECT NUMBER: 1652.10
PROJECT NAME: 2005 Bridgeton Gas System CQA
GAS WELL NO.: GEW-49
WELL LOCATION:
INSTALLATION START DATE: 7/16/05
COMPLETION DATE: 7/18/05
DRILLER: AEG B. Willis
INSPECTOR: Nathan Higgerson

COMMENTS:

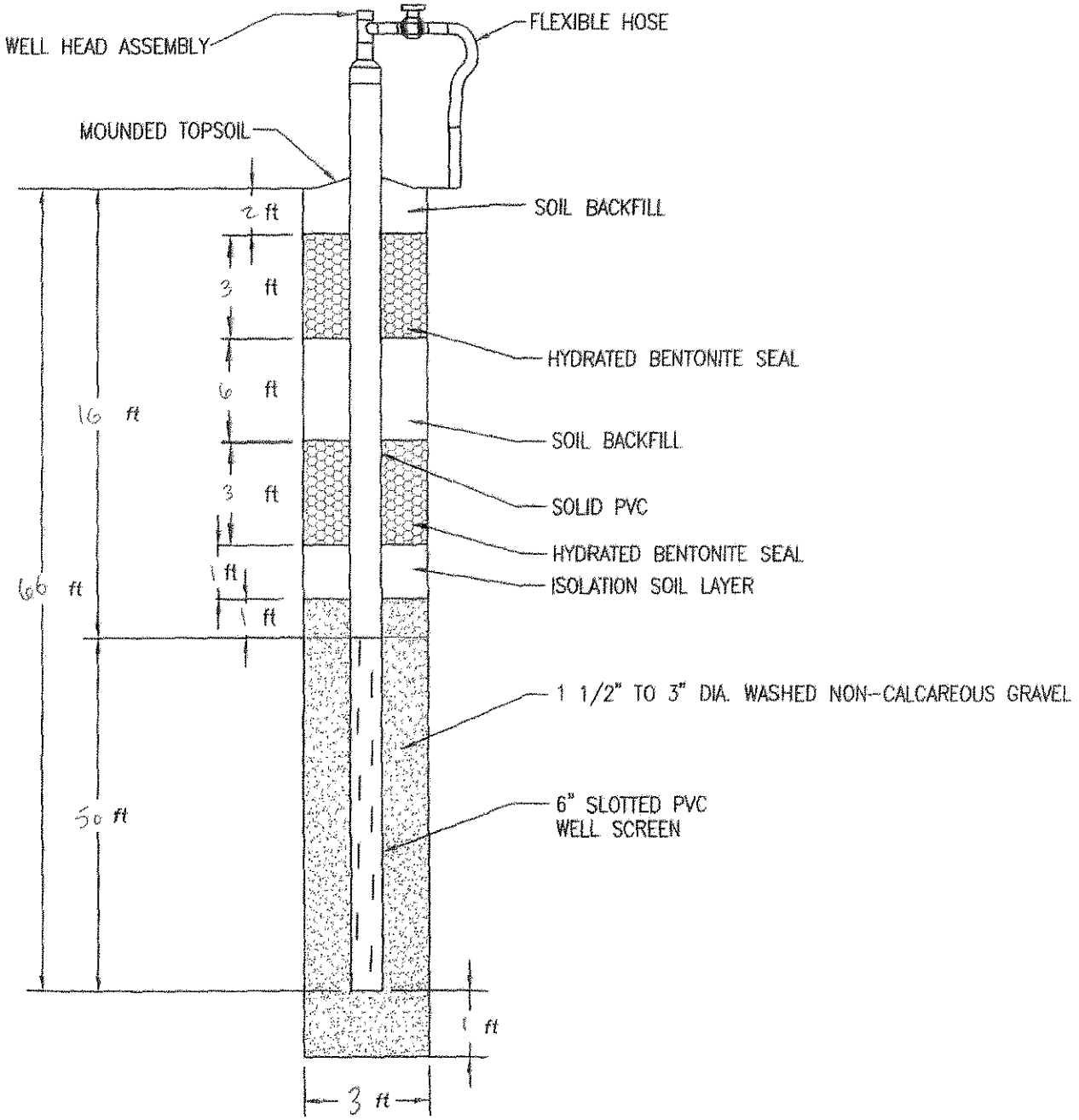

American Environmental Group Ltd.

Well Log

DATE: 6/26/2004

PROJECT NAME: BRIDGETON

PROJECT#: 1-04-028

DRILLING

GEW 50 WELL NUMBER OR NAME

54' LINEAR FEET OF DRILLING

54' LINEAR FEET OF COMPLETION

0' LINEAR FEET OF ABANDONMENT

Time in: Time out:

Weather conditions: Sunny

Site conditions:

Rig hrs:

Service: Oil/ OK Raidiator/ OK Grease/ OK

NOTES:

northing 1068476

easting 516230

Well Asbuild

Top of ground elv	524.37
Backfill Material	2'
Bentonite plug	2'
Length of Solid	16'
Backfill Material	7'
Bentonite plug	2'
Isolation Layer	1'
Length of Gravel Pack	39'
Length of Perf. Pipe	37'
Style of Pipe	6"SCH80 PVC
Bottom of bore	54'
Bore diameter	36"

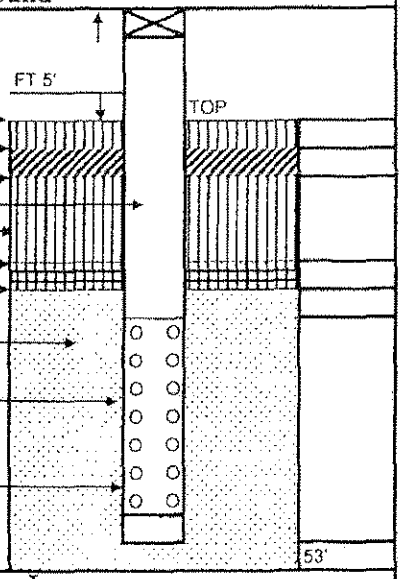

MONITORING LOG

Time	OXYGEN	H2S		LEL / CO	
7:00	20.9	0	0	0	GEW 50
8:00	"	0	0	0	
9:00	20.9	0	0	0	GEW 40
10:00	"	0	0	0	
11:00	"	0	0	0	
12:00	20.9	0	0	0	GEW 41
1:00	"	0	0	0	
2:00	"	0	0	0	
3:00					
4:00					
5:00					
6:00					

Notes

Well Boring Log

Depth	Composition	Degree of Decomp.	Degree of Moisture	Temp
0-10	DIRT-HHT	LIGHT	DRY	64
10-20	"	LIGHT	DRY	70
20-30	WOOD-HHT	LIGHT	DRY	79
30-40	HHT	LIGHT	DRY	84
40-50	HHT	LIGHT	DRY	92
50-60	HHT	LIGHT	DRY	TD 54'
60-70				
70-80				
80-90				
90-100				
100-110				
110-120				
120-130				
130-140				
140-150				

CLIENT REPRESENTATIVE DATE

BRETT WILLIS 6/26/2004

AEGL SITE SUPERVISOR DATE

NAME & TITLE

Aquaterra Drilling Log

HOLE NO.	SHEET 1 OF SHEETS
GEW-51	1

PROJECT NAME: 2005 LFG Wells/Header CQA	DRILLING SUBCONTRACTOR: AEG
ECT NUMBER: 1652.10	NAME OF DRILLER(S): B. Willis
L N: Bridgeton, Missouri	MANUFACTURER'S DESIGNATION OF DRILL: Caterpillar FMT AF10
HOLE LOCATION: GEW 51	SIZES AND TYPES OF DRILLING AND SAMPLING EQUIPMENT: 36 in Bucket
SURFACE ELEVATION: 523 50	
OVERBURDEN THICKNESS: —	DRILLING START DATE: 7/16/05 — DRILLING END DATE: 7/16/05
DEPTH DRILLED INTO ROCK: —	DEPTH GROUNDWATER ENCOUNTERED: —
TOTAL DEPTH OF HOLE: 70 ft	DEPTH TO WATER AND ELAPSED TIME AFTER DRILLING COMPLETED: —

GEOTECHNICAL SAMPLES (TOTAL)	DISTURBED	UNDISTURBED	TOTAL NUMBER OF CORE BOXES
—	—	—	—

SAMPLES FOR CHEMICAL ANALYSIS (TOTAL)	(SPECIFY)	(SPECIFY)	(SPECIFY)	(SPECIFY)	(SPECIFY)	TOTAL CORE RECOVERY
—	—	—	—	—	—	—

DISPOSITION OF HOLE	BACKFILLED	MONITORING WELL	OTHER (SPEICFY)	SIGNATURE OF INSPECTOR
—	—	—	—	[signature]

DEPTH	DESCRIPTION OF MATERIALS	FIELD SCREENING RESULTS	GEOTECH SAMPLE RESULTS	ANALYTICAL SAMPLE NO.	TIME	REMARKS
	2 ft of soil				900	Drilling begins on 7/16/05
10	Waste					
30	Waste					
40						
50	Waste	125°F			1000	
60		138°F				
70	Waste	154°F			1030	Drilling stopped at 70 ft due to high temperatures
	End of boring at 70 ft	152.5°F			1045	No Asbestos Containing Materials Observed
80						
90						
100						
110						

AQUATERRA ENVIRONMENTAL SOLUTIONS, INC.

PROJECT NAME	HOLE NO.
2005 LFG Wells/Header CQA	GEW-51

AQUATERRA
ENVIRONMENTAL SOLUTIONS, INC.
6980 West 153rd Street
Overland Park, Kansas 66223

GAS WELL CONSTRUCTION DIAGRAM

PROJECT NUMBER: 1652.10
PROJECT NAME: 2005 Bridgeton Gas System CQA
GAS WELL NO.: GEW-51
WELL LOCATION:
INSTALLATION START DATE: 7/16/05
COMPLETION DATE: 7/16/05
DRILLER: AEG - B. Willis
INSPECTOR: Nathan Higgerson

COMMENTS:

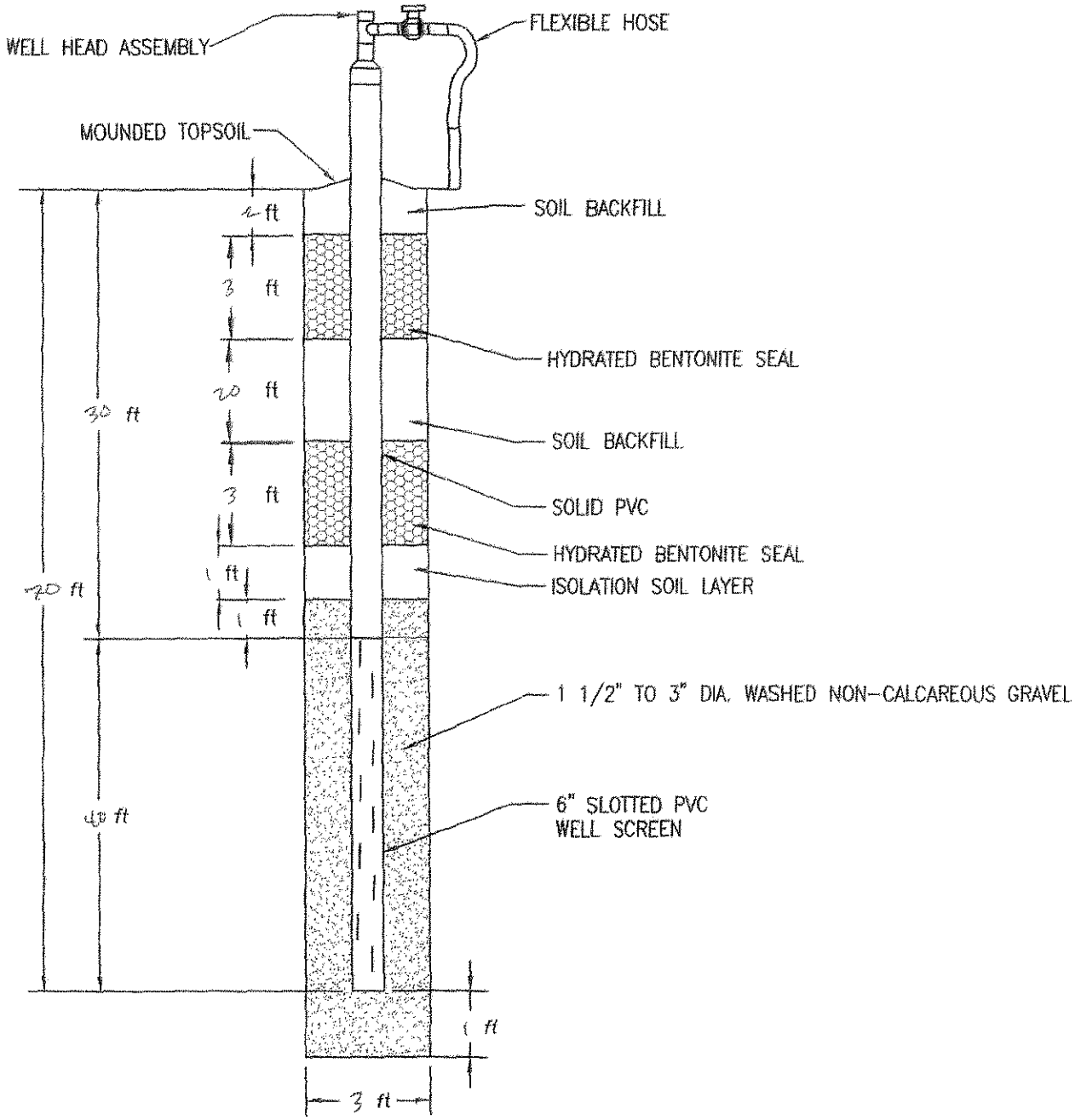

American Environmental Group Ltd.

Well Log

DATE: 6/25/2004

PROJECT NAME: BRIDGETON

PROJECT#: 1-04-028

DRILLING

GEW 52 WELL NUMBER OR NAME

62' LINEAR FEET OF DRILLING

62' LINEAR FEET OF COMPLETION

0' LINEAR FEET OF ABANDONMENT

Time in: Time out:

Weather conditions: Sunny

Site conditions:

Rig hrs:

Service: Oil/ OK Raidiator/ OK Grease/ OK

NOTES:

Well Asbuild

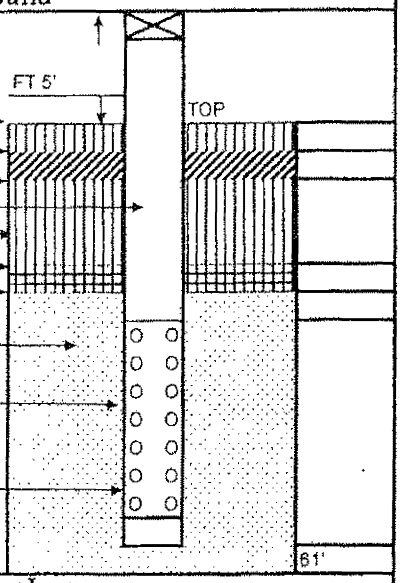

Top of ground elv.	522.13
Backfill Material	2'
Bentonite plug	2'
Length of Solid	18'
Backfill Material	13'
Bentonite plug	2'
Isolation Layer	1'
Length of Gravel Pack	46'
Length of Perf. Pipe	44'
Style of Pipe	6"SCH80 PVC
Bottom of bore	62'
Bore diameter	36"

MONITORING LOG

Time	OXYGEN	H2S		LEL / CO	
7:00	20.9	0	0	0	GEW 52
8:00	20.9	0	0	0	GEW 4
9:00	"	0	0	0	
10:00	"	0	0	0	
11:00	"	0	0	0	
12:00	20.9	0	0	0	GEW 3
1:00	"	0	0	0	
2:00	"	0	0	0	
3:00	"	0	0	0	
4:00	20.9	0	0	0	GEW 2
5:00	20.9	0	0	0	6-24-04
6:00	"	0	0	0	

Notes

northing 106325

easting 516248

Well Boring Log

Depth	Composition	Degree of Decomp.	Degree of Moisture	Temp
0-10	DIRT-HHT	LIGHT	DRY	69
10-20	HHT	LIGHT	DRY	76
20-30	HHT	LIGHT	DRY	81
30-40	HHT	LIGHT	DRY	85
40-50	HHT	LIGHT	DRY	98
50-60	HHT	LIGHT	DRY	98
60-70	HHT-DIRT	LIGHT	DRY	TD 62'
70-80				
80-90				
90-100				
100-110				
110-120				
120-130				
130-140				
140-150				

CLIENT REPRESENTATIVE DATE

NAME & TITLE

BRETT WILLIS 6/25/2004

AEGL SITE SUPERVISOR DATE

Aquaterra Drilling Log

HOLE NO. GEW-53 | SHEET 1 OF 2 SHEETS

PROJECT NAME: 2005 LFG Wells / Header CQA	DRILLING SUBCONTRACTOR: AEG
PROJECT NUMBER: 1652.10	NAME OF DRILLER(S): B. Willis
LOCATION: Bridgeton, Missouri	MANUFACTURER'S DESIGNATION OF DRILL: Caterpillar IMT AF10
HOLE LOCATION: GEW 53	SIZES AND TYPES OF DRILLING AND SAMPLING EQUIPMENT: 36 in Bucket
SURFACE ELEVATION: 527	
OVERBURDEN THICKNESS: —	DRILLING START DATE: 7/14/05 — DRILLING END DATE: 7/15/05
DEPTH DRILLED INTO ROCK: —	DEPTH GROUNDWATER ENCOUNTERED: —
TOTAL DEPTH OF HOLE: 136 ft	DEPTH TO WATER AND ELAPSED TIME AFTER DRILLING COMPLETED: —

GEOTECHNICAL SAMPLES (TOTAL)	DISTURBED	UNDISTURBED	TOTAL NUMBER OF CORE BOXES
—	—	—	—

SAMPLES FOR CHEMICAL ANALYSIS (TOTAL)	(SPECIFY)	(SPECIFY)	(SPECIFY)	(SPECIFY)	(SPECIFY)	TOTAL CORE RECOVERY
—	—	—	—	—	—	—

DISPOSITION OF HOLE	BACKFILLED	MONITORING WELL	OTHER (SPECIFY)	SIGNATURE OF INSPECTOR
—	—	—	—	[signature]

DEPTH	DESCRIPTION OF MATERIALS	FIELD SCREENING RESULTS	GEOTECH SAMPLE RESULTS	ANALYTICAL SAMPLE NO.	TIME	REMARKS
10	Waste [illegible] ZH of soil				1310	Begin drilling on 7/14/05
30	Waste					
40						
50	Waste					
60						
70	Waste				1530	
80						
90	Waste					
100						
110	Waste				1715	Drilling stopped for the day at an approximate depth of 115ft.
					700	Drilling Resumes on 7/15/05
	Waste					

AQUATERRA ENVIRONMENTAL SOLUTIONS, INC.

PROJECT NAME: 2005 LFG Wells / Header CQA | HOLE NO.: GEW-53

Aquaterra Drilling Log

HOLE NO. GEW 53 | SHEET 2 OF 2 SHEETS

PROJECT NAME: 2005 LFG Wells/Header CQA

INSPECTOR: Nathan Hinderson

DESCRIPTION OF MATERIALS	FIELD SCREENING RESULTS	GEOTECH SAMPLE RESULTS	ANALYTICAL SAMPLE NO.	TIME	REMARKS
35 Weather					Drilling finished on 7/15/05 at a total depth of 1360'
				930	
40 End of the boring at 1360'					No Asbestos Containing Materials Observed

AQUATERRA
ENVIRONMENTAL SOLUTIONS, INC.
6980 West 153rd Street
Overland Park, Kansas 66223

GAS WELL CONSTRUCTION DIAGRAM

PROJECT NUMBER: 1652.10
PROJECT NAME: 2005 Bridgeton Gas System CQA
GAS WELL NO.: GEW-53
WELL LOCATION:
INSTALLATION START DATE: 7/14/05
COMPLETION DATE: 7/15/05
DRILLER: AEG - B. Willis
INSPECTOR: Nathan Higgerson

COMMENTS:

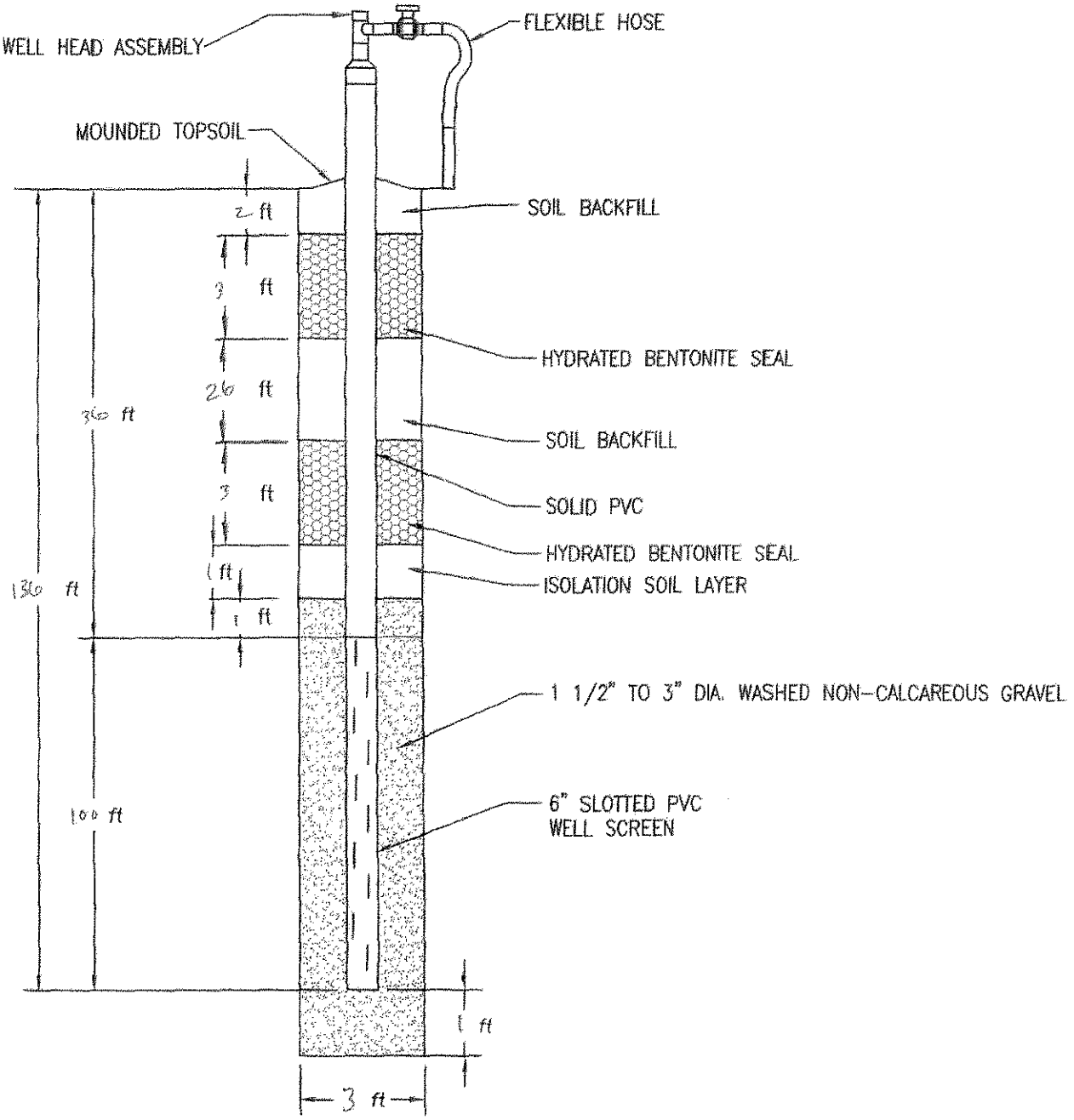

Aquaterra Drilling Log

HOLE NO. GEW-54 | SHEET 1 OF 2 SHEETS

PROJECT NAME: 2005 LFG Wells/Header CQA	DRILLING SUBCONTRACTOR: AEG
PROJECT NUMBER: 1652.10	NAME OF DRILLER(S): B. Willis
IN: Bridgeton, Missouri	MANUFACTURER'S DESIGNATION OF DRILL: Caterpillar IM7 - AF10
HOLE LOCATION: GEW-54	SIZES AND TYPES OF DRILLING AND SAMPLING EQUIPMENT: 36in Bucket
SURFACE ELEVATION: 522.92 ft	
OVERBURDEN THICKNESS: —	DRILLING START DATE: 7/13/05 — DRILLING END DATE: 7/14/05
DEPTH DRILLED INTO ROCK: —	DEPTH GROUNDWATER ENCOUNTERED: —
TOTAL DEPTH OF HOLE: 136 ft	DEPTH TO WATER AND ELAPSED TIME AFTER DRILLING COMPLETED: —

GEOTECHNICAL SAMPLES (TOTAL)	DISTURBED	UNDISTURBED	TOTAL NUMBER OF CORE BOXES
—	—	—	—

SAMPLES FOR CHEMICAL ANALYSIS (TOTAL)	(SPECIFY)	(SPECIFY)	(SPECIFY)	(SPECIFY)	(SPECIFY)	TOTAL CORE RECOVERY
—	—	—	—	—	—	—

DISPOSITION OF HOLE	BACKFILLED	MONITORING WELL	OTHER (SPECIFY)	SIGNATURE OF INSPECTOR
—	—	—	—	[signature]

DEPTH	DESCRIPTION OF MATERIALS	FIELD SCREENING RESULTS	GEOTECH SAMPLE RESULTS	ANALYTICAL SAMPLE NO.	TIME	REMARKS
	[illegible]				1245	Begin drilling on 7/13/05
	25 ft of 50.1					
10	Waste					
30	Waste					
40						
50	Waste				1400	
60						
70	Waste				1500	
80						
90						End of the drilling on 7/13/05 at depth of 90 ft
	Waste				700	Resume drilling on 7/14/05
100						
110	Wet Waste					

Aquaterra Drilling Log

HOLE NO. GEW-54 | SHEET 2 OF 2 SHEETS

PROJECT NAME: 2005 LFG Wells / Header CQA

INSPECTOR: ~~Aaron~~ Nathan Higgerson

DESCRIPTION OF MATERIALS	FIELD SCREENING RESULTS	GEOTECH SAMPLE RESULTS	ANALYTICAL SAMPLE NO.	TIME	REMARKS
12 Waste					
130 Waste				1100	End of drilling on 7/14/05 at a depth of 176 ft
140 End of the boring at a depth of 136 ft					No Dakota Containing Materials ~~Encountered~~ Observed

AQUATERRA
ENVIRONMENTAL SOLUTIONS, INC.
6980 West 153rd Street
Overland Park, Kansas 66223

GAS WELL CONSTRUCTION DIAGRAM

PROJECT NUMBER: 1652.10
PROJECT NAME: 2005 Bridgeton Gas System CQA
GAS WELL NO.: GEW-54
WELL LOCATION:
INSTALLATION START DATE: 7/14/05
COMPLETION DATE: 7/14/05
DRILLER: AEG - B. Willis
INSPECTOR: Nathan Higgerson

COMMENTS:

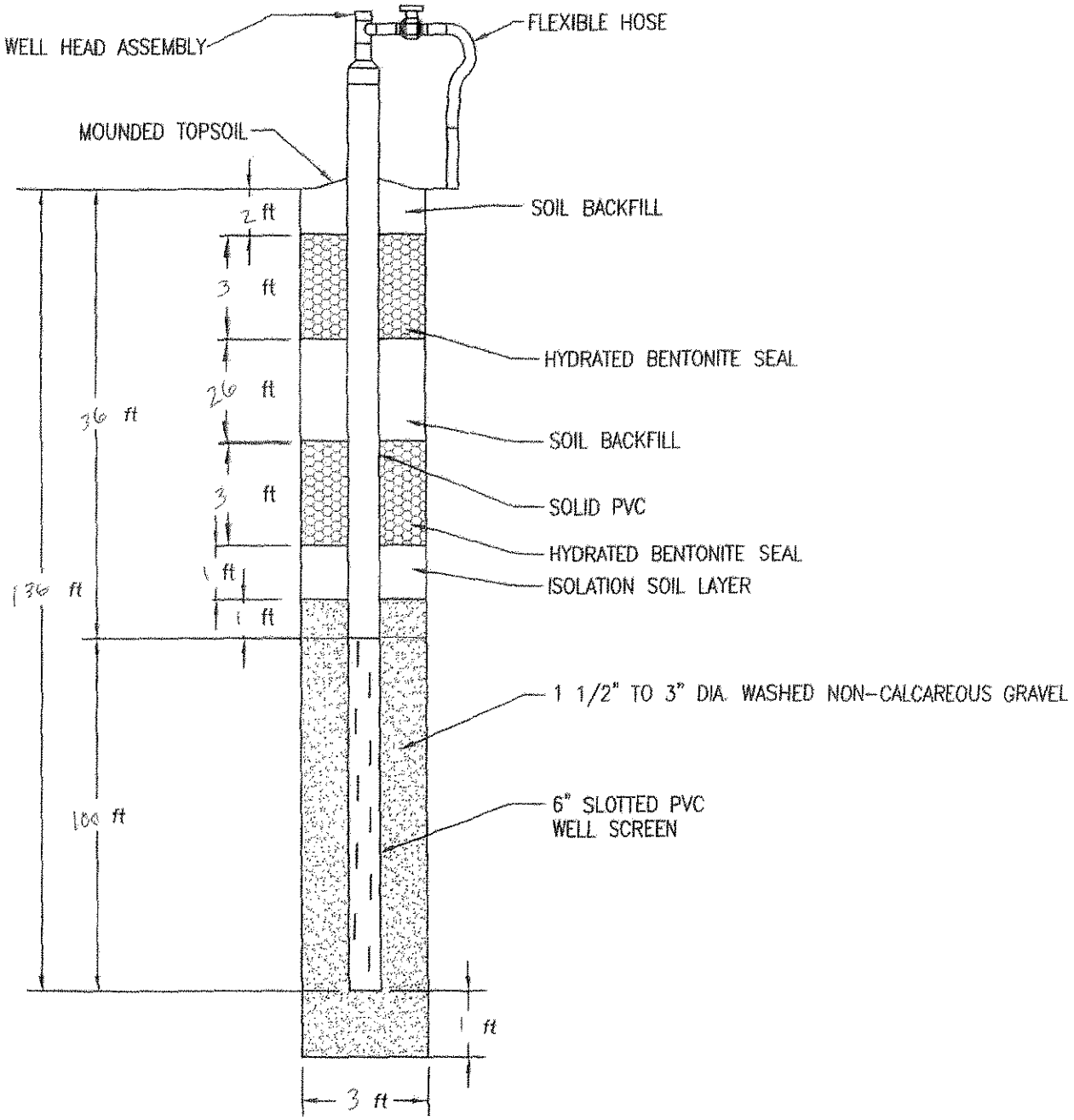

Aquaterra Drilling Log

HOLE NO. GEW-55 | SHEET 1 OF ____ SHEETS

PROJECT NAME: 2005 LFG Wells/Header	DRILLING SUBCONTRACTOR: AEG
PROJECT NUMBER: 1652.10	NAME OF DRILLER(S): B. Willis
CITY: Bridgeton, Missouri	MANUFACTURER'S DESIGNATION OF DRILL: Caterpillar IMT AT 10
HOLE LOCATION: GEW-55	SIZES AND TYPES OF DRILLING AND SAMPLING EQUIPMENT: 36 in Bucket
SURFACE ELEVATION: 522.10	
OVERBURDEN THICKNESS: —	DRILLING START DATE: 7/15/05 — DRILLING END DATE: 7/16/05
DEPTH DRILLED INTO ROCK: —	DEPTH GROUNDWATER ENCOUNTERED: —
TOTAL DEPTH OF HOLE: 84 ft.	DEPTH TO WATER AND ELAPSED TIME AFTER DRILLING COMPLETED: —

GEOTECHNICAL SAMPLES (TOTAL)	DISTURBED	UNDISTURBED	TOTAL NUMBER OF CORE BOXES
—	—	—	—

SAMPLES FOR CHEMICAL ANALYSIS (TOTAL)	(SPECIFY)	(SPECIFY)	(SPECIFY)	(SPECIFY)	(SPECIFY)	TOTAL CORE RECOVERY
—	—	—	—	—	—	—

DISPOSITION OF HOLE	BACKFILLED	MONITORING WELL	OTHER (SPECIFY)	SIGNATURE OF INSPECTOR
—	—	—	—	

DEPTH	DESCRIPTION OF MATERIALS	FIELD SCREENING RESULTS	GEOTECH SAMPLE RESULTS	ANALYTICAL SAMPLE NO.	TIME	REMARKS
	2 ft of soil				945	Beginning on 7/15/05
10	Waste					
20	Waste					
40	Waste					
50						
60						
70	Waste					
		148°				
		150°			1330	End of drilling on 7/15/05 at a depth of 80 ft
80	End of Boring at 84 ft	152°			700	Resume drilling on 7/16/05
	Waste					
		[illegible]				End of the boring at 84 ft due to the temperature being around 150° F. No asbestos containing materials observed
90						
100						
110						

AQUATERRA ENVIRONMENTAL SOLUTIONS, INC.

PROJECT NAME: 2005 LFG Wells/Header CQA | HOLE NO.: GEW-55

AQUATERRA
ENVIRONMENTAL SOLUTIONS, INC.
6980 West 153rd Street
Overland Park, Kansas 66223

GAS WELL CONSTRUCTION DIAGRAM

PROJECT NUMBER: 1652.10
PROJECT NAME: 2005 Bridgeton Gas System CQA
GAS WELL NO.: GEW-55
WELL LOCATION:
INSTALLATION START DATE: 7/15/05
COMPLETION DATE: 7/16/05
DRILLER: AGE - B. Willis
INSPECTOR: Nathan Higgerson

COMMENTS:

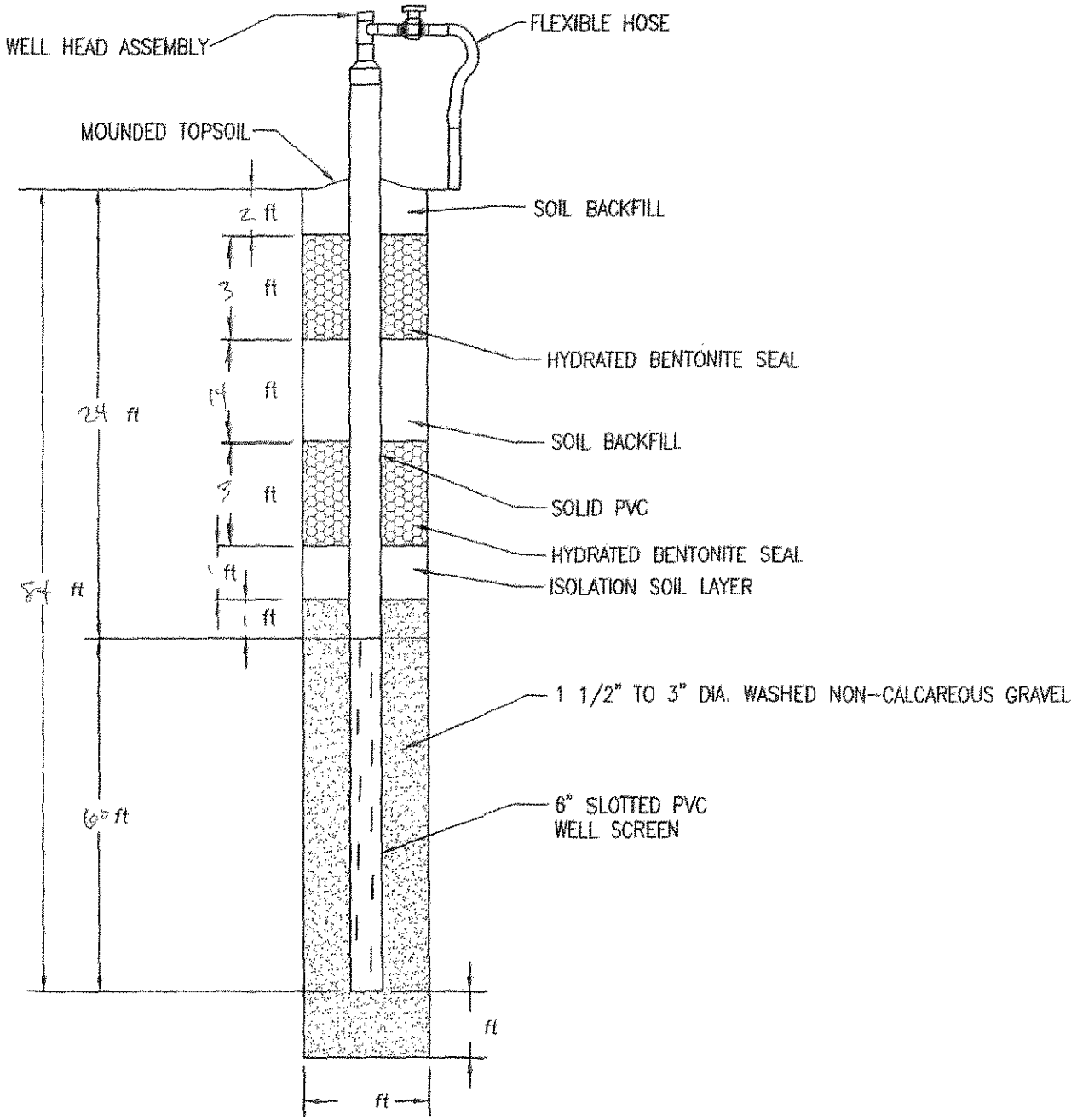

Gas Extraction Well Drilling Summary

Weaver Boos Consultants

Project Name: 2009 Gas System | Project Number: 0120-131-17

Project Location: Bridgeton Landfill | QA/QC Monitor: Joshua Ross

Well No.: 56R | Elevation: Ground 499.1

Exact Location (Coordinates): N:1067786.2 E:516317.6

Date Started: 9/26/2009 | Date Completed: 9/26/2009

Boring Size: 36 inch | Total Depth: 101

Length of Perforated Pipe: 80 | Length of Solid Pipe: 20

Comments: 10 feet south of existing well

Depth	Material Drilled	Temp.	Comment
0-2	soil/dry	93	
2-4	soil/dry	93	
4-6	soil/dry	93	
6-10	soil/dry	93	
10-15	trash/dry	97	
15-20	trash/dry	97	
20-25	trash/dry	99	
25-30	trash/dry	99	
30-35	trash/dry	100	
35-40	trash/dry	102	
40-45	trash/dry	107	
45-50	trash/dry	110	
50-55	trash/dry	110	
55-60	trash/dry	116	
60-65	trash/damp	117	
65-70	trash/moist	122	
70-75	trash/moist	124	
75-80	trash/wet	129	
80-85	trash/wet	130	
85-90	sludge/wet	134	
90-95	sludge/wet	136	

Gas Extraction Well Drilling Summary

Weaver Boos Consultants

Project Name: 2009 Gas System | Project Number: 0120-131-17

Project Location: Bridgeton Landfill | QA/QC Monitor: Joshua Ross

95-100	sludge/wet	136	
100-105	sludge/wet	136	
105-110			
110-115			
115-120			
120-125			
125-130			
130-135			
135-140			
140-145			
145-150			

Record of Gas Well Installation

Job Number: 0120-131-17 Job Name: 2009 gas system Well Number: 56R
Drilling Contractor: A.E.G.L Observed By: Joshua Ross
Started Install.: 9-26-09 Completed Install.: 9-26-09
Time: 6:00am Time: 11:00am

Top of Flange Elevation: _____
Ground Surface Elevation: 499.1 Location: N 1067786.2E 516317.6

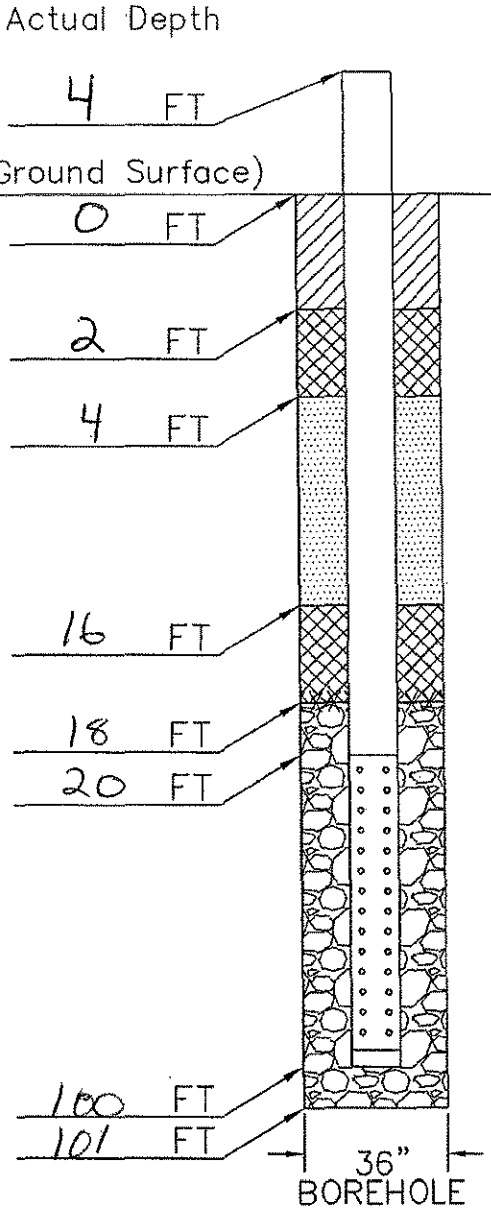

Materials

Intermediate or Final Cover:
- Material: clay soil material

Top Seal:
- Material: Granular bentonite
- Quntity: 12 bags
- Hydrated: yes

Backfill:
- Material: clay soil material

Bottom Seal:
- Material: Granular bentonite
- Quntity: 12 bags
- Hydrated: yes

Filter Pack:
- Material: 1" to 3" gravel

Riser:
- Material: CPVC
- Quantity: 24 Feet
- Diameter: 6.n

Screen:
- Material: CPVC
- Quantity: 80
- Diameter: 6in
- Plug: 6in cap

Weaver Boos Consultants

Gas Extraction Well Drilling Summary

Weaver Boos Consultants

Project Name: 2009 Gas System | Project Number: 0120-131-17

Project Location: Bridgeton Landfill | QA/QC Monitor: Joshua Ross

Well No.: 57R | Elevation: Ground 551.8

Exact Location (Coordinates): N:1067220.9 E:516522.1

Date Started: 9/16/2009 | Date Completed: 9/16/2009

Boring Size: 36 inch | Total Depth: 136

Length of Perforated Pipe: 115 | Length of Solid Pipe: 20

Comments: 5 feet SE of existing well

Depth	Material Drilled	Temp.	Comment
0-2	soil/dry	94	
2-4	soil/dry	94	
4-6	soil/dry	94	
6-10	soil/dry	94	
10-15	trash/dry	99	
15-20	trash/dry	99	
20-25	trash/dry	99	
25-30	trash/dry	99	
30-35	trash/dry	105	
35-40	trash/dry	105	
40-45	trash/dry	107	
45-50	trash/dry	107	
50-55	trash/dry	109	
55-60	trash/dry	110	
60-65	trash/dry	110	
65-70	trash/dry	113	
70-75	trash/dry	113	
75-80	trash/dry	113	
80-85	trash/dry	113	
85-90	trash/dry	116	
90-95	trash/dry	116	

Gas Extraction Well Drilling Summary

Weaver Boos Consultants

Project Name: 2009 Gas System | Project Number: 0120-131-17

Project Location: Bridgeton Landfill | QA/QC Monitor: Joshua Ross

95-100	trash/dry	119	
100-105	trash/dry	119	
105-110	trash/dry	122	
110-115	trash/dry	122	
115-120	trash/dry	123	
120-125	trash/damp	124	
125-130	trash/damp	124	
130-135	trash/damp	124	
135-140	trash/damp	124	
140-145			
145-150			

Record of Gas Well Installation

Job Number: 0120-131-17 Job Name: 2009 gas system Well Number: 517R
Drilling Contractor: A.E.&L. Observed By: Joshua Ross
Started Install.: 9-16-09 Completed Install.: 9-16-09
Time: 10:00am Time: 4:30pm

Top of Flange Elevation: _____
Ground Surface Elevation: 551.8 Location: N 1067220.9 E 516522.1

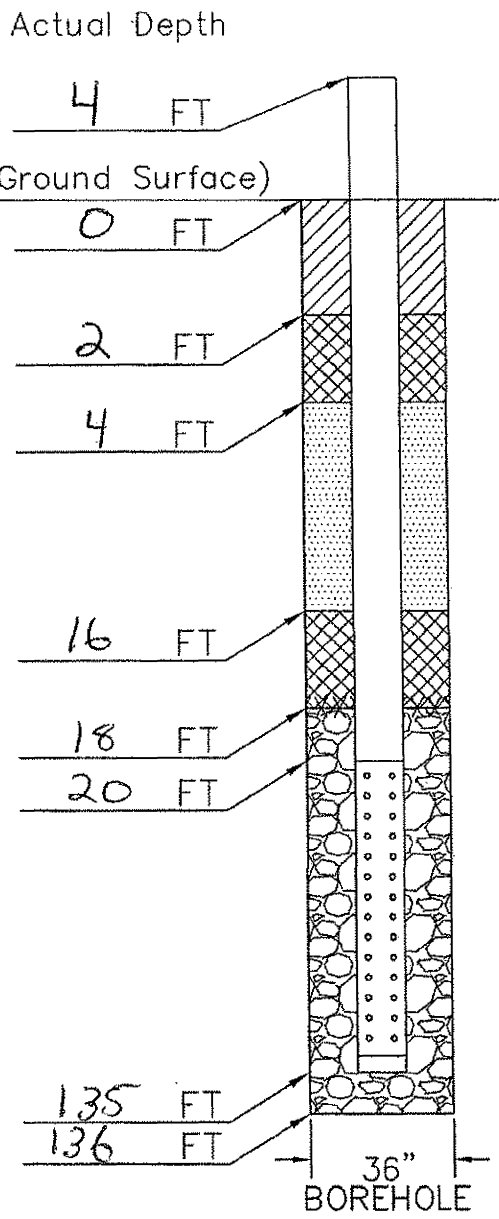

Materials

Intermediate or Final Cover:
- Material: clay soil material

Top Seal:
- Material: Granular bentonite
- Quntity: 12 bags
- Hydrated: yes

Backfill:
- Material: clay soil material

Bottom Seal:
- Material: Granular bentonite
- Quntity: 12 bags
- Hydrated: yes

Filter Pack:
- Material: 1" to 3" gravel

Riser:
- Material: CPVC
- Quantity: 24 Feet
- Diameter: 6in

Screen:
- Material: CPVC
- Quantity: 115
- Diameter: 6in
- Plug: 6in cap

Weaver Boos Consultants

American Environmental Group Ltd.

Well Log

DATE: 6/3/2004

PROJECT NAME: BRIDGTON

PROJECT#: 1-04-028

DRILLING

GEW 58	WELL NUMBER OR NAME
136'	LINEAR FEET OF DRILLING
136'	LINEAR FEET OF COMPLETION
0'	LINEAR FEET OF ABANDONMENT

Time in: Time out:

Weather conditions: Sunny

Site conditions:

Rig hrs:

Service: Oil/ OK Raidiator/ OK Grease/ OK

NOTES:

northing 1067359

easting 516560

Well Asbuild

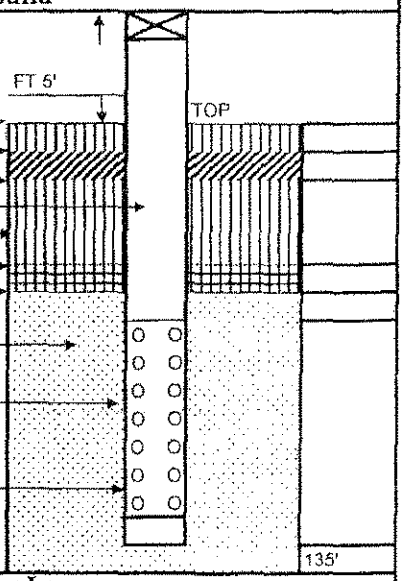

Top of ground elv.	554.65
Backfill Material	1'
Bentonite plug	2'
Length of Solid	21'
Backfill Material	18'
Bentonite plug	2'
Isolation Layer	1'
Length of Gravel Pack	117'
Length of Perf. Pipe	115'
Style of Pipe	8"SCH80 PVC
Bottom of bore	136
Bore diameter	36"

MONITORING LOG

Time	OXYGEN	H2S		LEL / CO	
7:00	20.9	0	0	0	GW 57
8:00	"	0	0	0	
9:00	"	0	0	0	
10:00	20.9	0	0	0	GW 58
11:00	"	0	0	0	
12:00	"	0	0	0	
1:00	"	0	0	0	
2:00	"	0	0	0	
3:00	"	0	0	0	
4:00	"	0	0	0	
5:00	20.9	0	0	0	GW 65
6:00					

Notes

Well Boring Log

Depth	Composition	Degree of Decomp.	Degree of Moisture	Temp
0-10	DIRT-MSW	LIGHT	DRY	70
10-20	"	LIGHT	DRY	72
20-30	MSW	LIGHT	DRY	75
30-40	WOOD-MSW	LIGHT	DRY	75
40-50	MSW	LIGHT	DRY	75
50-60	STEEL-MSW	LIGHT	DRY	83
60-70	MSW	LIGHT	DRY	88
70-80	MSW	LIGHT	DRY	96
80-90	MSW	LIGHT	DRY	102
90-100	MSW	HEAVY	Moisture	106
100-110	MSW	HEAVY	Moisture	106
110-120	MSW	HEAVY	Moisture	111
120-130	M SW	HEAVY	Moisture	115
130-140	MSW	HEAVY	Moisture	TD 136'
140-150				

CLIENT REPRESENTATIVE DATE

NAME & TITLE

BRETT WILLIS 6/3/2004

AEGL SITE SUPERVISOR DATE

Gas Extraction Well Drilling Summary

Weaver Boos Consultants

Project Name: 2009 Gas System | Project Number: 0120-131-17

Project Location: Bridgeton Landfill | QA/QC Monitor: Joshua Ross

Well No.: 59R | Elevation: Ground 551.0

Exact Location (Coordinates): N:1067487.5 E:516435.1

Date Started: 9/17/2009 | Date Completed: 9/17/2009

Boring Size: 36 inch | Total Depth: 134

Length of Perforated Pipe: 113 | Length of Solid Pipe: 20

Comments: 20 feet south of existing

Depth	Material Drilled	Temp.	Comment
0-2	trash/dry	93	
2-4	trash/dry	93	
4-6	trash/dry	93	
6-10	trash/dry	93	
10-15	trash/dry	97	
15-20	trash/dry	97	
20-25	trash/dry	99	
25-30	trash/dry	99	
30-35	trash/dry	99	
35-40	trash/dry	102	
40-45	trash/dry	102	
45-50	trash/dry	102	
50-55	trash/dry	105	
55-60	trash/dry	105	
60-65	trash/dry	109	
65-70	trash/dry	109	
70-75	trash/dry	111	
75-80	trash/dry	111	
80-85	trash/dry	111	
85-90	trash/dry	115	
90-95	trash/dry	115	

Gas Extraction Well Drilling Summary

Weaver Boos Consultants

Project Name:	2009 Gas System	Project Number:	0120-131-17
Project Location:	Bridgeton Landfill	QA/QC Monitor:	Joshua Ross

95-100	trash/dry	121	
100-105	trash/dry	123	
105-110	trash/dry	125	
110-115	trash/dry	129	
115-120	trash/wet	134	
120-125	trash/wet	134	
125-130	sludge/wet	139	
130-135	sludge/wet	141	
135-140			
140-145			
145-150			

Record of Gas Well Installation

Job Number: 0120-131-17 Job Name: 2009 gas system Well Number: 59 R
Drilling Contractor: A.E.G.L Observed By: Joshua Ross
Started Install.: 9-17-09 Completed Install.: 9-17-09
Time: 6:00am Time: 4:00pm

Top of Flange Elevation: _____
Ground Surface Elevation: 551.0 Location: N 1067487.5 E 516435.1

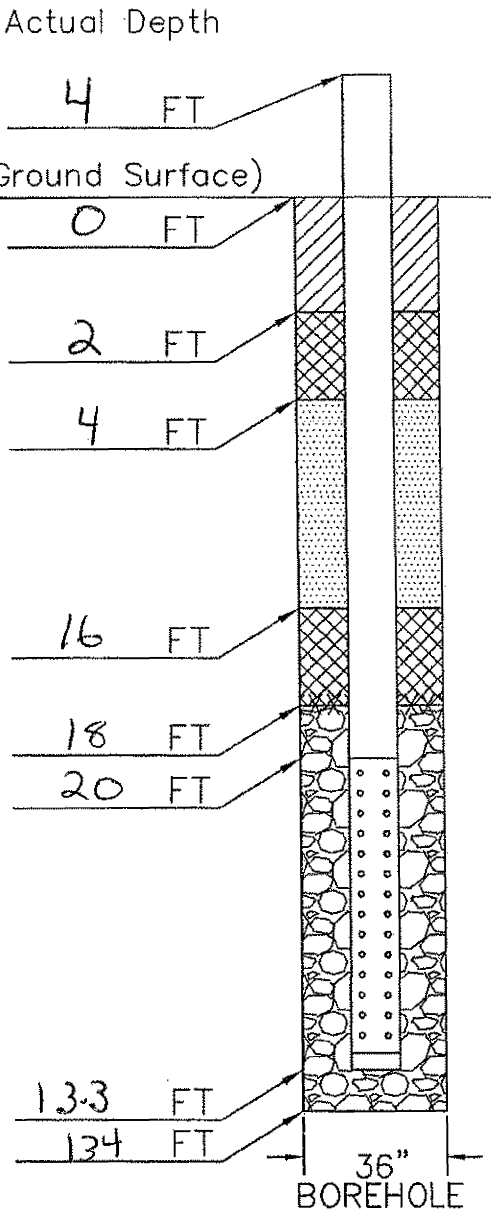

Materials

Intermediate or Final Cover:
- Material: clay soil material

Top Seal:
- Material: Granular bentonite
- Quntity: 12 bags
- Hydrated: yes

Backfill:
- Material: clay soil material

Bottom Seal:
- Material: Granular bentonite
- Quntity: 12 bags
- Hydrated: yes

Filter Pack:
- Material: 1" to 3" gravel

Riser:
- Material: CPVC
- Quantity: 24 Feet
- Diameter: 6in

Screen:
- Material: CPVC
- Quantity: 113
- Diameter: 6in
- Plug: 6in cap

Weaver Boos Consultants

Gas Extraction Well Drilling Summary

Weaver Boos Consultants

Project Name: 2009 Gas System | Project Number: 0120-131-17

Project Location: Bridgeton Landfill | QA/QC Monitor: Joshua Ross

Well No.: 60R | Elevation: Ground 551.9

Exact Location (Coordinates): N:1067128.0 E:516480.7

Date Started: 9/18/2009 | Date Completed: 9/18/2009

Boring Size: 36 inch | Total Depth: 150

Length of Perforated Pipe: 129 | Length of Solid Pipe: 20

Comments: 20 feet west of existing

Depth	Material Drilled	Temp.	Comment
0-2	soil/dry	92	
2-4	soil/dry	92	
4-6	soil/dry	92	
6-10	soil/dry	92	
10-15	trash/dry	96	
15-20	trash/dry	96	
20-25	trash/dry	96	
25-30	trash/dry	99	
30-35	trash/dry	99	
35-40	trash/dry	100	
40-45	trash/dry	101	
45-50	trash/dry	103	
50-55	trash/dry	103	
55-60	trash/dry	105	
60-65	trash/dry	105	
65-70	trash/dry	105	
70-75	trash/dry	105	
75-80	trash/dry	111	
80-85	trash/dry	111	
85-90	trash/dry	111	
90-95	trash/dry	111	

Gas Extraction Well Drilling Summary

Weaver Boos Consultants

Project Name:	2009 Gas System	Project Number:	0120-131-17
Project Location:	Bridgeton Landfill	QA/QC Monitor:	Joshua Ross

95-100	trash/dry		113	
100-105	trash/dry		113	
105-110	trash/dry		116	
110-115	trash/dry		116	
115-120	trash/dry		119	
120-125	trash/dry		124	
125-130	trash/dry		124	
130-135	trash/dry		127	
135-140	trash/dry		127	
140-145	trash/dry		129	
145-150	trash/dry		131	

Record of Gas Well Installation

Job Number: 0120-131-17 Job Name: 2009 gas system Well Number: 60R
Drilling Contractor: A.E.G.L Observed By: Joshua Ross
Started Install.: 9-18-09 Completed Install.: 9-18-09
Time: 6.00am Time: 5.00pm

Top of Flange Elevation: _____
Ground Surface Elevation: 551.9 Location: N 1067128.0 E 516480.7

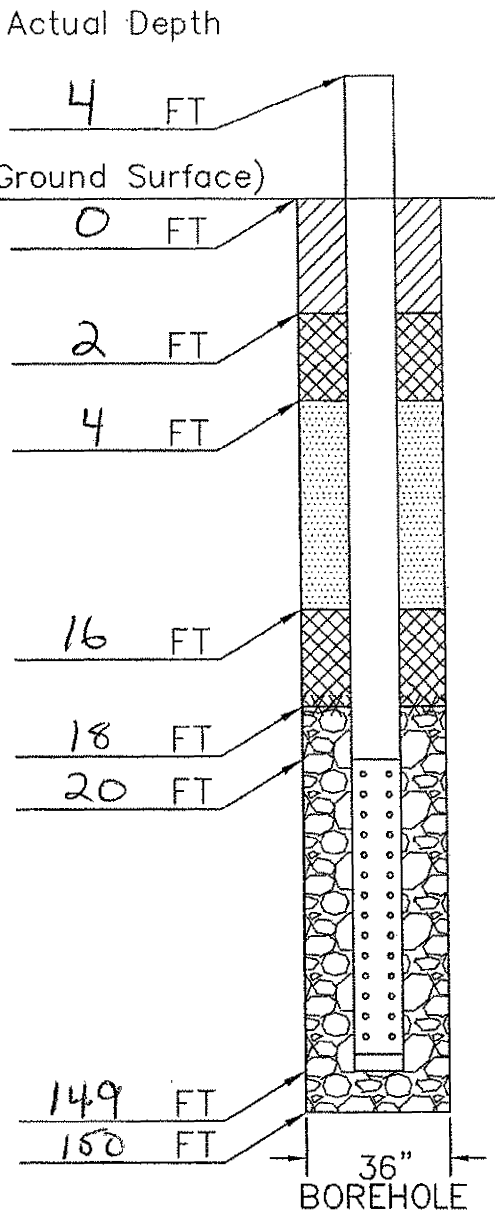

Materials

Intermediate or Final Cover:
- Material: clay soil material

Top Seal:
- Material: Granular bentonite
- Quntity: 12 bags
- Hydrated: yes

Backfill:
- Material: clay soil material

Bottom Seal:
- Material: Granular bentonite
- Quntity: 12 bags
- Hydrated: yes

Filter Pack:
- Material: 1" to 3" gravel

Riser:
- Material: CPVC
- Quantity: 24 Feet
- Diameter: 6in

Screen:
- Material: CPVC
- Quantity: 129
- Diameter: 6in
- Plug: 6in cap

Weaver Boos Consultants

Gas Extraction Well Drilling Summary

Weaver Boos Consultants

Project Name: 2009 Gas System | Project Number: 0120-131-17

Project Location: Bridgeton Landfill | QA/QC Monitor: Joshua Ross

Well No.: 61R | Elevation: Ground 555.6

Exact Location (Coordinates): N:1067265.1 E:516465.1

Date Started: 9/21/2009 | Date Completed: 9/21/2009

Boring Size: 36 inch | Total Depth: 150

Length of Perforated Pipe: 129 | Length of Solid Pipe: 20

Comments: 15 feet NE of existing well

Depth	Material Drilled	Temp.	Comment
0-2	soil/dry	92	
2-4	soil/dry	92	
4-6	soil/dry	92	
6-10	soil/dry	92	
10-15	trash/dry	94	
15-20	trash/dry	94	
20-25	trash/dry	95	
25-30	trash/dry	95	
30-35	trash/dry	95	
35-40	trash/dry	97	
40-45	trash/dry	97	
45-50	trash/dry	99	
50-55	trash/dry	101	
55-60	trash/dry	101	
60-65	trash/dry	103	
65-70	trash/dry	105	
70-75	trash/dry	105	
75-80	trash/dry	107	
80-85	trash/dry	111	
85-90	trash/dry	111	
90-95	trash/dry	114	

Gas Extraction Well Drilling Summary

Weaver Boos Consultants

Project Name: 2009 Gas System | Project Number: 0120-131-17

Project Location: Bridgeton Landfill | QA/QC Monitor: Joshua Ross

95-100	trash/dry		114	
100-105	trash/dry		117	
105-110	trash/dry		121	
110-115	trash/dry		124	
115-120	trash/dry		124	
120-125	trash/dry		128	
125-130	trash/dry		128	
130-135	trash/dry		128	
135-140	trash/dry		128	
140-145	trash/dry		131	
145-150	trash/dry		131	

Record of Gas Well Installation

Job Number: 0120-131-17 Job Name: 2009 gas system Well Number: 61R
Drilling Contractor: A.E.G.L Observed By: Joshua Ross
Started Install.: 9-21-09 Completed Install.: 9-21-09
Time: 6:00am Time: 5:30pm

Top of Flange Elevation: _____
Ground Surface Elevation: 555.6 Location: N 1067265.1 E 516465.1

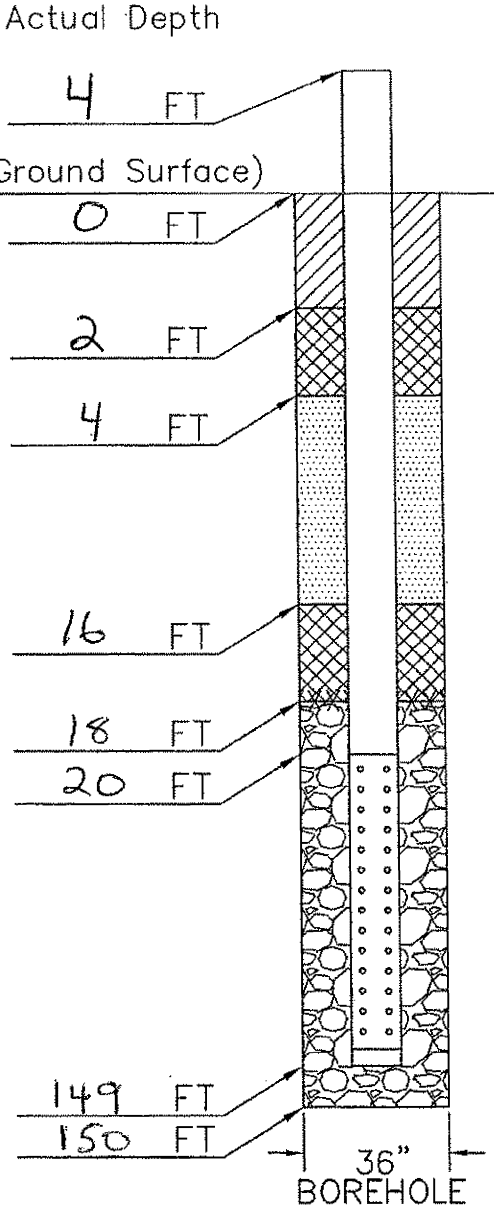

Materials

Intermediate or Final Cover:
- Material: clay soil material

Top Seal:
- Material: Granular bentonite
- Quntity: 12 bags
- Hydrated: yes

Backfill:
- Material: clay soil material

Bottom Seal:
- Material: Granular bentonite
- Quntity: 12 bags
- Hydrated: yes

Filter Pack:
- Material: 1" to 3" gravel

Riser:
- Material: CPVC
- Quantity: 24 Feet
- Diameter: 6in

Screen:
- Material: CPVC
- Quantity: 129
- Diameter: 6in
- Plug: 6in cap

Weaver Boos Consultants

Gas Extraction Well Drilling Summary

Weaver Boos Consultants

Project Name:	2009 Gas System	Project Number:	0120-131-17
Project Location:	Bridgeton Landfill	QA/QC Monitor:	Joshua Ross
Well No.:	62R	Elevation:	Ground 556.6
Exact Location (Coordinates):	N:1067375.2	E:516320.3	
Date Started:	8/21/2009	Date Completed:	8/21/2009
Boring Size:	36 inch	Total Depth:	70
Length of Perforated Pipe:	49	Length of Solid Pipe:	20
Comments:	15 foot south of existing		

Depth	Material Drilled	Temp.	Comment
0-2	soil/dry	92	
2-4	soil/dry	94	
4-6	soil/dry	95	
6-10	soil/dry	95	
10-15	trash/dry	96	
15-20	trash/dry	97	
20-25	trash/dry	97	
25-30	trash/dry	97	
30-35	trash/dry	98	
35-40	trash/dry	100	
40-45	trash/dry	101	
45-50	trash/dry	100	
50-55	trash/dry	100	
55-60	trash/dry	105	
60-65	trash/dry	108	
65-70	trash/dry	110	
70-75			
75-80			
80-85			
85-90			
90-95			

Record of Gas Well Installation

Job Number: 0120-131-17 Job Name: 2009 gas system Well Number: 62R
Drilling Contractor: A.E.G.L Observed By: Joshua Ross
Started Install.: 8-21-09 Completed Install.: 8-21-09
Time: 6:00am Time: 8:30am

Top of Flange Elevation: _____
Ground Surface Elevation: 556.6 Location: N 1067375.2 E 516320.3

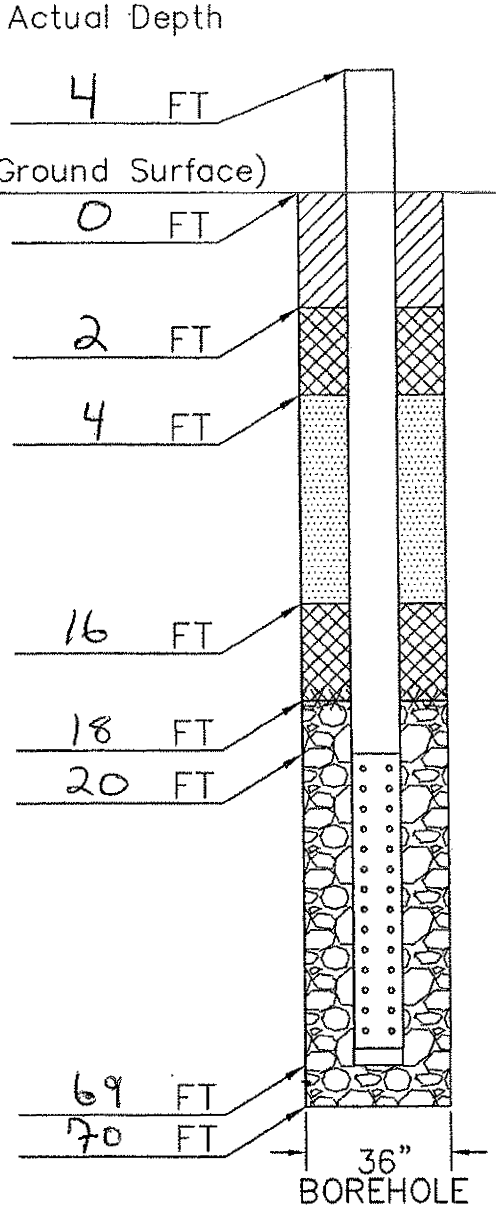

Materials

Intermediate or Final Cover:
- Material: clay soil material

Top Seal:
- Material: Granular bentonite
- Quntity: 12 bags
- Hydrated: yes

Backfill:
- Material: clay soil material

Bottom Seal:
- Material: Granular bentonite
- Quntity: 12 bags
- Hydrated: yes

Filter Pack:
- Material: 1" to 3" gravel

Riser:
- Material: CPVC
- Quantity: 24 Feet
- Diameter: 6in

Screen:
- Material: CPVC
- Quantity: 49
- Diameter: 6in
- Plug: 6in cap

Weaver Boos Consultants

American Environmental Group Ltd.

Well Log

DATE: 6/8/2004

PROJECT NAME: BRIDGETON

PROJECT#: 1-04-028

DRILLING

GEW 63 WELL NUMBER OR NAME

107' LINEAR FEET OF DRILLING

107' LINEAR FEET OF COMPLETION

0' LINEAR FEET OF ABANDONMENT

Time in: Time out:

Weather conditions: Sunny

Site conditions:

Rig hrs:

Service: Oil/ OK Raidiator/ OK Grease/ OK

NOTES:

northing 1067568

easting 516279

Well Asbuild

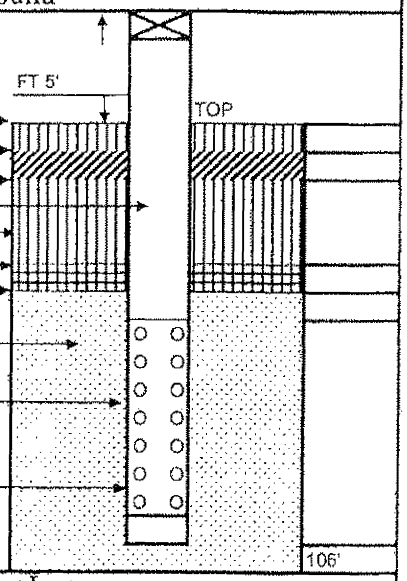

Top of ground elv.	507.88
Backfill Material	1'
Bentonite plug	2'
Length of Solid	25'
Backfill Material	17'
Bentonite plug	2'
Isolation Layer	1'
Length of Gravel Pack	84'
Length of Perf. Pipe	82'
Style of Pipe	6"SCH80 PVC
Bottom of bore	107'
Bore diameter	36"

MONITORING LOG

Time	OXYGEN	H2S		LEL / CO
7:00	20.9	0	0	0 GEW 65
8:00	"	0	0	0
9:00	"	0	0	0
7:00	20.9	0	0	0 6-5-04
7:00	20.9	0	0	0 6-07-04
6:30	20.9	0	0	0 6-08-04
1:00				
2:00				
3:00				
4:00				
5:00				
6:00				

Notes

Well Boring Log

Depth	Composition	Degree of Decomp.	Degree of Moisture	Temp
0-10	DIRT-ROC	LIGHT	DRY	74
10-20	MSW	LIGHT	DRY	86
20-30	MSW	LIGHT	DRY	91
30-40	MSW	LIGHT	DRY	98
40-50	MSW	LIGHT	DRY	101
50-60	MSW	LIGHT	DRY	103
60-70	MSW	LIGHT	DRY	103
70-80	MSW	LIGHT	DRY	114
80-90	WOOD-STEEL	LIGHT	Moisture	116
90-100	MSW	LIGHT	Moisture	116
100-110	MSW	LIGHT	Moisture	TD 107'
110-120				
120-130				
130-140				
140-150				

CLIENT REPRESENTATIVE DATE

NAME & TITLE

BRETT WILLIS 6/8/2004

AEGL SITE SUPERVISOR DATE

Aquaterra Drilling Log

HOLE NO. GEW-64 | SHEET 1 OF 2 SHEETS

PROJECT NAME: Bridgeton Landfill · Gas System Install	DRILLING SUBCONTRACTOR: AEG
PROJECT NUMBER: 0203w008	NAME OF DRILLER(S): John Stanley
LOCATION: Bridgeton, MO	MANUFACTURER'S DESIGNATION OF DRILL: IMT / Caterpillar
HOLE LOCATION: GEW-64	SIZES AND TYPES OF DRILLING AND SAMPLING EQUIPMENT: 36 inch Borehole
SURFACE ELEVATION: —	
OVERBURDEN THICKNESS:	DRILLING START DATE: 8/20/03 — DRILLING END DATE: 8/21/03
DEPTH DRILLED INTO ROCK: —	DEPTH GROUNDWATER ENCOUNTERED: —
TOTAL DEPTH OF HOLE: 140 feet	DEPTH TO WATER AND ELAPSED TIME AFTER DRILLING COMPLETED: —

GEOTECHNICAL SAMPLES (TOTAL)	DISTURBED	UNDISTURBED	TOTAL NUMBER OF CORE BOXES
—	—	—	—

SAMPLES FOR CHEMICAL ANALYSIS (TOTAL)	(SPECIFY)	(SPECIFY)	(SPECIFY)	(SPECIFY)	(SPECIFY)	TOTAL CORE RECOVERY
—	—	—	—	—	—	—

DISPOSITION OF HOLE	BACKFILLED	MONITORING WELL	OTHER (SPECIFY)	SIGNATURE OF INSPECTOR
—	—	—	—	Heather L Hagan

DEPTH	DESCRIPTION OF MATERIALS	FIELD SCREENING RESULTS	GEOTECH SAMPLE RESULTS	ANALYTICAL SAMPLE NO.	TIME	REMARKS
	2 feet of cover soil				1515	
	Refuse	80°F				
30		80°F				
	Refuse	81°F				
40		81°F				
					1645	End of drilling on 8/20/03 at 50 ft
50		84°F			715	Resume drilling on 8/21/03
	Refuse					
60						

AQUATERRA ENVIRONMENTAL SOLUTIONS, INC.

PROJECT NAME: | HOLE NO.: GEW-64

Aquaterra Drilling Log

HOLE NO. GEW-64 | SHEET 1 OF SHEETS 2

PROJECT NAME: Bridgeton Landfill - Gas System Install

INSPECTOR: Nathan Hagerson

DEPTH	DESCRIPTION OF MATERIALS	FIELD SCREENING RESULTS	GEOTECH SAMPLE RESULTS	ANALYTICAL SAMPLE NO.	TIME	REMARKS
60	Refuse					
70						
					900	
80						
90	Refuse					
110					1100	
120	Refuse				1130	
130						
					1300	
140	End of boring at 140 ft.					No Asbestos Containing Materials Encountered

AQUATERRA ENVIRONMENTAL SOLUTIONS, INC.

PROJECT NAME

HOLE NO.

American Environmental Group Ltd.

Well Form

DATE: 08/21/2003

PROJECT NAME: Bridgeton

PROJECT#: 1-03-011

DRILLING

GW 64 WELL NUMBER OR NAME

140' LINEAR FEET OF DRILLING

140' LINEAR FEET OF COMPLETION

0 LINEAR FEET OF ABANDONMENT

NOTES:

Well Asbuild

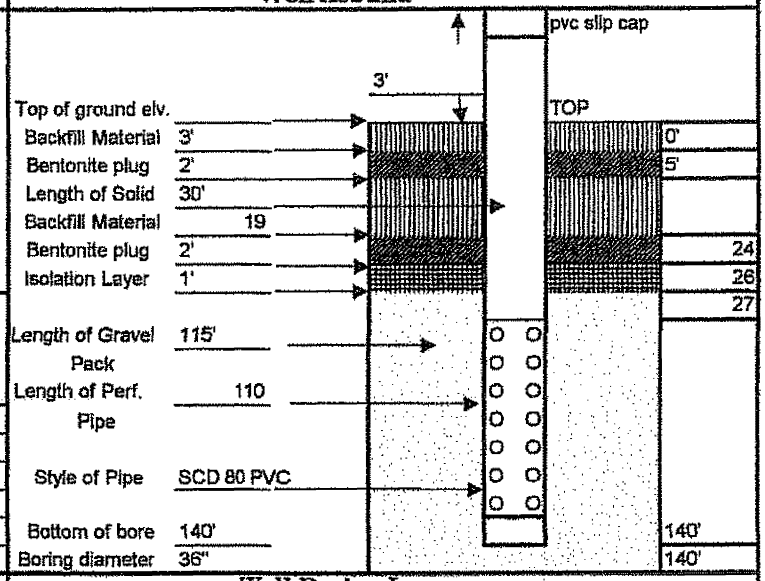

MONITORING LOG

Calibration date 08/22/03

Time	OXYGEN	H2S	LEL / CO-	Date
07:00	20.9	0	0 0	GW 64
08:00	"	0	0 0	"
09:00	"	0	0 0	"
10:00	"	0	0 0	"
11:00	"	0	0 0	"
12:00	"	0	0 0	"
01:00	"	0	0 0	"
02:00	"	0	0 0	"
03:00	20.9	0	0 0	GW61
04:00	"	0	0 0	"
05:00	"	0	0 0	"
06:00				

Notes

Well Boring Log

Depth	Composition	Degree of Comp.	Degree of Moisture	Temp
0-10	cover res was.	slight	dry	
10-20	"	slight	dry	80
20-30	"	slight	dry	
30-40	"	slight	Moisture	81
40-50	"	slight	"	
50-60	dirt "	moderate	"	86
60-70	"	moderate	dry	
70-80	"	slight	dry	97
80-90	"	moderate	dry	
90-100	"	moderate	dry	97
100-110	c&d "	heavy	dry	
110-120	"	heavy	dry	104
120-130	"	heavy	dry	
130-140	"	heavy	dry	TD 140'
140-150				

CLIENT REPRESENTATIVE DATE

NAME & TITLE

John Stanley 08/21/2003

AEGL SITE SUPERVISOR DATE

Aquaterra Drilling Log

HOLE NO. GEW 65A | SHEET 1 OF 2 SHEETS

PROJECT NAME: GEW 23A & 27A CQA	DRILLING SUBCONTRACTOR: PDI
PROJECT NUMBER: 2048.10	NAME OF DRILLER(S): MITCH WILKENSON
LOCATION: BRIDGETON, MISSOURI	MANUFACTURER'S DESIGNATION OF DRILL: WESTERN BORE 200 CRAWLER DRILL
HOLE LOCATION: 35' NORTHEAST OF GEW 65 ON TOP OF 2006 FINAL COVER HILL	SIZES AND TYPES OF DRILLING AND SAMPLING EQUIPMENT: 24" BUCKET; 2 OPERATORS FROM LAMBERT; 35" DIAMETER HOLE
SURFACE ELEVATION: 572±	
OVERBURDEN THICKNESS: 5' ±	DRILLING START DATE: 10-4-06 / DRILLING END DATE: 10-5-06
DEPTH DRILLED INTO ROCK: NO	DEPTH GROUNDWATER ENCOUNTERED: NO
TOTAL DEPTH OF HOLE: 135	DEPTH TO WATER AND ELAPSED TIME AFTER DRILLING COMPLETED: NO

GEOTECHNICAL SAMPLES (TOTAL)	DISTURBED	UNDISTURBED	TOTAL NUMBER OF CORE BOXES
–	–	–	–

SAMPLES FOR CHEMICAL ANALYSIS (TOTAL)	(SPECIFY)	(SPECIFY)	(SPECIFY)	(SPECIFY)	(SPECIFY)	TOTAL CORE RECOVERY
–	–	–	–	–	–	–

DISPOSITION OF HOLE	BACKFILLED	MONITORING WELL	OTHER (SPECIFY)	SIGNATURE OF INSPECTOR
FILLED	SOIL, GRAVEL, BENTONITE	–	GAS WELL	TERRY L. MUELLER

DEPTH	DESCRIPTION OF MATERIALS	FIELD SCREENING RESULTS	GEOTECH SAMPLE RESULTS	ANALYTICAL SAMPLE NO.	TIME	REMARKS
0	0+00				1100	
	CH	0+02		SOIL		
	0+05	0+05		BENTONITE		
10			SOIL			
	WASTE		6" SOLID PVC			DRY
20						
30		0+29		BENTONITE		
	0+32				1200	
		0+32		SOIL		
		0+33				
		0+34				
40	WASTE					
			GRAVEL			WASTE TEMPERATURE
	0+47		6" PERFORATED PVC		1300	75°-80°F
50						
	WASTE					
			GRAVEL			
	0+59				1400	
60						

AQUATERRA ENVIRONMENTAL SOLUTIONS, INC.

PROJECT NAME: GEW 23A & 27A CQA | HOLE NO.: GEW 65A

Aquaterra Drilling Log

HOLE NO. GEW-65A | SHEET 2 OF 2 SHEETS

PROJECT NAME: GEW 23A & 27A CQA

INSPECTOR: (TERRY L. MUELLER)

DEPTH	DESCRIPTION OF MATERIALS	FIELD SCREENING RESULTS	GEOTECH SAMPLE RESULTS	ANALYTICAL SAMPLE NO.	TIME	REMARKS
60						
	WASTE					
70	0+74				1500	
	WASTE					↑ DRY ↓
80	0+87				1600	
	WASTE					
90	0+95				1700	
	WASTE		GRAVEL		↑	
	1+02		6" PERFORATED		1800 10-4-06	WASTE TEMPERATURE
					0700 10-5-06	105°-110°
	WASTE				↓	
110	1+11				0800	↑ MOIST ↓
	WASTE					
	1+20				0900	WASTE TEMPERATURE 130°F
120	WASTE 1+23				1000	CONCRETE CHUNKS REMOVED
	WASTE 1+26				1100	
	WASTE 1+30				1200	NEWSPAPER & MAGAZINES FOUND FROM JANUARY 2000
130	WASTE		134			
	1+35	135			1300	WASTE TEMPERATURE 130°F
140						
						NO ASBESTOS MATERIAL OBSERVED
150						

AQUATERRA ENVIRONMENTAL SOLUTIONS, INC.

PROJECT NAME: GEW 23A & 27A CQA

HOLE NO.: GEW 65A

AQUATERRA
ENVIRONMENTAL SOLUTIONS, INC.
141 Market Place Drive
Fairveiw Heights, Illinois 62208

GAS WELL CONSTRUCTION DIAGRAM

PROJECT NUMBER: 2048.10
PROJECT NAME: GEW 23A & 27A CDA
GAS WELL NO.: 65 A
WELL LOCATION: TOP OF 2006 FINAL COVER - ~~[illegible]~~ 35' NORTHEAST OF WELL 65
INSTALLATION START DATE: 10-4-06
COMPLETION DATE: 10-5-06
DRILLER: MITCH WILKENSON PDI
INSPECTOR: [signature] (TERRY L. MUELLER)

COMMENTS:

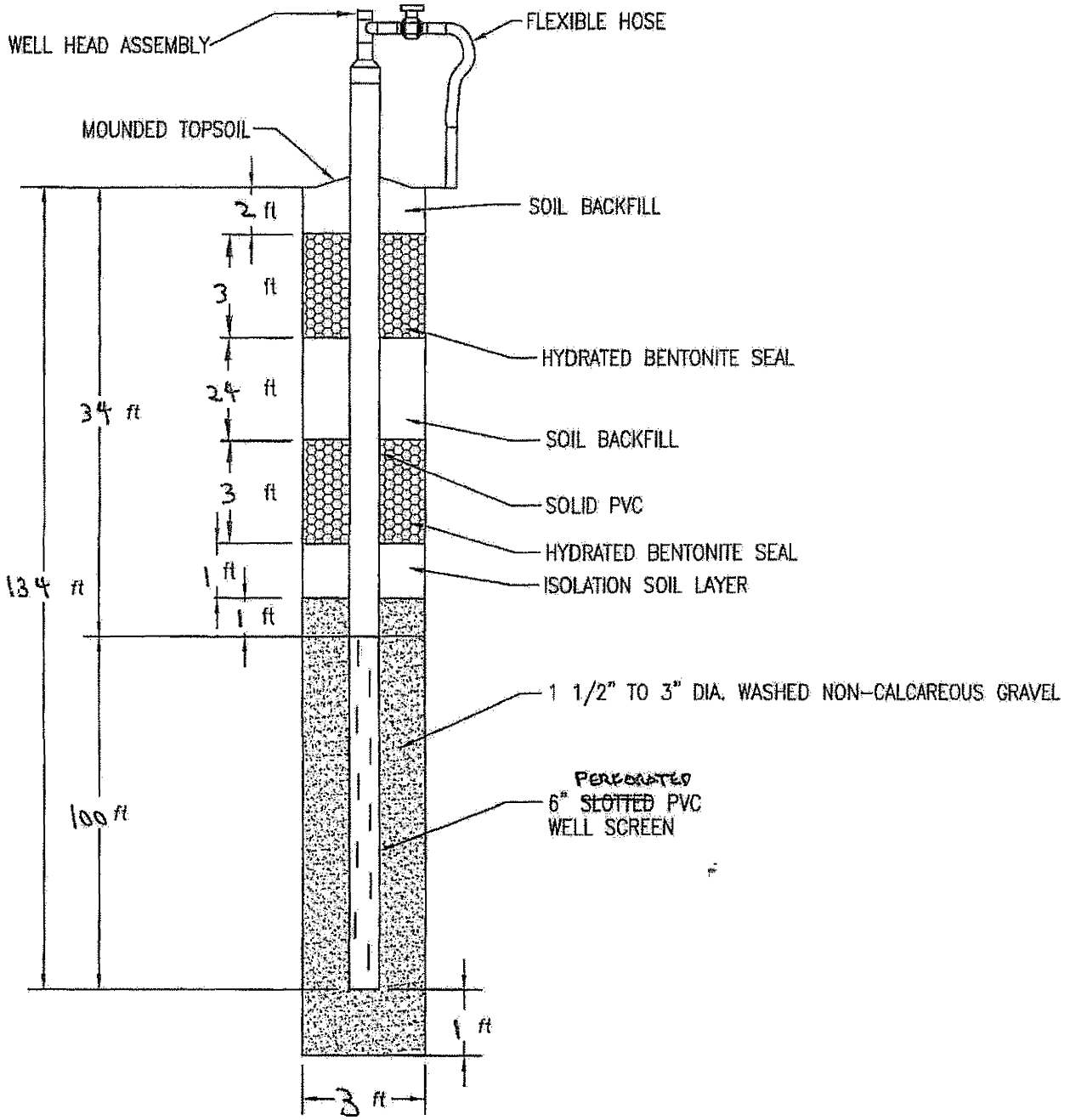

Aquaterra Drilling Log

HOLE NO. GEW-66 | SHEET 1 OF 2 SHEETS

PROJECT NAME: Bridgeton Landfill - Gas System Installation	DRILLING SUBCONTRACTOR: AEG
PROJECT NUMBER: 0203008	NAME OF DRILLER(S): John Stanley
LOCATION: Bridgeton, MO	MANUFACTURER'S DESIGNATION OF DRILL: IMT / Caterpiller
HOLE LOCATION: GEW-66	SIZES AND TYPES OF DRILLING AND SAMPLING EQUIPMENT: 36 inch borehole
SURFACE ELEVATION: —	
OVERBURDEN THICKNESS: —	DRILLING START DATE: 8/16/03 — DRILLING END DATE: 8/17/03
DEPTH DRILLED INTO ROCK: —	DEPTH GROUNDWATER ENCOUNTERED: —
TOTAL DEPTH OF HOLE: 140 feet	DEPTH TO WATER AND ELAPSED TIME AFTER DRILLING COMPLETED: —

GEOTECHNICAL SAMPLES (TOTAL)	DISTURBED	UNDISTURBED	TOTAL NUMBER OF CORE BOXES
—	—	—	—

SAMPLES FOR CHEMICAL ANALYSIS (TOTAL)	(SPECIFY)	(SPECIFY)	(SPECIFY)	(SPECIFY)	(SPECIFY)	TOTAL CORE RECOVERY
—	—	—	—	—	—	—

DISPOSITION OF HOLE	BACKFILLED	MONITORING WELL	OTHER (SPECIFY)	SIGNATURE OF INSPECTOR
—	—	—	—	Nathan J Hyzer

DEPTH	DESCRIPTION OF MATERIALS	FIELD SCREENING RESULTS	GEOTECH SAMPLE RESULTS	ANALYTICAL SAMPLE NO.	TIME	REMARKS
	18 inches of cover soil				1030	
	Refuse	73°F				
20		76°F			1050	
30	Refuse	83°F				
40		84°F				
					1200	
50		87°F				
	Refuse	87°F				
60						

AQUATERRA ENVIRONMENTAL SOLUTIONS, INC.

PROJECT NAME:

HOLE NO. GEW-66

Aquaterra Drilling Log

HOLE NO. GEW-66 | SHEET 2 OF SHEETS 2

PROJECT NAME: Bridgeton Landfill - Gas System Install

INSPECTOR: Nathan Higgerson

DESCRIPTION OF MATERIALS	FIELD SCREENING RESULTS	GEOTECH SAMPLE RESULTS	ANALYTICAL SAMPLE NO.	TIME	REMARKS
Refuse	98°F			1	
	102°F			1300	
	106°F				
Refuse	114°F			1440	End of drilling on 8/16/03 at 100 ft
				800	Resumes drilling on 8/17/03
Refuse					
Refuse					
End of boring at 140 ft				1040	No Asbestos Containing Materials Encountered

AQUATERRA ENVIRONMENTAL SOLUTIONS, INC.

PROJECT NAME

HOLE NO. GEW-66

American Environmental Group Ltd.

Well Form

DATE: 08/17/03

PROJECT NAME: Bridgeton

PROJECT#: 1-03-011

DRILLING

GW 66 WELL NUMBER OR NAME

40' LINEAR FEET OF DRILLING

140' LINEAR FEET OF COMPLETION

0 LINEAR FEET OF ABANDONMENT

NOTES:

Well Asbuild

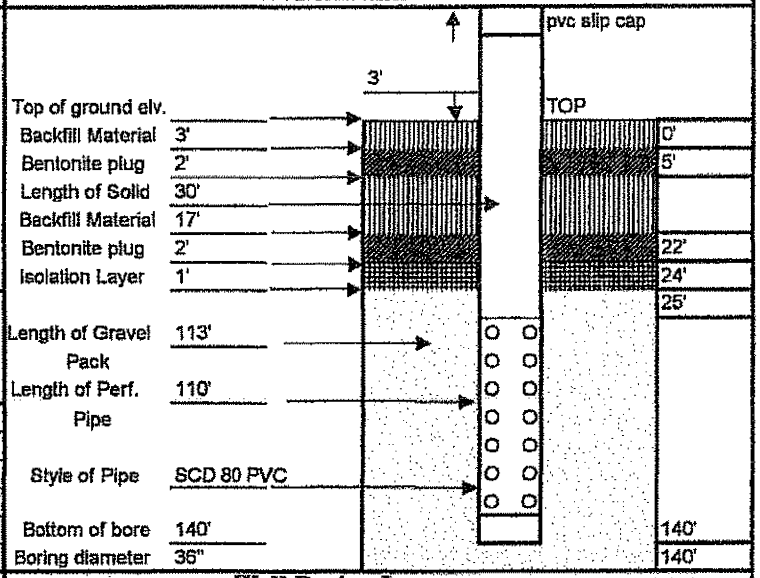

MONITORING LOG

Calibration date 08/17/03

Time	OXYGEN	H2S	LEL	CO	Date
07:00	20.9	0	0	0	GW 66
08:00	"	0	0	0	"
09:00	"	0	0	0	"
10:00	"	0	0	0	"
11:00	"	0	0	0	"
12:00					
01:00					
02:00					
03:00					
04:00					
05:00					
06:00					

Notes

Well Boring Log

Depth	Composition		Degree of Comp.	Degree of Moisture	Temp
0-10	cover	res was.	slight	dry	
10-20		"	slight	dry	76
20-30		"	slight	dry	
30-40		"	slight	dry	84
40-50		"	slight	dry	
50-60		"	slight	dry	87
60-70		"	slight	dry	
70-80		"	slight	dry	102
80-90		"	moderate	dry	
90-100		"	moderate	dry	114
100-110		"	moderate	dry	
110-120		"	moderate	dry	112
120-130		"	moderate	dry	
130-140		"	moderate	dry	TD 140'
140-150					

CLIENT REPRESENTATIVE DATE

NAME & TITLE

John Stanley 08/17/03

AEGL SITE SUPERVISOR DATE

Aquaterra Drilling Log

HOLE NO.	SHEET 1 OF 2 SHEETS
GEW-67	

PROJECT NAME: Bridgeton Landfill - Gas System Install	DRILLING SUBCONTRACTOR: AEG
PROJECT NUMBER: 02031008	NAME OF DRILLER(S): John Stanley
LOCATION: Bridgeton, MO	MANUFACTURER'S DESIGNATION OF DRILL: JMT / Caterpillar
HOLE LOCATION: GEW-67	SIZES AND TYPES OF DRILLING AND SAMPLING EQUIPMENT: 36 inch borehole
SURFACE ELEVATION: —	
OVERBURDEN THICKNESS: —	DRILLING START DATE: 9/4/03 — DRILLING END DATE: 9/5/03
DEPTH DRILLED INTO ROCK: —	DEPTH GROUNDWATER ENCOUNTERED: —
TOTAL DEPTH OF HOLE: 135 feet	DEPTH TO WATER AND ELAPSED TIME AFTER DRILLING COMPLETED: —

GEOTECHNICAL SAMPLES (TOTAL)	DISTURBED	UNDISTURBED	TOTAL NUMBER OF CORE BOXES
—	—	—	—

SAMPLES FOR CHEMICAL ANALYSIS (TOTAL)	(SPECIFY)	(SPECIFY)	(SPECIFY)	(SPECIFY)	(SPECIFY)	TOTAL CORE RECOVERY
—	—	—	—	—	—	—

DISPOSITION OF HOLE	BACKFILLED	MONITORING WELL	OTHER (SPEICFY)	SIGNATURE OF INSPECTOR
—	—	—	—	[signature]

DEPTH	DESCRIPTION OF MATERIALS	FIELD SCREENING RESULTS	GEOTECH SAMPLE RESULTS	ANALYTICAL SAMPLE NO.	TIME	REMARKS
	6 inches of cover soil				~~1430~~ 1445	
	Refuse					
20						
30	Refuse					
40						
					1545	
50						
					1600	End of drilling on 9/4/03 @ 55 feet.
					715	Resumed drilling on 9/5/03

AQUATERRA ENVIRONMENTAL SOLUTIONS, INC.

PROJECT NAME	HOLE NO.
	GEW-67

Aquaterra Drilling Log

HOLE NO. GEW-67 | SHEET 2 OF 2 SHEETS

PROJECT NAME: Bridgeton Landfill Gas System Install

INSPECTOR: Nathan Higgerson

DEPTH	DESCRIPTION OF MATERIALS	FIELD SCREENING RESULTS	GEOTECH SAMPLE RESULTS	ANALYTICAL SAMPLE NO.	TIME	REMARKS
70	Refuse					
80						
90	Refuse					
100					1100	
110						
120						
130	Refuse				1400	
140	End of boring at 135 feet					No Asbestos Containing Materials Encountered. Well was stopped at 135 feet for safety reasons.

AQUATERRA
ENVIRONMENTAL SOLUTIONS, INC.

PROJECT NAME

HOLE NO. GEW-67

American Environmental Group Ltd.

Well Form

DATE: 09/05/03

PROJECT NAME: Bridgeton

PROJECT#: 1-03-011

DRILLING

GW 67 WELL NUMBER OR NAME

135' LINEAR FEET OF DRILLING

135' LINEAR FEET OF COMPLETION

0' LINEAR FEET OF ABANDONMENT

NOTES:

Well Asbuild

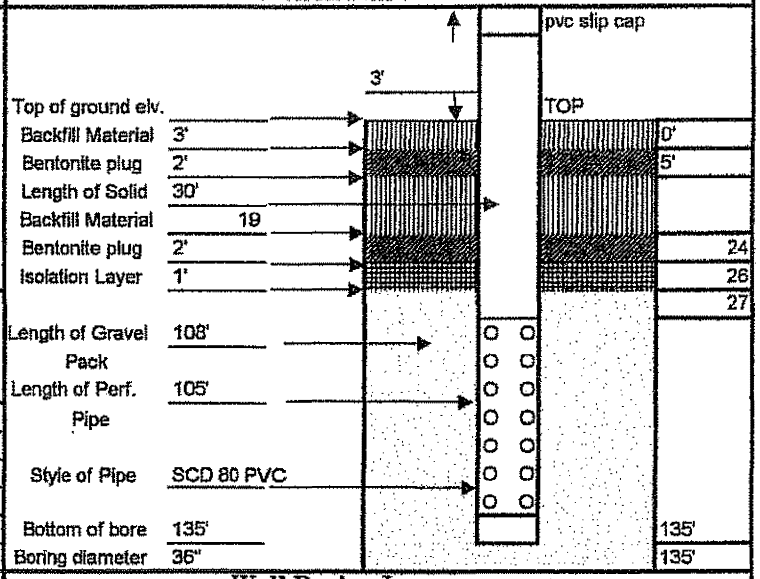

MONITORING LOG

Calibration date 09/05/03

Time	OXYGEN	H2S	LEL / CO-	Date
07:00	20.9	0	0 0	GW 67
08:00	"	0	0 0	"
09:00	"	0	0 0	"
10:00	"	0	0 0	"
11:00	"	0	0 0	"
12:00	"	0	0 0	"
01:00	"	0	0 0	"
02:00				
03:00				
04:00				
05:00				
06:00				

Notes

Well Boring Log

Depth	Composition	Degree of Comp.	Degree of Moisture	Temp
0-10	cover / res was.	slight	dry	
10-20	"	slight	dry	79
20-30	"	slight	dry	
30-40	"	slight	dry	81
40-50	"	slight	dry	
50-60	"	slight	dry	80
60-70	"	slight	dry	
70-80	"	slight	dry	86
80-90	"	slight	dry	
90-100	"	slight	dry	88
100-110	"	slight	dry	
110-120	"	moderate	dry	101
120-130	"	moderate	dry	
130-140	"	moderate	dry	TD 135'
140-150				

CLIENT REPRESENTATIVE DATE

John Stanley 09/05/03

AEGL SITE SUPERVISOR DATE

NAME & TITLE

Aquaterra Drilling Log

HOLE NO. GEW-68 | SHEET 1 OF 2 SHEETS

PROJECT NAME: Bridgeton Landfill - Gas System Install	DRILLING SUBCONTRACTOR: AEG
PROJECT NUMBER: 0203100 8	NAME OF DRILLER(S): John Stanley
LOCATION: Bridgeton, MO	MANUFACTURER'S DESIGNATION OF DRILL: IMT / Caterpillar
HOLE LOCATION: GEW-68	SIZES AND TYPES OF DRILLING AND SAMPLING EQUIPMENT: 36 inch borehole
SURFACE ELEVATION: —	
OVERBURDEN THICKNESS: —	DRILLING START DATE: 8/22/03 — DRILLING END DATE: 8/25/03
DEPTH DRILLED INTO ROCK: —	DEPTH GROUNDWATER ENCOUNTERED: —
TOTAL DEPTH OF HOLE: 135 feet	DEPTH TO WATER AND ELAPSED TIME AFTER DRILLING COMPLETED: —

GEOTECHNICAL SAMPLES (TOTAL)	DISTURBED	UNDISTURBED	TOTAL NUMBER OF CORE BOXES
—	—	—	—

SAMPLES FOR CHEMICAL ANALYSIS (TOTAL)	(SPECIFY)	(SPECIFY)	(SPECIFY)	(SPECIFY)	(SPECIFY)	TOTAL CORE RECOVERY
—	—	—	—	—	—	—

DISPOSITION OF HOLE	BACKFILLED	MONITORING WELL	OTHER (SPECIFY)	SIGNATURE OF INSPECTOR
—	—	—	—	Heather L Hogan

DEPTH	DESCRIPTION OF MATERIALS	FIELD SCREENING RESULTS	GEOTECH SAMPLE RESULTS	ANALYTICAL SAMPLE NO.	TIME	REMARKS
0	3 feet of cover soil (including Berm)				1500	
	Refuse	81°F				
20		86°F				
30		85°F				
40	Refuse	90°F				
50		89°F				
60		90°F				End of drilling on 8/22/03 at 60 ft

AQUATERRA ENVIRONMENTAL SOLUTIONS, INC.

PROJECT NAME: —

HOLE NO.: GEW-68

Aquaterra Drilling Log

HOLE NO. GEW-68 | SHEET 2 OF 2 SHEETS

PROJECT NAME: Bridgeton Landfill - Gas System Install

INSPECTOR: Nathan Higgerson

TH	DESCRIPTION OF MATERIALS	FIELD SCREENING RESULTS	GEOTECH SAMPLE RESULTS	ANALYTICAL SAMPLE NO.	TIME	REMARKS
					845	Resume drilling on 8/23/03
70	Refuse					
80					1035	
90	Refuse					
100						
					1200	
110						
	Refuse				1300	End of drilling on 8/28/03 at 120 ft
120					700	Resume drilling on 8/25/03
130						
	End of boring at 135 feet				930	No Asbestos containg materials encountered
140						

AQUATERRA ENVIRONMENTAL SOLUTIONS, INC.

PROJECT NAME

HOLE NO. GEW-68

American Environmental Group Ltd.

Well Form

DATE: 08/25/2003

PROJECT NAME: Bridgeton

PROJECT#: 1-03-011

DRILLING

GW 68 WELL NUMBER OR NAME

135' LINEAR FEET OF DRILLING

135' LINEAR FEET OF COMPLETION

0 LINEAR FEET OF ABANDONMENT

NOTES:

Well Asbuild

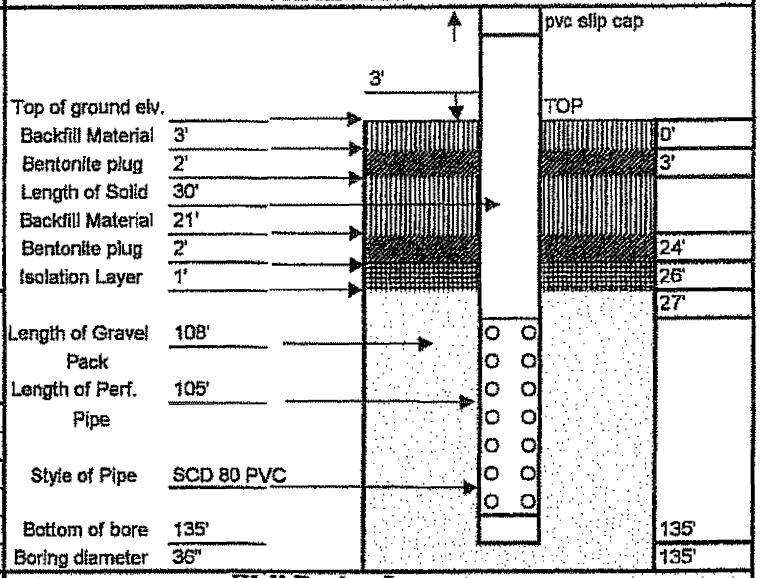

MONITORING LOG

Calibration date 08/25/03

Time	OXYGEN	H2S	LEL / CO-	Date
07:00	20.9	0	0 0	GW 68
08:00	"	0	0 0	"
09:00	"	0	0 0	"
10:00				
11:00				
12:00				
01:00				
02:00				
03:00				
04:00				
05:00				
06:00				

Notes

Well Boring Log

Depth	Composition		Degree of Comp.	Degree of Moisture	Temp
0-10	cover	res was.	slight	dry	
10-20		"	slight	dry	86
20-30		"	slight	dry	
30-40		"	slight	dry	90
40-50		"	slight	dry	
50-60	dirt	"	moderate	dry	90
60-70		"	moderate	dry	
70-80		"	slight	dry	90
80-90		"	moderate	dry	
90-100		"	moderate	dry	94
100-110	c&d	"	high	dry	
110-120		"	high	dry	99
120-130		"	high	dry	
130-140		"	high	dry	TD 135'
140-150					

CLIENT REPRESENTATIVE DATE

NAME & TITLE

John Stanley 08/25/2003

AEGL SITE SUPERVISOR DATE

Gas Extraction Well Drilling Summary

Weaver Boos Consultants

Project Name: 2009 Gas System | Project Number: 0120-131-17

Project Location: Bridgeton Landfill | QA/QC Monitor: Joshua Ross

Well No.: 69R | Elevation: Ground 561.0

Exact Location (Coordinates): N:1067020.6 E:516147.9

Date Started: 9/23/2009 | Date Completed: 9/23/2009

Boring Size: 36 inch | Total Depth: 150

Length of Perforated Pipe: 129 | Length of Solid Pipe: 20

Comments: feet wesr of existing welll

Depth	Material Drilled	Temp.	Comment
0-2	soil/dry	93	
2-4	soil/dry	93	
4-6	soil/dry	93	
6-10	soil/dry	93	
10-15	trash/dry	97	
15-20	trash/dry	97	
20-25	trash/dry	99	
25-30	trash/dry	99	
30-35	trash/dry	99	
35-40	trash/dry	100	
40-45	trash/dry	101	
45-50	trash/dry	104	
50-55	trash/dry	104	
55-60	trash/dry	105	
60-65	trash/dry	106	
65-70	trash/dry	108	
70-75	trash/dry	108	
75-80	trash/dry	109	
80-85	trash/dry	109	
85-90	trash/dry	109	
90-95	trash/dry	114	

Gas Extraction Well Drilling Summary

Weaver Boos Consultants

Project Name: 2009 Gas System | Project Number: 0120-131-17

Project Location: Bridgeton Landfill | QA/QC Monitor: Joshua Ross

95-100	trash/dry		114	
100-105	trash/dry		116	
105-110	trash/dry		120	
110-115	trash/dry		120	
115-120	trash/dry		120	
120-125	trash/dry		131	
125-130	trash/dry		131	
130-135	trash/dry		133	
135-140	trash/dry		135	
140-145	trash/dry		137	
145-150	trash/dry		137	

Record of Gas Well Installation

Job Number: 0120-131-17 Job Name: 2009 gas system Well Number: 69R
Drilling Contractor: A.E.G.L Observed By: Joshua Ross
Started Install.: 9-23-09 Completed Install.: 9-23-09
Time: 6:00am Time: 6:30pm

Top of Flange Elevation: _____
Ground Surface Elevation: 561.0 Location: N 1067020.6 E 516147.9

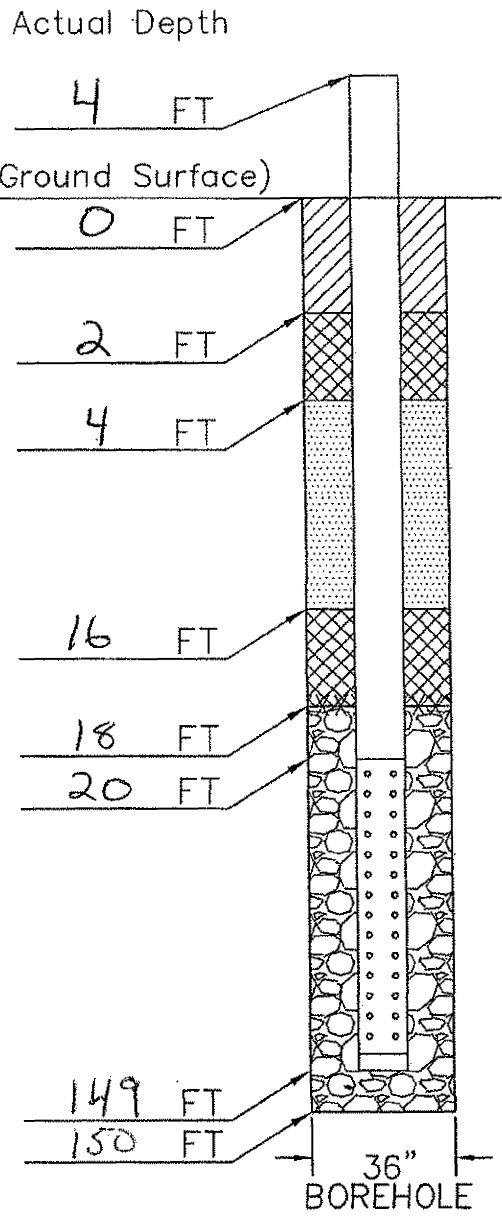

Materials

Intermediate or Final Cover:
- Material: clay soil material

Top Seal:
- Material: Granular bentonite
- Quntity: 12 bags
- Hydrated: yes

Backfill:
- Material: clay soil material

Bottom Seal:
- Material: Granular bentonite
- Quntity: 12 bags
- Hydrated: yes

Filter Pack:
- Material: 1" to 3" gravel

Riser:
- Material: CPVC
- Quantity: 24 Feet
- Diameter: 6in

Screen:
- Material: CPVC
- Quantity: 129
- Diameter: 6in
- Plug: 6in cap

Weaver Boos Consultants

Gas Extraction Well Drilling Summary

Weaver Boos Consultants

roject Name: 2009 Gas System | Project Number: 0120-131-17

Project Location: Bridgeton Landfill | QA/QC Monitor: Joshua Ross

Well No.: 70R | Elevation: Ground 563.7

Exact Location (Coordinates): N:1067133.9 E:516104.7

Date Started: 9/9/2009 | Date Completed: 9/9/2009

Boring Size: 36 inch | Total Depth: 150

Length of Perforated Pipe: 129 | Length of Solid Pipe: 20

Comments: 15 feet north of existing well

Depth	Material Drilled	Temp.	Comment
0-2	soil/dry	90	
2-4	soil/dry	90	
4-6	soil/dry	90	
6-10	soil/trash/dry	90	
10-15	trash/dry	94	
15-20	trash/dry	94	
20-25	trash/dry	94	
25-30	trash/dry	98	
30-35	trash/dry	101	
35-40	trash/dry	105	
40-45	trash/dry	109	
45-50	trash/dry	109	
50-55	trash/dry	110	
55-60	trash/dry	110	
60-65	trash/dry	111	
65-70	trash/dry	112	
70-75	trash/dry	112	
75-80	trash/dry	112	
80-85	trash/dry	115	
85-90	trash/dry	115	
90-95	trash/dry	117	

Gas Extraction Well Drilling Summary

Weaver Boos Consultants

roject Name: 2009 Gas System | Project Number: 0120-131-17

Project Location: Bridgeton Landfill | QA/QC Monitor: Joshua Ross

95-100	trash/dry		117	
100-105	trash/dry		120	
105-110	trash/dry		124	
110-115	trash/dry		127	
115-120	trash/dry		129	
120-125	trash/dry		132	
125-130	trash/dry		132	
130-135	trash/dry		135	
135-140	trash/dry		135	
140-145	trash/dry		138	
145-150	trash/dry		138	

Record of Gas Well Installation

Job Number: 0120-131-17 Job Name: 2009 gas system Well Number: 70 R
Drilling Contractor: A.E.G.L Observed By: Joshua Ross
Started Install.: 9-9-09 Completed Install.: 9-9-09
Time: 6:00am Time: 4:30pm

Top of Flange Elevation: _____
Ground Surface Elevation: 563.7 Location: N 10671339 E 516104.7

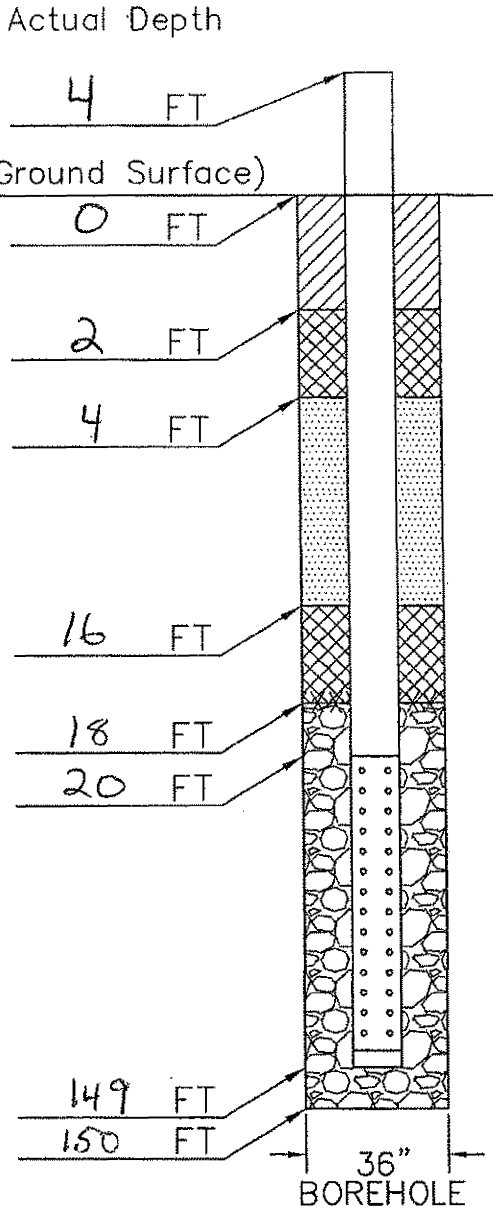

Materials

Intermediate or Final Cover:
- Material: clay soil material

Top Seal:
- Material: Granular bentonite
- Quntity: 12 bags
- Hydrated: yes

Backfill:
- Material: clay soil material

Bottom Seal:
- Material: Granular bentonite
- Quntity: 12 bags
- Hydrated: yes

Filter Pack:
- Material: 1" to 3" gravel

Riser:
- Material: CPVC
- Quantity: 24 Feet
- Diameter: 6in

Screen:
- Material: CPVC
- Quantity: 129
- Diameter: 6in
- Plug: 6in cap

Weaver Boos Consultants

Aquaterra Drilling Log

HOLE NO. GEW-71 | SHEET 1 OF 2 SHEETS

PROJECT NAME: Bridgeton Landfill - Gas System Installation	DRILLING SUBCONTRACTOR: AEG
PROJECT NUMBER: 02031008	NAME OF DRILLER(S): John Stanley
LOCATION: Bridgeton, MO	MANUFACTURER'S DESIGNATION OF DRILL: IMT / Caterpillar
HOLE LOCATION: GEW-71	SIZES AND TYPES OF DRILLING AND SAMPLING EQUIPMENT: 36 inch borehole
SURFACE ELEVATION: —	
OVERBURDEN THICKNESS: —	DRILLING START DATE: 8/12/03 — DRILLING END DATE: 8/13/03
DEPTH DRILLED INTO ROCK: —	DEPTH GROUNDWATER ENCOUNTERED: —
TOTAL DEPTH OF HOLE: 140 feet	DEPTH TO WATER AND ELAPSED TIME AFTER DRILLING COMPLETED: —

GEOTECHNICAL SAMPLES (TOTAL)	DISTURBED	UNDISTURBED	TOTAL NUMBER OF CORE BOXES
—	—	—	—

SAMPLES FOR CHEMICAL ANALYSIS (TOTAL)	(SPECIFY)	(SPECIFY)	(SPECIFY)	(SPECIFY)	(SPECIFY)	TOTAL CORE RECOVERY
—	—	—	—	—	—	—

DISPOSITION OF HOLE	BACKFILLED	MONITORING WELL	OTHER (SPECIFY)	SIGNATURE OF INSPECTOR
—	—	—	—	Matthew J. Hoppe

DEPTH	DESCRIPTION OF MATERIALS	FIELD SCREENING RESULTS	GEOTECH SAMPLE RESULTS	ANALYTICAL SAMPLE NO.	TIME	REMARKS
0	15 inches of cover soil				1158	
	Refuse	74°F				
20		74°F				
	Refuse					
30		78°F			1300	
40		79°F				
50		78°F				
	Refuse					
60		81°F				

AQUATERRA
ENVIRONMENTAL SOLUTIONS, INC.

PROJECT NAME

HOLE NO. GEW-71

Aquaterra Drilling Log

HOLE NO. GEW-71 | SHEET 2 OF 2

PROJECT NAME: Bridgeton Landfill - Gas System Install

INSPECTOR: Nathan Higgerson

DEPTH	DESCRIPTION OF MATERIALS	FIELD SCREENING RESULTS	GEOTECH SAMPLE RESULTS	ANALYTICAL SAMPLE NO.	TIME	REMARKS
70	Refuse	82°F			1400	
80		84°F				
90	Refuse	87°F				
100		92°F				
110	Refuse	96°F			1500	End of drilling on 8/12/03 at 110 feet
	Refuse				715	Resume drilling on 8/13/03
120	Refuse					
130					900	
140					1115	
	End of boring at 140 ft.					No Asbestos Containing Materials Encountered

AQUATERRA
ENVIRONMENTAL SOLUTIONS, INC.

PROJECT NAME

HOLE NO. GEW-71

American Environmental Group Ltd.

Well Form

DATE: 08/13/2203

PROJECT NAME Bridgeton

PROJECT# 1-03-011

DRILLING

GW 71 WELL NUMBER OR NAME

140' LINEAR FEET OF DRILLING

140' LINEAR FEET OF COMPLETION

0 LINEAR FEET OF ABANDONMENT

NOTES:

Well Asbuild

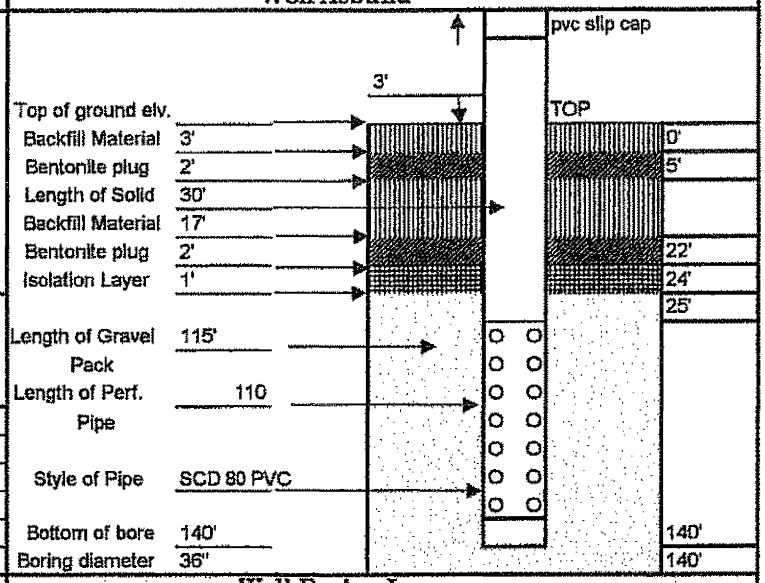

MONITORING LOG

Calibration date 08/13/03

Time	OXYGEN	H2S	LEL	/	CO-	Date
07:00	20.9	0	0	0	0	GW 71
08:00	"	0	0	0	0	"
09:00	"	0	0	0	0	"
10:00	20.9	0	0	0	0	GW 72
11:00	20.9	0	0	0	0	"
12:00	"	0	0	0	0	"
01:00	"	0	0	0	0	"
02:00	"	0	0	0	0	"
03:00	"	0	0	0	0	"
04:00	"	0	0	0	0	"
05:00	"	0	0	0	0	"
06:00						

Notes

Well Boring Log

Depth	Composition	Degree of Comp.	Degree of Moisture	Temp
0-10	cover / res was.	slight	dry	
10-20	"	slight	dry	74
20-30	"	slight	dry	
30-40	"	slight	dry	79
40-50	"	slight	dry	
50-60	"	slight	dry	81
60-70	"	slight	dry	
70-80	"	slight	dry	84
80-90	"	moderate	dry	
90-100	"	moderate	dry	92
100-110	"	moderate	dry	
110-120	"	moderate	dry	104
120-130	"	moderate	dry	
130-140	"	moderate	dry	TD 140'
140-150				

CLIENT REPRESENTATIVE DATE

John Stanley 08/13/2003

AEGL SITE SUPERVISOR DATE

NAME & TITLE

Gas Extraction Well Drilling Summary

Weaver Boos Consultants

Project Name: 2009 Gas System
Project Number: 0120-131-17
Project Location: Bridgeton Landfill
QA/QC Monitor: Joshua Ross

Well No.: 72R
Elevation: Ground 551.8
Exact Location (Coordinates): N:1067284.7 E:515878.9
Date Started: 9/4/2009
Date Completed: 9/4/2009
Boring Size: 36 inch
Total Depth: 150
Length of Perforated Pipe: 129
Length of Solid Pipe: 20
Comments:

Depth	Material Drilled	Temp.	Comment
0-2	soil/dry	94	
2-4	soil/dry	94	
4-6	soil/dry	94	
6-10	soil/dry	96	
10-15	trash/dry	97	
15-20	trash/dry	97	
20-25	trash/dry	99	
25-30	trash/dry	100	
30-35	trash/dry	103	
35-40	trash/dry	103	
40-45	trash/dry	104	
45-50	trash/dry	109	
50-55	trash/dry	108	
55-60	trash/dry	111	
60-65	trash/dry	111	
65-70	trash/dry	114	
70-75	trash/dry	114	
75-80	trash/dry	114	
80-85	trash/dry	119	
85-90	trash/dry	119	
90-95	trash/dry	122	

Gas Extraction Well Drilling Summary

Weaver Boos Consultants

Project Name: 2009 Gas System

Project Number: 0120-131-17

Project Location: Bridgeton Landfill

QA/QC Monitor: Joshua Ross

95-100	trash/dry		124		
100-105	trash/dry		127		
105-110	trash/dry		128		
110-115	trash/dry		127		
115-120	trash/dry		132		
120-125	trash/dry		133		
125-130	trash/dry		136		
130-135	trash/dry		136		
135-140	trash/dry		137		
140-145	trash/dry		137		
145-150	trash/dry		140		

Record of Gas Well Installation

Job Number: 0120-131-17 Job Name: 2009 gas system Well Number: 72R
Drilling Contractor: A.E.G.L Observed By: Joshua Ross
Started Install.: 9-4-09 Completed Install.: 9-4-09
Time: 6:00am Time: 4:30pm

Top of Flange Elevation: _____
Ground Surface Elevation: 551.8 Location: N1067284.7 E 515878.9

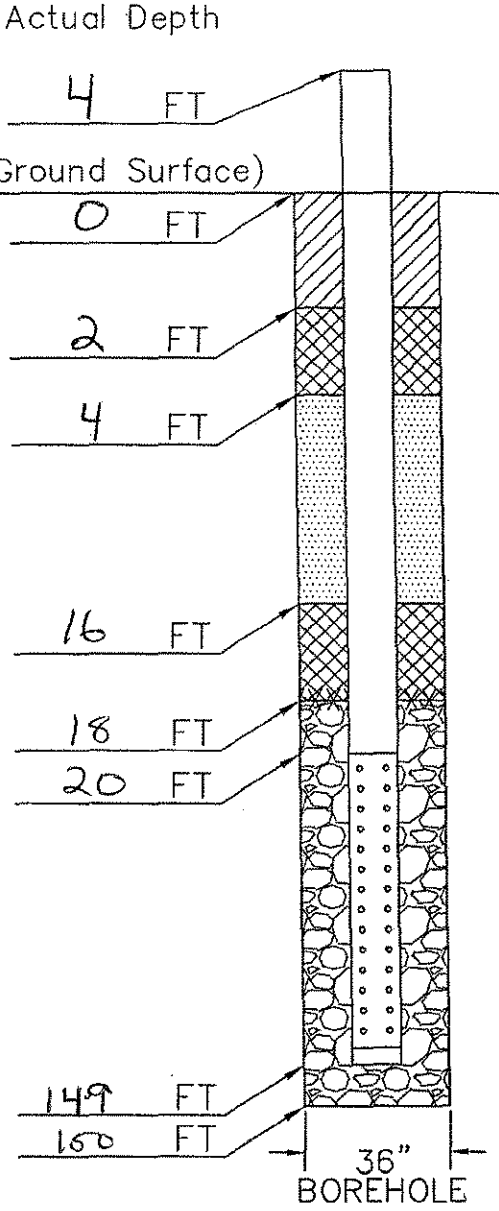

Materials

Intermediate or Final Cover:
Material: clay soil material

Top Seal:
Material: Granular bentonite
Quntity: 12 bags
Hydrated: yes

Backfill:
Material: clay soil material

Bottom Seal:
Material: Granular bentonite
Quntity: 12 bags
Hydrated: yes

Filter Pack:
Material: 1" to 3" gravel

Riser:
Material: CPVC
Quantity: 24 feet
Diameter: 6in

Screen:
Material: CPVC
Quantity: 129
Diameter: 6in
Plug: 6in cap

Weaver Boos Consultants

Gas Extraction Well Drilling Summary — Weaver Boos Consultants

Project Name: 2009 Gas System | Project Number: 0120-131-17

Project Location: Bridgeton Landfill | QA/QC Monitor: Joshua Ross

Well No.: 73R | Elevation: Ground 553.7

Exact Location (Coordinates): N:1066831.2 E:516116.9

Date Started: 9/25/2009 | Date Completed: 9/25/2009

Boring Size: 36 inch | Total Depth: 150

Length of Perforated Pipe: 129 | Length of Solid Pipe: 20

Comments: 10 feet N of existing well

Depth	Material Drilled	Temp.	Comment
0-2	soil/dry	95	
2-4	soil/dry	95	
4-6	soil/dry	95	
6-10	soil/dry	95	
10-15	trash/dry	99	
15-20	trash/dry	99	
20-25	trash/dry	101	
25-30	trash/dry	101	
30-35	trash/dry	103	
35-40	trash/dry	104	
40-45	trash/dry	106	
45-50	trash/dry	108	
50-55	trash/dry	108	
55-60	trash/dry	108	
60-65	trash/dry	108	
65-70	trash/dry	111	
70-75	trash/dry	111	
75-80	trash/dry	112	
80-85	trash/dry	112	
85-90	trash/dry	117	
90-95	trash/dry	117	

Gas Extraction Well Drilling Summary

Weaver Boos Consultants

Project Name: 2009 Gas System | Project Number: 0120-131-17

Project Location: Bridgeton Landfill | QA/QC Monitor: Joshua Ross

95-100	trash/dry		123	
100-105	trash/dry		123	
105-110	trash/dry		123	
110-115	trash/dry		125	
115-120	trash/dry		128	
120-125	trash/dry		128	
125-130	trash/dry		131	
130-135	trash/dry		131	
135-140	trash/dry		132	
140-145	trash/dry		137	
145-150	trash/dry		137	

Record of Gas Well Installation

Job Number: 0120-131-17 Job Name: 2009 gas system Well Number: F-3 R
Drilling Contractor: A.E.G.L Observed By: Joslyn Ross
Started Install.: 9-25-09 Completed Install.: 9-25-09
Time: 6:00am Time: 6:30pm

Top of Flange Elevation: _____
Ground Surface Elevation: 553.7 Location: N1066831.2 E516116.9

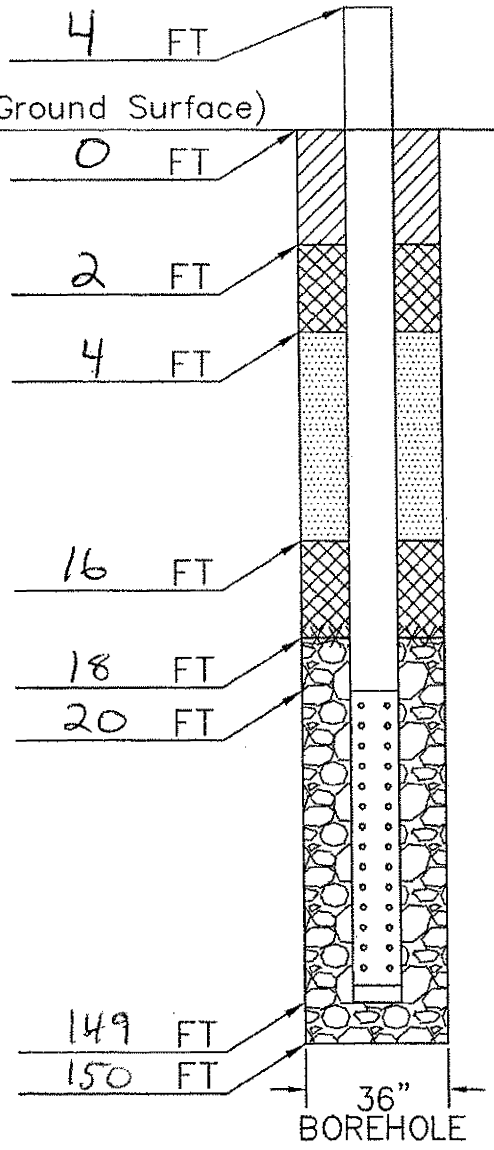

Materials

Intermediate or Final Cover:
- Material: clay soil material

Top Seal:
- Material: Granular bentonite
- Quntity: 12 bags
- Hydrated: yes

Backfill:
- Material: clay soil material

Bottom Seal:
- Material: Granular bentonite
- Quntity: 12 bags
- Hydrated: yes

Filter Pack:
- Material: 1" to 3" gravel

Riser:
- Material: CPVC
- Quantity: 24 Feet
- Diameter: 6in

Screen:
- Material: CPVC
- Quantity: 129
- Diameter: 6in
- Plug: 6in cap

Weaver Boos Consultants

American Environmental Group Ltd.

Well Log

DATE: 7/12/2004

PROJECT NAME: BRIDGETON

PROJECT#: 1-04-028

DRILLING

GW74	WELL NUMBER OR NAME
136'	LINEAR FEET OF DRILLING
136'	LINEAR FEET OF COMPLETION
0'	LINEAR FEET OF ABANDONMENT

Time in: Time out:

Weather conditions: Sunny

Site conditions:

Rig hrs:

Service: Oil/ OK Raidiator/ OK Grease/ OK

NOTES:

Well Asbuild

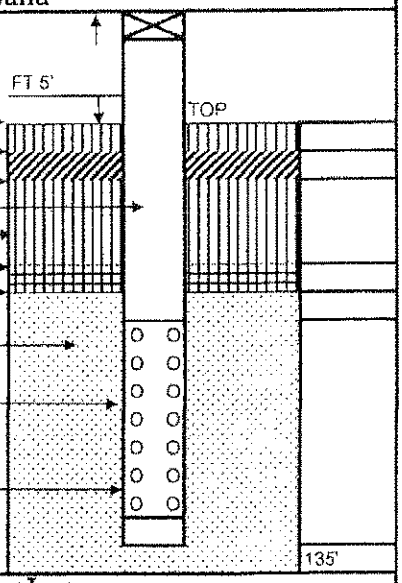

Top of ground elv.	563
Backfill Material	2'
Bentonite plug	2'
Length of Solid	25'
Backfill Material	14'
Bentonite plug	2'
Isolation Layer	1'
Length of Gravel Pack	115'
Length of Perf. Pipe	111'
Style of Pipe	6"SCH80 PVC
Bottom of bore	136'
Bore diameter	36"

MONITORING LOG

Time	OXYGEN	H2S		LEL / CO	
7:00	20.9	0	0	0	GEW 74
8:00	"	0	0	0	
9:00	20.9	0	0	0	GEW 82
10:00	"	0	0	0	
11:00	"	0	0	0	
12:00	"	0	0	0	
1:00	"	0	0	0	
2:00	"	0	0	0	
3:00	"	0	0	0	
4:00	"	0	0	0	
5:00	"	0	0	0	
6:00	20.9	0	0	0	GEW 13

Notes

northing 1066973

easting 515988

Well Boring Log

Depth	Composition	Degree of Decomp.	Degree of Moisture	Temp
0-10	DIRT-MSW	LIGHT	DRY	71
10-20	MSW	LIGHT	DRY	71
20-30	MSW	LIGHT	DRY	76
30-40	MSW	LIGHT	DRY	79
40-50	MSW	LIGHT	DRY	85
50-60	MSW	LIGHT	DRY	88
60-70	MSW	LIGHT	DRY	88
70-80	MSW	LIGHT	DRY	94
80-90	MSW	LIGHT	DRY	101
90-100	MSW	LIGHT		107
100-110	WOOD-DIRT			113
110-120	MSW			113
120-130	MSW			118
130-140	MSW			TD 136
140-150				

CLIENT REPRESENTATIVE DATE

NAME & TITLE

BRETT WILLIS 7/12/2004

AEGL SITE SUPERVISOR DATE

Aquaterra Drilling Log

HOLE NO. GEW-75 | SHEET 1 OF 2 SHEETS

PROJECT NAME: Bridgeton Landfill - Gas System Install	DRILLING SUBCONTRACTOR: AEG
PROJECT NUMBER: 02031008	NAME OF DRILLER(S): John Stanley
LOCATION: Bridgeton, MO	MANUFACTURER'S DESIGNATION OF DRILL: IMT / Caterpiller
HOLE LOCATION: GEW-75	SIZES AND TYPES OF DRILLING AND SAMPLING EQUIPMENT: 36 inch bore hole
SURFACE ELEVATION: -	
OVERBURDEN THICKNESS: -	DRILLING START DATE: 8/14/03 — DRILLING END DATE: 8/16/03
DEPTH DRILLED INTO ROCK: -	DEPTH GROUNDWATER ENCOUNTERED: -
TOTAL DEPTH OF HOLE: 140 feet	DEPTH TO WATER AND ELAPSED TIME AFTER DRILLING COMPLETED: -

GEOTECHNICAL SAMPLES (TOTAL)	DISTURBED	UNDISTURBED	TOTAL NUMBER OF CORE BOXES
-	-	-	-

SAMPLES FOR CHEMICAL ANALYSIS (TOTAL)	(SPECIFY)	(SPECIFY)	(SPECIFY)	(SPECIFY)	(SPECIFY)	TOTAL CORE RECOVERY
-	-	-	-	-	-	-

DISPOSITION OF HOLE	BACKFILLED	MONITORING WELL	OTHER (SPECIFY)	SIGNATURE OF INSPECTOR
-	-	-	-	Nathan Hyer

DEPTH	DESCRIPTION OF MATERIALS	FIELD SCREENING RESULTS	GEOTECH SAMPLE RESULTS	ANALYTICAL SAMPLE NO.	TIME	REMARKS
0	1 ft of cover soil				1510	
	Refuse					
10					1545	End of drilling on 8/14/03 at 15 feet
					730	Resume drilling on 8/15/03
20	Refuse					
30						
40					800	
	Refuse					
50						
					900	
140						

AQUATERRA ENVIRONMENTAL SOLUTIONS, INC.

PROJECT NAME: -

HOLE NO.: GEW-75

Aquaterra Drilling Log

HOLE NO. GEW-75 | SHEET 2 OF 2 SHEETS

PROJECT NAME: Bridgeton Landfill - Gas System Install

INSPECTOR: Nathan Hagerman

DESCRIPTION OF MATERIALS	FIELD SCREENING RESULTS	GEOTECH SAMPLE RESULTS	ANALYTICAL SAMPLE NO.	TIME	REMARKS
Refuse					
Refuse				1000	
Refuse					
Refuse				1045	End of drilling on 8/15/03 at 110 ft
				715	Resume drilling on 8/16/03
Refuse	~~[illegible]~~ 100°F				
Refuse	112°F				
End of boring at 140 ft				930	No Asbestos Containing Materials Encountered

AQUATERRA ENVIRONMENTAL SOLUTIONS, INC.

PROJECT NAME

HOLE NO. GEW-75

American Environmental Group Ltd.

Well Form

DATE: 08/16/03

PROJECT NAME: Bridgeton

PROJECT#: 1-03-011

DRILLING

GW 75 WELL NUMBER OR NAME

140' LINEAR FEET OF DRILLING

140 LINEAR FEET OF COMPLETION

0 LINEAR FEET OF ABANDONMENT

NOTES:

Well Asbuild

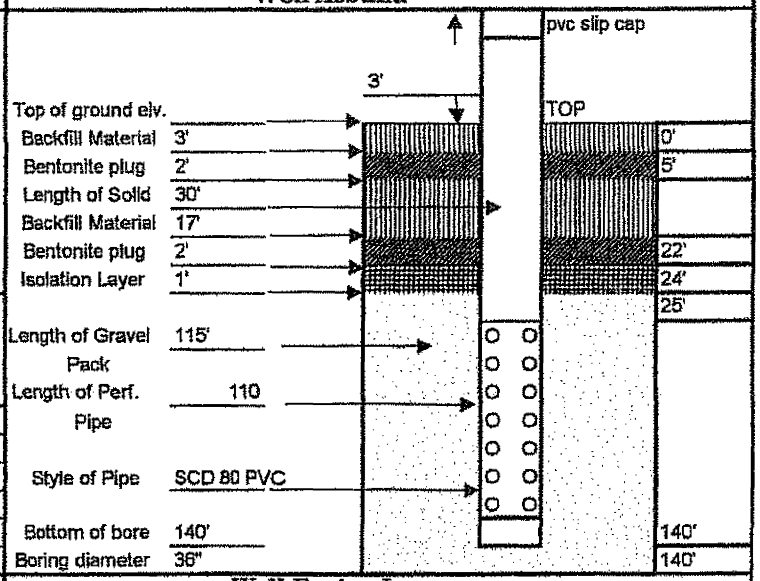

MONITORING LOG

Calibration date 08/16/03

Time	OXYGEN	H2S	LEL	CO	Date
07:00	20.9	0	0	0	GW 75
08:00	"	0	0	0	"
09:00	"	0	0	0	"
10:00	"	0	0	0	"
11:00	20.9	0	0	0	GW 66
12:00	"	0	0	0	"
01:00	"	0	0	0	"
02:00	"	0	0	0	"
03:00	"	0	0	0	"
04:00	"	0	0	0	"
05:00					
06:00					

Notes

Well Boring Log

Depth	Composition		Degree of Comp.	Degree of Moisture	Temp
0-10	cover	res was.	slight	dry	
10-20		"	slight	dry	76
20-30		"	slight	dry	
30-40		"	slight	dry	77
40-50		"	slight	dry	
50-60		"	slight	dry	88
60-70		"	slight	dry	
70-80		"	slight	dry	92
80-90		"	moderate	dry	
90-100	steel	"	moderate	dry	94
100-110	concrete	"	moderate	dry	
110-120		"	moderate	dry	110
120-130		"	moderate	dry	
130-140		"	moderate	dry	TD 140'
140-150					

CLIENT REPRESENTATIVE DATE

NAME & TITLE

John Stanley 08/16/03

AEGL SITE SUPERVISOR DATE

Gas Extraction Well Drilling Summary

Weaver Boos Consultants

Project Name: 2009 Gas System

Project Number: 0120-131-17

Project Location: Bridgeton Landfill

QA/QC Monitor: Joshua Ross

Well No.: 76R

Elevation: Ground 545.0

Exact Location (Coordinates): N:1067148.3 E:515728.0

Date Started: 9/3/2009

Date Completed: 9/3/2009

Boring Size: 36 inch

Total Depth: 139

Length of Perforated Pipe: 118

Length of Solid Pipe: 20

Comments: 15 feet of existing well

Depth	Material Drilled	Temp.	Comment
0-2	soil/dry	93	
2-4	soil/dry	93	
4-6	soil/dry	93	
6-10	soil/dry	93	
10-15	trash/dry	96	
15-20	trash/dry	97	
20-25	trash/dry	97	
25-30	trash/dry	101	
30-35	trash/dry	104	
35-40	trash/dry	106	
40-45	trash/dry	106	
45-50	trash/dry	106	
50-55	trash/dry	106	
55-60	trash/dry	110	
60-65	trash/dry	112	
65-70	trash/dry	115	
70-75	trash/dry	115	
75-80	trash/dry	115	
80-85	trash/dry	118	
85-90	trash/dry	121	
90-95	trash/dry	121	

Gas Extraction Well Drilling Summary

Weaver Boos Consultants

Project Name: 2009 Gas System

Project Number: 0120-131-17

Project Location: Bridgeton Landfill

QA/QC Monitor: Joshua Ross

95-100	trash/dry		121	
100-105	trash/dry		125	
105-110	trash/damp		125	
110-115	trash/damp		128	
115-120	trash/dry		131	
120-125	trash/moist		134	
125-130	trash/moist		134	
130-135	sludge/wet		137	
135-140	sludge/wet		138	
140-145				
145-150				

Record of Gas Well Installation

Job Number: 0120-131-17 Job Name: 2009 gas system Well Number: 76R
Drilling Contractor: A.E.G.L Observed By: Joshua Ross
Started Install.: 9-3-09 Completed Install.: 9-3-09
Time: 6:00am Time: 5:00pm

Top of Flange Elevation: _____
Ground Surface Elevation: 545.0 Location: N1067148.3 E 515728.0

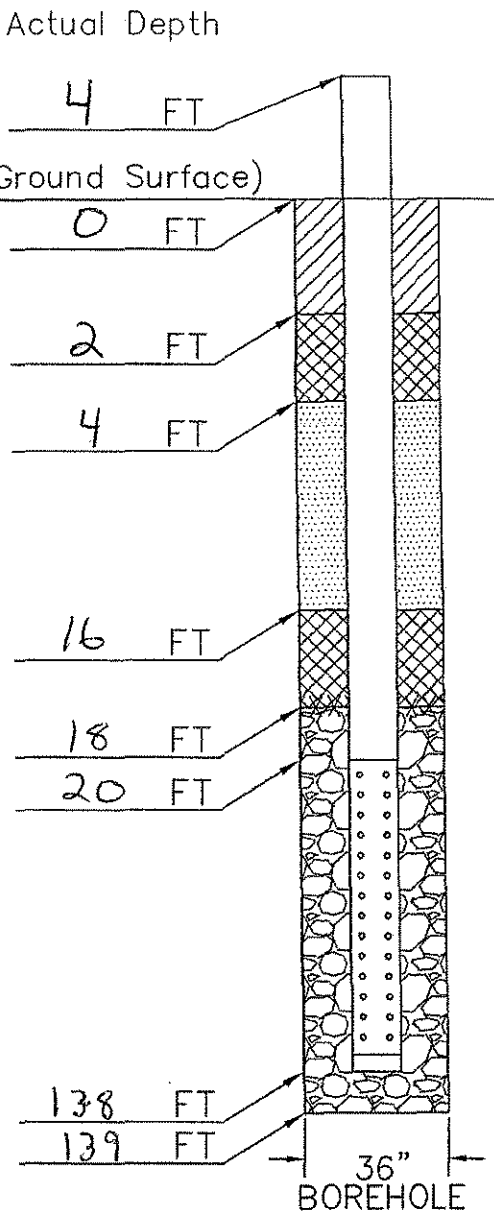

Materials

Intermediate or Final Cover:
- Material: clay soil material

Top Seal:
- Material: Granular bentonite
- Quntity: 12 bags
- Hydrated: yes

Backfill:
- Material: clay soil material

Bottom Seal:
- Material: Granular bentonite
- Quntity: 12 bags
- Hydrated: yes

Filter Pack:
- Material: 1" to 3" gravel

Riser:
- Material: CPVC
- Quantity: 24 Feet
- Diameter: 6in

Screen:
- Material: CPVC
- Quantity: 118
- Diameter: 6in
- Plug: 6in cap

Weaver Boos Consultants

American Environmental Group Ltd.

Well Log

DATE: 6/1/2004

PROJECT NAME: BRIDGETON

PROJECT#: 1-04-028

DRILLING

GEW 77 WELL NUMBER OR NAME

122' LINEAR FEET OF DRILLING

122' LINEAR FEET OF COMPLETION

0' LINEAR FEET OF ABANDONMENT

Time in: _____ Time out: _____

Weather conditions: Sunny

Site conditions: _____

Rig hrs: _____

Service: Oil/ OK Raidiator/ OK Grease/ OK

NOTES:

northing 1066599

easting 516000

Well Asbuild

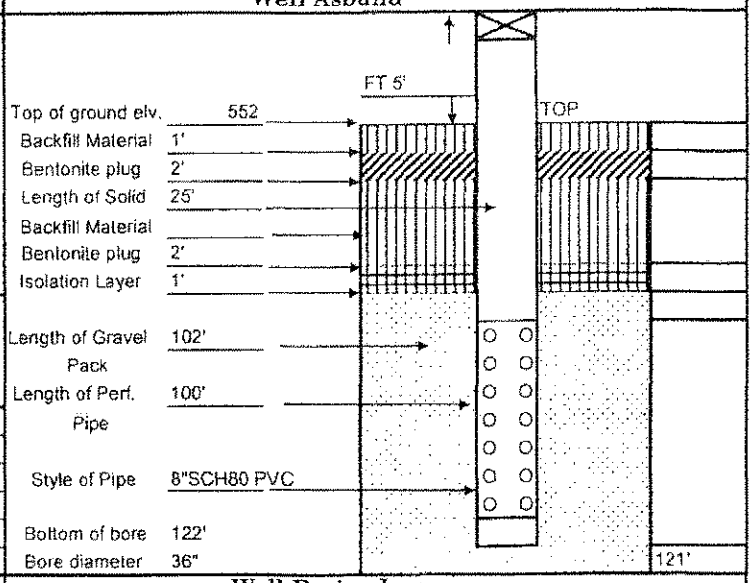

Top of ground elv.	552
Backfill Material	1'
Bentonite plug	2'
Length of Solid	25'
Backfill Material	
Bentonite plug	2'
Isolation Layer	1'
Length of Gravel Pack	102'
Length of Perf. Pipe	100'
Style of Pipe	8"SCH80 PVC
Bottom of bore	122'
Bore diameter	36"

MONITORING LOG

Time	OXYGEN	H2S		LEL / CO	
7:00	20.9	0	0	0	6-02-04
8:00	"	0	0	0	
9:00	"	0	0	0	
10:00	"	0	0	0	
11:00	"	0	0	0	
12:00	"	0	0	0	6-01-04
1:00	"	0	0	0	
2:00	"	0	0	0	
3:00	"	0	0	0	
4:00	"	0	0	0	
5:00	"	0	0	0	
6:00	"	0	0	0	

Notes

Well Boring Log

Depth	Composition	Degree of Decomp.	Degree of Moisture	Temp
0-10	DIRT-MSW	LIGHT	DRY	63
10-20	MSW	LIGHT	DRY	63
20-30	MSW	LIGHT	DRY	71
30-40	MSW	LIGHT	DRY	72
40-50	MSW	LIGHT	DRY	74
50-60	MSW	LIGHT	DRY	76
60-70	MSW	LIGHT	DRY	82
70-80	MSW	LIGHT	DRY	82
80-90	MSW-WOOD	LIGHT	DRY	88
90-100	MSW	LIGHT	DRY	97
100-110	MSW	LIGHT	DRY	105
110-120	MSW-STEEL	LIGHT	DRY	109
120-130	STEEL	LIGHT	DRY	TD 122'
130-140				
140-150				

CLIENT REPRESENTATIVE DATE

BRETT WILLIS 6/1/2004

AEGL SITE SUPERVISOR DATE

NAME & TITLE

Gas Extraction Well Drilling Summary

Weaver Boos Consultants

roject Name: 2009 Gas System | Project Number: 0120-131-17

Project Location: Bridgeton Landfill | QA/QC Monitor: Joshua Ross

Well No.: 78R | Elevation: Ground 555.7

Exact Location (Coordinates): N:1066840.7 E:515908.1

Date Started: 9/8/2009 | Date Completed: 9/8/2009

Boring Size: 36 inch | Total Depth: 150 feet

Length of Perforated Pipe: 129 | Length of Solid Pipe: 20

Comments: 15 sw of existing well

Depth	Material Drilled	Temp.	Comment
0-2	soil/dry	94	
2-4	soil/dry	94	
4-6	soil/dry	94	
6-10	soil/dry	94	
10-15	trash/dry	97	
15-20	trash/dry	97	
20-25	trash/dry	98	
25-30	trash/dry	99	
30-35	trash/dry	99	
35-40	trash/dry	99	
40-45	trash/dry	100	
45-50	trash/dry	100	
50-55	trash/dry	100	
55-60	trash/dry	101	
60-65	trash/dry	106	
65-70	trash/dry	106	
70-75	trash/dry	111	
75-80	trash/dry	112	
80-85	trash/dry	112	
85-90	trash/dry	112	
90-95	trash/dry	113	

Gas Extraction Well Drilling Summary

Weaver Boos Consultants

Project Name:	2009 Gas System	Project Number:	0120-131-17
Project Location:	Bridgeton Landfill	QA/QC Monitor:	Joshua Ross

95-100	trash/dry		113	
100-105	trash/dry		118	
105-110	trash/dry		121	
110-115	trash/dry		131	
115-120	trash/dry		131	
120-125	trash/dry		131	
125-130	trash/dry		134	
130-135	trash/dry		135	
135-140	trash/dry		135	
140-145	trash/dry		139	
145-150	trash/dry		143	

Record of Gas Well Installation

Job Number: 0120-131-17 Job Name: 2009 gas system Well Number: 78 R
Drilling Contractor: A.E.G.L Observed By: Joshua Ross
Started Install.: 9-8-09 Completed Install.: 9-8-09
Time: 6:00am Time: 5:30pm

Top of Flange Elevation: _____
Ground Surface Elevation: 555.7 Location: N 1066840.7 E 515909.1

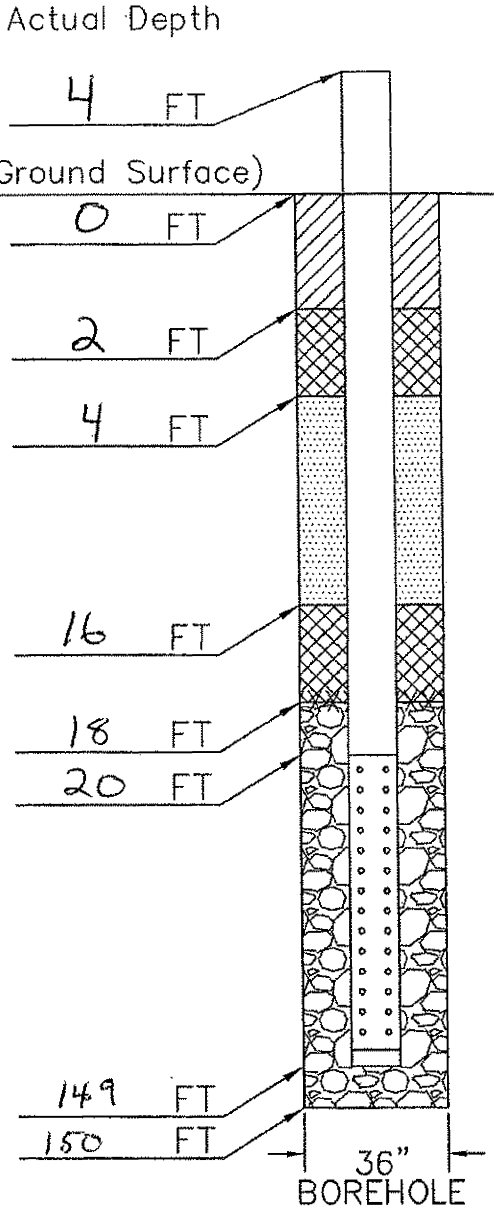

Materials

Intermediate or Final Cover:
- Material: clay soil material

Top Seal:
- Material: Granular bentonite
- Quntity: 12 bags
- Hydrated: yes

Backfill:
- Material: clay soil material

Bottom Seal:
- Material: Granular bentonite
- Quntity: 12 bags
- Hydrated: yes

Filter Pack:
- Material: 1" to 3" gravel

Riser:
- Material: CPVC
- Quantity: 24 Feet
- Diameter: 6in

Screen:
- Material: CPVC
- Quantity: 129
- Diameter: 6in
- Plug: 6in cap

Gas Extraction Well Drilling Summary — Weaver Boos Consultants

Project Name: 2009 Gas System | Project Number: 0120-131-17

Project Location: Bridgeton Landfill | QA/QC Monitor: Joshua Ross

Well No.: 79R | Elevation: Ground 555.7

Exact Location (Coordinates): N:1066972.2 E:515771.8

Date Started: 9/2/2009 | Date Completed: 9/2/2009

Boring Size: 36 inch | Total Depth: 150

Length of Perforated Pipe: 129 | Length of Solid Pipe: 20

Comments: 0 feet south of existing

Depth	Material Drilled	Temp.	Comment
0-2	soil/dry	96	
2-4	soil/dry	96	
4-6	soil/dry	96	
6-10	soil/dry	96	
10-15	trash/dry	99	
15-20	trash/dry	99	
20-25	trash/dry	103	
25-30	trash/dry	103	
30-35	trash/dry	106	
35-40	trash/dry	106	
40-45	trash/dry	108	
45-50	trash/dry	109	
50-55	trash/dry	111	
55-60	trash/dry	111	
60-65	trash/dry	111	
65-70	trash/dry	115	
70-75	trash/dry	115	
75-80	trash/dry	117	
80-85	trash/dry	121	
85-90	trash/dry	123	
90-95	trash/dry	126	

Gas Extraction Well Drilling Summary

Weaver Boos Consultants

Project Name: 2009 Gas System

Project Number: 0120-131-17

Project Location: Bridgeton Landfill

QA/QC Monitor: Joshua Ross

95-100	trash/dry	126	
100-105	trash/dry	130	
105-110	trash/dry	130	
110-115	trash/dry	135	
115-120	trash/dry	135	
120-125	trash/dry	137	
125-130	trash/dry	137	
130-135	trash/dry	137	
135-140	trash/dry	137	
140-145	trash/dry	139	
145-150	trash/dry	141	

Record of Gas Well Installation

Job Number: 0120-131-17 Job Name: 2009 gas system Well Number: 79R
Drilling Contractor: A.E.G.L Observed By: Joshua Ross
Started Install.: 9-2-09 Completed Install.: 9-2-09
Time: 6:00am Time: 4:30pm

Top of Flange Elevation: _____
Ground Surface Elevation: 555.7 Location: N 1066972.2E 515771.8

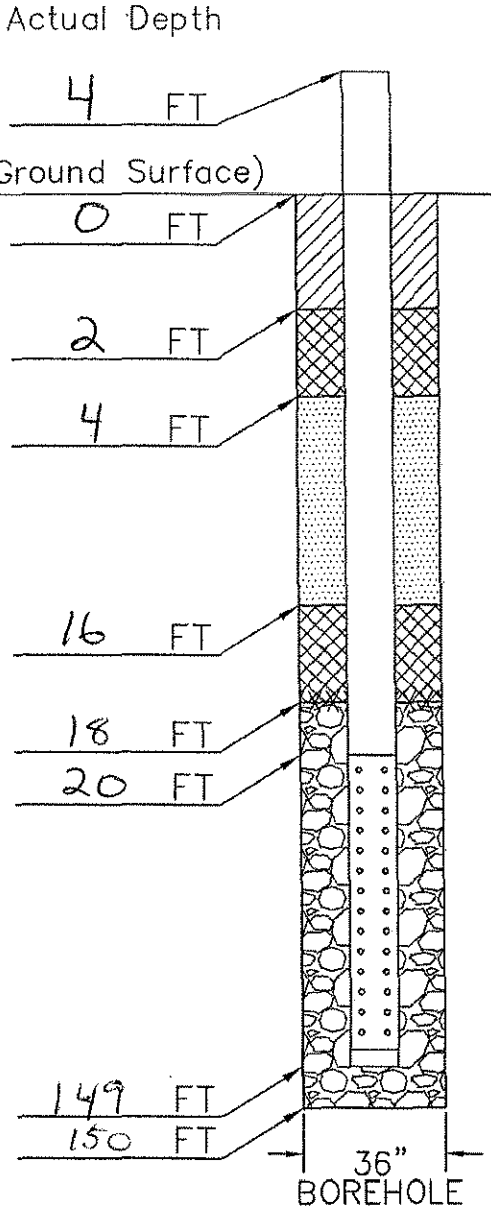

Materials

Intermediate or Final Cover:
Material: clay soil material

Top Seal:
Material: Granular bentonite
Quntity: 12 bags
Hydrated: yes

Backfill:
Material: clay soil material

Bottom Seal:
Material: Granular bentonite
Quntity: 12 bags
Hydrated: yes

Filter Pack:
Material: 1" to 3" gravel

Riser:
Material: CPVC
Quantity: 24 Feet
Diameter: 6in

Screen:
Material: CPVC
Quantity: 129
Diameter: 6in
Plug: 6in cap

Weaver Boos Consultants

Aquaterra Drilling Log

HOLE NO. GEW 80 | SHEET 1 OF 2 SHEETS

PROJECT NAME: GW & Header Bridgeton Landfill	DRILLING SUBCONTRACTOR: AEG
PROJECT NUMBER: 652.10	NAME OF DRILLER(S): B. Willis 2 crew
LOCATION: Bridgeton Landfill	MANUFACTURER'S DESIGNATION OF DRILL: Caterpillar AF10
HOLE LOCATION: GEW 80	SIZES AND TYPES OF DRILLING AND SAMPLING EQUIPMENT: 3 ft Bucket
SURFACE ELEVATION: 551.88'	
OVERBURDEN THICKNESS: —	DRILLING START DATE: 6/23/05 — DRILLING END DATE: 6/25/05
DEPTH DRILLED INTO ROCK: —	DEPTH GROUNDWATER ENCOUNTERED: —
TOTAL DEPTH OF HOLE:	DEPTH TO WATER AND ELAPSED TIME AFTER DRILLING COMPLETED: —

GEOTECHNICAL SAMPLES (TOTAL)	DISTURBED	UNDISTURBED	TOTAL NUMBER OF CORE BOXES
—	—	—	—

SAMPLES FOR CHEMICAL ANALYSIS (TOTAL)	(SPECIFY)	(SPECIFY)	(SPECIFY)	(SPECIFY)	(SPECIFY)	TOTAL CORE RECOVERY
—	—	—	—	—	—	—

DISPOSITION OF HOLE	BACKFILLED	MONITORING WELL	OTHER (SPECIFY)	SIGNATURE OF INSPECTOR
—	—	—	—	Nathan Higgs

DEPTH	DESCRIPTION OF MATERIALS	FIELD SCREENING RESULTS	GEOTECH SAMPLE RESULTS	ANALYTICAL SAMPLE NO.	TIME	REMARKS
10	Soil				10:15	Soil - 4' thickness
	waste					
50						
60	waste				12:30	Dry waste
	waste				2:30	
	waste				5:00	Stopped for the day
	Waste				7:00	resumed drilling on 6/26/05

Aquaterra Drilling Log

HOLE NO.

SHEET OF SHEETS

PROJECT NAME: GW & Header Bridgeton Landfill

INSPECTOR: J. Jordan, D. Hormesch

DESCRIPTION OF MATERIALS	FIELD SCREENING RESULTS	GEOTECH SAMPLE RESULTS	ANALYTICAL SAMPLE NO.	TIME	REMARKS
Waste				800	
					End of drilling on 6/25/05
End of boring at total depth of 132 ft					No asbestos containing material observed

AQUATERRA
ENVIRONMENTAL SOLUTIONS, INC.
6980 West 153rd Street
Overland Park, Kansas 66223

GAS WELL CONSTRUCTION DIAGRAM

PROJECT NUMBER: 1652.10
PROJECT NAME: 2005 Bridgeton Gas System CQA
GAS WELL NO.: GEW-80
WELL LOCATION:
INSTALLATION START DATE: 6/25/05
COMPLETION DATE: 6/25/05
DRILLER: B. Willis
INSPECTOR: Nathan Higgerson

COMMENTS:

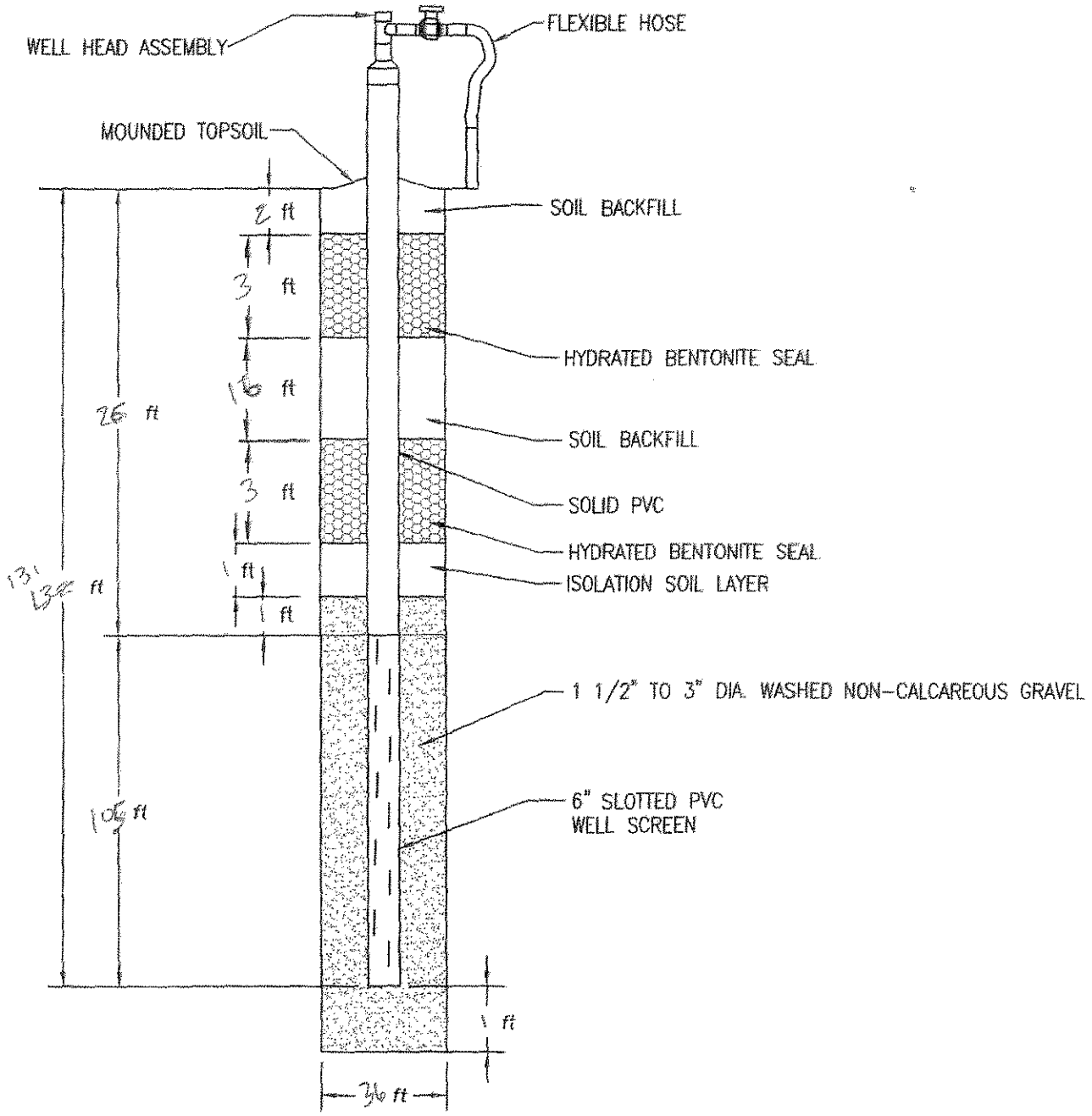

Aquaterra Drilling Log

HOLE NO. GEW-81 | SHEET 1 OF 2 SHEETS

PROJECT NAME: 2005 LFG Wells/Header COA	DRILLING SUBCONTRACTOR: AEG
PROJECT NUMBER: 1652.10	NAME OF DRILLER(S): B. Willis
LOCATION: Bridgeton, Missouri	MANUFACTURER'S DESIGNATION OF DRILL: Caterpillar LMT AF10
HOLE LOCATION: GEW-81	SIZES AND TYPES OF DRILLING AND SAMPLING EQUIPMENT: 36in bucket
SURFACE ELEVATION: 539 ft	
OVERBURDEN THICKNESS: —	DRILLING START DATE: 7/1/05 — DRILLING END DATE: 7/2/05
DEPTH DRILLED INTO ROCK: —	DEPTH GROUNDWATER ENCOUNTERED: —
TOTAL DEPTH OF HOLE: 130 ft.	DEPTH TO WATER AND ELAPSED TIME AFTER DRILLING COMPLETED: —

GEOTECHNICAL SAMPLES (TOTAL)	DISTURBED	UNDISTURBED	TOTAL NUMBER OF CORE BOXES
—	—	—	—

SAMPLES FOR CHEMICAL ANALYSIS (TOTAL)	(SPECIFY)	(SPECIFY)	(SPECIFY)	(SPECIFY)	(SPECIFY)	TOTAL CORE RECOVERY
—	—	—	—	—	—	—

DISPOSITION OF HOLE	BACKFILLED	MONITORING WELL	OTHER (SPECIFY)	SIGNATURE OF INSPECTOR
—	—	—	—	[signature]

DEPTH	DESCRIPTION OF MATERIALS	FIELD SCREENING RESULTS	GEOTECH SAMPLE RESULTS	ANALYTICAL SAMPLE NO.	TIME	REMARKS
0	Excavation of soil				1100	
10	Waste					
20	Waste				1300	
30						
40						
50						
60	Waste					
70					1400	Ended the drilling on 7/1/05 at 70 ft.
80	Waste				700	Resume drilling on 7/2/05
90						
100	Waste				900	
110						
120	Waste				1100	

AQUATERRA ENVIRONMENTAL SOLUTIONS, INC.

PROJECT NAME: 2005 LFG Wells/Header COA | HOLE NO.: GEW-81

Aquaterra Drilling Log

HOLE NO. GEW - 81 | SHEET 2 OF 2

PROJECT NAME: 2005 LFG Wells/Header CQA

INSPECTOR: Nathan Higgerson

DESCRIPTION OF MATERIALS	FIELD SCREENING RESULTS	GEOTECH SAMPLE RESULTS	ANALYTICAL SAMPLE NO.	TIME	REMARKS
Waste				1100	Drilling stopped at a depth of 130 ft due to shut in the bore hole
End of boring at 130 ft					No asbestos containing materials observed

AQUATERRA
ENVIRONMENTAL SOLUTIONS, INC.
6980 West 153rd Street
Overland Park, Kansas 66223

GAS WELL CONSTRUCTION DIAGRAM

PROJECT NUMBER: 1652.10
PROJECT NAME: 2005 Bridgeton Gas System CQA
GAS WELL NO.: GEW-81
WELL LOCATION:
INSTALLATION START DATE: 7/1/05
COMPLETION DATE: 7/2/05
DRILLER: AEC - B. Willis
INSPECTOR: Nathan Higgerson

COMMENTS:

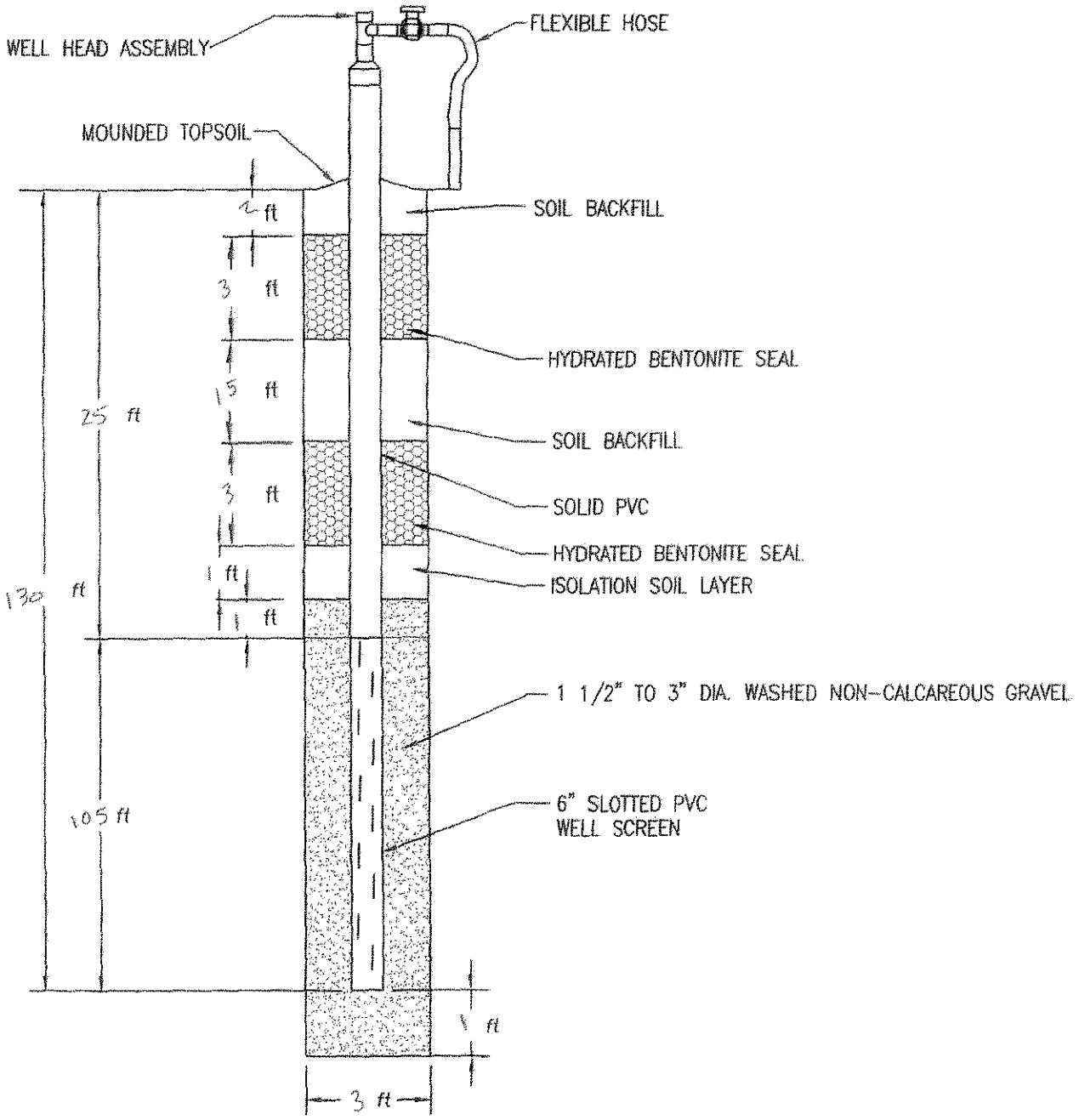

Gas Extraction Well Drilling Summary

Weaver Boos Consultants

Project Name: 2009 Gas System

Project Number: 0120-131-17

Project Location: Bridgeton Landfill

QA/QC Monitor: Joshua Ross

Well No.: 82R

Elevation: Ground 541.4

Exact Location (Coordinates): N:1066998.5 E:515634.0

Date Started: 8/26/2009

Date Completed: 8/26/2009

Boring Size: 36 inch

Total Depth: 131 feet

Length of Perforated Pipe: 110

Length of Solid Pipe: 20

Comments: 10 feet east of existing

Depth	Material Drilled	Temp.	Comment
0-2	soil/dry	90	
2-4	soil/dry	93	
4-6	soil/dry	93	
6-10	soil/dry	95	
10-15	trash/dry	96	
15-20	trash/dry	95	
20-25	trash/dry	97	
25-30	trash/dry	98	
30-35	trash/dry	99	
35-40	trash/dry	104	
40-45	trash/dry	108	
45-50	trash/dry	108	
50-55	trash/dry	108	
55-60	trash/dry	108	
60-65	trash/dry	111	
65-70	trash/dry	112	
70-75	trash/dry	112	
75-80	trash/dry	112	
80-85	trash/dry	115	
85-90	trash/dry	116	
90-95	trash/dry	115	

Gas Extraction Well Drilling Summary

Weaver Boos Consultants

Project Name:	2009 Gas System	Project Number:	0120-131-17
Project Location:	Bridgeton Landfill	QA/QC Monitor:	Joshua Ross

95-100	trash/dry	115	
100-105	trash/dry	117	
105-110	trash/dry	118	
110-115	trash/dry	119	
115-120	trash/dry	120	
120-125	trash/damp	120	
125-130	trash/damp	120	
130-135	trash/dry	122	
135-140			
140-145			
145-150			

Record of Gas Well Installation

Job Number: 0120-131-17 Job Name: 2009 gas system Well Number: B2R
Drilling Contractor: A.E.G.L Observed By: Joshua Ross
Started Install.: 8-26-09 Completed Install.: 8-26-09
Time: 8:00am Time: 3:00pm

Top of Flange Elevation: _____
Ground Surface Elevation: 541.4 Location: N 106698.5E 515634.0

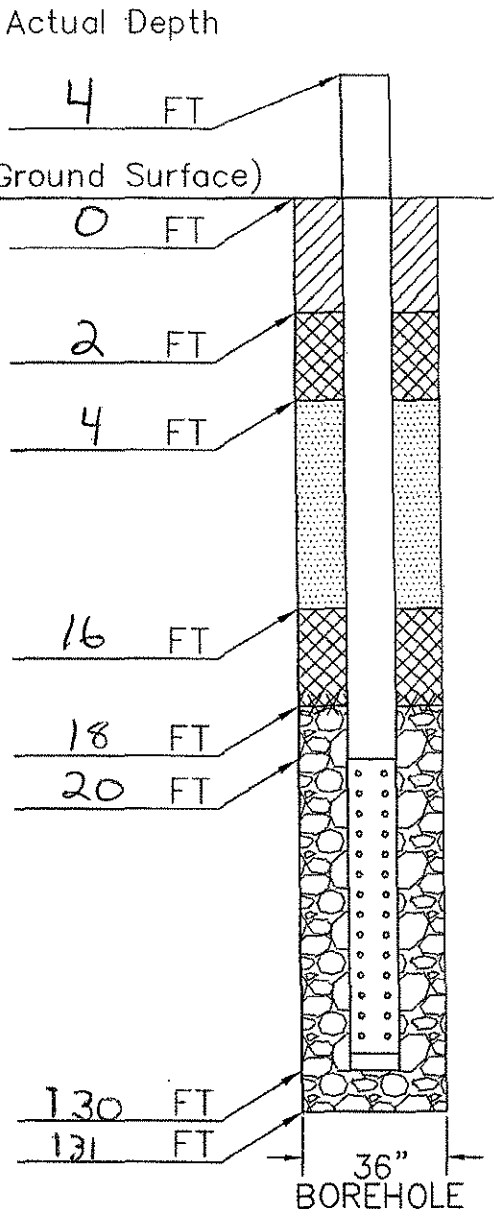

Materials

Intermediate or Final Cover:
- Material: clay soil material

Top Seal:
- Material: Granular bentonite
- Quntity: 12 bags
- Hydrated: yes

Backfill:
- Material: clay soil material

Bottom Seal:
- Material: Granular bentonite
- Quntity: 12 bags
- Hydrated: yes

Filter Pack:
- Material: 1" to 3" gravel

Riser:
- Material: CPVC
- Quantity: 24 Feet
- Diameter: 6in

Screen:
- Material: CPVC
- Quantity: 110
- Diameter: 6in
- Plug: 6in cap

Weaver Boos Consultants

Gas Extraction Well Drilling Summary

Weaver Boos Consultants

oject Name:	2009 Gas System	Project Number:	0120-131-17
Project Location:	Bridgeton Landfill	QA/QC Monitor:	Joshua Ross
Well No.:	83	Elevation:	Ground 560.8
Exact Location (Coordinates):	N:1067246.0	E:516252.0	
Date Started:	9/15/2009	Date Completed:	9/15/2009
Boring Size:	36 inch	Total Depth:	60
Length of Perforated Pipe:	39	Length of Solid Pipe:	20
Comments:	50 feet east of existing well		

Depth	Material Drilled	Temp.	Comment
0-2	soil/dry	91	
2-4	soil/dry	91	
4-6	soil/dry	93	
6-10	soil/dry	93	
10-15	trash/dry	96	
15-20	trash/dry	96	
20-25	trash/dry	99	
25-30	trash/dry	98	
30-35	trash/dry	103	
35-40	trash/dry	104	
40-45	trash/dry	104	
45-50	trash/dry	107	
50-55	trash/dry	109	
55-60	trash/dry	113	
60-65			
65-70			
70-75			
75-80			
80-85			
85-90			
90-95			

Record of Gas Well Installation

Job Number: 0120-131-17 Job Name: 2009 gas system Well Number: 83
Drilling Contractor: A.E.G.L Observed By: Joshua Ross
Started Install.: 9-15-09 Completed Install.: 9-15-09
Time: 1:00pm Time: 3:00pm

Top of Flange Elevation: _____
Ground Surface Elevation: 560.8 Location: N 1067246.0 E 516252.0

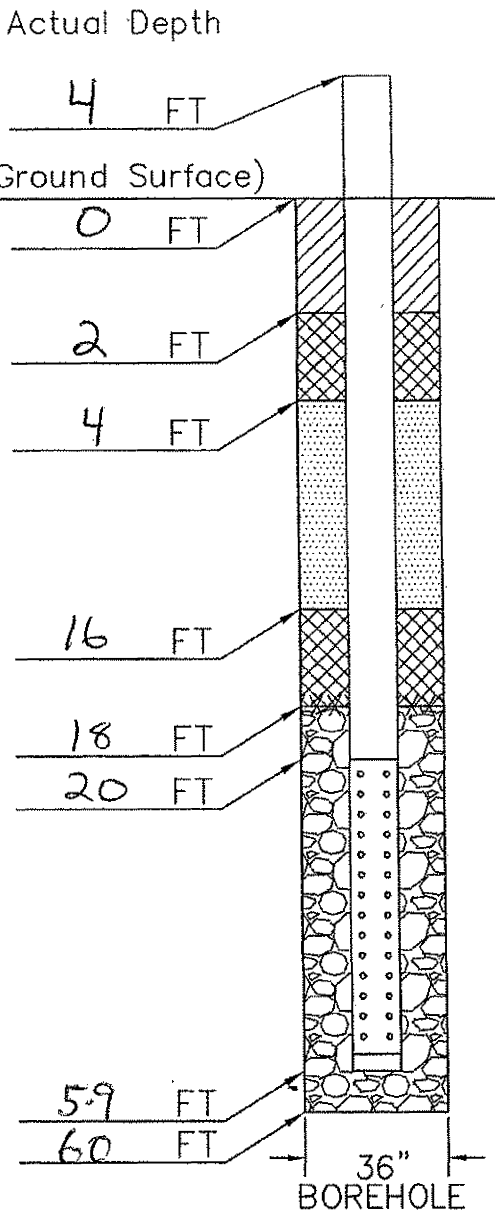

Materials

Intermediate or Final Cover:
- Material: clay soil material

Top Seal:
- Material: Granular bentonite
- Quntity: 12 bags
- Hydrated: yes

Backfill:
- Material: clay soil material

Bottom Seal:
- Material: Granular bentonite
- Quntity: 12 bags
- Hydrated: yes

Filter Pack:
- Material: 1" to 3" gravel

Riser:
- Material: CPVC
- Quantity: 24 Feet
- Diameter: 6in

Screen:
- Material: CPVC
- Quantity: 39
- Diameter: 6in
- Plug: 6in cap

Gas Extraction Well Drilling Summary

Weaver Boos Consultants

roject Name: 2009 Gas System | Project Number: 0120-131-17

Project Location: Bridgeton Landfill | QA/QC Monitor: Joshua Ross

Well No.: 84 | Elevation: Ground 532.8

Exact Location (Coordinates): N:1067402.1 E:516212.8

Date Started: 9/16/2009 | Date Completed: 9/16/2009

Boring Size: 36 inch | Total Depth: 60

Length of Perforated Pipe: 39 | Length of Solid Pipe: 20

Comments: 50 feet north of existing well

Depth	Material Drilled	Temp.	Comment
0-2	soil/dry	93	
2-4	soil/dry	93	
4-6	soil/dry	93	
6-10	soil/dry	93	
10-15	trash/dry	95	
15-20	trash/dry	97	
20-25	trash/dry	97	
25-30	trash/dry	99	
30-35	trash/dry	99	
35-40	trash/dry	99	
40-45	trash/dry	104	
45-50	trash/dry	107	
50-55	trash/dry	110	
55-60	trash/dry	110	
60-65			
65-70			
70-75			
75-80			
80-85			
85-90			
90-95			

Record of Gas Well Installation

Job Number: 0120-131-17 Job Name: 2009 gas system Well Number: 84
Drilling Contractor: A.E.G.L Observed By: Joshua Ross
Started Install.: 9-16-09 Completed Install.: 9-16-09
Time: 6:00am Time: 9:00am

Top of Flange Elevation: _____
Ground Surface Elevation: 532.8 Location: N 1067402.1 E 516212.8

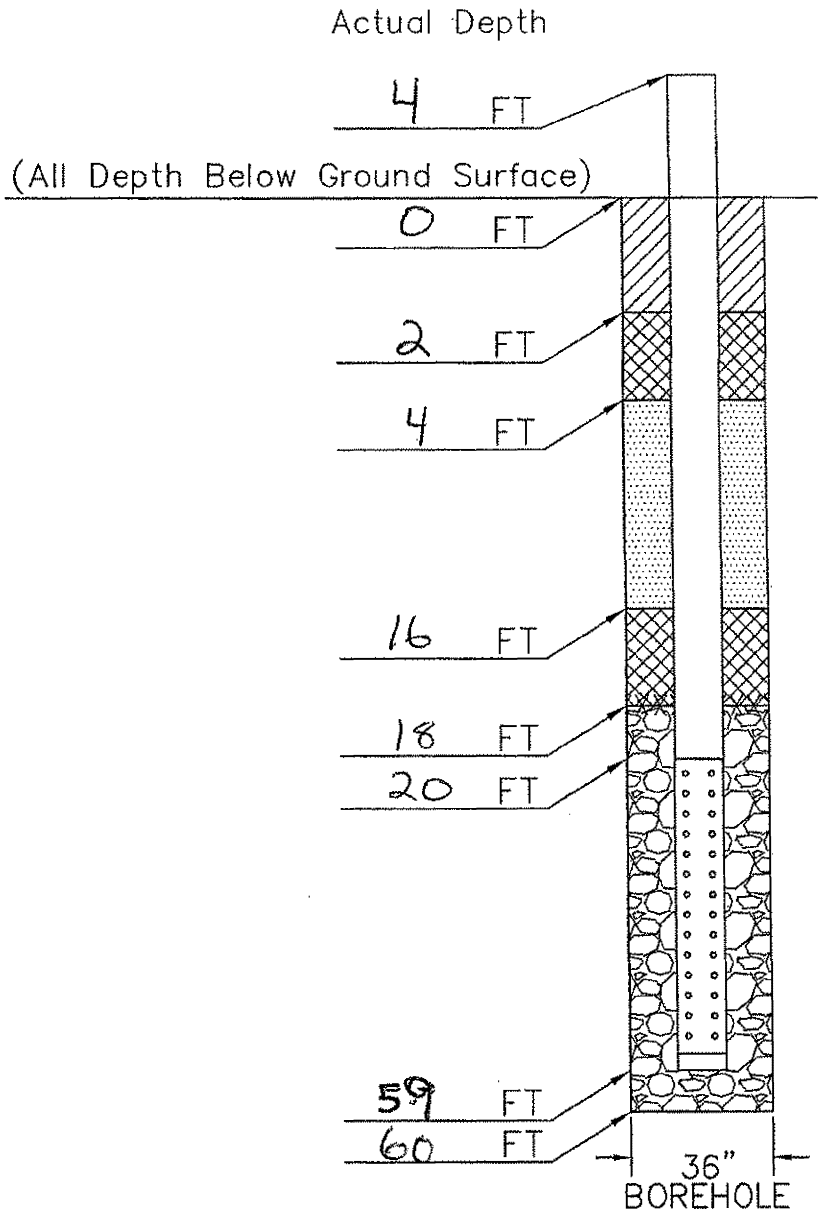

Materials

Intermediate or Final Cover:
- Material: clay soil material

Top Seal:
- Material: Granular bentonite
- Quntity: 12 bags
- Hydrated: yes

Backfill:
- Material: clay soil material

Bottom Seal:
- Material: Granular bentonite
- Quntity: 12 bags
- Hydrated: yes

Filter Pack:
- Material: 1" to 3" gravel

Riser:
- Material: CPVC
- Quantity: 24 Feet
- Diameter: 6.n

Screen:
- Material: CPVC
- Quantity: 39
- Diameter: 6in
- Plug: 6in cap

Weaver Boos Consultants

Gas Extraction Well Drilling Summary

Weaver Boos Consultants

oject Name:	2009 Gas System	Project Number:	0120-131-17
Project Location:	Bridgeton Landfill	QA/QC Monitor:	Joshua Ross
Well No.:	85	Elevation:	Ground 549.3
Exact Location (Coordinates):	N:1067250.3	E:516088.8	
Date Started:	8/15/2009	Date Completed:	8/15/2009
Boring Size:	36 inch	Total Depth:	60
Length of Perforated Pipe:	39	Length of Solid Pipe:	20
Comments:	50 foot east of existing well		

Depth	Material Drilled	Temp.	Comment
0-2	soil/dry	94	
2-4	soil/dry	94	
4-6	soil/dry	96	
6-10	soil/dry	96	
10-15	trash/dry	99	
15-20	trash/dry	101	
20-25	trash/dry	104	
25-30	trash/dry	104	
30-35	trash/dry	105	
35-40	trash/dry	107	
40-45	trash/dry	109	
45-50	trash/dry	109	
50-55	trash/dry	114	
55-60	trash/dry	116	
60-65			
65-70			
70-75			
75-80			
80-85			
85-90			
90-95			

Record of Gas Well Installation

Job Number: 0120-131-17 Job Name: 2009 gas system Well Number: 85
Drilling Contractor: A.E.G.L Observed By: Joshua Ross
Started Install.: 9-15-09 Completed Install.: 9-15-09
Time: 10:30am Time: 12:30pm

Top of Flange Elevation: _____
Ground Surface Elevation: 549.3 Location: N 1067250.3 E 516088.8

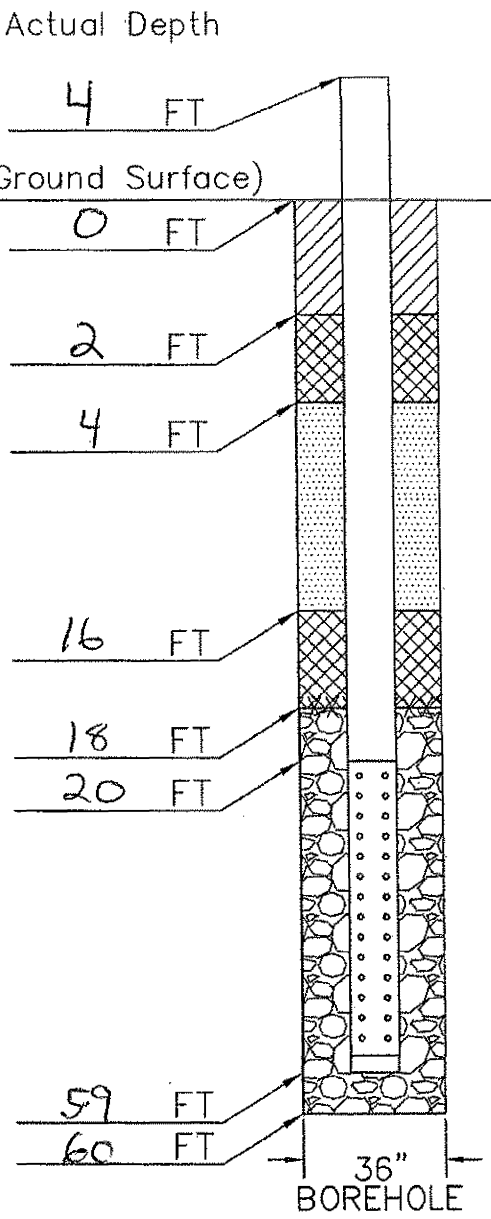

Materials

Intermediate or Final Cover:
Material: clay soil material

Top Seal:
Material: Granular bentonite
Quntity: 12 bags
Hydrated: yes

Backfill:
Material: clay soil material

Bottom Seal:
Material: Granular bentonite
Quntity: 12 bags
Hydrated: yes

Filter Pack:
Material: 1" to 3" gravel

Riser:
Material: CPVC
Quantity: 24 Feet
Diameter: 6.n

Screen:
Material: CPVC
Quantity: 39
Diameter: 6in
Plug: 6in cap

Weaver Boos Consultants

LANDFILL GAS COLLECTION SYSTEM
WELL FIELD SCHEDULE (Updated 10/27/2012)

Well No.	Location Coordinates		Surface Elevation (ft MSL)	Waste Bottom Elevation (ft MSL)	Landfill Depth (ft)	Borehole Depth (ft)	Well Pipe Depth (ft)	Slotted Pipe Depth (ft)	Solid Pipe Depth (ft)	Above Grade Riser (ft)	Thickness of Gravel Pack (ft)	Completed (Y/N)	Actual Installed Depth (ft)
	N-S	E-W											
New Perimeter Wells													
GEW-100	1,066,744	516,375	496.9	337	160	140	139	114	25	3	117		
GEW-101	1,066,858	516,491	499.5	337	163	140	139	114	25	3	117		
GEW-102	1,066,967	516,598	495.1	335	160	140	139	114	25	3	117		
GEW-103	1,067,092	516,723	499.2	330	169	140	139	114	25	3	117		
GEW-104	1,067,223	516,669	535.8	330	206	140	139	114	25	3	117		
GEW-105	1,067,311	516,783	505.5	320	186	140	139	114	25	3	117		
GEW-106	1,067,418	516,686	509.2	330	179	140	139	114	25	3	117		
GEW-107	1,067,552	516,598	504.4	350	154	140	139	114	25	3	117		
GEW-108	1,067,677	516,505	504.5	360	145	135	134	109	25	3	112		
GEW-109	1,067,791	516,434	500.2	385	115	105	104	79	25	3	82		
GEW-110	1,067,785	516,258	482.8	380	103	93	92	67	25	3	70		
GEW-111	1,067,634	516,209	491.1	305	186	140	139	114	25	3	117		
GEW-112	1,067,568	515,917	479.8	330	150	140	139	114	25	3	117		
GEW-113	1,067,470	515,781	499	270	229	140	139	114	25	3	117		
GEW-116	1,067,078	515,418	473	337	137	136	135	110	25	3	113		
GEW-117	1,066,966	515,397	467	322	145	140	139	114	25	3	117		
GEW-118	1,066,863	515,417	473	406	67	66	65	45	20	3	48		
New Interior Wells													
GEW-86	1,067,204	516,154	553.1	310	243	140	139	114	25	3	117		
GEW-87	1,067,413	515,942	519.9	270	250	140	139	114	25	3	117		
GEW-88	1,067,361	516,107	523.5	285	238	140	139	114	25	3	117		
GEW-89	1,067,363	516,273	543.5	325	219	140	139	114	25	3	117		
GEW-90	1,067,498	516,335	533.9	330	204	140	139	114	25	3	117	Y	119
GEW-91	1,067,636	516,366	511.5	351	161	140	139	114	25	3	117		
New Replacement Wells													
GEW-13R	1,067,532	516,068	482.6	320	163	140	139	114	25	3	117		
GEW-18B	1,067,078	515,522	500.9	372	129	119	118	93	25	4	96	Y	120
GEW-34R	1,067,199	516,799	510.0	440	??	140	139	114	25	3	117		
GEW-57B	1,067,229	516,546	546.2	390	156	140	139	114	25	6	117		
GEW-58R	1,067,366	516,547	543.6	335	209	140	139	114	25	7	117		
GEW-61B	1,067,299	516,406	550.1	335	215	140	139	114	25	8	117		
GEW-64A	1,067,008	516,395	539.4	390	149	139	138	113	25	9	116		
GEW-67R	1,067,499	516,197	507.2	295	212	140	139	114	25	10	117		
GEW-68A	1,066,934	516,297	544.7	380	165	140	139	114	25	11	117		
GEW-71B	1,067,264	516,011	544.3	280	264	140	139	114	25	3	117		
Total						4,432	4,399	3,579	820				

PERIMETER LANDFILL GAS EXTRACTION WELLS

MISSOURI DEPARTMENT OF NATURAL RESOURCES
DIVISION OF GEOLOGY AND LAND SURVEY
(573) 368-2165

MONITORING WELL AND ENVIRONMENTAL INJECTION WELL RECORD

REF NO	DATE RECEIVED
00314898	05/23/2005
CR NO	
STATE CERT NO APPROVED DATE: A131522 05/27/2005	CHECK NO.: 5032106
DATE ENTERED: PHASE 1 PHASE 2 PHASE 3 05/23/2005 05/26/2005 02/17/2006	ROUTE: PCD
REVENUE NO.: 052305	

INFORMATION SUPPLIED BY WELL OR PUMP INSTALLATION CONTRACTOR

OWNER NAME: BRIDGETON LANDFILL LLC
TELEPHONE (OPTIONAL):
DNR VARIANCE NUMBER 2780 — Applicable only if variance was obtained from DNR
OWNER ADDRESS: C/O ALLEN STEINKAMP 13570 ST CHARLES ROCK RD
CITY: BRIDGETON
STATE: MO
ZIP: 63044
SITE NAME: , PGW-1D
CONTACT NAME:
SITE ADDRESS (IF DIFFERENT THAN ABOVE):
CITY:
STATE: MO
ZIP:

PROPOSED USE OF WELL

[ ] MONITORING [X] GAS MONITORING [ ] EXTRACTION [ ] RETURN OR INJECTION (UIC PERMIT MAY BE NEEDED) [ ] WATER LEVEL MEASUREMENT (only)

TYPE OF SURFACE COMPLETION

[ ] ABOVE GROUND [ ] FLUSH CASE LENGTH 0.0 IN. CASE HOLE DEPTH 0.0 IN.
PROTECTIVE CASE MATERIAL [ ] STEEL [ ] ALUMINUM [ ] PLASTIC [ ] OTHER CASE DIAMETER 0.0 IN. CASE HOLE DIAMETER 0.0 IN.

CONSTRUCTION

RISER PIPE DIAMETER 4.0 IN. RISER PIPE LENGTH 29.0 FT. RISER HOLE DIAMETER 8.0 IN.
RISER PIPE MATERIAL [X] PLASTIC RISER PIPE WEIGHT [X] SCH40 [ ] SCH80 DRILLING METHOD
[ ] STEEL [ ] PTFE [ ] OTHER [ ] 304/316 [ ] OTHER [ ] AUGER [ ] PUSH [ ] OTHER

COPY

SCREEN DIAMETER 4.0 IN. SCREEN LENGTH 50.0 FT. BENTONITE SEAL LENGTH 3.0 FT.
SCREEN MATERIAL [ ] PLASTIC SCREEN HOLE DIAMETER SEAL ABOVE SWL [ ] SEAL BELOW SWL [ ]
[ ] STEEL [ ] PTFE [ ] OTHER IF DIFFERENT FROM RISER 8.0 IN. SEAL ABOVE SWL WAS HYDRATED [ ]

PRIMARY FILTER PACK LENGTH 65.0 FT. PRIMARY FILTER MATERIAL [ ] SAND
SECONDARY FILTER PACK LENGTH 0.0 FT. [ ] PREPACKED

ANNULAR SEAL LENGTH 21.0 FT. ANNULAR SEAL MATERIAL [ ] BENTONITE SLURRY [ ] NEAT CEMENT GROUT
ANNULAR SEAL PLACED BY [ ] TREMIE [ ] CEMENT BENTONITE GROUT [X] NON-SLURRY BENTONITE [ ] OTHER
[ ] GRAVITY [ ] PRESSURE GROUT THRU TREMIE IF NON-SLURRY BENTONITE [X] CHIPS [ ] GRANULAR [ ] PELLETS [ ] OTHER

[ ] MULTIPLE CASED OR NESTED WELLS
ATTACH AS-BUILT DIAGRAMS showing constructions details with type, length and diameter of material and length and diameter of bores

LOCATION OF WELL

LAT. 38° 45' 7.9" COUNTY
LONG. 90° 26' 7.5" ST LOUIS COUNTY
Please be aware that we do not guarantee the accuracy of the data. It is submitted to us by a third party and has not been field verified.

(OPTIONAL)
ELEVATION 0 FT.

LEGAL LOCATION (OPTIONAL)
1/4 1/4 1/4 SEC. 0 TWN. 0 RNG. 0

DEPTH FROM	DEPTH TO	FORMATION DESCRIPTION
0	5	FILL CLY
5	16	BRN SILTY CLY
16	76	LS

TOTAL DEPTH 76.0 FEET

FIRST ENCOUNTER GROUNDWATER 0.0 FT
STATIC WATER LEVEL (swl) 0.0 FT
WELL COMPLETION DATE 04/19/2005
PUMP SET DEPTH FT
WELL YIELD 0.0 GPM
PUMP INSTALLATION DATE

OTHER INFORMATION OR LOCATION DATA (OPTIONAL)

I HEREBY CERTIFY THE WELL/PUMP INFORMATION DESCRIBED HEREIN IS TRUE AND ACCURATE

	PERMIT NUMBER	DATE
PRIMARY CONTRACTOR SIGNATURE x DAVID MEYER	001251	
WELL DRILLER SIGNATURE x DAVID MEYER	001251	
PUMP INSTALLER SIGNATURE pump info required for extraction/recovery wells x		
APPRENTICE WELL DRILLER SIGNATURE x		

MISSOURI DEPARTMENT OF NATURAL RESOURCES
DIVISION OF GEOLOGY AND LAND SURVEY
(573) 368-2165

MONITORING WELL AND ENVIRONMENTAL INJECTION WELL RECORD

REF NO	DATE RECEIVED
00314913	05/23/2005
CR NO	

STATE CERT NO	APPROVED DATE	CHECK NO.
A131523	05/27/2005	5032106

DATE ENTERED	ROUTE	REVENUE NO.
PHASE 1 PHASE 2 PHASE 3 05/23/2005 05/26/2005 02/17/2006	PCD	052305

INFORMATION SUPPLIED BY WELL OR PUMP INSTALLATION CONTRACTOR

OWNER NAME: BRIDGETON LANDFILL LLC
TELEPHONE (OPTIONAL):
DNR VARIANCE NUMBER 2780 — Applicable only if variance was obtained from DNR

OWNER ADDRESS: C/O ALLEN STEINKAMP 13570 ST CHARLES ROCK RD
CITY: BRIDGETON
STATE: MO
ZIP: 63044

SITE NAME: , PGW-2
CONTACT NAME:

SITE ADDRESS (IF DIFFERENT THAN ABOVE):
CITY:
STATE: MO
ZIP:

PROPOSED USE OF WELL

[ ] MONITORING [X] GAS MONITORING [ ] EXTRACTION [ ] RETURN OR INJECTION (UIC PERMIT MAY BE NEEDED) [ ] WATER LEVEL MEASUREMENT (only)

TYPE OF SURFACE COMPLETION

[ ] ABOVE GROUND [ ] FLUSH CASE LENGTH 0.0 IN. CASE HOLE DEPTH 0.0 IN.

PROTECTIVE CASE MATERIAL [ ] STEEL [ ] ALUMINUM [ ] PLASTIC [ ] OTHER CASE DIAMETER 0.0 IN. CASE HOLE DIAMETER 0.0 IN.

CONSTRUCTION

RISER PIPE DIAMETER 4.0 IN. RISER PIPE LENGTH 22.5 FT. RISER HOLE DIAMETER 8.0 IN.

RISER PIPE MATERIAL [X] PLASTIC [ ] STEEL [ ] PTFE [ ] OTHER
RISER PIPE WEIGHT [X] SCH40 [ ] 304/316 [ ] OTHER
DRILLING METHOD [ ] AUGER [ ] PUSH [ ] OTHER

SCREEN DIAMETER 4.0 IN. SCREEN LENGTH 30.0 FT. BENTONITE SEAL LENGTH 3.0 FT.

SCREEN MATERIAL [ ] PLASTIC [ ] STEEL [ ] PTFE [ ] OTHER
SCREEN HOLE DIAMETER IF DIFFERENT FROM RISER 8.0 IN.
SEAL ABOVE SWL [ ] SEAL BELOW SWL [ ]
SEAL ABOVE SWL WAS HYDRATED [ ]

PRIMARY FILTER PACK LENGTH 33.5 FT. PRIMARY FILTER MATERIAL [ ] SAND [ ] PREPACKED
SECONDARY FILTER PACK LENGTH 0.0 FT.

ANNULAR SEAL LENGTH 14.0 FT. ANNULAR SEAL MATERIAL [ ] BENTONITE SLURRY [ ] NEAT CEMENT GROUT
ANNULAR SEAL PLACED BY [ ] TREMIE [ ] GRAVITY [ ] PRESSURE GROUT THRU TREMIE
[ ] CEMENT BENTONITE GROUT [X] NON-SLURRY BENTONITE [ ] OTHER
IF NON-SLURRY BENTONITE [X] CHIPS [ ] GRANULAR [ ] PELLETS [ ] OTHER

COPY

[ ] MULTIPLE CASED OR NESTED WELLS
ATTACH AS-BUILT DIAGRAMS showing constructions details with type, length and diameter of material and length and diameter of bores

LOCATION OF WELL

LAT. 38 ° 45' 7.9" COUNTY
LONG. 90 ° 26' 7.5" ST LOUIS COUNTY
Please be aware that we do not guarantee the accuracy of the data. It is submitted to us by a third party and has not been field verified.

(OPTIONAL)
ELEVATION 0 FT.

LEGAL LOCATION (OPTIONAL)
1/4 1/4 1/4 SEC. 0 TWN. 0 RNG. 0

DEPTH FROM	DEPTH TO	FORMATION DESCRIPTION
0	13	FILL CLY MIX
13	15	GRY SND
15	17	CLY
17	50	LS

TOTAL DEPTH 50.5 FEET

FIRST ENCOUNTER GROUNDWATER 0.0 FT
STATIC WATER LEVEL (swl) 0.0 FT
WELL COMPLETION DATE 03/25/2005
PUMP SET DEPTH FT
WELL YIELD 0.0 GPM
PUMP INSTALLATION DATE

OTHER INFORMATION OR LOCATION DATA (OPTIONAL)

I HEREBY CERTIFY THE WELL/PUMP INFORMATION DESCRIBED HEREIN IS TRUE AND ACCURATE

	PERMIT NUMBER	DATE
PRIMARY CONTRACTOR SIGNATURE x DAVID MEYER	001251	
WELL DRILLER SIGNATURE x DAVID MEYER	001251	
PUMP INSTALLER SIGNATURE pump info required for extraction/recovery wells x		
APPRENTICE WELL DRILLER SIGNATURE x		

MISSOURI DEPARTMENT OF NATURAL RESOURCES
DIVISION OF GEOLOGY AND LAND SURVEY
(573) 368-2165

MONITORING WELL AND ENVIRONMENTAL INJECTION WELL RECORD

REF NO	DATE RECEIVED
00314908	05/23/2005
CR NO	
STATE CERT NO APPROVED DATE	CHECK NO.
A131524 05/27/2005	5032106
DATE ENTERED	ROUTE / REVENUE NO.
PHASE 1 PHASE 2 PHASE 3 05/23/2005 05/26/2005 02/17/2006	PCD / 052305

INFORMATION SUPPLIED BY WELL OR PUMP INSTALLATION CONTRACTOR

OWNER NAME: BRIDGETON LANDFILL LLC
TELEPHONE (OPTIONAL):
DNR VARIANCE NUMBER 2780 (Applicable only if variance was obtained from DNR)
OWNER ADDRESS: C/O ALLEN STEINKAMP 13570 ST CHARLES ROCK RD
CITY: BRIDGETON
STATE: MO
ZIP: 63044
SITE NAME: , PGW-3
CONTACT NAME:
SITE ADDRESS (IF DIFFERENT THAN ABOVE):
CITY:
STATE: MO
ZIP:

PROPOSED USE OF WELL

[ ] MONITORING [X] GAS MONITORING [ ] EXTRACTION [ ] RETURN OR INJECTION (UIC PERMIT MAY BE NEEDED) [ ] WATER LEVEL MEASUREMENT (only)

TYPE OF SURFACE COMPLETION

[ ] ABOVE GROUND [ ] FLUSH CASE LENGTH 0.0 IN. CASE HOLE DEPTH 0.0 IN.
PROTECTIVE CASE MATERIAL [ ] STEEL [ ] ALUMINUM [ ] PLASTIC [ ] OTHER CASE DIAMETER 0.0 IN. CASE HOLE DIAMETER 0.0 IN

CONSTRUCTION

RISER PIPE DIAMETER 4.0 IN. RISER PIPE LENGTH 24.0 FT. RISER HOLE DIAMETER 8.0 IN.
RISER PIPE MATERIAL [X] PLASTIC RISER PIPE WEIGHT [ ] SCH40 DRILLING METHOD
[ ] STEEL [ ] PTFE [ ] OTHER [X] SCH80 [ ] 304/316 [ ] OTHER [ ] AUGER [ ] PUSH [ ] OTHER

COPY

SCREEN DIAMETER 4.0 IN. SCREEN LENGTH 30.0 FT. BENTONITE SEAL LENGTH 3.0 FT.
SCREEN MATERIAL [ ] PLASTIC SCREEN HOLE DIAMETER SEAL ABOVE SWL [ ] SEAL BELOW SWL [ ]
[ ] STEEL [ ] PTFE [ ] OTHER IF DIFFERENT FROM RISER 8.0 IN. SEAL ABOVE SWL WAS HYDRATED [ ]

PRIMARY FILTER PACK LENGTH 34.0 FT. PRIMARY FILTER MATERIAL [ ] SAND
SECONDARY FILTER PACK LENGTH 0.0 FT. [ ] PREPACKED

ANNULAR SEAL LENGTH 14.0 FT. ANNULAR SEAL MATERIAL [ ] BENTONITE SLURRY [ ] NEAT CEMENT GROUT
ANNULAR SEAL PLACED BY [ ] TREMIE [ ] CEMENT BENTONITE GROUT [X] NON-SLURRY BENTONITE [ ] OTHER
[ ] GRAVITY [ ] PRESSURE GROUT THRU TREMIE IF NON-SLURRY BENTONITE [X] CHIPS [ ] GRANULAR [ ] PELLETS [ ] OTHER

[ ] MULTIPLE CASED OR NESTED WELLS
ATTACH AS-BUILT DIAGRAMS showing constructions details with type, length and diameter of material and length and diameter of bores

LOCATION OF WELL

(OPTIONAL) LEGAL LOCATION (OPTIONAL)
LAT. 38° 45' 7.8" COUNTY
LONG. 90° 26' 7.5" ST LOUIS COUNTY
ELEVATION 0 FT. _____ 1/4 _____ 1/4 _____ 1/4
SEC. 0 TWN. 0 RNG. 0

Please be aware that we do not guarantee the accuracy of the data. It is submitted to us by a third party and has not been field verified.

DEPTH FROM	DEPTH TO	FORMATION DESCRIPTION
0	16	CLY RX
15	51	LS

TOTAL DEPTH 51.0 FEET

FIRST ENCOUNTER GROUNDWATER 0.0 FT PUMP SET DEPTH FT
STATIC WATER LEVEL (swl) 0.0 FT WELL YIELD 0.0 GPM
WELL COMPLETION DATE 03/24/2005 PUMP INSTALLATION DATE
OTHER INFORMATION OR LOCATION DATA (OPTIONAL)

I HEREBY CERTIFY THE WELL/PUMP INFORMATION DESCRIBED HEREIN IS TRUE AND ACCURATE

	PERMIT NUMBER	DATE
PRIMARY CONTRACTOR SIGNATURE x DAVID MEYER	001251	
WELL DRILLER SIGNATURE x DAVID MEYER	001251	
PUMP INSTALLER SIGNATURE pump info required for extraction/recovery wells x		
APPRENTICE WELL DRILLER SIGNATURE x		

MISSOURI DEPARTMENT OF NATURAL RESOURCES
DIVISION OF GEOLOGY AND LAND SURVEY
(573) 368-2165

MONITORING WELL AND ENVIRONMENTAL INJECTION WELL RECORD

REF NO	DATE RECEIVED
00314907	05/23/2005
CR NO	
STATE CERT NO APPROVED DATE	CHECK NO.
A131525 05/27/2005	5032106
DATE ENTERED	ROUTE / REVENUE NO.
PHASE 1 PHASE 2 PHASE 3	PCD / 052305
05/23/2005 05/26/2005 02/17/2006	

INFORMATION SUPPLIED BY WELL OR PUMP INSTALLATION CONTRACTOR

OWNER NAME: BRIDGETON LANDFILL LLC
TELEPHONE (OPTIONAL):
DNR VARIANCE NUMBER 2780 — Applicable only if variance was obtained from DNR
OWNER ADDRESS: C/O ALLEN STEINKAMP 13570 ST CHARLES ROCK RD
CITY: BRIDGETON
STATE: MO
ZIP: 63044
SITE NAME: , PGW-4
CONTACT NAME:
SITE ADDRESS (IF DIFFERENT THAN ABOVE):
CITY:
STATE: MO
ZIP:

PROPOSED USE OF WELL

[ ] MONITORING [X] GAS MONITORING [ ] EXTRACTION [ ] RETURN OR INJECTION (UIC PERMIT MAY BE NEEDED) [ ] WATER LEVEL MEASUREMENT (only)

TYPE OF SURFACE COMPLETION

[ ] ABOVE GROUND [ ] FLUSH — CASE LENGTH 0.0 IN. CASE HOLE DEPTH 0.0 IN.
PROTECTIVE CASE MATERIAL [ ] STEEL [ ] ALUMINUM [ ] PLASTIC [ ] OTHER — CASE DIAMETER 0.0 IN. CASE HOLE DIAMETER 0.0 IN.

CONSTRUCTION

RISER PIPE DIAMETER 4.0 IN. — RISER PIPE LENGTH 18.0 FT. — RISER HOLE DIAMETER 8.0 IN.
RISER PIPE MATERIAL [X] PLASTIC — RISER PIPE WEIGHT SCH40 — DRILLING METHOD
[ ] STEEL [ ] PTFE [ ] OTHER — [X] SCH40 [ ] 304/316 OTHER — [ ] AUGER [ ] PUSH [ ] OTHER

COPY

SCREEN DIAMETER 4.0 IN. — SCREEN LENGTH 60.0 FT. — BENTONITE SEAL LENGTH 3.0 FT.
SCREEN MATERIAL [ ] PLASTIC — SCREEN HOLE DIAMETER — SEAL ABOVE SWL [ ] — SEAL BELOW SWL [ ]
[ ] STEEL [ ] PTFE [ ] OTHER — IF DIFFERENT FROM RISER 8.0 IN. — SEAL ABOVE SWL WAS HYDRATED [ ]

PRIMARY FILTER PACK LENGTH 62.0 FT. — PRIMARY FILTER MATERIAL [ ] SAND
SECONDARY FILTER PACK LENGTH 0.0 FT. [ ] PREPACKED

ANNULAR SEAL LENGTH 10.0 FT. — ANNULAR SEAL MATERIAL [ ] BENTONITE SLURRY [ ] NEAT CEMENT GROUT
ANNULAR SEAL PLACED BY [ ] TREMIE — [ ] CEMENT BENTONITE GROUT [X] NON-SLURRY BENTONITE [ ] OTHER
[ ] GRAVITY [ ] PRESSURE GROUT THRU TREMIE — IF NON-SLURRY BENTONITE [X] CHIPS [ ] GRANULAR [ ] PELLETS [ ] OTHER

[ ] MULTIPLE CASED OR NESTED WELLS
ATTACH AS-BUILT DIAGRAMS showing constructions details with type, length and diameter of material and length and diameter of bores

LOCATION OF WELL

LAT. 38° 45' 7.9" COUNTY
LONG. 90° 26' 7.5" ST LOUIS COUNTY
Please be aware that we do not guarantee the accuracy of the data. It is submitted to us by a third party and has not been field verified.

(OPTIONAL) ELEVATION 0 FT.

LEGAL LOCATION (OPTIONAL): 1/4 1/4 1/4 SEC. 0 TWN. 0 RNG. 0

DEPTH FROM	DEPTH TO	FORMATION DESCRIPTION
0	6	FILL
6	14	SILTY CLY
14	75	LS W/ CHT

TOTAL DEPTH 75.0 FEET

FIRST ENCOUNTER GROUNDWATER 0.0 FT
STATIC WATER LEVEL (swl) 0.0 FT
WELL COMPLETION DATE 04/08/2005
PUMP SET DEPTH FT
WELL YIELD 0.0 GPM
PUMP INSTALLATION DATE

OTHER INFORMATION OR LOCATION DATA (OPTIONAL)

I HEREBY CERTIFY THE WELL/PUMP INFORMATION DESCRIBED HEREIN IS TRUE AND ACCURATE

	PERMIT NUMBER	DATE
PRIMARY CONTRACTOR SIGNATURE x DAVID MEYER	001251	
WELL DRILLER SIGNATURE x DAVID MEYER	001251	
PUMP INSTALLER SIGNATURE pump info required for extraction/recovery wells x		
APPRENTICE WELL DRILLER SIGNATURE x		

MISSOURI DEPARTMENT OF NATURAL RESOURCES
DIVISION OF GEOLOGY AND LAND SURVEY
(573) 368-2165

MONITORING WELL AND ENVIRONMENTAL INJECTION WELL RECORD

REF NO	00314905
CR NO	
DATE RECEIVED	05/23/2005
STATE CERT NO APPROVED DATE	A131526 05/27/2005
CHECK NO.	5032106
DATE ENTERED	PHASE 1 PHASE 2 PHASE 3 05/23/2005 05/26/2005 02/17/2006
ROUTE	PCD
REVENUE NO.	052305

INFORMATION SUPPLIED BY WELL OR PUMP INSTALLATION CONTRACTOR

OWNER NAME: BRIDGETON LANDFILL LLC
TELEPHONE (OPTIONAL):
DNR VARIANCE NUMBER 2780 — Applicable only if variance was obtained from DNR

OWNER ADDRESS: C/O ALLEN STEINKAMP 13570 ST CHARLES ROCK RD
CITY: BRIDGETON
STATE: MO
ZIP: 63044

SITE NAME: , PGW-5
CONTACT NAME:

SITE ADDRESS (IF DIFFERENT THAN ABOVE):
CITY:
STATE: MO
ZIP:

PROPOSED USE OF WELL

[ ] MONITORING [X] GAS MONITORING [ ] EXTRACTION [ ] RETURN OR INJECTION (UIC PERMIT MAY BE NEEDED) [ ] WATER LEVEL MEASUREMENT (only)

TYPE OF SURFACE COMPLETION

[ ] ABOVE GROUND [ ] FLUSH CASE LENGTH 0.0 IN. CASE HOLE DEPTH 0.0 IN.

PROTECTIVE CASE MATERIAL [ ] STEEL [ ] ALUMINUM [ ] PLASTIC [ ] OTHER CASE DIAMETER 0.0 IN. CASE HOLE DIAMETER 0.0 IN.

CONSTRUCTION

RISER PIPE DIAMETER 4.0 IN. RISER PIPE LENGTH 23.0 FT. RISER HOLE DIAMETER 8.0 IN.

RISER PIPE MATERIAL [X] PLASTIC RISER PIPE WEIGHT [ ] SCH40 DRILLING METHOD

[ ] STEEL [ ] PTFE [ ] OTHER [X] SCH80 [ ] 304/316 [ ] OTHER [ ] AUGER [ ] PUSH [ ] OTHER

SCREEN DIAMETER 4.0 IN. SCREEN LENGTH 65.0 FT. BENTONITE SEAL LENGTH 3.0 FT.

SCREEN MATERIAL [ ] PLASTIC SCREEN HOLE DIAMETER SEAL ABOVE SWL [ ] SEAL BELOW SWL [ ]

[ ] STEEL [ ] PTFE [ ] OTHER IF DIFFERENT FROM RISER 8.0 IN. SEAL ABOVE SWL WAS HYDRATED [ ]

PRIMARY FILTER PACK LENGTH 57.0 FT. PRIMARY FILTER MATERIAL [ ] SAND

SECONDARY FILTER PACK LENGTH 0.0 FT. [ ] PREPACKED

ANNULAR SEAL LENGTH 18.5 FT. ANNULAR SEAL MATERIAL [ ] BENTONITE SLURRY [ ] NEAT CEMENT GROUT

ANNULAR SEAL PLACED BY [ ] TREMIE [ ] CEMENT BENTONITE GROUT [X] NON-SLURRY BENTONITE [ ] OTHER

[ ] GRAVITY [ ] PRESSURE GROUT THRU TREMIE IF NON-SLURRY BENTONITE [X] CHIPS [ ] GRANULAR [ ] PELLETS [ ] OTHER

[ ] MULTIPLE CASED OR NESTED WELLS

ATTACH AS-BUILT DIAGRAMS showing constructions details with type, length and diameter of material and length and diameter of bores

COPY

LOCATION OF WELL

LAT. 38 ° 45' 7.9" COUNTY

LONG. 90 ° 26' 7.5" ST LOUIS COUNTY

Please be aware that we do not guarantee the accuracy of the data. It is submitted to us by a third party and has not been field verified.

(OPTIONAL)

ELEVATION 0 FT.

LEGAL LOCATION (OPTIONAL)

1/4 1/4 1/4 SEC. 0 TWN. 0 RNG. 0

DEPTH FROM	DEPTH TO	FORMATION DESCRIPTION
0	25	SILTY CLY
25	44	SH
44	50	BLK SH
50	75	LS

TOTAL DEPTH 75.0 FEET

FIRST ENCOUNTER GROUNDWATER 0.0 FT

STATIC WATER LEVEL (swl) 0.0 FT

WELL COMPLETION DATE 04/13/2005

PUMP SET DEPTH FT

WELL YIELD 0.0 GPM

PUMP INSTALLATION DATE

OTHER INFORMATION OR LOCATION DATA (OPTIONAL)

I HEREBY CERTIFY THE WELL/PUMP INFORMATION DESCRIBED HEREIN IS TRUE AND ACCURATE

	PERMIT NUMBER	DATE
PRIMARY CONTRACTOR SIGNATURE x DAVID MEYER	001251	
WELL DRILLER SIGNATURE x DAVID MEYER	001251	
PUMP INSTALLER SIGNATURE pump info required for extraction/recovery wells x		
APPRENTICE WELL DRILLER SIGNATURE x		

MISSOURI DEPARTMENT OF NATURAL RESOURCES
DIVISION OF GEOLOGY AND LAND SURVEY
(573) 368-2165

MONITORING WELL AND ENVIRONMENTAL INJECTION WELL RECORD

REF NO 00314911	DATE RECEIVED 05/23/2005		
CR NO			
STATE CERT NO A131527	APPROVED DATE 05/27/2005	CHECK NO. 5032106	
DATE ENTERED PHASE 1 PHASE 2 PHASE 3 05/23/2005 05/26/2005 02/17/2006	ROUTE PCD	REVENUE NO. 052305	

INFORMATION SUPPLIED BY WELL OR PUMP INSTALLATION CONTRACTOR

OWNER NAME: BRIDGETON LANDFILL LLC
TELEPHONE (OPTIONAL):
DNR VARIANCE NUMBER 2780 — Applicable only if variance was obtained from DNR
OWNER ADDRESS: C/O ALLEN STEINKAMP 13570 ST CHARLES ROCK RD
CITY: BRIDGETON
STATE: MO
ZIP: 63044
SITE NAME: , PGW-6
CONTACT NAME:
SITE ADDRESS (IF DIFFERENT THAN ABOVE):
CITY:
STATE: MO
ZIP:

PROPOSED USE OF WELL

[ ] MONITORING [X] GAS MONITORING [ ] EXTRACTION [ ] RETURN OR INJECTION (UIC PERMIT MAY BE NEEDED) [ ] WATER LEVEL MEASUREMENT (only)

TYPE OF SURFACE COMPLETION

[ ] ABOVE GROUND [ ] FLUSH CASE LENGTH 0.0 IN. CASE HOLE DEPTH 0.0 IN.
PROTECTIVE CASE MATERIAL [ ] STEEL [ ] ALUMINUM [ ] PLASTIC [ ] OTHER CASE DIAMETER 0.0 IN. CASE HOLE DIAMETER 0.0 IN.

CONSTRUCTION

RISER PIPE DIAMETER 4.0 IN. RISER PIPE LENGTH 18.0 FT. RISER HOLE DIAMETER 8.0 IN.
RISER PIPE MATERIAL [X] PLASTIC RISER PIPE WEIGHT [ ] SCH40
[ ] STEEL [ ] PTFE [ ] OTHER [X] SCH80 [ ] 304/316 [ ] OTHER DRILLING METHOD [ ] AUGER [ ] PUSH [ ] OTHER

SCREEN DIAMETER 4.0 IN. SCREEN LENGTH 60.0 FT. BENTONITE SEAL LENGTH 3.0 FT.
SCREEN MATERIAL [ ] PLASTIC SCREEN HOLE DIAMETER SEAL ABOVE SWL [ ] SEAL BELOW SWL [ ]
[ ] STEEL [ ] PTFE [ ] OTHER IF DIFFERENT FROM RISER 8.0 IN. SEAL ABOVE SWL WAS HYDRATED [ ]

PRIMARY FILTER PACK LENGTH 62.0 FT. PRIMARY FILTER MATERIAL [ ] SAND
SECONDARY FILTER PACK LENGTH 0.0 FT. [ ] PREPACKED

ANNULAR SEAL LENGTH 10.0 FT. ANNULAR SEAL MATERIAL [ ] BENTONITE SLURRY [ ] NEAT CEMENT GROUT
ANNULAR SEAL PLACED BY [ ] TREMIE [ ] CEMENT BENTONITE GROUT [X] NON-SLURRY BENTONITE [ ] OTHER
[ ] GRAVITY [ ] PRESSURE GROUT THRU TREMIE IF NON-SLURRY BENTONITE [X] CHIPS [ ] GRANULAR [ ] PELLETS [ ] OTHER

[ ] MULTIPLE CASED OR NESTED WELLS
ATTACH AS-BUILT DIAGRAMS showing constructions details with type, length and diameter of material and length and diameter of bores

COPY

LOCATION OF WELL

LAT. 38 ° 45' 7.9" COUNTY
LONG. 90 ° 26' 7.5" ST LOUIS COUNTY
Please be aware that we do not guarantee the accuracy of the data. It is submitted to us by a third party and has not been field verified.

(OPTIONAL) ELEVATION 0 FT.
LEGAL LOCATION (OPTIONAL) 1/4 1/4 1/4 SEC. 0 TWN. 0 RNG. 0

DEPTH FROM	DEPTH TO	FORMATION DESCRIPTION
0	3	CLY FILL
3	12	BRN SILTY CLY
12	75	LS

TOTAL DEPTH 75.0 FEET

FIRST ENCOUNTER GROUNDWATER 0.0 FT
STATIC WATER LEVEL (swl) 0.0 FT
PUMP SET DEPTH FT
WELL YIELD 0.0 GPM
WELL COMPLETION DATE 04/07/2005
PUMP INSTALLATION DATE
OTHER INFORMATION OR LOCATION DATA (OPTIONAL)

I HEREBY CERTIFY THE WELL/PUMP INFORMATION DESCRIBED HEREIN IS TRUE AND ACCURATE

	PERMIT NUMBER	DATE
PRIMARY CONTRACTOR SIGNATURE x DAVID MEYER	001251	
WELL DRILLER SIGNATURE x DAVID MEYER	001251	
PUMP INSTALLER SIGNATURE pump info required for extraction/recovery wells x		
APPRENTICE WELL DRILLER SIGNATURE x		

MISSOURI DEPARTMENT OF NATURAL RESOURCES
DIVISION OF GEOLOGY AND LAND SURVEY
(573) 368-2165

MONITORING WELL AND ENVIRONMENTAL INJECTION WELL RECORD

REF NO: 00314910
CR NO:
DATE RECEIVED: 05/23/2005
STATE CERT NO APPROVED DATE: A131528 05/27/2005
CHECK NO.: 5032106
DATE ENTERED: PHASE 1 PHASE 2 PHASE 3 05/23/2005 05/26/2005 02/17/2006
ROUTE: PCD
REVENUE NO.: 052305

INFORMATION SUPPLIED BY WELL OR PUMP INSTALLATION CONTRACTOR

OWNER NAME: BRIDGETON LANDFILL LLC
TELEPHONE (OPTIONAL):
DNR VARIANCE NUMBER 2780 — Applicable only if variance was obtained from DNR
OWNER ADDRESS: C/O ALLEN STEINKAMP 13570 ST CHARLES ROCK RD
CITY: BRIDGETON
STATE: MO
ZIP: 63044
SITE NAME: , PGW-7
CONTACT NAME:
SITE ADDRESS (IF DIFFERENT THAN ABOVE):
CITY:
STATE: MO
ZIP:

PROPOSED USE OF WELL

[ ] MONITORING [X] GAS MONITORING [ ] EXTRACTION [ ] RETURN OR INJECTION (UIC PERMIT MAY BE NEEDED) [ ] WATER LEVEL MEASUREMENT (only)

TYPE OF SURFACE COMPLETION

[ ] ABOVE GROUND [ ] FLUSH CASE LENGTH 0.0 IN. CASE HOLE DEPTH 0.0 IN.
PROTECTIVE CASE MATERIAL [ ] STEEL [ ] ALUMINUM [ ] PLASTIC [ ] OTHER CASE DIAMETER 0.0 IN. CASE HOLE DIAMETER 0.0 IN.

CONSTRUCTION

RISER PIPE DIAMETER 4.0 IN. RISER PIPE LENGTH 18.0 FT. RISER HOLE DIAMETER 8.0 IN.
RISER PIPE MATERIAL [X] PLASTIC RISER PIPE WEIGHT [ ] SCH40 DRILLING METHOD
[ ] STEEL [ ] PTFE [ ] OTHER [X] SCH80 [ ] 304/316 [ ] OTHER [ ] AUGER [ ] PUSH [ ] OTHER

COPY

SCREEN DIAMETER 4.0 IN. SCREEN LENGTH 60.0 FT. BENTONITE SEAL LENGTH 3.0 FT.
SCREEN MATERIAL [ ] PLASTIC SCREEN HOLE DIAMETER SEAL ABOVE SWL [ ] SEAL BELOW SWL [ ]
[ ] STEEL [ ] PTFE [ ] OTHER IF DIFFERENT FROM RISER 8.0 IN. SEAL ABOVE SWL WAS HYDRATED [ ]

PRIMARY FILTER PACK LENGTH 62.0 FT. PRIMARY FILTER MATERIAL [ ] SAND
SECONDARY FILTER PACK LENGTH 0.0 FT. [ ] PREPACKED

ANNULAR SEAL LENGTH 10.0 FT. ANNULAR SEAL MATERIAL [ ] BENTONITE SLURRY [ ] NEAT CEMENT GROUT
ANNULAR SEAL PLACED BY [ ] TREMIE [ ] CEMENT BENTONITE GROUT [X] NON-SLURRY BENTONITE [ ] OTHER
[ ] GRAVITY [ ] PRESSURE GROUT THRU TREMIE IF NON-SLURRY BENTONITE [X] CHIPS [ ] GRANULAR [ ] PELLETS [ ] OTHER

[ ] MULTIPLE CASED OR NESTED WELLS
ATTACH AS-BUILT DIAGRAMS showing constructions details with type, length and diameter of material and length and diameter of bores

LOCATION OF WELL

LAT. 38 ° 45' 7.9" COUNTY
LONG. 90 ° 26' 7.5" ST LOUIS COUNTY
Please be aware that we do not guarantee the accuracy of the data. It is submitted to us by a third party and has not been field verified.

(OPTIONAL)
ELEVATION 0 FT.

LEGAL LOCATION (OPTIONAL)
1/4 1/4 1/4
SEC. 0 TWN. 0 RNG. 0

DEPTH FROM	DEPTH TO	FORMATION DESCRIPTION
0	3	FILL CLY
3	12	SILTY CLY
12	75	LS CHT

TOTAL DEPTH 75.0 FEET

FIRST ENCOUNTER GROUNDWATER 0.0 FT
STATIC WATER LEVEL (swl) 0.0 FT
WELL COMPLETION DATE 04/07/2005
PUMP SET DEPTH FT
WELL YIELD 0.0 GPM
PUMP INSTALLATION DATE
OTHER INFORMATION OR LOCATION DATA (OPTIONAL)

I HEREBY CERTIFY THE WELL/PUMP INFORMATION DESCRIBED HEREIN IS TRUE AND ACCURATE

	PERMIT NUMBER	DATE
PRIMARY CONTRACTOR SIGNATURE x DAVID MEYER	001251	
WELL DRILLER SIGNATURE x DAVID MEYER	001251	
PUMP INSTALLER SIGNATURE pump info required for extraction/recovery wells x		
APPRENTICE WELL DRILLER SIGNATURE x		

MISSOURI DEPARTMENT OF NATURAL RESOURCES
DIVISION OF GEOLOGY AND LAND SURVEY
(573) 368-2165

MONITORING WELL AND ENVIRONMENTAL INJECTION WELL RECORD

REF NO	DATE RECEIVED
00314906	05/23/2005
CR NO	
STATE CERT NO APPROVED DATE: A131529 05/27/2005	CHECK NO.: 5032106
DATE ENTERED: PHASE 1 PHASE 2 PHASE 3 05/23/2005 05/26/2005 02/17/2006	ROUTE: PCD
	REVENUE NO.: 052305

INFORMATION SUPPLIED BY WELL OR PUMP INSTALLATION CONTRACTOR

OWNER NAME: BRIDGETON LANDFILL LLC
TELEPHONE (OPTIONAL):
DNR VARIANCE NUMBER 2780 (Applicable only if variance was obtained from DNR)
OWNER ADDRESS: C/O ALLEN STEINKAMP 13570 ST CHARLES ROCK RD
CITY: BRIDGETON
STATE: MO
ZIP: 63044
SITE NAME: , PGW-8
CONTACT NAME:
SITE ADDRESS (IF DIFFERENT THAN ABOVE):
CITY:
STATE: MO
ZIP:

PROPOSED USE OF WELL

[ ] MONITORING [X] GAS MONITORING [ ] EXTRACTION [ ] RETURN OR INJECTION (UIC PERMIT MAY BE NEEDED) [ ] WATER LEVEL MEASUREMENT (only)

TYPE OF SURFACE COMPLETION

[ ] ABOVE GROUND [ ] FLUSH CASE LENGTH 0.0 IN. CASE HOLE DEPTH 0.0 IN.
PROTECTIVE CASE MATERIAL [ ] STEEL [ ] ALUMINUM [ ] PLASTIC [ ] OTHER CASE DIAMETER 0.0 IN. CASE HOLE DIAMETER 0.0 IN.

CONSTRUCTION

RISER PIPE DIAMETER 4.0 IN. RISER PIPE LENGTH 27.0 FT. RISER HOLE DIAMETER 8.0 IN.
RISER PIPE MATERIAL [X] PLASTIC RISER PIPE WEIGHT [ ] SCH40 DRILLING METHOD
[ ] STEEL [ ] PTFE [ ] OTHER [X] SCH80 [ ] 304/316 [ ] OTHER [ ] AUGER [ ] PUSH [ ] OTHER

SCREEN DIAMETER 4.0 IN. SCREEN LENGTH 25.0 FT. BENTONITE SEAL LENGTH 3.0 FT.
SCREEN MATERIAL [ ] PLASTIC SCREEN HOLE DIAMETER SEAL ABOVE SWL [ ] SEAL BELOW SWL [ ]
[ ] STEEL [ ] PTFE [ ] OTHER IF DIFFERENT FROM RISER 8.0 IN. SEAL ABOVE SWL WAS HYDRATED [ ]

PRIMARY FILTER PACK LENGTH 27.5 FT. PRIMARY FILTER MATERIAL [ ] SAND
SECONDARY FILTER PACK LENGTH 0.0 FT. [ ] PREPACKED

ANNULAR SEAL LENGTH 15.0 FT. ANNULAR SEAL MATERIAL [ ] BENTONITE SLURRY [ ] NEAT CEMENT GROUT
ANNULAR SEAL PLACED BY [ ] TREMIE [ ] CEMENT BENTONITE GROUT [X] NON-SLURRY BENTONITE [ ] OTHER
[ ] GRAVITY [ ] PRESSURE GROUT THRU TREMIE IF NON-SLURRY BENTONITE [X] CHIPS [ ] GRANULAR [ ] PELLETS [ ] OTHER

[ ] MULTIPLE CASED OR NESTED WELLS
ATTACH AS-BUILT DIAGRAMS showing constructions details with type, length and diameter of material and length and diameter of bores

COPY

LOCATION OF WELL

LAT. 38 ° 45' 7.8" COUNTY
LONG. 90 ° 26' 7.5" ST LOUIS COUNTY
Please be aware that we do not guarantee the accuracy of the data. It is submitted to us by a third party and has not been field verified.

(OPTIONAL) LEGAL LOCATION (OPTIONAL)
ELEVATION 0 FT. ____ 1/4 ____ 1/4 ____ 1/4
SEC. 0 TWN. 0 RNG. 0

DEPTH FROM	DEPTH TO	FORMATION DESCRIPTION
0	4	CLY FILL
4	17	SILTY CLY SND
17	21	LS
21	26	CLY
26	45	LS

TOTAL DEPTH 45.5 FEET

FIRST ENCOUNTER GROUNDWATER 0.0 FT
STATIC WATER LEVEL (swl) 0.0 FT
PUMP SET DEPTH FT
WELL YIELD 0.0 GPM
WELL COMPLETION DATE 03/31/2005
PUMP INSTALLATION DATE
OTHER INFORMATION OR LOCATION DATA (OPTIONAL)

I HEREBY CERTIFY THE WELL/PUMP INFORMATION DESCRIBED HEREIN IS TRUE AND ACCURATE

	PERMIT NUMBER	DATE
PRIMARY CONTRACTOR SIGNATURE x DAVID MEYER	001251	
WELL DRILLER SIGNATURE x DAVID MEYER	001251	
PUMP INSTALLER SIGNATURE pump info required for extraction/recovery wells x		
APPRENTICE WELL DRILLER SIGNATURE x		

MISSOURI DEPARTMENT OF NATURAL RESOURCES
DIVISION OF GEOLOGY AND LAND SURVEY
(573) 368-2165

MONITORING WELL AND ENVIRONMENTAL INJECTION WELL RECORD

REF NO	DATE RECEIVED
00314904	05/23/2005
CR NO	
STATE CERT NO APPROVED DATE: A131530 05/27/2005	CHECK NO.: 5032106
DATE ENTERED: PHASE 1 PHASE 2 PHASE 3 05/23/2005 05/26/2005 02/17/2006	ROUTE: PCD
REVENUE NO.: 052305	

INFORMATION SUPPLIED BY WELL OR PUMP INSTALLATION CONTRACTOR

OWNER NAME: BRIDGETON LANDFILL LLC
TELEPHONE (OPTIONAL):
DNR VARIANCE NUMBER 2780 — Applicable only if variance was obtained from DNR
OWNER ADDRESS: C/O ALLEN STEINKAMP 13570 ST CHARLES ROCK RD
CITY: BRIDGETON
STATE: MO
ZIP: 63044
SITE NAME: , PGW=9
CONTACT NAME:
SITE ADDRESS (IF DIFFERENT THAN ABOVE):
CITY:
STATE: MO
ZIP:

PROPOSED USE OF WELL

[ ] MONITORING [X] GAS MONITORING [ ] EXTRACTION [ ] RETURN OR INJECTION (UIC PERMIT MAY BE NEEDED) [ ] WATER LEVEL MEASUREMENT (only)

TYPE OF SURFACE COMPLETION

[ ] ABOVE GROUND [ ] FLUSH CASE LENGTH 0.0 IN. CASE HOLE DEPTH 0.0 IN.
PROTECTIVE CASE MATERIAL [ ] STEEL [ ] ALUMINUM [ ] PLASTIC [ ] OTHER CASE DIAMETER 0.0 IN. CASE HOLE DIAMETER 0.0 IN.

CONSTRUCTION

RISER PIPE DIAMETER 4.0 IN. RISER PIPE LENGTH 22.6 FT. RISER HOLE DIAMETER 8.0 IN.
RISER PIPE MATERIAL [X] PLASTIC RISER PIPE WEIGHT [ ] SCH40 DRILLING METHOD
[ ] STEEL [ ] PTFE [ ] OTHER [X] SCH80 [ ] SS304/316 [ ] OTHER [ ] AUGER [ ] PUSH [ ] OTHER

SCREEN DIAMETER 4.0 IN. SCREEN LENGTH 55.0 FT. BENTONITE SEAL LENGTH 3.0 FT.
SCREEN MATERIAL [ ] PLASTIC SCREEN HOLE DIAMETER SEAL ABOVE SWL [ ] SEAL BELOW SWL [ ]
[ ] STEEL [ ] PTFE [ ] OTHER IF DIFFERENT FROM RISER 8.0 IN. SEAL ABOVE SWL WAS HYDRATED [ ]

PRIMARY FILTER PACK LENGTH 57.0 FT. PRIMARY FILTER MATERIAL [ ] SAND
SECONDARY FILTER PACK LENGTH 0.0 FT. [ ] PREPACKED

ANNULAR SEAL LENGTH 15.5 FT. ANNULAR SEAL MATERIAL [ ] BENTONITE SLURRY [ ] NEAT CEMENT GROUT
ANNULAR SEAL PLACED BY [ ] TREMIE [ ] CEMENT BENTONITE GROUT [X] NON-SLURRY BENTONITE [ ] OTHER
[ ] GRAVITY [ ] PRESSURE GROUT THRU TREMIE IF NON-SLURRY BENTONITE [X] CHIPS [ ] GRANULAR [ ] PELLETS [ ] OTHER

[ ] MULTIPLE CASED OR NESTED WELLS
ATTACH AS-BUILT DIAGRAMS showing constructions details with type, length and diameter of material and length and diameter of bores

COPY

LOCATION OF WELL

LAT. 38 ° 45' 7.9" COUNTY
LONG. 90 ° 26' 7.5" ST LOUIS COUNTY
Please be aware that we do not guarantee the accuracy of the data. It is submitted to us by a third party and has not been field verified.

(OPTIONAL)
ELEVATION 0 FT.

LEGAL LOCATION (OPTIONAL)
1/4 1/4 1/4
SEC. 0 TWN. 0 RNG. 0

DEPTH FROM	DEPTH TO	FORMATION DESCRIPTION
0	5	FILL
5	14	SILTY CLY SND
14	19	LS
19	21	BRN SILTY CLY
21	75	LS

TOTAL DEPTH 75.5 FEET

FIRST ENCOUNTER GROUNDWATER 0.0 FT
STATIC WATER LEVEL (swl) 0.0 FT
PUMP SET DEPTH FT
WELL YIELD 0.0 GPM
WELL COMPLETION DATE 04/01/2005
PUMP INSTALLATION DATE
OTHER INFORMATION OR LOCATION DATA (OPTIONAL)

I HEREBY CERTIFY THE WELL/PUMP INFORMATION DESCRIBED HEREIN IS TRUE AND ACCURATE

PRIMARY CONTRACTOR SIGNATURE x DAVID MEYER	PERMIT NUMBER 001251	DATE
WELL DRILLER SIGNATURE x DAVID MEYER	PERMIT NUMBER 001251	DATE
PUMP INSTALLER SIGNATURE pump info required for extraction/recovery wells x	PERMIT NUMBER	DATE
APPRENTICE WELL DRILLER SIGNATURE x	PERMIT NUMBER	DATE

MISSOURI DEPARTMENT OF NATURAL RESOURCES
DIVISION OF GEOLOGY AND LAND SURVEY
(573) 368-2165

MONITORING WELL AND ENVIRONMENTAL INJECTION WELL RECORD

REF NO: 00314903
CR NO:
DATE RECEIVED: 05/23/2005
STATE CERT NO APPROVED DATE: A131531 05/27/2005
CHECK NO.: 5032106
DATE ENTERED: PHASE 1 PHASE 2 PHASE 3 05/23/2005 05/26/2005 02/17/2006
ROUTE: PCD
REVENUE NO.: 052305

INFORMATION SUPPLIED BY WELL OR PUMP INSTALLATION CONTRACTOR

OWNER NAME: BRIDGETON LANDFILL LLC
TELEPHONE (OPTIONAL):
DNR VARIANCE NUMBER 2780 — Applicable only if variance was obtained from DNR
OWNER ADDRESS: C/O ALLEN STEINKAMP 13570 ST CHARLES ROCK RD
CITY: BRIDGETON
STATE: MO
ZIP: 63044
SITE NAME: , PGW 10
CONTACT NAME:
SITE ADDRESS (IF DIFFERENT THAN ABOVE):
CITY:
STATE: MO
ZIP:

PROPOSED USE OF WELL

[ ] MONITORING [X] GAS MONITORING [ ] EXTRACTION [ ] RETURN OR INJECTION (UIC PERMIT MAY BE NEEDED) [ ] WATER LEVEL MEASUREMENT (only)

TYPE OF SURFACE COMPLETION

[ ] ABOVE GROUND [ ] FLUSH CASE LENGTH 0.0 IN. CASE HOLE DEPTH 0.0 IN.
PROTECTIVE CASE MATERIAL [ ] STEEL [ ] ALUMINUM [ ] PLASTIC [ ] OTHER CASE DIAMETER 0.0 IN. CASE HOLE DIAMETER 0.0 IN.

CONSTRUCTION

RISER PIPE DIAMETER 4.0 IN. RISER PIPE LENGTH 23.0 FT. RISER HOLE DIAMETER 8.0 IN.
RISER PIPE MATERIAL [X] PLASTIC RISER PIPE WEIGHT [X] SCH40 DRILLING METHOD
[ ] STEEL [ ] PTFE [ ] OTHER [X] SCH40 [ ] 304/316 [ ] OTHER [ ] AUGER [ ] PUSH [ ] OTHER

SCREEN DIAMETER 4.0 IN. SCREEN LENGTH 55.0 FT. BENTONITE SEAL LENGTH 3.0 FT.
SCREEN MATERIAL [ ] PLASTIC SCREEN HOLE DIAMETER SEAL ABOVE SWL [ ] SEAL BELOW SWL [ ]
[ ] STEEL [ ] PTFE [ ] OTHER IF DIFFERENT FROM RISER 8.0 IN. SEAL ABOVE SWL WAS HYDRATED [ ]

PRIMARY FILTER PACK LENGTH 58.0 FT. PRIMARY FILTER MATERIAL [ ] SAND
SECONDARY FILTER PACK LENGTH 0.0 FT. [ ] PREPACKED

ANNULAR SEAL LENGTH 15.0 FT. ANNULAR SEAL MATERIAL [ ] BENTONITE SLURRY [ ] NEAT CEMENT GROUT
ANNULAR SEAL PLACED BY [ ] TREMIE [ ] CEMENT BENTONITE GROUT [X] NON-SLURRY BENTONITE [ ] OTHER
[ ] GRAVITY [ ] PRESSURE GROUT THRU TREMIE IF NON-SLURRY BENTONITE [X] CHIPS [ ] GRANULAR [ ] PELLETS [ ] OTHER

[ ] MULTIPLE CASED OR NESTED WELLS
ATTACH AS-BUILT DIAGRAMS showing constructions details with type, length and diameter of material and length and diameter of bores

COPY

LOCATION OF WELL

LAT. 38 ° 45' 7.9" COUNTY
LONG. 90 ° 26' 7.5" ST LOUIS COUNTY
Please be aware that we do not guarantee the accuracy of the data. It is submitted to us by a third party and has not been field verified.

(OPTIONAL)
ELEVATION 0 FT.
LEGAL LOCATION (OPTIONAL)
1/4 1/4 1/4
SEC. 0 TWN. 0 RNG. 0

DEPTH FROM	DEPTH TO	FORMATION DESCRIPTION
0	8	CLY FILL
8	18	SILTY CLY
18	76	LS

TOTAL DEPTH 76.0 FEET

FIRST ENCOUNTER GROUNDWATER 0.0 FT
STATIC WATER LEVEL (swl) 0.0 FT
PUMP SET DEPTH FT
WELL YIELD 0.0 GPM
WELL COMPLETION DATE 04/04/2005
PUMP INSTALLATION DATE
OTHER INFORMATION OR LOCATION DATA (OPTIONAL)

I HEREBY CERTIFY THE WELL/PUMP INFORMATION DESCRIBED HEREIN IS TRUE AND ACCURATE

	PERMIT NUMBER	DATE
PRIMARY CONTRACTOR SIGNATURE x DAVID MEYER	001251	
WELL DRILLER SIGNATURE x DAVID MEYER	001251	
PUMP INSTALLER SIGNATURE pump info required for extraction/recovery wells x		
APPRENTICE WELL DRILLER SIGNATURE x		

MISSOURI DEPARTMENT OF NATURAL RESOURCES
DIVISION OF GEOLOGY AND LAND SURVEY
(573) 368-2165

MONITORING WELL AND ENVIRONMENTAL INJECTION WELL RECORD

REF NO	DATE RECEIVED
00314902	05/23/2005
CR NO	
STATE CERT NO APPROVED DATE	CHECK NO.
A131532 05/27/2005	5032106
DATE ENTERED	ROUTE / REVENUE NO.
PHASE 1 PHASE 2 PHASE 3	PCD / 052305
05/23/2005 05/26/2005 02/17/2006	

INFORMATION SUPPLIED BY WELL OR PUMP INSTALLATION CONTRACTOR

OWNER NAME: BRIDGETON LANDFILL LLC
TELEPHONE (OPTIONAL):
DNR VARIANCE NUMBER 2780 (Applicable only if variance was obtained from DNR)
OWNER ADDRESS: C/O ALLEN STEINKAMP 13570 ST CHARLES ROCK RD
CITY: BRIDGETON
STATE: MO ZIP: 63044
SITE NAME: , PGW 11
CONTACT NAME:
SITE ADDRESS (IF DIFFERENT THAN ABOVE):
CITY:
STATE: MO ZIP:

PROPOSED USE OF WELL

[ ] MONITORING [X] GAS MONITORING [ ] EXTRACTION [ ] RETURN OR INJECTION (UIC PERMIT MAY BE NEEDED) [ ] WATER LEVEL MEASUREMENT (only)

TYPE OF SURFACE COMPLETION

[ ] ABOVE GROUND [ ] FLUSH CASE LENGTH 0.0 IN. CASE HOLE DEPTH 0.0 IN.
PROTECTIVE CASE MATERIAL [ ] STEEL [ ] ALUMINUM [ ] PLASTIC [ ] OTHER CASE DIAMETER 0.0 IN. CASE HOLE DIAMETER 0.0 IN.

CONSTRUCTION

RISER PIPE DIAMETER 4.0 IN. RISER PIPE LENGTH 28.0 FT. RISER HOLE DIAMETER 8.0 IN.
RISER PIPE MATERIAL [X] PLASTIC RISER PIPE WEIGHT [ ] SCH40 DRILLING METHOD
[ ] STEEL [ ] PTFE [ ] OTHER [X] SCH80 [ ] 304/316 [ ] OTHER [ ] AUGER [ ] PUSH [ ] OTHER

SCREEN DIAMETER 4.0 IN. SCREEN LENGTH 75.0 FT. BENTONITE SEAL LENGTH 3.0 FT.
SCREEN MATERIAL [ ] PLASTIC SCREEN HOLE DIAMETER SEAL ABOVE SWL [ ] SEAL BELOW SWL [ ]
[ ] STEEL [ ] PTFE [ ] OTHER IF DIFFERENT FROM RISER 8.0 IN. SEAL ABOVE SWL WAS HYDRATED [ ]

PRIMARY FILTER PACK LENGTH 78.0 FT. PRIMARY FILTER MATERIAL [ ] SAND
SECONDARY FILTER PACK LENGTH 0.0 FT. [ ] PREPACKED

ANNULAR SEAL LENGTH 19.0 FT. ANNULAR SEAL MATERIAL [ ] BENTONITE SLURRY [ ] NEAT CEMENT GROUT
ANNULAR SEAL PLACED BY [ ] TREMIE [ ] CEMENT BENTONITE GROUT [X] NON-SLURRY BENTONITE [ ] OTHER
[ ] GRAVITY [ ] PRESSURE GROUT THRU TREMIE IF NON-SLURRY BENTONITE [X] CHIPS [ ] GRANULAR [ ] PELLETS [ ] OTHER

[ ] MULTIPLE CASED OR NESTED WELLS
ATTACH AS-BUILT DIAGRAMS showing constructions details with type, length and diameter of material and length and diameter of bores

COPY

LOCATION OF WELL

LAT. 38 ° 45' 7.9" COUNTY
LONG. 90 ° 26' 7.5" ST LOUIS COUNTY
Please be aware that we do not guarantee the accuracy of the data. It is submitted to us by a third party and has not been field verified.

(OPTIONAL) ELEVATION 0 FT.
LEGAL LOCATION (OPTIONAL) 1/4 1/4 1/4 SEC. 0 TWN. 0 RNG. 0

DEPTH FROM	DEPTH TO	FORMATION DESCRIPTION
0	6	CLY FILL
6	20	SILTY CLY SND
20	100	LS

TOTAL DEPTH 100.0 FEET

FIRST ENCOUNTER GROUNDWATER 0.0 FT
STATIC WATER LEVEL (swl) 0.0 FT
PUMP SET DEPTH FT
WELL YIELD 0.0 GPM
WELL COMPLETION DATE 03/28/2005
PUMP INSTALLATION DATE
OTHER INFORMATION OR LOCATION DATA (OPTIONAL)

I HEREBY CERTIFY THE WELL/PUMP INFORMATION DESCRIBED HEREIN IS TRUE AND ACCURATE

	PERMIT NUMBER	DATE
PRIMARY CONTRACTOR SIGNATURE x DAVID MEYER	001251	
WELL DRILLER SIGNATURE x DAVID MEYER	001251	
PUMP INSTALLER SIGNATURE pump info required for extraction/recovery wells x		
APPRENTICE WELL DRILLER SIGNATURE x		

MISSOURI DEPARTMENT OF NATURAL RESOURCES
DIVISION OF GEOLOGY AND LAND SURVEY
(573) 368-2165

MONITORING WELL AND ENVIRONMENTAL INJECTION WELL RECORD

REF NO	DATE RECEIVED
00314900	05/23/2005
CR NO	

STATE CERT NO	APPROVED DATE	CHECK NO.
A131533	05/27/2005	5032106

DATE ENTERED	ROUTE	REVENUE NO.
PHASE 1 PHASE 2 PHASE 3 05/23/2005 05/26/2005 02/17/2006	PCD	052305

INFORMATION SUPPLIED BY WELL OR PUMP INSTALLATION CONTRACTOR

OWNER NAME
BRIDGETON LANDFILL LLC

TELEPHONE (OPTIONAL)

DNR VARIANCE NUMBER 2760
Applicable only if variance was obtained from DNR

OWNER ADDRESS
C/O ALLEN STEINKAMP 13570 ST CHARLES ROCK RD

CITY
BRIDGETON

STATE
MO

ZIP
63044

SITE NAME
, PGW 12

CONTACT NAME

SITE ADDRESS (IF DIFFERENT THAN ABOVE)

CITY

STATE
MO

ZIP

PROPOSED USE OF WELL

[ ] MONITORING [X] GAS MONITORING [ ] EXTRACTION [ ] RETURN OR INJECTION (UIC PERMIT MAY BE NEEDED) [ ] WATER LEVEL MEASUREMENT (only)

TYPE OF SURFACE COMPLETION

[ ] ABOVE GROUND [ ] FLUSH CASE LENGTH 0.0 IN. CASE HOLE DEPTH 0.0 IN.

PROTECTIVE CASE MATERIAL [ ] STEEL [ ] ALUMINUM [ ] PLASTIC [ ] OTHER CASE DIAMETER 0.0 IN. CASE HOLE DIAMETER 0.0 IN.

CONSTRUCTION

RISER PIPE DIAMETER 4.0 IN. RISER PIPE LENGTH 23.0 FT. RISER HOLE DIAMETER 8.25 IN.

RISER PIPE MATERIAL [X] PLASTIC RISER PIPE WEIGHT [ ] SCH40 DRILLING METHOD

[ ] STEEL [ ] PTFE [ ] OTHER [X] SCH40 [ ] 304/316 [ ] OTHER [ ] AUGER [ ] PUSH [ ] OTHER

COPY

SCREEN DIAMETER 4.0 IN. SCREEN LENGTH 55.0 FT. BENTONITE SEAL LENGTH 3.0 FT.

SCREEN MATERIAL [ ] PLASTIC SCREEN HOLE DIAMETER SEAL ABOVE SWL [ ] SEAL BELOW SWL [ ]

[ ] STEEL [ ] PTFE [ ] OTHER IF DIFFERENT FROM RISER 8.0 IN. SEAL ABOVE SWL WAS HYDRATED [ ]

PRIMARY FILTER PACK LENGTH 57.5 FT. PRIMARY FILTER MATERIAL [ ] SAND

SECONDARY FILTER PACK LENGTH 0.0 FT. [ ] PREPACKED

ANNULAR SEAL LENGTH 15.0 FT. ANNULAR SEAL MATERIAL [ ] BENTONITE SLURRY [ ] NEAT CEMENT GROUT

ANNULAR SEAL PLACED BY [ ] TREMIE [ ] CEMENT BENTONITE GROUT [X] NON-SLURRY BENTONITE [ ] OTHER

[ ] GRAVITY [ ] PRESSURE GROUT THRU TREMIE IF NON-SLURRY BENTONITE [X] CHIPS [ ] GRANULAR [ ] PELLETS [ ] OTHER

[ ] MULTIPLE CASED OR NESTED WELLS

ATTACH AS-BUILT DIAGRAMS showing constructions details with type, length and diameter of material and length and diameter of bores

LOCATION OF WELL

(OPTIONAL) LEGAL LOCATION (OPTIONAL)

LAT. 38 ° 45' 7.9" COUNTY

LONG. 90 ° 26' 7.5" ST LOUIS COUNTY

ELEVATION 0 FT. _____ 1/4 _____ 1/4 _____ 1/4

SEC. 0 TWN. 0 RNG. 0

Please be aware that we do not guarantee the accuracy of the data. It is submitted to us by a third party and has not been field verified.

DEPTH FROM	DEPTH TO	FORMATION DESCRIPTION
0	5	FILL
5	20	SILTY CLY
20	22	SND
22	75	LS

TOTAL DEPTH 75.5 FEET

FIRST ENCOUNTER GROUNDWATER 0.0 FT

STATIC WATER LEVEL (swl) 0.0 FT

WELL COMPLETION DATE 04/05/2005

PUMP SET DEPTH FT

WELL YIELD 0.0 GPM

PUMP INSTALLATION DATE

OTHER INFORMATION OR LOCATION DATA (OPTIONAL)

I HEREBY CERTIFY THE WELL/PUMP INFORMATION DESCRIBED HEREIN IS TRUE AND ACCURATE

	PERMIT NUMBER	DATE
PRIMARY CONTRACTOR SIGNATURE x DAVID MEYER	001251	
WELL DRILLER SIGNATURE x DAVID MEYER	001251	
PUMP INSTALLER SIGNATURE pump info required for extraction/recovery wells x		
APPRENTICE WELL DRILLER SIGNATURE x		

MISSOURI DEPARTMENT OF NATURAL RESOURCES
DIVISION OF GEOLOGY AND LAND SURVEY
(573) 368-2165

MONITORING WELL AND ENVIRONMENTAL INJECTION WELL RECORD

REF NO	00314901
CR NO	
DATE RECEIVED	05/23/2005
STATE CERT NO APPROVED DATE	A131534 05/27/2005
CHECK NO.	5032106
DATE ENTERED	PHASE 1 PHASE 2 PHASE 3 05/23/2005 05/26/2005 02/17/2006
ROUTE	PCD
REVENUE NO.	052305

INFORMATION SUPPLIED BY WELL OR PUMP INSTALLATION CONTRACTOR

OWNER NAME: BRIDGETON LANDFILL LLC
TELEPHONE (OPTIONAL):
DNR VARIANCE NUMBER 2780 (Applicable only if variance was obtained from DNR)
OWNER ADDRESS: C/O ALLEN STEINKAMP 13570 ST CHARLES ROCK RD
CITY: BRIDGETON STATE: MO ZIP: 63044
SITE NAME: , PGW 13
CONTACT NAME:
SITE ADDRESS (IF DIFFERENT THAN ABOVE):
CITY: STATE: MO ZIP:

PROPOSED USE OF WELL

[ ] MONITORING [X] GAS MONITORING [ ] EXTRACTION [ ] RETURN OR INJECTION (UIC PERMIT MAY BE NEEDED) [ ] WATER LEVEL MEASUREMENT (only)

TYPE OF SURFACE COMPLETION

[ ] ABOVE GROUND [ ] FLUSH CASE LENGTH 0.0 IN. CASE HOLE DEPTH 0.0 IN.
PROTECTIVE CASE MATERIAL [ ] STEEL [ ] ALUMINUM [ ] PLASTIC [ ] OTHER CASE DIAMETER 0.0 IN. CASE HOLE DIAMETER 0.0 IN.

CONSTRUCTION

RISER PIPE DIAMETER 4.0 IN. RISER PIPE LENGTH 19.0 FT. RISER HOLE DIAMETER 8.0 IN.
RISER PIPE MATERIAL [X] PLASTIC RISER PIPE WEIGHT [X] SCH 40 DRILLING METHOD
[ ] STEEL [ ] PTFE [ ] OTHER [ ] 304/316 [ ] OTHER [ ] AUGER [ ] PUSH [ ] OTHER

SCREEN DIAMETER 4.0 IN. SCREEN LENGTH 60.0 FT. BENTONITE SEAL LENGTH 3.0 FT.
SCREEN MATERIAL [ ] PLASTIC SCREEN HOLE DIAMETER SEAL ABOVE SWL [ ] SEAL BELOW SWL [ ]
[ ] STEEL [ ] PTFE [ ] OTHER IF DIFFERENT FROM RISER 8.0 IN. SEAL ABOVE SWL WAS HYDRATED [ ]

PRIMARY FILTER PACK LENGTH 62.0 FT. PRIMARY FILTER MATERIAL [ ] SAND
SECONDARY FILTER PACK LENGTH 0.0 FT. [ ] PREPACKED

ANNULAR SEAL LENGTH 11.0 FT. ANNULAR SEAL MATERIAL [ ] BENTONITE SLURRY [ ] NEAT CEMENT GROUT
ANNULAR SEAL PLACED BY [ ] TREMIE [ ] CEMENT BENTONITE GROUT [X] NON-SLURRY BENTONITE [ ] OTHER
[ ] GRAVITY [ ] PRESSURE GROUT THRU TREMIE IF NON-SLURRY BENTONITE [X] CHIPS [ ] GRANULAR [ ] PELLETS [ ] OTHER

[ ] MULTIPLE CASED OR NESTED WELLS
ATTACH AS-BUILT DIAGRAMS showing constructions details with type, length and diameter of material and length and diameter of bores

COPY

LOCATION OF WELL

LAT. 38° 45' 7.9" COUNTY
LONG. 90° 26' 7.5" ST LOUIS COUNTY
Please be aware that we do not guarantee the accuracy of the data. It is submitted to us by a third party and has not been field verified.

(OPTIONAL)
ELEVATION 0 FT.
LEGAL LOCATION (OPTIONAL)
1/4 1/4 1/4 SEC. 0 TWN. 0 RNG. 0

DEPTH FROM	DEPTH TO	FORMATION DESCRIPTION
0	30	SILTY CLY
30	33	SND
33	76	LS

TOTAL DEPTH 76.0 FEET

FIRST ENCOUNTER GROUNDWATER 0.0 FT
STATIC WATER LEVEL (swl) 0.0 FT
WELL COMPLETION DATE 04/14/2005
PUMP SET DEPTH FT
WELL YIELD 0.0 GPM
PUMP INSTALLATION DATE
OTHER INFORMATION OR LOCATION DATA (OPTIONAL)

I HEREBY CERTIFY THE WELL/PUMP INFORMATION DESCRIBED HEREIN IS TRUE AND ACCURATE

	PERMIT NUMBER	DATE
PRIMARY CONTRACTOR SIGNATURE x DAVID MEYER	001251	
WELL DRILLER SIGNATURE x DAVID MEYER	001251	
PUMP INSTALLER SIGNATURE pump info required for extraction/recovery wells x		
APPRENTICE WELL DRILLER SIGNATURE x		

MISSOURI DEPARTMENT OF NATURAL RESOURCES
DIVISION OF GEOLOGY AND LAND SURVEY
(573) 368-2165

MONITORING WELL AND ENVIRONMENTAL INJECTION WELL RECORD

REF NO 00314899		DATE RECEIVED 05/23/2005	
CR NO			
STATE CERT NO APPROVED DATE A131521 05/27/2005		CHECK NO. 5032106	
DATE ENTERED PHASE 1 PHASE 2 PHASE 3 05/23/2005 05/26/2005 02/17/2006	ROUTE PCD	REVENUE NO. 052305	

INFORMATION SUPPLIED BY WELL OR PUMP INSTALLATION CONTRACTOR

OWNER NAME BRIDGETON LANDFILL LLC	TELEPHONE (OPTIONAL)	DNR VARIANCE NUMBER 2780 Applicable only if variance was obtained from DNR	
OWNER ADDRESS C/O ALLEN STEINKAMP 13570 ST CHARLES ROCK RD	CITY BRIDGETON	STATE MO	ZIP 63044
SITE NAME		CONTACT NAME	
SITE ADDRESS (IF DIFFERENT THAN ABOVE)	CITY	STATE MO	ZIP

PROPOSED USE OF WELL

[ ] MONITORING [X] GAS MONITORING [ ] EXTRACTION [ ] RETURN OR INJECTION (UIC PERMIT MAY BE NEEDED) [ ] WATER LEVEL MEASUREMENT (only)

TYPE OF SURFACE COMPLETION

[ ] ABOVE GROUND [ ] FLUSH CASE LENGTH 0.0 IN. CASE HOLE DEPTH 0.0 IN.

PROTECTIVE CASE MATERIAL [ ] STEEL [ ] ALUMINUM [ ] PLASTIC [ ] OTHER CASE DIAMETER 0.0 IN. CASE HOLE DIAMETER 0.0 IN.

CONSTRUCTION

RISER PIPE DIAMETER 4.0 IN. RISER PIPE LENGTH 19.0 FT. RISER HOLE DIAMETER 8.0 IN.

RISER PIPE MATERIAL [X] PLASTIC [ ] STEEL [ ] PTFE [ ] OTHER

RISER PIPE WEIGHT [X] SCH40 [ ] SCH80 [ ] 304/316 [ ] OTHER

DRILLING METHOD [ ] AUGER [ ] PUSH [ ] OTHER

SCREEN DIAMETER 4.0 IN. SCREEN MATERIAL [ ] PLASTIC [ ] STEEL [ ] PTFE [ ] OTHER

SCREEN LENGTH 60.0 FT. SCREEN HOLE DIAMETER IF DIFFERENT FROM RISER 8.0 IN.

BENTONITE SEAL LENGTH 3.0 FT. SEAL ABOVE SWL [ ] SEAL BELOW SWL [ ] SEAL ABOVE SWL WAS HYDRATED [ ]

PRIMARY FILTER PACK LENGTH 62.0 FT. SECONDARY FILTER PACK LENGTH 0.0 FT.

PRIMARY FILTER MATERIAL [ ] SAND [ ] PREPACKED

ANNULAR SEAL LENGTH 11.0 FT. ANNULAR SEAL PLACED BY [ ] TREMIE [ ] GRAVITY [ ] PRESSURE GROUT THRU TREMIE

ANNULAR SEAL MATERIAL [ ] BENTONITE SLURRY [ ] NEAT CEMENT GROUT [ ] CEMENT BENTONITE GROUT [X] NON-SLURRY BENTONITE [ ] OTHER

IF NON-SLURRY BENTONITE [X] CHIPS [ ] GRANULAR [ ] PELLETS [ ] OTHER

COPY

[ ] MULTIPLE CASED OR NESTED WELLS

ATTACH AS-BUILT DIAGRAMS showing constructions details with type, length and diameter of material and length and diameter of bores

LOCATION OF WELL

LAT. 38 ° 45' 7.9" COUNTY ST LOUIS COUNTY

LONG. 90 ° 26' 7.5"

Please be aware that we do not guarantee the accuracy of the data. It is submitted to us by a third party and has not been field verified.

(OPTIONAL)

ELEVATION 0 FT.

LEGAL LOCATION (OPTIONAL) 1/4 1/4 1/4 SEC. 0 TWN. 0 RNG. 0

DEPTH FROM	DEPTH TO	FORMATION DESCRIPTION
0	11	FILL
11	27	SILTY CLY
27	28	SND
28	76	LS

TOTAL DEPTH 76.0 FEET

FIRST ENCOUNTER GROUNDWATER 0.0 FT STATIC WATER LEVEL (SWL) 0.0 FT

PUMP SET DEPTH FT WELL YIELD 0.0 GPM

WELL COMPLETION DATE 04/18/2005 PUMP INSTALLATION DATE

OTHER INFORMATION OR LOCATION DATA (OPTIONAL)

I HEREBY CERTIFY THE WELL/PUMP INFORMATION DESCRIBED HEREIN IS TRUE AND ACCURATE

PRIMARY CONTRACTOR SIGNATURE x DAVID MEYER	PERMIT NUMBER 001251	DATE
WELL DRILLER SIGNATURE x DAVID MEYER	PERMIT NUMBER 001251	DATE
PUMP INSTALLER SIGNATURE pump info required for extraction/recovery wells x	PERMIT NUMBER	DATE
APPRENTICE WELL DRILLER SIGNATURE x	PERMIT NUMBER	DATE

Why drilled log type

Aquaterra Drilling Log

HOLE NO. PGW-15 | SHEET 1 OF 2 SHEETS

PROJECT NAME: Additional Perimeter LFG Collection Wells	DRILLING SUBCONTRACTOR: Layne-Western
PROJECT NUMBER: 1684.10	NAME OF DRILLER(S): T. Eggers
LOCATION: Bridgeton Landfill	MANUFACTURER'S DESIGNATION OF DRILL: Schram T660
HOLE LOCATION: PGW # 15	SIZES AND TYPES OF DRILLING AND SAMPLING EQUIPMENT: 8 1/4" ID HSA; 6" Rotary Air
SURFACE ELEVATION: 480 ±	
OVERBURDEN THICKNESS: 35'	DRILLING START DATE: 9-20-05 / DRILLING END DATE: 9-21-05
DEPTH DRILLED INTO ROCK: 48'	DEPTH GROUNDWATER ENCOUNTERED
TOTAL DEPTH OF HOLE: 83'	DEPTH TO WATER AND ELAPSED TIME AFTER DRILLING COMPLETED

GEOTECHNICAL SAMPLES (TOTAL)	DISTURBED	UNDISTURBED	TOTAL NUMBER OF CORE BOXES

SAMPLES FOR CHEMICAL ANALYSIS (TOTAL)	(SPECIFY)	(SPECIFY)	(SPECIFY)	(SPECIFY)	(SPECIFY)	TOTAL CORE RECOVERY

DISPOSITION OF HOLE	BACKFILLED	MONITORING WELL	OTHER (SPECIFY)	SIGNATURE OF INSPECTOR

DEPTH	DESCRIPTION OF MATERIALS	FIELD SCREENING RESULTS	GEOTECH SAMPLE RESULTS	ANALYTICAL SAMPLE NO.	TIME	REMARKS
0					1000	
5	STRUCTURAL FILL	BENTONITE PLUG		← 3'		65' SCREEN - 4" SCH 80 #20 PVC
	7'			← 8'		
	GRAY SILTY CLAY					15' SOLID - 4" SCH 80
10	10'					
	TAN SILTY CLAY			← 12'		5 BAGS OF 50 lb. ENVIROPLUG
13'						
15	GRAY SILTY CLAY (WARM)					59 BAGS OF BACKFILL MATERIAL
20						
25	25'					
	WET GRAY SILTY/SAND CLAY					
30	32'				1130	
	GRAY SHALE					
34'						
35	LIMESTONE BEDROCK					
40						
45						
50						
55						
60						

AQUATERRA ENVIRONMENTAL SOLUTIONS, INC.

PROJECT NAME: Additional Perimeter LFG Collection Wells

HOLE NO.: PGW-15

Aquaterra Drilling Log

HOLE NO.	SHEET 2 OF SHEETS 3
PGW-15	

PROJECT NAME	INSPECTOR
...TIONAL PERIMETER LFG COLLECTION WELLS	TERRY L. MUELLER

DEPTH	DESCRIPTION OF MATERIALS	FIELD SCREENING RESULTS	GEOTECH SAMPLE RESULTS	ANALYTICAL SAMPLE NO.	TIME	REMARKS
60						
65						
70	LIMESTONE BEDROCK					
75				77'1500		
80						
	83'			83'		
85						

AQUATERRA	PROJECT NAME	HOLE NO.
	ADDITIONAL PERIMETER LFG COLLECTION WELLS	PGW-15

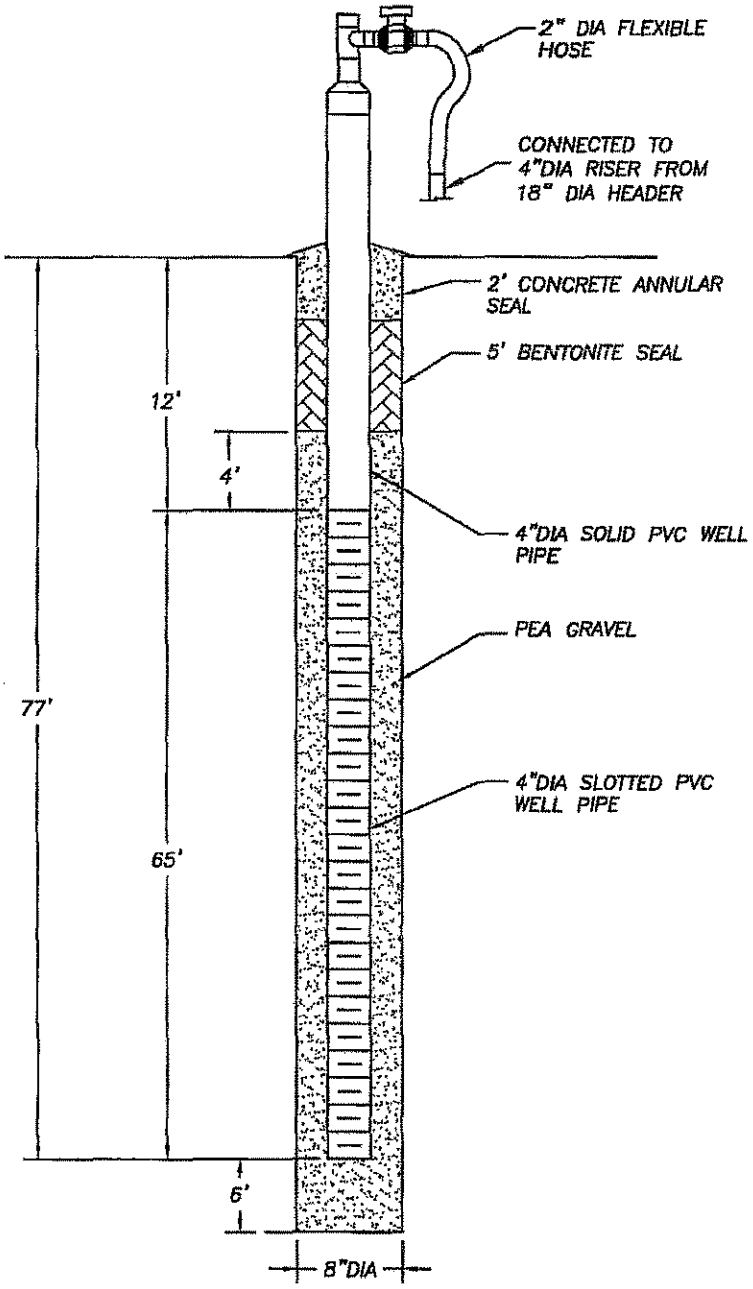

NOTES:

1. A PAINTED DESIGNATION NUMBER AND/OR TAG WILL BE PROVIDED TO IDENTIFY EACH WELL HEAD.
2. DEPTHS ARE APPROXIMATE.

AQUATERRA
ENVIRONMENTAL SOLUTIONS, INC.
141 Market Place Drive, Suite 204
Fairview Heights, Illinois 62208

PGW-15 DETAIL

BRIDGETON LANDFILL, LLC
BRIDGETON, MISSOURI

Project Mgr.	Drawn By	Designed By	Project No.
MSB	AJF	NLH	1684.10
Scale	Date	File Name	Drawing No.
No Scale	11/7/05	PGW-15_DETAIL.dwg	1

MISSOURI DEPARTMENT OF NATURAL RESOURCES
GEOLOGICAL SURVEY AND RESOURCE ASSESSMENT DIVISION
(573) 368-2165

MONITORING WELL CERTIFICATION RECORD

OFFICE USE ONLY	DATE RECEIVED
REF. NO. 359605	
C.R. NO.	CHECK NO.
STATE WELL NUMBER	REVENUE NO.
ENTERED Ph 1 Ph 2 Ph 3	APPROVED BY / ROUTE /

INFORMATION SUPPLIED BY PRIMARY CONTRACTOR OR DRILLING CONTRACTOR

OWNER NAME	WELL NUMBER	VARIANCE GRANTED BY THE D.N.R.
Bridgeton Landfill LLC	RGW-15	☐ NO
OWNER ADDRESS	**CITY**	**STATE**	**ZIP CODE**	☒ YES, ATTACH A COPY OF THE VARIANCE
13570 St. Charles Rock Rd	Bridgeton	MO	63044	
SITE NAME	**CONTACT NAME**	
Same	Rod Bluese	
SITE ADDRESS	**CITY**	**STATE**	**ZIP CODE**	**VARIANCE NUMBER**
Same				3786

PROPOSED USE OF WELL
☒ GAS MONITORING WELL ☐ MONITORING
☐ EXTRACTION WELL ☐ PIEZOMETERS

TYPE OF POTENTIAL SITE
☐ HAZARDOUS MATERIAL ☒ LANDFILL
☐ INITIAL SITE ASSESSMENT ☐ L.U.S.T.
☐ WATER LEVEL DRAWDOWN

MONITORING FOR: (CHECK ALL THAT APPLY)
☐ RADIONUCLIDES ☐ PETROLEUM PRODUCTS ONLY
☐ EXPLOSIVES ☐ METALS ☐ V.O.C.
☐ SVOCS ☐ PESTICIDES/HERBICIDES

SKETCH LOCATION OF WELL INCLUDING MILEAGE ON ALL ROADS TRAVELLED FROM NEAREST TOWNS.



LOCATION OF WELL
LAT. 38 : 45 : 43
LONG. 90 : 26 : 38
AREA
ELEV
COUNTY St. Louis
SMALLEST 1/4 LARGEST 1/4 1/4
SEC. 3 TWN. 46 N. RNG. 5 E OR W

DESCRIBE LOCATION OF THE WELL SO WE WOULD BE ABLE TO VISIT THE WELL SITE: MW-1 West on St. Charles Rock Rd, site on left

DRILLER NOTES: Methane collection well

TYPE OF SURFACE COMPLETION	LENGTH OF PROTECTIVE CASING	DIAMETER OF PROTECTIVE CASING	DIAMETER AND DEPTH OF THE HOLE PROTECTIVE CASING WAS PLACED	PROTECTIVE CASING MATERIAL	LOCKING CAP?
☐ ABOVE GROUND ☐ FLUSH MOUNT N/A	FT.	IN.	IN. FT.	☒ STEEL ☐ ALUMINUM ☐ PLASTIC	☐ YES ☐ NO

WEEP HOLE?	VENTED CAP?	LENGTH OF FLUSH MOUNT	DIAMETER OF FLUSH MOUNT	DIAMETER AND DEPTH OF THE HOLE FLUSH MOUNT WAS PLACED	SURFACE COMPLETION GROUT
☐ YES ☐ NO	☐ YES ☐ NO	FT.	IN	IN. FT.	☒ CONCRETE ☐ OTHER N/A

RISER PIPE DETAIL

LENGTH	DIAMETER	WEIGHT OR SDR#	DIAMETER OF DRILL HOLE	MATERIAL	GLUED
15 FT.	4 IN.	80	8" FT.	☐ STEEL ☒ THERMOPLASTIC (PVC) ☐ OTHER	☒ YES ☒ NO

BENTONITE SEAL

LENGTH OF SEAL	MATERIAL
3 FT.	☐ SLURRY ☐ PELLETS ☐ GRANULAR ☒ CHIPS

SECONDARY FILTER PACK
☐ SATURATED ZONE ☐ UNSATURATED ZONE HYDRATED ☐ YES ☐ NO
BOTH ZONES ☐ IF YES, HYDRATED ☐ YES ☐ NO N/A

PRIMARY FILTER PACK

LENGTH	DEPTH TO TOP OF PRIMARY FILTER PACK	SECONDARY FILTER PACK LENGTH
67 FT.	8 FT.	N/A FT.

ANNULAR SEAL
☐ BENTONITE SLURRY ☐ CEMENT/BENTONITE SLURRY
☐ NON SLURRY BENTONITE TYPE
BAGS OF CEMENT USED 5
% OF BENTONITE USED 5
WATER USED/BAG 2.5 GAL
LENGTH 5 FT.

WELL SCREEN

LENGTH	DIAMETER	DIAMETER OF DRILL HOLE	DEPTH TO TOP OF SCREEN	MATERIAL
65 FT.	4 IN.	8 IN.	10 FT.	☐ STEEL ☒ THERMOPLASTIC (PVC) ☐ OTHER

DEPTH FROM	DEPTH TO	FORMATION DESCRIPTION
0	32	silty clay
32	37	Sandy silt
37	57	shale
57	58	Limestone
58	69	Limestone & shale
69	83	Limestone

MULTIPLE CASED WELLS ☐ YES ☒ NO PUMP INSTALLED FOR REMEDIATION ☐ YES ☒ NO
SUBMIT ADDITIONAL AS BUILT DIAGRAMS SHOWING WELL CONSTRUCTION DETAILS INCLUDING TYPE AND SIZE OF ALL CASING, HOLE DIAMETERS AND GROUT USED

TOTAL DEPTH: 83'

SIGNATURE (PRIMARY CONTRACTOR)	PERMIT NUMBER	STATIC WATER LEVEL FEET FROM MEASURING POINT	DATE WELL DRILLING WAS COMPLETED
[signature]	2001051 WRM		7-21-05

I HEREBY CERTIFY THAT THE MONITORING WELL HEREIN DESCRIBED WAS CONSTRUCTED IN ACCORDANCE WITH THE DEPARTMENT OF NATURAL RESOURCES REQUIREMENTS FOR THE CONSTRUCTION OF MONITORING WELLS.

SIGNATURE (WELL DRILLER)	PERMIT NUMBER	DATE	SIGNATURE (PUMP INSTALLER)	PERMIT NUMBER	DATE
X [signature]	2001051 WRM	11-1-05	X N/A		

MO 780-1418 (1-02)

MAIL ORIGINAL
ENCLOSE $75.00
CERTIFICATION FEE

DISTRIBUTION: WHITE/DIVISION CANARY/CONTRACTOR PINK/OWNER
MAIL TO: DEPARTMENT OF NATURAL RESOURCES, P.O. BOX 250, ROLLA, MO 65402
MONITORING WELL CERTIFICATION FEE WITHIN 60 DAYS AFTER WELL COMPLETION

Aquaterra Drilling Log

HOLE NO. PGW-16 | SHEET 1 OF SHEETS

PROJECT NAME: Additional Perimeter LFG Wells	DRILLING SUBCONTRACTOR: LAYNE WESTERN
PROJECT NUMBER: 1634.10	NAME OF DRILLER(S): Tim Elders, Bill Pinson, Dave Jones
LOCATION: Bridgeton Landfill, LLC - Bridgeton, MO	MANUFACTURER'S DESIGNATION OF DRILL: Schramm T660
SURFACE ELEVATION: ≈ 480 FT MSL	SIZES AND TYPES OF DRILLING AND SAMPLING EQUIPMENT: 8¼" ID HSA x 5 ft; 3" D rod x 20 ft
OVERBURDEN THICKNESS: 35 FT	
BEDROCK FOOTAGE: 42 FT	DRILLING START DATE: 8-22-05
DRILLING END DATE: 8-22-05	
DEPTH GROUNDWATER ENCOUNTERED: 15 FT	TOTAL NUMBER OF CORE BOXES: 0
TOTAL NUMBER OF SAMPLES: 0	
DEPTH TO WATER AND ELAPSED TIME AFTER DRILLING COMPLETED: 38 ft 20 hrs	LOGGED BY: Andy Limmer

DEPTH	DESCRIPTION OF MATERIALS	CLASS.	BLOW COUNTS	RECOVERY	SAMPLE NO.	FIELD SCREENING RESULTS	REMARKS
0–5	Brown, silty CLAY, possible structural fill	CL		5'		6'	Silt flowing in open borehole. HSAs advanced to 35 feet for casing.
10–15	Dark grayish brown, SILT with fine sand, saturated	ML/SM					
25–35							
35	35						
40	Dark gray SHALE, moderately hard, clayey	SH					
45	46						
50–65	Light gray LIMESTONE	LMS					

AQUATERRA ENVIRONMENTAL SOLUTIONS, INC. Kansas City-Jefferson City-Omaha-St. Louis

PROJECT NAME: ADD'L Perimeter LFG Wells

HOLE NO.: PGW-16

Aquaterra Drilling Log

HOLE NO. PGW-16 | SHEET 2 OF 2 SHEETS

PROJECT NAME: Additional Perimeter LFG Wells - Bridgeton LF | LOGGED BY: AJL

DESCRIPTION OF MATERIALS	CLASS.	BLOW COUNTS	RECOVERY	SAMPLE NO.	FIELD SCREENING RESULTS	REMARKS
Light gray LIMESTONE	LmS				← 71'	
Boring Terminated at 77 feet						

75

80

AQUATERRA
ENVIRONMENTAL SOLUTIONS, INC.
Kansas City-Jefferson City-Omaha-St. Louis

PROJECT NAME: ADD'L Perimeter LFG Wells

HOLE NO.: PGW-16

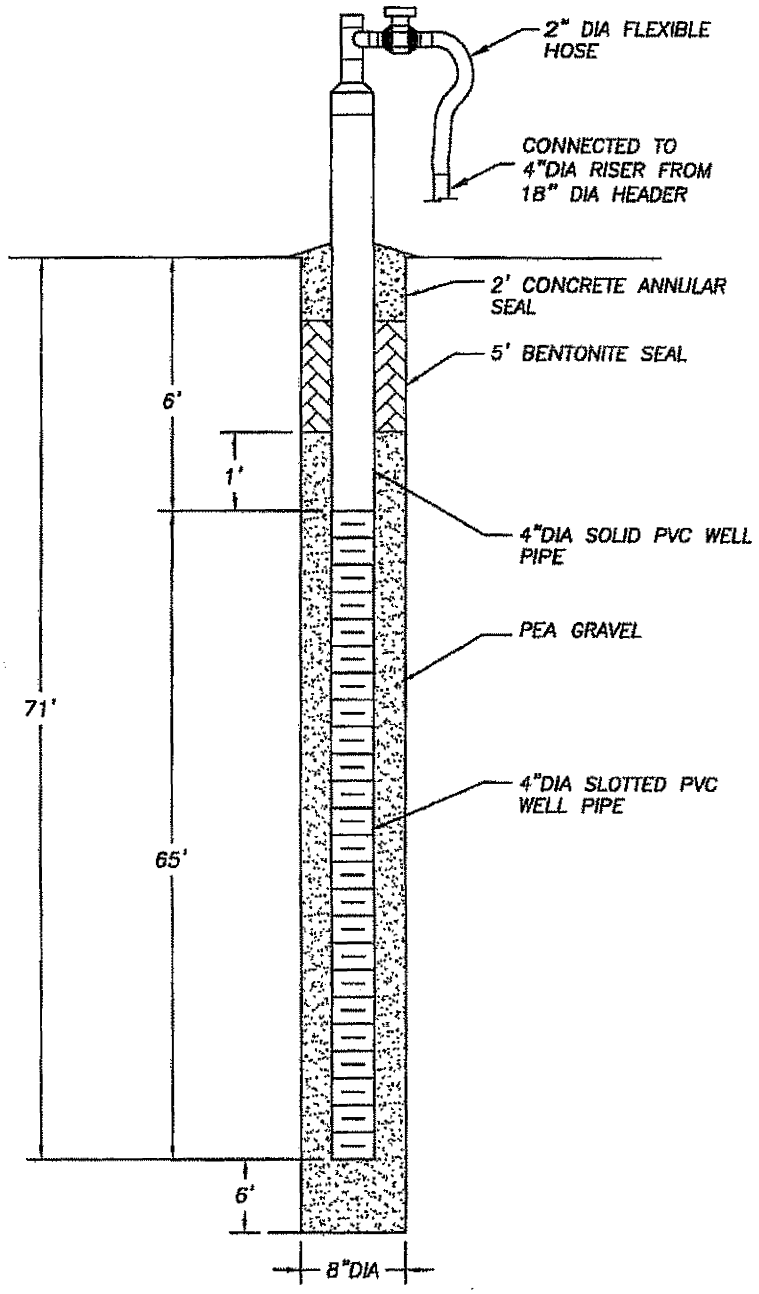

NOTES:

1. A PAINTED DESIGNATION NUMBER AND/OR TAG WILL BE PROVIDED TO IDENTIFY EACH WELL HEAD.
2. DEPTHS ARE APPROXIMATE.

AQUATERRA
ENVIRONMENTAL SOLUTIONS, INC.
141 Market Place Drive, Suite 204
Fairview Heights, Illinois 62208

PGW-16 DETAIL

BRIDGETON LANDFILL, LLC
BRIDGETON, MISSOURI

Project Mgr.	Drawn By	Designed By	Project No.
MSB	AJF	NLH	1684.10
Scale	Date	File Name	Drawing No.
No Scale	11/7/05	PGW-16_DETAIL.dwg	2

MISSOURI DEPARTMENT OF NATURAL RESOURCES
GEOLOGICAL SURVEY AND RESOURCE ASSESSMENT DIVISION
(573) 368-2165

MONITORING WELL CERTIFICATION RECORD

OFFICE USE ONLY	DATE RECEIVED
REF. NO. 314929	
C.R. NO.	CHECK NO.
STATE WELL NUMBER	REVENUE NO.
ENTERED Ph 1 Ph 2 Ph 3	APPROVED BY / ROUTE /

INFORMATION SUPPLIED BY PRIMARY CONTRACTOR OR DRILLING CONTRACTOR

OWNER NAME	WELL NUMBER	VARIANCE GRANTED BY THE D.N.R.
Bridgeton Landfill LLC	PGW-16	☐ NO
OWNER ADDRESS: 13570 St. Charles Rock Rd	CITY: Bridgeton	STATE: Mo ZIP CODE: 63044
SITE NAME: Same	CONTACT NAME: Rod Bloese	☒ YES, ATTACH A COPY OF THE VARIANCE
SITE ADDRESS: Same	CITY:	STATE: ZIP CODE: VARIANCE NUMBER: 2760

PROPOSED USE OF WELL	TYPE OF POTENTIAL SITE	MONITORING FOR: (CHECK ALL THAT APPLY)
☒ GAS MONITORING WELL ☐ MONITORING	☐ HAZARDOUS MATERIAL ☒ LANDFILL	☐ RADIONUCLIDES ☐ PETROLEUM PRODUCTS ONLY
☐ EXTRACTION WELL ☐ PIEZOMETERS	☐ INITIAL SITE ASSESSMENT ☐ L.U.S.T.	☐ EXPLOSIVES ☐ METALS ☐ V.O.C.
	☐ WATER LEVEL DRAWDOWN	☐ SVOCS ☒ PESTICIDES/HERBICIDES

SKETCH LOCATION OF WELL INCLUDING MILEAGE ON ALL ROADS TRAVELLED FROM NEAREST TOWNS.



LOCATION OF WELL: LAT. 38 : 45 : 44 LONG. 90 : 26 : 37 AREA ELEV COUNTY

SMALLEST 1/4 1/4 LARGEST 1/4 SEC. 2 TWN. 46 N. RNG. 5 E. OR W.

DESCRIBE LOCATION OF THE WELL SO WE WOULD BE ABLE TO VISIT THE WELL SITE: ~70, West on St. Charles Rock Rd, site on left

DRILLER NOTES: Methane collection well

TYPE OF SURFACE COMPLETION	LENGTH OF PROTECTIVE CASING	DIAMETER OF PROTECTIVE CASING	DIAMETER AND DEPTH OF THE HOLE PROTECTIVE CASING WAS PLACED	PROTECTIVE CASING MATERIAL	LOCKING CAP?
☐ ABOVE GROUND N/A ☐ FLUSH MOUNT	FT.	IN.	IN. FT.	☐ STEEL ☐ ALUMINUM ☐ PLASTIC	☐ YES ☐ NO

WEEP HOLE?	VENTED CAP?	LENGTH OF FLUSH MOUNT	DIAMETER OF FLUSH MOUNT	DIAMETER AND DEPTH OF THE HOLE FLUSH MOUNT WAS PLACED	SURFACE COMPLETION GROUT
☐ YES ☒ NO	☐ YES ☐ NO	FT.	IN.	IN. FT.	☐ CONCRETE ☐ OTHER N/A

RISER PIPE DETAIL	LENGTH	DIAMETER	WEIGHT OR SCH#	DIAMETER OF DRILL HOLE	MATERIAL	BENTONITE SEAL	LENGTH OF SEAL	MATERIAL
	110 FT.	4 IN.	80	8" FT.	☐ STEEL ☒ THERMOPLASTIC (PVC) ☐ OTHER		3 FT.	☐ SLURRY ☐ PELLETS ☐ GRANULAR ☒ CHIPS

GLUED	SECONDARY FILTER PACK
☐ YES ☒ NO	☐ SATURATED ZONE ☐ UNSATURATED ZONE HYDRATED ☐ YES ☐ NO BOTH ZONES ☐ IF YES, HYDRATED ☐ YES ☐ NO

PRIMARY FILTER PACK	LENGTH	DEPTH TO TOP OF PRIMARY FILTER PACK	SECONDARY FILTER PACK LENGTH
	66 FT.	5 FT.	N/A FT.

ANNULAR SEAL			LENGTH
☐ BENTONITE SLURRY ☐ NON SLURRY BENTONITE TYPE	☒ CEMENT/BENTONITE SLURRY	BAGS OF CEMENT USED 2	3 FT.
		% OF BENTONITE USED 5	
		WATER USED/BAG 10 GAL	

WELL SCREEN	LENGTH	DIAMETER	DIAMETER OF DRILL HOLE	DEPTH TO TOP OF SCREEN	MATERIAL
	60 FT.	4 IN.	8 IN.	110 FT.	☐ STEEL ☒ THERMOPLASTIC (PVC) ☐ OTHER

DEPTH FROM	DEPTH TO	FORMATION DESCRIPTION
0	34	OVERBURDEN
34	41	SHALE
41	70	LIMESTONE
70	71	LIMESTONE W/ INT SHALE LAYERS

MULTIPLE CASED WELLS ☐ YES ☒ NO PUMP INSTALLED FOR REMEDIATION ☐ YES ☒ NO

SUBMIT ADDITIONAL AS BUILT DIAGRAMS SHOWING WELL CONSTRUCTION DETAILS INCLUDING TYPE AND SIZE OF ALL CASING, HOLE DIAMETERS AND GROUT USED

TOTAL DEPTH: 71

SIGNATURE (PRIMARY CONTRACTOR)	PERMIT NUMBER	STATIC WATER LEVEL FEET FROM MEASURING POINT	DATE WELL DRILLING WAS COMPLETED
	0025WPIA		8-23-25

I HEREBY CERTIFY THAT THE MONITORING WELL HEREIN DESCRIBED WAS CONSTRUCTED IN ACCORDANCE WITH THE DEPARTMENT OF NATURAL RESOURCES REQUIREMENTS FOR THE CONSTRUCTION OF MONITORING WELLS.

SIGNATURE (WELL DRILLER)	PERMIT NUMBER	DATE	SIGNATURE (PUMP INSTALLER)	PERMIT NUMBER	DATE
X	0025WPIA	8-23-25	X N/A		

MO 780-1415 (L-02)

DISTRIBUTION: WHITE/DIVISION CANARY/CONTRACTOR PINK/OWNER
MAIL WHITE COPY TO: DEPARTMENT OF NATURAL RESOURCES, P.O. BOX 250, ROLLA, MO 65402
ENCLOSE $35 MONITORING WELL CERTIFICATION FEE WITHIN 60 DAYS AFTER WELL COMPLETION

Aquaterra Drilling Log

HOLE NO. PGW-17 | SHEET 1 OF 2 SHEETS

PROJECT NAME: Additional Perimeter LFG Wells	DRILLING SUBCONTRACTOR: LAYNE WESTERN
PROJECT NUMBER: 1684.10	NAME OF DRILLER(S): Tim Eldets, Bill Pinson, Dave Jones
LOCATION: Bridgeton Landfill, LLC - Bridgeton, MO	MANUFACTURER'S DESIGNATION OF DRILL: Schramm T660
SURFACE ELEVATION: ≈ 430	SIZES AND TYPES OF DRILLING AND SAMPLING EQUIPMENT: 8 1/2" HSA x 5' ft; 8" D Bit w/ 4" D x 20' rods
OVERBURDEN THICKNESS: 34	
BEDROCK FOOTAGE: 13.5	DRILLING START DATE: 8-23-05
DRILLING END DATE: 8-24-05	
DEPTH GROUNDWATER ENCOUNTERED: 27'	TOTAL NUMBER OF CORE BOXES: 0
TOTAL NUMBER OF SAMPLES: 0	
DEPTH TO WATER AND ELAPSED TIME AFTER DRILLING COMPLETED: NA	LOGGED BY: Andy Limmer

DEPTH	DESCRIPTION OF MATERIALS	CLASS.	BLOW COUNTS	RECOVERY	SAMPLE NO.	FIELD SCREENING RESULTS	REMARKS
0	Structural Fill: brown silty CLAY						
5	Brown silty CLAY, low plasticity			6'			
10						8'	52 x 50 lbs bags of "Aquarium Gravel" WB-50
15	16 Dark brown, low plastic silty CLAY, with woody debris	CL-ML					4" D SCH 40 @ 20 ft x 65 ft - PVC
	22 Dark grayish brown, low plastic, silty CLAY saturated below 27 ft.						4" D SCH 40 x 10' x 1 x 6' RISER - PVC
20	30 Dark gray, fine SAND, saturated	SP					
25	34 Gray SHALE, moderately hard, clayey	SH					
	42 Light gray LIMESTONE						
30		LmS					
35							
40							
45							

AQUATERRA ENVIRONMENTAL SOLUTIONS, INC. EAST CITY/JEFFERSON CITY/OMAHA/ST. LOUIS

PROJECT NAME: ADD'L Perimeter LFG Wells

HOLE NO.: PGW-17

Aquaterra Drilling Log

HOLE NO. PGW-17 | SHEET 2 OF 2 SHEETS

CT NAME: Add'l Perimeter LFG Wells | LOGGED BY: AJL

DE:	DESCRIPTION OF MATERIALS	CLASS.	BLOW COUNTS	RECOVERY	SAMPLE NO.	FIELD SCREENING - RESULTS	REMARKS
	Interbedded Limestone and Shale	LS/SH				73'	
75	Light grey Limestone	LS					
	77.5 Boring Terminated at 77.5 feet						
80							

AQUATERRA
ENVIRONMENTAL SOLUTIONS, INC.
INDIANAPOLIS-JEFFERSON CITY-OMAHA-ST. LOUIS

PROJECT NAME: Add'l Perimeter LFG - Bridgeton

HOLE NO. PGW-17

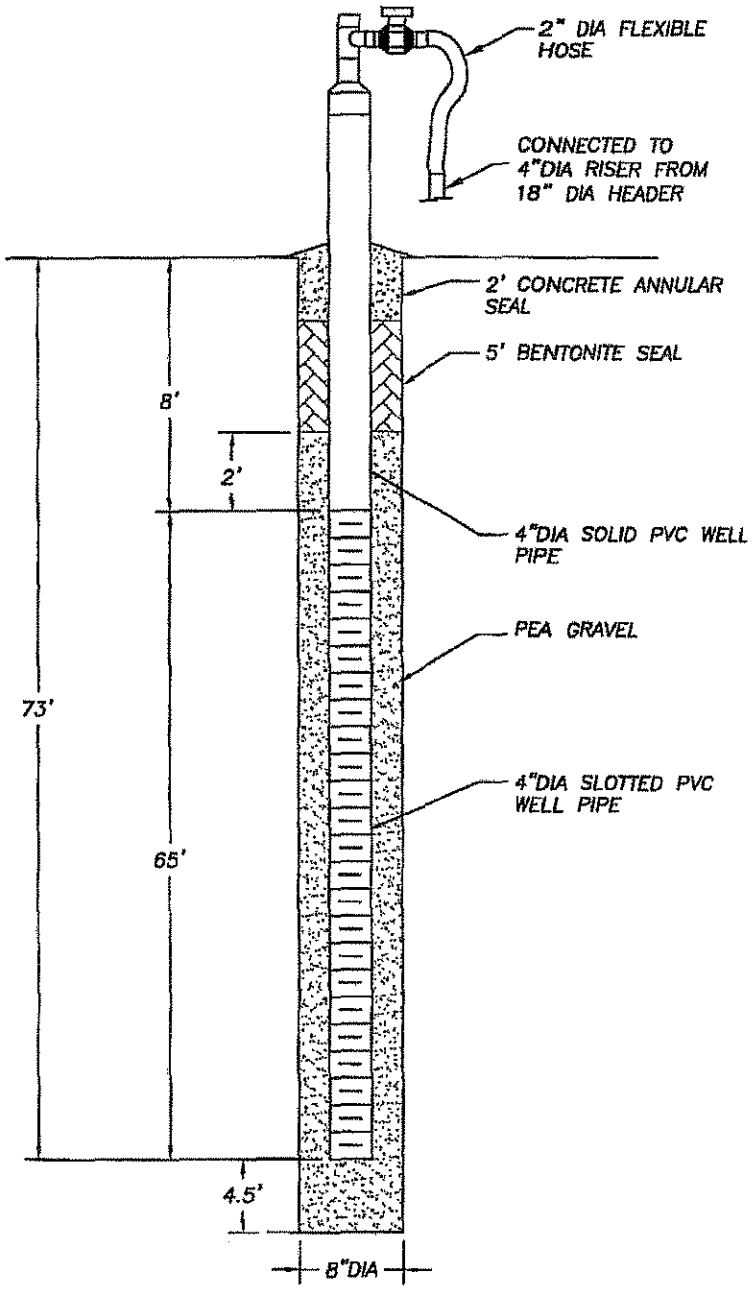

NOTES:

1. A PAINTED DESIGNATION NUMBER AND/OR TAG WILL BE PROVIDED TO IDENTIFY EACH WELL HEAD.
2. DEPTHS ARE APPROXIMATE.

AQUATERRA
ENVIRONMENTAL SOLUTIONS, INC.
141 Market Place Drive, Suite 204
Fairview Heights, Illinois 62208

PGW-17 DETAIL

BRIDGETON LANDFILL, LLC
BRIDGETON, MISSOURI

Project Mgr.	Drawn By	Designed By	Project No.
MSB	AJF	NLH	1684.10
Scale	Date	File Name	Drawing No.
No Scale	11/7/05	PGW-17_DETAIL.dwg	3

MISSOURI DEPARTMENT OF NATURAL RESOURCES
GEOLOGICAL SURVEY AND RESOURCE ASSESSMENT DIVISION
(573) 368-2165

MONITORING WELL CERTIFICATION RECORD

OFFICE USE ONLY	DATE RECEIVED
REF. NO. 214030	
C.R. NO.	CHECK NO.
STATE WELL NUMBER	REVENUE NO.
ENTERED Ph 1 Ph 2 Ph 3	APPROVED BY / ROUTE /

INFORMATION SUPPLIED BY PRIMARY CONTRACTOR OR DRILLING CONTRACTOR

OWNER NAME	WELL NUMBER	VARIANCE GRANTED BY THE D.N.R.
Bridgeton Landfill LLC	PGW-17	☐ NO ☑ YES, ATTACH A COPY OF THE VARIANCE

OWNER ADDRESS	CITY	STATE	ZIP CODE
13570 St. Charles Rock Rd	Bridgeton	MO	63044

SITE NAME	CONTACT NAME
Same	Paul Bloese

SITE ADDRESS	CITY	STATE	ZIP CODE	VARIANCE NUMBER
Same				2150

PROPOSED USE OF WELL
☒ GAS MONITORING WELL ☐ MONITORING
☐ EXTRACTION WELL ☐ PIEZOMETERS

TYPE OF POTENTIAL SITE
☐ HAZARDOUS MATERIAL ☒ LANDFILL
☐ INITIAL SITE ASSESSMENT ☐ L.U.S.T.
☐ WATER LEVEL DRAWDOWN

MONITORING FOR: (CHECK ALL THAT APPLY)
☐ RADIONUCLIDES ☐ PETROLEUM PRODUCTS ONLY
☑ EXPLOSIVES ☐ METALS ☐ V.O.C.
☐ SVOCS ☐ PESTICIDES/HERBICIDES

SKETCH LOCATION OF WELL INCLUDING MILEAGE ON ALL ROADS TRAVELLED FROM NEAREST TOWNS



LOCATION OF WELL
LAT 38° 45' 41"
LONG 90° 36' 31"
AREA
ELEV.
COUNTY St. Louis
SMALLEST 1/4 LARGEST 1/4 1/4
SEC. 6 TWN. 46 N. RNG. 5 E OR W

DESCRIBE LOCATION OF THE WELL SO WE WOULD BE ABLE TO VISIT THE WELL SITE
0.6 West on St. Charles Rock Rd, side on left

DRILLER NOTES:
Methane collection well

TYPE OF SURFACE COMPLETION	LENGTH OF PROTECTIVE CASING	DIAMETER OF PROTECTIVE CASING	DIAMETER AND DEPTH OF THE HOLE PROTECTIVE CASING WAS PLACED	PROTECTIVE CASING MATERIAL	LOCKING CAP?
☐ ABOVE GROUND ☒ FLUSH MOUNT N/A	FT.	IN.	IN. FT.	☐ STEEL ☐ ALUMINUM ☐ PLASTIC	☐ YES ☐ NO

WEEP HOLE?	VENTED CAP?	LENGTH OF FLUSH MOUNT	DIAMETER OF FLUSH MOUNT	DIAMETER AND DEPTH OF THE HOLE FLUSH MOUNT WAS PLACED	SURFACE COMPLETION GROUT	
☐ YES ☐ NO	☐ YES ☐ NO	FT.	IN.	IN. FT.	☐ CONCRETE ☐ OTHER N/A	

RISER PIPE DETAIL

LENGTH	DIAMETER	WEIGHT OR SDR#	DIAMETER OF DRILL HOLE	MATERIAL	BENTONITE SEAL: LENGTH OF SEAL	MATERIAL
10 FT.	4 IN.	80	8" FT.	☐ STEEL ☒ THERMOPLASTIC (PVC) ☐ OTHER	3 FT.	☐ SLURRY ☐ PELLETS ☐ GRANULAR ☒ CHIPS

GLUED ☐ YES ☒ NO

SECONDARY FILTER PACK
☐ SATURATED ZONE ☐ UNSATURATED ZONE HYDRATED ☐ YES ☐ NO
BOTH ZONES ☐ IF YES, HYDRATED ☐ YES ☐ NO

PRIMARY FILTER PACK: LENGTH	DEPTH TO TOP OF PRIMARY FILTER PACK	SECONDARY FILTER PACK LENGTH
69 FT.	6 FT.	N/A FT.

ANNULAR SEAL
☐ BENTONITE SLURRY ☒ CEMENT/BENTONITE SLURRY
☐ NON SLURRY BENTONITE TYPE
BAGS OF CEMENT USED 3
% OF BENTONITE USED 5
WATER USED/BAG 15 GAL.
LENGTH 3 FT.

WELL SCREEN

LENGTH	DIAMETER	DIAMETER OF DRILL HOLE	DEPTH TO TOP OF SCREEN	MATERIAL
65 FT.	4 IN.	8 IN.	10 FT.	☐ STEEL ☒ THERMOPLASTIC (PVC) ☐ OTHER

MULTIPLE CASED WELLS ☐ YES ☒ NO PUMP INSTALLED FOR REMEDIATION ☐ YES ☒ NO
SUBMIT ADDITIONAL AS BUILT DIAGRAMS SHOWING WELL CONSTRUCTION DETAILS INCLUDING TYPE AND SIZE OF ALL CASING, HOLE DIAMETERS AND GROUT USED

DEPTH FROM	DEPTH TO	FORMATION DESCRIPTION
0	34	Overburden
34	41	Shale
41	70	Limestone
70	75	Limestone w/interbedded shale layers

TOTAL DEPTH: 75

SIGNATURE (PRIMARY CONTRACTOR)	PERMIT NUMBER	STATIC WATER LEVEL FEET FROM MEASURING POINT	DATE WELL DRILLING WAS COMPLETED
	2013-0174		10-24-05

I HEREBY CERTIFY THAT THE MONITORING WELL HEREIN DESCRIBED WAS CONSTRUCTED IN ACCORDANCE WITH THE DEPARTMENT OF NATURAL RESOURCES REQUIREMENTS FOR THE CONSTRUCTION OF MONITORING WELLS.

SIGNATURE (WELL DRILLER)	PERMIT NUMBER	DATE	SIGNATURE (PUMP INSTALLER)	PERMIT NUMBER	DATE
X	2013-0174	10-24-05	X N/A		

MO 780-1415 (1-02)

DISTRIBUTION: WHITE/DIVISION CANARY/CONTRACTOR PINK/OWNER
MAIL WHITE COPY TO: DEPARTMENT OF NATURAL RESOURCES, P.O. BOX 250, ROLLA, MO 65402
ENCLOSE $35 MONITORING WELL CERTIFICATION FEE WITHIN 60 DAYS AFTER WELL COMPLETION

Aquaterra Drilling Log

HOLE NO. PGW-18 | SHEET 1 OF 2 SHEETS

PROJECT NAME: Additional Perimeter LFG Wells	DRILLING SUBCONTRACTOR: LAYNE WESTERN
PROJECT NUMBER: 1624.10	NAME OF DRILLER(S): Tim Elders, Bill Pinson, Dave Jones
LOCATION: Brickyard LF, LLC - Bridgeton, MO	MANUFACTURER'S DESIGNATION OF DRILL: Schramm T660
SURFACE ELEVATION: ≈430	SIZES AND TYPES OF DRILLING AND SAMPLING EQUIPMENT: 8 1/4 HSA; 8" A.R. rotary
OVERBURDEN THICKNESS: 32	
BEDROCK FOOTAGE: 45	DRILLING START DATE: 8-24-05
DRILLING END DATE: 8-25-05	
DEPTH GROUNDWATER ENCOUNTERED: ≈28	TOTAL NUMBER OF CORE BOXES: 0
TOTAL NUMBER OF SAMPLES: 0	
DEPTH TO WATER AND ELAPSED TIME AFTER DRILLING COMPLETED	LOGGED BY: Andy Limmer

DEPTH	DESCRIPTION OF MATERIALS	CLASS.	BLOW COUNTS	RECOVERY	SAMPLE NO.	FIELD SCREENING RESULTS	REMARKS
5	Structural Fill: brown, silty CLAY						5 bags of chips
	5						50 lb bags of Enviroplug Medium
0	Brown + grayish brown silty CLAY	CL-ML	7.5'			9'	51 bags of Gravel
5							4 inch D SCH 80 PVC RISER IX 10 FT + 1 X 5 FT
	20						
	Gray SILT, saturated below 28 feet	ML					4 inch D SCH 80 #20 PVC SCREEN X 65 FT
0	29 with fine sand						
	32						
5	Dark gray SHALE clayey	SH					
	36						
	light gray LIMESTONE						
0		LMS					
5							
	65						
	Interbedded light gray LIMESTONE and dark gray argillaceous						

AQUATERRA
ENVIRONMENTAL SOLUTIONS, INC.
KAS CITY-JEFFERSON CITY-OMAHA-ST. LOUIS

PROJECT NAME: ADD'L Perimeter LFG Wells

HOLE NO. PGW-18

Aquaterra Drilling Log

HOLE NO. PGW-18 | SHEET 2 OF 2 SHEETS

PROJECT NAME: Additional Perimeter LFG Wells | LOGGED BY: MJL

DEPTH	DESCRIPTION OF MATERIALS	CLASS.	BLOW COUNTS	RECOVERY	SAMPLE NO.	FIELD SCREENING RESULTS	REMARKS
75	LIMESTONE	LMS				74'	
80	Boring Terminated @ 77 feet						

AQUATERRA
ENVIRONMENTAL SOLUTIONS, INC.
LINDAS CITY-JEFFERSON CITY-OMAHA-ST. LOUIS

PROJECT NAME: ADD'L Perimeter LFG Wells | HOLE NO.: PGW-18

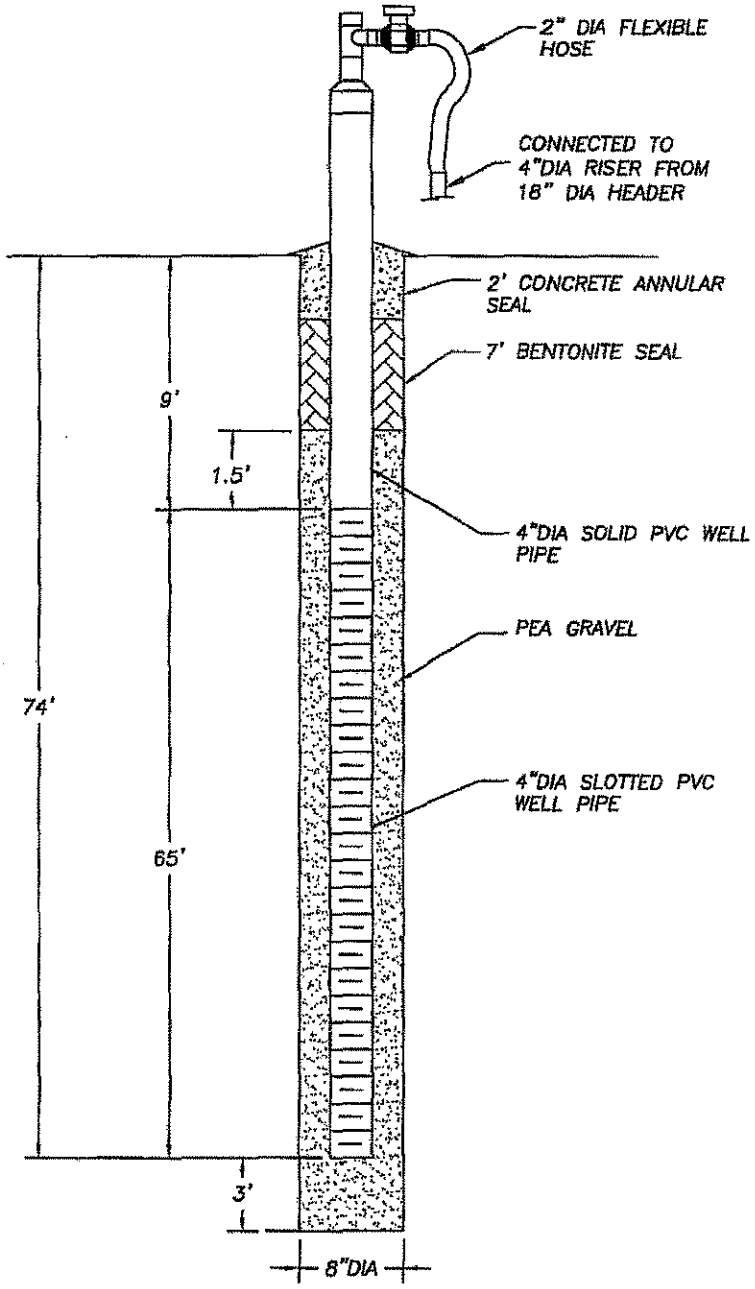

NOTES:

1. A PAINTED DESIGNATION NUMBER AND/OR TAG WILL BE PROVIDED TO IDENTIFY EACH WELL HEAD.
2. DEPTHS ARE APPROXIMATE.

AQUATERRA
ENVIRONMENTAL SOLUTIONS, INC.
141 Market Place Drive, Suite 204
Fairview Heights, Illinois 62208

PGW-18 DETAIL

BRIDGETON LANDFILL, LLC
BRIDGETON, MISSOURI

Project Mgr.	Drawn By	Designed By	Project No.
MSB	AJF	NLH	1684.10
Scale	**Date**	**File Name**	**Drawing No.**
No Scale	11/7/05	PGW-18_DETAIL.dwg	4

MISSOURI DEPARTMENT OF NATURAL RESOURCES
GEOLOGICAL SURVEY AND RESOURCE ASSESSMENT DIVISION
(573) 368-2165

MONITORING WELL CERTIFICATION RECORD

OFFICE USE ONLY	DATE RECEIVED
REF. NO. 314031	
C.R. NO.	CHECK NO.
STATE WELL NUMBER	REVENUE NO.
ENTERED Pg 1 Pg 2 Pg 3	APPROVED BY / ROUTE /

INFORMATION SUPPLIED BY PRIMARY CONTRACTOR OR DRILLING CONTRACTOR

OWNER NAME	WELL NUMBER	VARIANCE GRANTED BY THE D.N.R.
Bridgeton Landfill LLC	PSW1-18	☐ NO ☒ YES, ATTACH A COPY OF THE VARIANCE

OWNER ADDRESS	CITY	STATE	ZIP CODE
13570 St. Charles Rock Rd	Bridgeton	MO	63044

SITE NAME	CONTACT NAME
same	Carl Bloese

SITE ADDRESS	CITY	STATE	ZIP CODE	VARIANCE NUMBER
same				2180

PROPOSED USE OF WELL
☒ GAS MONITORING WELL ☐ MONITORING
☐ EXTRACTION WELL ☒ PIEZOMETERS

TYPE OF POTENTIAL SITE
☐ HAZARDOUS MATERIAL ☒ LANDFILL
☐ INITIAL SITE ASSESSMENT ☐ U.S.T.
☐ WATER LEVEL DRAWDOWN

MONITORING FOR: (CHECK ALL THAT APPLY)
☐ RADIONUCLIDES ☐ PETROLEUM PRODUCTS ONLY
☐ EXPLOSIVES ☐ METALS ☐ V.O.C.
☐ SVOCS ☐ PESTICIDES/HERBICIDES

SKETCH LOCATION OF WELL INCLUDING MILEAGE ON ALL ROADS TRAVELLED FROM NEAREST TOWNS.



LOCATION OF WELL
LAT. 38 45 45
LONG. 90 26 34

AREA ELEV
COUNTY St. Louis

SMALLEST 1/4 1/4 LARGEST 1/4
SEC. 8 TWN. 46 N. RNG. 5 E OR W

DESCRIBE LOCATION OF THE WELL SO WE WOULD BE ABLE TO VISIT THE WELL SITE	DRILLER NOTES
370, West on St. Charles Rock Rd, site on left	Methane collection well

TYPE OF SURFACE COMPLETION	LENGTH OF PROTECTIVE CASING	DIAMETER OF PROTECTIVE CASING	DIAMETER AND DEPTH OF THE HOLE PROTECTIVE CASING WAS PLACED	PROTECTIVE CASING MATERIAL	LOCKING CAP?
☐ ABOVE GROUND ☒ FLUSH MOUNT N/A	FT.	IN.	IN. FT.	☐ STEEL ☐ ALUMINUM ☐ PLASTIC	☐ YES ☐ NO

WEEP HOLE?	VENTED CAP?	LENGTH OF FLUSH MOUNT	DIAMETER OF FLUSH MOUNT	DIAMETER AND DEPTH OF THE HOLE FLUSH MOUNT WAS PLACED	SURFACE COMPLETION GROUT
☐ YES ☐ NO	☐ YES ☐ NO	FT.	IN.	IN. FT.	☐ CONCRETE ☐ OTHER N/A

RISER PIPE DETAIL

LENGTH	DIAMETER	WEIGHT OR SCH#	DIAMETER OF DRILL HOLE	MATERIAL
10 FT.	4 IN.	80	12" FT.	☐ STEEL ☒ THERMOPLASTIC (PVC) ☐ OTHER

BENTONITE SEAL

LENGTH OF SEAL	MATERIAL
3 FT.	☐ SLURRY ☐ PELLETS ☐ GRANULAR ☒ CHIPS

SECONDARY FILTER PACK
GLUED ☐ YES ☒ NO
☐ SATURATED ZONE ☐ UNSATURATED ZONE HYDRATED ☐ YES ☐ NO
BOTH ZONES ☐ IF YES, HYDRATED ☐ YES ☐ NO

PRIMARY FILTER PACK

LENGTH	DEPTH TO TOP OF PRIMARY FILTER PACK	SECONDARY FILTER PACK LENGTH
69 FT.	6 FT.	N/A FT.

ANNULAR SEAL
☐ BENTONITE SLURRY ☒ CEMENT/BENTONITE SLURRY
☐ NON SLURRY BENTONITE TYPE
BAGS OF CEMENT USED 2
% OF BENTONITE USED 5
WATER USED/BAG 15 GAL.
LENGTH 3 FT.

WELL SCREEN

LENGTH	DIAMETER	DIAMETER OF DRILL HOLE	DEPTH TO TOP OF SCREEN	MATERIAL
65 FT.	4 IN.	8 IN.	10 FT.	☐ STEEL ☒ THERMOPLASTIC (PVC) ☐ OTHER

DEPTH FROM	DEPTH TO	FORMATION DESCRIPTION
0	31	Overburden
31	36	Shale
36	65	Limestone
65	75	Limestone w/interbedded shale layers

MULTIPLE CASED WELLS ☐ YES ☒ NO PUMP INSTALLED FOR REMEDIATION ☐ YES ☒ NO
SUBMIT ADDITIONAL AS BUILT DIAGRAMS SHOWING WELL CONSTRUCTION DETAILS INCLUDING TYPE AND SIZE OF ALL CASING, HOLE DIAMETERS AND GROUT USED

TOTAL DEPTH: 75'

SIGNATURE (PRIMARY CONTRACTOR)	PERMIT NUMBER	STATIC WATER LEVEL FEET FROM MEASURING POINT	DATE WELL DRILLING WAS COMPLETED
	0124SWIPM		8-25-05

I HEREBY CERTIFY THAT THE MONITORING WELL HEREIN DESCRIBED WAS CONSTRUCTED IN ACCORDANCE WITH THE DEPARTMENT OF NATURAL RESOURCES REQUIREMENTS FOR THE CONSTRUCTION OF MONITORING WELLS.

SIGNATURE (WELL DRILLER)	PERMIT NUMBER	DATE	SIGNATURE (PUMP INSTALLER)	PERMIT NUMBER	DATE
X	0124SWIPM	8-25-05	X N/A		

MO 780-1415 (1-02)

DISTRIBUTION: WHITE/DIVISION CANARY/CONTRACTOR PINK/OWNER
MAIL WHITE COPY TO: DEPARTMENT OF NATURAL RESOURCES, P.O. BOX 250, ROLLA, MO 65402
ENCLOSE $35 MONITORING WELL CERTIFICATION FEE WITHIN 60 DAYS AFTER WELL COMPLETION

Aquaterra Drilling Log

HOLE NO. PGW-19 | SHEET 1 OF 2 SHEETS

PROJECT NAME: Additional Perimeter LFG Wells	DRILLING SUBCONTRACTOR: LAYNE WESTERN
PROJECT NUMBER: 1684.10	NAME OF DRILLER(S): Tim Elders, Bill Pinson, Dave Jones
LOCATION: Bridgeton LF, LLC - Bridgeton, MO	MANUFACTURER'S DESIGNATION OF DRILL: Schramm T660
SURFACE ELEVATION: ≈480	SIZES AND TYPES OF DRILLING AND SAMPLING EQUIPMENT: 8¼" ID HSA; 8" air rotary
OVERBURDEN THICKNESS: 31	
BEDROCK FOOTAGE: 45	DRILLING START DATE: 8-29-05 / DRILLING END DATE: 8-29-05
DEPTH GROUNDWATER ENCOUNTERED: ≈ 26	TOTAL NUMBER OF CORE BOXES: 0 / TOTAL NUMBER OF SAMPLES: 0
DEPTH TO WATER AND ELAPSED TIME AFTER DRILLING COMPLETED:	LOGGED BY: Andy Limmer

DEPTH	DESCRIPTION OF MATERIALS	CLASS.	BLOW COUNTS	RECOVERY	SAMPLE NO.	FIELD SCREENING RESULTS	REMARKS
0	Structural Fill: brown silty CLAY			7'	9'		49 bags of 50 lb magnesium gravel
10	Brown silty CLAY, low Plasticity	CL-ML					5 bags of 50 lb Enviroplug
17	Grayish brown SILT	ML					65' of 4 inch id SCH 80 #20 slot x 10 feet of 4 inch id SCH 80 riser x 5 feet
31	dark gray, shale, clayey	SH					
33	Light gray LIMESTONE	LMS					

AQUATERRA ENVIRONMENTAL SOLUTIONS, INC. (AS CITY-JEFFERSON CITY-OMAHA-ST. LOUIS)

PROJECT NAME: ADD'L Perimeter LFG Wells

HOLE NO.: PGW-19

Aquaterra Drilling Log

HOLE NO. PGW-19 | SHEET OF SHEETS 2 2

PROJECT NAME: Additional Perimeter LFG Wells | LOGGED BY: AJL

DEPTH	DESCRIPTION OF MATERIALS	CLASS.	BLOW COUNTS	RECOVERY	SAMPLE NO.	FIELD SCREENING RESULTS	REMARKS
	Light gray, LIMESTONE	LMS				74'	
	Boring Terminated at 76 feet						

AQUATERRA
ENVIRONMENTAL SOLUTIONS, INC.
IAB CITY-JEFFERSON CITY-CHAHA-ST. LOUIS

PROJECT NAME: ADD'L Perimeter LFG Wells | HOLE NO. PGW-19

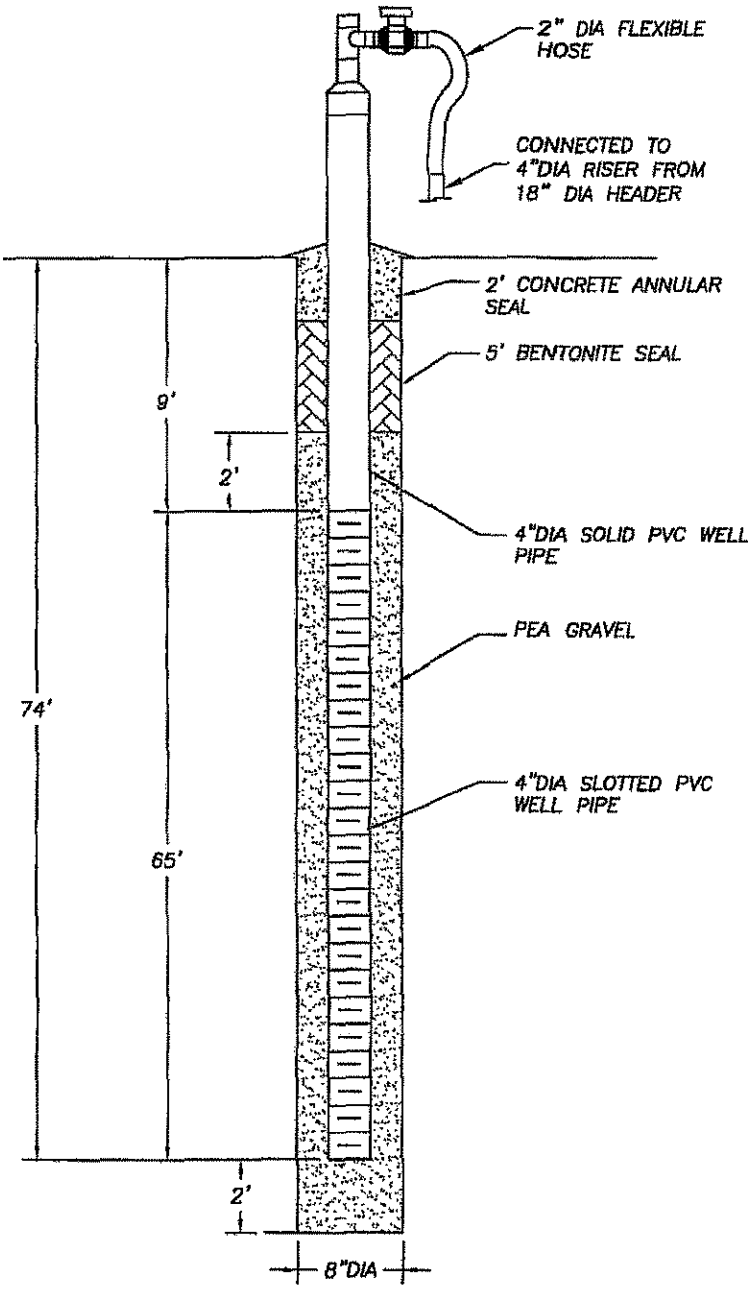

NOTES:

1. A PAINTED DESIGNATION NUMBER AND/OR TAG WILL BE PROVIDED TO IDENTIFY EACH WELL HEAD.
2. DEPTHS ARE APPROXIMATE.

AQUATERRA
ENVIRONMENTAL SOLUTIONS, INC.
141 Market Place Drive, Suite 204
Fairview Heights, Illinois 62208

PGW-19 DETAIL

BRIDGETON LANDFILL, LLC
BRIDGETON, MISSOURI

Project Mgr.	Drawn By	Designed By	Project No.
MSB	AJF	NLH	1684.10
Scale	**Date**	**File Name**	**Drawing No.**
No Scale	11/7/05	PGW-19_DETAIL.dwg	5

MISSOURI DEPARTMENT OF NATURAL RESOURCES
GEOLOGICAL SURVEY AND RESOURCE ASSESSMENT DIVISION
(573) 368-2165

MONITORING WELL CERTIFICATION RECORD

OFFICE USE ONLY	DATE RECEIVED
REF. NO. 314932	
O.R. NO.	CHECK NO.
STATE WELL NUMBER	REVENUE NO.
ENTERED Ph 1 Ph 2 Ph 3	APPROVED BY / ROUTE /

INFORMATION SUPPLIED BY PRIMARY CONTRACTOR OR DRILLING CONTRACTOR

OWNER NAME	WELL NUMBER	VARIANCE GRANTED BY THE D.N.R.
Bridgeton Landfill LLC	GAW-19	☐ NO ☒ YES, ATTACH A COPY OF THE VARIANCE

OWNER ADDRESS	CITY	STATE	ZIP CODE
13570 St Charles Rock Rd	Bridgeton	MO	63044

SITE NAME	CONTACT NAME
same	Rod Blaese

SITE ADDRESS	CITY	STATE	ZIP CODE	VARIANCE NUMBER
same				N/A

PROPOSED USE OF WELL	TYPE OF POTENTIAL SITE	MONITORING FOR: (CHECK ALL THAT APPLY)
☒ GAS MONITORING WELL ☐ MONITORING	☐ HAZARDOUS MATERIAL ☒ LANDFILL	☐ RADIONUCLIDES ☐ PETROLEUM PRODUCTS ONLY
☐ EXTRACTION WELL ☐ PIEZOMETERS	☐ INITIAL SITE ASSESSMENT ☐ L.U.S.T.	☐ EXPLOSIVES ☐ METALS ☐ V.O.C.
	☐ WATER LEVEL DRAWDOWN	☒ SVOCS ☐ PESTICIDES/HERBICIDES

SKETCH LOCATION OF WELL INCLUDING MILEAGE ON ALL ROADS TRAVELLED FROM NEAREST TOWNS



LOCATION OF WELL	AREA	ELEV
LAT. 38 45 45		
LONG. 90 26 24	COUNTY St. Louis	

SMALLEST 1/4 1/4 1/4 LARGEST

SEC. 12 TWN. 46 N. RNG. 5 E OR W

DESCRIBE LOCATION OF THE WELL SO WE WOULD BE ABLE TO VISIT THE WELL SITE	DRILLER NOTES:
370 West on St. Charles Rock Rd, site on left	Methane collection well

TYPE OF SURFACE COMPLETION	LENGTH OF PROTECTIVE CASING	DIAMETER OF PROTECTIVE CASING	DIAMETER AND DEPTH OF THE HOLE PROTECTIVE CASING WAS PLACED	PROTECTIVE CASING MATERIAL	LOCKING CAP?
☐ ABOVE GROUND ☒ FLUSH MOUNT N/A	FT.	IN.	IN. FT.	☐ STEEL ☐ ALUMINUM ☐ PLASTIC	☒ YES ☐ NO

WEEP HOLE?	VENTED CAP?	LENGTH OF FLUSH MOUNT	DIAMETER OF FLUSH MOUNT	DIAMETER AND DEPTH OF THE HOLE FLUSH MOUNT WAS PLACED	SURFACE COMPLETION GROUT
☐ YES ☐ NO	☐ YES ☐ NO	FT.	IN.	IN. FT.	☐ CONCRETE ☐ OTHER N/A

RISER PIPE DETAIL

LENGTH	DIAMETER	WEIGHT OR SDR#	DIAMETER OF DRILL HOLE	MATERIAL	BENTONITE SEAL	LENGTH OF SEAL	MATERIAL
10 FT.	4 IN.	SDR 17	8" FT.	☐ STEEL ☒ THERMOPLASTIC (PVC) ☐ OTHER		3 FT.	☐ SLURRY ☐ PELLETS ☐ GRANULAR ☒ CHIPS

GLUED ☐ YES ☒ NO

SECONDARY FILTER PACK

☐ SATURATED ZONE ☐ UNSATURATED ZONE HYDRATED ☐ YES ☐ NO
BOTH ZONES ☐ IF YES, HYDRATED ☐ YES ☐ NO

PRIMARY FILTER PACK	LENGTH	DEPTH TO TOP OF PRIMARY FILTER PACK	SECONDARY FILTER PACK LENGTH
	62 FT.	7 FT.	N/A FT.

ANNULAR SEAL

☒ BENTONITE SLURRY ☐ NON SLURRY BENTONITE TYPE ☐ CEMENT/BENTONITE SLURRY
BAGS OF CEMENT USED 4
% OF BENTONITE USED 6
WATER USED/BAG 22 GAL
LENGTH 4 FT.

WELL SCREEN

LENGTH	DIAMETER	DIAMETER OF DRILL HOLE	DEPTH TO TOP OF SCREEN	MATERIAL
65 FT.	4 IN.	8 IN.	10 FT.	☐ STEEL ☒ THERMOPLASTIC (PVC) ☐ OTHER

MULTIPLE CASED WELLS ☐ YES ☒ NO PUMP INSTALLED FOR REMEDIATION ☐ YES ☒ NO

SUBMIT ADDITIONAL AS BUILT DIAGRAMS SHOWING WELL CONSTRUCTION DETAILS INCLUDING TYPE AND SIZE OF ALL CASING, HOLE DIAMETERS AND GROUT USED

DEPTH FROM	DEPTH TO	FORMATION DESCRIPTION
0	31	Overburden
31	82	Shale
82	62	Limestone
62	75	Limestone w/ interbedded shale layers

TOTAL DEPTH: 75'

SIGNATURE (PRIMARY CONTRACTOR)	PERMIT NUMBER	STATIC WATER LEVEL FEET FROM MEASURING POINT	DATE WELL DRILLING WAS COMPLETED
[signature]	2005031111		10-5-05

I HEREBY CERTIFY THAT THE MONITORING WELL HEREIN DESCRIBED WAS CONSTRUCTED IN ACCORDANCE WITH THE DEPARTMENT OF NATURAL RESOURCES REQUIREMENTS FOR THE CONSTRUCTION OF MONITORING WELLS.

SIGNATURE (WELL DRILLER)	PERMIT NUMBER	DATE	SIGNATURE (PUMP INSTALLER)	PERMIT NUMBER	DATE
X [signature]	2005031111	10-5-05	X N/A		

MO 780-1416 (1-02)

DISTRIBUTION: WHITE/DIVISION CANARY/CONTRACTOR PINK/OWNER
MAIL WHITE COPY TO: DEPARTMENT OF NATURAL RESOURCES, P.O. BOX 250, ROLLA, MO 65402
ENCLOSE $35 MONITORING WELL CERTIFICATION FEE WITHIN 60 DAYS AFTER WELL COMPLETION

Aquaterra Drilling Log

HOLE NO. PGW-20 | SHEET 1 OF 2 SHEETS

PROJECT NAME: Addl Perimeter LFG Wells	DRILLING SUBCONTRACTOR: Layne Western
PROJECT NUMBER: 1684.10	NAME OF DRILLER(S): Tim Elders, Bill Pinson, Dave Jones
LOCATION: Bridgeton LF, LLC - Bridgeton, MO	MANUFACTURER'S DESIGNATION OF DRILL: Schramm T660
SURFACE ELEVATION: ≈ 481	SIZES AND TYPES OF DRILLING AND SAMPLING EQUIPMENT: 8 1/4" id HSA; 5" A.I. rotary
OVERBURDEN THICKNESS: 27	
BEDROCK FOOTAGE: 49	DRILLING START DATE: 8-30-05 / DRILLING END DATE: 8-30-05
DEPTH GROUNDWATER ENCOUNTERED: 24 ft	TOTAL NUMBER OF CORE BOXES: 0 / TOTAL NUMBER OF SAMPLES: 0
DEPTH TO WATER AND ELAPSED TIME AFTER DRILLING COMPLETED: 36 ft / 2 Hrs 40ft/48 Hrs	LOGGED BY: Andy Lummer

DEPTH	DESCRIPTION OF MATERIALS	CLASS.	BLOW COUNTS	RECOVERY	SAMPLE NO.	FIELD SCREENING RESULTS	REMARKS
0	Structural Fill: brown silty CLAY	CL		2' →			6 bags of 50lb bentonite
5				7.5' →			
10	Brown, silty CLAY, low plasticity, slightly sticky	CL-ML				10'	49 bags of 50lb gravel
15	Grayish brown to dark brownish gray, SILT, trace clay	ML					4 inch id # 20 SCH80 screen x 65 feet
20	with sand below 24 feet						4 inch id SCH80 riser x 10 feet + 5 feet
25	Gray SHALE, clayey, soft	SH					
30	Light gray LIMESTONE	LMS					
35	with intermittent brown and light gray clay seams						

AQUATERRA
ENVIRONMENTAL SOLUTIONS, INC.
IAS CITY-JEFFERSON CITY-OMAHA-ST. LOUIS

PROJECT NAME: Addl Perimeter LFG Wells

HOLE NO. PGW-20

Aquaterra Drilling Log

HOLE NO. PGW-20 | SHEET OF SHEETS 2 2

PROJECT NAME: Add'l Perimeter LFG Wells | LOGGED BY: AJL

DEPTH	DESCRIPTION OF MATERIALS	CLASS.	BLOW COUNTS	RECOVERY	SAMPLE NO.	FIELD SCREENING RESULTS	REMARKS
75	Light gray LIMESTONE with light gray clay seams	LMS				75'	
76.5	Boring terminated @ 76.5 feet						

AQUATERRA
ENVIRONMENTAL SOLUTIONS, INC.
KANSAS CITY-JEFFERSON CITY-OMAHA-ST. LOUIS

PROJECT NAME: ADD'L Perimeter LFG Wells | HOLE NO.: PGW-20

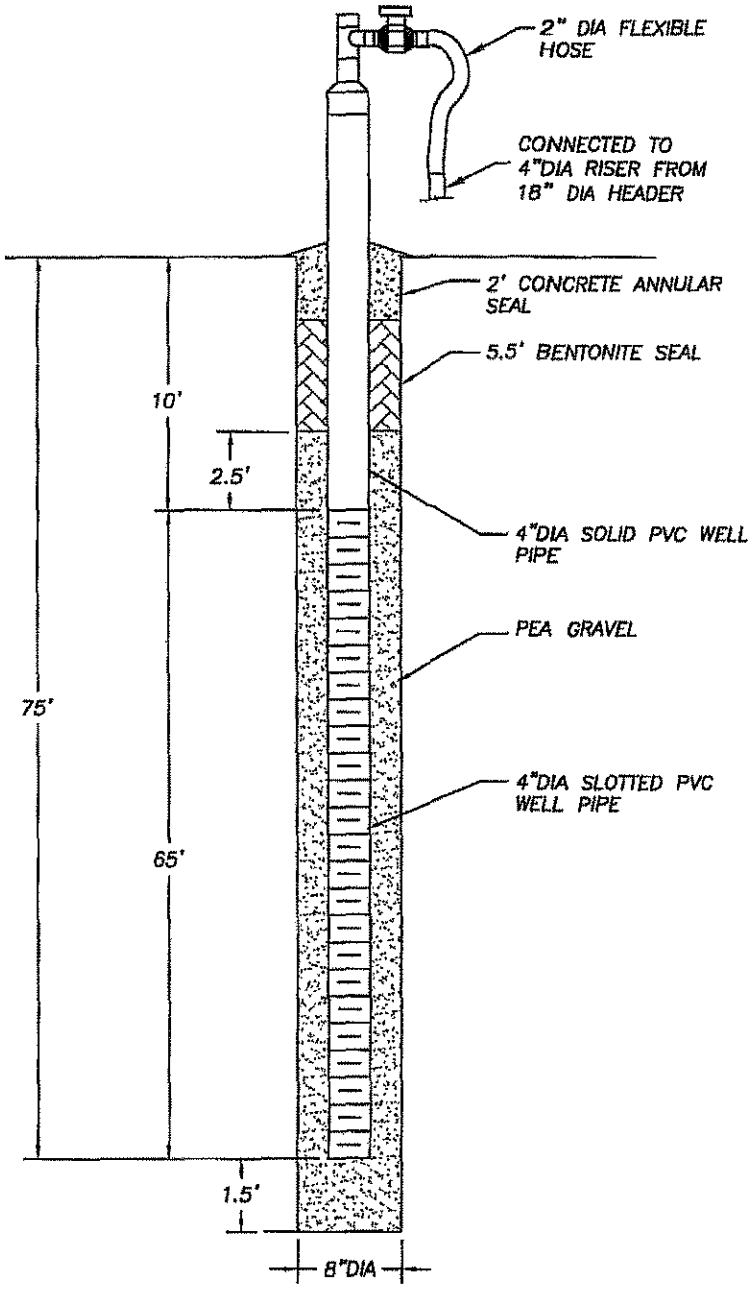

NOTES:

1. A PAINTED DESIGNATION NUMBER AND/OR TAG WILL BE PROVIDED TO IDENTIFY EACH WELL HEAD.
2. DEPTHS ARE APPROXIMATE.

AQUATERRA
ENVIRONMENTAL SOLUTIONS, INC.
141 Market Place Drive, Suite 204
Fairview Heights, Illinois 62208

PGW-20 DETAIL

BRIDGETON LANDFILL, LLC
BRIDGETON, MISSOURI

Project Mgr.	Drawn By	Designed By	Project No.
MSB	AJF	NLH	1684.10
Scale	**Date**	**File Name**	**Drawing No.**
No Scale	11/7/05	PGW-20_DETAIL.dwg	6

MISSOURI DEPARTMENT OF NATURAL RESOURCES
GEOLOGICAL SURVEY AND RESOURCE ASSESSMENT DIVISION
(573) 368-2165

MONITORING WELL CERTIFICATION RECORD

OFFICE USE ONLY	DATE RECEIVED
REF. NO. 314033	
C.R. NO.	CHECK NO.
STATE WELL NUMBER	REVENUE NO.
ENTERED Ph 1 Ph 2 Ph 3	APPROVED BY / ROUTE /

INFORMATION SUPPLIED BY PRIMARY CONTRACTOR OR DRILLING CONTRACTOR

OWNER NAME: Bridgeton Landfill LLC	WELL NUMBER: DGW-20			VARIANCE GRANTED BY THE D.N.R. ☐ NO
OWNER ADDRESS: 13570 St. Charles Rock Rd	CITY: Bridgeton	STATE: MO	ZIP CODE: 63044	☒ YES, ATTACH A COPY OF THE VARIANCE
SITE NAME: Same	CONTACT NAME: Rod Bloese			
SITE ADDRESS: Same	CITY	STATE	ZIP CODE	VARIANCE NUMBER: 07-BUS

PROPOSED USE OF WELL: ☒ GAS MONITORING WELL ☐ MONITORING ☐ EXTRACTION WELL ☐ PIEZOMETERS

TYPE OF POTENTIAL SITE: ☐ HAZARDOUS MATERIAL ☒ LANDFILL ☐ INITIAL SITE ASSESSMENT ☐ L.U.S.T. ☐ WATER LEVEL DRAWDOWN

MONITORING FOR: (CHECK ALL THAT APPLY) ☐ RADIONUCLIDES ☒ PETROLEUM PRODUCTS ONLY ☐ EXPLOSIVES ☐ METALS ☐ V.O.C. ☐ SVOCS ☐ PESTICIDES/HERBICIDES

SKETCH LOCATION OF WELL INCLUDING MILEAGE ON ALL ROADS TRAVELLED FROM NEAREST TOWNS.



LOCATION OF WELL: LAT. 38 45 42 . LONG. 90 26 34 . AREA ELEV. COUNTY St. Louis

SMALLEST 1/4 1/4 LARGEST 1/4 SEC. 8 TWN. 46 N. RNG. 5 E OR W

DESCRIBE LOCATION OF THE WELL SO WE WOULD BE ABLE TO VISIT THE WELL SITE: 370, West on St. Charles Rock Rd, site on left

DRILLER NOTES: Methane collection well

TYPE OF SURFACE COMPLETION	LENGTH OF PROTECTIVE CASING	DIAMETER OF PROTECTIVE CASING	DIAMETER AND DEPTH OF THE HOLE PROTECTIVE CASING WAS PLACED	PROTECTIVE CASING MATERIAL	LOCKING CAP?
☐ ABOVE GROUND ☐ FLUSH MOUNT N/A	FT.	IN.	IN. FT.	☐ STEEL ☐ ALUMINUM ☐ PLASTIC	☐ YES ☐ NO

WEEP HOLE?	VENTED CAP?	LENGTH OF FLUSH MOUNT	DIAMETER OF FLUSH MOUNT	DIAMETER AND DEPTH OF THE HOLE FLUSH MOUNT WAS PLACED	SURFACE COMPLETION GROUT	
☐ YES ☐ NO	☐ YES ☐ NO	FT.	IN.	IN. FT.	☐ CONCRETE ☐ OTHER N/A	

RISER PIPE DETAIL	LENGTH	DIAMETER	WEIGHT OR SDR#	DIAMETER OF DRILL HOLE	MATERIAL	BENTONITE SEAL	LENGTH OF SEAL	MATERIAL
	10 FT.	4 IN.	80	8" FT.	☐ STEEL ☒ THERMOPLASTIC (PVC) ☐ OTHER		3 FT.	☐ SLURRY ☐ PELLETS ☐ GRANULAR ☒ CHIPS

GLUED ☐ YES ☒ NO

SECONDARY FILTER PACK: ☐ SATURATED ZONE ☐ UNSATURATED ZONE HYDRATED ☐ YES ☐ NO BOTH ZONES ☐ IF YES, HYDRATED ☐ YES ☐ NO

PRIMARY FILTER PACK	LENGTH	DEPTH TO TOP OF PRIMARY FILTER PACK	SECONDARY FILTER PACK LENGTH
	67.5 FT.	7.5 FT.	N/A FT.

ANNULAR SEAL			LENGTH
☐ BENTONITE SLURRY ☐ NON SLURRY BENTONITE TYPE	☐ CEMENT/BENTONITE SLURRY BAGS OF CEMENT USED 4 % OF BENTONITE USED 5 WATER USED/BAG 20 GAL.		4.5 FT.

WELL SCREEN	LENGTH	DIAMETER	DIAMETER OF DRILL HOLE	DEPTH TO TOP OF SCREEN	MATERIAL
	6.5 FT.	4 IN.	8 IN.	10 FT.	☐ STEEL ☒ THERMOPLASTIC (PVC) ☐ OTHER

DEPTH FROM	DEPTH TO	FORMATION DESCRIPTION
0	28	Overburden
28	30.5	Shale
30.5	53	Limestone
53	60	Limestone w/ some interbedded shale
60	70	Limestone fractured w/ clay seams
70	75	Limestone w/ some interbedded shale

TOTAL DEPTH: 75

MULTIPLE CASED WELLS ☐ YES ☒ NO PUMP INSTALLED FOR REMEDIATION ☐ YES ☒ NO

SUBMIT ADDITIONAL AS BUILT DIAGRAMS SHOWING WELL CONSTRUCTION DETAILS INCLUDING TYPE AND SIZE OF ALL CASING, HOLE DIAMETERS AND GROUT USED

SIGNATURE (PRIMARY CONTRACTOR)	PERMIT NUMBER	STATIC WATER LEVEL FEET FROM MEASURING POINT	DATE WELL DRILLING WAS COMPLETED
	0121S1WPM		8-20-25

I HEREBY CERTIFY THAT THE MONITORING WELL HEREIN DESCRIBED WAS CONSTRUCTED IN ACCORDANCE WITH THE DEPARTMENT OF NATURAL RESOURCES REQUIREMENTS FOR THE CONSTRUCTION OF MONITORING WELLS.

SIGNATURE (WELL DRILLER)	PERMIT NUMBER	DATE	SIGNATURE (PUMP INSTALLER)	PERMIT NUMBER	DATE
X	0121S1WPM	10-1-25	X N/A		

MO 780-1416 (1-02)

DISTRIBUTION: WHITE/DIVISION CANARY/CONTRACTOR PINK/OWNER
MAIL WHITE COPY TO: DEPARTMENT OF NATURAL RESOURCES, P.O. BOX 250, ROLLA, MO 65402
ENCLOSE $35 MONITORING WELL CERTIFICATION FEE WITH IN 60 DAYS AFTER WELL COMPLETION

Aquaterra Drilling Log

HOLE NO. PGW-21 | SHEET 1 OF 2 SHEETS

PROJECT NAME: Additional Perimeter LFG Wells	DRILLING SUBCONTRACTOR: Layne Western
PROJECT NUMBER: 1684.10	NAME OF DRILLER(S): Tim Elders, Bill Pinson, Dave Jones
LOCATION: Bridgeton Landfill LLC - Bridgeton, MO	MANUFACTURER'S DESIGNATION OF DRILL: Schramm T660
SURFACE ELEVATION: ≈ 482	SIZES AND TYPES OF DRILLING AND SAMPLING EQUIPMENT: 8¼" HSA; 8" Air Rotary
OVERBURDEN THICKNESS: 27	
BEDROCK FOOTAGE: 74	DRILLING START DATE: 8-31-05 / DRILLING END DATE: 9-1-05
DEPTH GROUNDWATER ENCOUNTERED: ≈ 20	TOTAL NUMBER OF CORE BOXES: Ø / TOTAL NUMBER OF SAMPLES: Ø
DEPTH TO WATER AND ELAPSED TIME AFTER DRILLING COMPLETED:	LOGGED BY: Andy Limmer

DEPTH	DESCRIPTION OF MATERIALS	CLASS.	BLOW COUNTS	RECOVERY	SAMPLE NO.	FIELD SCREENING RESULTS	REMARKS
0	Structural Fill: brown silty CLAY with gravel					← 2'	Well set at 100 feet with 8 x 10 ft + 2 x 5 ft 4 inch id SCH 80 #20 slot PVC well screen. 1 x 10 ft + 1 x 5 ft 4 inch id SCH 80 PVC riser. 61 bags of sand 6 bags of bentonite chips
5	5					← 7'	
10	Brown, silty CLAY	CL				← 16'	
15	15						
	Grayish brown to brownish gray SILT	ML					
25	27						
	SHALE and CLAY with LIMESTONE layers or cobbles	SH					
35	34						
	Tan and light gray LIMESTONE						
50	50	LMS					
	Light gray LIMESTONE						

AQUATERRA ENVIRONMENTAL SOLUTIONS, INC. KAS CITY-JEFFERSON CITY-OMAHA-ST. LOUIS

PROJECT NAME: ADD'L Perimeter LFG Wells

HOLE NO. PGW-21

Aquaterra Drilling Log

HOLE NO. PGW-21 | SHEET OF SHEETS 2 2

PROJECT NAME: A Addl Perimeter LFG Wells | LOGGED BY: AJL

DEPTH	DESCRIPTION OF MATERIALS	CLASS.	BLOW COUNTS	RECOVERY	SAMPLE NO.	FIELD SCREENING RESULTS	REMARKS
75	Light gray LIMESTONE with light gray clayey SHALE seams	LMS					
80							
85							
90							
95							
100					100'		
	Boring Terminated @ 101 ft						

AQUATERRA
ENVIRONMENTAL SOLUTIONS, INC.
ST. CITY-JEFFERSON CITY-OMAHA-ST. LOUIS

PROJECT NAME: ADD'L Perimeter LFG Wells | HOLE NO. PGW-21

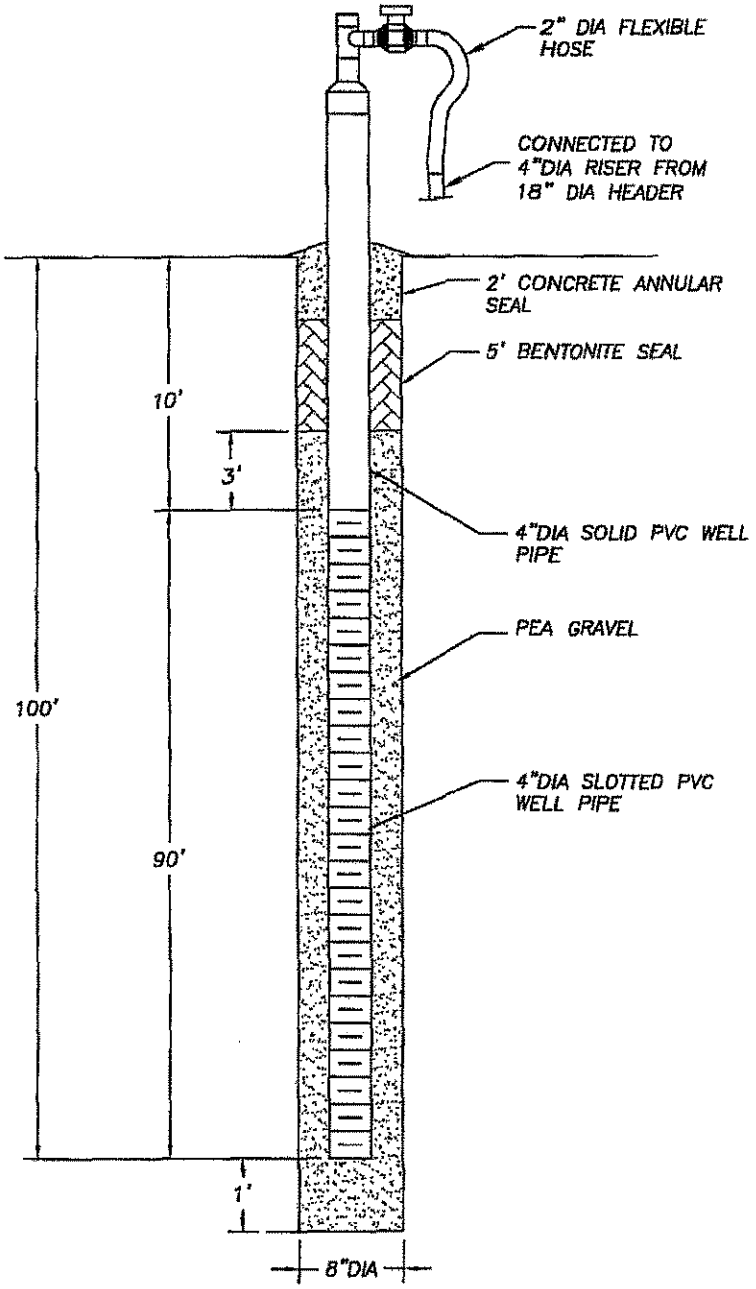

NOTES:

1. A PAINTED DESIGNATION NUMBER AND/OR TAG WILL BE PROVIDED TO IDENTIFY EACH WELL HEAD.
2. DEPTHS ARE APPROXIMATE.

AQUATERRA
ENVIRONMENTAL SOLUTIONS, INC.
141 Market Place Drive, Suite 204
Fairview Heights, Illinois 62208

PGW-21 DETAIL

BRIDGETON LANDFILL, LLC
BRIDGETON, MISSOURI

Project Mgr.	Drawn By	Designed By	Project No.
MSB	AJF	NLH	1684.10
Scale	Date	File Name	Drawing No.
No Scale	11/7/05	PGW-21_DETAIL.dwg	7

MISSOURI DEPARTMENT OF NATURAL RESOURCES
GEOLOGICAL SURVEY AND RESOURCE ASSESSMENT DIVISION
(573) 368-2165

MONITORING WELL CERTIFICATION RECORD

OFFICE USE ONLY	DATE RECEIVED
REF. NO. 314984	
C.R. NO.	CHECK NO.
STATE WELL NUMBER	REVENUE NO.
ENTERED Ph 1 Ph 2 Ph 3	APPROVED BY / ROUTE / /

INFORMATION SUPPLIED BY PRIMARY CONTRACTOR OR DRILLING CONTRACTOR

OWNER NAME	WELL NUMBER	VARIANCE GRANTED BY THE D.N.R.
Bridgeton Landfill LLC	RGW 21	☐ NO
OWNER ADDRESS	**CITY / STATE / ZIP CODE**	☒ YES, ATTACH A COPY OF THE VARIANCE
10570 St. Charles Rock Rd	Bridgeton MO 63044	
SITE NAME	**CONTACT NAME**	
Same	Rod Bloese	
SITE ADDRESS	**CITY / STATE / ZIP CODE**	**VARIANCE NUMBER**
Same		21765

PROPOSED USE OF WELL
☒ GAS MONITORING WELL ☐ MONITORING
☐ EXTRACTION WELL ☐ PIEZOMETERS

TYPE OF POTENTIAL SITE
☐ HAZARDOUS MATERIAL ☒ LANDFILL
☐ INITIAL SITE ASSESSMENT ☐ L.U.S.T.
☐ WATER LEVEL DRAWDOWN

MONITORING FOR: (CHECK ALL THAT APPLY)
☒ RADIONUCLIDES ☐ PETROLEUM PRODUCTS ONLY
☐ EXPLOSIVES ☐ METALS ☐ V.O.C.
☐ SVOCS ☐ PESTICIDES/HERBICIDES

SKETCH LOCATION OF WELL INCLUDING MILEAGE ON ALL ROADS TRAVELLED FROM NEAREST TOWNS.



LOCATION OF WELL
LAT. 38 ° 45 ' 47 "
LONG. 90 ° 26 ' 33 "
AREA ELEV
COUNTY St. Louis
SMALLEST 1/4 LARGEST 1/4 1/4
SEC. 12 TWN. 46 N RNG. 5 E OR W

DESCRIBE LOCATION OF THE WELL SO WE WOULD BE ABLE TO VISIT THE WELL SITE	DRILLER NOTES:
2nd West on St. Charles Rock Rd, site on left	Methane collection well

TYPE OF SURFACE COMPLETION	LENGTH OF PROTECTIVE CASING	DIAMETER OF PROTECTIVE CASING	DIAMETER AND DEPTH OF THE HOLE PROTECTIVE CASING WAS PLACED	PROTECTIVE CASING MATERIAL	LOCKING CAP?
☐ ABOVE GROUND ☐ FLUSH MOUNT n/a	FT.	IN.	IN. FT.	☐ STEEL ☐ ALUMINUM ☐ PLASTIC	☐ YES ☐ NO

WEEP HOLE?	VENTED CAP?	LENGTH OF FLUSH MOUNT	DIAMETER OF FLUSH MOUNT	DIAMETER AND DEPTH OF THE HOLE FLUSH MOUNT WAS PLACED	SURFACE COMPLETION GROUT	
☐ YES ☐ NO	☐ YES ☐ NO	FT.	IN.	IN. FT.	☐ CONCRETE ☐ OTHER	n/a

RISER PIPE DETAIL

LENGTH	DIAMETER	WEIGHT OR SCH#	DIAMETER OF DRILL HOLE	MATERIAL
10' FT.	4 IN.	80	8" FT.	☐ STEEL ☒ THERMOPLASTIC (PVC) ☐ OTHER

GLUED ☐ YES ☒ NO

BENTONITE SEAL

LENGTH OF SEAL	MATERIAL
3 FT.	☐ SLURRY ☐ PELLETS ☐ GRANULAR ☒ CHIPS

SECONDARY FILTER PACK
☐ SATURATED ZONE ☐ UNSATURATED ZONE HYDRATED ☐ YES ☐ NO
BOTH ZONES ☐ IF YES, HYDRATED ☐ YES ☐ NO

PRIMARY FILTER PACK

LENGTH	DEPTH TO TOP OF PRIMARY FILTER PACK	SECONDARY FILTER PACK LENGTH
40.5 FT.	39.5 FT.	n/a FT.

ANNULAR SEAL
☐ BENTONITE SLURRY ☒ CEMENT/BENTONITE SLURRY
☐ NON SLURRY BENTONITE TYPE BAGS OF CEMENT USED 4
% OF BENTONITE USED 5
WATER USED/BAG 22.2 GAL
LENGTH 4.5 FT.

WELL SCREEN

LENGTH	DIAMETER	DIAMETER OF DRILL HOLE	DEPTH TO TOP OF SCREEN	MATERIAL
40 FT.	4 IN.	8 IN.	10 FT.	☐ STEEL ☒ THERMOPLASTIC (PVC) ☐ OTHER

DEPTH FROM	DEPTH TO	FORMATION DESCRIPTION
0	28	overburden
28	34	shale
34	70	limestone
70	102	limestone/shale

MULTIPLE CASED WELLS ☐ YES ☒ NO PUMP INSTALLED FOR REMEDIATION ☐ YES ☒ NO
SUBMIT ADDITIONAL AS BUILT DIAGRAMS SHOWING WELL CONSTRUCTION DETAILS INCLUDING TYPE AND SIZE OF ALL CASING, HOLE DIAMETERS AND GROUT USED

TOTAL DEPTH: 102'

SIGNATURE (PRIMARY CONTRACTOR)	PERMIT NUMBER	STATIC WATER LEVEL FEET FROM MEASURING POINT	DATE WELL DRILLING WAS COMPLETED
	002851 WRM		12-11-15

I HEREBY CERTIFY THAT THE MONITORING WELL HEREIN DESCRIBED WAS CONSTRUCTED IN ACCORDANCE WITH THE DEPARTMENT OF NATURAL RESOURCES REQUIREMENTS FOR THE CONSTRUCTION OF MONITORING WELLS.

SIGNATURE (WELL DRILLER)	PERMIT NUMBER	DATE	SIGNATURE (PUMP INSTALLER)	PERMIT NUMBER	DATE
X	002851 WRM	12-11-15	X n/a		

MO 780-1415 (1-02)

DISTRIBUTION: WHITE/DIVISION CANARY/CONTRACTOR PINK/OWNER
MAIL WHITE COPY TO: DEPARTMENT OF NATURAL RESOURCES, P.O. BOX 250, ROLLA, MO 65402
ENCLOSE $35 MONITORING WELL CERTIFICATION FEE WITHIN 60 DAYS AFTER WELL COMPLETION

Aquaterra Drilling Log

HOLE NO. PGW-22 | SHEET 1 OF 2 SHEETS

PROJECT NAME: Additional Perimeter LFG Wells	DRILLING SUBCONTRACTOR: Layne Western
PROJECT NUMBER: 1684.10	NAME OF DRILLER(S): Tim Elders, Bill Pinson, Dave Jones
LOCATION: Bridgeton Landfill, LLC - Bridgeton, MO	MANUFACTURER'S DESIGNATION OF DRILL: Schramm T660
HOLE LOCATION: ~~2483 ft~~ PGW-22	SIZES AND TYPES OF DRILLING AND SAMPLING EQUIPMENT: 8 1/4" HSA; 8" Air rotary
SURFACE ELEVATION: ± 483 ft	
OVERBURDEN THICKNESS: 32 ft	DRILLING START DATE: 9/2/05 — DRILLING END DATE: 9/2/05
DEPTH DRILLED INTO ROCK: 70 ft	DEPTH GROUNDWATER ENCOUNTERED:
TOTAL DEPTH OF HOLE: 102	DEPTH TO WATER AND ELAPSED TIME AFTER DRILLING COMPLETED:

GEOTECHNICAL SAMPLES (TOTAL)	DISTURBED	UNDISTURBED	TOTAL NUMBER OF CORE BOXES

SAMPLES FOR CHEMICAL ANALYSIS (TOTAL)	(SPECIFY)	(SPECIFY)	(SPECIFY)	(SPECIFY)	(SPECIFY)	TOTAL CORE RECOVERY

DISPOSITION OF HOLE	BACKFILLED	MONITORING WELL	OTHER (SPECIFY)	SIGNATURE OF INSPECTOR
				Nathan Hyzer

DEPTH	DESCRIPTION OF MATERIALS	FIELD SCREENING RESULTS	GEOTECH SAMPLE RESULTS	ANALYTICAL SAMPLE NO.	TIME	REMARKS
0	Structural Fill: brown silty clay w/ gravel	0'			800	
5	5	7'				
10	Brown silty clay		10			
15						
20						
25	25					
30	Shale with clay				1030	
35	32 Shale with clay					
40	Light gray limestone					
45					1230	
50						
55	Light gray limestone					
60						

AQUATERRA ENVIRONMENTAL SOLUTIONS, INC.

PROJECT NAME: Additional Perimeter LFG Wells | HOLE NO.: PGW-22

Additional LFG wells

Aquaterra Drilling Log

HOLE NO. PGW-22 | SHEET 2 OF 2 SHEETS

PROJECT NAME | INSPECTOR N Higgsbea

EPT	DESCRIPTION OF MATERIALS	FIELD SCREENING RESULTS	GEOTECH SAMPLE RESULTS	ANALYTICAL SAMPLE NO.	TIME	REMARKS
05	Limestone					TD 102 Bottom of well 100 feet
	102 TD Borehole					

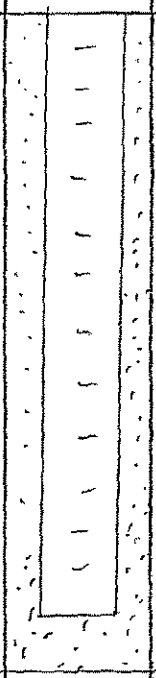

QUATERRA | PROJECT NAME | HOLE NO.

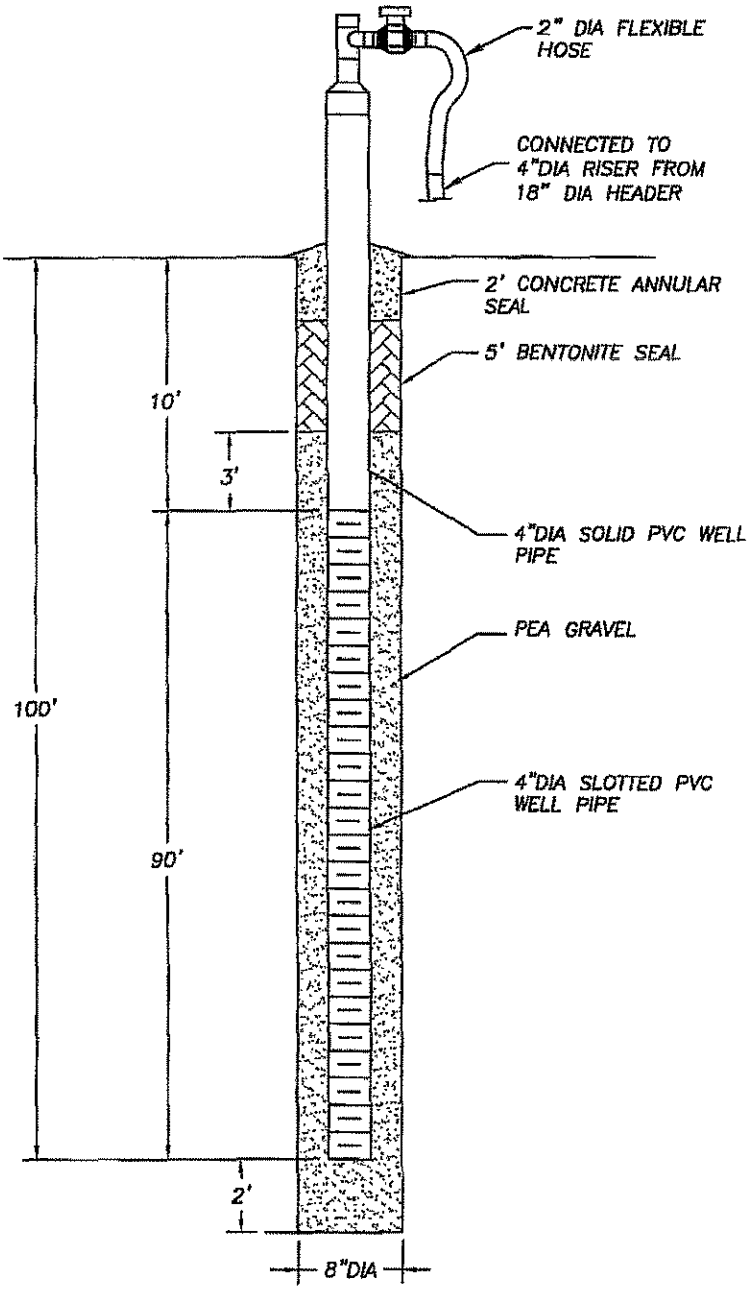

NOTES:

1. A PAINTED DESIGNATION NUMBER AND/OR TAG WILL BE PROVIDED TO IDENTIFY EACH WELL HEAD.
2. DEPTHS ARE APPROXIMATE.

AQUATERRA
ENVIRONMENTAL SOLUTIONS, INC.
141 Market Place Drive, Suite 204
Fairview Heights, Illinois 62208

PGW-22 DETAIL

BRIDGETON LANDFILL, LLC
BRIDGETON, MISSOURI

Project Mgr.	Drawn By	Designed By	Project No.
MSB	AJF	NLH	1684.10
Scale	**Date**	**File Name**	**Drawing No.**
No Scale	11/7/05	PGW-22_DETAIL.dwg	8

MISSOURI DEPARTMENT OF NATURAL RESOURCES
GEOLOGICAL SURVEY AND RESOURCE ASSESSMENT DIVISION
(573) 368-2165

MONITORING WELL CERTIFICATION RECORD

OFFICE USE ONLY	DATE RECEIVED
REF. NO. 314935	
C.I. NO.	CHECK NO.
STATE WELL NUMBER	REVENUE NO.
ENTERED Ph 1 Ph 2 Ph 3	APPROVED BY / ROUTE /

INFORMATION SUPPLIED BY PRIMARY CONTRACTOR OR DRILLING CONTRACTOR

OWNER NAME	WELL NUMBER	VARIANCE GRANTED BY THE D.N.R.
Bridgeton Landfill LLC.	PzW-23	☐ NO
OWNER ADDRESS: 13570 St. Charles Rock Rd	CITY: Bridgeton	STATE: MO ZIP CODE: 63044
SITE NAME: Same	CONTACT NAME: Pat Bloese	☒ YES, ATTACH A COPY OF THE VARIANCE!
SITE ADDRESS: Same	CITY	STATE ZIP CODE: VARIANCE NUMBER: 2760

PROPOSED USE OF WELL: ☒ GAS MONITORING WELL ☐ MONITORING ☐ EXTRACTION WELL ☐ PIEZOMETERS

TYPE OF POTENTIAL SITE: ☐ HAZARDOUS MATERIAL ☒ LANDFILL ☐ INITIAL SITE ASSESSMENT ☐ L.U.S.T. ☐ WATER LEVEL DRAWDOWN

MONITORING FOR: (CHECK ALL THAT APPLY) ☐ RADIONUCLIDES ☐ PETROLEUM PRODUCTS ONLY ☐ EXPLOSIVES ☐ METALS ☐ V.O.C. ☐ SVOCS ☒ PESTICIDES/HERBICIDES

SKETCH LOCATION OF WELL INCLUDING MILEAGE ON ALL ROADS TRAVELLED FROM NEAREST TOWNS.



LOCATION OF WELL: LAT 38 . 45 . 48 . LONG 90 . 26 . 31 .

AREA: ELEV:

COUNTY: St. Louis

SMALLEST 1/4 1/4 1/4 LARGEST

SEC. 0 TWN. 46 N. RNG. 6 E OR W

DESCRIBE LOCATION OF THE WELL SO WE WOULD BE ABLE TO VISIT THE WELL SITE: 270, west on St. Charles Rock Rd, site on left

DRILLER NOTES: Methane collection well

TYPE OF SURFACE COMPLETION	LENGTH OF PROTECTIVE CASING	DIAMETER OF PROTECTIVE CASING	DIAMETER AND DEPTH OF THE HOLE PROTECTIVE CASING WAS PLACED	PROTECTIVE CASING MATERIAL	LOCKING CAP?
☐ ABOVE GROUND ☐ FLUSH MOUNT N/A	FT.	IN.	IN. FT.	☐ STEEL ☐ ALUMINUM ☐ PLASTIC	☐ YES ☐ NO

WEEP HOLE?	VENTED CAP?	LENGTH OF FLUSH MOUNT	DIAMETER OF FLUSH MOUNT	DIAMETER AND DEPTH OF THE HOLE FLUSH MOUNT WAS PLACED	SURFACE COMPLETION GROUT
☐ YES ☐ NO	☐ YES ☐ NO	FT.	IN.	IN. FT.	☐ CONCRETE ☐ OTHER N/A

RISER PIPE DETAIL	LENGTH	DIAMETER	WEIGHT OR SDR#	DIAMETER OF DRILL HOLE	MATERIAL	BENTONITE SEAL	LENGTH OF SEAL	MATERIAL
	10 FT.	4 IN.	SDR	8" FT.	☐ STEEL ☒ THERMOPLASTIC (PVC) ☐ OTHER		3 FT.	☐ SLURRY ☐ PELLETS ☐ GRANULAR ☒ CHIPS

GLUED: ☐ YES ☒ NO

SECONDARY FILTER PACK: ☒ SATURATED ZONE ☐ UNSATURATED ZONE HYDRATED ☐ YES ☐ NO BOTH ZONES ☐ IF YES, HYDRATED ☐ YES ☐ NO

PRIMARY FILTER PACK	LENGTH	DEPTH TO TOP OF PRIMARY FILTER PACK	SECONDARY FILTER PACK LENGTH
	94 FT.	6 FT.	N/A FT.

ANNULAR SEAL		LENGTH
☐ BENTONITE SLURRY ☐ NON SLURRY BENTONITE TYPE	☒ CEMENT/BENTONITE SLURRY BAGS OF CEMENT USED 3 % OF BENTONITE USED 5 WATER USED/BAG 1.5 GAL	3 FT.

WELL SCREEN	LENGTH	DIAMETER	DIAMETER OF DRILL HOLE	DEPTH TO TOP OF SCREEN	MATERIAL
	90 FT.	4 IN.	8 IN.	10 FT.	☐ STEEL ☒ THERMOPLASTIC (PVC) ☐ OTHER

DEPTH FROM	DEPTH TO	FORMATION DESCRIPTION
0	27	Overburden
27	31	Silty sand
31	32	Limestone - weathered
32	63	Limestone
63	79	Limestone + shaley
79	100	Limestone w/ thin shale layers

MULTIPLE CASED WELLS ☐ YES ☒ NO PUMP INSTALLED FOR REMEDIATION ☐ YES ☒ NO

SUBMIT ADDITIONAL AS BUILT DIAGRAMS SHOWING WELL CONSTRUCTION DETAILS INCLUDING TYPE AND SIZE OF ALL CASING, HOLE DIAMETERS AND GROUT USED

TOTAL DEPTH: 100'

SIGNATURE (PRIMARY CONTRACTOR)	PERMIT NUMBER	STATIC WATER LEVEL FEET FROM MEASURING POINT	DATE WELL DRILLING WAS COMPLETED
	00125IWPM		09-26-05

I HEREBY CERTIFY THAT THE MONITORING WELL HEREIN DESCRIBED WAS CONSTRUCTED IN ACCORDANCE WITH THE DEPARTMENT OF NATURAL RESOURCES REQUIREMENTS FOR THE CONSTRUCTION OF MONITORING WELLS.

SIGNATURE (WELL DRILLER)	PERMIT NUMBER	DATE	SIGNATURE (PUMP INSTALLER)	PERMIT NUMBER	DATE
X	00125IWPM	10-11-05	X N/A		

MO 780-1416 (1-02)

DISTRIBUTION: WHITE/DIVISION CANARY/CONTRACTOR PINK/OWNER
MAIL WHITE COPY TO: DEPARTMENT OF NATURAL RESOURCES, P.O. BOX 250, ROLLA, MO 65402
ENCLOSE $35 MONITORING WELL CERTIFICATION FEE WITHIN 60 DAYS AFTER WELL COMPLETION

Aquaterra Drilling Log

HOLE NO. PGW 23 | SHEET 1 OF SHEETS

PROJECT NAME: Additional Perimeter Gas wells	DRILLING SUBCONTRACTOR: Layne Western
PROJECT NUMBER: 1684.10	NAME OF DRILLER(S): Tim Eckels
LOCATION: Bridgeton Landfill	MANUFACTURER'S DESIGNATION OF DRILL: SChramm T660
HOLE LOCATION: PGW 23	SIZES AND TYPES OF DRILLING AND SAMPLING EQUIPMENT: 5 1/4 HSA; 8" Air Rotary
SURFACE ELEVATION: ≈ 485	
OVERBURDEN THICKNESS: 34'	DRILLING START DATE: 9/7/05 — DRILLING END DATE: 9/7/05
DEPTH DRILLED INTO ROCK: 64	DEPTH GROUNDWATER ENCOUNTERED:
TOTAL DEPTH OF HOLE: 102	DEPTH TO WATER AND ELAPSED TIME AFTER DRILLING COMPLETED:

GEOTECHNICAL SAMPLES (TOTAL)	DISTURBED	UNDISTURBED	TOTAL NUMBER OF CORE BOXES
—	-	—	

SAMPLES FOR CHEMICAL ANALYSIS (TOTAL)	(SPECIFY)	(SPECIFY)	(SPECIFY)	(SPECIFY)	(SPECIFY)	TOTAL CORE RECOVERY
—	-	-	-	—	-	—

DISPOSITION OF HOLE	BACKFILLED	MONITORING WELL	OTHER (SPECIFY)	SIGNATURE OF INSPECTOR
—	-	-	-	

DEPTH	DESCRIPTION OF MATERIALS	FIELD SCREENING RESULTS	GEOTECH SAMPLE RESULTS	ANALYTICAL SAMPLE NO.	TIME	REMARKS
5	Structural Fill 5 Brown silty clay				2'	6 Bags of Bentonite
	Brown Silty Clay		Bentonite		7'	90 Feet Screen 10 Feet Solid
10					10'	
15	15 Gray Brown silt					
20						
25						
30	31' Gray Shale					
35	38 Limestone Bedrock					
40						
45						
50						

AQUATERRA ENVIRONMENTAL SOLUTIONS, INC.

PROJECT NAME: Additional Perimeter LFG wells

HOLE NO.: PGW-23

Additional Perimeter LFG wells

Aquaterra Drilling Log

HOLE NO. PGW-23 | SHEET 2 OF SHEETS 2

PROJECT NAME

INSPECTOR J. Jordan

DEPTH	DESCRIPTION OF MATERIALS	FIELD SCREENING RESULTS	GEOTECH SAMPLE RESULTS	ANALYTICAL SAMPLE NO.	TIME	REMARKS
	Limestone					
100					100'	
102	TD 102 feet					

QUATERRA PROJECT NAME HOLE NO.

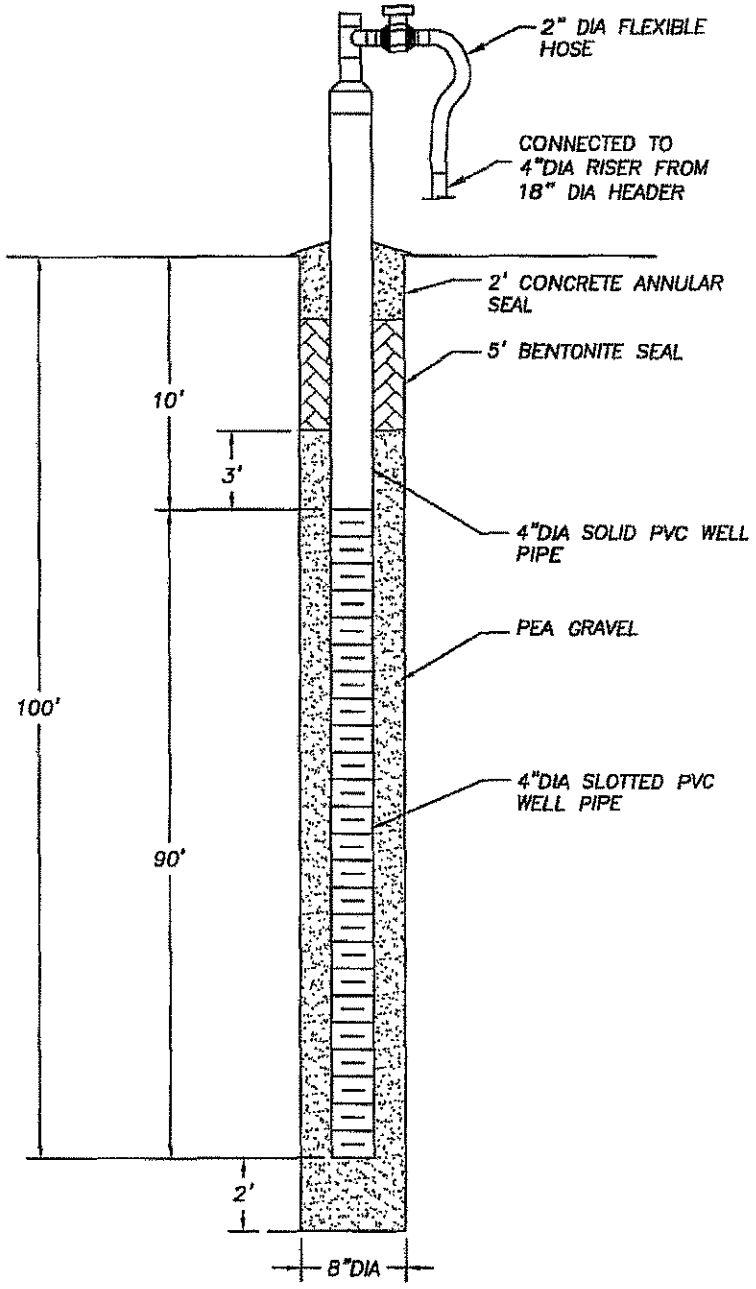

NOTES:

1. A PAINTED DESIGNATION NUMBER AND/OR TAG WILL BE PROVIDED TO IDENTIFY EACH WELL HEAD.
2. DEPTHS ARE APPROXIMATE.

AQUATERRA
ENVIRONMENTAL SOLUTIONS, INC.
141 Market Place Drive, Suite 204
Fairview Heights, Illinois 62208

PGW-23 DETAIL

BRIDGETON LANDFILL, LLC
BRIDGETON, MISSOURI

Project Mgr.	Drawn By	Designed By	Project No.
MSB	AJF	NLH	1684.10
Scale	**Date**	**File Name**	**Drawing No.**
No Scale	11/7/05	PGW-23_DETAIL.dwg	9

MISSOURI DEPARTMENT OF NATURAL RESOURCES
GEOLOGICAL SURVEY AND RESOURCE ASSESSMENT DIVISION
(573) 368-2165

MONITORING WELL CERTIFICATION RECORD

OFFICE USE ONLY	DATE RECEIVED
REF. NO. 814936	
C.R. NO.	CHECK NO.
STATE WELL NUMBER	REVENUE NO.
ENTERED Ph 1 Ph 2 Ph 3	APPROVED BY / ROUTE / /

INFORMATION SUPPLIED BY PRIMARY CONTRACTOR OR DRILLING CONTRACTOR

OWNER NAME	WELL NUMBER	VARIANCE GRANTED BY THE D.N.R
Bridgeton Landfill LLC	RMW-93	☐ NO
OWNER ADDRESS: 13570 St. Charles Rock Rd	CITY: Bridgeton	STATE: MO ZIP CODE: 63044
SITE NAME: Same	CONTACT NAME: Rod Bloese	☒ YES, ATTACH A COPY OF THE VARIANCE
SITE ADDRESS: Same	CITY	STATE ZIP CODE
		VARIANCE NUMBER: 5762

PROPOSED USE OF WELL
☒ GAS MONITORING WELL ☐ MONITORING
☐ EXTRACTION WELL ☐ PIEZOMETERS

TYPE OF POTENTIAL SITE
☐ HAZARDOUS MATERIAL ☒ LANDFILL
☐ INITIAL SITE ASSESSMENT ☐ L.U.S.T.
☐ WATER LEVEL DRAWDOWN

MONITORING FOR: (CHECK ALL THAT APPLY)
☐ RADIONUCLIDES ☐ PETROLEUM PRODUCTS ONLY
☐ EXPLOSIVES ☐ METALS ☐ V.O.C.
☐ SVOCS ☐ PESTICIDES/HERBICIDES

SKETCH LOCATION OF WELL INCLUDING MILEAGE ON ALL ROADS TRAVELLED FROM NEAREST TOWNS.

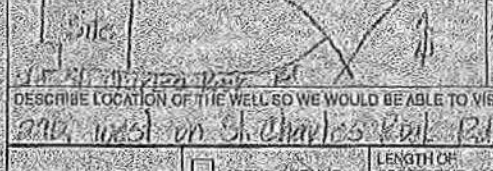

LOCATION OF WELL
LAT. 38 45 48
LONG. 90 26 31
AREA ELEV
COUNTY: St. Louis
SMALLEST 1/4 LARGEST 1/4 1/4
SEC. 12 TWN. 46 N. RNG. 5 E OR W

DESCRIBE LOCATION OF THE WELL SO WE WOULD BE ABLE TO VISIT THE WELL SITE: 2nd west on St. Charles Rock Rd, site on left

DRILLER NOTES: Methane collection well

TYPE OF SURFACE COMPLETION	LENGTH OF PROTECTIVE CASING	DIAMETER OF PROTECTIVE CASING	DIAMETER AND DEPTH OF THE HOLE PROTECTIVE CASING WAS PLACED	PROTECTIVE CASING MATERIAL	LOCKING CAP?
☐ ABOVE GROUND ☐ FLUSH MOUNT N/A	FT.	IN.	IN. FT.	☐ STEEL ☐ ALUMINUM ☐ PLASTIC	☐ YES ☐ NO

WEEP HOLE?	VENTED CAP?	LENGTH OF FLUSH MOUNT	DIAMETER OF FLUSH MOUNT	DIAMETER AND DEPTH OF THE HOLE FLUSH MOUNT WAS PLACED	SURFACE COMPLETION GROUT	
☐ YES ☐ NO	☐ YES ☐ NO	FT.	IN.	IN. FT.	☐ CONCRETE ☐ OTHER N/A	

RISER PIPE DETAIL

LENGTH	DIAMETER	WEIGHT OR SCH#	DIAMETER OF DRILL HOLE	MATERIAL	BENTONITE SEAL	LENGTH OF SEAL	MATERIAL
10 FT.	4 IN.	80	8" FT.	☐ STEEL ☒ THERMOPLASTIC (PVC) ☐ OTHER		3 FT.	☐ SLURRY ☐ PELLETS ☐ GRANULAR ☒ CHIPS

GLUED ☐ YES ☒ NO

SECONDARY FILTER PACK
☐ SATURATED ZONE ☐ UNSATURATED ZONE HYDRATED ☐ YES ☐ NO
BOTH ZONES ☐ IF YES, HYDRATED ☐ YES ☐ NO

PRIMARY FILTER PACK

LENGTH	DEPTH TO TOP OF PRIMARY FILTER PACK	SECONDARY FILTER PACK LENGTH
23 FT.	63 FT.	N/A FT.

ANNULAR SEAL
☐ BENTONITE SLURRY ☒ CEMENT/BENTONITE SLURRY
☒ NON SLURRY BENTONITE TYPE BAGS OF CEMENT USED 5
% OF BENTONITE USED 5
WATER USED/BAG 5 GAL
LENGTH 43 FT.

WELL SCREEN

LENGTH	DIAMETER	DIAMETER OF DRILL HOLE	DEPTH TO TOP OF SCREEN	MATERIAL
40 FT.	4 IN.	8 IN.	10 FT.	☐ STEEL ☒ THERMOPLASTIC (PVC) ☐ OTHER

MULTIPLE CASED WELLS ☐ YES ☒ NO PUMP INSTALLED FOR REMEDIATION ☐ YES ☒ NO

SUBMIT ADDITIONAL AS BUILT DIAGRAMS SHOWING WELL CONSTRUCTION DETAILS INCLUDING TYPE AND SIZE OF ALL CASING, HOLE DIAMETERS AND GROUT USED

DEPTH FROM	DEPTH TO	FORMATION DESCRIPTION
0	30	Overburden
30	38	Shale
38	53	Limestone
53	71	Limestone - shaley
71	100	Limestone

TOTAL DEPTH: 100'

SIGNATURE (PRIMARY CONTRACTOR)	PERMIT NUMBER	STATIC WATER LEVEL FEET FROM MEASURING POINT	DATE WELL DRILLING WAS COMPLETED
	D12345WPF		09-07-05

I HEREBY CERTIFY THAT THE MONITORING WELL HEREIN DESCRIBED WAS CONSTRUCTED IN ACCORDANCE WITH THE DEPARTMENT OF NATURAL RESOURCES REQUIREMENTS FOR THE CONSTRUCTION OF MONITORING WELLS.

SIGNATURE (WELL DRILLER)	PERMIT NUMBER	DATE	SIGNATURE (PUMP INSTALLER)	PERMIT NUMBER	DATE
X	D12345WPF	10-11-05	X N/A		

MO 780-1416 (1-02)

DISTRIBUTION: WHITE/DIVISION CANARY/CONTRACTOR PINK/OWNER
MAIL WHITE COPY TO: DEPARTMENT OF NATURAL RESOURCES, P.O. BOX 250, ROLLA, MO 65402
ENCLOSE $35 MONITORING WELL CERTIFICATION FEE WITHIN 60 DAYS AFTER WELL COMPLETION

Aquaterra Drilling Log

HOLE NO. PGW-24 | SHEET 1 OF 2 SHEETS

PROJECT NAME: Additional perimeter gas wells	DRILLING SUBCONTRACTOR: Layne Western
PROJECT NUMBER: 1684.10	NAME OF DRILLER(S): Tim Elders
LOCATION: Bridgeton Landfill	MANUFACTURER'S DESIGNATION OF DRILL: Schramm T660
HOLE LOCATION: PGW 24	SIZES AND TYPES OF DRILLING AND SAMPLING EQUIPMENT: 8¼ HSA; 8" Air Rotary
SURFACE ELEVATION: ≈ 495	
OVERBURDEN THICKNESS: 44 feet	DRILLING START DATE: 9/8/05 — DRILLING END DATE: 9/9/05
DEPTH DRILLED INTO ROCK: 58 feet	DEPTH GROUNDWATER ENCOUNTERED: 22
TOTAL DEPTH OF HOLE: 102	DEPTH TO WATER AND ELAPSED TIME AFTER DRILLING COMPLETED:

GEOTECHNICAL SAMPLES (TOTAL)	DISTURBED	UNDISTURBED	TOTAL NUMBER OF CORE BOXES

SAMPLES FOR CHEMICAL ANALYSIS (TOTAL)	(SPECIFY)	(SPECIFY)	(SPECIFY)	(SPECIFY)	(SPECIFY)	TOTAL CORE RECOVERY

DISPOSITION OF HOLE	BACKFILLED	MONITORING WELL	OTHER (SPECIFY)	SIGNATURE OF INSPECTOR

DEPTH	DESCRIPTION OF MATERIALS	FIELD SCREENING RESULTS	GEOTECH SAMPLE RESULTS	ANALYTICAL SAMPLE NO.	TIME	REMARKS
0	Structural fill			0'	1300	10 foot Solid 70 foot Screen Borehole stopped at 84 foot due to quantity of water reducing hole
5	5ft Brown Silty clay			7'		
10				10'		
15	15ft Brownish Brown Silt					
20						
25						
30						
35	33ft Gray Shale mixed with Limestone chunks				1400	
40						
45	44ft Limestone Bedrock				900	9/8/05 ↑ 9/9/05 ↓
50						
55						
60						

AQUATERRA ENVIRONMENTAL SOLUTIONS, INC.

PROJECT NAME: Additional PGW | HOLE NO.: PGW-24

Aquaterra Drilling Log

HOLE NO. PGW-24 | SHEET 1 OF SHEETS 2

PROJECT NAME: Additional Perimeter Gas wells | INSPECTOR:

DEPTH	DESCRIPTION OF MATERIALS	FIELD SCREENING RESULTS	GEOTECH SAMPLE RESULTS	ANALYTICAL SAMPLE NO.	TIME	REMARKS
0	Limestone Bedrock		90'			TD 84 feet Borehole Stopped Per R. Walker Due TD Amount of water Recharging hole

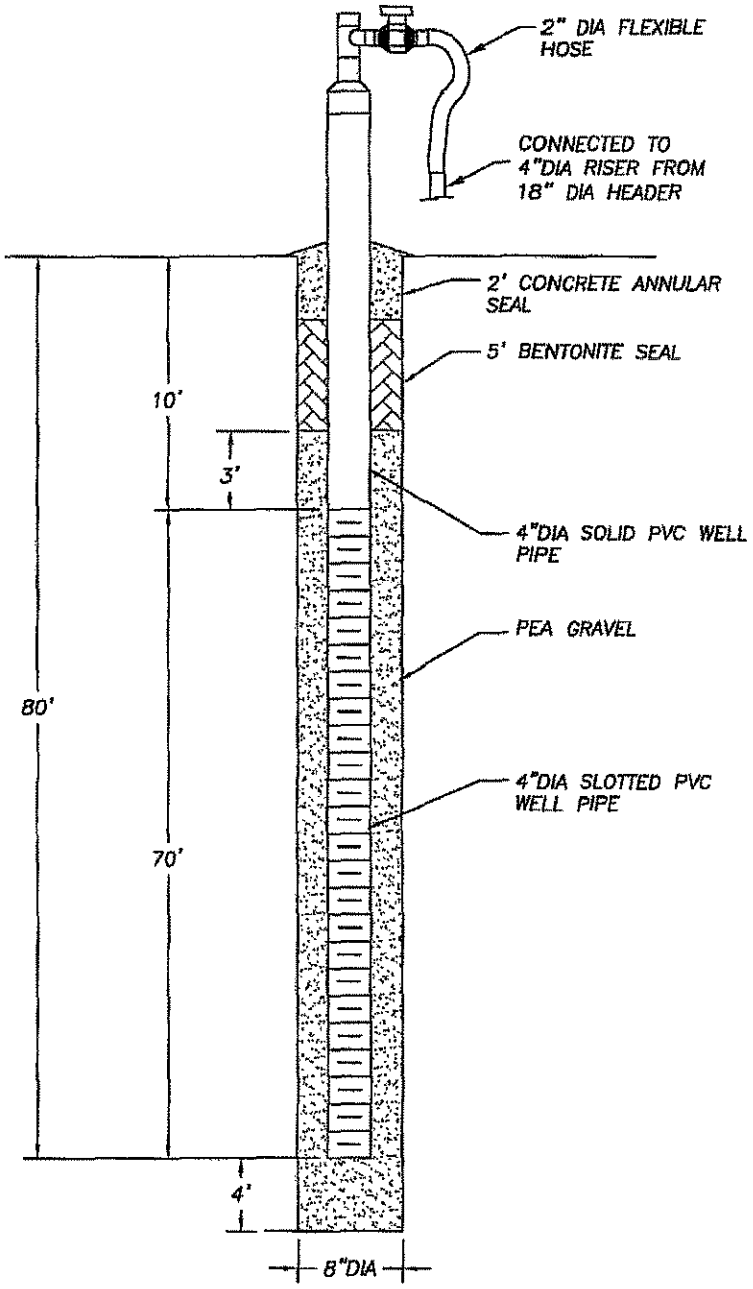

NOTES:

1. A PAINTED DESIGNATION NUMBER AND/OR TAG WILL BE PROVIDED TO IDENTIFY EACH WELL HEAD.
2. DEPTHS ARE APPROXIMATE.

AQUATERRA
ENVIRONMENTAL SOLUTIONS, INC.
141 Market Place Drive, Suite 204
Fairview Heights, Illinois 62208

PGW-24 DETAIL

BRIDGETON LANDFILL, LLC
BRIDGETON, MISSOURI

Project Mgr.	Drawn By	Designed By	Project No.
MSB	AJF	NLH	1684.10
Scale	Date	File Name	Drawing No.
No Scale	11/7/05	PGW-24_DETAIL.dwg	10

MISSOURI DEPARTMENT OF NATURAL RESOURCES
GEOLOGICAL SURVEY AND RESOURCE ASSESSMENT DIVISION
(573) 368-2165

MONITORING WELL CERTIFICATION RECORD

OFFICE USE ONLY	DATE RECEIVED
REF. NO. 214927	
C.R. NO.	CHECK NO.
STATE WELL NUMBER	REVENUE NO.
ENTERED Ph 1 Ph 2 Ph 3	APPROVED BY / ROUTE / /

INFORMATION SUPPLIED BY PRIMARY CONTRACTOR OR DRILLING CONTRACTOR

OWNER NAME: Bridgeton Landfill LLC
WELL NUMBER: PGW-24
VARIANCE GRANTED BY THE D.N.R: ☐ NO ☒ YES, ATTACH A COPY OF THE VARIANCE

OWNER ADDRESS: 13570 St. Charles Rock Rd
CITY: Bridgeton
STATE: MO
ZIP CODE: 63044

SITE NAME: Same
CONTACT NAME: Pat Bloese

SITE ADDRESS: Same
CITY:
STATE:
ZIP CODE:
VARIANCE NUMBER: 5760

PROPOSED USE OF WELL: ☒ GAS MONITORING WELL ☐ MONITORING ☐ EXTRACTION WELL ☐ PIEZOMETERS

TYPE OF POTENTIAL SITE: ☐ HAZARDOUS MATERIAL ☒ LANDFILL ☐ INITIAL SITE ASSESSMENT ☐ L.U.S.T. ☐ WATER LEVEL DRAWDOWN

MONITORING FOR: (CHECK ALL THAT APPLY) ☐ RADIONUCLIDES ☐ PETROLEUM PRODUCTS ONLY ☐ EXPLOSIVES ☐ METALS ☐ V.O.C. ☐ SVOCS ☐ PESTICIDES/HERBICIDES

SKETCH LOCATION OF WELL INCLUDING MILEAGE ON ALL ROADS TRAVELLED FROM NEAREST TOWNS.



LOCATION OF WELL: LAT. 38 : 45 : 49 LONG. 90 : 26 : 30
AREA:
ELEV:
COUNTY: St. Louis
SMALLEST 1/4 1/4 LARGEST 1/4
SEC. 6 TWN. 44 N. RNG. 5 E OR W

DESCRIBE LOCATION OF THE WELL SO WE WOULD BE ABLE TO VISIT THE WELL SITE:

DRILLER NOTES:

TYPE OF SURFACE COMPLETION	LENGTH OF PROTECTIVE CASING	DIAMETER OF PROTECTIVE CASING	DIAMETER AND DEPTH OF THE HOLE PROTECTIVE CASING WAS PLACED	PROTECTIVE CASING MATERIAL	LOCKING CAP?
☐ ABOVE GROUND ☐ FLUSH MOUNT N/A	FT.	IN.	IN. FT.	☐ STEEL ☐ ALUMINUM ☒ PLASTIC	☒ YES ☐ NO

WEEP HOLE?	VENTED CAP?	LENGTH OF FLUSH MOUNT	DIAMETER OF FLUSH MOUNT	DIAMETER AND DEPTH OF THE HOLE FLUSH MOUNT WAS PLACED	SURFACE COMPLETION GROUT
☐ YES ☐ NO	☐ YES ☒ NO	FT.	IN.	IN. FT.	☐ CONCRETE ☐ OTHER N/A

RISER PIPE DETAIL	LENGTH	DIAMETER	WEIGHT OR SDR#	DIAMETER OF DRILL HOLE	MATERIAL	BENTONITE SEAL	LENGTH OF SEAL	MATERIAL
	110 FT.	4 IN.	80	8" FT.	☐ STEEL ☒ THERMOPLASTIC (PVC) ☐ OTHER		3' FT.	☐ SLURRY ☐ PELLETS ☐ GRANULAR ☒ CHIPS

GLUED: ☐ YES ☒ NO

SECONDARY FILTER PACK: ☐ SATURATED ZONE ☐ UNSATURATED ZONE HYDRATED ☐ YES ☐ NO BOTH ZONES ☐ IF YES, HYDRATED ☐ YES ☐ NO

PRIMARY FILTER PACK LENGTH	DEPTH TO TOP OF PRIMARY FILTER PACK	SECONDARY FILTER PACK LENGTH
73.5 FT.	75 FT.	N/A FT.

ANNULAR SEAL		LENGTH
☐ BENTONITE SLURRY ☐ NON SLURRY BENTONITE TYPE	☐ CEMENT/BENTONITE SLURRY BAGS OF CEMENT USED 4 % OF BENTONITE USED 5 WATER USED/BAG ~6 GAL	46.5 FT.

WELL SCREEN	LENGTH	DIAMETER	DIAMETER OF DRILL HOLE	DEPTH TO TOP OF SCREEN	MATERIAL
	10 FT.	4 IN.	8 IN.	110 FT.	☐ STEEL ☒ THERMOPLASTIC (PVC) ☐ OTHER

DEPTH FROM	DEPTH TO	FORMATION DESCRIPTION
0	37	overburden
37	49	shale, silty sand
49	80	limestone

MULTIPLE CASED WELLS ☐ YES ☒ NO PUMP INSTALLED FOR REMEDIATION ☐ YES ☒ NO

SUBMIT ADDITIONAL AS BUILT DIAGRAMS SHOWING WELL CONSTRUCTION DETAILS INCLUDING TYPE AND SIZE OF ALL CASING, HOLE DIAMETERS AND GROUT USED

TOTAL DEPTH: 120'

SIGNATURE (PRIMARY CONTRACTOR)	PERMIT NUMBER	STATIC WATER LEVEL FEET FROM MEASURING POINT	DATE WELL DRILLING WAS COMPLETED
	000251 WPM		09-04-05

I HEREBY CERTIFY THAT THE MONITORING WELL HEREIN DESCRIBED WAS CONSTRUCTED IN ACCORDANCE WITH THE DEPARTMENT OF NATURAL RESOURCES REQUIREMENTS FOR THE CONSTRUCTION OF MONITORING WELLS.

SIGNATURE (WELL DRILLER)	PERMIT NUMBER	DATE	SIGNATURE (PUMP INSTALLER)	PERMIT NUMBER	DATE
X	000251 WPM	10-11-05	X N/A		

MO 780-1415 (1-02)

DISTRIBUTION: WHITE/DIVISION CANARY/CONTRACTOR PINK/OWNER
MAIL WHITE COPY TO: DEPARTMENT OF NATURAL RESOURCES, P.O. BOX 250, ROLLA, MO 65402
ENCLOSE $35 MONITORING WELL CERTIFICATION FEE WITHIN 60 DAYS AFTER WELL COMPLETION

Aquaterra Drilling Log

HOLE NO. PGW-25 | SHEET 1 OF 2 SHEETS

PROJECT NAME: Additional Perimeter Gas wells	DRILLING SUBCONTRACTOR: Layne western
PROJECT NUMBER: 1684.10	NAME OF DRILLER(S): T. Elders
LOCATION: PGW-25 Bridgeton Landfill	MANUFACTURER'S DESIGNATION OF DRILL: Schramm T160
HOLE LOCATION: East Perimeter	SIZES AND TYPES OF DRILLING AND SAMPLING EQUIPMENT: 8¼" HSA; 8" Air Rotary
SURFACE ELEVATION: ≈ 484	
OVERBURDEN THICKNESS: 38	DRILLING START DATE: 9/12/05 — DRILLING END DATE: 9/12/05
DEPTH DRILLED INTO ROCK: 64	DEPTH GROUNDWATER ENCOUNTERED:
TOTAL DEPTH OF HOLE: 102	DEPTH TO WATER AND ELAPSED TIME AFTER DRILLING COMPLETED:

GEOTECHNICAL SAMPLES (TOTAL)	DISTURBED	UNDISTURBED	TOTAL NUMBER OF CORE BOXES
—	—	—	—

SAMPLES FOR CHEMICAL ANALYSIS (TOTAL)	(SPECIFY)	(SPECIFY)	(SPECIFY)	(SPECIFY)	(SPECIFY)	TOTAL CORE RECOVERY
—	—	—	—	—	—	—

DISPOSITION OF HOLE	BACKFILLED	MONITORING WELL	OTHER (SPECIFY)	SIGNATURE OF INSPECTOR
—	—	—	—	

DEPTH	DESCRIPTION OF MATERIALS	FIELD SCREENING RESULTS	GEOTECH SAMPLE RESULTS	ANALYTICAL SAMPLE NO.	TIME	REMARKS
0	Structural fill					90 Ft Screen
5 ft	Brown Silty clay w/ Gravel			3'	1110	10 ft solid
10				8'		5 ft stickup
15				10'		
20 ft	Light gray clay shale mix (moist)				1115	
25						
30						
38 ft	Lime Stone Bedrock				1350	
40						
45						
50						
55						

AQUATERRA ENVIRONMENTAL SOLUTIONS, INC.

PROJECT NAME: Additional Perimeter Gas wells | HOLE NO.: PGW-25

Aquaterra Drilling Log

HOLE NO. PGW-25 | SHEET 2 OF 2 SHEETS

NAME Final Perimeter Gas wells | INSPECTOR D. Jordan

DEPTH	DESCRIPTION OF MATERIALS	FIELD SCREENING RESULTS	GEOTECH SAMPLE RESULTS	ANALYTICAL SAMPLE NO.	TIME	REMARKS
	Limestone					
			100'			TD 102'

AQUATERRA | PROJECT NAME Additional Perimeter Gas wells | HOLE NO. PGW-25

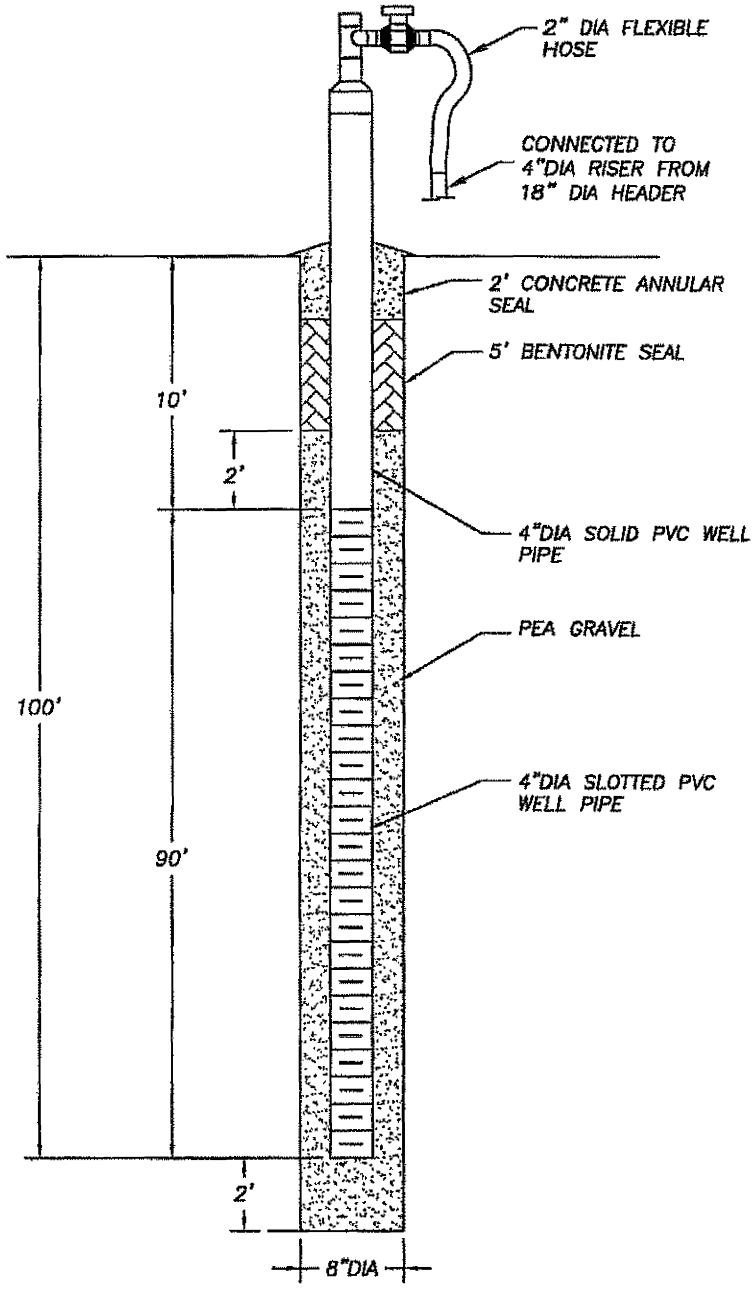

NOTES:

1. A PAINTED DESIGNATION NUMBER AND/OR TAG WILL BE PROVIDED TO IDENTIFY EACH WELL HEAD.
2. DEPTHS ARE APPROXIMATE.

AQUATERRA
ENVIRONMENTAL SOLUTIONS, INC.
141 Market Place Drive, Suite 204
Fairview Heights, Illinois 62208

PGW-25 DETAIL

BRIDGETON LANDFILL, LLC
BRIDGETON, MISSOURI

Project Mgr.	Drawn By	Designed By	Project No.
MSB	AJF	NLH	1684.10
Scale	Date	File Name	Drawing No.
No Scale	11/7/05	PGW-25_DETAIL.dwg	11

MISSOURI DEPARTMENT OF NATURAL RESOURCES
GEOLOGICAL SURVEY AND RESOURCE ASSESSMENT DIVISION
(573) 368-2165

MONITORING WELL CERTIFICATION RECORD

OFFICE USE ONLY	DATE RECEIVED
REF. NO. 350602	
C.I.N. NO.	CHECK NO.
STATE WELL NUMBER	REVENUE NO.
ENTERED Ph 1 Ph 2 Ph 3	APPROVED BY / ROUTE /

INFORMATION SUPPLIED BY PRIMARY CONTRACTOR OR DRILLING CONTRACTOR

OWNER NAME: Bridgeton Landfill LLC		WELL NUMBER: PGW 25	VARIANCE GRANTED BY THE D.N.R. ☐ NO ☒ YES, ATTACH A COPY OF THE VARIANCE
OWNER ADDRESS: 13570 St. Charles Rock Rd	CITY: Bridgeton	STATE: MO	ZIP CODE: 63044
SITE NAME: Same	CONTACT NAME: Rod Bleeke		
SITE ADDRESS: Same	CITY:	STATE:	ZIP CODE: VARIANCE NUMBER: 2782

PROPOSED USE OF WELL	TYPE OF POTENTIAL SITE	MONITORING FOR: (CHECK ALL THAT APPLY)
☒ GAS MONITORING WELL ☐ MONITORING	☐ HAZARDOUS MATERIAL ☒ LANDFILL	☐ RADIONUCLIDES ☐ PETROLEUM PRODUCTS ONLY
☐ EXTRACTION WELL ☐ PIEZOMETERS	☐ INITIAL SITE ASSESSMENT ☐ L.U.S.T.	☐ EXPLOSIVES ☒ METALS ☒ V.O.C.
	☐ WATER LEVEL DRAWDOWN	☐ SVOCS ☐ PESTICIDES/HERBICIDES

SKETCH LOCATION OF WELL INCLUDING MILEAGE ON ALL ROADS TRAVELLED FROM NEAREST TOWN



LOCATION OF WELL: LAT. 38 45 49 LONG. 90 26 30 — AREA — ELEV — COUNTY St. Louis

SMALLEST 1/4 1/4 1/4 LARGEST — SEC. 0 TWN. 46 N. RNG. 5 E OR W

DESCRIBE LOCATION OF THE WELL SO WE WOULD BE ABLE TO VISIT THE WELL SITE: 370 West on St. Charles Rock Rd site on left

DRILLER NOTES: Methane collection well

TYPE OF SURFACE COMPLETION	LENGTH OF PROTECTIVE CASING	DIAMETER OF PROTECTIVE CASING	DIAMETER AND DEPTH OF THE HOLE PROTECTIVE CASING WAS PLACED	PROTECTIVE CASING MATERIAL	LOCKING CAP?
☐ ABOVE GROUND ☐ FLUSH MOUNT N/A	FT.	IN.	IN. FT.	☐ STEEL ☐ ALUMINUM ☐ PLASTIC	☐ YES ☐ NO

WEEP HOLE?	VENTED CAP?	LENGTH OF FLUSH MOUNT	DIAMETER OF FLUSH MOUNT	DIAMETER AND DEPTH OF THE HOLE FLUSH MOUNT WAS PLACED	SURFACE COMPLETION GROUT
☐ YES ☐ NO	☐ YES ☐ NO	FT.	IN.	IN. FT.	☐ CONCRETE ☐ OTHER N/A

RISER PIPE DETAIL	LENGTH	DIAMETER	WEIGHT OR SDR#	DIAMETER OF DRILL HOLE	MATERIAL	BENTONITE SEAL	LENGTH OF SEAL	MATERIAL
	15 FT.	4 IN.	SDR 26	8" FT.	☐ STEEL ☒ THERMOPLASTIC (PVC) ☐ OTHER		3 FT.	☐ SLURRY ☐ PELLETS ☐ GRANULAR ☒ CHIPS

GLUED: ☐ YES ☒ NO

SECONDARY FILTER PACK: ☐ SATURATED ZONE ☐ UNSATURATED ZONE HYDRATED ☐ YES ☐ NO — BOTH ZONES ☐ IF YES, HYDRATED ☐ YES ☐ NO N/A

PRIMARY FILTER PACK	LENGTH	DEPTH TO TOP OF PRIMARY FILTER PACK	SECONDARY FILTER PACK LENGTH
	91.5 FT.	7.5 FT.	N/A FT.

ANNULAR SEAL			LENGTH
☐ BENTONITE SLURRY ☐ NON SLURRY BENTONITE TYPE	☒ CEMENT/BENTONITE SLURRY	BAGS OF CEMENT USED 4 % OF BENTONITE USED 5 WATER USED/BAG 2.0 GAL	45 FT.

WELL SCREEN	LENGTH	DIAMETER	DIAMETER OF DRILL HOLE	DEPTH TO TOP OF SCREEN	MATERIAL
	90 FT.	4 IN.	8 IN.	12 FT.	☐ STEEL ☒ THERMOPLASTIC (PVC) ☐ OTHER

DEPTH FROM	DEPTH TO	FORMATION DESCRIPTION
0	36	Overburden
36	84	Silty sand
84	87	shale & rubble
87	51	Limestone w/thin shale layers
51	102	Limestone

MULTIPLE CASED WELLS ☐ YES ☒ NO PUMP INSTALLED FOR REMEDIATION ☐ YES ☒ NO

SUBMIT ADDITIONAL AS BUILT DIAGRAMS SHOWING WELL CONSTRUCTION DETAILS INCLUDING TYPE AND SIZE OF ALL CASING, HOLE DIAMETERS AND GROUT USED

TOTAL DEPTH: 102'

SIGNATURE (PRIMARY CONTRACTOR)	PERMIT NUMBER	STATIC WATER LEVEL FEET FROM MEASURING POINT	DATE WELL DRILLING WAS COMPLETED
	001851 WPM		7-12-05

I HEREBY CERTIFY THAT THE MONITORING WELL HEREIN DESCRIBED WAS CONSTRUCTED IN ACCORDANCE WITH THE DEPARTMENT OF NATURAL RESOURCES REQUIREMENTS FOR THE CONSTRUCTION OF MONITORING WELLS.

SIGNATURE (WELL DRILLER)	PERMIT NUMBER	DATE	SIGNATURE (PUMP INSTALLER)	PERMIT NUMBER	DATE
X	001851	11/7/05	X N/A		

MO 780-1415 (1-02)

MAIL ORIGINAL
ENCLOSE $75.00
CERTIFICATION FEE

DISTRIBUTION: WHITE/DIVISION CANARY/CONTRACTOR PINK/OWNER
RETURN TO: DEPARTMENT OF NATURAL RESOURCES, P.O. BOX 250, ROLLA, MO 65402
MONITORING WELL CERTIFICATION FEE WITHIN 60 DAYS AFTER WELL COMPLETION.

Aquaterra Drilling Log

HOLE NO. PGW-26 | SHEET 1 OF 2 SHEETS

PROJECT NAME: Additional Perimeter Gas wells	DRILLING SUBCONTRACTOR: Layne Western
PROJECT NUMBER: 1684.10	NAME OF DRILLER(S): T. Elders
LOCATION: Bridgeton Landfill	MANUFACTURER'S DESIGNATION OF DRILL: Schramm T660
HOLE LOCATION: PGW-26	SIZES AND TYPES OF DRILLING AND SAMPLING EQUIPMENT: 8 ¼ HSA; 4" AR Rotary
SURFACE ELEVATION: ≈ 484	
OVERBURDEN THICKNESS: 38	DRILLING START DATE: 9/13 — DRILLING END DATE: 9/13
DEPTH DRILLED INTO ROCK: 64	DEPTH GROUNDWATER ENCOUNTERED:
TOTAL DEPTH OF HOLE: 102	DEPTH TO WATER AND ELAPSED TIME AFTER DRILLING COMPLETED:

GEOTECHNICAL SAMPLES (TOTAL)	DISTURBED	UNDISTURBED	TOTAL NUMBER OF CORE BOXES
—	—		—

SAMPLES FOR CHEMICAL ANALYSIS (TOTAL)	(SPECIFY)	(SPECIFY)	(SPECIFY)	(SPECIFY)	(SPECIFY)	TOTAL CORE RECOVERY
—	—	—	—	—	—	—

DISPOSITION OF HOLE	BACKFILLED	MONITORING WELL	OTHER (SPECIFY)	SIGNATURE OF INSPECTOR
—	—	—	—	

DEPTH	DESCRIPTION OF MATERIALS	FIELD SCREENING RESULTS	GEOTECH SAMPLE RESULTS	ANALYTICAL SAMPLE NO.	TIME	REMARKS
0	Structural fill	Bentonite plug			1110	90 foot Screen 10 foot Solid
5	2ft				29ft	
10	Brown silty clay				7ft	
15	15				10ft	
20	Gray silty clay shale mix				1125	
25						
30						
35	35' shale				1200	
40	38' Limestone Bed Rock					
45						
50						
55						
60						
65						
70						
75						
80						
85						
90						
95						
100						
105						
110						
115						
120						

Aquaterra Drilling Log

HOLE NO. PGW-26 | SHEET 2 OF 2 SHEETS

PROJECT NAME: Additional Perimeter Gas wells | INSPECTOR: J. Jordan

EPT	DESCRIPTION OF MATERIALS	FIELD SCREENING RESULTS	GEOTECH SAMPLE RESULTS	ANALYTICAL SAMPLE NO.	TIME	REMARKS
	Limestone Bed Rock				1400	
					100'	
					102'	TD 102'
					1500 Drill'g Stopped cut 102'	

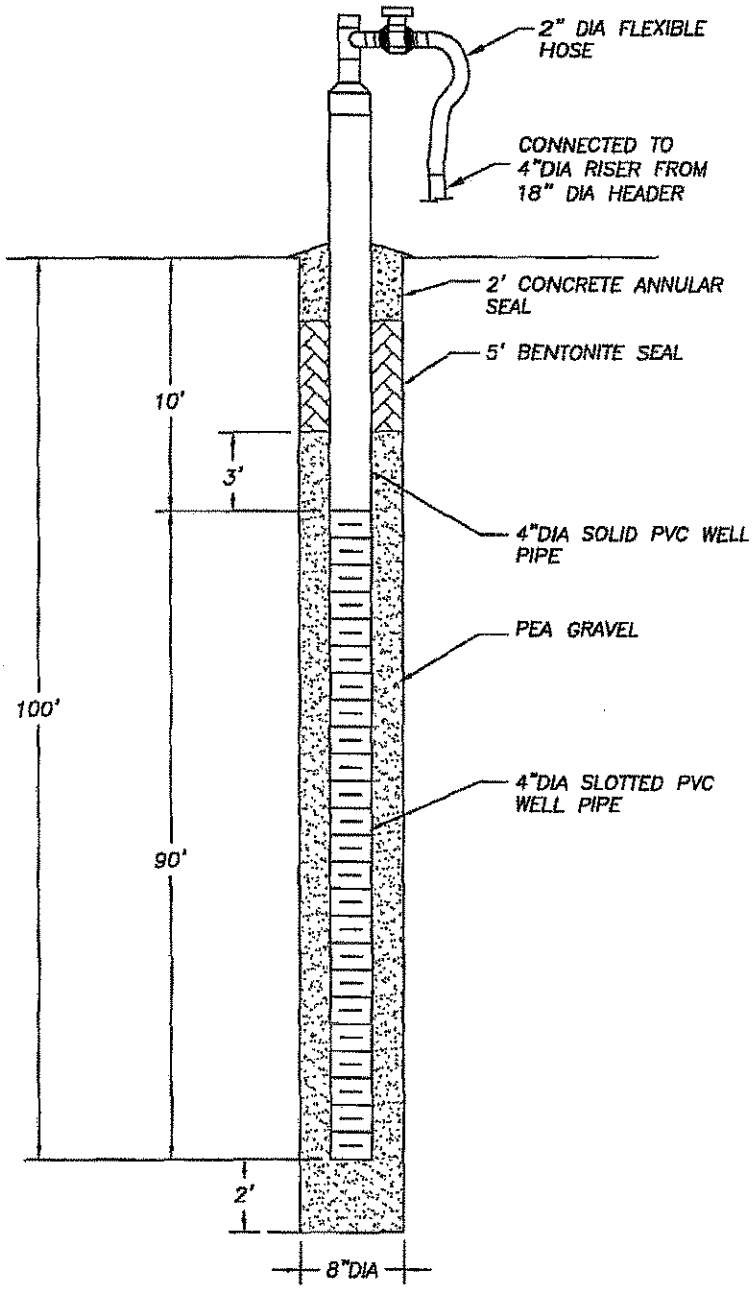

NOTES:

1. A PAINTED DESIGNATION NUMBER AND/OR TAG WILL BE PROVIDED TO IDENTIFY EACH WELL HEAD.
2. DEPTHS ARE APPROXIMATE.

AQUATERRA
ENVIRONMENTAL SOLUTIONS, INC.
141 Market Place Drive, Suite 204
Fairview Heights, Illinois 62208

PGW-26 DETAIL

BRIDGETON LANDFILL, LLC
BRIDGETON, MISSOURI

Project Mgr.	Drawn By	Designed By	Project No.
MSB	AJF	NLH	1684.10
Scale	Date	File Name	Drawing No.
No Scale	11/7/05	PGW-26_DETAIL.dwg	12

MISSOURI DEPARTMENT OF NATURAL RESOURCES
GEOLOGICAL SURVEY AND RESOURCE ASSESSMENT DIVISION
(573) 368-2165

MONITORING WELL CERTIFICATION RECORD

OFFICE USE ONLY	DATE RECEIVED
REF. NO. 358603	
C.R. NO.	CHECK NO.
STATE WELL NUMBER	REVENUE NO.
ENTERED Ph 1 Ph 2 Ph 3	APPROVED BY / ROUTE 1 / 1

INFORMATION SUPPLIED BY PRIMARY CONTRACTOR OR DRILLING CONTRACTOR

OWNER NAME	WELL NUMBER	VARIANCE GRANTED BY THE D.N.R.
Bridgeton Landfill LLC	MW-36	☐ NO
OWNER ADDRESS / CITY / STATE / ZIP CODE		☒ YES, ATTACH A COPY OF THE VARIANCE
15570 St. Charles Rock Rd / Bridgeton / MO / 63044		
SITE NAME	CONTACT NAME	
Same	Neil Bloese	
SITE ADDRESS / CITY / STATE / ZIP CODE		VARIANCE NUMBER
Same		3780

PROPOSED USE OF WELL
☒ GAS MONITORING WELL ☐ MONITORING ☐ EXTRACTION WELL ☐ PIEZOMETERS

TYPE OF POTENTIAL SITE
☒ HAZARDOUS MATERIAL ☒ LANDFILL ☐ INITIAL SITE ASSESSMENT ☐ L.U.S.T. ☐ WATER LEVEL DRAWDOWN

MONITORING FOR: (CHECK ALL THAT APPLY)
☐ RADIONUCLIDES ☐ PETROLEUM PRODUCTS ONLY ☐ EXPLOSIVES ☐ METALS ☐ V.O.C. ☐ SVOCS ☐ PESTICIDES/HERBICIDES

SKETCH LOCATION OF WELL INCLUDING MILEAGE ON ALL ROADS TRAVELLED FROM NEAREST TOWN.

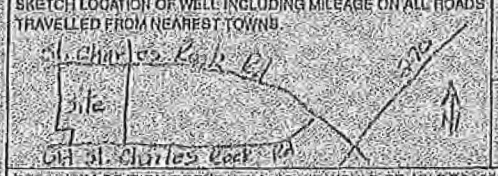

LOCATION OF WELL
LAT. 38 · 43 · 30.
LONG. 90 · 33 · 39.
AREA
ELEV.
COUNTY St. Louis
SMALLEST 1/4 1/4 LARGEST 1/4
SEC. 8 TWN. 46 N. RNG. 5 E OR W

DESCRIBE LOCATION OF THE WELL SO WE WOULD BE ABLE TO VISIT THE WELL SITE
2nd West on St. Charles Rock Rd. site on left

DRILLER NOTES:
Melvine auburtin Mell

TYPE OF SURFACE COMPLETION	LENGTH OF PROTECTIVE CASING	DIAMETER OF PROTECTIVE CASING	DIAMETER AND DEPTH OF THE HOLE PROTECTIVE CASING WAS PLACED	PROTECTIVE CASING MATERIAL	LOCKING CAP?
☐ ABOVE GROUND ☐ FLUSH MOUNT N/A	FT.	IN.	IN. FT.	☐ STEEL ☐ ALUMINUM ☐ PLASTIC	☐ YES ☐ NO

WEEP HOLE?	VENTED CAP?	LENGTH OF FLUSH MOUNT	DIAMETER OF FLUSH MOUNT	DIAMETER AND DEPTH OF THE HOLE FLUSH MOUNT WAS PLACED	SURFACE COMPLETION GROUT
☐ YES ☐ NO	☐ YES ☐ NO	FT.	IN.	IN. FT.	☐ CONCRETE ☐ OTHER N/A

RISER PIPE DETAIL	LENGTH	DIAMETER	WEIGHT OR SDR#	DIAMETER OF DRILL HOLE	MATERIAL	BENTONITE SEAL	LENGTH OF SEAL	MATERIAL
	15 FT.	4 IN.	80	8" FT.	☐ STEEL ☒ THERMOPLASTIC (PVC) ☐ OTHER		3 FT.	☐ SLURRY ☐ PELLETS ☐ GRANULAR ☒ CHIPS

GLUED ☐ YES ☒ NO

SECONDARY FILTER PACK
☐ SATURATED ZONE ☐ UNSATURATED ZONE HYDRATED ☐ YES ☐ NO
BOTH ZONES ☐ IF YES, HYDRATED ☐ YES ☐ NO N/A

PRIMARY FILTER PACK	LENGTH	DEPTH TO TOP OF PRIMARY FILTER PACK	SECONDARY FILTER PACK LENGTH
	94.5 FT.	75 FT.	N/A FT.

ANNULAR SEAL
☐ BENTONITE SLURRY ☐ NON SLURRY BENTONITE TYPE ☒ CEMENT/BENTONITE SLURRY
BAGS OF CEMENT USED 4
% OF BENTONITE USED 5
WATER USED/BAG 7.0 GAL
LENGTH 4.5 FT.

WELL SCREEN	LENGTH	DIAMETER	DIAMETER OF DRILL HOLE	DEPTH TO TOP OF SCREEN	MATERIAL
	10 FT.	4 IN.	8 IN.	13 FT.	☐ STEEL ☒ THERMOPLASTIC (PVC) ☐ OTHER

DEPTH FROM	DEPTH TO	FORMATION DESCRIPTION
0	31	Overburden, silty clay
31	37	Limestone, highly weathered w/some silt
37	102	Limestone

MULTIPLE CASED WELLS ☐ YES ☒ NO PUMP INSTALLED FOR REMEDIATION ☐ YES ☒ NO
SUBMIT ADDITIONAL AS BUILT DIAGRAMS SHOWING WELL CONSTRUCTION DETAILS INCLUDING TYPE AND SIZE OF ALL CASING, HOLE DIAMETERS AND GROUT USED

TOTAL DEPTH: 102

SIGNATURE (PRIMARY CONTRACTOR)	PERMIT NUMBER	STATIC WATER LEVEL FEET FROM MEASURING POINT	DATE WELL DRILLING WAS COMPLETED
	0025/1004		9-18-25

I HEREBY CERTIFY THAT THE MONITORING WELL HEREIN DESCRIBED WAS CONSTRUCTED IN ACCORDANCE WITH THE DEPARTMENT OF NATURAL RESOURCES REQUIREMENTS FOR THE CONSTRUCTION OF MONITORING WELLS.

SIGNATURE (WELL DRILLER)	PERMIT NUMBER	DATE	SIGNATURE (PUMP INSTALLER)	PERMIT NUMBER	DATE
X	0025/1004	10-9-25	X N/A		

MO 780-1415 (1-02) DISTRIBUTION: WHITE/DIVISION CANARY/CONTRACTOR PINK/OWNER
RETURN TO: DEPARTMENT OF NATURAL RESOURCES, PO BOX 250, ROLLA, MO 65402
MONITORING WELL CERTIFICATION FEE WITHIN 60 DAYS AFTER WELL COMPLETION

MAIL ORIGINAL
ENCLOSE $75.00
CERTIFICATION FEE

Aquaterra Drilling Log

HOLE NO.	SHEET 1 OF 2 SHEETS
PGW 27	

PROJECT NAME: ADDITIONAL PERIMETER LFG COLLECTION WELLS	DRILLING SUBCONTRACTOR: LAYNE-WESTERN
PROJECT NUMBER: 1684.10	NAME OF DRILLER(S): T. ELDERS
LOCATION: BRIDGETON LANDFILL	MANUFACTURER'S DESIGNATION OF DRILL: SCHRAMM T660
HOLE LOCATION: PGW 27	SIZES AND TYPES OF DRILLING AND SAMPLING EQUIPMENT: 8¼" I.D. HSA; 8" ROTARY AIR
SURFACE ELEVATION: 484 ±	
OVERBURDEN THICKNESS: 35'	DRILLING START DATE: 9-14-05; DRILLING END DATE: 9-19-05
DEPTH DRILLED INTO ROCK: 48'	DEPTH GROUNDWATER ENCOUNTERED:
TOTAL DEPTH OF HOLE: 83'	DEPTH TO WATER AND ELAPSED TIME AFTER DRILLING COMPLETED:

GEOTECHNICAL SAMPLES (TOTAL)	DISTURBED	UNDISTURBED	TOTAL NUMBER OF CORE BOXES

SAMPLES FOR CHEMICAL ANALYSIS (TOTAL)	(SPECIFY)	(SPECIFY)	(SPECIFY)	(SPECIFY)	(SPECIFY)	TOTAL CORE RECOVERY

DISPOSITION OF HOLE	BACKFILLED	MONITORING WELL	OTHER (SPEICFY)	SIGNATURE OF INSPECTOR
				[signature]

DEPTH	DESCRIPTION OF MATERIALS	FIELD SCREENING RESULTS	GEOTECH SAMPLE RESULTS	ANALYTICAL SAMPLE NO.	TIME	REMARKS
0	STRUCTURAL FILL	BENTONITE PLUG		← 2'		65' SCREEN - 4" SCH 80 #20 PVC
5	6'			← 7'		15' SOLID - 4" SCH 80
10	BROWN SILTY CLAY			12'		5 BAGS OF 50 lb. ENVIROPLUG
15	15'					60 BAGS OF BACKFILL MATERIAL
20	GRAY SILTY CLAY					
25						
30	32'					
35	GRAY SHALE 35'				0800	
40	LIMESTONE BEDROCK					
45						
50						
55						
60						

AQUATERRA ENVIRONMENTAL SOLUTIONS, INC.	PROJECT NAME: ADDITIONAL PERIMETER LFG COLLECTION WELLS	HOLE NO. PGW 27

Aquaterra Drilling Log

HOLE NO. PGW 27 | SHEET 2 OF 2 SHEETS

PROJECT NAME: Additional Perimeter LFG Collection Wells

INSPECTOR: Terry L. Mueller

EP'	DESCRIPTION OF MATERIALS	FIELD SCREENING RESULTS	GEOTECH SAMPLE RESULTS	ANALYTICAL SAMPLE NO.	TIME	REMARKS
60						
65						
10	Limestone Bedrock					
5						
0						
5	83'		77' / 83'	83'	1000	

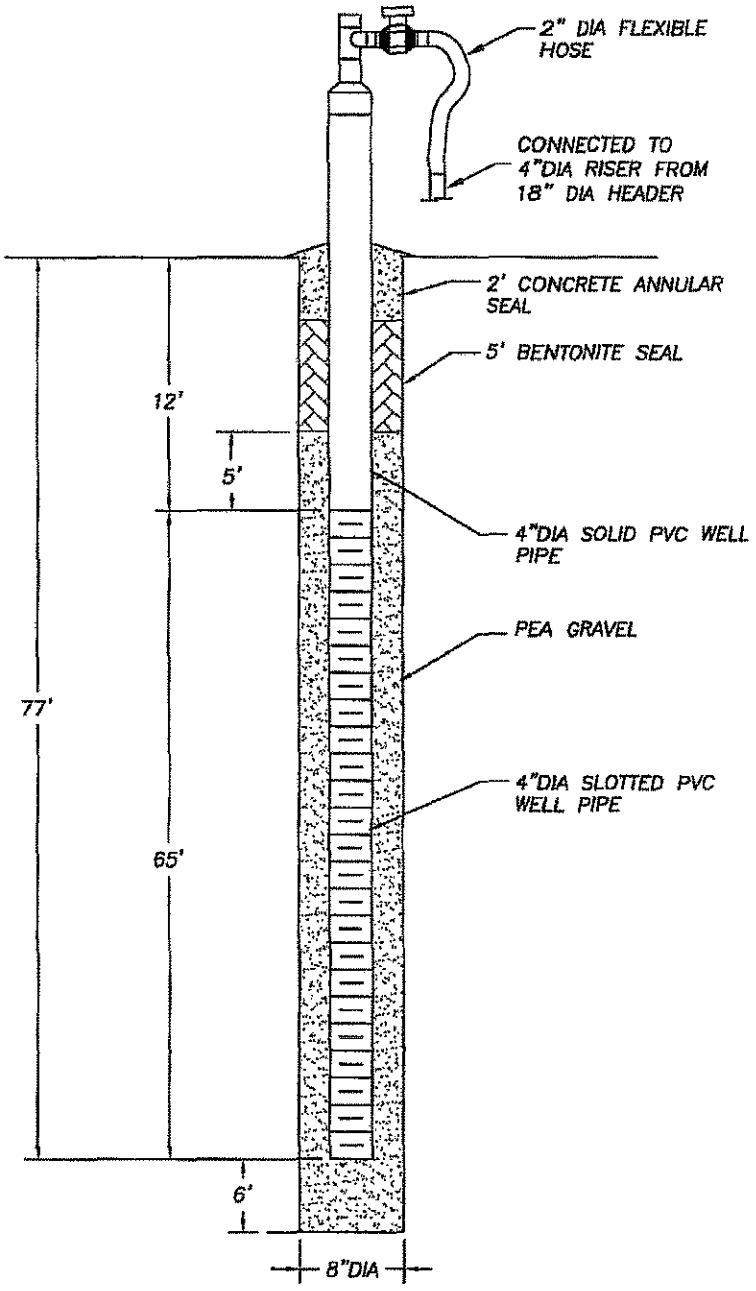

NOTES:

1. A PAINTED DESIGNATION NUMBER AND/OR TAG WILL BE PROVIDED TO IDENTIFY EACH WELL HEAD.
2. DEPTHS ARE APPROXIMATE.

AQUATERRA
ENVIRONMENTAL SOLUTIONS, INC.
141 Market Place Drive, Suite 204
Fairview Heights, Illinois 62208

PGW-27 DETAIL

BRIDGETON LANDFILL, LLC
BRIDGETON, MISSOURI

Project Mgr.	Drawn By	Designed By	Project No.
MSB	AJF	NLH	1684.10
Scale	**Date**	**File Name**	**Drawing No.**
No Scale	11/7/05	PGW-27_DETAIL.dwg	13

MISSOURI DEPARTMENT OF NATURAL RESOURCES
GEOLOGICAL SURVEY AND RESOURCE ASSESSMENT DIVISION
(573) 368-2165

MONITORING WELL CERTIFICATION RECORD

OFFICE USE ONLY	DATE RECEIVED
REF. NO. 380604	
C.R. NO.	CHECK NO.
STATE WELL NUMBER	REVENUE NO.
ENTERED PH 1 PH 2 PH 3	APPROVED BY / ROUTE /

INFORMATION SUPPLIED BY PRIMARY CONTRACTOR OR DRILLING CONTRACTOR

OWNER NAME: Bridgeton Landfill LLC	WELL NUMBER: AGW-37	VARIANCE GRANTED BY THE D.N.R. ☐ NO ☒ YES, ATTACH A COPY OF THE VARIANCE
OWNER ADDRESS: 13570 St. Charles Rock Rd	CITY: Bridgeton	STATE: MO ZIP CODE: 63044
SITE NAME: Same	CONTACT NAME: Rod Blase	
SITE ADDRESS: Same	CITY	STATE ZIP CODE VARIANCE NUMBER: 0480

PROPOSED USE OF WELL: ☒ GAS MONITORING WELL ☐ MONITORING ☐ EXTRACTION WELL ☐ PIEZOMETERS

TYPE OF POTENTIAL SITE: ☐ HAZARDOUS MATERIAL ☒ LANDFILL ☐ INITIAL SITE ASSESSMENT ☐ L.U.S.T. ☐ WATER LEVEL DRAWDOWN

MONITORING FOR: (CHECK ALL THAT APPLY) ☐ RADIONUCLIDES ☐ PETROLEUM PRODUCTS ONLY ☐ EXPLOSIVES ☐ METALS ☐ V.O.C. ☐ SVOCS ☐ PESTICIDES/HERBICIDES

SKETCH LOCATION OF WELL INCLUDING MILEAGE ON ALL ROADS TRAVELLED FROM NEAREST TOWN:



LOCATION OF WELL: LAT. 38 ° 45 ' 53 " LONG. 90 ° 26 ' 34 "

AREA ELEV

COUNTY St. Louis

SMALLEST 1/4 LARGEST 1/4 1/4 SEC. 2 TWN. 46 N RNG. 5 E OR W

DESCRIBE LOCATION OF THE WELL SO WE WOULD BE ABLE TO VISIT THE WELL SITE: 370 west on St. Charles Rock Rd, site on left

DRILLER NOTES: Methane collection well

TYPE OF SURFACE COMPLETION: ☐ ABOVE GROUND ☐ FLUSH MOUNT n/a	LENGTH OF PROTECTIVE CASING FT.	DIAMETER OF PROTECTIVE CASING IN.	DIAMETER AND DEPTH OF THE HOLE PROTECTIVE CASING WAS PLACED IN. FT.	PROTECTIVE CASING MATERIAL: ☐ STEEL ☐ ALUMINUM ☐ PLASTIC	LOCKING CAP? ☐ YES ☐ NO		
WEEP HOLE? ☐ YES ☐ NO	VENTED CAP? ☐ YES ☐ NO	LENGTH OF FLUSH MOUNT FT.	DIAMETER OF FLUSH MOUNT IN.	DIAMETER AND DEPTH OF THE HOLE FLUSH MOUNT WAS PLACED IN. FT.	SURFACE COMPLETION GROUT: ☐ CONCRETE ☐ OTHER n/a		

RISER PIPE DETAIL	LENGTH 15 FT.	DIAMETER 4 IN.	WEIGHT OR SCH 80	DIAMETER OF DRILL HOLE 8" FT.	MATERIAL: ☐ STEEL ☒ THERMOPLASTIC (PVC) ☐ OTHER	BENTONITE SEAL	LENGTH OF SEAL 3 FT.	MATERIAL: ☐ SLURRY ☐ PELLETS ☐ GRANULAR ☒ CHIPS	
	GLUED: ☐ YES ☒ NO	SECONDARY FILTER PACK: ☐ SATURATED ZONE ☐ UNSATURATED ZONE ☐ BOTH ZONES HYDRATED: ☐ YES ☐ NO IF YES, HYDRATED ☐ YES ☐ NO n/a							
PRIMARY FILTER PACK	LENGTH 68.5 FT.	DEPTH TO TOP OF PRIMARY FILTER PACK 7.5 FT.	SECONDARY FILTER PACK LENGTH n/a FT.						
ANNULAR SEAL	☐ BENTONITE SLURRY ☐ NON SLURRY BENTONITE TYPE ☒ CEMENT/BENTONITE SLURRY BAGS OF CEMENT USED 4 % OF BENTONITE USED 5 WATER USED/BAG 5.0 GAL	LENGTH 4.5 FT.							
WELL SCREEN	LENGTH 60 FT.	DIAMETER 4 IN.	DIAMETER OF DRILL HOLE 8 IN.	DEPTH TO TOP OF SCREEN 11 FT.	MATERIAL: ☐ STEEL ☒ THERMOPLASTIC (PVC) ☐ OTHER				

DEPTH FROM	DEPTH TO	FORMATION DESCRIPTION
0	36	Silty clay
36	84	Sandy silt
84	86	Shale
86	93	Limestone

MULTIPLE CASED WELLS: ☐ YES ☒ NO PUMP INSTALLED FOR REMEDIATION: ☐ YES ☒ NO

SUBMIT ADDITIONAL AS BUILT DIAGRAMS SHOWING WELL CONSTRUCTION DETAILS INCLUDING TYPE AND SIZE OF ALL CASING, HOLE DIAMETERS, AND GROUT USED.

TOTAL DEPTH: 93'

SIGNATURE (PRIMARY CONTRACTOR)	PERMIT NUMBER	STATIC WATER LEVEL FEET FROM MEASURING POINT	DATE WELL DRILLING WAS COMPLETED
	2012-WM		7-17-08

I HEREBY CERTIFY THAT THE MONITORING WELL HEREIN DESCRIBED WAS CONSTRUCTED IN ACCORDANCE WITH THE DEPARTMENT OF NATURAL RESOURCES REQUIREMENTS FOR THE CONSTRUCTION OF MONITORING WELLS.

SIGNATURE (WELL DRILLER)	PERMIT NUMBER	DATE	SIGNATURE (PUMP INSTALLER)	PERMIT NUMBER	DATE
X	2012-WM	11-4-08	X n/a		

MO 780-1416 (1-02)

DISTRIBUTION: WHITE/DIVISION CANARY/CONTRACTOR PINK/OWNER
MAIL TO: DEPARTMENT OF NATURAL RESOURCES, P.O. BOX 250, ROLLA, MO 65402
MONITORING WELL CERTIFICATION FEE WITHIN 60 DAYS AFTER WELL COMPLETION

MAIL ORIGINAL
ENCLOSE $75.00
CERTIFICATION FEE

Aquaterra Drilling Log

HOLE NO. PGW-28 | SHEET 1 OF 2 SHEETS

PROJECT NAME: Additional Perimeter LFG Collection Wells	DRILLING SUBCONTRACTOR: Layne-Western
PROJECT NUMBER: .684.10	NAME OF DRILLER(S): Bill Pinson
LOCATION: Bridgeton Landfill	MANUFACTURER'S DESIGNATION OF DRILL: Schramm T660
HOLE LOCATION: PGW-28	SIZES AND TYPES OF DRILLING AND SAMPLING EQUIPMENT: 8¼" ID HSA; 8" Rotary Air
SURFACE ELEVATION: 484 ±	
OVERBURDEN THICKNESS: 38	DRILLING START DATE: 10-21-05 / DRILLING END DATE: 10-21-05
DEPTH DRILLED INTO ROCK: 40	DEPTH GROUNDWATER ENCOUNTERED:
TOTAL DEPTH OF HOLE: 78	DEPTH TO WATER AND ELAPSED TIME AFTER DRILLING COMPLETED:

GEOTECHNICAL SAMPLES (TOTAL)	DISTURBED	UNDISTURBED	TOTAL NUMBER OF CORE BOXES

SAMPLES FOR CHEMICAL ANALYSIS (TOTAL)	(SPECIFY)	(SPECIFY)	(SPECIFY)	(SPECIFY)	(SPECIFY)	TOTAL CORE RECOVERY

DISPOSITION OF HOLE	BACKFILLED	MONITORING WELL	OTHER (SPECIFY)	SIGNATURE OF INSPECTOR

DEPTH	DESCRIPTION OF MATERIALS	FIELD SCREENING RESULTS	GEOTECH SAMPLE RESULTS	ANALYTICAL SAMPLE NO.	TIME	REMARKS
0					0800	
	1' Structural Fill			1		65' Screen 4" Sch 80 #20 PVC
5	Tan Clay					
	7'			6		15' Solid 4" Sch 80 PVC
	Dark Brown Clay	Bentonite Plug				
10	11'			12		
						5 Bags of 50lb. Enviroplug
15	Brown Clay					
						51 Bags of Backfill Material
20	23'					
	Dark Brown Clay					
25	32'				0900	
	Sandy Silty Wet Green Clay					
30	38'				0930	
	Limestone Bedrock					
35						
40						
45						
50						
55						
60						
65						
70						
75						
80						

AQUATERRA ENVIRONMENTAL SOLUTIONS, INC.

PROJECT NAME: Additional Perimeter LFG Collection Wells

HOLE NO.: PGW-28

Aquaterra Drilling Log

HOLE NO. PGW-28 | SHEET 2 OF SHEETS 2

NAME: Additional Perimeter LFG Collection Wells

INSPECTOR: Terry L. Mueller

DEPTH	DESCRIPTION OF MATERIALS	FIELD SCREENING RESULTS	GEOTECH SAMPLE RESULTS	ANALYTICAL SAMPLE NO.	TIME	REMARKS
60	LIMESTONE BEDROCK					
	69'					
	SHALE					
	69'					
70	LIMESTONE BEDROCK					
75				77		
	78'			78	1015	
80						
85						

AQUATERRA ENVIRONMENTAL SOLUTIONS, INC.

PROJECT NAME: Additional Perimeter LFG Collection Wells

HOLE NO. PGW-28

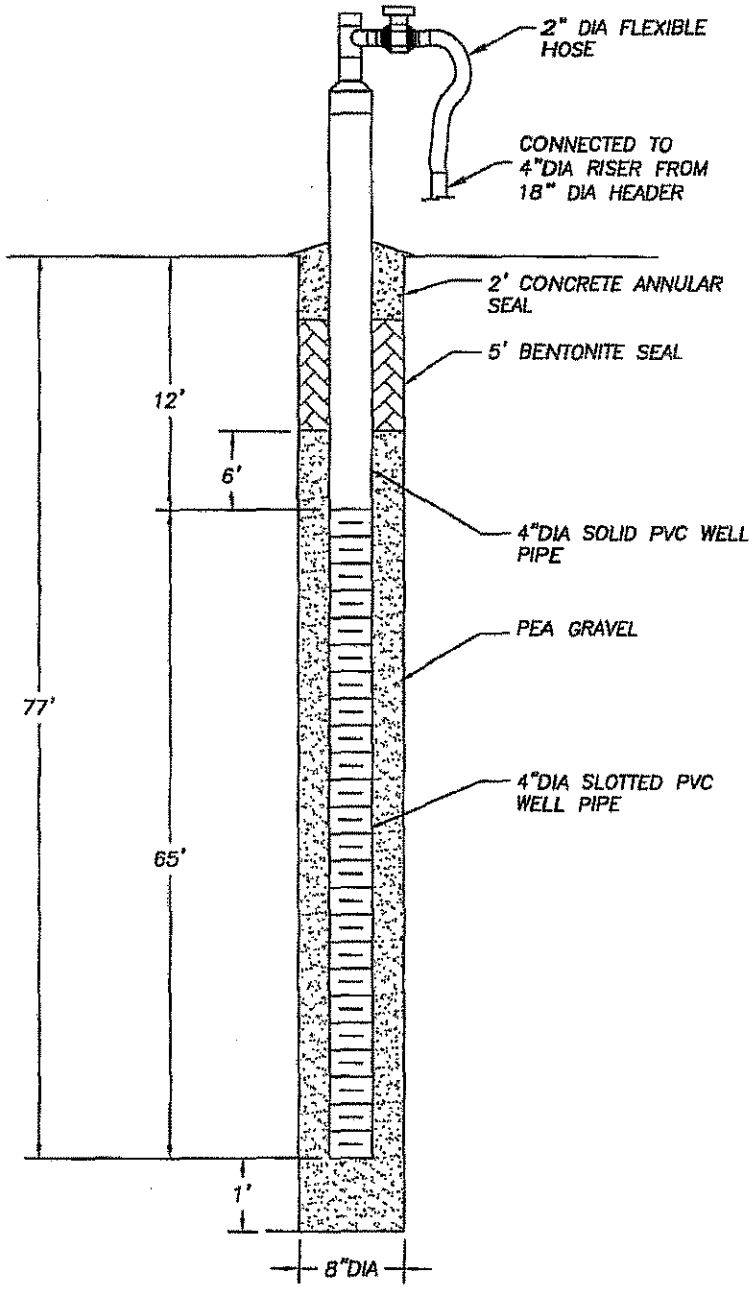

NOTES:

1. A PAINTED DESIGNATION NUMBER AND/OR TAG WILL BE PROVIDED TO IDENTIFY EACH WELL HEAD.
2. DEPTHS ARE APPROXIMATE.

AQUATERRA
ENVIRONMENTAL SOLUTIONS, INC.
141 Market Place Drive, Suite 204
Fairview Heights, Illinois 62208

PGW-28 DETAIL

BRIDGETON LANDFILL, LLC
BRIDGETON, MISSOURI

Project Mgr.	Drawn By	Designed By	Project No.
MSB	AJF	NLH	1684.10
Scale	Date	File Name	Drawing No.
No Scale	11/7/05	PGW-28_DETAIL.dwg	14

MISSOURI DEPARTMENT OF NATURAL RESOURCES
GEOLOGICAL SURVEY AND RESOURCE ASSESSMENT DIVISION
(573) 368-2165

MONITORING WELL CERTIFICATION RECORD

OFFICE USE ONLY	DATE RECEIVED
REF. NO. 359641	
O.R. NO.	CHECK NO.
STATE WELL NUMBER	REVENUE NO.
ENTERED Pg 1 Pg 2 Pg 3	APPROVED BY / ROUTE 1 /

INFORMATION SUPPLIED BY PRIMARY CONTRACTOR OR DRILLING CONTRACTOR

OWNER NAME	WELL NUMBER	VARIANCE GRANTED BY THE D.N.R.
Bridgeton Landfill LLC	DOUT-18	☐ NO
OWNER ADDRESS: 13570 St. Charles Rock Rd	CITY: Bridgeton	STATE: MO ZIP CODE: 63044
SITE NAME: same	CONTACT NAME: Paul Place QC	☒ YES, ATTACH A COPY OF THE VARIANCE
SITE ADDRESS: same	CITY	STATE ZIP CODE VARIANCE NUMBER: 7852

PROPOSED USE OF WELL
☒ GAS MONITORING WELL ☐ MONITORING
☐ EXTRACTION WELL ☐ PIEZOMETERS

TYPE OF POTENTIAL SITE
☐ HAZARDOUS MATERIAL ☒ LANDFILL
☐ INITIAL SITE ASSESSMENT ☐ L.U.S.T.
☐ WATER LEVEL DRAWDOWN

MONITORING FOR: (CHECK ALL THAT APPLY)
☐ RADIONUCLIDES ☐ PETROLEUM PRODUCTS ONLY
☐ EXPLOSIVES ☐ METALS ☐ V.O.C.
☐ SVOCS ☐ PESTICIDES/HERBICIDES

SKETCH LOCATION OF WELL INCLUDING MILEAGE ON ALL ROADS TRAVELLED FROM NEAREST TOWNS.



LOCATION OF WELL
LAT. 38 45 51
LONG 90 26 38
AREA ELEV
COUNTY: St. Louis
SMALLEST 1/4 1/4 LARGEST 1/4
SEC. 2 TWN. 46 N RNG. 5 E OR W

DESCRIBE LOCATION OF THE WELL SO WE WOULD BE ABLE TO VISIT THE WELL SITE: 2 miles west on St. Charles Rock Rd

DRILLER NOTES: Bridgeton landfill

TYPE OF SURFACE COMPLETION	LENGTH OF PROTECTIVE CASING	DIAMETER OF PROTECTIVE CASING	DIAMETER AND DEPTH OF THE HOLE PROTECTIVE CASING WAS PLACED	PROTECTIVE CASING MATERIAL	LOCKING CAP?
☐ ABOVE GROUND N/A ☐ FLUSH MOUNT	FT.	IN.	IN. FT.	☐ STEEL ☐ ALUMINUM ☒ PLASTIC	☐ YES ☐ NO

WEEP HOLE?	VENTED CAP?	LENGTH OF FLUSH MOUNT	DIAMETER OF FLUSH MOUNT	DIAMETER AND DEPTH OF THE HOLE FLUSH MOUNT WAS PLACED	SURFACE COMPLETION GROUT
☐ YES ☐ NO	☐ YES ☐ NO	FT.	IN.	IN. FT.	☐ CONCRETE ☐ OTHER N/A

RISER PIPE DETAIL

LENGTH	DIAMETER	WEIGHT OR SDR#	DIAMETER OF DRILL HOLE	MATERIAL
15 FT.	4 IN.	SDR 17	8" FT.	☐ STEEL ☒ THERMOPLASTIC (PVC) ☐ OTHER

BENTONITE SEAL

LENGTH OF SEAL	MATERIAL
5 FT.	☐ SLURRY ☐ PELLETS ☒ GRANULAR ☒ CHIPS

GLUED ☐ YES ☒ NO

SECONDARY FILTER PACK
☐ SATURATED ZONE ☐ UNSATURATED ZONE HYDRATED ☐ YES ☐ NO
BOTH ZONES ☐ IF YES, HYDRATED ☐ YES ☐ NO N/A

PRIMARY FILTER PACK

LENGTH	DEPTH TO TOP OF PRIMARY FILTER PACK	SECONDARY FILTER PACK LENGTH
68 FT.	7 FT.	N/A FT.

ANNULAR SEAL
☐ BENTONITE SLURRY ☒ CEMENT/BENTONITE SLURRY
☐ NON SLURRY BENTONITE TYPE
BAGS OF CEMENT USED 4
% OF BENTONITE USED 5
WATER USED/BAG 5.2 GAL.
LENGTH 4 FT.

WELL SCREEN

LENGTH	DIAMETER	DIAMETER OF DRILL HOLE	DEPTH TO TOP OF SCREEN	MATERIAL
15 FT.	4 IN.	8 IN.	10 FT.	☐ STEEL ☒ THERMOPLASTIC (PVC) ☐ OTHER

DEPTH FROM	DEPTH TO	FORMATION DESCRIPTION
0	38	overburden
38	42	Limestone
42	64	Limestone, some thin shale
64	68	shale
68	78	Limestone

MULTIPLE CASED WELLS ☐ YES ☒ NO PUMP INSTALLED FOR REMEDIATION ☐ YES ☒ NO

SUBMIT ADDITIONAL AS BUILT DIAGRAMS SHOWING WELL CONSTRUCTION DETAILS INCLUDING TYPE AND SIZE OF ALL CASING, HOLE DIAMETERS AND GROUT USED

TOTAL DEPTH: 78'

SIGNATURE (PRIMARY CONTRACTOR)	PERMIT NUMBER	STATIC WATER LEVEL FEET FROM MEASURING POINT	DATE WELL DRILLING WAS COMPLETED
[signature]	2008SL WPM		10-31-05

I HEREBY CERTIFY THAT THE MONITORING WELL HEREIN DESCRIBED WAS CONSTRUCTED IN ACCORDANCE WITH THE DEPARTMENT OF NATURAL RESOURCES' REQUIREMENTS FOR THE CONSTRUCTION OF MONITORING WELLS.

SIGNATURE (WELL DRILLER)	PERMIT NUMBER	DATE	SIGNATURE (PUMP INSTALLER)	PERMIT NUMBER	DATE
X [signature]	2008SL WPM	11-9-05	X N/A		

MO 780-1418 (1-02) ...TION: WHITE/DIVISION CANARY/CONTRACTOR PINK/OWNER
...DEPARTMENT OF NATURAL RESOURCES, P.O. BOX 250, ROLLA, MO 65402
...RING WELL CERTIFICATION FEE WITHIN 60 DAYS AFTER WELL COMPLETION

MAIL ORIGINAL
ENCLOSE $75.00
CERTIFICATION FEE

Aquaterra Drilling Log

HOLE NO. PGW-29 | SHEET 1 OF 2 SHEETS

PROJECT NAME: Additional Perimeter LF6 Collection Wells	DRILLING SUBCONTRACTOR: Layne-Western
PROJECT NUMBER: 16884.10	NAME OF DRILLER(S): Tim Eldred
LOCATION: Bridgeton Landfill	MANUFACTURER'S DESIGNATION OF DRILL: Sprague T660
HOLE LOCATION: PGW-29	SIZES AND TYPES OF DRILLING AND SAMPLING EQUIPMENT: 8¼" ID HSA; 8" Rotary Air
SURFACE ELEVATION: 484 ±	
OVERBURDEN THICKNESS: 40	DRILLING START DATE: 9-28-05
DRILLING END DATE: 9-28-05	
DEPTH DRILLED INTO ROCK: 42	DEPTH GROUNDWATER ENCOUNTERED:
TOTAL DEPTH OF HOLE: 82	DEPTH TO WATER AND ELAPSED TIME AFTER DRILLING COMPLETED:

GEOTECHNICAL SAMPLES (TOTAL)	DISTURBED	UNDISTURBED	TOTAL NUMBER OF CORE BOXES

SAMPLES FOR CHEMICAL ANALYSIS (TOTAL)	(SPECIFY)	(SPECIFY)	(SPECIFY)	(SPECIFY)	(SPECIFY)	TOTAL CORE RECOVERY

DISPOSITION OF HOLE	BACKFILLED	MONITORING WELL	OTHER (SPECIFY)	SIGNATURE OF INSPECTOR

DEPTH	DESCRIPTION OF MATERIALS	FIELD SCREENING RESULTS	GEOTECH SAMPLE RESULTS	ANALYTICAL SAMPLE NO.	TIME	REMARKS
0	STRUCTURAL FILL	BENTONITE PLUG		1050		
	7' BROWN CLAY			2'		
10	10'			7'		65' SCREEN - 4" SCH 80 #20 PVC
				12'		
15	LT. GRAY SILTY CLAY					15' SOLID - 4" SCH 80
20						5 BAGS OF 50 lb. ENVIROPLUG
25						54 BAGS OF BACKFILL MATERIAL
30	30'					
	GRAY SILTY CLAY					
35	37'					
	SILTY SHALEY WET, GRAY CLAY					
40	39'					
	SHALE LIMESTONE					
45	46'			1125		
	LIMESTONE BEDROCK					
50						

AQUATERRA ENVIRONMENTAL SOLUTIONS, INC.

PROJECT NAME: Additional Perimeter LF6 Collection Wells | HOLE NO.: PGW-29

Aquaterra Drilling Log

HOLE NO. PGW-29 | SHEET 2 OF SHEETS 2

PROJECT NAME: Additional Perimeter LFG Collection Wells

INSPECTOR: Terry L. Mower

DESCRIPTION OF MATERIALS	FIELD SCREENING RESULTS	GEOTECH SAMPLE RESULTS	ANALYTICAL SAMPLE NO.	TIME	REMARKS
Limestone / Bedrock			77'		
82'		82'	1400		

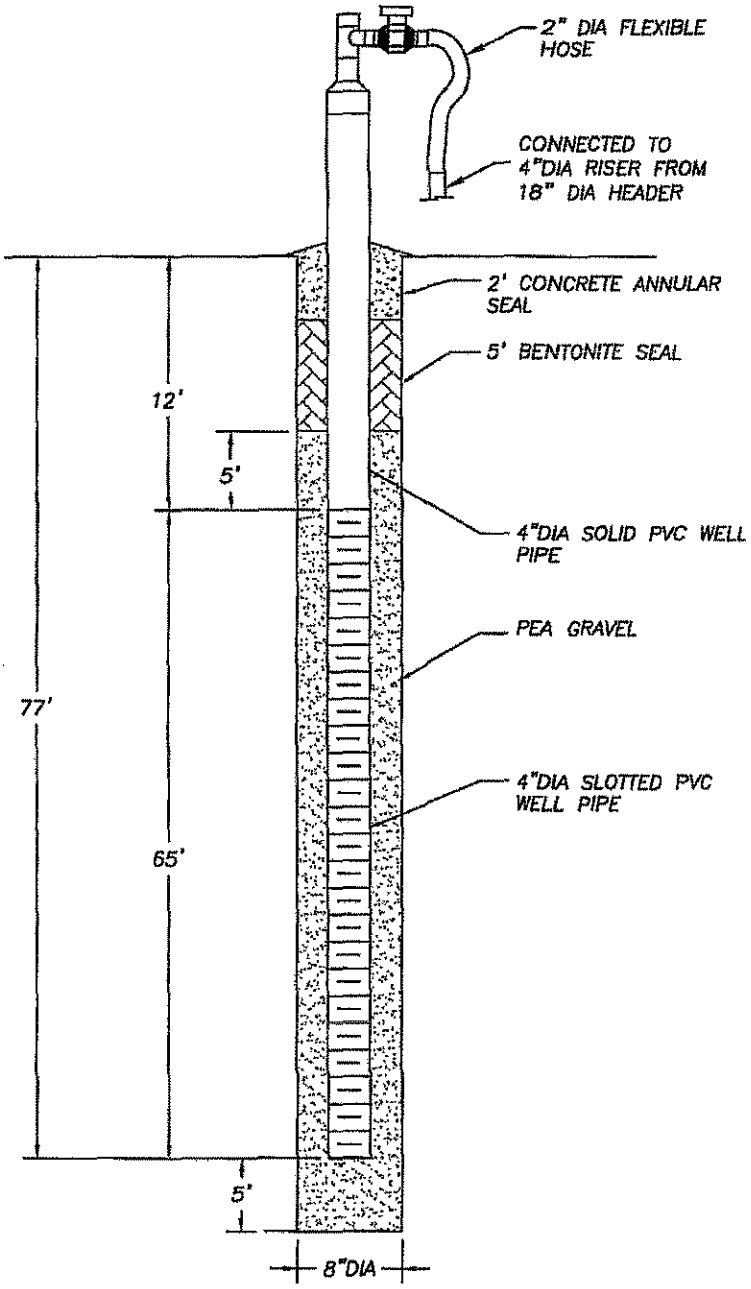

NOTES:

1. A PAINTED DESIGNATION NUMBER AND/OR TAG WILL BE PROVIDED TO IDENTIFY EACH WELL HEAD.
2. DEPTHS ARE APPROXIMATE.

AQUATERRA
ENVIRONMENTAL SOLUTIONS, INC.
141 Market Place Drive, Suite 204
Fairview Heights, Illinois 62208

PGW-29 DETAIL

BRIDGETON LANDFILL, LLC
BRIDGETON, MISSOURI

Project Mgr.	Drawn By	Designed By	Project No.
MSB	AJF	NLH	1684.10
Scale	Date	File Name	Drawing No.
No Scale	11/7/05	PGW-29_DETAIL.dwg	15

MISSOURI DEPARTMENT OF NATURAL RESOURCES
GEOLOGICAL SURVEY AND RESOURCE ASSESSMENT DIVISION
(573) 368-2165

MONITORING WELL CERTIFICATION RECORD

OFFICE USE ONLY	DATE RECEIVED
REF. NO. 859608	
C.R. NO.	CHECK NO.
STATE WELL NUMBER	REVENUE NO.
ENTERED Ph 1 Ph 2 Ph 3	APPROVED BY / ROUTE

INFORMATION SUPPLIED BY PRIMARY CONTRACTOR OR DRILLING CONTRACTOR

OWNER NAME	WELL NUMBER	VARIANCE GRANTED BY THE D.N.R.
Bridgeton Landfill LLC	RGW-29	☐ NO
OWNER ADDRESS: 13570 St Charles Rock Rd	CITY: Bridgeton	STATE: MO ZIP CODE: 63044
SITE NAME: Same	CONTACT NAME: Rod Bruce	☒ YES, ATTACH A COPY OF THE VARIANCE
SITE ADDRESS: Same	CITY	STATE / ZIP CODE / VARIANCE NUMBER: 5782

PROPOSED USE OF WELL	TYPE OF POTENTIAL SITE	MONITORING FOR: (CHECK ALL THAT APPLY)
☒ GAS MONITORING WELL ☐ MONITORING	☐ HAZARDOUS MATERIAL ☒ LANDFILL	☐ RADIONUCLIDES ☒ PETROLEUM PRODUCTS ONLY
☐ EXTRACTION WELL ☐ PIEZOMETERS	☐ INITIAL SITE ASSESSMENT ☐ L.U.S.T.	☐ EXPLOSIVES ☐ METALS ☐ V.O.C.
	☒ WATER LEVEL DRAWDOWN	☐ SVOCS ☒ PESTICIDES/HERBICIDES

SKETCH LOCATION OF WELL INCLUDING MILEAGE ON ALL ROADS TRAVELLED FROM NEAREST TOWNS.



LOCATION OF WELL: LAT. 38 : 45 : 51. LONG 90 : 26 : 37. AREA ELEV. COUNTY St Louis
SMALLEST 1/4 LARGEST 1/4 1/4 SEC 5 TWN. 46 N RNG. 5 E OR W

DESCRIBE LOCATION OF THE WELL SO WE WOULD BE ABLE TO VISIT THE WELL SITE: 370' west on St Charles Rock Rd, site on left

DRILLER NOTES: Methane collection well

TYPE OF SURFACE COMPLETION	LENGTH OF PROTECTIVE CASING	DIAMETER OF PROTECTIVE CASING	DIAMETER AND DEPTH OF THE HOLE PROTECTIVE CASING WAS PLACED	PROTECTIVE CASING MATERIAL	LOCKING CAP?
☐ ABOVE GROUND ☐ FLUSH MOUNT N/A	FT.	IN.	IN. FT.	☐ STEEL ☒ ALUMINUM ☐ PLASTIC	☒ YES ☐ NO

WEEP HOLE?	VENTED CAP?	LENGTH OF FLUSH MOUNT	DIAMETER OF FLUSH MOUNT	DIAMETER AND DEPTH OF THE HOLE FLUSH MOUNT WAS PLACED	SURFACE COMPLETION GROUT
☐ YES ☐ NO	☐ YES ☐ NO	FT.	IN.	IN. FT.	☐ CONCRETE ☐ OTHER N/A

RISER PIPE DETAIL	LENGTH	DIAMETER	WEIGHT OR SDR#	DIAMETER OF DRILL HOLE	MATERIAL	BENTONITE SEAL	LENGTH OF SEAL	MATERIAL
	15 FT.	4 IN.	80	8" FT.	☐ STEEL ☒ THERMOPLASTIC (PVC) ☐ OTHER		3 FT.	☐ SLURRY ☐ PELLETS ☒ GRANULAR ☒ CHIPS

GLUED? ☐ YES ☒ NO

SECONDARY FILTER PACK: ☐ SATURATED ZONE ☐ UNSATURATED ZONE ☐ HYDRATED ☐ YES ☐ NO ☐ BOTH ZONES ☐ IF YES, HYDRATED ☐ YES ☐ NO N/A

PRIMARY FILTER PACK LENGTH	DEPTH TO TOP OF PRIMARY FILTER PACK	SECONDARY FILTER PACK LENGTH
69 FT.	7 FT.	N/A FT.

ANNULAR SEAL			LENGTH
☐ BENTONITE SLURRY ☒ NON SLURRY BENTONITE TYPE	☒ CEMENT/BENTONITE SLURRY	BAGS OF CEMENT USED 4	4 FT.
		% OF BENTONITE USED 5	
		WATER USED/BAG 2.0 GAL	

WELL SCREEN	LENGTH	DIAMETER	DIAMETER OF DRILL HOLE	DEPTH TO TOP OF SCREEN	MATERIAL
	65 FT.	4 IN.	8 IN.	11 FT.	☐ STEEL ☒ THERMOPLASTIC (PVC) ☐ OTHER

DEPTH FROM	DEPTH TO	FORMATION DESCRIPTION
0	40	Silty clay
40	46	Shale
46	83	Limestone

MULTIPLE CASED WELLS ☐ YES ☒ NO PUMP INSTALLED FOR REMEDIATION ☐ YES ☒ NO

SUBMIT ADDITIONAL AS BUILT DIAGRAMS SHOWING WELL CONSTRUCTION DETAILS INCLUDING TYPE AND SIZE OF ALL CASING, HOLE DIAMETERS AND GROUT USED

TOTAL DEPTH: 83'

SIGNATURE (PRIMARY CONTRACTOR)	PERMIT NUMBER	STATIC WATER LEVEL FEET FROM MEASURING POINT	DATE WELL DRILLING WAS COMPLETED
	2005-1078A		7-21-05

I HEREBY CERTIFY THAT THE MONITORING WELL HEREIN DESCRIBED WAS CONSTRUCTED IN ACCORDANCE WITH THE DEPARTMENT OF NATURAL RESOURCES REQUIREMENTS FOR THE CONSTRUCTION OF MONITORING WELLS.

SIGNATURE (WELL DRILLER)	PERMIT NUMBER	DATE	SIGNATURE (PUMP INSTALLER)	PERMIT NUMBER	DATE
X	2005-1078A	11-9-05	X N/A		

MO 780-1415 (1-02)

MAIL ORIGINAL
ENCLOSE $75.00
CERTIFICATION FEE

TION: WHITE/DIVISION; CANARY/CONTRACTOR; PINK/OWNER
DEPARTMENT OF NATURAL RESOURCES, P.O. BOX 250, ROLLA, MO 65402
ING WELL CERTIFICATION FEE WITHIN 60 DAYS AFTER WELL COMPLETION

Aquaterra Drilling Log

HOLE NO. PGW-30 | SHEET 1 OF 2 SHEETS

PROJECT NAME: Additional Perimeter LFG Collection Wells	DRILLING SUBCONTRACTOR: Layne-Western
PROJECT NUMBER: 1084.10	NAME OF DRILLER(S): Tim Elders
LOCATION: Bridgeton Landfill	MANUFACTURER'S DESIGNATION OF DRILL: Schramm T660
HOLE LOCATION: PGW-30	SIZES AND TYPES OF DRILLING AND SAMPLING EQUIPMENT: 8¾" I.D. HSA; 8" Rotary Air
SURFACE ELEVATION: 484 ±	
OVERBURDEN THICKNESS: 41'	DRILLING START DATE: 9-26-05 / DRILLING END DATE: 9-27-05
DEPTH DRILLED INTO ROCK: 62'	DEPTH GROUNDWATER ENCOUNTERED:
TOTAL DEPTH OF HOLE: 103'	DEPTH TO WATER AND ELAPSED TIME AFTER DRILLING COMPLETED:

GEOTECHNICAL SAMPLES (TOTAL)	DISTURBED	UNDISTURBED	TOTAL NUMBER OF CORE BOXES

SAMPLES FOR CHEMICAL ANALYSIS (TOTAL)	(SPECIFY)	(SPECIFY)	(SPECIFY)	(SPECIFY)	(SPECIFY)	TOTAL CORE RECOVERY

DISPOSITION OF HOLE	BACKFILLED	MONITORING WELL	OTHER (SPECIFY)	SIGNATURE OF INSPECTOR

DEPTH	DESCRIPTION OF MATERIALS	FIELD SCREENING RESULTS	GEOTECH SAMPLE RESULTS	ANALYTICAL SAMPLE NO.	TIME	REMARKS
0					0930	
5	STRUCTURAL FILL	BENTONITE PLUG		← 2'		30' SCREEN - 4" SCH 80 #20 PVC
10	10' WET TAN CLAY			← 7'		15' SOLID - 4" SCH 80
15	15' WET LT. GRAY CLAY 16'			← 12'		5 BAGS OF 50 lb. ENVIROPLUG.
20	BROWN CLAY					? BAGS OF BACKFILL MATERIAL (POURED LOOSE FROM STOCKPILE) 3½ CU. YDS.
25						
30	30'					
35	WET LT. GRAY CLAY					
40	40' 41'					
45	WET SILTY/SANDY DK. GRAY CLAY					
50	GRAY SHALE					
55						
60						

AQUATERRA ENVIRONMENTAL SOLUTIONS, INC.

PROJECT NAME: Additional Perimeter Collection Wells

HOLE NO.: PGW-30

Aquaterra Drilling Log

HOLE NO. PGW-30 | SHEET 2 OF SHEETS 2

PROJECT NAME: ADDITIONAL PERIMETER LFG COLLECTION WELLS | INSPECTOR: TERRY L. MUELLER

EPT	DESCRIPTION OF MATERIALS	FIELD SCREENING RESULTS	GEOTECH SAMPLE RESULTS	ANALYTICAL SAMPLE NO.	TIME	REMARKS
60						
65	GRAY SHALE					
70						
75						
80	81'				1030	
	LIMESTONE					
85	85'					
90	LIMESTONE/ GRAY SHEY					
95				102'		
	103			103	1420	
100						

AQUATERRA | PROJECT NAME: ADDITIONAL PERIMETER LFG COLLECTION WELLS | HOLE NO. PGW-30

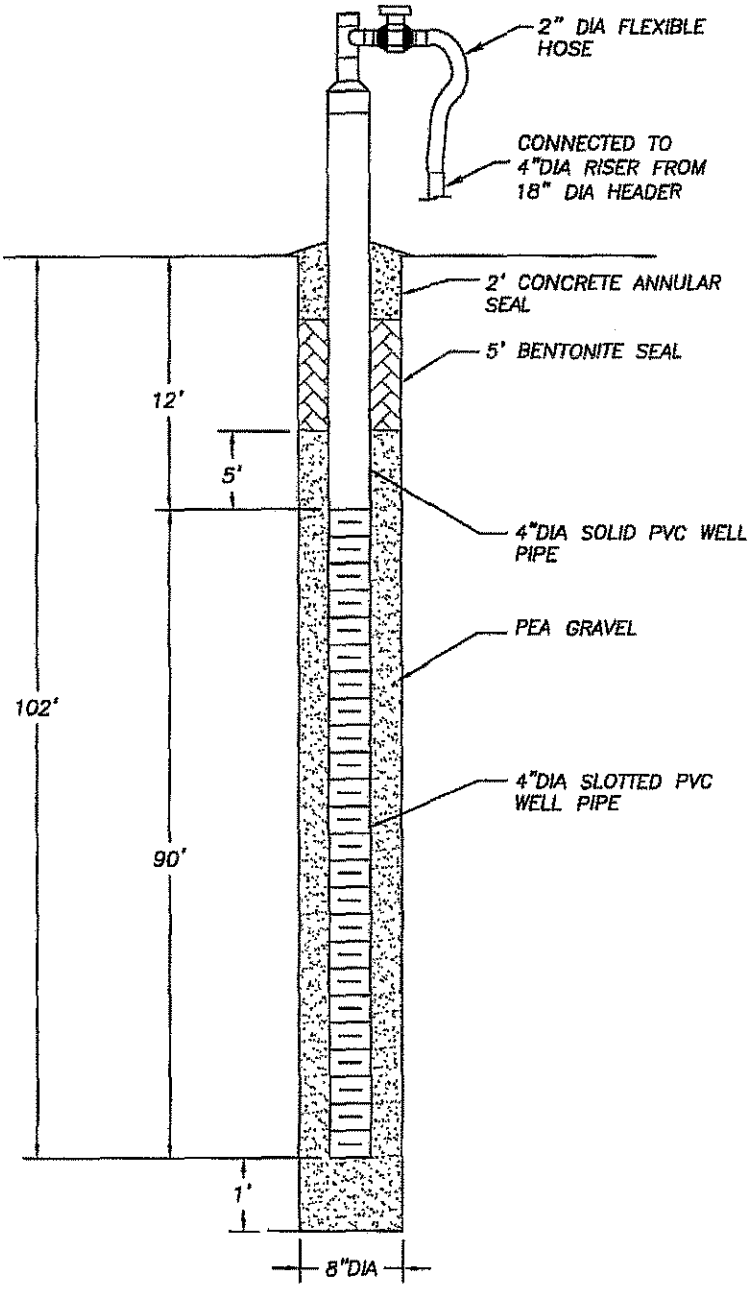

NOTES:

1. A PAINTED DESIGNATION NUMBER AND/OR TAG WILL BE PROVIDED TO IDENTIFY EACH WELL HEAD.
2. DEPTHS ARE APPROXIMATE.

AQUATERRA
ENVIRONMENTAL SOLUTIONS, INC.
141 Market Place Drive, Suite 204
Fairview Heights, Illinois 62208

PGW-30 DETAIL

BRIDGETON LANDFILL, LLC
BRIDGETON, MISSOURI

Project Mgr.	Drawn By	Designed By	Project No.
MSB	AJF	NLH	1684.10
Scale	**Date**	**File Name**	**Drawing No.**
No Scale	11/7/05	PGW-30_DETAIL.dwg	16

MISSOURI DEPARTMENT OF NATURAL RESOURCES
GEOLOGICAL SURVEY AND RESOURCE ASSESSMENT DIVISION
(573) 368-2165

MONITORING WELL CERTIFICATION RECORD

OFFICE USE ONLY	DATE RECEIVED
REF. NO. 569607	
C.B. NO.	CHECK NO.
STATE WELL NUMBER	REVENUE NO.
ENTERED Ph 1 Ph 2 Ph 3	APPROVED BY / ROUTE /

INFORMATION SUPPLIED BY PRIMARY CONTRACTOR OR DRILLING CONTRACTOR

OWNER NAME: Bridgeton Landfill LLC
WELL NUMBER: MW 30
VARIANCE GRANTED BY THE D.N.R: ☐ NO ☒ YES, ATTACH A COPY OF THE VARIANCE

OWNER ADDRESS: 13570 St. Charles Rock Rd.
CITY: Bridgeton
STATE: MO
ZIP CODE: 63044

SITE NAME: Same
CONTACT NAME: Ed Moore

SITE ADDRESS: Same
CITY:
STATE:
ZIP CODE:
VARIANCE NUMBER: 2730

PROPOSED USE OF WELL: ☒ GAS MONITORING WELL ☐ MONITORING ☐ EXTRACTION WELL ☐ PIEZOMETERS
TYPE OF POTENTIAL SITE: ☐ HAZARDOUS MATERIAL ☒ LANDFILL ☐ INITIAL SITE ASSESSMENT ☐ L.U.S.T. ☐ WATER LEVEL DRAWDOWN
MONITORING FOR: (CHECK ALL THAT APPLY) ☐ RADIONUCLIDES ☐ PETROLEUM PRODUCTS ONLY ☐ EXPLOSIVES ☐ METALS ☐ V.O.C. ☐ SVOCS ☐ PESTICIDES/HERBICIDES

SKETCH LOCATION OF WELL INCLUDING MILEAGE ON ALL ROADS TRAVELLED FROM NEAREST TOWN:
St. Charles Rock Rd
Site
Old Halls Ferry Rd
3W
1N

LOCATION OF WELL:
LAT. 38 ° 45 ' 51 "
LONG. 90 ° 46 ' 39 "
AREA:
ELEV:
COUNTY: St. Louis
SMALLEST 1/4 1/4 LARGEST 1/4
SEC. 6 TWN. 46N N. RNG. 5 E OR W.

DESCRIBE LOCATION OF THE WELL SO WE WOULD BE ABLE TO VISIT THE WELL SITE: 392 west on St. Charles Rock Rd, site on left
DRILLER NOTES: No Water encountered well

TYPE OF SURFACE COMPLETION: ☐ ABOVE GROUND ☐ FLUSH MOUNT
LENGTH OF PROTECTIVE CASING: n/a FT.
DIAMETER OF PROTECTIVE CASING: IN.
DIAMETER AND DEPTH OF THE HOLE PROTECTIVE CASING WAS PLACED: IN. FT.
PROTECTIVE CASING MATERIAL: ☐ STEEL ☐ ALUMINUM ☐ PLASTIC
LOCKING CAP? ☐ YES ☐ NO
WEEP HOLE? ☐ YES ☐ NO
VENTED CAP? ☐ YES ☐ NO
LENGTH OF FLUSH MOUNT: FT.
DIAMETER OF FLUSH MOUNT: IN.
DIAMETER AND DEPTH OF THE HOLE FLUSH MOUNT WAS PLACED: IN. FT.
SURFACE COMPLETION GROUT: ☐ CONCRETE ☐ OTHER n/a

RISER PIPE DETAIL: LENGTH 15 FT. DIAMETER 4 IN. WEIGHT OR SDR# 80
DIAMETER OF DRILL HOLE: 8" FT.
MATERIAL: ☐ STEEL ☒ THERMOPLASTIC (PVC) ☐ OTHER
GLUED: ☐ YES ☒ NO

BENTONITE SEAL: LENGTH OF SEAL 3 FT.
MATERIAL: ☐ SLURRY ☐ PELLETS ☐ GRANULAR ☒ CHIPS

SECONDARY FILTER PACK: ☐ SATURATED ZONE ☐ UNSATURATED ZONE - HYDRATED ☐ YES ☒ NO
BOTH ZONES ☐ IF YES, HYDRATED ☐ YES ☐ NO n/a

PRIMARY FILTER PACK: LENGTH 23 FT. DEPTH TO TOP OF PRIMARY FILTER PACK 7 FT. SECONDARY FILTER PACK LENGTH n/a FT.

ANNULAR SEAL: ☐ BENTONITE SLURRY ☒ CEMENT/BENTONITE SLURRY ☐ NON SLURRY BENTONITE TYPE
BAGS OF CEMENT USED 4
% OF BENTONITE USED 5
WATER USED/BAG 20 GAL.
LENGTH 4 FT.

WELL SCREEN: LENGTH 10 FT. DIAMETER 4 IN. DIAMETER OF DRILL HOLE 8 IN. DEPTH TO TOP OF SCREEN 10 FT.
MATERIAL: ☒ STEEL ☒ THERMOPLASTIC (PVC) ☐ OTHER

DEPTH FROM	DEPTH TO	FORMATION DESCRIPTION
0	31	Silty clay
31	40	Sandy silty clay
40	81	Shale
81	85	Limestone
85	103	Mostly limestone

MULTIPLE CASED WELLS: ☐ YES ☒ NO PUMP INSTALLED FOR REMEDIATION: ☐ YES ☒ NO
SUBMIT ADDITIONAL AS BUILT DIAGRAMS SHOWING WELL CONSTRUCTION DETAILS INCLUDING TYPE AND SIZE OF ALL CASING, HOLE DIAMETERS AND GROUT USED.
TOTAL DEPTH: 103'

SIGNATURE (PRIMARY CONTRACTOR):
PERMIT NUMBER: 401.257 MWM
STATIC WATER LEVEL FEET FROM MEASURING POINT:
DATE WELL DRILLING WAS COMPLETED: 9-27-05

I HEREBY CERTIFY THAT THE MONITORING WELL HEREIN DESCRIBED WAS CONSTRUCTED IN ACCORDANCE WITH THE DEPARTMENT OF NATURAL RESOURCES REQUIREMENTS FOR THE CONSTRUCTION OF MONITORING WELLS.

SIGNATURE (WELL DRILLER): X
PERMIT NUMBER: 401.257 MWM
DATE: 11-9-05
SIGNATURE (PUMP INSTALLER): X n/a
PERMIT NUMBER:
DATE:

MO 780-1416 (1-02) DISTRIBUTION: WHITE/DIVISION CANARY/CONTRACTOR PINK/OWNER
MAIL ORIGINAL TO: DEPARTMENT OF NATURAL RESOURCES, P.O. BOX 250, ROLLA, MO 65402
ENCLOSE $75.00 MONITORING WELL CERTIFICATION FEE WITHIN 60 DAYS AFTER WELL COMPLETION
CERTIFICATION FEE

Aquaterra Drilling Log

HOLE NO. PGW-31 | SHEET 1 OF 2 SHEETS

PROJECT NAME: Additional Perimeter Gas wells	DRILLING SUBCONTRACTOR: Layne - western
PROJECT NUMBER: 1684.10	NAME OF DRILLER(S): T. Elders
LOCATION: Bradenton Landfill	MANUFACTURER'S DESIGNATION OF DRILL: Schramm T 660
HOLE LOCATION: PGW-31	SIZES AND TYPES OF DRILLING AND SAMPLING EQUIPMENT: 8¼" ID HSA; 9" Rotary Air
SURFACE ELEVATION: ± 48'	
OVERBURDEN THICKNESS: 85'	DRILLING START DATE: 9-23-05
DRILLING END DATE: 9-23-05	
DEPTH DRILLED INTO ROCK: 17'	DEPTH GROUNDWATER ENCOUNTERED: 30'
TOTAL DEPTH OF HOLE: 102'	DEPTH TO WATER AND ELAPSED TIME AFTER DRILLING COMPLETED: —

GEOTECHNICAL SAMPLES (TOTAL)	DISTURBED	UNDISTURBED	TOTAL NUMBER OF CORE BOXES
—	—	—	—

SAMPLES FOR CHEMICAL ANALYSIS (TOTAL)	(SPECIFY)	(SPECIFY)	(SPECIFY)	(SPECIFY)	(SPECIFY)	TOTAL CORE RECOVERY
—	—	—		—	—	

DISPOSITION OF HOLE	BACKFILLED	MONITORING WELL	OTHER (SPECIFY)	SIGNATURE OF INSPECTOR
—	—	—	—	

DEPTH	DESCRIPTION OF MATERIALS	FIELD SCREENING RESULTS	GEOTECH SAMPLE RESULTS	ANALYTICAL SAMPLE NO.	TIME	REMARKS
0	Structural fill	Background		3'	7 45	TD Borehole 102'
5				8'		Limestone Bedrock encountered at 85'
10	— 9'					90 foot Screen
15	Brown silty Clay					10 foot Solid
20						
25					9 00	
30	— 30'					
35	Tan silty clay				8 15	
40	— 34'					
45	Dark Gray Shale Clay mix					
50						
55						
60						

AQUATERRA ENVIRONMENTAL SOLUTIONS, INC.

PROJECT NAME | HOLE NO.

Aquaterra Drilling Log

HOLE NO. PGw-31 | SHEET 2 OF 2 SHEETS

PROJECT NAME: Additional Perimeter Gas Wells | INSPECTOR: J. Jordan

EPT	DESCRIPTION OF MATERIALS	FIELD SCREENING RESULTS	GEOTECH SAMPLE RESULTS	ANALYTICAL SAMPLE NO.	TIME	REMARKS
	Dark Gray Shale					
	64'				945	
	Light Gray Shale Limestone mix					
	85'					
	Limestone Bed Rock				9 15	
	102' TD				10 00	

AQUATERRA | PROJECT NAME: Additional Perimeter Gas Wells | HOLE NO. PGw 31

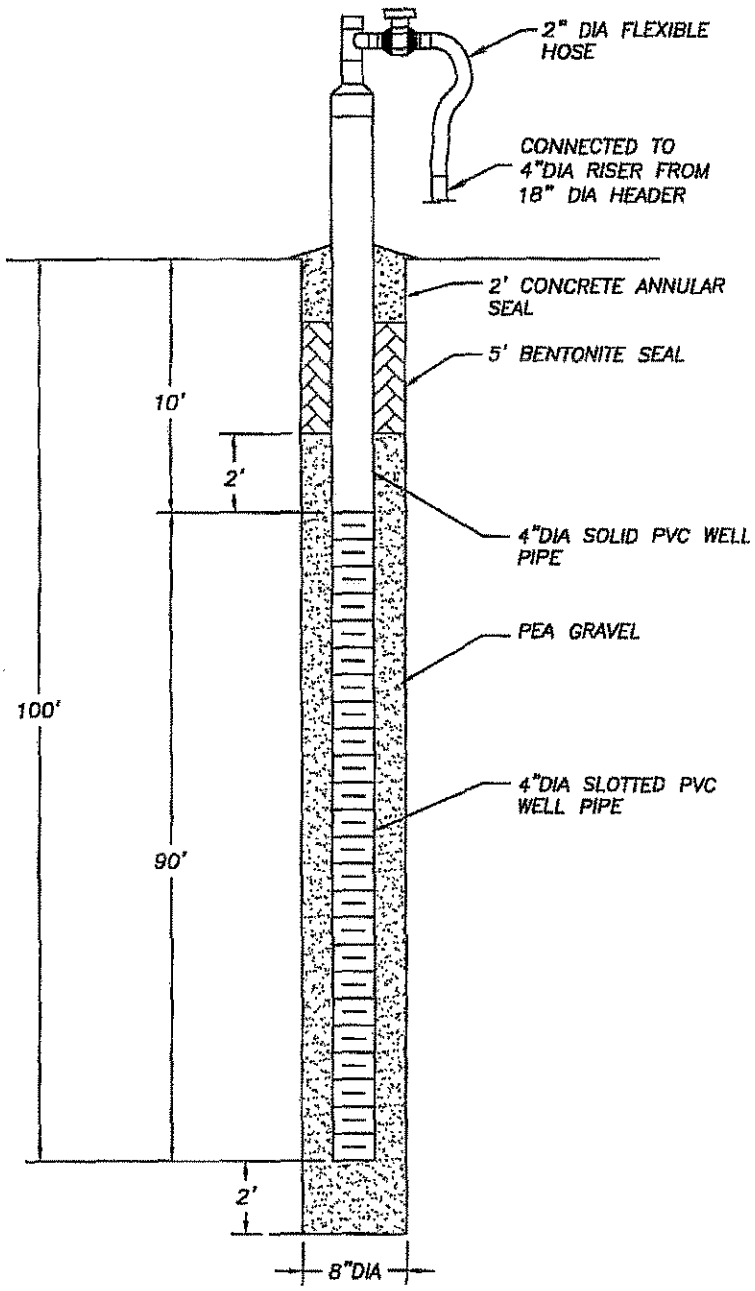

NOTES:

1. A PAINTED DESIGNATION NUMBER AND/OR TAG WILL BE PROVIDED TO IDENTIFY EACH WELL HEAD.
2. DEPTHS ARE APPROXIMATE.

AQUATERRA
ENVIRONMENTAL SOLUTIONS, INC.
141 Market Place Drive, Suite 204
Fairview Heights, Illinois 62208

PGW-31 DETAIL

BRIDGETON LANDFILL, LLC
BRIDGETON, MISSOURI

Project Mgr.	Drawn By	Designed By	Project No.
MSB	AJF	NLH	1684.10
Scale	**Date**	**File Name**	**Drawing No.**
No Scale	11/7/05	PGW-31_DETAIL.dwg	17

MISSOURI DEPARTMENT OF NATURAL RESOURCES
GEOLOGICAL SURVEY AND RESOURCE ASSESSMENT DIVISION
(573) 368-2165

MONITORING WELL CERTIFICATION RECORD

OFFICE USE ONLY	DATE RECEIVED
REF. NO. 359606	
O.R. NO.	CHECK NO.
STATE WELL NUMBER	REVENUE NO.
ENTERED Ph 1 Ph 2 Ph 3	APPROVED BY / ROUTE /

INFORMATION SUPPLIED BY PRIMARY CONTRACTOR OR DRILLING CONTRACTOR

OWNER NAME	WELL NUMBER	VARIANCE GRANTED BY THE D.N.R.
Bridgeton Landfill LLC	RGM-31	☐ NO
OWNER ADDRESS: 13570 St. Charles Rock Rd	CITY: Bridgeton	STATE: MO ZIP CODE: 63044
SITE NAME: Same	CONTACT NAME: Kal Alavi	☒ YES, ATTACH A COPY OF THE VARIANCE
SITE ADDRESS: Same	CITY	STATE ZIP CODE VARIANCE NUMBER: 3720

PROPOSED USE OF WELL
☒ GAS MONITORING WELL ☐ MONITORING
☐ EXTRACTION WELL ☐ PIEZOMETERS

TYPE OF POTENTIAL SITE
☐ HAZARDOUS MATERIAL ☒ LANDFILL
☐ INITIAL SITE ASSESSMENT ☐ L.U.S.T.
☐ WATER LEVEL DRAWDOWN

MONITORING FOR: (CHECK ALL THAT APPLY)
☐ RADIONUCLIDES ☐ PETROLEUM PRODUCTS ONLY
☐ EXPLOSIVES ☐ METALS ☐ V.O.C.
☐ SVOCS ☐ PESTICIDES/HERBICIDES

SKETCH LOCATION OF WELL INCLUDING MILEAGE ON ALL ROADS TRAVELLED FROM NEAREST TOWNS.



LOCATION OF WELL
LAT. 38 46 52
LONG. 90 36 36
AREA ELEV.
COUNTY St. Louis
SMALLEST 1/4 LARGEST 1/4 1/4
SEC. 12 TWN. 46 N. RNG. 5 E OR W

DESCRIBE LOCATION OF THE WELL SO WE WOULD BE ABLE TO VISIT THE WELL SITE
NW, West on St. Charles Rock Rd, site on left

DRILLER NOTES: Methane collection well

TYPE OF SURFACE COMPLETION	LENGTH OF PROTECTIVE CASING	DIAMETER OF PROTECTIVE CASING	DIAMETER AND DEPTH OF THE HOLE PROTECTIVE CASING WAS PLACED	PROTECTIVE CASING MATERIAL	LOCKING CAP?
☐ ABOVE GROUND ☐ FLUSH MOUNT N/A	FT.	IN.	IN. FT.	☐ STEEL ☐ ALUMINUM ☐ PLASTIC	☐ YES ☐ NO

WEEP HOLE?	VENTED CAP?	LENGTH OF FLUSH MOUNT	DIAMETER OF FLUSH MOUNT	DIAMETER AND DEPTH OF THE HOLE FLUSH MOUNT WAS PLACED	SURFACE COMPLETION GROUT	
☐ YES ☐ NO	☐ YES ☐ NO	FT.	IN.	IN. FT.	☐ CONCRETE ☐ OTHER N/A	

RISER PIPE DETAIL

LENGTH	DIAMETER	WEIGHT OR SDR#	DIAMETER OF DRILL HOLE	MATERIAL
15 FT.	4 IN	80	8" FT.	☐ STEEL ☒ THERMOPLASTIC (PVC) ☐ OTHER

BENTONITE SEAL

LENGTH OF SEAL	MATERIAL
3 FT.	☐ SLURRY ☐ PELLETS ☐ GRANULAR ☒ CHIPS

RISER PIPE DETAIL — GLUED: ☒ YES ☐ NO

SECONDARY FILTER PACK
☐ SATURATED ZONE ☐ UNSATURATED ZONE HYDRATED ☒ YES ☐ NO
BOTH ZONES ☐ IF YES, HYDRATED ☐ YES ☐ NO N/A

PRIMARY FILTER PACK

LENGTH	DEPTH TO TOP OF PRIMARY FILTER PACK	SECONDARY FILTER PACK LENGTH
28 FT.	8 FT.	N/A FT.

ANNULAR SEAL
☐ BENTONITE SLURRY ☒ CEMENT/BENTONITE SLURRY
☐ NON SLURRY BENTONITE TYPE
BAGS OF CEMENT USED: 5
% OF BENTONITE USED 5
WATER USED/BAG 2 5 GAL
LENGTH 5 FT.

WELL SCREEN

LENGTH	DIAMETER	DIAMETER OF DRILL HOLE	DEPTH TO TOP OF SCREEN	MATERIAL
40 FT.	4 IN	8 IN.	10 FT.	☐ STEEL ☒ THERMOPLASTIC (PVC) ☐ OTHER

DEPTH FROM	DEPTH TO	FORMATION DESCRIPTION
0	30	Silty clay
30	31	Silty clay wet
31	33.5	Silty sandy clay
33.5	41	Shale
41	44	Limestone
44	69	Shale
69	88	Shale, limestone
88	102	Limestone

MULTIPLE CASED WELLS ☐ YES ☒ NO PUMP INSTALLED FOR REMEDIATION ☐ YES ☒ NO
SUBMIT ADDITIONAL AS BUILT DIAGRAMS SHOWING WELL CONSTRUCTION DETAILS INCLUDING TYPE AND SIZE OF ALL CASING, HOLE DIAMETERS AND GROUT USED

TOTAL DEPTH: 102'

SIGNATURE (PRIMARY CONTRACTOR)	PERMIT NUMBER	STATIC WATER LEVEL FEET FROM MEASURING POINT	DATE WELL DRILLING WAS COMPLETED
	000251 WRM		9-23-05

I HEREBY CERTIFY THAT THE MONITORING WELL HEREIN DESCRIBED WAS CONSTRUCTED IN ACCORDANCE WITH THE DEPARTMENT OF NATURAL RESOURCES REQUIREMENTS FOR THE CONSTRUCTION OF MONITORING WELLS.

SIGNATURE (WELL DRILLER)	PERMIT NUMBER	DATE	SIGNATURE (PUMP INSTALLER)	PERMIT NUMBER	DATE
X	000251 WRM	11-9-05	X		

MO 780-1415 (1-02)

MAIL ORIGINAL
ENCLOSE $75.00
CERTIFICATION FEE

TION: WHITE/DIVISION CANARY/CONTRACTOR PINK/OWNER
DEPARTMENT OF NATURAL RESOURCES, P.O. BOX 250, ROLLA, MO 65402
ING WELL CERTIFICATION FEE WITHIN 60 DAYS AFTER WELL COMPLETION

Aquaterra Drilling Log

HOLE NO. PGW-32 | SHEET 1 OF 2 SHEETS

PROJECT NAME: Additional Perimeter LFG Collection Wells	DRILLING SUBCONTRACTOR: Layne Western
PROJECT NUMBER: 1684.10	NAME OF DRILLER(S): Tim Evans
LOCATION: Bridgeton Landfill	MANUFACTURER'S DESIGNATION OF DRILL: Schramm T660
HOLE LOCATION: PGW-32	SIZES AND TYPES OF DRILLING AND SAMPLING EQUIPMENT: 8 3/4" ID HSA; 8" Rotary Air
SURFACE ELEVATION: 484 ±	
OVERBURDEN THICKNESS: 33	DRILLING START DATE: 9-29-05 / DRILLING END DATE: 9-29-05
DEPTH DRILLED INTO ROCK: 48	DEPTH GROUNDWATER ENCOUNTERED:
TOTAL DEPTH OF HOLE: 81	DEPTH TO WATER AND ELAPSED TIME AFTER DRILLING COMPLETED:

GEOTECHNICAL SAMPLES (TOTAL)	DISTURBED	UNDISTURBED	TOTAL NUMBER OF CORE BOXES

SAMPLES FOR CHEMICAL ANALYSIS (TOTAL)	(SPECIFY)	(SPECIFY)	(SPECIFY)	(SPECIFY)	(SPECIFY)	TOTAL CORE RECOVERY

DISPOSITION OF HOLE	BACKFILLED	MONITORING WELL	OTHER (SPECIFY)	SIGNATURE OF INSPECTOR

DEPTH	DESCRIPTION OF MATERIALS	FIELD SCREENING RESULTS	GEOTECH SAMPLE RESULTS	ANALYTICAL SAMPLE NO.	TIME	REMARKS
0					1030	
	Brown Clay	Bentonite Plug		2'		65' Screen - 4" Sch. 80 #20 PVC
9'				7'		
10	Tan Clay			10'		15' Solid - 4" Sch 80 PVC
16'						
20	Wet Silty Tan Clay					5 Bags of 50 lb. Enviroplug
22'						52 Bags of Backfill Material
25	Silty Sand Clay					
31'						
30	Weathered Limestone 33'				1130	
35						
40						
45	Limestone Bedrock					
50						

AQUATERRA ENVIRONMENTAL SOLUTIONS, INC.	PROJECT NAME: Additional Perimeter LFG Collection Wells	HOLE NO.: PGW-32

Aquaterra Drilling Log

HOLE NO. PGW-32 | SHEET 2 OF SHEETS 2

PROJECT NAME: ADDITIONAL PERIMETER LFG COLLECTION WELLS

INSPECTOR: TERRY L. MUELLER

DEPTH	DESCRIPTION OF MATERIALS	FIELD SCREENING RESULTS	GEOTECH SAMPLE RESULTS	ANALYTICAL SAMPLE NO.	TIME	REMARKS
60						
65	LIMESTONE BEDROCK					
70				← 75'		
75	81'			← 81'	1300	
80						
85						
90						
95						

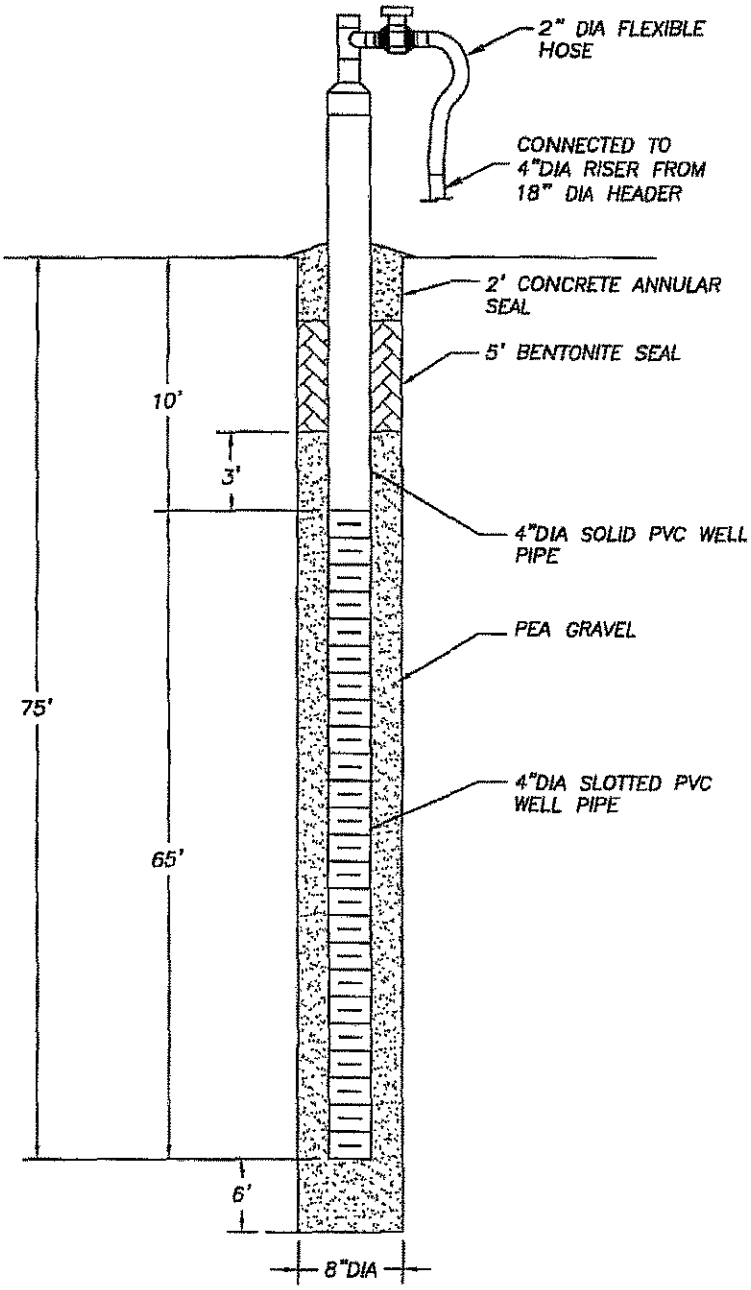

NOTES:

1. A PAINTED DESIGNATION NUMBER AND/OR TAG WILL BE PROVIDED TO IDENTIFY EACH WELL HEAD.
2. DEPTHS ARE APPROXIMATE.

AQUATERRA
ENVIRONMENTAL SOLUTIONS, INC.
141 Market Place Drive, Suite 204
Fairview Heights, Illinois 62208

PGW-32 DETAIL

BRIDGETON LANDFILL, LLC
BRIDGETON, MISSOURI

Project Mgr.	Drawn By	Designed By	Project No.
MSB	AJF	NLH	1684.10
Scale	**Date**	**File Name**	**Drawing No.**
No Scale	11/7/05	PGW-32_DETAIL.dwg	18

MISSOURI DEPARTMENT OF NATURAL RESOURCES
GEOLOGICAL SURVEY AND RESOURCE ASSESSMENT DIVISION
(573) 368-2165

MONITORING WELL CERTIFICATION RECORD

OFFICE USE ONLY	DATE RECEIVED
REF. NO. 399613	
C.R. NO.	CHECK NO.
STATE WELL NUMBER	REVENUE NO.
ENTERED Ph 1 Ph 2 Ph 3	APPROVED BY / ROUTE /

INFORMATION SUPPLIED BY PRIMARY CONTRACTOR OR DRILLING CONTRACTOR

OWNER NAME	WELL NUMBER	VARIANCE GRANTED BY THE D.N.R.
Bridgeton Landfill LLC	RSW-35	☐ NO
OWNER ADDRESS: 13570 St. Charles Rock Road	CITY: Bridgeton	STATE: MO ZIP CODE: 63044
SITE NAME: same	CONTACT NAME: Brad Bess	☒ YES, ATTACH A COPY OF THE VARIANCE
SITE ADDRESS: same	CITY	STATE ZIP CODE VARIANCE NUMBER: 2760

PROPOSED USE OF WELL	TYPE OF POTENTIAL SITE	MONITORING FOR: (CHECK ALL THAT APPLY)
☒ GAS MONITORING WELL ☐ MONITORING	☐ HAZARDOUS MATERIAL ☒ LANDFILL	☐ RADIONUCLIDES ☐ PETROLEUM PRODUCTS ONLY
☐ EXTRACTION WELL ☒ PIEZOMETERS	☐ INITIAL SITE ASSESSMENT ☐ L.U.S.T.	☒ EXPLOSIVES ☐ METALS ☒ V.O.C.
	☐ WATER LEVEL DRAWDOWN	☒ SVOCS ☐ PESTICIDES/HERBICIDES

SKETCH LOCATION OF WELL INCLUDING MILEAGE ON ALL ROADS TRAVELLED FROM NEAREST TOWNS.

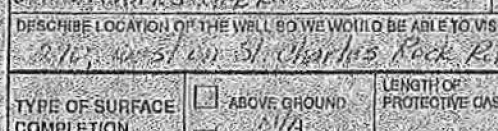

LOCATION OF WELL: LAT. 38 45 34 LONG. 90 26 27 AREA ELEV. COUNTY: St. Louis

SMALLEST 1/4 1/4 LARGEST 1/4 SEC. 0 TWN. 46 N. RNG. 5 E OR W

DESCRIBE LOCATION OF THE WELL SO WE WOULD BE ABLE TO VISIT THE WELL SITE	DRILLER NOTES:
2.10, W of St on St. Charles Rock Rd, site on left	Methane extraction well

TYPE OF SURFACE COMPLETION	LENGTH OF PROTECTIVE CASING	DIAMETER OF PROTECTIVE CASING	DIAMETER AND DEPTH OF THE HOLE PROTECTIVE CASING WAS PLACED	PROTECTIVE CASING MATERIAL	LOCKING CAP?
☐ ABOVE GROUND N/A ☒ FLUSH MOUNT	FT.	IN.	IN. FT.	☐ STEEL ☐ ALUMINUM ☐ PLASTIC	☐ YES ☐ NO

WEEP HOLE?	VENTED CAP?	LENGTH OF FLUSH MOUNT	DIAMETER OF FLUSH MOUNT	DIAMETER AND DEPTH OF THE HOLE FLUSH MOUNT WAS PLACED	SURFACE COMPLETION GROUT
☐ YES ☐ NO	☐ YES ☐ NO	FT.	IN.	IN. FT.	☐ CONCRETE ☐ OTHER N/A

RISER PIPE DETAIL	LENGTH	DIAMETER	WEIGHT OR SDR#	DIAMETER OF DRILL HOLE	MATERIAL	BENTONITE SEAL	LENGTH OF SEAL	MATERIAL
	15 FT.	4 IN.	80	8" FT.	☐ STEEL ☒ THERMOPLASTIC (PVC) ☐ OTHER		3 FT.	☐ SLURRY ☐ PELLETS ☐ GRANULAR ☒ CHIPS

GLUED	SECONDARY FILTER PACK
☐ YES ☒ NO	☒ SATURATED ZONE ☐ UNSATURATED ZONE HYDRATED ☒ YES ☐ NO BOTH ZONES ☐ IF YES, HYDRATED ☒ YES ☐ NO N/A

PRIMARY FILTER PACK	LENGTH	DEPTH TO TOP OF PRIMARY FILTER PACK	SECONDARY FILTER PACK LENGTH
	67 FT.	6 FT.	N/A FT.

ANNULAR SEAL			LENGTH
☐ BENTONITE SLURRY ☒ NON SLURRY BENTONITE TYPE	☐ CEMENT/BENTONITE SLURRY BAGS OF CEMENT USED 3 % OF BENTONITE USED 5 WATER USED/BAG 1.5 GAL		3 FT.

WELL SCREEN	LENGTH	DIAMETER	DIAMETER OF DRILL HOLE	DEPTH TO TOP OF SCREEN	MATERIAL
	65 FT.	4 IN.	8 IN.	10 FT.	☐ STEEL ☒ THERMOPLASTIC (PVC) ☐ OTHER

DEPTH FROM	DEPTH TO	FORMATION DESCRIPTION
0'	31'	overburden
31'	35'	limestone with interval
35'	47'	shale
47'	63'	limestone - shale
63'	81'	limestone

MULTIPLE CASED WELLS ☐ YES ☒ NO PUMP INSTALLED FOR REMEDIATION ☐ YES ☒ NO

SUBMIT ADDITIONAL AS BUILT DIAGRAMS SHOWING WELL CONSTRUCTION DETAILS INCLUDING TYPE AND SIZE OF ALL CASING, HOLE DIAMETERS AND GROUT USED.

TOTAL DEPTH: 81'

SIGNATURE (PRIMARY CONTRACTOR)	PERMIT NUMBER	STATIC WATER LEVEL FEET FROM MEASURING POINT	DATE WELL DRILLING WAS COMPLETED
	2005120111		12-30-05

I HEREBY CERTIFY THAT THE MONITORING WELL HEREIN DESCRIBED WAS CONSTRUCTED IN ACCORDANCE WITH THE DEPARTMENT OF NATURAL RESOURCES REQUIREMENTS FOR THE CONSTRUCTION OF MONITORING WELLS.

SIGNATURE (WELL DRILLER)	PERMIT NUMBER	DATE	SIGNATURE (PUMP INSTALLER)	PERMIT NUMBER	DATE
X	[illegible]PM	12-30-05	X N/A		

MO 780-1415 (1-02)

MAIL ORIGINAL
ENCLOSE $75.00
CERTIFICATION FEE

TION: WHITE/DIVISION CANARY/CONTRACTOR PINK/OWNER
DEPARTMENT OF NATURAL RESOURCES, P.O. BOX 250, ROLLA, MO 65402
RING WELL CERTIFICATION FEE WITHIN 60 DAYS AFTER WELL COMPLETION

Aquaterra Drilling Log

HOLE NO. PGW - 33 | SHEET 1 OF 2 SHEETS

PROJECT NAME: Additional Perimeter LFG Collection Well	DRILLING SUBCONTRACTOR: Layne Western
PROJECT NUMBER: 1684.10	NAME OF DRILLER(S): Tim Elders
LOCATION: Bridgeton LF LLC - Bridgeton MO	MANUFACTURER'S DESIGNATION OF DRILL: Schramm T660
SURFACE ELEVATION: ≈ 481	SIZES AND TYPES OF DRILLING AND SAMPLING EQUIPMENT: 5 1/2" HSA; 8" air rotary
OVERBURDEN THICKNESS: 34	
BEDROCK FOOTAGE	DRILLING START DATE: 10-3-05
DRILLING END DATE: 10-6-05	
DEPTH GROUNDWATER ENCOUNTERED: ≈ 14	TOTAL NUMBER OF CORE BOXES: 0
TOTAL NUMBER OF SAMPLES: 0	
DEPTH TO WATER AND ELAPSED TIME AFTER DRILLING COMPLETED	LOGGED BY: Andy Limmer

DEPTH	DESCRIPTION OF MATERIALS	CLASS.	BLOW COUNTS	RECOVERY	SAMPLE NO.	FIELD SCREENING RESULTS	REMARKS
0	Structural fill: Brown silty CLAY, trace debris	CL	1' →				Logged from cuttings
5			8' →				Set 65 feet of 4-inch id SCH80 #20 slot screen + 15 feet of 4-inch id SCH 80 PVC risers
10					11'		Filled annular space with pea gravel to 8 ft.
15	Tan, SILT with clay	ML-CL					6 bags of soft bentonite to 1 ft.
20	Grayish brown SILT						
25		ML					
30	Gray SILT, with v. fine sand						
34	Shale gray	SH					
44	Shaley LIMESTONE, with shale seams and layers	LMS					
66	Fractured LIMESTONE (U)						

AQUATERRA
ENVIRONMENTAL SOLUTIONS, INC.
KANSAS CITY-JEFFERSON CITY-OMAHA-ST. LOUIS

PROJECT NAME: Additional Perimeter LFG Collection

HOLE NO.: PGW-33

Aquaterra Drilling Log

HOLE NO. PGW-33 | SHEET 2 OF SHEETS 2

PROJECT NAME Bridgeton LF Perimeter LFG Wells | INSPECTOR A&L

DEPTH	DESCRIPTION OF MATERIALS	FIELD SCREENING RESULTS	GEOTECH SAMPLE RESULTS	ANALYTICAL SAMPLE NO.	TIME	REMARKS
75	Clay seams					Fractures noted by driller
				76'		
80	Light gray LMS					
85	Boring Terminated @ 81 ft					

AQUATERRA ENVIRONMENTAL SOLUTIONS, INC.

PROJECT NAME Additional Perimeter LFG Collection Wells | HOLE NO. PGW-33

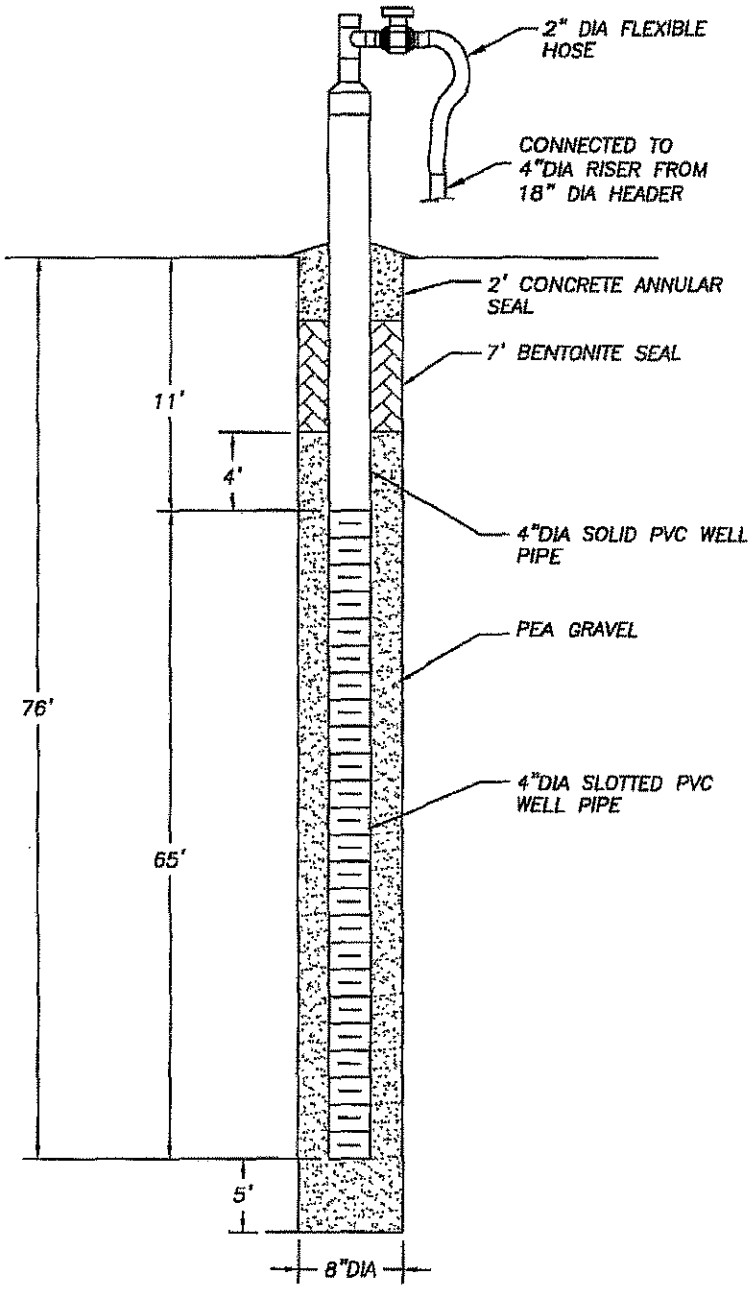

NOTES:

1. A PAINTED DESIGNATION NUMBER AND/OR TAG WILL BE PROVIDED TO IDENTIFY EACH WELL HEAD.
2. DEPTHS ARE APPROXIMATE.

AQUATERRA
ENVIRONMENTAL SOLUTIONS, INC.
141 Market Place Drive, Suite 204
Fairview Heights, Illinois 62208

PGW-33 DETAIL

BRIDGETON LANDFILL, LLC
BRIDGETON, MISSOURI

Project Mgr.	Drawn By	Designed By	Project No.
MSB	AJF	NLH	1684.10
Scale	**Date**	**File Name**	**Drawing No.**
No Scale	11/7/05	PGW-33_DETAIL.dwg	19

MISSOURI DEPARTMENT OF NATURAL RESOURCES
GEOLOGICAL SURVEY AND RESOURCE ASSESSMENT DIVISION
(573) 368-2165

MONITORING WELL CERTIFICATION RECORD

OFFICE USE ONLY	DATE RECEIVED
REF. NO. 356034	
O.R. NO.	CHECK NO.
STATE WELL NUMBER	REVENUE NO.
ENTERED Ph 1 Ph 2 Ph 3	APPROVED BY / ROUTE /

INFORMATION SUPPLIED BY PRIMARY CONTRACTOR OR DRILLING CONTRACTOR

OWNER NAME	WELL NUMBER	VARIANCE GRANTED BY THE D.N.R.
Bridgeton Landfill LLC	RMW-33	☐ NO ☒ YES, ATTACH A COPY OF THE VARIANCE

OWNER ADDRESS	CITY	STATE	ZIP CODE
13570 St. Charles Rock Rd	Bridgeton	MO	63044

SITE NAME	CONTACT NAME
Same	Paul Lopez

SITE ADDRESS	CITY	STATE	ZIP CODE	VARIANCE NUMBER
Same				2820

PROPOSED USE OF WELL	TYPE OF POTENTIAL SITE	MONITORING FOR: (CHECK ALL THAT APPLY)
☒ GAS MONITORING WELL ☐ MONITORING ☐ EXTRACTION WELL ☐ PIEZOMETERS	☐ HAZARDOUS MATERIAL ☒ LANDFILL ☐ INITIAL SITE ASSESSMENT ☐ L.U.S.T. ☐ WATER LEVEL DRAWDOWN	☐ RADIONUCLIDES ☐ PETROLEUM PRODUCTS ONLY ☐ EXPLOSIVES ☒ METALS ☒ V.O.C. ☐ SVOCS ☒ PESTICIDES/HERBICIDES

SKETCH LOCATION OF WELL INCLUDING MILEAGE ON ALL ROADS TRAVELLED FROM NEAREST TOWNS



LOCATION OF WELL: LAT 38° 45' 34" LONG 90° 36' 30"

AREA ELEV

COUNTY St. Louis

SMALLEST 1/4 1/4 LARGEST 1/4 SEC. 12 TWN. 46 N RNG. 5 E OR W

DESCRIBE LOCATION OF THE WELL SO WE WOULD BE ABLE TO VISIT THE WELL SITE: 370 W of on St. Charles Rock Rd, site on left

DRILLER NOTES: Methane extraction well

TYPE OF SURFACE COMPLETION		LENGTH OF PROTECTIVE CASING	DIAMETER OF PROTECTIVE CASING	DIAMETER AND DEPTH OF THE HOLE PROTECTIVE CASING WAS PLACED	PROTECTIVE CASING MATERIAL	LOCKING CAP?
	☐ ABOVE GROUND ☒ FLUSH MOUNT N/A	FT.	IN.	IN. FT.	☐ STEEL ☐ ALUMINUM ☒ PLASTIC	☐ YES ☐ NO

WEEP HOLE?	VENTED CAP?	LENGTH OF FLUSH MOUNT	DIAMETER OF FLUSH MOUNT	DIAMETER AND DEPTH OF THE HOLE FLUSH MOUNT WAS PLACED	SURFACE COMPLETION GROUT	
☐ YES ☒ NO	☐ YES ☐ NO	FT.	IN.	IN. FT.	☐ CONCRETE ☐ OTHER N/A	

RISER PIPE DETAIL	LENGTH	DIAMETER	WEIGHT OR SDR#	DIAMETER OF DRILL HOLE	MATERIAL	BENTONITE SEAL	LENGTH OF SEAL	MATERIAL
	15 FT.	4 IN.	SDR 21	8 IN. FT.	☐ STEEL ☒ THERMOPLASTIC (PVC) ☐ OTHER		3 FT.	☐ SLURRY ☐ PELLETS ☐ GRANULAR ☒ CHIPS

GLUED	SECONDARY FILTER PACK
☐ YES ☒ NO	☐ SATURATED ZONE ☐ UNSATURATED ZONE HYDRATED ☐ YES ☐ NO BOTH ZONES ☐ IF YES, HYDRATED ☐ YES ☐ NO N/A

PRIMARY FILTER PACK	LENGTH	DEPTH TO TOP OF PRIMARY FILTER PACK	SECONDARY FILTER PACK LENGTH
	62 FT.	8 FT.	N/A FT.

ANNULAR SEAL			LENGTH
	☐ BENTONITE SLURRY ☐ NON SLURRY BENTONITE TYPE	☒ CEMENT/BENTONITE SLURRY BAGS OF CEMENT USED 3 % OF BENTONITE USED 5 WATER USED/BAG 6.5 GAL.	5 FT.

WELL SCREEN	LENGTH	DIAMETER	DIAMETER OF DRILL HOLE	DEPTH TO TOP OF SCREEN	MATERIAL
	15 FT.	4 IN.	8 IN.	77 FT.	☐ STEEL ☒ THERMOPLASTIC (PVC) ☐ OTHER

DEPTH FROM	DEPTH TO	FORMATION DESCRIPTION
0	34	overburden
34	40	Shale
40	66	Limestone - soft
66	77	Limestone - fractured
77	81	Limestone w/ shale

MULTIPLE CASED WELLS ☐ YES ☒ NO PUMP INSTALLED FOR REMEDIATION ☐ YES ☒ NO

SUBMIT ADDITIONAL AS BUILT DIAGRAMS SHOWING WELL CONSTRUCTION DETAILS INCLUDING TYPE AND SIZE OF ALL CASING, HOLE DIAMETERS AND GROUT USED

TOTAL DEPTH: 81

SIGNATURE (PRIMARY CONTRACTOR)	PERMIT NUMBER	STATIC WATER LEVEL FEET FROM MEASURING POINT	DATE WELL DRILLING WAS COMPLETED
[signature]	2005140M		11/02/05

I HEREBY CERTIFY THAT THE MONITORING WELL HEREIN DESCRIBED WAS CONSTRUCTED IN ACCORDANCE WITH THE DEPARTMENT OF NATURAL RESOURCES REQUIREMENTS FOR THE CONSTRUCTION OF MONITORING WELLS.

SIGNATURE (WELL DRILLER)	PERMIT NUMBER	DATE	SIGNATURE (PUMP INSTALLER)	PERMIT NUMBER	DATE
X [signature]	2005140M	11/02/05	X N/A		

MO 780-1415 (1-02)

MAIL ORIGINAL
ENCLOSE $75.00
CERTIFICATION FEE

IBUTION: WHITE/DIVISION CANARY/CONTRACTOR PINK/OWNER
TO: DEPARTMENT OF NATURAL RESOURCES, P.O. BOX 250, ROLLA, MO 65402
ITORING WELL CERTIFICATION FEE WITHIN 60 DAYS AFTER WELL COMPLETION

Aquaterra Drilling Log

HOLE NO. PGW-34 | SHEET 1 OF 2 SHEETS

PROJECT NAME: Additional Perimeter LFG Wells	DRILLING SUBCONTRACTOR: LAYNE WESTERN
PROJECT NUMBER: 1684.10	NAME OF DRILLER(S): Tim Elders
LOCATION: Bridgeton LF, LLC - Bridgeton, MO	MANUFACTURER'S DESIGNATION OF DRILL: SCHRAMM T660
SURFACE ELEVATION: ≈ 481	SIZES AND TYPES OF DRILLING AND SAMPLING EQUIPMENT: 8 1/4" HSA; 8" air rotary
OVERBURDEN THICKNESS: ≈ 42	
BEDROCK FOOTAGE: 41	DRILLING START DATE: 10-7-2005
DRILLING END DATE:	
DEPTH GROUNDWATER ENCOUNTERED: ≈ 16	TOTAL NUMBER OF CORE BOXES: 0
TOTAL NUMBER OF SAMPLES: 0	
DEPTH TO WATER AND ELAPSED TIME AFTER DRILLING COMPLETED:	LOGGED BY: Andy Limmer

DEPTH	DESCRIPTION OF MATERIALS	CLASS.	BLOW COUNTS	RECOVERY	SAMPLE NO.	FIELD SCREENING RESULTS	REMARKS
5	Structural fill: brown silty CLAY, some bricks	CL					Logged from cuttings
10	10						borehole collapsed to 55 ft after pulling rods
	Brown clayey SILT	CL-ML					
15	18						
	Brown SILT						
25							
30	30	ML					
	Brownish gray SILT with sand						
35	33 - Rubble layer noted by driller						
40	42						
	Light gray LIMESTONE	LMS					
45	50						
	Void, olive gray cuttings, water filled void						
50	57						
	Tan LIMESTONE with olive gray clay lenses	LMS					
55	66						
	Light gray LIMESTONE interlayered black SHALE						

AQUATERRA
ENVIRONMENTAL SOLUTIONS, INC.
KANSAS CITY/JEFFERSON CITY-OMAHA-ST. LOUIS

PROJECT NAME: Bridgeton LFG Wells

HOLE NO.: PGW-34

Aquaterra Drilling Log

HOLE NO. PGW-34 | SHEET OF SHEETS 2 2

PROJECT NAME: Additional Perimeter LFG Wells

INSPECTOR: AJL

DEPTH	DESCRIPTION OF MATERIALS	FIELD SCREENING RESULTS	GEOTECH SAMPLE RESULTS	ANALYTICAL SAMPLE NO.	TIME	REMARKS
75	Light gray LIMESTONE with black SHALE layers					
80						
85	Boring Terminated @ 83 feet					

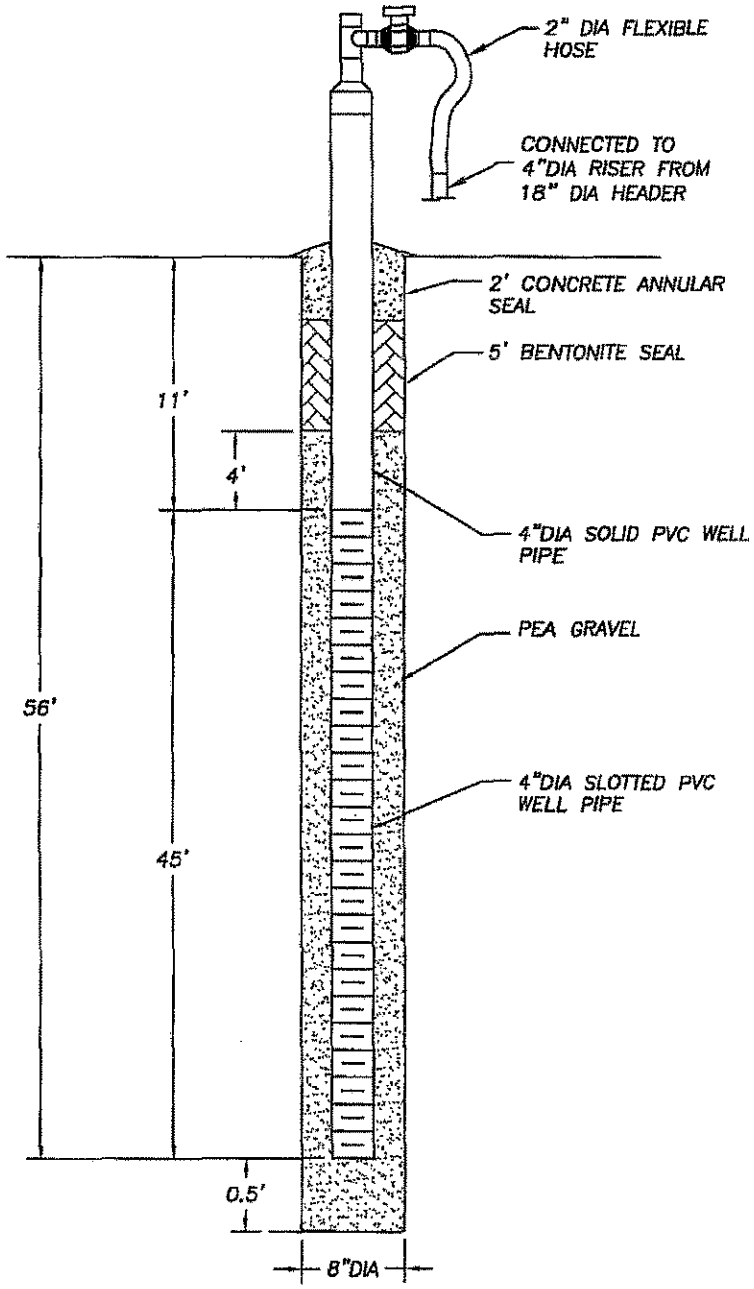

NOTES:

1. A PAINTED DESIGNATION NUMBER AND/OR TAG WILL BE PROVIDED TO IDENTIFY EACH WELL HEAD.
2. DEPTHS ARE APPROXIMATE.

AQUATERRA
ENVIRONMENTAL SOLUTIONS, INC.
141 Market Place Drive, Suite 204
Fairview Heights, Illinois 62208

PGW-34 DETAIL

BRIDGETON LANDFILL, LLC
BRIDGETON, MISSOURI

Project Mgr.	Drawn By	Designed By	Project No.
MSB	AJF	NLH	1684.10
Scale	**Date**	**File Name**	**Drawing No.**
No Scale	11/7/05	PGW-34_DETAIL.dwg	20

MISSOURI DEPARTMENT OF NATURAL RESOURCES
GEOLOGICAL SURVEY AND RESOURCE ASSESSMENT DIVISION
(573) 368-2165

MONITORING WELL CERTIFICATION RECORD

OFFICE USE ONLY	DATE RECEIVED
REF. NO. 35961.0	
C.R. NO.	CHECK NO.
STATE WELL NUMBER	REVENUE NO.
ENTERED Ph 1 Ph 2 Ph 3	APPROVED BY / ROUTE /

INFORMATION SUPPLIED BY PRIMARY CONTRACTOR OR DRILLING CONTRACTOR

OWNER NAME	WELL NUMBER	VARIANCE GRANTED BY THE D.N.R
Bridgeton Landfill LLC	Path 34	☐ NO
OWNER ADDRESS: 13570 St. Charles Rock Rd	CITY: Bridgeton	STATE: Mo ZIP CODE: 63044
SITE NAME: Same	CONTACT NAME: Earl Bleeker	☒ YES, ATTACH A COPY OF THE VARIANCE
SITE ADDRESS: Same	CITY	STATE ZIP CODE VARIANCE NUMBER: N/A

PROPOSED USE OF WELL: ☒ GAS MONITORING WELL ☐ MONITORING ☐ EXTRACTION WELL ☐ PIEZOMETERS

TYPE OF POTENTIAL SITE: ☐ HAZARDOUS MATERIAL ☒ LANDFILL ☐ INITIAL SITE ASSESSMENT ☐ L.U.S.T. ☐ WATER LEVEL DRAWDOWN

MONITORING FOR: (CHECK ALL THAT APPLY) ☐ RADIONUCLIDES ☐ PETROLEUM PRODUCTS ONLY ☐ EXPLOSIVES ☐ METALS ☒ V.O.C. ☒ BYOOS ☒ PESTICIDES/HERBICIDES

SKETCH LOCATION OF WELL INCLUDING MILEAGE ON ALL ROADS TRAVELLED FROM NEAREST TOWNS



LOCATION OF WELL: LAT. 38° 45' 42.55" LONG. 90° 36' 38" AREA ELEV COUNTY St. Louis

SMALLEST ¼ ¼ ¼ LARGEST ¼ SEC. 20 TWN. 46 N. RNG. 5 E OR W

DESCRIBE LOCATION OF THE WELL SO WE WOULD BE ABLE TO VISIT THE WELL SITE: 2.2 mi. west on St. Charles Rock Rd. site on left

DRILLER NOTES: Methane collection well

TYPE OF SURFACE COMPLETION	LENGTH OF PROTECTIVE CASING	DIAMETER OF PROTECTIVE CASING	DIAMETER AND DEPTH OF THE HOLE PROTECTIVE CASING WAS PLACED	PROTECTIVE CASING MATERIAL	LOCKING CAP?
☐ ABOVE GROUND ☐ FLUSH MOUNT N/A	FT.	IN.	IN. FT.	☐ STEEL ☐ ALUMINUM ☐ PLASTIC	☐ YES ☐ NO

WEEP HOLE?	VENTED CAP?	LENGTH OF FLUSH MOUNT	DIAMETER OF FLUSH MOUNT	DIAMETER AND DEPTH OF THE HOLE FLUSH MOUNT WAS PLACED	SURFACE COMPLETION GROUT
☐ YES ☐ NO	☐ YES ☐ NO	FT.	IN.	IN. FT.	☐ CONCRETE ☐ OTHER N/A

RISER PIPE DETAIL	LENGTH	DIAMETER	WEIGHT OR SDR#	DIAMETER OF DRILL HOLE	MATERIAL	BENTONITE SEAL	LENGTH OF SEAL	MATERIAL
	15 FT.	4 IN.	80	8" FT.	☐ STEEL ☒ THERMOPLASTIC (PVC) ☐ OTHER		3 FT.	☐ SLURRY ☐ PELLETS ☐ GRANULAR ☒ CHIPS

GLUED ☐ YES ☒ NO

SECONDARY FILTER PACK
☐ SATURATED ZONE ☐ UNSATURATED ZONE HYDRATED ☐ YES ☐ NO
BOTH ZONES ☐ IF YES, HYDRATED ☐ YES ☐ NO N/A

PRIMARY FILTER PACK	LENGTH	DEPTH TO TOP OF PRIMARY FILTER PACK	SECONDARY FILTER PACK LENGTH
	47 FT.	7 FT.	N/A FT.

ANNULAR SEAL
☐ BENTONITE SLURRY ☐ NON SLURRY BENTONITE TYPE ☒ CEMENT/BENTONITE SLURRY
BAGS OF CEMENT USED 3
% OF BENTONITE USED 6
WATER USED/BAG 20 GAL.
LENGTH 4 FT.

WELL SCREEN	LENGTH	DIAMETER	DIAMETER OF DRILL HOLE	DEPTH TO TOP OF SCREEN	MATERIAL
	45 FT.	4 IN.	8" IN.	10 FT.	☐ STEEL ☒ THERMOPLASTIC (PVC) ☐ OTHER

DEPTH FROM	DEPTH TO	FORMATION DESCRIPTION
0	34	Overburden
34	49	Shale
49	50	Limestone/Hard Shale
50	57	Void water
57	60	Limestone/Hard Shale

MULTIPLE CASED WELLS ☐ YES ☒ NO PUMP INSTALLED FOR REMEDIATION ☐ YES ☒ NO
SUBMIT ADDITIONAL AS BUILT DIAGRAMS SHOWING WELL CONSTRUCTION DETAILS INCLUDING TYPE AND SIZE OF ALL CASING, HOLE DIAMETERS AND GROUT USED

TOTAL DEPTH: 60'

SIGNATURE (PRIMARY CONTRACTOR)	PERMIT NUMBER	STATIC WATER LEVEL FEET FROM MEASURING POINT	DATE WELL DRILLING WAS COMPLETED
[signature]	2010510 WMP		10-27-10

I HEREBY CERTIFY THAT THE MONITORING WELL HEREIN DESCRIBED WAS CONSTRUCTED IN ACCORDANCE WITH THE DEPARTMENT OF NATURAL RESOURCES REQUIREMENTS FOR THE CONSTRUCTION OF MONITORING WELLS.

SIGNATURE (WELL DRILLER)	PERMIT NUMBER	DATE	SIGNATURE (PUMP INSTALLER)	PERMIT NUMBER	DATE
X [signature]	2010510 WMP	11-10-10	X N/A		

MO 780-1418 (1-02)

MAIL ORIGINAL
ENCLOSE $75.00
CERTIFICATION FEE

DISTRIBUTION: WHITE/DIVISION CANARY/CONTRACTOR PINK/OWNER
MAIL TO: DEPARTMENT OF NATURAL RESOURCES, P.O. BOX 250, ROLLA, MO 65402
MONITORING WELL CERTIFICATION FEE WITHIN 60 DAYS AFTER WELL COMPLETION

Aquaterra Drilling Log

HOLE NO. PEW - 35 | SHEET 1 OF SHEETS

PROJECT NAME: Bridgeton LF Additional Perimeter LFG	DRILLING SUBCONTRACTOR: LAYNE WESTERN
PROJECT NUMBER: 1684.10	NAME OF DRILLER(S): Bill Pinson
LOCATION: Bridgeton LF, LLC - Bridgeton, MO	MANUFACTURER'S DESIGNATION OF DRILL: SCHRAMM T660
SURFACE ELEVATION: ~480	SIZES AND TYPES OF DRILLING AND SAMPLING EQUIPMENT: 8 1/4" id HSA; 8" ~~bit~~ and air rotary
OVERBURDEN THICKNESS: ~35	
BEDROCK FOOTAGE: 28	DRILLING START DATE: 10-11-05
DRILLING END DATE: 10-11-05	
DEPTH GROUNDWATER ENCOUNTERED: ~18	TOTAL NUMBER OF CORE BOXES: 0
TOTAL NUMBER OF SAMPLES: 0	
DEPTH TO WATER AND ELAPSED TIME AFTER DRILLING COMPLETED	LOGGED BY: Andy Limmer

DEPTH	DESCRIPTION OF MATERIALS	CLASS.	BLOW COUNTS	RECOVERY	SAMPLE NO.	FIELD SCREENING RESULTS	REMARKS
0	Possible structural fill: Brown silty clay	CL		1' → 8'			Logged from cuttings
10	Brown clayey SILT	CL-ML				10'	Set 65 feet of 4-inch id SCH 80 #20 slot screen
15							15 feet of 4-inch id SCH 80 PVC riser
25	Olive gray SILT	ML					
35	LIMESTONE Rubble or ledge over clay with sand and gravel						
43	Light gray LIMESTONE Driller noted rock was fractured	LMS					
51	VOID						
52	Light gray LIMESTONE with black SHALE Layers	LMS					
58	Olive Gray CLAY						
59	Light gray LIMESTONE	LMS					

AQUATERRA
ENVIRONMENTAL SOLUTIONS, INC.
KANSAS CITY-JEFFERSON CITY-OMAHA-ST. LOUIS

PROJECT NAME: Bridgeton Additional Perimeter LFG

HOLE NO.: PGW-35

Aquaterra Drilling Log

HOLE NO. PGW-35 | SHEET OF SHEETS 2 2

PROJECT NAME: Bridgeton LFG Wells | INSPECTOR: Andy Limmer

DEPTH	DESCRIPTION OF MATERIALS	FIELD SCREENING RESULTS	GEOTECH SAMPLE RESULTS	ANALYTICAL SAMPLE NO.	TIME	REMARKS
75	Light gray LIMESTONE	LMS			75'	
80	Black SHALE, mod. hard	SH				
85	Boring Terminated @ 83 ft					

AQUATERRA ENVIRONMENTAL SOLUTIONS, INC.

PROJECT NAME: Bridgeton Add'l Perimeter LFG | HOLE NO. PGW-35

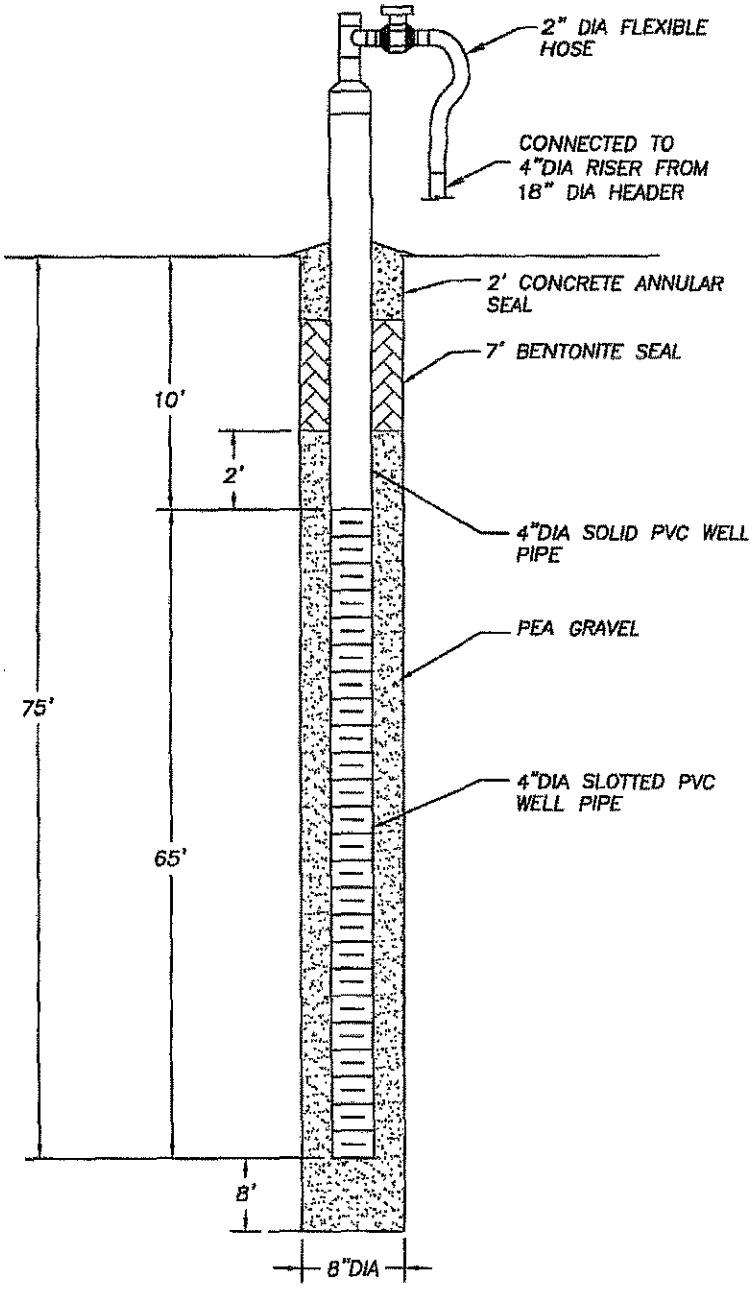

NOTES:

1. A PAINTED DESIGNATION NUMBER AND/OR TAG WILL BE PROVIDED TO IDENTIFY EACH WELL HEAD.
2. DEPTHS ARE APPROXIMATE.

AQUATERRA
ENVIRONMENTAL SOLUTIONS, INC.
141 Market Place Drive, Suite 204
Fairview Heights, Illinois 62208

PGW-35 DETAIL

BRIDGETON LANDFILL, LLC
BRIDGETON, MISSOURI

Project Mgr.	Drawn By	Designed By	Project No.
MSB	AJF	NLH	1684.10
Scale	Date	File Name	Drawing No.
No Scale	11/7/05	PGW-35_DETAIL.dwg	21

MISSOURI DEPARTMENT OF NATURAL RESOURCES
GEOLOGICAL SURVEY AND RESOURCE ASSESSMENT DIVISION
(573) 368-2165

MONITORING WELL CERTIFICATION RECORD

OFFICE USE ONLY	DATE RECEIVED
REF. NO. 359615	
C.R. NO.	CHECK NO.
STATE WELL NUMBER	REVENUE NO.
ENTERED Ph 1 Ph 2 Ph 3	APPROVED BY / ROUTE / /

INFORMATION SUPPLIED BY PRIMARY CONTRACTOR OR DRILLING CONTRACTOR

OWNER NAME	WELL NUMBER	VARIANCE GRANTED BY THE D.N.R.
Bridgeton Landfill LLC	12MW-35	☐ NO
OWNER ADDRESS: 13570 St. Charles Rock Road	CITY: Bridgeton	STATE: MO ZIP CODE: 63044
SITE NAME: same	CONTACT NAME: Art Blake	☒ YES, ATTACH A COPY OF THE VARIANCE
SITE ADDRESS: same	CITY	STATE ZIP CODE VARIANCE NUMBER: 1720

PROPOSED USE OF WELL: ☒ GAS MONITORING WELL ☐ MONITORING ☐ EXTRACTION WELL ☐ PIEZOMETERS

TYPE OF POTENTIAL SITE: ☐ HAZARDOUS MATERIAL ☒ LANDFILL ☐ INITIAL SITE ASSESSMENT ☐ L.U.S.T. ☐ WATER LEVEL DRAWDOWN

MONITORING FOR: (CHECK ALL THAT APPLY) ☐ RADIONUCLIDES ☐ PETROLEUM PRODUCTS ONLY ☐ EXPLOSIVES ☐ METALS ☐ V.O.C. ☐ SVOCS ☐ PESTICIDES/HERBICIDES

SKETCH LOCATION OF WELL INCLUDING MILEAGE ON ALL ROADS TRAVELLED FROM NEAREST TOWNS.



LOCATION OF WELL: LAT. 38 45 55 LONG. 90 26 39 AREA ELEV COUNTY St. Louis

SMALLEST ¼ LARGEST ¼ ¼ SEC. 12 TWN. 46 N. RNG. 5 E OR W

DESCRIBE LOCATION OF THE WELL SO WE WOULD BE ABLE TO VISIT THE WELL SITE: 0.25 West on St. Charles Rock Rd, site on left

DRILLER NOTES: methane detection well

TYPE OF SURFACE COMPLETION	LENGTH OF PROTECTIVE CASING	DIAMETER OF PROTECTIVE CASING	DIAMETER AND DEPTH OF THE HOLE PROTECTIVE CASING WAS PLACED	PROTECTIVE CASING MATERIAL	LOCKING CAP?
☐ ABOVE GROUND ☐ FLUSH MOUNT N/A	FT.	IN.	IN. FT.	☐ STEEL ☐ ALUMINUM ☐ PLASTIC	☐ YES ☐ NO

WEEP HOLE?	VENTED CAP?	LENGTH OF FLUSH MOUNT	DIAMETER OF FLUSH MOUNT	DIAMETER AND DEPTH OF THE HOLE FLUSH MOUNT WAS PLACED	SURFACE COMPLETION GROUT	
☐ YES ☐ NO	☐ YES ☐ NO	FT.	IN.	IN. FT.	☐ CONCRETE ☐ OTHER	N/A

RISER PIPE DETAIL	LENGTH	DIAMETER	WEIGHT OR SCH#	DIAMETER OF DRILL HOLE	MATERIAL	BENTONITE SEAL	LENGTH OF SEAL	MATERIAL
	15 FT.	4 IN.	80	8" FT.	☐ STEEL ☒ THERMOPLASTIC (PVC) ☐ OTHER		3 FT.	☐ SLURRY ☐ PELLETS ☐ GRANULAR ☑ CHIPS

GLUED: ☐ YES ☒ NO

SECONDARY FILTER PACK: ☐ SATURATED ZONE ☐ UNSATURATED ZONE HYDRATED ☐ YES ☐ NO ☐ BOTH ZONES ☐ IF YES, HYDRATED ☐ YES ☐ NO N/A

PRIMARY FILTER PACK	LENGTH	DEPTH TO TOP OF PRIMARY FILTER PACK	SECONDARY FILTER PACK LENGTH
	65 FT.	7 FT.	N/A FT.

ANNULAR SEAL			
☐ BENTONITE SLURRY ☐ NON SLURRY BENTONITE TYPE	☑ CEMENT/BENTONITE SLURRY BAGS OF CEMENT USED 3 % OF BENTONITE USED 5 WATER USED/BAG 6 GAL.	LENGTH	4 FT.

WELL SCREEN	LENGTH	DIAMETER	DIAMETER OF DRILL HOLE	DEPTH TO TOP OF SCREEN	MATERIAL
	65 FT.	4 IN.	8 IN.	10 FT.	☐ STEEL ☒ THERMOPLASTIC (PVC) ☐ OTHER

DEPTH FROM	DEPTH TO	FORMATION DESCRIPTION
0	36	Overburden
36	43	Shale
43	55	Limestone
55	64	Void
64	68	Limestone - fractured
68	70	Limestone
70	83	Limestone - fractured

MULTIPLE CASED WELLS ☐ YES ☒ NO PUMP INSTALLED FOR REMEDIATION ☐ YES ☒ NO

SUBMIT ADDITIONAL AS BUILT DIAGRAMS SHOWING WELL CONSTRUCTION DETAILS INCLUDING TYPE AND SIZE OF ALL CASING, HOLE DIAMETERS AND GROUT USED

TOTAL DEPTH: 83'

SIGNATURE PRIMARY CONTRACTOR	PERMIT NUMBER	STATIC WATER LEVEL FEET FROM MEASURING POINT	DATE WELL DRILLING WAS COMPLETED
[signature]	000351 W/M		11-5-15

I HEREBY CERTIFY THAT THE MONITORING WELL HEREIN DESCRIBED WAS CONSTRUCTED IN ACCORDANCE WITH THE DEPARTMENT OF NATURAL RESOURCES REQUIREMENTS FOR THE CONSTRUCTION OF MONITORING WELLS

SIGNATURE (WELL DRILLER)	PERMIT NUMBER	DATE	SIGNATURE (PUMP INSTALLER)	PERMIT NUMBER	DATE
X [signature]	000351 W/M	11-5-15	X N/A		

MO 780-1415 (1-02) WHITE/DIVISION CANARY/CONTRACTOR PINK/OWNER
DEPARTMENT OF NATURAL RESOURCES, P.O. BOX 250, ROLLA, MO 65402
WELL CERTIFICATION FEE WITHIN 60 DAYS AFTER WELL COMPLETION

MAIL ORIGINAL
ENCLOSE $75.00
CERTIFICATION FEE

Aquaterra Drilling Log

HOLE NO. PGW-36 | SHEET 1 OF 2 SHEETS

PROJECT NAME: Bridgeton Additional LFG Collection Wells	DRILLING SUBCONTRACTOR: LAYNE WESTERN
PROJECT NUMBER: 1684.10	NAME OF DRILLER(S): Bill Dinsen Dean
LOCATION: Bridgeton LF LLC - Bridgeton, MO	MANUFACTURER'S DESIGNATION OF DRILL: Schramm T660
SURFACE ELEVATION:	SIZES AND TYPES OF DRILLING AND SAMPLING EQUIPMENT: 8 1/2" id HSA; 8" air rotary
OVERBURDEN THICKNESS: 30	
BEDROCK FOOTAGE: 52	DRILLING START DATE: 10-12-05
DRILLING END DATE: 10-12-05	
DEPTH GROUNDWATER ENCOUNTERED: ~13	TOTAL NUMBER OF CORE BOXES: 0
TOTAL NUMBER OF SAMPLES: 0	
DEPTH TO WATER AND ELAPSED TIME AFTER DRILLING COMPLETED:	LOGGED BY: Andy Limmer

DEPTH	DESCRIPTION OF MATERIALS	CLASS.	BLOW COUNTS	RECOVERY	SAMPLE NO.	FIELD SCREENING RESULTS	REMARKS
5	Brown silty CLAY, possible structural fill to 5 feet	CL	11'	35' →			Logged from cuttings
10			16'	X →			Set 65 feet of screen 4-inch id sch 80 #20 PVC to 80', 20 feet of 4-inch id sch 80 PVC risers.
13							
15	Dark brown clayey SILT	CL-ML				15	Gravel to 7 feet
22							Bentonite chips to 3.5 ft
25	Dark gray SILT to SILT w/ sand	ML					
30							
32	LIMESTONE, weathered	lms					
35	Light green SHALE, weathered	SH					
40							
41	Light gray LIMESTONE occasional dark gray to black shale layers	LMS					
45							
50							
55							
60							
65							

AQUATERRA
ENVIRONMENTAL SOLUTIONS, INC.
KANSAS CITY-JEFFERSON CITY-OMAHA-ST. LOUIS

PROJECT NAME: Bridgeton Add'l LFG Collection Wells

HOLE NO. PGW-36

Aquaterra Drilling Log

HOLE NO.	SHEET OF SHEETS
PGW-36	2 2

R	NAME	INSPECTOR
B1	ton Additional LFG Collection Wells	ADL

EPTH	DESCRIPTION OF MATERIALS	FIELD SCREENING RESULTS	GEOTECH SAMPLE RESULTS	ANALYTICAL SAMPLE NO.	TIME	REMARKS
5	Light gray LIMESTONE, occasional dark gray + black SHALE layers					
0					80'	
5	Boring Terminated @ 82 ft					

AQUATERRA
ENVIRONMENTAL SOLUTIONS, INC.

PROJECT NAME	HOLE NO.
Add'l LFG Wells	PGW-36

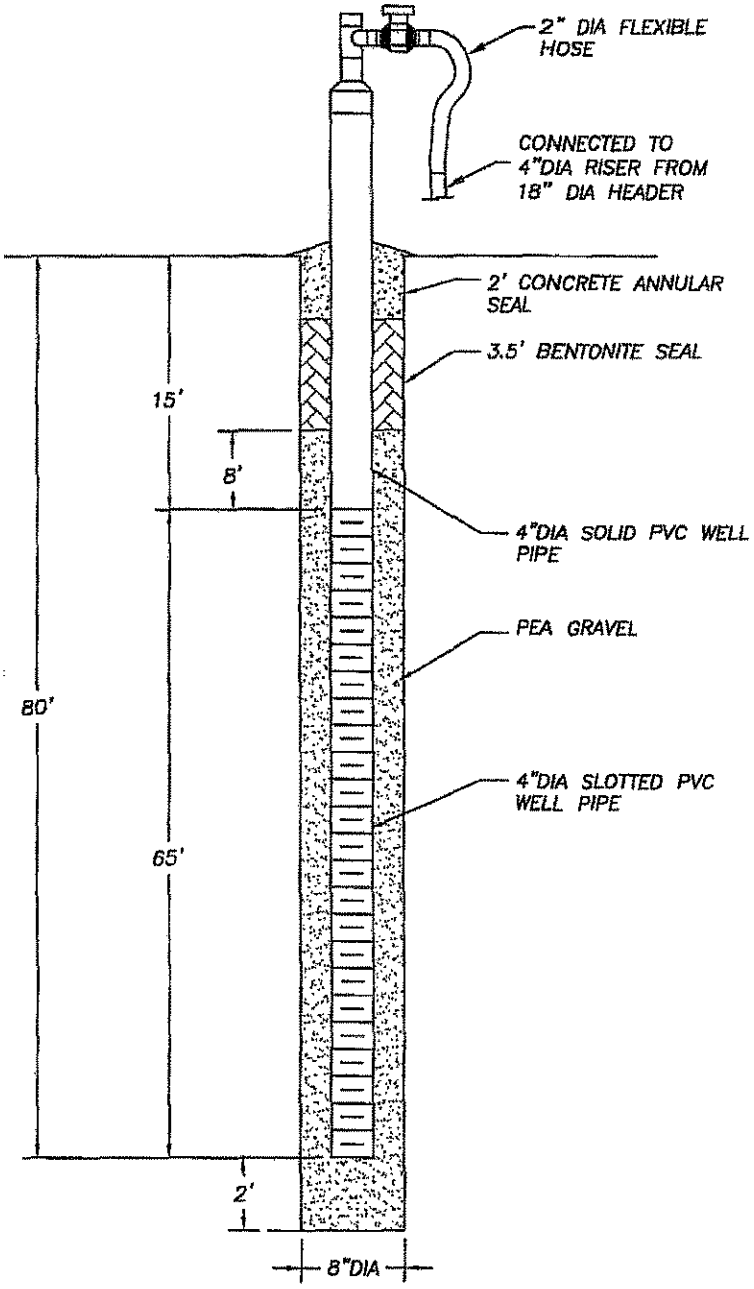

NOTES:

1. A PAINTED DESIGNATION NUMBER AND/OR TAG WILL BE PROVIDED TO IDENTIFY EACH WELL HEAD.
2. DEPTHS ARE APPROXIMATE.

AQUATERRA
ENVIRONMENTAL SOLUTIONS, INC.
141 Market Place Drive, Suite 204
Fairview Heights, Illinois 62208

PGW-36 DETAIL

BRIDGETON LANDFILL, LLC
BRIDGETON, MISSOURI

Project Mgr.	Drawn By	Designed By	Project No.
MSB	AJF	NLH	1684.10
Scale	**Date**	**File Name**	**Drawing No.**
No Scale	11/7/05	PGW-36_DETAIL.dwg	22

MISSOURI DEPARTMENT OF NATURAL RESOURCES
GEOLOGICAL SURVEY AND RESOURCE ASSESSMENT DIVISION
(573) 368-2165

MONITORING WELL CERTIFICATION RECORD

OFFICE USE ONLY	DATE RECEIVED
REF. NO. 388616	
O.R. NO.	CHECK NO.
STATE WELL NUMBER	REVENUE NO.
ENTERED Ph 1 Ph 2 Ph 3	APPROVED BY / ROUTE 1 / 1

INFORMATION SUPPLIED BY PRIMARY CONTRACTOR OR DRILLING CONTRACTOR

OWNER NAME	WELL NUMBER	VARIANCE GRANTED BY THE D.N.R.
Bridgeton Landfill LLC	RGW-36	☐ NO
OWNER ADDRESS	CITY / STATE / ZIP CODE	☒ YES, ATTACH A COPY OF THE VARIANCE
13570 St Charles Rock Rd	Bridgeton / MO / 63044	
SITE NAME	CONTACT NAME	
same	Kal Blake	
SITE ADDRESS	CITY / STATE / ZIP CODE	VARIANCE NUMBER
same		5440

PROPOSED USE OF WELL
☒ GAS MONITORING WELL ☐ MONITORING
☐ EXTRACTION WELL ☐ PIEZOMETER

TYPE OF POTENTIAL SITE
☐ HAZARDOUS MATERIAL ☒ LANDFILL
☐ INITIAL SITE ASSESSMENT ☐ L.U.S.T.
☐ WATER LEVEL DRAWDOWN

MONITORING FOR: (CHECK ALL THAT APPLY)
☐ RADIONUCLIDES ☐ PETROLEUM PRODUCTS ONLY
☐ EXPLOSIVES ☐ METALS ☐ V.O.C.
☐ SVOCS ☐ PESTICIDES/HERBICIDES

SKETCH LOCATION OF WELL INCLUDING MILEAGE ON ALL ROADS TRAVELLED FROM NEAREST TOWNS

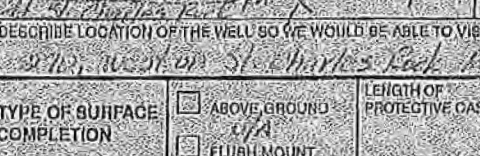

LOCATION OF WELL
LAT. 38° 45' 56"
LONG. 90° 26' 39"
AREA / ELEV
COUNTY St Louis
SMALLEST 1/4 / LARGEST 1/4 / 1/4
SEC. 2 TWN. 46 N RNG. 5 E OR W

DESCRIBE LOCATION OF THE WELL SO WE WOULD BE ABLE TO VISIT THE WELL SITE: NW, West of St. Charles Rock Rd, site on left

DRILLER NOTES: Methane collection well

TYPE OF SURFACE COMPLETION	ABOVE GROUND / FLUSH MOUNT	LENGTH OF PROTECTIVE CASING	DIAMETER OF PROTECTIVE CASING	DIAMETER AND DEPTH OF THE HOLE PROTECTIVE CASING WAS PLACED	PROTECTIVE CASING MATERIAL	LOCKING CAP?
	N/A	FT.	IN.	IN. FT.	☐ STEEL ☐ ALUMINUM ☐ PLASTIC	☐ YES ☒ NO

WEEP HOLE?	VENTED CAP?	LENGTH OF FLUSH MOUNT	DIAMETER OF FLUSH MOUNT	DIAMETER AND DEPTH OF THE HOLE FLUSH MOUNT WAS PLACED	SURFACE COMPLETION GROUT
☐ YES ☐ NO	☐ YES ☐ NO	FT.	IN.	IN. FT.	☐ CONCRETE ☐ OTHER N/A

RISER PIPE DETAIL

LENGTH	DIAMETER	WEIGHT OR BORE	DIAMETER OF DRILL HOLE	MATERIAL	GLUED
15 FT.	4 IN.	80	8" FT.	☐ STEEL ☒ THERMOPLASTIC (PVC) ☐ OTHER	☐ YES ☒ NO

SECONDARY FILTER PACK
☐ SATURATED ZONE ☐ UNSATURATED ZONE HYDRATED ☐ YES ☐ NO
BOTH ZONES ☐ IF YES, HYDRATED ☐ YES ☐ NO N/A

BENTONITE SEAL
LENGTH OF SEAL: 3 FT.
MATERIAL: ☐ SLURRY ☐ PELLETS ☐ GRANULAR ☒ CHIPS

PRIMARY FILTER PACK
LENGTH: 82' 72" FT.
DEPTH TO TOP OF PRIMARY FILTER PACK: 8 FT.
SECONDARY FILTER PACK LENGTH: N/A FT.

ANNULAR SEAL
☐ BENTONITE SLURRY ☒ CEMENT/BENTONITE SLURRY
☐ NON SLURRY BENTONITE TYPE
BAGS OF CEMENT USED 5
% OF BENTONITE USED 5
WATER USED/BAG 2.5 GAL.
LENGTH: 5 FT.

WELL SCREEN

LENGTH	DIAMETER	DIAMETER OF DRILL HOLE	DEPTH TO TOP OF SCREEN	MATERIAL
105 FT.	4 IN.	8" IN.	15 FT.	☐ STEEL ☒ THERMOPLASTIC (PVC) ☐ OTHER

DEPTH FROM	DEPTH TO	FORMATION DESCRIPTION
0	31	Overburden
31	37	Limestone - weathered
37	41	Shale
41	50	Limestone
50	202	Void
202	204	Limestone

MULTIPLE CASED WELLS ☐ YES ☒ NO PUMP INSTALLED FOR REMEDIATION ☐ YES ☒ NO
SUBMIT ADDITIONAL AS BUILT DIAGRAMS SHOWING WELL CONSTRUCTION DETAILS INCLUDING TYPE AND SIZE OF ALL CASING, HOLE DIAMETERS AND GROUT USED

TOTAL DEPTH: 204'

SIGNATURE (PRIMARY CONTRACTOR)	PERMIT NUMBER	STATIC WATER LEVEL FEET FROM MEASURING POINT	DATE WELL DRILLING WAS COMPLETED
X [signature]	2012-0151 WRM		10-12-05

I HEREBY CERTIFY THAT THE MONITORING WELL HEREIN DESCRIBED WAS CONSTRUCTED IN ACCORDANCE WITH THE DEPARTMENT OF NATURAL RESOURCES REQUIREMENTS FOR THE CONSTRUCTION OF MONITORING WELLS.

SIGNATURE (WELL DRILLER)	PERMIT NUMBER	DATE	SIGNATURE (PUMP INSTALLER)	PERMIT NUMBER	DATE
X [signature]	2012-0151 WRM	11-9-05	X N/A		

MAIL ORIGINAL
ENCLOSE $75.00
CERTIFICATION FEE

MO 780-1415 (1-02) DISTRIBUTION: WHITE/DIVISION CANARY/CONTRACTOR PINK/OWNER
RETURN TO: DEPARTMENT OF NATURAL RESOURCES, P.O. BOX 250, ROLLA, MO 65402
MONITORING WELL CERTIFICATION FEE WITHIN 60 DAYS AFTER WELL COMPLETION

Aquaterra Drilling Log

HOLE NO.	SHEET 1 OF 2 SHEETS
PGW-37	

PROJECT NAME: Bridgeton LF Perimeter LFG Wells	DRILLING SUBCONTRACTOR: LAYNE WESTERN
PROJECT NUMBER: 1684.10	NAME OF DRILLER(S): Bill Pinson
LOCATION: Bridgeton LF - Bridgeton, MO	MANUFACTURER'S DESIGNATION OF DRILL: Schramm T660
SURFACE ELEVATION: ≈ 484	SIZES AND TYPES OF DRILLING AND SAMPLING EQUIPMENT: 8¼" id HSA; 8" air rotary; 8" Tricone rotary
OVERBURDEN THICKNESS:	
BEDROCK FOOTAGE:	DRILLING START DATE: 10-13-05 / DRILLING END DATE: 10-14-05
DEPTH GROUNDWATER ENCOUNTERED:	TOTAL NUMBER OF CORE BOXES: Ø / TOTAL NUMBER OF SAMPLES: Ø
DEPTH TO WATER AND ELAPSED TIME AFTER DRILLING COMPLETED:	LOGGED BY: Andy Limmer

DEPTH	DESCRIPTION OF MATERIALS	CLASS.	BLOW COUNTS	RECOVERY	SAMPLE NO.	FIELD SCREENING RESULTS	REMARKS
	Fill: Brown silty CLAY, trace trash	CL		3'			Logged from cuttings
5	5 Olive brown silty CLAY, slight odor of gas	CL		7'			Placed 80 feet of well material to 77 feet - 65 feet of 4-inch id SCH 80 + 15 ft of 4-inch id SCH 80
10						12'	
15	15 Brownish gray silty CLAY to clayey SILT	CL to ML					
25							
30	32 Gravel	GP					
35	34 CLAY	CH					
0							
5							
0							
5	53 Weathered LIMESTONE - Driller noted rock was rubbly -						
0							
	63 Light gray LIMESTONE with dark gray SHALE	LMS					

AQUATERRA ENVIRONMENTAL SOLUTIONS, INC. ANSAS CITY-JEFFERSON CITY-OMAHA-ST. LOUIS	PROJECT NAME: Bridgeton LFG Wells	HOLE NO.: PGW-37

Aquaterra Drilling Log

HOLE NO. PGW-37 | SHEET OF SHEETS 2 2

ECT NAME Bridgeton LF - Add'L LFG Wells | LOGGED BY: AJL / MSB

DESCRIPTION OF MATERIALS	CLASS.	BLOW COUNTS	RECOVERY	SAMPLE NO.	FIELD SCREENING RESULTS	REMARKS
75	LMS			77'		
92						
Boring Terminated @ 92' Plan						
95						

AQUATERRA
ENVIRONMENTAL SOLUTIONS, INC.
KANSAS CITY-JEFFERSON CITY-OMAHA-ST. LOUIS

PROJECT NAME Bridgeton LFG | HOLE NO. PGW-37

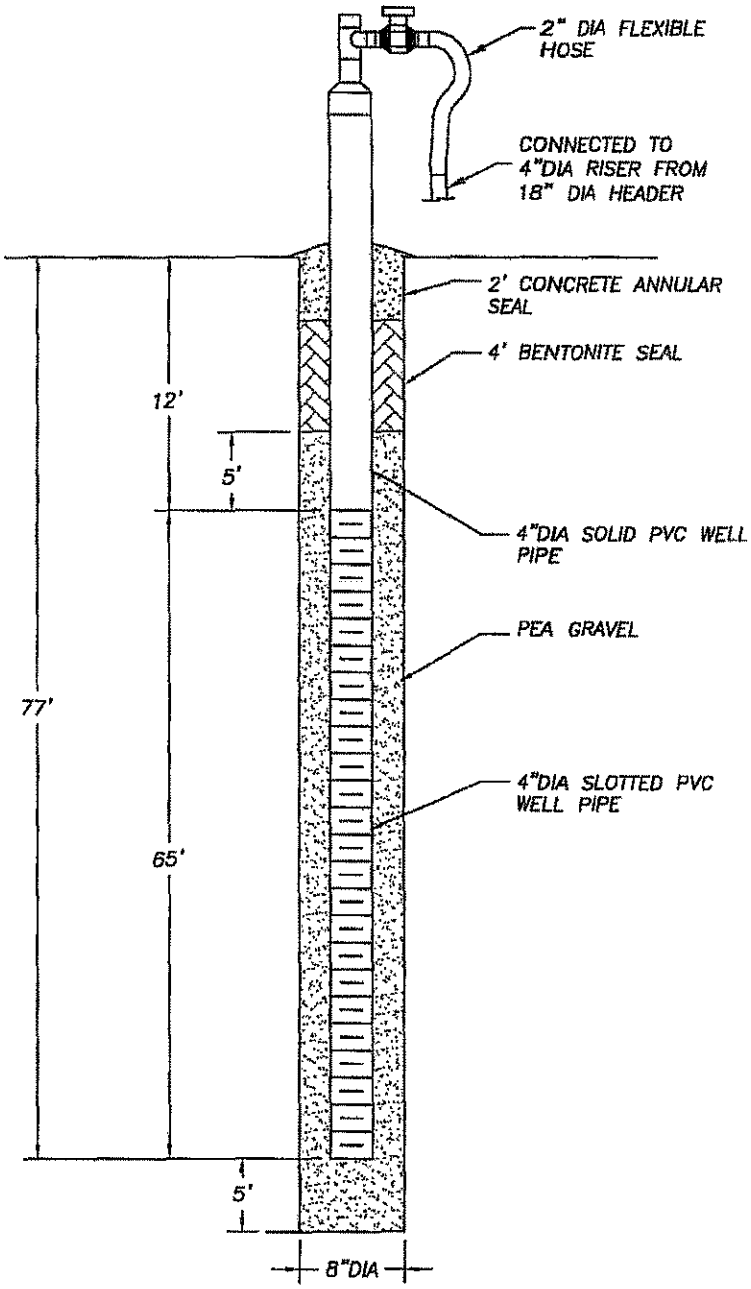

NOTES:

1. A PAINTED DESIGNATION NUMBER AND/OR TAG WILL BE PROVIDED TO IDENTIFY EACH WELL HEAD.
2. DEPTHS ARE APPROXIMATE.

AQUATERRA
ENVIRONMENTAL SOLUTIONS, INC.
141 Market Place Drive, Suite 204
Fairview Heights, Illinois 62208

PGW-37 DETAIL

BRIDGETON LANDFILL, LLC
BRIDGETON, MISSOURI

Project Mgr.	Drawn By	Designed By	Project No.
MSB	AJF	NLH	1684.10
Scale	Date	File Name	Drawing No.
No Scale	11/7/05	PGW-37_DETAIL.dwg	23

MISSOURI DEPARTMENT OF NATURAL RESOURCES
GEOLOGICAL SURVEY AND RESOURCE ASSESSMENT DIVISION
(573) 368-2165

MONITORING WELL CERTIFICATION RECORD

OFFICE USE ONLY	DATE RECEIVED
REF. NO. 359617	
O.R. NO.	CHECK NO.
STATE WELL NUMBER	REVENUE NO.
ENTERED Ph 1 Ph 2 Ph 3	APPROVED BY / ROUTE /

INFORMATION SUPPLIED BY PRIMARY CONTRACTOR OR DRILLING CONTRACTOR

OWNER NAME	WELL NUMBER	VARIANCE GRANTED BY THE D.N.R.
Bridgeton Landfill LLC	MW-37	☐ NO ☒ YES, ATTACH A COPY OF THE VARIANCE

OWNER ADDRESS	CITY	STATE	ZIP CODE
13570 St. Charles Rock Rd	Bridgeton	Mo	63044

SITE NAME	CONTACT NAME
same	Pat Blosser

SITE ADDRESS	CITY	STATE	ZIP CODE	VARIANCE NUMBER
same				NBD

PROPOSED USE OF WELL	TYPE OF POTENTIAL SITE	MONITORING FOR: (CHECK ALL THAT APPLY)
☒ GAS MONITORING WELL ☐ MONITORING	☐ HAZARDOUS MATERIAL ☒ LANDFILL	☐ RADIONUCLIDES ☐ PETROLEUM PRODUCTS ONLY
☐ EXTRACTION WELL ☐ PIEZOMETERS	☐ INITIAL SITE ASSESSMENT ☐ L.U.S.T.	☒ EXPLOSIVES ☐ METALS ☐ V.O.C.
	☐ WATER LEVEL DRAWDOWN	☐ SVOCS ☐ PESTICIDES/HERBICIDES

SKETCH LOCATION OF WELL INCLUDING MILEAGE ON ALL ROADS TRAVELLED FROM NEAREST TOWNS.



LOCATION OF WELL

LAT. 38° 45' 56"
LONG. 90° 30' 30"

AREA ELEV

COUNTY St. Louis

SMALLEST 1/4 1/4 1/4 LARGEST

SEC. 2 TWN. 46 N, RNG. 5 E OR W

DESCRIBE LOCATION OF THE WELL SO WE WOULD BE ABLE TO VISIT THE WELL SITE: NW, west on St. Charles rock Rd, Bridgeton

DRILLER NOTES: Methane extraction well

TYPE OF SURFACE COMPLETION	LENGTH OF PROTECTIVE CASING	DIAMETER OF PROTECTIVE CASING	DIAMETER OF THE HOLE PROTECTIVE CASING WAS PLACED	PROTECTIVE CASING MATERIAL	LOCKING CAP?
☐ ABOVE GROUND ☒ FLUSH MOUNT	FT.	IN.	IN. FT.	☐ STEEL ☐ ALUMINUM ☐ PLASTIC	☒ YES ☐ NO

WEEP HOLE?	VENTED CAP?	LENGTH OF FLUSH MOUNT	DIAMETER OF FLUSH MOUNT	DIAMETER AND DEPTH OF THE HOLE FLUSH MOUNT WAS PLACED	SURFACE COMPLETION GROUT
☐ YES ☐ NO	☒ YES ☐ NO	FT.	IN.	IN. FT.	☐ CONCRETE ☐ OTHER n/a

RISER PIPE DETAIL	LENGTH	DIAMETER	WEIGHT OR SDR#	DIAMETER OF DRILL HOLE	MATERIAL	BENTONITE SEAL	LENGTH OF SEAL	MATERIAL
	15 FT.	4 IN.	sch 80	8" FT.	☐ STEEL ☒ THERMOPLASTIC (PVC) ☐ OTHER		3 FT.	☐ SLURRY ☒ PELLETS ☒ GRANULAR ☒ CHIPS

GLUED	SECONDARY FILTER PACK
☐ YES ☒ NO	☐ SATURATED ZONE ☐ UNSATURATED ZONE HYDRATED ☐ YES ☐ NO BOTH ZONES ☐ IF YES, HYDRATED ☐ YES ☐ NO n/a

PRIMARY FILTER PACK	LENGTH	DEPTH TO TOP OF PRIMARY FILTER PACK	SECONDARY FILTER PACK LENGTH
	62 FT.	7 FT.	n/a FT.

ANNULAR SEAL			LENGTH
	☐ BENTONITE SLURRY ☐ NON SLURRY BENTONITE TYPE	☒ CEMENT/BENTONITE SLURRY BAGS OF CEMENT USED 11 % OF BENTONITE USED 5 WATER USED/BAG 9.0 GAL.	4 FT.

WELL SCREEN	LENGTH	DIAMETER	DIAMETER OF DRILL HOLE	DEPTH TO TOP OF SCREEN	MATERIAL
	65 FT.	4 IN.	8 IN.	10 FT.	☐ STEEL ☒ THERMOPLASTIC (PVC) ☐ OTHER

DEPTH FROM	DEPTH TO	FORMATION DESCRIPTION
0	50	overburden
50	63	Limestone - highly fractured
63	80	Limestone

MULTIPLE CASED WELLS ☐ YES ☒ NO PUMP INSTALLED FOR REMEDIATION ☐ YES ☒ NO

SUBMIT ADDITIONAL AS BUILT DIAGRAMS SHOWING WELL CONSTRUCTION DETAILS INCLUDING TYPE AND SIZE OF ALL CASING, HOLE DIAMETERS AND GROUT USED

TOTAL DEPTH: 80'

SIGNATURE (PRIMARY CONTRACTOR)	PERMIT NUMBER	STATIC WATER LEVEL FEET FROM MEASURING POINT	DATE WELL DRILLING WAS COMPLETED
X	2005111.000		10-14-05

I HEREBY CERTIFY THAT THE MONITORING WELL HEREIN DESCRIBED WAS CONSTRUCTED IN ACCORDANCE WITH THE DEPARTMENT OF NATURAL RESOURCES REQUIREMENTS FOR THE CONSTRUCTION OF MONITORING WELLS

SIGNATURE (WELL DRILLER)	PERMIT NUMBER	DATE	SIGNATURE (PUMP INSTALLER)	PERMIT NUMBER	DATE
X	2005111.000	11-9-05	X n/a		

MO 780-1415 (1-02)

MAIL ORIGINAL
ENCLOSE $75.00
CERTIFICATION FEE

DISTRIBUTION: WHITE/DIVISION CANARY/CONTRACTOR PINK/OWNER
RETURN TO: DEPARTMENT OF NATURAL RESOURCES, P.O. BOX 250, ROLLA, MO 65402
MONITORING WELL CERTIFICATION FEE WITHIN 60 DAYS AFTER WELL COMPLETION

Aquaterra Drilling Log

HOLE NO. PGW-3B | SHEET 1 OF 2 SHEETS

PROJECT NAME: Bridgeton LF LLC Add'l LFG Wells	DRILLING SUBCONTRACTOR: Layne Western
PROJECT NUMBER: 1684.10	NAME OF DRILLER(S): Bill Pinson
LOCATION: Bridgeton, MO	MANUFACTURER'S DESIGNATION OF DRILL: Schramm T660
SURFACE ELEVATION: ≈ 495	SIZES AND TYPES OF DRILLING AND SAMPLING EQUIPMENT:
OVERBURDEN THICKNESS:	
BEDROCK FOOTAGE:	DRILLING START DATE: 10-17-05
DRILLING END DATE:	
DEPTH GROUNDWATER ENCOUNTERED: ≈ 20	TOTAL NUMBER OF CORE BOXES: 0
TOTAL NUMBER OF SAMPLES: 0	
DEPTH TO WATER AND ELAPSED TIME AFTER DRILLING COMPLETED:	LOGGED BY: Andy Limmer

DEPTH	DESCRIPTION OF MATERIALS	CLASS.	BLOW COUNTS	RECOVERY	SAMPLE NO.	FIELD SCREENING RESULTS	REMARKS
0	Fill: Brown silty clay + clayey SILT	CL-ML		8' TO 13' 5'	ENVIROPLUG		Logged from cuttings
12	Olive brown clayey SILT	CL-ML					
25	Light gray SILT with	ML					
30	Yellow Sand						
32	Light gray LIMESTONE	Lms					
	Tan CLAY	CH					
52	Light gray LIMESTONE with dark gray SHALE	Lms					Water @ Lms @ 52'. Gas odor below 52'

AQUATERRA ENVIRONMENTAL SOLUTIONS, INC. KANSAS CITY-JEFFERSON CITY-OMAHA-ST. LOUIS

PROJECT NAME: Bridgeton LF Add'l LFG Wells

HOLE NO.: PGW-3B

Aquaterra Drilling Log

HOLE NO. PGW-38 | SHEET OF SHEETS 2 2

PROJECT NAME: Bridgeton | LOGGED BY: MJL

DESCRIPTION OF MATERIALS	CLASS.	BLOW COUNTS	RECOVERY	SAMPLE NO.	FIELD SCREENING RESULTS	REMARKS
75						
90						
95 Boring Term. @ 82 Ft						

AQUATERRA
ENVIRONMENTAL SOLUTIONS, INC.
JEFFERSON CITY-OMAHA-ST. LOUIS

PROJECT NAME: Bridgeton LF Perimeter Gas Wells

HOLE NO. PGW-38

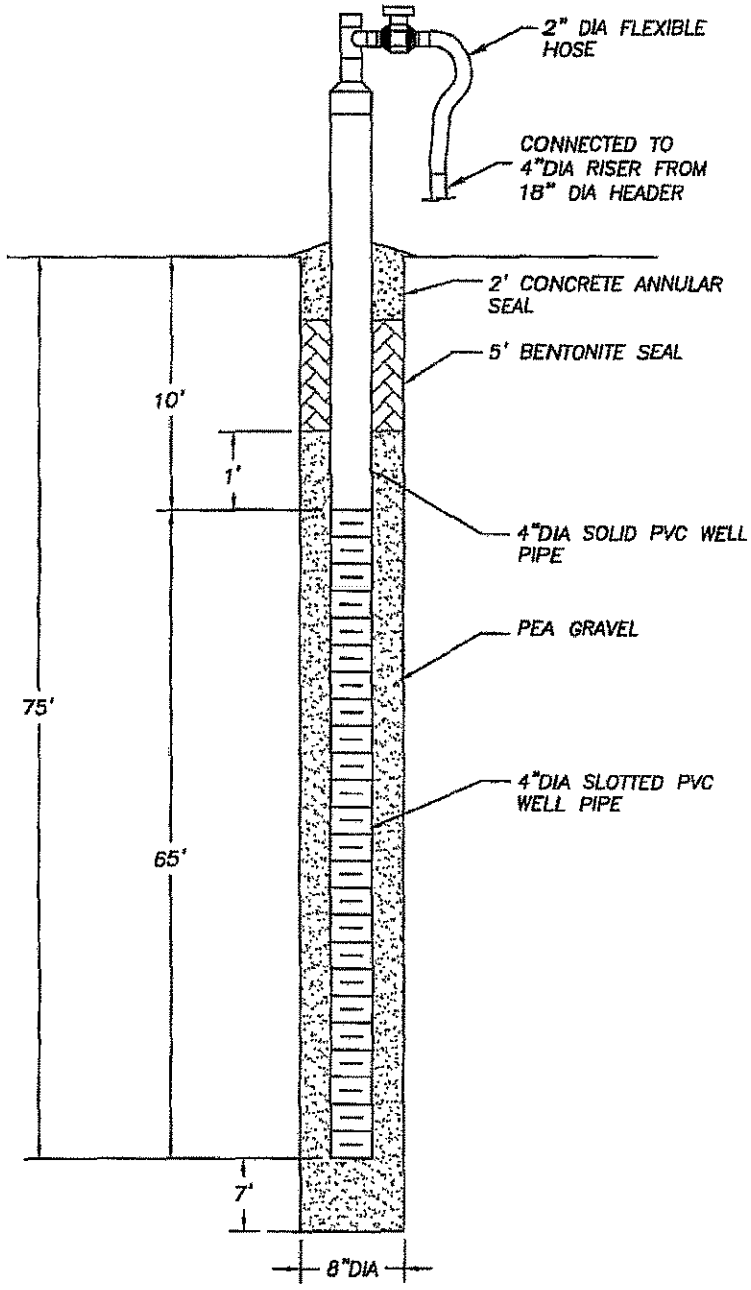

NOTES:

1. A PAINTED DESIGNATION NUMBER AND/OR TAG WILL BE PROVIDED TO IDENTIFY EACH WELL HEAD.
2. DEPTHS ARE APPROXIMATE.

AQUATERRA
ENVIRONMENTAL SOLUTIONS, INC.
141 Market Place Drive, Suite 204
Fairview Heights, Illinois 62208

PGW-38 DETAIL

BRIDGETON LANDFILL, LLC
BRIDGETON, MISSOURI

Project Mgr.	Drawn By	Designed By	Project No.
MSB	AJF	NLH	1684.10
Scale	**Date**	**File Name**	**Drawing No.**
No Scale	11/7/05	PGW-38_DETAIL.dwg	24

MISSOURI DEPARTMENT OF NATURAL RESOURCES
GEOLOGICAL SURVEY AND RESOURCE ASSESSMENT DIVISION
(573) 368-2165

MONITORING WELL CERTIFICATION RECORD

OFFICE USE ONLY	DATE RECEIVED
REF. NO. 35961.8	
C.R. NO.	CHECK NO.
STATE WELL NUMBER	REVENUE NO.
ENTERED Ph 1 Ph 2 Ph 3	APPROVED BY / ROUTE /

INFORMATION SUPPLIED BY PRIMARY CONTRACTOR OR DRILLING CONTRACTOR

OWNER NAME	WELL NUMBER	VARIANCE GRANTED BY THE D.N.R
Bridgeton Landfill LLC	PSMW-35	☐ NO ☒ YES, ATTACH A COPY OF THE VARIANCE

OWNER ADDRESS	CITY	STATE	ZIP CODE
13570 St. Charles Rock Rd	Bridgeton	Mo	63044

SITE NAME	CONTACT NAME
Same	Paul Place

SITE ADDRESS	CITY	STATE	ZIP CODE	VARIANCE NUMBER
Same				2760

PROPOSED USE OF WELL
☒ GAS MONITORING WELL ☐ MONITORING
☐ EXTRACTION WELL ☐ PIEZOMETERS

TYPE OF POTENTIAL SITE
☐ HAZARDOUS MATERIAL ☒ LANDFILL
☐ INITIAL SITE ASSESSMENT ☐ U.S.T.
☐ WATER LEVEL DRAWDOWN

MONITORING FOR: (CHECK ALL THAT APPLY)
☐ RADIONUCLIDES ☐ PETROLEUM PRODUCTS ONLY
☐ EXPLOSIVES ☐ METALS ☐ V.O.C.
☐ SVOCS ☐ PESTICIDES/HERBICIDES

SKETCH LOCATION OF WELL INCLUDING MILEAGE ON ALL ROADS TRAVELLED FROM NEAREST TOWN.

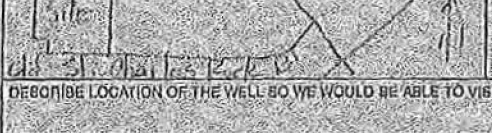

LOCATION OF WELL
LAT. ____ LONG. ____
AREA ____ ELEV ____
COUNTY ____
SMALLEST ____ LARGEST ____
¼ ____ ¼ ____ ¼
SEC. ____ TWN. ____ N RNG ____ E OR W

DESCRIBE LOCATION OF THE WELL SO WE WOULD BE ABLE TO VISIT THE WELL SITE

DRILLER NOTES:

TYPE OF SURFACE COMPLETION	LENGTH OF PROTECTIVE CASING	DIAMETER OF PROTECTIVE CASING	DIAMETER AND DEPTH OF THE HOLE PROTECTIVE CASING WAS PLACED	PROTECTIVE CASING MATERIAL	LOCKING CAP?
☐ ABOVE GROUND N/A ☐ FLUSH MOUNT	FT.	IN.	IN. FT.	☐ STEEL ☐ ALUMINUM ☐ PLASTIC	☐ YES ☐ NO

WEEP HOLE?	VENTED CAP?	LENGTH OF FLUSH MOUNT	DIAMETER OF FLUSH MOUNT	DIAMETER AND DEPTH OF THE HOLE FLUSH MOUNT WAS PLACED	SURFACE COMPLETION GROUT
☐ YES ☐ NO	☐ YES ☐ NO	FT.	IN.	IN. FT.	☐ CONCRETE ☐ OTHER N/A

RISER PIPE DETAIL	LENGTH	DIAMETER	WEIGHT OR SDR#	DIAMETER OF DRILL HOLE	MATERIAL	BENTONITE SEAL	LENGTH OF SEAL	MATERIAL
	15 FT.	4 IN.	80	8 FT.	☐ STEEL ☒ THERMOPLASTIC (PVC) ☐ OTHER		3 FT.	☐ SLURRY ☐ PELLETS ☐ GRANULAR ☒ CHIPS

GLUED	SECONDARY FILTER PACK
☐ YES ☒ NO	☐ SATURATED ZONE ☐ UNSATURATED ZONE HYDRATED ☐ YES ☐ NO BOTH ZONES ☐ IF YES, HYDRATED ☐ YES ☐ NO N/A

PRIMARY FILTER PACK	LENGTH	DEPTH TO TOP OF PRIMARY FILTER PACK	SECONDARY FILTER PACK LENGTH
	63 FT.	2 FT.	N/A FT.

ANNULAR SEAL			LENGTH
☐ BENTONITE SLURRY ☐ NON SLURRY BENTONITE TYPE	☐ CEMENT/BENTONITE SLURRY	BAGS OF CEMENT USED 5 % OF BENTONITE USED 5 WATER USED/BAG 2.5 GAL	5 FT.

WELL SCREEN	LENGTH	DIAMETER	DIAMETER OF DRILL HOLE	DEPTH TO TOP OF SCREEN	MATERIAL
	65 FT.	4 IN.	8 IN.	10 FT.	☐ STEEL ☒ THERMOPLASTIC (PVC) ☐ OTHER

DEPTH FROM	DEPTH TO	FORMATION DESCRIPTION
0	13	Overburden
13	35	clay
35	37	Limestone (fractured)
37	58	clay
58	60	Limestone
60	75	Limestone w/ intermittent chert
75	80	Limestone

MULTIPLE CASED WELLS ☐ YES ☒ NO PUMP INSTALLED FOR REMEDIATION ☐ YES ☒ NO

SUBMIT ADDITIONAL AS BUILT DIAGRAMS SHOWING WELL CONSTRUCTION DETAILS INCLUDING TYPE AND SIZE OF ALL CASING, HOLE DIAMETERS AND GROUT USED

TOTAL DEPTH: 80'

SIGNATURE (PRIMARY CONTRACTOR)	PERMIT NUMBER	STATIC WATER LEVEL FEET FROM MEASURING POINT	DATE WELL DRILLING WAS COMPLETED
[signature]	C-2525 WPM		11-4-05

I HEREBY CERTIFY THAT THE MONITORING WELL HEREIN DESCRIBED WAS CONSTRUCTED IN ACCORDANCE WITH THE DEPARTMENT OF NATURAL RESOURCES REQUIREMENTS FOR THE CONSTRUCTION OF MONITORING WELLS.

SIGNATURE (WELL DRILLER)	PERMIT NUMBER	DATE	SIGNATURE (PUMP INSTALLER)	PERMIT NUMBER	DATE
X [signature]	170	11-4-05	X N/A		

MAIL ORIGINAL
ENCLOSE $75.00
CERTIFICATION FEE

MO 780-1415 (1-02) ...ION: WHITE-DIVISION CANARY-CONTRACTOR PINK-OWNER
...DEPARTMENT OF NATURAL RESOURCES, P.O. BOX 250, ROLLA, MO 65402
...ING WELL CERTIFICATION FEE WITHIN 60 DAYS AFTER WELL COMPLETION

Aquaterra Drilling Log

HOLE NO. PGW-39 | SHEET 1 OF SHEETS

PROJECT NAME: Bridgeton LF Add'l LFG Wells	DRILLING SUBCONTRACTOR: Layne Western
PROJECT NUMBER: 16P4.10	NAME OF DRILLER(S): Bill Pinson
LOCATION: Bridgeton, MO	MANUFACTURER'S DESIGNATION OF DRILL: Schramm T660
SURFACE ELEVATION: ± 485'	SIZES AND TYPES OF DRILLING AND SAMPLING EQUIPMENT:
OVERBURDEN THICKNESS:	
BEDROCK FOOTAGE:	DRILLING START DATE: 10-18-05 / DRILLING END DATE:
DEPTH GROUNDWATER ENCOUNTERED:	TOTAL NUMBER OF CORE BOXES: / TOTAL NUMBER OF SAMPLES:
DEPTH TO WATER AND ELAPSED TIME AFTER DRILLING COMPLETED:	LOGGED BY: Michele Boussard

DEPTH	DESCRIPTION OF MATERIALS	CLASS.	BLOW COUNTS	RECOVERY	SAMPLE NO.	FIELD SCREENING RESULTS	REMARKS
5	Brown silty clay			6' TO 11'	5 BAGS ENVIROFLUX		Logged from cuttings
10							
15							
20	clayey silt - brown						TOP OF WELL 5' ABOVE GROUND SURFACE
25	sandy silty clay						
28							
30	dark brown silt w. very fine sand						
32							
35	gray silty sand clay						
	37' ST LIMESTONE TOP						
40	41' SHALE TOP						
42	light gray limestone						
45							
50	shale						
55							
60							
65							

AQUATERRA
ENVIRONMENTAL SOLUTIONS, INC.
KANSAS CITY-JEFFERSON CITY-OMAHA-ST. LOUIS

PROJECT NAME: Bridgeton LF add'l LFG Wells

HOLE NO.: PGW-39

Aquaterra Drilling Log

HOLE NO. | SHEET OF SHEETS

PROJECT NAME: Additional Perimeter LFG Collection Wells | LOGGED BY: MAB

DEPTH	DESCRIPTION OF MATERIALS	CLASS.	BLOW COUNTS	RECOVERY	SAMPLE NO.	FIELD SCREENING RESULTS	REMARKS
75	Shale						
80							
92	total depth						

AQUATERRA
ENVIRONMENTAL SOLUTIONS, INC.
KANSAS CITY-JEFFERSON CITY-OMAHA-ST. LOUIS

PROJECT NAME | HOLE NO.

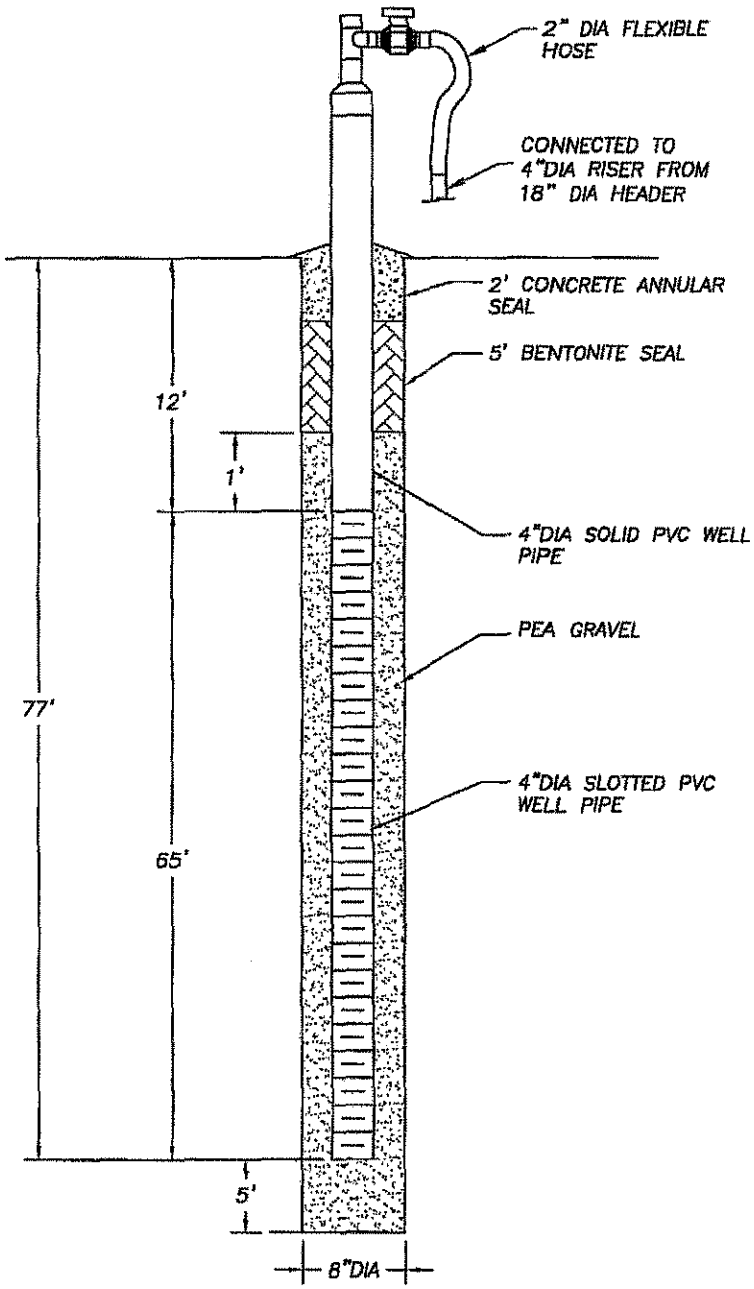

NOTES:

1. A PAINTED DESIGNATION NUMBER AND/OR TAG WILL BE PROVIDED TO IDENTIFY EACH WELL HEAD.
2. DEPTHS ARE APPROXIMATE.

AQUATERRA
ENVIRONMENTAL SOLUTIONS, INC.
141 Market Place Drive, Suite 204
Fairview Heights, Illinois 62208

PGW-39 DETAIL

BRIDGETON LANDFILL, LLC
BRIDGETON, MISSOURI

Project Mgr.	Drawn By	Designed By	Project No.
MSB	AJF	NLH	1684.10
Scale	Date	File Name	Drawing No.
No Scale	11/7/05	PGW-39_DETAIL.dwg	25

MISSOURI DEPARTMENT OF NATURAL RESOURCES
GEOLOGICAL SURVEY AND RESOURCE ASSESSMENT DIVISION
(573) 368-2165

MONITORING WELL CERTIFICATION RECORD

OFFICE USE ONLY	DATE RECEIVED
REF. NO. 350612	
C.R. NO.	CHECK NO.
STATE WELL NUMBER	REVENUE NO.
ENTERED Ph 1 Ph 2 Ph 3	APPROVED BY / ROUTE /

INFORMATION SUPPLIED BY PRIMARY CONTRACTOR OR DRILLING CONTRACTOR

OWNER NAME	WELL NUMBER	VARIANCE GRANTED BY THE D.N.R.
Bridgeton Landfill LLC	RW-38	☐ NO
OWNER ADDRESS	CITY / STATE / ZIP CODE	☒ YES, ATTACH A COPY OF THE VARIANCE
13570 St. Charles Rock Rd	Bridgeton / MO / 63044	
SITE NAME	CONTACT NAME	
Same	Paul Sheetz	
SITE ADDRESS	CITY / STATE / ZIP CODE	VARIANCE NUMBER
Same		1750

PROPOSED USE OF WELL	TYPE OF POTENTIAL SITE	MONITORING FOR: (CHECK ALL THAT APPLY)
☒ GAS MONITORING WELL ☐ MONITORING	☐ HAZARDOUS MATERIAL ☒ LANDFILL	☐ RADIONUCLIDES ☐ PETROLEUM PRODUCTS ONLY
☐ EXTRACTION WELL ☐ PIEZOMETER	☐ INITIAL SITE ASSESSMENT ☐ L.U.S.T.	☐ EXPLOSIVES ☐ METALS ☐ V.O.C.
	☐ WATER LEVEL DRAWDOWN	☐ SVOCS ☐ PESTICIDES/HERBICIDES

SKETCH LOCATION OF WELL, INCLUDING MILEAGE ON ALL ROADS TRAVELLED FROM NEAREST TOWNS.



LOCATION OF WELL: LAT. 38 ° 45 ' 37 " LONG. 90 ° 26 ' 31 "
AREA ELEV
COUNTY St. Louis
SMALLEST 1/4 1/4 LARGEST 1/4
SEC. 6 TWN. 46 N. RNG. 5 E OR W

DESCRIBE LOCATION OF THE WELL SO WE WOULD BE ABLE TO VISIT THE WELL SITE: 3/4 West on St. Charles Rock Rd, site on left
DRILLER NOTES: Methane collection well

TYPE OF SURFACE COMPLETION	LENGTH OF PROTECTIVE CASING	DIAMETER OF PROTECTIVE CASING	DIAMETER AND DEPTH OF THE HOLE PROTECTIVE CASING WAS PLACED	PROTECTIVE CASING MATERIAL	LOCKING CAP?
☐ ABOVE GROUND ☐ FLUSH MOUNT N/A	FT.	IN.	IN. FT.	☐ STEEL ☐ ALUMINUM ☒ PLASTIC	☐ YES ☒ NO

WEEP HOLE?	VENTED CAP?	LENGTH OF FLUSH MOUNT	DIAMETER OF FLUSH MOUNT	DIAMETER AND DEPTH OF THE HOLE FLUSH MOUNT WAS PLACED	SURFACE COMPLETION GROUT
☐ YES ☐ NO	☐ YES ☐ NO	FT.	IN.	IN. FT.	☐ CONCRETE ☐ OTHER N/A

RISER PIPE DETAIL	LENGTH	DIAMETER	WEIGHT OR SDR#	DIAMETER OF DRILL HOLE	MATERIAL	BENTONITE SEAL	LENGTH OF SEAL	MATERIAL
	15 FT.	4 IN.	80	8" FT.	☐ STEEL ☒ THERMOPLASTIC (PVC) ☐ OTHER		3 FT.	☐ SLURRY ☐ PELLETS ☐ GRANULAR ☒ CHIPS

GLUED	SECONDARY FILTER PACK
☐ YES ☒ NO	☐ SATURATED ZONE ☐ UNSATURATED ZONE HYDRATED ☐ YES ☐ NO BOTH ZONES ☐ IF YES, HYDRATED ☐ YES ☐ NO N/A

PRIMARY FILTER PACK	LENGTH	DEPTH TO TOP OF PRIMARY FILTER PACK	SECONDARY FILTER PACK LENGTH
	10 FT.	7 FT.	N/A FT.

ANNULAR SEAL			LENGTH
	☐ BENTONITE SLURRY ☐ NON SLURRY BENTONITE TYPE	☒ CEMENT/BENTONITE SLURRY BAGS OF CEMENT USED 4 % OF BENTONITE USED 5 WATER USED/BAG 5.0 GAL	4 FT.

WELL SCREEN	LENGTH	DIAMETER	DIAMETER OF DRILL HOLE	DEPTH TO TOP OF SCREEN	MATERIAL
	15 FT.	4 IN.	8 IN.	15 FT.	☐ STEEL ☒ THERMOPLASTIC (PVC) ☐ OTHER

DEPTH FROM	DEPTH TO	FORMATION DESCRIPTION
0	37	Overburden
37	43	Limestone
43	58	Shale
58	64	Limestone
64	66	Limestone w/shale layers
66	80	Shale

MULTIPLE CASED WELLS ☐ YES ☒ NO PUMP INSTALLED FOR REMEDIATION ☐ YES ☒ NO
SUBMIT ADDITIONAL AS BUILT DIAGRAMS SHOWING WELL CONSTRUCTION DETAILS INCLUDING TYPE AND SIZE OF ALL CASING, HOLE DIAMETERS AND GROUT USED

TOTAL DEPTH: 80'

SIGNATURE (PRIMARY CONTRACTOR)	PERMIT NUMBER	STATIC WATER LEVEL FEET FROM MEASURING POINT	DATE WELL DRILLING WAS COMPLETED
	2012-0128		10-19-05

I HEREBY CERTIFY THAT THE MONITORING WELL HEREIN DESCRIBED WAS CONSTRUCTED IN ACCORDANCE WITH THE DEPARTMENT OF NATURAL RESOURCES REQUIREMENTS FOR THE CONSTRUCTION OF MONITORING WELLS.

SIGNATURE (WELL DRILLER)	PERMIT NUMBER	DATE	SIGNATURE (PUMP INSTALLER)	PERMIT NUMBER	DATE
X	2012-0128	11-9-05	X N/A		

MO 780-1415 (1-02)

DISTRIBUTION: WHITE/DIVISION CANARY/CONTRACTOR PINK/OWNER
RETURN TO: DEPARTMENT OF NATURAL RESOURCES, P.O. BOX 250, ROLLA, MO 65402
MONITORING WELL CERTIFICATION FEE WITHIN 60 DAYS AFTER WELL COMPLETION

MAIL ORIGINAL
ENCLOSE $75.00
CERTIFICATION FEE

Aquaterra Drilling Log

HOLE NO. PGW-40 | SHEET 1 OF 2 SHEETS

PROJECT NAME: Additional Perimeter LFG Collection Wells	DRILLING SUBCONTRACTOR: Layne-Western
PROJECT NUMBER: 10894.10	NAME OF DRILLER(S): Bill Pinson
LOCATION: Biglocetton Landfill	MANUFACTURER'S DESIGNATION OF DRILL: Schramm T660
HOLE LOCATION: PGW-40	SIZES AND TYPES OF DRILLING AND SAMPLING EQUIPMENT: 8¼" ID HSA; 8" Rotary Air
SURFACE ELEVATION: 485 ±	
OVERBURDEN THICKNESS: 37	DRILLING START DATE: 10-19-05 / DRILLING END DATE: 10-20-05
DEPTH DRILLED INTO ROCK: 45	DEPTH GROUNDWATER ENCOUNTERED:
TOTAL DEPTH OF HOLE: 82	DEPTH TO WATER AND ELAPSED TIME AFTER DRILLING COMPLETED:

GEOTECHNICAL SAMPLES (TOTAL)	DISTURBED	UNDISTURBED	TOTAL NUMBER OF CORE BOXES

SAMPLES FOR CHEMICAL ANALYSIS (TOTAL)	(SPECIFY)	(SPECIFY)	(SPECIFY)	(SPECIFY)	(SPECIFY)	TOTAL CORE RECOVERY

DISPOSITION OF HOLE	BACKFILLED	MONITORING WELL	OTHER (SPECIFY)	SIGNATURE OF INSPECTOR

DEPTH	DESCRIPTION OF MATERIALS	FIELD SCREENING RESULTS	GEOTECH SAMPLE RESULTS	ANALYTICAL SAMPLE NO.	TIME	REMARKS
0					1330	
5				5'		65' SCREEN 4" SCH 80 #20 PVC
10	TAN CLAY	BENTONITE PLUG		10' 12'		15' SOLID 4" SCH 80 PVC
15						5 BAGS OF 50 lb. ENVIROPLUG
20						56 BAGS OF BACKFILL MATERIAL
25	27'				↑ 10-19-05 ↓	
30	GRAY CLAY					
35	33' WET SILTY SANDY GRAY CLAY				1500 0800 ↓	
40	37'					
45	LIMESTONE BEDROCK				10-20-05	
50						

AQUATERRA ENVIRONMENTAL SOLUTIONS, INC.

PROJECT NAME: Additional Perimeter LFG Perimeter Wells | HOLE NO.: PGW-40

Aquaterra Drilling Log

HOLE NO. PGW-40 | SHEET 2 OF SHEETS 2

PROJECT NAME: Additional Perimeter LFG Collection Wells

LOGGED BY: Terry L. Mueller

DESCRIPTION OF MATERIALS	CLASS.	BLOW COUNTS	RECOVERY	SAMPLE NO.	FIELD SCREENING RESULTS	REMARKS
LIMESTONE BEDROCK			77'		10-20-05	
82'			82'		0 0 0	

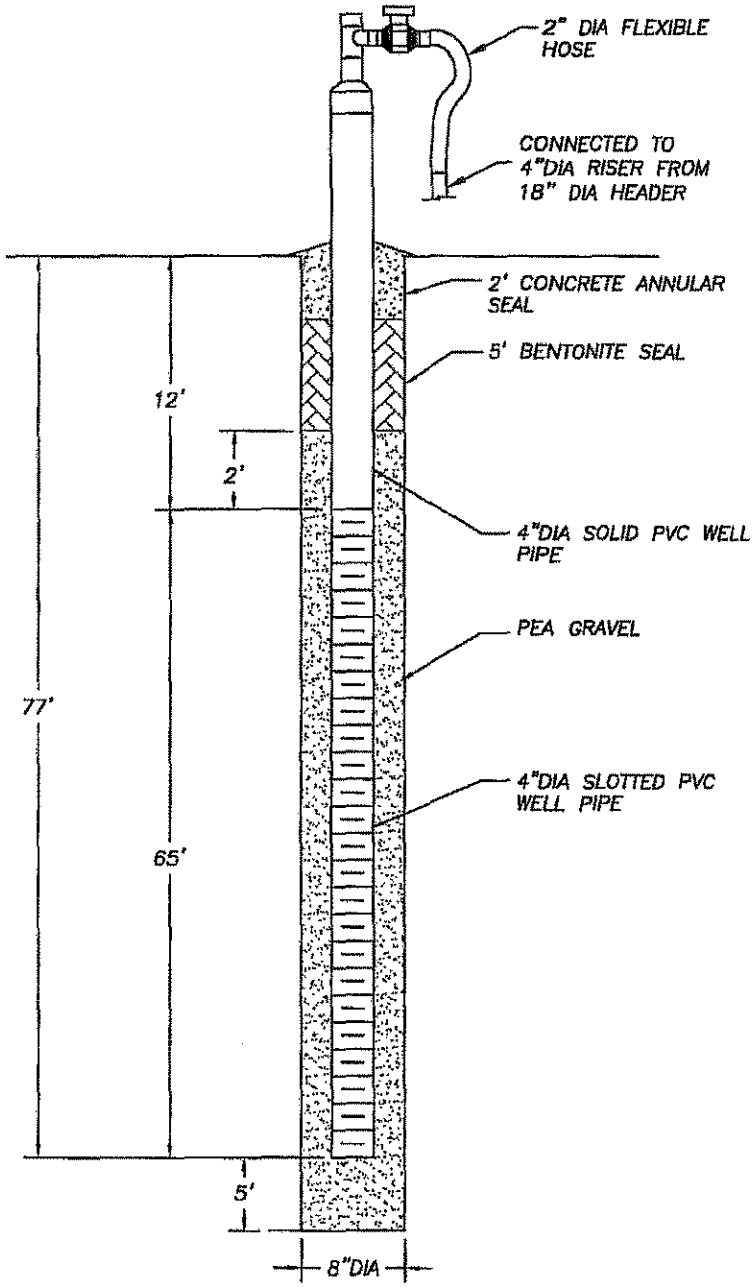

NOTES:

1. A PAINTED DESIGNATION NUMBER AND/OR TAG WILL BE PROVIDED TO IDENTIFY EACH WELL HEAD.
2. DEPTHS ARE APPROXIMATE.

AQUATERRA
ENVIRONMENTAL SOLUTIONS, INC.
141 Market Place Drive, Suite 204
Fairview Heights, Illinois 62208

PGW-40 DETAIL

BRIDGETON LANDFILL, LLC
BRIDGETON, MISSOURI

Project Mgr.	Drawn By	Designed By	Project No.
MSB	AJF	NLH	1684.10
Scale	Date	File Name	Drawing No.
No Scale	11/7/05	PGW-40_DETAIL.dwg	26

MISSOURI DEPARTMENT OF NATURAL RESOURCES
GEOLOGICAL SURVEY AND RESOURCE ASSESSMENT DIVISION
(573) 368-2165

MONITORING WELL CERTIFICATION RECORD

OFFICE USE ONLY	DATE RECEIVED
REF. NO. 359819	
C.R. NO.	CHECK NO.
STATE WELL NUMBER	REVENUE NO.
ENTERED Ph 1 Ph 2 Ph 3	APPROVED BY	ROUTE 1 / 1

INFORMATION SUPPLIED BY PRIMARY CONTRACTOR OR DRILLING CONTRACTOR

OWNER NAME: Bridgeton Landfill LLC
WELL NUMBER: PGW-40
VARIANCE GRANTED BY THE D.N.R.: ☐ NO ☒ YES, ATTACH A COPY OF THE VARIANCE

OWNER ADDRESS: 13570 St. Charles Rock Rd
CITY: Bridgeton
STATE: MO
ZIP CODE: 63044

SITE NAME: same
CONTACT NAME: Rick Bloss

SITE ADDRESS: same
CITY:
STATE:
ZIP CODE:
VARIANCE NUMBER: 21812

PROPOSED USE OF WELL: ☒ GAS MONITORING WELL ☐ MONITORING ☐ EXTRACTION WELL ☒ PIEZOMETERS

TYPE OF POTENTIAL SITE: ☐ HAZARDOUS MATERIAL ☒ LANDFILL ☐ INITIAL SITE ASSESSMENT ☐ L.U.S.T. ☐ WATER LEVEL DRAWDOWN

MONITORING FOR: (CHECK ALL THAT APPLY) ☐ RADIONUCLIDES ☐ PETROLEUM PRODUCTS ONLY ☐ EXPLOSIVES ☐ METALS ☐ V.O.C. ☐ SVOCS ☐ PESTICIDES/HERBICIDES

SKETCH LOCATION OF WELL INCLUDING MILEAGE ON ALL ROADS TRAVELLED FROM NEAREST TOWNS:
St. Charles Rock Rd
Site
Off St. Charles Rock Rd
N

LOCATION OF WELL: LAT. 38° 45' 47" LONG. 90° 26' 31"
AREA:
ELEV:
COUNTY: St Louis
SMALLEST 1/4 LARGEST 1/4 1/4
SEC. 6 TWN. 44 N. RNG. 5 E OR W

DESCRIBE LOCATION OF THE WELL SO WE WOULD BE ABLE TO VISIT THE WELL SITE: 290 West on St. Charles Rock Rd, site on left
DRILLER NOTES: Methane extraction well

TYPE OF SURFACE COMPLETION	LENGTH OF PROTECTIVE CASING	DIAMETER OF PROTECTIVE CASING	DIAMETER AND DEPTH OF THE HOLE PROTECTIVE CASING WAS PLACED	PROTECTIVE CASING MATERIAL	LOCKING CAP?
☐ ABOVE GROUND ☐ FLUSH MOUNT n/a	FT.	IN.	IN. FT.	☒ STEEL ☐ ALUMINUM ☐ PLASTIC	☐ YES ☐ NO

WEEP HOLE?	VENTED CAP?	LENGTH OF FLUSH MOUNT	DIAMETER OF FLUSH MOUNT	DIAMETER AND DEPTH OF THE HOLE FLUSH MOUNT WAS PLACED	SURFACE COMPLETION GROUT
☐ YES ☐ NO	☐ YES ☐ NO	FT.	IN.	IN. FT.	☐ CONCRETE ☐ OTHER n/a

RISER PIPE DETAIL

LENGTH	DIAMETER	WEIGHT OR SCH#	DIAMETER OF DRILL HOLE	MATERIAL
15 FT.	4 IN.	80	8" FT.	☐ STEEL ☒ THERMOPLASTIC (PVC) ☐ OTHER

GLUED: ☐ YES ☒ NO

BENTONITE SEAL

LENGTH OF SEAL	MATERIAL
3 FT.	☐ SLURRY ☐ PELLETS ☐ GRANULAR ☒ CHIPS

SECONDARY FILTER PACK

☐ SATURATED ZONE ☐ UNSATURATED ZONE HYDRATED ☐ YES ☐ NO
BOTH ZONES ☐ IF YES, HYDRATED ☐ YES ☐ NO n/a

PRIMARY FILTER PACK

LENGTH	DEPTH TO TOP OF PRIMARY FILTER PACK	SECONDARY FILTER PACK LENGTH
18 FT.	7 FT.	n/a FT.

ANNULAR SEAL

☐ BENTONITE SLURRY ☐ CEMENT/BENTONITE SLURRY
☐ NON SLURRY BENTONITE TYPE
BAGS OF CEMENT USED: 4
% OF BENTONITE USED: 5
WATER USED/BAG: 2 GAL
LENGTH: 1 FT.

WELL SCREEN

LENGTH	DIAMETER	DIAMETER OF DRILL HOLE	DEPTH TO TOP OF SCREEN	MATERIAL
15 FT.	4 IN.	8 IN.	10 FT.	☐ STEEL ☒ THERMOPLASTIC (PVC) ☐ OTHER

DEPTH FROM	DEPTH TO	FORMATION DESCRIPTION
0	37	Overburden
37	18	Limestone bedrock
18	60	Limestone

MULTIPLE CASED WELLS ☐ YES ☒ NO PUMP INSTALLED FOR REMEDIATION ☐ YES ☒ NO
SUBMIT ADDITIONAL AS BUILT DIAGRAMS SHOWING WELL CONSTRUCTION DETAILS INCLUDING TYPE AND SIZE OF ALL CASING, HOLE DIAMETERS AND GROUT USED

TOTAL DEPTH: 60'

SIGNATURE (PRIMARY CONTRACTOR)	PERMIT NUMBER	STATIC WATER LEVEL FEET FROM MEASURING POINT	DATE WELL DRILLING WAS COMPLETED
	2005110111		10-26-05

I HEREBY CERTIFY THAT THE MONITORING WELL HEREIN DESCRIBED WAS CONSTRUCTED IN ACCORDANCE WITH THE DEPARTMENT OF NATURAL RESOURCES REQUIREMENTS FOR THE CONSTRUCTION OF MONITORING WELLS.

SIGNATURE (WELL DRILLER)	PERMIT NUMBER	DATE	SIGNATURE (PUMP INSTALLER)	PERMIT NUMBER	DATE
X	2005110111	11-4-05	X n/a		

MO 780-1415 (1-02)

MAIL ORIGINAL
ENCLOSE $75.00
CERTIFICATION FEE

DISTRIBUTION: WHITE/DIVISION CANARY/CONTRACTOR PINK/OWNER
MAIL TO: DEPARTMENT OF NATURAL RESOURCES, P.O. BOX 250, ROLLA, MO 65402
MONITORING WELL CERTIFICATION FEE WITHIN 60 DAYS AFTER WELL COMPLETION

Layne-Western Company

A Layne Company
2399 Cassens Drive • Fenton, Missouri 63026

FIELD BORING LOG

Boring No. 12
PGW-41

Project Bridgeton Landfill Job No. 87845 Date 8-19-08

Location Bridgeton MO Crew Bill Pinson

Drilling Method: ☐ HSA ☐ CFA ☐ Rotary Wash ☐ Rock Coring ☐ Drilling Fluid 8¼ Mobil Augers 8" Hamm & Bit

DEPTH, ft. From	DEPTH, ft. To	DESCRIPTION	Sample Type	Sample Depth, ft.	Sample Recovery	SPT Blows N/6"
0	10'	Overburden Brown Sandy Dirt				
10	30'	Dark Brown Clay				
30	49'	Brown wet Clay				
	49'	Rock set 8" hammer & Bit				
45	65'	Broken Gray limestone				
65	70'	Shale Blue				
2	100'	limestone no Fracturing				
	1	4" SCH 80 Bottom Cap				
	9	4" SCH 80 10' Screens				
	1	4" SCH 80 5' Riser				
	1	4" SCH 80 10' Riser				
	1	4" SCH 80 top cap				
	1½	Buckets Gravel				
	5	Bags Bentonite chips				

WATER LEVEL OBSERVATIONS	NOTES
During Drilling ____ ft.	Piezometer Installed: ☐ No ☐ Yes - Depth ____ ft.
At Completion ____ ft.	Well Bottom 100'
After ____ hrs. ____ ft.	
After ____ hrs. ____ ft.	
After ____ hrs. ____ ft.	

LW-784 3/00

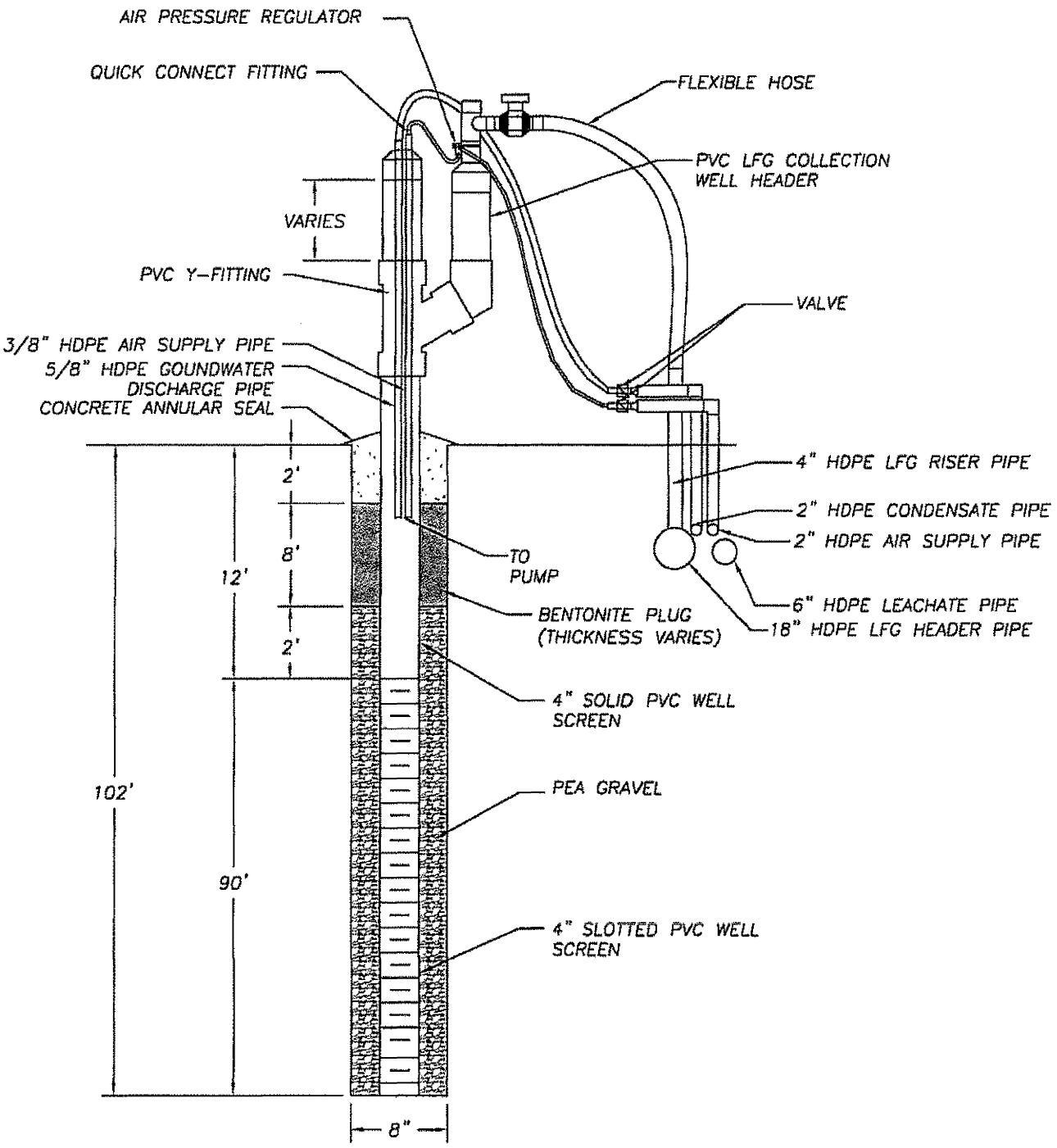

AQUATERRA
ENVIRONMENTAL SOLUTIONS, INC.
141 Market Place Drive
Fairview Hieghts, Illinois 62208

WELL DETAIL
PGW-41
BRIDGETON LANDFILL, LLC
BRIDGETON, MISSOURI

Project Mgr.	Drawn By	Designed By	Project No.
TKJ	RLH	RLH	3038.10
Scale	**Date**	**File Name**	**Drawing No.**
No Scale	10/24/08	3038.10 PGW-41 Detail.dwg	1

K:\Allied Waste\3038.10 - 2008 PGW Installation\PGW Details\3038.10 PGW-41 Detail.dwg November 6, 2008 2:10:55 pm (dt

Layne-Western Company

A Layne Company
2399 Cassens Drive • Fenton, Missouri 63026

FIELD BORING LOG

42
Boring No. ~~PGW-11~~ PGW-42

Project Bridgeton Land Fill Job No. 878415 Date 8-19-08

Location Bridgeton MO Crew Bill Pilson Jeff Litch

Drilling Method: ☐ HSA ☐ CFA ☒ Rotary Wash ☐ Rock Coring ☐ Drilling Fluid 8 1/4" Mobil Augers 8" mm

DEPTH, ft. From	DEPTH, ft. To	DESCRIPTION	Sample Type	Sample Depth, ft.	Sample Recovery	SPT Blows N/6"
0	10'	Dark Brown Sandy Dirt				
10	20'	Dark Green Sandy clay				
20	36'	Dark Green Sand — some clay				
36	48'	Blue Shale set 8" hammer	Call Bedrock	36'		
48	50'	Fractured limestone				
50	85'	Blue Shale				
85	102'	gray limestone & some Fracturing				
	1	4" SCH 80 Bottom Cap				
	1	4" SCH 80 10' Riser				
	9	4" SCH 80 10' Screens				
	1	4" SCH 80 5' Riser				
	1	4" SCH 80 top Cap				
	1½	Buckets gravel				
	5	Bags Bentonite Chips				

WATER LEVEL OBSERVATIONS	NOTES	Piezometer Installed: ☐ No ☐ Yes - Depth _____ ft.
During Drilling _____ ft.	Well Bottom 102'	
At Completion _____ ft.		
After _____ hrs. _____ ft.		
After _____ hrs. _____ ft.		
After _____ hrs. _____ ft.		

LW 784 9/80

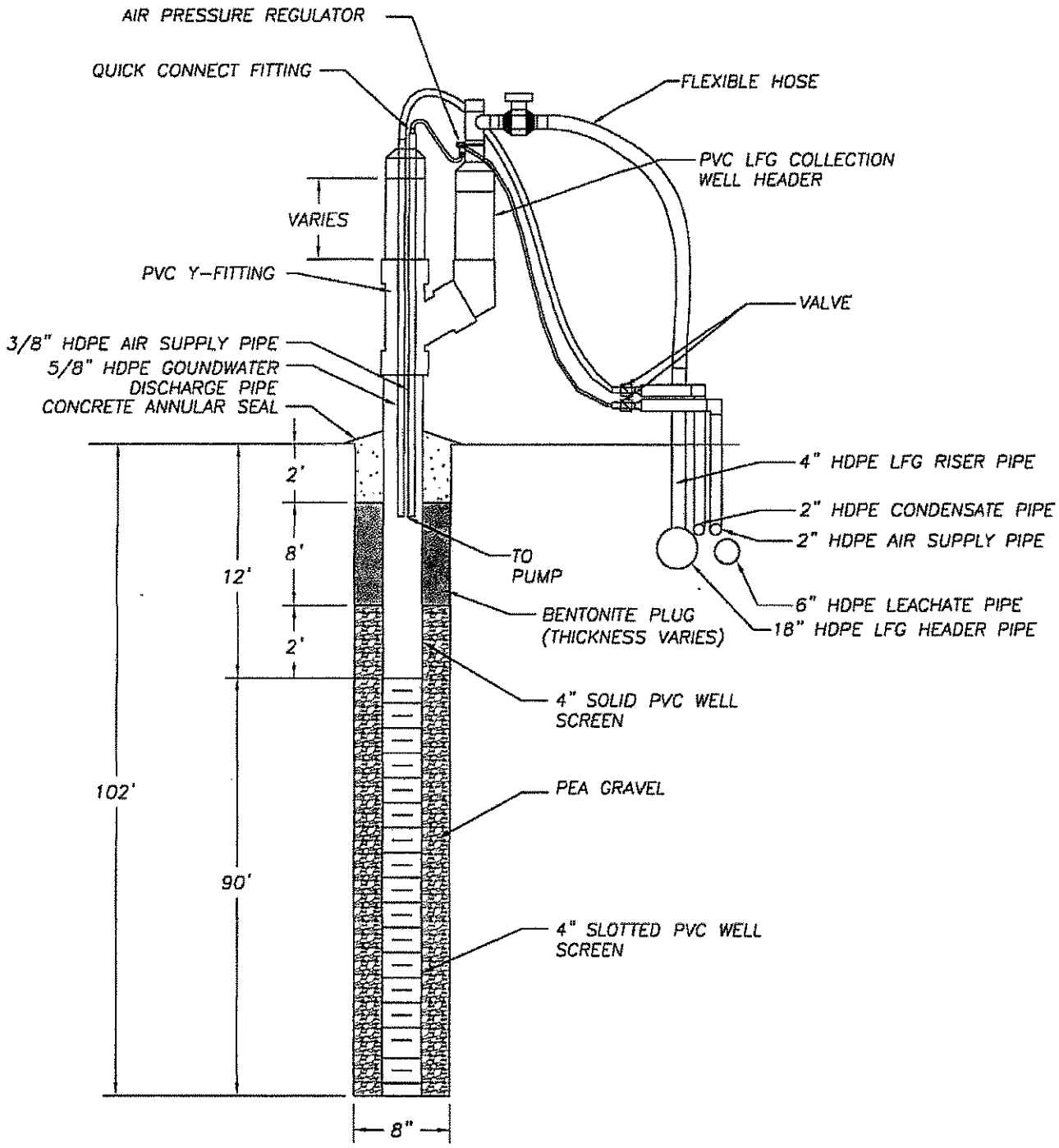

AQUATERRA

ENVIRONMENTAL SOLUTIONS, INC.
141 Market Place Drive
Fairview Hieghts, Illinois 62208

WELL DETAIL
PGW-42
BRIDGETON LANDFILL, LLC
BRIDGETON, MISSOURI

Project Mgr.	Drawn By	Designed By	Project No.
TKJ	RLH	RLH	3038.10
Scale	Date	File Name	Drawing No.
No Scale	10/24/08	3038.10 PGW-42 Detail.dwg	1

K:\Allied Waste\3038.10 - 2008 PGW Installation\PGW Details\3038.10 PGW-42 Detail.dwg November 6, 2008 2:12:05 pm (mt

✓

Layne-Western Company

A Layne Company
2399 Cassens Drive • Fenton, Missouri 63026

FIELD BORING LOG

43
Boring No. 10
PGW-43

Project Bridgeton Landfill Job No. 878447 Date 8-18-08

Location Bridgeton mo Crew Bill Pitsen JEFF Litch

Drilling Method: ☐ HSA ☐ CFA ☒ Rotary Wash ☐ Rock Coring ☐ Drilling Fluid 8¼ Augers 8" hammer

DEPTH, ft. From	DEPTH, ft. To	DESCRIPTION	Sample Type	Sample Depth, ft.	Sample Recovery	SPT Blows N/6"
0	5'	Brown Sandy Dirt				
5	20'	Brown Sandy Clay				
20	25'	Sandy wet red Clay				
25	34'	Dark Green or Gray Clay				
34	60'	yellow light Brown weathered limestone				
60	100	Fractured Gray limestone				
		34' Bed Rock				
	1	4" SCH 80 Bottom Cap				
	9	4" SCH 80 10' screens				
	1	4" SCH 80 10' Riser				
	1	4" SCH 80 5' Riser				
	1	4" SCH 80 Top cap				
	1½	Buckets gravel				
	5	Bags Bentonite Chips				

WATER LEVEL OBSERVATIONS	NOTES
During Drilling ____ ft.	Bottom well 100'
At Completion ____ ft.	
After ____ hrs. ____ ft.	
After ____ hrs. ____ ft.	
After ____ hrs. ____ ft.	

Piezometer Installed: ☐ No ☐ Yes - Depth ____ ft.

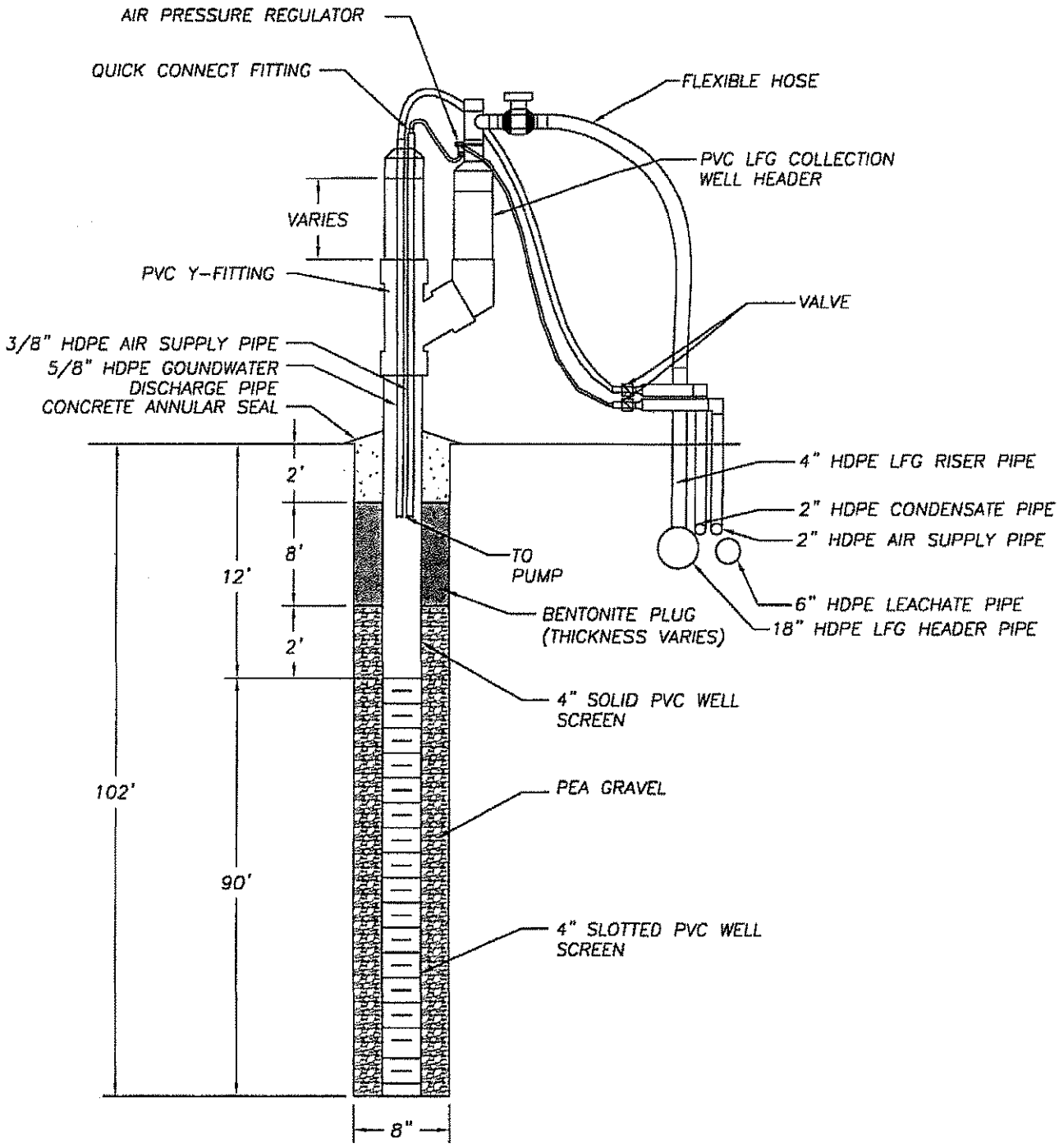

AQUATERRA
ENVIRONMENTAL SOLUTIONS, INC.
141 Market Place Drive
Fairview Hieghts, Illinois 62208

WELL DETAIL
PGW-43
BRIDGETON LANDFILL, LLC
BRIDGETON, MISSOURI

Project Mgr.	Drawn By	Designed By	Project No.
TKJ	RLH	RLH	3038.10
Scale	**Date**	**File Name**	**Drawing No.**
No Scale	10/24/08	3038.10 PGW-43 Detail.dwg	1

K:\Allied Waste\...3038.10 - 2008 PGW Installation\PGW Details\3038.10 PGW-43 Detail.dwg November 6, 2008 2:12:25 pm (rhc

Layne-Western Company

A Layne Company
2399 Cassens Drive • Fenton, Missouri 63026

FIELD BORING LOG

44 Boring No. 9
PGW-44

Project Bridgeton landFill Job No. 87 8447 Date 8-18-08

Location Bridgeton MO Crew Bill Pinson Jeff Litch

Drilling Method: ☐ HSA ☐ CFA ☒ Rotary Wash ☐ Rock Coring ☐ Drilling Fluid 8¼ Augers 8" hammer & [illegible]

DEPTH, ft. From	DEPTH, ft. To	DESCRIPTION	Sample Type	Sample Depth, ft.	Sample Recovery	SPT Blows N/6"
0	5'	Brown Sandy Dirt				
5	20'	Brown Sandy Clay				
20	34'	Dark Green Gray Clay				
34	50'	yellow light Brown weather limestone				
50	60'	Fractured gray limestone & shale				
60	100'	Gray Fractured limestone				
		34' Bedrock				
	1	4" SCH 80 Bottom Cap				
	9	4" SCH 80 10' screens				
	1	4" SCH 80 10' Riser				
	1	4" SCH 80 5' Riser				
	1	4" SCH 80 Top Cap				
	1½	Buckets Gravel				
	5	Bags Bentonite Chips				

WATER LEVEL OBSERVATIONS	NOTES
During Drilling ____ ft.	Bottom well 100'
At Completion ____ ft.	
After ____ hrs. ____ ft.	
After ____ hrs. ____ ft.	
After ____ hrs. ____ ft.	

Piezometer Installed: ☐ No ☐ Yes - Depth ____ ft.

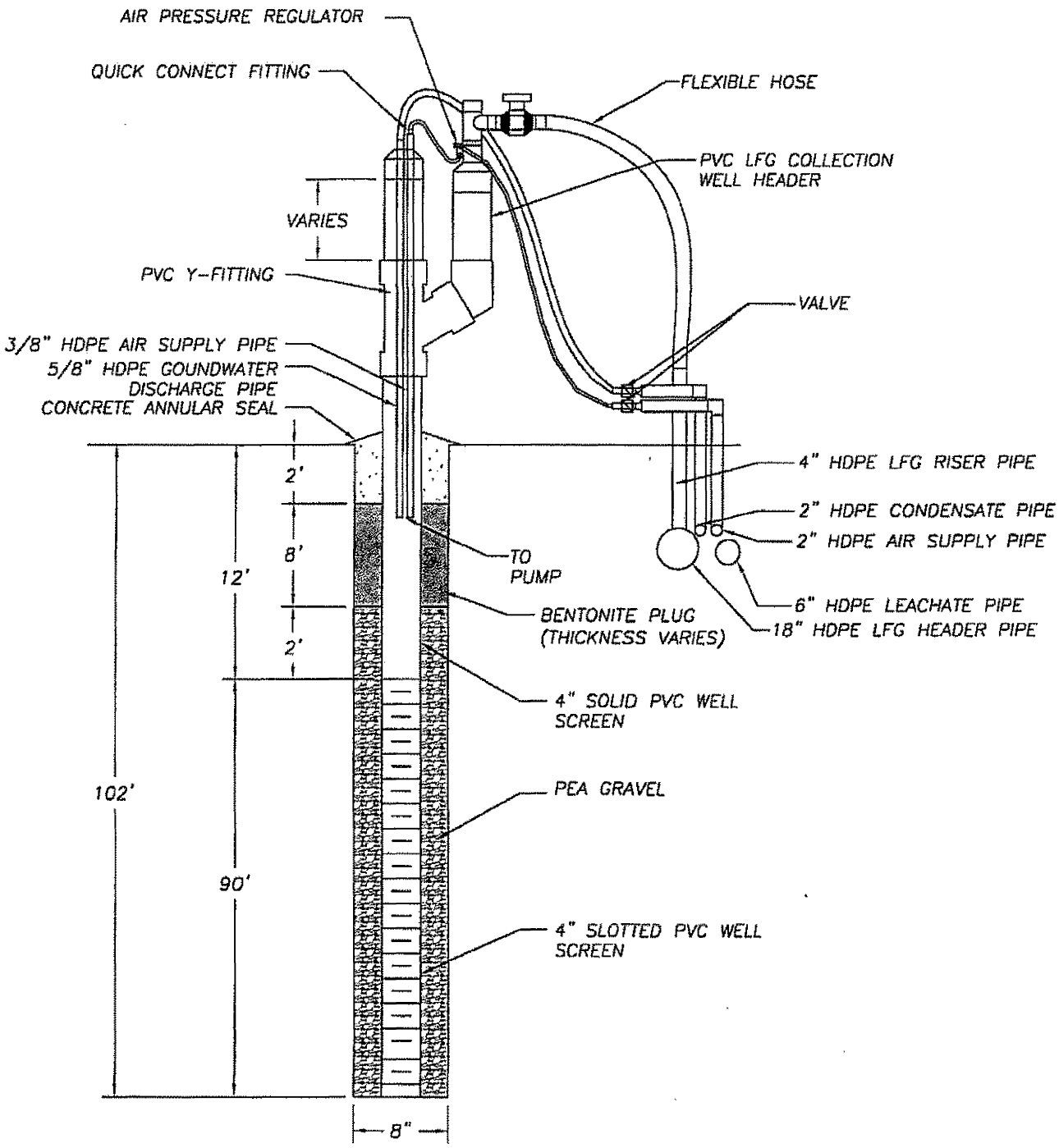

AQUATERRA
ENVIRONMENTAL SOLUTIONS, INC.
141 Market Place Drive
Fairview Hieghts, Illinois 62208

WELL DETAIL
PGW-44
BRIDGETON LANDFILL, LLC
BRIDGETON, MISSOURI

Project Mgr.	Drawn By	Designed By	Project No.
TKJ	RLH	RLH	3038.10
Scale	**Date**	**File Name**	**Drawing No.**
No Scale	10/24/08	3038.10 PGW-44 Detail.dwg	1

K:\Allied Waste\3038.10 - 2008 PGW Installation\PGW Details\3038.10 PGW-44 Detail.dwg November 6, 2008 2:12:45 pm (rho)

Layne-Western Company

A Layne Company
2399 Cassens Drive • Fenton, Missouri 63026

FIELD BORING LOG

45 Boring No. 8
PGW-45

Project Bridgeton L.F Job No. 87 8KS Date 8-15-08

Location Bridgeton MO Crew Bill Pilson Jeff Hitch

Drilling Method: ☐ HSA ☐ CFA ☒ Rotary Wash ☐ Rock Coring ☐ Drilling Fluid 8¼ Augers 8" Ham + Bit

DEPTH, ft. From	DEPTH, ft. To	DESCRIPTION	Sample Type	Sample Depth, ft.	Sample Recovery	SPT Blows N/6"
0	24'	Brown Clay Sand Mix				
24	30'	Brown Sand Dry				
30	33'	Brown Clay Sand Mix wet				
33		Bedrock				
33	47'	Blue Gray Clay Compacted + Stable				
47	60'	Gray limestone Some Fracturing				
3	102'	Gray limestone				
	1	4" SCH 80 Bottom Cap				
	9	4" SCH 80 10' Screens				
	1	4" SCH 80 10' Risers				
	1	4" SCH 80 5' Risers				
	1	4" SCH 80 top Cap				
	1½	Buckets Gravel				
	5	Bags Bentonite chips				

WATER LEVEL OBSERVATIONS	NOTES
During Drilling ____ ft.	Well Bottom 102'
At Completion ____ ft.	
After ____ hrs. ____ ft.	
After ____ hrs. ____ ft.	
After ____ hrs. ____ ft.	

Piezometer Installed: ☐ No ☐ Yes - Depth ____ ft.

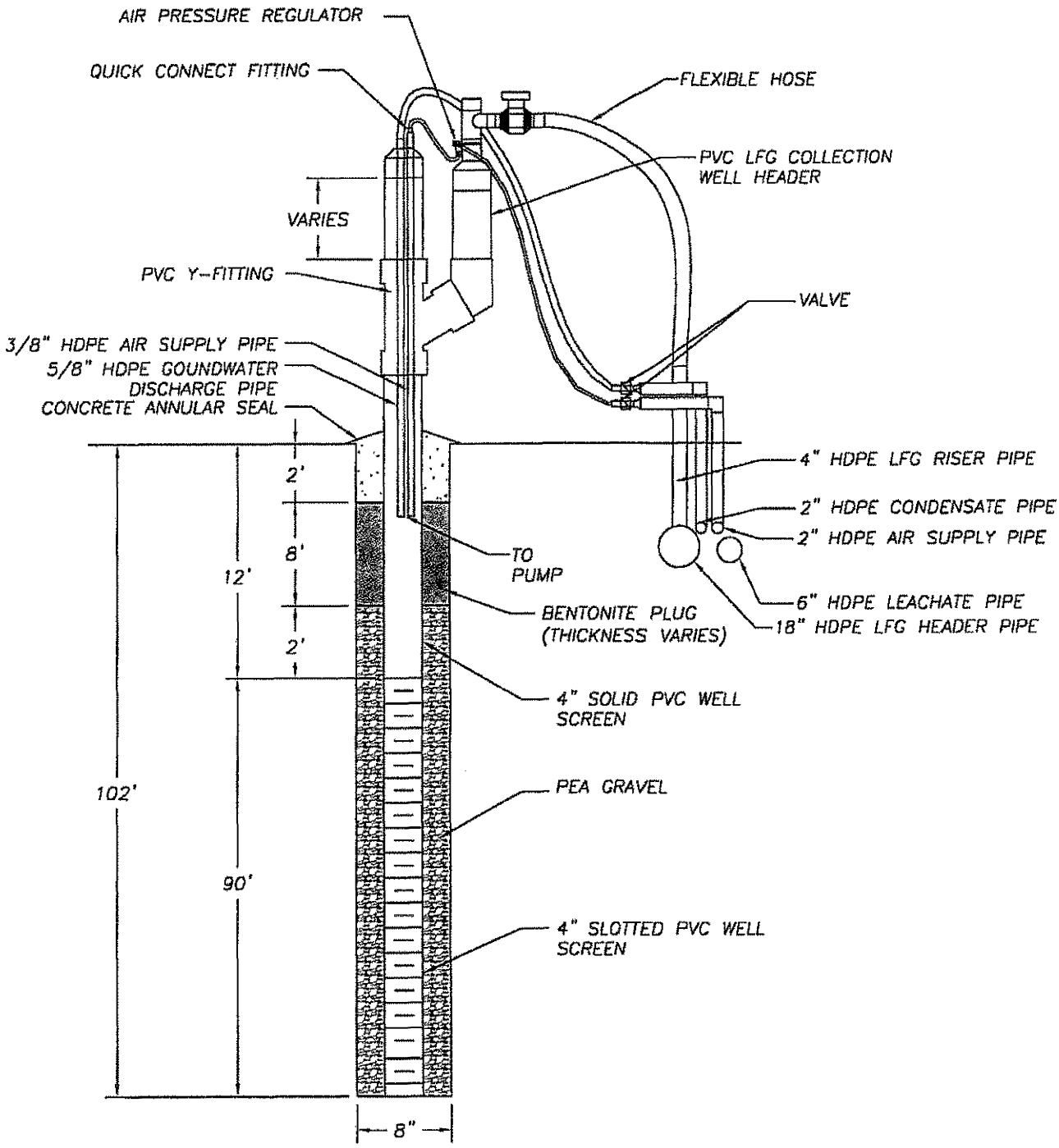

AQUATERRA
ENVIRONMENTAL SOLUTIONS, INC.
141 Market Place Drive
Fairview Hieghts, Illinois 62208

WELL DETAIL
PGW-45
BRIDGETON LANDFILL, LLC
BRIDGETON, MISSOURI

Project Mgr.	Drawn By	Designed By	Project No.
TKJ	RLH	RLH	3038.10
Scale	**Date**	**File Name**	**Drawing No.**
No Scale	10/24/08	3038.10 PGW-45 Detail.dwg	1

3038.10 - 2008 PGW Installation\PGW Details\3038.10 PGW-45 Detail.dwg November 6, 2008 2:13:09 pm (thr
K:\Allied Waste

Layne-Western Company

A Layne Company
2399 Cassens Drive • Fenton, Missouri 63026

FIELD BORING LOG

PGW-46
Boring No. 7
P

Project Bridgeton L.F. Job No. 87 8045 Date 8-14-08

Location Bridgeton MO Crew Bill Pinson Jeff Hitch

Drilling Method: ☐ HSA ☐ CFA ☒ Rotary Wash ☐ Rock Coring ☐ Drilling Fluid 8 1/4 mobil Augers 8" mount8

DEPTH, ft. From	DEPTH, ft. To	DESCRIPTION	Sample Type	Sample Depth, ft.	Sample Recovery	SPT Blows N/6"
0	20'	Red clay				
20	25'	wet Red clay mix with Sand				
25'	33'	Brown Sand				
33	32'	Rock maybe Fill				
32	35'	Silt & 2" to 3" Broken up Rock				
35'	50'	Fractured gray limestone				
)	51'	Shale layering				
51	100'	Limestone. Bottom				
	1	4" SCH 80 Bottom Cap				
	9	4" SCH 80 10' screen				
	1	4" SCH 80 10' Riser				
	1	4" SCH 80 5' Riser				
	1	4" SCH 80 top cap				
	1 1/2	Buckets gravel				
	5	Bags Bentonite chips				

WATER LEVEL OBSERVATIONS	NOTES
During Drilling ____ ft.	Well Bottom at 100'
At Completion ____ ft.	
ter ____ hrs. ____ ft.	
After ____ hrs. ____ ft.	
After ____ hrs. ____ ft.	

Piezometer Installed: ☐ No ☐ Yes Depth ____ ft.

LW 204 8/00

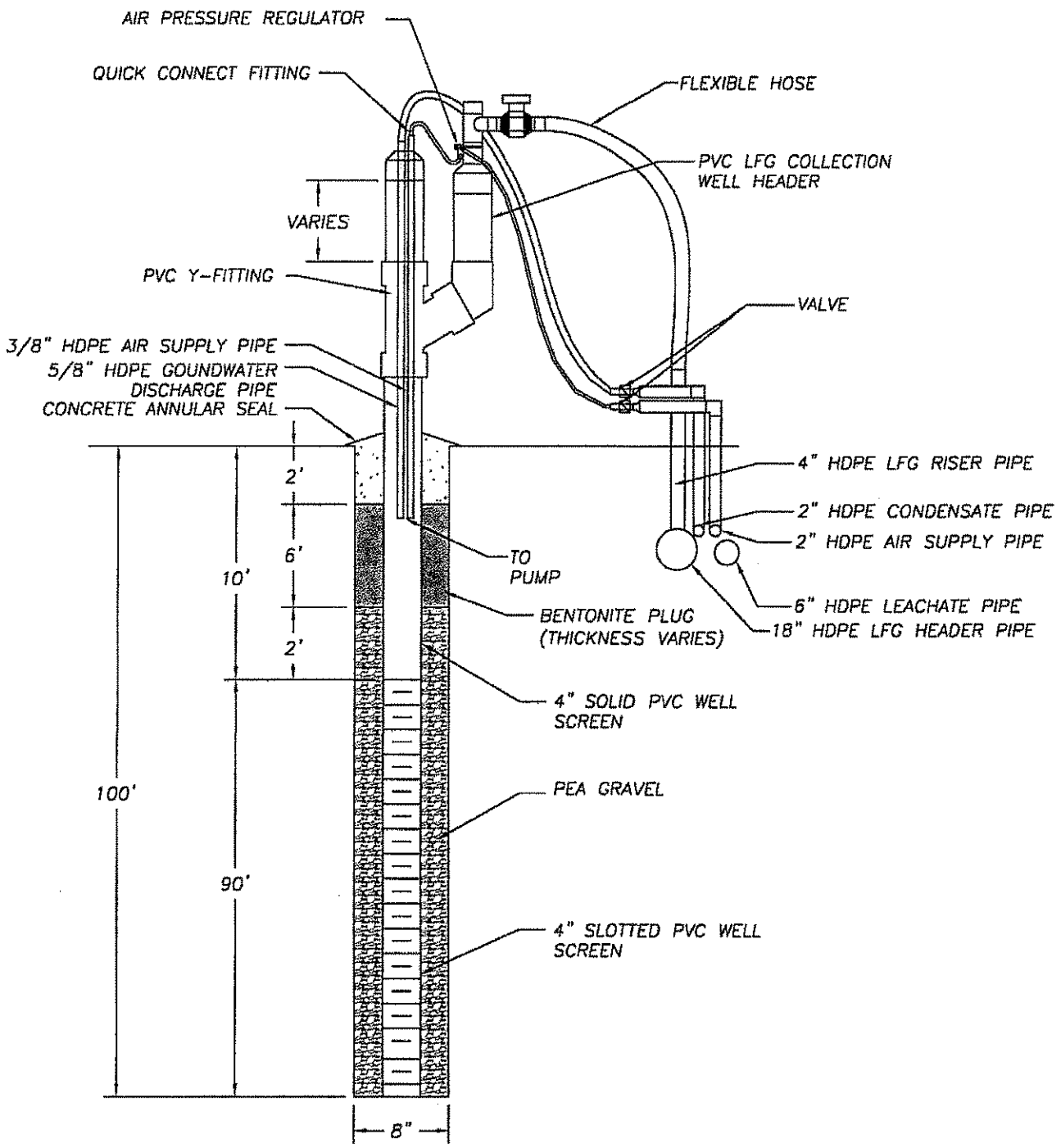

AQUATERRA
ENVIRONMENTAL SOLUTIONS, INC.
141 Market Place Drive
Fairview Hieghts, Illinois 62208

WELL DETAIL
PGW-46
BRIDGETON LANDFILL, LLC
BRIDGETON, MISSOURI

Project Mgr.	Drawn By	Designed By	Project No.
TKJ	RLH	RLH	3038.10
Scale	Date	File Name	Drawing No.
No Scale	10/24/08	3038.10 PGW-46 Detail.dwg	1

K:\Allied Waste\... 3038.10 - 2008 PGW Installation\PGW Details\3038.10 PGW-46 Detail.dwg November 6, 2008 2:16:39 pm (ma

Layne-Western Company

A Layne Company
2399 Cassens Drive • Fenton, Missouri 63026

FIELD BORING LOG

PLW-47
Boring No. 6

Project Bridgeton L.F. Job No. 87 8445 Date 8-14-08

Location Bridgeton MO Crew Bill Russell Jeff Hitch

Drilling Method: ☐ HSA ☐ CFA ☒ Rotary Wash ☐ Rock Coring ☐ Drilling Fluid 8¼ Mobil Augers 6" Hammer Bit

DEPTH, ft. From	DEPTH, ft. To	DESCRIPTION	Sample Type	Sample Depth, ft.	Sample Recovery	SPT Blows N/6"
0	24'	Red clay sand mix				
24	28'	Brown sand				
	28'	Bedrock				
28	47'	Broken limestone Fracturing				
47	50'	Small shale seam				
50	102'	gray limestone some Fracturing				
	1	4" SCH 80 Bottom Cap				
	9	4" SCH 80 10' Screen				
	1	4" SCH 80 10' Riser				
	1	4" SCH 80 5' Riser				
	1	4" SCH 80 top cap				
	1½	Bucket gravel				
	5	Bags Bitonite chips				

WATER LEVEL OBSERVATIONS	NOTES
During Drilling ____ ft.	well Bottom (02'
At Completion ____ ft.	
After ____ hrs. ____ ft.	
After ____ hrs. ____ ft.	
After ____ hrs. ____ ft.	

Piezometer Installed: ☐ No ☐ Yes - Depth ____ ft.

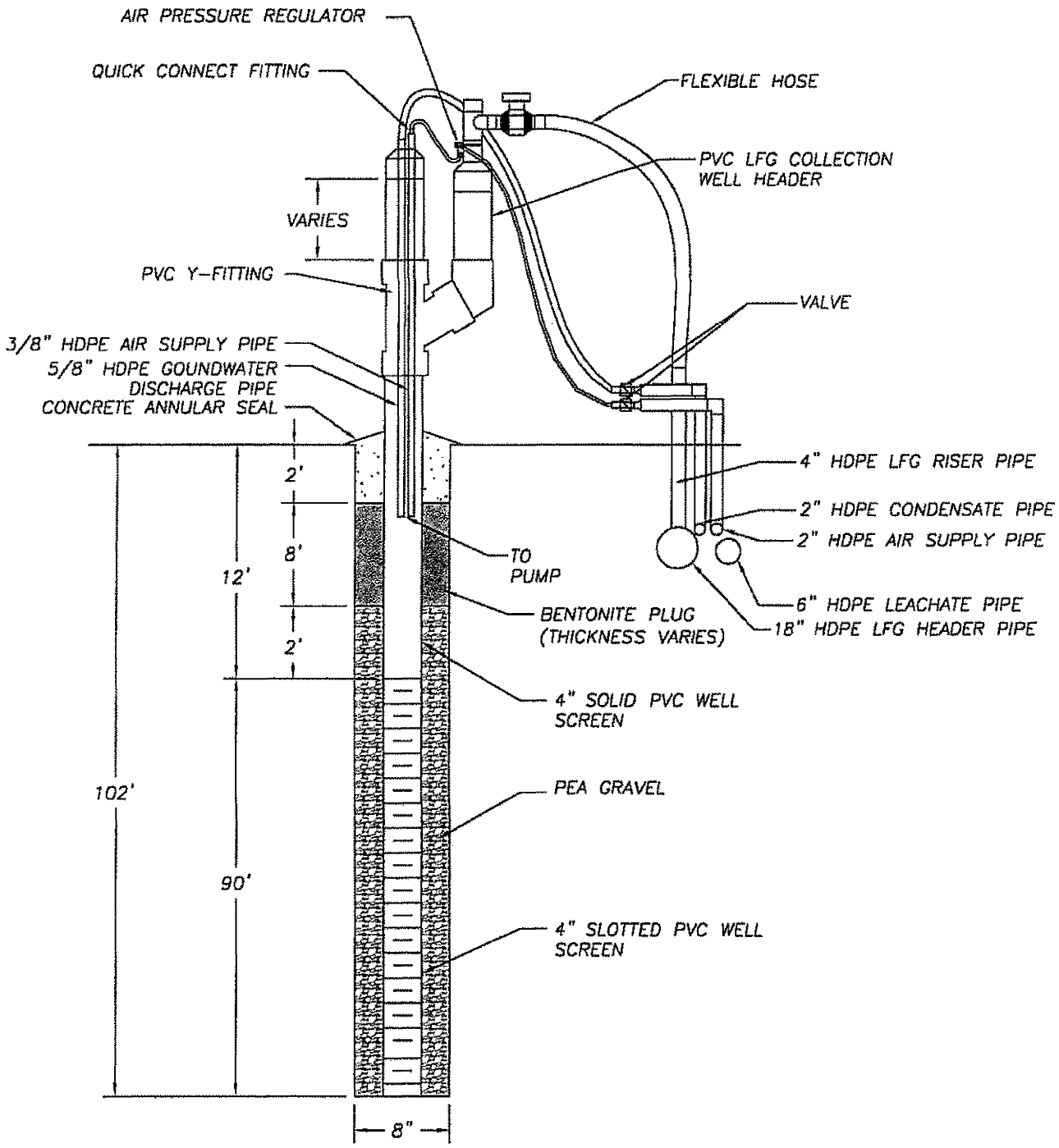

AQUATERRA
ENVIRONMENTAL SOLUTIONS, INC.
141 Market Place Drive
Fairview Hieghts, Illinois 62208

WELL DETAIL
PGW-47
BRIDGETON LANDFILL, LLC
BRIDGETON, MISSOURI

Project Mgr.	Drawn By	Designed By	Project No.
TKJ	RLH	RLH	3038.10
Scale	**Date**	**File Name**	**Drawing No.**
No Scale	10/24/08	3038.10 PGW-47 Detail.dwg	1

3038.10 - 2008 PGW Installation\PGW Details\3038.10 PGW-47 Detail.dwg November 6, 2008 2:16:58 pm (rho)
K:\Allied Waste\

Layne-Western Company

A Layne Company
2399 Cassens Drive • Fenton, Missouri 63026

FIELD BORING LOG

PAW-48
Boring No. S

Project Bridgeton L.F. Job No. 87 8145 Date 8-13-08

Location Bridgeton MO Crew Bill Pinson Jeff Litch

Drilling Method: ☐ HSA ☐ CFA ☐ Rotary Wash ☐ Rock Coring ☐ Drilling Fluid 8¼ mobil Ag 8" hammer Bit

DEPTH, ft. From	DEPTH, ft. To	DESCRIPTION	Sample Type	Sample Depth, ft.	Sample Recovery	SPT Blows N/6"
0	24'	Red clay Sand mix				
24	48'	Brown sand				
	48'	Rock				
48	50'	Fractured gray limestone.				
50	52'	Shale more Thin Previous layers				
52	102'	gray limestone limited Fractures				
	1	4" SCH 80 Bottom Cap				
	9	4" SCH 80 10' screens				
	1	4" SCH 80 10' Riser				
	1	4" SCH 80 5' Riser				
	1	4" SCH 80 top cap				
	1½	Buckets gravel				
	5	Bags Bitonite chips				

WATER LEVEL OBSERVATIONS	NOTES
During Drilling ____ ft.	well Bottom 102'
At Completion ____ ft.	
After ____ hrs. ____ ft.	
After ____ hrs. ____ ft.	
After ____ hrs. ____ ft.	

Piezometer Installed: ☐ No ☐ Yes - Depth ____ ft.

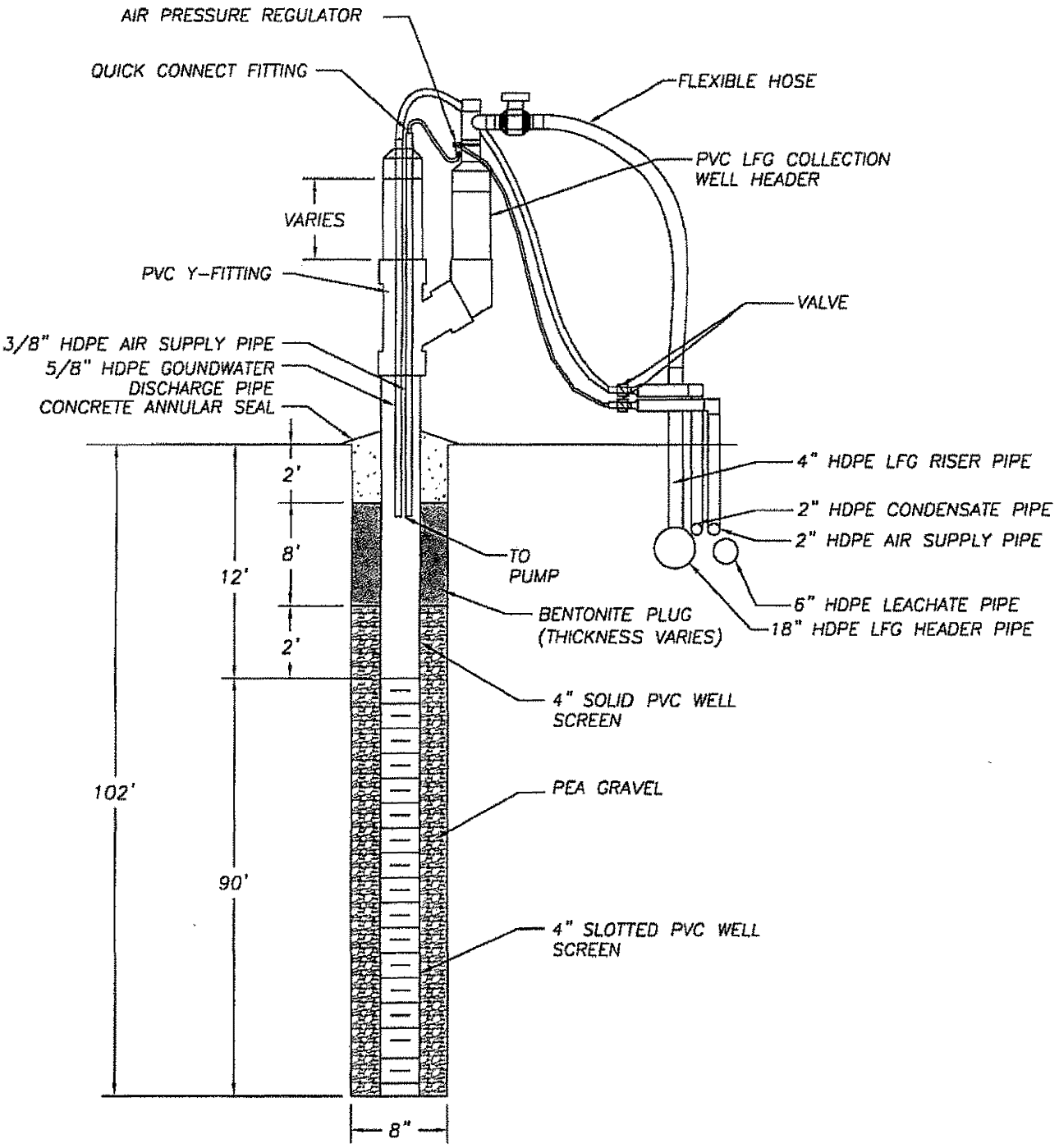

AQUATERRA
ENVIRONMENTAL SOLUTIONS, INC.
141 Market Place Drive
Fairview Hieghts, Illinois 62208

WELL DETAIL
PGW-48
BRIDGETON LANDFILL, LLC
BRIDGETON, MISSOURI

Project Mgr.	Drawn By	Designed By	Project No.
TKJ	RLH	RLH	3038.10
Scale	**Date**	**File Name**	**Drawing No.**
No Scale	10/24/08	3038.10 PGW-48 Detail.dwg	1

K:\Allied Waste\...\3038.10 - 2008 PGW Installation\PGW Details\3038.10 PGW-48 Detail.dwg November 6, 2008 2:30:47 pm rhs

Layne

Layne-Western Company

A Layne Company
2399 Cassens Drive • Fenton, Missouri 63026

FIELD BORING LOG

PGW-49
Boring No. 4

Project Bridgeton LF Job No. 87 8445 Date 8 (12-13) 08

Location Bridgeton MO Crew Bill Pinson Jeff Litch

Drilling Method: ☐ HSA ☐ CFA ☑ Rotary Wash ☐ Rock Coring ☐ Drilling Fluid 8¼ mobil Augers 8" hum + Bit

DEPTH, ft. From	DEPTH, ft. To	DESCRIPTION	Sample Type	Sample Depth, ft.	Sample Recovery	SPT Blows N/6"
0	24'	Red clay sand mix				
24	28'	Brown sand				
28'		Bed Rock				
28	50'	Fractured limestone gray				
50	60'	Brown limestone Maybe sand mix				
60	70'	Brown limestone Drill very Fast				
0	102'	gray Fractured limestone				
	1	4" SCH 80 Bottom cap				
	9	4" SCH 80 10' screen				
	1	4" SCH 80 10' Riser				
	1	4" SCH 80 5' Riser				
	1	4" SCH 80 top cap				
	1½	Buckets gravel				
	5	Bags Bitonite Chips				

WATER LEVEL OBSERVATIONS	NOTES
During Drilling ____ ft.	Piezometer Installed: ☐ No ☐ Yes - Depth ____ ft.
At Completion ____ ft.	Well Bottom 102'
After ____ hrs. ____ ft.	
After ____ hrs. ____ ft.	
After ____ hrs. ____ ft.	

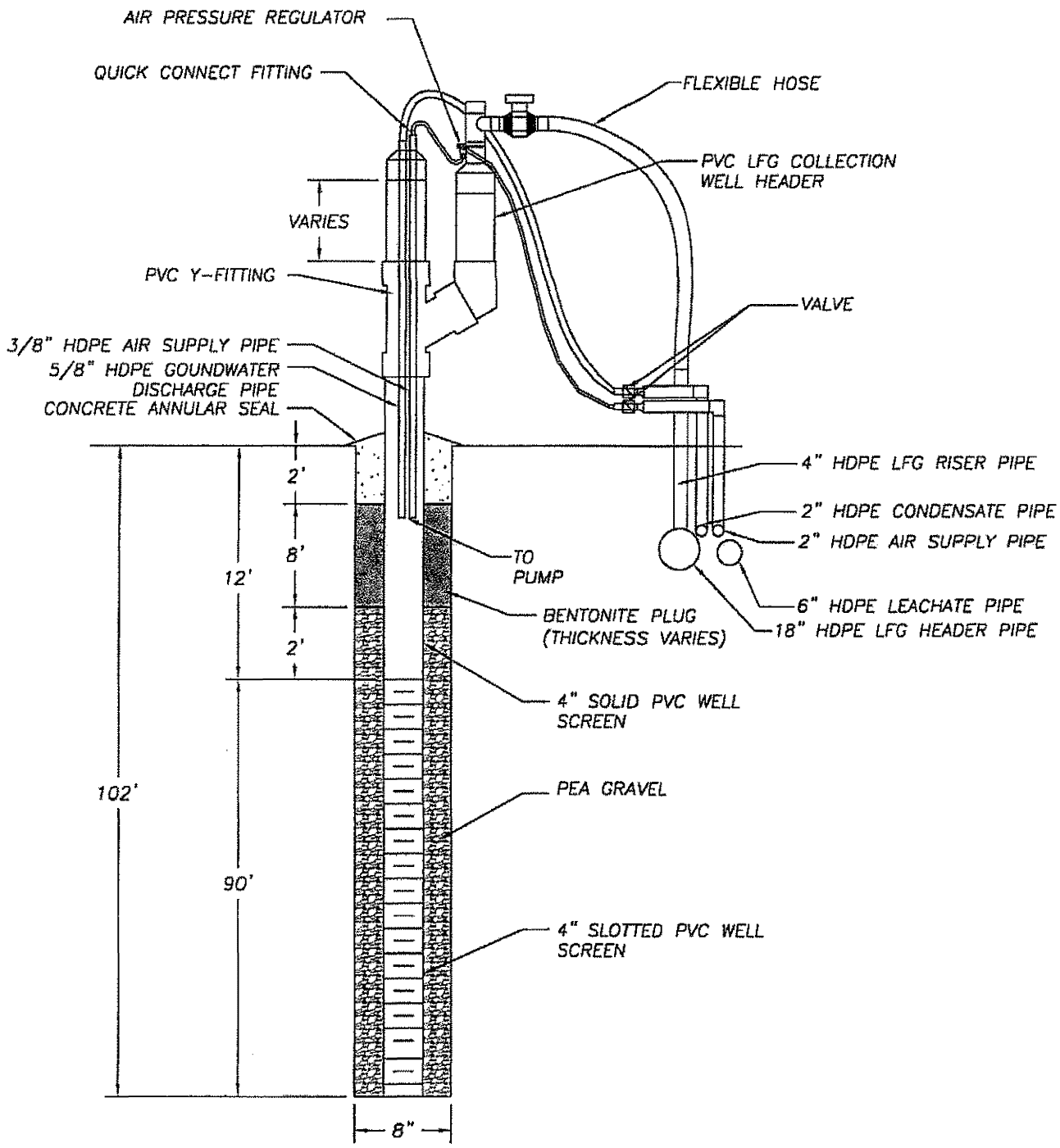

AQUATERRA
ENVIRONMENTAL SOLUTIONS, INC.
141 Market Place Drive
Fairview Hieghts, Illinois 62208

WELL DETAIL
PGW-49
BRIDGETON LANDFILL, LLC
BRIDGETON, MISSOURI

Project Mgr.	Drawn By	Designed By	Project No.
TKJ	RLH	RLH	3038.10
Scale	**Date**	**File Name**	**Drawing No.**
No Scale	10/24/08	3038.10 PGW-49 Detail.dwg	1

K:\Allied Waste\Bridgeton\3038.10 - 2008 PGW Installation\PGW Details\3038.10 PGW-49 Detail.dwg November 6, 2008 2:31:29 pm (rho)

Layne-Western Company

A Layne Company
2399 Cassens Drive • Fenton, Missouri 63026

FIELD BORING LOG

PGW-SD Boring No. 3

Project Bridgeton Landfill Job No. 87 8445 Date 8(11-12)08

Location Bridgeton MO Crew Bill Pinson Jeff Litch

Drilling Method: ☐ HSA ☐ CFA ☒ Rotary Wash ☐ Rock Coring ☐ Drilling Fluid 8¼" Mobil Augers 8" hammer bit

DEPTH, ft. From	DEPTH, ft. To	DESCRIPTION	Sample Type	Sample Depth, ft.	Sample Recovery	SPT Blows N/6"
0	20'	Red clay				
20	31'	Brown sand				
31'		Bed Rock				
31	47'	Fractured gray limestone				
47	50'	Small Shale Fracturing				
50	60'	Fractured gray limestone				
3	62'	Shale layer				
62	95'	Fractured gray limestone				
95	102'	Mucho The same maybe with Sand layering				
	1	4" SCH80 Bottom Cap				
	9	4" SCH 80 10' screen				
	1	4" SCH 80 10' Riser				
	1	4" SCH 80 5' Riser				
	1	4" SCH 80 Top cap				
	1½	Buckets gravel				
	5	Bags Bitowite chips				

WATER LEVEL OBSERVATIONS	NOTES
During Drilling ____ ft.	Well Bottom 102'
At Completion ____ ft.	
After ____ hrs. ____ ft.	
After ____ hrs. ____ ft.	
After ____ hrs. ____ ft.	

Piezometer Installed: ☐ No ☐ Yes - Depth ____ ft.

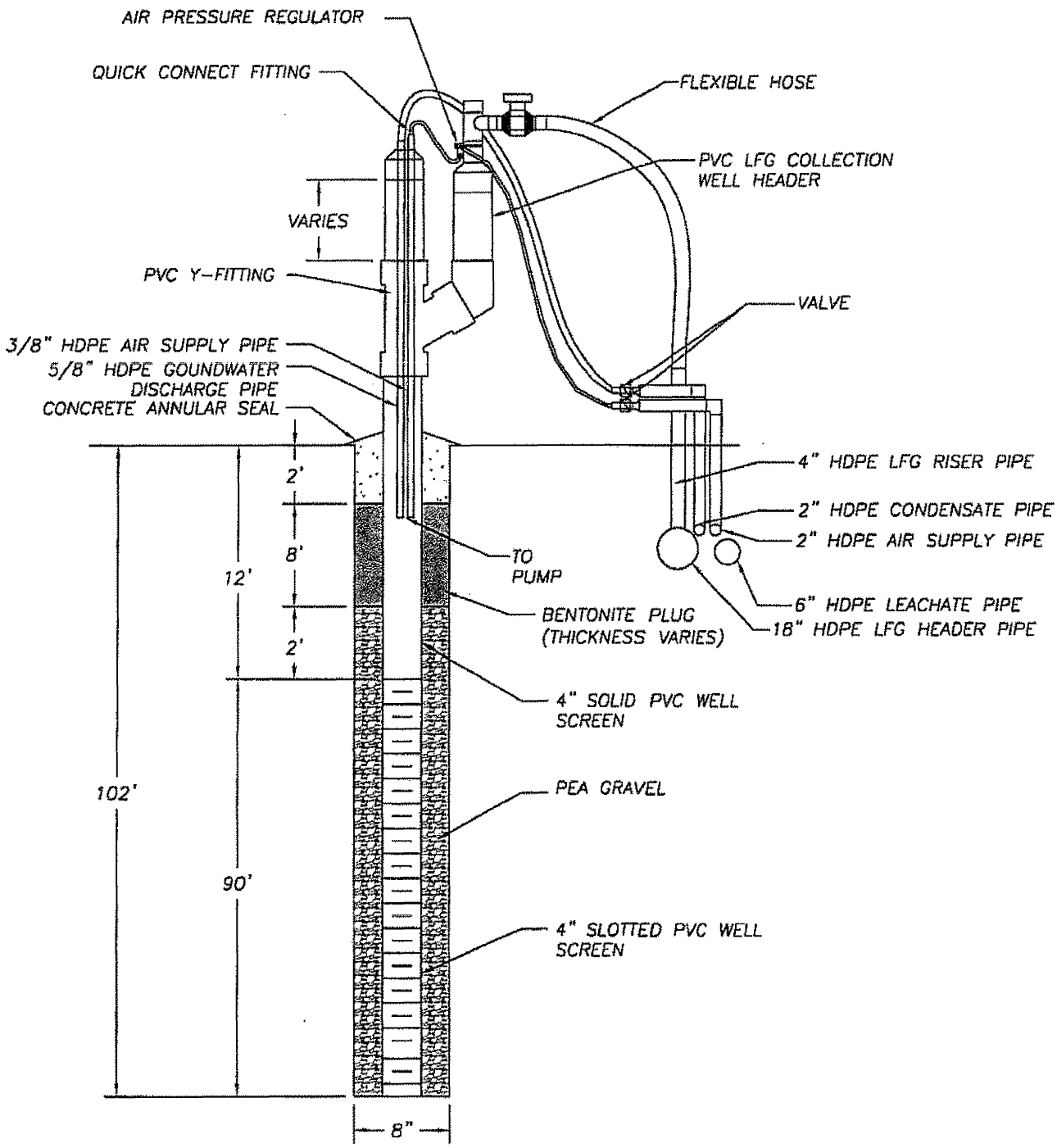

AQUATERRA
ENVIRONMENTAL SOLUTIONS, INC.
141 Market Place Drive
Fairview Hieghts, Illinois 62208

WELL DETAIL
PGW-50
BRIDGETON LANDFILL, LLC
BRIDGETON, MISSOURI

Project Mgr.	Drawn By	Designed By	Project No.
TKJ	RLH	RLH	3038.10
Scale	Date	File Name	Drawing No.
No Scale	10/24/08	3038.10 PGW-50 Detail.dwg	1

K:\Allied Waste\3038.10 - 2008 PGW Installation\PGW Details\3038.10 PGW-50 Detail.dwg November 6, 2008 2:31:52 pm (rho)

Layne-Western Company

A Layne Company
2399 Cassens Drive • Fenton, Missouri 63026

FIELD BORING LOG

PGW-51
Boring No. 2

Project Bridgeton L.F. Job No. 87 8445 Date 8 (5-11) 08

Location Bridgeton MO Crew Bill Pinson Jeff Fitch

Drilling Method: ☐ HSA ☐ CFA ☐ Rotary Wash ☐ Rock Coring ☐ Drilling Fluid

DEPTH, ft. From	DEPTH, ft. To	DESCRIPTION	Sample Type	Sample Depth, ft.	Sample Recovery	SPT Blows N/6"
0	28'	Clays & sands overburden				
28'		Red Rock				
28	58'	Fractured gray limestone				
58	61'	Shale layerings				
61'	70'	Fractured limestone				
70	102'	Fractured gray limestone Bottom of Drill Fast				
	1	4" SCH Bottom cap				
	9	4" SCH 10' Screen				
	1	4" SCH 10' Riser				
	1	4" SCH 5' Riser				
	1	4" SCH top cap				
	1½	Bushels gravel				
	5	Bags Bentonite chips				

WATER LEVEL OBSERVATIONS	NOTES
During Drilling ____ ft.	Well Bottom 102'
At Completion ____ ft.	
After ____ hrs. ____ ft.	
After ____ hrs. ____ ft.	
After ____ hrs. ____ ft.	

Piezometer Installed: ☐ No ☐ Yes - Depth ____ ft.

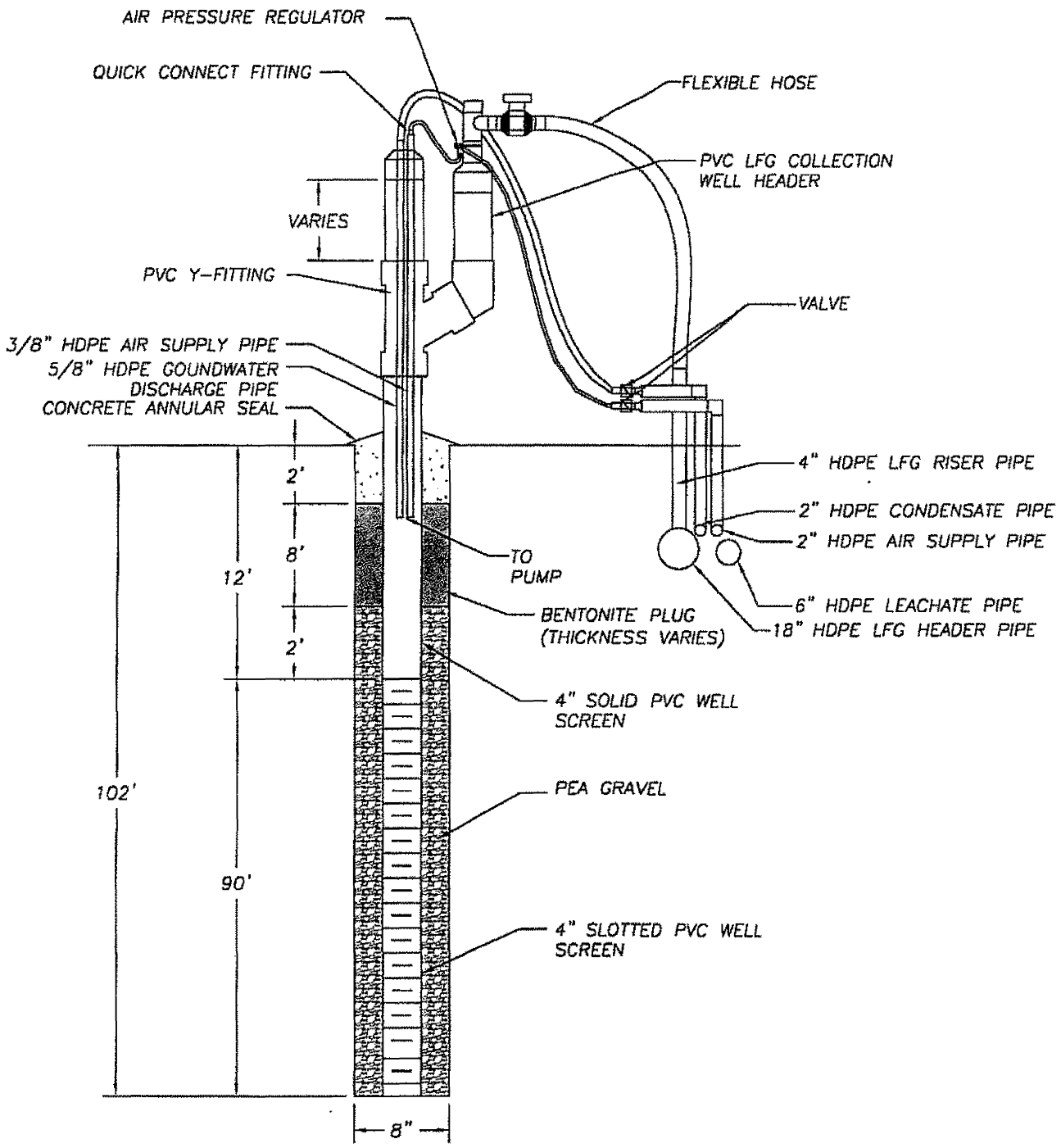

AQUATERRA

ENVIRONMENTAL SOLUTIONS, INC.

141 Market Place Drive
Fairview Hieghts, Illinois 62208

WELL DETAIL
PGW-51
BRIDGETON LANDFILL, LLC
BRIDGETON, MISSOURI

Project Mgr.	Drawn By	Designed By	Project No.
TKJ	RLH	RLH	3038.10
Scale	**Date**	**File Name**	**Drawing No.**
No Scale	10/24/08	3038.10 PGW-51 Detail.dwg	1

K:\Allied Waste\3038.10 - 2008 PGW Installation\PGW Details\3038.10 PGW-51 Detail.dwg November 6, 2008 2:33:51 pm (rhs)

Layne-Western Company

A Layne Company
2399 Cassens Drive • Fenton, Missouri 63026

FIELD BORING LOG

52 Boring No. #1
PGW-52

Project Bridgeton L.F. Job No. 87 8445 Date 8-7-08

Location Bridgeton MO. Crew Bill Pinson JEFF Litch.

Drilling Method: ☐ HSA ☐ CFA ☒ Rotary Wash ☐ Rock Coring ☐ Drilling Fluid 8¼ Augers 8" hammer to 60'

DEPTH, ft. From	DEPTH, ft. To	DESCRIPTION	Sample Type	Sample Depth, ft.	Sample Recovery	SPT Blows N/6"
0	32'	overburden Red green clay				
32	60'	weathered gray limestone				
60	62'	Broken green Shale				
62	70'	Back to Broke limestone				
78	90'	gray limestone				
90	102'	SOFT limestone Sandstone MIX				
	102	Bottom From elevation				
		SET 90' SCH 80 4" Screen				
		SET 15' SCH 80 4" Riser 3' exposed				
		gravel to 10'				
		& chip to 3'				
		1 Bottom Cap				
		1 top Cap				

WATER LEVEL OBSERVATIONS	NOTES
During Drilling ____ ft.	Piezometer Installed: ☐ No ☐ Yes - Depth ____ ft.
Completion ____ ft.	
After ____ hrs. ____ ft.	
After ____ hrs. ____ ft.	
After ____ hrs. ____ ft.	

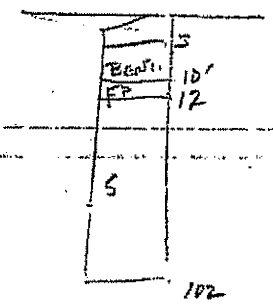

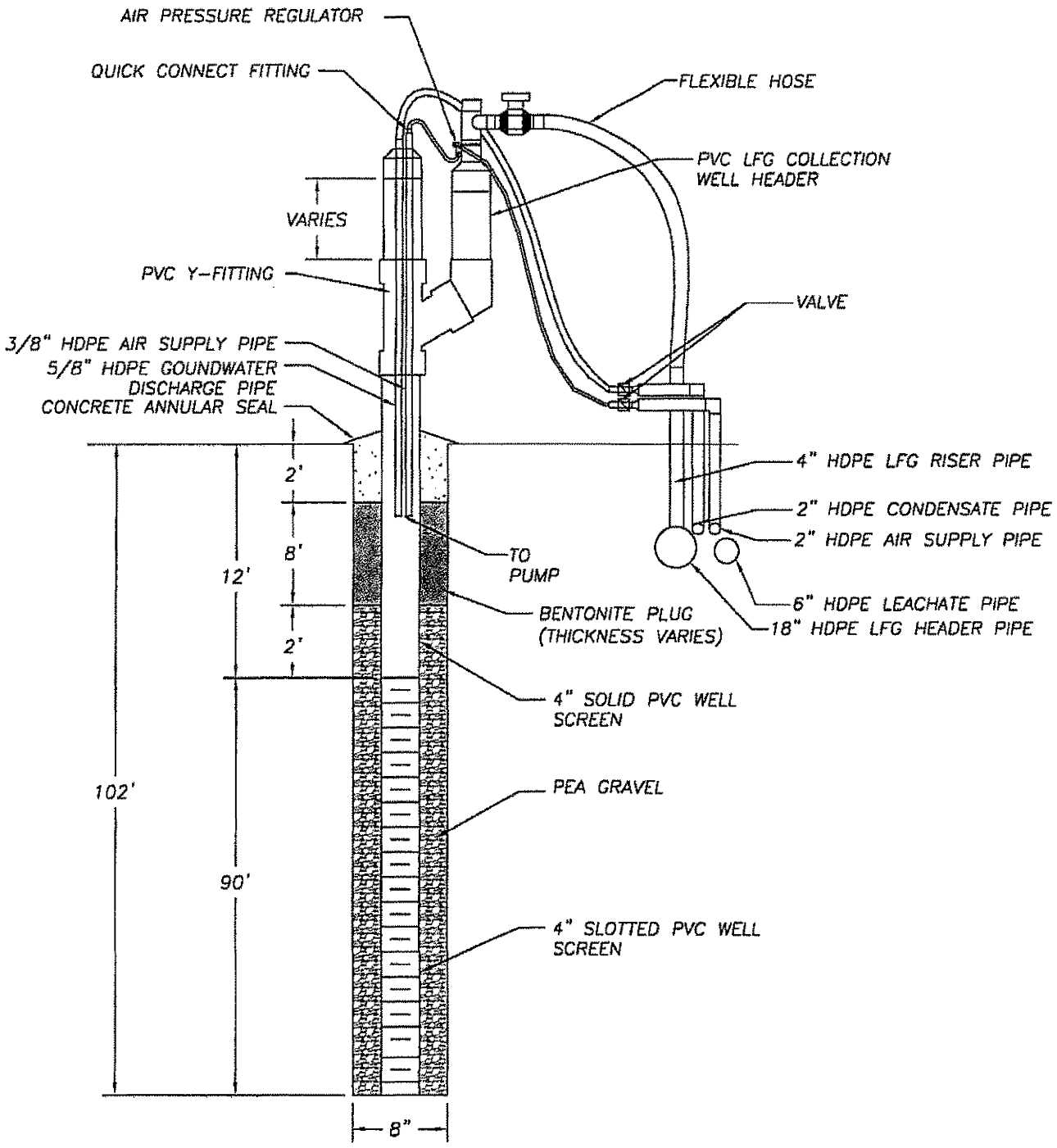

AQUATERRA
ENVIRONMENTAL SOLUTIONS, INC.
141 Market Place Drive
Fairview Hieghts, Illinois 62208

WELL DETAIL
PGW-52
BRIDGETON LANDFILL, LLC
BRIDGETON, MISSOURI

Project Mgr.	Drawn By	Designed By	Project No.
TKJ	RLH	RLH	3038.10
Scale	Date	File Name	Drawing No.
No Scale	10/24/08	3038.10 PGW-52 Detail.dwg	1

K:\Allied Waste\Bridgeton\3038.10 - 2008 PGW Installation\PGW Details\3038.10 PGW-52 Detail.dwg November 6, 2008 2:34:11 pm (rho,

✓

Layne-Western Company

A Layne Company
2399 Cassens Drive • Fenton, Missouri 63026

FIELD BORING LOG

40
Boring No. 13
PGW-53

Project Bridgeton Landfill Job No. 87 8445 Date 8-20-08

Location Bridgeton MO Crew Bill Pinson Jeff Litch

Drilling Method: ☐ HSA ☐ CFA ☒ Rotary Wash ☐ Rock Coring ☐ Drilling Fluid 8¼ mobil Agers 8" ham + Bit

DEPTH, ft. From	DEPTH, ft. To	DESCRIPTION	Sample Type	Sample Depth, ft.	Sample Recovery	SPT Blows N/6"
0	22'	overburden light Brown clays				
22	32'	Dark green wet clay some Trash	Strong oder			
	32'	Bedrock				
32	60'	weathered green limestone				
60	62'	Shale				
62	70'	Broken limestone				
3	90'	light gray limestone				
90	102'	Soft limestone Bottom				
	1	4" SCH 80 Bottom Cap				
	9	4" SCH 80 10' screens				
	1	4" SCH 80 10' Riser				
	1	4" SCH 80 5' Riser				
	1	4" SCH 80 Top Cap				
	1½	Buckets gravel				
	5	Bags Bentonite chips				

WATER LEVEL OBSERVATIONS	NOTES
During Drilling ____ ft.	Piezometer Installed: ☐ No ☐ Yes - Depth ____ ft.
At Completion ____ ft.	Well Bottom 102'
After ____ hrs. ____ ft.	
After ____ hrs. ____ ft.	
After ____ hrs. ____ ft.	

LW 704 3/90

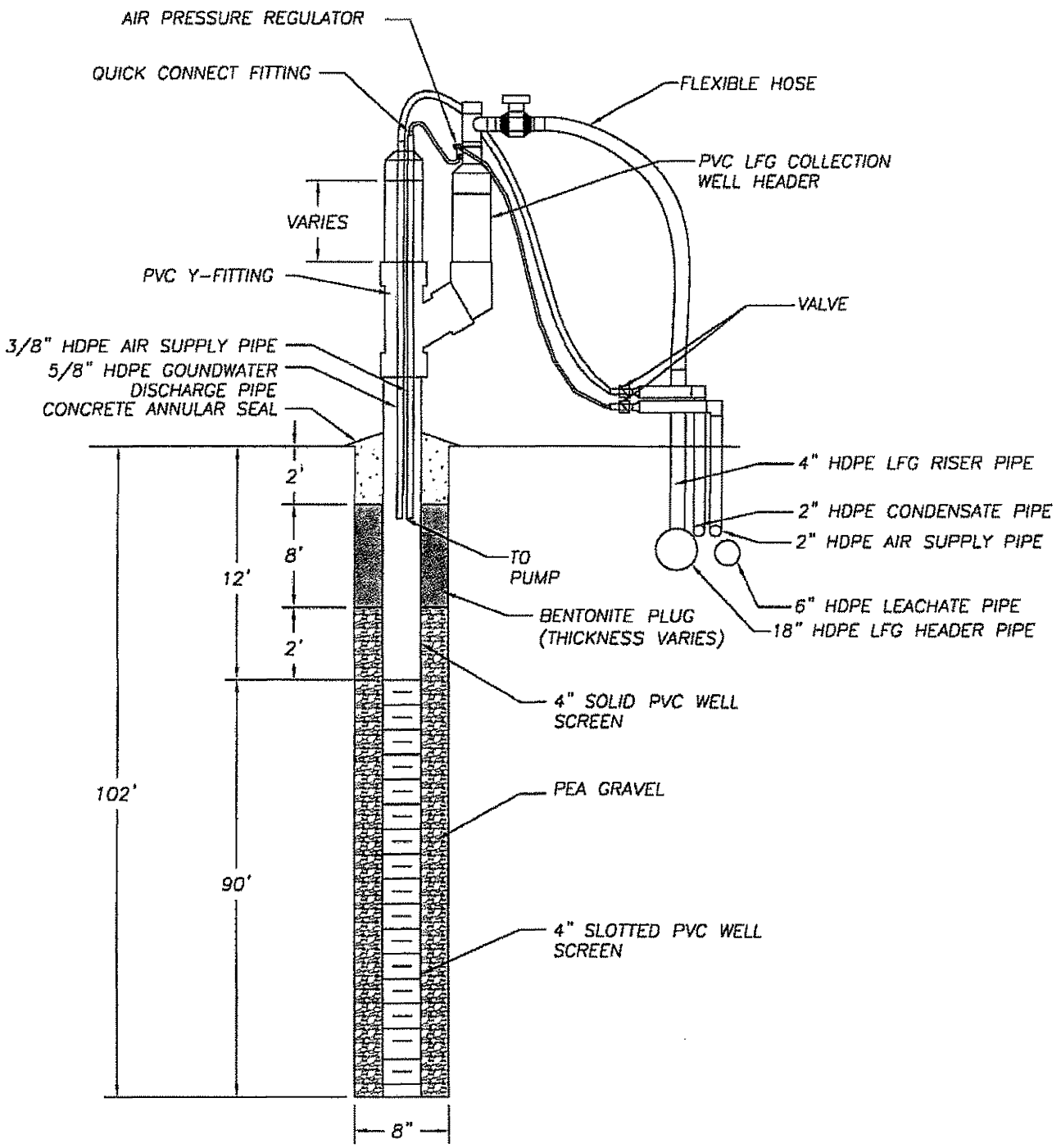

AQUATERRA
ENVIRONMENTAL SOLUTIONS, INC.
141 Market Place Drive
Fairview Hieghts, Illinois 62208

WELL DETAIL
PGW-53
BRIDGETON LANDFILL, LLC
BRIDGETON, MISSOURI

Project Mgr. TKJ	Drawn By RLH	Designed By RLH	Project No. 3038.10
Scale No Scale	Date 10/24/08	File Name 3038.10 PGW-53 Detail.dwg	Drawing No. 1

K:\Allied Waste\B... 138.10 - 2008 PGW Installation\PGW Details\3038.10 PGW-53 Detail.dwg November 6, 2008 2:34:29 pm (rho)

✓

Layne-Western Company

A Layne Company
2399 Cassens Drive • Fenton, Missouri 63026

FIELD BORING LOG

39
Boring No. 14
PGW-54

Project Bridgeton Landfill Job No. 87 8445 Date 8-20-08

Location Bridgeton MO Crew Bill Pinson Jeff Litch

Drilling Method: ☐ HSA ☐ CFA ☒ Rotary Wash ☐ Rock Coring ☐ Drilling Fluid 8¼" Mobil Auger 8" Mainstbit

DEPTH, ft.		DESCRIPTION	Sample			SPT Blows N/6"
From	To		Type	Depth, ft.	Recovery	
0	10'	Brown Clay				
10	28'	Dark green clay mix with Trash	Stronge oder			
	28'	Bred Rock				
28	102'	gray limeston no Fracturing or limited				
	1	4" SCH 80 Bottom cap				
	9	4" SCH 80 10' Screen				
	1	4" SCH 80 10' Riser				
	1	4" SCH 80 5' Riser				
	1	4" SCH 80 top Cap				
	1½	Buckets gravel				
	5	Bags Bentonite Chips				

WATER LEVEL OBSERVATIONS	NOTES
During Drilling _____ ft.	Piezometer Installed: ☐ No ☐ Yes - Depth _____ ft.
At Completion _____ ft.	Well Bottom 102'
After _____ hrs. _____ ft.	
After _____ hrs. _____ ft.	
After _____ hrs. _____ ft.	

LW-794 3/90

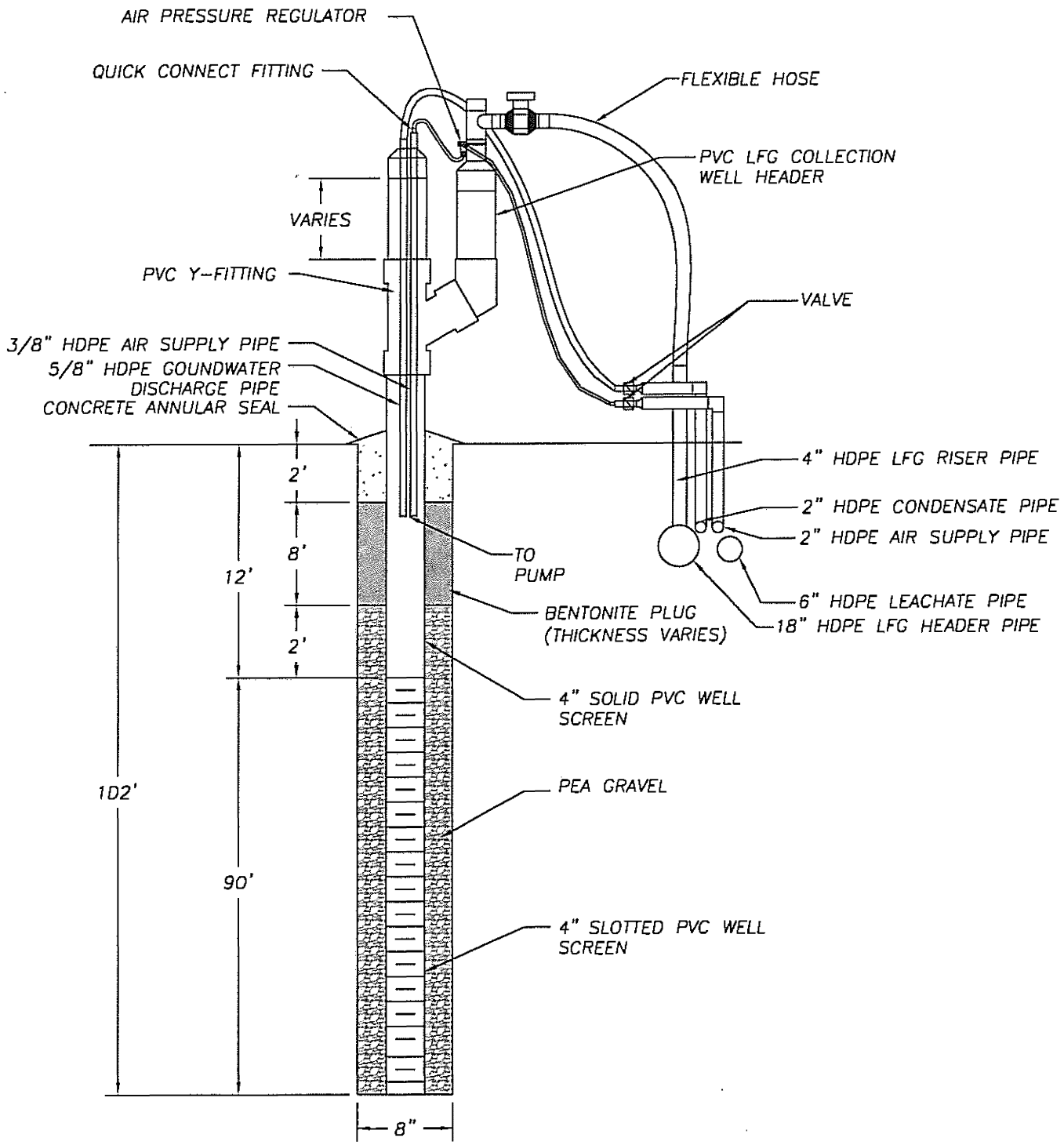

K:\Allied Waste\Bridg...3038.10 - 2008 PGW Installation\PGW Details\3038.10 PGW-54 Detail.dwg November 6, 2008 2:34:47 pm (rho)

AQUATERRA
ENVIRONMENTAL SOLUTIONS, INC.
141 Market Place Drive
Fairview Hieghts, Illinois 62208

WELL DETAIL
PGW-54
BRIDGETON LANDFILL, LLC
BRIDGETON, MISSOURI

Project Mgr.	Drawn By	Designed By	Project No.
TKJ	RLH	RLH	3038.10
Scale	**Date**	**File Name**	**Drawing No.**
No Scale	10/24/08	3038.10 PGW-54 Detail.dwg	1

Layne-Western Company

A Layne Company
2399 Cassens Drive • Fenton, Missouri 63026

FIELD BORING LOG

Boring No. 15 (58) PGW - 55

Project Bridgeton Landfill Job No. 87 8145 Date 8-02-08

Location Bridgeton MO Crew Bill Pinson Jeff Hitch

Drilling Method: ☐ HSA ☐ CFA ☒ Rotary Wash ☐ Rock Coring ☐ Drilling Fluid 8¼" mobil Augers 8" Inpact BIT

DEPTH, ft. From	DEPTH, ft. To	DESCRIPTION	Sample Type	Sample Depth, ft.	Sample Recovery	SPT Blows N/6"
0	10'	Brown clay Overburden.				
10	28'	Green clay heavy trash Deposits	Strong odor			
28'	60'	Gray limestone limited Fracturing				
60	102'	Gray limestone				
	1	4" SCH 80 Bottom cap				
	9	4" SCH 80 10' Screens				
	1	4" SCH 80 10' Riser				
	1	4" SCH 80 5' Riser				
	1	4" SCH 80 Top Cap				
	1½	Bucket gravel				
	5	Bags Bentonite Chips				

WATER LEVEL OBSERVATIONS	NOTES	Piezometer Installed: ☐ No ☐ Yes - Depth _____ ft.
During Drilling _____ ft.	Bottom well 102'	
At Completion _____ ft.		
After _____ hrs. _____ ft.		
After _____ hrs. _____ ft.		
After _____ hrs. _____ ft.		

LW-794 9/90

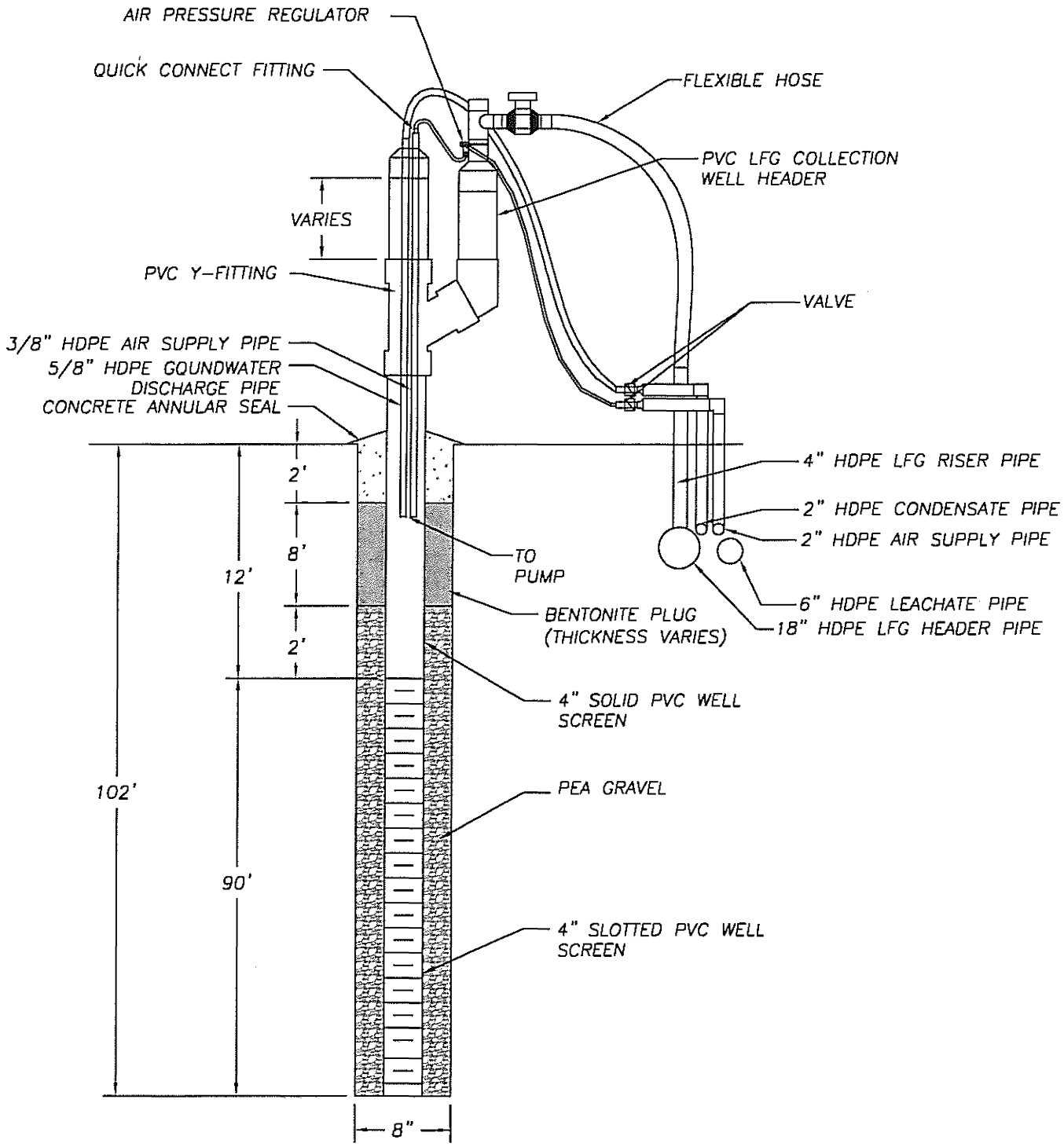

AQUATERRA
ENVIRONMENTAL SOLUTIONS, INC.
141 Market Place Drive
Fairview Hieghts, Illinois 62208

WELL DETAIL
PGW-55
BRIDGETON LANDFILL, LLC
BRIDGETON, MISSOURI

Project Mgr.	Drawn By	Designed By	Project No.
TKJ	RLH	RLH	3038.10
Scale	**Date**	**File Name**	**Drawing No.**
No Scale	10/24/08	3038.10 PGW-55 Detail.dwg	1

K:\Allied Waste\Brid\ 3038.10 - 2008 PGW Installation\PGW Details\3038.10 PGW-55 Detail.dwg November 6, 2008 2:35:09 pm (mo)

Layne-Western Company

A Layne Company
2399 Cassens Drive • Fenton, Missouri 63026

FIELD BORING LOG

Boring No. 34 # 16
PAW - 56

at Bridgeton L.F. Job No. 87 8445 Date 8-25-08

tion Bridgeton MO Crew Bill Pinson Jeff Litch

ing Method: ☐ HSA ☐ CFA ☐ Rotary Wash ☐ Rock Coring ☐ Drilling Fluid 8¼ Mobil Augers 8" hamm+Bit

DEPTH, ft. From	DEPTH, ft. To	DESCRIPTION	Sample Type	Sample Depth, ft.	Sample Recovery	SPT Blows N/6"
0	30'	Overburden Trash				
30	60'	weathered gray limestone				
60	63'	green shale				
33	70'	Broken Gray limestone Trash Smell				
70	90'	gray limestone stable Trash Smell				
90	102'	very easy Drill: limestone Trash Smell				
	1	4" SCH 80 Bottom Cap				
	9	4" SCH 80 10' Screen				
	1	4" SCH 80 10' Riser				
	1	4" SCH 80 5' Riser				
	1	4" SCH 80 top cap				
	1½	Buckets gravel				
	8	Bags Bentonite chips				

WATER LEVEL OBSERVATIONS	NOTES
During Drilling _____ ft.	Well Bottom 102'
At Completion _____ ft.	
After _____ hrs. _____ ft.	
After _____ hrs. _____ ft.	
After _____ hrs. _____ ft.	

Piezometer Installed: ☐ No ☐ Yes - Depth _____ ft.

LW 704 3/00

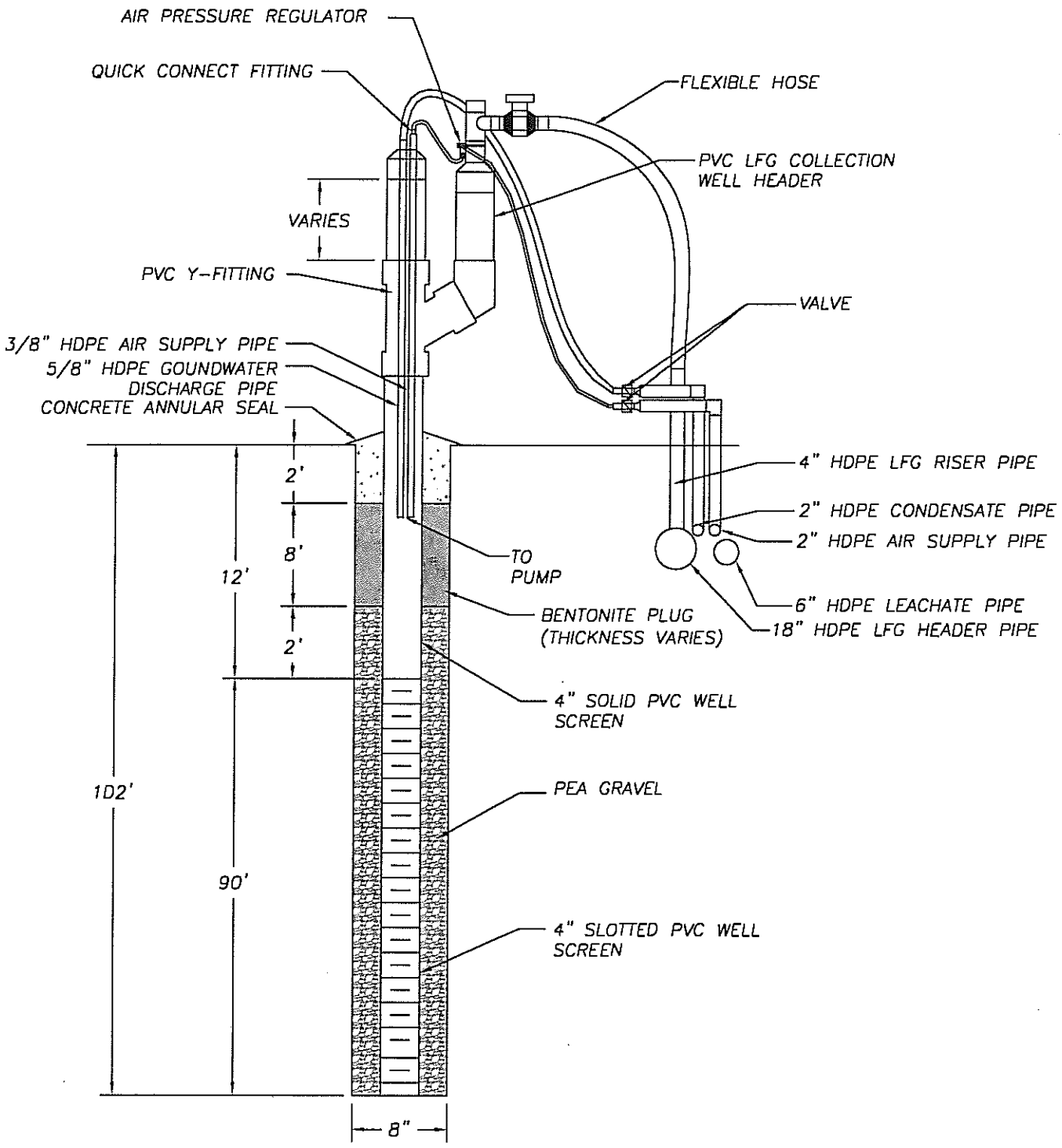

K:\Allied Waste\Brid, 1038.10 - 2008 PGW Installation\PGW Details\3038.10 PGW-56 Detail.dwg November 6, 2008 2:36:58 pm (rho,

AQUATERRA
ENVIRONMENTAL SOLUTIONS, INC.
141 Market Place Drive
Fairview Hieghts, Illinois 62208

WELL DETAIL
PGW-56
BRIDGETON LANDFILL, LLC
BRIDGETON, MISSOURI

Project Mgr.	Drawn By	Designed By	Project No.
TKJ	RLH	RLH	3038.10
Scale	**Date**	**File Name**	**Drawing No.**
No Scale	10/24/08	3038.10 PGW-56 Detail.dwg	1

Layne-Western Company

A Layne Company
2399 Cassens Drive • Fenton, Missouri 63026

FIELD BORING LOG

Boring No. #17
PAW-57

Project Bridgeton L.F. Job No. 878445 Date 8-25-08

Location Bridgeton MO Crew Bill Pinson Jeff Hitch

Drilling Method: ☐ HSA ☐ CFA ☒ Rotary Wash ☐ Rock Coring ☐ Drilling Fluid 8¼ mobil Augers 8' Man 8" Bit

DEPTH, ft. From	DEPTH, ft. To	DESCRIPTION	Sample Type	Sample Depth, ft.	Sample Recovery	SPT Blows N/6"
0	30'	Trash				
30	61'	weathered gray limestone				
61	62'	Shale				
62	70'	Broken gray limestone	Trash Smell			
70	80'	Broken gray limestone with Shale	Trash Smell			
80	90'	gray limestone	Trash Smell			
90	100	Broken very easily Drilled limestone				
	1	4" SCH 80 Bottom Cap				
	9	4" SCH 80 10' Screen				
	1	4" SCH 80 10' Riser				
	1	4" SCH 80 5' Riser				
	1	4" SCH 80 topcap				
	1½	Buckets Gravel				
	9	Bags Bentonite Chips				

WATER LEVEL OBSERVATIONS	NOTES
During Drilling _____ ft.	Piezometer Installed: ☐ No ☐ Yes - Depth _____ ft.
At Completion _____ ft.	
After _____ hrs. _____ ft.	
After _____ hrs. _____ ft.	
After _____ hrs. _____ ft.	

LW-704 3/00

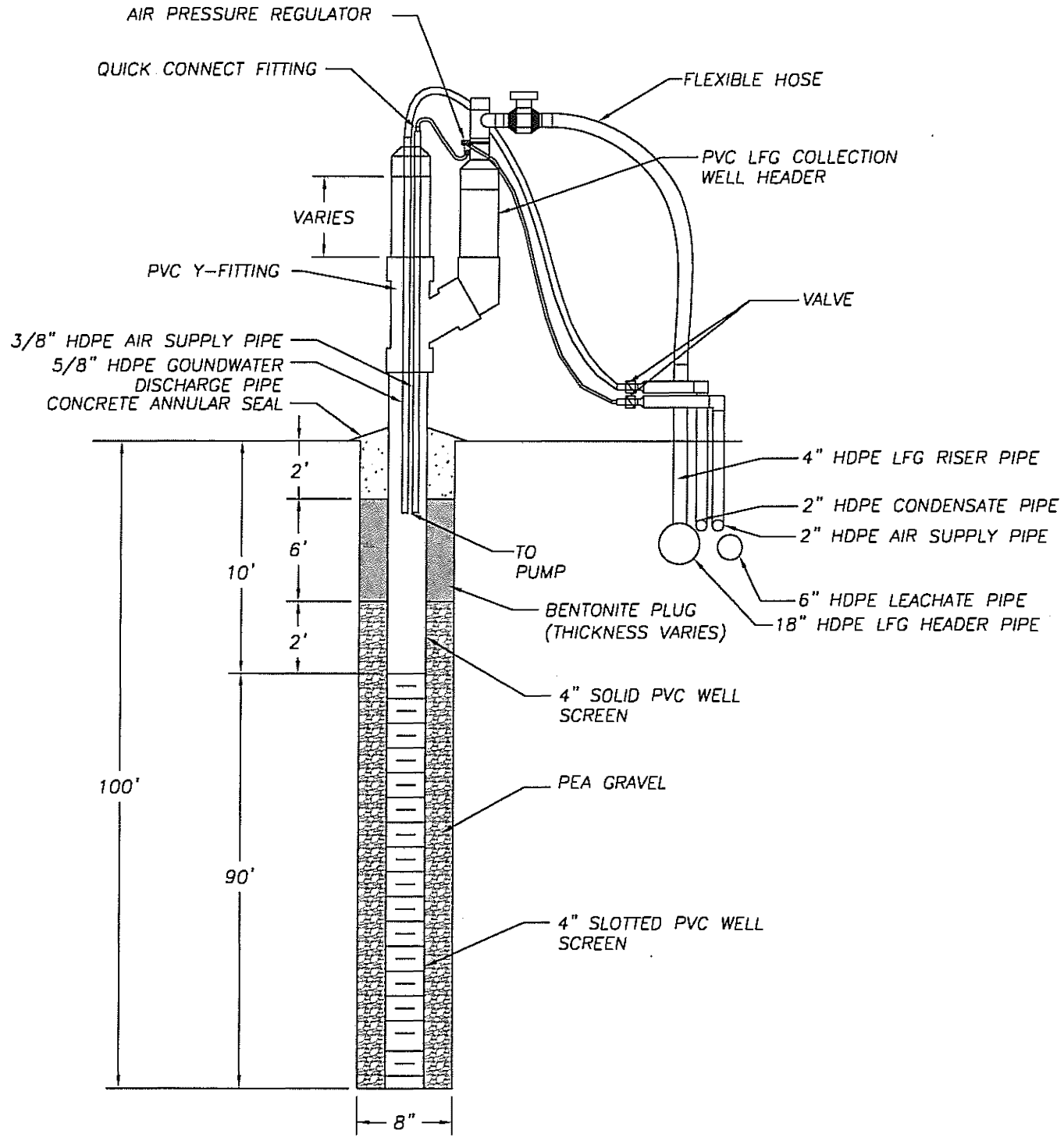

AQUATERRA
ENVIRONMENTAL SOLUTIONS, INC.
141 Market Place Drive
Fairview Hieghts, Illinois 62208

WELL DETAIL
PGW-57
BRIDGETON LANDFILL, LLC
BRIDGETON, MISSOURI

Project Mgr.	Drawn By	Designed By	Project No.
TKJ	RLH	RLH	3038.10
Scale	**Date**	**File Name**	**Drawing No.**
No Scale	10/24/08	3038.10 PGW-57 Detail.dwg	1

K:\Allied Waste\Brid... 3038.10 - 2008 PGW Installation\PGW Details\3038.10 PGW-57 Detail.dwg November 6, 2008 2:37:19 pm (rho.

Layne-Western Company

A Layne Company
2399 Cassens Drive • Fenton, Missouri 63026

FIELD BORING LOG

35 # Boring No. 18
PGW-58

Project Bridgeton L.F. Job No. 87-8445 Date 9-2-08

Location Bridgeton MO Crew Bill Pinson Jeff Hitch

Drilling Method: ☐ HSA ☐ CFA ☐ Rotary Wash ☐ Rock Coring ☐ Drilling Fluid 8¼ mobil Augers 8" mud 8" Bit

DEPTH, ft. From	DEPTH, ft. To	DESCRIPTION	Sample Type	Sample Depth, ft.	Sample Recovery	SPT Blows N/6"
0	32½'	trash Heavy odor				
33	61'	weathered gray limestone				
61	67'	mix of shale to limestone trash smell				
67	80'	Broken gray limestone				
80	90'	limestone				
90	102'	Broken easily Drilled limestone				
	1	4" SCH 80 top Cap				
	9	4" SCH 80 10' Screen				
	1	4" SCH 80 10' Riser				
	1	4" SCH 80 5' Riser				
	1	4" SCH 80 Bottom Cap				
	1½	Buckets gravel				
	9	Bags Bentonite chips				

WATER LEVEL OBSERVATIONS	NOTES
During Drilling ____ ft.	Bottom PVC 102'
At Completion ____ ft.	
After ____ hrs. ____ ft.	
After ____ hrs. ____ ft.	
After ____ hrs. ____ ft.	

Piezometer Installed: ☐ No ☐ Yes - Depth ____ ft.

LW-784 3/90

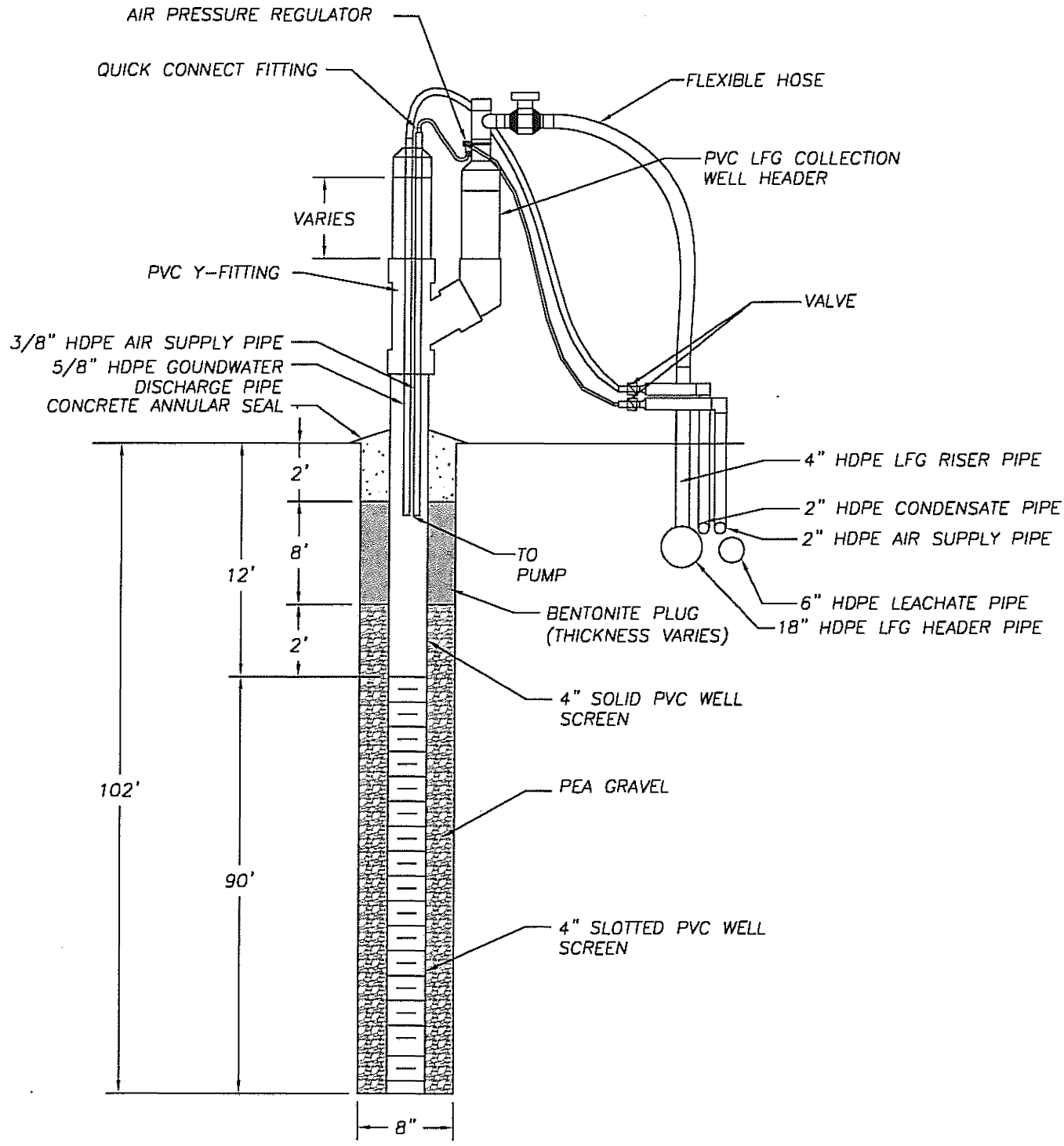

AQUATERRA
ENVIRONMENTAL SOLUTIONS, INC.
141 Market Place Drive
Fairview Hieghts, Illinois 62208

WELL DETAIL
PGW-58
BRIDGETON LANDFILL, LLC
BRIDGETON, MISSOURI

Project Mgr.	Drawn By	Designed By	Project No.
TKJ	RLH	RLH	3038.10
Scale	**Date**	**File Name**	**Drawing No.**
No Scale	10/24/08	3038.10 PGW-58 Detail.dwg	1

K:\Allied Waste\Bridg 038.10 - 2008 PGW Installation\PGW Details\3038.10 PGW-58 Detail.dwg November 6, 2008 2:37:36 pm (rho)

✓

Layne®

Layne-Western Company

A Layne Company
2399 Cassens Drive • Fenton, Missouri 63026

FIELD BORING LOG

34 Boring No. # 19
PGW-59

Project Bridgeton L.F. Job No. 87-8414/5 Date 8-29-08

Location Bridgeton MO Crew Bill Pinson Jeff Litch

Drilling Method: ☐ HSA ☐ CFA ☒ Rotary Wash ☐ Rock Coring ☐ Drilling Fluid 8¼" mud Augers 8¼ hammer Bit

DEPTH, ft. From	DEPTH, ft. To	DESCRIPTION	Sample Type	Sample Depth, ft.	Sample Recovery	SPT Blows N/6"
0	31'	Trash				
31	60'	Broken limestone Trash Smell				
		very close to Quarry wall Trash Smell				
60	70'	Broken gray limestone. Trash Smell				
70	80'	Broken shale limestone mix Trash Smell				
80	90'	Broken limestone. Trash Smell				
90	100	Broken limestone, Sandstone mix Trash Smell				
	1	4" SCH 80 Bottom Cap				
	9	4" SCH 80 10' Screen				
	1	4" SCH 80 10' Riser				
	1	4" SCH 80 5' Riser				
	1	4" SCH 80 Top Cap				
	1½	Buckets Gravel				
	9	Bags Bentonite chips				

WATER LEVEL OBSERVATIONS	NOTES
During Drilling _____ ft.	Piezometer Installed: ☐ No ☐ Yes - Depth _____ ft.
At Completion _____ ft.	
After _____ hrs. _____ ft.	
After _____ hrs. _____ ft.	
After _____ hrs. _____ ft.	

LW-704 3/90

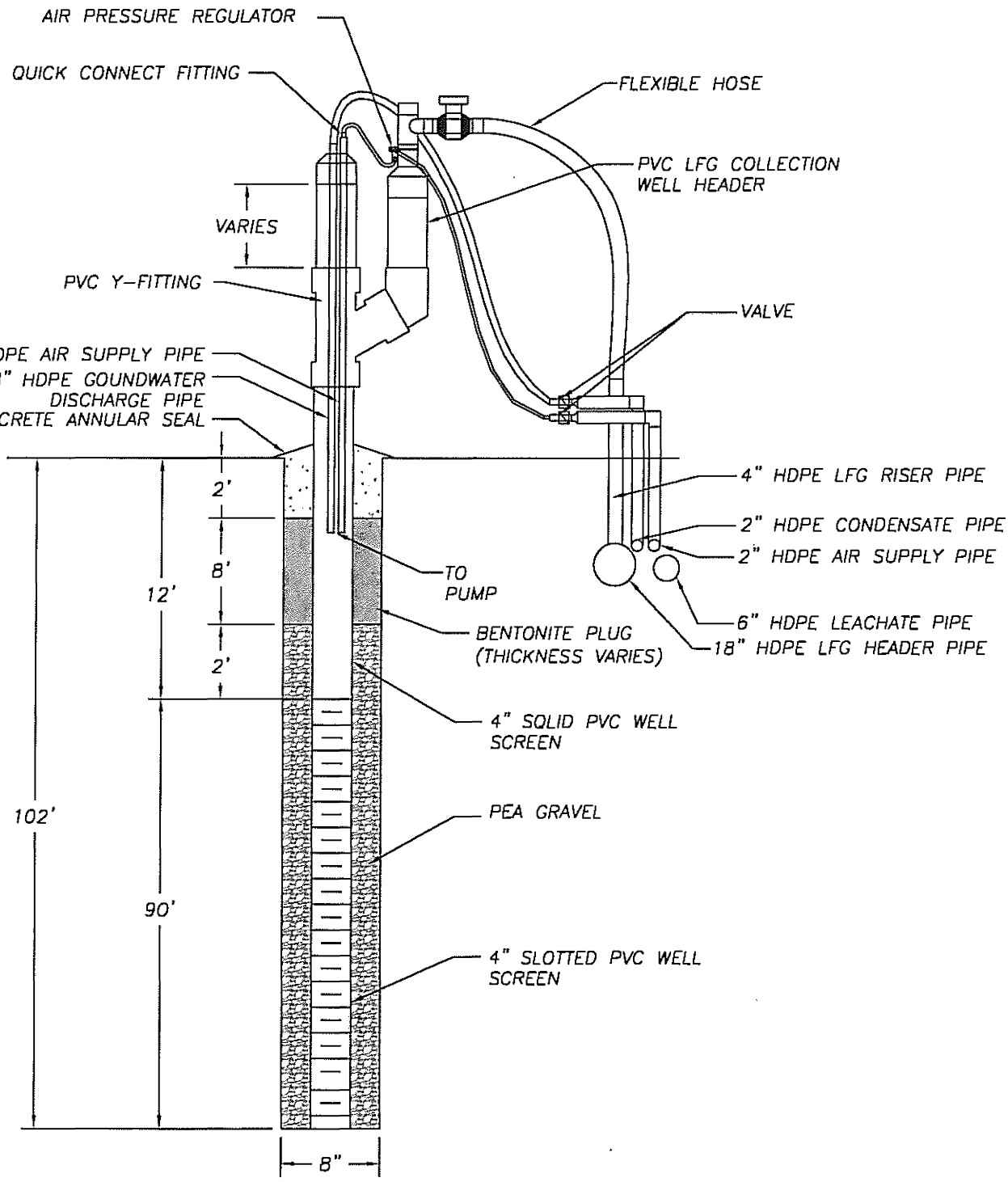

AQUATERRA
ENVIRONMENTAL SOLUTIONS, INC.
141 Market Place Drive
Fairview Hieghts, Illinois 62208

WELL DETAIL
PGW-59
BRIDGETON LANDFILL, LLC
BRIDGETON, MISSOURI

Project Mgr.	Drawn By	Designed By	Project No.
TKJ	RLH	RLH	3038.10
Scale	**Date**	**File Name**	**Drawing No.**
No Scale	10/24/08	3038.10 PGW-59 Detail.dwg	1

K:\Allied Waste\Bridgeton\3038.10 - 2008 PGW Installation\PGW Details\3038.10 PGW-59 Detail.dwg November 6, 2008 2:37:55 pm (rho

Layne-Western Company

A Layne Company
2399 Cassens Drive • Fenton, Missouri 63026

FIELD BORING LOG

33
Boring No. MW-60
PGW-60

Project Bridgeton L.F. Job No. 87 8445 Date 8-26-08

Location Bridgeton MO Crew Bill Pinson Jeff Hitch

Drilling Method: ☐ HSA ☐ CFA ☒ Rotary Wash ☐ Rock Coring ☐ Drilling Fluid 8¼" mobil Augers 8" hsa, 8" Bi

DEPTH, ft. From	DEPTH, ft. To	DESCRIPTION	Sample Type	Sample Depth, ft.	Sample Recovery	SPT Blows N/6"
0	102'	trash				
0	12'	NO Fluid				
12	102'	leach aid				
		well set at 98½'				
	1	4" SCH 80 Bottom Cap				
	9	4" SCH 80 10' Screen				
	1	4" SCH 80 10' Riser				
	1	4" SCH 80 5' Riser				
	1	4" SCH 80 top Cap				
	1½	Buckets Gravel				
	9	Bags Bentonite Chips				

WATER LEVEL OBSERVATIONS	NOTES
During Drilling ____ ft.	Piezometer Installed: ☐ No ☐ Yes - Depth ____ ft.
At Completion ____ ft.	well Bottom 98½'
After ____ hrs. ____ ft.	
After ____ hrs. ____ ft.	
After ____ hrs. ____ ft.	

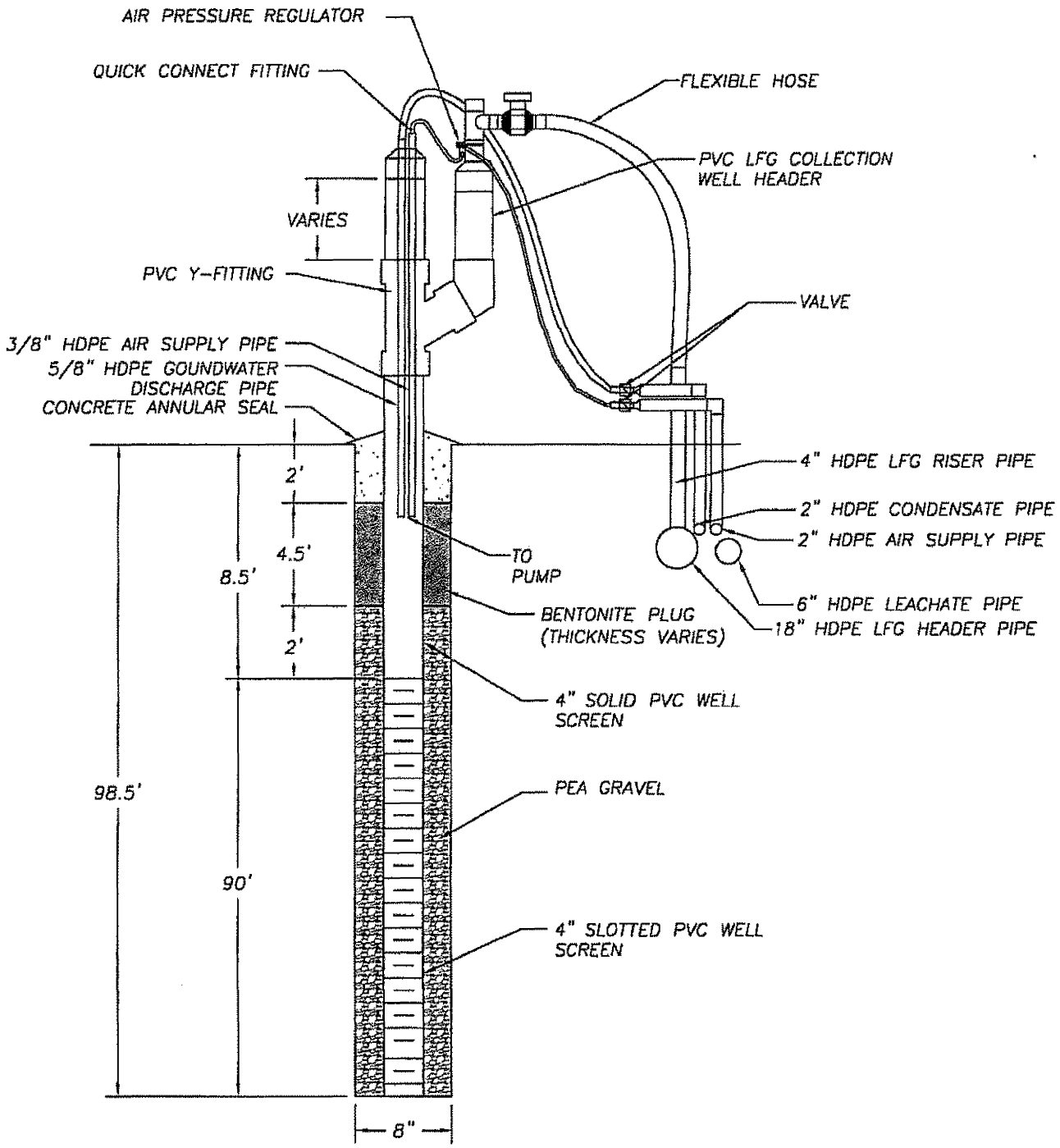

AQUATERRA
ENVIRONMENTAL SOLUTIONS, INC.
141 Market Place Drive
Fairview Hieghts, Illinois 62208

WELL DETAIL
PGW-60
BRIDGETON LANDFILL, LLC
BRIDGETON, MISSOURI

Project Mgr.	Drawn By	Designed By	Project No.
TKJ	RLH	RLH	3038.10
Scale	Date	File Name	Drawing No.
No Scale	10/24/08	3038.10 PGW-60 Detail.dwg	1

K:\Allied Waste\...\3038.10 - 2008 PGW Installation\PGW Details\3038.10 PGW-60 Detail.dwg November 6, 2008 2:38:12 pm (mq

TABLE 1
PERIMETER LANDFILL GAS WELL COORDINATES
CONSTRUCTION QUALITY ASSURANCE REPORT
BRIDGETON LANDFILL
BRIDGETON, MISSOURI

Point Number	Northing	Easting	Elevation	Description
2001	1067873.283	516609.979	479.78	4" Riser
2002	1067869.400	516614.860	483.39	PGW-41 ground
2003	1067869.440	516614.920	486.03	Top of Cap
2004	1067916.862	516664.221	477.06	4" Riser
2005	1067916.937	516664.202		7.75' offset perpendicular to header
2006	1067911.471	516667.284	481.80	PGW-42 ground
2007	1067911.471	516667.284	485.04	Top of Cap
2008	1067964.660	516727.150	475.90	4" Riser
2009	1067959.247	516730.698	480.96	PGW-43 ground
2010	1067959.247	516730.898	483.21	Top of Cap
2011	1068012.640	516784.270	476.24	4" Riser
2012	1068006.541	516787.758	480.64	PGW-44 ground
2013	1068006.541	516787.758	483.23	Top of Cap
2014	1068057.500	516841.960	477.66	4" Riser
2015	1068051.040	516844.760	481.23	PGW-45 ground
2016	1068051.040	516844.760	483.89	Top of Cap
2017	1068068.525	516856.192	482.49	Existing clean-out
2018	1068070.300	516858.270	484.39	Existing 6" leachate clean-out
2019	1068078.414	516866.545	482.92	PGW cut-off valve for PGW-41 through 53
2020	1068132.510	516872.100	479.63	4" Riser
2021	1068137.182	516878.377	482.75	PGW-46 ground
2022	1068137.182	516878.377	485.71	Top of Cap
2023	1068190.250	516823.900	480.44	4" Riser
2024	1068193.900	516829.065	483.93	PGW-47 ground
2025	1068193.900	516829.065	486.43	Top of Cap
2026	1068249.550	516776.110	482.19	4" Riser
2027	1068253.376	516781.769	484.73	PGW-48 ground
2028	1068253.376	516781.769	487.64	Top of Cap
2029	1068307.900	516729.760	482.34	4" Riser
2030	1068312.136	516736.260	486.52	PGW-49 ground
2031	1068312.136	516736.260	489.24	Top of Cap
2032	1068371.023	516691.286	487.01	4" Riser
2033	1068376.758	516694.420	486.29	PGW-50 ground
2034	1068376.758	516694.420	488.66	Top of Cap
2035	1068436.443	516648.621	488.79	4" Riser
2036	1068440.487	516653.168	488.72	PGW-51 ground
2037	1068440.487	516653.168	491.70	Top of Cap
2038	1068500.061	516613.940	490.55	4" Riser
2039	1068501.722	516620.725	489.42	PGW-52
2040	1068501.722	516620.725	491.81	Top of Cap
2041	1068540.381	516628.727	489.70	4" Riser
2042	1068536.980	516635.413	489.55	PGW-53
2043	1068536.980	516635.413	491.60	Top of Cap
2044	1068592.806	516643.611	492.32	4" Riser
2045	1068583.415	516649.371	490.22	PGW-54
2046	1068583.415	516649.371	493.43	Top of Cap
2047	1068638.901	516707.113	492.91	4" Riser
2048	1068632.244	516711.275	490.70	PGW-55
2049	1068632.244	516711.275	494.32	Top of Cap
2050	1068686.584	516765.300	492.07	4" Riser
2051	1068679.836	516768.837	490.69	PGW-56
2052	1068679.836	516768.837	494.66	Top of Cap
2053	1068729.600	516824.520	488.13	4" Riser
2054	1068724.754	516827.415	486.46	PGW-57
2055	1068724.754	516827.415	491.83	Top of Cap
2056	1068784.620	516872.310	484.36	4" Riser
2057	1068781.425	516877.148	487.10	PGW-58
2058	1068781.425	516877.148	490.12	Top of Cap
2059	1068796.116	516880.812	486.78	PGW cut-off valve for PGW-54 through 60
2060	1068829.160	516897.230	478.75	4" Riser
2061	1068828.149	516903.758	482.58	PGW-59
2062	1068828.149	516903.758	486.46	Top of Cap
2063	1068898.570	516881.250	473.94	4" Riser
2064	1068906.348	516883.049	474.82	PGW-60
2065	1068906.348	516883.049	478.33	Top of Cap
2066	1068887.797	516876.313	477.12	Top of Condensate Trap
2067	1068367.811	516684.154	489.07	Top of Condensate Trap

LANDFILL GAS MONITORING PROBES

GMP-1
As Built Diagram

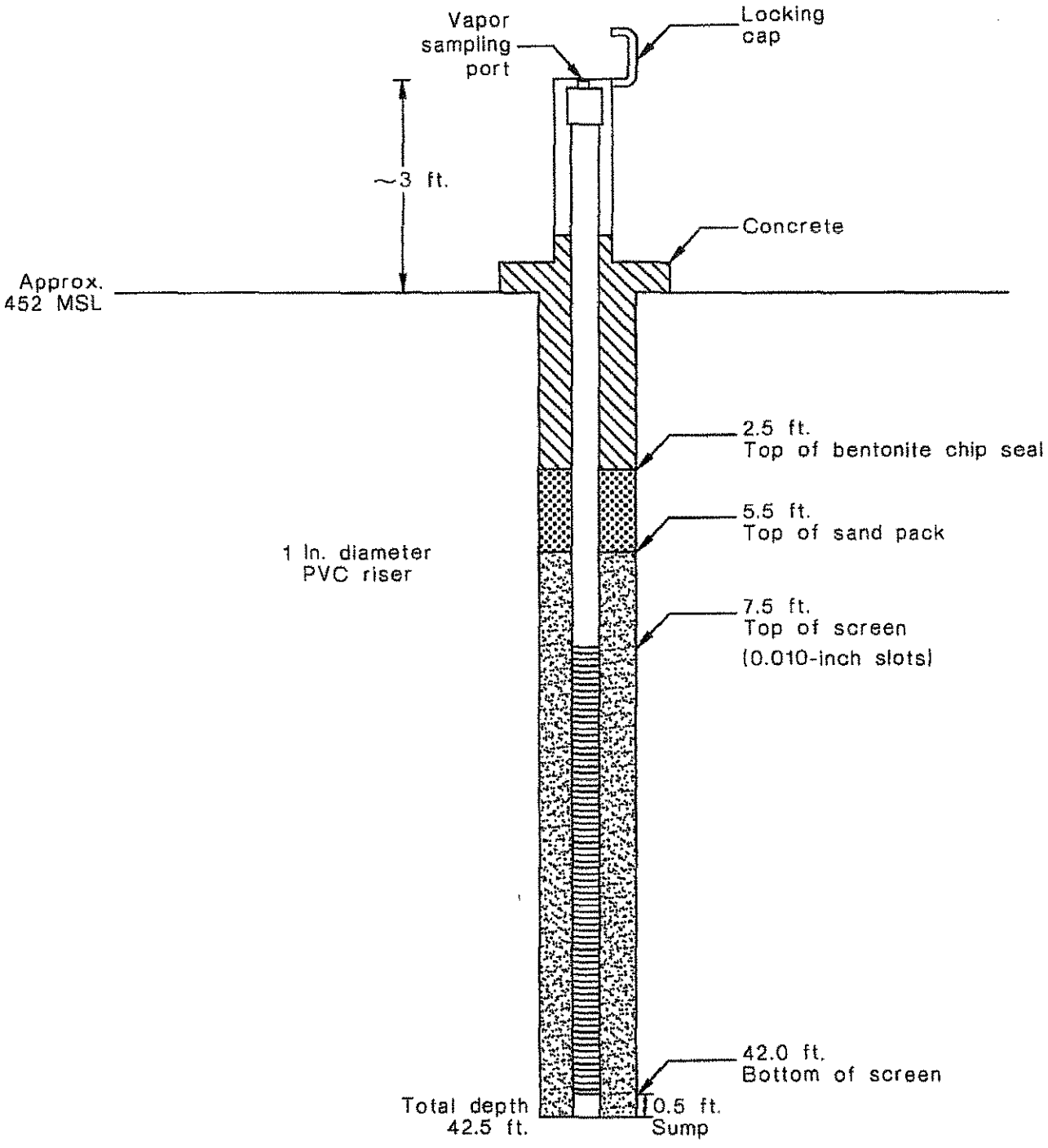

(Not to Scale)

All depths relative to ground surface

2206S-BL
GMP
GMP-1

MISSOURI DEPARTMENT OF NATURAL RESOURCES
DIVISION OF GEOLOGY AND LAND SURVEY

MONITORING WELL CERTIFICATION RECORD

OFFICE USE ONLY	DATE RECEIVED
REF. NO. 146363	
C.R. NO.	CHECK NO.
STATE WELL NUMBER	TRANSMITTAL NO.
CHECKED BY	ROUTE
APPROVED BY	ENTERED Ph 1 Ph 2 Ph 3

INFORMATION SUPPLIED BY MONITORING WELL CONTRACTOR

SITE/FACILITY NAME: Bridgeton Landfill Authority — WELL NUMBER: GMP-1

SITE ADDRESS: 13570 St. Charles Rk Rd — CITY: Bridgeton — STATE: Mo — ZIP CODE: 63042

OWNER NAME: Same — TELEPHONE: 314 739 1929

OWNER ADDRESS: — CITY: — STATE: — ZIP CODE:

VARIANCE ISSUED: ☑ YES ☐ NO — DATE ISSUED: 10-23-97 — VARIANCE NUMBER: V 833

DESCRIBE LOCATION OF THE WELL SO WE WOULD BE ABLE TO VISIT IT: South Side of Landfill Old St. Charles Rk Rd - Road Gate

LOCATION OF WELL — SHOW LOCATION IN SECTION PLAT — COUNTY: St. Louis — SURFACE ELEVATION: +478

SMALLEST ¼ — LARGEST ¼ — SEC. — TWN. — N,RNG. — E OR W

LAT. 92° 26' 34" — LONG. 38° 46' 12"

MONITORING WELL INSTALLATION CONTRACTOR'S NAME: Layne-Western — PERMIT NUMBER: 000126 SAMPM

DRILLING CONTRACTOR'S NAME: Layne-Western — PERMIT NUMBER: 000126 GWRM

WELL CONSTRUCTION INFORMATION

TYPE OF WELL: ☐ MONITORING WELL ☐ PIEZOMETER ☑ OTHER GAS Probe

TYPE OF POTENTIAL SITE: ☐ HAZARDOUS MATERIAL ☑ LANDFILL ☐ OTHER ☐ L.U.S.T.

MONITORING FOR: (CHECK ALL THAT APPLY) ☐ V.O.C. ☐ METALS ☐ PETROLEUM PRODUCT ☑ OTHER GAS ONLY

PROTECTIVE CASING DETAILS (IF USED): LENGTH 5 FT. — DIAMETER OF CASING 6 IN. — WEIGHT OR SDR # 40 — DIAMETER AND DEPTH OF DRILL HOLE 2.5 x 2 IN. FT. — JOINTS ☐ MECHANICAL ☑ THREADED ☑ WELDED ☐ OTHER — MATERIAL ☐ THERMO PLASTIC ☑ STEEL ☐ FLUORO POLYMER ☐ OTHER — LOCKING CAP? ☑ YES ☐ NO

CASING GROUT DETAILS: CAP VENTED ☐ YES ☑ NO — WEEP HOLE? ☑ YES ☐ NO — MATERIAL ☐ CEMENT ☑ CONCRETE ☐ OTHER — DEPTH FROM THE SURFACE TO THE BOTTOM OF THE CASING GROUT SEAL 3' FT.

TYPE OF SURFACE COMPLETION: ☑ ABOVE GROUND ☐ FLUSH MOUNT

DESCRIBE HOW THE FLUSH MOUNT WAS CONSTRUCTED: N/A

CENTRALIZER USED ON RISER ☑ NO ☐ YES LOCATED AT — MATERIAL ☐ STAINLESS STEEL ☐ OTHER

RISER PIPE DETAILS: LENGTH 13 FT. — DIAMETER OF RISER PIPE 1 IN. — WEIGHT OR SDR # 80 — DIAMETER OF DRILL HOLE 6 IN. — JOINTS ☐ MECHANICAL ☑ THREADED ☐ WELDED ☐ OTHER — MATERIAL ☑ THERMO PLASTIC ☐ STEEL ☐ FLUORO POLYMER ☐ OTHER

ANNULAR SEAL: ☐ CEMENT SLURRY ☑ BENTONITE SLURRY ☐ NON SLURRY BENTONITE ☐ CEMENT/BENTONITE SLURRY BAGS OF — CEMENT USED — % BENTONITE USED — WATER USED/BAG — GAL. — TYPE:

BENTONITE SEAL: MATERIAL BENTONITE ☐ SLURRY ☑ CHIPS ☐ GRANULAR ☐ PELLETS — LENGTH OF SEAL 3 — BENTONITE SEAL INSTALLED IN ☑ UNSATURATED ZONE ☐ SATURATED ZONE

PRIMARY FILTER PACK: TYPE ☑ SAND ☐ MANUFACTURED ☐ NATURAL — GRAIN SIZE 20/40 — LENGTH OF FILTER PACK 37 FT. — METHOD OF INSTALLATION Tremie

SECONDARY FILTER PACK: TYPE ☐ SAND ☐ MANUFACTURED ☑ NONE — GRAIN SIZE — — LENGTH OF FILTER PACK — FT. — METHOD OF INSTALLATION —

WELL SCREEN: LENGTH OF SCREEN 35 FT. — DIAMETER 1 IN. — SLOT SIZE 10 — WEIGHT OR SDR # 80 — MATERIAL ☑ PLASTIC ☐ STEEL ☐ FLUORO POLYMER

SUMP DETAILS: LENGTH OF SUMP N/A — DIAMETER OF SUMP — — MATERIAL ☐ PVC ☐ STEEL ☐ FLUORO POLYMER ☐ OTHER

BACK FILL: WAS THE WELL BACK FILLED? ☐ YES ☑ NO — MATERIAL USED — — LENGTH OF BACK FILLED BORE HOLE —

STATIC WATER LEVEL 24 FEET FROM MEASURING POINT — DATE OF STATIC WATER LEVEL 11-4-97

MEASURING POINT FOR STATIC WATER LEVEL IS ☐ TOP OF RISER PIPE ☑ OTHER Ground

ELEVATION OF MEASURING POINT +478

MULTIPLE CASED WELLS: SUBMIT ADDITIONAL AS BUILT DIAGRAM SHOWING WELL CONSTRUCTION DETAILS INCLUDING TYPE AND SIZE OF ALL CASING, HOLE DIAMETERS, AND GROUT USED.

DRILLING EQUIPMENT: ☑ AIR ROTARY ☐ AUGER TYPE — ☐ REVERSE ROTARY ☐ OTHER

Information in this column to be supplied in the Feet from Surface column	FEET FROM SURFACE	FORMATION DESCRIPTION
Depth to bottom of Protective Casing Seal:	2.5	0-25 Clay
Depth to Base of Annular Seal:	2.5	25-42 Shale
Depth to Base of Bentonite Seal:	2.5	
Depth to Top of Primary Filter Pack:	5.5	
Depth to Top of the Screen:	7.5	
Depth to Bottom of the Screen:	42.5	
Total Depth:	42.5	

DATE WELL DRILLING WAS COMPLETED 11/4/97

I HEREBY CERTIFY THAT THE MONITORING WELL HEREIN DESCRIBED WAS CONSTRUCTED IN ACCORDANCE WITH THE DEPARTMENT OF NATURAL RESOURCES REQUIREMENTS FOR THE CONSTRUCTION OF MONITORING WELLS.

SIGNATURE PRIMARY CONTRACTOR/PERMIT # 000126 SAMPM — DATE 1/25/98 — SIGNATURE DRILLER/PERMIT # 000126 GWRM — DATE 1-22-98

MO 780-1415 (7-95)

DISTRIBUTION: WHITE/DIVISION/ CANARY/MONITORING WELL CONTRACTOR PINK/OWNER

MAIL WHITE COPY TO: DEPARTMENT OF NATURAL RESOURCES, P.O. BOX 250, ROLLA, MO 65402

ENCLOSE $35 PER MONITORING WELL FOR THE CERTIFICATION FEE WITHIN 60 DAYS AFTER WELL COMPLETION

RECYCLED PAP

GMP-2
As Built Diagram

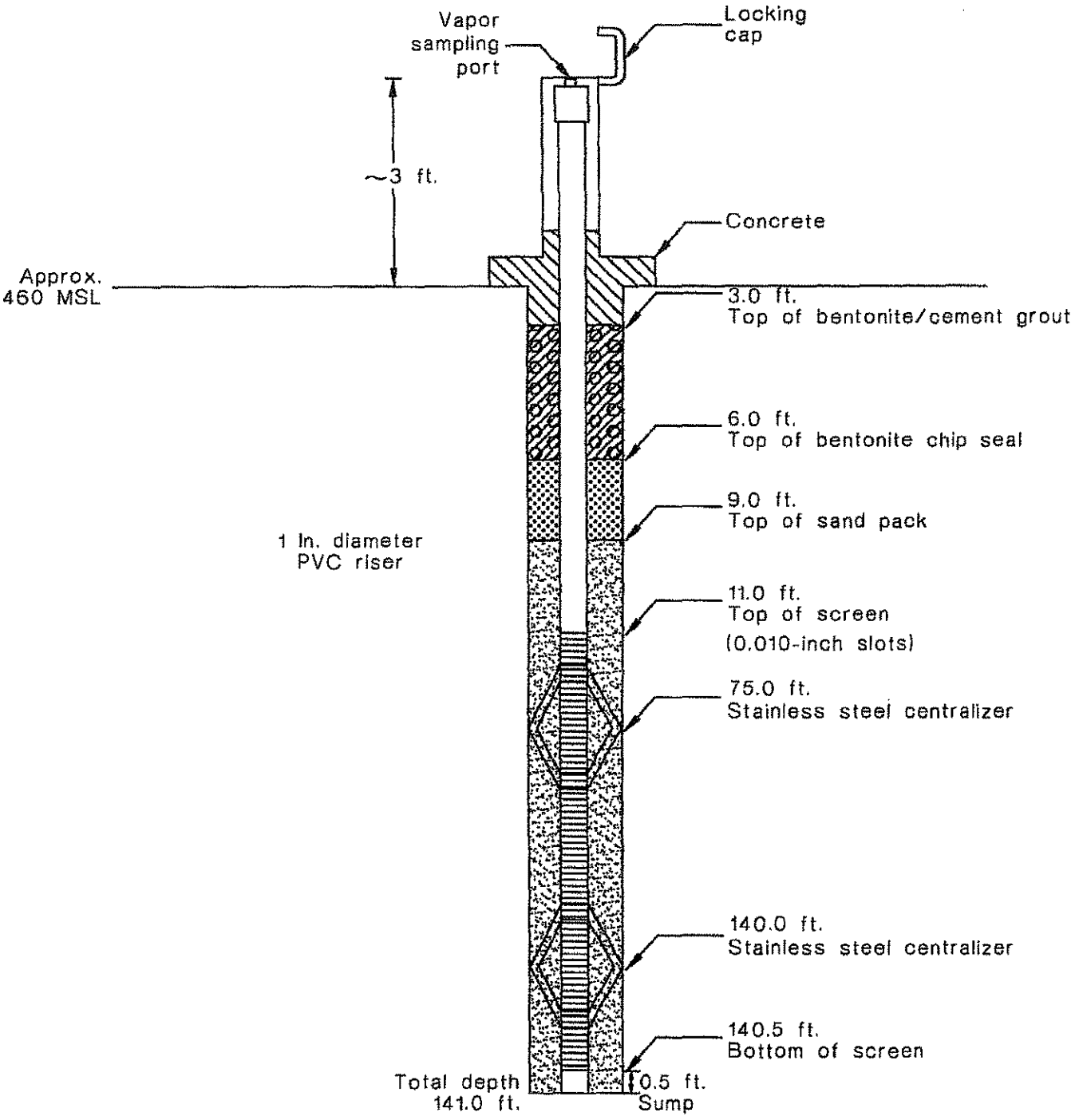

(Not to Scale)

All depths relative to ground surface

2206S-BL
GMP
GMP-2

MISSOURI DEPARTMENT OF NATURAL RESOURCES
DIVISION OF GEOLOGY AND LAND SURVEY

MONITORING WELL CERTIFICATION RECORD

OFFICE USE ONLY	DATE RECEIVED
REF. NO. 162335	
C.R. NO.	CHECK NO.
STATE WELL NUMBER	TRANSMITTAL NO.
CHECKED BY	ROUTE
APPROVED BY	ENTERED Ph 1 Ph 2 Ph 3

INFORMATION SUPPLIED BY MONITORING WELL CONTRACTOR

SITE/FACILITY NAME: Bridgeton Landfill Authority — WELL NUMBER: EMP-2

SITE ADDRESS: 13570 St Charles Rock Rd — CITY: Bridgeton — STATE: MO — ZIP CODE: 63042

OWNER NAME: Same — TELEPHONE: 314 739-1919

OWNER ADDRESS: — CITY: — STATE: — ZIP CODE:

VARIANCE ISSUED ☐ YES ☐ NO — DATE ISSUED: 10-23-97 — VARIANCE NUMBER: V833

DESCRIBE LOCATION OF THE WELL SO WE WOULD BE ABLE TO VISIT IT: Old St Charles Rock Road at South end of Landfill through Road gate And 200' East

LOCATION OF WELL — SHOW LOCATION IN SECTION PLAT — COUNTY: St Louis — SURFACE ELEVATION: E478

SMALLEST ¼ ____ ¼ ____ ¼ ____ ¼ LARGEST ¼

SEC. ____ TWN. ____ N.RNG. ____ E.C

LAT. 92 ° 26 34 " LONG. 38 ° 46 12 "

MONITORING WELL INSTALLATION CONTRACTOR'S NAME: Layne-Western — PERMIT NUMBER: 00126 / WPM

DRILLING CONTRACTOR'S NAME: Layne-Western — PERMIT NUMBER: 00126 / WPM

WELL CONSTRUCTION INFORMATION

TYPE OF WELL: ☐ MONITORING WELL ☐ PIEZOMETER ☐ OTHER Gas Probe

TYPE OF POTENTIAL SITE: ☐ HAZARDOUS MATERIAL ☐ LANDFILL ☐ OTHER ☐ L.U.S.T.

MONITORING FOR: (CHECK ALL THAT APPLY) ☐ V.O.C. ☐ METALS ☐ PETROLEUM PRODUCTS ☐ OTHER GAS ONLY

PROTECTIVE CASING DETAILS (IF USED): LENGTH 5 FT. — DIAMETER OF CASING 6 IN. — WEIGHT OR SDR # 40 — DIAMETER AND DEPTH OF DRILL HOLE 15x2 IN. FT. — JOINTS ☐ THREADED ☐ MECHANICAL ☐ WELDED ☐ OTHER — MATERIAL ☐ STEEL ☐ THERMO PLASTIC ☐ FLUORO POLYMER TYPE — LOCKING CAP? ☐ YES ☐ NO

CAP VENTED ☐ YES ☐ NO — WEEP HOLE? ☐ YES ☐ NO

CASING GROUT DETAILS: MATERIAL ☐ CEMENT ☐ CONCRETE ☐ OTHER — DEPTH FROM THE SURFACE TO THE BOTTOM OF THE CASING GROUT SEAL 3 FT. — TYPE OF SURFACE COMPLETION ☐ ABOVE GROUND ☐ FLUSH MOUNT

DESCRIBE HOW THE FLUSH MOUNT WAS CONSTRUCTED: N/A

CENTRALIZER USED ON RISER ☐ NO ☐ YES LOCATED AT 75' : 140' — MATERIAL ☐ STAINLESS STEEL ☐ OTHER

RISER PIPE DETAILS: LENGTH 12 FT. — DIAMETER OF RISER PIPE 1 IN. — WEIGHT OR SDR # 80 — DIAMETER OF DRILL HOLE 6 IN. — JOINTS ☐ THREADED ☐ MECHANICAL ☐ WELDED ☐ OTHER — MATERIAL ☐ THERMO PLASTIC ☐ STEEL ☐ FLUORO POLYMER ☐ OTHER

ANNULAR SEAL: ☐ CEMENT SLURRY ☑ BENTONITE SLURRY ☐ NON SLURRY BENTONITE TYPE: ☐ CEMENT/BENTONITE SLURRY BAGS OF CEMENT USED % BENTONITE USED WATER USED/BAG GAL.

BENTONITE SEAL: MATERIAL BENTONITE ☐ SLURRY ☑ CHIPS ☐ GRANULAR ☐ PELLETS — LENGTH OF SEAL 3 — BENTONITE SEAL INSTALLED IN ☐ UNSATURATED ZONE ☐ SATURATED ZONE

PRIMARY FILTER PACK: TYPE ☑ SAND ☐ MANUFACTURED ☐ NATURAL — GRAIN SIZE 20/40 — LENGTH OF FILTER PACK 132 FT. — METHOD OF INSTALLATION Tremie

SECONDARY FILTER PACK: TYPE ☐ SAND ☐ MANUFACTURED ☑ NONE — GRAIN SIZE — — LENGTH OF FILTER PACK — FT. — METHOD OF INSTALLATION —

WELL SCREEN: LENGTH OF SCREEN 130 FT. — DIAMETER 1 IN. — SLOT SIZE 10 — WEIGHT OR SDR # 80 — MATERIAL ☐ PLASTIC ☐ STEEL ☐ FLUORO POLYMER

SUMP DETAILS: LENGTH OF SUMP N/A — DIAMETER OF SUMP — — MATERIAL ☐ PVC ☐ STEEL ☐ FLUORO POLYMER ☐ OTHER

BACK FILL: WAS THE WELL BACK FILLED? ☐ YES ☑ NO — MATERIAL USED — — LENGTH OF BACK FILLED BORE HOLE —

STATIC WATER LEVEL 60 FEET FROM MEASURING POINT — DATE OF STATIC WATER LEVEL 11-5-97

MEASURING POINT FOR STATIC WATER LEVEL IS: ☐ TOP OF RISER PIPE ☑ OTHER Ground

ELEVATION OF MEASURING POINT ± [illegible]

MULTIPLE CASED WELLS: SUBMIT ADDITIONAL AS BUILT DIAGRAM SHOWING WELL CONSTRUCTION DETAILS INCLUDING TYPE AND SIZE OF ALL CASING, HOLE DIAMETERS, AND GROUT USED.

DRILLING EQUIPMENT: ☑ AIR ROTARY ☐ AUGER TYPE ☐ REVERSE ROTARY ☐ OTHER

Information in this column to be supplied in the Feet from Surface column	FEET FROM SURFACE	FORMATION DESCRIPTION
Depth to bottom of Protective Casing Seal:	3	0-13 Clay
Depth to Base of Annular Seal:	6	13-141 LS/Shale
Depth to Base of Bentonite Seal:	9	with Chert
Depth to Top of Primary Filter Pack:	9	
Depth to Top of the Screen:	11	
Depth to Bottom of the Screen:	141	
Total Depth:	141	
DATE WELL DRILLING WAS COMPLETED	11-5-97	

I HEREBY CERTIFY THAT THE MONITORING WELL HEREIN DESCRIBED WAS CONSTRUCTED IN ACCORDANCE WITH THE DEPARTMENT OF NATURAL RESOURCES REQUIREMENTS FOR THE CONSTRUCTION OF MONITORING WELLS.

SIGNATURE PRIMARY CONTRACTOR/PERMIT # [illegible] 00214PM — DATE 1/23/98 — SIGNATURE DRILLER/PERMIT # 00126 / WPM [illegible] — DATE 1-12-98

MO 780-1415 (7-95)

DISTRIBUTION: WHITE/DIVISION CANARY/MONITORING WELL CONTRACTOR PINK/OWNER
MAIL WHITE COPY TO: DEPARTMENT OF NATURAL RESOURCES, P.O. BOX 250, ROLLA, MO 65402
ENCLOSE $35 PER MONITORING WELL FOR THE CERTIFICATION FEE WITHIN 60 DAYS AFTER WELL COMPLETION

RECYCLED P

GMP-3
As Built Diagram

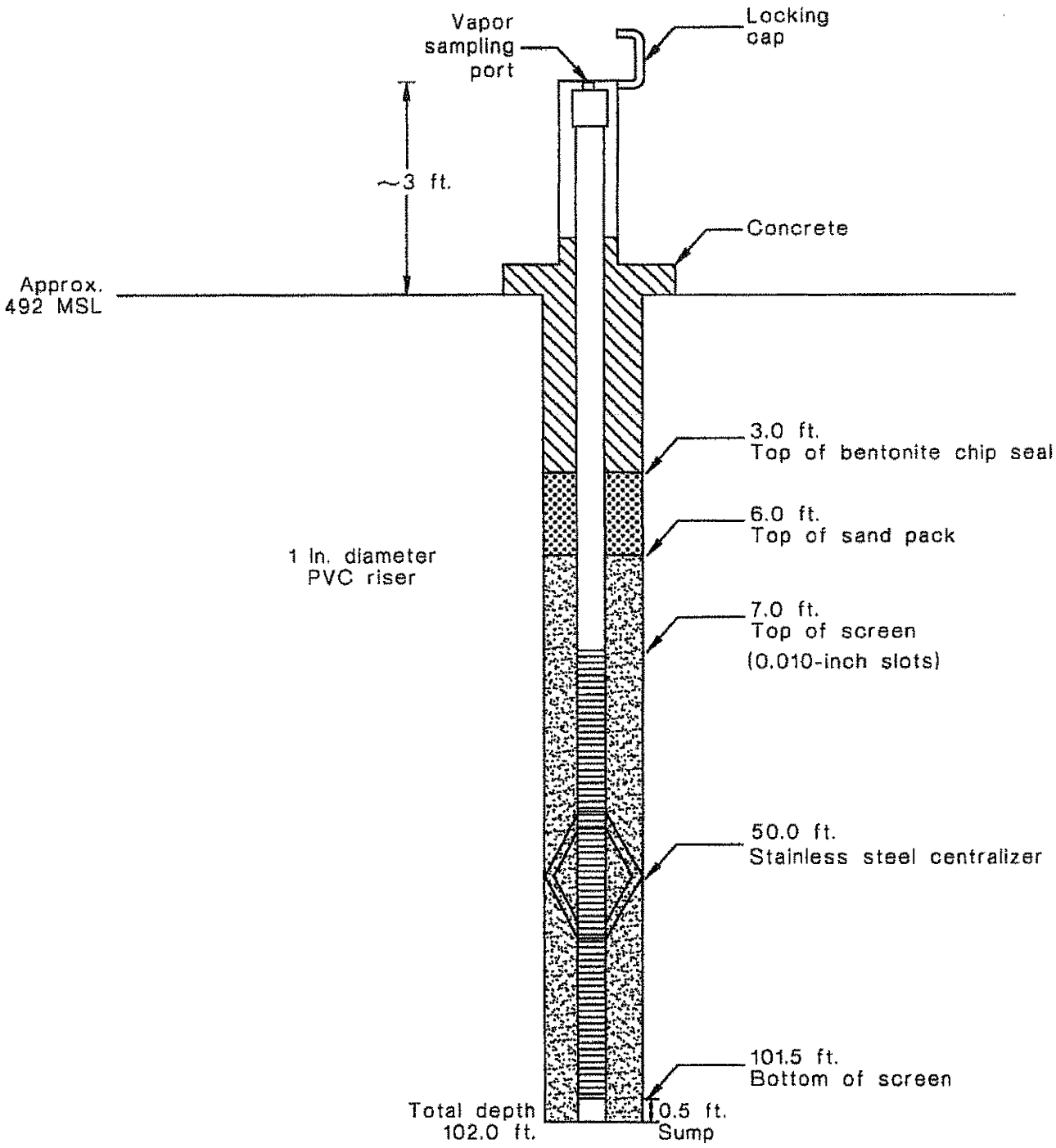

(Not to Scale)

All depths relative to ground surface

2206S-BL
GMP
GMP-3

MISSOURI DEPARTMENT OF NATURAL RESOURCES
DIVISION OF GEOLOGY AND LAND SURVEY

MONITORING WELL CERTIFICATION RECORD

OFFICE USE ONLY	DATE RECEIVED
REF. NO. 145157	
C.R. NO.	CHECK NO.
STATE WELL NUMBER	TRANSMITTAL NO.
CHECKED BY	ROUTE
APPROVED BY	ENTERED Ph 1 Ph 2 Ph 3

INFORMATION SUPPLIED BY MONITORING WELL CONTRACTOR

SITE/FACILITY NAME: Bridgeton Landfill Auxiliary | WELL NUMBER: GMP-3

SITE ADDRESS: 13570 St Charles Rock Rd | CITY: Bridgeton | STATE: MO | ZIP CODE: 63042

OWNER NAME: SAME | TELEPHONE: 314 739 1919

OWNER ADDRESS: | CITY: | STATE: | ZIP CODE:

VARIANCE ISSUED: ☑ YES ☐ NO | DATE ISSUED: 10-23-97 | VARIANCE NUMBER: V 8833

DESCRIBE LOCATION OF THE WELL SO WE WOULD BE ABLE TO VISIT IT: Southeast Corner of the Landfill at Old St. Charles Rock Road

LOCATION OF WELL — SHOW LOCATION IN SECTION PLAT | COUNTY: St Louis | SURFACE ELEVATION: ± 478

SMALLEST ¼ ____ ¼ ____ ¼ | LARGEST ¼

SEC. ____ TWN. ____ N,RNG. ____ E OR W

LAT. 92 · 26 · 34 · LONG. 38 · 46 · 12 ·

MONITORING WELL INSTALLATION CONTRACTOR'S NAME: Layne-Western | PERMIT NUMBER: 001261 MDNR

DRILLING CONTRACTOR'S NAME: Layne-Western | PERMIT NUMBER: 001261 MDNR

WELL CONSTRUCTION INFORMATION

TYPE OF WELL: ☐ MONITORING WELL ☐ PIEZOMETER ☑ OTHER GAS Probe

TYPE OF POTENTIAL SITE: ☐ HAZARDOUS MATERIAL ☑ LANDFILL ☐ OTHER ☐ L.U.S.T.

MONITORING FOR: (CHECK ALL THAT APPLY) ☐ V.O.C. ☐ METALS ☐ PETROLEUM PRODUCT ☑ OTHER GAS ONLY

PROTECTIVE CASING DETAILS (IF USED): LENGTH: 5 FT. | DIAMETER OF CASING: 6 IN. | WEIGHT OR SDR #: 40 | DIAMETER AND DEPTH OF DRILL HOLE: 2.5 x 2 IN. FT. | JOINTS: ☐ MECHANICAL ☐ THREADED ☐ WELDED ☐ OTHER | MATERIAL: ☑ STEEL ☐ THERMO PLASTIC ☐ FLUORO POLYMER ☐ OTHER TYPE | LOCKING CAP? ☑ YES ☐ NO

CASING GROUT DETAILS: CAP VENTED ☐ YES ☑ NO | WEEP HOLE? ☑ YES ☐ NO | MATERIAL: ☐ CEMENT ☑ CONCRETE ☐ OTHER | DEPTH FROM THE SURFACE TO THE BOTTOM OF THE CASING GROUT SEAL: 3 FT. | TYPE OF SURFACE COMPLETION: ☑ ABOVE GROUND ☐ FLUSH MOUNT | DESCRIBE HOW THE FLUSH MOUNT WAS CONSTRUCTED: N/A

CENTRALIZER USED ON RISER: ☐ NO ☑ YES LOCATED AT ± 50' | MATERIAL: ☑ STAINLESS STEEL ☐ OTHER

RISER PIPE DETAILS: LENGTH: 12 FT. | DIAMETER OF RISER PIPE: 1 IN. | WEIGHT OR SDR #: SD | DIAMETER OF DRILL HOLE: 6 IN. | JOINTS: ☑ THREADED ☐ MECHANICAL ☐ WELDED ☐ OTHER | MATERIAL: ☐ STEEL ☐ THERMO PLASTIC ☐ FLUORO POLYMER ☐ OTHER

ANNULAR SEAL: ☐ CEMENT SLURRY ☑ BENTONITE SLURRY ☐ NON SLURRY BENTONITE TYPE: ☐ CEMENT/BENTONITE SLURRY BAGS OF CEMENT USED % BENTONITE USED WATER USED/BAG GAL

BENTONITE SEAL: MATERIAL: BENTONITE ☐ SLURRY ☑ CHIPS ☐ GRANULAR ☐ PELLETS | LENGTH OF SEAL: 3 | BENTONITE SEAL INSTALLED IN: ☑ UNSATURATED ZONE ☐ SATURATED ZONE

PRIMARY FILTER PACK: TYPE: ☑ SAND ☐ MANUFACTURED ☐ NATURAL | GRAIN SIZE: 2/40 | LENGTH OF FILTER PACK: 96 FT. | METHOD OF INSTALLATION: Tremie

SECONDARY FILTER PACK: TYPE: ☐ SAND ☐ MANUFACTURED ☑ NONE | GRAIN SIZE: — | LENGTH OF FILTER PACK: — FT. | METHOD OF INSTALLATION: —

WELL SCREEN: LENGTH OF SCREEN: 95 FT. | DIAMETER: 1 IN. | SLOT SIZE: 10 | WEIGHT OR SDR #: SD | MATERIAL: ☑ PLASTIC ☐ STEEL ☐ FLUORO POLYMER

SUMP DETAILS: LENGTH OF SUMP: N/A | DIAMETER OF SUMP: | MATERIAL: ☐ PVC ☐ STEEL ☐ FLUORO POLYMER ☐ OTHER

BACK FILL: WAS THE WELL BACK FILLED? ☐ YES ☑ NO | MATERIAL USED: — | LENGTH OF BACK FILLED BORE HOLE: —

STATIC WATER LEVEL: 55 FEET FROM MEASURING POINT | DATE OF STATIC WATER LEVEL: 11/10/97

MEASURING POINT FOR STATIC WATER LEVEL IS: ☐ TOP OF RISER PIPE ☑ OTHER Ground

ELEVATION OF MEASURING POINT: ± 478

MULTIPLE CASED WELLS: SUBMIT ADDITIONAL AS BUILT DIAGRAM SHOWING WELL CONSTRUCTION DETAILS INCLUDING TYPE AND SIZE OF ALL CASING, HOLE DIAMETERS, AND GROUT USED.

DRILLING EQUIPMENT: ☑ AIR ROTARY ☐ AUGER TYPE ☐ REVERSE ROTARY ☐ OTHER

Information in this column to be supplied in the Feet from Surface column	FEET FROM SURFACE	FORMATION DESCRIPTION
Depth to bottom of Protective Casing Seal:	3	0-35 Clay w/Sand
Depth to Base of Annular Seal:	3	35-102 Ls/Shale
Depth to Base of Bentonite Seal:	6	With Chert
Depth to Top of Primary Filter Pack:	6	
Depth to Top of the Screen:	7	
Depth to Bottom of the Screen:	102	
Total Depth:	102	
DATE WELL DRILLING WAS COMPLETED	11/10/97	

I HEREBY CERTIFY THAT THE MONITORING WELL HEREIN DESCRIBED WAS CONSTRUCTED IN ACCORDANCE WITH THE DEPARTMENT OF NATURAL RESOURCES REQUIREMENTS FOR THE CONSTRUCTION OF MONITORING WELLS.

SIGNATURE PRIMARY CONTRACTOR/PERMIT #	DATE	SIGNATURE DRILLER/PERMIT #	DATE
C2714PM	1/23/98	001261 MDNR	1-22-98

MO 780-1416 (7-95)

DISTRIBUTION: WHITE/DIVISION CANARY/MONITORING WELL CONTRACTOR PINK/OWNER

MAIL WHITE COPY TO: DEPARTMENT OF NATURAL RESOURCES, P.O. BOX 250, ROLLA, MO 65402

ENCLOSE $35 PER MONITORING WELL FOR THE CERTIFICATION FEE WITHIN 60 DAYS AFTER WELL COMPLETION

RECYCLED PAPER

GMP-4
As Built Diagram

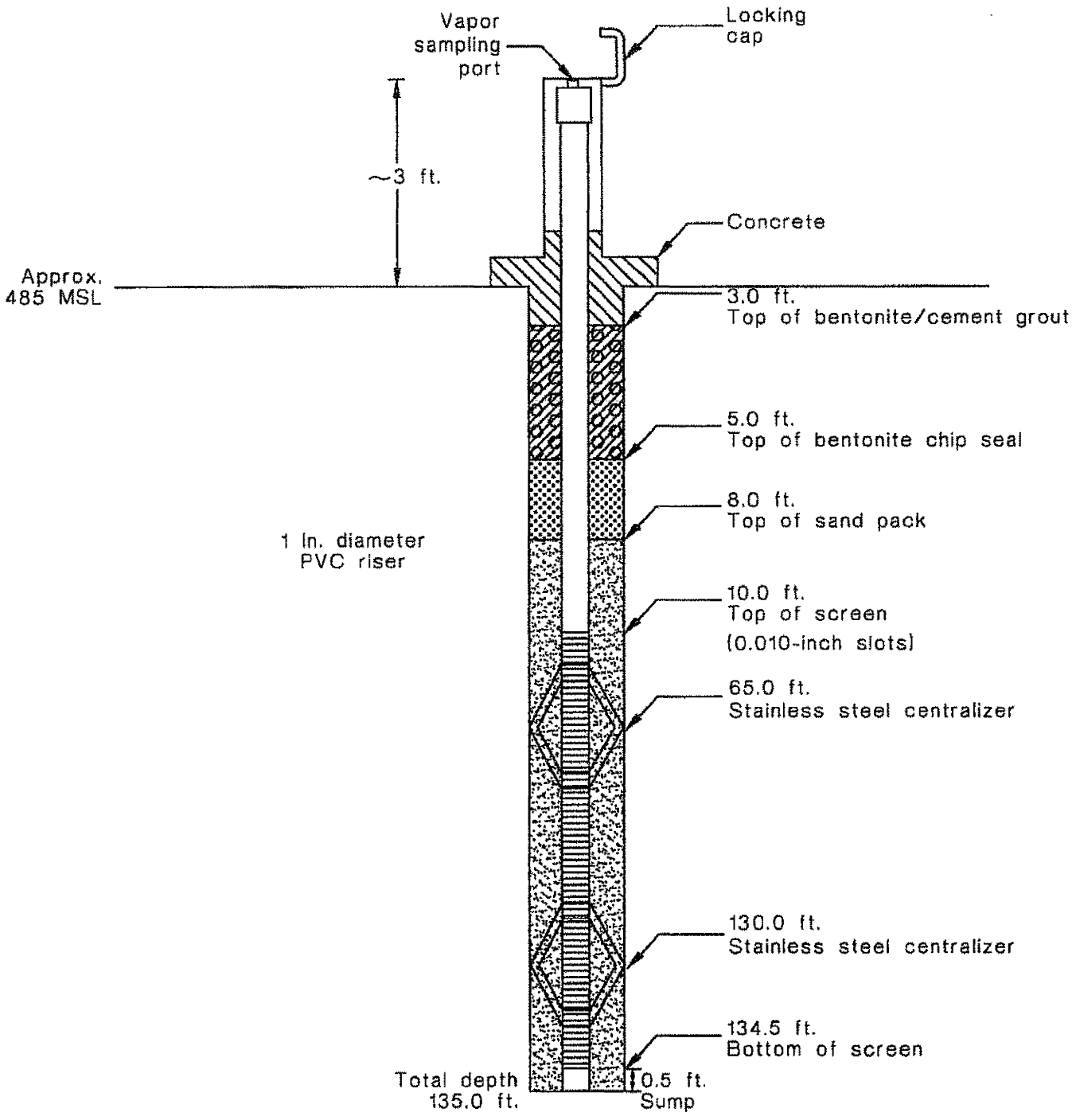

(Not to Scale)

All depths relative to ground surface

2206S-BL
GMP
GMP-4

MISSOURI DEPARTMENT OF NATURAL RESOURCES
DIVISION OF GEOLOGY AND LAND SURVEY

MONITORING WELL CERTIFICATION RECORD

OFFICE USE ONLY	DATE RECEIVED
REF. NO. 162334	
C.R. NO.	CHECK NO.
STATE WELL NUMBER	TRANSMITTAL NO.
CHECKED BY	ROUTE
APPROVED BY	ENTERED Ph 1 Ph 2 Ph 3

INFORMATION SUPPLIED BY MONITORING WELL CONTRACTOR

SITE/FACILITY NAME: Bridgeton Landfill Authority | WELL NUMBER: GMP-4

SITE ADDRESS: 13570 St. Charles Rock Rd | CITY: Bridgeton | STATE: MO | ZIP CODE: 63042

OWNER NAME: [illegible] | TELEPHONE: 314 739 1919

OWNER ADDRESS: [illegible] | CITY | STATE | ZIP CODE

VARIANCE ISSUED: ☒ YES ☐ NO | DATE ISSUED: 10-23-97 | VARIANCE NUMBER: V 833

DESCRIBE LOCATION OF THE WELL SO WE WOULD BE ABLE TO VISIT IT: East Side of Landfill in Farmed Land Approximately 1/2 Mile North of Old St Charles Rock Rd

LOCATION OF WELL SHOW LOCATION IN SECTION PLAT

COUNTY: St. Louis | SURFACE ELEVATION: ± 478

SMALLEST ¼ | LARGEST ¼

SEC. ____ TWN. ____ N,RNG. ____ E OR

LAT. 92° 26' 34" LONG. 38° 46' 12"

MONITORING WELL INSTALLATION CONTRACTOR'S NAME	Layne Western	PERMIT NUMBER	001261 WPM
DRILLING CONTRACTOR'S NAME	Layne - Western	PERMIT NUMBER	001261 WPM

WELL CONSTRUCTION INFORMATION

TYPE OF WELL: ☐ MONITORING WELL ☐ PIEZOMETER ☒ OTHER Gas Probe

TYPE OF POTENTIAL SITE: ☐ HAZARDOUS MATERIAL ☒ LANDFILL ☐ OTHER ☐ L.U.S.T.

MONITORING FOR: (CHECK ALL THAT APPLY) ☐ V.O.C. ☐ METALS ☐ PETROLEUM PRODUCT ☒ OTHER GAS ONLY

PROTECTIVE CASING DETAILS (IF USED): LENGTH 5 FT. | DIAMETER OF CASING 6 IN. | WEIGHT OR SDR # 40 | DIAMETER AND DEPTH OF DRILL HOLE 2.5 IN. FT. | JOINTS ☐ THREADED ☐ WELDED ☐ MECHANICAL ☐ OTHER | MATERIAL ☐ THERMO PLASTIC ☒ STEEL ☐ FLUORO POLYMER TYPE | LOCKING CAP? ☒ YES ☐ NO

CASING GROUT DETAILS: CAP VENTED ☐ YES ☒ NO | WEEP HOLE? ☒ YES ☐ NO | MATERIAL ☐ CEMENT ☒ CONCRETE ☐ OTHER | DEPTH FROM THE SURFACE TO THE BOTTOM OF THE CASING GROUT SEAL 3 FT.

TYPE OF SURFACE COMPLETION: ☒ ABOVE GROUND ☐ FLUSH MOUNT

DESCRIBE HOW THE FLUSH MOUNT WAS CONSTRUCTED: N/A

CENTRALIZER USED ON RISER ☐ NO ☒ YES LOCATED AT ± 130' & 65' | MATERIAL ☒ STAINLESS STEEL ☐ OTHER

RISER PIPE DETAILS: LENGTH 10 FT. | DIAMETER OF RISER PIPE 1 IN. | WEIGHT OR SDR # 80 | DIAMETER OF DRILL HOLE 6 IN. | JOINTS ☒ THREADED ☐ MECHANICAL ☐ WELDED ☐ OTHER | MATERIAL ☒ THERMO PLASTIC ☐ STEEL ☐ FLUORO POLYMER ☐ OTHER

ANNULAR SEAL: ☐ CEMENT SLURRY ☒ BENTONITE SLURRY ☐ NON SLURRY BENTONITE TYPE ☐ CEMENT/BENTONITE SLURRY BAGS OF CEMENT USED % BENTONITE USED WATER USED/BAG GAL.

BENTONITE SEAL: MATERIAL BENTONITE ☐ SLURRY ☒ CHIPS ☐ GRANULAR ☐ PELLETS | LENGTH OF SEAL 3 | BENTONITE SEAL INSTALLED IN ☒ UNSATURATED ZONE ☐ SATURATED ZONE

PRIMARY FILTER PACK: TYPE ☒ SAND ☐ MANUFACTURED ☐ NATURAL | GRAIN SIZE 20/40 | LENGTH OF FILTER PACK 127 FT. | METHOD OF INSTALLATION Tremie

SECONDARY FILTER PACK: TYPE ☐ SAND ☐ MANUFACTURED ☒ NONE | GRAIN SIZE — | LENGTH OF FILTER PACK — FT. | METHOD OF INSTALLATION —

WELL SCREEN: LENGTH OF SCREEN 125 FT. | DIAMETER 1 IN. | SLOT SIZE 10 | WEIGHT OR SDR # 80 | MATERIAL ☒ PLASTIC ☐ STEEL ☐ FLUORO POLYMER

SUMP DETAILS: LENGTH OF SUMP N/A | DIAMETER OF SUMP — | MATERIAL ☐ PVC ☐ STEEL ☐ FLUORO POLYMER ☐ OTHER

BACK FILL: WAS THE WELL BACK FILLED? ☐ YES ☒ NO | MATERIAL USED — | LENGTH OF BACK FILLED BORE HOLE —

Information in this column to be supplied in feet from surface column

	FEET FROM SURFACE	FORMATION DESCRIPTION
Depth to bottom of Protective Casing Seal:	3	0-40 Clay
Depth to Base of Annular Seal:	5	40-135 Gs/Sh
Depth to Base of Bentonite Seal:	8	Gravel Chert
Depth to Top of Primary Filter Pack:	8	
Depth to Top of the Screen:	10	
Depth to Bottom of the Screen:	135	
Total Depth:	135	
DATE WELL DRILLING WAS COMPLETED	11-12-97	

STATIC WATER LEVEL 120 FEET FROM MEASURING POINT

DATE OF STATIC WATER LEVEL 11-12-97

MEASURING POINT FOR STATIC WATER LEVEL IS ☐ TOP OF RISER PIPE ☒ OTHER Ground

ELEVATION OF MEASURING POINT ± 478

MULTIPLE CASED WELLS: SUBMIT ADDITIONAL AS BUILT DIAGRAM SHOWING WELL CONSTRUCTION DETAILS INCLUDING TYPE AND SIZE OF ALL CASING, HOLE DIAMETERS, AND GROUT USED.

DRILLING EQUIPMENT: ☒ AIR ROTARY ☐ AUGER TYPE ☐ REVERSE ROTARY ☐ OTHER

I HEREBY CERTIFY THAT THE MONITORING WELL HEREIN DESCRIBED WAS CONSTRUCTED IN ACCORDANCE WITH THE DEPARTMENT OF NATURAL RESOURCES REQUIREMENTS FOR THE CONSTRUCTION OF MONITORING WELLS.

SIGNATURE PRIMARY CONTRACTOR/PERMIT #	DATE	SIGNATURE DRILLER/PERMIT #	DATE
[illegible] 003714PM	1/23/98	Craig Skowley OPTECT WPM	1-22-98

MO 780-1415 (7-95)

DISTRIBUTION: WHITE/DIVISION CANARY/MONITORING WELL CONTRACTOR PINK/OWNER

MAIL WHITE COPY TO: DEPARTMENT OF NATURAL RESOURCES P.O. BOX 250, ROLLA, MO 65402

ENCLOSE $35 PER MONITORING WELL FOR THE CERTIFICATION FEE WITHIN 60 DAYS AFTER WELL COMPLETION

RECYCLED PAPER

AQUATERRA
Environmental Solutions, Inc.

13 Executive Dr. Suite 1 Fairview Heights IL 62208

LOG OF BORING NO: **GMP-4**

SHEET NUMBER: 1 of 2

CLIENT:	Republic Services, Inc.
PROJECT NAME:	Bridgeton Landfill
PROJECT NUMBER:	4788.10
ROJECT LOCATION:	Maryland Heights, MO
BORING LOCATION:	N: 1066895 E: 515160
AES PROJECT NO:	4788.10
AES GEOLOGIST:	T.Pool, C. Joyce
START DATE:	08/31/12 FINISH DATE 09/04/12
START TIME:	FINISH TIME

DRILLING CONTRACTOR:	Roberts Environmental Drilling
DRILLER:	Patrick
DRILLING RIG:	Track Mounted CME-75
DRILLING METHOD:	8" ID HSA, 8" Air Rorary
SAMPLING METHOD:	Split Spoon, Cuttings
BORING DIAMETER:	10"/6"
WELL DIAMETER:	2x2"
WELL COMPLETION:	Stick-Up
SURFACE ELEVATION:	484.2
TOC ELEVATION:	S-487.2', D-487.21'
WATER LEVEL:	-
WATER ELEVATION:	-
DATE:	-

WELL CONSTRUCTION DETAILS		
MATERIAL:	PVC	PVC
CASING DIAMETER:	2"	2"
WELL TOTAL DEPTH:	70'	43'
SCREEN LENGTH:	20'	35'
RISER LENGTH:	53'	11'
TOP OF SCREEN:	49'	7.8'
BOTTOM OF SCREEN:	69'	42.8'
SCREEN SLOT:	0.010 IN	0.010 IN
TOP OF FILTER PACK:	45'	5'
TOP OF SEAL:	43'	3'
TYPE OF SEAL:	3/8" Bentonite Chips	→
TYPE OF FILTER PACK:	12/20 Silica GMP-4D	GMP-4S

SAMPLE NUMBER	SAMPLE TYPE	BLOW COUNT	RECOVERY (FT)	DEPTH IN FEET	USCS CLASS	SOIL DESCRIPTION AND DRILLING CONDITIONS
HSA-1				2		Top 2" roots and vegetation Medium brown (5yr4/4), fine SAND with lean CLAY, moist
SS-1	SS		2.0	4		
HSA-2	CU			6	SC	
SS-2	SS		2.0	8		Moderate brown (2yr3/4) very fine clayey SAND, moist
HSA-3	CU			10		
SS-3	SS		2.0	12		
HSA-4	CU			14		Moderate brown (5yr4/4) fine sandy CLAY, moist
SS-4	SS		2.0	16		
HSA-5	CU			18		Color grades to dark yellow brown, slightly coarser (10yr5/4)
SS-5	SS		2.0	20	CL	Moderate yellow bronw (10yr5/4) fine sandy lean CLAY, moist
HSA-6	CU			22		
SS-6	SS		2.0	24		Color grades to pale Brown (5yr5/2)
HSA-7	CU			26		Grayish red (10yr4/2) clayey fine SAND, wet
HSA-8	CU			28		
				30		Light olive gray (5y5/2)
				32	SC	
				34		
				36		Saturated so no samples taken
				38		
				40		

NOTES AND WELL CONSTRUCTION

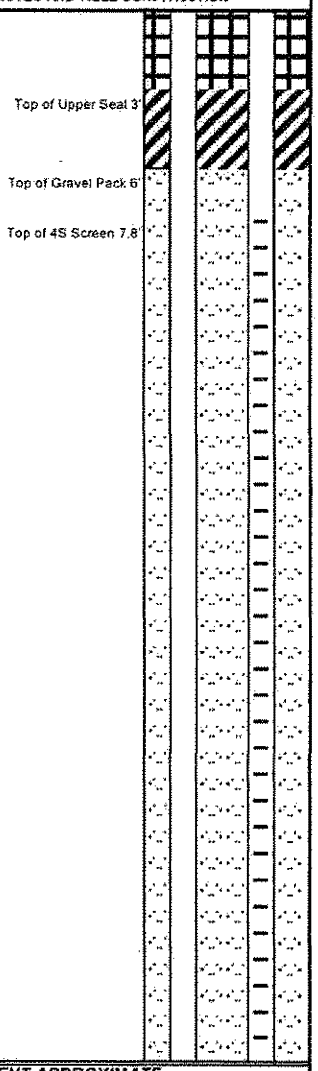

LEGEND:

SS - Split Spoon
CU -Cuttings Sample
ST - Shelby Tube
PID - Photoionization Detecto
PP - Pocket Penetrometer
HSA - Hollow Stem Augers
AR - Air Rotary
HA - Hand Auger
WB - Wash Bore
RB - Rock Bit
NX - Rock Core

THE STRATIFICATION LINES REPRESENT APPROXIMATE BOUNDARY LINES BETWEEN SOIL AND ROCK TYPES: IN-SITU, THE TRANSITION MAY BE GRADUAL.

AQUATERRA

Environmental Solutions, Inc.

13 Executive Dr. Suite 1 Fairview Heights IL 62208

LOG OF BORING NO. **GMP-4** SHEET NUMBER 2 of 2

GEOLOGIST T.Pool, C. Joyce

CLIENT: Republic Services, Inc.

DATE: 08/31/12

PROJECT NAME: Bridgeton Landfill

PROJECT NUMBER: 4788.1

SAMPLE NUMBER	SAMPLE TYPE	BLOW COUNT	RECOVERY (FT)	DEPTH IN FEET	USCS CLASS	SOIL DESCRIPTION AND DRILLING CONDITIONS	NOTES:
HSA-9	CU			42	SC		Bottom of 4S Screen 42.8'
				44			Top of Lower Seal 43'
				46		Bedrock @45 Very dark red (SR2.5) clayey SHALE, dry Light black in gray mottles (5b7/1)	Top of Gravel Pack 45'
				48			
				50			Top of 4D Screen 49'
				52			
				54		Red brown SHALE, wet	
AR	CU			56	SH		
				58			
				60			
				62			
				64		Band of gray shale, wet	
				66			
				68		Red brown SHALE, wet	
				70			Bottom of 4D Screen 69'
						Boring Terminated @ 70.0'	
				72			
				74			
				76			
				78			
				80			
				82			
				84			
				86			
				88			
				90			

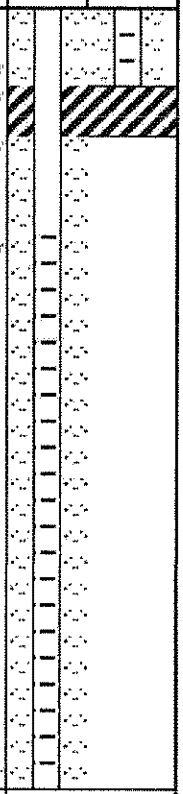

LEGEND:

SS - Split Spoon
CS - 5 foot CME Sampler
ST - Shelby Tube
PID - Photoionization Detecto
PP - Pocket Penetrometer
HSA - Hollow Stem Augers
AR - Air Rotary
HA - Hand Auger
WB - Wash Bore
RB - Rock Bit
NX - Rock Core

THE STRATIFICATION LINES REPRESENT APPROXIMATE BOUNDARY LINES BETWEEN SOIL AND ROCK TYPES: IN-SITU, THE TRANSITION MAY BE GRADUAL.

GMP-5
As Built Diagram

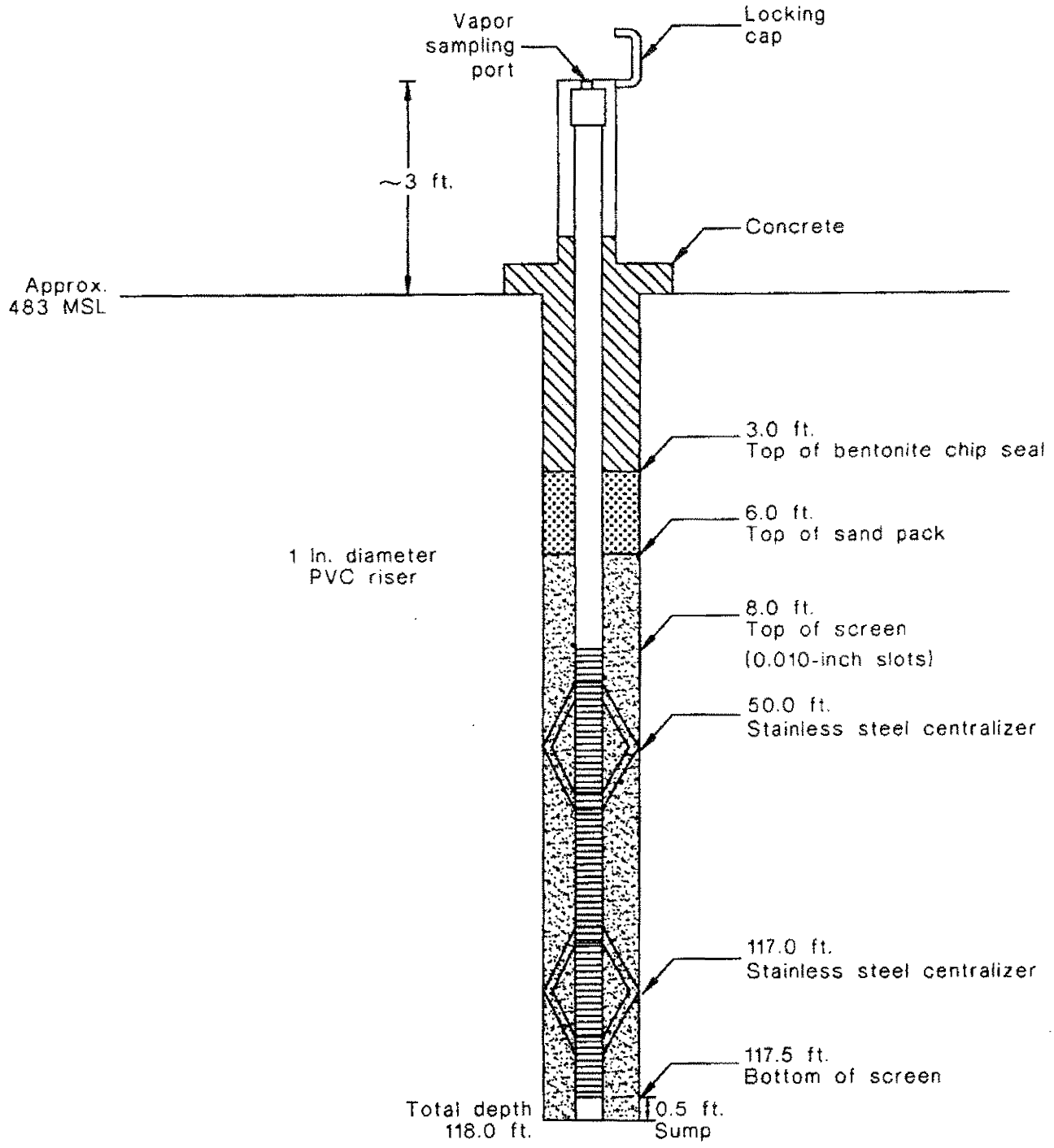

(Not to Scale)

All depths relative to ground surface

2206S-BL
GMP
GMP-5

MISSOURI DEPARTMENT OF NATURAL RESOURCES
DIVISION OF GEOLOGY AND LAND SURVEY

MONITORING WELL CERTIFICATION RECORD

OFFICE USE ONLY	DATE RECEIVED
REF. NO. 161715	
C.R. NO.	CHECK NO.
STATE WELL NUMBER	TRANSMITTAL NO.
CHECKED BY	ROUTE
APPROVED BY	ENTERED Ph 1 Ph 2 Ph 3

INFORMATION SUPPLIED BY MONITORING WELL CONTRACTOR

SITE/FACILITY NAME: Bridgeton Landfill Authority — WELL NUMBER: EMP-5

SITE ADDRESS: 13570 St Charles Rock Rd — CITY: Bridgeton — STATE: Mo — ZIP CODE: 63042

OWNER NAME: Same — TELEPHONE: 314 739 1719

OWNER ADDRESS: — CITY: — STATE: — ZIP CODE:

VARIANCE ISSUED: ☑ YES ☐ NO — DATE ISSUED: 10-23-97 — VARIANCE NUMBER: V 833

DESCRIBE LOCATION OF THE WELL SO WE WOULD BE ABLE TO VISIT IT:
Along East side of Landfill in Farm field between Old St Charles Rock Rd & St Charles Rock Road

LOCATION OF WELL — SHOW LOCATION IN SECTION PLAT — COUNTY: St Louis — SURFACE ELEVATION: ± 478

SMALLEST ¼ ____ ¼ ____ ¼ ____ ¼ — LARGEST ¼

SEC. ____ TWN. ____ N,RNG. ____ E OR W

LAT. 38° 46' 12" LONG. 90° 26' 34"

MONITORING WELL INSTALLATION CONTRACTOR'S NAME: Layne-Western — PERMIT NUMBER: 001261 MPRM

DRILLING CONTRACTOR'S NAME: Layne-Western — PERMIT NUMBER: 001261 MPRM

WELL CONSTRUCTION INFORMATION

TYPE OF WELL: ☐ MONITORING WELL ☐ PIEZOMETER ☑ OTHER Gas Probe

TYPE OF POTENTIAL SITE: ☐ HAZARDOUS MATERIAL ☑ LANDFILL ☐ OTHER ☐ L.U.S.T.

MONITORING FOR: (CHECK ALL THAT APPLY) ☐ V.O.C. ☐ METALS ☐ PETROLEUM PRODUCT ☑ OTHER Gas ONLY

PROTECTIVE CASING DETAILS (IF USED)
LENGTH: 5 FT. — DIAMETER OF CASING: 6 IN. — WEIGHT OR SDR #: 40 — DIAMETER AND DEPTH OF DRILL HOLE: 2.5 x 2 IN. FT. — JOINTS: ☐ THREADED ☐ WELDED ☐ MECHANICAL ☐ OTHER — MATERIAL: ☑ STEEL ☐ THERMO PLASTIC ☐ FLUORO POLYMER TYPE — LOCKING CAP? ☑ YES ☐ NO

CASING GROUT DETAILS
CAP VENTED: ☐ YES ☑ NO — WEEP HOLE? ☑ YES ☐ NO — MATERIAL: ☐ CEMENT ☑ CONCRETE ☐ OTHER — DEPTH FROM THE SURFACE TO THE BOTTOM OF THE CASING GROUT SEAL: 3 FT. — TYPE OF SURFACE COMPLETION: ☑ ABOVE GROUND ☐ FLUSH MOUNT — DESCRIBE HOW THE FLUSH MOUNT WAS CONSTRUCTED: N/A

CENTRALIZER USED ON RISER: ☐ NO ☑ YES LOCATED AT 110' 50' — MATERIAL: ☑ STAINLESS STEEL ☐ OTHER

RISER PIPE DETAILS
LENGTH: 10 FT. — DIAMETER OF RISER PIPE: 1 IN. — WEIGHT OR SDR #: 80 — DIAMETER OF DRILL HOLE: 6 IN. — JOINTS: ☐ THREADED ☐ MECHANICAL ☐ WELDED ☐ OTHER — MATERIAL: ☑ THERMO PLASTIC ☐ STEEL ☐ FLUORO POLYMER ☐ OTHER

ANNULAR SEAL
☐ CEMENT SLURRY ☑ BENTONITE SLURRY ☐ NON SLURRY BENTONITE ☐ CEMENT/BENTONITE SLURRY
TYPE: — BAGS OF CEMENT USED — % BENTONITE USED — WATER USED/BAG ____ GAL.

BENTONITE SEAL
MATERIAL: BENTONITE ☐ SLURRY ☑ CHIPS ☐ GRANULAR ☐ PELLETS — LENGTH OF SEAL: 3 — BENTONITE SEAL INSTALLED IN: ☑ UNSATURATED ZONE ☐ SATURATED ZONE

PRIMARY FILTER PACK
TYPE: ☑ SAND ☐ MANUFACTURED ☐ NATURAL — GRAIN SIZE: 20/40 — LENGTH OF FILTER PACK: 112 FT. — METHOD OF INSTALLATION: Tremie

SECONDARY FILTER PACK
TYPE: ☐ SAND ☐ MANUFACTURED ☑ NONE — GRAIN SIZE: — — LENGTH OF FILTER PACK: — FT. — METHOD OF INSTALLATION: —

WELL SCREEN
LENGTH OF SCREEN: 110 FT. — DIAMETER: 1 IN. — SLOT SIZE: 10 — WEIGHT OR SDR #: 80 — MATERIAL: ☑ PLASTIC ☐ STEEL ☐ FLUORO POLYMER

SUMP DETAILS
LENGTH OF SUMP: N/A — DIAMETER OF SUMP: — — MATERIAL: ☐ PVC ☐ STEEL ☐ FLUORO POLYMER ☐ OTHER

BACK FILL
WAS THE WELL BACK FILLED? ☐ YES ☑ NO — MATERIAL USED: — — LENGTH OF BACK FILLED BORE HOLE: —

Information in this column to be supplied in the Feet from Surface column	FEET FROM SURFACE	FORMATION DESCRIPTION
Depth to bottom of Protective Casing Seal:	3	0-10 Clay w/ Sand
Depth to Base of Annular Seal:	3	60-118 Shale/Lime
Depth to Base of Bentonite Seal:	6	
Depth to Top of Primary Filter Pack:	6	
Depth to Top of the Screen:	8	
Depth to Bottom of the Screen:	118	
Total Depth:	118	
DATE WELL DRILLING WAS COMPLETED	11-13-97	

STATIC WATER LEVEL: 100 FEET FROM MEASURING POINT — DATE OF STATIC WATER LEVEL: 11-13-97 — MEASURING POINT FOR STATIC WATER LEVEL IS: ☐ TOP OF RISER PIPE ☐ OTHER Ground — ELEVATION OF MEASURING POINT: ± 478

MULTIPLE CASED WELLS: SUBMIT ADDITIONAL AS BUILT DIAGRAM SHOWING WELL CONSTRUCTION DETAILS INCLUDING TYPE AND SIZE OF ALL CASING, HOLE DIAMETERS, AND GROUT USED.

DRILLING EQUIPMENT: ☑ AIR ROTARY ☐ AUGER TYPE ☐ REVERSE ROTARY ☐ OTHER

I HEREBY CERTIFY THAT THE MONITORING WELL HEREIN DESCRIBED WAS CONSTRUCTED IN ACCORDANCE WITH THE DEPARTMENT OF NATURAL RESOURCES REQUIREMENTS FOR THE CONSTRUCTION OF MONITORING WELLS.

SIGNATURE PRIMARY CONTRACTOR/PERMIT #	DATE	SIGNATURE DRILLER/PERMIT #	DATE
[signature] 0027 PM	1/23/98	[signature] 001261 MPRM	1/22/98

MO 780-1415 (7-95)

DISTRIBUTION: WHITE/DIVISION CANARY/MONITORING WELL CONTRACTOR PINK/OWNER
MAIL WHITE COPY TO: DEPARTMENT OF NATURAL RESOURCES, P.O. BOX 250, ROLLA, MO 65402
ENCLOSE $35 PER MONITORING WELL FOR THE CERTIFICATION FEE WITHIN 60 DAYS AFTER WELL COMPLETION

RECYCLED PAPER

AQUATERRA

Environmental Solutions, Inc.

13 Executive Dr. Suite 1 Fairview Heights IL 62208

LOG OF BORING NO.: **GMP-5**

SHEET NUMBER 1 of 2

CLIENT:	Republic Services, Inc.
PROJECT NAME:	Bridgeton Landfill
PROJECT NUMBER:	4788.10
PROJECT LOCATION:	Maryland Heights, MO
BORING LOCATION:	N: 1067135 E: 517115
AES PROJECT NO:	4788.10
AES GEOLOGIST:	T.Pool
START DATE:	09/05/12 FINISH DATE: 09/06/12
START TIME:	FINISH TIME:

DRILLING CONTRACTOR:	Roberts Environmental Drilling
DRILLER:	Patrick
DRILLING RIG:	Track Mounted CME-75
DRILLING METHOD:	8" ID HSA, 6" Air Rotary
SAMPLING METHOD:	Split Spoon, Cuttings
BORING DIAMETER:	10"/6"
WELL DIAMETER:	2x2"
WELL COMPLETION:	Stick-Up
SURFACE ELEVATION:	486.2
TOC ELEVATION:	S-489; D-489.01
WATER LEVEL:	-
WATER ELEVATION:	-
DATE:	-

WELL CONSTRUCTION DETAILS		
MATERIAL:	PVC	PVC
CASING DIAMETER:	2"	2"
WELL TOTAL DEPTH:	62'	46'
SCREEN LENGTH:	30'	35'
RISER LENGTH:	54.8'	13.8'
TOP OF SCREEN:	51.8'	10.8'
BOTTOM OF SCREEN:	71.8'	45.8'
SCREEN SLOT:	0.010 IN	0.010 IN
TOP OF FILTER PACK:	48'	9.8'
TOP OF SEAL:	46'	3'
TYPE OF SEAL:	3/8" Bentonite Chips	→
TYPE OF FILTER PACK:	12/20 Silica	GMP-5D / GMP-5S

SAMPLE NUMBER	SAMPLE TYPE	BLOW COUNT	RECOVERY (FT)	DEPTH IN FEET	USCS CLASS	SOIL DESCRIPTION AND DRILLING CONDITIONS
HSA-1				2	CL	Gravel and brown silty CLAY, dry
				4	ML	Brown clayey SILT, dry
SS-1	SS		2.0	6	CL	Brown silty CLAY, dry
HSA-2	CU			8		
SS-2	SS		2.0	10		Brown silty CLAY, dry
HSA-3	CU			12		
SS-3	SS		0.0	14		Tan to light gray silty CLAY, moist
HSA-4	CU			16		
SS-4	SS		2.0	18		Tan to light gray silty CLAY, wet
HSA-5	CU			20		
SS-5	SS		2.0	22		Dark grey silty CLAY, wet
HSA-6	CU			24		
SS-6	SS		2.0	26		
HSA-7	CU			28		
HSA-8	CU			30	SM	Gray silty fine SAND with clay horizons, saturated
				32		
				34		
				36	ML	Gray, sandy, clayey SILT, wet
				38		
				40		

NOTES AND WELL CONSTRUCTION

Top of Upper Seal 3'

Top of Gravel Pack 9.8'

Top of SS Screen 10.8'

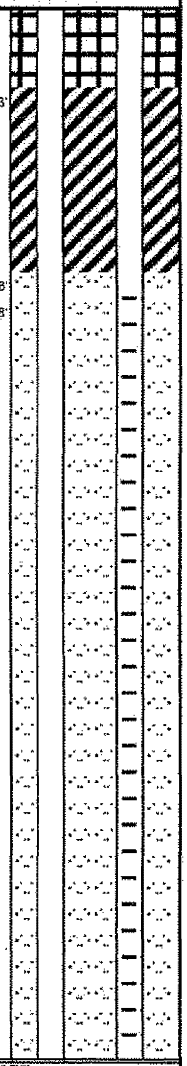

LEGEND:

SS - Split Spoon
CU -Cuttings Sample
ST - Shelby Tube
PID - Photoionization Detector
PP - Pocket Penetrometer
HSA - Hollow Stem Augers
AR - Air Rotary
HA - Hand Auger
WB - Wash Bore
RB - Rock Bit
NX - Rock Core

THE STRATIFICATION LINES REPRESENT APPROXIMATE BOUNDARY LINES BETWEEN SOIL AND ROCK TYPES: IN-SITU, THE TRANSITION MAY BE GRADUAL.

AQUATERRA

Environmental Solutions, Inc.

13 Executive Dr. Suite 1 Fairview Heights IL 62208

CLIENT: Republic Services, Inc.

PROJECT NAME: Bridgeton Landfill

LOG OF BORING NO **GMP-5** SHEET NUMBER 2 of 2

GEOLOGIST: T.Pool

DATE: 09/05/12

PROJECT NUMBER: 4786.1

SAMPLE NUMBER	SAMPLE TYPE	BLOW COUNT	RECOVERY (FT)	DEPTH IN FEET	USCS CLASS	SOIL DESCRIPTION AND DRILLING CONDITIONS	NOTES:
HSA-9	CU			42	SP	Gray fine-medium SAND trace gravel, saturated	
				44			
				46		Gray fine-medium SAND with clay, saturated	Bottom of 5S Screen 45.8'
					CL	Orange red silty CLAY with shale fragments, wet	Top of Lower Seal 46'
				48		Bit Refusal/ Bedrock @ 48'	Top of Gravel Pack 48'
				50	SH	Orange brown SHALE, wet	
				52		Gray weathered LMS interbedded with orange brown shale, wet	Top of 5D Screen 51.8'
				54			
				56			
AR	CU			58		Competent LIMESTONE begins from cuttings	
				60		Gray LIMESTONE, dry	
				62			
				64			
				66	LMS		
				68			
				70			
				72			
				74			
				76			
				78			
				80		Gray LIMESTONE, wet	Bottom of 5D Screen 81.8'
				82		Boring Terminated @ 82.0'	
				84			
				86			
				88			
				90			

GMP-5D GMP-5S

LEGEND:

SS - Split Spoon
CS - 5 foot CME Sampler
ST - Shelby Tube
PID - Photolonization Detecto
PP - Pocket Penetrometer
HSA - Hollow Stem Augers
AR - Air Rotary
HA - Hand Auger
WB - Wash Bore
RB - Rock Bit
NX - Rock Core

THE STRATIFICATION LINES REPRESENT APPROXIMATE BOUNDARY LINES BETWEEN SOIL AND ROCK TYPES: IN-SITU, THE TRANSITION MAY BE GRADUAL.

AQUATERRA
Environmental Solutions, Inc.

13 Executive Dr. Suite 1 Fairview Heights IL 62208

LOG OF BORING NO.: **GMP-6**

SHEET NUMBER 1 of 2

CLIENT:	Republic Services, Inc.
PROJECT NAME:	Bridgeton Landfill
PROJECT NUMBER:	4788.10
PROJECT LOCATION:	Maryland Heights, MO
BORING LOCATION:	N: 1067308 E: 517573
AES PROJECT NO:	4788.10
AES GEOLOGIST:	T.Pool
START DATE:	09/06/12 FINISH DATE: 09/07/12
START TIME:	FINISH TIME:

DRILLING CONTRACTOR:	Roberts Environmental Drilling
DRILLER:	Patrick
DRILLING RIG:	Track Mounted CME-75
DRILLING METHOD:	8" ID HSA, 6" Air Rorary
SAMPLING METHOD:	Split Spoon, Cuttings
BORING DIAMETER:	10"/6"
WELL DIAMETER:	2x2"
WELL COMPLETION:	Stick-Up
SURFACE ELEVATION:	476.3
TOC ELEVATION:	S-478.867' D-478.94
WATER LEVEL:	-
WATER ELEVATION:	-
DATE:	-

WELL CONSTRUCTION DETAILS		
MATERIAL:	PVC	PVC
CASING DIAMETER:	2"	2"
WELL TOTAL DEPTH:	70'	26'
SCREEN LENGTH:	40'	15'
RISER LENGTH:	32.7	13.6
TOP OF SCREEN:	29.8'	10.8'
BOTTOM OF SCREEN:	69.8'	25.8'
SCREEN SLOT:	0.010 IN	0.010 IN
TOP OF FILTER PACK:	28'	8'
TOP OF SEAL:	26'	3'
TYPE OF SEAL:	3/8" Bentonite Chips	
TYPE OF FILTER PACK:	12/20 Silica	GMP-6D GMP-6S

SAMPLE NUMBER	SAMPLE TYPE	BLOW COUNT	RECOVERY (FT)	DEPTH IN FEET	USCS CLASS	SOIL DESCRIPTION AND DRILLING CONDITIONS
HSA-1				2	ML	Grass on surface Brown clayey SILT, dry
				4		
SS-1	SS		2.0	6	CL	Brown silty CLAY, dry
HSA-2	CU			8		
				10		
SS-2	SS		2.0		ML	Gray mottled brown clayey SILT, moist
HSA-3	CU			12		
				14		
SS-3	SS		0.0	16		Brown sandy clayey SILT, wet
HSA-4	CU			18		
				20		
SS-4	SS		2.0		SM	Brown silty fine SAND, saturated
HSA-5	CU			22		
				24		
SS-5	SS		2.0	26	SP	Brown fine-medium SAND, saturated Gray CLAY, wet
HSA-6	CU			28		Bit refusal @ 28.0'
				30		
AR	CU			32	LMS	Gray weathered Limestone with sand in cuttings,
				34		
				36		
				38	CL	Gray CLAY, wet (Possible CLAY filled void)
				40		

NOTES AND WELL CONSTRUCTION

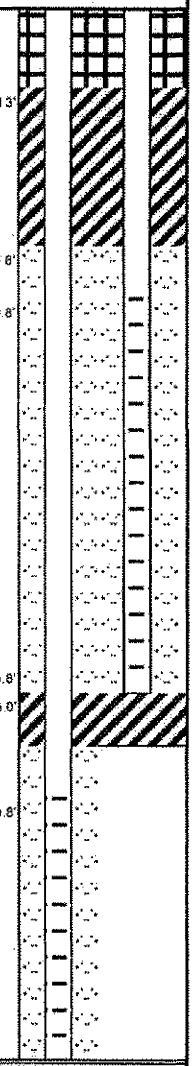

LEGEND:

SS - Split Spoon
CU -Cuttings Sample
ST - Shelby Tube
PID - Photoionization Detecto
PP - Pocket Penetrometer
HSA - Hollow Stem Augers
AR - Air Rotary
HA - Hand Auger
WB - Wash Bore
RB - Rock Bit
NX - Rock Core

THE STRATIFICATION LINES REPRESENT APPROXIMATE BOUNDARY LINES BETWEEN SOIL AND ROCK TYPES: IN-SITU, THE TRANSITION MAY BE GRADUAL.

AQUATERRA

Environmental Solutions, Inc.

13 Executive Dr. Suite 1 Fairview Heights IL 62208

CLIENT: Republic Services, Inc.

PROJECT NAME: Bridgeton Landfill

LOG OF BORING NO.: **GMP-6** SHEET NUMBER: 2 of 2

GEOLOGIST: T.Pool

DATE: 09/06/12

PROJECT NUMBER: 4788.1

SAMPLE NUMBER	SAMPLE TYPE	BLOW COUNT	RECOVERY (FT)	DEPTH IN FEET	USCS CLASS	SOIL DESCRIPTION AND DRILLING CONDITIONS	NOTES:	GMP-6D	GMP-6S
AR	CU			42 44 46 48 50 52 54 56 58 60 62 64 66 68 70 72 74 76	LMS	Gray weathered LIMESTONE, sand in cuttings, Gray	Bottom of 6D Screen 69.8' Boring fell in 6.0' before casing was installed		
				78 80 82 84 86 88 90		Boring Terminated @ 76.0'			

LEGEND:

SS - Split Spoon
CS - 5 foot CME Sampler
ST - Shelby Tube
PID - Photoionization Detecto
PP - Pocket Penetrometer
HSA - Hollow Stem Augers
AR - Air Rotary
HA - Hand Auger
WB - Wash Bore
RB - Rock Bit
NX - Rock Core

THE STRATIFICATION LINES REPRESENT APPROXIMATE BOUNDARY LINES BETWEEN SOIL AND ROCK TYPES: IN-SITU, THE TRANSITION MAY BE GRADUAL.

AQUATERRA
Environmental Solutions, Inc.

13 Executive Dr. Suite 1 Fairview Heights IL 62208

LOG OF BORING NO: **GMP-7**

SHEET NUMBER 1 of 2

CLIENT:	Republic Services, Inc.
PROJECT NAME:	Bridgeton Landfill
PROJECT NUMBER:	4788.10
PROJECT LOCATION:	Maryland Heights, MO
BORING LOCATION:	N: 1068503 E: 517249
AES PROJECT NO:	4788.10
AES GEOLOGIST:	T.Pool
START DATE:	09/12/12 FINISH DATE: 09/12/12
START TIME:	FINISH TIME:

DRILLING CONTRACTOR:	Roberts Environmental Drilling
DRILLER:	Patrick
DRILLING RIG:	Track Mounted CME-75
DRILLING METHOD:	8" ID HSA, 6" Air Rorary
SAMPLING METHOD:	Split Spoon, Cuttings
BORING DIAMETER:	10"/6"
WELL DIAMETER:	2x2"
WELL COMPLETION:	Stick-Up
SURFACE ELEVATION:	480.7
TOC ELEVATION:	S-483.5; D-483.56
WATER LEVEL:	-
WATER ELEVATION:	-
DATE:	-

WELL CONSTRUCTION DETAILS		
MATERIAL:	PVC	PVC
CASING DIAMETER:	2"	2"
WELL TOTAL DEPTH:	118'	32'
SCREEN LENGTH:	80'	25'
RISER LENGTH:	32.9'	9.8'
TOP OF SCREEN:	37.8'	6.8'
BOTTOM OF SCREEN:	117.8'	31.8'
SCREEN SLOT:	0.010 IN	0.010 IN
TOP OF FILTER PACK:	34'	5.8'
TOP OF SEAL:	32'	3'
TYPE OF SEAL:	3/8" Bentonite Chips	
TYPE OF FILTER PACK:	12/20 Silica	GMP-7D GMP-7S

SAMPLE NUMBER	SAMPLE TYPE	BLOW COUNT	RECOVERY (FT)	DEPTH IN FEET	USCS CLASS	SOIL DESCRIPTION AND DRILLING CONDITIONS
				0		Grass on surface
HSA-1				2	CL	
				4		
SS-1	SS		2.0	6		Brown silty CLAY, dry
HSA-2	CU			8		
				10		
SS-2	SS		2.0		SP	Brown fine SAND, dry
				12	ML	Brown clayey SILT, moist
HSA-3	CU			14		
				16		
SS-3	SS		2.0		CL	Brown silty CLAY, moist
HSA-4	CU			18		
				20		
SS-4	SS		2.0			Light brown mottled gray clayey SILT, moist
HSA-5	CU			22		
				24	ML	
SS-5	SS		2.0			Gray clayey sandy SILT, moist
HSA-6	CU			26		
				28		
				30		
SS-6	SS		2.0		SM	Gray clayey silty SAND, wet
				32		Gray fine-medium SAND, saturated
HSA-7	CU			34	SP	ROUGH DRILLING 33.0'-35.0'
				36		Bit refusal/Bedrock at 34.5'
AR	CU			38	LMS	Gray Weathered LIMESTONE with shale and sand, dry
				40		

NOTES AND WELL CONSTRUCTION

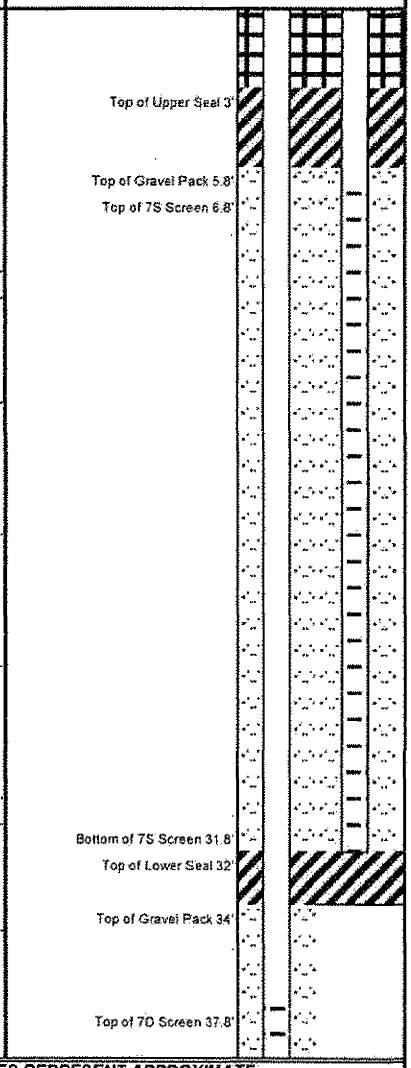

LEGEND:

SS - Split Spoon
CU -Cuttings Sample
ST - Shelby Tube
PID - Photoionization Detecto
PP - Pocket Penetrometer
HSA - Hollow Stem Augers
AR - Air Rotary
HA - Hand Auger
WB - Wash Bore
RB - Rock Bit
NX - Rock Core

THE STRATIFICATION LINES REPRESENT APPROXIMATE BOUNDARY LINES BETWEEN SOIL AND ROCK TYPES: IN-SITU, THE TRANSITION MAY BE GRADUAL.

AQUATERRA

Environmental Solutions, Inc.

13 Executive Dr. Suite 1 Fairview Heights IL 62208

LOG OF BORING NO: **GMP-7** SHEET NUMBER 2 of 2

CLIENT:	Republic Services, Inc.
PROJECT NAME:	Bridgeton Landfill
GEOLOGIST:	T.Pool
DATE:	09/12/12
PROJECT NUMBER:	4786.1

SAMPLE NUMBER	SAMPLE TYPE	BLOW COUNT	RECOVERY (FT)	DEPTH IN FEET	USCS CLASS	SOIL DESCRIPTION AND DRILLING CONDITIONS	NOTES:
				42		Gray Weathered LIMESTONE with shale and sand, dry	
				44		Limestone becomes saturated	
				46			
				48			
				50			
				52			
				54			
				56			
				58	LMS		
				60			
				62			
				64		Weathered Limestone ends, dry	
AR	CU			66			
				68			
				70		Gray LIMESTONE, dry	
				72			
				74			
				76			
				78			
				80			
				82			
				84			
				90		Gray LIMESTONE, wet till end of boring at 118'	
				100			
				118		Boring Terminated @ 118'	Bottom of 7D Screen 117.8'

GMP-7D GMP-7S

LEGEND:

SS - Split Spoon
CS - 5 foot CME Sampler
ST - Shelby Tube
PID - Photoionization Detecto
PP - Pocket Penetrometer
HSA - Hollow Stem Augers
HA - Hand Auger
WB - Wash Bore
RB - Rock Bit
NX - Rock Core

THE STRATIFICATION LINES REPRESENT APPROXIMATE BOUNDARY LINES BETWEEN SOIL AND ROCK TYPES: IN-SITU, THE TRANSITION MAY BE GRADUAL.

GMP-8
As Built Diagram

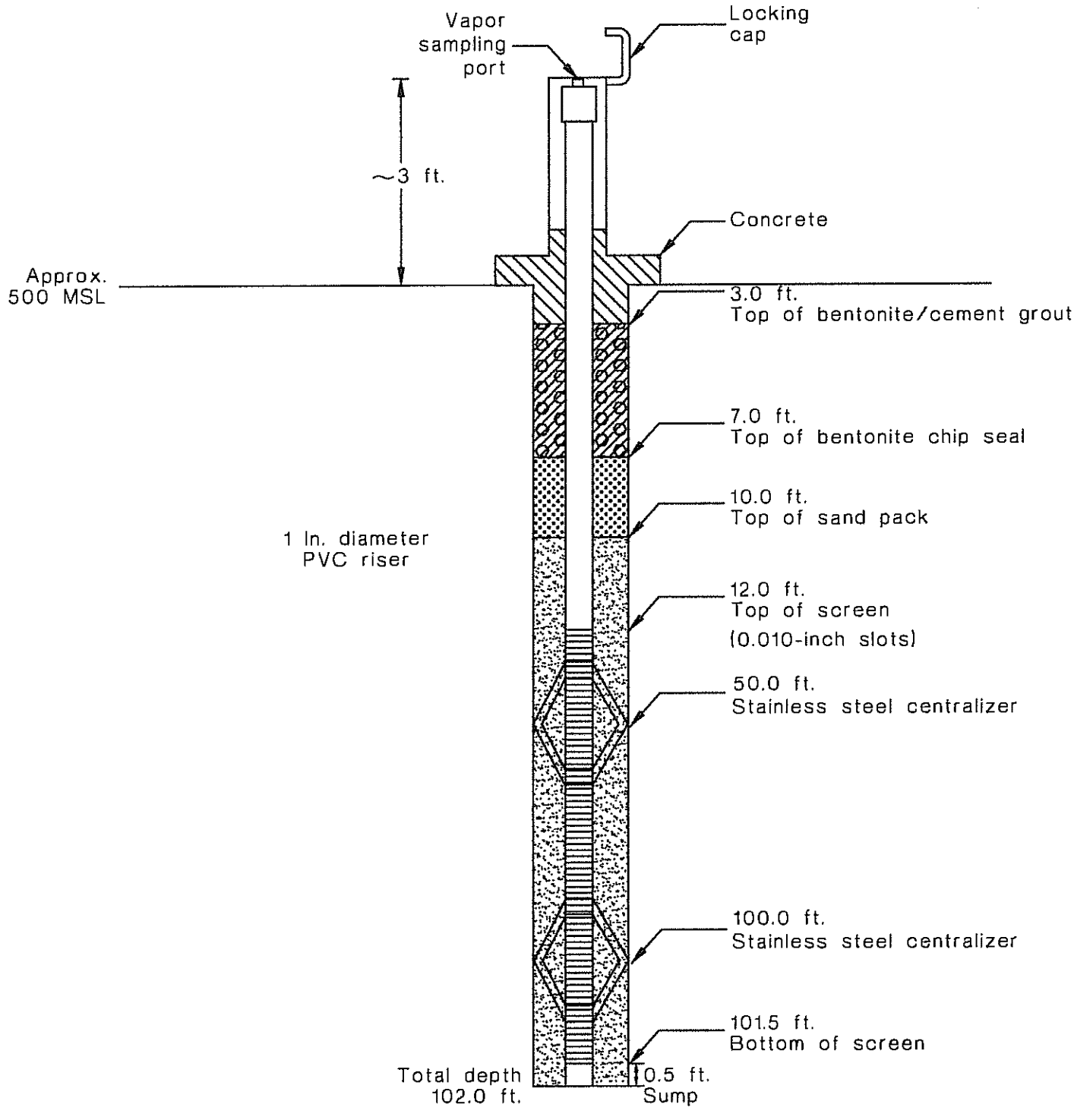

(Not to Scale)

All depths relative to ground surface

2206S-BL
GMP
GMP-8

MISSOURI DEPARTMENT OF NATURAL RESOURCES
DIVISION OF GEOLOGY AND LAND SURVEY

MONITORING WELL CERTIFICATION RECORD

OFFICE USE ONLY	DATE RECEIVED
REF. NO. 161716	
C.R. NO.	CHECK NO.
STATE WELL NUMBER	TRANSMITTAL NO.
CHECKED BY	ROUTE
APPROVED BY	ENTERED Ph 1 Ph 2 Ph 3

INFORMATION SUPPLIED BY MONITORING WELL CONTRACTOR

SITE/FACILITY NAME	WELL NUMBER
Bridgeton Landfill Authority	GMW-8

SITE ADDRESS	CITY	STATE	ZIP CODE
13570 St Charles Rock Rd	Bridgeton	MO	63042

OWNER NAME	TELEPHONE
Same	314 739 1919

OWNER ADDRESS	CITY	STATE	ZIP CODE

VARIANCE ISSUED ☑ YES ☐ NO — DATE ISSUED 10-22-97 — VARIANCE NUMBER: V 8553

DESCRIBE LOCATION OF THE WELL SO WE WOULD BE ABLE TO VISIT IT
The Northeast corner of the Landfill Located on St Charles Rock Rd & Trumbull Rd

LOCATION OF WELL — SHOW LOCATION IN SECTION PLAT — COUNTY St Louis — SURFACE ELEVATION ± 472

SMALLEST ¼ ____ ¼ ____ ¼ ____ ¼ LARGEST ¼

SEC. ____ TWN. ____ N,RNG. ____ E OR W

LAT. 92° 2' 34" LONG. 34° 46' 12"

MONITORING WELL INSTALLATION CONTRACTOR'S NAME	PERMIT NUMBER
Layne Western	001261 IDNR
DRILLING CONTRACTOR'S NAME Layne Western	PERMIT NUMBER 001261 IDNR

WELL CONSTRUCTION INFORMATION

TYPE OF WELL: ☐ MONITORING WELL ☐ PIEZOMETER ☑ OTHER Groundwater

TYPE OF POTENTIAL SITE: ☐ HAZARDOUS MATERIAL ☑ LANDFILL ☐ OTHER ☐ L.U.S.T.

MONITORING FOR: (CHECK ALL THAT APPLY) ☐ V.O.C. ☐ METALS ☐ PETROLEUM PRODUCT ☐ OTHER Gas ONLY

PROTECTIVE CASING DETAILS (IF USED): LENGTH 5 FT. — DIAMETER OF CASING 6 IN. — WEIGHT OR SDR # 40 — DIAMETER AND DEPTH OF DRILL HOLE 8.5" IN. FT. — JOINTS ☐ THREADED ☐ MECHANICAL ☐ WELDED ☐ OTHER — MATERIAL ☑ STEEL ☐ THERMO PLASTIC ☐ FLUORO POLYMER ☐ OTHER — LOCKING CAP? ☑ YES ☐ NO

CASING GROUT DETAILS: CAP VENTED ☐ YES ☐ NO — WEEP HOLE? ☐ YES ☐ NO — MATERIAL ☐ CEMENT ☑ CONCRETE ☐ OTHER — DEPTH FROM THE SURFACE TO THE BOTTOM OF THE CASING GROUT SEAL 3 FT.

TYPE OF SURFACE COMPLETION: ☐ ABOVE GROUND ☐ FLUSH MOUNT

DESCRIBE HOW THE FLUSH MOUNT WAS CONSTRUCTED: N/A

CENTRALIZER USED ON RISER ☐ NO ☑ YES LOCATED AT 100' 50' — MATERIAL ☑ STAINLESS STEEL ☐ OTHER

RISER PIPE DETAILS: LENGTH 14 FT. — DIAMETER OF RISER PIPE 1 IN. — WEIGHT OR SDR # 80 — DIAMETER OF DRILL HOLE 6 IN. — JOINTS ☑ THREADED ☐ MECHANICAL ☐ WELDED ☐ OTHER — MATERIAL ☑ THERMO PLASTIC ☐ STEEL ☐ FLUORO POLYMER ☐ OTHER

ANNULAR SEAL: ☐ CEMENT SLURRY ☑ BENTONITE SLURRY ☐ NON SLURRY BENTONITE ☐ CEMENT/BENTONITE SLURRY — TYPE: — BAGS OF CEMENT USED — % BENTONITE USED — WATER USED/BAG — GAL.

BENTONITE SEAL: MATERIAL BENTONITE ☐ SLURRY ☑ CHIPS ☐ GRANULAR ☐ PELLETS — LENGTH OF SEAL 3' — BENTONITE SEAL INSTALLED IN ☑ UNSATURATED ZONE ☐ SATURATED ZONE

	TYPE	GRAIN SIZE	LENGTH OF FILTER PACK	METHOD OF INSTALLATION	Information in this column to be supplied in the Feet from Surface column	FEET FROM SURFACE	FORMATION DESCRIPTION
PRIMARY FILTER PACK	☑ SAND ☐ MANUFACTURED ☐ NATURAL	20/40	92 FT.	Tremie			
SECONDARY FILTER PACK	☐ SAND ☐ MANUFACTURED ☑ NONE	—	— FT.	—	Depth to bottom of Protective Casing Seal:	3	0-10 Clay w/ sand
WELL SCREEN	LENGTH OF SCREEN 90 FT. — DIAMETER 1 IN. — SLOT SIZE 10 — WEIGHT OR SDR # 80 — MATERIAL ☑ PLASTIC ☐ STEEL ☐ FLUORO POLYMER				Depth to Base of Annular Seal:	7	10-102 Limestone
SUMP DETAILS	LENGTH OF SUMP N/A	DIAMETER OF SUMP —	MATERIAL ☐ PVC ☐ STEEL ☐ FLUORO POLYMER ☐ OTHER		Depth to Base of Bentonite Seal:	10	w/ Chert
BACK FILL	WAS THE WELL BACK FILLED? ☐ YES ☑ NO	MATERIAL USED —	LENGTH OF BACK FILLED BORE HOLE —		Depth to Top of Primary Filter Pack:	10	
					Depth to Top of the Screen:	12	
					Depth to Bottom of the Screen:	102	
					Total Depth:	102	

STATIC WATER LEVEL 20 FEET FROM MEASURING POINT — DATE OF STATIC WATER LEVEL 11-14-97

MEASURING POINT FOR STATIC WATER LEVEL IS ☐ TOP OF RISER PIPE ☑ OTHER Ground

ELEVATION OF MEASURING POINT ± 472

MULTIPLE CASED WELLS — SUBMIT ADDITIONAL AS BUILT DIAGRAM SHOWING WELL CONSTRUCTION DETAILS INCLUDING TYPE AND SIZE OF ALL CASING, HOLE DIAMETERS, AND GROUT USED.

DRILLING EQUIPMENT ☑ AIR ROTARY ☐ AUGER TYPE ☐ REVERSE ROTARY ☐ OTHER

DATE WELL DRILLING WAS COMPLETED 11-12-97

I HEREBY CERTIFY THAT THE MONITORING WELL HEREIN DESCRIBED WAS CONSTRUCTED IN ACCORDANCE WITH THE DEPARTMENT OF NATURAL RESOURCES REQUIREMENTS FOR THE CONSTRUCTION OF MONITORING WELLS.

SIGNATURE PRIMARY CONTRACTOR/PERMIT #	DATE	SIGNATURE DRILLER/PERMIT #	DATE
[illegible] 001261 IDNR	1/23/98	Craig Skowlund 001261 IDNR	1/22/98

MO 780-1415 (7-95)

DISTRIBUTION: WHITE/DIVISION CANARY/MONITORING WELL CONTRACTOR PINK/OWNER

MAIL WHITE COPY TO: DEPARTMENT OF NATURAL RESOURCES, P.O. BOX 250, ROLLA, MO 65402

ENCLOSE $35 PER MONITORING WELL FOR THE CERTIFICATION FEE WITHIN 60 DAYS AFTER WELL COMPLETION

RECYCLED PAPER

MISSOURI DEPARTMENT OF NATURAL RESOURCES
DIVISION OF GEOLOGY AND LAND SURVEY
(573) 368-2165

MONITORING WELL AND ENVIRONMENTAL INJECTION WELL RECORD

REF NO: 00206789
CR NO:
DATE RECEIVED: 10/15/1999
PUBLIC SAFETY PROBE GMP-09
STATE CERT NO APPROVED DATE: A082738 01/05/2000
CHECK NO.: 8706629
DATE ENTERED: PHASE 1 10/18/1999 PHASE 2 01/01/1000 PHASE 3 02/17/2006
ROUTE: PCD
REVENUE NO.: 102799

INFORMATION SUPPLIED BY WELL OR PUMP INSTALLATION CONTRACTOR

OWNER NAME: BRIDGETON LANDFILL AUTHORITY
TELEPHONE (OPTIONAL):
DNR VARIANCE NUMBER 833 — Applicable only if variance was obtained from DNR
OWNER ADDRESS: 13570 ST CHARLES ROCK RD
CITY: BRIDGETON
STATE: MO
ZIP: 63042
SITE NAME: GMP-9,
CONTACT NAME:
SITE ADDRESS (IF DIFFERENT THAN ABOVE):
CITY:
STATE: MO
ZIP:

PROPOSED USE OF WELL

[X] MONITORING [ ] GAS MONITORING [ ] EXTRACTION [ ] RETURN OR INJECTION (UIC PERMIT MAY BE NEEDED) [ ] WATER LEVEL MEASUREMENT (only)

TYPE OF SURFACE COMPLETION

[X] ABOVE GROUND [ ] FLUSH CASE LENGTH 60.0 IN. CASE HOLE DEPTH 576.0 IN.
PROTECTIVE CASE MATERIAL [X] STEEL [ ] ALUMINUM [ ] PLASTIC [ ] OTHER CASE DIAMETER 6.0 IN. CASE HOLE DIAMETER 2.0 IN.

CONSTRUCTION

RISER PIPE DIAMETER 1.0 IN. RISER PIPE LENGTH 12.0 FT. RISER HOLE DIAMETER 6.0 IN.
RISER PIPE MATERIAL [X] PLASTIC RISER PIPE WEIGHT [X] SCH40 DRILLING METHOD
[ ] STEEL [ ] PTFE [ ] OTHER [X] SCH40 [ ] 304/316 [ ] OTHER [ ] AUGER [ ] PUSH [ ] OTHER

SCREEN DIAMETER 1.0 IN. SCREEN LENGTH 30.0 FT. BENTONITE SEAL LENGTH 3.0 FT.
SCREEN MATERIAL [ ] PLASTIC SCREEN HOLE DIAMETER SEAL ABOVE SWL [ ] SEAL BELOW SWL [ ]
[ ] STEEL [ ] PTFE [ ] OTHER IF DIFFERENT FROM RISER 6.0 IN. SEAL ABOVE SWL WAS HYDRATED [ ]

PRIMARY FILTER PACK LENGTH 32.0 FT. PRIMARY FILTER MATERIAL [ ] SAND
SECONDARY FILTER PACK LENGTH 0.0 FT. [ ] PREPACKED

ANNULAR SEAL LENGTH 1.0 FT. ANNULAR SEAL MATERIAL [ ] BENTONITE SLURRY [ ] NEAT CEMENT GROUT
ANNULAR SEAL PLACED BY [ ] TREMIE [ ] CEMENT BENTONITE GROUT [X] NON-SLURRY BENTONITE [ ] OTHER
[ ] GRAVITY [ ] PRESSURE GROUT THRU TREMIE IF NON-SLURRY BENTONITE [X] CHIPS [ ] GRANULAR [ ] PELLETS [ ] OTHER

[ ] MULTIPLE CASED OR NESTED WELLS
ATTACH AS-BUILT DIAGRAMS showing constructions details with type, length and diameter of material and length and diameter of bores

COPY

LOCATION OF WELL

LAT. 0° 0' 0.0" COUNTY
LONG. 0° 0' 0.0" ST LOUIS COUNTY
Please be aware that we do not guarantee the accuracy of the data. It is submitted to us by a third party and has not been field verified.

(OPTIONAL) LEGAL LOCATION (OPTIONAL)
ELEVATION 475 FT.
1/4 1/4 1/4 SEC. 0 TWN. 0 RNG. 0 E

DEPTH FROM	DEPTH TO	FORMATION DESCRIPTION
0	15	SILTY CLAY
15	20	CLAY
20	40	LS WITH CHERT

TOTAL DEPTH 40.0 FEET

FIRST ENCOUNTER GROUNDWATER 0.0 FT
STATIC WATER LEVEL (swl) 0.0 FT
WELL COMPLETION DATE 07/22/1999
PUMP SET DEPTH FT
WELL YIELD 0.0 GPM
PUMP INSTALLATION DATE
OTHER INFORMATION OR LOCATION DATA (OPTIONAL)

I HEREBY CERTIFY THE WELL/PUMP INFORMATION DESCRIBED HEREIN IS TRUE AND ACCURATE

	PERMIT NUMBER	DATE
PRIMARY CONTRACTOR SIGNATURE x WARD HERST	002702	
WELL DRILLER SIGNATURE x JOHN PHILLIPS	002883	
PUMP INSTALLER SIGNATURE pump info required for extraction/recovery wells x		
APPRENTICE WELL DRILLER SIGNATURE x		

OFFICE USE ONLY

206789

MONITORING WELL CERTIFICATION RECORD

INFORMATION SUPPLIED BY PRIMARY CONTRACTOR OR DRILLING CONTRACTOR

MISSOURI DEPARTMENT OF NATURAL RESOURCES
DIVISION OF GEOLOGY AND LAND SURVEY
(573) 368-2165

MONITORING WELL AND ENVIRONMENTAL INJECTION WELL RECORD

REF NO: 00206790
CR NO:
DATE RECEIVED: 10/15/1999
PUBLIC SAFETY PROBE GMP-10
STATE CERT NO APPROVED DATE: A082774 03/22/2000
CHECK NO.: 8706629
DATE ENTERED: PHASE 1 PHASE 2 PHASE 3 10/18/1999 01/01/1000 02/17/2006
ROUTE: PCD
REVENUE NO.: 102799

INFORMATION SUPPLIED BY WELL OR PUMP INSTALLATION CONTRACTOR

OWNER NAME: BRIDGETON LANDFILL AUTHORITY
TELEPHONE (OPTIONAL):
DNR VARIANCE NUMBER: Applicable only if variance was obtained from DNR
OWNER ADDRESS: 13570 ST CHARLES ROCK RD
CITY: BRIDGETON
STATE: MO
ZIP: 63042
SITE NAME: GMP-10,
CONTACT NAME:
SITE ADDRESS (IF DIFFERENT THAN ABOVE):
CITY:
STATE: MO
ZIP:

PROPOSED USE OF WELL

[X] MONITORING [ ] GAS MONITORING [ ] EXTRACTION [ ] RETURN OR INJECTION (UIC PERMIT MAY BE NEEDED) [ ] WATER LEVEL MEASUREMENT (only)

TYPE OF SURFACE COMPLETION

[X] ABOVE GROUND [ ] FLUSH CASE LENGTH 60.0 IN. CASE HOLE DEPTH 576.0 IN.
PROTECTIVE CASE MATERIAL [X] STEEL [ ] ALUMINUM [ ] PLASTIC [ ] OTHER CASE DIAMETER 6.0 IN. CASE HOLE DIAMETER 2.0 IN.

CONSTRUCTION

RISER PIPE DIAMETER 1.0 IN. RISER PIPE LENGTH 12.0 FT. RISER HOLE DIAMETER 6.0 IN.
RISER PIPE MATERIAL [X] PLASTIC RISER PIPE WEIGHT [ ] SCH40 DRILLING METHOD
[ ] STEEL [ ] PTFE [ ] OTHER [X] SCH80 [ ] 4/316 [ ] OTHER [ ] AUGER [ ] PUSH [ ] OTHER

COPY

SCREEN DIAMETER 1.0 IN. SCREEN LENGTH 30.0 FT. BENTONITE SEAL LENGTH 3.0 FT.
SCREEN MATERIAL [ ] PLASTIC SCREEN HOLE DIAMETER SEAL ABOVE SWL [ ] SEAL BELOW SWL [ ]
[ ] STEEL [ ] PTFE [ ] OTHER IF DIFFERENT FROM RISER 6.0 IN. SEAL ABOVE SWL WAS HYDRATED [ ]

PRIMARY FILTER PACK LENGTH 32.0 FT. PRIMARY FILTER MATERIAL [ ] SAND
SECONDARY FILTER PACK LENGTH 0.0 FT. [ ] PREPACKED

ANNULAR SEAL LENGTH 1.0 FT. ANNULAR SEAL MATERIAL [ ] BENTONITE SLURRY [ ] NEAT CEMENT GROUT
ANNULAR SEAL PLACED BY [ ] TREMIE [ ] CEMENT BENTONITE GROUT [X] NON-SLURRY BENTONITE [ ] OTHER
[ ] GRAVITY [ ] PRESSURE GROUT THRU TREMIE IF NON-SLURRY BENTONITE [X] CHIPS [ ] GRANULAR [ ] PELLETS [ ] OTHER

[ ] MULTIPLE CASED OR NESTED WELLS
ATTACH AS-BUILT DIAGRAMS showing constructions details with type, length and diameter of material and length and diameter of bores

LOCATION OF WELL

LAT. 0° 0' 0.0" COUNTY
LONG. 0° 0' 0.0" ST LOUIS COUNTY
Please be aware that we do not guarantee the accuracy of the data. It is submitted to us by a third party and has not been field verified.

(OPTIONAL)
ELEVATION 0 FT.
LEGAL LOCATION (OPTIONAL)
1/4 1/4 1/4
SEC. 0 TWN. 0 RNG. 0 E

DEPTH FROM	DEPTH TO	FORMATION DESCRIPTION
0	15	SILTY CLAY
15	40	LS WITH CHERT

TOTAL DEPTH 40.0 FEET

FIRST ENCOUNTER GROUNDWATER 0.0 FT
STATIC WATER LEVEL (swl) 0.0 FT
WELL COMPLETION DATE 07/22/1999
PUMP SET DEPTH FT
WELL YIELD 0.0 GPM
PUMP INSTALLATION DATE

OTHER INFORMATION OR LOCATION DATA (OPTIONAL)

I HEREBY CERTIFY THE WELL/PUMP INFORMATION DESCRIBED HEREIN IS TRUE AND ACCURATE

	PERMIT NUMBER	DATE
PRIMARY CONTRACTOR SIGNATURE x WARD HERST	002702	
WELL DRILLER SIGNATURE x JOHN PHILLIPS	002883	
PUMP INSTALLER SIGNATURE pump info required for extraction/recovery wells x		
APPRENTICE WELL DRILLER SIGNATURE x		

OFFICE USE ONLY

206791

MONITORING WELL CERTIFICATION RECORD

INFORMATION SUPPLIED BY PRIMARY CONTRACTOR OR DRILLING CONTRACTOR

MISSOURI DEPARTMENT OF NATURAL RESOURCES
DIVISION OF GEOLOGY AND LAND SURVEY
(573) 368-2165

MONITORING WELL AND ENVIRONMENTAL INJECTION WELL RECORD

REF NO	DATE RECEIVED	
00206791	10/15/1999	PUBLIC SAFETY PROBE GMP-11
CR NO		

STATE CERT NO	APPROVED DATE	CHECK NO.
A082773	03/22/2000	8706629

DATE ENTERED	ROUTE	REVENUE NO.
PHASE 1 PHASE 2 PHASE 3 10/18/1999 01/01/1000 02/17/2006	PCD	102799

INFORMATION SUPPLIED BY WELL OR PUMP INSTALLATION CONTRACTOR

OWNER NAME: BRIDGETON LANDFILL AUTHORITY
TELEPHONE (OPTIONAL):
DNR VARIANCE NUMBER 833 — Applicable only if variance was obtained from DNR
OWNER ADDRESS: 13570 ST CHARLES ROCK RD
CITY: BRIDGETON
STATE: MO
ZIP: 63042
SITE NAME: GMP-11,
CONTACT NAME:
SITE ADDRESS (IF DIFFERENT THAN ABOVE):
CITY:
STATE: MO
ZIP:

PROPOSED USE OF WELL

[X] MONITORING [ ] GAS MONITORING [ ] EXTRACTION [ ] RETURN OR INJECTION (UIC PERMIT MAY BE NEEDED) [ ] WATER LEVEL MEASUREMENT (only)

TYPE OF SURFACE COMPLETION

[X] ABOVE GROUND [ ] FLUSH CASE LENGTH 60.0 IN. CASE HOLE DEPTH 570.0 IN.
PROTECTIVE CASE MATERIAL [X] STEEL [ ] ALUMINUM [ ] PLASTIC [ ] OTHER CASE DIAMETER 8.0 IN. CASE HOLE DIAMETER 2.0 IN.

CONSTRUCTION

RISER PIPE DIAMETER 1.0 IN. RISER PIPE LENGTH 12.0 FT. RISER HOLE DIAMETER 6.0 IN.
RISER PIPE MATERIAL [X] PLASTIC RISER PIPE WEIGHT [ ] SCH40 DRILLING METHOD
[ ] STEEL [ ] PTFE [ ] OTHER [X] SCH80 [ ] 304/316 [ ] OTHER [ ] AUGER [ ] PUSH [ ] OTHER

SCREEN DIAMETER 1.0 IN. SCREEN LENGTH 60.0 FT. BENTONITE SEAL LENGTH 3.0 FT.
SCREEN MATERIAL [ ] PLASTIC SCREEN HOLE DIAMETER SEAL ABOVE SWL [ ] SEAL BELOW SWL [ ]
[ ] STEEL [ ] PTFE [ ] OTHER IF DIFFERENT FROM RISER 6.0 IN. SEAL ABOVE SWL WAS HYDRATED [ ]

PRIMARY FILTER PACK LENGTH 52.0 FT. PRIMARY FILTER MATERIAL [ ] SAND
SECONDARY FILTER PACK LENGTH 0.0 FT. [ ] PREPACKED

ANNULAR SEAL LENGTH 1.0 FT. ANNULAR SEAL MATERIAL [ ] BENTONITE SLURRY [ ] NEAT CEMENT GROUT
ANNULAR SEAL PLACED BY [ ] TREMIE [ ] CEMENT BENTONITE GROUT [X] NON-SLURRY BENTONITE [ ] OTHER
[ ] GRAVITY [ ] PRESSURE GROUT THRU TREMIE IF NON-SLURRY BENTONITE [X] CHIPS [ ] GRANULAR [ ] PELLETS [ ] OTHER

[ ] MULTIPLE CASED OR NESTED WELLS
ATTACH AS-BUILT DIAGRAMS showing constructions details with type, length and diameter of material and length and diameter of bores

COPY

LOCATION OF WELL

LAT. 0° 0' 0.0" COUNTY
LONG. 0° 0' 0.0" ST LOUIS COUNTY
Please be aware that we do not guarantee the accuracy of the data. It is submitted to us by a third party and has not been field verified.

(OPTIONAL)
ELEVATION 0 FT.

LEGAL LOCATION (OPTIONAL)
1/4 1/4 1/4 SEC. 0 TWN. 0 RNG. 0 E

DEPTH FROM	DEPTH TO	FORMATION DESCRIPTION
0	15	SILTY CLAY
15	60	LS WITH CHERT

TOTAL DEPTH 60.0 FEET

FIRST ENCOUNTER GROUNDWATER 0.0 FT
STATIC WATER LEVEL (swl) 0.0 FT
PUMP SET DEPTH FT
WELL YIELD 0.0 GPM
WELL COMPLETION DATE 07/26/1999
PUMP INSTALLATION DATE
OTHER INFORMATION OR LOCATION DATA (OPTIONAL)

I HEREBY CERTIFY THE WELL/PUMP INFORMATION DESCRIBED HEREIN IS TRUE AND ACCURATE

	PERMIT NUMBER	DATE
PRIMARY CONTRACTOR SIGNATURE x WARD HERST	002702	
WELL DRILLER SIGNATURE x JOHN PHILLIPS	002883	
PUMP INSTALLER SIGNATURE pump info required for extraction/recovery wells x		
APPRENTICE WELL DRILLER SIGNATURE x		

MISSOURI DEPARTMENT OF NATURAL RESOURCES
DIVISION OF GEOLOGY AND LAND SURVEY
(573) 368-2165

MONITORING WELL AND ENVIRONMENTAL INJECTION WELL RECORD

REF NO: 00206788
CR NO:
DATE RECEIVED: 10/15/1999
PUBLIC SAFETY PROBE GMP-12
STATE CERT NO APPROVED DATE: A082772 03/22/2000
CHECK NO.: 8706629
DATE ENTERED: PHASE 1 PHASE 2 PHASE 3 10/18/1999 01/01/1000 02/17/2006
ROUTE: PCD
REVENUE NO.: 102799

INFORMATION SUPPLIED BY WELL OR PUMP INSTALLATION CONTRACTOR

OWNER NAME: BRIDGETON LANDFILL AUTH
TELEPHONE (OPTIONAL):
DNR VARIANCE NUMBER 833 — Applicable only if variance was obtained from DNR
OWNER ADDRESS: 13570 ST CHARLES ROCK RD
CITY: BRIDGETON
STATE: MO
ZIP: 63042
SITE NAME: GMP-12,
CONTACT NAME:
SITE ADDRESS (IF DIFFERENT THAN ABOVE):
CITY:
STATE: MO
ZIP:

PROPOSED USE OF WELL

[X] MONITORING [ ] GAS MONITORING [ ] EXTRACTION [ ] RETURN OR INJECTION (UIC PERMIT MAY BE NEEDED) [ ] WATER LEVEL MEASUREMENT (only)

TYPE OF SURFACE COMPLETION

[X] ABOVE GROUND [ ] FLUSH CASE LENGTH 60.0 IN. CASE HOLE DEPTH 576.0 IN.
PROTECTIVE CASE MATERIAL [X] STEEL [ ] ALUMINUM [ ] PLASTIC [ ] OTHER CASE DIAMETER 6.0 IN. CASE HOLE DIAMETER 2.0 IN.

CONSTRUCTION

RISER PIPE DIAMETER 1.0 IN. RISER PIPE LENGTH 10.0 FT. RISER HOLE DIAMETER 6.0 IN.
RISER PIPE MATERIAL [X] PLASTIC RISER PIPE WEIGHT [ ] SCH 40 DRILLING METHOD
[ ] STEEL [ ] PTFE [ ] OTHER [X] SCH 80 [ ] 304/316 [ ] OTHER _____ [ ] AUGER [ ] PUSH [ ] OTHER

SCREEN DIAMETER 1.0 IN. SCREEN LENGTH 70.0 FT. BENTONITE SEAL LENGTH 3.0 FT.
SCREEN MATERIAL [ ] PLASTIC SCREEN HOLE DIAMETER SEAL ABOVE SWL [ ] SEAL BELOW SWL [ ]
[ ] STEEL [ ] PTFE [ ] OTHER IF DIFFERENT FROM RISER 6.0 IN. SEAL ABOVE SWL WAS HYDRATED [ ]

PRIMARY FILTER PACK LENGTH 71.0 FT. PRIMARY FILTER MATERIAL [ ] SAND
SECONDARY FILTER PACK LENGTH 0.0 FT. [ ] PREPACKED

ANNULAR SEAL LENGTH 2.0 FT. ANNULAR SEAL MATERIAL [ ] BENTONITE SLURRY [ ] NEAT CEMENT GROUT
ANNULAR SEAL PLACED BY [ ] TREMIE [ ] CEMENT BENTONITE GROUT [X] NON-SLURRY BENTONITE [ ] OTHER
[ ] GRAVITY [ ] PRESSURE GROUT THRU TREMIE IF NON-SLURRY BENTONITE [X] CHIPS [ ] GRANULAR [ ] PELLETS [ ] OTHER

[ ] MULTIPLE CASED OR NESTED WELLS
ATTACH AS-BUILT DIAGRAMS showing constructions details with type, length and diameter of material and length and diameter of bores

COPY

LOCATION OF WELL

(OPTIONAL) LEGAL LOCATION (OPTIONAL)
LAT. 0° 0' 0.0" COUNTY
LONG. 0° 0' 0.0" ST LOUIS COUNTY
ELEVATION 0 FT.
_____ 1/4 _____ 1/4 _____ 1/4
SEC. 0 TWN. 0 RNG. 0 E

Please be aware that we do not guarantee the accuracy of the data. It is submitted to us by a third party and has not been field verified.

DEPTH FROM	DEPTH TO	FORMATION DESCRIPTION
0	4	SILTY CLAY
4	11	BROWN SAND
11	15	GRAY SAND
15	60	BROKEN LS
60	80	SHALE & LS

TOTAL DEPTH 80.0 FEET

FIRST ENCOUNTER GROUNDWATER 0.0 FT
STATIC WATER LEVEL (swl) 0.0 FT
WELL COMPLETION DATE 07/28/1999
PUMP SET DEPTH FT
WELL YIELD 0.0 GPM
PUMP INSTALLATION DATE

OTHER INFORMATION OR LOCATION DATA (OPTIONAL)

I HEREBY CERTIFY THE WELL/PUMP INFORMATION DESCRIBED HEREIN IS TRUE AND ACCURATE

	PERMIT NUMBER	DATE
PRIMARY CONTRACTOR SIGNATURE x WARD HERST	002702	
WELL DRILLER SIGNATURE x JOHN PHILLIPS	002883	
PUMP INSTALLER SIGNATURE pump info required for extraction/recovery wells x		
APPRENTICE WELL DRILLER SIGNATURE x		

AQUATERRA
Environmental Solutions, Inc.

13 Executive Dr. Suite 1 Fairview Heights IL 62208

LOG OF BORING NO.: **GMP-13**

SHEET NUMBER 1 of 2

CLIENT:	Republic Services, Inc.
PROJECT NAME:	Bridgeton Landfill
PROJECT NUMBER:	4788.10
PROJECT LOCATION:	Maryland Heights, MO
BORING LOCATION:	N: 1066434 E: 516379
AES PROJECT NO:	4788.10
AES GEOLOGIST:	C. Joyce
START DATE:	08/30/12 FINISH DATE: 09/12/12
START TIME:	FINISH TIME:

DRILLING CONTRACTOR:	Roberts Environmental Drilling
DRILLER:	Patrick
DRILLING RIG:	Track Mounted CME-75
DRILLING METHOD:	8" HAS, 6" Air Rorary
SAMPLING METHOD:	Split Spoon, Cuttings
BORING DIAMETER:	8"/6"
WELL DIAMETER:	2x2"
WELL COMPLETION:	Stick-Up
SURFACE ELEVATION:	483.2
TOC ELEVATION:	S-485.981, D-486.027
WATER LEVEL:	-
WATER ELEVATION:	-
DATE:	-

WELL CONSTRUCTION DETAILS		
MATERIAL:	PVC	PVC
DIAMETER:	2"	2"
WELL TOTAL DEPTH:	69'	45'
SCREEN LENGTH:	20'	40'
RISER LENGTH:	52.9'	7.8'
TOP OF SCREEN:	48.9'	4.8'
BOTTOM OF SCREEN:	68.9'	44.8'
SCREEN SLOT:	0.010 IN	0.010 IN
TOP OF FILTER PACK:	48'	3.8'
TOP OF SEAL:	45'	2.8'
TYPE OF SEAL:	3/8" Bentonite Chips	→
TYPE OF FILTER PACK:	12/20 Silica GMP-13D	GMP-13S

SAMPLE NUMBER	SAMPLE TYPE	BLOW COUNT	RECOVERY (FT)	DEPTH IN FEET	USCS CLASS	SOIL DESCRIPTION AND DRILLING CONDITIONS
HSA-1				2	SM	Top 1" Roots and Veg. Fine Clayey, SILT, Dark Reddish Brown (10yr3/4), moist
				4		
SS-1	SS		2.0	6	CL	Fine Sandy Fat CLAY, Mod Brown (5yr4/4), moist
HSA-2	CU			8		
SS-2	SS		2.0	10		Fine sandy Fat CLAY, Mod Brown (syr4/4), moist
HSA-3	CU			12		
SS-3	SS		2.0	14	SM	Silty Sand, Light Olive Gray (5y5/2) moist-wet with iron oxide Staining light brown (5yr5/6) medium mottled pattern
HSA-4	CU			16		
SS-4	SS		2.0	18	ML	Light brown mottled gray clayey SILT, moist
HSA-5	CU			20		Color grades to moderate yellow/brown (10yr5/4)
SS-5	SS		2.0	22		
HSA-6	CU			24		
SS-6	SS		2.0	26		
HSA-7	CU			28		
HSA-8	CU			30		
				32		
				34		
				36	GC	Clayey GRAVEL, Anugular to sub angular, dark yellow-orange, wet
				38	SM	Clayey Silty SAND, Fine and Medium grained, Dark Yellow Brown (10yr4/2)
				40		

NOTES AND WELL CONSTRUCTION

Top of Upper Seal 2.8'
Top of Gravel Pack 3.8'
Top of 13S Screen 4.8'

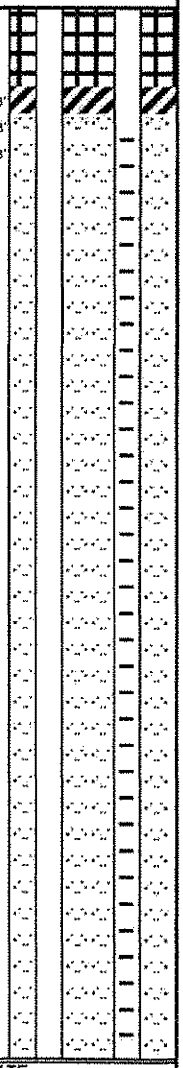

LEGEND:

SS - Split Spoon
CU -Cuttings Sample
ST - Shelby Tube
PID - Photoionization Detecto
PP - Pocket Penetrometer
HSA - Hollow Stem Augers
AR - Air Rotary
HA - Hand Auger
WB - Wash Bore
RB - Rock Bit
NX - Rock Core

THE STRATIFICATION LINES REPRESENT APPROXIMATE BOUNDARY LINES BETWEEN SOIL AND ROCK TYPES: IN-SITU, THE TRANSITION MAY BE GRADUAL.

AQUATERRA

Environmental Solutions, Inc.

13 Executive Dr. Suite 1 Fairview Heights IL 62208

LOG OF BORING NO **GMP-13** SHEET NUMBER 2 of 2

GEOLOGIST: C. Joyce

CLIENT: Republic Services, Inc.

DATE: 08/30/12

PROJECT NAME: Bridgeton Landfill

PROJECT NUMBER: 4788.1

SAMPLE NUMBER	SAMPLE TYPE	BLOW COUNT	RECOVERY (FT)	DEPTH IN FEET	USCS CLASS	SOIL DESCRIPTION AND DRILLING CONDITIONS	NOTES:
				42		Grading to Weathered Clayey SHALE, Thin slaty, Lt. Olive gray. (5y5/2)	
				44			Botton of 13S Screen 44.8'
				46		Silt to Shale with fine sandy banding, Pale Red (10r6/2), pale Brown (syr5/2) Gray, Light Red (5r4/2), light Bluish gray (5b7/1), Dry Hard	Top of Lower Seal 45'
				48			Top of Gravel Pack 48'
				50		Silty SHALE, moderate red (5rs14), Dry	Top of 13D Screen 49'
				52			
AR	CU			54	SH	Layered with pale brown (5yr5/2) and medium bluish gray (5b5/1), saturated in fractures within unit	
				56			
				58			
				60		Silty SHALE, medium dark gray (NH), Dry	
				62			
				64			
				66			
				68			Bottom of 13D Screen 69'
				70		Boring Terminated @ 69.0'	
				72			
				74			
				76			
				78			
				80			
				82			
				84			
				90			
				100			
				118			

GMP-13D GMP-13S

LEGEND:

SS - Split Spoon
CS - 5 foot CME Sampler
ST - Shelby Tube
PID - Photoionization Detecto
PP - Pocket Penetrometer
HSA - Hollow Stem Augers
AR - Air Rotary
HA - Hand Auger
WB - Wash Bore
RB - Rock Bit
NX - Rock Core

THE STRATIFICATION LINES REPRESENT APPROXIMATE BOUNDARY LINES BETWEEN SOIL AND ROCK TYPES: IN-SITU, THE TRANSITION MAY BE GRADUAL.

AQUATERRA

Environmental Solutions, Inc.

13 Executive Dr. Suite 1 Fairview Heights IL 62208

LOG OF BORING NO: **GMP-14**

SHEET NUMBER 1 of 2

CLIENT:	Republic Services, Inc.
PROJECT NAME:	Bridgeton Landfill
PROJECT NUMBER:	4788.10
PROJECT LOCATION	Maryland Heights, MO
BORING LOCATION:	N: 1068503 E: 517249
AES PROJECT NO:	4788.10
AES GEOLOGIST:	T.Pool
START DATE	09/04/12 FINISH DATE 09/05/12
START TIME	FINISH TIME

DRILLING CONTRACTOR:	Roberts Environmental Drilling
DRILLER:	Patrick
DRILLING RIG:	Track Mounted CME-75
DRILLING METHOD:	8" ID HSA, 6" Air Rorary
SAMPLING METHOD:	Split Spoon, Cuttings
BORING DIAMETER:	10"/6"
WELL DIAMETER:	2x2"
WELL COMPLETION:	Stick-Up
SURFACE ELEVATION:	480.7
TOC ELEVATION:	S-483.53; D-483.56
WATER LEVEL:	-
WATER ELEVATION:	-
DATE:	-

WELL CONSTRUCTION DETAILS		
MATERIAL:	PVC	PVC
CASING DIAMETER:	2"	2"
WELL TOTAL DEPTH:	79'	34'
SCREEN LENGTH:	40'	25'
RISER LENGTH:	42'	12'
TOP OF SCREEN:	38.9'	8.8'
BOTTOM OF SCREEN:	78.9'	33.8'
SCREEN SLOT:	0.010 IN	0.010 IN
TOP OF FILTER PACK:	37'	7'
TOP OF SEAL:	34'	3'
TYPE OF SEAL:	3/8" Bentonite Chips	→
TYPE OF FILTER PACK:	12/20 Silica	GMP-14D GMP-14S

SAMPLE NUMBER	SAMPLE TYPE	BLOW COUNT	RECOVERY (FT)	DEPTH IN FEET	USCS CLASS	SOIL DESCRIPTION AND DRILLING CONDITIONS
HSA-1				2	ML	Grass on surface with Brown clayey SILT, dry trace gravel
SS-1	SS		2.0	4 6		Brown silty CLAY, dry
HSA-2	CU			8		
SS-2	SS		2.0	10	CL	Tan to light Gray, silty CLAY, moist
HSA-3	CU			12 14		
SS-3	SS		2.0	16		Gray with Tan silty CLAY, wet
HSA-4	CU			18 20		
SS-4	SS		2.0	22	ML	Dark gray clayey SILT, wet
HSA-5	CU			24		
SS-5	SS		2.0	26	SM	Gray silty fine SAND, saturated
HSA-6	CU			28 30		
SS-6	SS		0.0		SP	No Sample due to Auger backfill of sand
HSA-7	CU			32 34		SAND in cuttings
HSA-8	CU			36		
AR	CU			38 40	LMS	Bit Refusal/Bedrock at 37' Gray weathered LIMESTONE with occasional shale, wet

NOTES AND WELL CONSTRUCTION

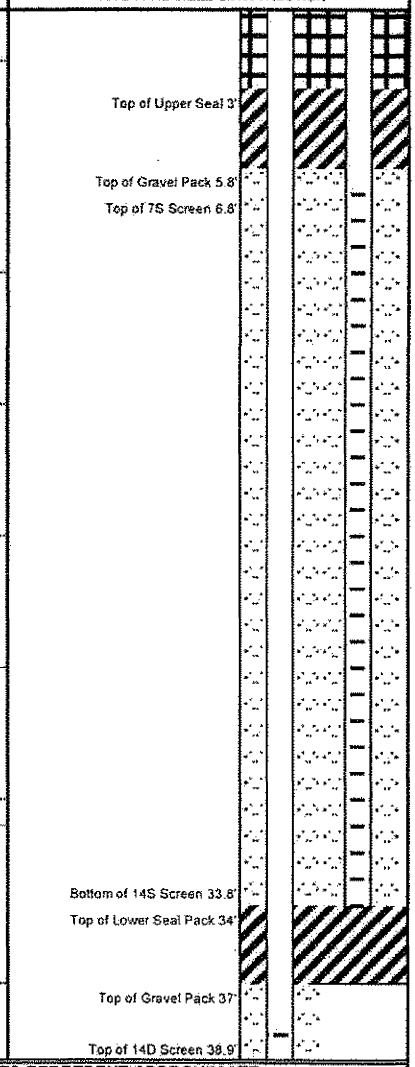

LEGEND:

SS - Split Spoon
CU -Cuttings Sample
ST - Shelby Tube
PID - Photoionization Detecto
PP - Pocket Penetrometer
HSA - Hollow Stem Augers
AR - Air Rotary
HA - Hand Auger
WB - Wash Bore
RB - Rock Bit
NX - Rock Core

THE STRATIFICATION LINES REPRESENT APPROXIMATE BOUNDARY LINES BETWEEN SOIL AND ROCK TYPES: IN-SITU, THE TRANSITION MAY BE GRADUAL.

AQUATERRA Environmental Solutions, Inc.	LOG OF BORING NO.	GMP-14	SHEET NUMBER	2 of 2
13 Executive Dr. Suite 1 Fairview Heights IL 62208	GEOLOGIST:	T.Pool		
CLIENT: Republic Services, Inc.	DATE:	09/04/12		
PROJECT NAME: Bridgeton Landfill	PROJECT NUMBER:	4788.1		

SAMPLE NUMBER	SAMPLE TYPE	BLOW COUNT	RECOVERY (FT)	DEPTH IN FEET	USCS CLASS	SOIL DESCRIPTION AND DRILLING CONDITIONS	NOTES:	GMP-14D	GMP-14S
AR	CU			42 44 46 48 50 52 54 56 58 60 62 64 66 68 70 72 74 76 78	LMS	Gray LIMESTONE, wet	Bottom of 14D Screen 78.6'		
				80 82 84 86 88 90		Boring Terminated @ 79'			

LEGEND:

SS - Split Spoon	*PID - Photoionization Detecto*	*HA - Hand Auger*
CS - 5 foot CME Sampler	*PP - Pocket Penetrometer*	*WB - Wash Bore*
ST - Shelby Tube	*HSA - Hollow Stem Augers*	*RB - Rock Bit*
	AR - Air Rotary	*NX - Rock Core*

THE STRATIFICATION LINES REPRESENT APPROXIMATE BOUNDARY LINES BETWEEN SOIL AND ROCK TYPES: IN-SITU, THE TRANSITION MAY BE GRADUAL.

AQUATERRA
Environmental Solutions, Inc.

13 Executive Dr. Suite 1 Fairview Heights IL 62208

LOG OF BORING NO. **GMP-15**

SHEET NUMBER 1 of 2

CLIENT:	Republic Services, Inc.
PROJECT NAME:	Bridgeton Landfill
PROJECT NUMBER:	4788.10
PROJECT LOCATION:	Maryland Heights, MO
BORING LOCATION:	N: 1067710 E: 517839
AES PROJECT NO:	4788.10
AES GEOLOGIST:	T.Pool
START DATE:	09/10/12 FINISH DATE: 09/10/12
START TIME:	FINISH TIME:

DRILLING CONTRACTOR:	Roberts Environmental Drilling
DRILLER:	Patrick
DRILLING RIG:	Track Mounted CME-75
DRILLING METHOD:	8" ID HSA, 6" Air Rorary
SAMPLING METHOD:	Split Spoon, Cuttings
BORING DIAMETER:	10"/6"
WELL DIAMETER:	2x2"
WELL COMPLETION:	Stick-Up
SURFACE ELEVATION:	483'
TOC ELEVATION:	S-481.15, D-481.19
WATER LEVEL:	-
WATER ELEVATION:	-
DATE:	-

WELL CONSTRUCTION DETAILS

MATERIAL:	PVC	PVC
CASING DIAMETER:	2"	2"
WELL TOTAL DEPTH:	75'	27'
SCREEN LENGTH:	45'	20'
RISER LENGTH:	36.7'	9.6'
TOP OF SCREEN:	33.8'	6.8'
BOTTOM OF SCREEN:	78.9'	26.8'
SCREEN SLOT:	0.010 IN	0.010 IN
TOP OF FILTER PACK:	32.8'	5.8'
TOP OF SEAL:	27'	3'
TYPE OF SEAL:	3/8" Bentonite Chips	
TYPE OF FILTER PACK:	12/20 Silica	GMP-15D GMP-15S

SAMPLE NUMBER	SAMPLE TYPE	BLOW COUNT	RECOVERY (FT)	DEPTH IN FEET	USCS CLASS	SOIL DESCRIPTION AND DRILLING CONDITIONS
HSA-1				2	ML	Grass on surface with Dark brown clayey SILT, dry
SS-1	SS		2.0	4		
HSA-2	CU			6		Brown clayey SILT, trace gravel, dry
SS-2	SS		2.0	8		
HSA-3	CU			10	CL	Tan mottled gray silty CLAY, wet
SS-3	SS		2.0	12		
HSA-4	CU			14		Brown silty CLAY, wet
SS-4	SS		2.0	16	ML	Brown sandy CLAY, wet
HSA-5	CU			18		Brown clayey SILT, wet
SS-5	SS		2.0	20		Brown sandy SILT, saturated
HSA-6	CU			22		
AR	CU			24		
				26	CL	Gray silty CLAY, wet
				28		
				30	LMS	Bit refusal/ Bedrock @ 29' (Rock in SS shoe)
				32		
				34		Gray weathered LIMESTONE, with clay in cuttings, wet
				36		
				38		
				40		

NOTES AND WELL CONSTRUCTION

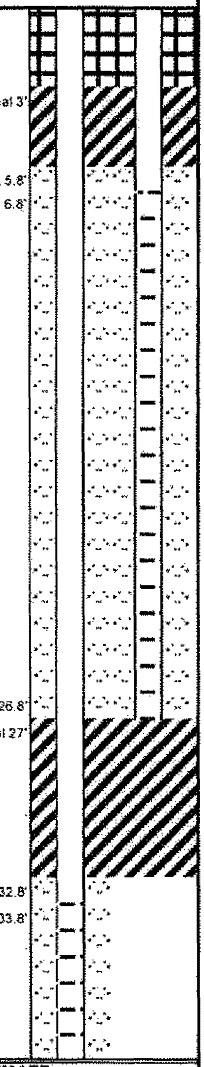

LEGEND:

SS - Split Spoon
CU -Cuttings Sample
ST - Shelby Tube
PID - Photoionization Detecto
PP - Pocket Penetrometer
HSA - Hollow Stem Augers
AR - Air Rotary
HA - Hand Auger
WB - Wash Bore
RB - Rock Bit
NX - Rock Core

THE STRATIFICATION LINES REPRESENT APPROXIMATE BOUNDARY LINES BETWEEN SOIL AND ROCK TYPES: IN-SITU, THE TRANSITION MAY BE GRADUAL.

AQUATERRA

Environmental Solutions, Inc.

13 Executive Dr. Suite 1 Fairview Heights IL 62208

CLIENT: Republic Services, Inc.

PROJECT NAME: Bridgeton Landfill

LOG OF BORING NO.: **GMP-15** SHEET NUMBER 2 of 2

GEOLOGIST: T.Pool

DATE: 09/10/12

PROJECT NUMBER: 4788.1

SAMPLE NUMBER	SAMPLE TYPE	BLOW COUNT	RECOVERY (FT)	DEPTH IN FEET	USCS CLASS	SOIL DESCRIPTION AND DRILLING CONDITIONS	NOTES:
				42		Gray weathered LIMESTONE, with clay in cuttings, wet	
				44			
				46			
				48			
				50			
				52			
				54			
				56			
				58			
AR	CU			60	LMS		
				62			
				64		Gray LIMESTONE, wet	
				66			
				68			
				70			
				72			
				74			
				76			
				78			Bottom of 15D Screen 78.8'
				80		Bottom of Boring @ 79'	
				82			
				84			
				86			
				88			
				90			

GMP-15D GMP-15S

LEGEND:

SS - Split Spoon
CS - 5 foot CME Sampler
ST - Shelby Tube
PID - Photoionization Detecto
PP - Pocket Penetrometer
HSA - Hollow Stem Augers
AR - Air Rotary
HA - Hand Auger
WB - Wash Bore
RB - Rock Bit
NX - Rock Core

THE STRATIFICATION LINES REPRESENT APPROXIMATE BOUNDARY LINES BETWEEN SOIL AND ROCK TYPES: IN-SITU, THE TRANSITION MAY BE GRADUAL.

AQUATERRA
Environmental Solutions, Inc.

13 Executive Dr. Suite 1 Fairview Heights IL 62208

LOG OF BORING NO.: **GMP-16**

SHEET NUMBER 1 of 2

CLIENT:	Republic Services, Inc.
PROJECT NAME:	Bridgeton Landfill
PROJECT NUMBER:	4788.10
PROJECT LOCATION:	Maryland Heights, MO
BORING LOCATION:	N: 1068094 E: 517531
AES PROJECT NO:	4788.10
AES GEOLOGIST:	T.Pool
START DATE:	09/11/12 FINISH DATE: 09/11/12
START TIME:	FINISH TIME:

DRILLING CONTRACTOR:	Roberts Environmental Drilling
DRILLER:	Patrick
DRILLING RIG:	Track Mounted CME-75
DRILLING METHOD:	8" ID HSA, 6" Air Rorary
SAMPLING METHOD:	Split Spoon, Cuttings
BORING DIAMETER:	10"/6"
WELL DIAMETER:	2x2"
WELL COMPLETION:	Flush Mount
SURFACE ELEVATION:	477.1
TOC ELEVATION:	S-4476.77; D-476.81
WATER LEVEL:	-
WATER ELEVATION:	-
DATE:	-

WELL CONSTRUCTION DETAILS		
MATERIAL:	PVC	PVC
CASING DIAMETER:	2"	2"
WELL TOTAL DEPTH:	78'	28'
SCREEN LENGTH:	45'	20'
RISER LENGTH:	32.7'	7.5'
TOP OF SCREEN:	32.6'	7.5'
BOTTOM OF SCREEN:	77.6'	27.5'
SCREEN SLOT:	0.010 IN	0.010 IN
TOP OF FILTER PACK:	30'	6.5'
TOP OF SEAL:	28'	3'
TYPE OF SEAL:	3/8" Bentonite Chips	
TYPE OF FILTER PACK:	12/20 Silica	GMP-16D GMP-16S

SAMPLE NUMBER	SAMPLE TYPE	BLOW COUNT	RECOVERY (FT)	DEPTH IN FEET	USCS CLASS	SOIL DESCRIPTION AND DRILLING CONDITIONS
HSA-1				2	GM	Brown with gray silty GRAVEL, dry
				4	SP	
SS-1	SS		2.0	6		Brown fine-medium SAND, dry
					ML	Light brown clayey SILT, dry
HSA-2	CU			8		
SS-2	SS		0.0	10		Rock in shoe no sample
HSA-3	CU			12	SP	
				14		
SS-3	SS		2.0	16		Brown silty fine SAND, trace medium SAND, saturated
HSA-4	CU			18		
				20		no samples do to saturated sand in cuttings
HSA-5	CU			22		
				24		
				26		
HSA-6	CU			28		Bit refusal/bedrock at 29.5' (LMS present in SS shoe)
				30	LMS	
				32		
AR	CU			34		Gray weathered LIMESTONE, with sand in cuttings, wet
				36		
				38		
				40		

NOTES AND WELL CONSTRUCTION

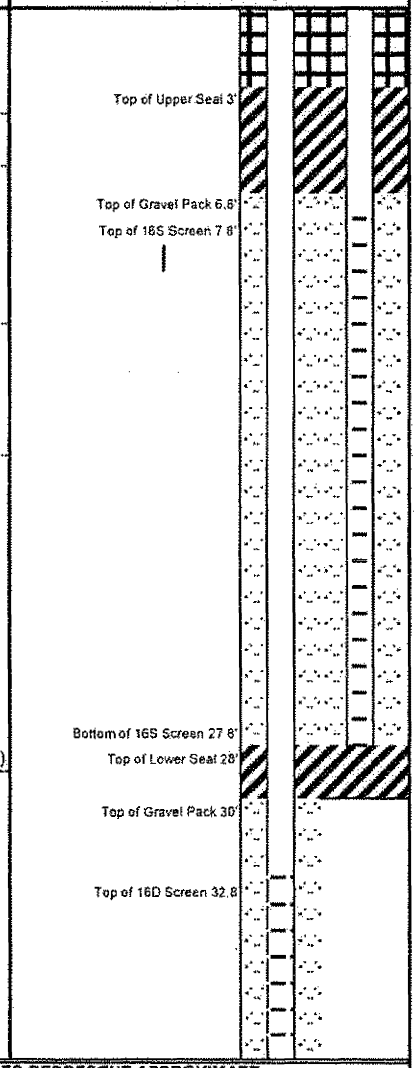

LEGEND:

SS - Split Spoon
CU -Cuttings Sample
ST - Shelby Tube
PID - Photoionization Detecto
PP - Pocket Penetrometer
HSA - Hollow Stem Augers
AR - Air Rotary
HA - Hand Auger
WB - Wash Bore
RB - Rock Bit
NX - Rock Core

THE STRATIFICATION LINES REPRESENT APPROXIMATE BOUNDARY LINES BETWEEN SOIL AND ROCK TYPES: IN-SITU, THE TRANSITION MAY BE GRADUAL.

AQUATERRA

Environmental Solutions, Inc.

13 Executive Dr. Suite 1 Fairview Heights IL 62208

CLIENT: Republic Services, Inc.

PROJECT NAME: Bridgeton Landfill

LOG OF BORING NO.: **GMP-16** SHEET NUMBER 2 of 2

GEOLOGIST: T.Pool

DATE: 09/11/12

PROJECT NUMBER: 4788.1

SAMPLE NUMBER	SAMPLE TYPE	BLOW COUNT	RECOVERY (FT)	DEPTH IN FEET	USCS CLASS	SOIL DESCRIPTION AND DRILLING CONDITIONS	NOTES:	GMP-16D	GMP-16S
				42		Gray weathered LIMESTONE, wet			
				44					
				46					
				48					
				50					
				52					
				54					
				56					
				58					
AR	CU			60	LMS	Gray LIMESTONE, wet			
				62					
				64					
				66					
				68					
				70					
				72					
				74					
				76					
				78					
				80		Bottom of Boring @ 78'			
				82					
				84					
				86					
				88					
				90					

LEGEND:

SS - Split Spoon
CS - 5 foot CME Sampler
ST - Shelby Tube
PID - Photoionization Detecto
PP - Pocket Penetrometer
HSA - Hollow Stem Augers
AR - Air Rotary
HA - Hand Auger
WB - Wash Bore
RB - Rock Bit
NX - Rock Core

THE STRATIFICATION LINES REPRESENT APPROXIMATE BOUNDARY LINES BETWEEN SOIL AND ROCK TYPES: IN-SITU, THE TRANSITION MAY BE GRADUAL.

TEMPORARY LANDFILL GAS MONITORING PROBES

AQUATERRA

Environmental Solutions, Inc.

13 Executive Dr. Suite 1 Fairview Heights IL 62208

LOG OF BORING NO.: **TMP-1**

SHEET NUMBER 1 of 2

CLIENT:	Republic Services, Inc.
PROJECT NAME:	Bridgeton Landfill
PROJECT NUMBER:	4788.10
PROJECT LOCATION:	Maryland Heights, MO
BORING LOCATION:	N: 1066895 E: 515160
AES PROJECT NO:	4788.10
AES GEOLOGIST:	T.Pool, C. Joyce
START DATE:	08/20/12 FINISH DATE: 08/29/12
START TIME:	FINISH TIME:

DRILLING CONTRACTOR:	Roberts Environmental Drilling
DRILLER:	Patrick
DRILLING RIG:	Track Mounted CME-75
DRILLING METHOD:	10" ID HSA, 8" Air Rotary
SAMPLING METHOD:	Split Spoon, Cuttings
BORING DIAMETER:	12"/8"
WELL DIAMETER:	3x 1"
WELL COMPLETION:	Stick-Up
SURFACE ELEVATION:	456.5
TOC ELEVATION:	S-456.47; M-456.43; C-456.41
WATER LEVEL:	-
WATER ELEVATION:	-
DATE:	-

WELL CONSTRUCTION DETAILS

MATERIAL:	PVC	PVC	PVC
CASING DIAMETER:	1"	1"	1"
WELL TOTAL DEPTH:	66.5'	53.5'	35.3'
SCREEN LENGTH:	10'	15'	30'
RISER LENGTH:	59.5'	41.5'	5'
TOP OF SCREEN:	56.3'	38.3'	5.1'
BOTTOM OF SCREEN:	66.3'	53.3'	35.1'
SCREEN SLOT:	0.010 IN	0.010 IN	0.010 IN
TOP OF FILTER PACK:	55.5'	37.3'	4.1'
TOP OF SEAL:	53.5'	35.3'	2.1'
TYPE OF SEAL:	3/8" Bentonite Chips	→	
TYPE OF FILTER PACK:	12/20 Silica	TMP-1D	TMP-1M TMP-1S

SAMPLE NUMBER	SAMPLE TYPE	BLOW COUNT	RECOVERY (FT)	DEPTH IN FEET	USCS CLASS	SOIL DESCRIPTION AND DRILLING CONDITIONS
HSA-1				2	ML	Parking lot fill,gravel
SS-1	SS		2.0	4		Brown sandy, clayey SILT, dry
HSA-2	CU			6		Trace Gravel at 8'
SS-2	SS		2.0	8	SM	Brown silty SAND, dry
HSA-3	CU			10	CL	Dark brown, silty CLAY, moist
SS-3	SS		0.0	12		No recovery spoon empty
HSA-4	CU			14		
SS-4	SS		2.0	16		Dark brown silty CLAY, moist
HSA-5	CU			18		
SS-5	SS		2.0	20		Gray silty CLAY, wet
HSA-6	CU			22	SM	Gray silty fine SAND, saturated
SS-6	SS		2.0	24	SP	Gray fine-med SAND, saturated
HSA-7	CU			26		
SS-7	SS		1.0	28		Gray fine-med SAND, saturated
AR	CU			30	LMS	BEDROCK @ 36' trace sand
				32		TP ends logging here on 8/20/12 resumed by CJ on 8/29/12
				34		
				36		
				38		
				40		

NOTES AND WELL CONSTRUCTION

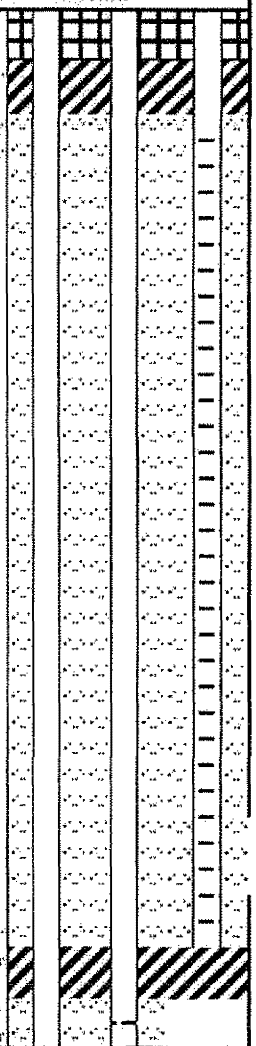

LEGEND:

SS - Split Spoon
CU -Cuttings Sample
ST - Shelby Tube
PID - Photoionization Detecto
PP - Pocket Penetrometer
HSA - Hollow Stem Augers
AR - Air Rotary
HA - Hand Auger
WB - Wash Bore
RB - Rock Bit
NX - Rock Core

THE STRATIFICATION LINES REPRESENT APPROXIMATE BOUNDARY LINES BETWEEN SOIL AND ROCK TYPES: IN-SITU, THE TRANSITION MAY BE GRADUAL.

AQUATERRA

Environmental Solutions, Inc.

13 Executive Dr. Suite 1 Fairview Heights IL 62208

LOG OF BORING NO.: **TMP-1** SHEET NUMBER 2 of 2

GEOLOGIST: T.Pool, C. Joyce

CLIENT: Republic Services, Inc.

DATE: 08/20/12

PROJECT NAME: Bridgeton Landfill

PROJECT NUMBER: 4788.1

SAMPLE NUMBER	SAMPLE TYPE	BLOW COUNT	RECOVERY (FT)	DEPTH IN FEET	USCS CLASS	SOIL DESCRIPTION AND DRILLING CONDITIONS	NOTES:
AR	CU			42 44 46 48 50 52 54 56 58 60 62 64 66	LMS	Fine clayey sand infiltrated through cracks in the limestone or beneath augers at RX interface overnight. Medium Bluish Gray (SB5/1) Unweathered LIMESTONE at 55.0'	Bottom of 1M Screen 53.3' Top of Lower Seal 53.5' Top of Gravel Pack 55.3' Top of 1D Screen 56.3' Bottom of 1D Screen 66.3'
				68 70 72 74 76 78 80 82 84 86 88 90		Boring Terminated @ 66.5'	

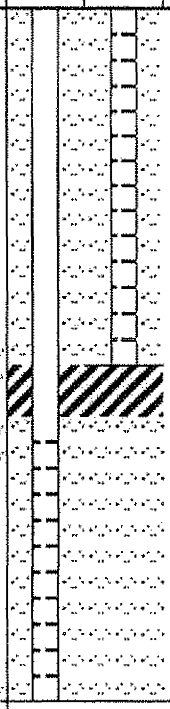

LEGEND:

SS - Split Spoon
CS - 5 foot CME Sampler
ST - Shelby Tube
PID - Photoionization Detecto
PP - Pocket Penetrometer
HSA - Hollow Stem Augers
AR - Air Rotary
HA - Hand Auger
WB - Wash Bore
RB - Rock Bit
NX - Rock Core

THE STRATIFICATION LINES REPRESENT APPROXIMATE BOUNDARY LINES BETWEEN SOIL AND ROCK TYPES: IN-SITU, THE TRANSITION MAY BE GRADUAL.

AQUATERRA

Environmental Solutions, Inc.

13 Executive Dr. Suite 1 Fairview Heights IL 62208

LOG OF BORING NO.: **TMP-2**

SHEET NUMBER 1 of 2

CLIENT:	Republic Services, Inc.
PROJECT NAME:	Bridgeton Landfill
PROJECT NUMBER:	4788.10
PROJECT LOCATION:	Maryland Heights, MO
BORING LOCATION:	N: 1066806 E: 515318
AES PROJECT NO:	4788.10
AES GEOLOGIST:	C. Joyce
START DATE:	08/28/12 FINISH DATE: 08/29/12
START TIME:	FINISH TIME:

DRILLING CONTRACTOR:	Roberts Environmental Drilling
DRILLER:	Patrick
DRILLING RIG:	Track Mounted CME-75
DRILLING METHOD:	10" ID HSA, 8" Air Rorary
SAMPLING METHOD:	Split Spoon, Cuttings
BORING DIAMETER:	12"/8"
WELL DIAMETER:	3x 1"
WELL COMPLETION:	Stick-Up
SURFACE ELEVATION:	457.9
TOC ELEVATION:	S-460.90; M-460.84; D-460.78
WATER LEVEL:	-
WATER ELEVATION:	-
DATE:	-

WELL CONSTRUCTION DETAILS

MATERIAL:	PVC	PVC	PVC
CASING DIAMETER:	1"	1"	1"
WELL TOTAL DEPTH:	47'	32'	14'
SCREEN LENGTH:	10'	15'	10'
RISER LENGTH:	36.9'	20'	7.1'
TOP OF SCREEN:	36.8'	15.8'	3.8'
BOTTOM OF SCREEN:	46.8'	31.8'	13.8'
SCREEN SLOT:	0.010 IN	0.010 IN	0.010 IN
TOP OF FILTER PACK:	35.8'	15.8'	2.8'
TOP OF SEAL:	32'	14'	1.8'
TYPE OF SEAL:	3/8" Bentonite Chips	→	→
TYPE OF FILTER PACK:	12/20 Silica	TMP-1D	TMP-1M	TMP-1S

SAMPLE NUMBER	SAMPLE TYPE	BLOW COUNT	RECOVERY (FT)	DEPTH IN FEET	USCS CLASS	SOIL DESCRIPTION AND DRILLING CONDITIONS
HSA-1				2	FILL	Road Aggregate
				4	SC	Pale yellow-brown (10yr6/2) clayey SAND, moist
SS-1	SS		2.0	6	CL	Grayish brown (5yr3/2) fine sandy lean CLAY, Moist
HSA-2	CU			8		
SS-2	SS		2.0	10		Moderate brown (5yr4/4) fine sandy lean CLAY, moist
HSA-3	CU			12		
SS-3	SS		2.0	14		Moderate brown (5yr3/4) lean CLAY, moist
HSA-4				16		
				18		Bedrock @ 18.0'
AR	CU			20	LMS	Limestone more crystaline. Medium Gray N6, weathered surface, very pale orange (10yr8/2)
				22		
				24		Shaley Limestone. medium gray (N5), to light .gray (N8)
				26		
				28		Weathered LMS, pale yellow-orange to light olive gray, dry (10yr8/6 to 5y 5/8)
				30		
				32		
				34		
				36		Limestone, medium light gray to medium gray N6
				38		Weathered surfaces reddish gray (5gy6/1)
				40		

NOTES AND WELL CONSTRUCTION

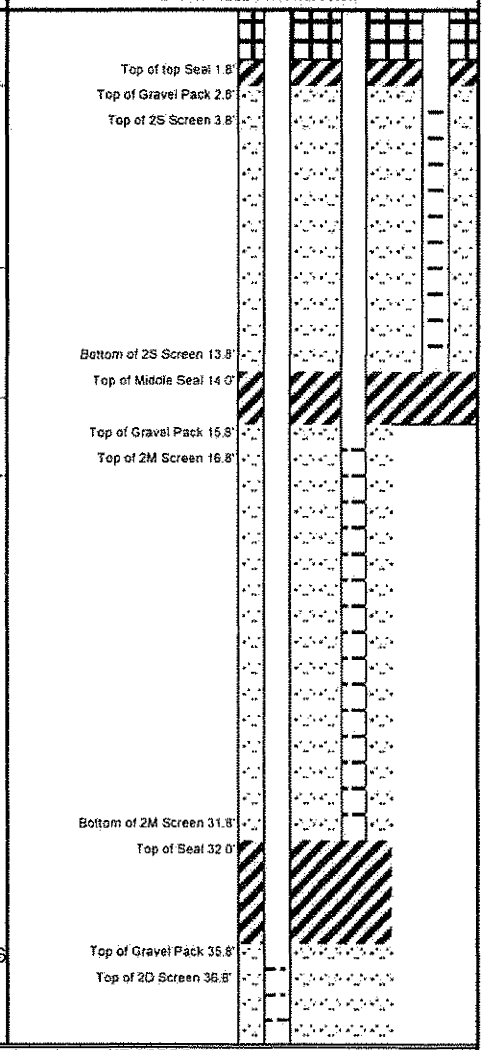

LEGEND:

SS - Split Spoon
CU -Cuttings Sample
ST - Shelby Tube
PID - Photoionization Detecto
PP - Pocket Penetrometer
HSA - Hollow Stem Augers
AR - Air Rotary
HA - Hand Auger
WB - Wash Bore
RB - Rock Bit
NX - Rock Core

THE STRATIFICATION LINES REPRESENT APPROXIMATE BOUNDARY LINES BETWEEN SOIL AND ROCK TYPES: IN-SITU, THE TRANSITION MAY BE GRADUAL.

AQUATERRA

Environmental Solutions, Inc.

13 Executive Dr. Suite 1 Fairview Heights IL 62208

LOG OF BORING NO.: **TMP-2** SHEET NUMBER 2 of 2

GEOLOGIST: C. Joyce

CLIENT: Republic Services, Inc.

DATE: 08/28/12

PROJECT NAME: Bridgeton Landfill

PROJECT NUMBER: 4788.1

SAMPLE NUMBER	SAMPLE TYPE	BLOW COUNT	RECOVERY (FT)	DEPTH IN FEET	USCS CLASS	SOIL DESCRIPTION AND DRILLING CONDITIONS	NOTES:	TMP-1D	TMP-1M	TMP-1S
AR	CU			42 44 46	LMS	Limestone med gray N6. Weathered Surfaces dusky yellow	Bottom of 2D Screen 46.8'			
				48 50 52 54 56 58 60 62 64 66 68 70 72 74 76 78 80 82 84 86 88 90		Boring Terminated @ 47' BGS			

LEGEND:

SS - Split Spoon
CS - 5 foot CME Sampler
ST - Shelby Tube
PID - Photoionization Detecto
PP - Pocket Penetrometer
HSA - Hollow Stem Augers
AR - Air Rotary
HA - Hand Auger
WB - Wash Bore
RB - Rock Bit
NX - Rock Core

THE STRATIFICATION LINES REPRESENT APPROXIMATE BOUNDARY LINES BETWEEN SOIL AND ROCK TYPES: IN-SITU, THE TRANSITION MAY BE GRADUAL.

AQUATERRA
Environmental Solutions, Inc.

13 Executive Dr. Suite 1 Fairview Heights IL 62208

LOG OF BORING NO. **TMP-3**

SHEET NUMBER 1 of 2

CLIENT:	Republic Services, Inc.
PROJECT NAME:	Bridgeton Landfill
PROJECT NUMBER:	4788.10
PROJECT LOCATION:	Maryland Heights, MO
BORING LOCATION:	N: 1066895 E: 515160
AES PROJECT NO:	4788.10
AES GEOLOGIST:	T.Pool, C. Joyce
START DATE	08/23/12 FINISH DATE 08/28/12
START TIME	FINISH TIME

DRILLING CONTRACTOR:	Roberts Environmental Drilling
DRILLER:	Patrick
DRILLING RIG:	Track Mounted CME-75
DRILLING METHOD:	8" HAS, 8" Air Rorary
SAMPLING METHOD:	Split Spoon, Cuttings
BORING DIAMETER:	10"/8"
WELL DIAMETER:	3x 1"
WELL COMPLETION:	Stick-Up
SURFACE ELEVATION:	456.1
TOC ELEVATION:	S-458.82: M-458.777: D-458.812
WATER LEVEL:	-
WATER ELEVATION:	-
DATE:	-

WELL CONSTRUCTION DETAILS

MATERIAL:	PVC	PVC	PVC
DIAMETER:	1"	1"	1"
WELL TOTAL DEPTH:	61'	48	28.5'
SCREEN LENGTH:	10'	15'	20'
RISER LENGTH:	53.8'	35.7'	11.3'
TOP OF SCREEN:	50.8	32.8	8.3
BOTTOM OF SCREEN:	60.8	47.8	28.3'
SCREEN SLOT:	0.010 IN	0.010 IN	0.010 IN
TOP OF FILTER PACK:	48.8	30.5	7.3
TOP OF SEAL:	45	29	3.5
TYPE OF SEAL:	3/8" Bentonite Chips	→	→
TYPE OF FILTER PACK:	12/20 Silica	TMP-3D	TMP-3M	TMP-3S

SAMPLE NUMBER	SAMPLE TYPE	BLOW COUNT	RECOVERY (FT)	DEPTH IN FEET	USCS CLASS	SOIL DESCRIPTION AND DRILLING CONDITIONS
HSA-1				2		Grass with Gravel
				4	ML	
SS-1	SS		2.0	6		Brown with gray clayey SILT, dry
						Brown silty CLAY, dry
HSA-2	CU			8		Trace Gravel at 8'
SS-2	SS		2.0	10		Brown silty CLAY, dry
				12		
HSA-3	CU			14	CL	
SS-3	SS		2.0	16		Dark brown silty CLAY, wet
HSA-4	CU			18		
				20		
SS-4	SS		2.0			Gray silty CLAY, moist
				22		Gray sandy, clayey SILT saturated
HSA-5	CU			24		
SS-5	SS		2.0	26	ML	Gray sandy SILT, moist
HSA-6	CU			28		
				30		
SS-6	SS		2.0			Bit Refusal
				32		Bedrock @ 31.0'
AR	CU			34		
				36	LMS	Gray weathered LIMESTONE, wet
				38		
				40		End of TP Log, CJ resumes on 8/28/2012

NOTES AND WELL CONSTRUCTION

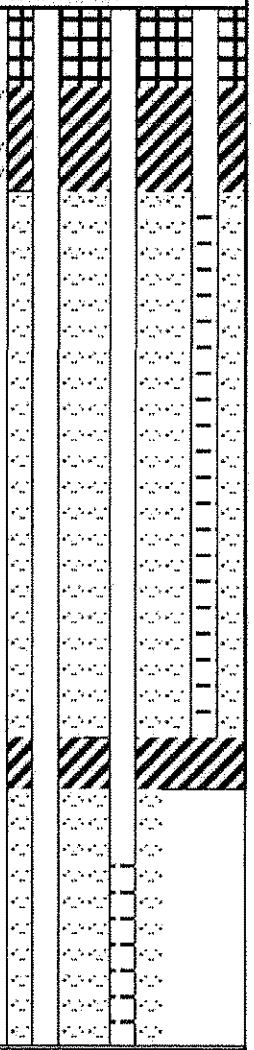

LEGEND:

SS - Split Spoon	*PID - Photoionization Detecto*	*HA - Hand Auger*
CU -Cuttings Sample	*PP - Pocket Penetrometer*	*WB - Wash Bore*
ST - Shelby Tube	*HSA - Hollow Stem Augers*	*RB - Rock Bit*
	AR - Air Rotary	*NX - Rock Core*

THE STRATIFICATION LINES REPRESENT APPROXIMATE BOUNDARY LINES BETWEEN SOIL AND ROCK TYPES: IN-SITU, THE TRANSITION MAY BE GRADUAL.

AQUATERRA

Environmental Solutions, Inc.

13 Executive Dr. Suite 1 Fairview Heights IL 62208

CLIENT: Republic Services, Inc.

PROJECT NAME: Bridgeton Landfill

LOG OF BORING NO.: **TMP-3** SHEET NUMBER: 2 of 2

GEOLOGIST: T.Pool, C. Joyce

DATE: 08/23/12

PROJECT NUMBER: 4788.1

SAMPLER TYPE	LEL %	H2S (PPM)	RECOVERY (FT)	DEPTH IN FEET	USCS CLASS	SOIL DESCRIPTION AND DRILLING CONDITIONS	NOTES:
				42		Gray weathered LIMESTONE, wet	
				44			
				46			
				48			Bottom of 3M Screen 47.8 Top of Bottom Seal 48'
AR	CU			50	LMS	Limestone Competent, Medium Light Gray (N6) Thin shaley LMS	Top of Gravel Pack 49.8' Top of 3D Screen 50.8'
				52			
				54			
				56			
				58			
				60			Bottom of 3D Screen 60.8'
				62		Boring Terminated @ 61.0'	
				64			
				66			
				68			
				70			
				72			
				74			
				76			
				78			
				80			
				82			
				84			
				86			
				88			
				90			

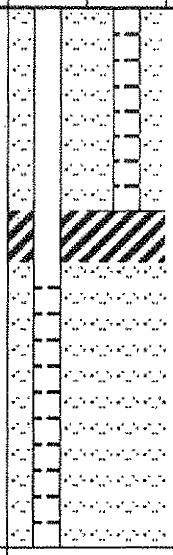

LEGEND:

SS - Split Spoon
CS - 5 foot CME Sampler
ST - Shelby Tube
PID - Photoionization Detecto
PP - Pocket Penetrometer
HSA - Hollow Stem Augers
AR - Air Rotary
HA - Hand Auger
WB - Wash Bore
RB - Rock Bit
NX - Rock Core

THE STRATIFICATION LINES REPRESENT APPROXIMATE BOUNDARY LINES BETWEEN SOIL AND ROCK TYPES: IN-SITU, THE TRANSITION MAY BE GRADUAL.

AQUATERRA

Environmental Solutions, Inc.

13 Executive Dr. Suite 1 Fairview Heights IL 62208

LOG OF BORING NO. **TMP-3** SHEET NUMBER 2 of 2

GEOLOGIST: T.Pool, C. Joyce

CLIENT: Republic Services, Inc.

DATE: 08/23/12

PROJECT NAME: Bridgeton Landfill

PROJECT NUMBER: 4788.1

SAMPLER TYPE	LEL %	H2S (PPM)	RECOVERY (FT)	DEPTH IN FEET	USCS CLASS	SOIL DESCRIPTION AND DRILLING CONDITIONS	NOTES:
				42		Gray weathered LIMESTONE, wet	
				44			
				46			
				48			Bottom of 3M Screen 47.8 Top of Bottom Seal 48'
AR	CU			50	LMS	Limestone Competent, Medium Light Gray (N6) Thin shaley LMS	Top of Gravel Pack 49.8' Top of 3D Screen 50.8'
				52			
				54			
				56			
				58			
				60			Bottom of 3D Screen 60.8'
				62		Boring Terminated @ 61.0'	
				64			
				66			
				68			
				70			
				72			
				74			
				76			
				78			
				80			
				82			
				84			
				86			
				88			
				90			

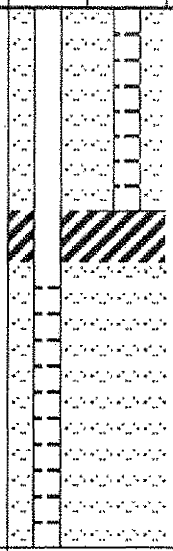

LEGEND:

SS - Split Spoon
CS - 5 foot CME Sampler
ST - Shelby Tube
PID - Photoionization Detecto
PP - Pocket Penetrometer
HSA - Hollow Stem Augers
AR - Air Rotary
HA - Hand Auger
WB - Wash Bore
RB - Rock Bit
NX - Rock Core

THE STRATIFICATION LINES REPRESENT APPROXIMATE BOUNDARY LINES BETWEEN SOIL AND ROCK TYPES: IN-SITU, THE TRANSITION MAY BE GRADUAL.

GROUNDWATER MONITORING WELLS

Soil Boring Log

McLaren Hart

Boring No.	Project No./Name	Page:
D-3 WL-105A	07.0803035.003.002	1 of 2

Start/Finish Date 8/8/95 / 8/9/95	**Site Name and Location** West Lake Landfill; Bridgeton, Missouri
Drilling Contractor Hart Environmental Drilling	**Boring Location:** Area 1 **Ground Surface Elevation:** 467.2
Driller Max Tinnin	**Northing:** 1069136.26 **Easting:** 515871.62
Drilling Equipment CME-55 Drill Rig, Hollow Stem Augers	**McLaren/Hart Geologist/Office** Tim Biggs / St. Louis

Bit Size/Type	Sample Method	T.D. Borehole	Well Installed?
4 1/4" ID; 8 1/4" Hole	5' Continuous Sampler	109'	D-3

Remarks:

Depth (ft)	Sample ID #	Geiger Reading (mR/hr)	Description
5	None Taken	None Taken	0.0-30.0' Landfill Debris: trashy debris consisting of cloth, wood, rope, and plastic; soil consisting of brown and gray silt, and crushed rock; dry to moist.
10	WL-105A 10'	None Taken	
15	None Taken	None Taken	
20	None Taken	None Taken	
25	None Taken	None Taken	
30	WL-105A 30'	None Taken	
35	None Taken	None Taken	30.0-60.0' Native Alluvium: dark gray clayey silt grading to fine to coarse-grained sand and gravel; wet. @ 30' wet
40	None Taken	None Taken	
45	WL-105A 47'	Background (0.04-0.06)	
50	None Taken	None Taken	
55	None Taken	None Taken	
60	None Taken	None Taken	

Soil Boring Log

McLaren Hart

Boring No.	Project No./Name	Page:
D-3 WL-105A	07.0803035.003.002	2 of 2

Start/Finish Date	Site Name and Location
8/8/95 / 8/9/95	West Lake Landfill; Bridgeton, Missouri
Drilling Contractor	**Boring Location:** Area 1
Hart Environmental Drilling	**Ground Surface Elevation:** 467.2
Driller	**Northing:** 1069136.26
Max Timin	**Easting:** 515871.62

Drilling Equipment	McLaren/Hart Geologist/Office
CME-55 Drill Rig, Hollow Stem Augers	Tim Biggs / St. Louis

Bit Size/Type	Sample Method	T.D. Borehole	Well Installed?
4 1/4" ID; 8 1/4" Hole	5' Continuous Sampler	109'	D-3

Remarks:

Depth (ft)	Sample ID #	Geiger Reading (mR/hr)	Description
70	None Taken	None Taken	60.0-109.0' Native Alluvium: dark gray clayey silt grading to fine to coarse-grained sand and gravel; wet.
75	None Taken	None Taken	
80	None Taken	None Taken	
85	None Taken	None Taken	
90	None Taken	None Taken	
95	None Taken	None Taken	
100	None Taken	None Taken	
105	None Taken	None Taken	
110	None Taken	Background	Auger refusal @ 109.0' (bedrock)

Notes:

Radiological samples collected at 10 and 30 feet below ground surface; downhole logging indicated elevated gamma readings from 0.5-11.0'.

Non-radiological samples not collected during boring activities.

Perched water not encountered during boring activities.

Groundwater encountered at 30 feet below ground surface.

McLaren Hart
ENVIRONMENTAL ENGINEERING CORPORATION

MONITORING WELL DETAILS

PROJECT NO. 070803035
WELL NO. D-3

PROJECT NAME WEST LAKE LANDFILL
WELL LOCATION BRIDGETON, MISSOURI DATE 8/9/95 BY HART ENVIRONMENTAL DRILLING

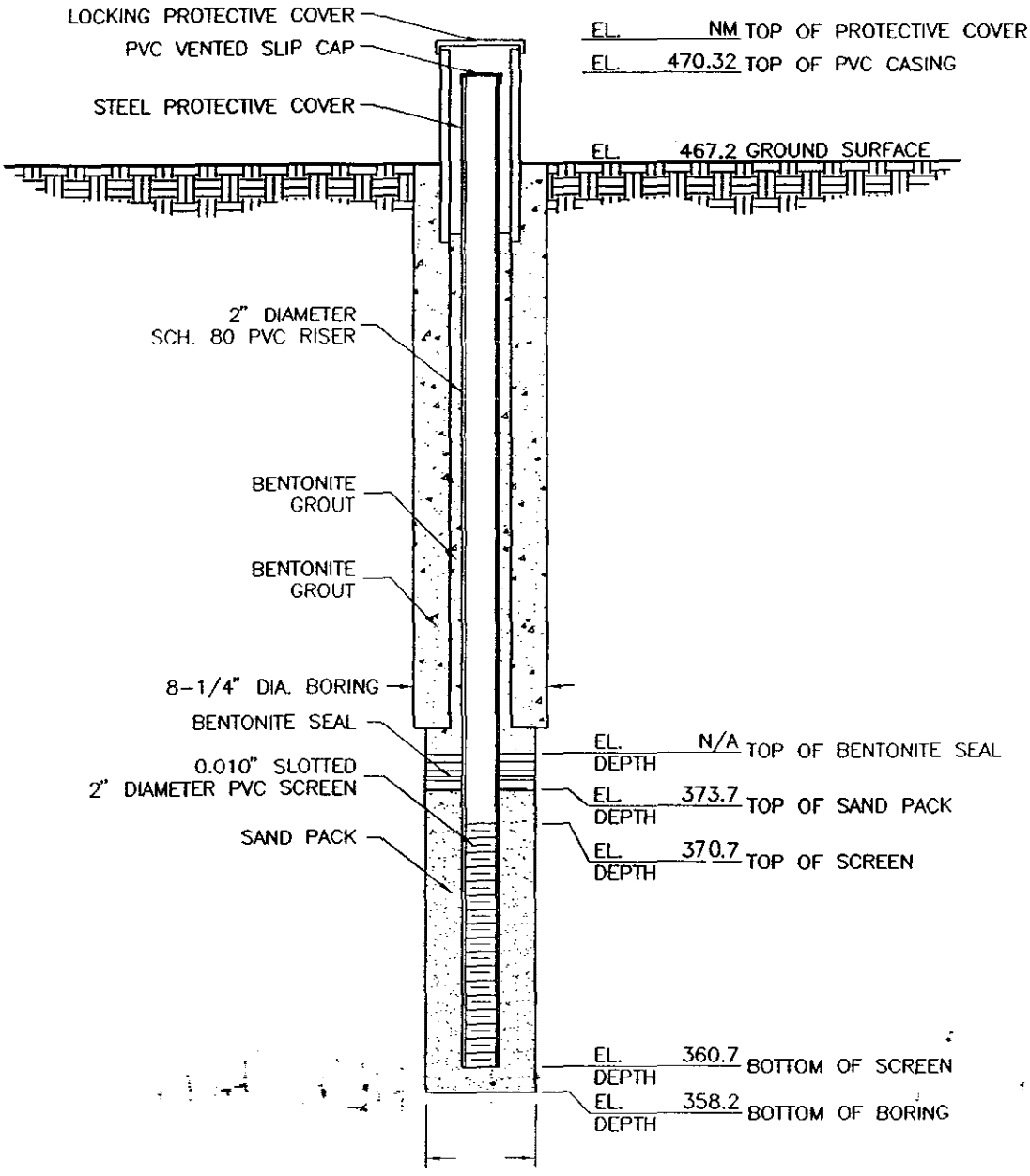

NOTES:

1. REFER TO SOIL BORING WL-105A FOR SOIL DESCRIPTION.
2. DETAIL NOT TO SCALE.
3. NM = NOT MEASURED
4. N/A NOT APPLICABLE, BENTONITE GROUT/CHIPS USED TO SEAL WELL UP TO SURFACE.

(W3.DWG)

Soil Boring Log

McLaren Hart

Boring No.	Project No./Name	Page:
D-6 WL-206	07.0803035.003.002	1 of 2

Start/Finish Date	Site Name and Location
8/16/95	West Lake Landfill; Bridgeton, Missouri

Drilling Contractor	Boring Location: Area 2
Hart Environmental Drilling	Ground Surface Elevation: 444.4
Driller	Northing: 1070194.31
Max Tinnin	Easting: 514549.50

Drilling Equipment	McLaren/Hart Geologist/Office
CME-55 Drill Rig, Hollow Stem Augers	Tim Biggs / St. Louis

Bit Size/Type	Sample Method	T.D. Borehole	Well Installed?
4 1/4" ID; 8 1/4" Hole	5' Continuous Sampler	109'	D-6

Remarks:

Depth (ft)	Sample ID #	Geiger Reading (mR/hr)	Description
5	WL-206 5'	Background (0.02-0.04)	0.0-65.0' Native Alluvium: olive brown clayey silt grading to grayish brown, coarse-grained sand and gravel; dry to wet.
10	WL-206 10'	Background (0.02-0.04)	
15	WL-206 15'	Background (0.02-0.04)	@ 11' wet
20	None Taken	None Taken	
25	None Taken	None Taken	
30	None Taken	None Taken	
35	None Taken	None Taken	
40	None Taken	None Taken	
45	None Taken	None Taken	
50	None Taken	None Taken	
55	None Taken	None Taken	
60	None Taken	None Taken	
65	None Taken	None Taken	

Soil Boring Log

McLaren Hart

Boring No.	Project No./Name	Page:
D-6 WL-206	07.0803035.003.002	2 of 2

Start/Finish Date	Site Name and Location
8/16/95	West Lake Landfill; Bridgeton, Missouri

Drilling Contractor	Boring Location:	Area 2
Hart Environmental Drilling	Ground Surface Elevation:	444.4
Driller	Northing:	1070194.31
Max Tinnin	Easting:	514549.50

Drilling Equipment	McLaren/Hart Geologist/Office
CME-55 Drill Rig, Hollow Stem Augers	Tim Biggs / St. Louis

Bit Size/Type	Sample Method	T.D. Borehole	Well Installed?
4 1/4" ID; 8 1/4" Hole	5' Continuous Sampler	109'	D-6

Remarks:

Depth (ft)	Sample ID #	Geiger Reading (mR/hr)	Description
70	None Taken	None Taken	65.0-109.0' Native Alluvium: olive brown clayey silt grading to grayish brown, coarse-grained sand and gravel; dry to wet.
75	None Taken	None Taken	
80	None Taken	None Taken	
85	None Taken	None Taken	
90	None Taken	None Taken	
95	None Taken	None Taken	
100	None Taken	None Taken	
105	None Taken	None Taken	
110	None Taken	None Taken	Auger refusal @ 109.0' (bedrock)

Notes:

Radiological samples collected at 5 and 10 feet below ground surface.

Non-radiological samples not collected during boring activities.

Perched water not encountered during boring activities.

Groundwater encountered at 11 feet below ground surface.

McLaren Hart
ENVIRONMENTAL ENGINEERING CORPORATION

MONITORING WELL DETAILS

PROJECT NO. 070803035
WELL NO. D-6

PROJECT NAME WEST LAKE LANDFILL
WELL LOCATION BRIDGETON, MISSOURI DATE 8/17/95 BY HART ENVIRONMENTAL DRILLING

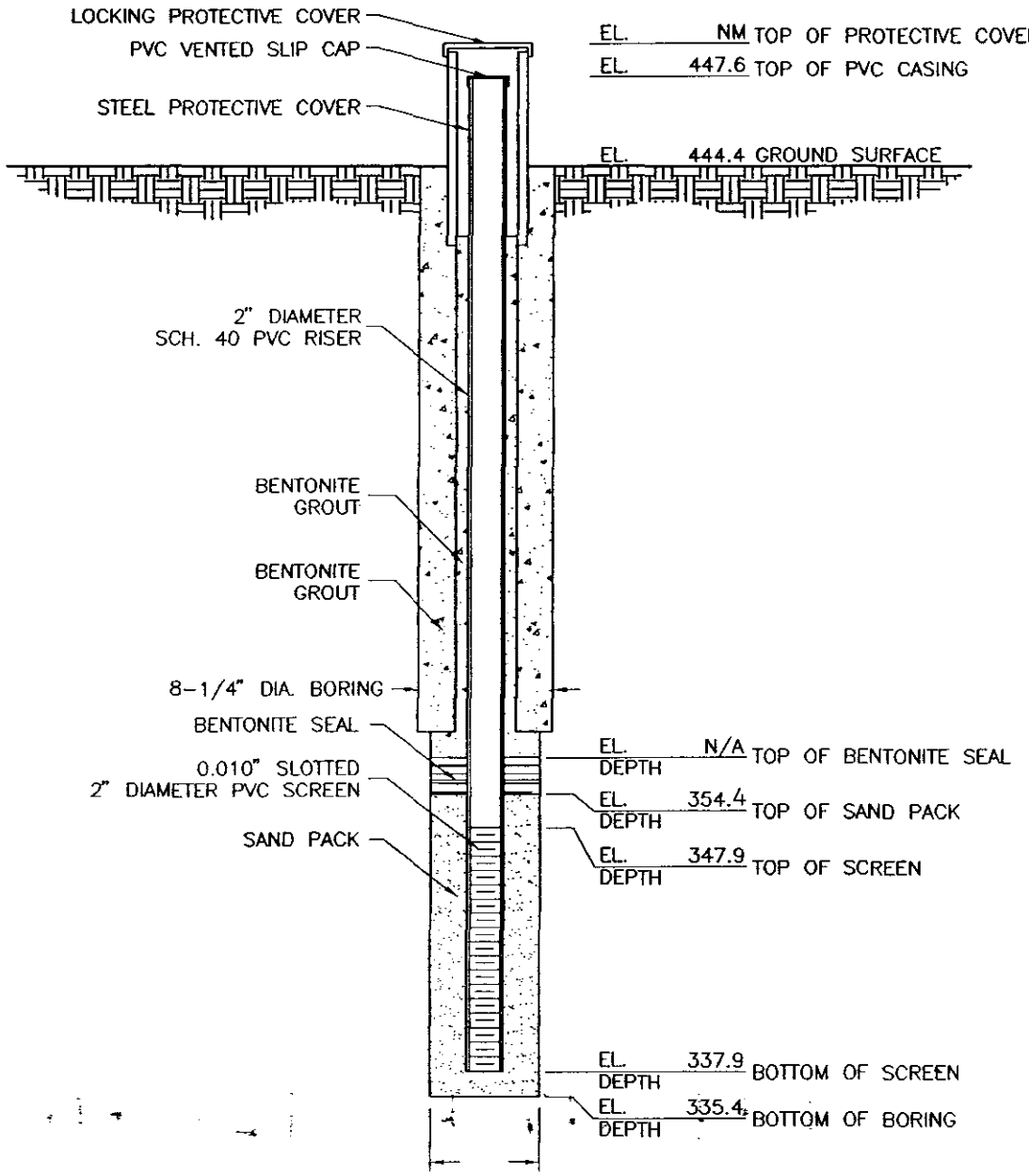

NOTES:

1. REFER TO SOIL BORING WL-206 SOIL DESCRIPTION.
2. DETAIL NOT TO SCALE.
3. NM = NOT MEASURED
4. N/A NOT APPLICABLE; BENTONITE GROUT USED TO SEAL WELL UP TO SURFACE

(W6.DWG)

Soil Boring Log

McLaren Hart

Boring No.	Project No./Name	Page:
D-12 WL-216A	07.0803035.003.002	1 of 3

Start/Finish Date	Site Name and Location
8/29/95 / 10/17/95	West Lake Landfill; Bridgeton, Missouri

Drilling Contractor	Boring Location: Area 2
Hart Environmental Drilling	Ground Surface Elevation: 477.4
Drilling Service Company	Northing: 1069836.29
Driller	Easting: 514936.08
Max Tinnin	**McLaren/Hart Geologist/Office**
Bruce Murphy	Tim Biggs / St. Louis

Drilling Equipment
CME-55 Drill Rig, Hollow Stem Augers
LDH-80T Drill Rig, Large Diameter Auger

Bit Size/Type	Sample Method	T.D. Borehole	Well Installed?
4 1/8" Drag Bit (mud rotary) 4 1/4" ID; 8 1/4" Hole 24" OD Solid Auger	5' Continuous Sampler Grab from Auger	146.2	D-12

Remarks:

Depth (ft)	Sample ID #	Geiger Reading (mR/hr)	Description
5	WL-216 5'	Background	0.0-22.0' Landfill Debris: soil consiting of grayish brown to olive brown silty clay to gray, very fine-grained sand, and crushed rock; no trashy debris encountered; dry to moist.
10	WL-216 10'	Background	
15	WL-216 15'	Background	
20	WL-216 20'	Background	
25	WL-216 25'	Background	22.0-65.0' Native Alluvium: gray, silty, very fine-grained sand grading to coarse-grained sand, gravel, cobbles, and coal; moist to wet.
30	None Taken	None Taken	
35	None Taken	None Taken	
40	None Taken	None Taken	
45	None Taken	None Taken	
50	None Taken	None Taken	@ 48' wet
55	None Taken	None Taken	
60	None Taken	None Taken	

Soil Boring Log

McLaren Hart

Boring No.	Project No./Name	Page:
D-12 WL-216A	07.0803035.003.002	2 of 3

Start/Finish Date	Site Name and Location
8/29/95 / 10/17/95	West Lake Landfill; Bridgeton, Missouri

Drilling Contractor	Boring Location:	Area 2
Hart Environmental Drilling	Ground Surface Elevation:	477.4
Drilling Service Company	Northing:	1069836.29
Driller	Easting:	514936.08
Max Tinnin	McLaren/Hart Geologist/Office	
Bruce Murphy	Tim Biggs / St. Louis	

Drilling Equipment

CME-55 Drill Rig, Hollow Stem Augers

LDH-80T Drill Rig, Large Diameter Auger

Bit Size/Type	Sample Method	T.D. Borehole	Well Installed?
4 1/8" Drag Bit (mud rotary)	5' Continuous Sampler	146.2	D-12
4 1/4" ID; 8 1/4" Hole	Grab from Auger		
24" OD Solid Auger			

Remarks:

Depth (ft)	Sample ID #	Geiger Reading (mR/hr)	Description
65	None Taken	None Taken	65.0-125.0' Native Alluvium: gray, silty, very fine-grained sand grading to coarse-grained sand, gravel, cobbles, and coal; moist to wet.
70	None Taken	None Taken	
75	None Taken	None Taken	
80	None Taken	None Taken	
85	None Taken	None Taken	
90	None Taken	None Taken	
95	None Taken	None Taken	
100	None Taken	None Taken	
105	None Taken	None Taken	
110	None Taken	None Taken	
115	None Taken	None Taken	

Soil Boring Log

McLaren Hart

Boring No.	Project No./Name	Page:
D-12 WL-216A	07.0803035.003.002	3 of 3

Start/Finish Date	**Site Name and Location**
8/29/95 / 10/17/95	West Lake Landfill; Bridgeton, Missouri
Drilling Contractor	**Boring Location:** Area 2
Hart Environmental Drilling	**Ground Surface Elevation:** 477.4
Drilling Service Company	**Northing:** 1069836.29
Driller	**Easting:** 514936.08
Max Tinnin	**McLaren/Hart Geologist/Office**
Bruce Murphy	Tim Biggs / St. Louis

Drilling Equipment
CME-55 Drill Rig, Hollow Stem Augers
LDH-80T Drill Rig, Large Diameter Auger

Bit Size/Type	Sample Method	T.D. Borehole	Well Installed?
4 1/8" Drag Bit (mud rotary)	5' Continuous Sampler	146.2	D-12
4 1/4" ID; 8 1/4" Hole	Grab from Auger		
24" OD Solid Auger			

Remarks:

Depth (ft)	Sample ID #	Geiger Reading (mR/hr)	Description
120	None Taken	None Taken	-
125	None Taken	None Taken	
130	None Taken	None Taken	125.0-146.2' Native Alluvium: gray, silty, very fine-grained sand grading to coarse-grained sand, gravel, cobbles, and coal; moist to wet.
135	None Taken	None Taken	
140	None Taken	None Taken	
145	None Taken	None Taken	
150	None Taken	None Taken	Auger refusal @ 146.2' (bedrock)

Notes:

Radiological samples collected at 5 and 25 feet below ground surface; downhole logging indicated elevated gamma readings from 2.5-5.0'.

Non-radiological samples not collected during boring activities.

Perched water not encountered during boring activities.

Groundwater encountered at 48 feet below ground surface.

McLaren Hart
ENVIRONMENTAL ENGINEERING CORPORATION

MONITORING WELL DETAILS

PROJECT NO. 070803035
WELL NO. D-12

PROJECT NAME WEST LAKE LANDFILL
WELL LOCATION BRIDGETON, MISSOURI DATE 10/17/95 BY HART ENVIRONMENTAL DRILLING

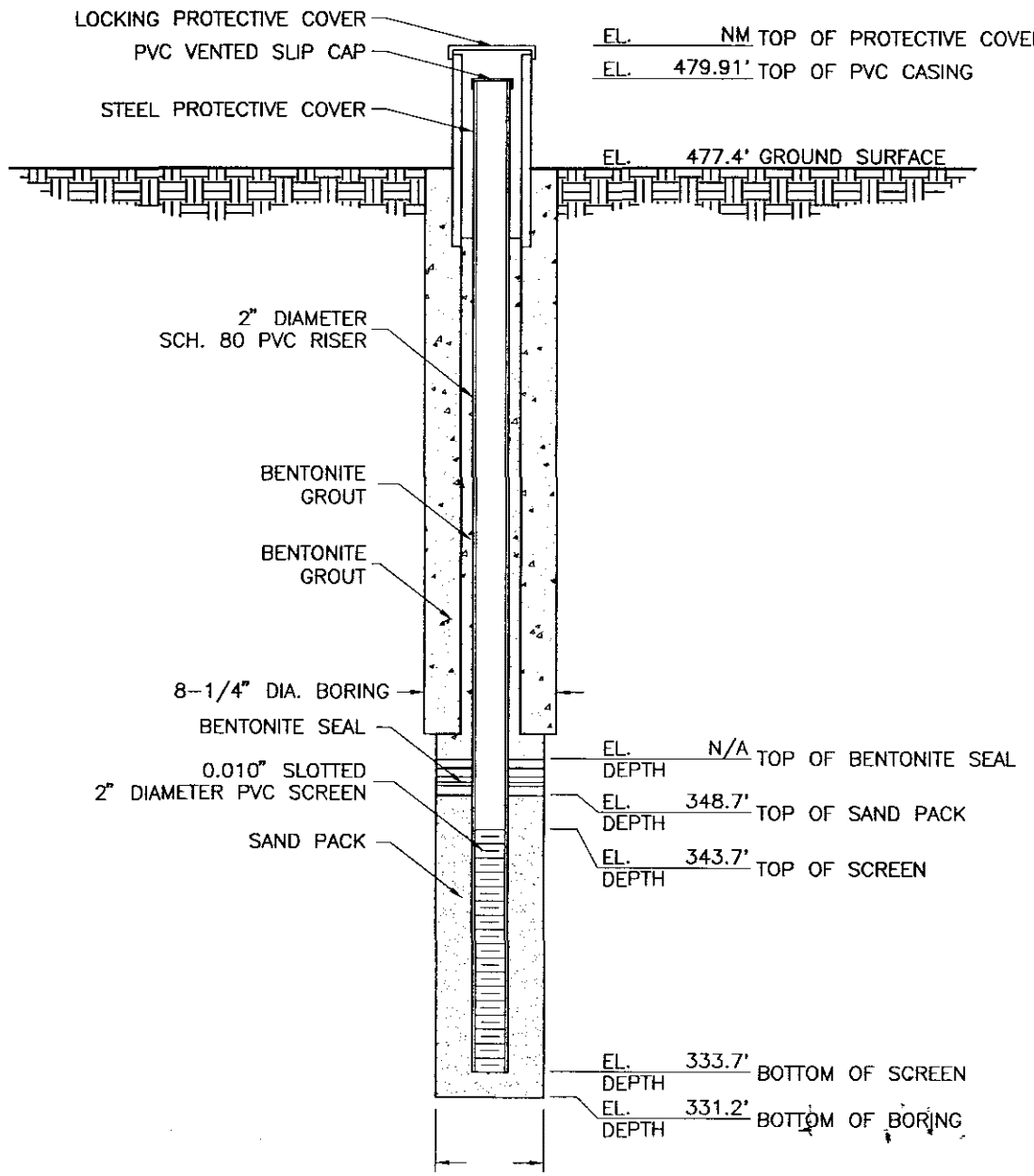

NOTES:

1. REFER TO SOIL BORING WL-216A FOR SOIL DESCRIPTION.
2. DETAIL NOT TO SCALE.
3. NM = NOT MEASURED.
4. N/A = NOT APPLICABLE; BENTONITE GROUT USED TO SEAL WELL UP TO SURFACE.

(W12)

Soil Boring Log

McLaren Hart

Boring No.	Project No./Name	Page:
3 D-14 WL-224	07.0803035.003.002	1 of 3

Start/Finish Date	Site Name and Location
9/14/95 / 10/19/95	West Lake Landfill: Bridgeton, Missouri

Drilling Contractor	Boring Location:	Area 2
Hart Environmental Drilling	Ground Surface Elevation:	468.4
Drilling Service Company	Northing:	1070485.74
Driller	Easting:	515601.73
Max Tinnin	McLaren/Hart Geologist/Office	
Bruce Murphy	Tim Biggs / St. Louis	

Drilling Equipment
CME-55 Drill Rig, Hollow Stem Augers
LDH-80T Drill Rig, Large Diameter Auger

Bit Size/Type	Sample Method	T.D. Borehole	Well Installed?
4 1/8" Drag Bit (mud rotary) 4 1/4" ID; 8 1/4" Hole 24" OD Solid Auger	5' Continuous Sampler Grab from Auger	135.5	D-13

Remarks:

Depth (ft)	Sample ID #	Geiger Reading (mR/hr)	Description
5	WL-224 5'	Background (0.02-0.04)	0.0-33.0' Landfill Debris: trashy debris consisting of rubber, wood, plastic, cloth, paper, glass, and metal; soil consisting of brownish yellow silt and dark gray clayey silt to silty fine-grained sand; dry to moist.
10	WL-224 10'	Background (0.02-0.04)	
15	WL-224 15'	Background (0.02-0.04)	
20	WL-224 20'	Background (0.02-0.04)	
25	WL-224 25'	Background (0.02-0.04)	
30	WL-224 30'	Background (0.02-0.04)	
35	WL-224 35'	Background (0.02-0.04)	@ 33' wet 33.0-65.0' Native Alluvium: dark gray clayey silt grading to fine to coarse grained sand, and coal; wet.
40	None Taken	Background (0.02-0.04)	
45	None Taken	Background (0.02-0.04)	
50	None Taken	Background (0.02-0.04)	
55	None Taken	None Taken	
60	None Taken	None Taken	

Soil Boring Log

McLaren Hart

Boring No.	Project No./Name	Page:
D-13 WL-224	07.0803035.003.002	2 of 3

Start/Finish Date	Site Name and Location
9/14/95 / 10/19/95	West Lake Landfill; Bridgeton, Missouri

Drilling Contractor	Boring Location: Area 2
Hart Environmental Drilling	Ground Surface Elevation: 468.4
Drilling Service Company	Northing: 1070485.74
Driller	Easting: 515601.73
Max Tinnin	McLaren/Hart Geologist/Office
Bruce Murphy	Tim Biggs / St. Louis

Drilling Equipment

CME-55 Drill Rig, Hollow Stem Augers

LDH-80T Drill Rig, Large Diameter Auger

Bit Size/Type	Sample Method	T.D. Borehole	Well Installed?
4 1/8" Drag Bit (mud rotary)	5' Continuous Sampler	135.5	D-13
4 1/4" ID; 8 1/4" Hole	Grab from Auger		
24" OD Solid Auger			

Remarks:

Depth (ft)	Sample ID #	Geiger Reading (mR/hr)	Description
65	None Taken	None Taken	
70	None Taken	None Taken	65.0-125.0' Native alluvium: dark gray clayey silt grading to fine to coarse grained sand, and coal; wet.
75	None Taken	None Taken	
80	None Taken	None Taken	
85	None Taken	None Taken	
90	None Taken	None Taken	
95	None Taken	None Taken	
100	None Taken	None Taken	
105	None Taken	None Taken	
110	None Taken	None Taken	
115	None Taken	None Taken	

Soil Boring Log

McLaren Hart

Boring No.	Project No./Name	Page:
D-13 WL-224	07.0803035.003.002	3 of 3

Start/Finish Date	Site Name and Location
9/14/95 / 10/19/95	West Lake Landfill; Bridgeton, Missouri

Drilling Contractor	Boring Location: Area 2
Hart Environmental Drilling	Ground Surface Elevation: 468.4
Drilling Service Company	Northing: 1070485.74
Driller	Easting: 515601.73
Max Tinnin	McLaren/Hart Geologist/Office
Bruce Murphy	Tim Biggs / St. Louis

Drilling Equipment

CME-55 Drill Rig, Hollow Stem Augers

LDH-80T Drill Rig, Large Diameter Auger

Bit Size/Type	Sample Method	T.D. Borehole	Well Installed?
4 1/8" Drag Bit (mud rotary)	5' Continuous Sampler		
4 1/4" ID; 8 1/4" Hole	Grab from Auger	135.5	D-13
24" OD Solid Auger			

Remarks:

Depth (ft)	Sample ID #	Geiger Reading (mR/hr)	Description
120	None Taken	None Taken	
125	None Taken	None Taken	
130	None Taken	None Taken	125.0-135.5' Native Alluvium: dark gray clayey silt grading to fine to coarse grained sand, and coal; wet.
135	None Taken	None Taken	
140	None Taken	None Taken	Auger refusal @ 135.5' (bedrock)

Notes:

Radiological samples collected at 5 and 35 feet below ground surface.

Non-radiological samples not collected during boring activities.

Perched water not encountered during boring activities.

Groundwater encountered at 33 feet below ground surface.

McLaren Hart
ENVIRONMENTAL ENGINEERING CORPORATION

MONITORING WELL DETAILS

PROJECT NO. 070803035
WELL NO. D-13

PROJECT NAME WEST LAKE LANDFILL
WELL LOCATION BRIDGETON, MISSOURI DATE 10/19/95 BY HART ENVIRONMENTAL DRILLING

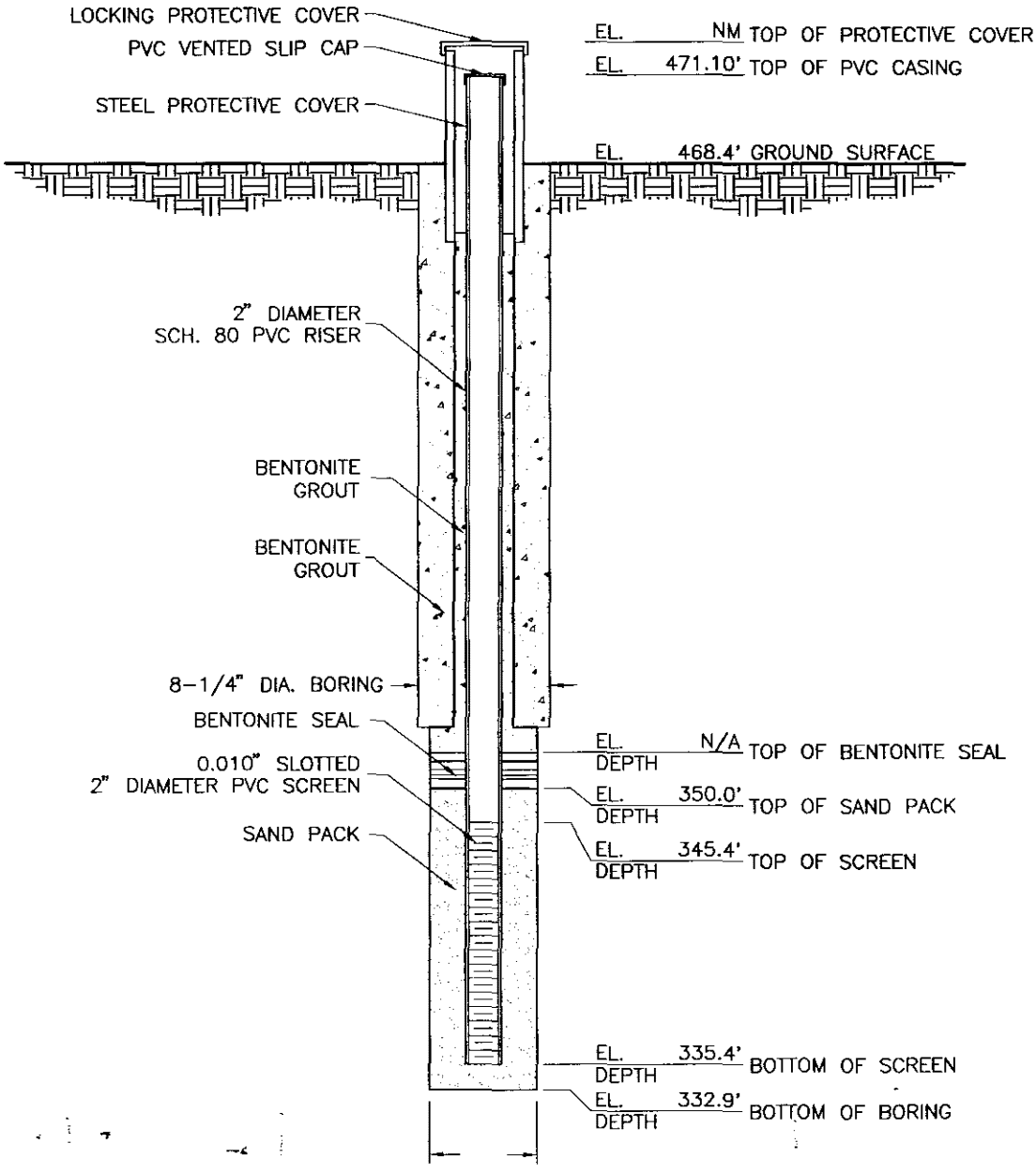

NOTES:

1. REFER TO SOIL BORING WL-224 FOR SOIL DESCRIPTION.
2. DETAIL NOT TO SCALE.
3. NM = NOT MEASURED.
4. N/A = NOT APPLICABLE; BENTONITE GROUT USED TO SEAL WELL UP TO SURFACE.

(W13)

Soil Boring Log

McLaren Hart

Boring No.	Project No./Name	Page:
D-14 WL-109B	07.0803035.003.002	1 of 2

Start/Finish Date	Site Name and Location
9/7/95 / 10/24/95	West Lake Landfill; Bridgeton, Missouri

Drilling Contractor	Boring Location:	Area 1
Hart Environmental Drilling	Ground Surface Elevation:	484.5
Drilling Service Company	Northing:	1068947.16
Driller	Easting:	516523.17
Max Timin	McLaren/Hart Geologist/Office	
Bruce Murphy	Tim Biggs / St. Louis	

Drilling Equipment
CME-55 Drill Rig, Hollow Stem Augers
LDH-80T Drill Rig, Large Diameter Auger

Bit Size/Type	Sample Method	T.D. Borehole	Well Installed?
4 1/4" ID 8 1/4" Hole 24" OD Solid Auger	Continuous Sampler Grab from Auger	59'	D-14

Remarks:

Depth (ft)	Sample ID #	Geiger Reading (mR/hr)	Description
5	None Taken	None Taken	0.0-49.0' Landfill Debris: trashy debris consisting of wood, plastic, brick, paper, wire, rubber, metal, yard waste, and carpeting; soil consisting of olive brown to dark gray silt, gray to black silty clay, and crushed rock; dry to moist; warm.
10	None Taken	None Taken	
15	None Taken	None Taken	
20	None Taken	None Taken	
25	None Taken	None Taken	
30	None Taken	None Taken	
35	None Taken	None Taken	
40	None Taken	None Taken	
45	None Taken	None Taken	@ 45.0' sample had temperature of 116° F

Soil Boring Log

McLaren Hart

Boring No.	Project No./Name	Page:
D-14 WL-109B	07.0803035.003.002	2 of 2

Start/Finish Date	Site Name and Location
10/24/95	West Lake Landfill; Bridgeton, Missouri

Drilling Contractor	Boring Location: Area 1
Hart Environmental Drilling	Ground Surface Elevation: 484.5
Drilling Service Company	Northing: 1068947.16
Driller	Easting: 516523.17
Max Tinnin	McLaren/Hart Geologist/Office
Bruce Murphy	Tim Biggs / St. Louis

Drilling Equipment
CME-55 Drill Rig, Hollow Stem Augers
LDH-80T Drill Rig, Large Diameter Auger

Bit Size/Type	Sample Method	T.D. Borehole	Well Installed?
4 1/4" ID 8 1/4" Hole	Continuous Sampler	59'	D-14
24" OD Solid Auger	Grab from Auger		

Remarks:

Depth (ft)	Sample ID #	Geiger Reading (mR/hr)	Description
50	None Taken	None Taken	49.0-59.0' Native Alluvium: dark gray, clayey and silty, very fine-grained sand; moist; warm.
55	None Taken	None Taken	
60	WL-109B 59'	None Taken	Auger refusal @ 59.0' (bedrock)

Notes:

Radiological samples not collected during boring activities.
Non-radiological samples not collected during boring activities.
Perched water not encountered during boring activities.
Groundwater not encountered during boring activities.

McLaren Hart
ENVIRONMENTAL ENGINEERING CORPORATION

MONITORING WELL DETAILS

PROJECT NO. 070803035
WELL NO. D-14

PROJECT NAME WEST LAKE LANDFILL
WELL LOCATION BRIDGETON, MISSOURI DATE 10/24/95 BY HART ENVIRONMENTAL DRILLING

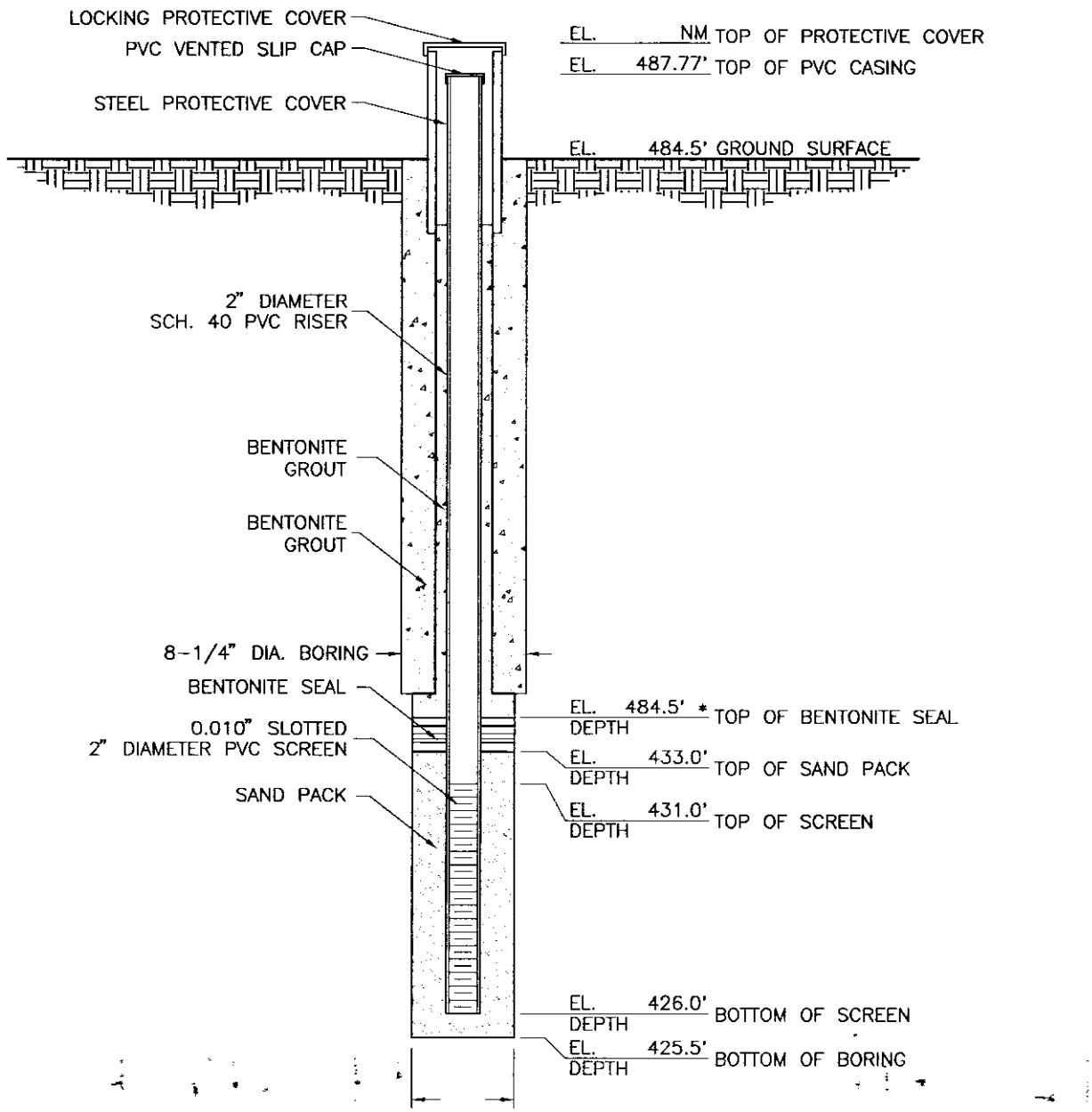

NOTES:

1. REFER TO SOIL BORING WL-109B FOR SOIL DESCRIPTION.
2. DETAIL NOT TO SCALE.
3. NM = NOT MEASURED.
4. * = HYDRATED BENTONITE CHIPS USED TO SEAL WELL UP TO SURFACE.

(W14)

MISSOURI DEPARTMENT OF NATURAL RESOURCES
GEOLOGICAL SURVEY PROGRAM

MONITORING WELL PLUGGING REGISTRATION RECORD

OFFICE USE ONLY		DATE RECEIVED	
REF NO.	514518		
C.R. NO.		CHECK NO.	TRANSMITTAL NO.
STATE WELL NUMBER		APPROVED BY	DATE APPROVED
ENTERED Ph1 Ph2 Ph3		ROUTE	

INFORMATION SUPPLIED BY WELL OR PUMP INSTALLATION CONTRACTOR

OWNER NAME	TELEPHONE NUMBER	VARIANCE NUMBER (IF APPLICABLE)
ENGINEERING MGMT.SUPPORT INC. EMSI. PAUL ROSASCO		6023

OWNER ADDRESS	CITY	STATE	ZIP CODE
7220 W. JEFFERSON AVE. SUITE 406	LAKEWOOD	CO	80235

ADDRESS OF WELL SITE	CITY	STATE	ZIP CODE	REFERENCE NUMBER OF ORIGINAL WELL (IF KNOWN)
13570 ST. CHARLES ROCK ROAD	BRIDGETON	MO	63044	N/A

SITE NAME	WELL NUMBER	DATE
WEST LAKE LANDFILL	D - 14	

LOCATION OF WELL
LAT. 38 ° 46 ' 9.9 "
LONG. 90 ° 26 ' 30.9 "

DRILL AREA: AREA 1
COUNTY: ST. LOUIS

SMALLEST ¼ ____ ¼ ____ ¼ LARGEST
Sec. ____ Township ____ North Range ____ ☐ East ☐ West

PLUGGING INFORMATION

ORIGINAL DRILLER (IF KNOWN)	DATE ORIGINALLY DRILLED	STATIC WATER LEVEL	DRILLER NOTES
N/A	N/A		

☑ MONITORING WELL ☐ SOIL BORING(S) Boring Diameter: _____ IN.

DEPTH OF WELL	LENGTH OF RISER
60 FT.	N/A FT. BGS

SCREEN/RISER DIAMETER	WELL SCREEN AND RISER REMOVED?
2 IN.	☑ Yes ☐ No

PUMP AND SAMPLING EQUIPMENT REMOVED?	CASING REMOVED?
☐ Yes ☑ N/A ☐ No	☑ Yes ☐ N/A ☐ No

QUANTITY	DEPTH
TOTAL ____ BORING(S)	TOTAL ____ FT.

TYPE OF FILL MATERIAL: ☐ Gravel ☐ Sand ☐ Other

AMOUNT OF FILL USED: _____ ☐ TONS ☐ CUBIC YARDS

DEPTH TO TOP OF FILL: _____ FT.

GROUT INSTALLATION METHOD	GROUT MATERIAL USED	HOW MANY GALLONS OF WATER MIXED PER BAG OF CEMENT OR BENTONITE?	TOTAL NUMBER OF BAGS OF GROUT USED
☐ Gravity ☑ Tremie ☐ Excavation	Neat Cement Bentonite ☐ Hi-Early ☑ Slurry ☐ Granular ☐ Pellets ☐ Type 1 ☐ Chips ☐ Other _____	5 ☐ Hydrated to Saturation	3
			POUNDS OF GROUT PER BAG: 50

DATE 1ST WELL PLUGGED	DATE LAST WELL PLUGGED	FINISHED SURFACE MATERIAL	SURFACE MATERIAL LENGTH
04/13/2016	04/15/2016	☑ Soil ☐ Concrete ☐ Asphalt ☐ Other	_____ FT. _____ IN.

REMARKS	REASON FOR ABANDONMENT
(REDI JOB# 162075-AB)	

I hereby certify that the monitoring well herein described was plugged in accordance with the Department of Natural Resources requirements for the plugging of wells.

SIGNATURE (PRIMARY CONTRACTOR)		SIGNATURE (CONTRACTOR)	PERMIT NUMBER	DATE
PERMIT NUMBER 3366 - M	DATE 5/17/2016	SIGNATURE (APPRENTICE)	PERMIT NUMBER	DATE

MO-780-2161 (1-12)

REMIT TO: MISSOURI DEPARTMENT OF NATURAL RESOURCES, DIVISION OF GEOLOGY AND LAND SURVEY
WELLHEAD PROTECTION SECTION, PO BOX 250, ROLLA, MO 65402 573-368-2165

ENCLOSE $50 FEE WITH REGISTRATION RECORD WITHIN 60 DAYS AFTER WELL PLUGGING OR WITHIN 180 DAYS AFTER THE PLUGGING OF TEMPORARY WELLS

Drilling Log

Project Name: WESTLAKE						Boring No.: D-81	
Project No.: 84-075-4-002						Page: 1 of 4	
Ground Elevation: 447.8	Location: N. 1196.2728, E. 922.0145.					Total Footage: 61.5'	
Drilling Type	Hole Size	Overburden Footage	Bedrock Footage	No. of Samples	No. Core Boxes	Depth To Water	Date Measured
SEE REMARKS	SEE REMARKS	61.5	0	11	0	SEE REMARKS	—
Drilling Co.: WABASH DRILLING CO.				Driller (s): DORL THORNTON			
Drilling Rig.: ACKER MP-5, TRUCK				Type of Penetration Test: STANDARD			
Date: 8-13-84 To 8-15-84				Field Observer (s): GLEN ERNSTMANN			

Depth	Description	Class.	Blow Count	Recov.	Sample or Box No.	Remarks
1	BROWN FINE SANDY SILT, LOW PLASTICITY, DAMP (FILL)					5" SOLID AUGERS 0' TO 15'
2						
3	GRAY-BROWN COARSE GRAVEL (MAX. 2" DIA.), SOME FINE GRAVEL AND SAND, DAMP (FILL)					
4						
5						
6						
7	BROWN CLAYEY SILT, LOW PLASTICITY, DAMP TO MOIST (FILL)					
8						
9						
10	BROWN FINE TO MEDIUM SAND, MEDIUM DENSE TO LOOSE, DAMP (FILL)				10.0	
11			5/5/4	16" 18"	SS-1	
	BROWN CLAYEY SILT, LOW PLASTICITY, MOIST (FILL)				11.5	STOPPED 8-12-84
12						RESUMED 8-14-84
13	BROWN SILTY FINE TO MEDIUM SAND, MEDIUM DENSITY, SATURATED BELOW APPROX. 13', (FILL?)					SATURATED MATERIAL FIRST ENCOUNTERED @ APPROX. 13'

TECHNICAL SERVICES
GEOTECHNICAL DEPARTMENT

Drilling Log (continued)

Boring No. D-81

Project Name: WESTLAKE — Page: 2 of 4

Project No.: 84-075-4-002 — Date: 8-13-84

Depth	Description	Log or Class	Blow Count	Core Recov. & Loss	Box or Sample No.	Remarks
15	BROWN SILTY FINE TO MEDIUM SAND, MEDIUM DENSE SATURATED BELOW APPROX. 13' (FILL(?)		3/5/7	19"/18"	15.0 SS-2 16.5	BEGAN 4½" DIA. TRI-CONE, WASH BORING @ 15'. CONTINUED TO 61.5'.
16						
17						
18	BROWN FINE TO MEDIUM SAND, WELL SORTED, SUBROUNDED GRAINS, MEDIUM DENSITY, SATURATED					
19						
20			6/10/16	10"/18"	20.0 SS-3 21.5	
21						
22						
23						
24						
25			9/14/15	10"/18"	25.0 SS-4 26.5	
26						
27						
28	GRAY FINE SAND, TRACE SILT, SAND IS MICHLY QUARTZOSE, MEDIUM DENSE, SATURATED					
29						
30			10/12/5	11"/18"	30.0 SS-5a	

TECHNICAL SERVICES
GEOTECHNICAL DEPARTMENT

Drilling Log (continued)

Project Name	WESTLAKE
Project No.	84-075-4-002
Boring No.	D-81
Page	3 of 4
Date	8-13-84

Depth	Description	Log or Class	Blow Count	Core Recov. & Loss		Box or Sample No.	Remarks
	GRAY SILTY CLAY MEDIUM TO HIGH PLASTICITY, STIFF TO MEDIUM STIFF, MOIST TO SATURATED				31.5	SS-5b	
32							
33							
34	GRAY SILT AND SAND INTERBEDS, SILT IS LOW PLASTICITY, VERY LOOSE, SATURATED				35.0		
35			*0/1/4	*0"/18"		SS-6	*NOTE: RODS SUNK 6" WHEN SAMPLE SS-6 WAS FIRST ATTEMPTED. NO RECOVERY ON FIRST ATTEMPT SO RODS WERE DROPPED BACK DOWN THE HOLE AND A SAMPLE OBTAINED.
36					36.5		
37							
38							
39							
40				18"/18"	40.0	ST-7	Q_p = N.A.
41	GRAY FINE TO COARSE SAND, SUBANGULAR TO SUBROUND GRAINS, HIGHLY QUARTZ, SATURATED				41.5		
42							
43							
44	GRAY SAND AND GRAVEL MAX SATURATED						
45	GRAY COARSE SAND, SO MEDIUM AND FINE, SUBRDED TO SUBANGULAR, DENSE		15/20/18	7"/18"	45.0	SS-8	
46					46.5		
47							
	(SEE DESCRIPTION BELO						

TECHNICAL SERVICES
GEOTECHNICAL DEPARTMENT

Drilling Log (continued)

Boring No. D-81
Project Name WESTLAKE
Page 4 of 4
Project No. 84-075-4-002
Date 8-13-84

Depth	Description	Log or Class	Blow Count	Core Recov. & Loss	Box or Sample No.	Remarks
49	GRAY SAND AND FINE GRAVEL INTERBEDS, SAND IS FINE TO COARSE, SUBROUNDED, QUARTZOSE GRAVEL IS SUBANGULAR TO SUBROUNDED, QUARTZ, FELDSPAR AND SOME MAFIC MINERALS, DENSE TO VERY DENSE, SATURATED					
50			15/18/22	10"/18"	50.0 SS-9	← GRAVEL
51					SS-9b	← SAND
52					51.5	
53						
54						
55					55.0	
56			13/21/57	9"/18"	SS-10	A 2" dia. PVC piezometer was installed to 60'.
57					56.5	PVC is flush-joint, threaded couplings. Bottom 15' is .010" machine slotted screen. Bottom 17.5' is gravel packed with a 3' thick bentonite pellet seal above. Annulus is grouted from seal to ground surface. T.O.P. is 3' above ground surface.
59	GRAY-BROWN FINE TO MEDIUM SAND, VERY DENSE, SATURATED					
60			19/20/44	8"/18"	60.0 SS-11	
61					61.5	
62	TOTAL DEPTH: 61.5'					WATER LEVEL IS @ 16.43' BELOW T.O.P. 3:05 pm 8-15-83 (24 hrs. after installation)
63						
64						

Drilling Log

Project Name: WESTLAKE						Boring No.: D-83	
Project No.: 89-075-4-002						Page: 1 of 7	
Ground Elevation: 444.4	Location: North Section of Site; Fig. I-2					Total Footage: 115.3	
Drilling Type	Hole Size	Overburden Footage	Bedrock Footage	No. of Samples	No. Core Boxes	Depth To Water	Date Measured
SEE REMARKS	SEE REMARKS	115.3	0	16	0	SEE REMARKS	—
Drilling Co.: WABASH DRILLING CO.					Driller (s): DORL THORNTON		
Drilling Rig.: ACKER MP-5, TRUCK					Type of Penetration Test: STANDARD		
Date: 8-16-84	To: 8-20-84				Field Observer (s): GLEN ERNSTMANN		

Depth	Description	Class.	Blow Count	Recov.	Sample or Box No.	Remarks
0–1	BROWN FINE SANDY SILT AND ORGANIC MATERIAL, DAMP					5" DIA. SOLID AUGERS 0' TO 5'.
1–2	BROWN SILTY FINE SAND, DAMP					
4–5	LIGHT BROWN FINE TO MEDIUM SAND, TRACE SILT, LOOSE TO MEDIUM DENSITY, DAMP SATURATED BELOW APPROX. 10.5'					
5.0			3/3/3	17"/18"	SS-1	
6.5						
10.8						SATURATED MATERIAL ENCOUNTERED @ APPROX. 10.5'
10.8			3/4/8	16"/18"	SS-2	
11.5						
13	LIGHT BROWN FINE SAND INTERBEDDED WITH THIN (3" TO 6") CLAY SEAMS, SATURATED					

A-15

TECHNICAL SERVICES
GEOTECHNICAL DEPARTMENT

Drilling Log (continued)

Boring No. D-83

Project Name WESTLAKE

Page 2 of 7

Project No. 84-075-4-002

Date 8-16-84

Depth	Description	Log or Class	Blow Count	Core Recov. & Loss		Box or Sample No.	Remarks
15	LIGHT BROWN FINE SAND INTERBEDDED WITH THIN (3" TO 6") CLAY SEAMS, SATURATED				15.0		BEGAN 4½" DIA. TRI-CONE WASH BORING @ 15' TO 115.3'.
	BROWN SILTY CLAY, MEDIUM PLASTICITY, MOIST		4/10/15	15"/18"		SS-3a	
16	LIGHT BROWN FINE TO MEDIUM SAND, TRACE SILT, MEDIUM DENSITY, SATURATED				16.5	SS-3b	STOPPED 8-16-84
17							RESUMED 8-17-84
18							
19	FINE TO COARSE SAND AND FINE GRAVEL, SATURATED						
20	BROWN TO GRAY FINE TO MEDIUM SAND, TRACE SILT, DENSE, SATURATED		14/19/24	15"/18"	20.0	SS-4	
21					21.5		
22							
23	GRAY-BROWN MEDIUM TO COARSE SAND, SOME FINE SAND, FEW THIN (3" TO 8" THICK) FINE GRAVEL SEAMS (3/4" MAX. DIA.), MEDIUM DENSE						
24							
25	SAND IS PRIMARILY QUARTZ, SOME FELDSPAR AND MAFIC MINERALS, SUBROUNDED TO SUBANGULAR GRAINS		9/10/10	13"/18"	25.0	SS-5	
26					26.5		
27							
28							
29							
30	GRAY FINE TO MEDIUM SAND, TRACE SILT AND COARSE SAND, PRIMARILY QUARTZ, DENSE, SATURATED		10/15/17	8"/18"	30.0	SS-6	

TECHNICAL SERVICES
GEOTECHNICAL DEPARTMENT

Drilling Log (continued)

Boring No. D-83
Page 3 of 7
Project Name WESTLAKE
Project No. 84-075-4-002
Date 8-16-84

Depth	Description	Log or Class	Blow Count	Core Recov. & Loss	Box or Sample No.	Remarks
31.5					SS-6	
32	GRAY FINE TO MEDIUM SAND, TRACE SILT AND COARSE SAND, PRIMARILY QUARTZ SAND, DENSE, SATURATED					
33						
34						
35.0						
35			9/15/21	9"/18"	SS-7	
36						
36.5						
37						
38						
39						
40.0	GRAY-BROWN MEDIUM TO COARSE SAND, FEW FINE GRAVEL SEAMS, PRIMARILY QUARTZ, WITH SOME FELDSPAR, SUBROUNDED TO SUBANGULAR GRAINS, DENSE, SATURATED		10/13/17	8"/18"	SS-8	
41						
41.5						
42						
43						
44						
45	GRAY-BROWN FINE TO COARSE SAND AND FINE TO COARSE GRAVEL (3" MAX. DIA.), QUARTZ, FELDSPAR, AND MAFIC MINERALS, SUBANGULAR GRAINS, MEDIUM DENSE, SATURATED		12/10/11	9"/18"	SS-9	
46.5						
47						

A-17

TECHNICAL SERVICES
GEOTECHNICAL DEPARTMENT

Drilling Log (continued)

Boring No. D-83
Page 4 of 7
Project Name WESTLAKE
Project No. 84-075-4-002
Date 8-16-84

Depth	Description	Log or Class	Blow Count	Core Recov. & Loss	Box or Sample No.	Remarks
49	GRAY-BROWN FINE TO COARSE SAND AND FINE TO COARSE GRAVEL AS DESCRIBED ABOVE					
50	GRAY FINE TO COARSE SAND, MEDIUM DENSITY, SATURATED		4/7/11	0" / 18"	50-5 SS-10 51.5	
51						
52						
53						
54						
55						
56						
57						
58	SAND AND GRAVEL, SATURATED					
59						
60	GRAY SILTY FINE TO MEDIUM SAND, PRIMARILY QUARTZ, VERY DENSE, SATURATED		35/50/5"	7" / 11"	60.0 SS-11 60.9	
61						
62	SEVERAL THIN (3" TO 6" THICK) FINE TO COARSE GRAVEL SEAMS					
63						
64						

A-18

TECHNICAL SERVICES
GEOTECHNICAL DEPARTMENT

Drilling Log (continued)

Boring No. D-83
Project Name WESTLAKE
Page 5 of 7
Project No. 84-075-4-002
Date 8-16-84

Depth	Description	Log of Class	Blow Count	Core Recov. & Loss	Box or Sample No.	Remarks
66	GRAY SILTY FINE TO MEDIUM SAND, PRIMARILY QUARTZ, VERY DENSE					
67	SEVERAL THIN (3" TO 6" THICK) FINE TO COARSE GRAVEL SEAMS AND COARSE SAND SEARMS					
68						
69						
70			14/19/22	7"/18"	70.0	
71					SS-12	
72					71.5	
73						
74						
75						
76						
77	GRAY-BROWN COARSE SAND, SOME FINE TO MEDIUM SAND AND FINE GRAVEL, QUARTZ, FELDSPAR AND SOME MAFIC MINERALS, SUBROUNDED, MEDIUM DENSITY TO DENSE, SATURATED					NOTE: SLIGHT ORGANIC OR LEACHATE-LIKE ODOR IN SAMPLES SS-12 & SS-13
78						
79						
80			13/14/14	8"/18"	80.0	
81		A-19			SS-13	
					81.5	

TECHNICAL SERVICES
GEOTECHNICAL DEPARTMENT

Drilling Log (continued)

Boring No. D-83

Project Name WESTLAKE

Page 6 of 7

Project No. 84-075-4-002

Date 8-16-84

Depth	Description	Log or Class	Blow Count	Core Recov. & Loss	Box or Sample No.	Remarks
83						
84	GRAV-BROWN COARSE SAND, SOME FINE TO MEDIUM SAND AND FINE GRAVEL, QUARTZ, FELDSPAR, AND SOME MAFIC MINERALS; SUBROUNDED, MEDIUM DENCITY TO DENSE, SATURATED					
85						
86						
87						
88						
89						
90			14/16/17	8" / 18"	SS-14	NOTE: MODERATE TO STRONG LEACHATE-LIKE ODOR IN SAMPLE SS-14
91	OCCASIONAL GRAVEL SEAM (3" TO 4" THICK), 92' TO 104'.					
92						
93						
94						
95						
96						
97						
98						

A-20

TECHNICAL SERVICES
GEOTECHNICAL DEPARTMENT

Drilling Log (continued)

Boring No. D-83
Project Name WESTLAKE
Page 7 of 7
Project No. 84-075-4-002
Date 8-16-84

Depth	Description	Log or Class	Blow Count	Core Recov. & Loss	Box or Sample No.	Remarks
100	GRAY-BROWN COARSE SAND, SOME FINE TO MEDIUM SAND AND FINE GRAVEL, QUARTZ, FELDSPAR AND SOME MAFIC MINERALS, SUBROUNDED, MEDIUM DENSE TO DENSE, SATURATED		18/24/26	9" 18"	100.0 SS-15	SLOWER DRILLING RATE 90' TO 100'.
101					101.5	STOPPED 8-17-84 RESUMED 8-20-84
102	OCCASIONAL GRAVEL SEAM (3" TO 4" THICK), 92' TO 104'.					
103						MUCH SLOWER DRILLING RATE 100' TO 115.3'.
104						
105						A 2" dia. PVC piezometer was installed to 97'. PVC is flush-jointed, threaded couplings, bottom 20' is .010" machine slotted screen.
106						
107						Gravel 115.3' to 100'. Bentonite pellets 100' to 99'. Gravel pack 99' to 75.5' with a 2' thick bentonite pellet seal above. Annulus is grouted from seal to ground surface.
108						
109						
110	GRAVEL AND SAND, SOME SILT, DENSE, SATURATED		24/22/27	3" 18"	110.0 SS-16	T.O.P. is 3.2' above ground surface.
111					111.5	
112						
113						
114						
115	CREAM LIMESTONE TOTAL DEPTH 115.3'	A-21				WATER LEVEL IMMEDIATELY AFTER PIEZOMETER INSTALLED (2:05 pm 8-21-84) is 14.50' BELOW T.O.P.

Drilling Log

Project Name: WESTLAKE						Boring No.: D - 85	
Project No.: 84-075-4-002						Page: 1 of 6	
Ground Elevation: 453.1	Location: NE section of Site; Figure I-2					Total Footage: 84.1'	
Drilling Type	Hole Size	Overburden Footage	Bedrock Footage	No. of Samples	No. Core Boxes	Depth To Water	Date Measured
SEE REMARKS	SEE REMARKS	83.5	0.6	12	0	SEE REMARKS	—
Drilling Co.: WABASH DRILLING CO.				Driller (s): DORL THORNTON			
Drilling Rig.: ACKER MP-5, TRUCK				Type of Penetration Test: STANDARD			
Date: 8-21-84	To: 8-22-84			Field Observer (s): GLEN ERNSTMANN			

Depth	Description	Class.	Blow Count	Recov.	Sample or Box No.	Remarks
1	LIGHT BROWN SAND, SILT AND GRAVEL, DAMP TO DRY (FILL)					5" SOLID AUGERS 0' TO 10'
2						
3						
4	GREENISH-GRAY TO DARK GRAY SILTY FINE SAND, VERY LOOSE, DAMP (FILL)					
5					5.0	
4			3/2/3	7"/18"	SS-1	
					6.5	
7						
8						
9						
10					10.0	4½" TRI-CONE WASH BORE 10.0' TO 84.1'.
11			1/1/1	18"/18"	SS-2	
					11.5	STOPPED 8-21-84 RESUMED 8-22-84
12						
13	GRAY CLAYEY SILT, AND FINE SAND, LOW PLASTICITY, STIFF, MOIST (FILL)	A-25				

TECHNICAL SERVICES
GEOTECHNICAL DEPARTMENT

Drilling Log (continued)

Boring No. B-85

Project Name WESTLAKE

Page 2 of 6

Project No. 84-075-4-002

Date B-21-84

Depth	Description	Log or Class	Blow Count	Core Recov. & Loss	Box or Sample No.	Remarks
15	GRAY CLAYEY SILT, AND FINE SAND, LOW PLASTICITY, STIFF, MOIST (FILL)		3/4/5	12" / 18"	15.0 SS-3 16.5	
20			2/4/4	10" / 18"	20.0 SS-4 21.5	SATURATED MATERIAL ENCOUNTERED BETWEEN 18' AND 25'.
22	GRAY-BROWN SILTY FINE SAND, MOIST TO SATURATED					
25	GRAY FINE TO COARSE SAND, TRACE SILT, MEDIUM DENSE TO VERY DENSE, SATURATED PRIMARILY SUBROUNDED QUARTZ GRAINS			17" / 18"	25.0 ST-5 26.5	Q_p = NOT OBTAINABLE
30		A-26	10/10/10	10" / 18"	30.0 SS-6	

Drilling Log, continued

Boring No. D-95

Project Name WESTLAKE

Page 3 of 4

Project No. 84-075-4-002

Date 8-21-84

Depth	Description	Log or Class	Blow Count	Core Recov. & Loss	Box or Sample No.	Remarks
31	GRAY FINE TO COARSE SAND, TRACE SILT, MEDIUM DENSE TO VERY DENSE, SATURATED			31.5	SS-6	
32						
33	PRIMARILY SUBROUNDED QUARTZ GRAINS					
34						
35				35.0		
36			21/27/26	13"/18"	SS-7	
37				36.5		
38						
39						
40	GRAY TO GRAY-BROWN COARSE SAND, SOME FINE TO MEDIUM SAND, FEW FINE GRAVELLY GRAINS, DENSE, SATURATED			40.0		
41			16/23/21	8"/18"	SS-8	
42				41.5		
43						
44						
45						
46						
47						

A-27

TECHNICAL SERVICES
GEOTECHNICAL DEPARTMENT

Drilling Log (continued)

Boring No. D-85
Project Name WESTLAKE
Page 4 of 6
Project No. 84-075-4-002
Date 8-21-84

Depth	Description	Log or Class	Blow Count	Core Recov. & Loss	Box or Sample No.	Remarks
49	GRAY TO GRAY-BROWN COARSE SAND, SOME FINE TO MEDIUM SAND, FEW FINE GRAVELLY SEAMS, DENSE, SATURATED					
50	GREENISH GRAY TO GRAY FINE TO MEDIUM SAND, TRACE SILT AND COARSE SAND, VERY DENSE, TO DENSE, SATURATED		26/34/24	13"/18"	50.0 SS-9 51.5	
51	..... 90% QUARTZ, SUBROUNDED TO SUBANGULAR					
52						
53						
54						
55						
56						
57						
58						
59						
60			14/16/22	8"/18"	60.0 SS-10 61.5	
61						
62						
63						
64						

TECHNICAL SERVICES
GEOTECHNICAL DEPARTMENT

Drilling Log (continued)

	Boring No. D-85
Project Name WESTLAKE	Page 5 of 6
Project No. 84-075-4-002	Date 8-21-84

Depth	Description	Log or Class	Blow Count	Core Recov. & Loss		Box or Sample No.	Remarks
66	GREENISH GRAY TO GRAY FINE TO MEDIUM SAND, TRACE SILT AND COARSE SAND, VERY DENSE TO DENSE, SATURATED						
67	90% QUARTZ, SUBROUNDED TO SUBANGULAR						
68							
69							
70					70.0		
71			17/20/27	16"/18"		SS-11	
					71.5		
72							
73							
74							
75							
76							
77							
78							
79							
80					80.0		
81			17/21/34	15"/18"		SS-12	VERY SLIGHT LEACHATE LIKE OR ORGANIC ODOR
		A-29			81.5		

TECHNICAL SERVICES
GEOTECHNICAL DEPARTMENT

Drilling Log (continued)

Boring No. D-85

Project Name WESTLAKE

Page 6 of 6

Project No. 84-075-4-002

Date 8-21-84

Depth	Description	Log or Class	Blow Count	Core Recov. & Loss	Box or Sample No.	Remarks
83	GRAVEL, COBBLES AND SAND, SATURATED					A 2" dia. PVC piezometer was installed to 82'. PVC is flush-jointed, threaded couplings. Bottom 20' is .010" machine slotted screen. Gravel pack from 84.1' to 59.7' with a 2.2' thick bentonite pellet seal above. Anulus is grouted from seal to ground surface. T.O.P. is 3.0' above ground surface.
84	CREAM TO LIGHT BROWN LIMESTONE					
	TOTAL DEPTH 84.1'					
85						
86						
87						
88						
89						
90						WATER LEVEL IMMEDIATELY AFTER PIEZOMETER INSTALLATION 20.05' BELOW T.O.P. 10:00am 8-24-84
						WATER LEVEL IS 24.09' BELOW T.O.P. 7:15am 8-27-84.
		A-30				

Drilling Log

Project Name: WESTLAKE						Boring No.: D - 87	
Project No.: B4-075-4-002						Page: 1 of 7	
Ground Elevation: 460.0	Location: N 114.45, E. 903.6487					Total Footage: 111.7	
Drilling Type	Hole Size	Overburden Footage	Bedrock Footage	No. of Samples	No. Core Boxes	Depth To Water	Date Measured
SEE REMARKS	5" @ THE SURFACE	111.0	0.7	22	0	SEE REMARKS	—
Drilling Co.: WABASH DRILLING CO.				Driller (s): DORL THORNTON			
Drilling Rig.: ACKER MP-5, TRUCK				Type of Penetration Test: STANDARD			
Date: 8-9-84	To: 8-10-84			Field Observer (s): GLEN ERNSTMANN			

Depth	Description	Class.	Blow Count	Recov.		Sample or Box No.	Remarks
1	LIGHT BROWN FINE TO COARSE SAND, SOME SILT AND GRAVEL, DAMP (FILL)						5" SOLID AUGERS 0' TO 30.0'
2	LIGHT GRAY GRAVEL (2" MAX. DIA.), SOME SAND, VERY DENSE, DAMP (FILL)						
3							
4							
5			50/3"	2"/3"	5.0 / 5.3	SS-1	
6	MOTTLED LIGHT GRAY TO DARK GRAY TO BROWN SANDY SILTY CLAY, MEDIUM PLASTICITY, STIFF, MOIST (FILL						
7	TRACE GRAVEL (2" MAX. DIA.)						
8							
9							
10			2/3/4	12"/18"	10.0	SS-2	
11							
12					11.5		
13							

Drilling Log, continued

Boring No. D-87

Project Name WESTLAKE — Page 2 of 7

Project No. 84-075-4-002 — Date 8-9-84

Depth	Description	Log or Class	Blow Counts	Core Recov. & Loss		Box or Sample No.	Remarks
15	MOTTLED LIGHT GRAY TO DARK GRAY TO BROWN SANDY, SILTY CLAY, MEDIUM PLASTICITY, STIFF MOIST (FILL				16.0		
16	TRACE GRAVEL (2" MAX. DIA.)			23" / 24"		ST-3	Q_p = 1.5 TSF
17					17.0		
18							
19							
20	DARK GRAY SILTY CLAY, MEDIUM TO HIGH PLASTICITY, VERY STIFF, MOIST				20.0		
21				21" / 24"		ST-4	Q_p = 2.75 TSF
22					22.0		
23							
24	DARK GRAY SANDY SILT AND SILTY SAND INTERBEDS, SAND IS FINE TO MEDIUM, LOW TO NON-PLASTIC, WET TO SATURATED						
25					25.0		
24				4" / 24"		ST-5	Q_p = N.A.
27					27.0		
28							SATURATED MATERIAL FIRST ENCOUNTERED @ APPROXIMATELY 27.0' BELOW G.S.
29							
30	BROWN TO GRAY-BROWN SILTY FINE SAND, MEDIUM DENSE SATURATED, SLIGHTLY MICACEOUS		3/4/8	10" / 18"	30.0	SS-6	

Drilling Log, continued

Boring No. D-87

Project Name WEST LAKE — Page 3 of 7

Project No. 84-075-4-002 — Date 8-9-84

Depth	Description	Log or Class	Blow Count	Core Recov. & Loss		Box or Sample No.	Remarks
32	BROWN TO GRAY-BROWN SILTY FINE SAND, MEDIUM DENSE SATURATED SLIGHTLY MICACEOUS				31.5	SS-6	NOTE: HOLE COLLAPSED TO 26.7' AFTER SAMPLE SS-6 WAS OBTAINED. NO FREE WATER OCCURS ABOVE THIS DEPTH. BEGAN ROTARY WASH BORING W/ 4½" DIA. TRI-CONE BIT @ 30.0'
35	BROWN FINE TO MEDIUM SAND, TRACE SILT, ~~SOME~~ HIGHLY QUARTZOSE, DENSE, SATURATED		12/14/20	4"/18"	35.0	SS-7	
36					36.5		
37							
38	LIGHT BROWN FINE TO COARSE SAND INTERBEDDED WITH THIN (3" TO 10" THICK) GRAVEL SEAMS, TRACE SILT, DENSE TO VERY DENSE, SATURATED						
40					40.8		
41			15/25/25	8"/18"		SS-8	
42					41.5		
43							
44							
45					45.0		
46			17/23/14	8"/18"		SS-9	
47					46.5		

Drilling Log, continued

Boring No. D-87

Project Name WEST LAKE — Page 4 of 7

Project No. 84-075-4-002 — Date 8-9-84

Depth	Description	Log or Class	Blow Counts	Core Recov. & Loss		Sox or Sample No.	Remarks
49	LIGHT BROWN FINE TO COARSE SAND INTERBEDDED WITH THIN (3" TO 10" THICK) GRAVEL SEAMS, TRACE SILT, DENSE TO VERY DENSE, SATURATED						
50					50.0		
			19/29/50	10"/18"		SS-10	
51					51.5		
52	DARK GREENISH GARY FINE TO MEDIUM SAND, TRACE SILT, DENSE TO VERY DENSE, SATURATED						
53							
54							
55					55.0		
			12/17/23	9"/18"		SS-11	
56					56.5		
57							
58							
59							
60					60.5		
			53/35/50/4"	12"/18"		SS-12	
61					61.5		
62							
63							
64							

Drilling Log, continued

Boring No. D-87

Project Name WESTLAKE

Page 5 of 7

Project No. 84-075-4-002

Date 8-9-84

Depth	Description	Log or Class	Blow Count	Core Recov. & Loss	Box or Sample No.	Remarks
65	GREENISH DARK GRAY FINE TO MEDIUM SAND, TRACE SILT, DENSE TO VERY DENSE, SATURATED		24/25/36	13"/18"	65.0 SS-13	
66					66.5	STOPPED 8-9-84 RESUMED 8-10-84
67						
68						
69						
70			30/23/24	14"/18"	70.0 SS-14	
71					71.5	
72						
73						
74						
75	GRAY TO DARK GREENISH GRAY FINE TO COARSE SAND, HIGHLY QUARTZOSE, SUBROUNDED GRAINS, VERY DENSE TO MEDIUM DENSE, SATURATED FEW THIN (3" TO 6") GRAVEL SEAMS		23/29/34	14"/18"	75.0 SS-15	
76					76.5	
77						
78						
79						
80					80.0	
81			27/37/26	11"/18"	SS-16	
					81.5	

Drilling Log, continued

Boring No. D - 87
Project Name WESTLAKE
Page 6 of 7
Project No. 84-075-4-002
Date 8-9-84

Depth	Description	Log or Class	Blow Count	Core Recov. & Loss	Box or Sample No.	Remarks
83	GRAY TO DARK GREENISH GRAY FINE TO COARSE SAND, HIGHLY QUARTZOSE, SUBROUNDED GRAINS, VERY DENSE TO MEDIUM DENSE, SATURATED					
84						
85	FEW THIN (3" TO 6" THICK) GRAVEL SEAMS AT INTERVALS OF 1' TO 5'.		15/16/14	9"/18"	85.0 SS-17	
86					86.5	
87						
88	NOTE: SAND IS PREDOMINANTLY COARSE WITH TRACE FINE GRAVEL THROUGHOUT BELOW APPROXIMATELY 88'.					
89						
90			15/17/22	8"/18"	90.0 SS-18	
91					91.5	
92						
93						
94						
95			19/15/18	7"/18"	95.0 SS-19	
96					96.5	
97						
98						

Drilling Log, continued

Boring No. D-87

Project Name WESTLAKE

Page 7 of 7

Project No. 84-075-4-002

Date 8-9-84

Depth	Description	Log or Class	Blow Count	Core Recov. & Loss	Box or Sample No.	Remarks
100	GRAY TO DARK GREENISH GRAY FINE TO COARSE SAND, HIGHLY QUARTZOSE SUBROUNDED GRAINS, VERY DENSE TO MEDIUM DENSE, SATURATED		24/50/6"	6"/12"	100.0	
101					SS-20	
102	FEW THIN (3" TO 6" THICK) GRAVEL SEAMS AT INTERVALS OF ROUGHLY 1' TO 5'.				101.0	
103	NOTE = SAND IS PREDOMINANTLY COARSE WITH TRACE FINE GRAVEL THROUGHOUT BELOW APPROXIMATELY 88'.					
104						A 2" dia. PVC piezometer was installed to 111'.
105			24/31/48	9"/18"	105.0	PVC is flush-joint, threaded couplings.
106					SS-21	Bottom 20' is .010" machine slotted screen.
107					106.5	
108						Bottom 24' is gravel packed with a 3' thick bentonite pellet seal above.
109						Annulus is grouted from seal to ground surface.
110			17/30/50/4"	10"/16"	110.0	T.O.P. is 3' above ground surface.
111	GRAY TO CREAM LIMESTONE, MEDIUM STRONG TO STRONG, SLIGHTLY TO MODERATELY WEATHERED				SS-22a	
112					111.7 SS-22b	111.7'
113	TOTAL DEPTH 111.7'					WATER LEVEL IMMEDIATELY AFTER PIEZOMETER INSTALLATION 8-10-84 is 4.46 BELOW T.O.P.
114						WATER LEVEL @ 26.05' BELOW T.O.P. 8:15am 8-14-84
115						

Drilling Log

Project Name: WESTLAKE						Boring No.: D-89	
Project No.: 84-075-4-002						Page: 1 of 4	
Ground Elevation: 454.1	Location: N. 1790.5514, E. 602.6094					Total Footage: 49.0'	
Drilling Type	Hole Size	Overburden Footage	Bedrock Footage	No. of Samples	No. Core Boxes	Depth To Water	Date Measured
SEE REMARKS	SEE REMARKS	47.8	1.2'	8	0	SEE REMARKS	—
Drilling Co.: WABASH DRILLING CO.				Driller (s): DORL THORNTON			
Drilling Rig.: ACKER MP-5, TRUCK				Type of Penetration Test: STANDARD			
Date: 8-27-84 To 8-28-84				Field Observer (s): GLEN ERNSTMANN			

Depth	Description	Class.	Blow Count	Recov.	Sample or Box No.	Remarks
1	LIGHT GRAY TO GRAY TO BROWN SAND AND GRAVEL, SOME SILT, DAMP (FILL)					5" SOLID AUGERS 0' TO 25'.
2						
3						
4						
5						
6						
7	GREENISH BROWN TO DARK GRAY SILTY CLAY AND CLAYEY SILT, LOW TO MEDIUM PLASTICITY, STIFF, DAMP TO MOIST (FILL)					
8						
9						
10					10-a	
11	NOTE: COLOR IS GREENISH BROWN WITH SOME BROWN (IRON) STAINS BELOW APPROX. 14'		3/2/3	15"/18"	SS-1	
11.5						
12						
13						

TECHNICAL SERVICES
GEOTECHNICAL DEPARTMENT

Drilling Log (continued)

Boring No. D-89
Project Name WESTLAKE
Page 2 of 4
Project No. 84-075-4-002
Date 8-27-84

Depth	Description	Log or Class	Blow Count	Core Recov. & Loss	Box or Sample No.	Remarks
15	GREENISH BROWN TO DARK GRAY SILTY CLAY AND CLAYEY SILT, LOW TO MEDIUM PLASTICITY, DAMP TO MOIST, STIFF				15.0	
16				18"/24"	ST-2	Q_p = 1.75 TSF
17	NOTE: COLOR IS GREENISH BROWN WITH SOME BROWN (IRON) STAINS BELOW APPROX. 19'.				17.0	
18						FEW THIN SATURATED ZONES 15' TO 20'.
19						MATERIAL IS SATURATED BELOW APPROX. 21'.
20					20.0	
21				24"/24"	ST-3	Q_p = 1.0 TSF
22					22.0	STOPPED 8-27-84
23	GRAY SILTY FINE TO MEDIUM SAND, SATURATED					RESUMED 8-28-84 NOTE: WATER LEVEL IS 19.2' BELOW G.S. 7.00 am 8-28-84
24	GRAYISH SILTY CLAY, MEDIUM PLASTICITY, SATURATED					
25					25.0	
26	GRAY SILTY FINE TO MEDIUM SAND, MEDIUM DENSE, SATURATED			* 12"/24"	ST-4	Q_p = N.A. * Approx. 12" of material was retained in the tube but it slipped out of the tube and was lost when brought to the surface. A jar sample was collected.
27					27.0	
28						
29						4½" TRI-CONE WASH-BORE, 25' TO
30			10/12/18	18"/18"	30.0 SS-5	

TECHNICAL SERVICES
GEOTECHNICAL DEPARTMENT

Drilling Log (continued)

Boring No. D-89

Project Name WESTLAKE

Page 3 of 4

Project No. 84-075-4-002

Date 8-27-84

Depth	Description	Log or Class	Blow Count	Core Recov. & Loss	Box or Sample No.	Remarks
					SS-5	
				31.5		
32	GRAY SILTY FINE TO MEDIUM SAND, MEDIUM DENSE, SATURATED					
33						
34	GRAY FINE TO MEDIUM SAND, DENSE, SATURATED					
35						
				35.0		
			7/14/28	16"/18"	SS-6	
36	90% TO 95% SUBANGULAR QUARTZ GRAINS					
				36.5		
37						
38						
39	GRAY TO BROWN FINE TO MEDIUM SAND WELL SORTED, DENSE TO VERY DENSE, SATURATED					
40						
				40.0		
	80% QUARTZ, 10% CHERT FRAGMENTS,		7/11/23	11"/18"	SS-7	
41	QUARTZ GRAINS ARE SUBROUNDED TO ROUNDED					
				41.5		
42						
43						
44						
45						
				45.0		
			13/18/39	10"/18"	SS-8	
46						
				46.5		
47						
	BUFF LIMESTONE					

TECHNICAL SERVICES
GEOTECHNICAL DEPARTMENT

Drilling Log (continued)

Boring No. D-89

Project Name: WESTLAKE

Page 4 of 4

Project No.: 84-075-4-002

Date: 8-27-84

Depth	Description	Log or Class	Blow Count	Core Recov. & Loss	Box or Sample No.	Remarks
49	BUFF LIMESTONE					
	TOTAL DEPTH 49.0'					
50						
51						A 2" dia. PVC piezometer was installed to 49'. PVC is flush-jointed, threaded couplings. Bottom 15' is .010" machine slotted screen. Bottom 16.5' is gravel packed with a 2' thick bentonite pellet seal above. Annulus is pressure grouted from seal to surface. T.O.P. is 3' above ground surface.
52						
53						
54						
55						
						WATER LEVEL IS 22.3' BELOW T.O.P. IMMEDIATELY AFTER PIEZOMETER INSTALLATION, 1:30 pm 8-28-84

Drilling Log

Project Name: WESTLAKE						Boring No.: D-90	
Project No.: 84-075-4-004						Page: 1 of 1	
Ground Elevation: ± 446'	Location: SW cnr of site; Fig I-2					Total Footage: 47	
Drilling Type	Hole Size	Overburden Footage	Bedrock Footage	No. of Samples	No. Core Boxes	Depth To Water	Date Measured
Solid 4" Auger & Rotary Wash	4" & 3 7/8"	46	1	9	0	9'	3/7/85

Drilling Co.: WABASH (Subsurface Construction Company) — Driller (s): Gary Hiles, Gary Feldmann

Drilling Rig.: CME-750 — Type of Penetration Test: SPT

Date: Aug 6, 1985 — To: Aug 7, 1985 — Field Observer (s): Stathis Payiatakis

Depth	Description	Class.	Blow Count	Recov.	Sample or Box No.	Remarks
	Sl. sandy silt - tan & brown, damp					10:10 start drilling w/ 4" solid auger
5	Br. Grey mottled sl. silty clay, damp, med. mod. plastic		3/5/5	18/18	SPT-1	10:30 switch to rotary wash w/ 3 7/8" tricone rotary bit.
10	Br. silty fine sand, loose		2/3/4	12/18	SPT-2	
15	Br sl. silty fine sand, mdm dense		5/7/7	12/18	SPT-3	
20	Same as above		3/6/7	10/18	SPT-4	
25	Br. sl. silty fine to medium sand, dense.		9/16/18	18/18	SPT-5	
30	Tan brown mdm to coarse sand md dense		15/15/12	4/18	SPT-6	
35	Dk Grey silty v. fine sand, loose		5/3/3	12/18	SPT-7	
40	Dk. Grey silty clay, moist, v. weak, plastic		0/0/1	18/18	SPT-8	Settled 12" under weight of 40' rods 5 min for 1" - very heavy drilling 8/7/85 start augering @ 40'
45	Dk Grey sl. silty fine sand, dense Limestone, lt brown, very hard, sl. weathered 1.5" seam - Loose water pressure @ 46.9'		19/50-5.5"	11.7/11.5	SPT-9	Pace @ 45' Rate @ 500 psi w/ tricone 5 min for 2" 60 min for 10" 3:15 start piezometer installation
50	BOB Total pipe length 50'-5 1/4" Piezometer @ 46'-3 1/4" depth below G.S.					
55						
60	Thread 3/4" 6" Piezometer tip					P.S. Grout w/ tremie pipe 4:50 Remove top rod
65						
70						

Drilling Log

Project Name: WESTLAKE						Boring No.: D-91	
Project No.: 84-075-4-004						Page: 1 of 1	
Ground Elevation: ± 448	Location: Southwest of Site ; Figure I-2					Total Footage: 45	
Drilling Type	Hole Size	Overburden Footage	Bedrock Footage	No. of Samples	No. Core Boxes	Depth To Water	Date Measured
SEE REMARKS	SEE REMARKS	44'	1'	4	0	9.25 from GS	2:45 8/6/85
Drilling Co.: WABASH					Driller (s): Gary Miles, Gary Feldmann		
Drilling Rig.: CME-750					Type of Penetration Test: SPT		
Date: Aug 5, 1985	To: Aug 6, 1985				Field Observer (s): Stathis Payiatacis		

Depth	Description	Class.	Blow Count	Recov.	Sample or Box No.	Remarks
0	Topsoil, organic					Start drilling @ 11:00 w/ 4" solid augers. Push 4 5/8" OD 4" ID casing & use water tank. Tricone bit 3 7/8" ø
	lt br. f. sandy silt, sl. plastic, v. loose, damp					
5						
	Gr. brn silty clay, mod. plastic					
10						
	Gr. brn f sandy silt, some clay					
15						
	Gr. silty clay, mod. plastic, tr. sand					
20						
	Gr. sl. silty clay, mod plastic, soft, moist becomes more silty near 30'		0/1/1	18/18	SPT-1	±Sank 6" under weight of 25' rod.
25						
	Dk. grey v.f. sand, loose, saturated, tr. silt		1/2/2	18/18	SPT-2	
30						
			3/2/3	10/18	SPT-3	
35						
	Tan-grey f. to med sand, md. dense w/ thin (2"-4") clay lenses		3/9/11	9/18	SPT-4	
40						
45	Limestone, white/creamy med. strong, med. hard sl. weathered BOB					14:00 Finish drilling @ 14:10 Start piezometer installation. 10' screen SL 50 + 40' 2" "Tri-Lock" PVC pipe, flush threaded schedule 50 & sch. 20 screen (200 slots/inch) 15:15 Finish for day 8/6/85. Grout to surface. Finish @ 9:00
50						
55						
60						
65						
70						

Bentonite Pellets

Sand

Screen

Drilling Log

Project Name: WESTLAKE			Boring No.: D - 92
Project No.: 84-075-4-004			Page: 1 of 9
Ground Elevation: 475.37	Location: North Central Section of Site ; Fig I-2		Total Footage: 143.6

Drilling Type	Hole Size	Overburden Footage	Bedrock Footage	No. of Samples	No. Core Boxes	Depth To Water	Date Measured
SEE REMARKS	4 7/8"	143.6	0.0	19	0	SEE REMARKS	-

Drilling Co.: SUBSURFACE CONSTRUCTORS (WABASH)		Driller (s): DORL THORNTON, DEAN	
Drilling No.: ACKER MP-5, TRUCK		Type of Penetration Test: STANDARD	
Date: 4-9-85	To: 4-11-85	Field Observer (s): G. ERNSTMANN	

Depth	Description	Class.	Blow Count	Recov.	Sample or Box No.	Remarks
1	LIGHT GRAY-BROWN SAND AND GRAVEL (3" MAX. DIA.),					4" SOLID AUGERS 0' TO 40.0'
2						
3	GRAY AND BROWN GRAVELLY SAND, SOME SILT; LOOSE TO MEDIUM DENSE, MOIST (FILL)					
4	SLIGHT LEACHATE-LIKE ODOR					
5					5.0	
6			5/6/6	9" / 18"	SS-1	
7					6.5	
8						
9						
10					10.0	
11			2/3/3	7" / 18"	SS-2	
12					11.5	
13	BROWN SANDY SILT, LOW PLASTICITY, TRACE GRAVEL, LOOSE (FILL)					

P.2

AUG 04 '93 08:33AM FYD STL

TECHNICAL SERVICES
GEOTECHNICAL DEPARTMENT

Drilling Log (continued)

Boring No. D-92

Project Name WESTLAKE

Page 2 of 9

Project No. 84-075-4-004

Date 4-9-85

Depth	Description	Log or Class	Blow Count	Core Recov. & Loss	Box or Sample No.	Remarks
15	BROWN SANDY SILT, LOW PLASTICITY, TRACE GRAVEL, LOOSE TO MEDIUM DENSE, MOIST (FILL)		3/5/5	6" / 18"	15.0 SS-3 16.5	
20			3/5/6	8" / 18"	20.0 SS-4 21.5	
25			6/5/5	11" / 18"	25.0 SS-5 26.5	
30			5/6/7	15" / 18"	30.0 SS-6	

211479

Sams & McDonnell

Form TS-GT-2-2

P.3

AUG 04 '93 08:34AM FYD STL

TECHNICAL SERVICES
GEOTECHNICAL DEPARTMENT

Drilling Log (continued)

Boring No. D-92
Project Name WESTLAKE
Page 3 of 9
Project No. 84-075-4-004
Date 4-9-85

Depth	Description	Log or Class	Blow Count	Core Recov. & Loss		Box or Sample No.	Remarks
32	BROWN SANDY SILT, LOW PLASTICITY, TRACE GRAVEL, LOOSE TO MEDIUM DENSE, MOIST				31.5	SS-6	
35	DARK GRAY SILTY CLAY, MEDIUM PLASTISITY, VERY STIFF, MOIST						
34	SLIGHT LEACHATE-LIKE ODOR						
35			5/7/13	16" / 18"	35.0	SS-7	
36							
37					36.5		
38	GRAY FINE TO MEDIUM SAND, MOIST						
39							SATURATED MATERIAL ENCOUNTERED @ APPROX. 39.5'
40	GRAY SILTY FINE TO MEDIUM SAND, MEDIUM DENSE, SATURATED		6/11/7	11" / 18"	40.0	SS-8	
41							
42					41.5		STOPPED 4-9-85 RESUMED 4-10-85
43							BEGAN WASH BORING W/ 3 7/8" TRI-CONE BIT AND BENTONITE MUD @ 40.0'.
44	GRAY FINE TO MEDIUM SAND, TRACE SILT, DENSE, SATURATED						
45			10/17/17	15" / 18"	45.0	SS-9	
46							
47					46.5		

P.4
AUG 04 '93 08:34AM FWD STL

TECHNICAL SERVICES
GEOTECHNICAL DEPARTMENT

Drilling Log (continued)

Boring No. D-92

Project Name WESTLAKE

Page 4 of 9

Project No. 84-075-4-004

Date 4-9-85

Depth	Description	Log of Class	Blow Count	Core Recov. & Loss		Box or Sample No.	Remarks
49	GRAY FINE TO MEDIUM SAND, TRACE SILT, DENSE, SATURATED						
	— — — — — — —						
	BROWN FINE TO COARSE SAND, VERY DENSE, SATURATED						
50					50.0		
			28/28/26	11" / 18"		SS-10	
51					51.5		
52							
53							
54							
55							
56							
57							
58							
59							
60					60.0		
			16/26/34	10" / 18"		SS-11	
61					61.5		
62							
63							
64							

AUG 04 '93 08:35AM FYD STL

P.5

TECHNICAL SERVICES
GEOTECHNICAL DEPARTMENT

Drilling Log (continued)

	Boring No. D-92
Project Name WESTLAKE	Page 5 of 9
Project No. 84-075-4.004	Date 4-9-85

Depth	Description	Log or Class	Blow Count	Core Recov. & Loss		Box or Sample No.	Remarks
	BROWN FINE TO COARSE SAND, VERY DENSE, SATURATED						
66							
67							
68	GRAY MEDIUM TO COARSE SAND, VERY DENSE, SATURATED						
69							
70					70.0		
			21/34/36	15"/18"		SS-12	
71					71.5		
72							
73							
74							
75							
76	GRAY-BROWN COARSE SAND, SOME MEDIUM TO FINE SAND, MEDIUM DENSE TO VERY DENSE, SATURATED						
77							
78							
79							
80					80.0		
			15/11/13	7"/18"		SS-13	
81					81.5		

111479

Burns & McDonnell

Form TS-GT-2-2

AUG 04 '93 08:35AM FVD STL
P.6

TECHNICAL SERVICES
GEOTECHNICAL DEPARTMENT

Drilling Log (continued)

Boring No. D-92
Project Name WESTLAKE
Page 6 of 9
Project No. 84-075-4-004
Date 4-9-85

Depth	Description	Log or Class	Blow Count	Core Recov. & Loss		Box or Sample No.	Remarks
83	GRAY-BROWN COARSE SAND, SOME MEDIUM TO FINE SAND, MEDIUM DENSE TO VERY DENSE, SATURATED						
84							
85							
86							
87							
88							
89	GRAY FINE TO MEDIUM SAND, TRACE SILT, VERY DENSE, SATURATED						
90			25/28/39	9"/18"	90.0	SS-14	
91	GRAY SILTY FINE SAND, VERY DENSE, SATURATED				91.5		
92							
93							
94	GRAY-BROWN COARSE SAND, SOME MEDIUM TO FINE SAND, DENSE						
95							
96							
97							
98							

AUG 04 '93 08:35AM FYD STL P.7

TECHNICAL SERVICES
GEOTECHNICAL DEPARTMENT

Drilling Log (continued)

	Boring No. D-92
Project Name WESTLAKE	Page 7 of 9
Project No. 84-075-4-004	Date 4-9-85

Depth	Description	Log or Class	Blow Count	Core Recov. & Loss		Box or Sample No.	Remarks
100	GRAY-BROWN COARSE SAND, SOME MEDIUM TO FINE SAND, DENSE				100.0		
101			17/22/24	8"/18"	101.5	SS-15	
102							
103							
104							
105							
106							
107							
108	BROWN-GRAY COARSE SAND, TRACE MEDIUM SAND AND FINE GRAVEL, VERY DENSE, SATURATED						
109							
110					110.0		
111			31/50/6"	8"/12"	111.0	SS-16	STOPPED 4-10-8 RESUMED 4-11-8
112							
113	GRAY-BROWN MEDIUM TO COARSE SAND WITH THIN (1" TO 3" THICK) GRAVEL INTERBEDS, SATURATED						
114							
115							

TECHNICAL SERVICES
GEOTECHNICAL DEPARTMENT

Drilling Log (continued)

Boring No. D-92
Project Name WESTLAKE
Page 8 of 9
Project No. 84-075-4-004
Date 4-9-85

Depth	Description	Log of Class	Blow Count	Core Recov. & Loss	Box or Sample No.	Remarks
117	GRAY-BROWN MEDIUM TO COARSE SAND WITH THIN (1" TO 3" THICK) GRAVEL INTERBEDS, SATURATED					
118						
119	GRAY MEDIUM TO COARSE SAND, TRACE SILT, VERY DENSE, SATURATED					
120					120.0	
121			17/24/28	8"/18"	SS-17	
122					121.5	
123	GRAVEL SEAM 123.0' to 123.3'					
124						
125						
126						
127						
128						
129						
130					130.0	
131			28/19/31	6"/18"	SS-18	
132					131.6	

111479

Burns & McDonnell

Form TS-GT-2-7

AUG 04 '93 08:36AM FYD STL P.9

TECHNICAL SERVICES
GEOTECHNICAL DEPARTMENT

Drilling Log (continued)

Boring No. D-92
Project Name WESTLAKE
Page 9 of 9
Project No. 94-025-4-004
Date 4-9-85

Depth	Description	Log or Class	Blow Count	Core Recov. & Loss	Box or Sample No.	Remarks
34	GRAY MEDIUM TO COARSE SAND, TRACE SILT, VERY DENSE, SATURATED					HOLE WAS REAMED W/ A 4 7/8" TRI-CONE BIT.
35						4 1/2" O.D. steel casing was temporarily installed to 143.6'.
136						The bentonite mud was flushed from the casing w/ potable water.
137						
138						
139						A 2" dia. PVC piezometer was installed to 143'. Flush-joint, thread-coupled.
140					139.8	
141			21/36/50/4"	9"/16"	SS-19	Bottom 20' is .010 machine-slotted screen.
142					141.3	Gravel pack w/ quartz sand to 120.0'.
143						Bentonite pellets 120.0' to 117.5'.
144	LIMESTONE					143.6
145	TOTAL DEPTH 143.6					HOLE COLLAPSED ABOVE THE BENTONITE SEAL TO 40' BELOW G.S.
146						GROUT 0' TO 40'.
147						WATER LEVEL IN PIEZOMETER - IMMEDIATELY AFTER INSTALLATION 59.6' BELOW G.S. 10:00 am 4-15-85.
148						T.O.P. IS 0.2' BELOW G.S.
149						4-17-85 11:15 am 38.9' BELOW T.O.P.

11479

Burns & McDonnell

Form TS-GT-2-2

AUG 04 '93 08:37AM FYD STL

Drilling Log

Project Name: WESTLAKE						Boring No.: D-93	
Project No.: 84-075-4-004						Page: 1 of 8	
Ground Elevation: 450.70	Location: West Central Section of Site - Fig I-2					Total Footage: 169.2	
Drilling Type	Hole Size	Overburden Footage	Bedrock Footage	No. of Samples	No. Core Boxes	Depth To Water	Date Measured
WASH BORE	4 7/8"	118.0	1.2	16	0	SEE REMARKS	—
Drilling Co.: SUBSURFACE CONSTRUCTION (WABASH)				Driller (s): GARY MILES			
Drilling Rig: CME 750, ATV				Type of Penetration Test: STANDARD			
Date: 4-15-85	To: 4-18-85			Field Observer (s): GLEN ENNSTMANN			

Depth	Description	Class.	Blow Count	Recov.	Sample or Box No.	Remarks
1	GRAY TO BROWN SILTY CLAY, AND SAND, SOME GRAVEL AND FEW BOULDERS, MOIST (FILL)					6" H.S. AUGER 0.0' TO 3.0'. 5" CASING SET TO 8'. 4 7/8" TRI-CONE WASH BORE 8.0' TO BENTONITE DRILLING MUD.
2						
3						
4						
5					5.0	
6			2/3/5	7" / 18"	SS-1	
7					6.5	
8						STOPPED 4-15-85. RESUMED 4-16-85
9						
10					10.0	
11			5/3/4	0" / 18"	SS-2	NO RECOVERY (PROBABLY A PIECE OF GRAVEL IN THE SPOON TIP)
12					11.5	
13						
		A-56				

TECHNICAL SERVICES
GEOTECHNICAL DEPARTMENT

Drilling Log (continued)

Boring No. B-93
Project Name WESTLAKE
Page 2 of 8
Project No. 84-075-4-004
Date 4-15-85

Depth	Description	Log or Class	Blow Count	Core Recov. & Loss	Box or Sample No.	Remarks
15	GREENISH BROWN FINE SAND, SOME MEDIUM SAND, MEDIUM DENSE, MOIST, TRACE SILT		5/8/9	8" / 18"	15.0 SS-3 16.5	
16						
17						
18						
19						
20	BROWN MEDIUM SAND, SOME FINE SAND, MEDIUM DENSE, SATURATED		9/10/11	9" / 18"	20.0 SS-4	
21						
22						
23	BROWN COARSE SAND SEAM 22.0 - 22.4					
24	BROWN MEDIUM TO COARSE SAND, MEDIUM DENSE, SATURATED					
25			6/9/12	9" / 18"	25.0 SS-5	
26					26.5	
27	SEVERAL COARSE SAND AND FINE GRAVEL SEAMS, 26.0 TO 30.0					
28						
29						
30		A-57	10/19/14	9 / 18"	30.0 SS-6	

TECHNICAL SERVICES
GEOTECHNICAL DEPARTMENT

Drilling Log (continued)

Boring No. D-93
Project Name WESTLAKE
Page 3 of 8
Project No. 84-675-4-004
Date 4-15-85

Depth	Description	Log or Class	Blow Count	Core Recov. & Loss	Box or Sampler No.	Remarks
31.5	BROWN MEDIUM TO COARSE SAND MEDIUM DENSE, SATURATED				SS-6	
35.0	GRAY-BROWN FINE TO MEDIUM SAND, TRACE SILT, FEW THIN GRAY CLAY SEAMS, DENSE, SATURATED		9/17/18	10"/18"	SS-7	
36.5						
40.0	GRAY COARSE SAND, SOME MEDIUM SAND, TRACE GRAVEL, MEDIUM DENSE, SATURATED		8/13/14	8"/18"	SS-8	5.0
41.5						
45.0			9/14/14	9"/18"	SS-9	5.0
46.5						

A-58

TECHNICAL SERVICES
GEOTECHNICAL DEPARTMENT

Drilling Log (continued)

Boring No. D-93
Page 4 of 8
Project Name WESTLAKE
Project No. 84-075-4-004
Date 4-15-85

Depth	Description	Log of Class	Blow Count	Core Recov. & Loss	Box or Sample No.	Remarks
49	GRAY COARSE SAND, SOME MEDIUM SAND, TRACE GRAVEL, MEDIUM DENSE, SATURATED					
50	GRAY SILTY FINE SAND, SOME MEDIUM SAND, VERY DENSE, SATURATED		18/25/26	15"/18"	50.0 SS-10 51.5	
51						
52						
53						
54						
55						
56						
57						
58	FINE GRAVEL, SOME SAND AND COARSE GRAVEL, SATURATED					
59						
60	GRAY SILTY FINE SAND, SOME SILTY MEDIUM SAND SEAMS, DENSE TO VERY DENSE, SATURATED		14/25/20	13"/18"	60.0 SS-11 61.5	S.O.
61						
62						
63						
64						

A-59

TECHNICAL SERVICES
GEOTECHNICAL DEPARTMENT

Drilling Log (continued)

Boring No. D-93
Project Name WESTLAKE
Page 5 of 8
Project No. 84-075-4-004
Date 4-15-85

Depth	Description	Log or Class	Blow Count	Core Recov. & Loss	Box or Sample No.	Remarks
66	GRAY SILTY FINE SAND, SOME SILTY MEDIUM SAND SEAMS DENSE TO VERY DENSE, SATURATED					
67						
68						
69						
70					60.0	
			17/34/28	8"/18"	SS-12	
71					61.5	
72						
73						
74						
75						
76	FINE GRAVEL AND SAND, SOME COARSE GRAVEL					
77	GRAY MEDIUM TO COARSE SAND, TRACE FINE TO COARSE GRAVEL, DENSE, SATURATED					
78						
79						
80					80.0	
			14/25/24	14"/18"	SS-13	
81		A-6Q			81.5	

TECHNICAL SERVICES
GEOTECHNICAL DEPARTMENT

Drilling Log (continued)

Boring No. D-93
Project Name WESTLAKE
Page 6 of 8
Project No. 84-075-4-004
Date 4-15-85

Depth	Description	Log or Class	Blow Count	Core Recov. & Loss	Box or Sample No.	Remarks
83	FINE TO COARSE GRAVEL					
84	GRAY-BROWN COARSE SAND: SOME FINE GRAVEL, DENSE, SATURATED					SLOWER DRILLING RATE AND MUCH GREATER CIRCULATION LOSS 80' TO
85	COARSE GRAVEL SEAM 85.5' TO 86.0'					
86						
87						
88						
89	—					
90			13/16/19	9"/18"	90.0	
91					SS-14	
91.5						STOPPED 4-16-85 RESUMED 4-17-85
92	— — — — — —					
93	GRAY-BROWN COARSE SAND AND FINE GRAVEL, SOME COARSE GRAVEL, FEW THIN (1" TO 12" THICK) SAND SEAMS, VERY DENSE, SATURATED					
94						
95						
96						
97						
98						
		A-61				

TECHNICAL SERVICES
GEOTECHNICAL DEPARTMENT

Drilling Log (continued)

Boring No. D-93
Project Name WESTLAKE
Page 7 of 8
Project No. 84-075-4-004
Date 4-15-85

Depth	Description	Log or Class	Blow Count	Core Recov. & Loss	Box or Sample No.	Remarks
100	GRAY-BROWN COARSE SAND AND FINE GRAVEL, SOME COARSE GRAVEL FEW SAND SEAMS (1" TO 12" THICK) VERY DENSE, SATURATED		18/24/48	8" / 18"	100.0	
101					SS-15	
102					104.5	
103						
104						
105						
106	COBBLE 106.0 TO 106.5'					
107	COARSE SAND, TRACE FINE GRAVEL					
108						
109	FINE TO COARSE GRAVEL, SOME SAND					
110	COBBLE 110.0' TO 110.4'.					
111						
112	GRAY COARSE SAND AND FINE GRAVEL, SOME COARSE GRAVEL, DENSE, SATURATED					
113						
114						
115		A-62	15/22/27	5" / 18"	SS-16	STOPPED 4-17-85 RESUMED 4-18-85.

Burns & McDonnell
Engineers-Architects-Consultants

Drilling Log, continued

Boring No. D-93

Project Name WESTLAKE

Page 8 of 8

Project No. 84-075-4-004

Date 4-15-85

Depth	Description	Log or Class	Blow Count	Core Recov. & Loss	Box or Sample No.	Remarks
117	GRAY COARSE SAND AND FINE GRAVEL, SOME COARSE GRAVEL, DENSE, SATURATED			1165	SS-16	
118	FRACTURED LIMESTONE					4½" dia. steel casing was temporarily installed to 112'. Hole collapsed to 112'.
119	LIMESTONE					A 2" dia. PVC flush-joint, threaded coupling piezometer was installed to 112'. The casing was pulled back to 90' and the hole collapsed to 91'. Bentonite pellets 91' to 89.6'. Grout 89.6' to surface. 20' of .010 machine-slotted screen. T.O.P. is 3.3' above ground surface.
120	TOTAL DEPTH 119.2'					
121						
122						
123						
124						
125						
126						
127						
128						Water level in piezometer immediately after installation 4-18-85 1:30pm is 15.4' below T.O.P.
129						
130						
131						
132						

A-63

Drilling Log

Project Name: WESTLAKE			Boring No.: D-94
Project No.: 84-075-4-004			Page: 1 of 7
Ground Elevation: 442.68	Location:		Total Footage: 109.0

Drilling Type	Hole Size	Overburden Footage	Bedrock Footage	No. of Samples	No. Core Boxes	Depth To Water	Date Measured
WASH BORE	3 7/8"	108.8	0.2	15	0	SEE REMARKS	—

Drilling Co.: SUBSURFACE CONSTRUCTORS (WABASH)		Driller (s): GARY MILES	
Drilling Rig.: CME 750, ATV		Type of Penetration Test: STANDARD	
Date: 4-18-85	To: 4-24-85	Field Observer (s): GLEN ERNSTMANN	

Depth	Description	Class.	Blow Count	Recov.	Sample or Box No.	Remarks
0	BROWN SANDY SILT AND ORGANIC MATERIAL, MOIST					4" solid auger 0' to 5'. 5' of 4" casing set. Wash bore w/ 3 7/8" tri-cone roller bit 5' to
1	BROWN FINE TO MEDIUM SAND, TRACE SILT, VERY LOOSE TO VERY DENSE, SATURATED BELOW 2'.					
2						
3						
4						SATURATED MATERIAL @ APPROX. 3'.
5					5.0	
			1/2/3	17"		
6				18"	SS-1	
					6.5	STOPPED 4-18-85
7						RESUMED 4-19-85
8						
9						
10					10.0	
			3/5/7			
11				6" 18"	SS-2	
					11.5	
12						
13						

TECHNICAL SERVICES
GEOTECHNICAL DEPARTMENT

Drilling Log (continued)

Boring No. D-94
Project Name WESTLAKE
Page 2 of 7
Project No. 84-075-4-004
Date 4-18-85

Depth	Description	Log or Class	Blow Count	Core Recov. & Loss	Box or Sample No.	Remarks
15	BROWN FINE TO MEDIUM SAND, TRACE SILT, VERY LOOSE TO VERY DENSE, SATURATED		11/22/28	7"/18"	15.0 SS-3 16.5	
20			18/29/31	15"/18"	20.0 SS-4 21.5	
25			9/11/15	15"/18"	25.0 SS-5 26.5	
28	GRAY-BROWN FINE TO COARSE SAND, FEW COARSE SAND SEAMS (1" TO 2" THICK), MEDIUM DENSE, SATURATED		12/8/7	9"/18"	30.0 SS-6	

TECHNICAL SERVICES
GEOTECHNICAL DEPARTMENT

Drilling Log (continued)

Boring No. D-94
Project Name WESTLAKE
Page 3 of 7
Project No. 84-075-4004
Date 4-18-85

Depth	Description	Log or Class	Blow Count	Core Recov. & Loss		Box or Sample No.	Remarks
32	GRAY-BROWN FINE TO COARSE SAND, FEW COARSE SAND SEAMS (1" TO 2" THICK), MEDIUM DENSE, SATURATED				31.5	SS-6	
33							
34	BROWN COARSE SAND, SOME MEDIUM TO FINE SAND, MEDIUM DENSE, SATURATED						
35					35.0		
36			9/13/12	8"/18"		SS-7	
37					36.5		
38							
39							
40					40.0		
41			6/8/9	6"/18"		SS-8	
42					41.5		
43							
44							
45	GRAY MEDIUM TO COARSE SAND, MEDIUM DENSE, SATURATED				45.0		
46			16/12/14	9"/18"		SS-9	
47					46.5		

TECHNICAL SERVICES
GEOTECHNICAL DEPARTMENT

Drilling Log (continued)

Boring No. D-94
Project Name WESTLAKE
Page 4 of 7
Project No. B4-075-4-004
Date 4-18-85

Depth	Description	Log or Class	Blow Count	Core Recov. & Loss	Box or Sample No.	Remarks
49	GRAY MEDIUM TO COARSE SAND, MEDIUM DENSE, SATURATED					
50	GRAY COARSE SAND, SOME MEDIUM SAND, MEDIUM DENSE TO DENSE, SATURATED		7/10/10	10"/18"	50.0 SS-10	
51						
52					51.5	
53	GRAVEL SEAM 53.0' TO 53.2'					
54						
55						
56						
57	GRAVEL SEAM 57.0' TO 57.8'					
58						
59						
60			15/16/16	4"/18"	60.0 SS-11	
61					61.5	
62						
63						
64						

TECHNICAL SERVICES
GEOTECHNICAL DEPARTMENT

Drilling Log (continued)

Boring No. D-74

Project Name WESTLAKE

Page 5 of 7

Project No. 84-075-4-004

Date 4-18-85

Depth	Description	Log or Class	Blow Count	Core Recov. & Loss	Box or Sample No.	Remarks
66	GRAY COARSE SAND, SOME MEDIUM SAND, MEDIUM DENSE TO DENSE, SATURATED					
67	GRAVEL SEAM 67.0 TO 67.4.					
68						
69						
70			13/20/19	7"/18"	70.0 SS-12	
71					71.5	STOPPED 4-19-85 RESUMED 4-22-85
72	GRAVEL SEAM 72' TO 72.3'					
73						
74						
75						
76						
77						
78						
79						
80			9/20/22	6"/18"	80.0 SS-13	
81					81.5	

TECHNICAL SERVICES
GEOTECHNICAL DEPARTMENT

Drilling Log (continued)

Boring No. D-94

Project Name WESTLAKE

Page 6 of 7

Project No. 84-075-4-004

Date 4-18-85

Depth	Description	Log or Class	Blow Count	Core Recov. & Loss	Box or Sample No.	Remarks
83	GRAY COARSE SAND, SOME MEDIUM SAND, MEDIUM DENSE TO DENSE, SATURATED					
84						
85						
86	GRAVEL SEAM 86.0' TO 86.4'					
87	GRAY FINE TO COARSE SAND, VERY DENSE, SATURATED					
88						
89						
90	SILTY SAND SEAM 90.4 TO 90.8		22/32/36	7"/18"	SS-14	
91						
92						
93						
94						
95						
96						
97						
98						

Drilling Log, continued

Boring No. D-94

Project Name WESTLAKE

Page 7 of 7

Project No. 84-075-4-004

Date 4-18-85

Depth	Description	Log or Class	Blow Count	Core Recov. & Loss	Box or Sample No.	Remarks
100	GRAY FINE TO COARSE SAND, VERY DENSE, SATURATED		14/28/27	4" / 18"	SS-15	
101						
102						
103						
104						
105						STOPPED 4-23-85 RESUMED 4-24-85
106						
107						
108	GRAVEL					A 2" PVC, flush-joint, threaded couple piezometer was installed To 106'. 20' of .010 machine slotted screen. Hole collapsed to a depth of 65'. Bentonite pellets 5' TO 64'. Grout 64' to surface. water level immediately after installation 4-23-85, 2:00 pm 2.6' below T.O.P. T.O.P is 4.0' above G.S.
109	LIMESTONE					
110	TOTAL DEPTH 109.0'					
111						
112						
113						
114						
115						

Drilling Log

Project Name: WESTLAKE						Boring No.: D-95	
Project No.: 84-075-4-004						Page: 1 of 7	
Ground Elevation: 453.09	Location: NE of site ; Figure I-2					Total Footage: 101.0	
Drilling Type	Hole Size	Overburden Footage	Bedrock Footage	No. of Samples	No. Core Boxes	Depth To Water	Date Measured
SEE REMARKS	3 7/8"	100.8'	0.2'	15	0	See Remarks	
Drilling Co.: SUBSURFACE CONSTRUCTORS (WABASH)				Driller (s): GARY JOHANNING			
Drilling Rig.: CME 55, TRUCK				Type of Penetration Test: STANDARD			
Date: 4-22-85	To:			Field Observer (s): G. ERNSTMANN			

Depth	Description	Class.	Blow Count	Recov.	Sample or Box No.	Remarks
1	GRAVEL					6" HOLLOW AUGERS 0' TO 20'.
2	DARK BROWN SAND AND GRAVEL, MOIST (FILL)					
3						
4						
5					5.0	
6			3/6/9	8" 18"	SS-1	
7					6.5	
8						
9	BROWN TO BLACK SILT, SAND AND GRAVEL, VERY LOOSE, MOIST					
10					10.0	
11			2/3/2	9" 18"	SS-2	
12					11.5	
13	BROWN FINE SANDY SILT, LOW PLASTICITY, VERY LOOSE, MOIST - SATURATED BELOW APPROX. 15'					

TECHNICAL SERVICES
GEOTECHNICAL DEPARTMENT

Drilling Log (continued)

Boring No. D-95
Project Name WESTLAKE
Page 2 of 7
Project No. 84-075-4-004
Date 4-22-85

Depth	Description	Log or Class	Blow Count	Core Recov. & Loss	Box or Sample No.	Remarks
15	BROWN FINE SANDY SILT, LOW PLASTICITY, VERY LOOSE, MOIST - SATURATED BELOW APPROX. 15'		2/2/3	6" / 18"	15.0 SS-3 16.5	WATER LEVEL @ 13.6' BELOW G.S. 7:15 am 4-23-85 (HOLE SAT OVERNIGHT AFTER BEING DRILLED 20')
16						
17						
18	— — — — — — —					
19	BROWN FINE TO MEDIUM SAND, LOOSE TO MEDIUM DENSE, SATURATED					
20					20.0	
21			1/3/3	6" / 18"	SS-4 21.5	STOPPED 4-22-85 RESUMED 4-23-85 SET 4½" CASING AND BEGAN WASH BORING W/ 3⅞" DIA. TRI-CONE BIT,
22						
23						
24					24.0	
25	SILTY SAND SEAM 25.0' TO 25.3'			12" / 18"	SS-5	
26	— — — — — — —		4/13/15		26.5	
27	BROWN SILTY FINE TO MEDIUM SAND, DENSE, SATURATED					
28						
29					29.0	
30			15/21/20	12" / 18"	SS-6 30.5	

TECHNICAL SERVICES
GEOTECHNICAL DEPARTMENT

Drilling Log (continued)

Boring No. D-95
Project Name WESTLAKE
Page 3 of 7
Project No.
Date 4-23-85

Depth	Description	Log or Class	Blow Count	Core Recov. & Loss	Box or Sample No.	Remarks
32	BROWN SILTY FINE TO MEDIUM SAND, DENSE, SATURATED					
33						
34			11/16/23	14"/18"	34.2 SS-7	
35					35.5	
36						
37	— — — — — —					
38	GRAY FINE TO MEDIUM SAND, MEDIUM DENSE TO VERY DENSE, SATURATED					
39			4/9/14	8"/18"	39.0 SS-8	
40					40.5	
41						
42						
43						
44			9/4/5	6"/18"	44.0 SS-9	
45					45.5	
46						
47	FEW THIN COARSE SAND SEAMS 47' TO 49'.					

TECHNICAL SERVICES
GEOTECHNICAL DEPARTMENT

Drilling Log (continued)

Boring No. D-95

Project Name WESTLAKE

Page 4 of 7

Project No. 84-075-4004

Date

Depth	Description	Log or Class	Blow Count	Core Recov. & Loss	Box or Sample No.	Remarks
49	GRAY FINE TO MEDIUM SAND MEDIUM DENSE TO VERY DENSE, SATURATED		13/29/43	5"/18"	49.0	
50					SS-10	
51					50.5	
52						
53						
54	GRAY FINE TO COARSE SAND, TRACE FINE GRAVEL, DENSE					
55						
56						
57						
58						
59			14/13/24	6"/18"	59.0	
60					SS-11	
61					60.5	
62						
63						
64						

TECHNICAL SERVICES
GEOTECHNICAL DEPARTMENT

Drilling Log (continued)

Boring No. D-95

Project Name WESTLAKE

Page 5 of 7

Project No. 84-075-4-004

Date

Depth	Description	Log or Class	Blow Count	Core Recov. & Loss	Box or Sample No.	Remarks
66	— — — — — —					
67	GRAY FINE TO MEDIUM SAND, VERY DENSE, SATURATED					
68						
69			24/50/6"	10"/12"	69.0 SS-12	
70					70.0	
71						
72	GRAVEL SEAM 72.0'-72.2'					
73						
74						
75						
76						
77	— — — — — — —					
78	GRAY COARSE SAND, SOME MEDIUM AND FINE SAND, VERY DENSE					
79					79.0	
80			16/25/27	7"/18"	SS-13	
81					80.5	

Drilling Log, continued

Boring No. D-95

Project Name WESTLAKE

Page 6 of 7

Project No. 84-075-4-004

Date

Depth	Description	Log or Class	Blow Count	Core Recov. & Loss	Box or Sample No.	Remarks
83	GRAY COARSE SAND, SOME MEDIUM AND FINE SAND, VERY DENSE, SATURATED					
84	GRAVEL SEAM 83.5 TO 83.8					
85						
86						
87						
88						
89			15/23/29	7"/18"	89.0 SS-14	
90					90.5	STOPPED 4-23-85 RESUMED 4-24-85
91						
92						
93						
94						
95	TRACE OF COARSE GRAVEL 95.5 TO					
96						
97						
98						

TECHNICAL SERVICES
GEOTECHNICAL DEPARTMENT

Drilling Log (continued)

Boring No. D-95

Project Name WESTLAKE

Page 7 of 7

Project No. 84-075-4-004

Date

Depth	Description	Log or Class	Blow Count	Core Recov. & Loss		Box or Sample No.	Remarks
100	GRAY COARSE SAND, SOME MEDIUM AND FINE SAND, VERY DENSE, SATURATED		17/23/43	7"/18"	99.0	SS-15	
101	LIMESTONE TOTAL DEPTH 101.0'				101.5		4-2" dia., flush-joint, threaded couple PVC piezometer was installed to 101.0'. Bottom 20' is .010 machine slotted screen. Hole collapsed to 42' after PVC installed. Grout 42' to surface. T.O.P. is 3.3' above ground surface Water level in piezometer immediately after installation 4-29-85 3:00pm is 16.7' below T.O.P.
102							
103							
104							
105							
106							
107							
108							
109							
110							
111							
112							
113							
114							
115							

LOG OF TEST BORING NO.: F-1-D

CLIENT: LAIDLAW/BRIDGETON
PROJECT: AUG 90 WELL INSTALL
PROJECT NUMBER: 89L46
LOCATION:

SURFACE ELEVATION:
BORING DEPTH: 79.5
DATE: 9-1-90

MSL ELEV	DEPTH FR LND SURF	SAMP DEPTH INTERVAL	TYPE	#	N	REC (ft)	DESCRIPTION OF MATERIAL	CLASS	FIELD INSTRUMENTS	DRILLING AND SAMPLING NOTES
0.0	--0									
		0-5	SB	1	-	4.8	Top 4' dark yellowish brown (10YR-4/4) lean CLAY w/ sand, some silt and little gravel; (FILL)		RAD = < 0.01 mR/hr.	
							Bottom 1' dk. grey (5Y 4/1) SILT w/ some black colored intermixing.		TIP = 0 ppm	
-5.0	--5							FILL		
		5-10	SB	2	-	3.5	Intermixed grey silt (as above) w/ gravel, sand, and some clay (FILL)		RAD = < 0.01 mR/hr.	
									TIP = 0 ppm	
-10.0	--10							-----		
		10-15	SB	3	-	3.5	Mottled dk. grey (5Y 4/1), greenish grey (5BG 5/1) & dk. yellowish brown (10YR 4/4) lean CLAY w/ some silt.		RAD = < 0.01 mR/hr. TIP = 0 ppm	Becomes v.moist to wet at 13.5'.
-15.0	--15							cl		
		15-20	SB	4	-	3.9	Same as above w/ increasing silt content w/ depth.	-----	RAD = < 0.01 mR/hr.	
									TIP = 0 ppm	
-20.0	--20							ml		
		20-25	SB	5	-	4.8	Top is dk. Grey (2.5Y 4/0) SILT w/ little clay.		RAD = < 0.01 mR/hr.	
							Bottom 2' grey (5Y 4/1), v.fine to fine, SAND stratified (lamina) w/ darker layers.	-----		
-25.0	--25									
		25-30	SB	6	-	2.0	Dk. grey (5Y 4/1), f. to v. fine SAND a litter coarse than above.		RAD = < 0.01 mR/hr.	
-30.0	--30	30-32	SS	7	-	1.5	Same as above.			Water added and maintained in augers to prevent sand blows.
		32.5-34.5	SS	8	38	1.1	Same as above.			
-35.0	--35	34.5-36.5	SS	9	50	1.0	Grey (5Y 5/1), f. to v.fine SAND; contains little gravel upto 1/4" in diameter bottom 3".			50 blows for 6"
		37.5-39.5	SS	10	100	0.9	Grey (5Y 5/1), f. to v.fine SAND very dense (without gravel).	sp		
-40.0	--40	39.5-41.5	SS	11	11	0.8	Same as above but not as dense although density seems higher than blow counts indicate.		SAMPLE #12 OXY = 21.1%	
		42.5-44.5	SS	12	18	0.8	Grey (5Y 5/1), v.f. to c., poorly graded SAND w/ trace of f. gravel.		H2S = 1 ppm CO = 0 ppm	
-45.0	--45	44.5-46.5	SS	13	86	0.7	Same as above.		EXP = 0% TIP = 0 ppm	
-50.0	--50	49.5-51.5	SS	14	19	1.4	Top is same as above. Bottom 12" Dark grey (5Y 4/1) v.f. to fine SAND w/ some v. dark grey layers (?) stratified or intermixed (?).			

DRILLING DATA

START DATE: 8/6/90
COMPLETION DATE: 8/8/90
LOGGED BY: LDA
DRILLING METHOD: 4-1/4" I.D. HSA's
DRILLING CONTRACTOR: BROTCKE ENGR.

WATER LEVEL INFORMATION

DEPTH AT COMPLETION: approx. 20'
LATER TIME/DEPTH: 15 hrs / 25.2'
LATER TIME/DEPTH:
CAVE IN DEPTH:
DRILLING LOSSES:

LOG OF TEST BORING NO.: F-1-D

CLIENT: LAIDLAW/BRIDGETON
PROJECT: AUG 90 WELL INSTALL
PROJECT NUMBER: 89L46
LOCATION:

SURFACE ELEVATION:
BORING DEPTH: 79.5
DATE: 9-2-90

MSL ELEV	DEPTH FR LND SURF	SAMP DEPTH INTERVAL	TYPE	#	N	REC (ft)	DESCRIPTION OF MATERIAL	CLASS	FIELD INSTRUMENTS	DRILLING AND SAMPLING NOTES
-55.0	--55	54.5-56.5	SS	15	21	1.4	Upper 3.5" v.dark grey (2.5Y 3/0) lean CLAY w/ no to some sand. Bottom v.dark grey, v.fine to c, stratified SAND; find pc of wood.	cl		
-60.0	--60	59.5-61.5	SS	16	27	0.8	Very dark grey (2.5Y 3/0), v.fine to coarse, poorly graded SAND.	sp		
-65.0	--65	64.5-66.5	SS	17	37	2.0	2" v.f. to f. v.dark grey SAND. 2" v.f. to v.c., v.dk grey SAND. 3" v.dk grey lean CLAY. 1/2" fine GRAVEL; sub rnded. 1" v.c. to c., grey SAND. Bottom f. to v.f., v.dk grey SAND.	cl gp		
-70.0	--70	69.5-71.5	SS	18	28	0.0	No recovery.			
-75.0	--75	74.5-76.5	SS	19	25	1.8	Top is v.dark to dark grey (2.5Y-3/0 to 4/0), m. to v.f. SAND. Middle 3" is v.f. to v.c. SAND w/ tr. to little v.f. gravel. Bottom 7" is black to v. dk. grey (2.5Y 2/0 to 3/0) v.f. to f. SAND w/ silt & organics (black color).	sp		
-80.0	--80	78.5-79.5	SS	20	100	0.9	Fine to coarse, poorly graded GRAVEL (rnded to angular) w/ v.f. to c. sand. Limestone bedrx @ 79.4	gp ls		100 blows for last 1"
							R.O.B. = 79.5'			Auger refusal at 79.5'
-85.0	--85									
							Piezometer F-1-D installed.			
-90.0	--90									
-95.0	--95									
-100.0	--100									
-105.0	--105									

DRILLING DATA
START DATE: 8/6/90
COMPLETION DATE: 8/8/90
LOGGED BY: LDA
DRILLING METHOD: 4-1/4" I.D. HSA's
DRILLING CONTRACTOR: BROTCKE ENGR.

WATER LEVEL INFORMATION
DEPTH AT COMPLETION: approx. 20'
LATER TIME/DEPTH: 15 hrs / 25.2'
LATER TIME/DEPTH:
CAVE IN DEPTH:
DRILLING LOSSES:

Foth & Van Dyke

DTW = 28.22 from PVC TOP

Client: Laidlaw/Bridgeton Scope I.D.: 8914 6-21
Project: 8/90 Well Installation Page: 1
Prepared by: L.D. Aughenbaugh Date: 8/9/90
Checked by: R.T. Bloese Date: 9/6/90

MONITORING WELL CONSTRUCTION DIAGRAM

Driller: Mike Foppe of Brotcke Engineering
Drilling Method: 4 1/4" I.D. HSA's
Well No.: F-1-D
Date Installed: 8/8/90

Coordinates: --

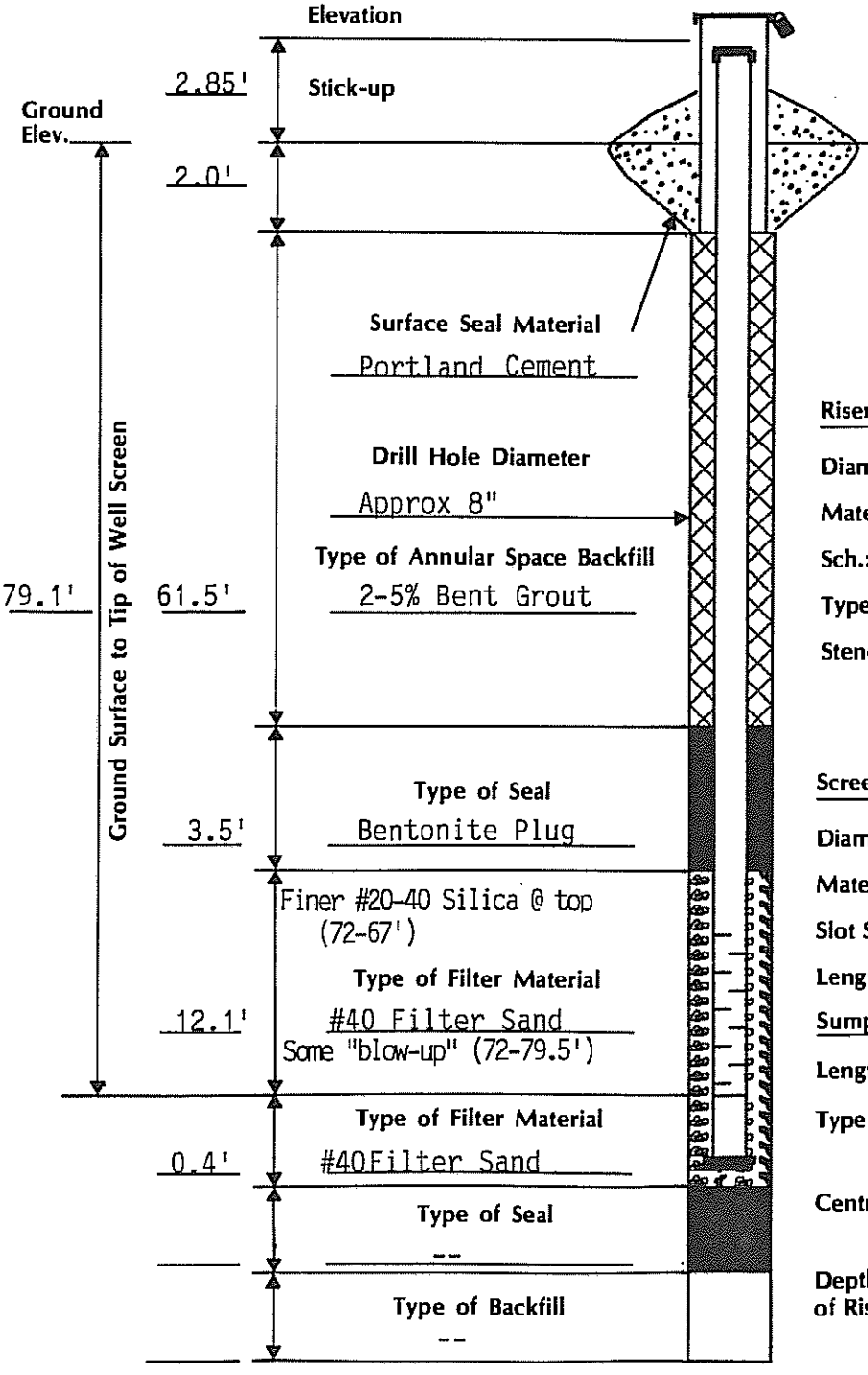

Protector Pipe:
Size: 4" x 4" x 5'
Material: Steel
Lock No.: --

Riser:
Diameter: 2"
Material: PVC
Sch.: 40
Type of Joints: flush threaded
Stenciled? No

Screen:
Diameter: 2"
Material: PVC
Slot Size: 10 slot
Length: 5'

Sump:
Length: 5"
Type of Cap: Point/sump

Centralizer: Used ☐
Not Used ☒

Depth to Water From Top of Riser at Completion: Approx. 20'

NOTE: Not to Scale

LOG OF TEST BORING NO.: F-1-S

CLIENT: LAIDLAW/BRIDGETON
PROJECT: AUG 90 WELL INSTALL
PROJECT NUMBER: 89146
LOCATION:

SURFACE ELEVATION:
BORING DEPTH: 34.0
DATE: 9/3/90

MSL ELEV	DEPTH FR LND SURF	SAMP DEPTH INTERVAL	TYPE	#	N	REC (ft)	DESCRIPTION OF MATERIAL	CLASS	FIELD INSTRUMENTS	DRILLING AND SAMPLING NOTES
0.0	--0									
-5.0	--5									
-10.0	--10	10	FA						TIP = 10.1 ppm maximum reading by headspace.	Notice petroleum like odor.
							NOTE: Blind drill to 34'. See log for F-1-D which is located approx. 7' Northwest of this location.			
-15.0	--15									
-20.0	--20	20	FA						TIP = 0.0 ppm by headspace analysis.	Notice slight earthy but sharp like odor in soil
-25.0	--25									
-30.0	--30									
-35.0	--35						E.O.B. = 34.0'			
-40.0	--40									
-45.0	--45									
-50.0	--50									
	--									

DRILLING DATA
START DATE: 8/9/90
COMPLETION DATE: 8/9/90
LOGGED BY: LDA
DRILLING METHOD: 4-1/4" I.D. HSA's
DRILLING CONTRACTOR: BROTCKE ENGR.

WATER LEVEL INFORMATION
DEPTH AT COMPLETION:
LATER TIME/DEPTH:
LATER TIME/DEPTH:
CAVE IN DEPTH:
DRILLING LOSSES: roughly 150 gal

Foth & Van Dyke

DTW = 27.98 from PVC Top

Client: Laidlaw/Bridgeton — Scope I.D.: 89L46-21
Project: 8/90 Well Installation — Page: 1
Prepared by: L.D. Aughenbaugh — Date: 8/10/90
Checked by: R.T. Bloese — Date: 9/6/90

MONITORING WELL CONSTRUCTION DIAGRAM

Driller: Mike Foppe of Brotcke Engineering — Well No.: F-1-S
Drilling Method: 4 1/4" I.D. HSA's — Date Installed: 8/9/90

Coordinates: --

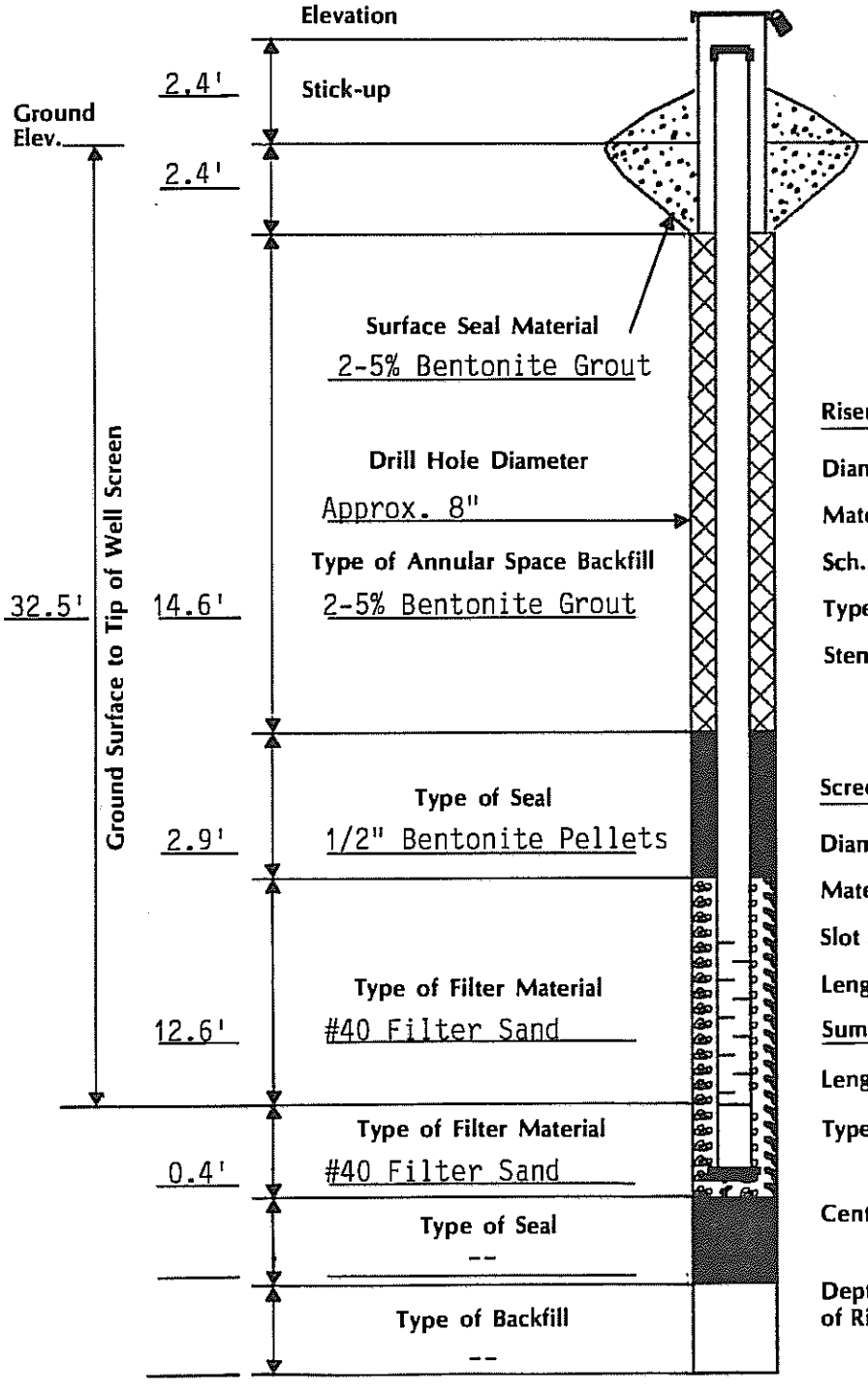

Protector Pipe:
Size: 4" x 4" x 5'
Material: Steel
Lock No.: --

Riser:
Diameter: 2"
Material: PVC
Sch.: 40
Type of Joints: Flush threaded
Stenciled? NO

Screen:
Diameter: 2"
Material: PVC
Slot Size: 10 slot
Length: 10 feet

Sump:
Length: 5"
Type of Cap: Point/sump

Centralizer: Used ☐ Not Used ☒

Depth to Water From Top of Riser at Completion: --

NOTE: Not to Scale

LOG OF TEST BORING NO.: F-2

CLIENT: LAIDLAW/BRIDGETON
PROJECT: AUG 90 WELL INSTALL
PROJECT NUMBER: 89L46
LOCATION:

SURFACE ELEVATION:
BORING DEPTH: 25.0
DATE: 9-3-90

MSL ELEV	DEPTH FR LND SURF	SAMP DEPTH INTERVAL	TYPE	#	N	REC (ft)	DESCRIPTION OF MATERIAL	CLASS	FIELD INSTRUMENTS	DRILLING AND SAMPLING NOTES
0.0	--0						Top is Brown (10YR 5/3) silt with some sand & clay; turns to Brown lean CLAY w/ silt later dk. brown (10YR 3/3); Grey v.f. SAND layer (lift ?) at 2.0'. See some crushed white limestone gravel at 4.5'			Underground utility running nearby approx. 15' (?).
		0-5	SB	1	-	2.8		FILL		
-5.0	--5							-----	TIP = 9.4 ppm maximum	Organics/sewer like odor noticed.
		5-10	SB	2	-	4.8	Brown (10YR 4/3) lean CLAY with little silt & trace of gravel; Bottom 1' is mottled brown, yell-brown(10YR 5/6) & grey (2.5YR 4/0) lean CLAY.	cl	TIP = 2.3 ppm max.	
-10.0	--10									
		10-15	SB	3	-	0.0	No recovery.	--?--	EXP = 28% LEL	First notice
									TIP = 220 ppm	strong petroleum & ligbter fluid like
-15.0	--15							ml	from cuttings	odors @ approx 13'
		15-20	SB	4	-	2.8	Dark Grey (2.5YR 4/0) SILT w/ some v.fine sand and some stratified CLAY layers (<2") 2" clay layer at 17.8'. Silt gradually coarsening to a v.f. SAND w/ little silt.	RAD = 0 mR/hr ----- cl -----	TIP = 471 ppm max.	Water added to lower EXP. level.
-20.0	--20									
		20-25	SB	5	-	2.7	Dark Grey (2.5YR 4/0), f. to v.f. clean SAND; very stiff.	sp	TIP = 930 ppm max.	Strong gasoline like odor.
-25.0	--25						E.O.B. = 25.0'	-----		
-30.0	--30									
-35.0	--35									
-40.0	--40									
-45.0	--45									
-50.0	--50									

DRILLING DATA
START DATE: 8/9/90
COMPLETION DATE: 8/9/90
LOGGED BY: LDA
DRILLING METHOD: 4-1/4" I.D. HSA's
DRILLING CONTRACTOR: BROTCKE ENGR.

WATER LEVEL INFORMATION
DEPTH AT COMPLETION: 13.5'
LATER TIME/DEPTH: 15 hrs / 14.9'
LATER TIME/DEPTH:
CAVE IN DEPTH:
DRILLING LOSSES:

Foth & Van Dyke

DTW = 16.73 from PVC Top

Client: Laidlaw/Bridgeton Scope I.D.: 89L46-21
Project: 8/90 Well Installation Page: 1
Prepared by: L.D. Aughenbaugh Date: 8/10/90
Checked by: R.T. Bloese Date: 9/6/90

MONITORING WELL CONSTRUCTION DIAGRAM

Driller: Mike Foppe of Brotcke Engineering Well No.: F-2
Drilling Method: 4 1/4" I.D. HSA's Date Installed: 8/10/90

Coordinates: --

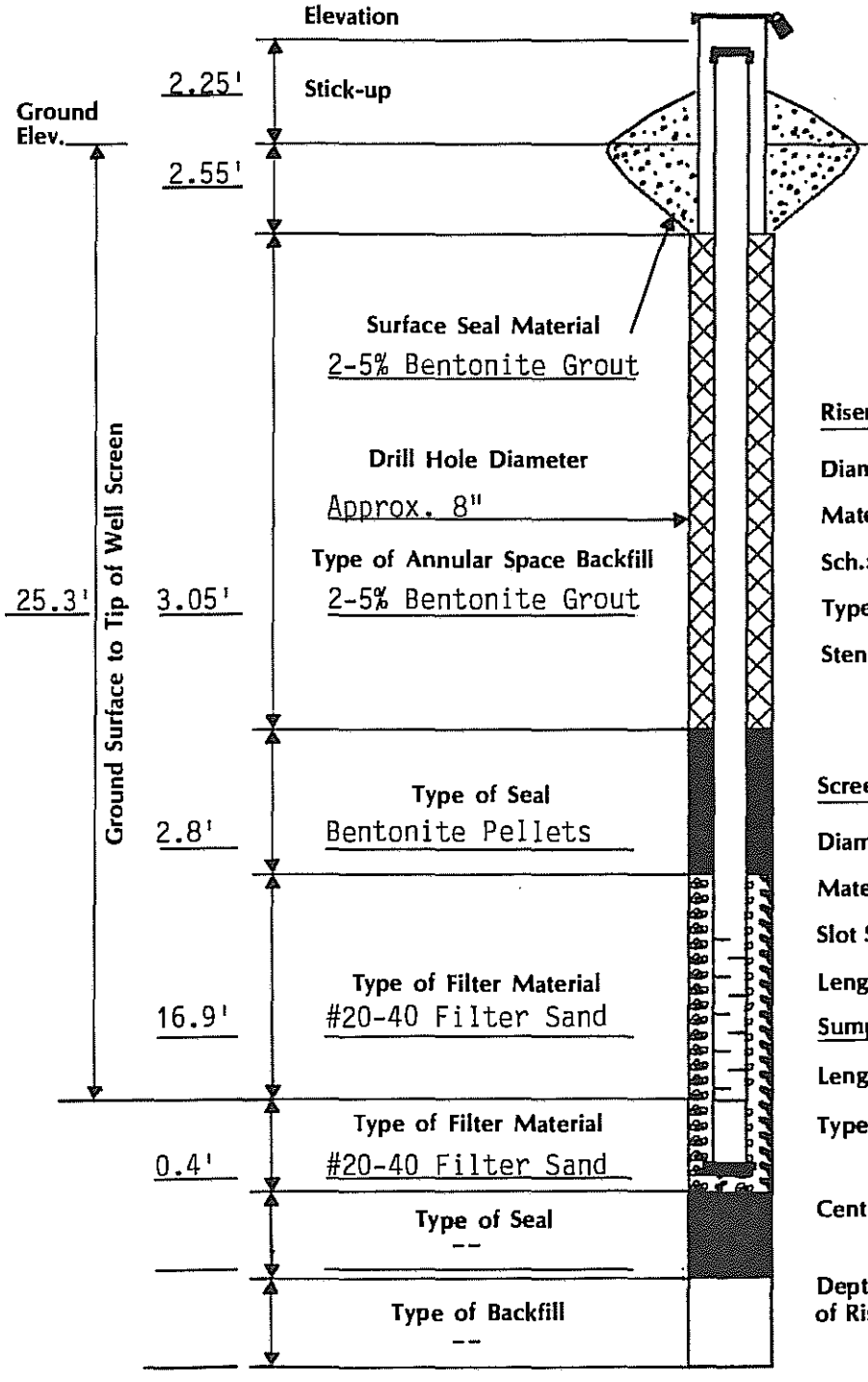

Protector Pipe:
Size: 6" x 6" x 5'
Material: Steel
Lock No.: --

Riser:
Diameter: 2"
Material: PVC
Sch.: 40
Type of Joints: Flush threaded
Stenciled? NO

Screen:
Diameter: 2"
Material: PVC
Slot Size: 10 slot
Length: 15 feet

Sump:
Length: 5"
Type of Cap: Point sump

Centralizer: Used ☐
Not Used ☒

Depth to Water From Top of Riser at Completion: 14'

NOTE: Not to Scale

LOG OF TEST BORING NO.: F-3

CLIENT: LAIDLAW/BRIDGETON
PROJECT: AUG 90 WELL INSTALL
PROJECT NUMBER: 89L46
LOCATION:

SURFACE ELEVATION:
BORING DEPTH: 46.5
DATE: 9-3-90

MSL ELEV	DEPTH FR LND SURF	SAMP DEPTH INTERVAL	TYPE	#	N	REC (ft)	DESCRIPTION OF MATERIAL	CLASS	FIELD INSTRUMENTS	DRILLING AND SAMPLING NOTES
0.0	--0						Top is Brown (10YR 4/3) lean CLAY w/ silt. 4" or refuse at 1.5'.	FILL	TIP = 5.7 ppm	
		0-5	SB	1	-	4.5	5" dk. grey (10YR 4/1) SILT with some v.f. sand & tr to little clay. Bottom 1.6' is Grey (10YR 5/1) v.f. to med., clean SAND; moist.	ml/sp		
-5.0	--5									
		5-10	SB	2	-	1.9	Dark grey SILT w/ v.f. SAND & tr. to little clay; moist.	ml	TIP < 1 ppm	
-10.0	--10									
		10-15	SB	3	-	2.4	Dark grey to grey, v.f. to f. SAND w/ silt; decreasing silt content with depth; moist.	sm / sp	TIP < 1 ppm	
-15.0	--15									
		15-20	SB	4	-	3.2	Top is dk. grey (10YR 4/1) to dk. greyish brown (10YR 4/2) SILT w/ some v.f. sand & little clay. Bottom 5" is dk. grey v.f. to fine SAND w/ little to tr silt, & clay.	ml	TIP < 1 ppm	
-20.0	--20									
		20-25	SB	5	-	4.0	Top 2.8' is grey (10YR 5/1) v.f. to f. SAND w/ little to trace silt. Bottom 1.2' is dk. brownish grey SILT/CLAY w/ tr. of v.f. sand.	sp/sm / ml/cl	TIP < 1 ppm	
-25.0	--25									
		25-30	SB	6	-	3.6	Top 2.2' is dk grey(10YR 4/1) SILT w/ tr. of clay. Bottom 1.4' is v.f. SAND; grey overall (10YR 5/1); moist.	ml	TIP = 3 ppm max.	
-30.0	--30									
		30-35	SB	7	-	3.9	Top is same as above becoming more silty. Bottom 1.3' is dk. grey (10YR 4/1) v.f. to fine SAND (color change from above); moist to wet.	sp	TIP = 3 ppm max.	Water added for pressure head.
-35.0	--35									
-40.0	--40	40-41.5	SS	8	22	1.5	Dk grey (10YR 4/1) v.f. to med. clean SAND.		TIP < 1 ppm	
-45.0	--45	45-46.5	SS	9	85	1.4	Same as above.		TIP < 1 ppm	85 blows for 11.5"
							E.O.B. = 46.5'			
-50.0	--50									

DRILLING DATA
START DATE: 8/10/90
COMPLETION DATE: 8/10/90
LOGGED BY: LDA
DRILLING METHOD: 4-1/4" I.D. HSA's
DRILLING CONTRACTOR: BROTCKE ENGR.

WATER LEVEL INFORMATION
DEPTH AT COMPLETION: approx. 33'
LATER TIME/DEPTH:
LATER TIME/DEPTH:
CAVE IN DEPTH:
DRILLING LOSSES:

Foth & Van Dyke

Client: Laidlaw/Bridgeton — Scope I.D.: 89L46-21
Project: 8/90 Well Installation — Page: 1
Prepared by: L.D. Aughenbaugh — Date: 8/10/90
Checked by: R.T. Bloese — Date: 9/6/90

MONITORING WELL CONSTRUCTION DIAGRAM

Driller: Mike Foppe of Brotcke Engineering — Well No.: F-3
Drilling Method: 4 1/4" I.D. HSA's — Date Installed: 8/10/90

Coordinates: --

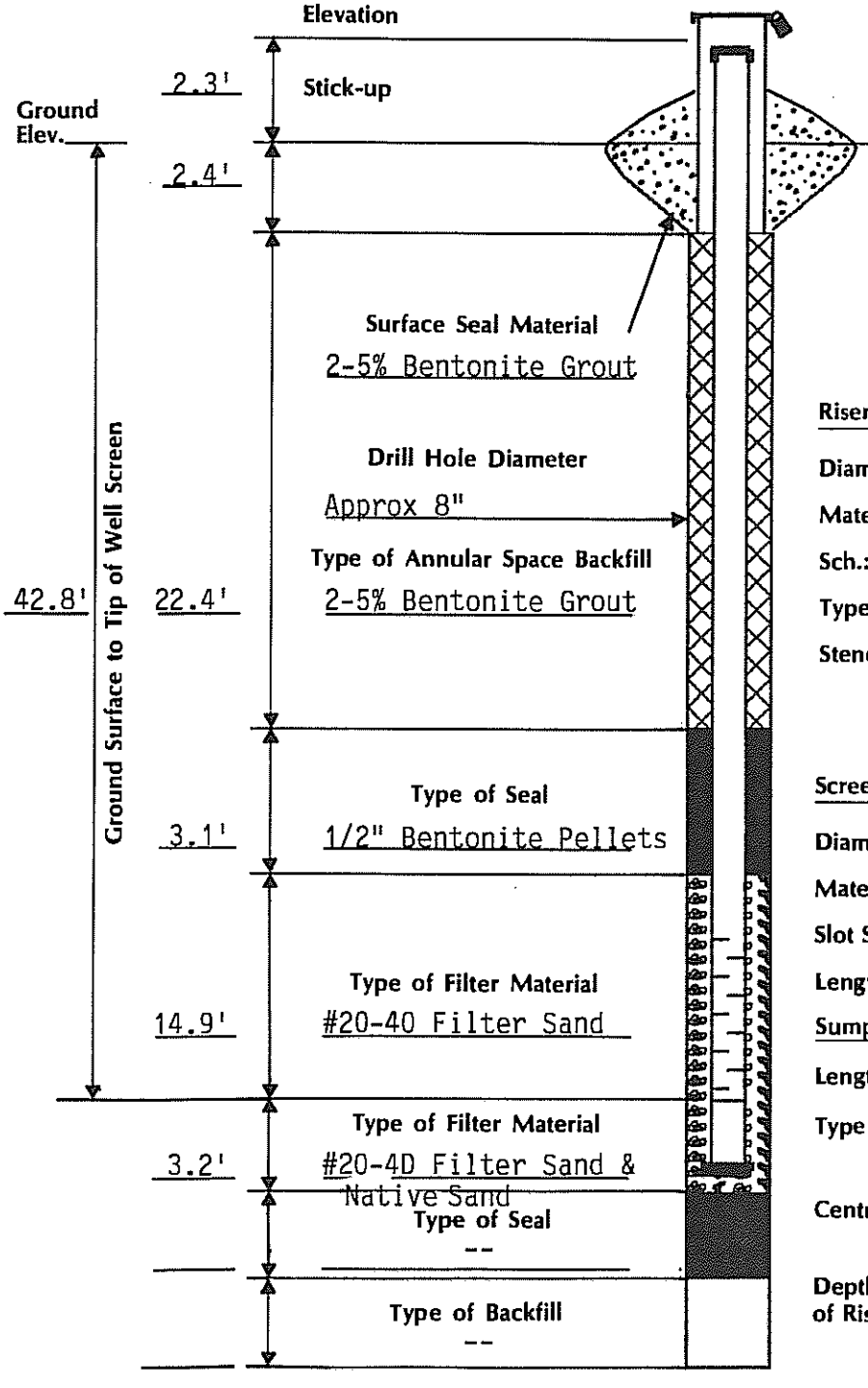

Protector Pipe:
Size: 6" x 6" x 5'
Material: Steel
Lock No.: --

Riser:
Diameter: 2"
Material: PVC
Sch.: 40
Type of Joints: Flush threaded
Stenciled? No

Screen:
Diameter: 2"
Material: PVC
Slot Size: 10 slot
Length: 10 feet

Sump:
Length: 5"
Type of Cap: Point sump

Centralizer: Used ☐ Not Used ☒

Depth to Water From Top of Riser at Completion:

NOTE: Not to Scale

Soil Boring Log

McLaren Hart

Boring No.	Project No./Name	Page:
WL-205	07.0803035.003.002	1 of 1

Start/Finish Date	Site Name and Location
8/1/95 / 8/3/95	West Lake Landfill; Bridgeton, Missouri

Drilling Contractor	Boring Location:	Area 2
Hart Environmental Drilling	Ground Surface Elevation:	443.2
Driller	Northing:	1069698.26
Max Tinnin	Easting:	514212.18

Drilling Equipment	McLaren/Hart Geologist/Office
CME-55 Drill Rig, Hollow Stem Augers	Tim Biggs / St. Louis

Bit Size/Type	Sample Method	T.D. Borehole	Well Installed?
4 1/4" ID; 8 1/4" Hole	5' Continuous Sampler	52'	I-2

Remarks:

Depth (ft)	Sample ID #	Geiger Reading (mR/hr)	Description
5	WL-205 5'	Background (0.05-0.07)	0.0-52.0' Native Alluvium: olive brown silty clay grading to grayish brown, coarse-grained sand with gravel; dry to wet.
10	WL-205 10'	Background (0.05-0.07)	@ 8' wet
15	WL-205 15'	Background (0.05-0.07)	
20	WL-205 20'	Background (0.05-0.07)	
25	WL-205 25'	Background (0.05-0.07)	
30	None Taken	Background (0.05-0.07)	
35	WL-205 32'	Background (0.05-0.07)	
40	WL-205 37'	Background (0.05-0.07)	
45	WL-205 42'	Background (0.05-0.07)	
50	WL-205 47'	Background (0.05-0.07)	
55	WL-205 52'	Background (0.05-0.07)	Boring terminated @ 52.0'

Notes:

Radiological samples collected at 5 and 15 feet below ground surface.

Non-radiological samples not collected.

Perched water not encountered during boring activities.

Groundwater encountered at 8 feet below ground surface.

McLaren Hart
ENVIRONMENTAL ENGINEERING CORPORATION

MONITORING WELL DETAILS

PROJECT NO. 070803035
WELL NO. I-2

PROJECT NAME WEST LAKE LANDFILL
WELL LOCATION BRIDGETON, MISSOURI DATE 8/2/95 BY HART ENVIRONMENTAL DRILLING

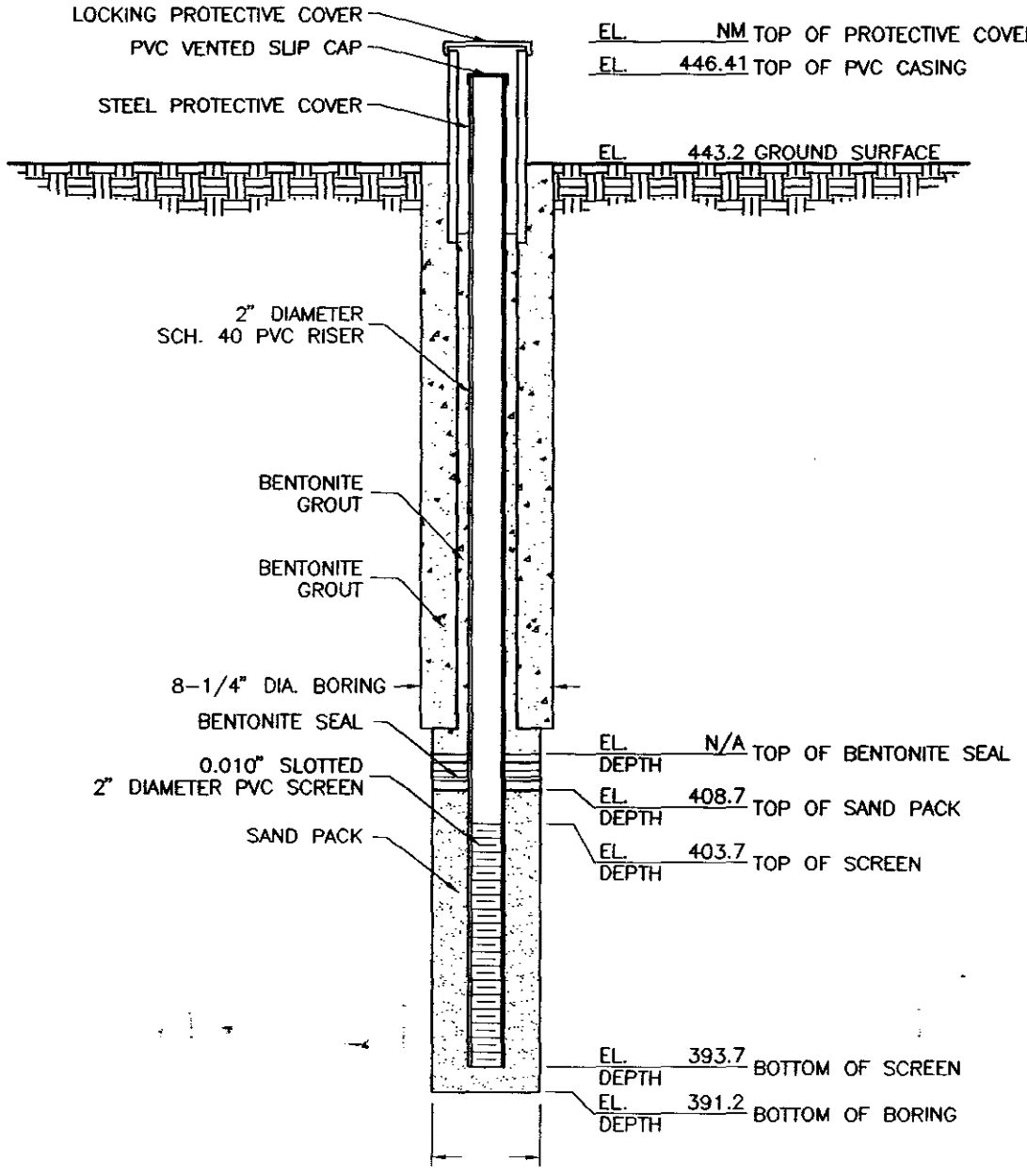

NOTES:

1. REFER TO SOIL BORING WL-205 FOR SOIL DESCRIPTION.
2. DETAIL NOT TO SCALE.
3. NM = NOT MEASURED
4. N/A NOT APPLICABLE, BENTONITE GROUT WAS USED TO SEAL WELL UP TO SURFACE.

(W2.DWG)

MISSOURI DEPARTMENT OF NATURAL RESOURCES
GEOLOGICAL SURVEY PROGRAM

MONITORING WELL PLUGGING REGISTRATION RECORD

OFFICE USE ONLY		DATE RECEIVED	
REF NO.	514517		
C.R. NO.		CHECK NO.	TRANSMITTAL NO.
STATE WELL NUMBER		APPROVED BY	DATE APPROVED
ENTERED Ph1 Ph2 Ph3		ROUTE	

INFORMATION SUPPLIED BY WELL OR PUMP INSTALLATION CONTRACTOR

OWNER NAME		TELEPHONE NUMBER		VARIANCE NUMBER (IF APPLICABLE)
ENGINEERING MGMT.SUPPORT INC. EMSI. PAUL ROSASCO				6023
OWNER ADDRESS	CITY	STATE	ZIP CODE	
7220 W. JEFFERSON AVE. SUITE 406	LAKEWOOD	CO	80235	
ADDRESS OF WELL SITE	CITY	STATE	ZIP CODE	REFERENCE NUMBER OF ORIGINAL WELL (IF KNOWN)
13570 ST. CHARLES ROCK ROAD	BRIDGETON	MO	63044	N/A
SITE NAME	WELL NUMBER		DATE	
WEST LAKE LANDFILL	I - 2			

LOCATION OF WELL	DRILL AREA	
LAT. 38 ° 46 ' 16.5 "	AREA 1	SMALLEST ¼ LARGEST ¼ ¼
LONG. 90 ° 27 ' 2.0 "	COUNTY ST. LOUIS	Sec. Township North Range ☐ East ☐ West

PLUGGING INFORMATION

ORIGINAL DRILLER (IF KNOWN)	DATE ORIGINALLY DRILLED	STATIC WATER LEVEL	DRILLER NOTES
N/A	N/A		

☑ MONITORING WELL

DEPTH OF WELL	LENGTH OF RISER
50 FT.	N/A FT. BGS
SCREEN/RISER DIAMETER	WELL SCREEN AND RISER REMOVED?
2 IN.	☐ Yes ☑ No
PUMP AND SAMPLING EQUIPMENT REMOVED?	CASING REMOVED?
☐ Yes ☑ N/A ☐ No	☐ Yes ☑ N/A ☐ No

☐ SOIL BORING(S) Boring Diameter: _____ IN.

QUANTITY	DEPTH
TOTAL _____ BORING(S)	TOTAL _____ FT.

TYPE OF FILL MATERIAL
☐ Gravel ☐ Sand ☐ Other

AMOUNT OF FILL USED
_____ ☐ TONS ☐ CUBIC YARDS

DEPTH TO TOP OF FILL
_____ FT.

GROUT INSTALLATION METHOD	GROUT MATERIAL USED	HOW MANY GALLONS OF WATER MIXED PER BAG OF CEMENT OR BENTONITE?	TOTAL NUMBER OF BAGS OF GROUT USED
☐ Gravity ☑ Tremie ☐ Excavation	Neat Cement Bentonite ☐ Hi-Early ☑ Slurry ☐ Granular ☐ Pellets ☐ Type 1 ☐ Chips ☐ Other _____	5 ☐ Hydrated to Saturation	3
			POUNDS OF GROUT PER BAG: 50

DATE 1ST WELL PLUGGED	DATE LAST WELL PLUGGED	FINISHED SURFACE MATERIAL	SURFACE MATERIAL LENGTH
04/13/2016	04/15/2016	☑ Soil ☐ Concrete ☐ Asphalt ☐ Other	_____ FT. _____ IN.

REMARKS	REASON FOR ABANDONMENT
(REDI JOB# 162075-AB)	

I hereby certify that the monitoring well herein described was plugged in accordance with the Department of Natural Resources requirements for the plugging of wells.

SIGNATURE (PRIMARY CONTRACTOR)		SIGNATURE (CONTRACTOR)		PERMIT NUMBER	DATE
		Pat Seymour TK		4438 M	5/12/16
PERMIT NUMBER	DATE	SIGNATURE (APPRENTICE)		PERMIT NUMBER	DATE
3368-M	5/17/2016				

MO-780-2151 (1-12)

REMIT TO: MISSOURI DEPARTMENT OF NATURAL RESOURCES, DIVISION OF GEOLOGY AND LAND SURVEY
WELLHEAD PROTECTION SECTION, PO BOX 250, ROLLA, MO 65402 573-368-2165
ENCLOSE $50 FEE WITH REGISTRATION RECORD WITHIN 60 DAYS AFTER WELL PLUGGING OR WITHIN 180 DAYS AFTER THE PLUGGING OF TEMPORARY WELLS

Soil Boring Log

I-4

McLaren Hart

Boring No.	Project No./Name	Page:
D-13 WL-105B	07.0803035.003.002	1 of 2

Start/Finish Date	**Site Name and Location**
8/10/95	West Lake Landfill; Bridgeton, Missouri
Drilling Contractor	**Boring Location:** Farmers Field
Hart Environmental Drilling	**Ground Surface Elevation:** 466
Driller	**Northing:** 1069148.42
Max Timin	**Easting:** 515889.50

Drilling Equipment		**McLaren/Hart Geologist/Office**	
CME-55 Drill Rig, Hollow Stem Augers		Tim Biggs / St. Louis	
Bit Size/Type	**Sample Method**	**T.D. Borehole**	**Well Installed?**
4 1/4" ID; 8 1/4" Hole	5' Continuous Sampler	79'	I-4

Remarks:

Depth (ft)	Sample ID #	Geiger Reading (mR/hr)	Description
5	None Taken	None Taken	0.0-30.0' Landfill Debris: trashy debris consisting of cloth, wood, rope, and plastic; soil consisting of brown and gray silt, and crushed rock; dry to moist.
10	None Taken	None Taken	
15	None Taken	None Taken	
20	None Taken	None Taken	
25	None Taken	Background	
30	WL-105B 30'	Background (0.04-0.06)	@30' wet
35	WL-105B 35'	Background (0.04-0.06)	30.0-55.0' Native Alluvium: dark gray clayey silt grading to fine to coarse-grained sand and gravel; wet.
40	WL-105B 40'	Background (0.04-0.06)	
45	None Taken	None Taken	
50	None Taken	None Taken	
55	None Taken	None Taken	

McLaren Hart
ENVIRONMENTAL ENGINEERING CORPORATION

MONITORING WELL DETAILS

PROJECT NO. 070803035
WELL NO. I-4

PROJECT NAME WEST LAKE LANDFILL
WELL LOCATION BRIDGETON, MISSOURI DATE 8/10/95 BY HART ENVIRONMENTAL DRILLING

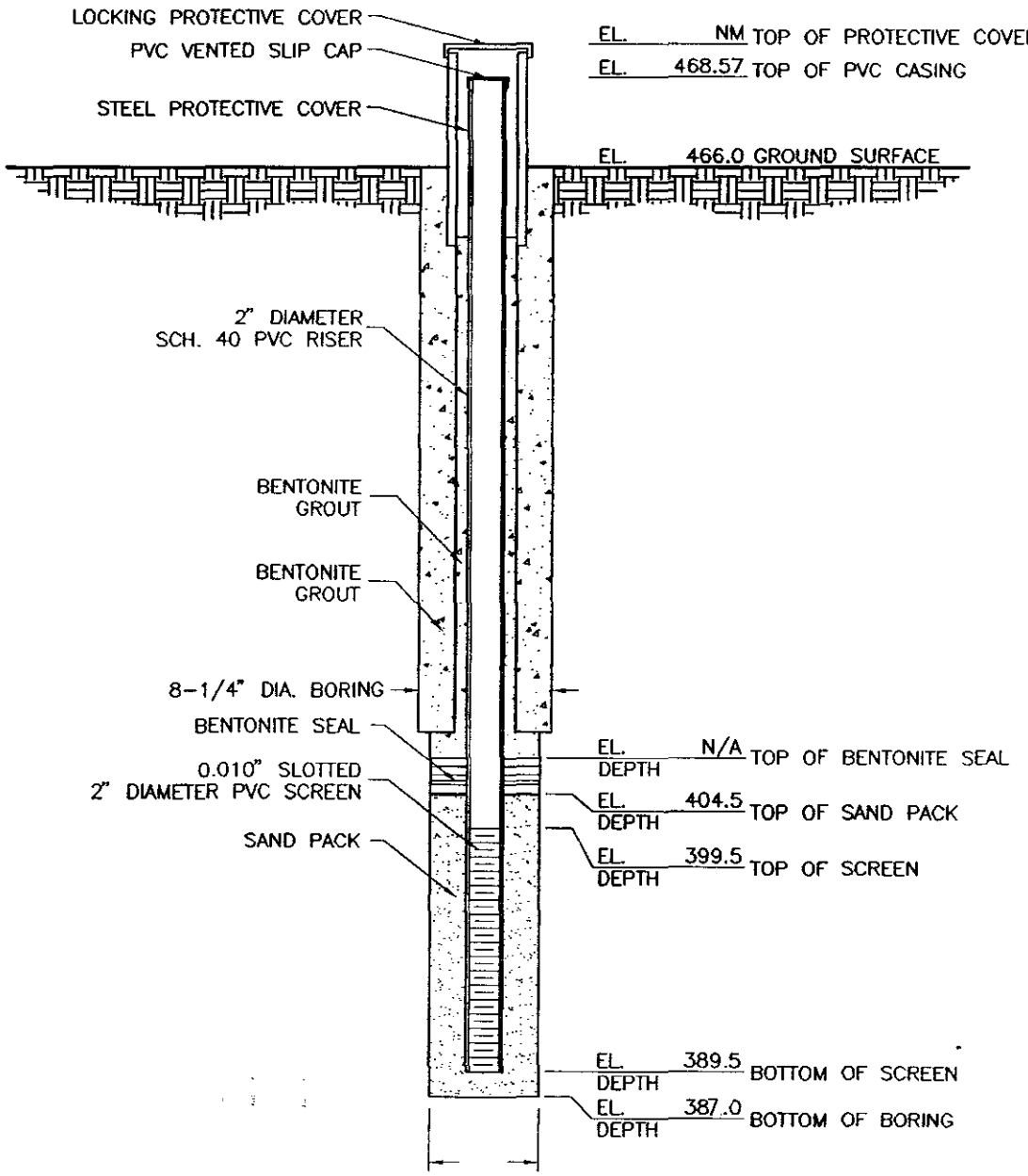

NOTES:

1. REFER TO SOIL BORING WL-105B FOR SOIL DESCRIPTION.
2. DETAIL NOT TO SCALE.
3. NM = NOT MEASURED
4. N/A NOT APPLICABLE, BENTONITE GROUT/CHIPS USED TO SEAL WELL UP TO SURFACE.

(W4.DWG)

Soil Boring Log

McLaren Hart

Boring No.	Project No./Name	Page:
WL-207	07.0803035.003.002	1 of 1

Start/Finish Date	**Site Name and Location**
8/18/95	West Lake Landfill; Bridgeton, Missouri
Drilling Contractor	**Boring Location:** Area 2
Hart Environmental Drilling	**Ground Surface Elevation:** 444.5
Driller	**Northing:** 1070743.05
Max Tinnin	**Easting:** 514299.87

Drilling Equipment	**McLaren/Hart Geologist/Office**
CME-55 Drill Rig, Hollow Stem Augers	Tim Biggs / St. Louis

Bit Size/Type	Sample Method	T.D. Borehole	Well Installed?
4 1/4" ID; 8 1/4" Hole	5' Continuous Sampler	50'	I-7

Remarks:

Depth (ft)	Sample ID #	Geiger Reading (mR/hr)	Description
5	WL-207 5'	Background (0.02-0.04)	0.0-50.0' Native Alluvium: slightly clayey, very fine-grained sand grading to gray coarse-grained sand with gravel; dry to wet
10	WL-207 10'	Background (0.02-0.04)	@ 9.5' wet
15	WL-207 15'	Background (0.02-0.04)	
20	WL-207 20'	Background (0.02-0.04)	
25	WL-207 25'	None Taken	
30	WL-207 30'	None Taken	
35	WL-207 35'	None Taken	
40	WL-207 40'	None Taken	
45	WL-207 45'	None Taken	
50	WL-207 50'	None Taken	Boring terminated @ 50.0'

Notes:

Radiological samples collected at 5 and 10 feet below ground surface.

Non-radiological samples not collected during boring activities.

Perched water not encountered during boring activities.

Groundwater encountered at 9.5 feet below ground surface.

McLaren Hart
ENVIRONMENTAL ENGINEERING CORPORATION

MONITORING WELL DETAILS

PROJECT NO. 070803035
WELL NO. I-7

PROJECT NAME WEST LAKE LANDFILL
WELL LOCATION BRIDGETON, MISSOURI DATE 8/3/95 BY HART ENVIRONMENTAL DRILLING

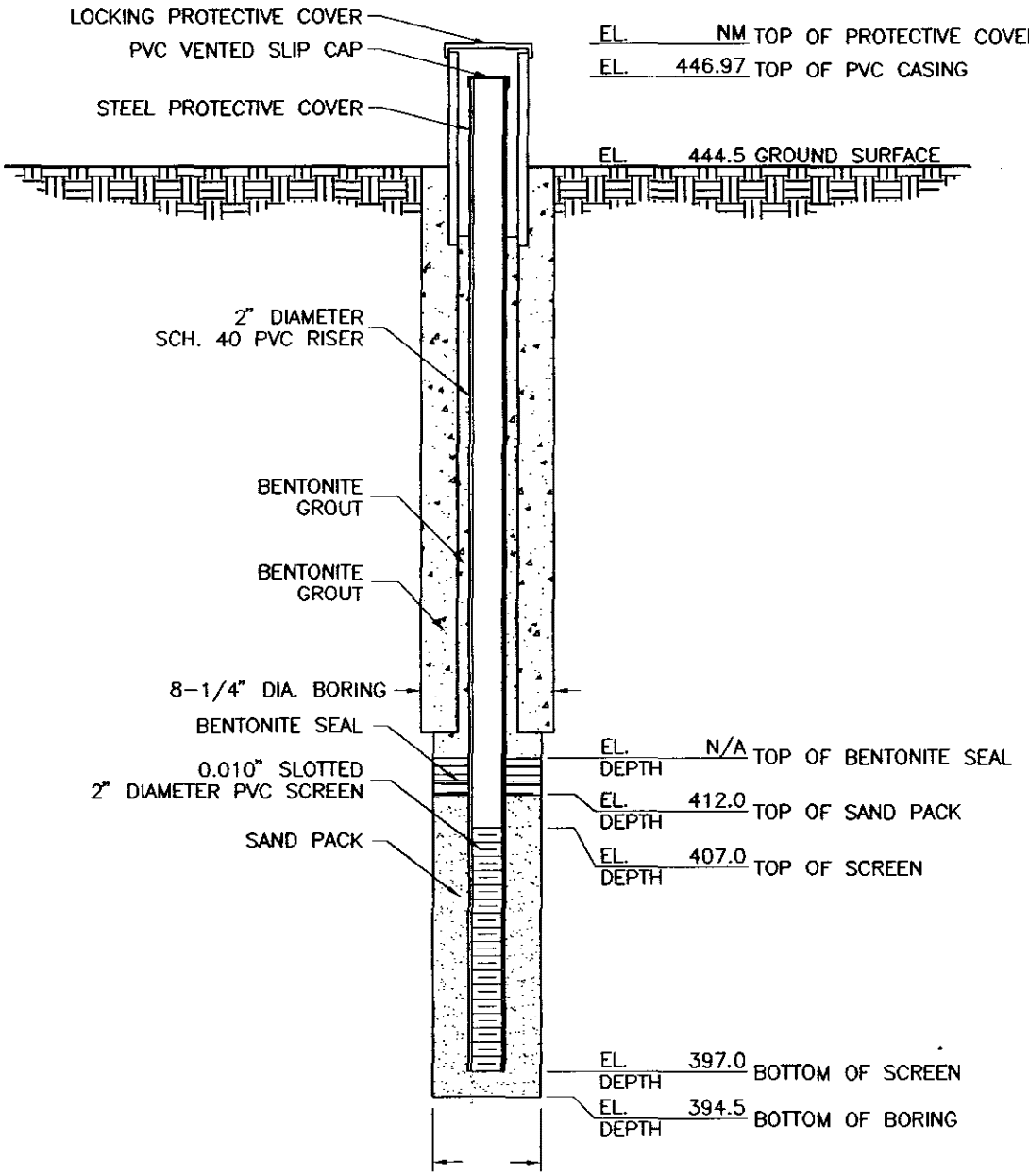

NOTES:
1. REFER TO SOIL BORING WL-207 SOIL DESCRIPTION.
2. DETAIL NOT TO SCALE.
3. NM = NOT MEASURED
4. N/A NOT APPLICABLE; BENTONITE GROUT USED TO SEAL WELL UP TO SURFACE

(W7.DWG)

Soil Boring Log

McLaren Hart

Boring No.	Project No./Name	Page:
1-9 WL-229	07.0803035.003.002	1 of 2

Start/Finish Date	**Site Name and Location**
9/18/95	West Lake Landfill; Bridgeton, Missouri
Drilling Contractor	**Boring Location:** Area 2
Hart Environmental Drilling	**Ground Surface Elevation:** 448.5
Driller	**Northing:** 1069329.26
Max Tinnin	**Easting:** 514268.59

Drilling Equipment	**McLaren/Hart Geologist/Office**
CME-55 Drill Rig, Hollow Stem Augers	Tim Biggs / St. Louis

Bit Size/Type	Sample Method	T.D. Borehole	Well Installed?
4 1/4" ID; 8 1/4" Hole	5' Continuous Sampler	55.6'	I-9

Remarks:

Depth (ft)	Sample ID #	Geiger Reading (mR/hr)	Description
5	WL-229 5	Background (0.01-0.04)	0.0-5.0' Landfill Debris: soil consisting of brown silt, and asphalt; no trashy debris encountered; dry.
10	None Taken	Background (0.01-0.04)	5.0-56.0' Native Alluvium: dark gray, silty, fine-grained sand grading to coarse-grained sand with gravel; moist to wet.
15	None Taken	Background (0.01-0.04)	
20	WL-229 20'	Background (0.01-0.04)	@ 16' wet
25	WL-229 25'	Background (0.01-0.04)	
30	WL-229 30'	Background (0.01-0.04)	
35	None Taken	None Taken	
40	None Taken	None Taken	
45	None Taken	None Taken	
50	None Taken	None Taken	

Soil Boring Log

McLaren Hart

Boring No.	Project No./Name	Page:
I-9 WL-229	07.0803035.003.002	2 of 2

Start/Finish Date	Site Name and Location
9/18/95	West Lake Landfill; Bridgeton, Missouri

Drilling Contractor	Boring Location:	Area 2
Hart Environmental Drilling	Ground Surface Elevation:	448.5
Driller	Northing:	1069329.26
Max Tinnin	Easting:	514268.59

Drilling Equipment	McLaren/Hart Geologist/Office
CME-55 Drill Rig, Hollow Stem Augers	Tim Biggs / St. Louis

Bit Size/Type	Sample Method	T.D. Borehole	Well Installed?
4 1/4" ID; 8 1/4" Hole	5' Continuous Sampler	55.6'	I-9

Remarks:

Depth (ft)	Sample ID #	Geiger Reading (uR/hr)	Description
55	None Taken	None Taken	50.0-55.6' Native Alluvium: dark gray, silty, fine-grained sand grading to coarse-grained sand with gravel; moist to wet.
60	None Taken	None Taken	Boring terminated @ 55.6'

Notes:

Radiological samples collected at 5 and 20 feet below ground surface.
Non-radiological samples not collected during boring activities.
Perched water not encountered during boring activities.
Groundwater encountered at 16 feet below ground surface.

McLaren Hart
ENVIRONMENTAL ENGINEERING CORPORATION

MONITORING WELL DETAILS

PROJECT NO. 070803035
WELL NO. I-9

PROJECT NAME WEST LAKE LANDFILL
WELL LOCATION BRIDGETON, MISSOURI DATE 9/18/95 BY HART ENVIRONMENTAL DRILLING

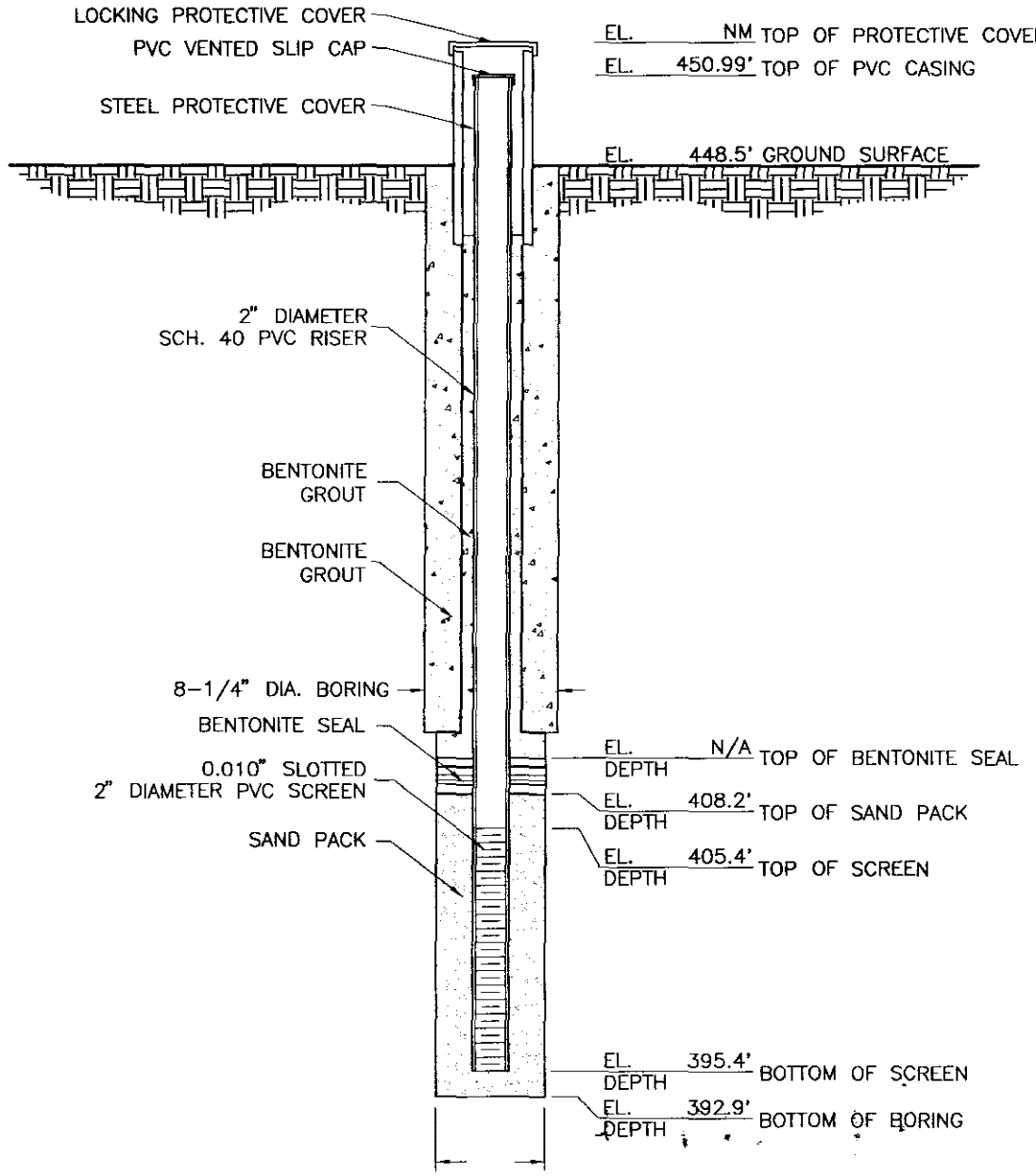

NOTES:

1. REFER TO SOIL BORING WL-229 FOR SOIL DESCRIPTION.
2. DETAIL NOT TO SCALE.
3. NM = NOT MEASURED.
4. N/A = NOT APPLICABLE; BENTONITE GROUT USED TO SEAL WELL UP TO SURFACE.

(W9)

Soil Boring Log

McLaren Hart

Boring No.	Project No./Name	Page:
I-11 WL-216C	07.0803035.003.002	1 of 2

Start/Finish Date	Site Name and Location
8/30/95 / 10/13/95	West Lake Landfill; Bridgeton, Missouri

Drilling Contractor	Boring Location:	Area 2
Hart Environmental Drilling	Ground Surface Elevation:	477.6
Drilling Service Company	Northing:	1069819.16
Driller	Easting:	514925.06
Max Tinnin	McLaren/Hart Geologist/Office	
Bruce Murphy	Tim Biggs / St. Louis	

Drilling Equipment
CME-55 Drill Rig, Hollow Stem Augers
LDH-80T Drill Rig, Large Diameter Auger

Bit Size/Type	Sample Method	T.D. Borehole	Well Installed?
4 1/8" Drag Bit (mud rotary) 4 1/4" ID; 8 1/4" Hole 24" OD Solid Auger	5' Continuous Sampler Grab from Auger	93'	I-11

Remarks:

Depth (ft)	Sample ID #	Geiger Reading (mR/hr)	Description
5	WL-216 5'	0.12	0.0-26.0' Landfill Debris: trashy debris consisting of plastic, cloth, and glass; soil consisting of grayish brown to olive brown silty clay to gray, very fine-grained sand, and limestone rock; dry to moist.
10	None Taken	Background (0.02-0.04)	
15	None Taken	Background (0.02-0.04)	
20	None Taken	Background (0.02-0.04)	
25	None Taken	None Taken	
30	None Taken	None Taken	26.0-60.0' Native Alluvium: gray, silty, very fine-grained sand grading to coarse-grained sand and gravel; moist to wet.
35	None Taken	None Taken	
40	None Taken	None Taken	
45	None Taken	None Taken	
50	None Taken	None Taken	@ 48' wet
55	None Taken	None Taken	
60	None Taken	None Taken	

Soil Boring Log

McLaren Hart

Boring No.	Project No./Name	Page:
I-11 WL-216C	07.0803035.003.002	2 of 2

Start/Finish Date	Site Name and Location
8/30/95 / 10/13/95	West Lake Landfill; Bridgeton, Missouri

Drilling Contractor	Boring Location: Area 2
Hart Environmental Drilling	Ground Surface Elevation: 477.6
Drilling Service Company	Northing: 1069819.16
Driller	Easting: 514925.06
Max Tinnin	McLaren/Hart Geologist/Office
Bruce Murphy	Tim Biggs / St. Louis

Drilling Equipment
CME-55 Drill Rig, Hollow Stem Augers
LDH-80T Drill Rig, Large Diameter Auger

Bit Size/Type	Sample Method	T.D. Borehole	Well Installed?
4 1/8" Drag Bit (mud rotary)	5' Continuous Sampler	93'	I-11
4 1/4" ID; 8 1/4" Hole	Grab from Auger		
24" OD Solid Auger			

Remarks:

Depth (ft)	Sample ID #	Geiger Reading (mR/hr)	Description
65	None Taken	None Taken	
70	None Taken	None Taken	65.0-93.0' Native Alluvium: gray, silty, very fine-grained sand grading to coarse-grained sand and gravel; moist to wet.
75	None Taken	None Taken	
80	None Taken	None Taken	
85	None Taken	None Taken	
90	None Taken	None Taken	
95	None Taken	None Taken	Auger refusal @ 93.0'

Notes:

Radiological samples not collected during boring activities; downhole logging indicated elevated gamma readings from 1.0-6.5'.
Non-radiological samples not collected during boring activities.
Perched water not encountered during boring activities.
Groundwater encountered at 48 feet below ground surface.

McLaren Hart
ENVIRONMENTAL ENGINEERING CORPORATION

MONITORING WELL DETAILS

PROJECT NO. 070803035
WELL NO. I-11

PROJECT NAME WEST LAKE LANDFILL
WELL LOCATION BRIDGETON, MISSOURI DATE 10/13/95 BY HART ENVIRONMENTAL DRILLING

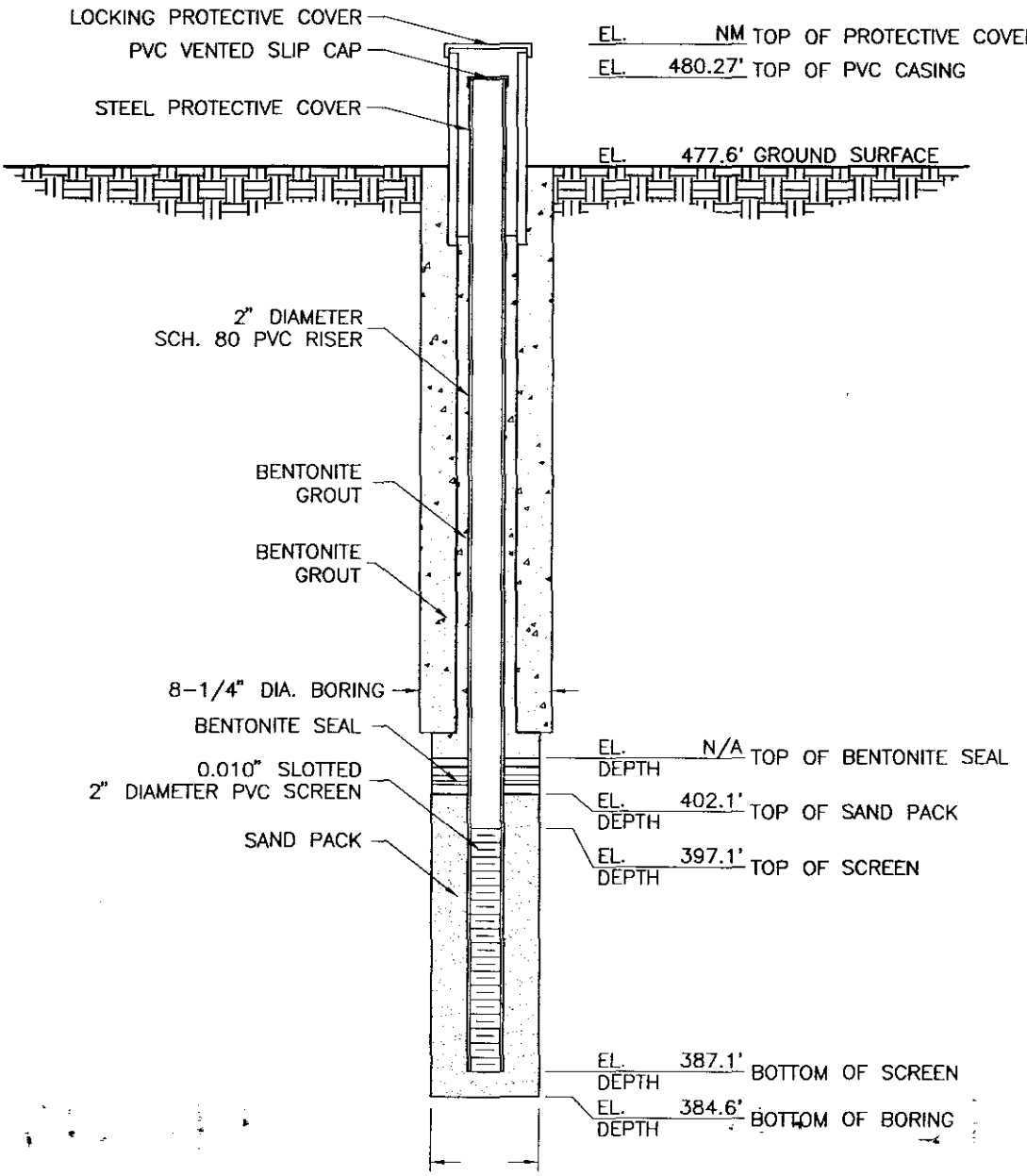

NOTES:

1. REFER TO SOIL BORING WL-216C FOR SOIL DESCRIPTION.
2. DETAIL NOT TO SCALE.
3. NM = NOT MEASURED.
4. N/A = NOT APPLICABLE; BENTONITE GROUT USED TO SEAL WELL UP TO SURFACE.

(W11)

SUBSURFACE EXPLORATION DATA

by

WABASH DRILLING COMPANY

110 Angelica St. • St. Louis, Mo. 63147 • 421-2460

Date of Drilling:
Started 6-26-78
Finished 6-26-78

Boring No. 35
Coordinates Sheet 1 of 2
Surf. Elev.
Gr. Water Elev. --

Client Westlake Quarry & Mater
Job Name Westlake Landfill
Job Location St. Charles Rock Road I-55
Casing O.D. I.D
Casing Hammer lbs.
W. D. Co. Foreman Gary Johanning

Client's Job No.
City Bridgeton State Mo.
ɔler O.D. 2" I.D. 1-3/8"
ɔler Hammer 140 lbs. 30" fall

Depth Below Ground Surface	Blows On Casing	Sample Number	Blows On Sampler	Penetration Of Sampler (inches)	FIELD IDENTIFICATION OF SOIL (Include relative firmness, relative moisture, color, mention all soil constituents, etc.)	REMARKS
					Brown, sandy clay and trash	Used 6" H.S. augers
2'6"					Moist, gray, firm to medium stiff, sandy clay and limestone boulders 6" minus	
7'0"					Moist, brown, firm to medium stiff, clay and white chat 1" minus	
14'0"					Moist, gray, firm to medium stiff, sandy clay	
33'0"					Moist, gray, medium stiff, plastic clay	
39'0"					Wet, brown, medium dense, fine, sand with traces of gravel	(Cont'd.)

SUBSURFACE EXPLORATION DATA

by

WABASH DRILLING COMPANY

110 Angelica St. • St. Louis, Mo. 63147 • 421-2460

Date of Drilling:
Started 6-26-78
Finished 6-26-78

Boring No. 35
Coordinates Sheet 2 of 2
Surf. Elev.
Gr. Water Elev. --

Client Westlake Quarry & Material Co.

Job Name Westlake Landfill Client's Job No.

Job Location St. Charles Rock Road City Bridgeton State Mo.

Casing O.D. I.D. Sampler O.D. 2" I.D. 1-3/8"

Casing Hammer lbs. fall Sampler Hammer 140 lbs. 30" fall

W. D. Co. Foreman Gary Johanning Client's Inspector

Depth Below Ground Surface	Blows On Casing	Sample Number	Blows On Sampler	Penetration Of Sampler (inches)	FIELD IDENTIFICATION OF SOIL (Include relative firmness, relative moisture, color, mention all soil constituents, etc.)	REMARKS
45'0"					Wet, gray, medium dense, fine, sand with traces of gravel	Set bottom of well point at 60'0" and back filled hole with ½" minus rock.
60'0"					Total depth of boring 60'0"	

SUBSURFACE EXPLORATION DATA
by
WABASH DRILLING COMPANY
110 Angelica St. • St. Louis, Mo. 63147 • 421-2460

Date of Drilling:
Started 6-26-78
Finished 6-27-78

Boring No. 34
Coordinates Sheet 1 of 2
Surf. Elev.
Gr. Water Elev. --

Client Westlake Quarry & Material
Job Name Westlake Landfill
Job Location St. Charles Rock Road
Casing O.D. I.D.
Casing Hammer lbs.
W. D. Co. Foreman Gary Johanning

I-56

Client's Job No.
City Bridgeton State Mo.
O.D. 2" I.D. 1-3/8"
Hammer 140 lbs. 30" fall

Depth Below Ground Surface	Blows On Casing	Sample Number	Blows On Sampler	Penetration Of Sampler (inches)	FIELD IDENTIFICATION OF SOIL (Include relative firmness, relative moisture, color, mention all soil constituents, etc.)	REMARKS
					Brown, sandy clay, trash and limestone boulders 12" minus	Used 6" H.S. augers
6'0"					Moist, gray, firm to medium stiff, sandy clay with limestone boulders	
15'6"					Moist, gray, fine, dense sand	
23'0"					Moist, gray, soft to firm, sandy clay	
29'0"					Moist, gray, medium stiff, plastic clay	
36'0"					Moist to wet, gray, loose, fine sand with traces of gravel	
40'6"					Wet, gray, medium dense, fine sand with traces of gravel	(Cont'd.)

SUBSURFACE EXPLORATION DATA

by

WABASH DRILLING COMPANY

110 Angelica St. • St. Louis, Mo. 63147 • 421-2460

Date of Drilling:
Started 6-26-78
Finished 6-27-78

Boring No. 34
Coordinates Sheet 2 of 2
Surf. Elev.
Gr. Water Elev. --

Client Westlake Quarry & Material Co.

Job Name Westlake Landfill Client's Job No.

Job Location St. Charles Rock Road City Bridgeton State Mo.

Casing O.D. I.D. Sampler O.D. 2" I.D. 1-3/8"

Casing Hammer lbs. fall Sampler Hammer 140 lbs. 30" fall

W. D. Co. Foreman Gary Johanning Client's Inspector

Depth Below Ground Surface	Blows On Casing	Sample Number	Blows On Sampler	Penetration Of Sampler (inches)	FIELD IDENTIFICATION OF SOIL (Include relative firmness, relative moisture, color, mention all soil constituents, etc.)	REMARKS
					Wet, gray, medium dense, fine, sand with traces of gravel	Set bottom of well point @ 60'0"; back filled hole with ½" minus rock
50'0"					Wet, gray, medium dense, fine sand	
60'0"					Total depth of boring 60'0"	

SUBSURFACE EXPLORATION DATA

by

WABASH DRILLING COMPANY

110 Angelica St. • St. Louis, Mo. 63147 • 421-2460

Date of Drilling:
Started 6-28-78
Finished 6-28-78

Boring No. 40
Coordinates Sheet 1 of 2
Surf. Elev.
Gr. Water Elev. --

Client Westlake Quarry & Material Co.

Job Name Westlake Landfill — Client's Job No.

Job Location St. Charles Rock Road — City Bridgeton State Mo.

Casing O.D. I.D. — I-58 — er O.D. 2" I.D. 1-3/8"

Casing Hammer lbs. — er Hammer 140 lbs. 30" fall

W. D. Co. Foreman Gary Johanning

Depth Below Ground Surface	Blows On Casing	Sample Number	Blows On Sampler	Penetration Of Sampler (inches)	FIELD IDENTIFICATION OF SOIL (Include relative firmness, relative moisture, color, mention all soil constituents, etc.)	REMARKS
					Moist, brown, firm to medium stiff, sandy clay, trash and limestone boulders	Used 6" H.S. augers
7'0"					Moist, brown & gray, firm, sandy-clay	
16'0"					Moist, gray, dense, fine sand	
20'0"					Moist, gray, medium stiff, plastic clay	
26'0"					Wet, brown, medium dense, fine sand with traces of gravel	
34'0"					Wet, gray, medium dense, fine sand with traces of gravel	(Cont'd.)

SUBSURFACE EXPLORATION DATA

by

WABASH DRILLING COMPANY

110 Angelica St. • St. Louis, Mo. 63147 • 421-2460

Date of Drilling:
Started 6-28-78
Finished 6-28-78

Boring No. 40
Coordinates Sheet 2 of 2
Surf. Elev.
Gr. Water Elev. --

Client Westlake Quarry & Material Co.

Job Name Westlake Landfill Client's Job No.

Job Location St. Charles Rock Road City Bridgeton State Mo.

Casing O.D. I.D. Sampler O.D. 2" I.D. 1-3/8"

Casing Hammer lbs. fall Sampler Hammer 140 lbs. 30" fall

W. D. Co. Foreman Gary Johanning Client's Inspector

Depth Below Ground Surface	Blows On Casing	Sample Number	Blows On Sampler	Penetration Of Sampler (inches)	FIELD IDENTIFICATION OF SOIL (Include relative firmness, relative moisture, color, mention all soil constituents, etc.)	REMARKS
						Set well point @ 60'0" and back filled hole with ½" minus rock.
50'0"					Wet, gray, fine, medium dense, sand with traces of gravel	
60'0"					Total depth of boring 60'0"	

SUBSURFACE EXPLORATION DA

by

WABASH DRILLING COMPANY

110 Angelica St. • St. Louis, Mo. 63147 • 421-2460

Date of Drilling:
Started 6-22-78
Finished 6-22-78

Boring No. 39
Coordinates Sheet 1 of 2
Surf. Elev.
Gr. Water Elev. --

Client Westlake Quarry & Material Co.

Job Name Westlake Landfill Client's Job No.

Job Location St. Charles Rock Road City Bridgeton State Mo.

Casing O.D. I.D. Sampler O.D. 2" I.D. 1-3/8"

Casing Hammer lbs. fall Sampler Hammer 140 lbs. 30" fall

W. D. Co. Foreman Gary Johanning Client's Inspector

Depth Below Ground Surface	Blows On Casing	Sample Number	Blows On Sampler	Penetration Of Sampler (inches)	FIELD IDENTIFICATION OF SOIL (Include relative firmness, relative moisture, color, mention all soil constituents, etc.)	REMARKS
					White chat 1" minus	Used 6" H.S. augers
2'0"					Moist, brown & light gray, firm to medium stiff, sandy-clay	
6'6"					Wet, gray, fine, loose sand	
8'0"					Moist to wet, brown, firm, silty-clay	
16'0"					Moist, gray, medium stiff, plastic clay with traces of rust stains	
25'6"					Moist to wet, gray, soft, clayey-silt with traces of fine sand	
33'6"					Wet, gray, soft, clayey-silt with traces of fine sand	
37'0"					Wet, gray, medium dense, sand	(Cont'd.)

AUG 04 '93 08:37AM FYD STL

SUBSURFACE EXPLORATION DA...

by

WABASH DRILLING COMPANY

110 Angelica St. • St. Louis, Mo. 63147 • 421-2460

Date of Drilling:
Started 6-22-78
Finished 6-22-78

Boring No. 39
Coordinates Sheet 2 of 2
Surf. Elev.
Gr. Water Elev. --

Client Westlake Quarry & Material Co.

Job Name Westlake Landfill Client's Job No.

Job Location St. Charles Rock Road City Bridgeton State Mo.

Casing O.D. I.D. Sampler O.D. 2" I.D. 1-3/8"

Casing Hammer lbs. fall Sampler Hammer 140 lbs. 30" fall

W. D. Co. Foreman Gary Johanning Client's Inspector

Depth Below Ground Surface	Blows On Casing	Sample Number	Blows On Sampler	Penetration (") Sampler (inches)	FIELD IDENTIFICATION OF SOIL (Include relative firmness, relative moisture, color, mention all soil constituents, etc.)	REMARKS
					Wet, gray, medium dense, fine sand	Set bottom of well point @ 50'0" and back filled with ½" minus gravel.
50'0"					Total depth of boring 50'0"	

AUG 04 '93 08:37AM FVD STL

SUBSURFACE EXPLORATION DA

by

WABASH DRILLING COMPANY

110 Angelica St. • St. Louis, Mo. 63147 • 421-2460

Date of Drilling:
Started 6-22-78
Finished 6-23-78

Boring No. 38
Coordinates Sheet 1 of 2
Surf. Elev.
Gr. Water Elev. --

Client Westlake Quarry & Material Co.

Job Name Westlake Landfill Client's Job No.

Job Location St. Charles Rock Road City Bridgeton State Mo.

Casing O.D. I.D. Sampler O.D. 2" I.D. 1-3/8"

Casing Hammer lbs. fall Sampler Hammer 140 lbs. 30" fall

W. D. Co. Foreman Gary Johanning Client's Inspector

Depth Below Ground Surface	Blows On Casing	Sample Number	Blows On Sampler	Penetration (ft Sampler (inches)	FIELD IDENTIFICATION OF SOIL (include relative firmness, relative moisture, color, mention all soil constituents, etc.)	REMARKS
					Trash & white chat	Used 6" H.S. auger
1'6"					White chat 1" minus	
7'0"					Moist, yellowish-tan, medium stiff clay	
13'0"					Moist, brown, firm, silty-clay with traces of fine sand	
19'0"					Moist, gray, medium stiff, plastic clay with traces of rust stains	
26'6"					Moist to wet, brown, loose, fine sand with traces of gravel	
32'0"					Wet, gray, medium dense, fine sand	(Cont'd.)

AUG 04 '93 08:38AM FVD STL

SUBSURFACE EXPLORATION D A

by

WABASH DRILLING COMPANY

110 Angelica St. • St. Louis, Mo. 63147 • 421-2460

Date of Drilling:
Started 6-22-78
Finished 6-23-78

Boring No. 38
Coordinates Sheet 2 of 2
Surf. Elev.
Gr. Water Elev. --

Client Westlake Quarry & Material Co.

Job Name Westlake Landfill — Client's Job No.

Job Location St.Charles Rock Road — City Bridgeton State Mo.

Casing O.D. — I.D. — Sampler O.D. 2" I.D. 1-3/8

Casing Hammer — lbs. — fall — Sampler Hammer 140 lbs. 30" fall

W. D. Co. Foreman Gary Johanning — Client's Inspector

Depth Below Ground Surface	Blows On Casing	Sample Number	Blows On Sampler	Penetration Of Sampler (inches)	FIELD IDENTIFICATION OF SOIL (Include relative firmness, relative moisture, color, mention all soil constituents, etc.)	REMARKS
					Wet, gray, medium dense, fine sand	Set bottom of well point @ 50'0" and back filled with ½" minus rock.
50'0"					Total depth of boring 50'0"	

AUG 04 '93 08:38AM FYD STL

DRILLING LOG

McLaren Hart

SB/MW #: I-73
Log #:
Page 1 of 2
Geoscientist:

PROJECT: Westlake
PROJECT #: 11.0800556
LOCATION: Bridgeton, Missouri
TOC ELEVATION: 462.6
SAMPLING DATE(S): 6/22/78 6/23/78 START: FINISH:
SAMPLING METHOD: MONITORING DEVICE:
SUBCONTRACTOR/EQUIPMENT: /
DRILLING METHOD: NOTES:

Depth Below Surface (ft.)	Sampler Interval/ Recovery	Sample ID #	PID reading (ppm)	Soil Description Color, Texture, Moisture, Etc.	Unified Classification	Graphic Log	Well Construction Details
0				TRASH & white CHAT (FILL)			
2				CHAT; white, 1" minus			
4							
6							
8				CLAY; yellowish tan, med stiff, moist			
10							
12							
14				Silty CLAY; tr fine Sand, brown, firm, moist	CL ML		
16							
18							
20				CLAY; gray, med stiff, tr rust stains, moist			
22							
24							
26							
28 ▼				SAND; brown, loose, fine, tr Gravel	SM GM		
30							
32							
34							
36				SAND; gray, med dense, fine, wet			
38							
40							
42							
44							
46							
48							
50				See Following Page...			

SIGNATURE OF FIELD SUPERVISOR

Assistant Geoscientist
TITLE

SIGNATURE OF REVIEWER

Project Manager
TITLE

DRILLING LOG

McLaren Hart

SB/MW #: I-73
Log #:
Page 2 of 2
Geoscientist:

PROJECT: Westlake PROJECT #: 11.0800556

Depth Below Surface (ft.)	Sampler Interval/ Recovery	Sample ID #	PID reading (ppm)	Soil Description Color, Texture, Moisture, Etc.	Unified Classification	Graphic Log	Well Construction Details
50.0				Total depth = 50.0'			

SIGNATURE OF FIELD SUPERVISOR

Assistant Geoscientist
TITLE

SIGNATURE OF REVIEWER

Project Manager
TITLE

LAIDLAW WASTE SYSTEMS INC.

SOIL BOREHOLE LOG

SITE NAME AND LOCATION

LAIDLAW/OU2 RI-FS/HO
WEST LAKE LANDFILL
OPERABLE UNIT 2

NORTHING: 1067293.73
DATUM EASTING: 514893.56 ELEVATION 467.2

DRILLING METHOD: 4.25 inch I.D./8.25 inch O.D. Hollow Stem Auger

SAMPLING METHOD:
SPLIT SPOON: 2.0 inch O.D./1.5 inch I.D. (SP)
SHELBY TUBE: 3.0 inch O.D./2 13/16 inch I.D. (SH)

					DRILLING START	DRILLING FINISH
WATER LEVEL	19.0 FT.					
TIME	11:55				TIME 7:30	TIME 11:00
DATE	10/04/95				DATE 10/04/95	DATE 10/04/95
CASING DEPTH	26.0 FT.					

BORING NO. LR-100

SHEET 1 OF 2

DRILL RIG CME 750

ANGLE 90° BEARING NA

SAMPLE HAMMER

SURFACE CONDITIONS

DEPTH IN FEET (ELEVATION)	BLOW/ 6 IN. ON SAMPLER	RECOVERY	SYMBOL	SAMPLER SYMBOL	SAMPLE NUMBER AND DESCRIPTION OF MATERIAL	SAMPLER TYPE	REMARKS
1	0 6 7 4	1.7' 2.0' (85%)			(0.0-5.5 ft.) Compact, moderate yellowish brown (10YR 5/4), CLAYEY SILT, NR, damp, (CL), (FILL) @ 0.8 ft., dry From 1.5-5.5 ft., intermixed organic matter and trace waste	SP ①	Landfill cap 1.5 ft. thick
2	3 1	0.9' 2.0'					
3	2 2	(45%)				SP ②	
4	2 3	0.3' 2.0'					
5	4 36	(15%)			@ 5.0 ft., wet (461.7) 5.5	SP ③	0.0 ppm PID
6	3 14	0.6' 2.0'			(5.5-22.0 ft.) WASTE, wet		
7	5 3	(30%)				SP ④	
8	4 6	0.5' 2.0'					0.1 ppm PID
9	4 5	(25%)				SP ⑤	
10	4 2	0.5' 2.0'					0.0 ppm PID
11	3 8	(25%)				SP ⑥	
12	7 14	0.4' 2.0'					
13	26 11	(20%)				SP ⑦	
14	50/2	0.1' 2.0'				SP ⑧	1.1 ppm PID

DRILLING CONTR LAYNE-WESTERN

LOGGED BY B. HARRINGTON

DATE 10/9/95 CHK'D BY B. TILTON

JOB NO.: 943-2848

FILENAME: LR100

LAIDLAW WASTE SYSTEMS INC.

SOIL BOREHOLE LOG

SITE NAME AND LOCATION	DRILLING METHOD:				BORING NO.	
LAIDLAW/OU2 RI-FS/MO WEST LAKE LANDFILL OPERABLE UNIT 2	4.25 inch I.D./8.25 inch O.D. Hollow Stem Auger				LR-100	
					SHEET	
	SAMPLING METHOD:				2 OF 2	
	SPLIT SPOON: 2.0 inch O.D./1.5 inch I.D. (SP)				DRILLING	
	SHELBY TUBE: 3.0 inch O.D./2 13/16 inch I.D. (SH)				START	FINISH
	WATER LEVEL	19.0 FT.			TIME	TIME
	TIME	11:55			7:30	11:00
	DATE	10/04/95			DATE	DATE
NORTHING: 1067293.73 DATUM EASTING: 514893.56 ELEVATION 467.2	CASING DEPTH	26.0 FT.			10/04/95	10/04/95

DRILL RIG CME 750	SURFACE CONDITIONS
ANGLE 90° BEARING NA	
SAMPLE HAMMER	

DEPTH IN FEET (ELEVATION)	BLOW/ 6 IN. ON SAMPLER	RECOVERY	SYMBOL	SAMPLER SYMBOL	SAMPLE NUMBER AND DESCRIPTION OF MATERIAL	SAMPLER TYPE	REMARKS
16	8 11 21 11	0.2'/2.0' (10%)			(5.5-22.0 Ft.) WASTE, wet	SP 8	
17						SP 9	
18	8 13 7 8	0.4'/2.0' (20%)				SP 10	0.0 ppm PID
19							
20	4 5 10 5	0.6'/2.0' (30%)			@ 19.9 ft, increasing amount of olive gray SILT intermixed with waste	SP 11	
21							
22	4 7 6 6	0.1'/2.0' (5%)				SP 12	0.0 ppm PID
23							
24	5 4 4 5	0.8'/2.0' (40%)				SP 13	
25							
26	4 5 5 7	0.4'/2.0' (20%)					0.2 ppm PID
27					(440.2) 27.0 (27.0-28.0 Ft.) Compact, olive gray (5Y 4/1), SILT, NR, wet, (ML), (LOESS)	SP 14	
28					(439.2) 28.0 End of Soil Borehole Log at 28.0 ft.		
29							

DRILLING CONTR LAYNE-WESTERN

LOGGED BY B. HARRINGTON

DATE 10/9/95 CHK'D BY B. TILTON

JOB NO.: 943-2848

FILENAME: LR100

Well No. LR-100

Boring No. X-Ref: LR-100

PIEZOMETER CONSTRUCTION SUMMARY

Survey Coords: Northing: 1067294 ft. Easting: 514894 ft.

Elevation Ground Level 467.2 ft. NGVD

Top of PVC Casing 469.12 ft. NGVD

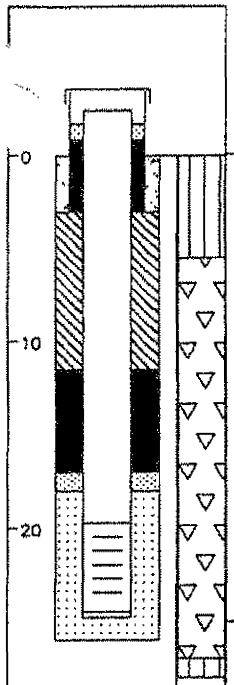

Drilling Summary:

Total Depth 26.0 ft.

Borehole Diameter 8 1/4" (0.0-26.0')

Casing Stickup Height 1.92 ft.

Driller Layne-Western, St. Louis, MO

Rig CME 750

Bit(s) 4 1/4" ID Hollow Stem Auger Bit

Drilling Fluid None

Protective Casing 8x8" Square Steel, by 5' long

Construction Time log:

Task	Start Date	Start Time	Finish Date	Finish Time
Drilling CME 750	10/4/95	7:30	10/4/95	11:00
Geophys.Logging:				
Casing: 2" I.D. PVC	10/4/95	12:00	10/4/95	12:10
Filter Placement:	10/4/95	12:10	10/4/95	13:05
Cementing:				
Development				
Bentonite Grout	10/4/95	14:45	10/4/95	14:55
Bentonite Seal	10/4/95	14:30	10/4/95	14:35

Well Design & Specifications

Basis: Geologic Log X Geophysical Log

Casing string(s): C = Casing S = Screen

Depth			String(s)	Elevation		
+ 1.92	-	19.70	C1	469.12	-	447.50
19.70	-	24.50	S1	447.50	-	442.70
24.50	-	24.80	C2	442.70	-	442.40

Casing: C1 2" dia. Schedule 80 PVC, flush threaded with O-rings

C2 2" dia. threaded PVC end cap (4" long or 0.33')

Screen: S1 2" dia. Schedule 80 PVC, 0.010" machine cut slot, flush threaded with O-rings

Sand Pack: 16-35 mesh Silica Sand 18.0-26.0'

Filter Pack: 100 mesh Silica Sand 17.0-18.0'

Grout Seal: Wyo-Ben Grout Well Bentonite Slurry 3.0-11.5'

Bentonite Seal: Extra high yield Wyo-Ben (100%) Slurry 11.5-16.0'; Chips 16.0-17.0'

Concrete: 0.0-3.0'

Well Development

Stabilization Test Data:

Time	pH	Spec. Cond.	Temp (°C)

Recovery Data:

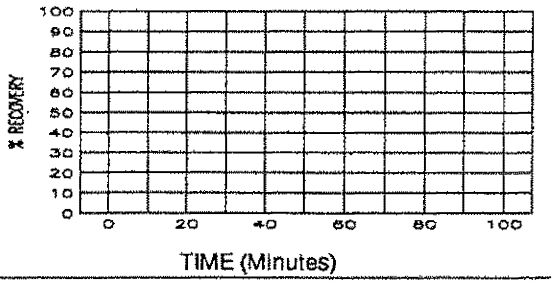

Comments:

Drilled to 26.0 ft. then collected split spoon sample from 26.0-28.0 ft.

Not to Scale

Supervised by B. Harrington

Job Number 943-2848

Site LAIDLAW/OU2 RI-FS/MO

File Name LR100

MISSOURI DEPARTMENT OF NATURAL RESOURCES
DIVISION OF GEOLOGY AND LAND SURVEY

MONITORING WELL CERTIFICATION RECORD

OFFICE USE ONLY	DATE RECEIVED
REF. NO. 145105	
C.R. NO.	CHECK NO.
STATE WELL NUMBER	TRANSMITTAL NO.
CHECKED BY	ROUTE
APPROVED BY	ENTERED Ph 1 Ph 2 Ph 3

INFORMATION SUPPLIED BY MONITORING WELL CONTRACTOR

SITE/FACILITY NAME: LAIDLAW BRIDGETON SANITARY LANDFILL
WELL NUMBER: LR-100
SITE ADDRESS: ST. CHARLES ROCK RD
CITY: BRIDGETON
STATE: MO
ZIP CODE: 63044
OWNER NAME: LAIDLAW WASTE SYSTEMS, INC.
TELEPHONE: 314-241-3710
OWNER ADDRESS: 1838 N. BROADWAY
CITY: ST. LOUIS
STATE: MO
ZIP CODE: 63102

VARIANCE ISSUED: ☐ YES ☒ NO
DATE ISSUED:
VARIANCE NUMBER: V

DESCRIBE LOCATION OF THE WELL SO WE WOULD BE ABLE TO VISIT IT
200' NORTHEAST OF SOUTH FENCE AND 380' NORTHWEST OF WESTERN MOST BUILDING AT SOUTH ENTRANCE OFF OLD ST CHARLES ROCK RD.

LOCATION OF WELL
SHOW LOCATION IN SECTION PLAT
COUNTY: ST. LOUIS
SURFACE ELEVATION: 467.2
SMALLEST ¼ ____ ¼ ____ ¼ LARGEST ¼ ____ ¼
SEC. ____ TWN. 47 N,RNG. 5 (E) OR W
LAT. 38 ° 45 ' 53 " LONG. 90 ° 26 ' 52 "

MONITORING WELL INSTALLATION CONTRACTOR'S NAME: LAYNE WESTERN CO, INC.
PERMIT NUMBER: 001258 WPM
DRILLING CONTRACTOR'S NAME: LAYNE WESTERN CO., INC.
PERMIT NUMBER: 001258 WPM

WELL CONSTRUCTION INFORMATION

TYPE OF WELL: ☐ MONITORING WELL ☒ PIEZOMETER ☐ OTHER ____
TYPE OF POTENTIAL SITE: ☐ HAZARDOUS MATERIAL ☒ LANDFILL ☐ OTHER ☐ L.U.S.T. ____
MONITORING FOR: (CHECK ALL THAT APPLY) ☒ V.O.C. ☐ METALS ☐ PETROLEUM PRODUCT ☐ OTHER ____ ONLY

PROTECTIVE CASING DETAILS (IF USED): LENGTH 5 FT. | DIAMETER OF CASING 8x8 IN. | WEIGHT OR SDR # 0.188" | DIAMETER AND DEPTH OF DRILL HOLE 8¼ IN. 26 FT. | JOINTS ☐ MECHANICAL ☐ WELDED ☐ THREADED ☐ OTHER ____ | MATERIAL ☒ STEEL ☐ THERMO PLASTIC ☐ FLUORO POLYMER ☐ OTHER ____ | LOCKING CAP? ☒ YES ☐ NO

CAP VENTED ☒ YES ☐ NO
WEEP HOLE? ☒ YES ☐ NO
CASING GROUT DETAILS: MATERIAL ☐ CEMENT ☒ CONCRETE ☐ OTHER ____
DEPTH FROM THE SURFACE TO THE BOTTOM OF THE CASING GROUT SEAL 3.0 FT.
TYPE OF SURFACE COMPLETION: ☒ ABOVE GROUND ☐ FLUSH MOUNT
DESCRIBE HOW THE FLUSH MOUNT WAS CONSTRUCTED

CENTRALIZER USED ON RISER: ☒ NO ☐ YES LOCATED AT ____
MATERIAL: ☐ STAINLESS STEEL ☐ OTHER ____

RISER PIPE DETAILS: LENGTH 22.9 FT. | DIAMETER OF RISER PIPE 2 IN. | WEIGHT OR SDR # SCH80 | DIAMETER OF DRILL HOLE 8¼ IN. | JOINTS ☒ THREADED ☐ MECHANICAL ☐ WELDED ☐ OTHER ____ | MATERIAL ☒ THERMO PLASTIC ☐ STEEL ☐ FLUORO POLYMER ☐ OTHER ____

ANNULAR SEAL: ☐ CEMENT SLURRY ☒ BENTONITE SLURRY ☐ NON SLURRY BENTONITE ☐ CEMENT/BENTONITE SLURRY
TYPE: ____ BAGS OF CEMENT USED ____ % BENTONITE USED ____ WATER USED/BAG ____ GAL.
BENTONITE SEAL: MATERIAL BENTONITE ☐ SLURRY ☒ CHIPS ☐ GRANULAR ☐ PELLETS | LENGTH OF SEAL 1.0 | BENTONITE SEAL INSTALLED IN ☒ UNSATURATED ZONE ☐ SATURATED ZONE

	TYPE	GRAIN SIZE	LENGTH OF FILTER PACK	METHOD OF INSTALLATION	Information in this column to be supplied in the Feet from Surface column	FEET FROM SURFACE	FORMATION DESCRIPTION
PRIMARY FILTER PACK	☒ SAND ☐ MANUFACTURED ☐ NATURAL	16-35	8.0 FT.	H.S.A. POUR			
SECONDARY FILTER PACK	☒ SAND ☐ MANUFACTURED ☐ NONE	100	1.0 FT.	H.S.A. POUR	Depth to bottom of Protective Casing Seal:	3.0	0-6 Clayey silt
WELL SCREEN	LENGTH OF SCREEN 5 FT.	DIAMETER 2 IN.	SLOT SIZE 10	WEIGHT OR SDR # SCH80	MATERIAL ☒ PLASTIC ☐ STEEL ☐ FLUORO POLYMER	Depth to Base of Annular Seal:	16.0	6-25.5 Trash
SUMP DETAILS	LENGTH OF SUMP	DIAMETER OF SUMP	MATERIAL ☐ PVC ☐ STEEL ☐ FLUORO POLYMER ☐ OTHER ____		Depth to Base of Bentonite Seal:	17.0	
BACK FILL	WAS THE WELL BACK FILLED? ☐ YES ☒ NO	MATERIAL USED	LENGTH OF BACK FILLED BORE HOLE		Depth to Top of Primary Filter Pack:	18.0	
					Depth to Top of the Screen:	21.0	
					Depth to Bottom of the Screen:	26.0	25.5-28 Clay
					Total Depth:	26.0	

STATIC WATER LEVEL ____ FEET FROM MEASURING POINT
DATE OF STATIC WATER LEVEL
MEASURING POINT FOR STATIC WATER LEVEL IS: ☒ TOP OF RISER PIPE ☐ OTHER ____
ELEVATION OF MEASURING POINT 469.12
MULTIPLE CASED WELLS: SUBMIT ADDITIONAL AS BUILT DIAGRAM SHOWING WELL CONSTRUCTION DETAILS INCLUDING TYPE AND SIZE OF ALL CASING, HOLE DIAMETERS, AND GROUT USED.
DRILLING EQUIPMENT: ☐ AIR ROTARY ☒ AUGER TYPE 4¼ H.S.A. ☐ REVERSE ROTARY ☐ OTHER ____
DATE WELL DRILLING WAS COMPLETED 10-04-95

I HEREBY CERTIFY THAT THE MONITORING WELL HEREIN DESCRIBED WAS CONSTRUCTED IN ACCORDANCE WITH THE DEPARTMENT OF NATURAL RESOURCES REQUIREMENTS FOR THE CONSTRUCTION OF MONITORING WELLS.

SIGNATURE PRIMARY CONTRACTOR/PERMIT #	DATE	SIGNATURE DRILLER/PERMIT #	DATE
Lowell V. Mahurin	11-15-95	Lowell V. Mahurin	11-15-95

MO 780-1415 (7-95)
DISTRIBUTION: WHITE/DIVISION CANARY/MONITORING WELL CONTRACTOR PINK/OWNER
MAIL WHITE COPY TO: DEPARTMENT OF NATURAL RESOURCES, P.O. BOX 250, ROLLA, MO 65402
ENCLOSE $35 PER MONITORING WELL FOR THE CERTIFICATION FEE WITHIN 60 DAYS AFTER WELL COMPLETION
RECYCLED PAPER

LAIDLAW WASTE SYSTEMS INC.

SOIL BOREHOLE LOG

SITE NAME AND LOCATION

LAIDLAW/OU2 RI-FS/MO
WEST LAKE LANDFILL
OPERABLE UNIT 2

DATUM NORTHING: 1068402.25 EASTING: 514718.41 ELEVATION 500.2

DRILLING METHOD: 4.25 inch I.D./8.25 inch O.D. Hollow Stem Auger

SAMPLING METHOD: SPLIT SPOON: 3.0 inch O.D./2 13/16 inch I.D. (SP); SHELBY TUBE: 3.0 inch O.D./2 13/16 inch I.D. (SH)

BORING NO. LR-101

SHEET 1 OF 4

					DRILLING START	DRILLING FINISH
WATER LEVEL	DRY	51.0 FT.				
TIME	11:15	15:30			8:00	15:20
DATE	10/10/95	10/10/95			DATE 10/10/95	DATE 10/10/95
CASING DEPTH	35.0 FT.	55.0 FT.				

DRILL RIG CME 750

ANGLE 90° BEARING NA

SAMPLE HAMMER

SURFACE CONDITIONS

DEPTH IN FEET (ELEVATION)	BLOW/ 6 IN. ON SAMPLER	RECOVERY	SYMBOL	SAMPLER SYMBOL	SAMPLE NUMBER AND DESCRIPTION OF MATERIAL	SAMPLER TYPE	REMARKS
1	20 39 25 23	0.1' 1.0' (10%)		ST 1	(0.0-1.0 ft.) Compact, moderate yellowish brown (10YR 5/4), SILT, NR, dry, (ML), (FILL) (499.2) 1.0		
2		1.6' 2.0' (80%)		SP 2	(1.0-2.6 ft.) Crushed, LIMESTONE Gravel, (GP), (FILL) (497.6) 2.6		
3	4 8 10 6	1.1' 2.0' (55%)		SP 3	(2.6-5.0 ft.) Compact, olive gray (5Y 4/1), SILT, NR, dry, (ML), (FILL) (495.5) 4.7		
5	7 6 25 50/3	1.0' 2.0' (50%)		SP 4	(4.7-12.4 ft.) WASTE, damp		
7	6 7 11 5	0.9' 2.0' (45%)		SP 5			0.0 ppm PID
9	40 8 5 14	1.1' 2.0' (55%)		SP 6	@ 10.0 ft., moist		
11	12 15 5 7	1.3' 2.0' (65%)		SP 7	(487.8) 12.4		
13	8 16 10 15			SP 8	(12.4-19.9 ft.) Compact, olive gray (5Y 4/1), SILT, with little waste, damp, (ML), (FILL) @ 14.5 ft., wet		

DRILLING CONTR LAYNE-WESTERN

LOGGED BY B. HARRINGTON

DATE 10/23/95 CHK'D BY B. TILTON

JOB NO.: 943-2848

FILENAME: LR101

SOIL BOREHOLE LOG

LAIDLAW WASTE SYSTEMS INC.

SITE NAME AND LOCATION	DRILLING METHOD:					BORING NO.
LAIDLAW/OU2 RI-FS/MO WEST LAKE LANDFILL OPERABLE UNIT 2	4.25 inch I.D./8.25 inch O.D. Hollow Stem Auger					LR-101
						SHEET 2 OF 4
	SAMPLING METHOD:					DRILLING
	SPLIT SPOON: 3.0 inch O.D./2 13/16 inch I.D. (SP)					START / FINISH
	SHELBY TUBE: 3.0 inch O.D./2 13/16 inch I.D. (SH)					START / FINISH
	WATER LEVEL	DRY	51.0 FT.			
	TIME	11:15	15:30			TIME 8:00 / TIME 15:20
	DATE	10/10/95	10/10/95			DATE 10/10/95 / DATE 10/10/95
	CASING DEPTH	35.0 FT.	55.0 FT.			

NORTHING: 1068402.25
DATUM EASTING: 514718.41 ELEVATION 500.2

DRILL RIG CME 750 SURFACE CONDITIONS

ANGLE 90° BEARING NA

SAMPLE HAMMER

DRILLING CONTR LAYNE-WESTERN

DEPTH IN FEET (ELEVATION)	BLOW/6 IN. ON SAMPLER	RECOVERY	SYMBOL	SAMPLER SYMBOL	SAMPLE NUMBER AND DESCRIPTION OF MATERIAL	SAMPLER TYPE	REMARKS
16	6 13 20 50/5	1.7'/2.0' (85%)			(12.4-19.9 ft.) Compact, olive gray (5Y 4/1), SILT, with little waste, damp, (ML), (FILL)	SP 9	
17	22 18	0.6'/2.0' (30%)				SP 10	0.0 ppm PID
18	18 16						
19	5 8	0.9'/2.0' (45%)				SP 11	
20	26 10				(480.3) 19.9 (19.9-51.5 ft.) WASTE, damp		
21	4 7	0.9'/2.0' (45%)				SP 12	
22	50 25				From 21.4-21.5 ft., layer of olive gray (5Y 4/1), SILT, with little waste, wet		
23	29 18	1.4'/2.0' (70%)				SP 13	0.0 ppm PID
24	25 50/4				From 23.5-24.0 ft., layer of olive gray (5Y 4/1), SILT, with little waste, wet, (ML) @ 24.0 ft., moist		
25	27 19	0.5'/2.0' (25%)				SP 14	
26	38 38				@ 26.0 ft., wet		
27	8 15	0.8'/2.0' (40%)				SP 15	0.0 ppm PID
28	50/6						
29	50/1	0.1'/2.0' (5%)				SP 16	

LOGGED BY B. HARRINGTON

DATE 10/23/95 CHK'D BY B. TILTON

JOB NO.: 943-2848

FILENAME: LR101

LAIDLAW WASTE SYSTEMS INC.

SOIL BOREHOLE LOG

SITE NAME AND LOCATION

LAIDLAW/OU2 RI-FS/MO
WEST LAKE LANDFILL
OPERABLE UNIT 2

DATUM NORTHING: 1068402.25 EASTING: 514718.41 ELEVATION 500.2

DRILLING METHOD: 4.25 inch I.D./8.25 inch O.D. Hollow Stem Auger

SAMPLING METHOD: SPLIT SPOON: 3.0 inch O.D./2 13/16 inch I.D. (SP); SHELBY TUBE: 3.0 inch O.D./2 13/16 inch I.D. (SH)

BORING NO. LR-101

SHEET 3 OF 4

					DRILLING START	DRILLING FINISH
WATER LEVEL	DRY	51.0 FT.			TIME	TIME
TIME	11:15	15:30			8:00	15:20
DATE	10/10/95	10/10/95			DATE	DATE
CASING DEPTH	35.0 FT.	55.0 FT.			10/10/95	10/10/95

DRILL RIG CME 750

ANGLE 90° BEARING NA

SAMPLE HAMMER

SURFACE CONDITIONS

DRILLING CONTR LAYNE-WESTERN

LOGGED BY B. HARRINGTON

DATE 10/23/95 CHK'D BY B. TILTON

JOB NO.: 943-2848

FILENAME: LR101

DEPTH IN FEET (ELEVATION)	BLOW/ 6 IN. ON SAMPLER	RECOVERY	SYMBOL	SAMPLER SYMBOL	SAMPLE NUMBER AND DESCRIPTION OF MATERIAL	SAMPLER TYPE	REMARKS
31	50/5	0.2'/2.0' (10%)			(19.5-51.5 ft.) WASTE, damp	SP (18)	Rods warm upon withdrawal from borehole.
32						SP (17)	
33	9 23 10 16	1.5'/2.0' (75%)				SP (18)	0.0 ppm PID
34							
35	9 11 17 17	1.8'/2.0' (90%)			From 35.3-35.7 ft., layer of olive gray (5Y 4/1), SILT, moist, (ML)	SP (19)	@ 11:00 Rain
36							
37	9 38 29 17				@ 37.0 ft., wet	SP (20)	1.1 ppm PID 34% LEL, stop drilling temporarily
38							
39	42 45 36 17	1.3'/2.0' (65%)				SP (21)	
40					@ 40.0 ft., moist		
41	11 11 18 20	1.1'/2.0' (55%)				SP (22)	
42							
43	12 18 40 50/1	1.6'/2.0' (80%)				SP (23)	6.1 ppm PID
44							

LAIDLAW WASTE SYSTEMS INC.

SOIL BOREHOLE LOG

SITE NAME AND LOCATION

LAIDLAW/OU2 RI-FS/MD
WEST LAKE LANDFILL
OPERABLE UNIT 2

NORTHING: 1068402.25
DATUM EASTING: 514718.41 ELEVATION 500.2

DRILLING METHOD: 4.25 inch I.D./8.25 inch O.D. Hollow Stem Auger

SAMPLING METHOD:
SPLIT SPOON: 3.0 inch O.D./2 13/16 inch I.D. (SP)
SHELBY TUBE: 3.0 inch O.D./2 13/16 inch I.D. (SH)

BORING NO. LR-101

SHEET 4 OF 4

					DRILLING START	DRILLING FINISH
WATER LEVEL	DRY	51.0 FT.			TIME	TIME
TIME	11:15	15:30			8:00	15:20
DATE	10/10/95	10/10/95			DATE	DATE
CASING DEPTH	35.0 FT.	55.0 FT.			10/10/95	10/10/95

DRILL RIG CME 750
ANGLE 90° BEARING NA
SAMPLE HAMMER
SURFACE CONDITIONS

DRILLING CONTR LAYNE-WESTERN
LOGGED BY B. HARRINGTON
DATE 10/23/95 CHK'D BY B. TILTON
JOB NO.: 943-2848
FILENAME: LR101

DEPTH IN FEET (ELEVATION)	BLOW/6 IN. ON SAMPLER	RECOVERY	SYMBOL	SAMPLER SYMBOL	SAMPLE NUMBER AND DESCRIPTION OF MATERIAL	SAMPLER TYPE	REMARKS
46	50/5	0.5'/2.0' (25%)			(19.5-51.5 ft.) WASTE, damp	SP (24)	Drill rods very warm upon withdrawal from borehole.
47	34	1.8'/2.0' (90%)			From 47.0-48.0 ft., ammonia odor	SP (25)	
48	15 25 33						
49	12	1.9'/2.0' (95%)				SP (26)	
50	11 14 16						
51	5	2.0'/2.0' (100%)			(448.7) 51.5		Newsprint dated 1974-1976 0.3 ppm PID 34% LEL Temporarily stop drilling
52	13 55 50/5				(51.5-52.1 ft.) Compact, olive gray (5Y 4/1), SILT, moist, (ML), (FILL) (448.1) 52.1	SP (27)	
53	29	1.6'/2.0' (80%)			(52.1-54.7 ft.) Dense, black stained SILT and mixed WASTE, some Gravel (looks as if burned), damp to moist, (FILL)		0.0 ppm PID
54	25 6 10				(445.5) 54.7	SP (28)	
55	1	2.0'/2.0' (100%)			(54.7-57.0 ft.) Very loose, very light gray (NB), very fine SAND and thinly laminated lime, appears to be mine spoils, WR, wet, (FILL)		Water level began to rise rapidly after penetrating mine spoils.
56	1 1 3					SP (29)	
57					(443.2) 57.0		
58					End of Soil Borehole Log at 55.0 ft. At completion of drilling, borehole sealed to surface with cement/bentonite grout.		
59							

MISSOURI DEPARTMENT OF NATURAL RESOURCES
DIVISION OF GEOLOGY AND LAND SURVEY

REGISTRATION RECORD

OFFICE USE ONLY		DATE RECEIVED	
REF. NO. 131862			
ROUTE		P.W.S. NUMBER	CHECK NUMBER
STATE WELL NUMBER		TRANSMITTAL NO.	
CHECKED BY		CROSS REFERENCE NO.	
APPROVED BY	DATE	ENTERED Ph 1 Ph 2 Ph 3	

INFORMATION SUPPLIED BY OWNER

NAME		TELEPHONE
LANDFILL WASTE SYSTEMS, INC.		314-241-3710

ADDRESS	CITY	STATE	ZIP CODE
1 S BROADWAY	ST. LOUIS	MO	63102

SITE NAME	WELL NUMBER	ADDRESS OF WELL SITE OR SITE NAME (IF DIFFERENT THAN ABOVE)
LANDFILL SANITARY LANDFILL	LR-101	ST. CHARLES ROCK RD

OWNER STATUS ☐ BUILDER ☐ PRIVATE HOME OWNER ☐ DEVELOPER ☑ OTHER (SPECIFY) LANDFILL

CITY	STATE	ZIP CODE
BRIDGETON	MO	63044

PURPOSE OF REGISTRATION FORM
☐ ABANDONED WELL ☐ MINERAL EXPLORATORY
☐ WELL RECONSTRUCTION TEST HOLE
☑ OTHER ABANDONED PIEZOMETER

VARIANCE ISSUED? ☐ YES ☒ NO

VARIANCE NUMBER:	WELL CERTIFICATION NUMBER	DATE ORIGINALLY DRILLED
		10-6-95

SIGNATURE (WELL OWNER) DATE

INFORMATION SUPPLIED BY CONTRACTOR

SKETCH THE LOCATION TO THE WELL INCLUDING MILEAGE ON ALL ROADS TRAVELED FROM NEAREST TOWNS OR HIGHWAYS

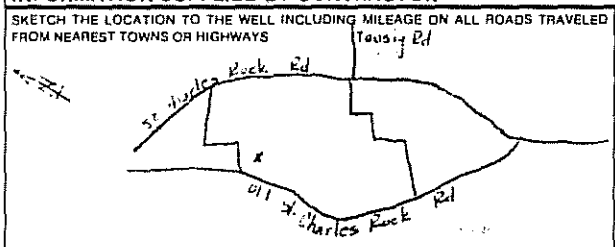

LOCATION OF WELL
SHOW LOCATION IN SECTION PLAT
QUAD _____ COUNTY ST. LOUIS
ELEV _____ AREA NO. _____
SMALLEST ¼ LARGEST ¼
SEC. _____ TWN. 47 N.RNG. 5S E OR W
LAT. 38 ° 46 ' 02 " LONG. 90 ° 26 ' 52 "

DESCRIBE LOCATION OF THE WELL SO WE WOULD BE ABLE TO VISIT THE WELL
775' NORTH OF SOUTHWEST FENCE CORNER AND 39D' EAST OF FENCE
HOLE WAS DRILLED AND THEN ABANDONED BEFORE WELL WAS ACTUALLY SET

CONTRACTOR'S NAME	PERMIT NUMBER	DRILLERS NAME	PERMIT NUMBER
LANNE WESTERN CO, INC.	01258	DALE MAHURIN	01258 WITH

ABANDONMENT OF WELLS

FORMER USE OF WELL
☐ HAND DUG ☐ SOIL BORING
☐ DOMESTIC (1 TO 3 CONNECTIONS) ☐ PUBLIC WATER SUPPLY
☐ MULTI-FAMILY ☐ MINERAL EXPLORATORY TEST HOLE
☐ HEAT PUMP ☒ MONITORING
☐ IRRIGATION ☐ OTHER

ORIGINAL DRILLER (IF KNOWN)	DATE ORIGINALLY DRILLED
DALE MAHURIN	10-10-95

DATE PLUGGED	STATIC WATER LEVEL	PUMP REMOVED FROM WELL?
10-10-15	FT	☐ YES N/A ☐ NO

DEPTH OF THE WELL	LENGTH OF CASING	CASING DIAMETER/WELL DIA
55'	N/A	8 1/4"

GROUT INSTALLATION METHOD	CASING CUT OFF THREE FEET BELOW SURFACE?	TYPE OF CASING
☐ GRAVITY ☑ TREMIE	☒ YES ☐ NO N/A	☐ STEEL ☐ PLASTIC ☐ OTHER N/A

GROUT MATERIAL USED
NEAT CEMENT ☐ HI-EARLY ☒ PORTLAND TYPE 1 ☐ OTHER
☒ BENTONITE SLURRY ☐ OTHER
BENTONITE ☒ POWDER ☐ GRANULAR ☐ CHIPS ☐ PELLETS

NUMBER OF BAGS OF GROUT USED: 20.5
POUNDS OF GROUT PER BAG: 47

IF NEAT CEMENT USED, HOW MANY GALLONS OF WATER MIXED PER BAG OF CEMENT: 5

TYPE OF FILL MATERIAL USED: CEMENT / BENTONITE GROUT

AMOUNT OF FILL MATERIAL USED: 0.75 CU. YDS.

DEPTH TO TOP OF FILL MATERIAL: 3'

WELL DISINFECTED BEFORE PLUGGING? ☐ YES ☒ NO

NUMBER USED FOR DISINFECTION
GALLONS OF CHLORINE _____
POUNDS OF CHLORINE _____
TABLETS OF CHLORINE _____

WAS THE WELL ABANDONED BECAUSE OF HOOKING UP TO A PUBLIC OR RURAL WATER SUPPLY DISTRICT? ☐ YES ☒ NO

IF YES, WHAT IS THE NAME OF THE WATER DISTRICT:

CHECK THE BOX WHICH APPLIES

☒ I HEREBY CERTIFY THAT THE WELL HEREIN DESCRIBED WAS ABANDONED IN ACCORDANCE WITH THE DEPARTMENT OF NATURAL RESOURCES REQUIREMENTS FOR THE ABANDONMENT OF WELLS.

☐ I HEREBY CERTIFY THAT THE WELL HEREIN DESCRIBED WAS REPAIRED IN ACCORDANCE WITH THE DEPARTMENT OF NATURAL RESOURCES REQUIREMENTS FOR THE REPAIR OF WELLS.

CONTRACTOR'S SIGNATURE [signature] DATE 11-15-15

WELL RECONSTRUCTION

TYPE OF REPAIR
☐ RAISED CASING ☐ LINING OF WELL
☐ DEEPENING OF WELL ☐ OTHER

USE OF WELL
☐ DOMESTIC (1 TO 3 CONNECTIONS) ☐ PUBLIC WATER SUPPLY
☐ MULTI-FAMILY ☐ MONITORING
☐ HEAT PUMP ☐ OTHER
☐ IRRIGATION

DIA. OF WELL CASING IN.	WAS WELL DISINFECTED AFTER RECONSTRUCTION ☐ YES ☐ NO	DATE RECONSTRUCTION COMPLETED

RAISED CASING INFORMATION
LENGTH OF CASING ADDED FT.
MATERIAL: ☐ STEEL ☐ PLASTIC
METHOD OF ATTACHMENT: ☐ THREADED ☐ FUSED ☐ WELDED ☐ GLUED ☐ COUPLED

LINER DETAILS
PURPOSE OF LINER: ☐ USED ONLY TO HOLD BACK FORMATION ☐ USED TO SEAL OUT CONTAMINATION OR OTHER CONDITIONS
DIAMETER OF LINER IN.
WEIGHT OR SDR #
DEPTH TO THE TOP OF LINER FROM SURFACE FT.
MATERIAL ☐ PLASTIC ☐ STEEL
AMOUNT OF LINER USED FT.
JOINTS ☐ GLUED ☐ WELDED ☐ OTHER

LINER PACKER DETAILS
TYPE USED ☐ NONE ☐ RUBBER BOOT
DEPTH(S) SET

LINER GROUT DETAILS
POSITION OF SEAL ☐ FULL LENGTH ☐ BETWEEN PACKERS
MATERIAL: CEMENT: ☐ PORTLAND TYPE 1 ☐ HI EARLY; BENTONITE: ☐ CHIPS ☐ PELLETS ☐ SLURRY ☐ GRANULAR

DEPTH PUMP WAS SET FT. GPM	DEPTH FROM SURFACE TO TOP OF THE GROUT SEAL FT.	DEPTH FROM SURFACE TO BOTTOM OF THE GROUT SEAL FT.

DEEPENING OF WELL INFORMATION

DEPTH FROM	DEPTH TO	FORMATION DESCRIPTION	YIELD

MO 780-1414 (1-95) DISTRIBUTION: WHITE/CONTRACTOR CANARY/DIVISION PINK/OWNER
MAIL CANARY COPY TO: DEPARTMENT OF NATURAL RESOURCES, P.O. BOX 250, ROLLA, MO 65401 RECORD MUST BE SUBMITTED WITHIN 60 DAYS OF COMPLETION DATE

LAIDLAW WASTE SYSTEMS INC.

SOIL BOREHOLE LOG

SITE NAME AND LOCATION	LAIDLAW/OU2 RI-FS/MO WEST LAKE LANDFILL OPERABLE UNIT 2
DRILLING METHOD:	4.25 inch I.D./8.25 inch O.D. Hollow Stem Auger
SAMPLING METHOD:	SPLIT SPOON: 3.0 inch O.D./2 13/16 inch I.D. (SP) SHELBY TUBE: 3.0 inch O.D./2 13/16 inch I.D. (SH)
BORING NO.	LR-102
SHEET	1 OF 6
DRILLING	START / FINISH
WATER LEVEL	54.0 FT.
TIME	10:15
DATE	10/8/95
CASING DEPTH	60.0 FT.
TIME	START: 11:55 / FINISH: 14:30
DATE	START: 10/6/95 / FINISH: 10/7/95
DATUM	NORTHING: 1068937.21 EASTING: 514788.13
ELEVATION	512.0
DRILL RIG	CME 750
ANGLE	90°
BEARING	NA
SAMPLE HAMMER	
SURFACE CONDITIONS	

DEPTH IN FEET (ELEVATION)	BLOW/6 IN. ON SAMPLER	RECOVERY	SYMBOL	SAMPLER SYMBOL	SAMPLE NUMBER AND DESCRIPTION OF MATERIAL	SAMPLER TYPE	REMARKS
1		1.5'/2.0' (75%)			(0.0-1.5 ft.) Compact, moderate yellowish brown (10YR 5/4), SILT, NR, dry, (ML), (FILL)	ST 1	
					(510.5) 1.5		
2	50/3	0.3'/2.0' (15%)			(1.5-19.5 ft.) WASTE, consisting of wood, asphalt, carpet and other demolition wastes intermixed with olive black composite soil	SP 2	Petroleum odor
3							
4	15	1.1'/2.0' (55%)					0.0 ppm PID
5	17 5 6					SP 3	
6	9 22	0.5'/2.0' (25%)					
7	22 4					SP 4	
8	3	0.8'/2.0' (40%)					0.3 ppm PID
9	50/6				From 8.4-8.8 ft, layer of dark gray SILT with gravel sized stones	SP 5	
10	11	0.7'/2.0' (35%)					
11	50/3				@ 10.5 ft, asphalt	SP 6	
12	50/6	0.5'/2.0' (25%)			From 12.0-14.2 ft, carpet		0.9 ppm PID
13						SP 7	
14	15 50/6	0.7'/2.0' (35%)				SP 8	

DRILLING CONTR LAYNE-WESTERN

LOGGED BY B. HARRINGTON CHK'D BY B. TILTON

DATE 10/9/95

JOB NO.: 943-2848

FILENAME: LR102

LAIDLAW WASTE SYSTEMS INC.

SOIL BOREHOLE LOG

SITE NAME AND LOCATION

LAIDLAW/OU2 RI-FS/MO
WEST LAKE LANDFILL
OPERABLE UNIT 2

NORTHING: 1068937.21
DATUM EASTING: 514788.13 ELEVATION 512.0

DRILLING METHOD: 4.25 inch I.D./8.25 inch O.D. Hollow Stem Auger

SAMPLING METHOD:
SPLIT SPOON: 3.0 inch O.D./2 13/16 inch I.D. (SP)
SHELBY TUBE: 3.0 inch O.D./2 13/16 inch I.D. (SH)

WATER LEVEL	54.0 FT.				
TIME	10:15				
DATE	10/8/95				
CASING DEPTH	60.0 FT.				

BORING NO. LR-102

SHEET 2 OF 6

DRILLING: START TIME 11:55, DATE 10/6/95; FINISH TIME 14:30, DATE 10/7/95

DRILL RIG CME 750

ANGLE 90° BEARING NA

SAMPLE HAMMER

SURFACE CONDITIONS

DEPTH IN FEET (ELEVATION)	BLOW/ 6 IN. ON SAMPLER	RECOVERY	SYMBOL	SAMPLER SYMBOL	SAMPLE NUMBER AND DESCRIPTION OF MATERIAL	SAMPLER TYPE	REMARKS
16	50/4	0.0' / 2.0' (0%)			(1.5-19.5 ft.) Compacted, WASTE, consisting of wood, asphalt, carpet and other demolition wastes intermixed with olive black composite soil	SP 8	0.1 ppm PID
17						SP 9	
18	16 20 24	0.3' / 2.0' (15%)				SP 10	
19	11				(492.5) 19.5		
20	10 8 8	0.8' / 2.0' (40%)			(19.5-20.5 ft.) Compact, greenish gray (5GY 6/1), SILT, damp, (ML), (FILL)		0.1 ppm PID
21	5				(491.5) 20.5 (20.5-36.0 ft.) WASTE, municipal intermixed with medium gray SILT, moist, strong leachate odor	SP 11	
22	0 0	0.2' / 2.0' (10%)			@ 22.0 ft., wet	SP 12	
23	13 33						
24	28 50/4	0.0' / 2.0' (0%)					0.7 ppm PID
25					@ 25.0 ft., moist	SP 13	
26	0 0 8	0.4' / 2.0' (20%)				SP 14	
27	6						
28	50/3	0.3' / 2.0' (15%)					0.0 ppm PID
29						SP 15	

DRILLING CONTR LAYNE-WESTERN

LOGGED BY B. HARRINGTON

DATE 10/9/95 CHK'D BY B. TILTON

JOB NO.: 943-2848

FILENAME: LR102

LAIDLAW WASTE SYSTEMS INC.

SOIL BOREHOLE LOG

SITE NAME AND LOCATION

LAIDLAW/OU2 RI-FS/MO
WEST LAKE LANDFILL
OPERABLE UNIT 2

DATUM NORTHING: 1068937.21 EASTING: 514788.13 ELEVATION 512.0

DRILLING METHOD: 4.25 inch I.D./8.25 inch O.D. Hollow Stem Auger

SAMPLING METHOD: SPLIT SPOON: 3.0 inch O.D./2 13/16 inch I.D. (SP); SHELBY TUBE: 3.0 inch O.D./2 13/16 inch I.D. (SH)

BORING NO. LR-102

SHEET 3 OF 6

					DRILLING START	DRILLING FINISH
WATER LEVEL	54.0 FT.				TIME 11:55	TIME 14:30
TIME	10:15					
DATE	10/8/95				DATE 10/6/95	DATE 10/7/95
CASING DEPTH	60.0 FT.					

DRILL RIG CME 750

ANGLE 90° BEARING NA

SAMPLE HAMMER

SURFACE CONDITIONS

DRILLING CONTR LAYNE-WESTERN

LOGGED BY B. HARRINGTON

DATE 10/9/95 CHK'D BY B. TILTON

JOB NO.: 943-2848

FILENAME: LR102

DEPTH IN FEET (ELEVATION)	BLOW/6 IN. ON SAMPLER	RECOVERY	SYMBOL	SAMPLER SYMBOL	SAMPLE NUMBER AND DESCRIPTION OF MATERIAL	SAMPLER TYPE	REMARKS
31	14 50/5	0.0' 2.0' (0%)			(20.5-36.0 ft.) Compacted WASTE, municipal intermixed with medium gray SILT, moist, strong leachate odor	SP (16)	
32	32 33	0.0' 2.0' (0%)					1.2 ppm PID
33	20 12					SP (17)	
34	13 9	0.2' 2.0' (10%)					
35	10 50/4					SP (18)	
36	50/5	0.0' 2.0' (0%)			(36.0-48.4 ft.) WASTE, demolition and construction debris, aphalt, particle board, wood, corrugated cardboard, brick, etc., intermixed with black composite soil, moist		1.1 ppm PID
37						SP (19)	
38	41 50/3	0.4' 2.0' (20%)					
39						SP (20)	
40	20 50/1	0.2' 2.0' (10%)					0.2 ppm PID
41						SP (21)	
42	27 13	0.6' 2.0' (30%)					
43	25 24					SP (22)	
44	50/5	0.0' 2.0' (0%)				SP (23)	1.0 ppm PID

LAIDLAW WASTE SYSTEMS INC.

SOIL BOREHOLE LOG

SITE NAME AND LOCATION

LAIDLAW/OU2 RI-FS/MO
WEST LAKE LANDFILL
OPERABLE UNIT 2

NORTHING: 1068937.21
DATUM EASTING: 514788.13 ELEVATION 512.0

DRILLING METHOD: 4.25 inch I.D./8.25 inch O.D. Hollow Stem Auger

SAMPLING METHOD:
SPLIT SPOON: 3.0 inch O.D./2 13/16 inch I.D. (SP)
SHELBY TUBE: 3.0 inch O.D./2 13/16 inch I.D. (SH)

WATER LEVEL	54.0 FT.				
TIME	10:15				
DATE	10/8/95				
CASING DEPTH	60.0 FT.				

BORING NO. LR-102

SHEET 4 OF 6

DRILLING

START	FINISH
TIME 11:55	TIME 14:30
DATE 10/6/95	DATE 10/7/95

DRILL RIG CME 750

SURFACE CONDITIONS

ANGLE 90° BEARING NA

SAMPLE HAMMER

DRILLING CONTR LAYNE-WESTERN

LOGGED BY B. HARRINGTON

DATE 10/9/95 CHK'D BY B. TILTON

JOB NO.: 943-2848

FILENAME: LR102

DEPTH IN FEET (ELEVATION)	BLOW/ 6 IN. ON SAMPLER	RECOVERY	SYMBOL	SAMPLER SYMBOL	SAMPLE NUMBER AND DESCRIPTION OF MATERIAL	SAMPLER TYPE	REMARKS
46	6 17 15 16	1.8'/2.0' (90%)			(36.0-48.4 ft.) Compacted WASTE, demolition and construction debris, asphalt, particle board, wood, corrugated cardboard, brick, etc., intermixed with black composite soil, moist from 45.0-45.5 ft., layer of compact, medium gray (N5), SILT, some Gravel, moist, (ML), (FILL)	SP (23)	
47						SP (24)	
48	7 18 27 17	2.0'/2.0' (100%)			(463.6) 48.4 (48.4-50.8 ft.) Dense, olive gray (5Y 4/1), SILT, with little waste and demolition debris, moist, (ML), (FILL)	SP (25)	1.1 ppm PID
49							
50	7 9 10 12	1.6'/2.0' (80%)			(461.2) 50.8 (50.8-58.0 ft.) WASTE, demolition debris, bricks, wood, etc., with little olive gray Silt, moist	SP (26)	
51							
52	8 11 50/5	1.5'/2.0' (75%)				SP (27)	
53					@ 53.0 ft., wet		
54	10 14 50/4	1.1'/2.0' (55%)				SP (28)	
55							
56	14 16 16 18	1.2'/2.0' (60%)				SP (29)	0.7 ppm PID
57							
58	3 50/6	0.6'/2.0' (30%)			(454.0) 58.0 (58.0-62.8 ft.) Compact, olive gray (5Y 4/1), SILT and GRAVEL, wet, (ML/GP), (FILL)	SP (30)	
59							0.2 ppm PID

LAIDLAW WASTE SYSTEMS INC.

SOIL BOREHOLE LOG

SITE NAME AND LOCATION

LAIDLAW/OU2 RI-FS/MD
WEST LAKE LANDFILL
OPERABLE UNIT 2

NORTHING: 1068937.21
DATUM EASTING: 514788.13 ELEVATION 512.0

DRILLING METHOD: 4.25 inch I.D./8.25 inch O.D. Hollow Stem Auger

SAMPLING METHOD:
SPLIT SPOON: 3.0 inch O.D./2 13/16 inch I.D. (SP)
SHELBY TUBE: 3.0 inch O.D./2 13/16 inch I.D. (SH)

BORING NO. LR-102

SHEET 5 OF 6

					DRILLING START	DRILLING FINISH
WATER LEVEL	54.0 FT.					
TIME	10:15				TIME 11:55	TIME 14:30
DATE	10/8/95				DATE 10/6/95	DATE 10/7/95
CASING DEPTH	60.0 FT.					

DRILL RIG CME 750
ANGLE 90° BEARING NA
SAMPLE HAMMER

SURFACE CONDITIONS

DEPTH IN FEET (ELEVATION)	BLOW/ 6 IN. ON SAMPLER	RECOVERY	SYMBOL	SAMPLER SYMBOL	SAMPLE NUMBER AND DESCRIPTION OF MATERIAL	SAMPLER TYPE	REMARKS
61	13 19 9 14	2.0'/2.0' (100%)			(58.0-62.8 ft.) Compact, olive gray (5Y 4/1), SILT and GRAVEL, wet, (ML/GP), (FILL)	SP (31)	
62	13 33 32	1.4'/2.0' (70%)			(449.2) 62.8	SP (32)	
63	35				(62.8-76.0 ft.) WASTE, demolition debris that appears to have been burned, wet to moist, with some olive gray Silt		
64	8 40 50/5	1.1'/2.0' (55%)			below 64.0 ft., waste becomes moist to damp	SP (33)	0.1 ppm PID
65							
66	65 49 25	0.5'/2.0' (25%)				SP (34)	
67	50/1						
68	8 29 21	0.4'/2.0' (20%)				SP (35)	0.0 ppm PID
69	12						
70	4 9 12	0.6'/2.0' (30%)				SP (36)	
71	27						
72	28 17 30	1.2'/2.0' (60%)				SP (37)	0.1 ppm PID
73	50/5						
74	50/2	0.0'/2.0' (0%)				SP (38)	0.7 ppm PID

DRILLING CONTR LAYNE-WESTERN

LOGGED BY B. HARRINGTON

DATE 10/9/95 CHK'D BY B. TILTON

JOB NO.: 943-2848

FILENAME: LR102

LAIDLAW WASTE SYSTEMS INC.

SOIL BOREHOLE LOG

SITE NAME AND LOCATION

LAIDLAW/OU2 RI-FS/MO
WEST LAKE LANDFILL
OPERABLE UNIT 2

NORTHING: 1068937.21
DATUM EASTING: 514788.13 ELEVATION 512.0

DRILLING METHOD: 4.25 inch I.D./8.25 inch O.D. Hollow Stem Auger

SAMPLING METHOD: SPLIT SPOON: 3.0 inch O.D./2 13/16 inch I.D. (SP)
SHELBY TUBE: 3.0 inch O.D./2 13/16 inch I.D. (SH)

BORING NO. LR-102

SHEET 6 OF 6

					DRILLING START	DRILLING FINISH
WATER LEVEL	54.0 FT.				TIME	TIME
TIME	10:15				11:55	14:30
DATE	10/8/95				DATE	DATE
CASING DEPTH	60.0 FT.				10/6/95	10/7/95

DRILL RIG CME 750

ANGLE 90° BEARING NA

SAMPLE HAMMER

SURFACE CONDITIONS

DRILLING CONTR LAYNE-WESTERN

LOGGED BY B. HARRINGTON

DATE 10/9/95 CHK'D BY B. TILTON

JOB NO.: 943-2848

FILENAME: LR102

DEPTH IN FEET (ELEVATION)	BLOW/ 6 IN. ON SAMPLER	RECOVERY	SYMBOL	SAMPLER SYMBOL	SAMPLE NUMBER AND DESCRIPTION OF MATERIAL	SAMPLER TYPE		REMARKS
76			▽▽▽▽▽▽		(62.8-76.0 ft.) Compacted WASTE, demolition debris, moist to damp, with some olive gray Silt (436.0) 76.0	SP	(38)	
					End of Soil Borehole Log at 76.0 ft.			
77								
78								
79								
80								
81								
82								
83								
84								
85								
86								
87								
88								
89								

Well No. LR-102

Boring No. X-Ref: LR-102

PIEZOMETER CONSTRUCTION SUMMARY

Survey Coords: Northing: 1068937 ft.
Easting: 514788 ft.

Elevation Ground Level 512.0 ft. NGVD
Top of PVC Casing 513.52 ft. NGVD

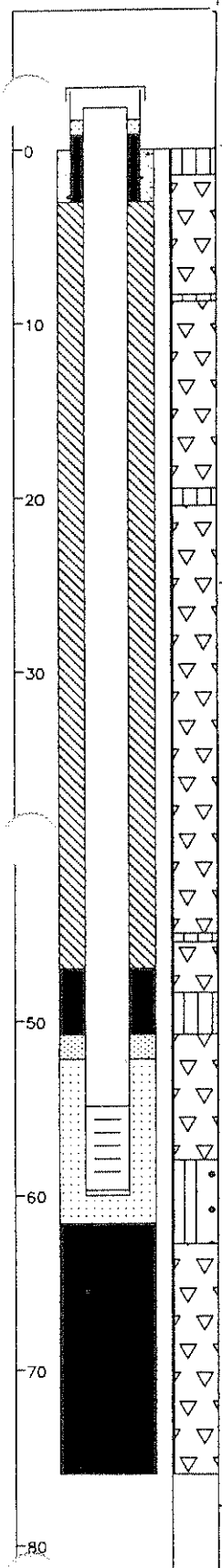

Drilling Summary:

Total Depth 76.0 ft.
Borehole Diameter 8 1/4" (0.0-76.0')
Casing Stickup Height 1.52 ft.
Driller Layne-Western
St. Louis, MO

Rig CME 750
Bit(s) 4 1/4" ID Hollow Stem Auger Bit

Drilling Fluid None

Protective Casing 8x8" Square Steel, by 5' long

Construction Time log:

Task	Start Date	Start Time	Finish Date	Finish Time
Drilling				
CME 750	10/6/95	11:55	10/7/95	14:30
Geophys.Logging:				
Casing:				
2" I.D. PVC	10/8/95	14:30	10/8/95	15:05
Filter Placement:	10/8/95	12:50	10/8/95	15:45
Cementing:				
Development				
Bentonite Grout	10/8/95	16:20	10/8/95	
Bentonite Seal	10/8/95	15:45	10/8/95	15:55

Well Design & Specifications

Basis: Geologic Log X Geophysical Log
Casing string(s): C = Casing S = Screen

Depth			String(s)	Elevation		
+ 1.52	-	54.90	C1	513.52	-	457.10
54.90	-	59.70	S1	457.10	-	452.30
59.70	-	60.00	C2	452.30	-	452.00
	-				-	
	-				-	
	-				-	

Casing: C1 2" dia. Schedule 80 PVC, flush threaded with O-rings
C2 2" dia. threaded PVC end cap (4" long or 0.33')
Screen: S1 2" dia. Schedule 80 PVC, 0.010" machine cut slot, flush threaded with O-rings

Sand Pack: 16-35 mesh Silica Sand 52.2-61.6'

Filter Pack: Less than 50 mesh Silica Sand 50.8-52.2'

Grout Seal: Wyo-Ben Grout Well Bentonite Slurry 3.0-47.0'

Bentonite Seal: Extra high yield Wyo-Ben (100%) Slurry 47.0-50.8', Chips 61.6-76.0'

Concrete: 0.0-3.0'

Well Development

Stabilization Test Data:

Time	pH	Spec. Cond.	Temp (°C)

Recovery Data:

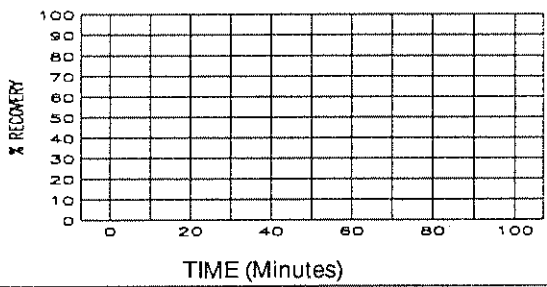

Comments:

Not to Scale

Supervised by B. Harrington
Job Number 943-2848

Site LAIDLAW/OU2 RI-FS/MO
File Name LR102

MISSOURI DEPARTMENT OF NATURAL RESOURCES
DIVISION OF GEOLOGY AND LAND SURVEY

MONITORING WELL CERTIFICATION RECORD

OFFICE USE ONLY	DATE RECEIVED
REF. NO. 145106	
C.R. NO.	CHECK NO.
STATE WELL NUMBER	TRANSMITTAL NO.
CHECKED BY	ROUTE
APPROVED BY	ENTERED Ph 1 Ph 2 Ph 3

INFORMATION SUPPLIED BY MONITORING WELL CONTRACTOR

SITE/FACILITY NAME: LAIDLAW BRIDGETON SANITARY LANDFILL
WELL NUMBER: LR-102
SITE ADDRESS: ST. CHARLES ROCK RD
CITY: BRIDGETON
STATE: Mo
ZIP CODE: 63044
OWNER NAME: LAIDLAW WASTE SYSTEMS, INC.
TELEPHONE: 314-291-3710
OWNER ADDRESS: 1838 N. BROADWAY
CITY: ST. LOUIS
STATE: Mo
ZIP CODE: 63102

VARIANCE ISSUED: ☐ YES ☒ NO
DATE ISSUED:
VARIANCE NUMBER: V

DESCRIBE LOCATION OF THE WELL SO WE WOULD BE ABLE TO VISIT IT
WEST SIDE OF SITE, 390' EAST OF FENCE LINE AND 1580' NORTH OF SOUTHWEST FENCE CORNER. (ON TOP OF HILL)

LOCATION OF WELL
SHOW LOCATION IN SECTION PLAT
COUNTY: ST. LOUIS
SURFACE ELEVATION: 512.0
SMALLEST ¼ ____ ¼ ____ ¼ LARGEST ¼ ____ ¼
SEC. ____ TWN. 47 N,RNG. 5 (E OR W)
LAT. 38 ° 46 ' 09 " LONG. 90 ° 26 ' 53 "

MONITORING WELL INSTALLATION CONTRACTOR'S NAME: LAYNE WESTERN CO, INC. — PERMIT NUMBER: 001258 WPM
DRILLING CONTRACTOR'S NAME: LAYNE WESTERN CO., INC. — PERMIT NUMBER: 001258 WPM

WELL CONSTRUCTION INFORMATION

TYPE OF WELL: ☐ MONITORING WELL ☒ PIEZOMETER ☐ OTHER
TYPE OF POTENTIAL SITE: ☐ HAZARDOUS MATERIAL ☒ LANDFILL ☐ OTHER ☐ L.U.S.T.
MONITORING FOR: (CHECK ALL THAT APPLY) ☒ V.O.C. ☐ METALS ☐ PETROLEUM PRODUCT ☐ OTHER ONLY

PROTECTIVE CASING DETAILS (IF USED): LENGTH 5 FT. | DIAMETER OF CASING 8x8 IN. | WEIGHT OR SDR # 0.188" | DIAMETER AND DEPTH OF DRILL HOLE 8¼ IN. 76 FT. | JOINTS ☐ THREADED ☐ MECHANICAL ☐ WELDED ☐ OTHER | MATERIAL ☐ THERMO PLASTIC ☒ STEEL ☐ FLUORO POLYMER TYPE | LOCKING CAP? ☒ YES ☐ NO

CASING GROUT DETAILS: CAP VENTED ☒ YES ☐ NO; WEEP HOLE? ☒ YES ☐ NO; MATERIAL ☐ CEMENT ☒ CONCRETE ☐ OTHER; DEPTH FROM THE SURFACE TO THE BOTTOM OF THE CASING GROUT SEAL 3.0 FT.; TYPE OF SURFACE COMPLETION ☒ ABOVE GROUND ☐ FLUSH MOUNT; DESCRIBE HOW THE FLUSH MOUNT WAS CONSTRUCTED

CENTRALIZER USED ON RISER: ☒ NO ☐ YES LOCATED AT ____ MATERIAL ☐ STAINLESS STEEL ☐ OTHER

RISER PIPE DETAILS: LENGTH 56.5 FT. | DIAMETER OF RISER PIPE 2 IN. | WEIGHT OR SDR # SCH 80 | DIAMETER OF DRILL HOLE 8¼ IN. | JOINTS ☒ THREADED ☐ MECHANICAL ☐ WELDED ☐ OTHER | MATERIAL ☒ THERMO PLASTIC ☐ STEEL ☐ FLUORO POLYMER ☐ OTHER

ANNULAR SEAL: ☐ CEMENT SLURRY ☒ BENTONITE SLURRY ☐ NON SLURRY BENTONITE ☐ CEMENT/BENTONITE SLURRY; BAGS OF CEMENT USED ____; % BENTONITE USED ____; WATER USED/BAG ____ GAL.; TYPE ____
BENTONITE SEAL: MATERIAL BENTONITE ☒ SLURRY ☐ CHIPS ☐ GRANULAR ☐ PELLETS | LENGTH OF SEAL 3.8 | BENTONITE SEAL INSTALLED IN ☒ UNSATURATED ZONE ☐ SATURATED ZONE

PRIMARY FILTER PACK: TYPE ☒ SAND ☐ MANUFACTURED ☐ NATURAL | GRAIN SIZE 16-35 | LENGTH OF FILTER PACK 9.4 FT. | METHOD OF INSTALLATION H.S.A. POUR

SECONDARY FILTER PACK: TYPE ☒ SAND ☐ MANUFACTURED ☐ NONE | GRAIN SIZE 100 | LENGTH OF FILTER PACK 1.4 FT. | METHOD OF INSTALLATION H.S.A. POUR

WELL SCREEN: LENGTH OF SCREEN 5 FT. | DIAMETER 2 IN. | SLOT SIZE 10 | WEIGHT OR SDR # SCH80 | MATERIAL ☒ PLASTIC ☐ STEEL ☐ FLUORO POLYMER

SUMP DETAILS: LENGTH OF SUMP | DIAMETER OF SUMP | MATERIAL ☐ PVC ☐ STEEL ☐ FLUORO POLYMER ☐ OTHER

BACK FILL: WAS THE WELL BACK FILLED? ☒ YES ☐ NO | MATERIAL USED MED. BENT. CHIPS | LENGTH OF BACK FILLED BORE HOLE 14.4'

Information in this column to be supplied in the Feet from Surface column

	FEET FROM SURFACE	FORMATION DESCRIPTION
Depth to bottom of Protective Casing Seal:	3.0	0-1.5 Clayey silt 1.5-76 Trash
Depth to Base of Annular Seal:	47.0	
Depth to Base of Bentonite Seal:	50.8	
Depth to Top of Primary Filter Pack:	52.2	
Depth to Top of the Screen:	55.0	
Depth to Bottom of the Screen:	60.0	
Total Depth:	76.0	
DATE WELL DRILLING WAS COMPLETED	10-08-95	

STATIC WATER LEVEL FEET FROM MEASURING POINT:
DATE OF STATIC WATER LEVEL:
MEASURING POINT FOR STATIC WATER LEVEL IS: ☒ TOP OF RISER PIPE ☐ OTHER
ELEVATION OF MEASURING POINT: 513.52

MULTIPLE CASED WELLS: SUBMIT ADDITIONAL AS BUILT DIAGRAM SHOWING WELL CONSTRUCTION DETAILS INCLUDING TYPE AND SIZE OF ALL CASING, HOLE DIAMETERS, AND GROUT USED.

DRILLING EQUIPMENT: ☐ AIR ROTARY ☒ AUGER TYPE 4¼ H.S.A. ☐ REVERSE ROTARY ☐ OTHER

I HEREBY CERTIFY THAT THE MONITORING WELL HEREIN DESCRIBED WAS CONSTRUCTED IN ACCORDANCE WITH THE DEPARTMENT OF NATURAL RESOURCES REQUIREMENTS FOR THE CONSTRUCTION OF MONITORING WELLS.

SIGNATURE PRIMARY CONTRACTOR/PERMIT #	DATE	SIGNATURE DRILLER/PERMIT #	DATE
Leman M. Mahurin M.	11-15-95	Leman M. Mahurin M.	11-15-95

MO 780-1415 (7-95)

DISTRIBUTION: WHITE/DIVISION CANARY/MONITORING WELL CONTRACTOR PINK/OWNER
MAIL WHITE COPY TO: DEPARTMENT OF NATURAL RESOURCES, P.O. BOX 250, ROLLA, MO 65402
ENCLOSE $35 PER MONITORING WELL FOR THE CERTIFICATION FEE WITHIN 60 DAYS AFTER WELL COMPLETION

RECYCLED PAPER

LAIDLAW WASTE SYSTEMS INC.

SOIL BOREHOLE LOG

SITE NAME AND LOCATION

LAIDLAW/OU2 RI-FS/MD
WEST LAKE LANDFILL
OPERABLE UNIT 2

NORTHING: 1068527.38
DATUM EASTING: 515217.07 ELEVATION 460.1

DRILLING METHOD: 4.25 inch I.D./8.25 inch O.D. Hollow Stem Auger

SAMPLING METHOD:
SPLIT SPOON: 2.0 inch O.D./1.5 inch I.D. (SP)
SHELBY TUBE: 3.0 inch O.D./2 13/16 inch I.D. (SH)

WATER LEVEL	26.74 FT			
TIME	9:16			
DATE	10/20/95			
CASING DEPTH	38.0 FT.			

BORING NO. LR-103

SHEET 1 OF 3

DRILLING START	DRILLING FINISH
TIME 14:00	TIME 9:00
DATE 10/19/95	DATE 10/20/95

DRILL RIG CME 750

ANGLE 90° BEARING NA

SAMPLE HAMMER

SURFACE CONDITIONS

DRILLING CONTR LAYNE-WESTERN

LOGGED BY M. SANDFORT

DATE 10/23/95 CHK'D BY B. TILTON

JOB NO.: 943-2848

FILENAME: LR103

DEPTH IN FEET (ELEVATION)	BLOW/6 IN. ON SAMPLER	RECOVERY	SYMBOL	SAMPLER SYMBOL	SAMPLE NUMBER AND DESCRIPTION OF MATERIAL	SAMPLER TYPE	REMARKS
1	2 4 6 8	1.0'/2.0' (50%)			(0.0-2.5 Ft.) Stiff, moderate yellowish brown (10YR 5/4), CLAYEY SILT, trace fine Gravel, occasional cobbles, NR, dry, (CL-ML), (FILL)	SP 1	
2	17 12	1.3'/2.0'			(457.6) 2.5		
3	13 16	(65%)			(2.5-3.5 Ft.) Very stiff, medium gray (N5), SANDY SILT, little c-f Gravel, occasional cobbles, SR, damp, (ML), (FILL)	SP 2	
4	9 10 8 11	0.7'/2.0' (35%)			(3.5-7.5 Ft.) Very stiff, medium bluish gray (5B 5/1), SILT, little c-f Sand, WR, damp, (ML), (FILL)	SP 3	
6	3 8 5 4	1.2'/2.0' (60%)				SP 4	
8	3 5 4 4	1.1'/2.0' (55%)			(7.5-10.0 Ft.) Stiff, medium light gray (N6), SANDY SILT, little c-f Gravel, SR, damp, (ML), (FILL)	SP 5	
10	2 2 3 2	1.6'/2.0' (80%)			(10.0-19.3 Ft.) Firm, medium gray (N5), SILT, little fine Sand, trace iron staining, SR, damp, (ML), (LOESS)	SP 6	
12	1 2 3 3	1.4'/2.0' (70%)				SP 7	@ 12.0 Ft. Hole began making gas at low levels
14	2 2 3 4	2.0'/2.0' (100%)				SP 8	

LAIDLAW WASTE SYSTEMS INC.

SOIL BOREHOLE LOG

SITE NAME AND LOCATION

LAIDLAW/OU2 RI-FS/MD
WEST LAKE LANDFILL
OPERABLE UNIT 2

NORTHING: 1068527.38
DATUM EASTING: 515217.07 ELEVATION 460.1

DRILLING METHOD: 4.25 inch I.D./8.25 inch O.D. Hollow Stem Auger

SAMPLING METHOD:
SPLIT SPOON: 2.0 inch O.D./1.5 inch I.D. (SP)
SHELBY TUBE: 3.0 inch O.D./2 13/16 inch I.D. (SH)

					START	FINISH
WATER LEVEL	26.74 FT.				TIME 14:00	TIME 9:00
TIME	9:16					
DATE	10/20/95				DATE 10/19/95	DATE 10/20/95
CASING DEPTH	38.0 FT.					

BORING NO. LR-103

SHEET 2 OF 3

DRILLING

DRILL RIG CME 750

ANGLE 90° BEARING NA

SAMPLE HAMMER

SURFACE CONDITIONS

DEPTH IN FEET (ELEVATION)	BLOW/ 6 IN. ON SAMPLER	RECOVERY	SYMBOL	SAMPLER SYMBOL	SAMPLE NUMBER AND DESCRIPTION OF MATERIAL	SAMPLER TYPE	REMARKS
16	3 3 4 5	2.0'/2.0' (100%)			(10.0-19.3 Ft.) Firm, medium gray (N5), SILT, little Fine Sand, trace iron staining, SR, damp, (ML), (LOESS)	SP 8	
17						SP 9	
18	1 2 2 4	2.0'/2.0' (100%)			From 18.0-19.0 Ft, wet zone	SP 10	
19					(440.8) 19.3		
20	2 4 6 7	2.0'/2.0' (100%)			(19.3-24.2 Ft.) Firm, grayish black (N2), SILTY CLAY, NR, damp, (CL), (ALLUVIUM)	SH 11	
21							
22	2 4 5 8	2.0'/2.0' (100%)			@ 22.3 Ft, color changes to medium dark gray (N4)	SP 12	
23							
24	6 12 17 15	2.0'/2.0' (100%)			(435.9) 24.2 (24.2-38.0 Ft.) Compact, medium gray to medium dark gray (N5 to N4), Fine SAND, trace Silt, NR, damp, (SP), (ALLUVIUM)	SP 13	
25							
26	4 4 6 15	1.2'/2.0' (60%)				SP 14	@ 26.0 Ft, encountered water
27					From 27.2-27.5 Ft, CLAYEY SILT layer		
28	8 8 15 15	2.0'/2.0' (100%)				SP 15	
29							

DRILLING CONTR LAYNE-WESTERN

LOGGED BY M. SANDFORT CHK'D BY B. TILTON

DATE 10/23/95

JOB NO.: 943-2848

FILENAME: LR103

LAIDLAW WASTE SYSTEMS INC.

SOIL BOREHOLE LOG

SITE NAME AND LOCATION

LAIDLAW/OU2 RI-FS/MO
WEST LAKE LANDFILL
OPERABLE UNIT 2

NORTHING: 1068527.38
DATUM EASTING: 515217.07 ELEVATION 460.1

DRILLING METHOD: 4.25 inch I.D./8.25 inch O.D. Hollow Stem Auger

SAMPLING METHOD:
SPLIT SPOON: 2.0 inch O.D./1.5 inch I.D. (SP)
SHELBY TUBE: 3.0 inch O.D./2 13/16 inch I.D. (SH)

BORING NO. LR-103

SHEET 3 OF 3

					DRILLING START	DRILLING FINISH
WATER LEVEL	26.74 FT				TIME 14:00	TIME 9:00
TIME	9:16					
DATE	10/20/95				DATE 10/19/95	DATE 10/20/95
CASING DEPTH	38.0 FT.					

DRILL RIG CME 750

SURFACE CONDITIONS

ANGLE 90° BEARING NA

SAMPLE HAMMER

DRILLING CONTR LAYNE-WESTERN

DEPTH IN FEET (ELEVATION)	BLOW/ 6 IN. ON SAMPLER	RECOVERY	SYMBOL	SAMPLER SYMBOL	SAMPLE NUMBER AND DESCRIPTION OF MATERIAL	SAMPLER TYPE	REMARKS
31	4 4 7 10	1.5'/2.0' (75%)			(24.2-38.0 Ft.) Compact, medium gray to medium dark gray (N5 to N4), fine SAND, trace Silt, NR, damp, (SP), (ALLUVIUM)	SP (16)	
32	5 11 14 27	1.3'/2.0' (65%)			From 32.3-32.5 Ft. layers of decayed vegetation	SP (17)	
33							
34	6 12 15 15					SP (18)	
35							
36	5 6 12 14					SP (19)	
37					@ 37.0 Ft., SAND becomes medium to fine grained		
38					(422.1) 38.0 End of Soil Borehole Log at 38.0 Ft.		
39							
40							
41							
42							
43							
44							

LOGGED BY M. SANDFORT

DATE 10/23/95 CHK'D BY B. TILTON

JOB NO.: 943-2848

FILENAME: LR103

Well No. LR-103

Boring No. X-Ref: LR-103

PIEZOMETER CONSTRUCTION SUMMARY

Survey Coords: Northing: 1068527 ft.
Easting: 515217 ft.

Elevation Ground Level 460.1 ft. NGVD
Top of PVC Casing 461.28 ft. NGVD

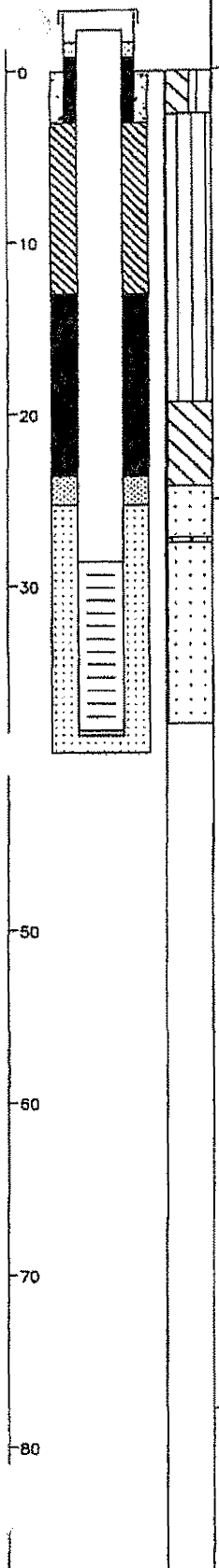

Not to Scale

Drilling Summary:

Total Depth 40.0 ft.
Borehole Diameter 8 1/4" (0.0-40.0')
Casing Stickup Height 1.10 ft.
Driller Layne-Western
St. Louis, MO

Rig CME 750
Bit(s) 4 1/4" ID/8 1/4" O.D. Hollow Stem Auger Bit

Drilling Fluid None

Protective Casing 8x8" Square Steel, by 5' long

Well Design & Specifications

Basis: Geologic Log X Geophysical Log

Casing string(s): C = Casing S = Screen

Depth			String(s)	Elevation		
+ 1.10	-	28.60	C1	461.28	-	431.50
28.60	-	38.40	S1	431.50	-	421.70
38.40	-	38.70	C2	421.70	-	421.40
	-				-	
	-				-	
	-				-	

Casing: C1 2" dia. Schedule 80 PVC, flush threaded with O-rings
C2 2" dia. threaded PVC end cap (4" long or 0.33')

Screen: S1 2" dia. Schedule 80 PVC, 0.010" machine cut slot, flush threaded with O-rings

Sand Pack: 16-35 mesh Silica Sand 25.3-39.7'

Filter Pack: 100 mesh Silica Sand 23.6-25.3'

Grout Seal: Wyo-Ben Grout Well Bentonite Slurry 3.0-13.0'

Bentonite Seal: Extra high yield Wyo-Ben (100%) Slurry 13.0-23.6'

Concrete: 0.0-3.0'

Construction Time log:

Task	Start Date	Start Time	Finish Date	Finish Time
Drilling				
CME 75	10/19/95	14:00	10/20/95	9:00
Geophys.Logging:				
Casing:				
2" I.D. PVC	10/20/95	8:55	10/20/95	8:59
Filter Placement:	10/20/95	9:10	10/20/95	10:25
Cementing:				
Development				
Bentonite Grout	10/20/95	10:35	10/20/95	10:50
Bentonite Seal	10/20/95	10:28	10/20/95	10:35

Well Development

Stabilization Test Data:

Time	pH	Spec. Cond.	Temp (°C)

Recovery Data:

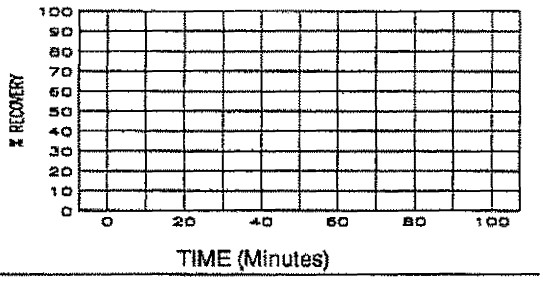

Comments:

Supervised by M. Sandfort
Job Number 943-2848

Site LAIDLAW/OU2 RI-FS/MO
File Name LR103

MISSOURI DEPARTMENT OF NATURAL RESOURCES
DIVISION OF GEOLOGY AND LAND SURVEY

MONITORING WELL CERTIFICATION RECORD

OFFICE USE ONLY	DATE RECEIVED
REF. NO. 145107	
C.R. NO.	CHECK NO.
STATE WELL NUMBER	TRANSMITTAL NO.
CHECKED BY	ROUTE
APPROVED BY	ENTERED Ph 1 Ph 2 Ph 3

INFORMATION SUPPLIED BY MONITORING WELL CONTRACTOR

SITE/FACILITY NAME: LAIDLAW BRIDGETON SANITARY LANDFILL
WELL NUMBER: LR-103
SITE ADDRESS: ST. CHARLES ROCK RD
CITY: BRIDGETON
STATE: Mo
ZIP CODE: 63044
OWNER NAME: LAIDLAW WASTE SYSTEMS, INC.
TELEPHONE: 314-241-3710
OWNER ADDRESS: 1838 N. BROADWAY
CITY: ST. LOUIS
STATE: MO
ZIP CODE: 63102

VARIANCE ISSUED: ☐ YES ☒ NO
DATE ISSUED:
VARIANCE NUMBER: V

DESCRIBE LOCATION OF THE WELL SO WE WOULD BE ABLE TO VISIT IT
AT WEST BASE OF GRAVEL PILE FOR ASPHALT PLANT.

LOCATION OF WELL
SHOW LOCATION IN SECTION PLAT
COUNTY: ST. LOUIS
SURFACE ELEVATION: 460.1
SMALLEST ¼ ____ ¼ ____ ¼ LARGEST ¼ ____ ¼
SEC. ____ TWN. 47 N,RNG. 5 (E)OR W
LAT. 38 ° 46 ' 05 " LONG. 90 ° 26 ' 48 "

MONITORING WELL INSTALLATION CONTRACTOR'S NAME: LAYNE WESTERN CO, INC.
PERMIT NUMBER: 001258 WPM
DRILLING CONTRACTOR'S NAME: LAYNE WESTERN CO, INC.
PERMIT NUMBER: 001258 WPM

WELL CONSTRUCTION INFORMATION

TYPE OF WELL: ☐ MONITORING WELL ☒ PIEZOMETER ☐ OTHER
TYPE OF POTENTIAL SITE: ☐ HAZARDOUS MATERIAL ☒ LANDFILL ☐ OTHER ☐ L.U.S.T.
MONITORING FOR: (CHECK ALL THAT APPLY) ☒ V.O.C. ☐ METALS ☐ PETROLEUM PRODUCT ☐ OTHER ONLY

PROTECTIVE CASING DETAILS (IF USED): LENGTH 5 FT. | DIAMETER OF CASING 8x8 IN. | WEIGHT OR SDR # 0.188 | DIAMETER AND DEPTH OF DRILL HOLE 8¼ IN. 40 FT. | JOINTS ☐ THREADED ☐ MECHANICAL ☐ WELDED ☐ OTHER | MATERIAL ☐ THERMO PLASTIC ☒ STEEL ☐ FLUORO POLYMER TYPE | LOCKING CAP? ☒ YES ☐ NO

CASING GROUT DETAILS: CAP VENTED ☒ YES ☐ NO; WEEP HOLE? ☒ YES ☐ NO; MATERIAL ☐ CEMENT ☒ CONCRETE ☐ OTHER; DEPTH FROM THE SURFACE TO THE BOTTOM OF THE CASING GROUT SEAL 3.0 FT.; TYPE OF SURFACE COMPLETION ☒ ABOVE GROUND ☐ FLUSH MOUNT; DESCRIBE HOW THE FLUSH MOUNT WAS CONSTRUCTED

CENTRALIZER USED ON RISER: ☒ NO ☐ YES LOCATED AT ____ MATERIAL ☐ STAINLESS STEEL ☐ OTHER

RISER PIPE DETAILS: LENGTH 31.2 FT. | DIAMETER OF RISER PIPE 2 IN. | WEIGHT OR SDR # SCH 80 | DIAMETER OF DRILL HOLE 8¼ IN. | JOINTS ☒ THREADED ☐ MECHANICAL ☐ WELDED ☐ OTHER | MATERIAL ☒ THERMO PLASTIC ☐ STEEL ☐ FLUORO POLYMER ☐ OTHER

ANNULAR SEAL: ☐ CEMENT SLURRY ☒ BENTONITE SLURRY ☐ NON SLURRY BENTONITE ☐ CEMENT/BENTONITE SLURRY TYPE: ____ BAGS OF CEMENT USED ____ % BENTONITE USED ____ WATER USED/BAG ____ GAL.

BENTONITE SEAL: MATERIAL BENTONITE ☒ SLURRY ☐ CHIPS ☐ GRANULAR ☐ PELLETS | LENGTH OF SEAL 10.6 | BENTONITE SEAL INSTALLED IN ☐ UNSATURATED ZONE ☒ SATURATED ZONE

	TYPE	GRAIN SIZE	LENGTH OF FILTER PACK	METHOD OF INSTALLATION	Information in this column to be supplied in the Feet from Surface column	FEET FROM SURFACE	FORMATION DESCRIPTION
PRIMARY FILTER PACK	☒ SAND ☐ MANUFACTURED ☐ NATURAL	16-35	14.7 FT.	H.S.A. POUR			
SECONDARY FILTER PACK	☒ SAND ☐ MANUFACTURED ☐ NONE	100	1.7 FT.	H.S.A. POUR	Depth to bottom of Protective Casing Seal:	3.0	0-7 Gravelly clay
WELL SCREEN	LENGTH OF SCREEN 10 FT.	DIAMETER 2 IN.	SLOT SIZE 10	WEIGHT OR SDR # SCH 80	MATERIAL ☒ PLASTIC ☐ STEEL ☐ FLUORO POLYMER	Depth to Base of Annular Seal:	13.0	7-26 Silty clay
SUMP DETAILS	LENGTH OF SUMP	DIAMETER OF SUMP	MATERIAL ☐ PVC ☐ STEEL ☐ FLUORO POLYMER ☐ OTHER			Depth to Base of Bentonite Seal:	23.6	
BACK FILL	WAS THE WELL BACK FILLED? ☐ YES ☒ NO	MATERIAL USED	LENGTH OF BACK FILLED BORE HOLE			Depth to Top of Primary Filter Pack:	25.3	
						Depth to Top of the Screen:	30.0	26-40 Silty sand
						Depth to Bottom of the Screen:	40.0	
						Total Depth:	40.0	

STATIC WATER LEVEL FEET FROM MEASURING POINT
DATE OF STATIC WATER LEVEL
MEASURING POINT FOR STATIC WATER LEVEL IS: ☒ TOP OF RISER PIPE ☐ OTHER
ELEVATION OF MEASURING POINT 461.28
MULTIPLE CASED WELLS: SUBMIT ADDITIONAL AS BUILT DIAGRAM SHOWING WELL CONSTRUCTION DETAILS INCLUDING TYPE AND SIZE OF ALL CASING, HOLE DIAMETERS, AND GROUT USED.
DRILLING EQUIPMENT: ☐ AIR ROTARY ☒ AUGER TYPE 4¼ H.S.A. ☐ REVERSE ROTARY ☐ OTHER
DATE WELL DRILLING WAS COMPLETED 10-20-95

I HEREBY CERTIFY THAT THE MONITORING WELL HEREIN DESCRIBED WAS CONSTRUCTED IN ACCORDANCE WITH THE DEPARTMENT OF NATURAL RESOURCES REQUIREMENTS FOR THE CONSTRUCTION OF MONITORING WELLS.

SIGNATURE PRIMARY CONTRACTOR/PERMIT #	DATE	SIGNATURE DRILLER/PERMIT #	DATE
Tomas M. Mahurin Jr.	11-15-95	Tomas M. Mahurin Jr.	11-15-95

MO 780-1415 (7-95)

DISTRIBUTION: WHITE/DIVISION CANARY/MONITORING WELL CONTRACTOR PINK/OWNER
MAIL WHITE COPY TO: DEPARTMENT OF NATURAL RESOURCES, P.O. BOX 250, ROLLA, MO 65402
ENCLOSE $35 PER MONITORING WELL FOR THE CERTIFICATION FEE WITHIN 60 DAYS AFTER WELL COMPLETION

RECYCLED PAPER

LAIDLAW WASTE SYSTEMS INC.

SOIL BOREHOLE LOG

SITE NAME AND LOCATION

LAIDLAW/OU2 RI-FS/MO
WEST LAKE LANDFILL
OPERABLE UNIT 2

NORTHING: 1068078.63
DATUM EASTING: 515623.34 ELEVATION 458.0

DRILLING METHOD: 4.25 inch I.D.8.25 inch O.D. Hollow Stem Auger

SAMPLING METHOD:
SPLIT SPOON: 2.0 inch O.D./1.5 inch I.D. (SP)
SHELBY TUBE: 3.0 inch O.D./2 13/16 inch I.D. (SH)

WATER LEVEL	26.0 FT.	25.6 FT.			
TIME	14:25	7:44			
DATE	10/17/95	10/18/95			
CASING DEPTH	26.5 FT.	38.0 FT.			

BORING NO. LR-104

SHEET 1 OF 3

DRILLING

START	FINISH
TIME 13:00	TIME 15:25
DATE 10/17/95	DATE 10/17/95

DRILL RIG CME 750

SURFACE CONDITIONS

ANGLE 90° BEARING NA

SAMPLE HAMMER

DEPTH IN FEET (ELEVATION)	BLOW/ 6 IN. ON SAMPLER	RECOVERY	SYMBOL	SAMPLER SYMBOL	SAMPLE NUMBER AND DESCRIPTION OF MATERIAL	SAMPLER TYPE	REMARKS
1					(0.0-2.0 ft.) Dense, yellowish gray (5Y 8/1), LIMESTONE GRAVEL, little fines, SR, damp, (GP), (ROAD BASE)	NS	
(456.0) 2.0							
2	9 9 13 15	1.5' 2.0' (75%)			(2.0-4.0 ft.) Very stiff, light olive gray (5Y 6/1), CLAYEY SILT, little Gravel, trace brick pieces, SR, damp, (CL-ML), (FILL)	SP 1	
3							
4	5 9 9 12	0.7' 2.0' (35%)			(4.0-10.0 ft.) Stiff, light olive gray (5Y 5/2), CLAYEY SILT, little Gravel, SR, damp, (CL-ML), (FILL)	SP 2	
5							
6	5 5 6 8	0.8' 2.0' (40%)				SP 3	
7							
8	5 8 10 11	0.5' 2.0' (25%)				SP 4	
9							
(448.0) 10.0							
10	5 9 12 50/6	1.8' 2.0' (90%)			(10.0-18.0 ft.) Compact, light olive brown and light olive gray (5Y 5/6 and 5Y 5/2), SILT, trace Gravel, trace Fe staining, little decayed plant matter, SR, damp to moist, (ML), (ALLUVIUM)	SP 5	
11							
12	9 3 3 4	1.5' 2.0' (75%)				SP 6	
13					below 13.0 ft., color changes to grayish olive green (5GY 3/2), becomes moist		
14							

DRILLING CONTR LAYNE-WESTERN

LOGGED BY M. SANDFORT CHK'D BY B. TILTON

DATE 10/17/95

JOB NO.: 943-2848

FILENAME: LR104

LAIDLAW WASTE SYSTEMS INC.

SOIL BOREHOLE LOG

SITE NAME AND LOCATION

LAIDLAW/OU2 RI-FS/MO
WEST LAKE LANDFILL
OPERABLE UNIT 2

NORTHING: 1068078.63
DATUM EASTING: 515623.34 ELEVATION 458.0

DRILLING METHOD: 4.25 inch I.D.8.25 inch O.D. Hollow Stem Auger

SAMPLING METHOD:
SPLIT SPOON: 2.0 inch O.D./1.5 inch I.D. (SP)
SHELBY TUBE: 3.0 inch O.D./2 13/16 inch I.D. (SH)

					DRILLING START	DRILLING FINISH
WATER LEVEL	26.0 FT.	25.6 FT.			TIME	TIME
TIME	14:25	7:44			13:00	15:25
DATE	10/17/95	10/18/95			DATE	DATE
CASING DEPTH	26.5 FT.	38.0 FT.			10/17/95	10/17/95

BORING NO. LR-104

SHEET 2 OF 3

DRILL RIG CME 750

ANGLE 90° BEARING NA

SAMPLE HAMMER

SURFACE CONDITIONS

DRILLING CONTR LAYNE-WESTERN

LOGGED BY M. SANDFORT

DATE 10/17/95 CHK'D BY B. TILTON

JOB NO.: 943-2848

FILENAME: LR104

DEPTH IN FEET (ELEVATION)	BLOW/ 6 IN. ON SAMPLER	RECOVERY	SYMBOL	SAMPLER SYMBOL	SAMPLE NUMBER AND DESCRIPTION OF MATERIAL	SAMPLER TYPE	REMARKS
16	3	1.2'/2.0' (60%)			(10.0-18.0 ft.) Compact, light olive brown and light olive gray (5Y 5/6 and 5Y 5/2), SILT, trace Gravel, trace Fe staining, little decayed plant matter, SR, damp to moist, (ML), (ALLUVIUM)		
17	8 5 6				From 16.5-17.0 ft, grayish olive green (5GY 3/2), SILTY SAND layer, moist, (SM)	SP (8)	
					(440.0) 18.0		
18	5	1.9'/2.0' (75%)			(18.0-26.2 ft.) Firm to stiff, dark gray (N3), SILTY CLAY, NR, damp, (CL), (ALLUVIUM)		
19	5 7 12					SP (9)	
20	1	1.6'/2.0' (80%)					
21	4 5 7					SP (10)	
22	2	2.0'/2.0' (100%)					
23	4 4 5				From 23.3-23.8 ft, wet Silt zone	SP (11)	
24	2	1.7'/2.0' (85%)					
25	3 6 6				From 25.0-26.2 ft, wet Silt zone	SP (12)	
26	2	1.2'/2.0' (60%)			(431.8) 26.2		@ 26.0 ft, First free water encountered
27	6 12 12				(26.2-37.3 ft.) Compact, dark gray (N3), Fine SAND, little Silt, occasional Silt layers, NR, wet, (SP), (ALLUVIUM)	SP (13)	
28	3	1.4'/2.0' (70%)					
29	5 6 7					SP (14)	

LAIDLAW WASTE SYSTEMS INC.

SOIL BOREHOLE LOG

SITE NAME AND LOCATION

LAIDLAW/OU2 RI-FS/MD
WEST LAKE LANDFILL
OPERABLE UNIT 2

NORTHING: 1068078.63
DATUM EASTING: 515623.34 ELEVATION 458.0

DRILLING METHOD:
4.25 inch I.D.8.25 inch O.D. Hollow Stem Auger

SAMPLING METHOD:
SPLIT SPOON: 2.0 inch O.D./1.5 inch I.D. (SP)
SHELBY TUBE: 3.0 inch O.D./2 13/16 inch I.D. (SH)

BORING NO. LR-104

SHEET 3 OF 3

					DRILLING START	DRILLING FINISH
WATER LEVEL	26.0 FT.	25.6 FT.				
TIME	14:25	7:44			TIME 13:00	TIME 15:25
DATE	10/17/95	10/18/95			DATE 10/17/95	DATE 10/17/95
CASING DEPTH	26.5 FT.	38.0 FT.				

DRILL RIG CME 750
ANGLE 90° BEARING NA
SAMPLE HAMMER

SURFACE CONDITIONS

DEPTH IN FEET (ELEVATION)	BLOW/ 6 IN. ON SAMPLER	RECOVERY	SYMBOL	SAMPLER SYMBOL	SAMPLE NUMBER AND DESCRIPTION OF MATERIAL	SAMPLER TYPE	REMARKS
31	5 7 8 11	1.6' 2.0' (86%)			(26.2-37.3 ft.) Compact, dark gray (N3), fine SAND, little Silt, occasional Silt layers, NR, wet, (SP), (ALLUVIUM)	SP (15)	
32	3 5 6	1.4' 2.0' (78%)			@ 34.0 ft, color changes to medium dark gray (N4)	SP (16)	
33					from 35.5-36.0 ft, trace carbonized wood		Began injecting water to control heaving sands
34	3 4 5	1.6' 2.0' (80%)				SP (17)	
35							
36	1 2 4	1.5' 2.0' (75%)			(420.7) 37.3	SP (18)	
37					(37.3-38.0 ft.) Medium dark gray (N4), firm SILTY CLAY, NR, damp, (CL) (420.0) 38.0		
38					End of Soil Borehole Log at 38.0 ft.		
39							
40							
41							
42							
43							
44							

DRILLING CONTR LAYNE-WESTERN

LOGGED BY M. SANDFORT

DATE 10/17/95 CHK'D BY B. TILTON

JOB NO.: 943-2848

FILENAME: LR104

Well No. LR-104

Boring No. X-Ref: LR-104

PIEZOMETER CONSTRUCTION SUMMARY

Survey Coords: Northing: 1068079 ft.
Easting: 515823 ft.

Elevation Ground Level 458.0 ft. NGVD
Top of PVC Casing 459.73 ft. NGVD

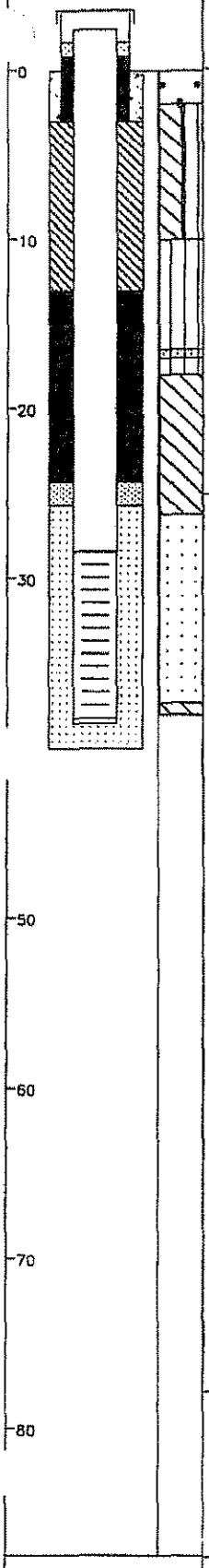

Not to Scale

Drilling Summary:

Total Depth 40.0 ft.
Borehole Diameter 8 1/4" (0.0-40.0')
Casing Stickup Height 1.73 ft.
Driller Layne-Western
St. Louis, MO

Rig CME 750
Bit(s) 4 1/4" ID Hollow Stem Auger Bit

Drilling Fluid None

Protective Casing 8x8" Square Steel, by 5' long

Construction Time log:

Task	Start Date	Start Time	Finish Date	Finish Time
Drilling				
CME 750	10/17/95	13:00	10/17/95	15:25
Geophys.Logging:				
Casing:				
2" I.D. PVC	10/18/95	7:45	10/18/95	7:48
Filter Placement:	10/18/95	7:52	10/18/95	8:48
Cementing:				
Development				
Bentonite Grout	10/18/95	8:44	10/18/95	8:56
Bentonite Seal	10/18/95	8:56	10/18/95	11:00

Well Design & Specifications

Basis: Geologic Log X Geophysical Log

Casing string(s): C = Casing S = Screen

Depth			String(s)	Elevation		
+ 1.73	-	28.40	C1	459.73	-	429.60
28.40	-	38.20	S1	429.60	-	419.80
38.20	-	38.50	C2	419.80	-	419.50

Casing: C1 2" dia. Schedule 80 PVC, flush threaded with O-rings
C2 2" dia. threaded PVC end cap (4" long or 0.33')

Screen: S1 2" dia. Schedule 80 PVC, 0.010" machine cut slot, flush threaded with O-rings

Sand Pack: 16-35 mesh Silica Sand 25.7-40.0'

Filter Pack: 100 mesh Silica Sand 24.3-25.7'

Grout Seal: Wyo-Ben Grout Well Bentonite Slurry 3.0-13.0'

Bentonite Seal: Extra high yield Wyo-Ben (100%) Slurry 13.0-24.3'

Concrete: 0.0-3.0'

Well Development

Stabilization Test Data:

Time	pH	Spec. Cond.	Temp (°C)

Recovery Data:

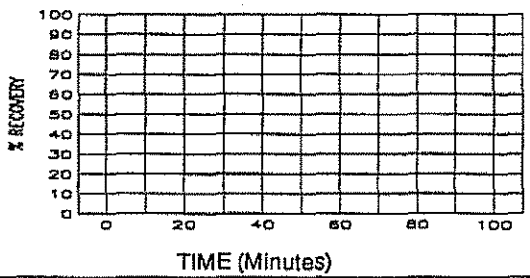

Comments:

Supervised by M. Sandfort
Job Number 943-2848

Site LAIDLAW/OU2 RI-FS/MO
File Name LR104

MISSOURI DEPARTMENT OF NATURAL RESOURCES
DIVISION OF GEOLOGY AND LAND SURVEY

MONITORING WELL CERTIFICATION RECORD

OFFICE USE ONLY	DATE RECEIVED
REF. NO. 145108	
C.R. NO.	CHECK NO.
STATE WELL NUMBER	TRANSMITTAL NO.
CHECKED BY	ROUTE
APPROVED BY	ENTERED Ph 1 Ph 2 Ph 3

INFORMATION SUPPLIED BY MONITORING WELL CONTRACTOR

SITE/FACILITY NAME: LAIDLAW BRIDGETON SANITARY LANDFILL
WELL NUMBER: LR-104
SITE ADDRESS: ST. CHARLES ROCK RD. | CITY: BRIDGETON | STATE: Mo | ZIP CODE: 63044
OWNER NAME: LAIDLAW WASTE SYSTEMS, INC. | TELEPHONE: 314-241-3710
OWNER ADDRESS: 1838 N. BROADWAY | CITY: ST. LOUIS | STATE: Mo | ZIP CODE: 63102

VARIANCE ISSUED: ☐ YES ☒ NO | DATE ISSUED | VARIANCE NUMBER: V

DESCRIBE LOCATION OF THE WELL SO WE WOULD BE ABLE TO VISIT IT
SOUTH OF OVERHEAD CONVEYOR, MIDWAY BETWEEN ROAD AND BUILDING.

LOCATION OF WELL
SHOW LOCATION IN SECTION PLAT
COUNTY: ST. LOUIS
SURFACE ELEVATION: 458.0
SMALLEST ¼ ____ ¼ ____ ¼ LARGEST ¼ ____ ¼
SEC. ____ TWN. 47 N,RNG. 5 (E) OR W
LAT. 38 ° 46 ' 01 " LONG. 90 ° 26 ' 43 "

MONITORING WELL INSTALLATION CONTRACTOR'S NAME: LAYNE WESTERN Co, INC. | PERMIT NUMBER: 001258 WPM
DRILLING CONTRACTOR'S NAME: LAYNE WESTERN Co, INC. | PERMIT NUMBER: 001258 WPM

WELL CONSTRUCTION INFORMATION

TYPE OF WELL: ☐ MONITORING WELL ☒ PIEZOMETER ☐ OTHER ____
TYPE OF POTENTIAL SITE: ☐ HAZARDOUS MATERIAL ☒ LANDFILL ☐ OTHER ____ ☐ L.U.S.T.
MONITORING FOR: (CHECK ALL THAT APPLY) ☒ V.O.C. ☐ METALS ☐ PETROLEUM PRODUCT ☐ OTHER ____ ONLY

PROTECTIVE CASING DETAILS (IF USED): LENGTH 5 FT. | DIAMETER OF CASING 8X8 IN. | WEIGHT OR SDR # 0.188 | DIAMETER AND DEPTH OF DRILL HOLE 8¼ IN. 40 FT. | JOINTS ☐ THREADED ☐ MECHANICAL ☐ WELDED ☐ OTHER ____ | MATERIAL ☒ THERMO PLASTIC ☐ STEEL ☐ FLUORO POLYMER TYPE ____ | LOCKING CAP? ☒ YES ☐ NO

CAP VENTED ☒ YES ☐ NO | WEEP HOLE? ☒ YES ☐ NO
CASING GROUT DETAILS: MATERIAL ☐ CEMENT ☒ CONCRETE ☐ OTHER ____ | DEPTH FROM THE SURFACE TO THE BOTTOM OF THE CASING GROUT SEAL 3.0 FT. | TYPE OF SURFACE COMPLETION ☒ ABOVE GROUND ☐ FLUSH MOUNT | DESCRIBE HOW THE FLUSH MOUNT WAS CONSTRUCTED

CENTRALIZER USED ON RISER ☒ NO ☐ YES LOCATED AT ____ | MATERIAL ☐ STAINLESS STEEL ☐ OTHER ____

RISER PIPE DETAILS: LENGTH 30.2 FT. | DIAMETER OF RISER PIPE 2 IN. | WEIGHT OR SDR # SCH80 | DIAMETER OF DRILL HOLE 8¼ IN. | JOINTS ☒ THREADED ☐ MECHANICAL ☐ WELDED ☐ OTHER ____ | MATERIAL ☒ THERMO PLASTIC ☐ STEEL ☐ FLUORO POLYMER ☐ OTHER ____

ANNULAR SEAL: ☐ CEMENT SLURRY ☒ BENTONITE SLURRY ☐ NON SLURRY BENTONITE TYPE: ____ ☐ CEMENT/BENTONITE SLURRY BAGS OF CEMENT USED ____ % BENTONITE USED ____ WATER USED/BAG ____ GAL.
BENTONITE SEAL: MATERIAL BENTONITE ☒ SLURRY ☐ CHIPS ☐ GRANULAR ☐ PELLETS | LENGTH OF SEAL 11.3 VWM | BENTONITE SEAL INSTALLED IN ☒ UNSATURATED ZONE ☐ SATURATED ZONE

	TYPE	GRAIN SIZE	LENGTH OF FILTER PACK	METHOD OF INSTALLATION	Information in this column to be supplied in the Feet from Surface column	FEET FROM SURFACE	FORMATION DESCRIPTION
PRIMARY FILTER PACK	☒ SAND ☐ MANUFACTURED ☐ NATURAL	16-35	14.3 FT.	H.S.A. POUR			0-2 Gravel
SECONDARY FILTER PACK	☒ SAND ☐ MANUFACTURED ☐ NONE	100	1.4 FT.	H.S.A. POUR	Depth to bottom of Protective Casing Seal:	3.0	2-10 Silty clay
WELL SCREEN	LENGTH OF SCREEN 10 FT.	DIAMETER 2 IN.	SLOT SIZE 10	WEIGHT OR SDR # SCH80 MATERIAL ☒ PLASTIC ☐ STEEL ☐ FLUORO POLYMER	Depth to Base of Annular Seal:	13.0	10-18 Silt
SUMP DETAILS	LENGTH OF SUMP	DIAMETER OF SUMP	MATERIAL ☐ PVC ☐ STEEL ☐ FLUORO POLYMER ☐ OTHER ____		Depth to Base of Bentonite Seal:	24.3 VWM	18-26.5 clay
BACK FILL	WAS THE WELL BACK FILLED? ☐ YES ☒ NO	MATERIAL USED	LENGTH OF BACK FILLED BORE HOLE		Depth to Top of Primary Filter Pack:	25.7	
					Depth to Top of the Screen:	28.5	26.5 39.3 Sand
					Depth to Bottom of the Screen:	38.5	39.3-40 clay
					Total Depth:	40.0	

STATIC WATER LEVEL ____ FEET FROM MEASURING POINT
DATE OF STATIC WATER LEVEL
MEASURING POINT FOR STATIC WATER LEVEL IS ☒ TOP OF RISER PIPE ☐ OTHER ____
ELEVATION OF MEASURING POINT 459.73
MULTIPLE CASED WELLS: SUBMIT ADDITIONAL AS BUILT DIAGRAM SHOWING WELL CONSTRUCTION DETAILS INCLUDING TYPE AND SIZE OF ALL CASING, HOLE DIAMETERS, AND GROUT USED.
DRILLING EQUIPMENT ☐ AIR ROTARY ☒ AUGER TYPE 4¼ H.S.A. ☐ REVERSE ROTARY ☐ OTHER ____
DATE WELL DRILLING WAS COMPLETED 10-18-95

I HEREBY CERTIFY THAT THE MONITORING WELL HEREIN DESCRIBED WAS CONSTRUCTED IN ACCORDANCE WITH THE DEPARTMENT OF NATURAL RESOURCES REQUIREMENTS FOR THE CONSTRUCTION OF MONITORING WELLS.

SIGNATURE PRIMARY CONTRACTOR/PERMIT #: Terrian N. Mahurin Jr. | DATE: 11-15-95
SIGNATURE DRILLER/PERMIT #: Terrian N. Mahurin Jr. | DATE: 11-15-95

MO 780-1415 (7-95)
DISTRIBUTION: WHITE/DIVISION CANARY/MONITORING WELL CONTRACTOR PINK/OWNER
MAIL WHITE COPY TO: DEPARTMENT OF NATURAL RESOURCES, P.O. BOX 250, ROLLA, MO 65402
ENCLOSE $35 PER MONITORING WELL FOR THE CERTIFICATION FEE WITHIN 60 DAYS AFTER WELL COMPLETION
RECYCLED PAPER

LAIDLAW WASTE SYSTEMS INC.

SOIL BOREHOLE LOG

SITE NAME AND LOCATION

LAIDLAW/OU2 RI-FS/MO
WEST LAKE LANDFILL
OPERABLE UNIT 2

NORTHING: 1067709.56
DATUM EASTING: 514524.56 ELEVATION 484.2

DRILLING METHOD: 4.25 inch I.D./8.25 inch O.D. Hollow Stem Auger

SAMPLING METHOD:
SPLIT SPOON: 2.0 inch O.D./1.5 inch I.D. (SP)
SHELBY TUBE: 3.0 inch O.D./2 13/16 inch I.D. (SH)

BORING NO. LR-105

SHEET 1 OF 3

					DRILLING START	DRILLING FINISH
WATER LEVEL	21.3 FT.	32.0 FT.				
TIME	13:50	11:00			9:45	14:45
DATE	10/03/95	10/04/95			DATE 10/03/95	DATE 10/03/95
CASING DEPTH	28.0 FT.	36.0 FT.				

DRILL RIG CME 750

SURFACE CONDITIONS

ANGLE 90° BEARING NA

SAMPLE HAMMER

DRILLING CONTR LAYNE-WESTERN

LOGGED BY B. HARRINGTON

DATE 10/9/95 CHK'D BY B. TILTON

JOB NO.: 943-2848

FILENAME: LR105

DEPTH IN FEET (ELEVATION)	BLOW/6 IN. ON SAMPLER	RECOVERY	SYMBOL	SAMPLER SYMBOL	SAMPLE NUMBER AND DESCRIPTION OF MATERIAL	SAMPLER TYPE	REMARKS
1	6 8 6 8	1.8'/2.0' (90%)			(0.0-2.2 Ft.) Compact, moderate yellowish brown (10YR 5/4), SILTY CLAY, NR, dry, (CL), (FILL) @ 1.3 ft., damp	SP ①	
2					(482.0) 2.2		
3	4 3 7 43	1.3'/2.0' (65%)			(2.2-3.2 Ft.) Loose, light olive gray (5Y 5/2), SILT, NR, damp, (ML), (FILL) (481.0) 3.2 (3.2-29.2 Ft.) WASTE, damp	SP ②	
4	4 3 2 4	0.4'/2.0' (20%)				SP ③	0.0 ppm PID
5							
6	8 6 10 5	0.7'/2.0' (35%)				SP ④	
7					@ 7.5 ft., moist		
8	1 2 2 4	0.4'/2.0' (20%)				SP ⑤	
9							
10					@ 9.6 ft., wet		
11	2 3 4 6	0.5'/2.0' (25%)				SP ⑥	Faint petroleum odor
12							
13	6 3 4 4	0.5'/2.0' (25%)				SP ⑦	
14	22 5 50/4	0.4'/2.0' (20%)				SP ⑧	

LAIDLAW WASTE SYSTEMS INC.

SOIL BOREHOLE LOG

SITE NAME AND LOCATION

LAIDLAW/OU2 RI-FS/MO
WEST LAKE LANDFILL
OPERABLE UNIT 2

NORTHING: 1067709.56
DATUM EASTING: 514524.56 ELEVATION 484.2

DRILLING METHOD: 4.25 inch I.D./8.25 inch O.D. Hollow Stem Auger

SAMPLING METHOD:
SPLIT SPOON: 2.0 inch O.D./1.5 inch I.D. (SP)
SHELBY TUBE: 3.0 inch O.D./2 13/16 inch I.D. (SH)

BORING NO. LR-105

SHEET 2 OF 3

					DRILLING START	DRILLING FINISH
WATER LEVEL	21.3 FT.	32.0 FT.			TIME 9:45	TIME 14:45
TIME	13:50	11:00				
DATE	10/03/95	10/04/95			DATE 10/03/95	DATE 10/03/95
CASING DEPTH	28.0 FT.	36.0 FT.				

DRILL RIG CME 750
ANGLE 90° BEARING NA
SAMPLE HAMMER
SURFACE CONDITIONS

DRILLING CONTR LAYNE-WESTERN
LOGGED BY B. HARRINGTON
DATE 10/9/95 CHK'D BY B. TILTON
JOB NO.: 943-2848
FILENAME: LR105

DEPTH IN FEET (ELEVATION)	BLOW/6 IN. ON SAMPLER	RECOVERY	SYMBOL	SAMPLER SYMBOL	SAMPLE NUMBER AND DESCRIPTION OF MATERIAL	SAMPLER TYPE	REMARKS
16	9	0.9' / 2.0' (45%)			(3.2-29.2 Ft.) WASTE, damp	SP (8)	0.0 ppm PID
17	3 5 6						
18	3 5 7	0.9' / 2.0' (45%)				SP (9)	
19	50/3					SP (10)	
20	50/5	0.4' / 2.0' (20%)			From 19.9-23.8 Ft, some Limestone and granular soil intermixed with waste	SP (11)	0.0 ppm PID
21							
22	7 13	1.0' / 2.0' (50%)				SP (12)	
23	20 12						
24	7 8	1.4' / 2.0' (70%)				SP (13)	Landfill gas odor 0.0 ppm PID Lost shoe on Split Spoon
25	19 17						
26	13 21	1.5' / 2.0' (75%)				SP (14)	
27	17 25						
28	9 37					SP (15)	0.0 ppm PID
29	15 11				(29.2-30.0 Ft.) Compact, medium gray (N5), SILTY CLAY, NR, wet, (CL), (FILL) From 29.2-29.8 Ft, layer of LIMESTONE GRAVEL		

LAIDLAW WASTE SYSTEMS INC.

SOIL BOREHOLE LOG

SITE NAME AND LOCATION

LAIDLAW/OU2 RI-FS/MO
WEST LAKE LANDFILL
OPERABLE UNIT 2

NORTHING: 1067709.56
DATUM EASTING: 514524.56 ELEVATION 484.2

DRILLING METHOD: 4.25 inch I.D./8.25 inch O.D. Hollow Stem Auger

SAMPLING METHOD:
SPLIT SPOON: 2.0 inch O.D./1.5 inch I.D. (SP)
SHELBY TUBE: 3.0 inch O.D./2 13/16 inch I.D. (SH)

					START	FINISH
WATER LEVEL	21.3 FT.	32.0 FT.			TIME	TIME
TIME	13:50	11:00			9:45	14:45
DATE	10/03/95	10/04/95			DATE	DATE
CASING DEPTH	28.0 FT.	36.0 FT.			10/03/95	10/03/95

BORING NO. LR-105

SHEET 3 OF 3

DRILLING

DRILL RIG CME 750

ANGLE 90° BEARING NA

SAMPLE HAMMER

SURFACE CONDITIONS

DEPTH IN FEET (ELEVATION)	BLOW/ 6 IN. ON SAMPLER	RECOVERY	SYMBOL	SAMPLER SYMBOL	SAMPLE NUMBER AND DESCRIPTION OF MATERIAL	SAMPLER TYPE	REMARKS
31		0.9' 2.0' (45%)			(30.0-36.0 ft.) WASTE, wet	ST (16)	@ 31.2 ft., chunk of limestone crushed end of Shelby Tube 0.0 ppm PID
32	10 11 50/3	0.4' 2.0' (20%)				SP (17)	
33							
34	37 29 24 30	0.2' 2.0' (10%)				SP (18)	
35							
36	1 2 3 4	1.8' 2.0' (90%)			(448.2) 36.0 (36.0-38.0 ft.) Loose, olive gray (5Y 4/1), SILT, little fine Sand, NR, moist, (ML), (LOESS)	SP (19)	0.0 ppm PID
37							
38					(446.2) 38.0 End of Soil Borehole Log at 38.0 ft.		
39							
40							
41							
42							
43							
44							

DRILLING CONTR LAYNE-WESTERN

LOGGED BY B. HARRINGTON CHK'D BY B. TILTON

DATE 10/9/95

JOB NO.: 943-2848

FILENAME: LR105

Well No. LR-105

Boring No. X-Ref: LR-105

PIEZOMETER CONSTRUCTION SUMMARY

Survey Coords: Northing: 1067710 ft. Easting: 514525 ft.

Elevation Ground Level 484.2 ft. NGVD

Top of PVC Casing 486.79 ft. NGVD

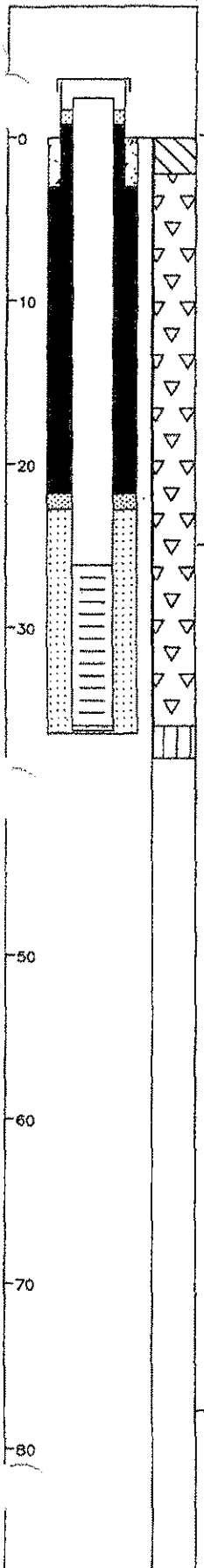

Drilling Summary:

Total Depth 38.0 ft.

Borehole Diameter 8 1/4" (0.0-38.0')

Casing Stickup Height 2.59 ft.

Driller Layne-Western
St. Louis, MO

Rig CME 750

Bit(s) 4 1/4" ID Hollow Stem Auger Bit

Drilling Fluid None

Protective Casing 8x8" Square Steel, by 5' long

Construction Time log:

Task	Start Date	Start Time	Finish Date	Finish Time
Drilling CME 750	10/3/95	9:45	10/3/95	14:45
Geophys.Logging:				
Casing: 2" I.D. PVC	10/3/95	15:00	10/3/95	15:05
Filter Placement:	10/3/95	15:10	10/3/95	16:00
Cementing:				
Development				
Bentonite Grout Bentonite Seal	10/3/95	15:00	10/3/95	16:40

Well Design & Specifications

Basis: Geologic Log X Geophysical Log

Casing string(s): C = Casing S = Screen

Depth			String(s)	Elevation		
+ 2.59	-	26.20	C1	486.79	-	458.00
26.20	-	36.00	S1	458.00	-	448.20
36.00	-	36.30	C2	448.20	-	447.90
	-				-	
	-				-	
	-				-	

Casing: C1 2" dia. Schedule 80 PVC, flush threaded with O-rings

C2 2" dia. threaded PVC end cap (4" long or 0.33')

Screen: S1 2" dia. Schedule 80 PVC, 0.010" machine cut slot, flush threaded with O-rings

Sand Pack: 16-35 mesh Silica Sand 22.8-36.5'

Filter Pack: Less than 50 mesh Silica Sand 21.8-22.8'

Grout Seal:

Bentonite Seal: Extra high yield Wyo-Ben (100%) Chips 3.0-21.8'

Concrete: 0.0-3.0'

Well Development

Stabilization Test Data:

Time	pH	Spec. Cond.	Temp (°C)

Recovery Data:

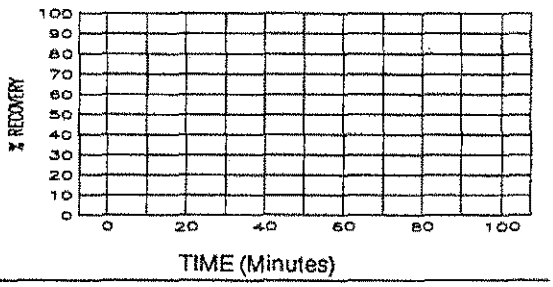

Comments:

Drilled to 36.0' and collected split spoon sample from 36.0-38.0'

Not to Scale

Supervised by B. Harrington

Job Number 943-2848

Site LAIDLAW/OU2 RI-FS/MO

File Name LR105

MISSOURI DEPARTMENT OF NATURAL RESOURCES
DIVISION OF GEOLOGY AND LAND SURVEY

MONITORING WELL CERTIFICATION RECORD

OFFICE USE ONLY	DATE RECEIVED
REF. NO. 145109	
C.R. NO.	CHECK NO.
STATE WELL NUMBER	TRANSMITTAL NO.
CHECKED BY	ROUTE
APPROVED BY	ENTERED Ph 1 Ph 2 Ph 3

INFORMATION SUPPLIED BY MONITORING WELL CONTRACTOR

SITE/FACILITY NAME: LAIDLAW BRIDGETON SANITARY LANDFILL
WELL NUMBER: LR-105
SITE ADDRESS: ST. CHARLES ROCK RD
CITY: BRIDGETON
STATE: Mo
ZIP CODE: 63044
OWNER NAME: LAIDLAW WASTE SYSTEMS, INC.
TELEPHONE: 314-241-3710
OWNER ADDRESS: 1838 N. BROADWAY
CITY: ST. LOUIS
STATE: Mo
ZIP CODE: 63102

VARIANCE ISSUED: ☐ YES ☒ NO
DATE ISSUED:
VARIANCE NUMBER: V

DESCRIBE LOCATION OF THE WELL SO WE WOULD BE ABLE TO VISIT IT
90' EAST OF WEST FENICE LINE AND 320' NORTH OF SOUTHWEST FENICE CORNER

LOCATION OF WELL
SHOW LOCATION IN SECTION PLAT
COUNTY: ST. LOUIS
SURFACE ELEVATION: 454.2
SMALLEST ¼ ____ ¼ ____ ¼ LARGEST ¼ ____ ¼
SEC. ____ TWN. 47 N,RNG. 5 E OR W
LAT. 38 ° 45 ' 57 " LONG. 90 ° 26 ' 57 "

MONITORING WELL INSTALLATION CONTRACTOR'S NAME: LAYNE WESTERN CO., INC. PERMIT NUMBER: 001258 WPM
DRILLING CONTRACTOR'S NAME: LAYNE WESTERN CO., INC. PERMIT NUMBER: 001258 WPM

WELL CONSTRUCTION INFORMATION

TYPE OF WELL: ☐ MONITORING WELL ☒ PIEZOMETER ☐ OTHER
TYPE OF POTENTIAL SITE: ☐ HAZARDOUS MATERIAL ☒ LANDFILL ☐ OTHER ☐ L.U.S.T.
MONITORING FOR: (CHECK ALL THAT APPLY) ☒ V.O.C. ☐ METALS ☐ PETROLEUM PRODUCT ☐ OTHER ONLY

PROTECTIVE CASING DETAILS (IF USED): LENGTH 5 FT. | DIAMETER OF CASING 8x8 IN. | WEIGHT OR SDR # 6.188" | DIAMETER AND DEPTH OF DRILL HOLE 8¼ IN. 38 FT. | JOINTS ☐ THREADED ☐ MECHANICAL ☐ WELDED ☐ OTHER | MATERIAL ☐ THERMO PLASTIC ☒ STEEL ☐ FLUORO POLYMER TYPE | LOCKING CAP? ☒ YES ☐ NO

CAP VENTED ☒ YES ☐ NO
WEEP HOLE? ☒ YES ☐ NO
CASING GROUT DETAILS: MATERIAL ☐ CEMENT ☒ CONCRETE ☐ OTHER
DEPTH FROM THE SURFACE TO THE BOTTOM OF THE CASING GROUT SEAL: 3.0 FT.
TYPE OF SURFACE COMPLETION: ☒ ABOVE GROUND ☐ FLUSH MOUNT
DESCRIBE HOW THE FLUSH MOUNT WAS CONSTRUCTED

CENTRALIZER USED ON RISER: ☒ NO ☐ YES LOCATED AT
MATERIAL: ☐ STAINLESS STEEL ☐ OTHER

RISER PIPE DETAILS: LENGTH 28.9 FT. | DIAMETER OF RISER PIPE 2 IN. | WEIGHT OR SDR # SCH 80 | DIAMETER OF DRILL HOLE 8¼ IN. | JOINTS ☒ THREADED ☐ MECHANICAL ☐ WELDED ☐ OTHER | MATERIAL ☒ THERMO PLASTIC ☐ STEEL ☐ FLUORO POLYMER ☐ OTHER

ANNULAR SEAL: ☐ CEMENT SLURRY ☒ BENTONITE SLURRY ☐ NON SLURRY BENTONITE TYPE: ☐ CEMENT/BENTONITE SLURRY BAGS OF CEMENT USED % BENTONITE USED WATER USED/BAG GAL
BENTONITE SEAL: MATERIAL BENTONITE ☒ SLURRY ☐ CHIPS ☐ GRANULAR ☐ PELLETS | LENGTH OF SEAL 18.8 | BENTONITE SEAL INSTALLED IN ☒ UNSATURATED ZONE ☐ SATURATED ZONE

	TYPE	GRAIN SIZE	LENGTH OF FILTER PACK	METHOD OF INSTALLATION	Information in this column to be supplied in the Feet from Surface column	FEET FROM SURFACE	FORMATION DESCRIPTION
PRIMARY FILTER PACK	☒ SAND ☐ MANUFACTURED ☐ NATURAL	16-35	15.2 FT.	H.S.A. POUR			
SECONDARY FILTER PACK	☒ SAND ☐ MANUFACTURED ☐ NONE	100	1.0 FT.	H.S.A. POUR	Depth to bottom of Protective Casing Seal:	3.0	0-2 clay
WELL SCREEN	LENGTH OF SCREEN 10 FT.	DIAMETER 2 IN.	SLOT SIZE 10	WEIGHT OR SDR # SCH 80	MATERIAL ☒ PLASTIC ☐ STEEL ☐ FLUORO POLYMER	Depth to Base of Annular Seal:	21.8	2-36 Trash
SUMP DETAILS	LENGTH OF SUMP	DIAMETER OF SUMP	MATERIAL ☐ PVC ☐ STEEL ☐ FLUORO POLYMER ☐ OTHER			Depth to Base of Bentonite Seal:	21.8	
BACK FILL	WAS THE WELL BACK FILLED? ☐ YES ☒ NO	MATERIAL USED	LENGTH OF BACK FILLED BORE HOLE			Depth to Top of Primary Filter Pack:	22.8	
						Depth to Top of the Screen:	26.3	
						Depth to Bottom of the Screen:	36.3	36-38 Silt
						Total Depth:	38.0	

STATIC WATER LEVEL FEET FROM MEASURING POINT
DATE OF STATIC WATER LEVEL
MEASURING POINT FOR STATIC WATER LEVEL IS: ☒ TOP OF RISER PIPE ☐ OTHER
ELEVATION OF MEASURING POINT: 456.79
MULTIPLE CASED WELLS: SUBMIT ADDITIONAL AS BUILT DIAGRAM SHOWING WELL CONSTRUCTION DETAILS INCLUDING TYPE AND SIZE OF ALL CASING, HOLE DIAMETERS, AND GROUT USED.
DRILLING EQUIPMENT: ☐ AIR ROTARY ☒ AUGER TYPE 4¼ H.S.A. ☐ REVERSE ROTARY ☐ OTHER
DATE WELL DRILLING WAS COMPLETED: 10-03-95

I HEREBY CERTIFY THAT THE MONITORING WELL HEREIN DESCRIBED WAS CONSTRUCTED IN ACCORDANCE WITH THE DEPARTMENT OF NATURAL RESOURCES REQUIREMENTS FOR THE CONSTRUCTION OF MONITORING WELLS.

SIGNATURE PRIMARY CONTRACTOR/PERMIT #	DATE	SIGNATURE DRILLER/PERMIT #	DATE
Terrence M. Mahurin M.	11-15-95	Terrence M. Mahurin M.	11-15-95

MO 780-1415 (7-95)

DISTRIBUTION: WHITE/DIVISION CANARY/MONITORING WELL CONTRACTOR PINK/OWNER
MAIL WHITE COPY TO: DEPARTMENT OF NATURAL RESOURCES, P.O. BOX 250, ROLLA, MO 65402
ENCLOSE $35 PER MONITORING WELL FOR THE CERTIFICATION FEE WITHIN 60 DAYS AFTER WELL COMPLETION

RECYCLED PAPER

Missouri Department of Natural Resources
Missouri Geological Survey

Boring Log

WELL NO.: **MO-1-SS**

TOTAL DEPTH: **150.9 feet**

PROJECT INFORMATION		DRILLING INFORMATION	
PROJECT:	**Bridgeton Landfill**	DRILLER:	**Steve Tapetti**
SITE LOCATION:	**Turner Property**		**Geotechnology Inc.**
CITY/COUNTY:	**Bridgeton/ St. Louis Co.**	RIG TYPE:	**CME ATV**
LOGGED BY:	**Fletcher Bone**	METHOD OF DRILLING:	**5 7/8in O.D. Air hammer**
DATES DRILLED:	**08/05/2015 to 08/06/2015**	LATITUDE/LONGITUDE:	**38 45'48.510" -90 26'26.666"**
		REL GROUND ELEV:	**484.98 feet**

▼ Water level at time of drilling

DEPTH (Feet)	LITHOLOGIC SYMBOLS	LITHOLOGIC DESC	WATER LEVEL	COMMENTS
0 to -100		sandy, clayey, silt Very fine sand with interbedded clay and silt layers Residuum- Very soft, weathered limestone gravels (St. Louis Limestone Residuum) Limestone- light gray/brown with interbedded shales. Very soft (St. Louis Limestone) Argillaceous Limestone- very soft, light gray to beige cuttings. Dry Argillaceous Limestone- very soft, nearly white/beige. Dry Argillaceous Limestone- light to medium gray. Dry Limestone- buff and light to medium gray, very fine grained- lithographic. Dry	▼	Water Encountered

NOTES:

State of MO v. Republic Services, Inc. et al
Price - 0000047

Missouri Department of Natural Resources
Missouri Geological Survey

Boring Log

WELL NO.: **MO-1-SS**

TOTAL DEPTH: **150.9 feet**

PROJECT INFORMATION		DRILLING INFORMATION	
PROJECT:	**Bridgeton Landfill**	DRILLER:	**Steve Tapetti**
SITE LOCATION:	**Turner Property**		**Geotechnology Inc.**
CITY/COUNTY:	**Bridgeton/ St. Louis Co.**	RIG TYPE:	**CME ATV**
LOGGED BY:	**Fletcher Bone**	METHOD OF DRILLING:	**5 7/8in O.D. Air hammer**
DATES DRILLED:	**08/05/2015 to 08/06/2015**	LATITUDE/LONGITUDE:	**38 45'48.510" -90 26'26.666"**
		REL GROUND ELEV:	**484.98 feet**

▼ Water level at time of drilling

DEPTH (Feet)	LITHOLOGIC SYMBOLS	LITHOLOGIC DESC	WATER LEVEL	COMMENTS
-100		Limestone- medium to dark gray, medium to dark gray shale. Dry		
-105				
-110		Limestone- medium to dark gray. Wet		Water Encountered
-115				
-120				
-125		Limestone gravels- light gray clayey gravel. Wet		
-130				
-135		Limestone gravels- light to dark gray with no clay and less fines. Wet		
-140		Argillaceous Limestone- light to dark gray, litohgraphic, few fines. Wet		
-145				
-150				



NOTES: 8 7/8 in Outbreak - 5 MO-1 - SPB

State of MO v. Republic Services, Inc. et al
Price - 0000048

Missouri Department of Natural Resources
Missouri Geological Survey

Boring Log

WELL NO.: **MO-1-SDR**

TOTAL DEPTH: **252.3 feet**

PROJECT INFORMATION		DRILLING INFORMATION	
PROJECT:	**Bridgeton Landfill**	DRILLER:	**Steve Tapetti**
SITE LOCATION:	**Turner Property**		**Geotechnology Inc.**
CITY/COUNTY:	**Bridgeton/ St. Louis Co.**	RIG TYPE:	**CME ATV**
LOGGED BY:	**Fletcher Bone**	METHOD OF DRILLING:	**5 7/8in O.D. Air hammer**
DATES DRILLED:	**08/03/2015 to 08/04/2015**	LATITUDE/LONGITUDE:	**38 45'48.574" -90 26'26.584"**
		REL GROUND ELEV:	**485.07 feet**

▼ Water level at time of drilling

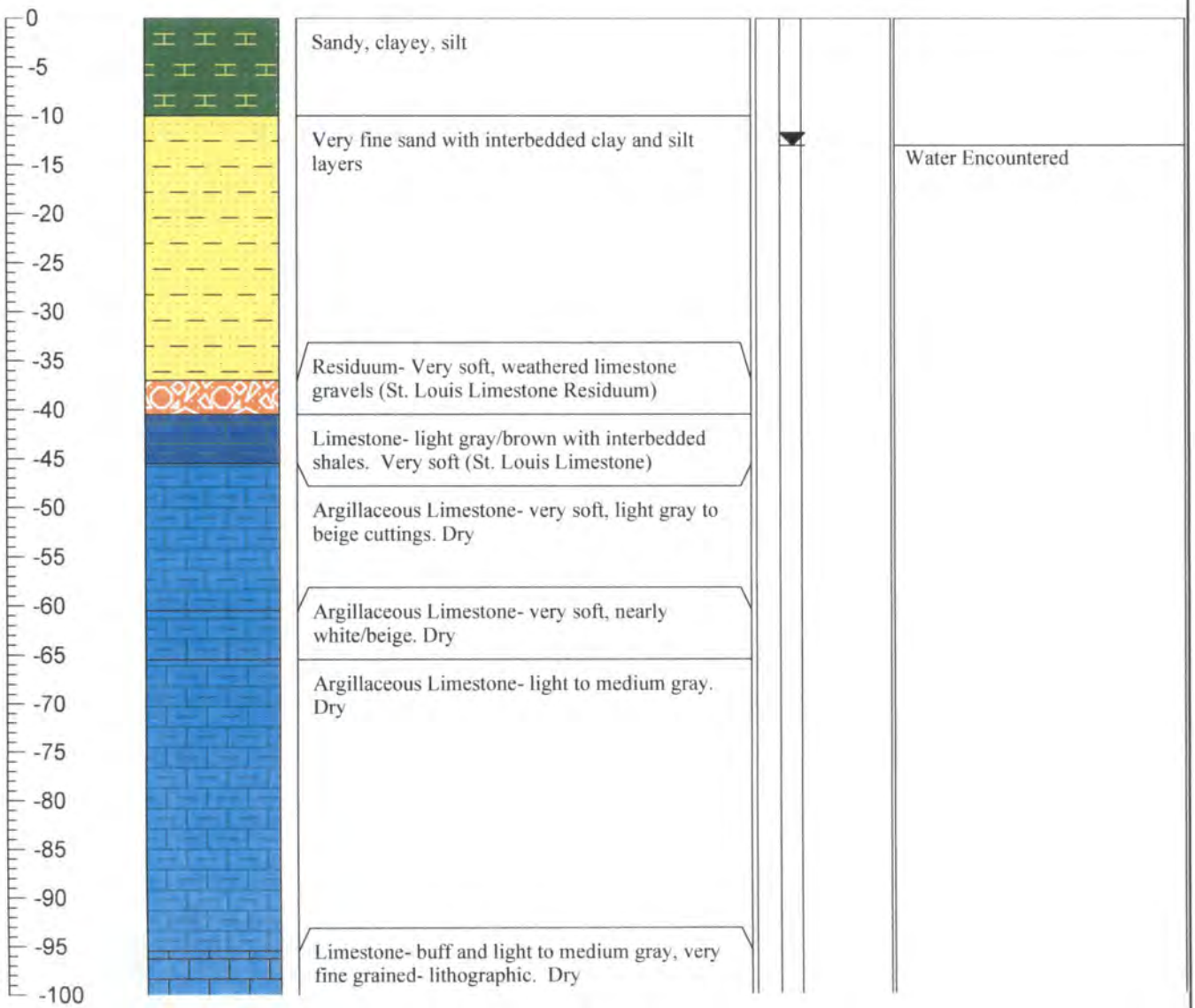

NOTES

State of MO v. Republic Services, Inc. et al
Price - 0000049

Missouri Department of Natural Resources
Missouri Geological Survey

Boring Log

WELL NO.: **MO-1-SDR**

TOTAL DEPTH: **252.3 feet**

PROJECT INFORMATION		DRILLING INFORMATION	
PROJECT:	**Bridgeton Landfill**	DRILLER:	**Steve Tapetti**
SITE LOCATION:	**Turner Property**		**Geotechnology Inc.**
CITY/COUNTY:	**Bridgeton/ St. Louis Co.**	RIG TYPE:	**CME ATV**
LOGGED BY:	**Fletcher Bone**	METHOD OF DRILLING:	**5 7/8in O.D. Air hammer**
DATES DRILLED:	**08/03/2015 to 08/04/2015**	LATITUDE/LONGITUDE:	**38 45'48.574" -90 26'26.584"**
		REL GROUND ELEV:	**485.07 feet**

▼ Water level at time of drilling

DEPTH (Feet)	LITHOLOGIC SYMBOLS	LITHOLOGIC DESC	WATER LEVEL	COMMENTS
-100		Limestone- medium to dark gray, medium to dark gray shale. Dry		
-105				
-110		Limestone- medium to dark gray. Wet	▼	Water Encountered
-115				
-120				
-125		Limestone gravels- light gray clayey gravel. Wet		
-130				
-135		Limestone gravels- light to dark gray with no clay and less fines. Wet		
-140		Argillaceous Limestone- light to dark gray, litohgraphic, few fines. Wet		
-145				
-150				
-155				
-160		Argillaceous Limestone- light to dark gray, lithographic, few fines. Wet. MnO staining (Salem Formation)		
-165				
-170				
-175				
-180		Limestone with shale interbedded- light to dark gray, fine grained limestone with black shale. Wet.		
-185				
-190				
-195				
-200				

NOTES:

State of MO v. Republic Services, Inc. et al
Price - 0000050

Missouri Department of Natural Resources
Missouri Geological Survey

Boring Log

WELL NO.: **MO-1-SDR**
TOTAL DEPTH: **252.3 feet**

PROJECT INFORMATION		DRILLING INFORMATION	
PROJECT:	**Bridgeton Landfill**	DRILLER:	**Steve Tapetti**
SITE LOCATION:	**Turner Property**		**Geotechnology Inc.**
CITY/COUNTY:	**Bridgeton/ St. Louis Co.**	RIG TYPE:	**CME ATV**
LOGGED BY:	**Fletcher Bone**	METHOD OF DRILLING:	**5 7/8in O.D. Air hammer**
DATES DRILLED:	**08/03/2015 to 08/04/2015**	LATITUDE/LONGITUDE:	**38 45'48.574" -90 26'26.584"**
		REL GROUND ELEV:	**485.07 feet**

▼ Water level at time of drilling

DEPTH (Feet)	LITHOLOGIC SYMBOLS	LITHOLOGIC DESC	WATER LEVEL	COMMENTS
-200 -205 -210 -215 -220 -225 -230 -235 -240 -245 -250		Argillaceous Limestone- medium gray with dark gray/black mottling, weathered to highly weathered, MnO staining. Wet		Lost water around outside of augers at surface

NOTES:

State of MO v. Republic Services, Inc. et al
Price - 0000051

Missouri Department of Natural Resources
Missouri Geological Survey

Boring Log

WELL NO.: **MO-2-SD**

TOTAL DEPTH: **250.4 feet**

PROJECT INFORMATION		DRILLING INFORMATION	
PROJECT:	**Bridgeton Landfill**	DRILLER:	**Steve Tapetti**
SITE LOCATION:	**Turner Property**		**Geotechnology Inc.**
CITY/COUNTY:	**Bridgeton/ St. Louis Co.**	RIG TYPE:	**CME ATV**
LOGGED BY:	**Brenna McDonald**	METHOD OF DRILLING:	**5 7/8in O.D. Air hammer**
DATES DRILLED:	**08/07/2015 to 08/08/2015**	LATITUDE/LONGITUDE:	**38 45'43.584" -90 26'32.225"**
		REL GROUND ELEV:	**490.69 feet**

▼ Water level at time of drilling

DEPTH (Feet)	LITHOLOGIC SYMBOLS	LITHOLOGIC DESC	WATER LEVEL	COMMENTS
0 to -40		sandy, clayey, silt		
-40 to -110		Very fine sand with interbedded clay and silt layers	▼	Water Encountered
-40 to -45		Residuum- Very soft, weathered limestone gravels, cherty (St. Louis Limestone Residuum)		
-45 to -55		Limestone- gray with some chert and clay (St. Louis Limestone)		
-55 to -80		Limestone- gray		
-80 to -85		Limestone- gray and red		
-85 to -110		Limestone- gray to dark gray		

NOTES:

State of MO v. Republic Services, Inc. et al
Price - 0000052

Missouri Department of Natural Resources
Missouri Geological Survey

Boring Log

WELL NO.: **MO-2-SD**

TOTAL DEPTH: **250.4 feet**

PROJECT INFORMATION		DRILLING INFORMATION	
PROJECT:	**Bridgeton Landfill**	DRILLER:	**Steve Tapetti**
SITE LOCATION:	**Turner Property**		**Geotechnology Inc.**
CITY/COUNTY:	**Bridgeton/ St. Louis Co.**	RIG TYPE:	**CME ATV**
LOGGED BY:	**Brenna McDonald**	METHOD OF DRILLING:	**5 7/8in O.D. Air hammer**
DATES DRILLED:	**08/07/2015 to 08/08/2015**	LATITUDE/LONGITUDE:	**38 45'43.584" -90 26'32.225"**
		REL GROUND ELEV:	**490.69 feet**

▼ Water level at time of drilling

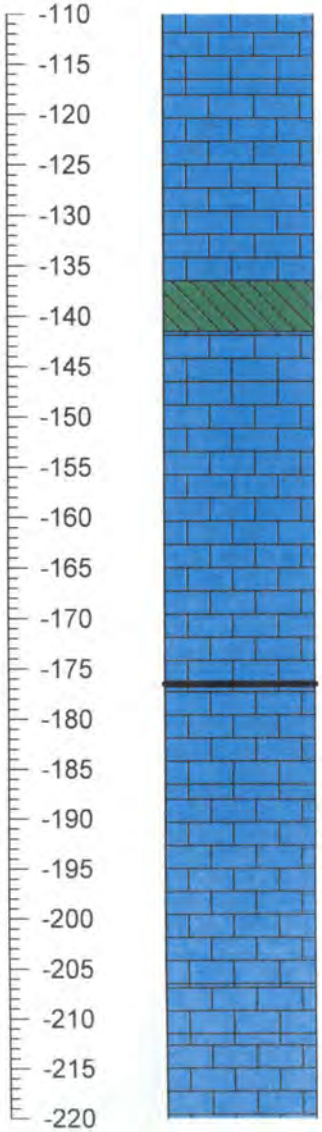

DEPTH (Feet)	LITHOLOGIC SYMBOLS	LITHOLOGIC DESC	WATER LEVEL	COMMENTS
-110 to -120		Limestone- weathered, clay infill, red-orange		Oily Sheen on discharged drilling water. Petroliferous odor present
-120 to -135		Clay- very little limestone		
-135 to -145		Limestone- mostly gray, little clay		
-145 to -175		Limestone- gray		
-175 to -180		Limestone- gray (most likely within the Salem Formation)		Oily Sheen on discharged drilling water
-180 to -205		Limestone- brown to buff to dark gray		
-205 to -210		Limestone- gray to dark gray to brown		Petroliferous odor present
-210 to -220		Limestone- gray to dark gray to brown		

NOTES:

State of MO v. Republic Services, Inc. et al
Price - 0000053

Missouri Department of Natural Resources
Missouri Geological Survey

Boring Log

WELL NO.: **MO-2-SD**

TOTAL DEPTH: **250.4 feet**

PROJECT INFORMATION		DRILLING INFORMATION	
PROJECT:	**Bridgeton Landfill**	DRILLER:	**Steve Tapetti**
SITE LOCATION:	**Turner Property**		**Geotechnology Inc.**
CITY/COUNTY:	**Bridgeton/ St. Louis Co.**	RIG TYPE:	**CME ATV**
LOGGED BY:	**Brenna McDonald**	METHOD OF DRILLING:	**5 7/8in O.D. Air hammer**
DATES DRILLED:	**08/07/2015 to 08/08/2015**	LATITUDE/LONGITUDE:	**38 45'43.584" -90 26'32.225"**
		REL GROUND ELEV:	**490.69 feet**

▼ Water level at time of drilling

DEPTH (Feet)	LITHOLOGIC SYMBOLS	LITHOLOGIC DESC	WATER LEVEL	COMMENTS
-220 -225 -230 -235 -240 -245 -250		Limestone- dark gray Limestone- dark gray Limestone- medium to dark gray limestone, some red-orange limestone Limestone- medium to dark gray limestone, some red-orange limestone.		Orange foam emitting from top of drill stem after it is disconnected from the swivel Return water is foamy out of drilling discharge pipe

NOTES:

State of MO v. Republic Services, Inc. et al
Price - 0000054

Missouri Department of Natural Resources
Missouri Geological Survey

Boring Log

WELL NO.: **MO-3-SS**

TOTAL DEPTH: **170.4 feet**

PROJECT INFORMATION		DRILLING INFORMATION	
PROJECT:	**Bridgeton Landfill**	DRILLER:	**Steve Tapetti**
SITE LOCATION:	**Materialogic Property**		**Geotechnology Inc.**
CITY/COUNTY:	**Bridgeton/ St. Louis Co.**	RIG TYPE:	**CME ATV**
LOGGED BY:	**Fletcher Bone**	METHOD OF DRILLING:	**5 7/8in O.D. Air hammer**
DATES DRILLED:	**08/11/2015 to 08/12/2015**	LATITUDE/LONGITUDE:	**38 45'45.416 -90 26'45.156"**
		REL GROUND ELEV:	**461.89 feet**

▼ Water level at time of drilling

DEPTH (Feet)	LITHOLOGIC SYMBOLS	LITHOLOGIC DESC	WATER LEVEL	COMMENTS
0 to -110	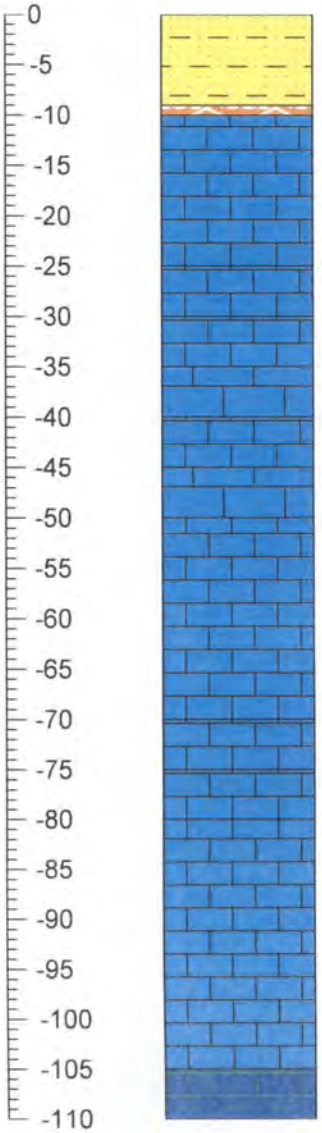	Sand and silt No sample Limestone- light gray to light brown, finely crystaline. Dry (St. Louis Limestone) Limestone- light gray to light tan, finely crystalline, weathered. Dry Limestone- light gray, weathered. Dry Limestone- light gray, weathered with some sandstone. Dry Limestone- light brown, weathered. Dry Limestone- light gray, soft, weathered with some sandstone. Dry Limestone- light to medium gray and brown. Dry Limestone- light gray with black weathered limestone. Moist Limestone- medium gray with black weathered limestone- speckled. Wet Limestone- varying amounts of light to medium brown, gray and white. Some black weathering. lithographic. Wet Limestone- light to medium gray with dark gray shale, lithographic. Wet	▼	Water Encountered

NOTES:

State of MO v. Republic Services, Inc. et al
Price - 0000055

Missouri Department of Natural Resources
Missouri Geological Survey

Boring Log

WELL NO.: **MO-3-SS**

TOTAL DEPTH: **170.4 feet**

PROJECT INFORMATION		DRILLING INFORMATION	
PROJECT:	**Bridgeton Landfill**	DRILLER:	**Steve Tapetti**
SITE LOCATION:	**Materialogic Property**		**Geotechnology Inc.**
CITY/COUNTY:	**Bridgeton/ St. Louis Co.**	RIG TYPE:	**CME ATV**
LOGGED BY:	**Fletcher Bone**	METHOD OF DRILLING:	**5 7/8in O.D. Air hammer**
DATES DRILLED:	**08/11/2015 to 08/12/2015**	LATITUDE/LONGITUDE:	**38 45'45.416 -90 26'45.156"**
		REL GROUND ELEV:	**461.89 feet**

▼ Water level at time of drilling

DEPTH (Feet)	LITHOLOGIC SYMBOLS	LITHOLOGIC DESC	WATER LEVEL	COMMENTS
-110 -115 -120 -125 -130 -135 -140 -145 -150 -155 -160 -165 -170		Limestone- light to dark gray, lithographic. Wet No sample Limestone- light to dark gray, lithographic. Wet Limestone- light to dary gray, lithographic. Wet (most likely within the Salem Formation) Limestone- medium to dark gray, lithographic. Black weathered pieces of limestone and FeO pieces. Wet		

NOTES:

State of MO v. Republic Services, Inc. et al
Price - 0000056

Missouri Department of Natural Resources
Missouri Geological Survey

Boring Log

WELL NO.: **MO-3-SDR**

TOTAL DEPTH: **210.4 feet**

PROJECT INFORMATION		DRILLING INFORMATION	
PROJECT:	**Bridgeton Landfill**	DRILLER:	**Steve Tapetti**
SITE LOCATION:	**Materialogic Property**		**Geotechnology Inc.**
CITY/COUNTY:	**Bridgeton/ St. Louis Co.**	RIG TYPE:	**CME ATV**
LOGGED BY:	**Fletcher Bone**	METHOD OF DRILLING:	**5 7/8in O.D. Air hammer**
DATES DRILLED:	**08/13/2015 - 08/14/2015**	LATITUDE/LONGITUDE:	**38 45'45.517" -90 26'45.202"**
		REL GROUND ELEV:	**461.13 feet**

▼ Water level at time of drilling

DEPTH (Feet)	LITHOLOGIC SYMBOLS	LITHOLOGIC DESC	WATER LEVEL	COMMENTS
0 to -110	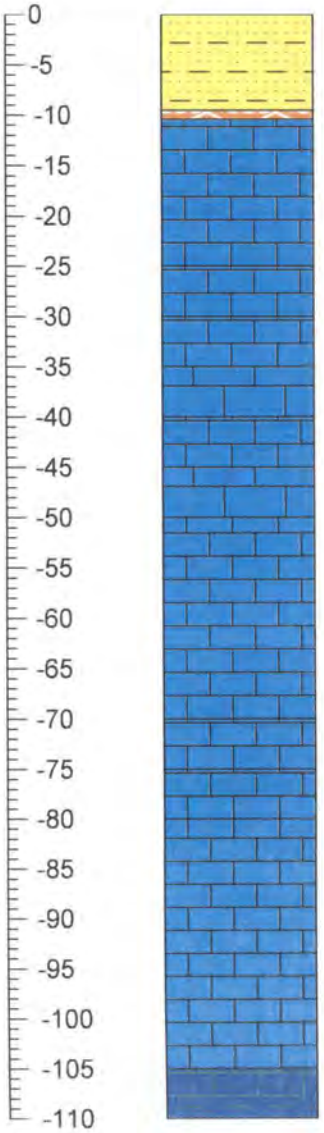	Sand and silt No sample Limestone- light gray to light brown, finely crystaline. Dry (St. Louis Limestone) Limestone- light gray to light tan, finely crystalline, weathered. Dry Limestone- light gray, weathered. Dry Limestone- light gray, weathered with some sandstone. Dry Limestone- light brown, weathered. Dry Limestone- light gray, soft, weathered with some sandstone. Dry Limestone- light to medium gray and brown. Dry Limestone- light gray with black weathered limestone. Moist Limestone- medium gray with black weathered limestone- speckled. Wet. Limestone- varying amounts of light to medium brown, gray and white. Some black weathering, lithographic. Wet Limestone- light to medium gray with dark gray shale, lithographic. Wet	▼	possible ammonia smell Water Encountered

State of MO v. Republic Services, Inc. et al
Price - 0000057

Missouri Department of Natural Resources
Missouri Geological Survey

Boring Log

WELL NO.: **MO-3-SDR**

TOTAL DEPTH: **210.4 feet**

PROJECT INFORMATION		DRILLING INFORMATION	
PROJECT:	**Bridgeton Landfill**	DRILLER:	**Steve Tapetti**
SITE LOCATION:	**Materialogic Property**		**Geotechnology Inc.**
CITY/COUNTY:	**Bridgeton/ St. Louis Co.**	RIG TYPE:	**CME ATV**
LOGGED BY:	**Fletcher Bone**	METHOD OF DRILLING:	**5 7/8in O.D. Air hammer**
DATES DRILLED:	**08/13/2015 - 08/14/2015**	LATITUDE/LONGITUDE:	**38 45'45.517" -90 26'45.202"**
		REL GROUND ELEV:	**461.13 feet**

▼ Water level at time of drilling

DEPTH (Feet)	LITHOLOGIC SYMBOLS	LITHOLOGIC DESC	WATER LEVEL	COMMENTS
-110 to -210		Limestone- light to dark gray, lithographic. Wet.		ammonia smell
-125		No sample		
-130 to -150		Limestone- light to dark gray, lithographic. Wet.		ammonia smell
-150 to -155		Limestone- light to dary gray, lithographic. Wet (most likely within the Salem Formation)		
-160 to -165		Limestone- medium to dark gray, lithographic. Black weathered pieces of limestone and FeO pieces. Wet		
-170 to -175		Limestone- light to dark gray, fine grained, some weathering. Wet		slight ammonia smell
-180		Limestone- light to dark gray, tan. Wet		
-185		Limestone- light to dark gray, tan, black. Wet		
-190 to -195		Limestone- light to dark gray, tan, black. Tan siltstone. Wet		black stain from FeO gravels in drilling discharge water
-200 to -210		Limestone- light to dark gray, tan, black. Abundant FeO gravels		nearly all FeO gravels with few limestone chips

NOTES:

State of MO v. Republic Services, Inc. et al
Price - 0000058

Table 1
State of Missouri Monitoring Well Information

Well Identification	Feet Below Top of Casing	Feet of Screen	Feet Above Mean Sea Level	
	Total Depth		Screen Elevation	TOC Elevation
MO-1-SS	153.37	20.00	354.08-334.08	487.45
MO-1-SDR	254.82	20.00	252.77-232.77	487.59
MO-2-SD	251.54	20.00	261.69-241.69	493.23
MO-3-SS	169.80	20.00	311.49-291.49	461.69
MO-3-SDR	209.80	20.00	271.05-251.05	460.85

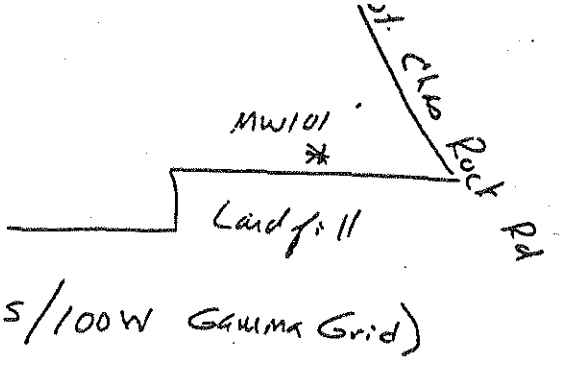

(1405/100W Gamma Grid)

DATUM

ELEVATION

DRILLING METHOD:	3 3/4" Hollow Stem Auger
	ATV Mounted
SAMPLING METHOD:	3" ID Continuous Sampler
	5' Length

BORING NO. MW101

SHEET 1 OF 2

					DRILLING START TIME	DRILLING FINISH TIME
WATER LEVEL	16					
TIME					1:15	
DATE					DATE	DATE
CASING DEPTH					4-11-90	

SAMPLER TYPE	INCHES DRIVEN / INCHES RECOVERED	DEPTH OF CASING	SAMPLE NO. / SAMPLE DEPTH	BLOWS/FT. SAMPLER	NUMBER OF RINGS	DEPTH IN FEET	SOIL GRAPH	SURFACE CONDITIONS:
								Tilled. Topsoil
CS	60/42		1/0-5			0		Topsoil dark brown silt
						1		Medium/fine lt/med brown sandy silt
						2		
						3		Brown silt
						4		Brown silty sand
CS	60/30		2/5-10			05		Brown sand
						6		Sandy silt w/ some clay
						7		fine silty sand - lt brown
						8		
						9		
CS	60/24		3/10-15			10		
						1		
						2		
						3		
						4		
CS	60/24		4/15-20			15		
						6		fine sand
						7		fine/medium sand
						8		fine silty sand
						9		
						20		

DATE 4-11-90 CHK'D BY

100635D

DRILLING METHOD:	BORING NO. MW101
	SHEET 2 of 2
SAMPLING METHOD:	DRILLING
	START / FINISH
WATER LEVEL	TIME / TIME
TIME	
DATE	DATE / DATE
CASING DEPTH	

DATUM ELEVATION

SAMPLER TYPE	INCHES DRIVEN / INCHES RECOVERED	DEPTH OF CASING	SAMPLE NO / SAMPLE DEPTH	BLOWS/FT. SAMPLER	NUMBER OF RINGS	DEPTH IN FEET	SOIL GRAPH
CS	60/24		S / 20-25			20	
						1	
						2	
						3	
						4	
						25	EOB 25'
						6	
						7	
						8	
						9	
						0	
						1	
						2	
						3	
						4	
						5	
						6	
						7	
						8	
						9	
						0	

SURFACE CONDITIONS:

Fine silt, sand

DATE 4-11-90 CHK'D BY

1C006349

MONITOR WELL INFORMATION SHEET

GROUND SURFACE ELEVATION _____

TOP OF WELL CASING ELEVATION 447.66

JOB NUMBER 19943-002

BORING NUMBER MW-101

DATE 4-11-90

LOCATION Earth City, MO

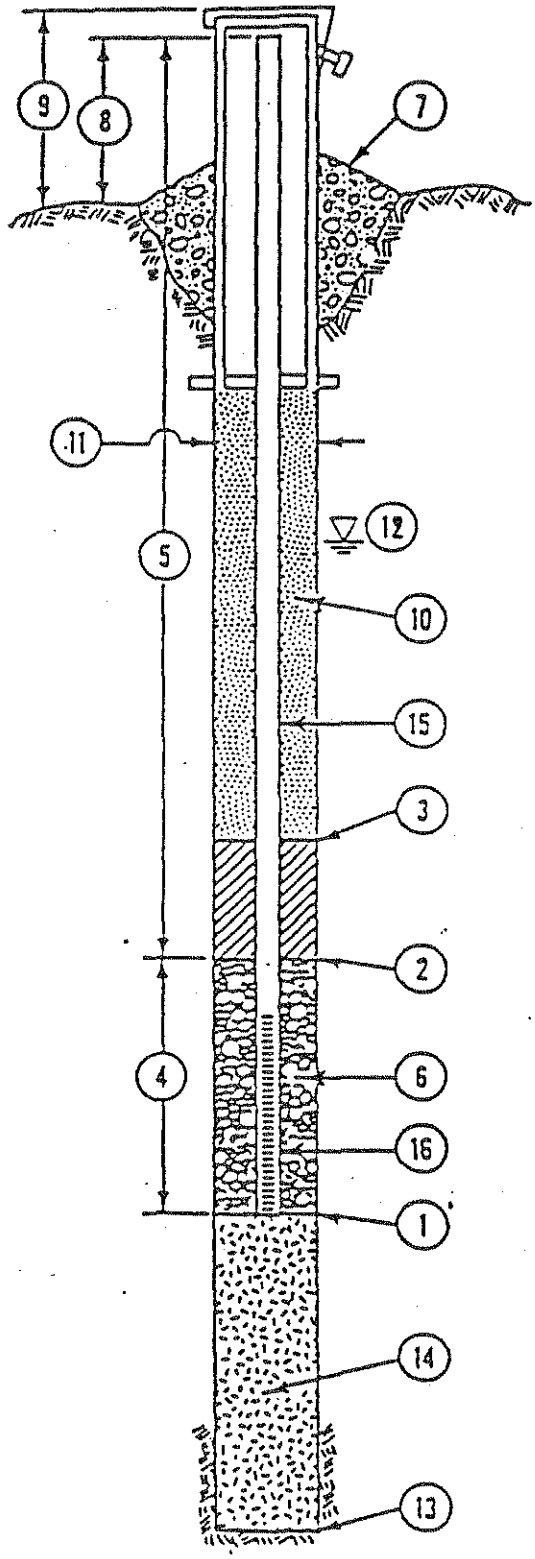

1. DEPTH TO BOTTOM OF WELL POINT OR SLOTTED PIPE 25 FEET.*
2. DEPTH TO BOTTOM OF SEAL (IF INSTALLED) 12.5 FEET.* Bentonite Pellets
3. DEPTH TO TOP OF SEAL (IF INSTALLED) 9.5 FEET.*
4. LENGTH OF WELL SCREEN 10 FEET. SLOT SIZE 0.010.
5. TOTAL LENGTH OF PIPE 12.3 FEET AT 2 INCH DIAMETER.
6. TYPE OF PACK AROUND WELL POINT OR SLOTTED PIPE SAND.
7. CONCRETE CAP. (YES) NO (CIRCLE ONE)
8. HEIGHT OF WELL CASING ABOVE GROUND 2.3 FEET.
9. PROTECTIVE CASING? (YES) NO (CIRCLE ONE)
   HEIGHT ABOVE GROUND _____ FEET.
   LOCKING CAP? (YES) NO (CIRCLE ONE)
10. TYPE OF UPPER BACKFILL Cement slurry
11. BOREHOLE DIAMETER 8 INCHES.
12. DEPTH TO GROUND WATER 16 FEET.*
13. TOTAL DEPTH OF BOREHOLE 25 FEET.*
14. TYPE OF LOWER BACKFILL N/A.
15. PIPE MATERIAL PVC.
16. SCREEN MATERIAL PVC.

*(DEPTH FROM GROUND SURFACE)

10006360

MONITOR WELL INSTALLATION DETAILS

Dames & Moore

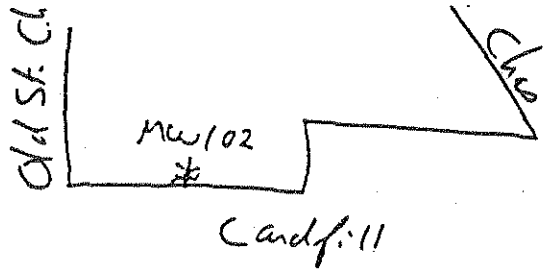

DRILLING METHOD:	BORING NO.
3¼ ID Hollow Stem Auger	MW102
ATV Mounted	SHEET 1 of 2
SAMPLING METHOD:	DRILLING
3" ID Continuous Sampler	START / FINISH
5' length	TIME 10:00 / TIME
WATER LEVEL 19.5	DATE 4-11-90 / DATE
TIME	
DATE	
CASING DEPTH	

DATUM

ELEVATION

SURFACE CONDITIONS: Tilled Topsoil

SAMPLER TYPE	INCHES DRIVEN / INCHES RECOVERED	DEPTH OF CASING	SAMPLE NO. / SAMPLE DEPTH	BLOWS/FT. SAMPLER	NUMBER OF RINGS	DEPTH IN FEET	SOIL GRAPH	
CS	60/36		1/0-5			00		dark brown silt
						1		
						2		lt brown fine sandy silt
						3		
						4		
CS	60/30		2/5-10			05		
						6		
						7		lt brown medium sand
						8		
						9		
CS	60/24		3/10-15			10		
						1		
						2		
						3		
						4		
CS	60/18		4/15-20			15		
						6		
						7		
						8		
						9		bottom 3" wet
						20		

DATE ____ CHK'D BY ____

10006352

DRILLING METHOD:

SAMPLING METHOD:

BORING NO. MCU102

SHEET 2 of 2

					DRILLING START TIME	DRILLING FINISH TIME
WATER LEVEL						
TIME						
DATE					DATE	DATE
CASING DEPTH						

DATUM ELEVATION

SURFACE CONDITIONS:

SAMPLER TYPE	INCHES DRIVEN / INCHES RECOVERED	DEPTH OF CASING	SAMPLE NO. / SAMPLE DEPTH	BLOWS/FT. SAMPLER	NUMBER OF RINGS	DEPTH IN FEET	SOIL GRAPH	
CS	60/0					20		No retreival
						1		
						2		
						3		
						4		
						25		
						6		EOB 25'
						7		
						8		
						9		
						0		
						1		
						2		
						3		
						4		
						5		
						6		
						7		
						8		
						9		
						0		

1CC06351

MONITOR WELL INFORMATION SHEET

GROUND SURFACE ELEVATION _____

TOP OF WELL CASING ELEVATION 448.98

JOB NUMBER 19943-002

BORING NUMBER MW-102

DATE 4-11-90

LOCATION Earth City, MO

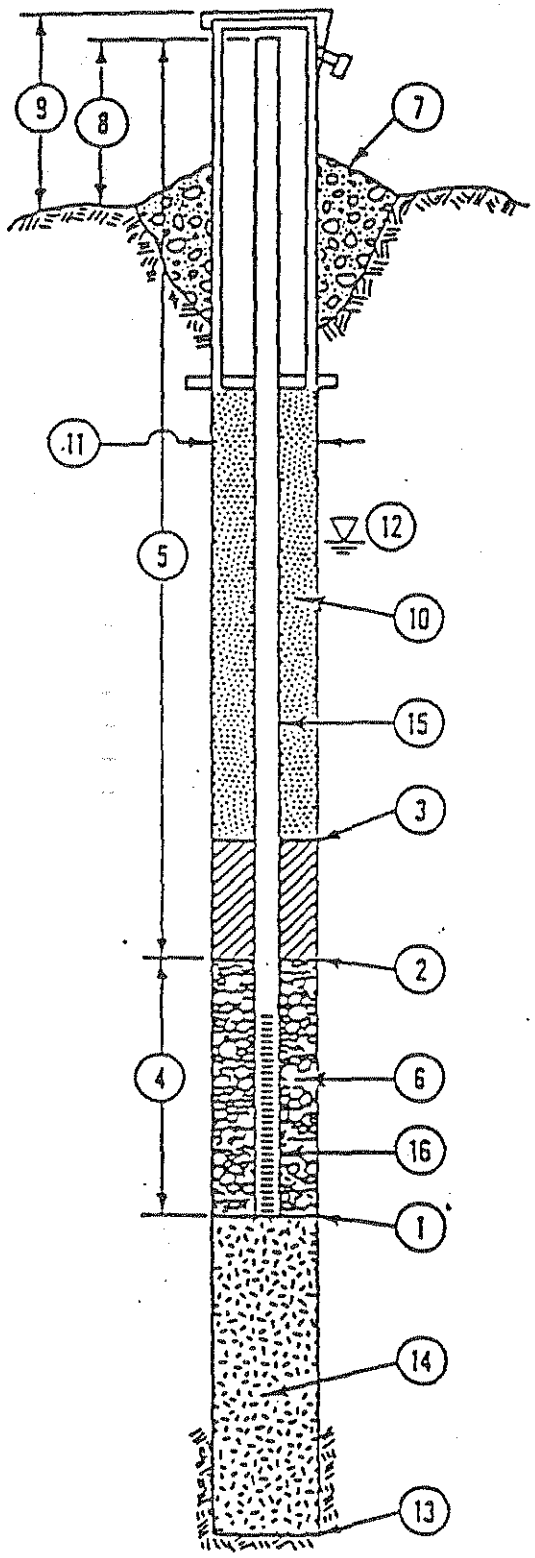

(1) DEPTH TO BOTTOM OF WELL POINT OR SLOTTED PIPE 24.5 FEET.*

(2) DEPTH TO BOTTOM OF SEAL (IF INSTALLED) 12 FEET.* Bentonite Pellets

(3) DEPTH TO TOP OF SEAL (IF INSTALLED) 9.5 FEET.*

(4) LENGTH OF WELL SCREEN 10 FEET.
SLOT SIZE 0.010.

(5) TOTAL LENGTH OF PIPE 16.8 FEET AT 2 INCH DIAMETER.

(6) TYPE OF PACK AROUND WELL POINT OR SLOTTED PIPE SAND.

(7) CONCRETE CAP. (YES) NO (CIRCLE ONE)

(8) HEIGHT OF WELL CASING ABOVE GROUND 2.3 FEET.

(9) PROTECTIVE CASING? (YES) NO (CIRCLE ONE)
HEIGHT ABOVE GROUND _____ FEET.
LOCKING CAP? (YES) NO (CIRCLE ONE)

(10) TYPE OF UPPER BACKFILL Cement slurry

(11) BOREHOLE DIAMETER 8 INCHES.

(12) DEPTH TO GROUND WATER 20 FEET.*

(13) TOTAL DEPTH OF BOREHOLE 25 FEET.*

(14) TYPE OF LOWER BACKFILL Natural Sand & silt

(15) PIPE MATERIAL PVC.

(16) SCREEN MATERIAL PVC.

*(DEPTH FROM GROUND SURFACE)

10006359

MONITOR WELL INSTALLATION DETAILS

MISSOURI DEPARTMENT OF NATURAL RESOURCES
GEOLOGICAL SURVEY PROGRAM

MONITORING WELL PLUGGING REGISTRATION RECORD

OFFICE USE ONLY		DATE RECEIVED	
REF NO.	514515		
C.R. NO.		CHECK NO.	TRANSMITTAL NO.
STATE WELL NUMBER		APPROVED BY	DATE APPROVED
ENTERED Ph1 Ph2 Ph3		ROUTE	

INFORMATION SUPPLIED BY WELL OR PUMP INSTALLATION CONTRACTOR

OWNER NAME	TELEPHONE NUMBER			VARIANCE NUMBER (IF APPLICABLE)
ENGINEERING MGMT.SUPPORT INC. EMSI. PAUL ROSASCO				6023
OWNER ADDRESS	**CITY**	**STATE**	**ZIP CODE**	
7220 W. JEFFERSON AVE. SUITE 406	LAKEWOOD	CO	80235	
ADDRESS OF WELL SITE	**CITY**	**STATE**	**ZIP CODE**	**REFERENCE NUMBER OF ORIGINAL WELL (IF KNOWN)**
13570 ST. CHARLES ROCK ROAD	BRIDGETON	MO	63044	N/A
SITE NAME	**WELL NUMBER**		**DATE**	
WEST LAKE LANDFILL	MW - 102			

LOCATION OF WELL
LAT. 38 ° 46 ' 21.6 "
LONG. 90 ° 26 ' 57.8 "

DRILL AREA
AREA 1

COUNTY
ST. LOUIS

SMALLEST ¼ ¼ ¼ LARGEST
Sec. Township North Range ☐ East ☐ West

PLUGGING INFORMATION

ORIGINAL DRILLER (IF KNOWN)	DATE ORIGINALLY DRILLED	STATIC WATER LEVEL	DRILLER NOTES
N/A	N/A		

☑ **MONITORING WELL**

DEPTH OF WELL	LENGTH OF RISER
30 FT.	N/A FT. BGS

SCREEN/RISER DIAMETER	WELL SCREEN AND RISER REMOVED?
2 IN.	☑ Yes ☐ No

PUMP AND SAMPLING EQUIPMENT REMOVED?	CASING REMOVED?
☐ Yes ☑ N/A ☐ No	☑ Yes ☐ N/A ☐ No

☐ **SOIL BORING(S)** Boring Diameter: _____ IN.

QUANTITY	DEPTH
TOTAL _____ BORING(S)	TOTAL _____ FT.

TYPE OF FILL MATERIAL
☐ Gravel ☐ Sand ☐ Other

AMOUNT OF FILL USED
_____ ☐ TONS ☐ CUBIC YARDS

DEPTH TO TOP OF FILL
_____ FT.

GROUT INSTALLATION METHOD	GROUT MATERIAL USED	HOW MANY GALLONS OF WATER MIXED PER BAG OF CEMENT OR BENTONITE?	TOTAL NUMBER OF BAGS OF GROUT USED
☐ Gravity ☑ Tremie ☐ Excavation	Neat Cement Bentonite ☐ Hi-Early ☑ Slurry ☐ Granular ☐ Pellets ☐ Type 1 ☐ Chips ☐ Other _____	5 ☐ Hydrated to Saturation	2
			POUNDS OF GROUT PER BAG: 50

DATE 1ST WELL PLUGGED	DATE LAST WELL PLUGGED	FINISHED SURFACE MATERIAL	SURFACE MATERIAL LENGTH
04/13/2016	04/15/2016	☑ Soil ☐ Concrete ☐ Asphalt ☐ Other	_____ FT. _____ IN.

REMARKS	REASON FOR ABANDONMENT
(REDI JOB# 162075-AB)	

I hereby certify that the monitoring well herein described was plugged in accordance with the Department of Natural Resources requirements for the plugging of wells.

SIGNATURE (PRIMARY CONTRACTOR)		SIGNATURE (CONTRACTOR)	PERMIT NUMBER	DATE
PERMIT NUMBER	DATE	SIGNATURE (APPRENTICE)	PERMIT NUMBER	DATE
3368 - M	5/17/2016			

MO-780-2161 (1-12)

REMIT TO: MISSOURI DEPARTMENT OF NATURAL RESOURCES, DIVISION OF GEOLOGY AND LAND SURVEY
WELLHEAD PROTECTION SECTION, PO BOX 250, ROLLA, MO 65402 573-368-2165
ENCLOSE $50 FEE WITH REGISTRATION RECORD WITHIN 60 DAYS AFTER WELL PLUGGING OR WITHIN 180 DAYS AFTER THE PLUGGING OF TEMPORARY WELLS

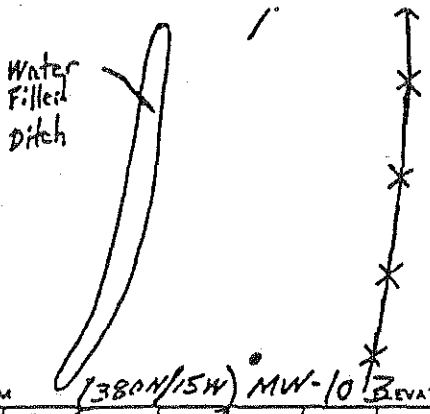

DATUM (380N/15W) MW-103 ELEVATION

DRILLING METHOD:	3¾" Hollow Stem Augers
SAMPLING METHOD:	3" I.D. Continuous Sampler
BORING NO.	MW-103
SHEET	1 of 2

	WATER LEVEL				DRILLING START	DRILLING FINISH
TIME	7'				11:30	
DATE					04/09	04/09
CASING DEPTH						

SURFACE CONDITIONS: Grassy Topsoil

SAMPLER TYPE	INCHES RECOVERED / INCHES DRIVEN	DEPTH OF CASING	SAMPLE NO. / SAMPLE DEPTH	BLOWS/FT. SAMPLER	HNU READING OR RANGE	DEPTH IN FEET	SOIL GRAPH	
CS	60"/48"		1/0'		0	0	ML	Dark brown, med stiff, slightly moist clay silt, high organic content
						1		
						2		
						3		
						4		Gray, med stiff, fine silt with traces of clay
						5		
CS	60"/20"		2/5'			6		
					0	7		Moist gray, med stiff to stiff, fine silt w/ traces of sand
						8		
						9		
						10		
CS	60"/42"		3/10'			1	SM	Very moist, gray, fine sand with silt, very soft and runny
					0	2		
						3		
						4		
						5		
CS	36"/36"		4/15'			6		
					0	7		
						8		
						9		
						20		

Steel Prot. Casing 0 to 2.7'
2" Dia. Pvc.
2.7'
2.5'
4.5'
Sand: WR-35
Well: 2" Dia PVC
Screen: #10 Slot Size PVC
Bentonite Pellets
Grout
E08-18'
10006354
(Ft. in Top of Pvc) 18.2'

MONITOR WELL INFORMATION SHEET

GROUND SURFACE ELEVATION _____

TOP OF WELL CASING ELEVATION 441.16

JOB NUMBER 19943-002

BORING NUMBER MW-103

DATE 04/09/90

LOCATION Earth City, MO

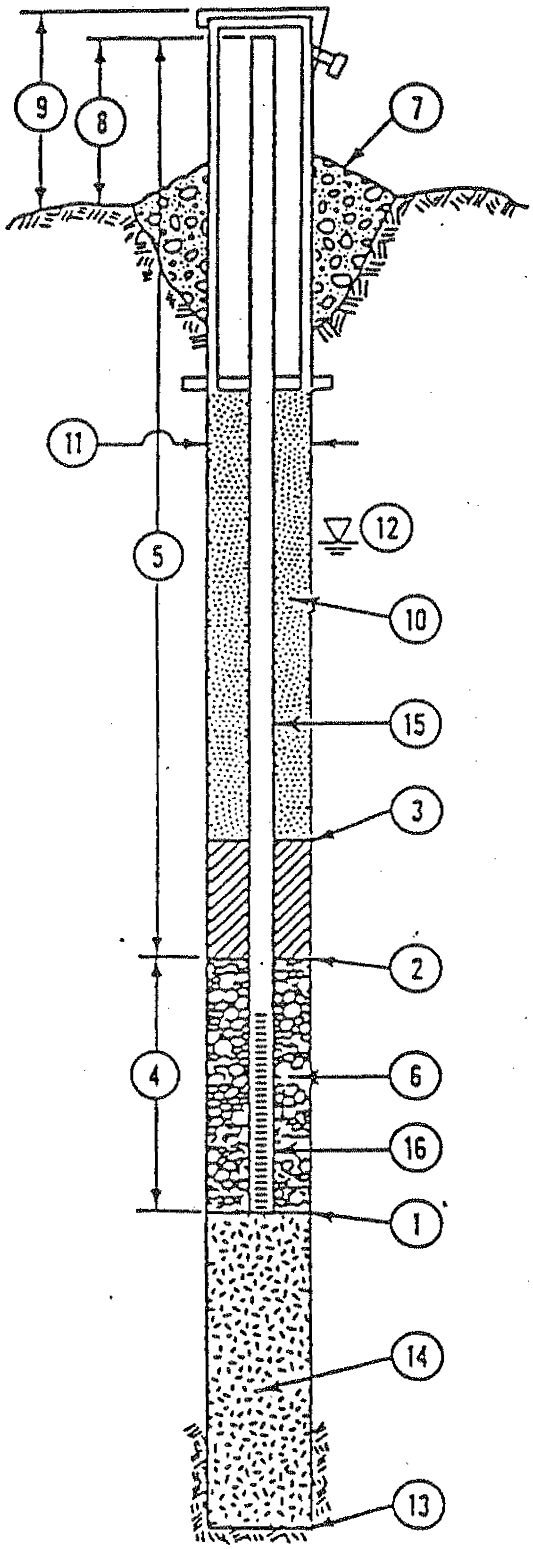

1. DEPTH TO BOTTOM OF WELL POINT OR SLOTTED PIPE 15.7 FEET.*
2. DEPTH TO BOTTOM OF SEAL (IF INSTALLED) 4.5 FEET.* Bentonite Pellets
3. DEPTH TO TOP OF SEAL (IF INSTALLED) 2.5 FEET.*
4. LENGTH OF WELL SCREEN 10 FEET. SLOT SIZE 0.010.
5. TOTAL LENGTH OF PIPE 8.4 FEET AT 2 INCH DIAMETER.
6. TYPE OF PACK AROUND WELL POINT OR SLOTTED PIPE sand.
7. CONCRETE CAP. (YES) NO (CIRCLE ONE)
8. HEIGHT OF WELL CASING ABOVE GROUND 2.7 FEET.
9. PROTECTIVE CASING? (YES) NO (CIRCLE ONE)
   HEIGHT ABOVE GROUND 2.8 FEET.
   LOCKING CAP? (YES) NO (CIRCLE ONE)
10. TYPE OF UPPER BACKFILL cement slurry
11. BOREHOLE DIAMETER 8 INCHES.
12. DEPTH TO GROUND WATER 7 FEET.*
13. TOTAL DEPTH OF BOREHOLE 18 FEET.*
14. TYPE OF LOWER BACKFILL Natural sand + silt
15. PIPE MATERIAL PVC.
16. SCREEN MATERIAL PVC.

*(DEPTH FROM GROUND SURFACE)

10006362

MONITOR WELL INSTALLATION DETAILS

Dames & Moore

Landfill

Old St. Charles Rock Rd

culvert

* MW104

ditch

(40N/15E)

DRILLING METHOD:					BORING NO.
3 3/4" ID Hollow Stem Auger					MW-104
					SHEET
SAMPLING METHOD:					1 OF 1
3" ID Continuous Sampler 5' Length					DRILLING
					START / FINISH
WATER LEVEL	17'				TIME / TIME
TIME					8:20 / 9:00
DATE					DATE / DATE
CASING DEPTH					4-11-90

DATUM ELEVATION

SAMPLER TYPE	INCHES DRIVEN / INCHES RECOVERED	DEPTH OF CASING	SAMPLE NO. / SAMPLE DEPTH	BLOWS/FT. SAMPLER	NUMBER OF RINGS	DEPTH IN FEET	SOIL GRAPH	SURFACE CONDITIONS:
								Grassy Topsoil
CS	60/48		1/0-5			00		moist dark brown topsoil silt
						1		sandy silt
						2		Medium to light brown stiff fine silt
						3		
						4		Medium brown to grey silt w/ black and rust particles
CS	60/48		2/5-10			05		
						6		Medium brown stiff silty clay
						7		
						8		Medium brown fine silt w/ rust stains
						9		stiff Medium brown stiff silt
CS	60/12		3/10-15			10		dark grey fine sand
						1		
						2		
						3		
						4		
CS	24/30		4/15-17			15		
						6		
						17		EOB 17'
						8		
						9		
						0		

10006353

MONITOR WELL INFORMATION SHEET

GROUND SURFACE ELEVATION _____

TOP OF WELL CASING ELEVATION 441.88

JOB NUMBER 19943-002

BORING NUMBER MW-104

DATE 4-11-90

LOCATION Earth City MO

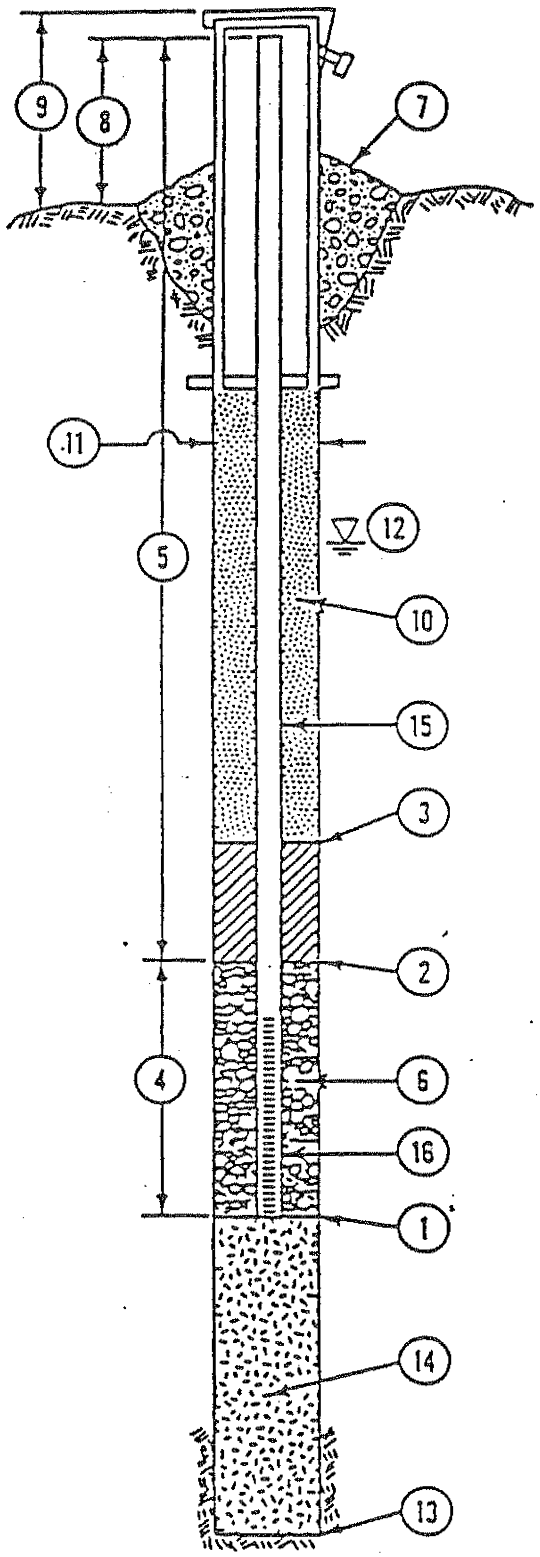

(1) DEPTH TO BOTTOM OF WELL POINT OR SLOTTED PIPE 17 FEET.*

(2) DEPTH TO BOTTOM OF SEAL (IF INSTALLED) 5 FEET.* Bentonite Pellets

(3) DEPTH TO TOP OF SEAL (IF INSTALLED) 2.3 FEET.*

(4) LENGTH OF WELL SCREEN 10 FEET.
SLOT SIZE 0.010.

(5) TOTAL LENGTH OF PIPE 9.9 FEET AT 2 INCH DIAMETER.

(6) TYPE OF PACK AROUND WELL POINT OR SLOTTED PIPE SAND.

(7) CONCRETE CAP. (YES) NO (CIRCLE ONE)

(8) HEIGHT OF WELL CASING ABOVE GROUND 2.9 FEET.

(9) PROTECTIVE CASING? (YES) NO (CIRCLE ONE)
HEIGHT ABOVE GROUND _____ FEET.
LOCKING CAP? (YES) NO (CIRCLE ONE)

(10) TYPE OF UPPER BACKFILL Cement.

(11) BOREHOLE DIAMETER 8 INCHES.

(12) DEPTH TO GROUND WATER 7 FEET.*

(13) TOTAL DEPTH OF BOREHOLE 17 FEET.*

(14) TYPE OF LOWER BACKFILL N/A.

(15) PIPE MATERIAL PVC.

(16) SCREEN MATERIAL PVC.

*(DEPTH FROM GROUND SURFACE)

10006361

MONITOR WELL INSTALLATION DETAILS

Dames & Moore

Expressway

MW105 * Trop Line

DRILLING METHOD: 3 3/4" ID Hollow Stem Auger ATV Mounted	BORING NO. MW-105
SAMPLING METHOD: 3" ID Continuous Sampler 5' length	SHEET 1 OF 1

WATER LEVEL	3 1/2			
TIME				
DATE				
CASING DEPTH				

DRILLING	
START	FINISH
TIME 8:50	TIME 9:15
DATE 4-12-90	DATE

DATUM

ELEVATION

SURFACE CONDITIONS: wooded, light brush cover, leaves & decaying matter

SAMPLER TYPE	INCHES DRIVEN / INCHES RECOVERED	DEPTH OF CASING	SAMPLE NO. / SAMPLE DEPTH	BLOWS/FT. SAMPLER	NUMBER OF RINGS	DEPTH IN FEET	SOIL GRAPH	
CS	60/48		1/0-5			00		stiff dark brown silt/clay organic
						1		mixed dark and light brown silt
						2		↓
						3		fine silty clay ↓
						4		wet sandy silt medium brown w/ dk brown material
CS	60/42		2/5-10			05		fine sandy silt brown/grey fine sandy silt w/ rust
						6		↓
						7		grey silty clay grey fine sand
						8		↓
						9		fine brown sand
CS	60/15		3/10-15			10		medium to light brown
						1		
						2		
						3		
						4		
						15		↓
						6		EOB 15'
						7		
						8		
						9		
						0		

DATE 4-12-90 CHK'D BY

10006356

MONITOR WELL INFORMATION SHEET

GROUND SURFACE ELEVATION _____

TOP OF WELL CASING ELEVATION 440.17

JOB NUMBER 19943-002

BORING NUMBER MW-105

DATE 4-12-90

LOCATION . Earth City MO

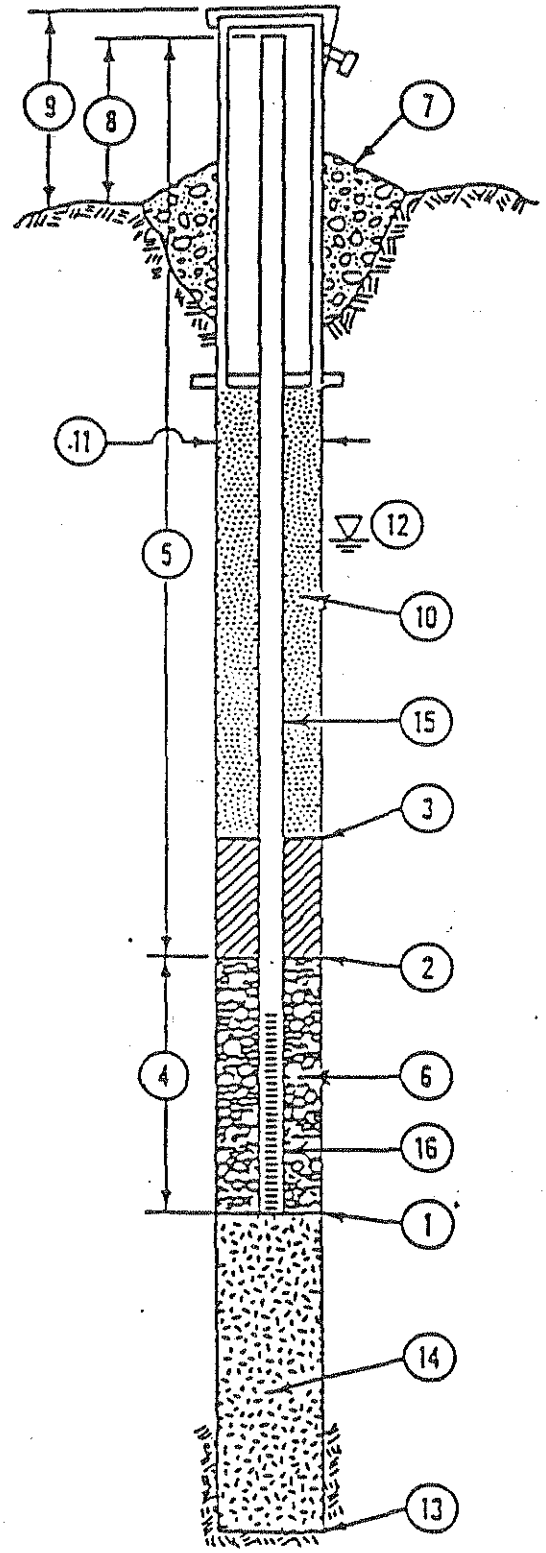

(1) DEPTH TO BOTTOM OF WELL POINT OR SLOTTED PIPE 15 FEET.*

(2) DEPTH TO BOTTOM OF SEAL (IF INSTALLED) 3.5 FEET.* Bentonite Pellets

(3) DEPTH TO TOP OF SEAL (IF INSTALLED) 2 FEET.*

(4) LENGTH OF WELL SCREEN 10 FEET.
SLOT SIZE 0.010.

(5) TOTAL LENGTH OF PIPE 23 FEET AT 2 INCH DIAMETER.

(6) TYPE OF PACK AROUND WELL POINT OR SLOTTED PIPE SAND.

(7) CONCRETE CAP. (YES) NO (CIRCLE ONE)

(8) HEIGHT OF WELL CASING ABOVE GROUND 2.3 FEET.

(9) PROTECTIVE CASING? (YES) NO (CIRCLE ONE)
HEIGHT ABOVE GROUND _____ FEET.
LOCKING CAP? (YES) NO (CIRCLE ONE)

(10) TYPE OF UPPER BACKFILL Cement.

(11) BOREHOLE DIAMETER 8 INCHES.

(12) DEPTH TO GROUND WATER 3 1/2 FEET.*

(13) TOTAL DEPTH OF BOREHOLE 15 FEET.*

(14) TYPE OF LOWER BACKFILL N/A.

(15) PIPE MATERIAL PVC.

(16) SCREEN MATERIAL PVC.

*(DEPTH FROM GROUND SURFACE)

10006364

MONITOR WELL INSTALLATION DETAILS

Dames & Moore

MW-106
*
shallow drainage channel

150'

1 450'

Prop Corner

DRILLING METHOD:	BORING NO.
3 3/4" I.D Hollow Stem Auger ATV mounted	MW-106
	SHEET 1 of 1
SAMPLING METHOD:	DRILLING
3" ID Continuous Sampler 5' Long	START / FINISH
WATER LEVEL 9'	TIME / TIME
TIME	10:15 /
DATE	DATE / DATE
CASING DEPTH	4-12-90

DATUM ELEVATION

SAMPLER TYPE	INCHES DRIVEN / INCHES RECOVERED	DEPTH OF CASING	SAMPLE NO / SAMPLE DEPTH	BLOWS/FT. SAMPLER	NUMBER OF RINGS	DEPTH IN FEET	SOIL GRAPH	SURFACE CONDITIONS:
								wooded lt brush cover, leaves & decaying matter
CS	60/37		1/0-5			00		dark brown clay/silt w/ organic matter
								medium brown fine silt w/ rust spots
						1		↓
								medium/dark brown fine silt
						2		↓
								stiff dark brown silty/clay w/ rust
						3		↓
								Medium brown silty sand
						4		↓
CS	60/45		2/5-10			05		dk brown silty clay w/ rust
						6		↓
						7		↓
						8		↓
						9	?	↓
CS	60/48		3/10-25			10		fine silty sand, tight and moist
								↓
						1		very tight grey silty clay
								↓
						2		brown/grey sandy silt w/ rust
						3		fine sand
								dk grey fine clay
						4		↓
						15		EOB 15'
						6		
						7		
						8		
						9		
						0		

10006355

MONITOR WELL INFORMATION SHEET

GROUND SURFACE ELEVATION _____

TOP OF WELL CASING ELEVATION 444.70

JOB NUMBER 19943-002

BORING NUMBER MW-106

DATE 4-12-90

LOCATION . Earth City, MO

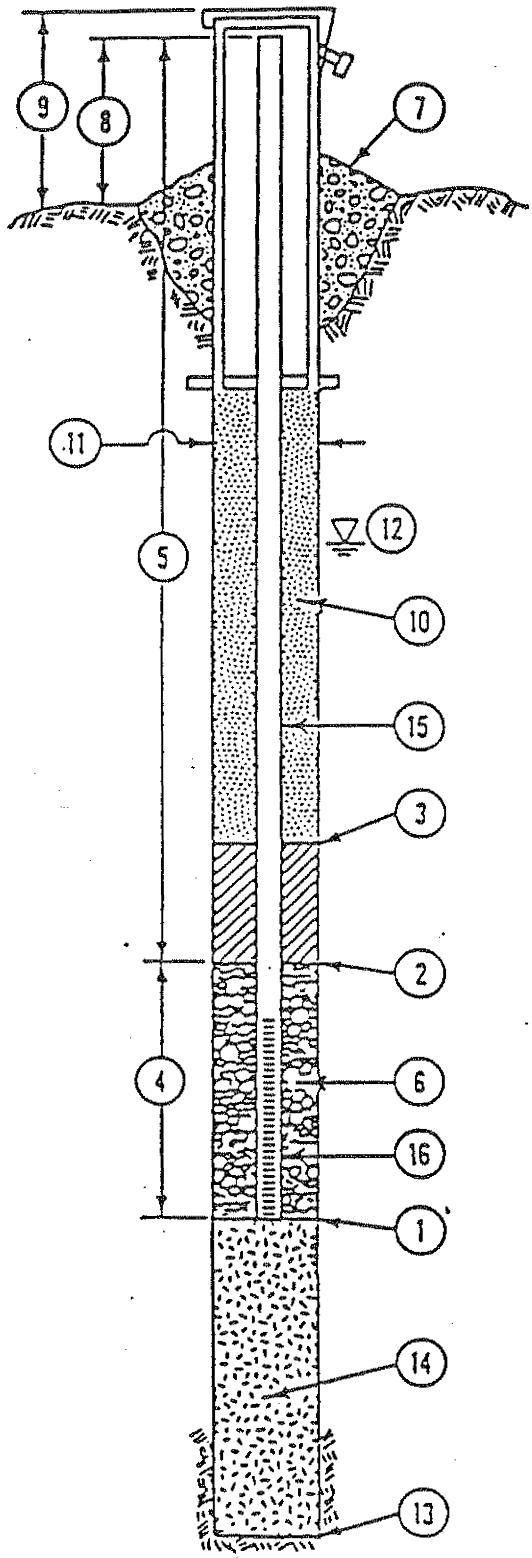

(1) DEPTH TO BOTTOM OF WELL POINT OR SLOTTED PIPE 15 FEET.*

(2) DEPTH TO BOTTOM OF SEAL (IF INSTALLED) 3.5 FEET.* Bentonite Pellets

(3) DEPTH TO TOP OF SEAL (IF INSTALLED) 2 FEET.*

(4) LENGTH OF WELL SCREEN 10 FEET.
SLOT SIZE 0.010.

(5) TOTAL LENGTH OF PIPE _____ FEET AT 2 INCH DIAMETER.

(6) TYPE OF PACK AROUND WELL POINT OR SLOTTED PIPE SAND.

(7) CONCRETE CAP. (YES) NO (CIRCLE ONE)

(8) HEIGHT OF WELL CASING ABOVE GROUND _____ FEET.

(9) PROTECTIVE CASING? (YES) NO (CIRCLE ONE)
HEIGHT ABOVE GROUND _____ FEET.
LOCKING CAP? (YES) NO (CIRCLE ONE)

(10) TYPE OF UPPER BACKFILL cement.

(11) BOREHOLE DIAMETER 8 INCHES.

(12) DEPTH TO GROUND WATER 9 FEET.*

(13) TOTAL DEPTH OF BOREHOLE 15 FEET.*

(14) TYPE OF LOWER BACKFILL N/A.

(15) PIPE MATERIAL PVC.

(16) SCREEN MATERIAL PVC.

*(DEPTH FROM GROUND SURFACE)

10006363

MONITOR WELL INSTALLATION DETAILS

Dames & Moore

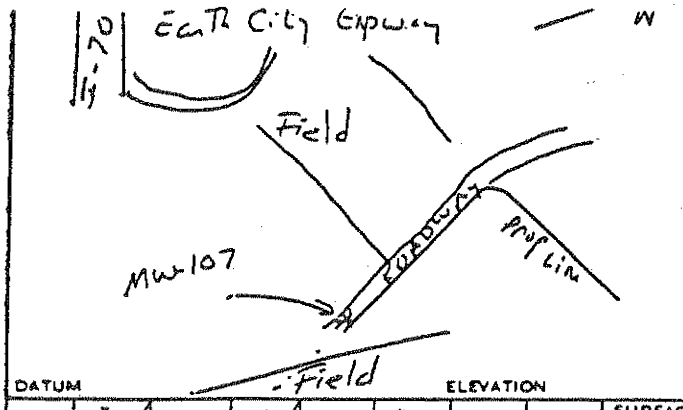

DRILLING METHOD: 3 3/4" I.D Hollow Stem Auger ATV Mounted	BORING NO. MW-107
SAMPLING METHOD: 3" ID Continuous Sampler 5' Length	SHEET 1 OF 1
	DRILLING START TIME 11:25 / FINISH TIME 12:45
WATER LEVEL 5'	
TIME	
DATE	DATE 4-12-90
CASING DEPTH	

DATUM ELEVATION

SURFACE CONDITIONS: Wooded lt brush cover, leaves & decaying matter

SAMPLER TYPE	INCHES DRIVEN / INCHES RECOVERED	DEPTH OF CASING	SAMPLE NO. / SAMPLE DEPTH	BLOWS/FT. SAMPLER	NUMBER OF RINGS	DEPTH IN FEET	SOIL GRAPH	
GS	60/30		1/0-5			0		organic matter medium brown fine silt
						1		
						2		med/lt brown fine silt
						3		
						4		
CS	60/60		2/5-10			05	7	dark grey silty clay, stiff
						6		
						7		
						8		
						9		
CS	60/60		3/10-15			10		
						1		
						2		
						3		
						4		
						15		dark grey fine sand w/ silt+clay EOB 15'
						6		
						7		Note: 2" diam. PVC well installed to 15' 10' of #10 slot screen 11-1/2' Sand Pack 1-1/2' of bentonite pellets locking protective steel casing
						8		
						9		
						0		

1000635B

MONITOR WELL INFORMATION SHEET

GROUND SURFACE ELEVATION _____

TOP OF WELL CASING ELEVATION 449.25

JOB NUMBER 19943-002

BORING NUMBER MW-107

DATE 4-12-90

LOCATION Earth City MO

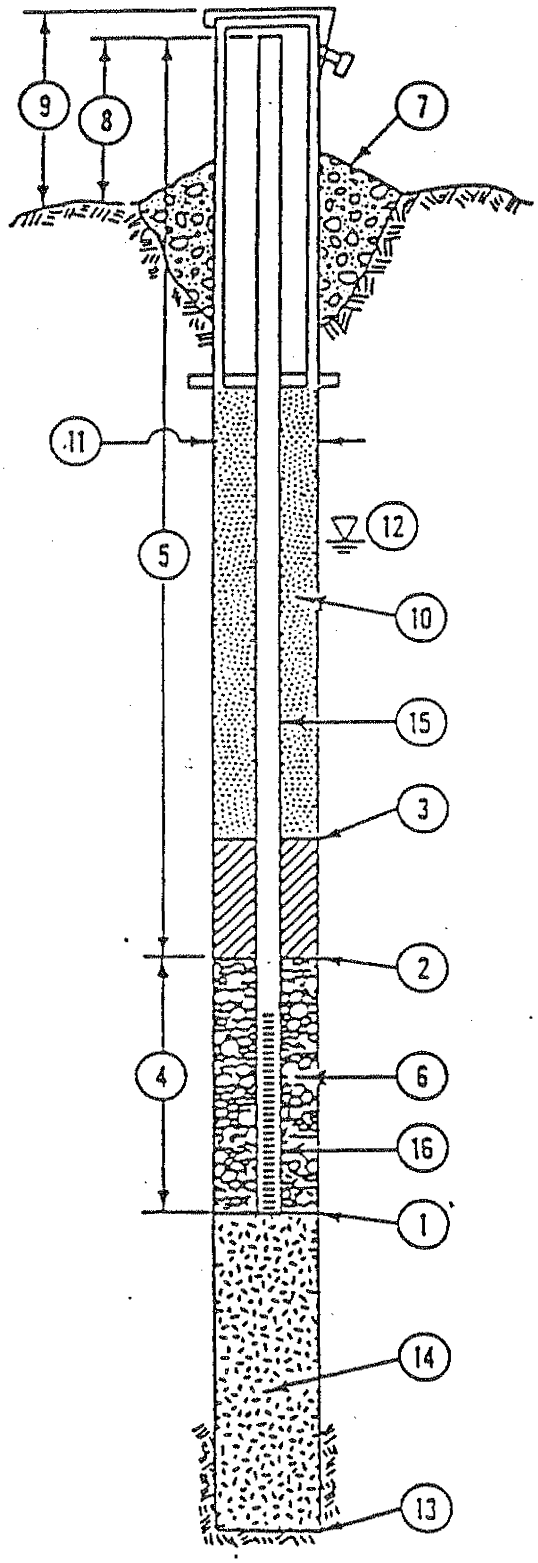

(1) DEPTH TO BOTTOM OF WELL POINT OR SLOTTED PIPE 19 FEET.*

(2) DEPTH TO BOTTOM OF SEAL (IF INSTALLED) 3.5 FEET.*

(3) DEPTH TO TOP OF SEAL (IF INSTALLED) 2 FEET.*

(4) LENGTH OF WELL SCREEN 10 FEET.
SLOT SIZE 0.010.

(5) TOTAL LENGTH OF PIPE _____ FEET AT 2 INCH DIAMETER.

(6) TYPE OF PACK AROUND WELL POINT OR SLOTTED PIPE SAND.

(7) CONCRETE CAP. (YES) NO (CIRCLE ONE)

(8) HEIGHT OF WELL CASING ABOVE GROUND _____ FEET.

(9) PROTECTIVE CASING? (YES) NO (CIRCLE ONE)
HEIGHT ABOVE GROUND _____ FEET.
LOCKING CAP? (YES) NO (CIRCLE ONE)

(10) TYPE OF UPPER BACKFILL Cement.

(11) BOREHOLE DIAMETER 8 INCHES.

(12) DEPTH TO GROUND WATER 5 FEET.*

(13) TOTAL DEPTH OF BOREHOLE 15 FEET.*

(14) TYPE OF LOWER BACKFILL N/A.

(15) PIPE MATERIAL PVC.

(16) SCREEN MATERIAL PVC.

*(DEPTH FROM GROUND SURFACE)

10006366

MONITOR WELL INSTALLATION DETAILS

Parsons & Moore

(MODIFICATION TO EXISTING)

MISSOURI DEPARTMENT OF NATURAL RESOURCES
DIVISION OF GEOLOGY AND LAND SURVEY

MONITORING WELL CERTIFICATION RECORD

OFFICE USE ONLY	DATE RECEIVED
REF NO 122517	CHECK NO
ROUTE	TRANSMITTAL NO
STATE WELL NUMBER	CROSS REFERENCE NO
CHECKED BY	ENTERED Ph 1 Ph 2 Ph 3
APPROVED BY	DATE APPROVED

INFORMATION SUPPLIED BY OWNER

SITE NAME: LAIDLAW BRIDGETON SANITARY LANDFILL
WELL NUMBER: MW-1301
SITE ADDRESS: ST. CHARLES ROCK RD
CITY: BRIDGETON
STATE: MO
ZIP CODE: 63044
NAME: LAIDLAW WASTE SYSTEMS, INC.
TELEPHONE: 314-241-3710
ADDRESS: 1833 N. BROADWAY
CITY: ST. LOUIS
STATE: MO.
ZIP CODE: 63102

INFORMATION SUPPLIED BY MONITORING WELL CONTRACTOR

LOCATION OF WELL
SHOW LOCATION IN SECTION PLAT

COUNTY: ST. LOUIS
ELEVATION: 430.41
AREA NO:

SMALLEST ¼ LARGEST ¼

SEC. ____ TWN. 47 N,RNG 5 (E) OR W

LAT. 38° 45' 53" LONG. 90° 26' 26"

SKETCH THE LOCATION TO THE WELL INCLUDING MILEAGE ON ALL ROADS TRAVELED FROM NEAREST TOWNS OR HIGHWAYS

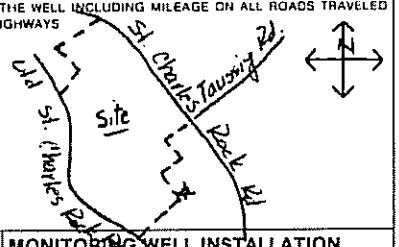

DESCRIBE LOCATION OF THE WELL SO WE WOULD BE ABLE TO VISIT IT

OPEN DUKE HOLE, ORIGINALLY DRILLED IN 1985 BY DRILLING SERVICE WAS GROUTED TO 148.5' AND MONITORING WELL MATERIALS WERE INSTALLED BY LAYNE WESTERN 7/95.

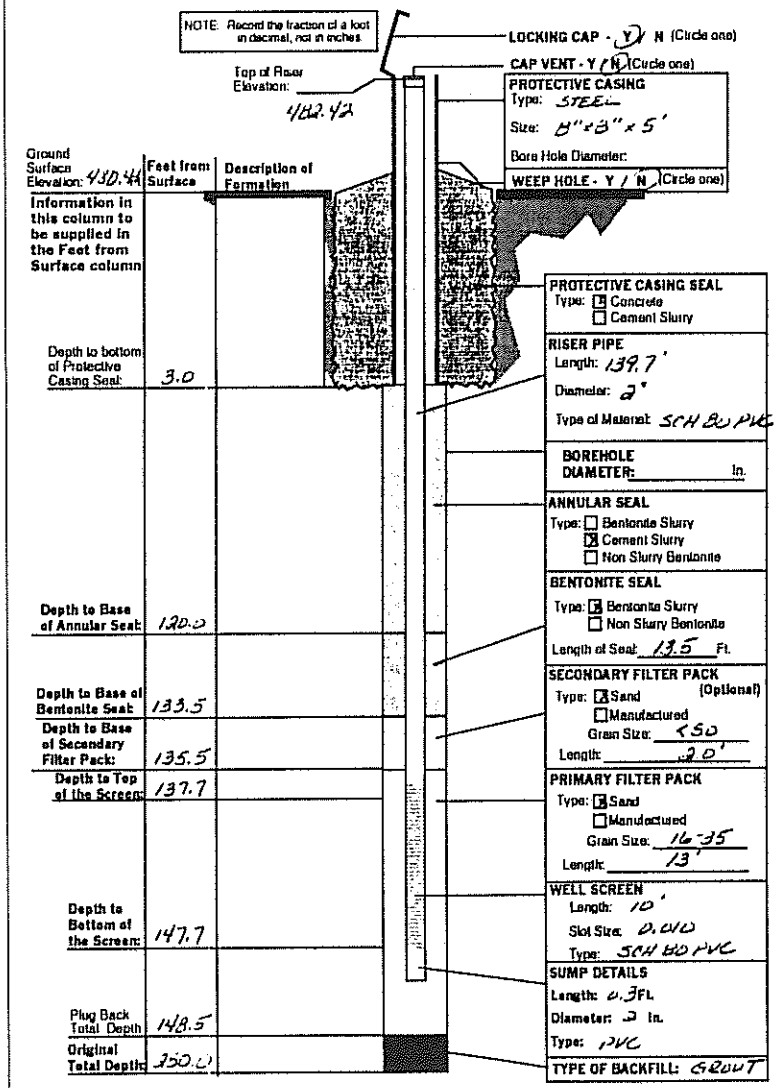

MONITORING WELL INSTALLATION CONTRACTOR'S NAME
LAYNE WESTERN CO, INC.

DRILLING CONTRACTOR'S NAME
DRILLING SERVICE CO.

TYPE OF INSTALLATION
(X) ABOVE GROUND ( ) FLUSH MOUNT

STATIC WATER LEVEL
FEET FROM MEASURING POINT

DATE OF STATIC WATER LEVEL

ELEVATION OF MEASURING POINT
432.42

MEASURING POINT IS
(X) TOP OF RISER PIPE
( ) OTHER

DRILLING EQUIPMENT
( ) AIR ROTARY ( ) AUGER TYPE
( ) REVERSE ROTARY ( ) OTHER

CENTRALIZERS USED
(X) YES, AT 3 TOTAL
(X) STAINLESS STEEL
( ) OTHER
( ) NO

MULTIPLE CASED WELLS

SUBMIT ADDITIONAL AS BUILT DIAGRAM SHOWING WELL CONSTRUCTION DETAILS INCLUDING TYPE AND SIZE OF ALL CASING, HOLE DIAMETERS, AND GROUT USED.

DATE WELL CONSTRUCTION WAS COMPLETED
7-07-95

I HEREBY CERTIFY THAT THE MONITORING WELL HEREIN DESCRIBED WAS CONSTRUCTED IN ACCORDANCE WITH THE DEPARTMENT OF NATURAL RESOURCES REQUIREMENTS FOR THE CONSTRUCTION OF MONITORING WELLS.

SIGNATURE (MONITORING WELL CONTRACTOR)
Michael P. Vogt

PERMIT NUMBER	DATE
001256 WM	7-07-95

SIGNATURE (DRILLING CONTRACTOR)

PERMIT NUMBER	DATE

DISTRIBUTION: WHITE DIVISION CANARY MONITORING WELL CONTRACTOR PINK/OWNER

Foth & Van Dyke

Client: LAIDLAW WASTE SYSTEMS Scope I.D.: 89L46
Project: Bridgeton Monitor Wells Page: 1
Prepared by: RTB Date: 4/15/91
Checked by: RTB Date: 4/24/91

MONITORING WELL CONSTRUCTION DIAGRAM

Driller: John Mathes and Associates, Inc. Well No.: 1204
Drilling Method: Air Rotary Date Installed: 4/5/91

Coordinates: 1,066,420.96N, 515,823.27E

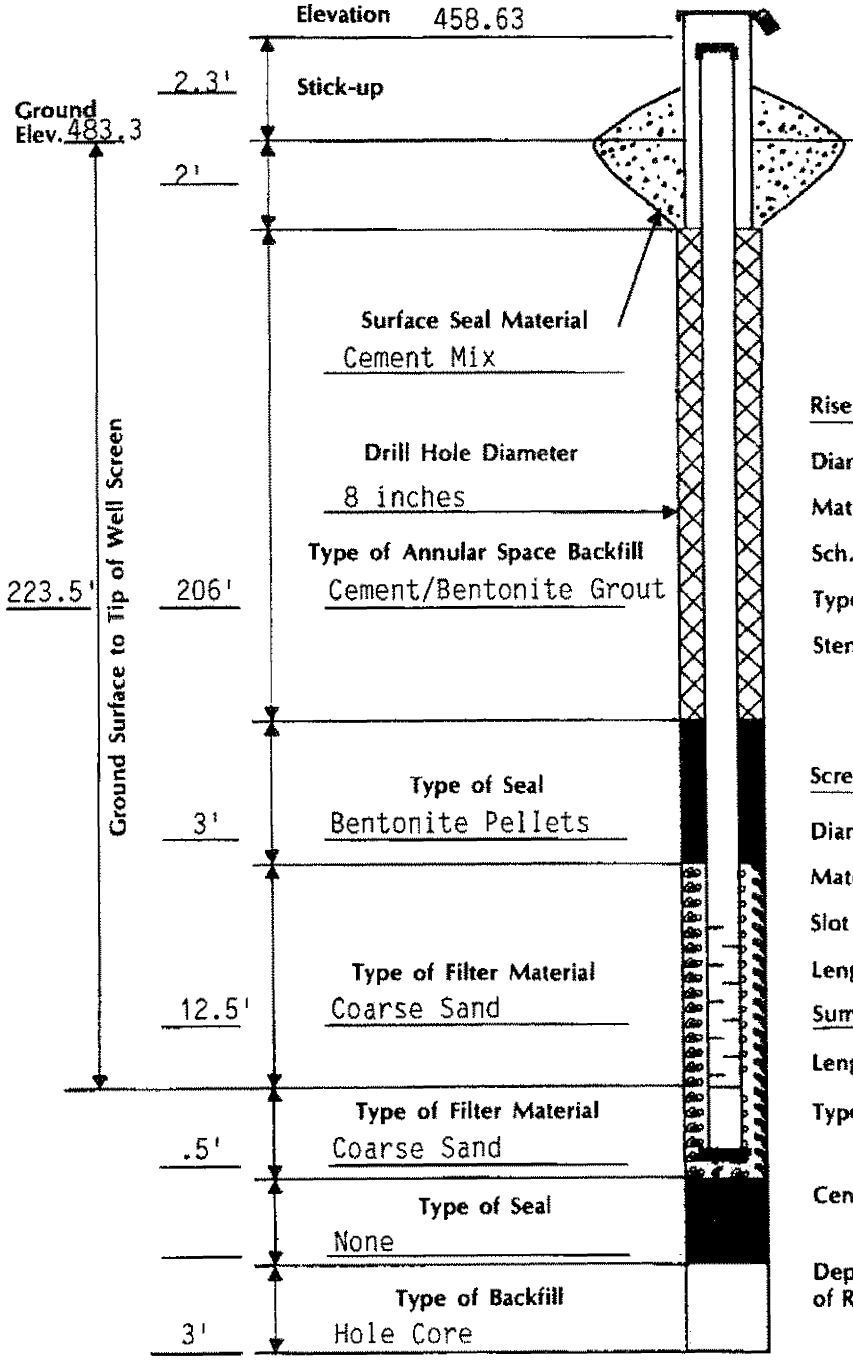

Protector Pipe:
Size: 4 inch
Material: Steel
Lock No.: Master

Riser:
Diameter: 2 inch
Material: PVC
Sch.: 80
Type of Joints: Flush Threaded
Stenciled? Yes

Screen:
Diameter: 2 inch
Material: PVC
Slot Size: 0.010 inch
Length: 10 feet

Sump:
Length: None
Type of Cap: PVC Flush Threaded

Centralizer: Used ☐
Not Used ☒

Depth to Water From Top of Riser at Completion: Dry

NOTE: Not to Scale

Foth & Van Dyke

Client: LAIDLAW WASTE SYSTEMS Scope I.D.: 89L46
Project: Bridgeton Monitor Wells Page: 1
Prepared by: CFN Date: 4/4/91
Checked by: RTB Date: 4/24/91

MONITORING WELL CONSTRUCTION DIAGRAM

Driller: John Mathes and Associates, Inc. Well No.: 1205
Drilling Method: Air Rotary Date Installed: 4/2/91

Coordinates: 1,067,387.39N, 515,620.75E

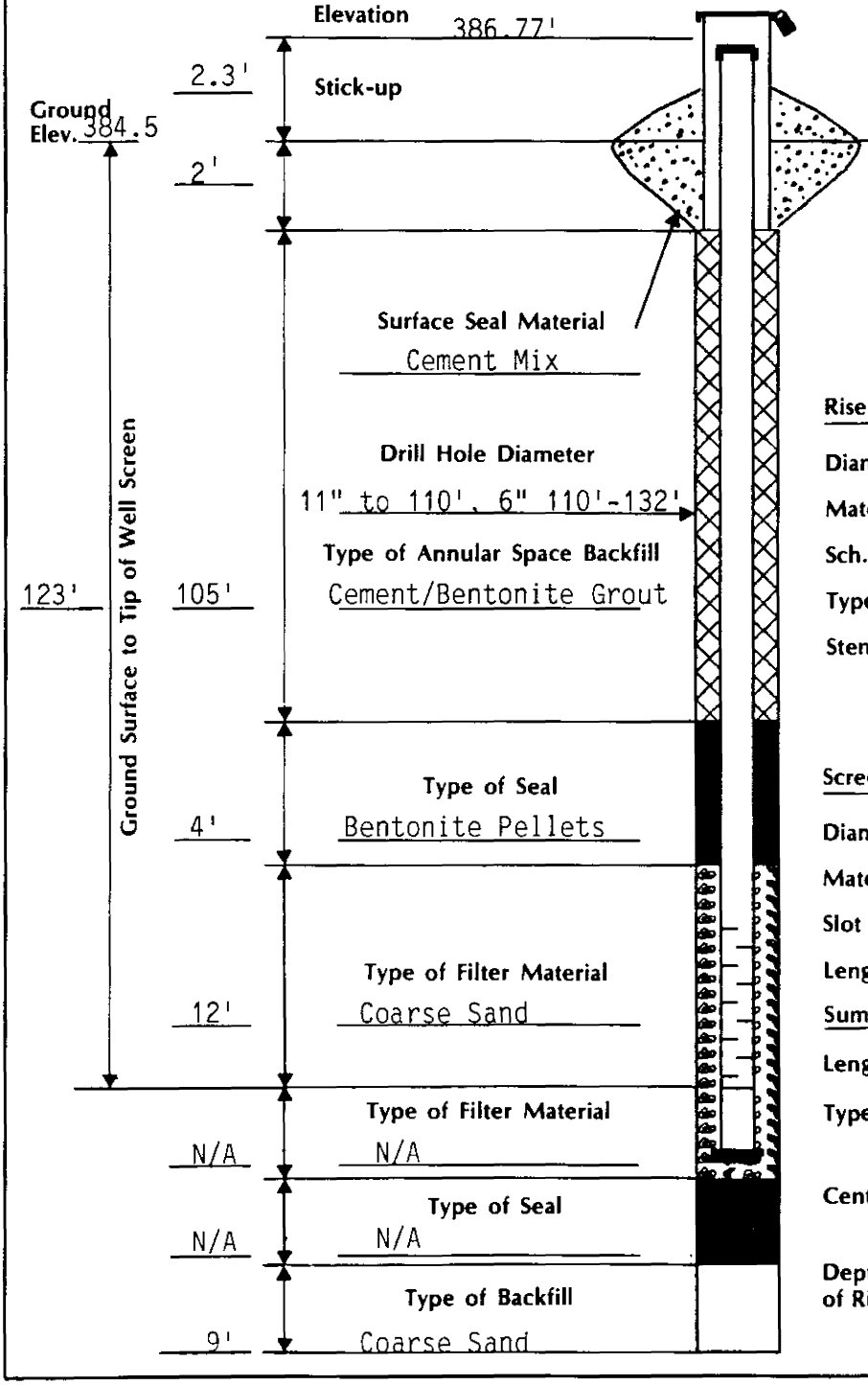

Protector Pipe:
Size: 4 inch
Material: Steel
Lock No.: Master

Note: 6 5/8" OD WELDED STEEL CASING SET AND GROUTED TO 110'

Riser:
Diameter: 2 inch
Material: PVC
Sch.: 80
Type of Joints: Flush Threaded
Stenciled? Yes

Screen:
Diameter: 2 inch
Material: PVC Sch 80
Slot Size: 0.010 inch
Length: 10'

Sump:
Length: N/A
Type of Cap: PVC Flush Threaded

Centralizer: Used ☐
Not Used ☒

Depth to Water From Top of Riser at Completion: Dry

NOTE: Not to Scale

MISSOURI DEPARTMENT OF NATURAL RESOURCES
DIVISION OF GEOLOGY AND LAND SURVEY

REGISTRATION RECORD

OFFICE USE ONLY		DATE RECEIVED	
REF NO 152609			
ROUTE		PWS NUMBER	CHECK NUMBER
STATE WELL NUMBER		TRANSMITTAL NO	
CHECKED BY		CROSS REFERENCE NO	
APPROVED BY	DATE	ENTERED Ph 1 Ph 2 Ph 3	

INFORMATION SUPPLIED BY OWNER

NAME: LAIDLAW WASTE SYSTEMS, INC. — TELEPHONE: 314-241-3710

ADDRESS: 1838 N. BROADWAY — CITY: ST. LOUIS — STATE: MO — ZIP CODE: 63102

SITE NAME: LAIDLAW BRIDGETON SANITARY LANDFILL 1205 — WELL NUMBER — ADDRESS OF WELL SITE OR SITE NAME (IF DIFFERENT THAN ABOVE): ST. CHARLES ROCK RD.

OWNER STATUS ☐ BUILDER ☐ PRIVATE HOME OWNER ☐ DEVELOPER ☒ OTHER (SPECIFY) LANDFILL — CITY: BRIDGETON — STATE: MO — ZIP CODE: 63044

PURPOSE OF REGISTRATION FORM: ☒ ABANDONED WELL ☐ MINERAL EXPLORATORY ☐ WELL RECONSTRUCTION ☐ TEST HOLE ☐ OTHER

VARIANCE ISSUED? ☐ YES ☒ NO — VARIANCE NUMBER — WELL CERTIFICATION NUMBER — DATE ORIGINALLY DRILLED: 4-2-91

SIGNATURE (WELL OWNER) — DATE

INFORMATION SUPPLIED BY CONTRACTOR

SKETCH THE LOCATION TO THE WELL INCLUDING MILEAGE ON ALL ROADS TRAVELED FROM NEAREST TOWNS OR HIGHWAYS

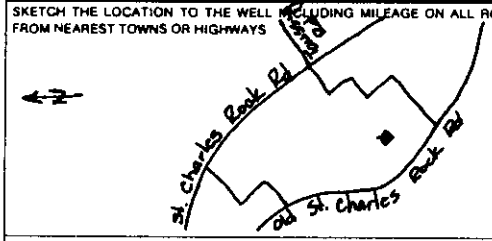

LOCATION OF WELL

SHOW LOCATION IN SECTION PLAT

QUAD ST. CHARLES COUNTY ST. LOUIS

ELEV 384.5 AREA NO.

SMALLEST ¼ NW ¼ SE ¼ LARGEST ¼ NW ¼

SEC. 3 TWN. 46 N.RNG. 5 (E) OR W

LAT 38 ° 45 ' 54 " LONG. 90 ° 26 ' 43 "

DESCRIBE LOCATION OF THE WELL SO WE WOULD BE ABLE TO VISIT THE WELL

ON RIGHT SIDE OF GRAVEL ROAD/RAMP LEADING DOWN INTO FILL PIT, APPROX 2/3 DOWN RAMP.

CONTRACTOR'S NAME: LAYNE WESTERN CO, INC. — PERMIT NUMBER: 001255

DRILLERS NAME: TIMOTHY ELDERS — PERMIT NUMBER: 001255WPM

ABANDONMENT OF WELLS

FORMER USE OF WELL
☐ HAND DUG ☐ SOIL BORING
☐ DOMESTIC (1 TO 3 CONNECTIONS) ☐ PUBLIC WATER SUPPLY
☐ MULTI-FAMILY ☐ MINERAL EXPLORATORY TEST HOLE
☐ HEAT PUMP ☒ MONITORING
☐ IRRIGATION ☐ OTHER

ORIGINAL DRILLER (IF KNOWN): JOHN MATHES & ASSOC. — DATE ORIGINALLY DRILLED: 4-2-91

DATE PLUGGED	STATIC WATER LEVEL	PUMP REMOVED FROM WELL?
5-3-96	43.87 FT	☐ YES ☒ N/A ☐ NO

DEPTH OF THE WELL	LENGTH OF CASING	CASING DIA.	HOLE DIA.
132'	110'	6"	0-110'-11" 110'-132'-6"

GROUT INSTALLATION METHOD: ☐ GRAVITY ☒ TREMIE

CASING CUT OFF THREE FEET BELOW SURFACE? DRILLED OUT ☐ YES ☐ NO

TYPE OF CASING: ☒ STEEL ☐ PLASTIC ☐ OTHER

GROUT MATERIAL USED
NEAT CEMENT: ☐ HI-EARLY ☒ PORTLAND TYPE 1 ☐ OTHER
☐ BENTONITE SLURRY ☐ OTHER
BENTONITE: ☒ POWDER ☐ GRANULAR ☐ CHIPS ☐ PELLETS

NUMBER OF BAGS OF GROUT USED: 13

POUNDS OF GROUT PER BAG: 50

HOW MANY GALLONS WATER MIXED PER BAG OF CEMENT OR BENTONITE? 4.5

TYPE OF FILL MATERIAL USED: CEMENT/BENTONITE GROUT

AMOUNT OF FILL MATERIAL USED: 1.1 (CIRCLE ONE) CU. YDS. / TONS

DEPTH TO TOP OF FILL MATERIAL FROM SURFACE: 0

WELL DISINFECTED BEFORE PLUGGING? ☐ YES ☒ NO

NUMBER USED FOR DISINFECTION: GALLONS OF CHLORINE — POUNDS OF CHLORINE — TABLETS OF CHLORINE

WAS THE WELL ABANDONED BECAUSE OF HOOKING UP TO A PUBLIC OR RURAL WATER SUPPLY DISTRICT? ☐ YES ☒ NO

IF YES, WHAT IS THE NAME OF THE WATER DISTRICT

CHECK THE BOX WHICH APPLIES

☒ I HEREBY CERTIFY THAT THE WELL HEREIN DESCRIBED WAS ABANDONED IN ACCORDANCE WITH THE DEPARTMENT OF NATURAL RESOURCES REQUIREMENTS FOR THE ABANDONMENT OF WELLS.

☐ I HEREBY CERTIFY THAT THE WELL HEREIN DESCRIBED WAS REPAIRED IN ACCORDANCE WITH THE DEPARTMENT OF NATURAL RESOURCES REQUIREMENTS FOR THE REPAIR OF WELLS.

CONTRACTOR'S SIGNATURE: Timothy D. Elders — DATE: 5-16-96

WELL RECONSTRUCTION

TYPE OF REPAIR
☐ RAISED CASING ☐ LINING OF WELL
☐ DEEPENING OF WELL ☐ OTHER

USE OF WELL
☐ DOMESTIC (1 TO 3 CONNECTIONS) ☐ PUBLIC WATER SUPPLY
☐ MULTI-FAMILY ☐ MONITORING
☐ HEAT PUMP ☐ OTHER
☐ IRRIGATION

DIA. OF WELL CASING	WAS WELL DISINFECTED AFTER RECONSTRUCTION	DATE RECONSTRUCTION COMPLETED
IN.	☐ YES ☐ NO	

RAISED CASING INFORMATION

LENGTH OF CASING ADDED FT.

MATERIAL: ☐ STEEL ☐ PLASTIC

METHOD OF ATTACHMENT: ☐ THREADED ☐ FUSED ☐ WELDED ☐ GLUED ☐ COUPLED

LINER DETAILS

PURPOSE OF LINER: ☐ USED ONLY TO HOLD BACK FORMATION ☐ USED TO SEAL OUT CONTAMINATION OR OTHER CONDITIONS

DIAMETER OF LINER IN.

WEIGHT OR SDR #

DEPTH TO THE TOP OF LINER FROM SURFACE FT.

MATERIAL: ☐ PLASTIC ☐ STEEL

AMOUNT OF LINER USED FT.

JOINTS: ☐ GLUED ☐ WELDED ☐ OTHER

LINER PACKER DETAILS

TYPE USED: ☐ NONE ☐ RUBBER BOOT

DEPTH(S) SET

LINER GROUT DETAILS

POSITION OF SEAL: ☐ FULL LENGTH ☐ BETWEEN PACKERS

MATERIAL: CEMENT: ☐ PORTLAND TYPE I ☐ HI EARLY BENTONITE: ☐ CHIPS ☐ PELLETS ☐ SLURRY ☐ GRANULAR

DEPTH PUMP WAS SET FT. GPM

DEPTH FROM SURFACE TO TOP OF THE GROUT SEAL FT.

DEPTH FROM SURFACE TO BOTTOM OF THE GROUT SEAL FT.

DEEPENING OF WELL INFORMATION

DEPTH FROM	DEPTH TO	FORMATION DESCRIPTION	YIELD

MO 780-1414 (11-90)

DISTRIBUTION: WHITE/CONTRACTOR CANARY/DIVISION PINK/OWNER

MAIL CANARY COPY TO DEPARTMENT OF NATURAL RESOURCES, P.O. BOX 250, ROLLA, MO 65402 RECORD MUST BE SUBMITTED WITHIN 60 DAYS OF COMPLETION DATE

Foth & Van Dyke

Client: LAIDLAW WASTE SYSTEMS Scope I.D.: 89L46
Project: Bridgeton Monitor Wells Page: 1
Prepared by: CFN Date: 4/4/91
Checked by: RTB Date: 4/17/91

MONITORING WELL CONSTRUCTION DIAGRAM

Driller: John Mathes and Associates, Inc. Well No.: 1206
Drilling Method: Air Rotary Date Installed: 3/26/91

Coordinates: 1,067,396.27N, 515,624.37E

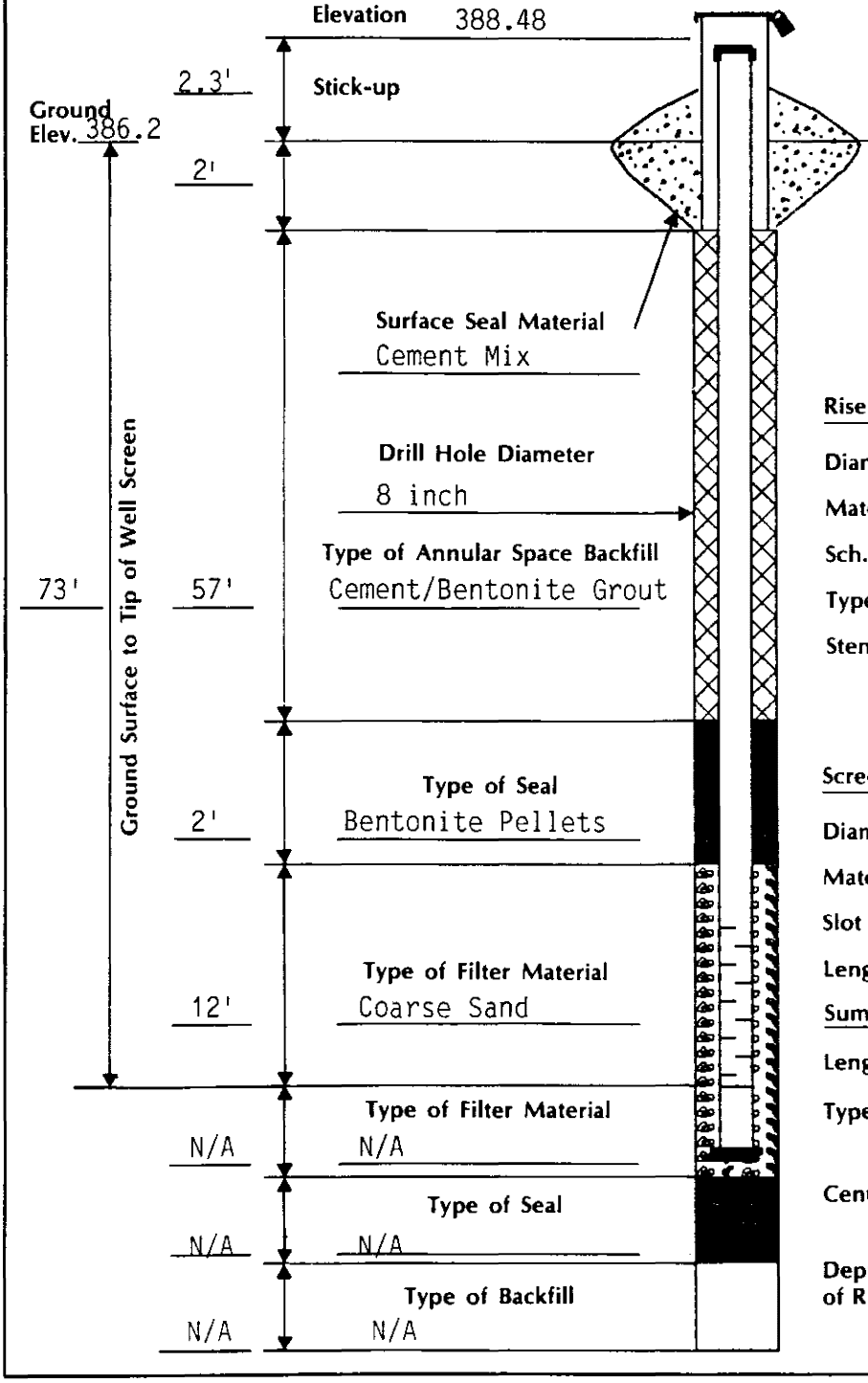

Protector Pipe:
Size: 4 inch
Material: Steel
Lock No.: Master

Riser:
Diameter: 2 inch
Material: PVC
Sch.: 80
Type of Joints: Flush Threaded
Stenciled? Yes

Screen:
Diameter: 2 inch
Material: Sch 80 PVC
Slot Size: 0.010 inch
Length: 10'

Sump:
Length: N/A
Type of Cap: PVC Flush Threaded

Centralizer: Used ☐
Not Used ☒

Depth to Water From Top of Riser at Completion: 51.6' @ T=12 hr.

NOTE: Not to Scale

MISSOURI DEPARTMENT OF NATURAL RESOURCES
DIVISION OF GEOLOGY AND LAND SURVEY

REGISTRATION RECORD

OFFICE USE ONLY		DATE REC	
REF NO 15,010			
ROUTE		PWS NUMBER	CHECK NUMBER
STATE WELL NUMBER		TRANSMITTAL NO	
CHECKED BY		CROSS REFERENCE NO	
APPROVED BY	DATE	ENTERED Ph 1 Ph 2 Ph 3	

INFORMATION SUPPLIED BY OWNER

NAME: LAIDLAW WASTE SYSTEMS, INC. TELEPHONE: 314-241-3710

ADDRESS: 1838 N. BROADWAY CITY: ST. LOUIS STATE: MO ZIP CODE: 63102

SITE NAME: LAIDLAW BRIDGETON SANITARY LANDFILL WELL NUMBER: 1206 ADDRESS OF WELL SITE OR SITE NAME (IF DIFFERENT THAN ABOVE): ST. CHARLES ROCK RD

OWNER STATUS: ☐ BUILDER ☐ PRIVATE HOME OWNER ☐ DEVELOPER ☒ OTHER (SPECIFY) LANDFILL CITY: BRIDGETON STATE: MO ZIP CODE: 63044

PURPOSE OF REGISTRATION FORM: ☒ ABANDONED WELL ☐ MINERAL EXPLORATORY ☐ WELL RECONSTRUCTION ☐ TEST HOLE ☐ OTHER

VARIANCE ISSUED? ☐ YES ☒ NO VARIANCE NUMBER: WELL CERTIFICATION NUMBER: DATE ORIGINALLY DRILLED: 3-26-91

SIGNATURE (WELL OWNER): DATE:

INFORMATION SUPPLIED BY CONTRACTOR

SKETCH THE LOCATION TO THE WELL INCLUDING MILEAGE ON ALL ROADS TRAVELED FROM NEAREST TOWNS OR HIGHWAYS

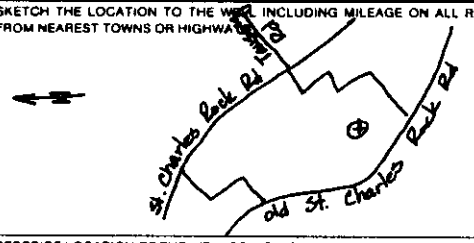

LOCATION OF WELL

SHOW LOCATION IN SECTION PLAT

QUAD St. CHARLES COUNTY ST. LOUIS

ELEV 384.2 AREA NO.

SMALLEST ¼ ____ ¼ NW ¼ SE ¼ LARGEST ¼ NW ¼

SEC. 3 TWN. 46 N,RNG. 5 (E) OR W

LAT. 38 ° 45 ' 54 " LONG. 90 ° 26 ' 43 "

DESCRIBE LOCATION OF THE WELL SO WE WOULD BE ABLE TO VISIT THE WELL

ON RIGHT SIDE OF GRAVEL ROAD/RAMP LEADING DOWN INTO FILL PIT, APPROX 2/3 DOWN RAMP.

CONTRACTOR'S NAME: LAYNE WESTERN CO., INC. PERMIT NUMBER: 001255

DRILLERS NAME: TIMOTHY ELDERS PERMIT NUMBER: 001255WPM

ABANDONMENT OF WELLS

FORMER USE OF WELL
☐ HAND DUG ☐ SOIL BORING
☐ DOMESTIC (1 TO 3 CONNECTIONS) ☐ PUBLIC WATER SUPPLY
☐ MULTI-FAMILY ☐ MINERAL EXPLORATORY TEST HOLE
☐ HEAT PUMP ☒ MONITORING
☐ IRRIGATION ☐ OTHER

ORIGINAL DRILLER (IF KNOWN): JOHN MATHES & ASSOC. DATE ORIGINALLY DRILLED: 3-26-91

DATE PLUGGED	STATIC WATER LEVEL	PUMP REMOVED FROM WELL?	
4-23-96	29.2 FT	☐ YES N/A ☐ NO	
DEPTH OF THE WELL	LENGTH OF CASING	CASING DIA.	HOLE DIA
73'	73'	2"	8"

GROUT INSTALLATION METHOD: ☐ GRAVITY ☒ TREMIE

CASING CUT OFF THREE FEET BELOW SURFACE? DRILLED OUT ☐ YES ☐ NO

TYPE OF CASING: ☐ STEEL ☒ PLASTIC ☐ OTHER

GROUT MATERIAL USED
NEAT CEMENT: ☐ HI-EARLY ☒ PORTLAND TYPE I ☐ OTHER
☐ BENTONITE SLURRY ☐ OTHER
BENTONITE: ☒ POWDER ☐ GRANULAR ☐ CHIPS ☐ PELLETS

NUMBER OF BAGS OF GROUT USED: 7

POUNDS OF GROUT PER BAG: 50

HOW MANY GALLONS WATER MIXED PER BAG OF CEMENT OR BENTONITE? 4.5

TYPE OF FILL MATERIAL USED: CEMENT/BENTONITE GROUT

AMOUNT OF FILL MATERIAL USED: 0.6 (CIRCLE ONE) CU. YDS / TONS

DEPTH TO TOP OF FILL MATERIAL FROM SURFACE: 0

WELL DISINFECTED BEFORE PLUGGING? ☐ YES ☒ NO

NUMBER USED FOR DISINFECTION: GALLONS OF CHLORINE ____ POUNDS OF CHLORINE ____ TABLETS OF CHLORINE ____

WAS THE WELL ABANDONED BECAUSE OF HOOKING UP TO A PUBLIC OR RURAL WATER SUPPLY DISTRICT? ☐ YES ☒ NO

IF YES, WHAT IS THE NAME OF THE WATER DISTRICT

CHECK THE BOX WHICH APPLIES

☒ I HEREBY CERTIFY THAT THE WELL HEREIN DESCRIBED WAS ABANDONED IN ACCORDANCE WITH THE DEPARTMENT OF NATURAL RESOURCES REQUIREMENTS FOR THE ABANDONMENT OF WELLS.

☐ I HEREBY CERTIFY THAT THE WELL HEREIN DESCRIBED WAS REPAIRED IN ACCORDANCE WITH THE DEPARTMENT OF NATURAL RESOURCES REQUIREMENTS FOR THE REPAIR OF WELLS

CONTRACTOR'S SIGNATURE: Timothy D. Elders DATE: 5-16-96

WELL RECONSTRUCTION

TYPE OF REPAIR
☐ RAISED CASING ☐ LINING OF WELL
☐ DEEPENING OF WELL ☐ OTHER

USE OF WELL
☐ DOMESTIC (1 TO 3 CONNECTIONS) ☐ PUBLIC WATER SUPPLY
☐ MULTI-FAMILY ☐ MONITORING
☐ HEAT PUMP ☐ OTHER
☐ IRRIGATION

DIA. OF WELL CASING	WAS WELL DISINFECTED AFTER RECONSTRUCTION	DATE RECONSTRUCTION COMPLETED
IN.	☐ YES ☐ NO	

RAISED CASING INFORMATION

LENGTH OF CASING ADDED FT.

MATERIAL: ☐ STEEL ☐ PLASTIC

METHOD OF ATTACHMENT: ☐ THREADED ☐ FUSED ☐ WELDED ☐ GLUED ☐ COUPLED

LINER DETAILS

PURPOSE OF LINER: ☐ USED ONLY TO HOLD BACK FORMATION ☐ USED TO SEAL OUT CONTAMINATION OR OTHER CONDITIONS

DIAMETER OF LINER: IN.

WEIGHT OR SDR #

DEPTH TO THE TOP OF LINER FROM SURFACE: FT.

MATERIAL: ☐ PLASTIC ☐ STEEL

AMOUNT OF LINER USED: FT.

JOINTS: ☐ GLUED ☐ WELDED ☐ OTHER

LINER PACKER DETAILS

TYPE USED: ☐ NONE ☐ RUBBER BOOT

DEPTH(S) SET

LINER GROUT DETAILS

POSITION OF SEAL: ☐ FULL LENGTH ☐ BETWEEN PACKERS

MATERIAL: CEMENT ☐ PORTLAND TYPE I ☐ HI EARLY BENTONITE ☐ CHIPS ☐ PELLETS ☐ SLURRY ☐ GRANULAR

DEPTH PUMP WAS SET ____ FT. GPM ____

DEPTH FROM SURFACE TO TOP OF THE GROUT SEAL: FT.

DEPTH FROM SURFACE TO BOTTOM OF THE GROUT SEAL: FT.

DEEPENING OF WELL INFORMATION

DEPTH FROM	DEPTH TO	FORMATION DESCRIPTION	YIELD

MO 780-1414 (11-95) DISTRIBUTION: WHITE/CONTRACTOR CANARY/DIVISION PINK/OWNER

MAIL CANARY COPY TO: DEPARTMENT OF NATURAL RESOURCES, P.O. BOX 250, ROLLA, MO 65402 RECORD MUST BE SUBMITTED WITHIN 60 DAYS OF COMPLETION DATE

SOIL BOREHOLE LOG

LAIDLAW WASTE SYSTEMS INC.

SITE NAME AND LOCATION

LAIDLAW/OU2 RI-FS/MO
WEST LAKE LANDFILL
OPERABLE UNIT 2

NORTHING: 1068842.03
DATUM EASTING: 517211.63 ELEVATION 483.8

DRILLING METHOD: 6.25 inch I.D. Hollow Stem Auger

SAMPLING METHOD:
SPLIT SPOON: 2.0 inch O.D./1.5 inch I.D. (SP)
SHELBY TUBE: 3.0 inch O.D./2 13/16 inch I.D. (SH)

BORING NO. PZ-100-KS

SHEET 1 OF 3

DRILLING

	START	FINISH
TIME	13:20	17:42
DATE	1/25/95	1/25/95

WATER LEVEL				
TIME				
DATE				
CASING DEPTH				

DRILL RIG CME 75 - TRUCK MOUNT

SURFACE CONDITIONS

ANGLE BEARING

SAMPLE HAMMER

DRILLING CONTR LAYNE-WESTERN

LOGGED BY J. MILLER

DATE 1/25/95 CHK'D BY W. HERST

JOB NO.: 943-2848

FILENAME: PZ100KS

DEPTH IN FEET (ELEVATION)	BLOW/ 6 IN. ON SAMPLER	RECOVERY	SYMBOL	SAMPLER SYMBOL	SAMPLE NUMBER AND DESCRIPTION OF MATERIAL	SAMPLER TYPE	REMARKS
1	6 3 4 6	1.6'/2.0' (80%)			(0.0-7.2 ft.) Firm, dusky yellowish brown (10YR 2/2), SILTY CLAY, little organics, NR, moist, (CL), (LOESS)	SP (1)	
2	4 6 7 8	1.8'/2.0' (90%)				SP (2)	
3							
4	2 5 5 5	1.7'/2.0' (85%)			@ 4.0 ft. color changes to moderate yellowish brown (10YR 5/4)	SP (3)	
5							
6	2 2 2 3	1.8'/2.0' (90%)				SP (4)	
7					(7.2-11.6 ft.) Firm, moderate yellowish brown (10YR 5/4), mottled SILTY CLAY, NR, moist, (CL), (LOESS)		
8	3 4 5 5	1.7'/2.0' (85%)				SP (5)	
9							
10	4 4 5 5	1.4'/2.0' (70%)				SP (6)	
11					(472.2) 11.6		
12	3 4 3 3	2.0'/2.0' (100%)			(11.6-19.2 ft.) Loose, moderate yellowish brown (10YR 5/4), mottled CLAYEY SILT, NR, moist, (ML), (LOESS)	SP (7)	
13							
14	1 3 6 7	1.8'/2.0' (90%)				SP (8)	

LAIDLAW WASTE SYSTEMS INC.

SOIL BOREHOLE LOG

SITE NAME AND LOCATION

LAIDLAW/OU2 RI-FS/MO
WEST LAKE LANDFILL
OPERABLE UNIT 2

NORTHING: 1068842.03
DATUM EASTING: 517211.63 ELEVATION 483.8

DRILLING METHOD: 6.25 inch I.D. Hollow Stem Auger

SAMPLING METHOD:
SPLIT SPOON: 2.0 inch O.D./1.5 inch I.D. (SP)
SHELBY TUBE: 3.0 inch O.D./2 13/16 inch I.D. (SH)

					START	FINISH
WATER LEVEL					TIME	TIME
TIME					13:20	17:42
DATE					DATE	DATE
CASING DEPTH					1/25/95	1/25/95

BORING NO. PZ-100-KS

SHEET 2 OF 3

DRILLING

DRILL RIG CME 75 - TRUCK MOUNT

SURFACE CONDITIONS

ANGLE BEARING

SAMPLE HAMMER

DEPTH IN FEET (ELEVATION)	BLOW/ 6 IN. ON SAMPLER	RECOVERY	SYMBOL	SAMPLER SYMBOL	SAMPLE NUMBER AND DESCRIPTION OF MATERIAL	SAMPLER TYPE	REMARKS
16	3 4 7 10	1.2' 2.0' (60%)			(11.6-19.2 ft.) Loose, moderate yellowish brown (10YR 5/4), mottled CLAYEY SILT, NR, moist, (ML), (LOESS)	SP 8	
17						SP 9	
18	3 4 5 7	1.9' 2.0' (95%)				SP 10	
19							
20	5 6 7 8	1.5' 2.0' (75%)			(19.2-22.4 ft.) Loose, light olive gray (5Y 6/1), CLAYEY SILT, NR, moist, (ML), (LOESS)	SP 11	
21							
22	2 7 9 10	1.2' 2.0' (60%)			(461.4) 22.4 (22.4-28.2 ft.) Compact light olive gray (5Y 6/1), fine SANDY SILT, NR, dry, (SM), (ALLUVIAL)	SP 12	
23							
24	5 10 9 14	1.7' 2.0' (85%)				SP 13	
25					@ 25.4 ft., partings of light olive gray (5Y 6/1), CLAYEY SILT		
26	3 9 14 15	1.4' 2.0' (70%)				SP 14	
27							
28	3 5 7 11	0.0' 2.0' (0%)			(455.6) 28.2 (28.2-32.1 ft.) Compact, light olive gray (5Y 6/1), mottled CLAYEY SILT, organics wet at 29.0 ft., NR, moist-wet, (ML), (ALLUVIAL)	SP 15	
29							

DRILLING CONTR LAYNE-WESTERN

LOGGED BY J. MILLER

DATE 1/25/95 CHK'D BY W. HERST

JOB NO.: 943-2848

FILENAME: P2100KS

LAIDLAW WASTE SYSTEMS INC.

SOIL BOREHOLE LOG

SITE NAME AND LOCATION	DRILLING METHOD:					BORING NO.
	6.25 inch I.D. Hollow Stem Auger					PZ-100-KS
						SHEET 3 OF 3
	SAMPLING METHOD:					DRILLING
LAIDLAW/OU2 RI-FS/MD WEST LAKE LANDFILL OPERABLE UNIT 2	SPLIT SPOON: 2.0 inch O.D./1.5 inch I.D. (SP)					START / FINISH
	SHELBY TUBE: 3.0 inch O.D./2 13/16 inch I.D. (SH)					START / FINISH
	WATER LEVEL					TIME 13:20 / TIME 17:42
	TIME					
	DATE					DATE 1/25/95 / DATE 1/25/95
	CASING DEPTH					

NORTHING: 1068842.03
DATUM EASTING: 517211.63 ELEVATION 483.8

DRILL RIG CME 75 - TRUCK MOUNT	SURFACE CONDITIONS
ANGLE BEARING	
SAMPLE HAMMER	

DEPTH IN FEET (ELEVATION)	BLOW/ 6 IN. ON SAMPLER	RECOVERY	SYMBOL	SAMPLER SYMBOL	SAMPLE NUMBER AND DESCRIPTION OF MATERIAL		SAMPLER TYPE	REMARKS
31	4 9 10 19	1.5' 2.0' (75%)			(28.2-32.1 Ft.) Compact light olive gray (5Y 6/1), mottled CLAYEY SILT, NR, moist-wet, (ML), (ALLUVIAL)		SP (16)	
32					@ 31.6 ft, ~1 inch of Fine SAND	(451.7) 32.1		
	15 14 12 14	1.1' 2.0' (55%)			(32.1-33.9 Ft.) Compact, brownish gray, (5YR 4/1), Fine SAND, NR, wet, (SM), (ALLUVIAL)		SP (17)	
33								
34	50/6"	0.6' 2.0' (30%)			(33.9 Ft.) Loose, light gray (5Y 6/1), CLAYEY SILT, NR, moist, (ALLUVIAL)	(449.3) 34.5		
					End of Soil Borehole Log at 34.5 ft.		SP (18)	Augers chatter, spoon refusal, hit bedrock at 34.5 ft.
35					See PZ-100-KS Record of Drillhole for rock descriptions			
36								
37								
38								
39								
40								
41								
42								
43								
44								

DRILLING CONTR LAYNE-WESTERN

LOGGED BY J. MILLER CHK'D BY W. HERST

DATE 1/25/95

JOB NO.: 943-2848

FILENAME: PZ100KS

RECORD OF DRILLHOLE PZ-100-KS

Sheet 1 of 23

PROJECT: LAIDLAW/RI-FS
PROJECT NO: 943-2846
LOCATION: BRIDGETON, MO

BORING METHOD: NX Core & water
DRILLING DATE: 1/27/95 - 2/13/95
DRILL RIG: CME 75

DATUM: MSL
COORDINATES N: 1068842.0
AZIMUTH: 0

COLLAR ELEV: 483.8
E: 517211.8
INCLINATION: -90

J-Joint, F-Fault, S-Shear, B-Bedding, F-Foliation
PL-Planar, C-Curved, U-Undulating, ST-Stepped, I-Irregular
P-Polished, K-Slickensided, SM-Smooth, R-Rough, VR-V. Rough
Fe-Fe Oxide, CL-Clay Infill, CH-Chlorite, H-Healed, GRF-Gravel Filled

DEPTH SCALE (ft)	DESCRIPTION	GRAPHIC LOG	ELEV / DEPTH (FT)	RUN NO.	CORE RECOVERY	RQD	FRACTURES PER FOOT	DISCONTINUITY DATA: DIP wrt CORE AXIS	DISCONTINUITY DATA: TYPE AND SURFACE DESCRIPTION	GRAPHIC LOG	WEATHERING INDEX	STRENGTH INDEX	POINT LOAD INDEX (psi)	TEST ORIENTATION	NOTES WATER LEVELS INSTRUMENTATION
32	0.0-34.0 ft. See Soil Borehole Log PZ-100-KS		449.80												0.0-34.0 ft. Drilling conducted with 6.25 inch ID hollow stem augers
34	34.0-52.3 ft. Slightly weathered, very thickly bedded, very light gray (N8), medium crystalline, weak, LIMESTONE, (ST. LOUIS FORMATION) 1 mm. iron concretions common, thin calcite vein (1 cm.), irregular joints, stylolitic		34.00						J,ST,R J,I,R J,I,R (2) J,PL,R J,C,R J,I,R J,PL,R						1/27/95 Began coring
36				1	100 %				J,I,R J,I,R-CL						
38									J,I,R J,PL,R						
			444.30 39.50												
40									J,I,R J,PL,R						
42	42.9 ft. 1 in. thick clay seam								J,I,R J,C,R J,I,R J,C,R J,PL,SM-CL (2)						
44				2	100 %				J,C,R J,C,R						
46									J,ST,R J,ST,R J,PL,R J,PL,R						
48									J,PL,R J,C,R						

DEPTH SCALE: 1:2
DRILLING CONTRACTOR: LAYNE-WESTERN
DRILLER: D. MAHURIN

LOGGED: J. MILLER
CHECKED: R. BOOTH
DATE: 3/9/95

Golder Associates

RECORD OF DRILLHOLE PZ-100-KS

Sheet 2 of 23

PROJECT: LAIDLAW/RI-FS
PROJECT NO: 943-2848
LOCATION: BRIDGETON, MO

BORING METHOD: NX Core & water
DRILLING DATE: 1/27/95 - 2/13/95
DRILL RIG: CME 75

DATUM: MSL
COORDINATES N: 1068842.0
AZIMUTH: 3

COLLAR ELEV: 483.8
E: 517211.8
INCLINATION: -90

ROCK TYPE

J-Joint, F-Fault, S-Shear, B-Bedding, F-Foliation
PL-Planar, C-Curved, U-Undulating, ST-Stepped, I-Irregular
P-Polished, K-Slickensided, SM-Smooth, R-Rough, VR-V. Rough
Fe-Fe Oxide, CL-Clay Infill, CH-Chlorite, H-Healed, GRF-Gravel Filled

DEPTH (FEET)	DESCRIPTION	GRAPHIC LOG	ELEV / DEPTH (FT)	RUN NO	CORE RECOVERY	RQD	FRACTURES PER FOOT	DISCONTINUITY DATA: DIP wrt CORE AXIS	DISCONTINUITY DATA: TYPE AND SURFACE DESCRIPTION	GRAPHIC LOG	WEATHERING INDEX	STRENGTH INDEX	POINT LOAD INDEX (psi)	TEST ORIENTATION	NOTES WATER LEVELS INSTRUMENTATION
48	34.0-52.3 ft. Slightly weathered, very thickly bedded, very light gray (N8), medium crystalline, weak, LIMESTONE, (ST. LOUIS FORMATION), 1 mm. iron concretions common, thin calcite vein (1 cm.), irregular joints, stylolitic			2	100				J,PL,R J,PL,R J,PL,R J,ST,R						
			434.30 49.50						J,PL,R J,ST,R						
50									J,C,R J,PL,R (3)						
52									J,PL,R (2)						
	52.3-62.5 ft. Fresh, medium bedded, light gray (N7), fine grained, medium strong, ARGILLACEOUS LIMESTONE, (ST. LOUIS FORMATION) Stylolitic, numerous clay filled discontinuities, some iron oxide staining			3	100				J,PL,R J,C,R						
56									J,I,R						
58									J,C,R J,U,R						
			424.30 59.50						J,P,S (2)						1/27/95 @ 17:15 Measured water level in hole at 34.49 ft. below ground surface 1/28/95 @ 8:18 Measured water level in hole at 36.6 ft. below ground surface
60									J,I,R J,PL,R-CL (2)						
62				4	100				J,I,R (2)						
	62.5-67.5 ft. Fresh, medium bedded, medium light gray (N6), crypto-crystalline, medium strong, LIMESTONE, (ST. LOUIS FORMATION)								J,C,R (2)						
64															

DEPTH SCALE: 1:2
DRILLING CONTRACTOR: LAYNE-WESTERN
DRILLER: D. MAHURIN

LOGGED: J. MILLER
CHECKED: R. BOOTH
DATE: 3/8/95

Golder Associates

RECORD OF DRILLHOLE PZ-100-KS

Sheet 3 of 23

PROJECT: LAIDLAW/RI-FS
PROJECT NO: 943-2848
LOCATION: BRIDGETON, MO

BORING METHOD: NX Core & water
DRILLING DATE: 1/27/95 - 2/13/95
DRILL RIG: CME 75

DATUM: MSL
COORDINATES N: 1068842.0
AZIMUTH: 0

COLLAR ELEV: 483.6
E: 517211.8
INCLINATION: -90

J-Joint, F-Fault, S-Shear, B-Bedding, F-Foliation
PL-Planar, C-Curved, U-Undulating, ST-Stepped, I-Irregular
P-Polished, K-Slickensided, SM-Smooth, R-Rough, VR-V. Rough
Fe-Fe Oxide, CL-Clay Infill, CH-Chlorite, H-Healed, GRF-Gravel Filled

DEPTH (FEET)	DESCRIPTION	GRAPHIC LOG	ELEV / DEPTH (FT)	RUN NO.	CORE RECOVERY	RQD	FRACTURES PER FOOT	DISCONTINUITY DATA: DIP wrt CORE AXIS	DISCONTINUITY DATA: TYPE AND SURFACE DESCRIPTION	GRAPHIC LOG	WEATHERING INDEX	STRENGTH INDEX	POINT LOAD INDEX (psi)	TEST ORIENTATION	NOTES WATER LEVELS INSTRUMENTATION
64	62.5-37.5 ft. Fresh, medium bedded, medium light gray (N5), crypto-crystalline, medium strong, LIMESTONE, (ST. LOUIS FORMATION)		418.70	4	100 %				J,I,R						
			65.10						J,C,R						1/27/95 @ 17:15 Quit drilling for the day @ 65.1 ft.
	1-2 in. chert nodules common														
66									J,PL,SM						
									J,I,R-CL (2)						
	67.5-76.0 ft. Slightly weathered, medium bedded, olive gray (5Y 4/1), m-c grained, medium strong rock, CLASTIC LIMESTONE (ST. LOUIS FORMATION)														
68									J,I,R						
									J,C,R						
70				5	99%				J,I,R (2)						
									J,C,R						
									J,I,R						
									J,C,R						
	Shaley partings common, fossiliferous								J,I,R (2)						
72									J,PL,R						
									J,ST,R						
74															
			408.70												
			75.10						J,PL,SM-CL (2)						
									J,C,R (2)						
76	76.0-88.5 ft. Slightly weathered, medium to thickly bedded, medium gray (N5) to light gray (N7), coarse grained, medium strong, CLASTIC LIMESTONE, (ST. LOUIS FORMATION)								J,PL,R-CL						
				6	99%										
78									J,C,R-CL						
									J,ST,R						
80	Stylolitic, shaley partings, sandy, more porous than above														

DEPTH SCALE: 1:2
DRILLING CONTRACTOR: LAYNE-WESTERN
DRILLER: D. MAHURIN

LOGGED: J. MILLER
CHECKED: R. BOOTH
DATE: 3/9/95

Golder Associates

RECORD OF DRILLHOLE PZ-100-KS

PROJECT: LAIDLAW/RI-FS
PROJECT NO: 943-2848
LOCATION: BRIDGETON, MO

BORING METHOD: NX Core & water
DRILLING DATE: 1/27/95 - 2/13/95
DRILL RIG: CME 75

DATUM: MSL
COORDINATES N: 1068842.0
AZIMUTH: 0

COLLAR ELEV: 483.8
E: 517211.6
INCLINATION: -90

J-Joint, F-Fault, S-Shear, B-Bedding, F-Foliation
PL-Planar, C-Curved, U-Undulating, ST-Stepped, I-Irregular
P-Polished, K-Slickensided, SM-Smooth, R-Rough, VR-V. Rough
Fe-Fe Oxide, CL-Clay Infill, CH-Chlorite, H-Healed, GRF-Gravel Filled

DEPTH (FEET)	DESCRIPTION	GRAPHIC LOG	ELEV / DEPTH (FT)	RUN NO	CORE RECOVERY	RQD	FRACTURES PER FOOT	DISCONTINUITY DATA: DIP wrt CORE AXIS	DISCONTINUITY DATA: TYPE AND SURFACE DESCRIPTION	GRAPHIC LOG	WEATHERING INDEX	STRENGTH INDEX	POINT LOAD INDEX (psi)	TEST ORIENTATION	NOTES WATER LEVELS INSTRUMENTATION
80	**76.0-88.5 ft.** Slightly weathered, medium to thickly bedded, medium gray (N5) to light grat (N7), coarse grained, medium strong, CLASTIC LIMESTONE, (ST. LOUIS FORMATION)								J,C,SM						
82									J,PL,SM-CL						
				8	99%										
									J,PL,SM (2)						
84									J,I,R-CL						
									J,I,VR (2)						
			398.70												
			85.10												
86									J,I,R						
									J,PL,R						
				7	100 %										
88			395.30												
	88.5-94.0 ft. Slightly weathered, thickly laminated to thinly bedded, medium gray (N5), fine grained, extremely weak to very weak, SILTY CLAYSTONE and SILTSTONE, (ST. LOUIS FORMATION) Pyrite in claystone, cross-bedded, fine sandy siltstone interbeds		88.50						J,I,R						
									J,I,R-CL						
90									J,PL,SM						
			393.40												
			90.40						J,I,R (3)						
									J,I,R						
									J,I,R (3)						
				9	72%				J,I,R (2)						
92									J,ST,SM						
									J,I,SM						92.7-93.3 ft. Core Loss
			390.50												
			93.30						J,I,R						
									J,I,R						
			389.80						J,C,R						
94	**94.0-98.0 ft.** Slightly weathered, thickly bedded, very light gray (N8), fine grained, medium strong, DOLOMITE (ST. LOUIS FORMATION)		94.00						J,ST,R (2)						
									J,I,R						
				9	98%										
									J,PL,R-CH						
96															

DEPTH SCALE: 1:2
DRILLING CONTRACTOR: LAYNE-WESTERN
DRILLER: D. MAHURIN

LOGGED: J. MILLER
CHECKED: R. BOOTH
DATE: 3/9/95

Golder Associates

RECORD OF DRILLHOLE PZ-100-KS

Sheet 5 of 23

PROJECT: LAIDLAW/RI-FS
PROJECT NO: 943-2848
LOCATION: BRIDGETON, MO

BORING METHOD: NX Core & water
DRILLING DATE: 1/27/95 - 2/13/95
DRILL RIG: CME 75

DATUM: MSL
COORDINATES N: 1068842.0
AZIMUTH: 0

COLLAR ELEV: 483.8
E: 517211.8
INCLINATION: -90

ROCK TYPE

J-Joint, F-Fault, S-Shear, B-Bedding, F-Foliation
PL-Planar, C-Curved, U-Undulating, ST-Stepped, I-Irregular
P-Polished, K-Slikensided, SM-Smooth, R-Rough, VR-V. Rough
Fe-Fe Oxide, CL-Clay Infill, CH-Chlorite, H-Healed, GRF-Gravel Filled

DEPTH (FEET)	DESCRIPTION	GRAPHIC LOG	ELEV / DEPTH (FT)	RUN NO.	CORE RECOVERY	ROD (80 60 40 20)	FRACTURES PER FOOT (2 4 6 8 10)	DISCONTINUITY DATA: DIP wrt CORE AXIS (0 30 60 90)	DISCONTINUITY DATA: TYPE AND SURFACE DESCRIPTION	GRAPHIC LOG	WEATHERING INDEX (SW FR, MW, HW, CW)	STRENGTH INDEX (R6 R5 R4 R3 R2 R1)	POINT LOAD INDEX (psi) (R1 30, R2 150, R3 300, R4 600, R5 1500, R6)	TEST ORIENTATION	NOTES WATER LEVELS INSTRUMENTATION
96	94.0-98.0 ft. Slightly weathered, thickly bedded, very light gray (N8), fine grained, medium strong, DOLOMITE, (ST. LOUIS FORMATION) Vuggy, highly silicified, bioturbated								J,I,R-CL						
98	98.0-116.4 ft. Slightly weathered, very thickly bedded, light brownish gray (5Y 6/1), fine grained, medium strong, DOLOMITE, (ST. LOUIS FORMATION)			9	98%										
100	Laminae, vuggy in places, clay infilling, some silicification														
	101.0-103.0 ft. Vuggy								J,C,S-CL						
102			380.50												
			103.30						J,PL,R						
104	104.5-106.4 ft. Vuggy, some silicification in veins, clay partings								J,PL,R						
106									J,PL,R						
				10	99%										
108															
110									J,I,R						
112															

DEPTH SCALE: 1:2
DRILLING CONTRACTOR: LAYNE-WESTERN
DRILLER: D. MAHURIN

LOGGED: J. MILLER
CHECKED: R. BOOTH
DATE: 3/9/95

Golder Associates

RECORD OF DRILLHOLE PZ-100-KS

Sheet 6 of 23

PROJECT: LAIDLAW/RI-FS
PROJECT NO: 943-2848
LOCATION: BRIDGETON, MO

BORING METHOD: NX Core & water
DRILLING DATE: 1/27/95 - 2/13/95
DRILL RIG: CME 75

DATUM: MSL
COORDINATES N: 1068842.0
AZIMUTH: 0

COLLAR ELEV: 483.8
E: 517211.6
INCLINATION: -90

J-Joint, F-Fault, S-Shear, B-Bedding, F-Foliation
PL-Planar, C-Curved, U-Undulating, ST-Stepped, I-Irregular
P-Polished, K-Slickensided, SM-Smooth, R-Rough, VR-V. Rough
Fe-Fe Oxide, CL-Clay Infill, CH-Chlorite, H-Healed, GRF-Gravel Filled

DEPTH (FEET)	DESCRIPTION	GRAPHIC LOG	ELEV / DEPTH (FT)	RUN NO.	CORE RECOVERY	RQD	FRACTURES PER FOOT	DISCONTINUITY DATA: DIP wrt CORE AXIS	DISCONTINUITY DATA: TYPE AND SURFACE DESCRIPTION	GRAPHIC LOG	WEATHERING INDEX: SW FR, HW MW, CW	STRENGTH INDEX: R6 R5 R4 R3 R2 R1	POINT LOAD INDEX (psi): R1 R2 30, R3 150, R4 300, R5 600, R6 1500	TEST ORIENTATION	NOTES WATER LEVELS INSTRUMENTATION
112	98.0-116.4 ft. Slightly weathered, very thickly bedded, light brownish gray (5Y 6/1), fine grained, medium strong, DOLOMITE, (ST. LOUIS FORMATION)			10	99%										
			370.40 / 113.40						J,I,VR						
114															
116															
	116.4-119.6 ft. Fresh, thickly bedded, medium light gray (N6), medium crystalline, medium strong, DOLOMITE, (ST. LOUIS FORMATION)			11	100 %										
118															
	364.20 / 119.60 119.6-120.7 ft. Fresh, thinly bedded, medium gray (N5), finely crystalline, medium strong, ARGILLACEOUS LIMESTONE, (ST. LOUIS FORMATION) 363.10 / 120.70 Bioturbated, calcite infilling								J,PL,R-CL						
120															
	120.7-123.7 ft. Fresh, thickly bedded, medium light gray (N6), f-m crystalline, medium strong, DOLOMITE, (ST. LOUIS FORMATION)														
122															
			380.30 / 123.50												
124	123.7-147.5 ft. Fresh, thickly bedded, light olive gray (5Y 6/1), fine crystalline, medium strong, DOLOMITE, (ST. LOUIS FORMATION) Stylolitic								J,I,R J,I,R J,I,R						1/28/95 @ 17:32 Finish drilling for the day at 123.5 ft., we blow out hole and measure water level at 72.77 ft. below ground surface
				12	100 %										
126															
	126.9 ft. 1 in. clay seam, fractures at ~124.5 and 127.6 ft.								J,C,R J,I,R						
128															

DEPTH SCALE: 1:2
DRILLING CONTRACTOR: LAYNE-WESTERN
DRILLER: D. MAHURIN

LOGGED: J. MILLER
CHECKED: R. BOOTH
DATE: 3/9/95

Golder Associates

RECORD OF DRILLHOLE PZ-100-KS

PROJECT: LAIDLAW/RI-FS
PROJECT NO: 843-2848
LOCATION: BRIDGETON, MO

BORING METHOD: NX Core & water
DRILLING DATE: 1/27/95 - 2/13/95
DRILL RIG: CME 75

DATUM: MSL
COORDINATES N: 1068842.0
AZIMUTH: 0

COLLAR ELEV: 483.8
E: 517211.8
INCLINATION: -90

J-Joint, F-Fault, S-Shear, B-Bedding, F-Foliation
PL-Planar, C-Curved, U-Undulating, ST-Stepped, I-Irregular
P-Polished, K-Slickensided, SM-Smooth, R-Rough, VR-V. Rough
Fe-Fe Oxide, CL-Clay Infill, CH-Chlorite, H-Healed, GRF-Gravel Filled

DEPTH (FEET)	DESCRIPTION	GRAPHIC LOG	ELEV / DEPTH (FT)	RUN NO.	CORE RECOVERY	RQD	FRACTURES PER FOOT	DISCONTINUITY DATA: DIP wrt CORE AXIS	DISCONTINUITY DATA: TYPE AND SURFACE DESCRIPTION	GRAPHIC LOG	WEATHERING INDEX (SW FR, MW, HW, CW)	STRENGTH INDEX (R6, R5, R4, R3, R2, R1)	POINT LOAD INDEX (psi) (R1 30, R2 150, R3 300, R4 600, R5 1500, R6)	TEST ORIENTATION	NOTES WATER LEVELS INSTRUMENTATION
128	123.7-147.5 ft. Fresh, thickly bedded, light olive gray (5Y 6/1), fine crystalline, medium strong, DOLOMITE, (ST. LOUIS FORMATION) Stylolitic								J,I,R-CL,CH						
130				12	100 %				J,C,SM						
132			351.60 / 132.20						J,ST,R						
134									J,PL,R-CL						
136									J,I,R						
138				13	100 %				J,PL,S-CL						Note: rock breaks along stylolites and clay partings
140									J,PL,S						
142			341.60 / 142.20												
144				14	100 %										

DEPTH SCALE: 1:2
DRILLING CONTRACTOR: LAYNE-WESTERN
DRILLER: D. MAHURIN

LOGGED: J. MILLER
CHECKED: R. BOOTH
DATE: 3/9/95

Golder Associates

RECORD OF DRILLHOLE PZ-100-KS

PROJECT: LAIDLAW/Ft-FS
PROJECT NO: 943-2848
LOCATION: BRIDGETON, MO

BORING METHOD: NX Core & water
DRILLING DATE: 1/27/95 - 2/13/95
DRILL RIG: CME 75

DATUM: MSL
COORDINATES N: 1068842.0
AZIMUTH: 0

COLLAR ELEV: 483.8
E: 517211.6
INCLINATION: -90

J-Joint, F-Fault, S-Shear, B-Bedding, F-Foliation
PL-Planar, C-Curved, U-Undulating, ST-Stepped, I-Irregular
P-Polished, K-Slikensided, SM-Smooth, R-Rough, VR-V. Rough
Fe-Fe Oxide, CL-Clay Infill, CH-Chlorite, H-Healed, GRF-Gravel Filled

DEPTH (FEET)	ROCK TYPE DESCRIPTION	GRAPHIC LOG	ELEV / DEPTH (FT)	RUN NO.	CORE RECOVERY	ROD	FRACTURES PER FOOT	DISCONTINUITY DATA: DIP wrt CORE AXIS	DISCONTINUITY DATA: TYPE AND SURFACE DESCRIPTION	GRAPHIC LOG	WEATHERING INDEX: FR, SW, MW, HW, CW	STRENGTH INDEX: R6, R5, R4, R3, R2, R1	POINT LOAD INDEX (psi): R1, R2 30, R3 150, R4 300, R5 600, R6 1500	TEST ORIENTATION	NOTES WATER LEVELS INSTRUMENTATION
144	123.7-147.5 ft. Fresh, thickly bedded, light olive gray (5Y 6/1), fine crystalline, medium strong, DOLOMITE, (ST. LOUIS FORMATION)														
146															
	336.30														
	147.5-159.5 ft. 147.50 Fresh, thickly bedded, pale yellowish brown (10YR 6/2), m-c crystalline, strong, LIMESTONE, (ST. LOUIS FORMATION) 147.5 ft. 1 in. clay partings								J,C,R-CL						
148				14	100 %				J,C,SM-CL						148.1-149.0 ft. 1 in. clay filled vertical fracture
150															
152			331.60												1/29/95 @ 16:06 Drillers quit drilling for the day, they blew out the hole, measured water level @ 80.4 ft. below ground surface, drilled to 152.2 ft.,
			152.20						J,I,R						
	Stylolitic								J,I,R						
154									J,I,R						1/30/95 @ 9:38 Measured water level in hole @ 48.3 ft. 1/30/95 @ 9:51 Begin Run 15
									J,I,R						
									J,I,VR						
156	Brecciated, glauconitic, clay and silt sized infilling			15	100 %				J,I,R-CL						
158															
									J,I,R						
	159.5-165.5 ft. 324.30 Fresh, thickly bedded, greenish gray (5GY 6/1), 159.50 coarsely crystalline, medium strong, DOLOMITE, (ST. LOUIS FORMATION)								J,PL,R						
160									J,I,R						

DEPTH SCALE: 1:2
DRILLING CONTRACTOR: LAYNE-WESTERN
DRILLER: D. MAHURIN

LOGGED: J. MILLER
CHECKED: R. BOOTH
DATE: 3/9/95

Golder Associates

RECORD OF DRILLHOLE PZ-100-KS

PROJECT: LAIDLAW/RI-FS
PROJECT NO: 943-2848
LOCATION: BRIDGETON, MO

BORING METHOD: NX Core & water
DRILLING DATE: 1/27/95 - 2/13/95
DRILL RIG: CME 75

DATUM: MSL
COORDINATES N: 1068842.0
AZIMUTH: 0

COLLAR ELEV: 483.6
E: 517211.6
INCLINATION: -90

J-Joint, F-Fault, S-Shear, B-Bedding, F-Foliation
PL-Planar, C-Curved, U-Undulating, ST-Stepped, I-Irregular
P-Polished, K-Slikensided, SM-Smooth, R-Rough, VR-V. Rough
Fe-Fe Oxide, CL-Clay Infill, CH-Chlorite, H-Healed, GRF-Gravel Filled

DEPTH (FEET)	DESCRIPTION	GRAPHIC LOG	ELEV / DEPTH (FT)	RUN NO.	CORE RECOVERY	RQD	FRACTURES PER FOOT	DISCONTINUITY DATA: DIP wrt CORE AXIS	DISCONTINUITY DATA: TYPE AND SURFACE DESCRIPTION	GRAPHIC LOG	WEATHERING INDEX (FR, SW, MW, HW, CW)	STRENGTH INDEX (R6, R5, R4, R3, R2, R1)	POINT LOAD INDEX (psi) (R1 30, R2 150, R3 300, R4 600, R5 1300, R6)	TEST ORIENTATION	NOTES WATER LEVELS INSTRUMENTATION
160	159.5-165.5 ft. Fresh, thickly bedded, greenish gray (5GY 6/1), coarsely crystalline, medium strong, DOLOMITE, (ST. LOUIS FORMATION)			15	100 %				J,I,VR						
162	Some dark gray organic laminae		321.50 / 162.30												
164															
166	165.5-173.0 ft. Fresh, thickly bedded, pale yellowish brown (10YR 6/2), f-m grained, strong, LIMESTONE, (SALEM FORMATION)		318.30 / 165.50						J,C,R						@ 165.5 ft. Inferred contact between ST. LOUIS FORMATION and SALEM FORMATION
	167.3-169.6 ft. Brecciated, glauconite and gray clay infilling, stylolitic, some calcite filled veins			16	100 %										
168									J,C,R						
170															
172			311.50 / 172.30												
174	173.0-181.2 ft. Fresh, thinly bedded, pale yellowish brown (10YR 6/2), fine grained, medium strong, ARGILLACEOUS LIMESTONE, (SALEM FORMATION)			17	100 %										
176															

DEPTH SCALE: 1:2
DRILLING CONTRACTOR: LAYNE-WESTERN
DRILLER: D. MAHURIN

LOGGED: J. MILLER
CHECKED: R. BOOTH
DATE: 3/9/95

Golder Associates

RECORD OF DRILLHOLE PZ-100-KS

PROJECT: LAIDLAW/RI-FS
PROJECT NO: 943-2848
LOCATION: BRIDGETON, MO

BORING METHOD: NX Core & water
DRILLING DATE: 1/27/95 - 2/13/95
DRILL RIG: CME 75

DATUM: MSL
COORDINATES N: 1068842.0
AZIMUTH: 0

COLLAR ELEV: 483.8
E: 517211.6
INCLINATION: -90

J-Joint, F-Fault, S-Shear, B-Bedding, F-Foliation
PL-Planar, C-Curved, U-Undulating, ST-Stepped, I-Irregular
P-Polished, K-Slickensided, SM-Smooth, R-Rough, VR-V, Rough
Fe-Fe Oxide, CL-Clay Infill, CH-Chlorite, H-Healed, GRF-Gravel Filled

DEPTH SCALE (FEET)	DESCRIPTION	GRAPHIC LOG	ELEV / DEPTH (FT)	RUN NO.	CORE RECOVERY	RQD	FRACTURES PER FOOT	DISCONTINUITY DATA: DIP wrt CORE AXIS	DISCONTINUITY DATA: TYPE AND SURFACE DESCRIPTION	GRAPHIC LOG	WEATHERING INDEX	STRENGTH INDEX	POINT LOAD INDEX (psi)	TEST ORIENTATION	NOTES WATER LEVELS INSTRUMENTATION
176	173.0-181.2 ft. Fresh, thinly bedded, pale yellowish brown (10YR 6/2), fine grained, medium strong, ARGILLACEOUS LIMESTONE, (SALEM FORMATION)														
178				17	100 %										
180															
182	181.2-183.0 ft. Thickly bedded, pale yellowish brown (10YR 6/2), coarse grained, strong, (SALEM FORMATION)		301.60												
			182.20												
184	183.0-190.5 ft. Fresh, thinly laminated, pale yellowish brown (10YR 6/2), fine grained, medium strong, ARGILLACEOUS LIMESTONE (SALEM FORMATION)			18	100 %			90	J,I,R-CL						
186	185.9-186.7 ft. Clay rich horizons, becoming silitier 186.7 ft. Chert nodules, stylolitic														
188								0	J,I,R						
			295.30												
			188.50												
190				19	100 %			90	J,PL,S						
	190.5-205.5 ft. Fresh, thickly bedded, pale yellowish brown (10YR 6/2), medium grained, strong, ARENACEOUS LIMESTONE, (SALEM FORMATION)		292.80												1/31/95 @ 8:00 Measure water level in hole at 38.05 ft. @ 8:10 resume coring on Run 20
			191.00												
192				20	100 %			90	J,I,VR						

DEPTH SCALE: 1:2
DRILLING CONTRACTOR: LAYNE-WESTERN
DRILLER: D. MAHURIN

LOGGED: J. MILLER
CHECKED: R. BOOTH
DATE: 3/9/95

Golder Associates

RECORD OF DRILLHOLE PZ-100-KS

PROJECT: LAIDLAW/RI-FS
PROJECT NO: 943-2848
LOCATION: BRIDGETON, MO

BORING METHOD: NX Core & water
DRILLING DATE: 1/27/95 - 2/13/95
DRILL RIG: CME 75

DATUM: MSL
COORDINATES N: 1068842.0
AZIMUTH: 0

COLLAR ELEV: 483.6
E: 517211.6
INCLINATION: -90

J-Joint, F-Fault, S-Shear, B-Bedding, F-Foliation
PL-Planar, C-Curved, U-Undulating, ST-Stepped, I-Irregular
P-Polished, K-Slikensided, SM-Smooth, R-Rough, VR-V. Rough
Fe-Fe Oxide, CL-Clay Infill, CH-Chlorite, H-Healed, GRF-Gravel Filled

DEPTH SCALE (FEET)	DESCRIPTION	GRAPHIC LOG	ELEV / DEPTH (FT)	RUN NO.	CORE RECOVERY	RQD	FRACTURES PER FOOT	DISCONTINUITY DATA: DIP wrt CORE AXIS	DISCONTINUITY DATA: TYPE AND SURFACE DESCRIPTION	GRAPHIC LOG	WEATHERING INDEX	STRENGTH INDEX	POINT LOAD INDEX (psi)	TEST ORIENTATION	NOTES WATER LEVELS INSTRUMENTATION
192	ROCK TYPE														
	190.5-205.5 ft. Fresh, thickly bedded, pale yellowish brown (10YR 6/2), medium grained, strong, ARENACEOUS LIMESTONE. (SALEM FORMATION)								J,I,S						
194	Silty, fine sand, fossil fragments, organic laminae, some clayey laminae, cherty, bioturbated														
196				20	100 %										
198															
200			283.90												
			199.90												
202	202.0 ft. Silicified horizons			21	100 %										
204			279.70												
			205.10												1/31/95 @ 17:15 Finish coring @ 205.1 ft., driller tried 1/2 day to get past the chert at this depth and failed
206	205.5-210.0 ft. Fresh, thinly bedded, pale yellowish brown (10YR 6/2), fine grained, medium strong, ARENACEOUS LIMESTONE. (SALEM FORMATION)								J,I,R-CL J,I,R (2) J,I,R J,I,R-CL						
				22	100 %										
	206.0-206.3 ft. Clay interbed														
	Silty, cherty, some clay horizons, silicified, coarse grained interbeds														
208															

DEPTH SCALE: 1:2
DRILLING CONTRACTOR: LAYNE-WESTERN
DRILLER: D. MAHURIN

LOGGED: J. MILLER
CHECKED: R. BOOTH
DATE: 3/9/95

Golder Associates

RECORD OF DRILLHOLE PZ-100-KS

PROJECT: LAIDLAW/RI-FS
PROJECT NO: 943-2848
LOCATION: BRIDGETON, MO

BORING METHOD: NX Core & water
DRILLING DATE: 1/27/95 - 2/13/95
DRILL RIG: CME 75

DATUM: MSL
COORDINATES N: 1068842.0
AZIMUTH: 0

COLLAR ELEV: 483.6
E: 517211.6
INCLINATION: -90

J-Joint, F-Fault, S-Shear, B-Bedding, F-Foliation
PL-Planar, C-Curved, U-Undulating, ST-Stepped, I-Irregular
P-Polished, K-Slickensided, SM-Smooth, R-Rough, VR-V. Rough
Fe-Fe Oxide, CL-Clay Infill, CH-Chlorite, H-Healed, GRF-Gravel Filled

DEPTH SCALE (FEET)	DESCRIPTION	GRAPHIC LOG	ELEV / DEPTH (FT)	RUN NO.	CORE RECOVERY	RQD	FRACTURES PER FOOT	DISCONTINUITY DATA: DIP wrt CORE AXIS	DISCONTINUITY DATA: TYPE AND SURFACE DESCRIPTION	GRAPHIC LOG	WEATHERING INDEX: SW FR, SW MW, HW CW	STRENGTH INDEX: R6 R5 R4 R3 R2 R1	POINT LOAD INDEX (psi): HT 30, R2 150, R3 300, R4 600, R5 1500, R6	TEST ORIENTATION	NOTES WATER LEVELS INSTRUMENTATION
208	205.5-210.0 ft. Fresh, thinly bedded, pale yellowish brown (10YR 6/2), fine grained, medium strong, ARENACEOUS LIMESTONE. (SALEM FORMATION)			22	100 %										
	Silty, cherty, some clay horizons, silicified, coarse grained interbeds 273.80		273.70												
210	210.0-220.7 ft. 210.00 Fresh, thickly bedded, light olive gray (5Y 6/1), fine grained, medium strong, ARGILLACEOUS DOLOMITE (SALEM FORMATION)		210.10												
212															
214															
				23	91%										
216															
218															
									Core Loss						
220			263.70												
			220.10												
	263.10														
	220.7-222.5 ft. 220.70 Fresh, thickly bedded, light olive gray (5Y 6/1), medium grained, medium strong, ARENACEOUS DOLOMITE, (SALEM FORMATION) shell debris in lower .5 ft., coarser downward, organic laminae 261.30			24	100 %										
222	222.5-233.8 ft. 222.50 Fresh, thickly bedded, light olive gray (5Y 6/1), fine grained, medium strong, ARGILLACEOUS DOLOMITE, (SALEM FORMATION)								J,PL,SM						
224															

DEPTH SCALE: 1:2
DRILLING CONTRACTOR: LAYNE-WESTERN
DRILLER: D. MAHURIN

LOGGED: J. MILLER
CHECKED: R. BOOTH
DATE: 3/9/95

Golder Associates

RECORD OF DRILLHOLE PZ-100-KS

Sheet 13 of 23

PROJECT: LAIDLAW/RI-FS
PROJECT NO: 943-2648
LOCATION: BRIDGETON, MO

BORING METHOD: NX Core & water
DRILLING DATE: 1/27/95 - 2/13/95
DRILL RIG: CME 75

DATUM: MSL
COORDINATES N: 1068842.0
AZIMUTH: 0

COLLAR ELEV: 483.8
E: 517211.8
INCLINATION: -90

J-Joint, F-Fault, S-Shear, B-Bedding, F-Foliation
PL-Planar, C-Curved, U-Undulating, ST-Stepped, I-Irregular
P-Polished, K-Slickensided, SM-Smooth, R-Rough, VR-V. Rough
Fe-Fe Oxide, CL-Clay Infill, CH-Chlorite, H-Healed, GRF-Gravel Filled

DEPTH SCALE (FEET)	DESCRIPTION	GRAPHIC LOG	ELEV / DEPTH (FT)	RUN NO.	CORE RECOVERY	RQD	FRACTURES PER FOOT	DISCONTINUITY DATA: DIP wrt CORE AXIS	DISCONTINUITY DATA: TYPE AND SURFACE DESCRIPTION	GRAPHIC LOG	WEATHERING INDEX (SW, FR, MW, HW, CW)	STRENGTH INDEX (R6, R5, R4, R3, R2, R1)	POINT LOAD INDEX (psi) (R1: 30, R2: 150, R3: 300, R4: 600, R5: 1500, R6)	TEST ORIENTATION	NOTES WATER LEVELS INSTRUMENTATION
224	222.5-233.8 ft. Fresh, thickly bedded, light olive gray (5Y 6/1), fine grained, medium strong, ARGILLACEOUS DOLOMITE, (SALEM FORMATION) Chert nodules common, bioturbated, organic laminae, some texture laminae								J,I,SM						
228				24	100 %										
226															
230			253.50												
			230.30						J,C,SM						
									J,PL,SM						
232	233.7 ft. Organic clay lense			25	100 %										
	250.00 233.80								J,I,R-CL						
234	233.8-241.4 ft. Fresh, thickly bedded, light gray (N7), coarse grained, medium strong, BIOCLASTIC LIMESTONE, (SALEM FORMATION)								J,PL,R						
236			247.60												
			236.20												2/1/95 End drilling @ 16:30, 2/6/95 @ 8:26 Measure water level at 80.8 ft. below ground surface 2/6/95 @ 9:50 Begin coring Run 26
				26	100 %				J,PL,R						
	Stylolitic, sandy, dark gray laminae		246.20												
238			237.60						J,PL,R						
				27	75%										
									J,PL,S						
240	239.8 ft. Medium sand, 1 cm. thick layer														

DEPTH SCALE: 1:2
DRILLING CONTRACTOR: LAYNE-WESTERN
DRILLER: D. MAHURIN

LOGGED: J. MILLER
CHECKED: R. BOOTH
DATE: 3/9/95

Golder Associates

RECORD OF DRILLHOLE PZ-100-KS

Sheet 14 of 23

PROJECT: LAIDLAW/RI-FS
PROJECT NO: 943-2648
LOCATION: BRIDGETON, MO

BORING METHOD: NX Core & water
DRILLING DATE: 1/27/95 - 2/13/95
DRILL RIG: CME 75

DATUM: MSL
COORDINATES N: 1068842.0
AZIMUTH: 0

COLLAR ELEV: 483.6
E: 517211.6
INCLINATION: -90

J-Joint, F-Fault, S-Shear, B-Bedding, F-Foliation
PL-Planar, C-Curved, U-Undulating, ST-Stepped, I-Irregular
P-Polished, K-Slikensided, SM-Smooth, R-Rough, VR-V. Rough
Fe-Fe Oxide, CL-Clay Infill, CH-Chlorite, H-Healed, GRF-Gravel Filled

DEPTH SCALE (FEET)	DESCRIPTION	GRAPHIC LOG	ELEV / DEPTH (FT)	RUN NO.	CORE RECOVERY	RQD	FRACTURES PER FOOT	DISCONTINUITY DATA: DIP wrt CORE AXIS	DISCONTINUITY DATA: TYPE AND SURFACE DESCRIPTION	GRAPHIC LOG	WEATHERING INDEX: SW FR, MW, HW, CW	STRENGTH INDEX: R6, R5, R4, R3, R2, R1	POINT LOAD INDEX (psi): R6 1500, R5 600, R4 300, R3 150, R2 30, R1	TEST ORIENTATION	NOTES WATER LEVELS INSTRUMENTATION
240	233.8-241.4 ft. Fresh, thickly bedded, light gray (N7), coarse grained, medium strong, BIOCLASTIC LIMESTONE, (SALEM FORMATION)														
								90	J,I,R						
242	241.4-245.6 ft. Fresh, thickly bedded, light gray (N7) to dark gray (N3), coarse grained, medium strong, ARENACEOUS LIMESTONE (SALEM FORMATION)			27	75%			90	J,I,R						
	242.8 ft. Silty sand, fossiliferous, 1 in. thick clayey horizon														Core loss occurred due to barrel falling down hole
									Core Loss						
244			239.20												
			244.60												
			238.20												
	245.6-249.8 ft. Fresh, thickly bedded, olive gray (5Y 4/1), fine grained, medium strong, SILTSTONE, (WARSAW FORMATION)		245.60												Run 28 recovery poor, because core barrel fell in hole and core was lost after Run 27. Run 28 core is broken up due to damage during its retrieval. Contacts @ 245.6 and 249.8 ft. are approximate because of core loss
248				28	81%										
			234.00												
	249.8-254.5 ft. Fresh, thickly bedded, olive gray (5Y 4/1), fine grained, medium strong, CLAYSTONE, (WARSAW FORMATION) Grades to siltstone near base		249.80												
									Core Loss						
252			231.20												
			252.60												
254															
			229.30	29	96%										
	254.5-256.4 ft. Fresh, thickly bedded, medium dark gray (N4), coarse grained, medium strong, FOSSILIFEROUS LIMESTONE, (WARSAW FORMATION)		254.50												
256															

DEPTH SCALE: 1:2
DRILLING CONTRACTOR: LAYNE-WESTERN
DRILLER: D. MAHURIN

LOGGED: J. MILLER
CHECKED: R. BOOTH
DATE: 3/9/95

Golder Associates

RECORD OF DRILLHOLE PZ-100-KS

Sheet 15 of 23

PROJECT: LAIDLAW/RI-FS
PROJECT NO: 943-2848
LOCATION: BRIDGETON, MO

BORING METHOD: NX Core & water
DRILLING DATE: 1/27/95 - 2/13/95
DRILL RIG: CME 75

DATUM: MSL
COORDINATES N: 1068842.0
AZIMUTH: 0

COLLAR ELEV: 483.8
E: 517211.8
INCLINATION: -90

J-Joint, F-Fault, S-Shear, B-Bedding, F-Foliation
Pl-Planar, C-Curved, U-Undulating, ST-Stepped, I-Irregular
P-Polished, K-Slickensided, SM-Smooth, R-Rough, VR-V. Rough
Fe-Fe Oxide, CL-Clay Infill, CH-Chlorite, H-Healed, GRF-Gravel Filled

DEPTH SCALE (FEET)	DESCRIPTION	GRAPHIC LOG	ELEV / DEPTH (FT)	RUN NO.	CORE RECOVERY	RQD	FRACTURES PER FOOT	DISCONTINUITY DATA: DIP wrt CORE AXIS	TYPE AND SURFACE DESCRIPTION	GRAPHIC LOG	WEATHERING INDEX	STRENGTH INDEX	POINT LOAD INDEX (psi)	TEST ORIENTATION	NOTES WATER LEVELS INSTRUMENTATION
256															
	227.40														
	256.4-261.3 ft. 258.40 Fresh, thickly bedded, olive black (5Y 6/1), fine grained, medium strong, SILTSTONE, (WARSAW FORMATION) Black organic laminae, slightly pitted, dolomitic			29	96%										
258															
			224.10						Minor Core Loss						2/6/95 @ 16:50 Quit for the day 2/7/95 @ 8:30 Start coring Run 30
			258.70												
260									J,I,SM						
	222.50														
	261.3-264.8 ft. 261.30 Fresh, thickly bedded, olive gray (5Y 4/1), medium crystalline, medium strong, DOLOMITE, (WARSAW FORMATION)														
262															
264															
	219.00														
	264.8-276.7 ft. 264.80 Fresh, thickly bedded, dark gray (N3), microcrystalline, medium strong, LIMESTONE, (WARSAW FORMATION)			30	100%										
266															
268															
	Packstone, fossiliferous		213.90												
270			269.90												
				31	100%				J,PL,VR						
272															

DEPTH SCALE: 1:2
DRILLING CONTRACTOR: LAYNE-WESTERN
DRILLER: D. MAHURIN

LOGGED: J. MILLER
CHECKED: R. BOOTH
DATE: 3/9/95

Golder Associates

RECORD OF DRILLHOLE PZ-100-KS

PROJECT: LAIDLAW/RI-FS
PROJECT NO: 943-2646
LOCATION: BRIDGETON, MO

BORING METHOD: NX Core & water
DRILLING DATE: 1/27/95 - 2/13/95
DRILL RIG: CME 75

DATUM: MSL
COORDINATES N: 1068842.0
AZIMUTH: 0

COLLAR ELEV: 483.8
E: 517211.6
INCLINATION: -90

J-Joint, F-Fault, S-Shear, B-Bedding, F-Foliation
PL-Planar, C-Curved, U-Undulating, ST-Stepped, I-Irregular
P-Polished, K-Slikensided, SM-Smooth, R-Rough, VR-V. Rough
Fe-Fe Oxide, CL-Clay Infill, CH-Chlorite, H-Healed, GRF-Gravel Filled

DEPTH SCALE (FEET)	ROCK TYPE DESCRIPTION	GRAPHIC LOG	ELEV / DEPTH (FT)	RUN NO	CORE RECOVERY	RQD	FRACTURES PER FOOT	DISCONTINUITY DATA: DIP wrt CORE AXIS	DISCONTINUITY DATA: TYPE AND SURFACE DESCRIPTION	GRAPHIC LOG	WEATHERING INDEX (SW FR, MW, HW, CW)	STRENGTH INDEX (R6, R5, R4, R3, R2, R1)	POINT LOAD INDEX (psi) (R1, R2, R3, R4, R5, R6)	TEST ORIENTATION	NOTES WATER LEVELS INSTRUMENTATION
272	284.8-276.7 ft. Fresh, thickly bedded, dark gray (N3), microcrystalline, medium strong, LIMESTONE, (WARSAW FORMATION)														
274															
276				31	100 %										
	207.10 / 276.70 276.7-278.5 ft. Fresh, medium bedded, light olive gray (5Y 6/1), fine grained, medium strong, ARENACEOUS DOLOMITE (WARSAW FORMATION)														
278	205.30 / 278.50 278.5-287.2 ft. Fresh, thickly bedded, medium light gray (N6), coarsely crystalline, medium strong, FOSSILIFEROUS LIMESTONE, (WARSAW FORMATION)		203.90 / 279.90												
280															
282								90	J,I,VR						
284				32	100 %										
286															
288	287.2-301.0 ft. Fresh, thickly bedded, olive black (5Y 2/1), coarse crystalline, medium strong, LIMESTONE, (WARSAW FORMATION)														

DEPTH SCALE: 1:2
DRILLING CONTRACTOR: LAYNE-WESTERN
DRILLER: D. MAHURIN

LOGGED: J. MILLER
CHECKED: R. BOOTH
DATE: 3/9/95

Golder Associates

RECORD OF DRILLHOLE PZ-100-KS

PROJECT: LAIDLAW/RI-FS
PROJECT NO: 943-2848
LOCATION: BRIDGETON, MO

BORING METHOD: NX Core & water
DRILLING DATE: 1/27/95 - 2/13/95
DRILL RIG: CME 75

DATUM: MSL
COORDINATES N: 1068842.0
AZIMUTH: 0

COLLAR ELEV: 483.8
E: 517211.6
INCLINATION: -90

J-Joint, F-Fault, S-Shear, B-Bedding, F-Foliation
PL-Planar, C-Curved, U-Undulating, ST-Stepped, I-Irregular
P-Polished, K-Slikensided, SM-Smooth, R-Rough, VR-V. Rough
Fe-Fe Oxide, CL-Clay Infill, CH-Chlorite, H-Healed, GRF-Gravel Filled

DEPTH SCALE (FEET)	DESCRIPTION	GRAPHIC LOG	ELEV / DEPTH (FT)	RUN NO.	CORE RECOVERY	RQD	FRACTURES PER FOOT	DISCONTINUITY DATA: DIP wrt CORE AXIS	DISCONTINUITY DATA: TYPE AND SURFACE DESCRIPTION	DISCONTINUITY DATA: GRAPHIC LOG	WEATHERING INDEX (FR, SW, MW, HW, CW)	STRENGTH INDEX (R6, R5, R4, R3, R2, R1)	POINT LOAD INDEX (psi) (R1 10, R2 155, R3 380, R4 600, R5 1300, R6)	TEST ORIENTATION	NOTES WATER LEVELS INSTRUMENTATION
288	287.2-301.0 ft. Fresh, thickly bedded, olive black (5Y 2/1), coarse crystalline, medium strong, LIMESTONE, (WARSAW FORMATION)			32	100%				J,PL,VR-Calcite mineralization						Possible water producer
290			183.90 / 289.90												2/7/95 @ 15:07 Start Run 33
292	Stylolitic common, fossiliferous								J,I,VR-Calcite mineralization						
294				33	100%				J,PL,VR-Calcite mineralization						
296	295.4-295.7 ft. Vuggy porosity														
298															
300			184.50 / 299.30						J,I,R J,I,R J,I,R						2/7/95 @ 16:30 Quit drilling @ 299.3 ft. after Run 33 2/8/95 @ 9:10 Start coring Run 34, measured water level @ 18.8 ft. below ground surface
302	182.60 / 301.00 301.0-304.3 ft. Fresh, thickly bedded, olive black (5Y 2/1), medium grained, medium strong, DOLOMITE, (WARSAW FORMATION) Argillaceous, vuggy 301.0-304.3 ft. Vuggy porosity			34	99%										
304															

DEPTH SCALE: 1:2
DRILLING CONTRACTOR: LAYNE-WESTERN
DRILLER: D. MAHURIN

LOGGED: J. MILLER
CHECKED: R. BOOTH
DATE: 3/9/95

Golder Associates

RECORD OF DRILLHOLE PZ-100-KS

PROJECT: LA/DLAW/RI-FS
PROJECT NO: 943-2648
LOCATION: BRIDGETON, MO

BORING METHOD: NX Core & water
DRILLING DATE: 1/27/95 - 2/13/95
DRILL RIG: CME 75

DATUM: MSL
COORDINATES N: 1068842.0
AZIMUTH: 0

COLLAR ELEV: 483.8
E: 517211.8
INCLINATION: -90

J-Joint, F-Fault, S-Shear, B-Bedding, F-Foliation
PL-Planar, C-Curved, U-Undulating, ST-Stepped, I-Irregular
P-Polished, K-Slikensided, SM-Smooth, R-Rough, VR-V. Rough
Fe-Fe Oxide, CL-Clay Infill, CH-Chlorite, H-Healed, GRF-Gravel Filled

DEPTH SCALE (FEET)	DESCRIPTION	GRAPHIC LOG	ELEV / DEPTH (FT)	RUN NO.	CORE RECOVERY	RQD	FRACTURES PER FOOT	DISCONTINUITY DATA: DIP wrt CORE AXIS	DISCONTINUITY DATA: TYPE AND SURFACE DESCRIPTION	GRAPHIC LOG	WEATHERING INDEX (SW FR, MW, HW, CW)	STRENGTH INDEX (R6, R5, R4, R3, R2, R1)	POINT LOAD INDEX (psi) (T1 30, R2 15, R3 30, R4 60, R5 150, R6)	TEST ORIENTATION	NOTES WATER LEVELS INSTRUMENTATION
304			179.50												
	304.3-306.1 ft. 304.30 Fresh, thickly bedded, medium dark gray (N4), coarsely crystalline, medium strong, LIMESTONE, (WARSAW LIMESTONE)														
306			177.70												
	306.1-313.0 ft. 306.10 Fresh, thinly bedded, grayish black (N2), fine grained, weak, CLAYEY SILTSTONE, (WARSAW FORMATION) Pyrite crystals, calcite mineralization			34	99%										
308									J,I,SM						
			174.60												
			309.20												
310															
312															
									J,PL,R						312.5-313.5 ft. 90 and 50 degree fractures are not open 314.5-315.5 ft. Second fracture not open
									J,I,VR						
	313.0-316.5 ft. 313.00 Fresh, thickly bedded, dark greenish gray (5GY 4/1), medium crystalline, medium strong, ARENACEOUS DOLOMITE, (WARSAW FORMATION), glauconitic, stylolitic, vuggy, silty shale interbeds														
314				35	100				J,PL,SM-CL (2)						
															2/8/95 Finish in Run 36, break down due to hydraulic leaks
									J,PL,R						
316															
			167.30												
	316.5-341.0 ft. 316.50 Fresh, thinly bedded, olive black (5Y 2/1), fine grained, weak, CLAYEY SILTSTONE, (WARSAW FORMATION)														
318															
			164.70												
			319.10												
				36	100										2/9/95 @ 7:40 Resume coring Run 36
320															

DEPTH SCALE: 1:2
DRILLING CONTRACTOR: LAYNE-WESTERN
DRILLER: D. MAHURIN

LOGGED: J. MILLER
CHECKED: R. BOOTH
DATE: 3/9/95

Golder Associates

RECORD OF DRILLHOLE PZ-100-KS

PROJECT: LAIDLAW/FI-FS
PROJECT NO: 943-2848
LOCATION: BRIDGETON, MO

BORING METHOD: NX Core & water
DRILLING DATE: 1/27/95 - 2/13/95
DRILL RIG: CME 75

DATUM: MSL
COORDINATES N: 1068842.0
AZIMUTH: 0

COLLAR ELEV: 483.8
E: 517211.8
INCLINATION: -90

J-Joint, F-Fault, S-Shear, B-Bedding, F-Foliation
PL-Planar, C-Curved, U-Undulating, ST-Stepped, I-Irregular
P-Polished, K-Slickensided, SM-Smooth, R-Rough, VR-V. Rough
Fe-Fe Oxide, CL-Clay Infill, CH-Chlorite, H-Healed, GRF-Gravel Filled

DEPTH SCALE (FEET)	DESCRIPTION	GRAPHIC LOG	ELEV / DEPTH (FT)	RUN NO.	CORE RECOVERY	RQD	FRACTURES PER FOOT	DISCONTINUITY DATA: DIP wrt CORE AXIS	DISCONTINUITY DATA: TYPE AND SURFACE DESCRIPTION	GRAPHIC LOG	WEATHERING INDEX	STRENGTH INDEX	POINT LOAD INDEX (psi)	TEST ORIENTATION	NOTES WATER LEVELS INSTRUMENTATION
320	316.5-341.0 ft. Fresh, thinly bedded, olive black (5Y 2/1), fine grained, weak, CLAYEY SILTSTONE, (WARSAW FORMATION)														
	321.1-322.1 ft. 1-2 in. thick limey and dolomite interbeds														
322									J,PL,SM						
									J,I,SM						
									J,PL,SM						
									J,C,SM						
324									J,PL,SM						
				36	100 %										
326															
328															
	Very fine pyrite crystals, calcite infilled veins, thin (0.2-0.3 in.) dolomite interbeds		154.60												
			329.20												
330									J,ST,SM-CL						
332				37	98%										
334															4 drill induced fractures in Run 37, especially at point core was lost
			146.40												
			335.40												
336				38	99%										

DEPTH SCALE: 1:2
DRILLING CONTRACTOR: LAYNE-WESTERN
DRILLER: D. MAHURIN

LOGGED: J. MILLER
CHECKED: R. BOOTH
DATE: 3/9/95

Golder Associates

RECORD OF DRILLHOLE PZ-100-KS

PROJECT: LAIDLAW/RI-FS
PROJECT NO: 943-2848
LOCATION: BRIDGETON, MO

BORING METHOD: NX Core & water
DRILLING DATE: 1/27/95 - 2/13/95
DRILL RIG: CME 75

DATUM: MSL
COORDINATES N: 1068842.0
AZIMUTH: 0

COLLAR ELEV: 483.8
E: 517211.8
INCLINATION: -90

J-Joint, F-Fault, S-Shear, B-Bedding, F-Foliation
PL-Planar, C-Curved, U-Undulating, ST-Stepped, I-Irregular
P-Polished, K-Slickensided, SM-Smooth, R-Rough, VR-V. Rough
Fe-Fe Oxide, CL-Clay Infill, CH-Chlorite, H-Healed, GRF-Gravel Filled

DEPTH SCALE (FEET)	DESCRIPTION	GRAPHIC LOG	ELEV / DEPTH (FT)	RUN NO.	CORE RECOVERY	RQD	FRACTURES PER FOOT	DISCONTINUITY DATA: DIP wrt CORE AXIS	DISCONTINUITY DATA: TYPE AND SURFACE DESCRIPTION	GRAPHIC LOG	WEATHERING INDEX (SW FR, MW, HW, CW)	STRENGTH INDEX (R6, R5, R4, R3, R2, R1)	POINT LOAD INDEX (psi) (RT 30, R2 150, R3 300, R4 600, R5 1500, R6)	TEST ORIENTATION	NOTES WATER LEVELS INSTRUMENTATION
336	316.5-341.0 ft. Fresh, thinly bedded, olive black (5Y 2/1), fine grained, weak, CLAYEY SILTSTONE, (WARSAW FORMATION)														
338															5 drill induced fractures in upper 5 ft. of Run 38
340				38	99%				J,PL,SM						
	142.60														
	341.0-344.6 ft. 341.00 Fresh, medium bedded, greenish black (5GY 2/1), fine grained, medium strong, ARGILLACEOUS DOLOMITE, (WARSAW FORMATION)								J,PL,SM						
342															
344	Black organic laminae, calcite filled vugs		139.50												
	139.20		344.30												
	344.6-348.8 ft. 344.60 Fresh, thinly bedded, olive black (5Y 2/1), fine grained, weak, SILTY CLAYSTONE, (WARSAW FORMATION)														Two drilling induced fractures in upper 2 ft. of Run 39
346															
	Calcite filled vugs														
348				39	100%										
	135.00														
	348.8-352.8 ft. 348.80 Fresh, medium bedded, olive gray (5Y 4/1), fine grained, medium strong, ARGILLACEOUS DOLOMITE, (WARSAW FORMATION)														
350	Vuggy, fossil fragments														
352															

DEPTH SCALE: 1:2
DRILLING CONTRACTOR: LAYNE-WESTERN
DRILLER: D. MAHURIN

LOGGED: J. MILLER
CHECKED: R. BOOTH
DATE: 3/9/95

Golder Associates

RECORD OF DRILLHOLE PZ-100-KS

PROJECT: LAIDLAW/RI-FS
PROJECT NO: 943-2648
LOCATION: BRIDGETON, MO

BORING METHOD: NX Core & water
DRILLING DATE: 1/27/95 - 2/13/95
DRILL RIG: CME 75

DATUM: MSL
COORDINATES N: 1068842.0
AZIMUTH: 0

COLLAR ELEV: 483.8
E: 517211.6
INCLINATION: -90

J-Joint, F-Fault, S-Shear, B-Bedding, F-Foliation
PL-Planar, C-Curved, U-Undulating, ST-Stepped, I-Irregular
P-Polished, K-Slickensided, SM-Smooth, R-Rough, VR-V. Rough
Fe-Fe Oxide, CL-Clay Infill, CH-Chlorite, H-Healed, GRF-Gravel Filled

DEPTH SCALE (Feet)	DESCRIPTION	GRAPHIC LOG	ELEV / DEPTH (FT)	RUN NO.	CORE RECOVERY	RQD	FRACTURES PER FOOT	DISCONTINUITY DATA: DIP wrt CORE AXIS	DISCONTINUITY DATA: TYPE AND SURFACE DESCRIPTION	GRAPHIC LOG	WEATHERING INDEX (SW FR, MW, HW, CW)	STRENGTH INDEX (R6 R5 R4 R3 R2 R1)	POINT LOAD INDEX (psi) (R1 R2 99 R3 150 R4 300 R5 600 R6 1500)	TEST ORIENTATION	NOTES WATER LEVELS INSTRUMENTATION
352															
	131.00														
	352.8-357.6 ft. 352.80 Fresh, medium bedded, olive gray (5Y 4/1), medium grained, medium strong, LIMESTONE, some fossils, race thin chert layers (<1 in.), (WARSAW FORMATION)			39	100 %										2/9/95 @ 15:15 Finish Run 39, quit work on the hole 2/11/95 @ 13:15 Corehole reamed out with 6 in. bit using Schramm Rotadrill to 354.5 ft.
354			129.60												
			354.20 129.30												
			354.50												
	354.8-355.0 ft. and 355.4-355.7 ft. Thinly bedded, medium dark gray (N4), Claystone layers														
356									J,I,R						
	126.20														
	357.6-386.6 ft. 357.60 Fresh, thin to medium bedded, medium light gray (N6), very coarse grained, medium strong, FOSSILIFEROUS LIMESTONE, (KEOKUK FORMATION) Predominantly argillaceous, shaley partings common, numerous light bluish gray (5B 7/1) chert layers (1-2 in. thick), chert nodules (1-10 mm.)			40	100 %				J,I,R J,I,R						@ 357.6 ft. Inferred top of KEOKUK FORMATION
358															
360									J,I,R						
			121.80												
362			362.00												
															363.0-372.0 ft. Numerous drilling induced fractures (2-3 per foot)
364				41	100 %										
366															
368															

DEPTH SCALE: 1:2
DRILLING CONTRACTOR: LAYNE-WESTERN
DRILLER: D. MAHURIN

LOGGED: J. MILLER
CHECKED: R. BOOTH
DATE: 3/9/95

Golder Associates

RECORD OF DRILLHOLE PZ-100-KS

Sheet 22 of 23

PROJECT: LAIDLAW/RI-FS
PROJECT NO: 943-2648
LOCATION: BRIDGETON, MO

BORING METHOD: NX Core & water
DRILLING DATE: 1/27/95 - 2/13/95
DRILL RIG: CME 75

DATUM: MSL
COORDINATES N: 1068842.0
AZIMUTH: 0

COLLAR ELEV: 483.6
E: 517211.6
INCLINATION: -90

J-Joint, F-Fault, S-Shear, B-Bedding, F-Foliation
PL-Planar, C-Curved, U-Undulating, ST-Stepped, I-Irregular
P-Polished, K-Slickensided, SM-Smooth, R-Rough, VR-V. Rough
Fe-Fe Oxide, CL-Clay Infill, CH-Chlorite, H-Healed, GRF-Gravel Filled

DEPTH SCALE (FEET)	DESCRIPTION	GRAPHIC LOG	ELEV / DEPTH (FT)	RUN NO.	CORE RECOVERY	RQD	FRACTURES PER FOOT	DISCONTINUITY DATA: DIP wrt CORE AXIS	DISCONTINUITY DATA: TYPE AND SURFACE DESCRIPTION	GRAPHIC LOG	WEATHERING INDEX	STRENGTH INDEX	POINT LOAD INDEX (psi)	TEST ORIENTATION	NOTES WATER LEVELS INSTRUMENTATION
368	357.6-386.6 ft. Fresh, thin to medium bedded, medium light gray (N6), very coarse grained, medium strong, FOSSILIFEROUS LIMESTONE. (KEOKUK FORMATION) Predominantly argillaceous, shaley partings common, numerous light bluish gray (5B 7/1) chert layers (1-2 in. thick), chert nodules (1-10 mm.)														
370				41	100 %										
372			111.80 / 372.00												
374															
	374.2-375.2 ft. Moderately weathered, medium bedded, light olive gray (5Y 6/1), medium strong, ARENACEOUS DOLOMITE layer, (KEOKUK FORMATION) 108.60 / 375.20		108.60 / 374.20	42	100 %			0	J,I,S,CL						
376								0	B,I,R						
								0	B,I,R (2)						
			106.60 / 377.20					0	J,I,R						
378								0	B,C,R,CL						
								0	J,R,R						
380								0	B,PL,S						
	380.7-381.0 ft. Thinly laminated, dark greenish gray (5G 4/1), SILTY CLAYSTONE layer			43	100 %			0	B,PL,R						
382								0	B,U,CL						
384															

DEPTH SCALE: 1:2
DRILLING CONTRACTOR: LAYNE-WESTERN
DRILLER: D. MAHURIN

LOGGED: J. MILLER
CHECKED: R. BOOTH
DATE: 3/9/95

Golder Associates

RECORD OF DRILLHOLE PZ-100-KS

Sheet 23 of 23

PROJECT: LAIDLAW/RI-FS
PROJECT NO: 943-2648
LOCATION: BRIDGETON, MO

BORING METHOD: NX Core & water
DRILLING DATE: 1/27/95 - 2/13/95
DRILL RIG: CME 75

DATUM: MSL
COORDINATES N: 1068642.0
AZIMUTH: 0

COLLAR ELEV: 483.8
E: 517211.8
INCLINATION: -90

J-Joint, F-Fault, S-Shear, B-Bedding, F-Foliation
PL-Planar, C-Curved, U-Undulating, ST-Stepped, I-Irregular
P-Polished, K-Slickensided, SM-Smooth, R-Rough, VR-V. Rough
Fe-Fe Oxide, CL-Clay Infill, CH-Chlorite, H-Healed, GRF-Gravel Filled

DEPTH SCALE (FEET)	DESCRIPTION	GRAPHIC LOG	ELEV / DEPTH (FT)	RUN NO.	CORE RECOVERY	RQD	FRACTURES PER FOOT	DISCONTINUITY DATA: DIP wrt CORE AXIS	DISCONTINUITY DATA: TYPE AND SURFACE DESCRIPTION	GRAPHIC LOG	WEATHERING INDEX: SW, MW, HW, CW, FR	STRENGTH INDEX: R6, R5, R4, R3, R2, R1	POINT LOAD INDEX (psi): R1 10, R2 150, R3 300, R4 600, R5 1500, R6	TEST ORIENTATION	NOTES, WATER LEVELS, INSTRUMENTATION
384	357.6-386.6 ft. Fresh, thin to medium bedded, medium light gray (N6), very coarse grained, medium strong, FOSSILIFEROUS LIMESTONE, (KEOKUK FORMATION) Predominantly argillaceous, shaley partings common, numerous light bluish gray (5B 7/1) chert layers (1-2 in. thick), chert nodules (1-10 mm.)								B,PL,CL						
386				43	100 %				B,I,VR J,I,VR J,I,R						
	386.6-391.2 ft. Slightly weathered, thinly bedded, light gray (N7), coarse grained, medium strong to strong, ARENACEOUS LIMESTONE, (KEOKUK FORMATION), Thin dolomite layers layers (<6 in.), argillaceous in some zones, stylolitic, chert nodules (<1 in.), silicified zones (<6 in.), some joints highly weathered, fossiliferous @ 389.0 ft. Open vug with calcite crystals (1/2 in. dia.)		96.80 387.00						B,I,R B,I,R						2/12/95 @ 16:00 Complete Run 43 2/13/95 @ 9:00 Resume coring Run 44
388				44	100 %				J,I,VR						
390									J,I,VR J,I,R J,I,R						
	92.60		92.60												
	End of Record of Drillhole at 391.2 ft. 391.20		391.20												
392															
394															
396															
398															
400															

DEPTH SCALE: 1:2
DRILLING CONTRACTOR: LAYNE-WESTERN
DRILLER: D. MAHURIN

LOGGED: J. MILLER
CHECKED: R. BOOTH
DATE: 3/9/95

Golder Associates

Well No. PZ-100-KS

Boring No. X-Ref: PZ-100-KS

PIEZOMETER CONSTRUCTION SUMMARY

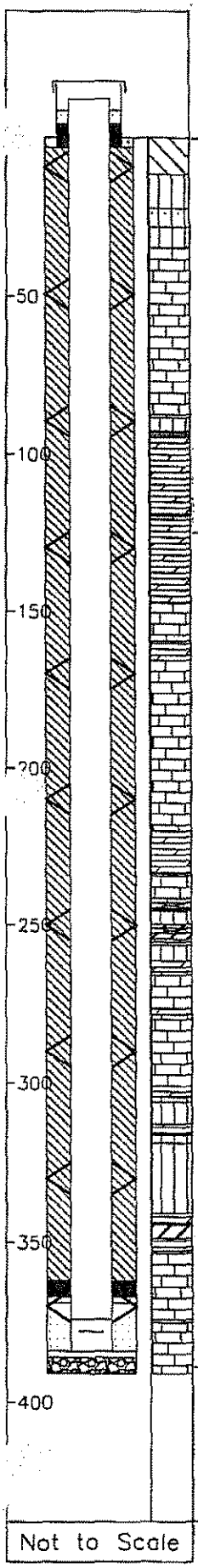

Not to Scale

Survey Coords: Northing: 1068842 ft. Easting: 517212 ft.

Elevation Ground Level 483.8 ft. NGVD

Top of PVC Casing 485.64 ft. NGVD

Drilling Summary:

Total Depth 390.0 ft.

Borehole Diameter 10 1/4 in. (0.0–34.0 ft.) 5 7/8 in. (34.0–391.0 ft.)

Casing Stickup Height 1.88 ft.

Driller Layne-Western St. Louis, MO

Rig CME 75, Schramm Portadrill T660H

Bit(s) 6 1/4 in. ID Hollow Stem Auger Bit, NX Core, 5 7/8 in. Button Bit for Reaming

Drilling Fluid Auger–None, NX Core Water, Air Rotary

Protective Casing 8x8 in. Square Steel, by 5 ft. long

Construction Time log:

Task	Start Date	Start Time	Finish Date	Finish Time
Drilling				
CME 75	1/25/95	13:20	2/9/95	15:15
Schramm Rotary	2/11/95	11:00	2/13/95	15:30
Geophys.Logging:	2/9/95	16:15	2/9/95	18:15
Casing:	2/17/95	7:55	2/17/95	11:00
Filter Placement:	2/17/95	11:00	2/17/95	13:30
Cementing:				
Development				
Bentonite Grout	2/20/95	7:30	2/20/95	11:30
Bentonite Seal	2/17/95	13:30	2/17/95	13:45

Well Design & Specifications

Basis: Geologic Log X Geophysical Log X

Casing string(s): C = Casing S = Screen

Depth			String(s)	Elevation		
+ 1.88	–	374.00	C1	485.64	–	109.76
374.00	–	383.80	S1	109.76	–	99.96
383.80	–	384.13	C2	99.96	–	99.63

Casing: C1 2 in. dia. Schedule 80 PVC, flush threaded with O-rings

C2 2 in. dia. threaded PVC end cap (4 in. long or 0.33 ft.)

Screen: S1 2 in. dia. Schedule 80 PVC, 0.010 in. machine cut slot, flush threaded with O-rings

Sand Pack: 16–35 mesh Silica Sand, 369.0–384.0 ft.

Filter Pack: Less than 50 mesh Silica Sand, 367.0–369.0 ft. and 384.0–386.0 ft.

Grout Seal: Wyo-Ben Grout Well Bentonite Slurry, 3.0–362.0 ft.

Bentonite Seal: Extra high yield Wyo-Ben (100%) Slurry, 362.0–367.0 ft.

Concrete: 0.0–3.0 ft.

Well Development

Stabilization Test Data:

Time	pH	Spec. Cond.	Temp (°C)

Recovery Data:

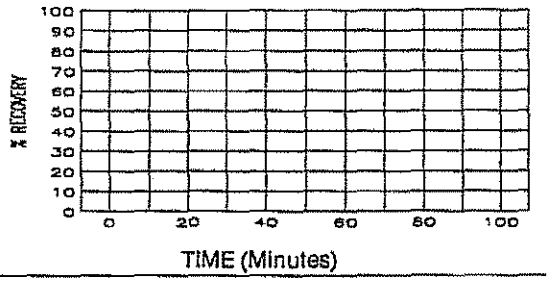

Comments: Prior to well installation, there was about 4 ft. of slough at base of borehole which could not be removed.

Supervised by W. Herst

Job Number 943-2848

Site LAIDLAW/OU2 RI-FS/MO

File Name PZ100KS

661574

MISSOURI DEPARTMENT OF NATURAL RESOURCES
DIVISION OF GEOLOGY AND LAND SURVEY

MONITORING WELL CERTIFICATION RECORD

OFFICE USE ONLY	DATE RECEIVED
REF. NO. 115080	CHECK NO.
ROUTE	TRANSMITTAL NO.
STATE WELL NUMBER	CROSS REFERENCE NO.
CHECKED BY	ENTERED Ph 1 Ph 2 Ph 3
APPROVED BY	DATE APPROVED

INFORMATION SUPPLIED BY OWNER

SITE NAME	WELL NUMBER
LANDFILL BRIDGETON SANITARY LANDFILL	PZ-100-KS

SITE ADDRESS	CITY	STATE	ZIP CODE
ST CHARLES ROCK ROAD	BRIDGETON	MO	63044

NAME	TELEPHONE
LANDFILL WASTE SYSTEMS, INC.	314-241-3710

ADDRESS	CITY	STATE	ZIP CODE
1838 N BROADWAY	ST. LOUIS	MO	63102

INFORMATION SUPPLIED BY MONITORING WELL CONTRACTOR

LOCATION OF WELL SHOW LOCATION IN SECTION PLAT

COUNTY ST. LOUIS
ELEVATION 493.76
AREA NO.

SMALLEST ¼ ____ ¼ ____ ¼ ____ ¼ LARGEST ¼

SEC. ____ TWN. 47 N,RNG. 5 (E) OR W

LAT. 38 ° 46 ' 09 " LONG. 90 ° 26 ' 33 "

SKETCH THE LOCATION TO THE WELL INCLUDING MILEAGE ON ALL ROADS TRAVELED FROM NEAREST TOWNS OR HIGHWAYS

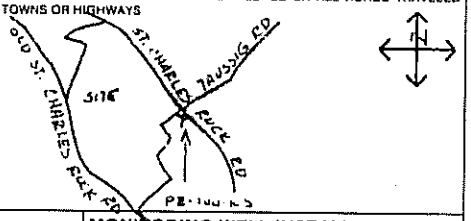

DESCRIBE LOCATION OF THE WELL SO WE WOULD BE ABLE TO VISIT IT

MONITORING WELL INSTALLATION CONTRACTOR'S NAME
LAYNE WESTERN CO, INC.

DRILLING CONTRACTOR'S NAME
LAYNE WESTERN CO, INC.

TYPE OF INSTALLATION
☒ ABOVE GROUND ☐ FLUSH MOUNT

STATIC WATER LEVEL
FEET FROM MEASURING POINT

DATE OF STATIC WATER LEVEL

ELEVATION OF MEASURING POINT
495.64

MEASURING POINT IS
☒ TOP OF RISER PIPE
☐ OTHER

DRILLING EQUIPMENT
☒ AIR ROTARY ☒ AUGER TYPE 6¼ HSA
☐ REVERSE ROTARY ☐ OTHER

CENTRALIZERS USED
☒ YES, AT 8 TOTAL
☒ STAINLESS STEEL
☐ OTHER
☐ NO

MULTIPLE CASED WELLS
SUBMIT ADDITIONAL AS BUILT DIAGRAM SHOWING WELL CONSTRUCTION DETAILS INCLUDING TYPE AND SIZE OF ALL CASING, HOLE DIAMETERS, AND GROUT USED.

DATE WELL CONSTRUCTION WAS COMPLETED
3-20-95

I HEREBY CERTIFY THAT THE MONITORING WELL HEREIN DESCRIBED WAS CONSTRUCTED IN ACCORDANCE WITH THE DEPARTMENT OF NATURAL RESOURCES REQUIREMENTS FOR THE CONSTRUCTION OF MONITORING WELLS.

SIGNATURE (MONITORING WELL CONTRACTOR) Michael P Vogt

PERMIT NUMBER	DATE
UC1256WMA	4-11-95

SIGNATURE (DRILLING CONTRACTOR) Michael P. Vogt

PERMIT NUMBER	DATE
UC1256WMA	4-11-95

NOTE: Record the fraction of a foot in decimal, not in inches

Top of Riser Elevation: 495.64

LOCKING CAP - (Y) N (Circle one)
CAP VENT - (Y) N (Circle one)

PROTECTIVE CASING
Type: STEEL
Size: 8"x8"x5'
Bore Hole Diameter: 10.25"

WEEP HOLE - Y / N (Circle one)

Ground Surface Elevation: 493.76 Ft

Information in this column to be supplied in the Feet from Surface column	Feet from Surface	Description of Formation
	0-13	clay
Depth to bottom of Protective Casing Seal:	3	
		13-36 silt
		36-88 Limestone
		88-94 shale
		94-143 Dolomite
		143-154 Limestone
		154-165 Dolomite
		165-210 Limestone
		210-234 Dolomite
Depth to Base of Annular Seal:	360	234-246 Limestone
		246-262 Shale
		262-367 Dolomite
Depth to Base of Bentonite Seal:	367	367-368 Limestone
Depth to Base of Secondary Filter Pack:	369	368-367 Dolomite
		367-314 Shale
Depth to Top of the Screen:	374	314-317 Dolomite
		317-343 Shale
		343-346 Dolomite
		346-351 Shale
		351-354 Dolomite
Depth to Bottom of the Screen:	394	354-371 Limestone
Plug Back Total Depth		
Original Total Depth:	371	

PROTECTIVE CASING SEAL
Type: ☒ Concrete ☐ Cement Slurry

RISER PIPE
Length: 375.88'
Diameter: 2"
Type of Material: PVC SCH 80

BOREHOLE DIAMETER: 5⅞ In.

ANNULAR SEAL
Type: ☒ Bentonite Slurry ☐ Cement Slurry ☐ Non Slurry Bentonite

BENTONITE SEAL
Type: ☒ Bentonite Slurry ☐ Non Slurry Bentonite
Length of Seal: 5 Ft.

SECONDARY FILTER PACK
Type: ☒ Sand (Optional) ☐ Manufactured
Grain Size: 30/65
Length: 2'

PRIMARY FILTER PACK
Type: ☒ Sand ☐ Manufactured
Grain Size: 16-35
Length: 15

WELL SCREEN
Length: 10'
Slot Size: 0.010"
Type: SCH. 80 PVC

SUMP DETAILS
Length: 0.2 Ft.
Diameter: 2 In.
Type: PVC

TYPE OF BACKFILL: SAND/SLURRY

MO 780-1415 (2-94) DISTRIBUTION: WHITE-DIVISION CANARY-MONITORING WELL CONTRACTOR PINK-OWNER

RECORD OF DRILLHOLE PZ-100-SD

Sheet 1 of 2

PROJECT: LAIDLAW/RI-FS
PROJECT NO: 943-2548
LOCATION: BRIDGETON, MO

BORING METHOD: NX Core & water
DRILLING DATE: 2/22/95
DRILL RIG: SCHRAMM

DATUM: MSL
COORDINATES N: 1068851.6
AZIMUTH: 0

COLLAR ELEV: 484.3
E: 517185.4
INCLINATION: -90

SCALE (FEET)

ROCK TYPE

DESCRIPTION

GRAPHIC LOG

J-Joint, F-Fault, S-Shear, B-Bedding, F-Foliation
PL-Planar, C-Curved, U-Undulating, ST-Stepped, I-Irregular
P-Polished, K-Slickensided, SM-Smooth, R-Rough, VR-V. Rough
Fe-Fe Oxide, CL-Clay Infill, CH-Chlorite, H-Healed, GRF-Gravel Filled

ELEV / DEPTH (FT)

RUN NO.

CORE RECOVERY

RQD

FRACTURES PER FOOT

DISCONTINUITY DATA: DIP wrt CORE AXIS

TYPE AND SURFACE DESCRIPTION

GRAPHIC LOG

WEATHERING INDEX: SW FR, MW, HW, CW

STRENGTH INDEX: R6, R5, R4, R3, R2, R1

POINT LOAD INDEX (psi): PT 30, R2 150, R3 300, R4 600, R5 1500, R6

TEST ORIENTATION

NOTES
WATER LEVELS
INSTRUMENTATION

SCALE (FEET)	DESCRIPTION	ELEV / DEPTH (FT)	RUN NO.	CORE RECOVERY	RQD	FRACTURES PER FOOT	DISCONTINUITY DATA: DIP wrt CORE AXIS	TYPE AND SURFACE DESCRIPTION
224	0.0-235.0 ft. No sampling conducted See Record of Drillhole for PZ-100-KS							
228								
230								
232								
234		246.00						
236	235.3-237.3 ft. 235.30 Fresh, thinly bedded, very light gray (N8) to light gray (N7), coarse grained, medium strong, ARENACEOUS LIMESTONE (SALEM FORMATION)	235.30						
238	237.3-242.4 ft. Fresh, thickly bedded, pale yellowish brown (10YR 6/2), m-c grained, medium strong, BIOCLASTIC LIMESTONE, (SALEM FORMATION)		1	97%				
	238.7-238.8 ft. Very light gray (N8), coarse grained Dolomite layer						90	B,PL,SM
40								

NOTES
WATER LEVELS
INSTRUMENTATION

0.0-34.0 ft.
Drilling conducted with 6 1/4 in. ID hollow stem augers
34.0-235.0 ft.
Borehole drilled with 5 7/8 in. bit using compressed air

DEPTH SCALE: 1:2
DRILLING CONTRACTOR: LAYNE-WESTERN
DRILLER: M. VOGT

LOGGED: M. HIRT
CHECKED: R. BOOTH
DATE: 3/9/95

Golder Associates

RECORD OF DRILLHOLE PZ-100-SD

Sheet 2 of 2

PROJECT: LAIDLAW/RI-FS
PROJECT NO: 943-2848
LOCATION: BRIDGETON, MO

BORING METHOD: NX Core & water
DRILLING DATE: 2/22/95
DRILL RIG: SCHRAMM

DATUM: MSL
COORDINATES N: 1066851.8
AZIMUTH: 0

COLLAR ELEV: 484.3
E: 517195.4
INCLINATION: -90

J-Joint, F-Fault, S-Shear, B-Bedding, F-Foliation
PL-Planar, C-Curved, U-Undulating, ST-Stepped, I-Irregular
P-Polished, K-Slickensided, SM-Smooth, R-Rough, VR-V. Rough
Fe-Fe Oxide, CL-Clay Infill, CH-Chlorite, H-Healed, GRF-Gravel Filled

DEPTH SCALE (FEET)	DESCRIPTION	GRAPHIC LOG	ELEV / DEPTH (FT)	RUN NO.	CORE RECOVERY	RQD	FRACTURES PER FOOT	DISCONTINUITY DATA: DIP wrt CORE AXIS	DISCONTINUITY DATA: TYPE AND SURFACE DESCRIPTION	GRAPHIC LOG	WEATHERING INDEX: SW FR, MW, HW, CW	STRENGTH INDEX: R6, R5, R4, R3, R2, R1	POINT LOAD INDEX (psi): R1 <30, R2 30-150, R3 150-300, R4 300-600, R5 600-1500, R6 >1500	TEST ORIENTATION	NOTES WATER LEVELS INSTRUMENTATION
240	237.3-242.4 ft. Fresh, thickly bedded, pale yellowish brown (10YR 6/2), m-c grained, medium strong, BIOCLASTIC LIMESTONE, (SALEM FORMATION)								J,I,SM						
242	240.9-214.3 ft. Fossiliferous, stylolitic 241.3-241.7 ft. Thinly laminated 242.1-242.4 ft. Thinly laminated 242.4-245.3 ft. Fresh, thickly bedded, light gray (N7), very coarse grained, medium strong, ARENACEOUS LIMESTONE (SALEM FORMATION)			1	97%										
244									J,U,R						
			238.00												
	245.3-246.0 ft. Fresh, thickly bedded, olive gray (5Y 4/1), very fine grained, medium strong, (WARSAW FORMATION)		245.30	2	100 %										
248			238.30 248.00												
	End of Record of Drillhole at 246.0 ft.														
248															
250															
252															
254															
258															

DEPTH SCALE: 1:2
DRILLING CONTRACTOR: LAYNE-WESTERN
DRILLER: M. VOGT

LOGGED: M. HIRT
CHECKED: R. BOOTH
DATE: 3/9/95

Golder Associates

Well No. PZ-100-SD

Boring No. X-Ref: PZ-100-SD

PIEZOMETER WELL CONSTRUCTION SUMMARY

Survey Coords: Northing: 1088852 ft. Easting: 517195 ft.

Elevation Ground Level 484.4 ft. NGVD

Top of PVC Casing 485.82 ft. NGVD

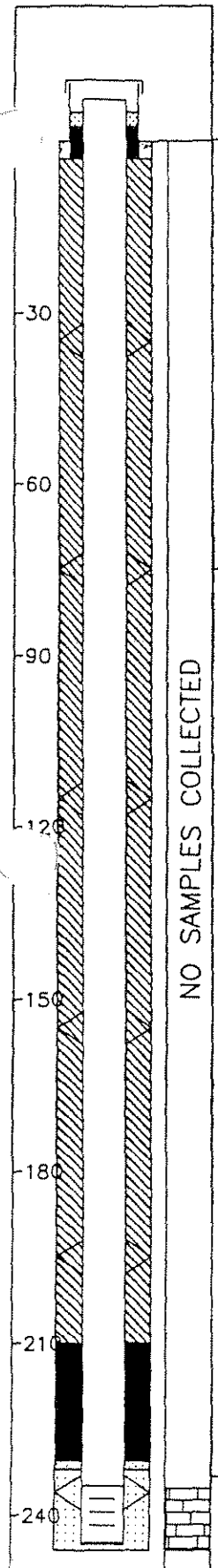

Drilling Summary:

Total Depth 246.0 ft.

Borehole Diameter 10 1/4 in. (0.0-51.0 ft.) 5 7/8 in. (51.0-246.0 ft.)

Casing Stickup Height 1.47 ft.

Driller Layne-Western, St. Louis, MO

Rig CME 75, Schramm Portadrill T660H

Bit(s) 6 1/4 in. ID Hollow Stem Auger Bit, NX Core, 5 7/8 in. Button Bit for Reaming

Drilling Fluid Auger-None, NX Core Water, Air Rotary

Protective Casing 8x8 in. Square Steel, by 5 ft. long

Construction Time log:

Task	Start Date	Start Time	Finish Date	Finish Time
Drilling				
CME 75	1/25/95	14:00	1/25/95	14:45
Schramm Rotary	2/21/95	8:30	2/22/95	15:00
Geophys.Logging:				
Casing:	2/23/95	9:50	2/23/95	10:15
Filter Placement:	2/23/95	10:35	2/23/95	11:40
Cementing:				
Development				
Bentonite Grout	2/23/95	13:45	2/23/95	15:30
Bentonite Seal	2/23/95	13:15	2/23/95	13:45

Well Design & Specifications

Basis: Geologic Log X Geophysical Log

Casing string(s): C = Casing S = Screen

Depth			String(s)	Elevation		
+ 1.47	-	234.80	C1	485.82	-	249.55
234.80	-	244.60	S1	249.55	-	239.75
244.60	-	244.93	C2	239.75	-	239.42
	-				-	
	-				-	
	-				-	

Casing: C1 2 in. dia. Schedule 80 PVC, flush threaded with O-rings

C2 2 in. dia. threaded PVC end cap (4 in. long or 0.33 ft.)

Screen: S1 2 in. dia. Schedule 80 PVC, 0.010 in. machine cut slot, flush threaded with O-rings

Sand Pack: 16-35 mesh Silica Sand, 232.0-246. ft.

Filter Pack: Less than 50 mesh Silica Sand, 230.5-232.0 ft.

Grout Seal: Wyo-Ben Grout Well Bentonite Slurry, 3.0-210.0 ft.

Bentonite Seal: Extra high yield Wyo-Ben (100%) Slurry, 210.0-230.5 ft.

Concrete: 0.0-3.0 ft.

Well Development

Stabilization Test Data:

Time	pH	Spec. Cond.	Temp (°C)

Recovery Data:

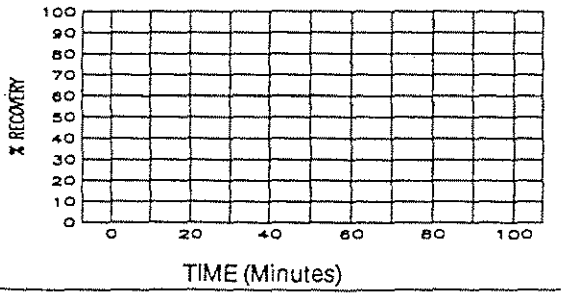

Comments:

Not to Scale

Supervised by B. Tilton

Job Number 943-2848

Site LAIDLAW/OU2 RI-FS/MO

File Name PZ100SD

661574

MISSOURI DEPARTMENT OF NATURAL RESOURCES
DIVISION OF GEOLOGY AND LAND SURVEY

MONITORING WELL CERTIFICATION RECORD

OFFICE USE ONLY	
REF NO 15081	DATE RECEIVED
ROUTE	CHECK NO
STATE WELL NUMBER	TRANSMITTAL NO.
CHECKED BY	CROSS REFERENCE NO.
APPROVED BY	ENTERED Ph 1 Ph 2 Ph 3
	DATE APPROVED

INFORMATION SUPPLIED BY OWNER

SITE NAME	WELL NUMBER
LAIDLAW BRIDGETON SANITARY LANDFILL	PZ-100-SD

SITE ADDRESS	CITY	STATE	ZIP CODE
ST. CHARLES ROCK RD.	BRIDGETON	MO	63044

NAME	TELEPHONE
LAIDLAW WASTE SYSTEMS, INC.	314-241-3710

ADDRESS	CITY	STATE	ZIP CODE
1138 N. BROADWAY	ST. LOUIS	MO	63102

INFORMATION SUPPLIED BY MONITORING WELL CONTRACTOR

LOCATION OF WELL SHOW LOCATION IN SECTION PLAT

COUNTY ST. LOUIS
ELEVATION 484.35
AREA NO

SMALLEST ¼ ____ ¼ ____ ¼ ____ LARGEST ¼

SEC. ____ TWN. 47 N,RNG. 5 E OR W

LAT. 38° 46' 09" LONG. 90° 26' 23"

SKETCH THE LOCATION TO THE WELL INCLUDING MILEAGE ON ALL ROADS TRAVELED FROM NEAREST TOWNS OR HIGHWAYS

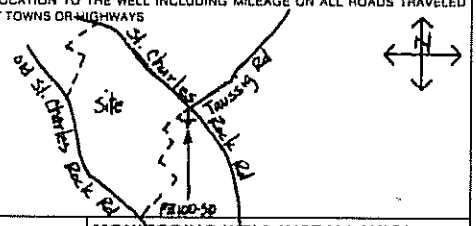

DESCRIBE LOCATION OF THE WELL SO WE WOULD BE ABLE TO VISIT IT

MONITORING WELL INSTALLATION CONTRACTOR'S NAME
LAYNE WESTERN CO., INC.

DRILLING CONTRACTOR'S NAME
LAYNE WESTERN CO, INC.

NOTE: Record the fraction of a foot in decimal, not in inches.

Top of Riser Elevation: 485.82

LOCKING CAP - (Y) N (Circle one)
CAP VENT (Y) N (Circle one)

PROTECTIVE CASING
Type: STEEL
Size: 8"x8"x5'
Bore Hole Diameter: 10.25"
WEEP HOLE - Y / N (Circle one)

Ground Surface Elevation: 484.35 Ft

Information in this column to be supplied in the Feet from Surface column	Feet from Surface	Description of Formation
		0-13 Clay
Depth to bottom of Protective Casing Seal:	3	
		13-36 Silt
		36-88 Limestone
		88-94 Shale
		94-143 Dolomite
		143-159 Limestone
		159-165 Dolomite
		165-210 Limestone
Depth to Base of Annular Seal:	210.0	
		210-234 Dolomite
Depth to Base of Bentonite Seal:	230.5	
Depth to Base of Secondary Filter Pack:	232.0	
Depth to Top of the Screen:	234.8	
		234-246 Limestone
Depth to Bottom of the Screen:	244.8	
Plug Back Total Depth:		
Original Total Depth:	246.0	

PROTECTIVE CASING SEAL
Type: [X] Concrete [ ] Cement Slurry

RISER PIPE
Length: 236.27'
Diameter: 2"
Type of Material: SCH80 PVC

BOREHOLE DIAMETER: 5 7/8 in.

ANNULAR SEAL
Type: [X] Bentonite Slurry [ ] Cement Slurry [ ] Non Slurry Bentonite

BENTONITE SEAL
Type: [X] Bentonite Slurry [ ] Non Slurry Bentonite
Length of Seal: 20.5 Ft.

SECONDARY FILTER PACK (Optional)
Type: [X] Sand [ ] Manufactured
Grain Size: SUGAR
Length: 1.5'

PRIMARY FILTER PACK
Type: [X] Sand [ ] Manufactured
Grain Size: 2440
Length: 14'

WELL SCREEN
Length: 10'
Slot Size: 0.010"
Type: SCH.80 PVC

SUMP DETAILS
Length: 0.3 Ft.
Diameter: 2 In.
Type: PVC

TYPE OF BACKFILL: SAND

TYPE OF INSTALLATION
[X] ABOVE GROUND [ ] FLUSH MOUNT

STATIC WATER LEVEL
FEET FROM MEASURING POINT

DATE OF STATIC WATER LEVEL

ELEVATION OF MEASURING POINT

MEASURING POINT IS
[X] TOP OF RISER PIPE
[ ] OTHER

DRILLING EQUIPMENT
[X] AIR ROTARY [X] AUGER TYPE 6¼ H.S.A.
[ ] REVERSE ROTARY [ ] OTHER

CENTRALIZERS USED
[X] YES, AT 5 TOTAL
[ ] STAINLESS STEEL
[ ] OTHER
[ ] NO

MULTIPLE CASED WELLS
SUBMIT ADDITIONAL AS BUILT DIAGRAM SHOWING WELL CONSTRUCTION DETAILS INCLUDING TYPE AND SIZE OF ALL CASING, HOLE DIAMETERS, AND GROUT USED.

DATE WELL CONSTRUCTION WAS COMPLETED
2-28-95

I HEREBY CERTIFY THAT THE MONITORING WELL HEREIN DESCRIBED WAS CONSTRUCTED IN ACCORDANCE WITH THE DEPARTMENT OF NATURAL RESOURCES REQUIREMENTS FOR THE CONSTRUCTION OF MONITORING WELLS.

SIGNATURE (MONITORING WELL CONTRACTOR)
Michael P. Vogt

PERMIT NUMBER	DATE
001256 WM	4-11-95

SIGNATURE (DRILLING CONTRACTOR)
Michael P. Vogt

PERMIT NUMBER	DATE
001256 WM	4-11-95

MO 780-1415 (2-94) DISTRIBUTION: WHITE-DIVISION CANARY-MONITORING WELL CONTRACTOR PINK-OWNER

RECORD OF DRILLHOLE PZ-100-SS

Sheet 1 of 2

PROJECT: LAIDLAW/RI-FS
PROJECT NO: 943-2848
LOCATION: BRIDGETON, MO

BORING METHOD: NX Core & water
DRILLING DATE: 2/24/95
DRILL RIG: SCHRAMM

DATUM: MSL
COORDINATES N: 1068867.81
AZIMUTH: 0

COLLAR ELEV: 484.35
E: 517175.03
INCLINATION: -90

J-Joint, F-Fault, S-Shear, B-Bedding, F-Foliation
PL-Planar, C-Curved, U-Undulating, ST-Stepped, I-Irregular
P-Polished, K-Slickensided, SM-Smooth, R-Rough, VR-V. Rough
Fe-Fe Oxide, CL-Clay Infill, CH-Chlorite, H-Healed, GRF-Gravel Filled

DEPTH SCALE (FT)	DESCRIPTION	GRAPHIC LOG	ELEV / DEPTH (FT)	RUN NO.	CORE RECOVERY	RQD	FRACTURES PER FOOT	DISCONTINUITY DATA: DIP wrt CORE AXIS	DISCONTINUITY DATA: TYPE AND SURFACE DESCRIPTION	DISCONTINUITY DATA: GRAPHIC LOG	WEATHERING INDEX: FR, SW, MW, HW, CW	STRENGTH INDEX: R6, R5, R4, R3, R2, R1, RT	POINT LOAD INDEX (psi): 30, R2 150, R3 300, R4 600, R5 1500, R6	TEST ORIENTATION	NOTES, WATER LEVELS, INSTRUMENTATION
64	0.0-78.9 ft. No sampling conducted See Record of Drillhole for PZ-100-KS														0.0-51.0 ft. Drilling conducted with 6 1/4 in. ID hollow stem auger, then borehole advanced to 78.9 ft. with 5 7/8 in. air rotary bit
66															
68															
70															
72															
74															
76															
78															
	405.45 78.9-81.8 ft. 78.90 Moderately weathered, medium bedded, light brownish gray (5Y 6/1), fine grained, strong, ARENACEOUS DOLOMITE, open vugs (<1/2 mm), (ST. LOUIS FORMATION)		405.45 78.90	1	100 %										
80															

DEPTH SCALE: 1:2
DRILLING CONTRACTOR: LAYNE-WESTERN
DRILLER: M. VOGT

LOGGED: B. TILTON
CHECKED: R. BOOTH
DATE: 3/9/95

Golder Associates

RECORD OF DRILLHOLE PZ-100-SS

Sheet 2 of 2

PROJECT: LAIDLAW/RI-FS
PROJECT NO: 943-2648
LOCATION: BRIDGETON, MO

BORING METHOD: NX Core & water
DRILLING DATE: 2/24/95
DRILL RIG: SCHRAMM

DATUM: MSL
COORDINATES N: 1068867.81
AZIMUTH: 0

COLLAR ELEV: 484.35
E: 517175.03
INCLINATION: -90

J-Joint, F-Fault, S-Shear, B-Bedding, F-Foliation
PL-Planar, C-Curved, U-Undulating, ST-Stepped, I-Irregular
P-Polished, K-Slikensided, SM-Smooth, R-Rough, VR-V. Rough
Fe-Fe Oxide, CL-Clay Infill, CH-Chlorite, H-Healed, GRF-Gravel Filled

DEPTH SCALE	DESCRIPTION	GRAPHIC LOG	ELEV / DEPTH (FT)	RUN NO.	CORE RECOVERY	ROD	FRACTURES PER FOOT	DISCONTINUITY DATA: DIP w/r CORE	DISCONTINUITY DATA: AXIS	DISCONTINUITY DATA: TYPE AND SURFACE DESCRIPTION	GRAPHIC LOG	WEATHERING INDEX: FR, SW, MW, HW, CW	STRENGTH INDEX: R6, R5, R4, R3, R2, R1	POINT LOAD INDEX (psi): HT 30, R2 150, R3 300, R4 600, R5 1500, R6	TEST ORIENTATION	NOTES WATER LEVELS INSTRUMENTATION
80	78.9-81.8 ft. Moderately weathered, medium bedded, light brownish gray (5Y 6/1), fine grained, strong, ARENACEOUS DOLOMITE, open vugs (<1/2 mm.), (ST. LOUIS FORMATION)		402.55													
82	81.8-90.6 ft. Slightly weathered, thickly bedded, light olive gray (5Y 6/1), very finely crystalline, strong ARGILLACEOUS LIMESTONE, (ST. LOUIS FORMATION)		81.80	1	100%											
	Below 82.3 ft. Stylolites common									J,I,SM						
84	@ 83.9 and 84.5 ft. Chert zones (<2 in.)									J,P,SM						
	84.4-84.7 ft. Silicified and finely disseminated pyrite		399.65							J,P,SM						
	84.7-84.9 ft. Medium gray chert zone		84.70													
	85.1-85.5 ft. Olive gray (5Y 3/2), DOLOMITIC LIMESTONE layer, low porosity, vugs (<1/4 mm)		399.25 85.10 398.85 85.50													
86										J,C,SM,CL						
										J,C,SM						
				2	86%					J,I,R						
88																
			385.35							Core Loss						
			89.00													
90																
	90.6-94.0 ft. Moderately weathered, thickly bedded, light brownish gray (5Y 6/1), f-m grained, medium strong BIOCLASTIC LIMESTONE, (ST. LOUIS FORMATION)			3	100%					J,I,R						
92																
										J,I,R,CL						
			390.35													
94	End of Record of Drillhole at 94.0 ft.		94.00													2/25/95 @ 11:15 Completed drilling
96																

DEPTH SCALE: 1:2
DRILLING CONTRACTOR: LAYNE-WESTERN
DRILLER: M. VOGT

LOGGED: B. TILTON
CHECKED: R. BOOTH
DATE: 3/9/95

Golder Associates

Well No. PZ-100-SS

Boring No. X-Ref: PZ-100-SS

PIEZOMETER CONSTRUCTION SUMMARY

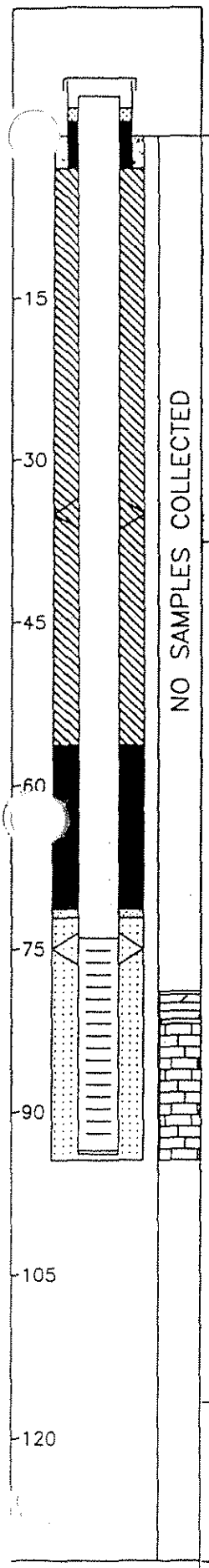

Not to Scale

Survey Coords: Northing: 1068868 ft. Easting: 517175 ft.

Elevation Ground Level 484.4 ft. NGVD

Top of PVC Casing 485.84 ft. NGVD

Drilling Summary:

Total Depth 94.5 ft.

Borehole Diameter 10 1/4 in. (0.0-51.0 ft.) 5 7/8 in. (51.0-94.5 ft.)

Casing Stickup Height 1.49 ft.

Driller Layne-Western, St. Louis, MO

Rig CME 75, Schramm Portadrill T660H

Bit(s) 6 1/4 in. ID Hollow Stem Auger Bit, NX Core, 5 7/8 in. Button Bit for Reaming

Drilling Fluid Auger-None, NX Core Water, Air Rotary

Protective Casing 8x8 in. Square Steel, by 5 ft. long

Construction Time log:

Task	Start Date	Start Time	Finish Date	Finish Time
Drilling				
CME 75	2/20/95	16:00	2/20/95	16:40
Schramm Rotary	2/24/95	7:30	2/25/95	11:30
Geophys.Logging:				
Casing:	2/25/95	11:30	2/25/95	11:45
Filter Placement:	2/25/95	11:45	2/25/95	12:30
Cementing:				
Development				
Bentonite Grout	2/25/95	12:50	2/25/95	14:00
Bentonite Seal	2/25/95	12:30	2/25/95	12:50

Well Design & Specifications

Basis: Geologic Log X Geophysical Log

Casing string(s): C = Casing S = Screen

Depth			String(s)	Elevation		
+ 1.49	-	73.96	C1	485.84	-	410.39
73.96	-	93.60	S1	410.39	-	390.75
93.60	-	93.93	C2	390.75	-	390.42

Casing: C1 2 in. dia. Schedule 80 PVC, flush threaded with O-rings

C2 2 in. dia. threaded PVC end cap (4 in. long or 0.33 ft.)

Screen: S1 2 in. dia. Schedule 80 PVC, 0.010 in. machine cut slot, flush threaded with O-rings

Sand Pack: 16-35 mesh Silica Sand, 72.1-94.5 ft.

Filter Pack: Less than 50 mesh Silica Sand, 71.3-72.1 ft.

Grout Seal: Wyo-Ben Grout Well Bentonite Slurry, 3.0-56.3 ft.

Bentonite Seal: Extra high yield Wyo-Ben (100%) Slurry, 56.3-71.3 ft.

Concrete: 0.0-3.0 ft.

Well Development

Stabilization Test Data:

Time	pH	Spec. Cond.	Temp (°C)

Recovery Data:

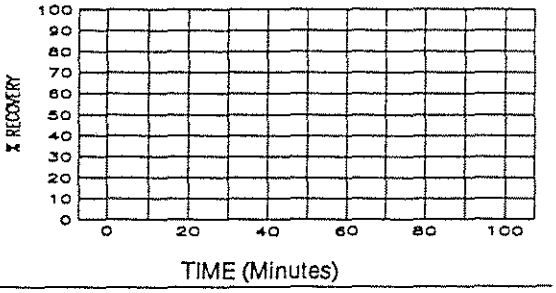

Comments:

Supervised by B. Tilton

Job Number 943-2848

Site LAIDLAW/OU2 RI-FS/MO

File Name PZ100SS

661574

MISSOURI DEPARTMENT OF NATURAL RESOURCES
DIVISION OF GEOLOGY AND LAND SURVEY

MONITORING WELL CERTIFICATION RECORD

OFFICE USE ONLY	DATE RECEIVED
REF. NO. 115082	CHECK NO.
ROUTE	TRANSMITTAL NO.
STATE WELL NUMBER	CROSS REFERENCE NO.
CHECKED BY	ENTERED Ph 1 Ph 2 Ph 3
APPROVED BY	DATE APPROVED

INFORMATION SUPPLIED BY OWNER

SITE NAME	WELL NUMBER
LAIDLAW BRIDGETON SANITARY LANDFILL	PZ-100-55

SITE ADDRESS	CITY	STATE	ZIP CODE
ST. CHARLES ROCK RD.	BRIDGETON	MO.	63044

NAME	TELEPHONE
LAIDLAW WASTE SYSTEMS, INC.	314-344-3710

ADDRESS	CITY	STATE	ZIP CODE
1838 N. BROADWAY	ST. LOUIS	MO.	63102

INFORMATION SUPPLIED BY MONITORING WELL CONTRACTOR

LOCATION OF WELL SHOW LOCATION IN SECTION PLAT

COUNTY: ST. LOUIS
ELEVATION: 434.35
AREA NO.:

SMALLEST ¼ ____ ¼ ____ ¼ ____ ¼ LARGEST ¼

SEC. ____ TWN. 47 N,RNG. 5 E OR W

LAT. 38 ° 46 ' 09 " LONG. 90 ° 30 ' 29 "

SKETCH THE LOCATION TO THE WELL INCLUDING MILEAGE ON ALL ROADS TRAVELED FROM NEAREST TOWNS OR HIGHWAYS

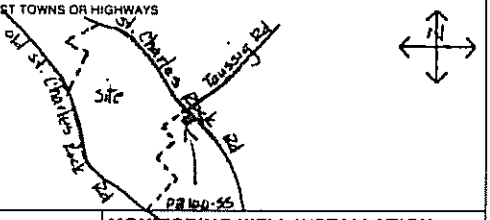

DESCRIBE LOCATION OF THE WELL SO WE WOULD BE ABLE TO VISIT IT

MONITORING WELL INSTALLATION CONTRACTOR'S NAME

LAYNE WESTERN CO., INC.

DRILLING CONTRACTOR'S NAME

LAYNE WESTERN CO, INC

TYPE OF INSTALLATION
☒ ABOVE GROUND ☐ FLUSH MOUNT

STATIC WATER LEVEL
FEET FROM MEASURING POINT

DATE OF STATIC WATER LEVEL

ELEVATION OF MEASURING POINT

MEASURING POINT IS
☐ TOP OF RISER PIPE
☐ OTHER

DRILLING EQUIPMENT
☒ AIR ROTARY ☒ AUGER TYPE 6¼ H.S.A.
☐ REVERSE ROTARY ☐ OTHER

CENTRALIZERS USED
☒ YES, AT 3 TOTAL
☐ STAINLESS STEEL
☐ OTHER
☐ NO

MULTIPLE CASED WELLS
SUBMIT ADDITIONAL AS BUILT DIAGRAM SHOWING WELL CONSTRUCTION DETAILS INCLUDING TYPE AND SIZE OF ALL CASING, HOLE DIAMETERS, AND GROUT USED.

DATE WELL CONSTRUCTION WAS COMPLETED
2-25-95

I HEREBY CERTIFY THAT THE MONITORING WELL HEREIN DESCRIBED WAS CONSTRUCTED IN ACCORDANCE WITH THE DEPARTMENT OF NATURAL RESOURCES REQUIREMENTS FOR THE CONSTRUCTION OF MONITORING WELLS.

SIGNATURE (MONITORING WELL CONTRACTOR) Michael J. Vogl
PERMIT NUMBER 001256 WIIA DATE 4-11-95

SIGNATURE (DRILLING CONTRACTOR) Michael J. Vogl
PERMIT NUMBER 001256 WIIA DATE 4-11-95

NOTE: Record the fraction of a foot in decimal, not in inches.

Top of Riser Elevation: 435.84

LOCKING CAP - Y / N (Circle one)
CAP VENT - Y / N (Circle one)
PROTECTIVE CASING Type: STEEL Size: 8" x 6" x 5' Bore Hole Diameter: 10.25"
WEEP HOLE - Y / N (Circle one)

Ground Surface Elevation: 434.35 Ft.

Information in this column to be supplied in the Feet from Surface column	Feet from Surface	Description of Formation
		0-31 Silty clay
Depth to bottom of Protective Casing Seal:	3	
		31-51 Sand & gravel
Depth to Base of Annular Seal:	36.3	
		51-71.5 Limestone
Depth to Base of Bentonite Seal:	71.3	
Depth to Base of Secondary Filter Pack:	72.1	
Depth to Top of the Screen:	73.6	
Depth to Bottom of the Screen:	93.6	
Plug Back Total Depth:		
Original Total Depth:	111.5	

PROTECTIVE CASING SEAL Type: ☒ Concrete ☐ Cement Slurry
RISER PIPE Length: 75.09' Diameter: 2" Type of Material: SCH80 PVC
BOREHOLE DIAMETER: 5⅞ In.
ANNULAR SEAL Type: ☒ Bentonite Slurry ☐ Cement Slurry ☐ Non Slurry Bentonite
BENTONITE SEAL Type: ☒ Bentonite Slurry ☐ Non Slurry Bentonite Length of Seal: 15 Ft.
SECONDARY FILTER PACK (Optional) Type: ☒ Sand ☐ Manufactured Grain Size: SUGAR Length: 0.8
PRIMARY FILTER PACK Type: ☒ Sand ☐ Manufactured Grain Size: 20/40 Length: 33.4
WELL SCREEN Length: 20' Slot Size: 0.010 Type: SCH80 PVC
SUMP DETAILS Length: 0.3 Ft. Diameter: 2 In. Type: PVC
TYPE OF BACKFILL: SAND

MO 780-1415 (2-94)

DISTRIBUTION: WHITE-DIVISION CANARY-MONITORING WELL CONTRACTOR PINK-OWNER

LAIDLAW WASTE SYSTEMS INC.

SOIL BOREHOLE LOG

SITE NAME AND LOCATION	DRILLING METHOD:					BORING NO.
	4.25 inch I.D. Hollow Stem Auger					PZ-101-SS
						SHEET 1 OF 1
	SAMPLING METHOD:					DRILLING
LAIDLAW/OU2 RI-FS/MO WEST LAKE LANDFILL OPERABLE UNIT 2	SPLIT SPOON: 2.0 inch O.D./1.5 inch I.D. (SP)					START / FINISH
	SHELBY TUBE: 3.0 inch O.D./2 13/16 inch I.D. (SH)					START / FINISH
	WATER LEVEL					TIME 13:35 / TIME 14:30
	TIME					
	DATE					DATE 2/23/95 / DATE 2/23/95
NORTHING: 1068472.89 DATUM EASTING: 516622.94 ELEVATION 474.9	CASING DEPTH					

DRILL RIG CME 75 - TRUCK MOUNT | SURFACE CONDITIONS

ANGLE BEARING

SAMPLE HAMMER

DEPTH IN FEET (ELEVATION)	BLOW/ 6 IN. ON SAMPLER	RECOVERY	SYMBOL	SAMPLER SYMBOL	SAMPLE NUMBER AND DESCRIPTION OF MATERIAL	SAMPLER TYPE	REMARKS
1	2 2 3 3	1.1'/2.0' (55%)			(0.0-0.2 ft.) Firm, olive gray (5Y 4/1), SILT, trace clay, NR, damp, (CL-ML), (LOESS) (0.2-2.7 Ft.) Firm, mottled dark yellowish brown (10YR 4/2), CLAYEY SILT, some roots, NR, damp, (CL-ML), (LOESS)	SP ①	
2							
3	5 4 5 4	1.6'/2.0' (80%)			(2.7-8.0 ft.) Firm, stiff, olive gray (5Y 3/2), CLAYEY SILT, NR, damp, (CL-ML), (LOESS)	SP ②	
4							
5	1 1 3 5	1.7'/2.0' (85%)				SP ③	
6		1.7'/2.0' (85%)					
7						SH ④	
8	1 3 6	1.7'/2.0' (85%)			(8.0-8.9 ft.) Stiff, mottled olive gray (5Y 3/2) and dark yellowish brown (10YR 4/2), CLAYEY SILT, NR, damp, (CL-ML), (LOESS)		Iron oxide staining from 8.0-14.0 ft.
9	6				(8.9-10.3 ft.) Stiff, mottled moderate yellowish brown (10YR 5/4) and dark yellowish brown (10YR 4/2), CLAYEY SILT, NR, damp, (CL-ML), (LOESS)	SP ⑤	
10							
11	5 5 5	1.7'/2.0' (85%)			(10.3-13.2 ft.) Stiff, mottled light olive gray (5Y 5/2) and moderate yellowish brown (10YR 4/2), CLAYEY SILT, NR, damp, (CL-ML), (LOESS)	SP ⑥	
12							
13	1 1 2 6	1.6'/2.0' (80%)			(13.2-14.0 ft.) Soft, dark greenish gray (5GY 4/1), CLAYEY SILT, NR, damp, (CL-ML), (LOESS) (460.9) 14.0	SP ⑦	
14					End of Soil Borehole Log at 14 ft. See PZ-101-SS Record of Drillhole for rock descriptions		Auger refusal at 14.0 ft.

DRILLING CONTR LAYNE-WESTERN

LOGGED BY M. HIRT CHK'D BY W. HERST

DATE 2/23/95

JOB NO.: 943-2848

FILENAME: PZ101SS

RECORD OF DRILLHOLE PZ-101-SS

Sheet 1 of 9

PROJECT: LAIDLAW/RI-FS
PROJECT NO: 943-2648
LOCATION: BRIDGETON, MO

BORING METHOD: NX Core & water
DRILLING DATE: 2/23/95-2/25/95
DRILL RIG: CME 75

DATUM: MSL
COORDINATES N: 1056472.9
AZIMUTH: 0

COLLAR ELEV: 474.6
E: 518622.9
INCLINATION: -90

ROCK TYPE

J-Joint, F-Fault, S-Shear, B-Bedding, F-Foliation
PL-Planar, C-Curved, U-Undulating, ST-Stepped, I-Irregular
P-Polished, K-Slickensided, SM-Smooth, R-Rough, VR-V. Rough
Fe-Fe Oxide, CL-Clay Infill, CH-Chlorite, H-Healed, GRF-Gravel Filled

DEPTH SCALE (Feet)	DESCRIPTION	GRAPHIC LOG	ELEV / DEPTH (FT)	RUN NO.	CORE RECOVERY	RQD	FRACTURES PER FOOT	DISCONTINUITY DATA: DIP wrt CORE AXIS	DISCONTINUITY DATA: TYPE AND SURFACE DESCRIPTION	DISCONTINUITY DATA: GRAPHIC LOG	WEATHERING INDEX (FR, SW, MW, HW, CW)	STRENGTH INDEX (R6, R5, R4, R3, R2, R1)	POINT LOAD INDEX (psi) (R1 30, R2 150, R3 300, R4 600, R5 1500, R6)	TEST ORIENTATION	NOTES WATER LEVELS INSTRUMENTATION
0	0.0-14.0 ft. See Soil Borehole Log PZ-101-SS														
2															
4															
6															
8															
10															
12															
14	460.80		460.80												
	14.0-27.6 ft. 14.00 Slightly weathered to fresh, medium bedded, very light gray (N8), medium grained, medium strong, LIMESTONE, (ST. LOUIS FORMATION) Brachiopod fossils, iron staining, 1 in. thick clay filled joint at 15.4 ft.		14.00	1	55%				Broken Zone Broken Zone						
16															

DEPTH SCALE: 1:2
DRILLING CONTRACTOR: LAYNE-WESTERN
DRILLER: D. MAHURIN

LOGGED: M. HIRT
CHECKED: R. BOOTH
DATE: 3/13/95

Golder Associates

RECORD OF DRILLHOLE PZ-101-SS

PROJECT: LAIDLAW/RI-FS
PROJECT NO: 943-2848
LOCATION: BRIDGETON, MO

BORING METHOD: NX Core & water
DRILLING DATE: 2/23/95-2/25/95
DRILL RIG: CME 75

DATUM: MSL
COORDINATES N: 1068472.9
AZIMUTH: 0

COLLAR ELEV: 474.6
E: 516822.9
INCLINATION: -90

J-Joint, F-Fault, S-Shear, B-Bedding, F-Foliation
PL-Planar, C-Curved, U-Undulating, ST-Stepped, I-Irregular
P-Polished, K-Slickensided, SM-Smooth, R-Rough, VR-V. Rough
Fe-Fe Oxide, CL-Clay Infill, CH-Chlorite, H-Healed, GRF-Gravel Filed

SCALE (FEET)	DESCRIPTION	GRAPHIC LOG	ELEV / DEPTH (FT)	RUN NO	CORE RECOVERY	RQD	FRACTURES PER FOOT	DISCONTINUITY DATA: DIP wrt CORE AXIS	DISCONTINUITY DATA: TYPE AND SURFACE DESCRIPTION	GRAPHIC LOG	WEATHERING INDEX	STRENGTH INDEX	POINT LOAD INDEX [psi]	TEST ORIENTATION	NOTES WATER LEVELS INSTRUMENTATION
16	14.0-27.6 ft. Slightly weathered to fresh, medium bedded, very light gray (N8), medium grained, medium strong, LIMESTONE, (ST. LOUIS FORMATION) Stylolitic			1	55%				Core Loss						Core loss due to highly fractured rock
			458.60												
18			16.00						J,I,R,Fe (2)						
									J,I,R,Fe (2)						
									J,I,R,Fe (2)						
									J,I,R (2)						
									J,I,R						
									J,I,R						
									J,I,R						
									J,I,R						
20									J,I,R (2)						
									J,I,R						
									J,I,R						
									J,I,R,CL (3)						
				2	100				J,I,R,CL (2)						
									J,I,R,CL (2)						
22									J,I,R,CL (2)						
									J,I,R,CL						
									J,I,R						
									J,I,SM						
									J,I,R,CL						
24									J,I,R,CL						
			450.30												
			24.50						J,ST,R,Fe						
									J,I,R,CL (3)						
26									J,I,R,CL (2)						
									J,I,SM,CL (3)						
				3	96%				J,I,SM,CL						
	27.6-40.5 ft. Fresh, medium bedded, very light gray (N8), very fine grained, medium strong, LIMESTONE, (ST. LOUIS FORMATION) Some braciopod fossils								J,U,SM,CL						
28									J,I,R,CL						
									J,PL,SM,CL (2)						
									J,I,R,CL						
									J,I,SM,CL (2)						
									J,I,SM,CL (2)						
			445.30												
			29.50						J,I,SM (2)						
30									J,U,SM						
				4	98%				J,I,R						
									J,I,R,chert						
									J,PL,SM						
									J,I,R,CL (2)						
32									J,I,R (2)						

DEPTH SCALE: 1:2
DRILLING CONTRACTOR: LAYNE-WESTERN
DRILLER: D. MAHURIN

LOGGED: M. HIRT
CHECKED: R. BOOTH
DATE: 3/13/95

Golder Associates

RECORD OF DRILLHOLE PZ-101-SS

Sheet 3 of 9

PROJECT: LAIDLAW/RI-FS
PROJECT NO: 943-2848
LOCATION: BRIDGETON, MO

BORING METHOD: NX Core & water
DRILLING DATE: 2/23/95-2/25/95
DRILL RIG: CME 75

DATUM: MSL
COORDINATES N: 1068472.9
AZIMUTH: 0

COLLAR ELEV: 474.8
E: 516622.9
INCLINATION: -90

J-Joint, F-Fault, S-Shear, B-Bedding, F-Foliation
PL-Planar, C-Curved, U-Undulating, ST-Stepped, I-Irregular
P-Polished, K-Slikensided, SM-Smooth, R-Rough, VR-V. Rough
Fe-Fe Oxide, CL-Clay Infill, CH-Chlorite, H-Healed, GRF-Gravel Filled

SCALE DEPTH (FEET)	DESCRIPTION	GRAPHIC LOG	ELEV / DEPTH (FT)	RUN NO	CORE RECOVERY	RQD	FRACTURES PER FOOT	DISCONTINUITY DATA: DIP wrt CORE AXIS	DISCONTINUITY DATA: TYPE AND SURFACE DESCRIPTION	GRAPHIC LOG	WEATHERING INDEX	STRENGTH INDEX	POINT LOAD INDEX (psi)	TEST ORIENTATION	NOTES WATER LEVELS INSTRUMENTATION
32	27.6-40.5 ft. Fresh, medium bedded, very light gray (N8), very fine grained, medium strong, LIMESTONE, (ST. LOUIS FORMATION)								J,PL,SM,CL						
	32.7 ft. Calcite and pyrite crystals								J,PL,R (2)						
	33.8 ft. Chert nodule								J,PL,SM						
34	34.1 ft. Crinoid fossils								J,PL,SM						
	35.0-35.6 ft. Moderately weathered														
				4	98%				J,PL,SM,CL						
36	36.1 ft. Stylolitic														
	37.7-40.5 ft. Large chert nodules								J,I,R (2)						
									J,U,SM,CL						
									J,I,SM						
			435.30						J,I,SM						
			39.50												
40	40.3-40.5 ft. Joints intersecting large chert nodules, some pyrite								J,I,R (2)						
	40.5-50.2 ft. Fresh, medium bedded, very light gray (N8) to light gray (N7), m-c grained, medium strong, LIMESTONE, (ST. LOUIS FORMATION)								J,PL,R						
42	42.2-45.1 ft. Stylolitic														
				5	100%				J,I,R						
44									J,I,R						
									J,I,R (2)						
									J,I,R (3)						
46									J,PL,R (4)						
									J,PL,R (2)						
	47.5-49.3 ft. Stylolitic														
48															

DEPTH SCALE: 1:2
DRILLING CONTRACTOR: LAYNE-WESTERN
DRILLER: D. MAHURIN

LOGGED: M. HIRT
CHECKED: R. BOOTH
DATE: 3/13/95

Golder Associates

RECORD OF DRILLHOLE PZ-101-SS

PROJECT: LAIDLAW/RI-FS
PROJECT NO: 943-2848
LOCATION: BRIDGETON, MO

BORING METHOD: NX Core & water
DRILLING DATE: 2/23/95-2/25/95
DRILL RIG: CME 75

DATUM: MSL
COORDINATES N: 1068472.9
AZIMUTH: 0

COLLAR ELEV: 474.8
E: 516622.9
INCLINATION: -90

J-Joint, F-Fault, S-Shear, B-Bedding, F-Foliation
PL-Planar, C-Curved, U-Undulating, ST-Stepped, I-Irregular
P-Polished, K-Slickensided, SM-Smooth, R-Rough, VR-V. Rough
Fe-Fe Oxide, CL-Clay Infill, CH-Chlorite, H-Healed, GRF-Gravel Filled

DEPTH SCALE (FEET)	ROCK TYPE DESCRIPTION	GRAPHIC LOG	ELEV DEPTH (FT)	RUN NO	CORE RECOVERY	RQD (80 60 40 20)	FRACTURES PER FOOT (2 4 6 8 10)	DISCONTINUITY DATA: DIP wrt CORE AXIS (0 30 60 90)	TYPE AND SURFACE DESCRIPTION	GRAPHIC LOG	WEATHERING INDEX (SW FR MW HW CW)	STRENGTH INDEX (R6 R4 R3 R2 R1)	POINT LOAD INDEX (psi) (R1 30 R2 150 R3 300 R4 600 R5 1500 R6)	TEST ORIENTATION	NOTES WATER LEVELS INSTRUMENTATION
48	40.5-50.2 ft. Fresh, medium bedded, very light gray (N8) to light gray (N7), m-c grained, medium strong, LIMESTONE, (ST. LOUIS FORMATION)			5	100 %				J,I,R (2)						
	49.1 ft. Brachiopoda fossil		425.30 / 49.50						J,U,R						
									J,PL,R						
50	50.2-52.7 ft. Fresh, very thinly to medium bedded, medium light gray (N6) to medium gray (N5), coarse grained, medium strong, LIMESTONE, (ST. LOUIS FORMATION)								J,I,R (3)						
52	51.2-52.2 ft. Numerous calcite veins at 20 degrees to core axis in healed fractures														
	52.7-54.5 ft. Fresh, medium bedded, light olive gray (5Y 6/1), medium grained, medium strong, LIMESTONE, (ST. LOUIS FORMATION)								J,PL,SM						
									J,PL,SM						
									J,I,R						
54	420.30 / 54.50														
	54.5-58.0 ft. Slightly weathered, medium light olive gray (5Y 6/1), fine to medium grained, medium strong, DOLOMITE, (ST. LOUIS FORMATION) Very porous/vuggy, vugs <1 mm. in diameter			6	98%				J,I,R						
56															
58	58.0-61.9 ft. Fresh, medium bedded, light olive gray (5Y 6/1), fine grained, medium strong, ARENACEOUS DOLOMITE, (ST. LOUIS FORMATION)								J,I,SM						
			415.30 / 59.50												
	59.7-60.0 ft. Weahtered, crumbly chert								J,I,R (2)						
60	60.0-61.9 ft. Porous/vuggy (vugs < 1 mm.)								J,I,R						
	61.4 ft. Calcite filled (healed) fracture			7	100 %										
	412.90 / 61.90														
62	61.9-66.3 ft. Fresh, thickly bedded, light olive gray (5Y 6/1), fine grained, medium strong, ARENACEOUS LIMESTONE, (ST. LOUIS FORMATION)								J,PL,SM,CL						
									J,PL,R						
64															

DEPTH SCALE: 1:2
DRILLING CONTRACTOR: LAYNE-WESTERN
DRILLER: D. MAHURIN

LOGGED: M. HIRT
CHECKED: R. BOOTH
DATE: 3/13/95

Golder Associates

RECORD OF DRILLHOLE PZ-101-SS

Sheet 5 of 9

PROJECT: LAIDLAW/RI-FS
PROJECT NO: 943-2848
LOCATION: BRIDGETON, MO

BORING METHOD: NX Core & water
DRILLING DATE: 2/23/95-2/25/95
DRILL RIG: CME 75

DATUM: MSL
COORDINATES N: 1068472.9
AZIMUTH: 0

COLLAR ELEV: 474.8
E: 516822.9
INCLINATION: -90

J-Joint, F-Fault, S-Shear, B-Bedding, F-Foliation
PL-Planar, C-Curved, U-Undulating, ST-Stepped, I-Irregular
P-Polished, K-Slickensided, SM-Smooth, R-Rough, VR-V. Rough
Fe-Fe Oxide, CL-Clay Infill, CH-Chlorite, H-Healed, GRF-Gravel Filled

DEPTH SCALE (FEET)	DESCRIPTION	GRAPHIC LOG	ELEV / DEPTH (FT)	RUN NO.	CORE RECOVERY	RQD	FRACTURES PER FOOT	DISCONTINUITY DATA: DIP wrt CORE AXIS	DISCONTINUITY DATA: TYPE AND SURFACE DESCRIPTION	GRAPHIC LOG	WEATHERING INDEX	STRENGTH INDEX	POINT LOAD INDEX (psi)	TEST ORIENTATION	NOTES WATER LEVELS INSTRUMENTATION
64	61.9-66.3 ft. Fresh, thickly bedded, light olive gray (5Y 6/1), fine grained, medium strong, ARENACEOUS LIMESTONE, (ST. LOUIS FORMATION)		410.30 / 64.50	7	100 %				J,U,SM,CL						
66									J,I,R,CL						
	66.3-72.7 ft. Slightly weathered, medium to thickly bedded, light olive gray (5Y 6/1), fine grained, medium strong, LIMESTONE, (ST. LOUIS FORMATION) Very stylolitic, numerous chert nodules, slightly porous/vuggy (vugs <1 mm. in diameter)								J,ST,R,CL						
68									J,I,R						
70				8	100 %										
									J,I,R,CL						
72															
	402.10								J,I,R,CL						
	72.7-78.9 ft. Slightly weathered, medium bedded, pinkish gray (5YR 8/1) to light brownish gray (5YR 6/1), coarse grained, medium strong, ARENACEOUS DOLOMITE, (ST. LOUIS FORMATION)	72.70							J,PL,SM,CL						
74	74.0-74.3 ft. Crumbly texture, porous, limestone		400.30 / 74.50						J,I,SM						
	74.4 ft. Cross bedding								J,PL,SM,CL						
76	76.4-76.8 ft. Crystalline Limestone layer			9	100 %										
78	395.90														
	78.9-83.2 ft. Fresh, medium bedded, light brownish gray (5YR 6/1), medium grained, medium strong, LIMESTONE, (ST. LOUIS FORMATION) Stylolitic to 80.1 ft.	78.90							J,U,SM						
									J,U,SM						
80									J,I,R						

DEPTH SCALE: 1:2
DRILLING CONTRACTOR: LAYNE-WESTERN
DRILLER: D. MAHURIN

LOGGED: M. HIRT
CHECKED: R. BOOTH
DATE: 3/13/95

Golder Associates

RECORD OF DRILLHOLE PZ-101-SS

Sheet 6 of 9

PROJECT: LAIDLAW/RI-FS
PROJECT NO: 943-2848
LOCATION: BRIDGETON, MO

BORING METHOD: NX Core & water
DRILLING DATE: 2/23/95-2/25/95
DRILL RIG: CME 75

DATUM: MSL
COORDINATES N: 1068472.9
AZIMUTH: 0

COLLAR ELEV: 474.8
E: 516822.9
INCLINATION: -90

J-Joint, F-Fault, S-Shear, B-Bedding, F-Foliation
PL-Planar, C-Curved, U-Undulating, ST-Stepped, I-Irregular
P-Polished, K-Slickensided, SM-Smooth, R-Rough, VR-V. Rough
Fe-Fe Oxide, CL-Clay Infill, CH-Chlorite, H-Healed, GRF-Gravel Filled

DEPTH SCALE (FEET)	DESCRIPTION	GRAPHIC LOG	ELEV / DEPTH (FT)	RUN NO.	CORE RECOVERY	RQD	FRACTURES PER FOOT	DISCONTINUITY DATA: DIP w/r CORE AXIS	DISCONTINUITY DATA: TYPE AND SURFACE DESCRIPTION	GRAPHIC LOG	WEATHERING INDEX: FR, SW, MW, HW, CW	STRENGTH INDEX: R6, R5, R4, R3, R2, R1	POINT LOAD INDEX (psi): R1 30, R2 150, R3 300, R4 600, R5 1500, R6	TEST ORIENTATION	NOTES, WATER LEVELS, INSTRUMENTATION
80	78.9-83.2 ft. Fresh, medium bedded, light brownish gray (5YR 6/1), medium grained, medium strong, LIMESTONE, (ST. LOUIS FORMATION) 80.1-80.5 ft. Dolomite								J,PL,R,CL						
82				9	100 %										
	391.60														
	83.2-92.0 ft. Slightly weathered, thickly bedded, yellowish gray (5Y 7/2) to light olive gray (5Y 5/2), fine grained, medium strong, ARENACEOUS DOLOMITE, (ST. LOUIS FORMATION) Porous/vuggy (vugs <1 mm.)		83.20												
84			390.30												
			84.50												
86															
88															
	89.7-91.3 ft. Stylolitic 89.9-90.9 ft. Limestone (crystalline)			10	99%				J,PL,R J,PL,R J,ST,SM J,PL,R						
90															
	382.80														
92	92.0-94.5 ft. Fresh, thickly bedded, light olive gray (5Y 6/1), micro-crystalline, medium strong, LIMESTONE, (ST. LOUIS FORMATION)		92.00												
	93.9-94.1 ft. Thickly laminated														
94			380.30						J,PL,SM,CL						
	94.5-101.0 ft. Fresh, thickly bedded, pale yellowish brown (10YR 6/2), coarse to very coarse grained, strong, ARGILLACEOUS LIMESTONE, (ST. LOUIS FORMATION)		94.50												
				11	100 %										
96															

DEPTH SCALE: 1:2
DRILLING CONTRACTOR: LAYNE-WESTERN
DRILLER: D. MAHURIN

LOGGED: M. HIRT
CHECKED: R. BOOTH
DATE: 3/13/95

Golder Associates

RECORD OF DRILLHOLE PZ-101-SS

PROJECT: LA/DLAW/RI-FS
PROJECT NO: 943-2846
LOCATION: BRIDGETON, MO

BORING METHOD: NX Core & Water
DRILLING DATE: 2/23/95-2/25/95
DRILL RIG: CME 75

DATUM: MSL
COORDINATES N: 1068472.9
AZIMUTH: 0

COLLAR ELEV: 474.8
E: 516922.8
INCLINATION: -90

J-Joint, F-Fault, S-Shear, B-Bedding, F-Foliation
PL-Planar, C-Curved, U-Undulating, ST-Stepped, I-Irregular
P-Polished, K-Slickensided, SM-Smooth, R-Rough, VR-V. Rough
Fe-Fe Oxide, CL-Clay Infill, CH-Chlorite, H-Healed, GRF-Gravel Filled

SCALE (1" = FEET)	DESCRIPTION	GRAPHIC LOG	ELEV / DEPTH (FT)	RUN NO.	CORE RECOVERY	RQD	FRACTURES PER FOOT	DISCONTINUITY DATA: DIP wrt CORE AXIS	DISCONTINUITY DATA: TYPE AND SURFACE DESCRIPTION	GRAPHIC LOG	WEATHERING INDEX: SW FR, MW, HW, CW	STRENGTH INDEX: R6 R5 R4 R3 R2 R1	POINT LOAD INDEX (psi): R1 30, R2 150, R3 300, R4 600, R5 1500, R6	TEST ORIENTATION	NOTES WATER LEVELS INSTRUMENTATION
96	94.5-101.0 ft. Fresh, thickly bedded, pale yellowish brown (10YR 6/2), coarse to very coarse grained, strong, ARGILLACEOUS LIMESTONE, (ST. LOUIS FORMATION)								J,PL,SM						
	96.3 ft. Calcite crystals								J,PL,SM,CL						
98	97.1-97.3 ft. Moderately weahtered zone, thickly laminated								J,PL,SM						
	98.8-99.0 ft. Chert nodules														
100				11	100 %				J,PL,SM						
	100.7 ft. Calcite crystals								J,I,R						
	101.0-119.9 ft. Fresh, medium bedded, light olive gray (5Y 6/1), micro-crystalline, strong, LIMESTONE, (ST. LOUIS FORMATION)								J,I,SM						
102	101.7-103.0 ft. Stylolitic								J,PL,SM						
									J,PL,SM						
104	104.1-104.8 ft. Slightly weathered dolomite layer, porous/vuggy		370.30 / 104.50						J,PL,SM						
	104.8-106.2 ft. Stylolitic								J,I,R						
									J,I,R						
106	106.7-109.2 ft. Some arenaceous zones								J,PL,R						
108	107.8-108.3 ft. Bioturbated zone, some calcite crystallization			12	100 %				J,PL,SM						
110	110.1-111.5 ft. Slightly to moderately weathered dolomite, porous/vuggy								J,I,R						
112															

DEPTH SCALE: 1:2
DRILLING CONTRACTOR: LAYNE-WESTERN
DRILLER: D. MAHURIN

LOGGED: M. HIRT
CHECKED: R. BOOTH
DATE: 3/13/95

Golder Associates

RECORD OF DRILLHOLE PZ-101-SS

Sheet 8 of 9

PROJECT: LAIDLAW/RI-FS
PROJECT NO: 943-2848
LOCATION: BRIDGETON, MO

BORING METHOD: NX Core & water
DRILLING DATE: 2/23/95-2/25/95
DRILL RIG: CME 75

DATUM: MSL
COORDINATES N: 1068472.9
AZIMUTH: 0

COLLAR ELEV: 474.8
E: 516822.9
INCLINATION: -90

J-Joint, F-Fault, S-Shear, B-Bedding, F-Foliation
PL-Planar, C-Curved, U-Undulating, ST-Stepped, I-Irregular
P-Polished, K-Slickensided, SM-Smooth, R-Rough, VR-V. Rough
Fe-Fe Oxide, CL-Clay Infill, CH-Chlorite, H-Healed, GRF-Gravel Filled

SCALE (FEET)	DESCRIPTION	GRAPHIC LOG	ELEV / DEPTH (FT)	RUN NO.	CORE RECOVERY	RQD	FRACTURES PER FOOT	DISCONTINUITY DATA: DIP wrt CORE AXIS	DISCONTINUITY DATA: TYPE AND SURFACE DESCRIPTION	GRAPHIC LOG	WEATHERING INDEX	STRENGTH INDEX	POINT LOAD INDEX (psi)	TEST ORIENTATION	NOTES WATER LEVELS INSTRUMENTATION
112	101.0-119.9 ft. Fresh, medium bedded, light olive gray (5Y 6/1), micro-crystalline, strong, LIMESTONE, (ST. LOUIS FORMATION)														
	112.9-113.1 ft. Thinly laminated	361.20													
	113.1-113.2 ft. Bioturbated, calcite crystallization	113.60													
114	113.6-115.3 ft. Slightly to moderately weathered, dolomite, porous/vuggy		360.30												
			114.50	12	100 %			90	J,I,R,CL						
		359.50													
		115.30													
116	116.5 ft. Becoming fine to medium grained														
	116.6-117.7 ft. Some arenaceous laminae							90	J,PL,SM						
	118.3-118.7 ft. Stylolitic							90	J,PL,SM						
		354.90		13	100 %										
120	119.9-121.7 ft. Slightly weathered, medium bedded, light olive gray (5Y 6/1), fine grained, medium strong, ARGILLACEOUS DOLOMITE, (ST. LOUIS FORMATION) Porous/vuggy (<1 mm. in diameter)	119.90													
	121.7-125.0 ft. Slightly weathered, medium bedded, light olive gray (5Y 6/1), fine grained, strong, DOLOMITE, (ST. LOUIS FORMATION)														
124								90	J,I,R,CL						
			350.30												
			124.50												
		349.80													
	125.0-126.3 ft. Fresh, thinly bedded, light olive gray (5Y 6/1) to olive gray (5Y 4/1), interbedded microcrystalline and m-c grained, medium strong, LIMESTONE, (ST. LOUIS FORMATION)	125.00													
126								90	J,I,SM						
				14	98%			90	J,PL,SM,CL (2)						
								90	J,ST,SM						
128															

DEPTH SCALE: 1:2
DRILLING CONTRACTOR: LAYNE-WESTERN
DRILLER: D. MAHURIN

LOGGED: M. HIRT
CHECKED: R. BOOTH
DATE: 3/13/95

Golder Associates

RECORD OF DRILLHOLE PZ-101-SS

PROJECT: LAIDLAW/RI-FS
PROJECT NO: 943-2848
LOCATION: BRIDGETON, MO

BORING METHOD: NX Core & water
DRILLING DATE: 2/23/95-2/25/95
DRILL RIG: CME 75

DATUM: MSL
COORDINATES N: 1068472.9
AZIMUTH: 0

COLLAR ELEV: 474.8
E: 516822.9
INCLINATION: -90

J-Joint, F-Fault, S-Shear, B-Bedding, F-Foliation
PL-Planar, C-Curved, U-Undulating, ST-Stepped, I-Irregular
P-Polished, K-Slickensided, SM-Smooth, R-Rough, VR-V. Rough
Fe-Fe Oxide, CL-Clay Infill, CH-Chlorite, H-Healed, GRF-Gravel Filled

DEPTH SCALE (FEET)	DESCRIPTION	GRAPHIC LOG	ELEV / DEPTH (FT)	RUN NO.	CORE RECOVERY	ROD (80 60 40 20)	FRACTURES PER FOOT (2 4 6 8 16)	DISCONTINUITY DATA: DIP wrt CORE AXIS (0 30 60 90)	DISCONTINUITY DATA: TYPE AND SURFACE DESCRIPTION	GRAPHIC LOG	WEATHERING INDEX (SW FR MW HW CW)	STRENGTH INDEX (R5 R6 R4 R3 R2 R1)	POINT LOAD INDEX (psi) (R1 R2 30 R3 150 R4 300 R5 600 R6 1500)	TEST ORIENTATION	NOTES WATER LEVELS INSTRUMENTATION
128			346.50						J,PL,SM,CL						
	128.3-130.5 ft. Slightly weathered, medium bedded, light olive gray (5Y 6/1), fine grained, medium strong, ARENACEOUS DOLOMITE, (ST. LOUIS FORMATION)		128.30												
	129.3-130.3 ft. Porous/vuggy								J,I,R						
130			344.30												
	130.5-140.5 ft. Fresh, medium bedded, light olive gray (5Y 6/1), coarse grained, medium strong, LIMESTONE, (ST. LOUIS FORMATION)		130.50	14	99%				J,I,SM,CL						
132															
	133.5-133.9 ft. Stylolitic, bioturbated, calcite crystals								J,PL,SM						
134	133.9-135.3 ft. Microcrystalline		340.30												
	134.9-135.2 ft. Small pyrite crystals		134.50												
	135.0-135.1 ft. Large chert nodules														
	135.7-137.1 ft. Slightly weathered, some calcite crystals and stylolites								J,I,R,CL						
136									J,I,R,CL						
	137.1-138.9 ft. Stylolites														
	137.4-138.5 ft. Microcrystalline, arenaceous, thickly laminated			15	100%				J,I,SM						
138									J,PL,R						
140			334.30												
	End of Record of Drillhole at 140.5 ft.		140.50												
142															
44															

DEPTH SCALE: 1:2
DRILLING CONTRACTOR: LAYNE-WESTERN
DRILLER: D. MAHURIN

LOGGED: M. HIRT
CHECKED: R. BOOTH
DATE: 3/13/95

Golder Associates

Well No. PZ-101-SS

Boring No. X-Ref: PZ-101-SS

PIEZOMETER CONSTRUCTION SUMMARY

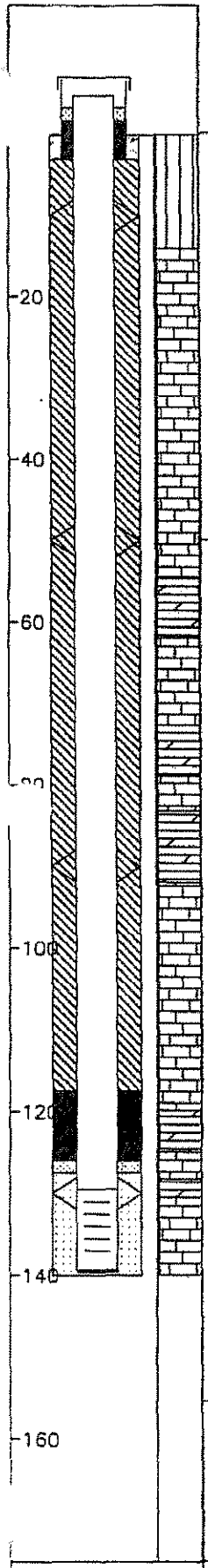

Not to Scale

Survey Coords: Northing: 1068473 ft. Easting: 516823 ft.

Elevation Ground Level 474.9 ft. NGVD

Top of PVC Casing 476.68 ft. NGVD

Drilling Summary:

Total Depth 140.0 ft.

Borehole Diameter 10 1/4 in. (0.0–14.0 ft.) 5 7/8 in. (14.0–140.0 ft.)

Casing Stickup Height 1.79 ft.

Driller Layne-Western, St. Louis, MO

Rig CME 75, Schramm Portadrill T660H

Bit(s) 6 1/4 in. ID Hollow Stem Auger Bit, NX Core, 5 7/8 in. Button Bit for Reaming

Drilling Fluid Auger–None, NX Core Water, Air Rotary

Protective Casing 8x8 in. Square Steel, by 5 ft. long

Construction Time log:

Task	Start Date	Start Time	Finish Date	Finish Time
Drilling				
CME 75	2/23/95	13:35	2/23/95	14:30
Schramm Rotary	3/6/95	8:15	3/6/95	9:45
Geophys.Logging:				
Casing:	3/6/95	9:50	3/6/95	10:10
Filter Placement:	3/6/95	10:20	3/6/95	10:50
Cementing:				
Development				
Bentonite Grout	3/6/95	11:30	3/6/95	12:30
Bentonite Seal	3/6/95	10:50	3/6/95	11:30

Well Design & Specifications

Basis: Geologic Log X Geophysical Log

Casing string(s): C = Casing S = Screen

Depth			String(s)	Elevation		
+ 1.79	–	129.48	C1	476.68	–	345.41
129.48	–	139.28	S1	345.41	–	335.61
139.28	–	139.61	C2	335.61	–	335.28

Casing: C1 2 in. dia. Schedule 80 PVC, flush threaded with O-rings

C2 2 in. dia. threaded PVC end cap (4 in. long or 0.33 ft.)

Screen: S1 2 in. dia. Schedule 80 PVC, 0.010 in. machine cut slot, flush threaded with O-rings

Sand Pack: 16-35 mesh Silica Sand, 127.5-140.0 ft.

Filter Pack: Less than 50 mesh Silica Sand, 126.0-127.5 ft.

Grout Seal: Wyo-Ben Grout Well Bentonite Slurry, 3.0-117.5 ft.

Bentonite Seal: Extra high yield Wyo-Ben (100%) Slurry, 117.5-126.0 ft.

Concrete: 0.0-3.0 ft.

Well Development

Stabilization Test Data:

Time	pH	Spec. Cond.	Temp (°C)

Recovery Data:

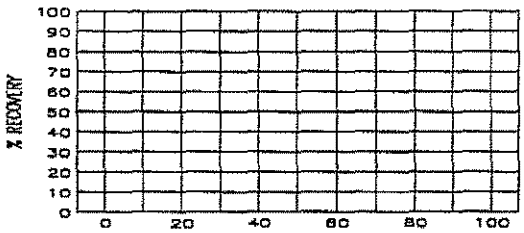

Comments:

Supervised by B. Tilton

Job Number 943-2848

Site LAIDLAW/OU2 RI-FS/MO

File Name PZ101SS

601574

MISSOURI DEPARTMENT OF NATURAL RESOURCES
DIVISION OF GEOLOGY AND LAND SURVEY

MONITORING WELL CERTIFICATION RECORD

OFFICE USE ONLY	
REF NO 15086	DATE RECEIVED
ROUTE	CHECK NO.
STATE WELL NUMBER	TRANSMITTAL NO.
CHECKED BY	CROSS REFERENCE NO.
APPROVED BY	ENTERED Ph 1 Ph 2 Ph 3
	DATE APPROVED

INFORMATION SUPPLIED BY OWNER

SITE NAME: LAIDLAW BRIDGETON SANITARY LANDFILL		WELL NUMBER: PZ-101-SS	
SITE ADDRESS: ST. CHARLES ROCK RD.	CITY: BRIDGETON	STATE: MO	ZIP CODE: 63044
NAME: LAIDLAW WASTE SYSTEMS, INC.		TELEPHONE: 314-341-3710	
ADDRESS: 1338 N. LINDBERGH	CITY: ST. LOUIS	STATE: MO	ZIP CODE: 63132

INFORMATION SUPPLIED BY MONITORING WELL CONTRACTOR

LOCATION OF WELL SHOW LOCATION IN SECTION PLAT

COUNTY: ST. LOUIS
ELEVATION: 474.7
AREA NO:

SMALLEST ¼ ____ ¼ ____ ¼ ____ LARGEST ¼

SEC. ____ TWN 47 N,RNG 5 E OR W

LAT. 38° 46' 06" LONG. 90° 16' 30"

SKETCH THE LOCATION TO THE WELL INCLUDING MILEAGE ON ALL ROADS TRAVELED FROM NEAREST TOWNS OR HIGHWAYS

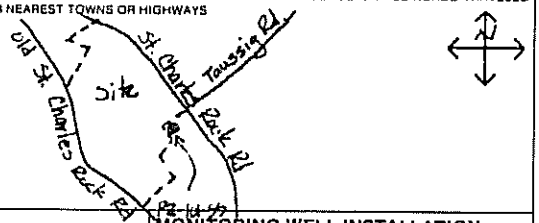

DESCRIBE LOCATION OF THE WELL SO WE WOULD BE ABLE TO VISIT IT

MONITORING WELL INSTALLATION CONTRACTOR'S NAME
LAYNE WESTERN CO, INC.

DRILLING CONTRACTOR'S NAME
LAYNE WESTERN CO, INC.

TYPE OF INSTALLATION: ☒ ABOVE GROUND ☐ FLUSH MOUNT

STATIC WATER LEVEL ____ FEET FROM MEASURING POINT

DATE OF STATIC WATER LEVEL

ELEVATION OF MEASURING POINT

MEASURING POINT IS ☐ TOP OF RISER PIPE ☐ OTHER

DRILLING EQUIPMENT: ☒ AIR ROTARY ☒ AUGER TYPE 6¼ H.S.A. ☐ REVERSE ROTARY ☐ OTHER

CENTRALIZERS USED: ☒ YES, AT 4 TOTAL ☐ STAINLESS STEEL ☐ OTHER ☐ NO

MULTIPLE CASED WELLS

SUBMIT ADDITIONAL AS BUILT DIAGRAM SHOWING WELL CONSTRUCTION DETAILS INCLUDING TYPE AND SIZE OF ALL CASING, HOLE DIAMETERS, AND GROUT USED.

DATE WELL CONSTRUCTION WAS COMPLETED: 3-06-95

I HEREBY CERTIFY THAT THE MONITORING WELL HEREIN DESCRIBED WAS CONSTRUCTED IN ACCORDANCE WITH THE DEPARTMENT OF NATURAL RESOURCES REQUIREMENTS FOR THE CONSTRUCTION OF MONITORING WELLS.

SIGNATURE (MONITORING WELL CONTRACTOR): Michael P. Vogt

PERMIT NUMBER	DATE
OW1256 WM1	4-11-95

SIGNATURE (DRILLING CONTRACTOR): Michael P. Vogt

PERMIT NUMBER	DATE
OW1256 WM1	4-11-95

NOTE: Record the fraction of a foot in decimal, not in inches

Top of Riser Elevation: 477.4

LOCKING CAP - Y / N (Circle one)
CAP VENT - Y / N (Circle one)
PROTECTIVE CASING Type: STEEL Size: 8"x8"x5' Bore Hole Diameter: 10.25"
WEEP HOLE - Y / N (Circle one)

Ground Surface Elevation: 474.1 Ft

Information in this column to be supplied in the Feet from Surface column	Feet from Surface	Description of Formation
		0-14 Silt
Depth to bottom of Protective Casing Seal:	3	
		14-55 Limestone
		55-62 Dolomite
		62-73 Limestone
		73-77 Dolomite
Depth to Base of Annular Seal:	117.5	77-84 Limestone
		84-73 Dolomite
Depth to Base of Bentonite Seal:	124	73-120 Limestone
Depth to Base of Secondary Filter Pack:	127.5	120-125 Dolomite
Depth to Top of the Screen:	127.5	
		125-142 Limestone
Depth to Bottom of the Screen:	137.5	
Plug Back Total Depth		
Original Total Depth:	142	

PROTECTIVE CASING SEAL Type: ☒ Concrete ☐ Cement Slurry

RISER PIPE Length: 132 Diameter: 2 Type of Material: SCH 80 PVC

BOREHOLE DIAMETER: 5⅞ In.

ANNULAR SEAL Type: ☒ Bentonite Slurry ☐ Cement Slurry ☐ Non Slurry Bentonite

BENTONITE SEAL Type: ☒ Bentonite Slurry ☐ Non Slurry Bentonite Length of Seal: 8.5 Ft.

SECONDARY FILTER PACK Type: ☒ Sand (Optional) ☐ Manufactured Grain Size: SUGAR Length: 1.5

PRIMARY FILTER PACK Type: ☒ Sand ☐ Manufactured Grain Size: 16-35 Length: 12.5

WELL SCREEN Length: 10' Slot Size: .010" Type: SCH 80 PVC

SUMP DETAILS Length: 0.3 Ft. Diameter: 2 In. Type: PVC

TYPE OF BACKFILL: SAND

MO 780-1415 (2-94) DISTRIBUTION: WHITE-DIVISION CANARY-MONITORING WELL CONTRACTOR PINK-OWNER

LAIDLAW WASTE SYSTEMS INC.

SOIL BOREHOLE LOG

SITE NAME AND LOCATION	DRILLING METHOD: 4.25 inch I.D. Hollow Stem Auger	BORING NO. PZ-102-SS
		SHEET 1 OF 3
LAIDLAW/OU2 RI-FS/MD WEST LAKE LANDFILL OPERABLE UNIT 2	SAMPLING METHOD: SPLIT SPOON: 2.0 inch O.D./1.5 inch I.D. (SP) SHELBY TUBE: 3.0 inch O.D./2 13/16 inch I.D. (SH)	DRILLING START: TIME 15:21, DATE 2/13/95 FINISH: TIME 17:33, DATE 2/13/95
NORTHING: 1068087.67 DATUM EASTING: 516887.97 ELEVATION 482.1	WATER LEVEL / TIME / DATE / CASING DEPTH	
DRILL RIG CME 75 - TRUCK MOUNT	SURFACE CONDITIONS	
ANGLE BEARING		
SAMPLE HAMMER		

DRILLING CONTR LAYNE-WESTERN

LOGGED BY J. MILLER DATE 2/13/95 CHK'D BY W. HERST

JOB NO.: 943-2848

FILENAME: PZ102SS

DEPTH IN FEET (ELEVATION)	BLOW/ 6 IN. ON SAMPLER	RECOVERY	SYMBOL	SAMPLER SYMBOL	SAMPLE NUMBER AND DESCRIPTION OF MATERIAL	SAMPLER TYPE	REMARKS
1	3 2 2 3	1.3'/2.0' (65%)			(0.0-2.6 ft.) Firm, dark yellowish brown (10YR 4/2), homogenous, CLAYEY SILT, NR, damp, (CL-ML), (LOESS)	SP ①	2/13/95 - 15:21 Begin drilling PZ-102-SS Air monitoring 15:27 21% O2 0.0 ppm H2S 0% LEL 0.0 ppm PID
2	2 2 2 4	1.4'/2.0' (70%)			(479.5) 2.6		
3					(2.6-5.0 ft.) Firm, moderate yellowish brown (10YR 5/4), homogenous, SILTY CLAY, NR, damp, (CL), (LOESS)	SP ②	
4		2.3'/2.0' (115%)					
5					(477.1) 5.0	SH ③	
6	1 2 3 4	1.6'/2.0' (80%)			(5.0-13.0 ft.) Firm, moderate yellowish brown (10YR 5/4), trace light gray (N7), homogenous, CLAYEY SILT, NR, damp, (CL-ML), (LOESS)	SP ④	15:43 @ 6 ft. 21.1% O2 0.0 ppm H2S 0% LEL 0.3 ppm PID
7							
8	1 3 3 5	1.9'/2.0' (95%)				SP ⑤	
9							
10		1.9'/2.0' (95%)					15:49 @ 10 ft. 21% O2 1.0 ppm H2S 0% LEL 0.3 ppm PID
11						SH ⑥	
12	3 4 5 6	1.6'/2.0' (80%)					
13					(469.1) 13.0	SP ⑦	
14	5 5 7 7	1.5'/2.0' (75%)			(13.0-15.0 ft.) Compact, dark yellowish orange (10YR 6/6), homogenous, fine SAND, trace Silt, NR, dry, (SP), (ALLUVIUM)	SP ⑧	

LAIDLAW WASTE SYSTEMS INC.

SOIL BOREHOLE LOG

SITE NAME AND LOCATION	DRILLING METHOD:	BORING NO.
	4.25 inch I.D. Hollow Stem Auger	PZ-102-SS
		SHEET 2 OF 3
	SAMPLING METHOD:	
LAIDLAW/OU2 RI-FS/MO WEST LAKE LANDFILL OPERABLE UNIT 2	SPLIT SPOON: 2.0 inch O.D./1.5 inch I.D. (SP)	DRILLING START TIME 15:21 / FINISH TIME 17:33
	SHELBY TUBE: 3.0 inch O.D./2 13/16 inch I.D. (SH)	
	WATER LEVEL	
	TIME	
	DATE	DATE 2/13/95 / DATE 2/13/95
NORTHING: 1068087.67 DATUM EASTING: 516887.97 ELEVATION 482.1	CASING DEPTH	

DRILL RIG CME 75 - TRUCK MOUNT	SURFACE CONDITIONS
ANGLE BEARING	
SAMPLE HAMMER	

DEPTH IN FEET (ELEVATION)	BLOW/ 6 IN. ON SAMPLER	RECOVERY	SYMBOL	SAMPLER SYMBOL	SAMPLE NUMBER AND DESCRIPTION OF MATERIAL	SAMPLER TYPE	REMARKS
16	4 4 6 7	1.3' / 2.0' (65%)			(15.0-23.6 Ft.) Loose to compact, pale yellowish brown (10YR 6/2), homogenous, Fine SAND, NR, dry, (SP), (ALLUVIUM)	SP 8	16:03 @ 16 ft. 21.1% O2 1.0 ppm H2S 0% LEL 0.0 ppm PID
17						SP 9	
18	4 4 5 5	1.4' / 2.0' (70%)				SP 10	
19							
20	3 3 4 6	1.6' / 2.0' (80%)				SP 11	
21							
22	6 5 4 8	1.5' / 2.0' (75%)				SP 12	
23					(458.5) 23.6		
24	5 6 7 10	1.5' / 2.0' (75%)			(23.6-25.6 Ft.) Stiff, light gray (N7) to light brown (5YR 5/6), laminated CLAYEY SILT, trace fine Sand, some rootlets, NR, moist, (CL-ML), (ALLUVIUM)	SP 13	16:20 @ 24 ft. 21% O2 0.0 ppm H2S 0% LEL 0.0 ppm PID
25							
26	5 7 10 11	1.6' / 2.0' (80%)			(25.6-28.1 Ft.) Very stiff, medium gray (N5), stratified, CLAYEY SILT, some fine SAND, thin organic rootlet beds (<1 cm.), NR, moist, (CL-ML), (ALLUVIUM)	SP 14	
27							
28	4 5 5 7	1.7' / 2.0' (85%)			(28.1-29.9 Ft.) Stiff, medium gray (N5), stratified, CLAYEY SILT and fine SAND, 1-15 cm. beds, NR, moist, (CL-ML), (ALLUVIUM)	SP 15	16:40 @ 28 ft. 21.1% O2 0.0 ppm H2S 0% LEL 0.0 ppm PID
29					(452.2) 29.9 (29.9-34.5 Ft.) Hard, light olive gray (5Y 6/1), fractured LIMESTONE, SR, (WEATHERED BEDROCK)		

DRILLING CONTR LAYNE-WESTERN

LOGGED BY J. MILLER

DATE 2/13/95 CHK'D BY W. HERST

JOB NO.: 943-2848

FILENAME: PZ102SS

SOIL BOREHOLE LOG

LAIDLAW WASTE SYSTEMS INC.

SITE NAME AND LOCATION

LAIDLAW/OU2 RI-FS/MO
WEST LAKE LANDFILL
OPERABLE UNIT 2

NORTHING: 1068087.67
DATUM EASTING: 516887.97 ELEVATION 482.1

DRILLING METHOD: 4.25 inch I.D. Hollow Stem Auger

SAMPLING METHOD:
SPLIT SPOON: 2.0 inch O.D./1.5 inch I.D. (SP)
SHELBY TUBE: 3.0 inch O.D./2 13/16 inch I.D. (SH)

					START	FINISH
WATER LEVEL					TIME	TIME
TIME					15:21	17:33
DATE					DATE	DATE
CASING DEPTH					2/13/95	2/13/95

BORING NO. PZ-102-SS

SHEET 3 OF 3

DRILLING

DRILL RIG CME 75 - TRUCK MOUNT

SURFACE CONDITIONS

ANGLE BEARING

SAMPLE HAMMER

DEPTH IN FEET (ELEVATION)	BLOW/ 6 IN. ON SAMPLER	RECOVERY	SYMBOL	SAMPLER SYMBOL	SAMPLE NUMBER AND DESCRIPTION OF MATERIAL	SAMPLER TYPE		REMARKS
31	5 5 5 20	1.7'/2.0' (85%)			(29.9-34.5 Ft.) Hard, light olive gray (5Y 6/1), fractured LIMESTONE, SR, (WEATHERED BEDROCK) @ 30.2 ft., wood fragments	SP	16	
32								
33	13 23 55 31	1.1'/2.0' (55%)				SP	17	
34					(447.6) 34.5			
35	12 18 21 18	0.5'/2.0' (25%)			(34.5-37.0 Ft.) Hard, dark greenish gray (5GY 4/1), SILTY CLAY, trace to little fine sand, little fine gravel, NR, moist, (CL), (WEATHERED BEDROCK)	SP	18	17:07 @ 35 ft. 21.3% O2 2.0 ppm H2S 0% LEL 0.0 ppm PID
36								
37					(445.1) 37.0 End of Soil Borehole Log at 37.0 ft. See PZ-102-SS Record of Drilhole for rock descriptions			
38								
39								
40								
41								
42								
43								
44								

DRILLING CONTR LAYNE-WESTERN

LOGGED BY J. MILLER CHK'D BY W. HERST

DATE 2/13/95

JOB NO.: 943-2848

FILENAME: PZ102SS

RECORD OF DRILLHOLE PZ-102-SS

Sheet 1 of 4

PROJECT: LAIDLAW/RI-FS
PROJECT NO: 943-2848
LOCATION: BRIDGETON, MO

BORING METHOD: NX Core & water
DRILLING DATE: 2/14/95
DRILL RIG: CME 75

DATUM: MSL
COORDINATES N: 1088087.7
AZIMUTH: 0

COLLAR ELEV: 482.1
E: 516887.9
INCLINATION: -90

J-Joint, F-Fault, S-Shear, B-Bedding, F-Foliation
PL-Planar, C-Curved, U-Undulating, ST-Stepped, I-Irregular
P-Polished, X-Slikensided, SM-Smooth, R-Rough, VR-V. Rough
Fe-Fe Oxide, CL-Clay Infill, CH-Chlorite, H-Healed, GRF-Gravel Filled

DEPTH SCALE (feet)	DESCRIPTION	GRAPHIC LOG	ELEV / DEPTH (FT)	RUN NO.	CORE RECOVERY	RQD	FRACTURES PER FOOT	DISCONTINUITY DATA: DIP wrt CORE AXIS	DISCONTINUITY DATA: TYPE AND SURFACE DESCRIPTION	GRAPHIC LOG	WEATHERING INDEX (SW, FR, MW, HW, CW)	STRENGTH INDEX (R6, R5, R4, R3, R2, R1)	POINT LOAD INDEX (psi) (R1 30, R2 150, R3 300, R4 600, R5 1500, R6)	TEST ORIENTATION	NOTES WATER LEVELS INSTRUMENTATION
32	0.0-37.0 ft. See Soil Borehole Log PZ-102-SS 37.0-37.8 ft. No samples collected														
34															
36															
			444.30												
38	37.8-41.0 ft. Highly weathered, thickly bedded, dark yellowish orange (10YR 6/6), fine grained, extremely weak, SANDSTONE, (ST. LOUIS FORMATION)		37.80						J,PL,SM-GRF J,I,SM-CL J,PL,SM-CL (2)						2/14/95 @ 8:09 Began coring Run 1
40									J,I,SM-GRF J,PL,SM-Intact J,PL,SM-GRF						
42	41.0-44.6 ft. Moderately weathered, dark yellowish orange (10YR 6/6), fine grained, weak, SANDSTONE, (ST. LOUIS FORMATION)		438.10	1	91%				J,PL,SM-Intact J,I,SM J,I,SM J,I,SM (2) J,I,R (2)						Fractures in upper portion of Run 1, are mapped in highly weathered sandstone, very clayey, likely drilling induced
44			44.00 437.50						Core Loss J,I,SM						Core loss due to weak rock
46	44.6-59.6 ft. Slightly to moderately weathered, thickly bedded, light olive gray, micro-crystalline, medium strong, LIMESTONE, (ST. LOUIS FORMATION)		44.60	2	70%				J,I,R-CL J,I,R-CL J,I,R-CL (2)						Fractures in Run 2, along contacts between lithologies of clay and limestone
48	47.0 ft. Solutioned, in-filled with unlithified sandy clay, in Run 2, approximately 50%, competent rock		435.10 47.00 434.20 47.90	3	85%				Core Loss						

DEPTH SCALE: 1:2
DRILLING CONTRACTOR: LAYNE-WESTERN
DRILLER: D. MAHURIN

LOGGED: J. MILLER
CHECKED: R. BOOTH
DATE: 3/13/95

Golder Associates

RECORD OF DRILLHOLE PZ-102-SS

Sheet 2 of 4

PROJECT: LAIDLAW/RI-FS
PROJECT NO: 943-2648
LOCATION: BRIDGETON, MO

BORING METHOD: NX Core & water
DRILLING DATE: 2/14/95
DRILL RIG: CME 75

DATUM: MSL
COORDINATES N: 1068087.7
AZIMUTH: 0

COLLAR ELEV: 482.1
E: 516887.6
INCLINATION: -90

ROCK TYPE

J-Joint, F-Fault, S-Shear, B-Bedding, F-Foliation
PL-Planar, C-Curved, U-Undulating, ST-Stepped, I-Irregular
P-Polished, K-Slickensided, SM-Smooth, R-Rough, VR-V. Rough
Fe-Fe Oxide, CL-Clay Infill, CH-Chlorite, H-Healed, GRF-Gravel Filled

DEPTH SCALE	DESCRIPTION	GRAPHIC LOG	ELEV / DEPTH (FT)	RUN NO	CORE RECOVERY	RQD	FRACTURES PER FOOT	DISCONTINUITY DATA: DIP w/r CORE AXIS	TYPE AND SURFACE DESCRIPTION	GRAPHIC LOG	WEATHERING INDEX: SW FR, MW, HW, CW	STRENGTH INDEX: R6, R5, R4, R3, R2, R1	POINT LOAD INDEX (psi): R1 30, R2 150, R3 300, R4 600, R5 1500, R6	TEST ORIENTATION	NOTES WATER LEVELS INSTRUMENTATION
48	44.6-59.6 ft. Slightly to moderately weathered, thickly bedded, light olive gray, micro-crystalline, medium strong, LIMESTONE, (ST. LOUIS FORMATION)								J,I,R-CL						
									J,I,R-CL						
									J,PL,SM (2)						
									J,PL,SM						
	48.8-49.0 ft. Glauconitic clay and limestone fragment infilled collapse zone, stylolitic								J,I,R						
50									J,PL,SM						
									J,I,R						
									J,PL,R						
				3	85%				J,I,R						
									J,PL,SM-CL-intact						
									J,ST,R-Fe						
52	51.8-52.2 ft. Infilled zone								J,PL,R-solutioned						
	52.0-52.9 ft. Breciated, collapsed, infilled with limestone fragments, sand and clay														Core loss due to fractures/lugging of bit, some rock recovered in this interval, but broken up
									Core Loss						
54			428.00												
			54.10						J,PL,R						
									J,PL,R-Fe						
									J,C,SM-CL-intact						
									J,PL,R						
									J,I,R-Fe						
									J,PL,R						
56									J,ST,R						
									J,I,R-CL						
									J,I,SM						
	56.9-56.9 ft. Collapse, infilling clay								J,PL,SM-CL						Numerous intact, very small, clay filled, irregular fractures 54.7-60.3 ft. Not mapped on graphic log
									J,I,R						
				4	100%				J,I,R						
	57.4-57.5 ft. Infilled fraction								J,I,R						
	57.6-59.8 ft. Solutioned, infilled with limestone fragments, glauconitic clay, sand								J,PL,SM-Fe						
58									J,PL,SM						
									J,I,R						
									J,I,R						
									J,I,SM,CL						
									J,PL,R						
									J,PL,R-CL						
	59.6-80.8 ft. Fresh to moderately weathered, thinly bedded, light olive gray (5Y 6/1), medium crystalline, extremely weak to medium strong, LIMESTONE, (ST. LOUIS FORMATION)														
60			421.80						J,PL,SM-CL						
			60.30						J,I,R						
									J,I,R						
									J,I,R						
									J,I,R						
									J,I,R						
									J,PL,R						
									J,C,VR						
									J,I,R						
64															

DEPTH SCALE: 1:2
DRILLING CONTRACTOR: LAYNE-WESTERN
DRILLER: D. MAHURIN

LOGGED: J. MILLER
CHECKED: R. BOOTH
DATE: 3/13/95

Golder Associates

RECORD OF DRILLHOLE PZ-102-SS

Sheet 3 of 4

PROJECT: LAIDLAW/RI-FS
PROJECT NO: 943-2848
LOCATION: BRIDGETON, MO

BORING METHOD: NX Core & water
DRILLING DATE: 2/14/95
DRILL RIG: CME 75

DATUM: MSL
COORDINATES N: 1088087.7
AZIMUTH: 0

COLLAR ELEV: 482.1
E: 516887.8
INCLINATION: -90

J-Joint, F-Fault, S-Shear, B-Bedding, F-Foliation
PL-Planar, C-Curved, U-Undulating, ST-Stepped, I-Irregular
P-Polished, K-Slikensided, SM-Smooth, R-Rough, VR-V. Rough
Fe-Fe Oxide, CL-Clay Infil, CH-Chlorite, H-Healed, GRF-Gravel Filled

DEPTH SCALE (FEET)	DESCRIPTION	GRAPHIC LOG	ELEV / DEPTH (FT)	RUN NO.	CORE RECOVERY	RQD	FRACTURES PER FOOT	DISCONTINUITY DATA: DIP wrt CORE AXIS	DISCONTINUITY DATA: TYPE AND SURFACE DESCRIPTION	GRAPHIC LOG	WEATHERING INDEX	STRENGTH INDEX	POINT LOAD INDEX (psi)	TEST ORIENTATION	NOTES WATER LEVELS INSTRUMENTATION
64	59.6-80.8 ft. Fresh to moderately weathered, thinly bedded, light olive gray (5Y 6/1), medium crystalline, extremely weak to medium strong, LIMESTONE, (ST. LOUIS FORMATION)							0	J,PL,R						
66	64.0-65.4 ft. Collapse fraction infilled with clay, limestone fragments, sand			5	98%			30	J,I,R-SM						Numerous very small intact, clay and sand filled fractures 65.5-68.6 ft. Not mapped
								0	J,I,R						
	67.3-67.4 ft. Clay, sand and limestone fragment infilled fracture							60	J,I,R						
	67.9-68.0 ft. Clay and limestone framgent infilled fracture							90	J,I,R-CL and sand filled						
68								60	J,I,R-intact						
			413.50					0	J,I,R-CL						
			68.60					0	J,I,R-calcite filled						
								0	J,PL,R						
70	70.1-70.5 ft. Collapse infilled with limestone fragments, black clay, pyrite crystals, sand							0	J,I,R						
								0	J,C,SM						
								0	J,C,R						
	71.3-71.7 ft. Breccia filled zone, pyrite, limestone fragments, black clay infilling							0	J,I,R-Fe						
	72.1-73.2 ft. Collapse zone			6	98%			0	J,I,R						
72															
								0	J,I,R-CL (3)						Numerous small intact fractures not mapped 73.2-74.9 ft. Infilled clay, sand, limestone fragments
								90	J,I,R (2)						
74								0	J,I,R						
			407.20												
			74.90												
76								90	J,I,R-calcite						
				7	99%			60	J,I,R-calcite						
78															
								90	J,I,R-calcite						
80															

DEPTH SCALE: 1:2
DRILLING CONTRACTOR: LAYNE-WESTERN
DRILLER: D. MAHURIN

LOGGED: J. MILLER
CHECKED: R. BOOTH
DATE: 3/13/95

Golder Associates

RECORD OF DRILLHOLE PZ-102-SS

Sheet 4 of 4

PROJECT: LAIDLAW/RI-FS
PROJECT NO: 943-2848
LOCATION: BRIDGETON, MO

BORING METHOD: NX Core & water
DRILLING DATE: 2/14/95
DRILL RIG: CME 75

DATUM: MSL
COORDINATES N: 1068087.7
AZIMUTH: 0

COLLAR ELEV: 482.1
E: 516887.9
INCLINATION: -90

J-Joint, F-Fault, S-Shear, B-Bedding, F-Foliation
PL-Planar, C-Curved, U-Undulating, ST-Stepped, I-Irregular
P-Polished, K-Slikensided, SM-Smooth, R-Rough, VR-V. Rough
Fe-Fe Oxide, CL-Clay Infil, CH-Chlorite, H-Healed, GRF-Gravel Filled

DEPTH SCALE (FEET)	DESCRIPTION	GRAPHIC LOG	ELEV / DEPTH (FT)	RUN NO.	CORE RECOVERY	RQD	FRACTURES PER FOOT	DISCONTINUITY DATA: DIP wrt CORE AXIS	DISCONTINUITY DATA: TYPE AND SURFACE DESCRIPTION	GRAPHIC LOG	WEATHERING INDEX	STRENGTH INDEX	POINT LOAD INDEX (psi)	TEST ORIENTATION	NOTES WATER LEVELS INSTRUMENTATION
80	ROCK TYPE										SW FR, MW, HW, CW	R6, R5, R4, R3, R2, R1	HT, I3, R2 150, R3 300, R4 600, R5 1500, R6		
	80.3-80.5 ft. Solutioned rock, infilled with limestone fragments, clay								J,I,R						
	401.30								J,I,R						
	80.80								J,I,R						
82	80.8-82.3 ft. Moderately weathered, interbedded, light gray (N7), weak, SILTY CLAYSTONE, (ST. LOUIS FORMATION) Cherty								J,I,R						
	399.80								J,I,R						
	82.30			7	99%										
	82.3-84.0 ft. Slightly weathered, thinly bedded, light olive gray (5Y 6/1), finely cyrstalline, medium strong, ARENACEOUS LIMESTONE, (ST. LOUIS FORMATION)								J,PL,SM						
	398.10								J,PL,SM (2)						
84	84.00														
	84.0-84.4 ft. Slightly weathered, thinly bedded, very light gray (N8), fine grained, medium strong, SANDSTONE, (ST. LOUIS FORMATION)								J,PL,SM						
	397.70														
	84.40		397.50						J,I,R						
	84.4-87.0 ft. Slightly weathered, thinly bedded, dark gray (N3) to medium gray (N5), weak, CLAYSTONE and SILTY CLAYSTONE, (ST. LOUIS FORMATION) Carbonaceous		84.60						J,PL,SM (3)						
86	395.10								J,PL,SM-CL						
	87.00			8	100 %										
	87.0-89.9 ft. Slightly weathered to fresh, light brownish gray (5YR 6/1), microcrystalline, medium strong, CRYSTALLINE LIME -STONE, (ST. LOUIS FORMATION) Upper 1 ft. and lower 3 in. bioturbated, pyrite mineralization								J,PL,SM-CL						
	392.20		392.20						J,I,SM-CL						2/14/95 @ 14:25 Complete drilling
90	89.90		89.90												
	End of Record of Drillhole at 89.9 ft.														
92															
94															
96															

DEPTH SCALE: 1:2
DRILLING CONTRACTOR: LAYNE-WESTERN
DRILLER: D. MAHURIN

LOGGED: J. MILLER
CHECKED: R. BOOTH
DATE: 3/13/95

Golder Associates

Well No. PZ-102-SS

Boring No. X-Ref: PZ-102-SS

PIEZOMETER CONSTRUCTION SUMMARY

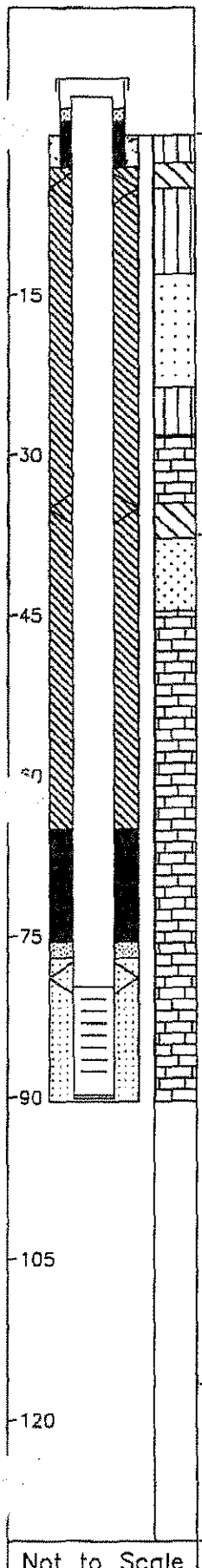

Not to Scale

Survey Coords: Northing: 1088088 ft. Easting: 516888 ft.

Elevation Ground Level 482.1 ft. NGVD

Top of PVC Casing 483.85 ft. NGVD

Drilling Summary:

Total Depth 90.4 ft.

Borehole Diameter 10 1/4 in. (0.0-37.0 ft.) 5 7/8 in. (37.0-90.4 ft.)

Casing Stickup Height 1.80 ft.

Driller Layne-Western, St. Louis, MO

Rig CME 75, Schramm Portadrill T660H

Bit(s) 6 1/4 in. ID Hollow Stem Auger Bit, NX Core, 5 7/8 in. Button Bit for Reaming

Drilling Fluid Auger-None, NX Core Water, Air Rotary

Protective Casing 8x8 in. Square Steel, by 5 ft. long

Construction Time log:

Task	Start Date	Start Time	Finish Date	Finish Time
Drilling				
CME 75	2/13/95	15:21	2/13/95	14:25
Schramm Rotary	3/12/95	12:45	3/12/95	13:45
Geophys.Logging:				
Casing:	3/12/95	13:40	3/12/95	13:50
Filter Placement:	3/12/95	13:55	3/12/95	14:10
Cementing:				
Development				
Bentonite Grout	3/12/95	14:15	3/12/95	14:30
Bentonite Seal	3/12/95	14:30	3/12/95	15:30

Well Design & Specifications

Basis: Geologic Log X Geophysical Log

Casing string(s): C = Casing S = Screen

Depth			String(s)	Elevation		
+ 1.80	-	79.70	C1	483.85	-	402.35
79.70	-	89.50	S1	402.35	-	392.55
89.50	-	90.83	C2	392.55	-	391.22

Casing: C1 2 in. dia. Schedule 80 PVC, flush threaded with O-rings

C2 2 in. dia. threaded PVC end cap (4 in. long or 0.33 ft.)

Screen: S1 2 in. dia. Schedule 80 PVC, 0.010 in. machine cut slot, flush threaded with O-rings

Sand Pack: 16-35 mesh Silica Sand, 77.0-90.4 ft.

Filter Pack: Less than 50 mesh Silica Sand, 75.5-77.0 ft.

Grout Seal: Wyo-Ben Grout Well Bentonite Slurry, 3.0-65.0 ft.

Bentonite Seal: Extra high yield Wyo-Ben (100%) Slurry, 65.0-75.5 ft.

Concrete: 0.0-3.0 ft.

Well Development

Stabilization Test Data:

Time	pH	Spec. Cond.	Temp (°C)

Recovery Data:

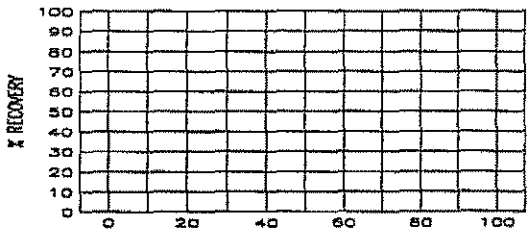

Comments:

Supervised by B. Tilton

Job Number 943-2848

Site LAIDLAW/OU2 RI-FS/MO

File Name PZ102SS

661574

MISSOURI DEPARTMENT OF NATURAL RESOURCES
DIVISION OF GEOLOGY AND LAND SURVEY

MONITORING WELL CERTIFICATION RECORD

OFFICE USE ONLY	
REF NO. 115088	DATE RECEIVED
ROUTE	CHECK NO.
STATE WELL NUMBER	TRANSMITTAL NO.
CHECKED BY	CROSS REFERENCE NO.
APPROVED BY	ENTERED Ph 1 Ph 2 Ph 3
	DATE APPROVED

INFORMATION SUPPLIED BY OWNER

SITE NAME: LAIDLAW BRIDGETON SANITARY LANDFILL		WELL NUMBER: AZ-102-55	
SITE ADDRESS: ST. CHARLES ROCK RD.	CITY: BRIDGETON	STATE: MO	ZIP CODE: 63044
NAME: LAIDLAW WASTE SYSTEMS, INC.		TELEPHONE: 314-341-3710	
ADDRESS: 1338 N. BROADWAY	CITY: ST. LOUIS	STATE: MO	ZIP CODE: 63102

INFORMATION SUPPLIED BY MONITORING WELL CONTRACTOR

LOCATION OF WELL SHOW LOCATION IN SECTION PLAT

COUNTY: ST. LOUIS
ELEVATION: 482.0
AREA NO.:

SMALLEST ¼ ____ ¼ ____ ¼ ____ ¼ LARGEST ¼

SEC. ____ TWN. 47 N.RNG. 5 E OR W

LAT. 38 ° 46 ' 02 " LONG. 90 ° 26 ' 27 "

SKETCH THE LOCATION TO THE WELL INCLUDING MILEAGE ON ALL ROADS TRAVELED FROM NEAREST TOWNS OR HIGHWAYS

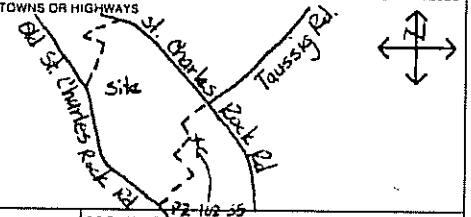

DESCRIBE LOCATION OF THE WELL SO WE WOULD BE ABLE TO VISIT IT

NOTE: Record the fraction of a foot in decimal, not in inches.

Top of Riser Elevation: 484.6

LOCKING CAP - Y / N (Circle one)
CAP VENT - Y / N (Circle one)
PROTECTIVE CASING Type: STEEL Size: 8" x 3" x 5' Bore Hole Diameter: 10.25"
WEEP HOLE - Y / N (Circle one)

Ground Surface Elevation: 482.0 Ft.	Feet from Surface	Description of Formation
Information in this column to be supplied in the Feet from Surface column		0-2.5 Silt
Depth to bottom of Protective Casing Seal:	3	2.5-5 clay
		5-13 Silt
		13-24 Sandstone
		24-28 silt
Depth to Base of Annular Seal:	65.0	28-35 Limestone
		35-38 clay
Depth to Base of Bentonite Seal:	72.5 ~~77.5~~	
Depth to Base of Secondary Filter Pack:	77.0	38-45 Sandstone
Depth to Top of the Screen:	79.75	
		45-90 Limestone
Depth to Bottom of the Screen:	89.75	
Plug Back Total Depth:		
Original Total Depth:	96.4	

PROTECTIVE CASING SEAL Type: [X] Concrete [ ] Cement Slurry

RISER PIPE Length: 52.35' Diameter: 2 Type of Material: SCH80 PVC

BOREHOLE DIAMETER: 5 7/8 in.

ANNULAR SEAL Type: [X] Bentonite Slurry [ ] Cement Slurry [ ] Non Slurry Bentonite

BENTONITE SEAL Type: [X] Bentonite Slurry [ ] Non Slurry Bentonite Length of Seal: 10.5 Ft.

SECONDARY FILTER PACK Type: [X] Sand [ ] Manufactured (Optional) Grain Size: SUGAR Length: 1.5'

PRIMARY FILTER PACK Type: [X] Sand [ ] Manufactured Grain Size: 16-35 Length: 13.4'

WELL SCREEN Length: 10' Slot Size: 0.010" Type: SCH 80 PVC

SUMP DETAILS Length: 0.3 Ft. Diameter: 2 In. Type: PVC

TYPE OF BACKFILL: SAND

MONITORING WELL INSTALLATION CONTRACTOR'S NAME
LAYNE WESTERN Co., INC.

DRILLING CONTRACTOR'S NAME
LAYNE WESTERN Co, INC.

TYPE OF INSTALLATION [X] ABOVE GROUND [ ] FLUSH MOUNT

STATIC WATER LEVEL ____ FEET FROM MEASURING POINT

DATE OF STATIC WATER LEVEL

ELEVATION OF MEASURING POINT

MEASURING POINT IS [ ] TOP OF RISER PIPE [ ] OTHER ____

DRILLING EQUIPMENT [X] AIR ROTARY [X] AUGER TYPE 6¼ H.S.A. [ ] REVERSE ROTARY [ ] OTHER ____

CENTRALIZERS USED [X] YES, AT 3 TOTAL [ ] STAINLESS STEEL [ ] OTHER ____ [ ] NO

MULTIPLE CASED WELLS

SUBMIT ADDITIONAL AS BUILT DIAGRAM SHOWING WELL CONSTRUCTION DETAILS INCLUDING TYPE AND SIZE OF ALL CASING, HOLE DIAMETERS, AND GROUT USED.

DATE WELL CONSTRUCTION WAS COMPLETED 3-12-95

I HEREBY CERTIFY THAT THE MONITORING WELL HEREIN DESCRIBED WAS CONSTRUCTED IN ACCORDANCE WITH THE DEPARTMENT OF NATURAL RESOURCES REQUIREMENTS FOR THE CONSTRUCTION OF MONITORING WELLS.

SIGNATURE (MONITORING WELL CONTRACTOR) Michael P. Vogt

PERMIT NUMBER 001256WM DATE 4-11-95

SIGNATURE (DRILLING CONTRACTOR) Michael P. Vogt

PERMIT NUMBER 001256WM DATE 4-11-95

MO 780-1415 (2-94) DISTRIBUTION: WHITE-DIVISION CANARY-MONITORING WELL CONTRACTOR PINK-OWNER

LAIDLAW WASTE SYSTEMS INC.

SOIL BOREHOLE LOG

SITE NAME AND LOCATION	DRILLING METHOD: 4.25 inch I.D. Hollow Stem Auger		BORING NO. PZ-102R-SS
			SHEET 1 OF 3
LAIDLAW/OU2 RI-FS/MD WEST LAKE LANDFILL OPERABLE UNIT 2	SAMPLING METHOD:		
	SPLIT SPOON: 2.0 inch O.D./1.5 inch I.D. (SP)		DRILLING
	SHELBY TUBE: 3.0 inch O.D./2 13/16 inch I.D. (SH)		START / FINISH
	WATER LEVEL		TIME 8:30 / TIME 10:45
	TIME		
	DATE		DATE 6/15/95 / DATE 6/15/95
NORTHING: 1068131.86 DATUM EASTING: 516858.81 ELEVATION 484.5	CASING DEPTH		

DRILL RIG CME 75 - TRUCK MOUNT	SURFACE CONDITIONS Flat, grass covered area
ANGLE BEARING	
SAMPLE HAMMER	

DEPTH IN FEET (ELEVATION)	BLOW/ 6 IN. ON SAMPLER	RECOVERY	SYMBOL	SAMPLER SYMBOL	SAMPLE NUMBER AND DESCRIPTION OF MATERIAL	SAMPLER TYPE	REMARKS
1	5 3 4 5	1.5'/2.0' (75%)			(0.0-6.0 ft.) Firm, dark yellowish brown (10YR 4/2), CLAYEY SILT, trace organics (fine roots), NR, damp, (CL-ML), (TOPSOIL)	SP 1	
2	4 5 5 5	1.8'/2.0' (90%)				SP 2	
3							
4	3 4 5 5	1.8'/2.0' (90%)			@ 4.0 ft., color changes to moderate yellowish brown (10YR 5/4)	SP 3	
5							
6	2 4 5 5	1.5'/2.0' (75%)			(478.5) 6.0 (6.0-14.0 ft.) Loose, mottled, moderate yellowish brown (10YR 5/4) to pale yellowish brown (10YR 6/2), SILT, NR, damp, (ML), (LOESS)	SP 4	
7							
8	5 5 5 5	1.4'/2.0' (70%)				SP 5	
9							
10	4 5 6 9	1.5'/2.0' (75%)			@ 10.0 ft., Silt becomes compact	SP 6	
11							
12	3 5 8 11	1.8'/2.0' (90%)				SP 7	
13							
14	6 6 8 8	2.0'/2.0' (100%)			(14.0-17.8 ft.) Compact, light olive gray (5Y 6/1), SILT, trace iron staining, NR, damp, (ML), (LOESS)	SP 8	

DRILLING CONTR LAYNE-WESTERN

LOGGED BY B. TILTON

DATE 7/14/95 CHK'D BY W. HERST

JOB NO.: 943-2848

FILENAME: PZ102RSS

SOIL BOREHOLE LOG

LAIDLAW WASTE SYSTEMS INC.

SITE NAME AND LOCATION: LAIDLAW/OU2 RI-FS/MD WEST LAKE LANDFILL OPERABLE UNIT 2	DRILLING METHOD: 4.25 inch I.D. Hollow Stem Auger SAMPLING METHOD: SPLIT SPOON: 2.0 inch O.D./1.5 inch I.D. (SP) SHELBY TUBE: 3.0 inch O.D./2 13/16 inch I.D. (SH)	BORING NO. PZ-102R-SS SHEET 2 OF 3

					DRILLING START TIME	DRILLING FINISH TIME
WATER LEVEL						
TIME					8:30	10:45
DATE					DATE 6/15/95	DATE 6/15/95
CASING DEPTH						

DATUM NORTHING: 1068131.86 EASTING: 516858.81 ELEVATION 484.5

DRILL RIG CME 75 - TRUCK MOUNT

SURFACE CONDITIONS Flat, grass covered area

ANGLE BEARING

SAMPLE HAMMER

DRILLING CONTR LAYNE-WESTERN

DEPTH IN FEET (ELEVATION)	BLOW/ 6 IN. ON SAMPLER	RECOVERY	SYMBOL	SAMPLER SYMBOL	SAMPLE NUMBER AND DESCRIPTION OF MATERIAL	SAMPLER TYPE	REMARKS
16	3 4 5 8	1.8' 2.0' (90%)			(14.0-17.8 ft.) Compact, light olive gray (5Y 6/1), SILT, trace iron staining, NR, damp, (ML), (LOESS)	SP (8)	
17					From 17.0-17.8 ft. Silt becomes wet	SP (9)	
					(466.7) 17.8		
18	9 9 6 10	1.6' 2.0' (80%)			(17.8-22.7 ft.) Compact, pale yellowish brown (10YR 6/2), Fine SAND, trace Silt, trace iron oxide staining, NR, dry, (SP), (ALLUVIUM)	SP (10)	
19							
20	4 6 7 9	1.5' 2.0' (75%)				SP (11)	
21							
22	4 4 8 6	1.8' 2.0' (90%)					
					(461.8) 22.7		
23					(22.7-24.0 ft.) Compact, pale yellowish brown (10YR 6/2), Fine SANDY SILT, NR, damp, (ML), (LOESS)	SP (12)	
24	5 6 6 6	1.6' 2.0' (80%)			(24.0-28.0 ft.) Compact, mottled moderate yellowish brown (10YR 5/4) to light olive gray (5Y 6/1), SILT, some iron oxide staining, NR, damp, (ML), (LOESS)	SP (13)	
25							
26	5 3 5 8	1.8' 2.0' (90%)			@ 26.0 ft. color changes to olive gray (5Y 4/1) and Silt becomes moist	SP (14)	
27							
					(456.5) 28.0		
28	4 6 10 10	2.0' 2.0' (100%)			(28.0-30.8 ft.) Stiff, olive gray (5Y 4/1) CLAYEY SILT, NR, moist, (CL-ML), (LOESS)	SP (15)	
29					@ 29.6 ft., thin silty fine sand seam, damp (<1 in. thick)		

LOGGED BY B. TILTON

DATE 7/14/95 CHK'D BY W. HERST

JOB NO.: 943-2848

FILENAME: PZ102RSS

LAIDLAW WASTE SYSTEMS INC.

SOIL BOREHOLE LOG

SITE NAME AND LOCATION	DRILLING METHOD: 4.25 inch I.D. Hollow Stem Auger	BORING NO. PZ-102R-SS
LAIDLAW/OU2 RI-FS/MO WEST LAKE LANDFILL OPERABLE UNIT 2	SAMPLING METHOD: SPLIT SPOON: 2.0 inch O.D./1.5 inch I.D. (SP) SHELBY TUBE: 3.0 inch O.D./2 13/16 inch I.D. (SH)	SHEET 3 OF 3
NORTHING: 1068131.86 DATUM EASTING: 516858.81 ELEVATION 484.5	WATER LEVEL / TIME / DATE / CASING DEPTH	DRILLING START: TIME 8:30, DATE 6/15/95; FINISH: TIME 10:45, DATE 6/15/95
DRILL RIG CME 75 - TRUCK MOUNT	SURFACE CONDITIONS Flat, grass covered area	
ANGLE BEARING		
SAMPLE HAMMER		

DEPTH IN FEET (ELEVATION)	BLOW/ 6 IN. ON SAMPLER	RECOVERY	SYMBOL	SAMPLER SYMBOL	SAMPLE NUMBER AND DESCRIPTION OF MATERIAL	SAMPLER TYPE	REMARKS
31	5 5 9 14	1.8" 2.0" (90%)			(28.0-30.8 ft.) Stiff, olive gray (5Y 4/1) CLAYEY SILT, NR, moist, (CL-ML), (LOESS) (453.7) 30.8 (30.8-32.0 ft.) Compact, olive gray (5Y 4/1), SILT, NR, moist, (ML), (LOESS) (452.5) 32.0	SP (16)	
32	47 44 26 27	1.2" 2.0" (60%)			(32.0-35.0 ft.) Very dense, light olive gray (5Y 6/1), fine GRAVEL and SILTY f-c SAND, trace pieces of lignite, NR, wet, (GP), (WEATHERED BEDROCK)	SP (17)	@ 32.0 ft, first water encountered overlying bedrock
33							
34	16 50/2"	0.4" 1.0" (40%)			(449.5) 35.0	SP (18)	
35					End of Soil Borehole Log at 35.0 ft. See PZ-102R-SS Record of Drillhole for rock descriptions		
36							
37							
38							
39							
40							
41							
42							
43							
44							

DRILLING CONTR LAYNE-WESTERN

LOGGED BY B. TILTON CHK'D BY W. HERST

DATE 7/14/95

JOB NO.: 943-2848

FILENAME: PZ102RSS

RECORD OF DRILLHOLE PZ-102R-SS

Sheet 1 of 4

PROJECT: LAIDLAW/RI-FS
PROJECT NO: 943-2848
LOCATION: BRIDGETON, MO

BORING METHOD: NX Core & water
DRILLING DATE: 6/15/95 - 6/16/95
DRILL RIG: CME 75

DATUM: MSL
COORDINATES N: 1066087.67
AZIMUTH: 0

COLLAR ELEV: 482.1
E: 516887.97
INCLINATION: -90

J-Joint, F-Fault, S-Shear, B-Bedding, F-Foliation
PL-Planar, C-Curved, U-Undulating, ST-Stepped, I-Irregular
P-Polished, K-Slickensided, SM-Smooth, R-Rough, VR-V. Rough
Fe-FeOxide, CL-Clay Infill, CH-Chlorite, H-Healed, GRF-Gravel Filled

DEPTH SCALE (FEET)	DESCRIPTION	GRAPHIC LOG	ELEV / DEPTH (FT)	RUN NO	CORE RECOVERY	ROD (80 60 40 20)	FRACTURES PER FOOT (2 4 6 8 10)	DISCONTINUITY DATA: Dip wrt CORE AXIS (0 30 60 90)	DISCONTINUITY DATA: TYPE AND SURFACE DESCRIPTION	GRAPHIC LOG	WEATHERING INDEX (SW FR, MW, HW, CW)	STRENGTH INDEX (R6 R5 R4 R3 R2 R1)	POINT LOAD INDEX (psi) (R1 30, R2 150, R3 300, R4 600, R5 1500, R6)	TEST ORIENTATION	NOTES WATER LEVELS INSTRUMENTATION
32	0.0-35.0 ft. See Soil Borehole Log PZ-102R-SS														
34															
	447.10		447.10												
	35.0-37.0 ft. 35.00 Highly weathered, thinly bedded, light olive gray (5Y 6/1), fine grained, medium strong, LIMESTONE, (ST. LOUIS FORMATION) Stylolitic		35.00	1	100 %				J,I,R (6)						6/15/95 @ 11:00 Began coring Highly broken rock due to weathering and drilling
36			445.90												
			36.20						J,I,R (6)						
	37.0-55.8 ft. Fresh, thinly bedded, light olive gray (5Y 6/1), micro-crystalline, medium strong, LIMESTONE, (ST. LOUIS FORMATION)			2	97%				J,PL,SM						
38									J,I,R (3)						
									J,I,R (2)						
			442.60						J,I,R,CL (2)						6/15/95 @ 11:50 End Run 2
			39.50						B,I,R (2)						
40									J,I,R,CL (2)						
									J,I,R (4)						
									J,I,R						
42									J,I,R,CL						
									J,I,R (4)						
									J,I,R (3)						
				3	94%				J,I,R (5)						
44									J,I,R,CL						
									J,I,R (2)						
									J,I,R,CL (3)						
									J,PL,SM						
46									J,I,R (4)						
									J,I,R,CL (4)						
									J,I,R (2)						
									J,I,R,CL (3)						
48															

DEPTH SCALE: 1:2
DRILLING CONTRACTOR: LAYNE-WESTERN
DRILLER: D. MAHURIN

LOGGED: B. TILTON
CHECKED: R. BOOTH
DATE: 7/12/95

Golder Associates

RECORD OF DRILLHOLE PZ-102R-SS

Sheet 2 of 4

PROJECT: LAIDLAW/RI-FS
PROJECT NO: 943-2848
LOCATION: BRIDGETON, MO

BORING METHOD: NX Core & water
DRILLING DATE: 6/15/95 - 6/16/95
DRILL RIG: CME 75

DATUM: MSL
COORDINATES N: 1068087.67
AZIMUTH: 0

COLLAR ELEV: 482.1
E: 516887.97
INCLINATION: -90

J-Joint, F-Fault, S-Shear, B-Bedding, F-Foliation
FL-Planar, C-Curved, U-Undulating, ST-Stepped, I-Irregular
P-Polished, K-Slikensided, SM-Smooth, R-Rough, VR-V. Rough
Fe-FeOxide, CL-Clay Infil, CH-Chlorite, H-Healed, GRF-Gravel Filled

DEPTH SCALE (FEET)	DESCRIPTION	GRAPHIC LOG	ELEV / DEPTH (FT)	RUN NO.	CORE RECOVERY	RQD	FRACTURES PER FOOT	DISCONTINUITY DATA: DIP wrt CORE AXIS	DISCONTINUITY DATA: TYPE AND SURFACE DESCRIPTION	GRAPHIC LOG	WEATHERING INDEX	STRENGTH INDEX	POINT LOAD INDEX (psi)	TEST ORIENTATION	NOTES WATER LEVELS INSTRUMENTATION
48	37.0-55.8 ft. Fresh, thinly bedded, light olive gray (5Y 6/1), micro-crystalline, medium strong, LIMESTONE, (ST. LOUIS FORMATION)			3	94%				B,I,R,CL						
			433.20						B,I,SM,CL						6/15/95 @ 13:45 End Run 3 Core loss possibly due to wash out of clay seams in joints
			48.90												
			432.60												
50			49.50						B,I,R (2)						
									J,I,R-intact						
									J,I,SM						
									B,PL,SM						
									J,I,R (2)						
52									J,I,R						
				4	100 %				B,I,R						
									B,I,R						
54									J,I,R						
									J,I,R (2)						
			426.30												6/15/95 @ 15:00 End Run 3
58	55.8-61.3 ft. Fresh, medium bedded, light olive gray (5Y 6/1), medium crystalline, strong, LIMESTONE, (ST. LOUIS FORMATION) Stylolitic 55.8-56.1 ft. Chert layer		55.80						B,I,R						
				5	100 %				B,I,R						
56	57.8-58.0 ft. Hard, greenish gray (5G 6/1), Siltstone layer								B,I,R (2)						
									J,I,R-intact						
			422.60						J,I,R						6/15/95 @ 16:15 End Run 5 Stop drilling for the day 6/16/95 @ 7:15 Began Run 6
			58.50						J,I,R-intact						
60									B,PL,SM,CL (3)						
	61.3-70.4 ft. Fresh, thinly bedded, light olive gray (5Y 6/1), finely crystalline, medium strong, FOSSILIFEROUS LIMESTONE, (ST. LOUIS FORMATION) Stylolitic			6	100 %				B,I,R (3) J,PL,SM,Fe						
62									J,PL,SM (2)						
64															

DEPTH SCALE: 1:2
DRILLING CONTRACTOR: LAYNE-WESTERN
DRILLER: D. MAHURIN

LOGGED: B. TILTON
CHECKED: R. BOOTH
DATE: 7/12/95

Golder Associates

RECORD OF DRILLHOLE PZ-102R-SS

PROJECT: LAIDLAW/RI-FS
PROJECT NO: 943-2848
LOCATION: BRIDGETON, MO

BORING METHOD: NX Core & water
DRILLING DATE: 6/15/95 - 6/16/95
DRILL RIG: CME 75

DATUM: MSL
COORDINATES N: 1068087.67
AZIMUTH: 0

COLLAR ELEV: 482.1
E: 518887.97
INCLINATION: -90

J-Joint, F-Fault, S-Shear, B-Bedding, F-Foliation
PL-Planar, C-Curved, U-Undulating, ST-Stepped, I-Irregular
P-Polished, K-Slikensided, SM-Smooth, R-Rough, VR-V. Rough
Fe-FeOxide, CL-Clay Infill, CH-Chlorite, H-Healed, GRF-Gravel Filled

DEPTH SCALE (FEET)	DESCRIPTION	GRAPHIC LOG	ELEV / DEPTH (FT)	RUN NO.	CORE RECOVERY	RQD	FRACTURES PER FOOT	DISCONTINUITY DATA: DIP wrt CORE AXIS	DISCONTINUITY DATA: TYPE AND SURFACE DESCRIPTION	GRAPHIC LOG	WEATHERING INDEX	STRENGTH INDEX	POINT LOAD INDEX (psi)	TEST ORIENTATION	NOTES WATER LEVELS INSTRUMENTATION
64	61.3-70.4 ft. Fresh, thinly bedded, light olive gray (5Y 6/1), finely crystalline, medium strong, FOSSILIFEROUS LIMESTONE, (ST. LOUIS FORMATION) Stylolitic								B,PL,SM						
66									B,PL,SM,CL						
				6	100 %										
68									J,PL,SM						
									B,PL,SM (2)						6/16/95 @ 8:25 End Run 6
			412.60												
70			69.50						B,I,SM						
	70.4-75.2 ft. Fresh, thinly bedded, light olive gray (5Y 6/1), finely crystalline, medium strong, LIMESTONE, (ST. LOUIS FORMATION) Stylolitic								B,I,R						
72				7	100 %										
									B,I,SM						
74	@ 74.2 ft. Stiff, dark greenish gray (5G 4/1), clay seam, (~1/2 in. thick) 75.2-76.0 ft. Fresh, thinly bedded, medium bluish gray (5B 5/1), micro-crystalline, very strong, Silicified Limestone, (ST. LOUIS FORMATION)								J,PL,SM,CL						
			406.90						B,PL,SM						6/16/95 @ 9:15 End Run 7
			75.20						J,I,R						
			408.10												
76	76.0-77.4 ft. Fresh, medium bedded, brownish gray (5YR 4/1), microcrystalline, strong, DOLOMITE, (ST. LOUIS FORMATION) Moderately porous, (open vugs <1 mm.)		76.00						B,I,SM						
			404.70						J,PL,SM						
	77.4-88.6 ft. Fresh, very thinly bedded, light olive gray (5Y 6/1), very fine crystalline, medium strong, LIMESTONE, (ST. LOUIS FORMATION) Some very thinly laminated shaley partings		77.40	8	98%				J,PL,SM						
78									J,I,R						
									J,I,R						
80															

DEPTH SCALE: 1:2
DRILLING CONTRACTOR: LAYNE-WESTERN
DRILLER: D. MAHURIN

LOGGED: B. TILTON
CHECKED: R. BOOTH
DATE: 7/12/95

Golder Associates

RECORD OF DRILLHOLE PZ-102R-SS

PROJECT: LAIDLAW/RI-FS
PROJECT NO: 943-2646
LOCATION: BRIDGETON, MO

BORING METHOD: NX Core & water
DRILLING DATE: 6/15/95 - 6/16/95
DRILL RIG: CME 75

DATUM: MSL
COORDINATES N: 1068087.67
AZIMUTH: 0

COLLAR ELEV: 482.1
E: 516887.97
INCLINATION: -90

J-Joint, F-Fault, S-Shear, B-Bedding, F-Foliation
PL-Planar, C-Curved, U-Undulating, ST-Stepped, I-Irregular
P-Polished, K-Slickensided, SM-Smooth, R-Rough, VR-V. Rough
Fe-FeOxide, CL-Clay Infill, CH-Chlorite, H-Healed, GRF-Gravel Filled

DEPTH SCALE (FEET)	DESCRIPTION	GRAPHIC LOG	ELEV / DEPTH (FT)	RUN NO.	CORE RECOVERY	RQD (85, 65, 40, 20)	FRACTURES PER FOOT (2, 4, 6, 8, 10)	DISCONTINUITY DATA: DIP wrt CORE AXIS (0, 30, 60, 90)	TYPE AND SURFACE DESCRIPTION	GRAPHIC LOG	WEATHERING INDEX (SW, FR, MW, HW, CW)	STRENGTH INDEX (R6, R5, R4, R3, R2, R1)	POINT LOAD INDEX (psi) (R1: 30, R2: 150, R3: 300, R4: 600, R5: 1500, R6)	TEST ORIENTATION	NOTES WATER LEVELS INSTRUMENTATION
80	77.4-88.6 ft. Fresh, very thinly bedded, light olive gray (5Y 6/1), very fine crystalline, medium strong, LIMESTONE, (ST. LOUIS FORMATION) Some very thinly laminated shaley partings								B,PL,SM						
82				8	98%				J,I,R B,I,R J,I,R						
84			388.10 84.00												6/16/95 @ 12:00 End Run 8
86									J,I,SM B,I,SM J,I,R						
88	393.50			9	100%				J,I,R (2)						
	88.6-90.0 ft. 88.60 Fresh, medium bedded, medium dark gray (N4), very weak, CLAYSTONE, (ST. LOUIS FORMATION)														
90	392.10 End of Record of Drillhole at 90.0 ft. 90.00		392.10 90.00												6/16/95 @ 15:00 Completed drilling
92															
94															
96															

DEPTH SCALE: 1:2
DRILLING CONTRACTOR: LAYNE-WESTERN
DRILLER: D. MAHURIN

LOGGED: B. TILTON
CHECKED: R. BOOTH
DATE: 7/12/95

Golder Associates

Well No. PZ-102R-SS

Boring No. X-Ref: PZ-102R-SS

PIEZOMETER CONSTRUCTION SUMMARY

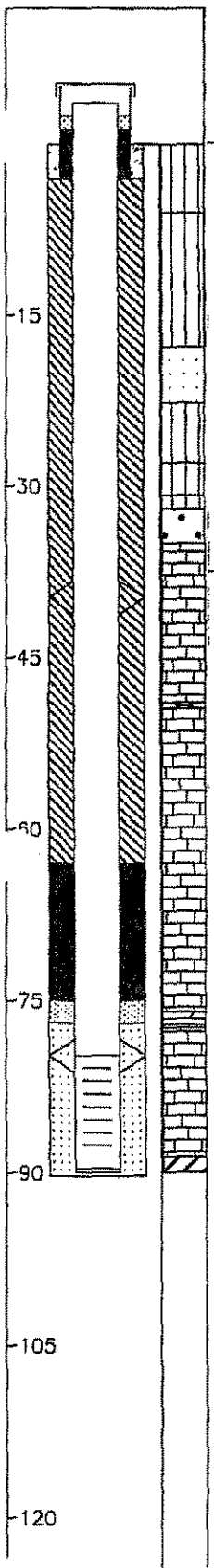

Not to Scale

Survey Coords: Northing: 1068132 ft. Easting: 516859 ft.

Elevation Ground Level 484.5 ft. NGVD

Top of PVC Casing 485.62 ft. NGVD

Drilling Summary:

Total Depth	90.3 ft.
Borehole Diameter	10 1/4" (0.0-35.0') 5 7/8" (35.0-90.3')
Casing Stickup Height	1.12 ft.
Driller	Layne-Western, St. Louis, MO
Rig	CME 75, Schramm Portadrill T660H
Bit(s)	6 1/4" ID Hollow Stem Auger Bit, NX Core, 5 7/8" Button Bit for Reaming
Drilling Fluid	Auger-None, NX Core Water, Air Rotary
Protective Casing	8x8" Square Steel, by 5' long

Construction Time log:

Task	Start Date	Start Time	Finish Date	Finish Time
Drilling				
CME 75	6/15/95	5:30	6/16/95	13:00
Schramm Rotary	6/18/95	13:00	6/18/95	13:45
Geophys.Logging:				
Casing:				
Filter Placement:	6/18/95	13:45	6/18/95	14:30
Cementing:				
Development				
Bentonite Grout	6/18/95	14:50	6/18/95	15:15
Bentonite Seal	6/18/95	14:35	6/18/95	14:55

Well Design & Specifications

Basis: Geologic Log X Geophysical Log

Casing string(s): C = Casing S = Screen

Depth			String(s)	Elevation		
+ 1.12	-	79.83	C1	485.62	-	404.67
79.83	-	89.63	S1	404.67	-	394.87
89.63	-	89.96	C2	394.87	-	394.54

Casing: C1 2 in. dia. Schedule 80 PVC, flush threaded with O-rings

C2 2 in. dia. threaded PVC end cap (4 in. long or 0.33 ft.)

Screen: S1 2 in. dia. Schedule 80 PVC, 0.010 in. machine cut slot, flush threaded with O-rings

Sand Pack: 16-35 mesh Silica Sand, 77.0-90.3 ft.

Filter Pack: Less than 50 mesh Silica Sand, 75.0-77.0 ft.

Grout Seal: Wyo-Ben Grout Well Bentonite Slurry, 3.0-63.0 ft.

Bentonite Seal: Extra high yield Wyo-Ben (100%) Slurry, 63.0-75.0 ft.

Concrete: 0.0-3.0 ft.

Well Development

Stabilization Test Data:

Time	pH	Spec. Cond.	Temp (°C)

Recovery Data:

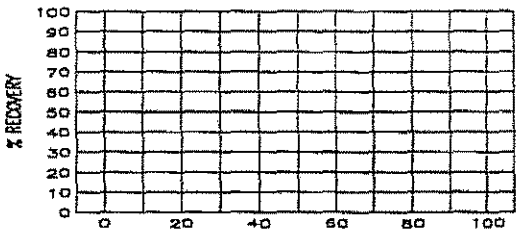

Comments:

Supervised by B. Tilton

Job Number 943-2848

Site LAIDLAW/OU2 RI-FS/MO

File Name PZ102RSS

MISSOURI DEPARTMENT OF NATURAL RESOURCES
DIVISION OF GEOLOGY AND LAND SURVEY

MONITORING WELL CERTIFICATION RECORD

OFFICE USE ONLY	DATE RECEIVED
REF NO 122513	CHECK NO
ROUTE	TRANSMITTAL NO
STATE WELL NUMBER	CROSS REFERENCE NO.
CHECKED BY	ENTERED Ph 1 Ph 2 Ph 3
APPROVED BY	DATE APPROVED

INFORMATION SUPPLIED BY OWNER

SITE NAME	WELL NUMBER
Laidlaw Bridgeton Sanitary Landfill	P2-102-R-SS

SITE ADDRESS	CITY	STATE	ZIP CODE
St. Charles Rock Rd.	Bridgeton	MO	63044

NAME	TELEPHONE
Laidlaw Waste Systems, Inc.	314-741-3710

ADDRESS	CITY	STATE	ZIP CODE
1938 N. Broadway	St. Louis	MO	63102

INFORMATION SUPPLIED BY MONITORING WELL CONTRACTOR

LOCATION OF WELL
SHOW LOCATION IN SECTION PLAT

COUNTY St. Louis
ELEVATION 484.46
AREA NO.

SMALLEST ¼ LARGEST ¼

SEC. ____ TWN. 47 N,RNG. 5 E OR W

LAT. 38° 46' 01" LONG 90° 26' 27"

SKETCH THE LOCATION TO THE WELL INCLUDING MILEAGE ON ALL ROADS TRAVELED FROM NEAREST TOWNS OR HIGHWAYS

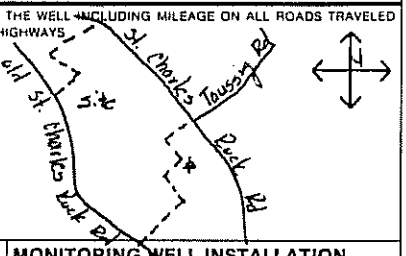

DESCRIBE LOCATION OF THE WELL SO WE WOULD BE ABLE TO VISIT IT

MONITORING WELL INSTALLATION CONTRACTOR'S NAME
Layne Western Co., Inc.

DRILLING CONTRACTOR'S NAME
Layne Western Co., Inc.

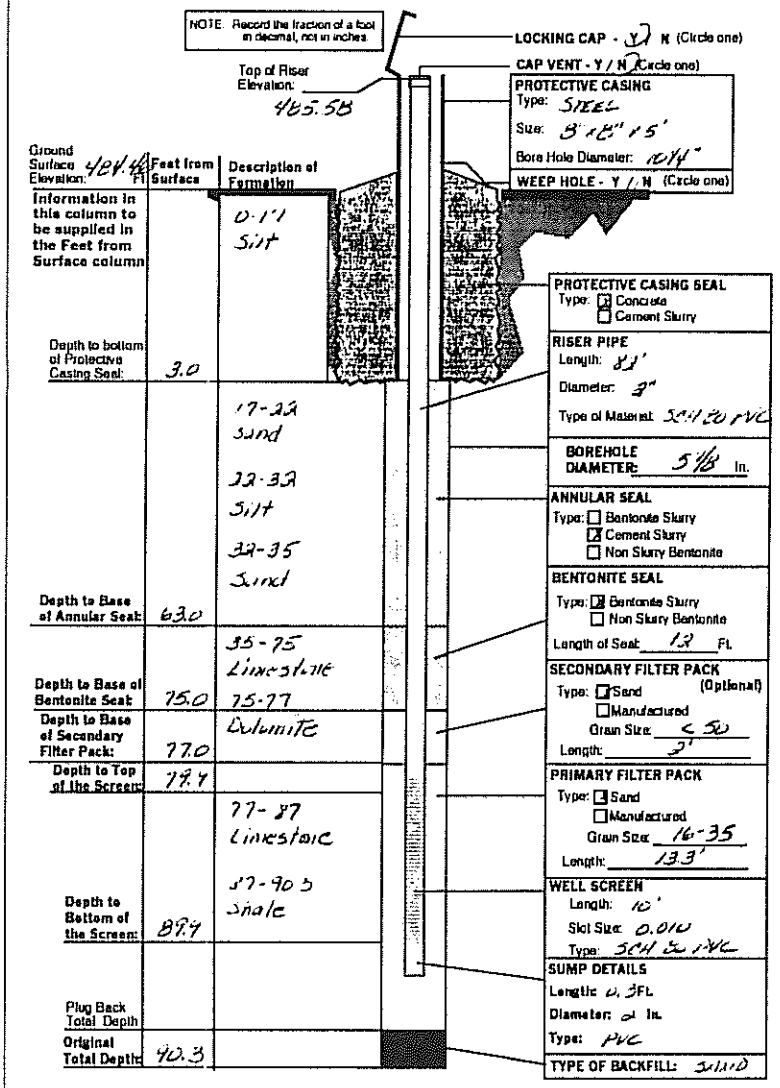

DRILLING CONTRACTOR'S NAME
Layne Western Co., Inc.

TYPE OF INSTALLATION
☒ ABOVE GROUND ☐ FLUSH MOUNT

STATIC WATER LEVEL
FEET FROM MEASURING POINT

DATE OF STATIC WATER LEVEL

ELEVATION OF MEASURING POINT
485.58

MEASURING POINT IS
☒ TOP OF RISER PIPE
☐ OTHER

DRILLING EQUIPMENT
☒ AIR ROTARY ☒ AUGER TYPE 6¼ H.S.A.
☐ REVERSE ROTARY ☐ OTHER

CENTRALIZERS USED
☒ YES, AT 2 TOTAL
☒ STAINLESS STEEL
☐ OTHER
☐ NO

MULTIPLE CASED WELLS
SUBMIT ADDITIONAL AS BUILT DIAGRAM SHOWING WELL CONSTRUCTION DETAILS INCLUDING TYPE AND SIZE OF ALL CASING, HOLE DIAMETERS, AND GROUT USED.

DATE WELL CONSTRUCTION WAS COMPLETED
6-18-95

I HEREBY CERTIFY THAT THE MONITORING WELL HEREIN DESCRIBED WAS CONSTRUCTED IN ACCORDANCE WITH THE DEPARTMENT OF NATURAL RESOURCES REQUIREMENTS FOR THE CONSTRUCTION OF MONITORING WELLS.

SIGNATURE (MONITORING WELL CONTRACTOR) Richard P. Vogt

PERMIT NUMBER	DATE
001356 WIII	7-07-95

SIGNATURE (DRILLING CONTRACTOR) Richard P. Vogt

PERMIT NUMBER	DATE
001356 WIII	7-07-95

MO 780-1139 (9-90) DISTRIBUTION: WHITE DIVISION CANARY MONITORING WELL CONTRACTOR PINK OWNER

LAIDLAW WASTE SYSTEMS INC.

SOIL BOREHOLE LOG

SITE NAME AND LOCATION	DRILLING METHOD:					BORING NO.	
	6.25 inch I.D. Hollow Stem Auger					PZ-103-SS	
						SHEET	
	SAMPLING METHOD:					1 OF 4	
LAIDLAW/OU2 RI-FS/MD WEST LAKE LANDFILL OPERABLE UNIT 2	SPLIT SPOON: 2.0 inch O.D./1.5 inch I.D. (SP)					DRILLING	
	SHELBY TUBE: 3.0 inch O.D./2 13/16 inch I.D. (SH)					START	FINISH
	WATER LEVEL					TIME	TIME
	TIME					07:30	12:00
	DATE					DATE	DATE
NORTHING: 1067660.40 DATUM EASTING: 516723.54 ELEVATION 477.8	CASING DEPTH					2/21/95	2/23/95

DRILL RIG CME 75 - TRUCK MOUNT | SURFACE CONDITIONS

ANGLE BEARING

SAMPLE HAMMER

DEPTH IN FEET (ELEVATION)	BLOW/ 6 IN. ON SAMPLER	RECOVERY	SYMBOL	SAMPLER SYMBOL	SAMPLE NUMBER AND DESCRIPTION OF MATERIAL	SAMPLER TYPE	REMARKS
1					(0.0-2.0 ft.) No samples collected due to coarse gravel placed for temporary road		
2					(475.8) 2.0		
3	1 2 3 4	1.6'/2.0' (80%)			(2.0-16.0 ft.) Firm, dusky yellowish brown (10YR 2/2), CLAYEY SILT, trace fine Sand, NR, damp, (CL-ML), (LOESS)	SP (2)	
4	2 4 4 4	1.3'/2.0' (65%)			@ 4.0 ft., color changes to pale yellowish brown (10YR 6/2) with moderate amount of iron oxide staining	SP (3)	
6	1 2 2 4	1.3'/2.0' (65%)				SP (4)	
8	1 2 3 4	1.8'/2.0' (90%)				SP (5)	
10	2 3 5 6	2.0'/2.0' (100%)			@ 10.0 ft., intermittent moist zones (<2 inches thick)	SP (6)	
12	1 2 2 3	1.7'/2.0' (85%)			Below 12.0 ft., increase in iron oxide staining (~50%)	SP (7)	
14		1.8'/2.0' (90%)				SH (8)	

DRILLING CONTR LAYNE-WESTERN

LOGGED BY B. TILTON

DATE 2/21/95 CHK'D BY W. HERST

JOB NO.: 943-2848

FILENAME: PZ103SS

LAIDLAW WASTE SYSTEMS INC.

SOIL BOREHOLE LOG

SITE NAME AND LOCATION	DRILLING METHOD:	BORING NO.
LAIDLAW/OU2 RI-FS/MO WEST LAKE LANDFILL OPERABLE UNIT 2	6.25 inch I.D. Hollow Stem Auger	PZ-103-SS
	SAMPLING METHOD:	SHEET 2 OF 4
	SPLIT SPOON: 2.0 inch O.D./1.5 inch I.D. (SP)	DRILLING
	SHELBY TUBE: 3.0 inch O.D./2 13/16 inch I.D. (SH)	START / FINISH
	WATER LEVEL / TIME / DATE / CASING DEPTH	TIME 07:30 / TIME 12:00
NORTHING: 1067660.40 DATUM EASTING: 516723.54 ELEVATION 477.8		DATE 2/21/95 / DATE 2/23/95

DRILL RIG CME 75 - TRUCK MOUNT

SURFACE CONDITIONS

ANGLE BEARING

SAMPLE HAMMER

DEPTH IN FEET (ELEVATION)	BLOW/ 6 IN. ON SAMPLER	RECOVERY	SYMBOL	SAMPLER SYMBOL	SAMPLE NUMBER AND DESCRIPTION OF MATERIAL	SAMPLER TYPE	REMARKS
					(2.0-16.0 ft.) Firm, dusky yellowish brown (10YR 2/2), CLAYEY SILT, trace fine Sand, NR, damp, (CL-ML), (LOESS) (461.8) 16.0	SH 8	
16	7 11 10 11	1.3' / 2.0' (65%)			(16.0-20.0 ft.) Loose to compact yellowish orange (10YR 6/6), SILTY fine SAND, NR, damp, (SM), (ALLUVIAL)	SP 9	
17							
18	1 4 3 8	1.1' / 2.0' (55%)			@ 18.0 ft., silty sand becomes moist	SP 10	
19					(457.8) 20.0		
20	2 6 10 10	2.0' / 2.0' (100%)			(20.0-22.0 ft.) Stiff to very stiff, pale yellowish brown (10YR 6/2) to moderate yellowish brown (10YR 5/4) CLAYEY SILT with silty fine sand layers (<2 inches), WR, moist, (CL-ML), (ALLUVIUM)	SP 11	
21							
22	1 3 6 7	1.1' / 2.0' (55%)			(22.0-28.0 ft.) Stiff, medium dark gray (N4), CLAYEY SILT, some thin silty fine sand zones (<1 inch), SR, damp to moist, (CL-ML), (ALLUVIUM)	SP 12	
23							
24		0.4' / 2.0' (20%)				SH 13	
25							
26	15 47 50/5"	0.9' / 2.0' (45%)			@ 26.0-27.5 ft., limestone boulder or layer encountered, first water identified in borehole	SP 14	Wet zone appears to be isolated
27							
28	2 6 7 10	1.4' / 2.0' (70%)			(28.0-32.0 ft.) Stiff, greenish gray (5G 6/1) CLAYEY SILT, trace to little fine Sand, NR, damp, (CL-ML), (ALLUVIUM)	SP 15	
29							

DRILLING CONTR LAYNE-WESTERN

LOGGED BY B. TILTON

DATE 2/21/95 CHK'D BY W. HERST

JOB NO.: 943-2848

FILENAME: PZ103SS

SOIL BOREHOLE LOG

LAIDLAW WASTE SYSTEMS INC.

SITE NAME AND LOCATION	DRILLING METHOD:		BORING NO.
	6.25 inch I.D. Hollow Stem Auger		PZ-103-SS
			SHEET
	SAMPLING METHOD:		3 OF 4
	SPLIT SPOON: 2.0 inch O.D./1.5 inch I.D. (SP)		DRILLING
LAIDLAW/OU2 RI-FS/MD WEST LAKE LANDFILL OPERABLE UNIT 2	SHELBY TUBE: 3.0 inch O.D./2 13/16 inch I.D. (SH)		START / FINISH
	WATER LEVEL		TIME 07:30 / TIME 12:00
	TIME		
	DATE		DATE 2/21/95 / DATE 2/23/95
NORTHING: 1067660.40 DATUM EASTING: 516723.54 ELEVATION 477.8	CASING DEPTH		

DRILL RIG CME 75 - TRUCK MOUNT | SURFACE CONDITIONS

ANGLE BEARING

SAMPLE HAMMER

DEPTH IN FEET (ELEVATION)	BLOW/ 6 IN. ON SAMPLER	RECOVERY	SYMBOL	SAMPLER SYMBOL	SAMPLE NUMBER AND DESCRIPTION OF MATERIAL	SAMPLER TYPE	REMARKS
31	2 4 7 9	1.5'/2.0' (75%)			(28.0-32.0 ft.) Stiff, greenish gray (5G 6/1) CLAYEY SILT, trace to little fine Sand, NR, damp, (CL-ML), (ALLUVIUM) @ 31.6 ft, moderate reddish brown (10R 4/6) CLAYEY medium SAND layer (~1/2 inch) (445.8) 32.0	SP (16)	
32	2 4 5 11	1.6'/2.0' (80%)			(32.0-47.5 ft.) Stiff to very stiff, pale yellowish green (10G 7/2) SILTY CLAY, trace to little medium Sand, NR, damp, (CL)	SP (17)	
33					@ 33.4-33.8 ft, clayey medium grained sand layer, damp, (SC)		
34	2 7 8 11	1.8'/2.0' (90%)				SP (18)	
35							
36	1 3 7 11	1.5'/2.0' (75%)			@ 36.0 ft, color varies from very pale orange (10R 8/2) to moderate yellowish brown (10R 5/4) to pale green (5G 7/2), trace fine gravel	SP (19)	
37							
38	3 4 6 15	2.0'/2.0' (100%)				SP (20)	
39							
40	3 5 20 11	2.0'/2.0' (100%)				SP (21)	
41							
42	9 19 50/5"	1.0'/2.0' (50%)				SP (22)	
43					@ 43.0 ft, extremely weathered limestone boulder or layer encountered		
44	3 36 24 50/2"	0.5'/2.0' (25%)				SP (23)	

DRILLING CONTR LAYNE-WESTERN

LOGGED BY B. TILTON

DATE 2/21/95 CHK'D BY W. HERST

JOB NO.: 943-2848

FILENAME: PZ103SS

LAIDLAW WASTE SYSTEMS INC.

SOIL BOREHOLE LOG

SITE NAME AND LOCATION

LAIDLAW/OU2 RI-FS/MO
WEST LAKE LANDFILL
OPERABLE UNIT 2

NORTHING: 1067660.40
DATUM EASTING: 516723.54 ELEVATION 477.8

DRILLING METHOD: 6.25 inch I.D. Hollow Stem Auger

SAMPLING METHOD:
SPLIT SPOON: 2.0 inch O.D./1.5 inch I.D. (SP)
SHELBY TUBE: 3.0 inch O.D./2 13/16 inch I.D. (SH)

BORING NO. PZ-103-SS

SHEET 4 OF 4

					DRILLING START	DRILLING FINISH
WATER LEVEL					TIME	TIME
TIME					07:30	12:00
DATE					DATE	DATE
CASING DEPTH					2/21/95	2/23/95

DRILL RIG CME 75 - TRUCK MOUNT
ANGLE BEARING
SAMPLE HAMMER

SURFACE CONDITIONS

DRILLING CONTR LAYNE-WESTERN

LOGGED BY B. TILTON CHK'D BY W. HERST
DATE 2/21/95

JOB NO.: 943-2848
FILENAME: PZ103SS

DEPTH IN FEET (ELEVATION)	BLOW/ 6 IN. ON SAMPLER	RECOVERY	SYMBOL	SAMPLER SYMBOL	SAMPLE NUMBER AND DESCRIPTION OF MATERIAL		SAMPLER TYPE	REMARKS
46	4 6 8 50/3"	2.0" 2.0" (100%)			(32.0-47.5 Ft.) Stiff to very stiff, pale yellowish green (10G 7/2) SILTY CLAY, trace to little medium Sand, NR, damp, (CL) @ 45.5 ft., weathered limestone boulder or layer encountered @ 47.1 Ft., thin silty fine sand layer (~1 inch), moist		SP (23) SP (24)	
47						(430.3) 47.5		
48	23 5 2 48	1.8" 2.0" (90%)			(47.5-48.0 Ft.) Hard, dark yellowish orange (10R 6/6), weathered SILTY CLAYSTONE, NR, damp, (CH) @ 48.0 Ft., weathered limestone boulder encountered (48.0-50.0 Ft.) Hard, moderate yellowish brown (10YR 5/4) SILTY CLAY, some weathered limestone pieces (<1 inch), WR-SR, moist, (CL)	(429.8) 48.0 (427.8) 50.0	SP (25)	
49								
50					End of Soil Borehole Log at 50.0 Ft. See PZ-103-SS Record of Drillhole for rock descriptions			
51								
52								
53								
54								
55								
56								
57								
58								
59								

RECORD OF DRILLHOLE PZ-103-SS

Sheet 1 of 7

PROJECT: LAIDLAW/RI-FS
PROJECT NO: 943-2848
LOCATION: BRIDGETON, MO

BORING METHOD: NX Core & water
DRILLING DATE: 2/21/95-2/22/95
DRILL RIG: CME 75

DATUM: MSL
COORDINATES N: 1087660.4
AZIMUTH: 0

COLLAR ELEV: 477.8
E: 516723.5
INCLINATION: -90

J-Joint, P-Fault, S-Shear, B-Bedding, F-Foliation
PL-Planar, C-Curved, U-Undulating, ST-Stepped, I-Irregular
P-Polished, K-Slikensided, SM-Smooth, R-Rough, VR-V. Rough
Fe-Fe Oxide, CL-Clay Infill, CH-Chlorite, H-Healed, GRF-Gravel Filled

DEPTH SCALE (FEET)	DESCRIPTION	GRAPHIC LOG	ELEV / DEPTH (FT)	RUN NO.	CORE RECOVERY	ROD 80 60 40 20	FRACTURES PER FOOT 2 4 6 8 10	DISCONTINUITY DATA: DIP wrt CORE AXIS 0 30 60 90	DISCONTINUITY DATA: TYPE AND SURFACE DESCRIPTION	GRAPHIC LOG	WEATHERING INDEX: SW FR MW HW CW	STRENGTH INDEX: R5 R4 R3 R2 R1	POINT LOAD INDEX (psi): R1 <10, R2 10-30, R3 30-150, R4 150-600, R5 >600	TEST ORIENTATION R5 R6	NOTES WATER LEVELS INSTRUMENTATION
48	0.0-50.0 ft. See Soil Borehole Log PZ-103-SS 50.0-51.5 ft. No samples collected														
50															
	426.30		426.30												
	51.5-62.7 ft. Moderately weathered, medium bedded, yellowish gray (5Y 8/1), medium crystalline, weak to medium strong, LIMESTONE, (ST. LOUIS FORMATION) Stylolites with iron oxide staining 53.4-53.9 ft. Pinkish gray (5YR 8/1), siltstone layer 54.7 ft. Oxidized pyrite nodules (<3 mm.) 56.4 ft. Vertical calcite filled vein (4 in.) 57.0 ft. Calcite filled vein at 90 degrees (1 in. thick)		51.50						Core Loss						Core loss possibly from 51.5-52.7 ft. in highly fractured rock and clay zones on top of bedrock
52															
54								90	J,I,R						
56				1	84%										
58								90	J,I,R						
			418.80					90	J,I,R,CL						
			58.00												59.0-60.0 ft. Five breaks that had been spun
60								90	J,I,R (2)						
				2	69%			90	J,PL,R						
62	62.7-62.9 ft. Extremely weak, greenish gray (5GY 6/1), glauconite clay layer		414.90												
	62.9-71.0 ft. Highly weathered, medium bedded, moderate yellowish brown (10YR 5/4), fine grained, weak, ARGILLACEOUS SANDSTONE, (ST. LOUIS FORMATION)		62.90												Core loss in soft formation or possible open void
64									Core Loss						

DEPTH SCALE: 1:2
DRILLING CONTRACTOR: LAYNE-WESTERN
DRILLER: D. MAHURIN

LOGGED: B. TILTON
CHECKED: W. HERST
DATE: 3/13/95

Golder Associates

RECORD OF DRILLHOLE PZ-103-SS

Sheet 2 of 7

PROJECT: LAIDLAW/RI-FS
PROJECT NO: 843-2848
LOCATION: BRIDGETON, MO

BORING METHOD: NX Core & water
DRILLING DATE: 2/21/95-2/22/95
DRILL RIG: CME 75

DATUM: MSL
COORDINATES N: 1067860.4
AZIMUTH: 0

COLLAR ELEV: 477.8
E: 516723.5
INCLINATION: -90

J-Joint, F-Fault, S-Shear, B-Bedding, F-Foliation
PL-Planar, C-Curved, U-Undulating, ST-Stepped, I-Irregular
P-Polished, K-Slickensided, SM-Smooth, R-Rough, VR-V. Rough
Fe-Fe Oxide, CL-Clay Infill, CH-Chlorite, H-Healed, GRF-Gravel Filled

DEPTH SCALE (FEET)	DESCRIPTION	GRAPHIC LOG	ELEV / DEPTH (FT)	RUN NO	CORE RECOVERY	RQD (50 60 40 20)	FRACTURES PER FOOT (2 4 6 8 10)	DISCONTINUITY DATA: DIP wrt CORE AXIS (0 20 60 90)	DISCONTINUITY DATA: TYPE AND SURFACE DESCRIPTION	GRAPHIC LOG	WEATHERING INDEX (SW FR MW HW CW)	STRENGTH INDEX (R6 R5 R4 R3 R2 R1)	POINT LOAD INDEX (psi) (R1 30 R2 150 R3 300 R4 600 R5 1500 R6)	TEST ORIENTATION	NOTES WATER LEVELS INSTRUMENTATION
64	62.9-71.0 ft. Highly weathered, medium bedded, moderate yellowish brown (10YR 5/4), fine grained, weak, ARGILLACEOUS SANDSTONE, (ST. LOUIS FORMATION)								Core Loss						
			411.80												
66	66.0-66.5 ft. Highly weathered, dark yellowish orange (10YR 6/6) extremely weak, SILTSTONE layer		66.00 411.30 / 66.50	2	69%				Core Loss						Core loss in soft formation or possible open void
68			408.80												
	69.6 ft. Very soft, dark yellowish orange (10YR 6/6), clay layer (2 in. thick)		69.00	3	100%										
70			406.80												
	71.0-71.7 ft. Slightly weathered, medium bedded, dark greenish gray (5GY 4/1), very fine crystalline, medium strong, DOLOMITIC LIMESTONE, moderate porosity, (ST. LOUIS FORMATION)		71.00 406.10 / 71.70						J,PL,SM J,ST,SM J,PL,SM						Run 3 stopped short, bit plugged off in claystones 2/21/95 @ 16:00 Stopped drilling in Run 3 2/22/95 @ 7:30 Began Run 4
72	71.7-78.7 ft. Highly weathered, thinly bedded, medium dark gray (N4) to grayish black (N2), very weak, CLAYEY SILTSTONE, (ST. LOUIS FORMATION) Some disseminated pyrite, some thin layers of claystone (<3 in.)		405.80 72.00												
74									B,I,R B,I,R J,I,R J,PL,SM,CL J,PL,SM						
	75.6-76.3 ft. Brownish gray (5YR 4/1), argillaceous LIMESTONE layer		402.20 75.60 / 401.50 76.30	4	100%				J,PL,SM J,PL,SM-Intact						
76									J,I,R (2) B,I,R						
78	78.7-87.5 ft. Fresh, thickly bedded, light olive gray (5Y 6/1), micro-crystalline, medium strong, LIMESTONE, (ST. LOUIS FORMATION) Stylolitic		399.10 78.70						B,I,R						
			398.60												
			79.20	5	100%										
80			397.80 80.00												

DEPTH SCALE: 1:2
DRILLING CONTRACTOR: LAYNE-WESTERN
DRILLER: D. MAHURIN

LOGGED: B. TILTON
CHECKED: W. HERST
DATE: 3/13/95

Golder Associates

RECORD OF DRILLHOLE PZ-103-SS

Sheet 3 of 7

PROJECT: LAIDLAW/RI-FS
PROJECT NO: 943-2848
LOCATION: BRIDGETON, MO

BORING METHOD: NX Core & water
DRILLING DATE: 2/21/95-2/22/95
DRILL RIG: CME 75

DATUM: MSL
COORDINATES N: 1067560.4
AZIMUTH: 0

COLLAR ELEV: 477.8
E: 518723.5
INCLINATION: -90

J-Joint, F-Fault, S-Shear, B-Bedding, F-Foliation
PL-Planar, C-Curved, U-Undulating, ST-Stepped, I-Irregular
P-Polished, K-Slickensided, SM-Smooth, R-Rough, VR-V. Rough
Fe-Fe Oxide, CL-Clay Infill, CH-Chlorite, H-Healed, GRF-Gravel Filled

SCALE (FEET)	DESCRIPTION	GRAPHIC LOG	ELEV / DEPTH (FT)	RUN NO.	CORE RECOVERY	RQD	FRACTURES PER FOOT	DISCONTINUITY DATA: DIP wrt CORE AXIS	DISCONTINUITY DATA: TYPE AND SURFACE DESCRIPTION	GRAPHIC LOG	WEATHERING INDEX (SW FR, MW, HW, CW)	STRENGTH INDEX (R6, R5, R4, R3, R2, R1)	POINT LOAD INDEX (psi) (R1 10, R2 150, R3 300, R4 600, R5 1500, R6)	TEST ORIENTATION	NOTES WATER LEVELS INSTRUMENTATION
80			397.80												
	80.0-81.2 ft. Thinly laminated, olive gray (5Y 4/1), CLAYEY SILTSTONE layer		80.00												
			396.60												
	78.7-87.5 ft. Fresh, thickly bedded, light olive gray (5Y 6/1), micro-crystalline, medium strong, LIMESTONE, (ST. LOUIS FORMATION) Stylolitic		81.20												
82				5	100 %				J,PL,SM,CL (2)						
84															
86			391.80												9:45 Stopped Run 5 short, bit plugged off
			86.00						B,PL,SM						
	87.3-87.5 ft. Soft, greenish gray (5GY 6/1), glauconite Clay layer								J,I,R,CL						
88	87.5-103.8 ft. Fresh, thinly bedded, light olive green (5Y 6/1) to olive gray (5Y 4/1), very fine grained, medium strong, ARENACEOUS DOLOMITE, (ST. LOUIS FORMATION) Trace disseminated pyrite								J,I,R (2)						
									J,PL,SM						
	89.0-91.5 ft. Moderate porosity, open vugs (<3 mm.), glauconite in some vugs (<1%) 90.4 ft. Thin silicified zone (~1/2 in.)														
90				6	98%										
									J,PL,SM						
92															
									J,PL,SM,CL						
94			383.30												
			94.50						J,I,SM (2)						
				7	98%										
96															

DEPTH SCALE: 1:2
DRILLING CONTRACTOR: LAYNE-WESTERN
DRILLER: D. MAHURIN

LOGGED: B. TILTON
CHECKED: W. HERST
DATE: 3/13/95

Golder Associates

RECORD OF DRILLHOLE PZ-103-SS

PROJECT: LAIDLAW/RI-FS
PROJECT NO: 943-2848
LOCATION: BRIDGETON, MO

BORING METHOD: NX Core & water
DRILLING DATE: 2/21/95-2/22/95
DRILL RIG: CME 75

DATUM: MSL
COORDINATES N: 1067660.4
AZIMUTH: 0

COLLAR ELEV: 477.8
E: 516723.5
INCLINATION: -90

J-Joint, F-Fault, S-Shear, B-Bedding, F-Foliation
PL-Planar, C-Curved, U-Undulating, ST-Stepped, I-Irregular
P-Polished, K-Slickensided, SM-Smooth, R-Rough, VR-V. Rough
Fe-Fe Oxide, CL-Clay Infill, CH-Chlorite, H-Healed, GRF-Gravel Filled

DEPTH SCALE (FEET)	DESCRIPTION	GRAPHIC LOG	ELEV / DEPTH (FT)	RUN NO	CORE RECOVERY	RQD	FRACTURES PER FOOT	DISCONTINUITY DATA: DIP wrt CORE AXIS	DISCONTINUITY DATA: TYPE AND SURFACE DESCRIPTION	GRAPHIC LOG	WEATHERING INDEX	STRENGTH INDEX	POINT LOAD INDEX (psi)	TEST ORIENTATION	NOTES WATER LEVELS INSTRUMENTATION
96	87.5-103.8 ft. Fresh, thinly bedded, light olive green (5Y 6/1) to olive gray (5Y 4/1), very fine grained, medium strong, ARENACEOUS DOLOMITE, (ST. LOUIS FORMATION) Trace disseminated pyrite							60	J,I,R						
98								60	J,I,SM						
								60	J,I,R						
								60	J,I,R						
								60	J,P,SM						
								60	J,P,SM						
								60	J,P,SM						
100								60	B,I,SM,CL						
				7	98%										
	101.3-103.6 ft. Moderate porosity, open vugs (<2 mm.)														
102															
			374.00												
104	103.8-105.6 ft. Freshly medium bedded, pale yellowish brown (10YR 6/2) to light brownish gray (5YR 6/1), medium crystalline, medium strong, DOLOMITIC LIMESTONE, (ST. LOUIS FORMATION)		103.80					60	J,U,SM						
			373.30												
			104.50					60	J,PL,R						
								30	J,PL,SM-healed with calcite						
			372.10												
106	105.6 ft. Brownish gray (5YR 4/1), Claystone layer, (~1 in. thick)		105.70												
	105.7-107.2 ft. Fresh, thickly bedded, olive gray (5Y 4/1), finely grained, strong, ARENACEOUS DOLOMITE, (ST. LOUIS FORMATION)		370.60												
			107.20												
	107.2-109.6 ft. Fresh, medium bedded, pale yellowish brown (10YR 6/2), finely crstalline, medium strong, DOLOMITIC LIMESTONE, (ST. LOUIS FORMATION) Trace disseminated pyrite														
108				8	100%			60	J,U,SM						
	109.6-128.4 ft. Fresh, medium bedded, olive gray (5Y 4/1), micro-crystalline, medium strong to strong, LIMESTONE, (ST. LOUIS FORMATION) Stylolites common, some glauconite stringers														
110								60	J,I,SM,CL						
112															

DEPTH SCALE: 1:2
DRILLING CONTRACTOR: LAYNE-WESTERN
DRILLER: D. MAHURIN

LOGGED: B. TILTON
CHECKED: W. HERST
DATE: 3/13/95

Golder Associates

RECORD OF DRILLHOLE PZ-103-SS

PROJECT: LAIDLAW/RI-FS
PROJECT NO: 943-2848
LOCATION: BRIDGETON, MO

BORING METHOD: NX Core & water
DRILLING DATE: 2/21/95-2/22/95
DRILL RIG: CME 75

DATUM: MSL
COORDINATES N: 1067660.4
AZIMUTH: 0

COLLAR ELEV: 477.8
E: 516723.5
INCLINATION: -90

J-Joint, F-Fault, S-Shear, B-Bedding, F-Foliation
PL-Planar, C-Curved, U-Undulating, ST-Stepped, I-Irregular
P-Polished, K-Slickensided, SM-Smooth, R-Rough, VR-V. Rough
Fe-Fe Oxide, CL-Clay Infill, CH-Chlorite, H-Healed, GRF-Gravel Filled

SCALE (FEET)	DESCRIPTION	GRAPHIC LOG	ELEV / DEPTH (FT)	RUN NO.	CORE RECOVERY	RQD	FRACTURES PER FOOT	DISCONTINUITY DATA: DIP wrt CORE AXIS	DISCONTINUITY DATA: TYPE AND SURFACE DESCRIPTION	GRAPHIC LOG	WEATHERING INDEX	STRENGTH INDEX	POINT LOAD INDEX (psi)	TEST ORIENTATION	NOTES WATER LEVELS INSTRUMENTATION
112	112.0-113.5 ft. Becomes argillaceous 109.6-128.4 ft. Fresh, medium bedded, olive gray (5Y 4/1), micro-crystalline, medium strong to strong, LIMESTONE, (ST. LOUIS FORMATION) Stylolites common, some glauconite stringers			8	100 %				J,I,R,CL						
114			363.30												
			114.50						J,I,SM						
116															
									J,PL,SM						
									J,I,VR						
									J,PL,SM,CL						
118									J,PL,VR						
	119.2-124.0 ft. Thin chert zone generally less than 2 in. thick			9	100 %										
120	120.0-120.5 ft. Moderate siliceous								J,I,R,CL						
122									J,I,R,CL						
									J,I,SM,CL						
124			353.30												
			124.50												
	Two stylolites														
126				10	100 %				J,PL,SM (2)						
									J,P,SM						
128															

DEPTH SCALE: 1:2
DRILLING CONTRACTOR: LAYNE-WESTERN
DRILLER: D. MAHURIN

LOGGED: B. TILTON
CHECKED: W. HERST
DATE: 3/13/95

Golder Associates

RECORD OF DRILLHOLE PZ-103-SS

Sheet 6 of 7

PROJECT: LAIDLAW/RI-FS
PROJECT NO: 943-2848
LOCATION: BRIDGETON, MO

BORING METHOD: NX Core & water
DRILLING DATE: 2/21/95-2/22/95
DRILL RIG: CME 75

DATUM: MSL
COORDINATES N: 1067560.4
AZIMUTH: 0

COLLAR ELEV: 477.8
E: 516723.5
INCLINATION: -90

J-Joint, F-Fault, S-Shear, B-Bedding, F-Foliation
PL-Planar, C-Curved, U-Undulating, ST-Stepped, I-Irregular
P-Polished, K-Slickensided, SM-Smooth, R-Rough, VR-V. Rough
Fe-Fe Oxide, CL-Clay Infill, CH-Chlorite, H-Healed, GRF-Gravel Filled

DEPTH SCALE (FEET)	DESCRIPTION	GRAPHIC LOG	ELEV / DEPTH (FT)	RUN NO.	CORE RECOVERY	RQD	FRACTURES PER FOOT	DISCONTINUITY DATA: DIP wrt CORE AXIS	DISCONTINUITY DATA: TYPE AND SURFACE DESCRIPTION	GRAPHIC LOG	WEATHERING INDEX: SW FR, MW, HW, CW	STRENGTH INDEX: R6, R5, R4, R3, R2, R1	POINT LOAD INDEX (psi): R1 30, R2 150, R3 300, R4 600, R5 1500, R6	TEST ORIENTATION	NOTES WATER LEVELS INSTRUMENTATION
128			349.40												
	128.4-133.9 ft. 128.40 Slightly weathered, thickly bedded, light olive gray (5Y 6/1), fine grained, medium strong, ARENACEOUS DOLOMITE, (ST. LOUIS FORMATION)														
130				10	100 %										
132															
134			343.90												
	133.9-136.5 ft. 133.90 Fresh, medium bedded, light olive gray (5Y 5/2), micro-crystalline to fine crystalline, medium strong, LIMESTONE, (ST. LOUIS FORMATION) Trace disseminated pyrite, some thin veins of calcite (<1/4 in.)		343.50 134.30						J,PL,SM,CL						2/22/95 16:45 Stopped drilling on Run 10 2/23/95 7:40 Resumed drilling Measured water level at 52.15 ft. below ground surface
136									J,U,SM						
			341.30						B,PL,SM						
	136.5-139.7 ft. 136.50 Slightly weathered, thickly bedded, light olive gray (5Y 6/1), very fine grained, medium strong, ARENACEOUS DOLOMITE, (<1 in.), (ST. LOUIS FORMATION) Thin Limestone layers														
138				11	100 %										
			338.10						J,C,SM						
	139.7-142.3 ft. 139.70 Slightly weathered, medium bedded, light olive gray (5Y 5/2), fine crystalline, medium strong, DOLOMITIC LIMESTONE, (ST. LOUIS FORMATION)								J,PL,SM						
140									J,I,R						
142			335.50						J,I,R,CL						
	142.3-144.3 ft. 142.30 Fresh, thickly bedded, light olive gray (5Y 6/1), micro-crystalline, strong, LIMESTONE, (ST. LOUIS FORMATION) 144.0-144.2 ft. Soft, grayish green (5G 5/2), glauconitic clay layer														Highly broken rock.
144															

DEPTH SCALE: 1:2
DRILLING CONTRACTOR: LAYNE-WESTERN
DRILLER: D. MAHURIN

LOGGED: B. TILTON
CHECKED: W. HERST
DATE: 3/13/95

Golder Associates

RECORD OF DRILLHOLE PZ-103-SS

PROJECT: LAIDLAW/RI-FS
PROJECT NO: 943-2848
LOCATION: BRIDGETON, MO

BORING METHOD: NX Core & water
DRILLING DATE: 2/21/95-2/22/95
DRILL RIG: CME 75

DATUM: MSL
COORDINATES N: 1067660.4
AZIMUTH: 0

COLLAR ELEV: 477.8
E: 516723.5
INCLINATION: -90

J-Joint, F-Fault, S-Shear, B-Bedding, F-Foliation
PL-Planar, C-Curved, U-Undulating, ST-Stepped, I-Irregular
P-Polished, K-Slickensided, SM-Smooth, R-Rough, VR-V. Rough
Fe-Fe Oxide, CL-Clay Infill, CH-Chlorite, H-Healed, GRF-Gravel Filled

DEPTH SCALE (FEET)	ROCK TYPE: DESCRIPTION	GRAPHIC LOG	ELEV / DEPTH (FT)	RUN NO.	CORE RECOVERY	RQD (80 60 40 20)	FRACTURES PER FOOT (2 4 6 8 10)	DISCONTINUITY DATA: DIP wrt CORE AXIS (0 30 60 90)	DISCONTINUITY DATA: TYPE AND SURFACE DESCRIPTION	GRAPHIC LOG	WEATHERING INDEX (SW FR, MW HW CW)	STRENGTH INDEX (R5 R4 R3 R2 R1)	POINT LOAD INDEX (psi) (R1 30 R2 150 R3 300 R4 600 R5 1500 R6)	TEST ORIENTATION	NOTES WATER LEVELS INSTRUMENTATION
144	333.50		333.50	11	100 %				J,I,SM (2)						
	End of Record of Drillhole at 144.3 ft. 144.30		144.30												2/23/95 @ 9:00 Finish drilling corehole.
146															
148															
150															
152															
154															
156															
158															
160															

DEPTH SCALE: 1:2
DRILLING CONTRACTOR: LAYNE-WESTERN
DRILLER: D. MAHURIN

LOGGED: B. TILTON
CHECKED: W. HERST
DATE: 3/13/95

Golder Associates

Well No. PZ-103-SS

Boring No. X-Ref: PZ-103-SS

PIEZOMETER CONSTRUCTION SUMMARY

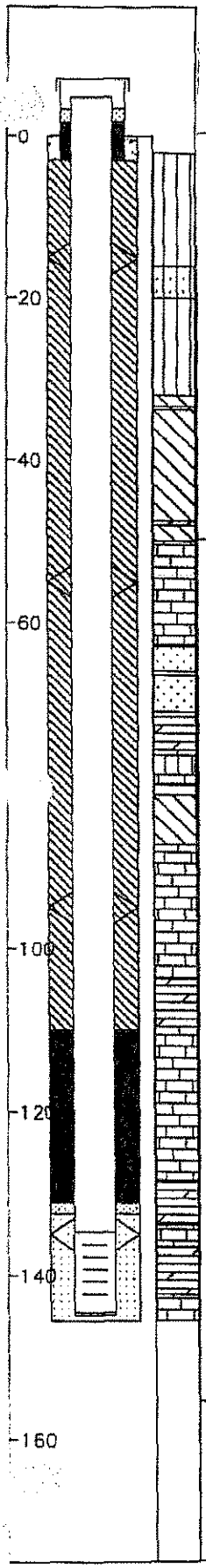

Not to Scale

Survey Coords: Northing: 1087660 ft. Easting: 516724 ft.

Elevation Ground Level 477.8 ft. NGVD

Top of PVC Casing 480.17 ft. NGVD

Drilling Summary:

Total Depth 145.5 ft.

Borehole Diameter 10 1/4 in. (0.0-51.0 ft.) 5 7/8 in. (51.0-145.5 ft.)

Casing Stickup Height 2.39 ft.

Driller Layne-Western St. Louis, MO

Rig CME 75, Schramm Portadrill T660H

Bit(s) 6 1/4 in. ID Hollow Stem Auger Bit, NX Core, 5 7/8 in. Button Bit for Reaming

Drilling Fluid Auger-None, NX Core Water, Air Rotary

Protective Casing 8x8 in. Square Steel, by 5 ft. long

Construction Time log:

Task	Start Date	Start Time	Finish Date	Finish Time
Drilling				
CME 75	2/21/95	7:30	2/23/95	9:45
Schramm Rotary	2/26/95	9:30	2/26/95	11:20
Geophys.Logging:				
Casing:	2/26/95	11:20	2/26/95	11:40
Filter Placement:	2/26/95	11:45	2/26/95	12:00
Cementing:				
Development				
Bentonite Grout	2/26/95	13:30	2/26/95	14:30
Bentonite Seal	2/26/95	12:30	2/26/95	13:00

Well Design & Specifications

Basis: Geologic Log X Geophysical Log

Casing string(s): C = Casing S = Screen

Depth			String(s)	Elevation		
+ 2.39	-	134.70	C1	480.17	-	343.08
134.70	-	144.50	S1	343.08	-	333.28
144.50	-	144.83	C2	333.28	-	332.95

Casing: C1 2 in. dia. Schedule 80 PVC, flush threaded with O-rings

C2 2 in. dia. threaded PVC end cap (4 in. long or 0.33 ft.)

Screen: S1 2 in. dia. Schedule 80 PVC, 0.010 in. machine cut slot, flush threaded with O-rings

Sand Pack: 16-35 mesh Silica Sand, 132.5-145.5 ft.

Filter Pack: Less than 50 mesh Silica Sand, 131.1-132.5 ft.

Grout Seal: Wyo-Ben Grout Well Bentonite Slurry, 3.0-35.0 ft. and 60.0-110.0 ft.

Bentonite Seal: Extra high yield Wyo-Ben (100%) Slurry, 110.0-131.1 ft.

Concrete: 0.0-3.0 ft.

Well Development

Stabilization Test Data:

Time	pH	Spec. Cond.	Temp (°C)

Recovery Data:

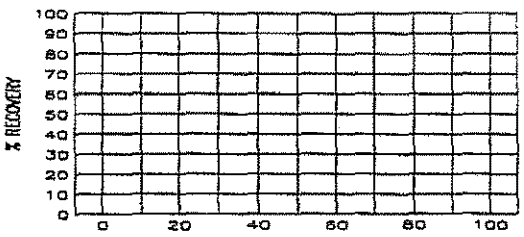

Comments:

Due to grout slurry lose above 60.0 ft., bentonite chips were placed from 35.0-60.0 ft. to seal borehole. The chips were hydrated at 1 ft. intervals during placement and were monitored with a weighted tape measure.

Supervised by B. Tilton

Job Number 943-2848

Site LAIDLAW/OU2 RI-FS/MO

File Name PZ103SS

661574

MISSOURI DEPARTMENT OF NATURAL RESOURCES
DIVISION OF GEOLOGY AND LAND SURVEY

MONITORING WELL CERTIFICATION RECORD

OFFICE USE ONLY	
REF NO. 15083	DATE RECEIVED
ROUTE	CHECK NO.
STATE WELL NUMBER	TRANSMITTAL NO
CHECKED BY	CROSS REFERENCE NO.
APPROVED BY	ENTERED Ph 1 Ph 2 Ph 3
	DATE APPROVED

INFORMATION SUPPLIED BY OWNER

SITE NAME: LAIDLAW BRIDGETON SANITARY LANDFILL
WELL NUMBER: PZ-103-SS
SITE ADDRESS: ST. CHARLES ROCK RD.
CITY: BRIDGETON
STATE: MO
ZIP CODE: 63044
NAME: LAIDLAW WASTE SYSTEMS, INC.
TELEPHONE: 314-341-3710
ADDRESS: 1838 N. BROADWAY
CITY: ST. LOUIS
STATE: MO.
ZIP CODE: 63102

INFORMATION SUPPLIED BY MONITORING WELL CONTRACTOR

LOCATION OF WELL (SHOW LOCATION IN SECTION PLAT)

COUNTY: ST. LOUIS
ELEVATION: 477.78
AREA NO.:

SMALLEST ¼ ____ ¼ ____ ¼ ____ ¼ LARGEST ¼

SEC. ____ TWN. 47 N.RNG. 5 (E) OR W

LAT. 38 ° 45 ' 37 " LONG. 90 ° 26 ' 29 "

SKETCH THE LOCATION TO THE WELL INCLUDING MILEAGE ON ALL ROADS TRAVELED FROM NEAREST TOWNS OR HIGHWAYS

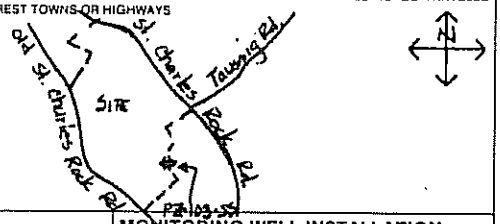

DESCRIBE LOCATION OF THE WELL SO WE WOULD BE ABLE TO VISIT IT

MONITORING WELL INSTALLATION CONTRACTOR'S NAME
LAYNE WESTERN CO., INC.

DRILLING CONTRACTOR'S NAME
LAYNE WESTERN CO., INC.

TYPE OF INSTALLATION: [X] ABOVE GROUND [ ] FLUSH MOUNT

STATIC WATER LEVEL: FEET FROM MEASURING POINT

DATE OF STATIC WATER LEVEL:

ELEVATION OF MEASURING POINT:

MEASURING POINT IS: [ ] TOP OF RISER PIPE [ ] OTHER

DRILLING EQUIPMENT: [X] AIR ROTARY [X] AUGER TYPE 6¼ H.S.A. [ ] REVERSE ROTARY [ ] OTHER

CENTRALIZERS USED: [X] YES, AT 4 TOTAL [ ] STAINLESS STEEL [ ] OTHER [ ] NO

MULTIPLE CASED WELLS: SUBMIT ADDITIONAL AS BUILT DIAGRAM SHOWING WELL CONSTRUCTION DETAILS INCLUDING TYPE AND SIZE OF ALL CASING, HOLE DIAMETERS, AND GROUT USED.

DATE WELL CONSTRUCTION WAS COMPLETED: 2-27-95

I HEREBY CERTIFY THAT THE MONITORING WELL HEREIN DESCRIBED WAS CONSTRUCTED IN ACCORDANCE WITH THE DEPARTMENT OF NATURAL RESOURCES REQUIREMENTS FOR THE CONSTRUCTION OF MONITORING WELLS.

SIGNATURE (MONITORING WELL CONTRACTOR): Michael P. Vogl
PERMIT NUMBER: 001256 WM — DATE: 4-11-95
SIGNATURE (DRILLING CONTRACTOR): Michael P. Vogl
PERMIT NUMBER: 001256 WM — DATE: 4-11-95

NOTE: Record the fraction of a foot in decimal, not in inches

Top of Riser Elevation: 480.17

LOCKING CAP - (Y) / N (Circle one)
CAP VENT - (Y) N (Circle one)

PROTECTIVE CASING
Type: STEEL
Size: 8" x 8" x 5'
Bore Hole Diameter: 10.25"

WEEP HOLE - Y / N (Circle one)

Ground Surface Elevation: 477.78 Ft	Feet from Surface	Description of Formation
Information in this column to be supplied in the Feet from Surface column		0-15 Silt
Depth to bottom of Protective Casing Seal:	3	
		15-20 Sandy silt
		20-32 Silt
		32-51 Clay
		51-64 Limestone
Depth to Base of Annular Seal:	110.0	64-72 Sandy silt
		72-78 Shale
Depth to Base of Bentonite Seal:	131.1	78-87 Limestone
Depth to Base of Secondary Filter Pack:	132.5	87-111 Dolomite
Depth to Top of the Screen:	134.5	
		111-128 Limestone
		128-135 Dolomite
Depth to Bottom of the Screen:	144.5	135-137 Limestone
		137-143 Dolomite
Plug Back Total Depth		143-144.5 Limestone
Original Total Depth:	145.5	

PROTECTIVE CASING SEAL
Type: [X] Concrete [ ] Cement Slurry

RISER PIPE
Length: 136.67'
Diameter: 2"
Type of Material: SCH80 PVC

BOREHOLE DIAMETER: 5⅞ In.

ANNULAR SEAL
Type: [X] Bentonite Slurry [ ] Cement Slurry [ ] Non Slurry Bentonite

BENTONITE SEAL
Type: [X] Bentonite Slurry [ ] Non Slurry Bentonite
Length of Seal: 21.1 Ft.

SECONDARY FILTER PACK (Optional)
Type: [X] Sand [ ] Manufactured
Grain Size: SUGAR
Length: 1.4'

PRIMARY FILTER PACK
Type: [X] Sand [ ] Manufactured
Grain Size: 20/40
Length: 13'

WELL SCREEN
Length: 10'
Slot Size: 0.010"
Type: SCH80 PVC

SUMP DETAILS
Length: 0.3 FL
Diameter: 2 In.
Type: PVC

TYPE OF BACKFILL: SAND

MO 780-1415 (2-94)

DISTRIBUTION: WHITE/DIVISION CANARY/MONITORING WELL CONTRACTOR PINK/OWNER

LAIDLAW WASTE SYSTEMS INC.

SOIL BOREHOLE LOG

SITE NAME AND LOCATION	DRILLING METHOD:		BORING NO.
	4.25 inch I.D. Hollow Stem Auger		PZ-104-KS
			SHEET 1 OF 3
	SAMPLING METHOD:		DRILLING
LAIDLAW/OU2 RI-FS/MD WEST LAKE LANDFILL OPERABLE UNIT 2	SPLIT SPOON: 2.0 inch O.D./1.5 inch I.D. (SP)		START / FINISH
	SHELBY TUBE: 3.0 inch O.D./2 13/16 inch I.D. (SH)		
	WATER LEVEL		TIME: 15:40 / 17:58
	TIME		
	DATE		DATE: 2/12/95 / 2/12/95
NORTHING: 1066993.15 DATUM EASTING: 516820.50 ELEVATION 482.3	CASING DEPTH		

DRILL RIG CME 75 - TRUCK MOUNT	SURFACE CONDITIONS
ANGLE BEARING	
SAMPLE HAMMER	

DEPTH IN FEET (ELEVATION)	BLOW/ 6 IN. ON SAMPLER	RECOVERY	SYMBOL	SAMPLER SYMBOL	SAMPLE NUMBER AND DESCRIPTION OF MATERIAL	SAMPLER TYPE	REMARKS
1	4 5 4 4	1.6' / 2.0' (80%)			(0.0-2.4 ft.) Stiff, dark yellowish brown (10YR 4/2), homogenous, CLAYEY SILT, rootlets, NR, moist, (ML-CL), (LOESS)	SP ①	2/12/95 - 15:40 Began drilling
2	2 2 2 2 2	1.2' / 2.0' (60%)			(2.4-7.0 ft.) Soft to firm, dusky yellowish brown (10YR 2/2), homogenous, CLAYEY SILT, NR, moist, (ML-CL), (LOESS)	SP ②	
3							
4	3 3 3 2 2	1.5' / 2.0' (75%)				SP ③	
5							
6		2.2' / 2.0' (110%)				SH ④	
7					(7.0-15.4 ft.) Stiff, light olive gray (5Y 6/1) to light brown (5YR 5/6), homogenous, mottled CLAYEY SILT, NR, damp, (ML-CL), (LOESS)		
8	3 4 5 8	0.9' / 2.0' (45%)				SP ⑤	
9							
10	3 4 5 7	1.1' / 2.0' (55%)				SP ⑥	
11							
12	4 4 6 7	1.1' / 2.0' (55%)				SP ⑦	
13							
14	3 5 5 8 9	1.2' / 2.0' (60%)				SP ⑧	

DRILLING CONTR LAYNE-WESTERN

LOGGED BY J. MILLER

DATE 2/12/95 CHK'D BY W. HERST

JOB NO.: 943-2848

FILENAME: PZ104KS

LAIDLAW WASTE SYSTEMS INC.

SOIL BOREHOLE LOG

SITE NAME AND LOCATION	DRILLING METHOD: 4.25 inch I.D. Hollow Stem Auger		BORING NO. PZ-104-KS
			SHEET 2 OF 3
LAIDLAW/OU2 RI-FS/MO WEST LAKE LANDFILL OPERABLE UNIT 2	SAMPLING METHOD: SPLIT SPOON: 2.0 inch O.D./1.5 inch I.D. (SP) SHELBY TUBE: 3.0 inch O.D./2 13/16 inch I.D. (SH)		DRILLING START TIME 15:40 DATE 2/12/95; FINISH TIME 17:58 DATE 2/12/95
NORTHING: 1066993.15 DATUM EASTING: 516820.50 ELEVATION 482.3	WATER LEVEL / TIME / DATE / CASING DEPTH		
DRILL RIG CME 75 - TRUCK MOUNT	SURFACE CONDITIONS		
ANGLE BEARING			
SAMPLE HAMMER			

DRILLING CONTR LAYNE-WESTERN

LOGGED BY J. MILLER

DATE 2/12/95 CHK'D BY W. HERST

JOB NO.: 943-2848

FILENAME: PZ104KS

DEPTH IN FEET (ELEVATION)	BLOW/ 6 IN. ON SAMPLER	RECOVERY	SYMBOL	SAMPLER SYMBOL	SAMPLE NUMBER AND DESCRIPTION OF MATERIAL			SAMPLER TYPE	REMARKS
16		1.7'/2.0' (85%)			(7.0-15.4 ft.) Stiff, light olive gray (5Y 6/1) to light brown (5YR 5/6), homogenous, mottled CLAYEY SILT, NR, damp, (ML-CL), (LOESS)	(466.9)	15.4	SH (8)	
17					(15.4-20.8 ft.) Compact, light gray (N7), homogenous, SILT, NR, dry, (ML), (LOESS)			SH (9)	
18	6	1.1'/2.0' (55%)							
19	5 6 8							SP (10)	
20	4	1.2'/2.0' (60%)							
21	4 6 8					(461.5)	20.8	SP (11)	
22	6	1.6'/2.0' (80%)			(20.8-22.4 ft.) Stiff, light olive gray (5Y 6/1), homogenous, CLAYEY SILT, SR, dry, (CL-ML), (LOESS)	(459.9)	22.4		
23	6 7 8				(22.4-23.31 ft.) Compact, pale yellowish brown (10YR 6/2), homogenous, SILTY coarse SAND, NR, dry, (SM), (ALLUVIUM)	(459.0)	23.3	SP (12)	
24	6	1.1'/2.0' (55%)			(23.31-24.8 ft.) Compact, light olive gray (5Y 6/1), homogenous, SILT, NR, dry, (ML), (ALLUVIUM)				
25	5 7 9					(457.5)	24.8	SP (13)	
26	2	1.3'/2.0' (65%)			(24.8-31.0 ft.) Compact to stiff, medium gray (N5), stratified very fine SAND and CLAYEY SILT, NR, dry, (SC), (ALLUVIUM)				
27	5 5 6							SP (14)	
28	4	1.6'/2.0' (80%)			@ 28.0 ft., 5-6 inch clayey silt layers, (0.5-2.0 inch fine SAND layers				
29	4 5 4							SP (15)	

LAIDLAW WASTE SYSTEMS INC.

SOIL BOREHOLE LOG

SITE NAME AND LOCATION	DRILLING METHOD: 4.25 inch I.D. Hollow Stem Auger	BORING NO. PZ-104-KS
LAIDLAW/OU2 RI-FS/MO WEST LAKE LANDFILL OPERABLE UNIT 2	SAMPLING METHOD: SPLIT SPOON: 2.0 inch O.D./1.5 inch I.D. (SP) SHELBY TUBE: 3.0 inch O.D./2 13/16 inch I.D. (SH)	SHEET 3 OF 3
NORTHING: 1066993.15 DATUM EASTING: 516820.50 ELEVATION 482.3	WATER LEVEL / TIME / DATE / CASING DEPTH	DRILLING START: TIME 15:40, DATE 2/12/95; FINISH: TIME 17:58, DATE 2/12/95
DRILL RIG CME 75 - TRUCK MOUNT	SURFACE CONDITIONS	
ANGLE BEARING		
SAMPLE HAMMER		

DEPTH IN FEET (ELEVATION)	BLOW/ 6 IN. ON SAMPLER	RECOVERY	SYMBOL	SAMPLER SYMBOL	SAMPLE NUMBER AND DESCRIPTION OF MATERIAL	SAMPLER TYPE	REMARKS
31	4 7 7 10	1.6'/2.0' (80%)			(24.8-31.0 Ft.) Compact to stiff, medium gray (N5), stratified very fine SAND and CLAYEY SILT, NR, dry, (SC), (ALLUVIUM) (451.3) 31.0	SP (16)	
32	10 5 4 12	0.9'/2.0' (45%)			(31.0-33.1 Ft.) Compact, medium dark gray (N4), homogenous, f-m SAND, trace Silt and Clay, NR, moist, (SP), (ALLUVIUM) @ 28.0 ft., 6 inch clayey silt layer, (0.5-2.0 inch fine SAND layers (449.2) 33.1	SP (17)	
34	6 17 28 52	1.6'/2.0' (80%)			(33.1-36.0 Ft.) Very stiff, light gray (N7), homogenous, SILTY CLAY, NR, dry, (CL), (WEATHERED BEDROCK) (446.3) 36.0	SP (18)	
36					End of Soil Borehole Log at 36.0 ft. See PZ-104-KS Record of Drillhole for rock descriptions		
37							
38							
39							
40							
41							
42							
43							
44							

DRILLING CONTR LAYNE-WESTERN

LOGGED BY J. MILLER DATE 2/12/95 CHK'D BY W. HERST

JOB NO.: 943-2848

FILENAME: PZ104KS

RECORD OF DRILLHOLE PZ-104-KS

Sheet 1 of 24

PROJECT: LAIDLAW/RI-FS
PROJECT NO: 943-2848
LOCATION: BRIDGETON, MO

BORING METHOD: NX Core & water
DRILLING DATE: 5/22/95 - 6/4/95
DRILL RIG: CME 75

DATUM: MSL
COORDINATES N: 1066983.15
AZIMUTH: 0

COLLAR ELEV: 482.3
E: 516820.50
INCLINATION: -90

J-Joint, F-Fault, S-Shear, B-Bedding, F-Foliation
PL-Planar, C-Curved, U-Undulating, ST-Stepped, I-Irregular
P-Polished, K-Slickensided, SM-Smooth, R-Rough, VR-V. Rough
Fe-FeOxide, CL-Clay Infill, CH-Chlorite, H-Healed, GRF-Gravel Filled

DEPTH SCALE (FEET)	ROCK TYPE DESCRIPTION	GRAPHIC LOG	ELEV / DEPTH (FT)	RUN NO	CORE RECOVERY	RQD	FRACTURES PER FOOT	DISCONTINUITY DATA: DIP wrt CORE AXIS	DISCONTINUITY DATA: TYPE AND SURFACE DESCRIPTION	GRAPHIC LOG	WEATHERING INDEX: SW FR, MW, HW, CW	STRENGTH INDEX: R6, R5, R4, R3, R2, R1	POINT LOAD INDEX (psi): R1 30, R2 150, R3 300, R4 600, R5 1500, R6	TEST ORIENTATION	NOTES WATER LEVELS INSTRUMENTATION
32	0.0-36.0 ft. See Soil Borehole Log PZ-104-KS 36.0-38.0 ft. No samples collected		444.30												
34															
36															
38	444.30 38.0-84.7 ft. 38.00 Fresh, medium bedded, pale yellowish brown (10YR 6/2), f-m grained, medium strong, LIMESTONE, (ST. LOUIS FORMATION)		38.00												5/22/95 @ 14:00 Began drilling
40				1	100 %				J,PL,SM J,PL,R (2) J,PL,R J,PL,R,CL J,PL,R,Fe						
42			439.30 43.00						J,PL,SM,CL J,P,R,CL J,I,R,Fe						5/22/95 @ 14:40 End of Run 1
44	44.9-45.0 ft. Clay layer 437.00 45.3-46.6 ft. Clay layer 435.70 46.60		45.30	2	100 %				J,I,R,Fe J,PL,R,Fe J,PL,R,CL						
46									J,PL,SM,CL J,I,R,CL						
48									J,C,R,Fe						

DEPTH SCALE: 1:2
DRILLING CONTRACTOR: LAYNE-WESTERN
DRILLER: D. MAHURIN

LOGGED: D. ALLOWAY
CHECKED: B. TILTON
DATE: 7/13/95

Golder Associates

RECORD OF DRILLHOLE PZ-104-KS

Sheet 2 of 24

PROJECT: LAIDLAW/RI-FS
PROJECT NO: 943-2846
LOCATION: BRIDGETON, MO

BORING METHOD: NX Core & water
DRILLING DATE: 5/22/95 - 6/4/95
DRILL RIG: CME 75

DATUM: MSL
COORDINATES N: 1066993.15
AZIMUTH: 0

COLLAR ELEV: 482.3
E: 518820.50
INCLINATION: -90

J-Joint, F-Fault, S-Shear, B-Bedding, F-Foliation
PL-Planar, C-Curved, U-Undulating, ST-Stepped, I-Irregular
P-Polished, K-Slickensided, SM-Smooth, R-Rough, VR-V. Rough
Fe-FeOxide, CL-Clay Infill, CH-Chlorite, H-Healed, GRF-Gravel Filled

DEPTH SCALE (FEET)	DESCRIPTION	GRAPHIC LOG	ELEV / DEPTH (FT)	RUN NO.	CORE RECOVERY	RQD	FRACTURES PER FOOT	DISCONTINUITY DATA: DIP wrt CORE AXIS	DISCONTINUITY DATA: TYPE AND SURFACE DESCRIPTION	GRAPHIC LOG	WEATHERING INDEX	STRENGTH INDEX	POINT LOAD INDEX (psi)	TEST ORIENTATION	NOTES WATER LEVELS INSTRUMENTATION
48	38.0-84.7 ft. Fresh, medium bedded, pale yellowish brown (10YR 6/2), f-m grained, medium strong, LIMESTONE, (ST. LOUIS FORMATION) 48.0-54.5 ft. Stylolites common, very thinly bedded clay layers common								J,PL,SM,CL						
									J,PL,SM,CL (3)						
50									J,PL,SM,CL						
				2	100 %				J,I,R						
52									J,PL,SM,CL						
			429.30						J,PL,SM,CL						5/22/95 @ 16:00 End of Run 2
			53.00												
	53.5-63.0 ft. Joints have approximately 1/2 in. of clay								B,PL,SM (3)						
54									J,I,R (4)						
									J,PL,SM,CL (7)						
56									J,PL,SM,CL (2)						
									J,PL,SM,CL (4)						
									J,PL,SM,CL (2)						
58				3	100 %				J,PL,SM,CL (4)						
									J,PL,SM,CL (4)						
60									J,I,R,CL						
									J,PL,R						
									J,PL,SM,CL						
62	61.9-62.6 ft. Abundant argillaceous partings														
	62.6-62.7 ft. Clay layer								J,PL,SM,CL (2)						
			419.30												5/22/95 @ 17:00 End of Run 3
			63.00												
				4	100 %										
64															

DEPTH SCALE: 1:2
DRILLING CONTRACTOR: LAYNE-WESTERN
DRILLER: D. MAHURIN

LOGGED: D. ALLOWAY
CHECKED: B. TILTON
DATE: 7/13/95

Golder Associates

RECORD OF DRILLHOLE PZ-104-KS

Sheet 3 of 24

PROJECT: LAIDLAW/RI-FS
PROJECT NO: 843-2648
LOCATION: BRIDGETON, MO

BORING METHOD: NX Core & water
DRILLING DATE: 5/22/95 - 6/4/95
DRILL RIG: CME 75

DATUM: MSL
COORDINATES N: 1066993.15
AZIMUTH: 0

COLLAR ELEV: 482.3
E: 516820.50
INCLINATION: -90

J-Joint, F-Fault, S-Shear, B-Bedding, F-Foliation
PL-Planar, C-Curved, U-Undulating, ST-Stepped, I-Irregular
P-Polished, K-Slikensided, SM-Smooth, R-Rough, VR-V. Rough
Fe-FeOxide, CL-Clay Infill, CH-Chlorite, H-Healed, GRF-Gravel Filled

DEPTH SCALE (FEET)	DESCRIPTION	GRAPHIC LOG	ELEV / DEPTH (FT)	RUN NO.	CORE RECOVERY	RQD	FRACTURES PER FOOT	DISCONTINUITY DATA: DIP wrt CORE AXIS	DISCONTINUITY DATA: TYPE AND SURFACE DESCRIPTION	GRAPHIC LOG	WEATHERING INDEX (SW FR, MW, HW, CW)	STRENGTH INDEX (R6, R5, R4, R3, R2, R1)	POINT LOAD INDEX (psi) (R1 30, R2 130, R3 300, R4 600, R5 1500, R6)	TEST ORIENTATION	NOTES WATER LEVELS INSTRUMENTATION
64	38.0-64.7 ft. Fresh, medium bedded, pale yellowish brown (10YR 6/2), f-m grained, medium strong, LIMESTONE, (ST. LOUIS FORMATION)								J,PL,SM						
66	@ 65.6 ft. Chert layer														
	67.3-73.0 ft. Stylolites common								J,PL,SM,CL						
68				4	100				J,PL,SM						
									J,PL,SM,CL (2)						
70									J,PL,SM,CL						
72			409.30 / 73.00												5/22/95 @ 17:45 End of Run 4
	73.4-83.3 ft. Abundant argillaceous partings								J,I,R						
74									B,I,SM						
									J,PL,SM,CL						
76				5	100				J,PL,SM,CL						
									J,PL,SM,CL						
78									J,PL,SM,CL						
									J,PL,SM,CL						
	79.1-79.2 ft. Clay layer								J,PL,SM,CL (2)						
80															

DEPTH SCALE: 1:2
DRILLING CONTRACTOR: LAYNE-WESTERN
DRILLER: D. MAHURIN

LOGGED: D. ALLOWAY
CHECKED: B. TILTON
DATE: 7/13/95

Golder Associates

RECORD OF DRILLHOLE PZ-104-KS

Sheet 4 of 24

PROJECT: LAIDLAW/RI-FS
PROJECT NO: 943-2848
LOCATION: BRIDGETON, MO

BORING METHOD: NX Core & water
DRILLING DATE: 5/22/95 - 6/4/95
DRILL RIG: CME 75

DATUM: MSL
COORDINATES N: 1066993.15
AZIMUTH: 0

COLLAR ELEV: 482.3
E: 518820.50
INCLINATION: -90

J-Joint, F-Fault, S-Shear, B-Bedding, F-Foliation
PL-Planar, C-Curved, U-Undulating, ST-Stepped, I-Irregular
P-Polished, K-Slickensided, SM-Smooth, R-Rough, VR-V. Rough
Fe-FeOxide, CL-Clay Infil, CH-Chlorite, H-Healed, GRF-Gravel Filled

DEPTH SCALE (FEET)	DESCRIPTION	GRAPHIC LOG	ELEV / DEPTH (FT)	RUN NO.	CORE RECOVERY	RQD	FRACTURES PER FOOT	DISCONTINUITY DATA: DIP wrt CORE AXIS	DISCONTINUITY DATA: TYPE AND SURFACE DESCRIPTION	GRAPHIC LOG	WEATHERING INDEX	STRENGTH INDEX	POINT LOAD INDEX (psi)	TEST ORIENTATION	NOTES WATER LEVELS INSTRUMENTATION
80	38.0-84.7 ft. Fresh, medium bedded, pale yellowish brown (10YR 6/2), f-m grained, medium strong, LIMESTONE, (ST. LOUIS FORMATION)								J,PL,SM,CL						
				5	100 %										
82															
			389.30												5/22/95 @ 18:30 End of Run 5 Ended drilling for the day 5/23/95 @ 7:25 Began drilling
			83.00												
84									J,I,R,CL						
	84.7-84.9 ft. Medium light gray (N6), fine grained, SANDSTONE layer, (ST. LOUIS FORMATION)								J,I,R,CL						
86	84.9-91.4 ft. Slightly weathered, medium bedded, pale yellowish brown (10YR 6/2), f-m crystalline, medium strong, LIMESTONE (ST. LOUIS FORMATION) Calcite filled fractures, clay filled fractures 86.3-86.6 ft. Clay layer			6	83%				J,I,SM-intact						
									J,I,VR						
									J,I,R,CL						
									J,I,R						
88									J,I,R						
									J,I,R,CL						
			392.90												
			89.40												
90															Core Loss, possible soft rock
			391.60						Core Loss						5/23/95 @ 8:30 End of Run 6
			90.70												
	390.90														
	91.4-91.9 ft. Slightly weathered, thinly bedded, medium gray (N5), fine grained, medium strong, SANDSTONE, (ST. LOUIS FORMATION) Thickly laminated clay layers		91.40						B,PL,SM (2)						
92			390.40												
			91.90												
	91.9-103.0 ft. Slightly weathered, medium bedded, pale yellowish brown (10YR 6/2), microcrystalline to fine grained, medium strong, LIMESTONE, (ST. LOUIS FORMATION) Abundant argillaceous layers								J,I,R,CL						
				7	100 %										
94									J,I,R						
96															
98															

DEPTH SCALE: 1:2
DRILLING CONTRACTOR: LAYNE-WESTERN
DRILLER: D. MAHURIN

LOGGED: D. ALLOWAY
CHECKED: B. TILTON
DATE: 7/13/95

Golder Associates

RECORD OF DRILLHOLE PZ-104-KS

Sheet 5 of 24

PROJECT: LAIDLAW/PI-FS
PROJECT NO: 943-2849
LOCATION: BRIDGETON, MO

BORING METHOD: NX Core & water
DRILLING DATE: 5/22/95 - 6/4/95
DRILL RIG: CME 75

DATUM: MSL
COORDINATES N: 1068993.15
AZIMUTH: 0

COLLAR ELEV: 482.3
E: 516820.50
INCLINATION: -90

J-Joint, F-Fault, S-Shear, B-Bedding, F-Foliation
PL-Planar, C-Curved, U-Undulating, ST-Stepped, I-Irregular
P-Polished, K-Slickensided, SM-Smooth, R-Rough, VR-V. Rough
Fe-FeOxide, CL-Clay Infill, CH-Chlorite, H-Healed, GRF-Gravel Filled

DEP... SCALE (FEET)	DESCRIPTION	GRAPHIC LOG	ELEV / DEPTH (FT)	RUN NO.	CORE RECOVERY	RQD	FRACTURES PER FOOT	DISCONTINUITY DATA: DIP w/r CORE AXIS	DISCONTINUITY DATA: TYPE AND SURFACE DESCRIPTION	GRAPHIC LOG	WEATHERING INDEX	STRENGTH INDEX	POINT LOAD INDEX (psi)	TEST ORIENTATION	NOTES WATER LEVELS INSTRUMENTATION
96	91.9-103.0 ft. Slightly weathered, medium bedded, pale yellowish brown (10YR 6/2), microcrystalline to fine grained, medium strong, LIMESTONE, (ST. LOUIS FORMATION) Abundant argillaceous layers														
				7	100 %				J,PL,R						
98									J,PL,R,CL						
			383.10												5/23/95 @ 9:00 End of Run 7
			99.20												
100															
	101.1-103.0 ft. Abundant chert														
102															
				8	80%										
	379.30														
	103.0-108.0 ft. Slightly weathered, thickly laminated, medium dark gray (N4), fine grained, very weak, SILTSTONE grades to sandy SILTSTONE with depth, (ST. LOUIS FORMATION)														
104															
106			376.20												
			106.10												Core Loss, soft rock
	374.50		374.50												
	107.80		107.80												5/23/95 @ 10:10 End of Run 8
108	108.0-118.2 ft. Fresh, medium bedded, light olive gray (5Y 6/1), fine grained, medium strong, ARGILLACEOUS LIMESTONE, (ST. LOUIS FORMATION) Stylolites present								B,PL,SM,CL						
									B,PL,SM,CL (5)						
									J,U,SM,CL						
110				9	100 %										
112															

DEPTH SCALE: 1:2
DRILLING CONTRACTOR: LAYNE-WESTERN
DRILLER: D. MAHURIN

LOGGED: D. ALLOWAY
CHECKED: B. TILTON
DATE: 7/13/95

Golder Associates

RECORD OF DRILLHOLE PZ-104-KS

PROJECT: LAIDLAW/RI-FS
PROJECT NO: 843-2848
LOCATION: BRIDGETON, MO

BORING METHOD: NX Core & water
DRILLING DATE: 5/22/95 - 6/4/95
DRILL RIG: CME 75

DATUM: MSL
COORDINATES N: 1066993.15
AZIMUTH: 0

COLLAR ELEV: 482.3
E: 516820.50
INCLINATION: -90

J-Joint, F-Fault, S-Shear, B-Bedding, F-Foliation
PL-Planar, C-Curved, U-Undulating, ST-Stepped, I-Irregular
P-Polished, K-Slickensided, SM-Smooth, R-Rough, VR-V. Rough
Fe-FeOxide, CL-Clay Infill, CH-Chlorite, H-Healed, GRF-Gravel Filled

DEPTH SCALE (FEET)	DESCRIPTION	GRAPHIC LOG	ELEV / DEPTH (FT)	RUN NO	CORE RECOVERY	RQD	FRACTURES PER FOOT	DISCONTINUITY DATA: DIP wrt CORE AXIS	DISCONTINUITY DATA: TYPE AND SURFACE DESCRIPTION	GRAPHIC LOG	WEATHERING INDEX: SW FR, MW HW, CW	STRENGTH INDEX: R6 R5 R4 R3 R2 R1	POINT LOAD INDEX (psi): R1 30, R2 150, R3 300, R4 600, R5 1500, R6	TEST ORIENTATION	NOTES WATER LEVELS INSTRUMENTATION
112	108.0-118.2 ft. Fresh, medium bedded, light olive gray (5Y 6/1), fine grained, medium strong, ARGILLACEOUS LIMESTONE, (ST. LOUIS FORMATION) Stylolites present			9	100%				B,PL,SM,CL						
114			388.10 / 114.20												5/23/95 @ 10:40 End of Run 9
116															
118			364.10												
	118.2-119.8 ft. Slightly weathered, medium bedded, olive gray (5Y 4/1), medium grained, medium strong, DOLOMITE, (ST. LOUIS FORMATION)		118.20	10	100%				J,PL,SM,CL						
			362.50												
120	119.8-121.7 ft. Fresh, medium bedded, pale yellowish brown (10YR 6/2), medium crystalline, medium strong, LIMESTONE, (ST. LOUIS FORMATION)		119.80												
									J,PL,SM,CL						
122	121.7-123.2 ft. Fresh, medium bedded, light olive gray (5Y 6/1), m-c grained, medium strong, ARGILLACEOUS LIMESTONE, (ST. LOUIS FORMATION)								J,PL,SM,CL (2)						
	123.2-133.8 ft. Fresh, medium bedded, pale yellowish brown (10YR 6/2), medium crystalline, medium strong, LIMESTONE, (ST. LOUIS FORMATION) Pyrite at contact								J,I,R						
124			358.10 / 124.20												5/23/95 @ 11:40 End of Run 10
									J,PL,SM,CL						
126				11	100%										
128															

DEPTH SCALE: 1:2
DRILLING CONTRACTOR: LAYNE-WESTERN
DRILLER: D. MAHURIN

LOGGED: D. ALLOWAY
CHECKED: B. TILTON
DATE: 7/13/95

Golder Associates

RECORD OF DRILLHOLE PZ-104-KS

Sheet 7 of 24

PROJECT: LAIDLAW/RI-FS
PROJECT NO: 943-2648
LOCATION: BRIDGETON, MO

BORING METHOD: NX Core & water
DRILLING DATE: 5/22/95 - 6/4/95
DRILL RIG: CME 75

DATUM: MSL
COORDINATES N: 1066993.15
AZIMUTH: 0

COLLAR ELEV: 482.3
E: 516820.50
INCLINATION: -90

J-Joint, F-Fault, S-Shear, B-Bedding, F-Foliation
PL-Planar, C-Curved, U-Undulating, ST-Stepped, I-Irregular
P-Polished, K-Slickensided, SM-Smooth, R-Rough, VR-V. Rough
Fe-FeOxide, CL-Clay Infill, CH-Chlorite, H-Healed, GRF-Gravel Filled

DEPTH SCALE (FEET)	DESCRIPTION	GRAPHIC LOG	ELEV / DEPTH (FT)	RUN NO.	CORE RECOVERY	RQD	FRACTURES PER FOOT	DISCONTINUITY DATA: DIP wrt CORE AXIS	DISCONTINUITY DATA: TYPE AND SURFACE DESCRIPTION	GRAPHIC LOG	WEATHERING INDEX	STRENGTH INDEX	POINT LOAD INDEX (psi)	TEST ORIENTATION	NOTES WATER LEVELS INSTRUMENTATION
128	123.2-133.8 ft. Fresh, medium bedded, pale yellowish brown (10YR 6/2), medium crystalline, medium strong, LIMESTONE, (ST. LOUIS FORMATION) Pyrite at contact								J,PL,SM,CL						
130				11	100 %				J,PL,SM,CL						
132									J,I,SM,CL						
134	348.50 133.80 133.8-135.3 ft. Slightly weathered, thinly bedded, light olive gray (5Y 6/1) fine grained, weak, SANDSTONE, (ST. LOUIS FORMATION) Thickly laminated, argillaceous layers 347.00 135.30		348.10 134.20						J,I,SM,CL B,PL,SM						5/23/95 @ 12:20 End of Run 11
136	135.3-137.5 ft. Fresh, medium bedded, pale yellowish brown (10YR 6/2), fine grained, medium strong, LIMESTONE, (ST. LOUIS FORMATION) Stylolitic								J,PL,SM						
138	137.5-140.0 ft. Fresh, thinly bedded, pale yellowish brown (10YR 6/2), fine grained, medium strong, ARGILLACEOUS LIMESTONE, (ST. LOUIS FORMATION) Includes fine sand and silt			12	100 %				J,PL,SM,CL						
140	140.0-144.7 ft. Fresh, thickly bedded, pale yellowish brown (10YR 6/2), fine grained, medium strong, LIMESTONE, (ST. LOUIS FORMATION) Stylolitic								J,PL,SM						
142									J,PL,SM						
144															

DEPTH SCALE: 1:2
DRILLING CONTRACTOR: LAYNE-WESTERN
DRILLER: D. MAHURIN

LOGGED: D. ALLOWAY
CHECKED: B. TILTON
DATE: 7/13/95

Golder Associates

RECORD OF DRILLHOLE PZ-104-KS

PROJECT: LAIDLAW/RI-FS
PROJECT NO: 943-2848
LOCATION: BRIDGETON, MO

BORING METHOD: NX Core & water
DRILLING DATE: 5/22/95 - 6/4/95
DRILL RIG: CME 75

DATUM: MSL
COORDINATES N: 1068993.15
AZIMUTH: 0

COLLAR ELEV: 482.3
E: 516820.50
INCLINATION: -90

J-Joint, F-Fault, S-Shear, B-Bedding, F-Foliation
PL-Planar, C-Curved, U-Undulating, ST-Stepped, I-Irregular
P-Polished, K-Slickensided, SM-Smooth, R-Rough, VR-V. Rough
Fe-FeOxide, CL-Clay Infill, CH-Chlorite, H-Healed, GRF-Gravel Filled

DEPTH SCALE (FEET)	DESCRIPTION	GRAPHIC LOG	ELEV / DEPTH (FT)	RUN NO.	CORE RECOVERY	RQD	FRACTURES PER FOOT	DISCONTINUITY DATA: DIP wrt CORE AXIS	DISCONTINUITY DATA: TYPE AND SURFACE DESCRIPTION	GRAPHIC LOG	WEATHERING INDEX (SW FR, MW, HW, CW)	STRENGTH INDEX (R6, R5, R4, R3, R2, R1)	POINT LOAD INDEX (psi) (R1 10, R2 150, R3 300, R4 600, R5 1500, R6)	TEST ORIENTATION	NOTES WATER LEVELS INSTRUMENTATION
144			338.10	12	100 %	80 60 40 20	2 4 6 8 10	0 30 60 90	J,PL,SM						5/23/95 @ 13:00 End of Run 12
			144.20						J,PL,R						
146	144.7-149.2 ft. Fresh, thickly bedded, light olive gray (5Y 6/1), f-m grained crystalline, medium strong, ARGILLACEOUS LIMESTONE, (ST. LOUIS FORMATION)														
148									J,PL,R						
	149.2-152.2 ft. Fresh, medium bedded, pale yellowish brown (10YR 6/2) to medium gray (N5), fine crystalline, medium strong, LIMESTONE, (ST. LOUIS FORMATION) Stylolites and argillaceous partings common			13	100 %				J,PL,R						
150									B,PL,SM,CL (3)						
152									B,PL,SM,CL (2)						
	152.3-154.6 ft. Fresh, medium bedded, light olive gray (5Y 6/1), f-m grained, medium strong, ARGILLACEOUS LIMESTONE, (ST. LOUIS FORMATION)														
154			328.10												5/23/95 @ 14:10 End of Run 13
	154.6-162.3 ft. Fresh, medium bedded, pale yellowish brown (10YR 6/2), fine grained, medium strong, LIMESTONE, (ST. LOUIS FORMATION) Stylolitic, argillaceous partings		154.20						B,PL,SM (2)						
156				14	100 %				J,PL,SM						
158															
									B,I,R						
160															

DEPTH SCALE: 1:2
DRILLING CONTRACTOR: LAYNE-WESTERN
DRILLER: D. MAHURIN

LOGGED: D. ALLOWAY
CHECKED: B. TILTON
DATE: 7/13/95

Golder Associates

RECORD OF DRILLHOLE PZ-104-KS

PROJECT: LAIDLAW/RI-FS
PROJECT NO: 943-2848
LOCATION: BRIDGETON, MO

BORING METHOD: NX Core & water
DRILLING DATE: 5/22/95 - 6/4/95
DRILL RIG: CME 75

DATUM: MSL
COORDINATES N: 1068993.15
AZIMUTH: 0

COLLAR ELEV: 482.3
E: 516820.50
INCLINATION: -90

J-Joint, F-Fault, S-Shear, B-Bedding, F-Foliation
PL-Planar, C-Curved, U-Undulating, ST-Stepped, I-Irregular
P-Polished, K-Slikensided, SM-Smooth, R-Rough, VR-V. Rough
Fe-FeOxide, CL-Clay Infill, CH-Chlorite, H-Healed, GRF-Gravel Filled

Depth Scale (Feet)	Description	Graphic Log	Elev / Depth (Ft)	Run No.	Core Recovery	RQD	Fractures Per Foot	Discontinuity Data: Dip w.r.t. Core Axis	Discontinuity Data: Type and Surface Description	Graphic Log	Weathering Index	Strength Index	Point Load Index (psi)	Test Orientation	Notes: Water Levels, Instrumentation
160	160.2-161.2 ft. Abundant clay zones, slightly weathered rock														
162	162.3-167.6 ft. Fresh, medium bedded, grayish orange (10YR 7/4), f-m crystalline, medium strong, ARENACEOUS LIMESTONE, (SALEM FORMATION)		320.00 / 162.30	14	100 %										@ 162.3 ft. Inferred top of SALEM FORMATION
164			318.10 / 164.20												5/23/95 @ 15:00 End of Run 14
166															
168	167.6-171.7 ft. Fresh, medium bedded, pale yellowish brown (10YR 6/2), m-c grained, medium strong, ARGILLACEOUS LIMESTONE, (SALEM FORMATION)			15	100 %										
170															
172	171.7-185.0 ft. Fresh, medium bedded, pale yellowish brown (10YR 6/2), f-m crystalline, medium strong, LIMESTONE, (SALEM FORMATION)								J,I,R						
174			308.10 / 174.20												5/23/95 @ 16:00 End of Run 15
									B,PL,SM,CL (4)						
	175.3-190.1 ft. Abundant argillaceous layers and partings			16	100 %				B,PL,SM						
176															

DEPTH SCALE: 1:2
DRILLING CONTRACTOR: LAYNE-WESTERN
DRILLER: D. MAHURIN

LOGGED: D. ALLOWAY
CHECKED: B. TILTON
DATE: 7/13/95

Golder Associates

RECORD OF DRILLHOLE PZ-104-KS

PROJECT: LAIDLAW/RI-FS
PROJECT NO: 943-2648
LOCATION: BRIDGETON, MO

BORING METHOD: NX Core & water
DRILLING DATE: 5/22/95 - 6/4/95
DRILL RIG: CME 75

DATUM: MSL
COORDINATES N: 1068993.15
AZIMUTH: 0

COLLAR ELEV: 482.3
E: 516820.50
INCLINATION: -90

J-Joint, F-Fault, S-Shear, B-Bedding, F-Foliation
PL-Planar, C-Curved, U-Undulating, ST-Stepped, I-Irregular
P-Polished, K-Slickensided, SM-Smooth, R-Rough, VR-V. Rough
Fe-FeOxide, CL-Clay Infill, CH-Chlorite, H-Healed, GRF-Gravel Filled

SCALE (FEET)	DESCRIPTION	GRAPHIC LOG	ELEV / DEPTH (FT)	RUN NO.	CORE RECOVERY	ROD	FRACTURES PER FOOT	DISCONTINUITY DATA: DIP wrt CORE AXIS	DISCONTINUITY DATA: TYPE AND SURFACE DESCRIPTION	GRAPHIC LOG	WEATHERING INDEX	STRENGTH INDEX	POINT LOAD INDEX (psi)	TEST ORIENTATION	NOTES WATER LEVELS INSTRUMENTATION
176	171.7-185.0 ft. Fresh, medium bedded, pale yellowish brown (10YR 6/2), fine to medium crystalline, medium strong, LIMESTONE, (SALEM FORMATION)								J,PL,SM						
178	178.4-185.0 ft. Abundant chert layers and nodules														
180				16	100 %										
182									J,PL,R						
									J,PL,R						
184			296.10 / 184.20												5/23/95 @ 16:45 End of Run 16 Finished drilling for the day 5/24/95 @ 7:30 Began drilling Run 17 Water level before drilling @ 112.0 ft.
186	185.0-186.7 ft. Fresh, thickly bedded, pale yellowish brown (10YR 6/2), fine grained, medium strong, ARGILLACEOUS LIMESTONE, (SALEM FORMATION) Chert nodules abundant														
	186.7-189.0 ft. Slightly weathered, thinly bedded, medium gray (N5), fine and medium grained, medium strong LIMESTONE, (SALEM FORMATION) Abundant argillaceous partings and layers								B,PL,SM,CL						
188				17	100 %										
									B,PL,SM,CL (2)						
190	189.0-197.2 ft. Fresh, thinly bedded to thickly bedded (with depth), pale yellowish brown (10YR 6/2), f-m grained, medium strong, ARGILLACEOUS LIMESTONE, (SALEM FORMATION) Abundant chert nodules														
192															

DEPTH SCALE: 1:2
DRILLING CONTRACTOR: LAYNE-WESTERN
DRILLER: D. MAHURIN

LOGGED: D. ALLOWAY
CHECKED: B. TILTON
DATE: 7/13/95

Golder Associates

RECORD OF DRILLHOLE PZ-104-KS

PROJECT: LAIDLAW/RI-FS
PROJECT NO: 943-2848
LOCATION: BRIDGETON, MO

BORING METHOD: NX Core & water
DRILLING DATE: 5/22/95 - 6/4/95
DRILL RIG: CME 75

DATUM: MSL
COORDINATES N: 1068993.15
AZIMUTH: 0

COLLAR ELEV: 482.3
E: 516820.50
INCLINATION: -90

J-Joint, F-Fault, S-Shear, B-Bedding, F-Foliation
PL-Planar, C-Curved, U-Undulating, ST-Stepped, I-Irregular
P-Polished, K-Slickensided, SM-Smooth, R-Rough, VR-V. Rough
Fe-FeOxide, CL-Clay Infill, CH-Chlorite, H-Healed, GRF-Gravel Filled

DEPTH SCALE (FEET)	ROCK TYPE DESCRIPTION	GRAPHIC LOG	ELEV / DEPTH (FT)	RUN NO.	CORE RECOVERY	RQD (80 60 40 20)	FRACTURES PER FOOT (2 4 6 8 10)	DISCONTINUITY DATA: DIP wrt CORE AXIS (0 30 60 90)	TYPE AND SURFACE DESCRIPTION	GRAPHIC LOG	WEATHERING INDEX (SW FR, MW HW, CW)	STRENGTH INDEX (R6 R5 R4 R3 R2 R1)	POINT LOAD INDEX (psi) (R1 30 R2 150 R3 300 R4 600 R5 1500 R6)	TEST ORIENTATION	NOTES WATER LEVELS INSTRUMENTATION
192	189.0-197.2 ft. Fresh, thinly bedded to thickly bedded (with depth), pale yellowish brown (10YR 6/2), f-m grained, medium strong, ARGILLACEOUS LIMESTONE, (SALEM FORMATION) Abundant chert nodules			17	100 %										
194			288.10 / 194.20												5/24/95 @ 8:40 End of Run 17
196															
	197.2-204.0 ft. Fresh, thickly bedded, pale yellowish brown (10YR 6/2) and medium gray (N5), fine grained, medium strong, LIMESTONE, (SALEM FORMATION) Abundant large, strong nodules and layers of chert			18	100 %				J,PL,SM,CL						
198									J,PL,SM,CL J,PL,SM						
									J,I,R J,PL,R						
200			281.70 / 200.60												5/24/95 @ 10:15 End of Run 18
202															
204	204.0-222.7 ft. Fresh, medium bedded, grayish orange (10YR 7/4), medium crystalline, medium strong, LIMESTONE, (SALEM FORMATION) Silicified zones and abundant chert			19	99%				J,PL,SM (3)						
206															
									J,PL,SM						
208															

DEPTH SCALE: 1:2
DRILLING CONTRACTOR: LAYNE-WESTERN
DRILLER: D. MAHURIN

LOGGED: D. ALLOWAY
CHECKED: B. TILTON
DATE: 7/13/95

Golder Associates

RECORD OF DRILLHOLE PZ-104-KS

Sheet 12 of 24

PROJECT: LAIDLAW/RI-FS
PROJECT NO: 943-2548
LOCATION: BRIDGETON, MO

BORING METHOD: NX Core & water
DRILLING DATE: 5/22/95 - 6/4/95
DRILL RIG: CME 75

DATUM: MSL
COORDINATES N: 1068993.15
AZIMUTH: 0

COLLAR ELEV: 482.3
E: 518620.50
INCLINATION: -90

J-Joint, F-Fault, S-Shear, B-Bedding, F-Foliation
PL-Planar, C-Curved, U-Undulating, ST-Stepped, I-Irregular
P-Polished, K-Slickensided, SM-Smooth, R-Rough, VR-V. Rough
Fe-FeOxide, CL-Clay Infil, CH-Chlorite, H-Healed, GRF-Gravel Filled

SCALE (FEET)	DESCRIPTION	GRAPHIC LOG	ELEV / DEPTH (FT)	RUN NO.	CORE RECOVERY	RQD	FRACTURES PER FOOT	DISCONTINUITY DATA: DIP wrt CORE AXIS	TYPE AND SURFACE DESCRIPTION	GRAPHIC LOG	WEATHERING INDEX	STRENGTH INDEX	POINT LOAD INDEX (psi)	TEST ORIENTATION	NOTES WATER LEVELS INSTRUMENTATION
208	204.0-222.7 ft. Fresh, medium bedded, grayish orange (10YR 7/4), medium crystalline, medium strong, LIMESTONE, (SALEM FORMATION) Silicified zones and abundant chert			19	99%				J,PL,SM						
			273.10						J,PL,SM (2)						5/24/95 @ 11:40 End of Run 19
			209.20						J,PL,SM (2)						
210				20	49%				J,I,R						
									J,PL,SM (2)						
			270.80												
			211.50						Core Loss						Core Loss
212															
			268.40												Core Loss, washed out 5/24/95 @ 13:20 End of Run 20
214			213.90						B,PL,SM (2)						
				21	92%										
216															
218			263.50												
			218.60												Core Loss (clay ?) 5/24/95 @ 14:00 End of Run 21
			263.10												
			219.20												
220															
				22	100 %										
222															
224	222.7-228.0 ft. Slightly weathered, medium bedded, grayish orange (10YR 7/4), coarse crystalline, weak, FOSSILIFEROUS LIMESTONE, (SALEM FORMATION) Highly silicious, argillaceous														> 10 mechanical breaks/foot

DEPTH SCALE: 1:2
DRILLING CONTRACTOR: LAYNE-WESTERN
DRILLER: D. MAHURIN

LOGGED: D. ALLOWAY
CHECKED: B. TILTON
DATE: 7/13/95

Golder Associates

RECORD OF DRILLHOLE PZ-104-KS

PROJECT: LAIDLAW/RI-FS
PROJECT NO: 943-2848
LOCATION: BRIDGETON, MO

BORING METHOD: NX Core & water
DRILLING DATE: 5/22/95 - 6/4/95
DRILL RIG: CME 75

DATUM: MSL
COORDINATES N: 1066993.15
AZIMUTH: 0

COLLAR ELEV: 482.3
E: 516820.50
INCLINATION: -90

J-Joint, F-Fault, S-Shear, B-Bedding, F-Foliation
PL-Planar, C-Curved, U-Undulating, ST-Stepped, I-Irregular
P-Polished, K-Slikensided, SM-Smooth, R-Rough, VR-V. Rough
Fe-FeOxide, CL-Clay Infill, CH-Chlorite, H-Healed, GRF-Gravel Filled

DEPTH SCALE (FEET)	DESCRIPTION	GRAPHIC LOG	ELEV / DEPTH (FT)	RUN NO.	CORE RECOVERY	RQD	FRACTURES PER FOOT	DISCONTINUITY DATA: DIP wrt CORE AXIS	DISCONTINUITY DATA: TYPE AND SURFACE DESCRIPTION	GRAPHIC LOG	WEATHERING INDEX	STRENGTH INDEX	POINT LOAD INDEX (psi)	TEST ORIENTATION	NOTES WATER LEVELS INSTRUMENTATION
224	222.7-228.0 ft. Slightly weathered, medium bedded, grayish orange (10YR 7/4), coarse crystalline, weak, FOSSILIFEROUS LIMESTONE, (SALEM FORMATION) Highly silicious, argillaceous														
226				22	100 %				J,PL,R						
228	228.0-230.7 ft. Slightly weathered, medium bedded, grayish orange (10YR 7/4), f-m crystalline, medium strong, LIMESTONE, (SALEM FORMATION)		253.10 / 228.20												5/24/95 @ 15:30 End of Run 22
230									F,U,R (2)						
232	230.7-238.9 ft. Slightly weathered, medium bedded, grayish orange (10YR 7/4), m-c crystalline, medium strong, LIMESTONE, (SALEM FORMATION) Argillaceous, silicious														
234				23	100 %				J,PL,R						
236															236.0-237.0 ft. Additional mechanical breaks
238									J,PL,R (2)						
238									J,PL,R						
240	238.9-247.4 ft. Slightly weathered, medium bedded, grayish orange (10YR 7/4), m-c crystalline, medium strong, LIMESTONE, (SALEM FORMATION) Argillaceous, silicious, includes fossiliferous zones		243.10 / 239.20	24	100 %				B,PL,SM,CL						5/24/95 @ 16:00 End of Run 23

DEPTH SCALE: 1:2
DRILLING CONTRACTOR: LAYNE-WESTERN
DRILLER: D. MAHURIN

LOGGED: D. ALLOWAY
CHECKED: B. TILTON
DATE: 7/13/95

Golder Associates

RECORD OF DRILLHOLE PZ-104-KS

PROJECT: LAIDLAW/RI-FS
PROJECT NO: 943-2848
LOCATION: BRIDGETON, MO

BORING METHOD: NX Core & water
DRILLING DATE: 5/22/95 - 6/4/95
DRILL RIG: CME 75

DATUM: MSL
COORDINATES N: 1066993.15
AZIMUTH: 0

COLLAR ELEV: 482.3
E: 518820.50
INCLINATION: -90

J-Joint, F-Fault, S-Shear, B-Bedding, F-Foliation
PL-Planar, C-Curved, U-Undulating, ST-Stepped, I-Irregular
P-Polished, K-Slickensided, SM-Smooth, R-Rough, VR-V. Rough
Fe-FeOxide, CL-Clay Infill, CH-Chlorite, H-Healed, GRF-Gravel Filled

DEPTH SCALE (FEET)	DESCRIPTION	GRAPHIC LOG	ELEV / DEPTH (FT)	RUN NO.	CORE RECOVERY	RQD	FRACTURES PER FOOT	DISCONTINUITY DATA: DIP wrt CORE AXIS	DISCONTINUITY DATA: TYPE AND SURFACE DESCRIPTION	DISCONTINUITY DATA: GRAPHIC LOG	WEATHERING INDEX (SW, FR, MW, HW, CW)	STRENGTH INDEX (R6, R5, R4, R3, R2, R1)	POINT LOAD INDEX (psi) (R1, R2, R3, R4, R5, R6)	TEST ORIENTATION	NOTES WATER LEVELS INSTRUMENTATION
240	238.9-247.7 ft. Slightly weathered, medium bedded, grayish orange (10YR 7/4), m-c crystalline, medium strong, LIMESTONE, (SALEM FORMATION) Argillaceous, silicious, includes fossiliferous zones														
242															
244				24	100 %										
246									J,PL,R						
248	247.4-256.8 ft. Fresh, medium bedded, light to medium gray (N6 to N5), m-c crystalline, strong, FOSSILIFEROUS LIMESTONE, (SALEM FORMATION)		233.10 / 249.20												5/24/95 @ 16:45 End of Run 24
250															
252				25	100 %										
254															
256															

DEPTH SCALE: 1:2
DRILLING CONTRACTOR: LAYNE-WESTERN
DRILLER: D. MAHURIN

LOGGED: D. ALLOWAY
CHECKED: S. TILTON
DATE: 7/13/95

Golder Associates

RECORD OF DRILLHOLE PZ-104-KS

Sheet 15 of 24

PROJECT: LAIDLAW/RI-FS
PROJECT NO: 943-2548
LOCATION: BRIDGETON, MO

BORING METHOD: NX Core & water
DRILLING DATE: 5/22/95 - 8/4/95
DRILL RIG: CME 75

DATUM: MSL
COORDINATES N: 1068983.15
AZIMUTH: 0

COLLAR ELEV: 482.3
E: 516820.50
INCLINATION: -90

J-Joint, F-Fault, S-Shear, B-Bedding, F-Foliation
PL-Planar, C-Curved, U-Undulating, ST-Stepped, I-Irregular
P-Polished, K-Slickensided, SM-Smooth, R-Rough, VR-V. Rough
Fe-FeOxide, CL-Clay Infill, CH-Chlorite, H-Healed, GRF-Gravel Filled

DEPTH SCALE (FEET)	DESCRIPTION	GRAPHIC LOG	ELEV / DEPTH (FT)	RUN NO.	CORE RECOVERY	RQD	FRACTURES PER FOOT	DISCONTINUITY DATA: DIP wrt CORE AXIS	DISCONTINUITY DATA: TYPE AND SURFACE DESCRIPTION	GRAPHIC LOG	WEATHERING INDEX	STRENGTH INDEX	POINT LOAD INDEX (psi)	TEST ORIENTATION	NOTES WATER LEVELS INSTRUMENTATION
256			226.00												
	256.3-258.8 ft. 258.30 Fresh, thinly bedded, medium dark gray (N4), fine grained, medium strong, SILTSTONE, (WARSAW FORMATION)			25	100 %				B,PL,SM,CL (2)						256.3 ft. Top of WARSAW FORMATION encountered
258			223.50												
	258.8-260.8 ft. 258.80 Fresh, medium bedded, medium gray (N5), m-c crystalline, strong, FOSSILIFEROUS LIMESTONE, (WARSAW FORMATION) Argillaceous, silicious		223.10 259.20												5/24/95 @ 17:30 End of Run 25
260			221.50												5/26/95 6 in steel casing installed to 257.0 ft. in 9 7/8 in. borehole and sealed with cement Core drilling resumed 6/1/95 @ 11:00
	260.8-264.6 ft. 260.80 Fresh, thinly bedded, olive gray (5Y 4/1), very fine grained, medium strong, SILTSTONE, (WARSAW FORMATION)			26	100 %										
262															
254			218.10 264.20												
	264.6-267.2 ft. 264.60 Fresh, thinly bedded, medium dark gray (N4), coarse crystalline, strong, DOLOMITIC LIMESTONE, (WARSAW FORMATION) Chert nodules common (<5 mm.)								B,PL,SM (2)						
268									J,I,R						
	267.2-271.9 ft. Fresh, medium bedded, olive gray (5Y 4/1), fine grained, medium strong, ARGILLACEOUS LIMESTONE, (WARSAW FORMATION)			27	100 %				J,U,SM						
268									J,PL,SM						
270															
	271.9-274.0 ft. Fresh, thinly bedded, medium dark gray (N4), coarse crystalline, strong, DOLOMITIC LIMESTONE, (WARSAW FORMATION) Chert nodules common (<5 mm.)														
272															

DEPTH SCALE: 1:2
DRILLING CONTRACTOR: LAYNE-WESTERN
DRILLER: D. MAHURIN

LOGGED: D. ALLOWAY
CHECKED: B. TILTON
DATE: 7/13/95

Golder Associates

RECORD OF DRILLHOLE PZ-104-KS

Sheet 16 of 24

PROJECT: LAIDLAW/RI-FS
PROJECT NO: 943-2848
LOCATION: BRIDGETON, MO

BORING METHOD: NX Core & water
DRILLING DATE: 5/22/95 - 6/4/95
DRILL RIG: CME 75

DATUM: MSL
COORDINATES N: 1066993.15
AZIMUTH: 0

COLLAR ELEV: 482.3
E: 518820.50
INCLINATION: -90

J-Joint, F-Fault, S-Shear, B-Bedding, F-Foliation
PL-Planar, C-Curved, U-Undulating, ST-Stepped, I-Irregular
P-Polished, K-Slickensided, SM-Smooth, R-Rough, VR-V. Rough
Fe-FeOxide, CL-Clay Infill, CH-Chlorite, H-Healed, GRF-Gravel Filled

DEPTH SCALE (FEET)	DESCRIPTION	GRAPHIC LOG	ELEV / DEPTH (FT)	RUN NO.	CORE RECOVERY	RQD	FRACTURES PER FOOT	DISCONTINUITY DATA: DIP wrt CORE AXIS	DISCONTINUITY DATA: TYPE AND SURFACE DESCRIPTION	GRAPHIC LOG	WEATHERING INDEX	STRENGTH INDEX	POINT LOAD INDEX (psi)	TEST ORIENTATION	NOTES WATER LEVELS INSTRUMENTATION
272	271.9-274.0 ft. Fresh, thinly bedded, medium dark gray (N4), coarse crystalline, strong, DOLOMITIC LIMESTONE, (WARSAW FORMATION) Chert nodules common (<5 mm.)			27	100 %				J,PL,SM						
274	274.0-279.9 ft. Fresh, thin to medium bedded, olive gray (5Y 4/1), very fine grained, medium strong, ARGILLACEOUS LIMESTONE, (WARSAW FORMATION) Porous, (<1 mm. open vugs) 274.4-275.5 ft. Several partially calcite crystal filled voids (<2 in.)		208.10 / 274.20						J,C,SM J,I,R J,I,R J,I,R (4)						274.4-275.5 ft. Possible high porosity zone
278				28	100 %				B,I,SM						
280	279.9-295.7 ft. Fresh, medium bedded, light olive gray (5Y 6/1), coarse crystalline, medium strong to strong, DOLOMITIC LIMESTONE, (WARSAW FORMATION) Abundant chert nodules (<2 mm.), fossiliferous with some silicified zones, stylolitic								J,I,VR J,PL,SM,Fe						
282															
284	284.2-285.4 ft. Olive gray (5Y 4/1), Argillaceous Limestone layer		198.10 / 284.20												6/1/95 @ 15:25 End of Run 28
286				29	100 %				J,PL,SM						
288															

DEPTH SCALE: 1:2
DRILLING CONTRACTOR: LAYNE-WESTERN
DRILLER: D. MAHURIN

LOGGED: D. ALLOWAY
CHECKED: B. TILTON
DATE: 7/13/95

Golder Associates

RECORD OF DRILLHOLE PZ-104-KS

Sheet 17 of 24

PROJECT: LAIDLAW/RI-FS
PROJECT NO: 943-2848
LOCATION: BRIDGETON, MO

BORING METHOD: NX Core & water
DRILLING DATE: 5/22/95 - 6/4/95
DRILL RIG: CME 75

DATUM: MSL
COORDINATES N: 1086993.15
AZIMUTH: 0

COLLAR ELEV: 482.3
E: 516820.50
INCLINATION: -90

J-Joint, F-Fault, S-Shear, B-Bedding, F-Foliation
PL-Planar, C-Curved, U-Undulating, ST-Stepped, I-Irregular
P-Polished, K-Slickensided, SM-Smooth, R-Rough, VR-V. Rough
Fe-FeOxide, CL-Clay Infill, CH-Chlorite, H-Healed, GRF-Gravel Filled

DEPTH SCALE (FEET)	DESCRIPTION	GRAPHIC LOG	ELEV / DEPTH (FT)	RUN NO.	CORE RECOVERY	RQD	FRACTURES PER FOOT	DISCONTINUITY DATA: DIP wrt CORE AXIS	DISCONTINUITY DATA: TYPE AND SURFACE DESCRIPTION	GRAPHIC LOG	WEATHERING INDEX: FR, SW, MW, HW, CW	STRENGTH INDEX: R6, R5, R4, R3, R2, R1	POINT LOAD INDEX (psi): R1 30, R2 150, R3 300, R4 600, R5 1500, R6	TEST ORIENTATION	NOTES WATER LEVELS INSTRUMENTATION
288	279.9-295.7 ft. Fresh, medium bedded, light olive gray (5Y 6/1), coarse crystalline, medium strong to strong, DOLOMITIC LIMESTONE, (WARSAW FORMATION) Abundant chert nodules (<2 mm.) fossiliferous with some silicified zones, stylolitic														
290				29	100 %										
292															
294			188.10 / 294.20												6/1/95 @ 16:20 End of Run 29
296	295.7-303.7 ft. Fresh, thinly bedded, medium dark gray (N4), very fine grained, medium strong, ARGILLACEOUS LIMESTONE, (WARSAW FORMATION)														
298	297.5-299.3 ft. Partially silicified, porous (open vugs <3 mm.)							80	J,PL,SM						
300	299.3-303.7 ft. Rock becomes weak due to high clay content			30	100 %			80	J,PL,SM,CL						
302															
304	303.7-305.0 ft. Fresh, thinly bedded, medium gray (N5), coarse crystalline, medium strong, LIMESTONE, (WARSAW FORMATION)														

DEPTH SCALE: 1:2
DRILLING CONTRACTOR: LAYNE-WESTERN
DRILLER: D. MAHURIN

LOGGED: D. ALLOWAY
CHECKED: B. TILTON
DATE: 7/13/95

Golder Associates

RECORD OF DRILLHOLE PZ-104-KS

Sheet 18 of 24

PROJECT: LAIDLAW/RI-FS
PROJECT NO: 943-2848
LOCATION: BRIDGETON, MO

BORING METHOD: NX Core & water
DRILLING DATE: 5/22/95 - 6/4/95
DRILL RIG: CME 75

DATUM: MSL
COORDINATES N: 1086993.15
AZIMUTH: 0

COLLAR ELEV: 482.3
E: 516820.50
INCLINATION: -90

J-Joint, F-Fault, S-Shear, B-Bedding, F-Foliation
PL-Planar, C-Curved, U-Undulating, ST-Stepped, Ir-Irregular
P-Polished, K-Slikensided, SM-Smooth, R-Rough, VR-V. Rough
Fe-FeOxide, CL-Clay Infill, CH-Chlorite, H-Healed, GRF-Gravel Filled

DEPTH SCALE (FEET)	DESCRIPTION	GRAPHIC LOG	ELEV / DEPTH (FT)	RUN NO.	CORE RECOVERY	RQD	FRACTURES PER FOOT	DISCONTINUITY DATA: DIP wrt CORE AXIS	DISCONTINUITY DATA: TYPE AND SURFACE DESCRIPTION	GRAPHIC LOG	WEATHERING INDEX: SW FR, MW, HW, CW	STRENGTH INDEX: R5, R4, R3, R2, R1	POINT LOAD INDEX (psi): R1 35, R2 130, R3 360, R4 600, R5 1500	TEST ORIENTATION	NOTES WATER LEVELS INSTRUMENTATION
304			178.10	30	100 %										6/1/95 @ 17:00 End of Run 30 Stop drilling 6/2/95 @ 8:30 Begin Run 31
			304.20												
	177.30														
	305.0-309.7 ft. 305.00 Fresh, thinly bedded, medium dark gray (N4), very fine grained, weak, SILTSTONE, (WARSAW FORMATION)														
306															
308				31	100 %				B,PL,SM						
	172.60														
	309.7-313.5 ft. 309.70 Fresh, thinly bedded, medium gray (N5), m-c crystalline, medium strong, LIMESTONE, (WARSAW FORMATION) Numerous clay partings, stylolitic								B,PL,SM						
310															
312									B,PL,SM,CL						
	313.5-322.0 ft. Fresh, thinly to medium bedded, light olive gray (5Y 6/1) to dark gray (N3), very fine to medium grained medium strong, alternating layers of ARGILLACEOUS LIMESTONE and SILTSTONE (2-6 in. thick) (WARSAW FORMATION)								B,U,SM,CL						
314	168.10		168.10												6/2/95 @ 11:30 End of Run 31 Slow drilling, a lot of rod wobble
	314.20		314.20						B,PL,SM,CL						
	167.30														
	315.00														
	166.30														
316	316.00														
									B,PL,SM (4)						
	165.30														
	317.00			32	98%										
	164.30														
318	318.00														
	163.30														
	319.00														
	162.30														
320	320.00														

DEPTH SCALE: 1:2
DRILLING CONTRACTOR: LAYNE-WESTERN
DRILLER: D. MAHURIN

LOGGED: D. ALLOWAY
CHECKED: B. TILTON
DATE: 7/13/95

Golder Associates

RECORD OF DRILLHOLE PZ-104-KS

Sheet 19 of 24

PROJECT: LAIDLAW/RI-FS
PROJECT NO: 943-2848
LOCATION: BRIDGETON, MO

BORING METHOD: NX Core & water
DRILLING DATE: 5/22/95 - 6/4/95
DRILL RIG: CME 75

DATUM: MSL
COORDINATES N: 1068893.15
AZIMUTH: 0

COLLAR ELEV: 482.3
E: 516820.50
INCLINATION: -90

J-Joint, F-Fault, S-Shear, B-Bedding, F-Foliation
PL-Planar, C-Curved, U-Undulating, ST-Stepped, I-Irregular
P-Polished, K-Slickensided, SM-Smooth, R-Rough, VR-V. Rough
Fe-FeOxide, CL-Clay Infill, CH-Chlorite, H-Healed, GRF-Gravel Filled

DEPTH SCALE (FEET)	DESCRIPTION	ELEV / DEPTH (FT)	RUN NO.	CORE RECOVERY	RQD	FRACTURES PER FOOT	DISCONTINUITY DATA: DIP wrt CORE AXIS	DISCONTINUITY DATA: TYPE AND SURFACE DESCRIPTION	WEATHERING INDEX	STRENGTH INDEX	POINT LOAD INDEX (psi)	TEST ORIENTATION	NOTES WATER LEVELS INSTRUMENTATION
320	313.5-322.0 ft. Fresh, thinly to medium bedded, light olive gray (5Y 6/1) to dark gray (N3), very fine to medium grained, medium strong, alternating layers of ARGILLACEOUS LIMESTONE and SILTSTONE (2-6 in. thick) (WARSAW FORMATION)	160.30 / 322.00	32	95%				B,I,R					
322	322.0-347.4 ft. Fresh, thickly bedded, dark gray (N3), very fine grained, medium strong, SILTSTONE, (WARSAW FORMATION)												
324		158.10 / 324.20											6/2/95 @ 12:40 End Run 32
326													
328			33	100%				J,PL,SM,CL					
330													
332		148.10 / 333.20											6/2/95 @ 14:00 End of Run 33
334			34	100%									
336													

DEPTH SCALE: 1:2
DRILLING CONTRACTOR: LAYNE-WESTERN
DRILLER: D. MAHURIN

LOGGED: D. ALLOWAY
CHECKED: B. TILTON
DATE: 7/13/95

Golder Associates

RECORD OF DRILLHOLE PZ-104-KS

Sheet 20 of 24

PROJECT: LAIDLAW/RI-FS
PROJECT NO: 943-2848
LOCATION: BRIDGETON, MO

BORING METHOD: NX Core & water
DRILLING DATE: 5/22/95 - 6/4/95
DRILL RIG: CME 75

DATUM: MSL
COORDINATES N: 1068993.15
AZIMUTH: 0

COLLAR ELEV: 482.3
E: 516820.50
INCLINATION: -90

J-Joint, F-Fault, S-Shear, B-Bedding, F-Foliation
PL-Planar, C-Curved, U-Undulating, ST-Stepped, I-Irregular
P-Polished, K-Slickensided, SM-Smooth, R-Rough, VR-V. Rough
Fe-FeOxide, CL-Clay Infill, CH-Chlorite, H-Healed, GRF-Gravel Filled

DEPTH SCALE (FEET)	DESCRIPTION	GRAPHIC LOG	ELEV / DEPTH (FT)	RUN NO.	CORE RECOVERY	ROD	FRACTURES PER FOOT	DISCONTINUITY DATA: DIP wrt CORE AXIS	DISCONTINUITY DATA: TYPE AND SURFACE DESCRIPTION	GRAPHIC LOG	WEATHERING INDEX (SW FR, MW, HW, CW)	STRENGTH INDEX (R6, R5, R4, R3, R2, R1)	POINT LOAD INDEX (psi) (R1 30, R2 150, R3 300, R4 600, R5 1500, R6)	TEST ORIENTATION	NOTES WATER LEVELS INSTRUMENTATION
336	322.0-347.4 ft. Fresh, thickly bedded, dark gray (N3), very fine grained, medium strong, SILTSTONE, (WARSAW FORMATION)														
				34	100 %										
338	338.0-347.2 ft. Siltstone becomes weak														
			143.10												
	339.3-339.5 ft. Soft, medium gray (N5), Clay seam		339.20												
340															
342															
				35	100 %										
344															
346															
			134.90												
	347.4-358.3 ft. Fresh, thinly bedded, medium dark gray (N4), fine crystalline, medium strong, DOLOMITIC LIMESTONE, (WARSAW FORMATION) Argillaceous, numerous shaley partings, some thin interbeds of Siltstone (<4 in. thick), fossiliferous, coarse chert nodules common		347.40												
348			134.10												
			348.20												
350				36	100 %										
352															

DEPTH SCALE: 1:2
DRILLING CONTRACTOR: LAYNE-WESTERN
DRILLER: D. MAHURIN

LOGGED: D. ALLOWAY
CHECKED: B. TILTON
DATE: 7/13/95

Golder Associates

RECORD OF DRILLHOLE PZ-104-KS

PROJECT: LAIDLAW/RI-FS
PROJECT NO: 643-2848
LOCATION: BRIDGETON, MO

BORING METHOD: NX Core & water
DRILLING DATE: 5/22/95 - 6/4/95
DRILL RIG: CME 75

DATUM: MSL
COORDINATES N: 1056993.15
AZIMUTH: 0

COLLAR ELEV: 482.3
E: 516820.50
INCLINATION: -90

J-Joint, F-Fault, S-Shear, B-Bedding, F-Foliation
PL-Planar, C-Curved, U-Undulating, ST-Stepped, I-Irregular
P-Polished, K-Slickensided, SM-Smooth, R-Rough, VR-V. Rough
Fe-FeOxide, CL-Clay Infill, CH-Chlorite, H-Healed, GRF-Gravel Filled

DEPTH SCALE (FEET)	DESCRIPTION	GRAPHIC LOG	ELEV / DEPTH (FT)	RUN NO.	CORE RECOVERY	RQD	FRACTURES PER FOOT	DISCONTINUITY DATA: DIP wrt CORE AXIS	DISCONTINUITY DATA: TYPE AND SURFACE DESCRIPTION	DISCONTINUITY DATA: GRAPHIC LOG	WEATHERING INDEX (SW FR, MW, HW, CW)	STRENGTH INDEX (R6 R5 R4 R3 R2 R1)	POINT LOAD INDEX (psi) (R6 1500, R5 600, R4 300, R3 150, R2 30, R1)	TEST ORIENTATION	NOTES WATER LEVELS INSTRUMENTATION
352	347.4-358.3 ft. Fresh, thinly bedded, medium dark gray (N4), fine crystalline, medium strong, DOLOMITIC LIMESTONE, (WARSAW FORMATION) Argillaceous, numerous shaley partings, some thin interbeds of Siltstone (<4 in. thick), fossilliferous, coarse chert nodules common														
354				36	100 %										
356															
358			124.00												
	358.3-384.7 ft. Fresh, thinly bedded, medium gray (N5), alternating fine crystalline and coarse crystalline layers, medium strong to strong, ARGILLACEOUS LIMESTONE, (KEOKUK FORMATION) Some zones fossiliferous, abundant medium bluish gray (5B 5/1), chert layers, coarse grained chert nodules common, thinly laminated, shaley partings common, trace disseminated pyrite		358.30												@ 358.3 ft. Inferred top of KEOKUK FORMATION Drilling rate slows significantly due to chert layers 6/2/95 @ 17:00
360															
362									● J,I,R						
				37	100 %										End of Run 36
364															
366															
368															

DEPTH SCALE: 1:2
DRILLING CONTRACTOR: LAYNE-WESTERN
DRILLER: D. MAHURIN

LOGGED: D. ALLOWAY
CHECKED: B. TILTON
DATE: 7/13/95

Golder Associates

RECORD OF DRILLHOLE PZ-104-KS

PROJECT: LAIDLAW/RI-FS
PROJECT NO: 943-2848
LOCATION: BRIDGETON, MO

BORING METHOD: NX Core & water
DRILLING DATE: 5/22/95 - 6/4/95
DRILL RIG: CME 75

DATUM: MSL
COORDINATES N: 1066993.15
AZIMUTH: 0

COLLAR ELEV: 482.3
E: 518820.50
INCLINATION: -90

J-Joint, F-Fault, S-Shear, B-Bedding, F-Foliation
PL-Planar, C-Curved, U-Undulating, ST-Stepped, I-Irregular
P-Polished, K-Slickensided, SM-Smooth, R-Rough, VR-V. Rough
Fe-FeOxide, CL-Clay Infill, CH-Chlorite, H-Healed, GRF-Gravel Filled

DEPTH SCALE (FEET)	DESCRIPTION	GRAPHIC LOG	ELEV / DEPTH (FT)	RUN NO.	CORE RECOVERY	RQD	FRACTURES PER FOOT	DISCONTINUITY DATA: DIP wrt CORE AXIS	DISCONTINUITY DATA: TYPE AND SURFACE DESCRIPTION	GRAPHIC LOG	WEATHERING INDEX	STRENGTH INDEX	POINT LOAD INDEX (psi)	TEST ORIENTATION	NOTES WATER LEVELS INSTRUMENTATION
368	357.7-384.7 ft. Fresh, thinly bedded, medium gray (N5), alternating fine crystalline and coarse crystalline layers, medium strong to strong, ARGILLACEOUS LIMESTONE, (KEOKUK FORMATION) Some zones fossiliferous, abundant medium bluish gray (5B 5/1), chert layers, coarse grained chert nodules common, thinly laminated, shaley partings, common, trace disseminated pyrite		114.00	37	100 %										6/2/95 @ 18:00 End of Run 37
370			368.30												
372				38	98%										
374			108.00												6/2/95 @ 19:15 End of Run 38 Stop drilling 6/3/95 @ 7:00 Drilling resumed
376			374.30												
378	Below 378.5 ft. Only occasional shaley partings			39	100 %				B,U,SM,CL						
380			103.00												6/3895 @ 13:30 End of Run 39
382			379.30	40	100 %										
384															

DEPTH SCALE: 1:2
DRILLING CONTRACTOR: LAYNE-WESTERN
DRILLER: D. MAHURIN

LOGGED: D. ALLOWAY
CHECKED: B. TILTON
DATE: 7/13/95

Golder Associates

RECORD OF DRILLHOLE PZ-104-KS

Sheet 23 of 24

PROJECT: LAIDLAW/RI-FS
PROJECT NO: 943-2848
LOCATION: BRIDGETON, MO

BORING METHOD: NX Core & water
DRILLING DATE: 5/22/95 - 6/4/95
DRILL RIG: CME 75

DATUM: MSL
COORDINATES N: 1066993.15
AZIMUTH: 0

COLLAR ELEV: 482.3
E: 516820.50
INCLINATION: -90

J-Joint, F-Fault, S-Shear, B-Bedding, F-Foliation
PL-Planar, C-Curved, U-Undulating, ST-Stepped, I-Irregular
P-Polished, K-Slickensided, SM-Smooth, R-Rough, VR-V. Rough
Fe-FeOxide, CL-Clay Infill, CH-Chlorite, H-Healed, GRF-Gravel Filled

DEPTH SCALE (FEET)	DESCRIPTION	GRAPHIC LOG	ELEV / DEPTH (FT)	RUN NO.	CORE RECOVERY	RQD	FRACTURES PER FOOT	DISCONTINUITY DATA: DIP wrt CORE AXIS	DISCONTINUITY DATA: TYPE AND SURFACE DESCRIPTION	DISCONTINUITY DATA: GRAPHIC LOG	WEATHERING INDEX	STRENGTH INDEX	POINT LOAD INDEX (psi)	TEST ORIENTATION	NOTES WATER LEVELS INSTRUMENTATION
384	384.7-393.8 ft. Slightly weathered, thinly bedded, pinkish gray (5Y 8/1) to light olive gray (5Y 6/1), f-m crystalline, medium strong to strong, LIMESTONE, (KEOKUK FORMATION) Some zones coarse grained, chert layers common (<6 in.), stylolitic, some zones silicified		98.00 / 384.30	40	100 %										6/3/95 @ 15:00 End of Run 40 Stop drilling 6/4/95 @ 8:00 Drilling resumed
386															
388				41	100 %										
390															
392	@ 392.0 ft. Three open vugs with quartz crystals (<1 in. dia.)		88.50 / 393.80												
394	393.8-406.5 ft. Moderate to highly weathered, thinly bedded, light gray (N7), f-c crystalline, medium strong to weak, SILICIFIED LIMESTONE, (KEOKUK FORMATION) Chert nodules and layers common, stylolitic														
396				42	94%										
398	398.5-399.1 ft. Highly weathered, very porous, (open vugs <5 mm.), weak rock														
400															

DEPTH SCALE: 1:2
DRILLING CONTRACTOR: LAYNE-WESTERN
DRILLER: D. MAHURIN

LOGGED: D. ALLOWAY
CHECKED: B. TILTON
DATE: 7/13/95

Golder Associates

RECORD OF DRILLHOLE PZ-104-KS

PROJECT: LAIDLAW/RI-FS
PROJECT NO: 943-2848
LOCATION: BRIDGETON, MO

BORING METHOD: NX Core & water
DRILLING DATE: 5/22/95 - 6/4/95
DRILL RIG: CME 75

DATUM: MSL
COORDINATES N: 1068993.15
AZIMUTH: 0

COLLAR ELEV: 482.3
E: 518820.50
INCLINATION: -90

J-Joint, F-Fault, S-Shear, B-Bedding, F-Foliation
PL-Planar, C-Curved, U-Undulating, ST-Stepped, I-Irregular
P-Polished, K-Slickensided, SM-Smooth, R-Rough, VR-V. Rough
Fe-FeOxide, CL-Clay Infill, CH-Chlorite, H-Healed, GRF-Gravel Filled

DEPTH SCALE (FEET)	DESCRIPTION	GRAPHIC LOG	ELEV / DEPTH (FT)	RUN NO.	CORE RECOVERY	RQD	FRACTURES PER FOOT	DISCONTINUITY DATA: DIP wrt CORE AXIS	DISCONTINUITY DATA: TYPE AND SURFACE DESCRIPTION	GRAPHIC LOG	WEATHERING INDEX: SW FR, MW, HW, CW	STRENGTH INDEX: R6 R5 R4 R3 R2 R1	POINT LOAD INDEX (psi): R1 30, R2 150, R3 300, R4 600, R5 1500, R6	TEST ORIENTATION	NOTES WATER LEVELS INSTRUMENTATION
400	393.8-408.5 ft. Moderate to highly weathered, thinly bedded, light gray (N7), f-c crystalline, medium strong to weak, SILICIFIED LIMESTONE, (KEOKUK FORMATION) Chert nodules and layers common, stylolitic			42	94%	85 60 20	2 4 5 6 8 10	0 30 60 90							
402			79.10												
			403.20												Core Loss in highly weathered rock 6/4/95 @ 14:10 End Run 42
			78.50												
404	@ 403.8 ft. Highly weathered, very porous, weak rock		403.80												
406				43	96%										
408															
	73.50		73.50												6/4/95 @ 14:45 Drilling completed
	End of Record of Drillhole at 408.8 ft. 408.80		408.80												
410															
412															
414															
416															

DEPTH SCALE: 1:2
DRILLING CONTRACTOR: LAYNE-WESTERN
DRILLER: D. MAHURIN

LOGGED: D. ALLOWAY
CHECKED: B. TILTON
DATE: 7/13/95

Golder Associates

Well No. PZ-104-KS

Boring No. X-Ref: PZ-104-KS

PIEZOMETER CONSTRUCTION SUMMARY

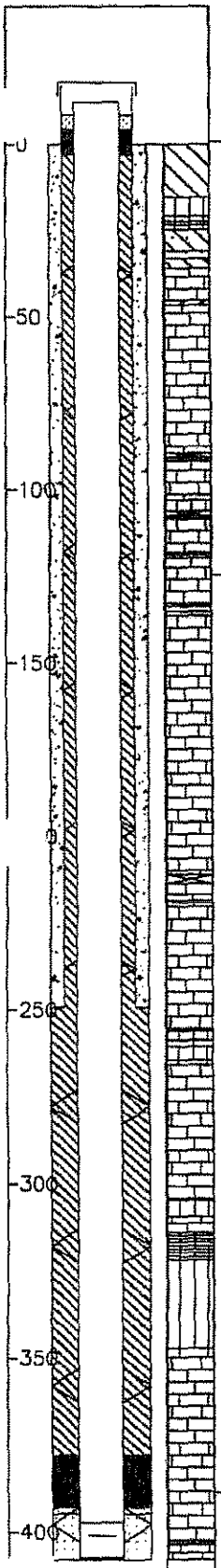

Not to Scale

Survey Coords: Northing: 1066993 ft. Easting: 516821 ft.

Elevation Ground Level 482.3 ft. NGVD

Top of PVC Casing 484.04 ft. NGVD

Drilling Summary:

Total Depth 408.0 ft.

Borehole Diameter 10 in. (0.0-249.0 ft.) 5 7/8 in. (249.0-408.0 ft.)

Casing Stickup Height 1.72 ft.

Driller Layne-Western, St. Louis, MO

Rig CME 75, Schramm Portadrill T660H

Bit(s) 6 1/4 in. ID Hollow Stem Auger Bit, NX Core, 5 7/8 in. and 10 in. Button Bits

Drilling Fluid Auger-None, NX Core Water, Air Rotary

Protective Casing 8x8 in. Square Steel, by 5 ft. long

Construction Time log:

Task	Start Date	Start Time	Finish Date	Finish Time
Drilling				
CME 75 (augers)	2/21/95	15:40	2/21/95	17:58
CME 75 (core)	5/22/95	14:00	5/22/95	14:45
Schramm Rotary	6/7/95	7:15	6/7/95	11:30
Geophys.Logging:	6/8/95	10:30	6/8/95	12:15
Casing:				
2" PVC	6/19/95	9:30	6/19/95	11:00
6" Steel	5/25/95	12:30	5/25/95	13:30
Filter Placement:	6/19/95	11:05	6/19/95	13:00
Cementing:				
Development				
Bentonite Grout	6/19/95	13:15	6/19/95	17:00
Bentonite Seal	6/19/95	13:00	6/19/95	13:15

Well Design & Specifications

Basis: Geologic Log X Geophysical Log X

Casing string(s): C = Casing S = Screen

Depth			String(s)	Elevation		
+ 1.72	-	397.37	C1	484.04	-	84.95
397.37	-	407.17	S1	84.95	-	75.15
407.17	-	407.50	C2	75.15	-	74.82
+ 1.00	-	249.00	C3	483.30	-	233.32
	-				-	
	-				-	

Casing: C1 2 in. dia. Schedule 80 PVC, flush threaded with O-rings

C2 2 in. dia. threaded PVC end cap (4 in. long or 0.33 ft.) (C3-see comments)

Screen: S1 2 in. dia. Schedule 80 PVC, 0.010 in. machine cut slot, flush threaded with O-rings

Sand Pack: 16-35 mesh Silica Sand, 395.0-408.0 ft.

Filter Pack: Less than 50 mesh Silica Sand, 393.0-395.0 ft.

Grout Seal: Wyo-Ben Grout Well Bentonite Slurry, 3.0-378.0 ft., Neat cement, 3.0-249.0 ft.

Bentonite Seal: Extra high yield Wyo-Ben (100%) Slurry, 378.0-393.0 ft.

Concrete: 0.0-3.0 ft.

Well Development

Stabilization Test Data:

Time	pH	Spec. Cond.	Temp (°C)

Recovery Data:

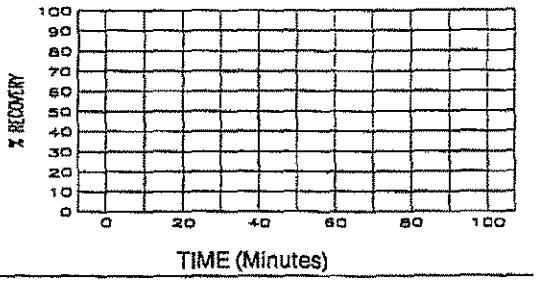

Comments: Surface Casing C3: 6 1/8 in. ID / 6 5/8 in. OD Steel Casing

Supervised by B. Tilton

Job Number 943-2848

Site LAIDLAW/OU2 RI-FS/MO

File Name PZ104KS

MISSOURI DEPARTMENT OF NATURAL RESOURCES
DIVISION OF GEOLOGY AND LAND SURVEY

MONITORING WELL CERTIFICATION RECORD

OFFICE USE ONLY	DATE RECEIVED
REF NO 122504	CHECK NO.
ROUTE	TRANSMITTAL NO
STATE WELL NUMBER	CROSS REFERENCE NO.
CHECKED BY	ENTERED Ph 1 Ph 2 Ph 3
APPROVED BY	DATE APPROVED

INFORMATION SUPPLIED BY OWNER

SITE NAME	WELL NUMBER
LAIDLAW BRIDGETON SANITARY LANDFILL	[redacted] PZ-104-KS

SITE ADDRESS	CITY	STATE	ZIP CODE
ST. CHARLES ROCK RD	BRIDGETON	Mo	63044

NAME	TELEPHONE
LAIDLAW WASTE SYSTEMS, INC.	314-241-3710

ADDRESS	CITY	STATE	ZIP CODE
1838 N. BROADWAY	ST. LOUIS	Mo	63102

INFORMATION SUPPLIED BY MONITORING WELL CONTRACTOR

LOCATION OF WELL SHOW LOCATION IN SECTION PLAT

COUNTY ST. LOUIS
ELEVATION 482.32
AREA NO.

SMALLEST ¼ LARGEST ¼

SEC. ____ TWN. 47 N,RNG 5 (E) OR W

LAT. 38 ° 45 ' 50 " LONG. 90 ° 36 ' 37 "

SKETCH THE LOCATION TO THE WELL INCLUDING MILEAGE ON ALL ROADS TRAVELED FROM NEAREST TOWNS OR HIGHWAYS

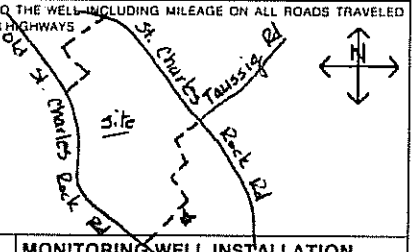

DESCRIBE LOCATION OF THE WELL SO WE WOULD BE ABLE TO VISIT IT

MONITORING WELL INSTALLATION CONTRACTOR'S NAME

LAYNE WESTERN Co., INC.

DRILLING CONTRACTOR'S NAME

LAYNE WESTERN Co., INC.

TYPE OF INSTALLATION
☒ ABOVE GROUND ☐ FLUSH MOUNT

STATIC WATER LEVEL
FEET FROM MEASURING POINT

DATE OF STATIC WATER LEVEL

ELEVATION OF MEASURING POINT
484.04

MEASURING POINT IS
☒ TOP OF RISER PIPE
☐ OTHER

DRILLING EQUIPMENT
☒ AIR ROTARY ☒ AUGER TYPE 6¼ H.S.A.
☐ REVERSE ROTARY ☐ OTHER

CENTRALIZERS USED
☒ YES, AT 9 TOTAL
☒ STAINLESS STEEL
☐ OTHER
☐ NO

MULTIPLE CASED WELLS
SUBMIT ADDITIONAL AS BUILT DIAGRAM SHOWING WELL CONSTRUCTION DETAILS INCLUDING TYPE AND SIZE OF ALL CASING, HOLE DIAMETERS, AND GROUT USED.

DATE WELL CONSTRUCTION WAS COMPLETED
6-19-95

I HEREBY CERTIFY THAT THE MONITORING WELL HEREIN DESCRIBED WAS CONSTRUCTED IN ACCORDANCE WITH THE DEPARTMENT OF NATURAL RESOURCES REQUIREMENTS FOR THE CONSTRUCTION OF MONITORING WELLS.

SIGNATURE (MONITORING WELL CONTRACTOR) Michael P. Vogl

PERMIT NUMBER	DATE
001256 WM	7-07-95

SIGNATURE (DRILLING CONTRACTOR) Michael P. Vogl

PERMIT NUMBER	DATE
001256 WM	7-07-95

NOTE: Record the fraction of a foot in decimal, not in inches

Top of Riser Elevation: 484.04

LOCKING CAP - (Y) N (Circle one)
CAP VENT - Y / (N) (Circle one)

PROTECTIVE CASING
Type: STEEL
Size: 8"x5' x5'
Bore Hole Diameter: 9 7/8"
WEEP HOLE - Y / N (Circle one)

Ground Surface Elevation: 482.32 Ft

Information in this column to be supplied in the Feet from Surface column	Feet from Surface	Description of Formation
		0-37 No sampling
Depth to bottom of Protective Casing Seal:	3.0	
		37-100 Limestone
		100-105 shale
		105-250 Limestone
		250-253 shale
		253-256 Limestone
		256-294 shale
		294-366 Limestone
Depth to Base of Annular Seal:	378.0	366-376 Dolomite
		376-397 Limestone
		397-304 shale
Depth to Base of Bentonite Seal:	343.0	304-317 Limestone
Depth to Base of Secondary Filter Pack:	345.0	317-342 shale
		342-406 Limestone
Depth to Top of the Screen:	347.5	
Depth to Bottom of the Screen:	407.5	
Plug Back Total Depth		
Original Total Depth:	408.0	

PROTECTIVE CASING SEAL
Type: ☒ Concrete ☐ Cement Slurry

RISER PIPE
Length: 349.2'
Diameter: 2"
Type of Material: SCH 80 PVC

BOREHOLE DIAMETER: 5 7/8 In.

ANNULAR SEAL
Type: ☒ Bentonite Slurry 345-378
☒ Cement Slurry 3-345
☐ Non Slurry Bentonite

BENTONITE SEAL
Type: ☒ Bentonite Slurry
☐ Non Slurry Bentonite
Length of Seal: 15 Ft.

SECONDARY FILTER PACK (Optional)
Type: ☒ Sand ☐ Manufactured
Grain Size: < 50
Length: 2.0'

PRIMARY FILTER PACK
Type: ☒ Sand ☐ Manufactured
Grain Size: 16-35
Length: 13.0'

WELL SCREEN
Length: 10'
Slot Size: 0.010
Type: SCH 80 PVC

SUMP DETAILS
Length: 0.5 FL
Diameter: 2 In.
Type: PVC

TYPE OF BACKFILL: SAND

MO 780-1419 (2-94)

DISTRIBUTION: WHITE-DIVISION CANARY-MONITORING WELL CONTRACTOR PINK-OWNER

RECORD OF DRILLHOLE PZ-104-SD

Sheet 1 of 1

PROJECT: LAIDLAW/RI-FS
PROJECT NO: 843-2848
LOCATION: BRIDGETON, MO

BORING METHOD: NX Core & water
DRILLING DATE: 6/6/95
DRILL RIG: SCHRAMM

DATUM: MSL
COORDINATES N: 1067013.26
AZIMUTH: 0

COLLAR ELEV: 482.1
E: 516834.43
INCLINATION: -90

J-Joint, F-Fault, S-Shear, B-Bedding, F-Foliation
PL-Planar, C-Curved, U-Undulating, ST-Stepped, I-Irregular
P-Polished, K-Slickensided, SM-Smooth, R-Rough, VR-V. Rough
Fe-FeOxide, CL-Clay Infill, CH-Chlorite, H-Healed, GRF-Gravel Filled

DEPTH SCALE (FEET)	DESCRIPTION	GRAPHIC LOG	ELEV / DEPTH (FT)	RUN NO.	CORE RECOVERY	RQD	FRACTURES PER FOOT	DISCONTINUITY DATA: DIP wrt CORE AXIS	DISCONTINUITY DATA: TYPE AND SURFACE DESCRIPTION	GRAPHIC LOG	WEATHERING INDEX: FR, SW, MW, HW, CW	STRENGTH INDEX: R6, R5, R4, R3, R2, R1	POINT LOAD INDEX (psi): R1 30, R2 150, R3 300, R4 600, R5 1500, R6	TEST ORIENTATION	NOTES WATER LEVELS INSTRUMENTATION
240	0.0-245.3 ft. No sampling conducted See Soil Borehoole Log and Record of Drillhole for PZ-104-KS														0.0-38.0 ft. Drilling conducted with 6 1/4 in. ID hollow stem augers, then borehole advanced to 245.3 ft. with 5 7/8 in. air rotary bit
242															
244			236.80												
246	245.3-252.8 ft. 245.30 Fresh, thickly bedded, medium dark gray (N4), coarse grained, medium strong, FOSSILIFEROUS LIMESTONE, (SALEM FORMATION) Coarse grained calcite crystals common		245.30												6/6/95 @ 8:30 Began coring
248	247.4-250.1 ft. Limestone is moderate yellowish brown (10YR 5/4) due to iron oxide														
250				1	94%										
252	229.30														
254	252.8-255.0 ft. 252.80 Slightly weathered, thinly bedded, moderate yellowish brown (10YR 5/4), very fine grained, weak, SILTSTONE, (WARSAW FORMATION)		227.70												Core Loss due to highly weathered SILTSTONE 6/6/95 @ 11:30 Coring completed
	254.4-255.0 ft. Siltstone becomes highly weathered 227.10		254.40						Core Loss						
256	End of Record of Drillhole at 255.00 ft. 255.00														

DEPTH SCALE: 1:2
DRILLING CONTRACTOR: LAYNE-WESTERN
DRILLER: M. VOGT

LOGGED: S. TILTON
CHECKED: R. BOOTH
DATE: 7/12/95

Golder Associates

Well No. PZ-104-SD

Boring No. X-Ref: PZ-104-SD

PIEZOMETER CONSTRUCTION SUMMARY

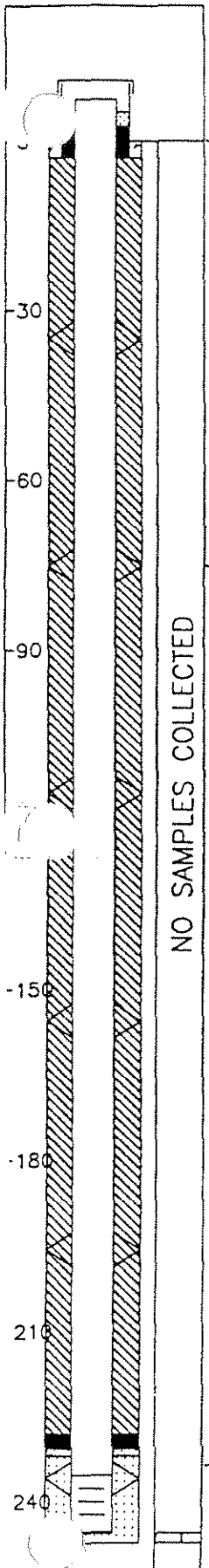

Not to Scale

Survey Coords: Northing: 1067013 ft. Easting: 516834 ft.

Elevation Ground Level 482.1 ft. NGVD

Top of PVC Casing 483.69 ft. NGVD

Drilling Summary:

Total Depth 252.5 ft.

Borehole Diameter 10 1/4 in. (0.0-38.0 ft.) 5 7/8 in. (38.0-252.5 ft.)

Casing Stickup Height 1.59 ft.

Driller Layne-Western, St. Louis, MO

Rig CME 75, Schramm Portadrill T660H

Bit(s) 6 1/4 in. ID Hollow Stem Auger Bit, NX Core, 5 7/8 in. Button Bit for Reaming

Drilling Fluid Auger-None, NX Core Water, Air Rotary

Protective Casing 8x8 in. Square Steel, by 5 ft. long

Construction Time log:

Task	Start Date	Start Time	Finish Date	Finish Time
Drilling				
CME 75				
Schramm Rotary	5/5/95	15:00	5/6/95	14:00
Geophys.Logging:	6/8/95	12:30	6/8/95	15:00
Casing:	6/17/95	12:10	6/17/95	12:30
Filter Placement:	6/17/95	12:30	6/17/95	13:00
Cementing:				
Development				
Bentonite Grout	6/17/95	13:20	6/17/95	15:00
Bentonite Seal	6/17/95	13:00	6/17/95	13:20

Well Design & Specifications

Basis: Geologic Log X Geophysical Log X

Casing string(s): C = Casing S = Screen

Depth			String(s)	Elevation		
+ 1.59	-	235.20	C1	483.69	-	246.90
235.20	-	245.00	S1	246.90	-	237.10
245.00	-	245.33	C2	237.10	-	236.77
	-				-	
	-				-	
	-				-	

Casing: C1 2 in. dia. Schedule 80 PVC, flush threaded with O-rings

C2 2 in. dia. threaded PVC end cap (4 in. long or 0.33 ft.)

Screen: S1 2 in. dia. Schedule 80 PVC, 0.010 in. machine cut slot, flush threaded with O-rings

Sand Pack: 16-35 mesh Silica Sand, 231.8-247.0 ft.

Filter Pack: Less than 50 mesh Silica Sand, 230.5-231.8 ft.

Grout Seal: Wyo-Ben Grout Well Bentonite Slurry, 3.0-220.0 ft.

Bentonite Seal: Extra high yield Wyo-Ben (100%) Slurry, 220.0-230.5 ft.

Concrete: 0.0-3.0 ft.

Well Development

Stabilization Test Data:

Time	pH	Spec. Cond.	Temp (°C)

Recovery Data:

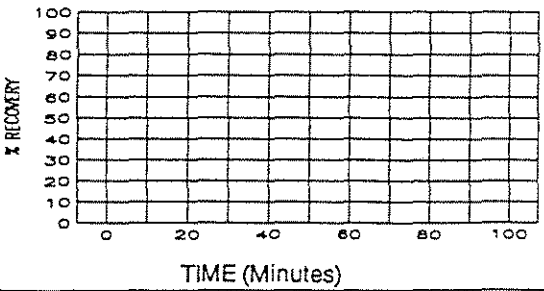

Comments:

When PVC casing was installed, it was observed that there was about 5.0 ft. of sluff in borehole from 247.5-252.5 ft. It did not appear that the sluff could be removed from the borehole since the borehole had remained open to allow for geophysical logging and packer testing and slaking of shale units and argillaceous limestones in the borehole. Two feet of sand pack was used to seperate the bottom of the piezometer from the sluff at the bottom of the borehole.

Supervised by B. Tilton

Job Number 943-2848

Site LAIDLAW/OU2 RI-FS/MO

File Name PZ104SD

MISSOURI DEPARTMENT OF NATURAL RESOURCES
DIVISION OF GEOLOGY AND LAND SURVEY

MONITORING WELL CERTIFICATION RECORD

OFFICE USE ONLY	
REF NO 122512	CHECK NO
ROUTE	TRANSMITTAL NO
STATE WELL NUMBER	CROSS REFERENCE NO
CHECKED BY	ENTERED Ph 1 Ph 2 Ph 3
APPROVED BY	DATE APPROVED

DATE RECEIVED

INFORMATION SUPPLIED BY OWNER

SITE NAME	WELL NUMBER
LANDFILL BRIDGETON SANITARY LANDFILL	PZ-104-SD

SITE ADDRESS	CITY	STATE	ZIP CODE
31 CHARLES ROCK RD.	BRIDGETON	MO.	63044

NAME	TELEPHONE
LANDFILL WASTE SYSTEMS, INC.	314-241 3110

ADDRESS	CITY	STATE	ZIP CODE
1530 N LACLEDE WAY	ST LOUIS	MO	63132

INFORMATION SUPPLIED BY MONITORING WELL CONTRACTOR

LOCATION OF WELL
SHOW LOCATION IN SECTION PLAT

COUNTY ST LOUIS
ELEVATION 453.69
AREA NO

SMALLEST ¼ LARGEST ¼

SEC. ____ TWN. 47 N,RNG. 5 E OR W

LAT. 38 ° 45 ' 50 " LONG. 90 ° 26 ' 27 "

SKETCH THE LOCATION TO THE WELL INCLUDING MILEAGE ON ALL ROADS TRAVELED FROM NEAREST TOWNS OR HIGHWAYS

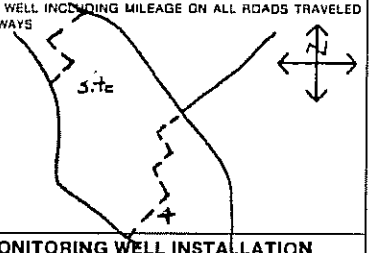

DESCRIBE LOCATION OF THE WELL SO WE WOULD BE ABLE TO VISIT IT

MONITORING WELL INSTALLATION CONTRACTOR'S NAME
LAYNE WESTERN CO., INC.

DRILLING CONTRACTOR'S NAME
LAYNE WESTERN CO., INC.

NOTE: Record the fraction of a foot in decimal, not in inches

Top of Riser Elevation: 453.69

Ground Surface Elevation: 453.19 Ft

Feet from Surface	Description of Formation
Information in this column to be supplied in the Feet from Surface column	
Depth to bottom of Protective Casing Seal: 3.0	
Depth to Base of Annular Seal: 228.0	
Depth to Base of Bentonite Seal: 230.5	
Depth to Base of Secondary Filter Pack: 231.8	
Depth to Top of the Screen: 235.0	
Depth to Bottom of the Screen: 245.0	
Plug Back Total Depth:	
Original Total Depth: 252.5	

LOCKING CAP - (Y) N (Circle one)
CAP VENT - Y / N (Circle one)

PROTECTIVE CASING
Type: STEEL
Size: 8" I.D. 8.5"
Bore Hole Diameter: 10¼"

WEEP HOLE - Y / N (Circle one)

PROTECTIVE CASING SEAL
Type: ☒ Concrete ☐ Cement Slurry

RISER PIPE
Length: 232'
Diameter: 2"
Type of Material: SCH 80 PVC

BOREHOLE DIAMETER: 5 7/8 in.

ANNULAR SEAL
Type: ☐ Bentonite Slurry ☒ Cement Slurry ☐ Non Slurry Bentonite

BENTONITE SEAL
Type: ☒ Bentonite Slurry ☐ Non Slurry Bentonite
Length of Seal: 2.5 Ft.

SECONDARY FILTER PACK (Optional)
Type: ☒ Sand ☐ Manufactured
Grain Size: #50
Length: 1.3'

PRIMARY FILTER PACK
Type: ☒ Sand ☐ Manufactured
Grain Size: 16-35
Length: 9.7'

WELL SCREEN
Length: 10
Slot Size: 0.010"
Type: PVC

SUMP DETAILS
Length: 0.5 Ft.
Diameter: 2 In.
Type: PVC

TYPE OF BACKFILL: N/A

DRILLING EQUIPMENT
☒ AIR ROTARY ☒ AUGER TYPE 6¼ H.S.A.
☐ REVERSE ROTARY ☐ OTHER

TYPE OF INSTALLATION
☒ ABOVE GROUND ☐ FLUSH MOUNT

STATIC WATER LEVEL
FEET FROM MEASURING POINT

DATE OF STATIC WATER LEVEL

ELEVATION OF MEASURING POINT
453.69

MEASURING POINT IS
☒ TOP OF RISER PIPE
☐ OTHER

CENTRALIZERS USED
☒ YES, AT 6 TOTAL
☒ STAINLESS STEEL
☐ OTHER
☐ NO

MULTIPLE CASED WELLS
SUBMIT ADDITIONAL AS BUILT DIAGRAM SHOWING WELL CONSTRUCTION DETAILS INCLUDING TYPE AND SIZE OF ALL CASING, HOLE DIAMETERS, AND GROUT USED.

DATE WELL CONSTRUCTION WAS COMPLETED
6-17-95

I HEREBY CERTIFY THAT THE MONITORING WELL HEREIN DESCRIBED WAS CONSTRUCTED IN ACCORDANCE WITH THE DEPARTMENT OF NATURAL RESOURCES REQUIREMENTS FOR THE CONSTRUCTION OF MONITORING WELLS.

SIGNATURE (MONITORING WELL CONTRACTOR) Michael P. Vogt

PERMIT NUMBER	DATE
001956 WELL	7-07-95

SIGNATURE (DRILLING CONTRACTOR) Michael P. Vogt

PERMIT NUMBER	DATE
001956 WELL	7-07-95

MO 780-1415 (2-94)

DISTRIBUTION: WHITE DIVISION CANARY: MONITORING WELL CONTRACTOR PINK/OWNER

RECORD OF DRILLHOLE PZ-104-SS

Sheet 1 of 2

PROJECT: LAIDLAW/RI-FS
PROJECT NO: 943-2648
LOCATION: BRIDGETON, MO

BORING METHOD: NX Core & water
DRILLING DATE: 6/4/95
DRILL RIG: SCHRAMM

DATUM: MSL
COORDINATES N: 1067028.01
AZIMUTH: 0

COLLAR ELEV: 481.6
E: 518847.19
INCLINATION: -90

ROCK TYPE
J-Joint, F-Fault, S-Shear, B-Bedding, F-Foliation
PL-Planar, C-Curved, U-Undulating, ST-Stepped, I-Irregular
P-Polished, K-Slikensided, SM-Smooth, R-Rough, VR-V. Rough
Fe-FeOxide, CL-Clay Infill, CH-Chlorite, H-Healed, GRF-Gravel Filled

DEPTH SCALE (FEET)	DESCRIPTION	GRAPHIC LOG	ELEV / DEPTH (FT)	RUN NO.	CORE RECOVERY	ROD	FRACTURES PER FOOT	DISCONTINUITY DATA: DIP wrt CORE AXIS	DISCONTINUITY DATA: TYPE AND SURFACE DESCRIPTION	GRAPHIC LOG	WEATHERING INDEX (SW, FR, MW, HW, CW)	STRENGTH INDEX (R6, R5, R4, R3, R2, R1)	POINT LOAD INDEX (psi) (R1: 30, R2: 150, R3: 300, R4: 600, R5: 1500, R6)	TEST ORIENTATION	NOTES WATER LEVELS INSTRUMENTATION
128	0.0-135.0 ft. No sampling conducted See Record of Drillhole for PZ-104-KS														0.0-38.0 ft. Drilling conducted with 6 1/4 in. ID hollow stem augers, then borehole advanced to 135.0 ft. with 5 7/8 in. air rotary bit
130															
132															
134															
	346.60		346.60												
136	135.0-138.1 ft. 135.00 Fresh, medium bedded, pale yellowish brown (10YR 6/2), very fine grained, medium strong, LIMESTONE, (ST. LOUIS FORMATION)		135.00						J,PL,R J,I,R J,P,R						6/4/95 @ 9:30 Begin Run 1
138	343.50								J,I,R,CL J,I,R,CL						
	138.1-138.7 ft. 138.10 Slightly weathered, finely bedded, dark greenish gray (5GY 4/1), very fine grained, very weak, CLAYSTONE, (ST. LOUIS FORMATION) 342.90 138.70								J,PL,SM,CL J,I,VR,calcite						
	138.7-145.0 ft. Fresh, medium bedded, pale yellowish brown (10YR 6/2), very fine grained, medium strong, LIMESTONE, (ST. LOUIS FORMATION)			1	100 %				J,C,R						
140															
142									J,PL,SM (2) J,I,SM						
144															

DEPTH SCALE: 1:2
DRILLING CONTRACTOR: LAYNE-WESTERN
DRILLER: M. VOGT

LOGGED: E. SWANSON
CHECKED: B. TILTON
DATE: 6/4/95

Golder Associates

RECORD OF DRILLHOLE PZ-104-SS

PROJECT: LAIDLAW/RI-FS
PROJECT NO: 943-2848
LOCATION: BRIDGETON, MO

BORING METHOD: NX Core & water
DRILLING DATE: 6/4/95
DRILL RIG: SCHRAMM

DATUM: MSL
COORDINATES N: 1067028.01
AZIMUTH: 0

COLLAR ELEV: 481.6
E: 516847.19
INCLINATION: -90

J-Joint, F-Fault, S-Shear, B-Bedding, F-Foliation
PL-Planar, C-Curved, U-Undulating, ST-Stepped, I-Irregular
P-Polished, K-Slickensided, SM-Smooth, R-Rough, VR-V. Rough
Fe-FeOxide, CL-Clay Infill, CH-Chlorite, H-Healed, GRF-Gravel Filled

DEPTH SCALE (FEET)	DESCRIPTION	GRAPHIC LOG	ELEV / DEPTH (FT)	RUN NO.	CORE RECOVERY	ROD (80 60 40 20)	FRACTURES PER FOOT (2 4 6 8 10)	DISCONTINUITY DATA: DIP wrt CORE AXIS (0 30 50 90)	TYPE AND SURFACE DESCRIPTION	GRAPHIC LOG	WEATHERING INDEX (SW FR, MW, HW, CW)	STRENGTH INDEX (R6 R5 R4 R3 R2 R1)	POINT LOAD INDEX (psi) (HT 30, R2 150, R3 300, R4 600, R5 1500, R6)	TEST ORIENTATION	NOTES WATER LEVELS INSTRUMENTATION
144	138.7-145.0 ft. Fresh, medium bedded, pale yellowish brown (10YR 6/2), very fine grained, medium strong, LIMESTONE, (ST. LOUIS FORMATION) 336.60 145.00		336.60	1	100 %										
	End of Record of Drillhole at 145.0 ft.		145.00												
146															
148															
150															
152															
154															
156															
158															
160															

DEPTH SCALE: 1:2
DRILLING CONTRACTOR: LAYNE-WESTERN
DRILLER: M. VOGT

LOGGED: E. SWANSON
CHECKED: B. TILTON
DATE: 6/4/95

Golder Associates

Well No. PZ-104-SS

Boring No. X-Ref: PZ-104-SS

PIEZOMETER CONSTRUCTION SUMMARY

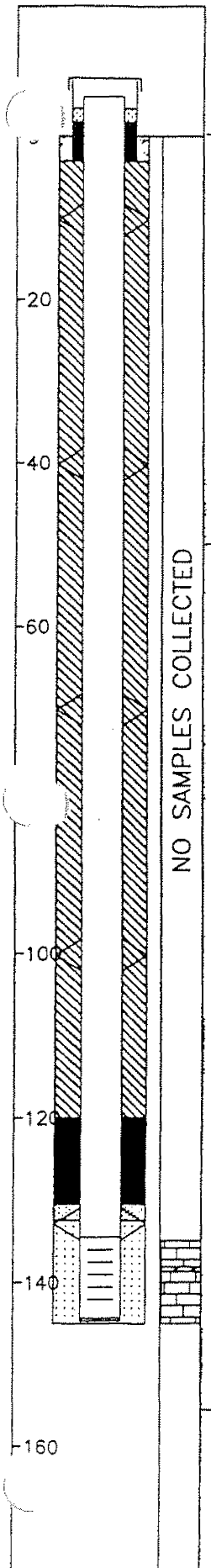

Not to Scale

Survey Coords: Northing: 1067028 ft.
Easting: 516847 ft.

Elevation Ground Level 481.6 ft. NGVD
Top of PVC Casing 483.63 ft. NGVD

Drilling Summary:

Total Depth 145.0 ft.
Borehole Diameter 10 1/4" (0.0-37.0') 5 7/8" (37.0-145.0')
Casing Stickup Height 2.07 ft.
Driller Layne-Western
St. Louis, MO

Rig CME 75, Schramm Portadrill T660H
Bit(s) 6 1/4" ID Hollow Stem Auger Bit,
NX Core, 5 7/8" Button Bit for Reaming
Drilling Fluid Auger-None, NX Core Water,
Air Rotary
Protective Casing 8x8" Square Steel, by 5' long

Construction Time log:

Task	Start Date	Start Time	Finish Date	Finish Time
Drilling				
CME 75				
Schramm Rotary	6/3/95	12:30	6/4/95	11:45
Geophys.Logging:				
Casing:	6/4/95	11:45	6/4/95	12:00
Filter Placement:	6/4/95	12:00	6/4/95	12:45
Cementing:				
Development				
Bentonite Grout	6/4/95	13:05	6/4/95	13:25
Bentonite Seal	6/4/95	12:45	6/4/95	13:05

Well Design & Specifications

Basis: Geologic Log X Geophysical Log
Casing string(s): C = Casing S = Screen

Depth			String(s)	Elevation		
+ 2.07	-	134.50	C1	483.63	-	347.06
134.50	-	144.30	S1	347.06	-	337.26
144.30	-	144.63	C2	337.26	-	336.93
	-				-	
	-				-	
	-				-	

Casing: C1 2 in. dia. Schedule 80 PVC, flush threaded with O-rings
C2 2 in. dia. threaded PVC end cap (4 in. long or 0.33 ft.)
Screen: S1 2 in. dia. Schedule 80 PVC, 0.010 in. machine cut slot, flush threaded with O-rings
Sand Pack: 16-35 mesh Silica Sand, 132.5-145.0 ft.
Filter Pack: Less than 50 mesh Silica Sand, 130.5-132.5 ft.
Grout Seal: Wyo-Ben Grout Well Bentonite Slurry, 3.0-120.0 ft.
Bentonite Seal: Extra high yield Wyo-Ben (100%) Slurry, 120.0-130.5 ft.
Concrete: 0.0-3.0 ft.

Well Development

Stabilization Test Data:

Time	pH	Spec. Cond.	Temp (°C)

Recovery Data:

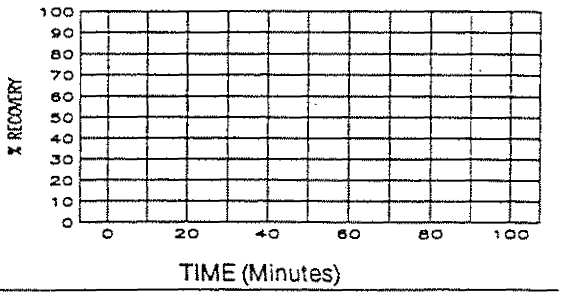

Comments:

Supervised by B. Tilton
Job Number 943-2848

Site LAIDLAW/OU2 RI-FS/MO
File Name PZ104SS

MISSOURI DEPARTMENT OF NATURAL RESOURCES
DIVISION OF GEOLOGY AND LAND SURVEY

MONITORING WELL CERTIFICATION RECORD

OFFICE USE ONLY	DATE RECEIVED
REF NO 122511	CHECK NO
ROUTE	TRANSMITTAL NO
STATE WELL NUMBER	CROSS REFERENCE NO
CHECKED BY	ENTERED Ph 1 Ph 2 Ph 3
APPROVED BY	DATE APPROVED

INFORMATION SUPPLIED BY OWNER

SITE NAME	WELL NUMBER	
LAIDLAW BRIDGETON SANITARY LANDFILL	PZ-104-55	
SITE ADDRESS	**CITY**	**STATE / ZIP CODE**
ST. CHARLES ROCK RD.	BRIDGETON	MO 63044
NAME		**TELEPHONE**
LAIDLAW WASTE SYSTEMS, INC.		314-241-3710
ADDRESS	**CITY**	**STATE / ZIP CODE**
1638 N. BROADWAY	ST LOUIS	MO 63102

INFORMATION SUPPLIED BY MONITORING WELL CONTRACTOR

LOCATION OF WELL (SHOW LOCATION IN SECTION PLAT)

COUNTY: ST. LOUIS
ELEVATION: 481.6
AREA NO:

SMALLEST ¼ ____ ¼ ____ ¼ ____ ¼ LARGEST ¼

SEC. ____ TWN. 47 N.RNG. 5 (E) OR W

LAT. 38° 45' 50" LONG. 90° 36' 27"

SKETCH THE LOCATION TO THE WELL INCLUDING MILEAGE ON ALL ROADS TRAVELED FROM NEAREST TOWNS OR HIGHWAYS

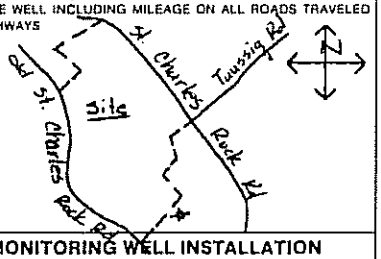

DESCRIBE LOCATION OF THE WELL SO WE WOULD BE ABLE TO VISIT IT

MONITORING WELL INSTALLATION CONTRACTOR'S NAME

LAYNE WESTERN CO., INC.

DRILLING CONTRACTOR'S NAME

LAYNE WESTERN CO., INC.

NOTE: Record the fraction of a foot in decimal, not in inches.

Top of Riser Elevation: 483.6

LOCKING CAP - (Y) N (Circle one)

CAP VENT - Y / (N) (Circle one)

PROTECTIVE CASING
Type: STEEL
Size: 8" x 5" x 5'
Bore Hole Diameter: 10¼"

WEEP HOLE - Y / (N) (Circle one)

Ground Surface Elevation: 481.6	Feet from Surface	Description of Formation
Information in this column to be supplied in the Feet from Surface column		
Depth to bottom of Protective Casing Seal:	3.0	
Depth to Base of Annular Seal:	120.0	
Depth to Base of Bentonite Seal:	130.5	
Depth to Base of Secondary Filter Pack:	132.5	
Depth to Top of the Screen:	134.5	
Depth to Bottom of the Screen:	144.5	
Plug Back Total Depth:		
Original Total Depth:	145.0	

PROTECTIVE CASING SEAL
Type: (X) Concrete ( ) Cement Slurry

RISER PIPE
Length: 136.6'
Diameter: 2"
Type of Material: SCH 80 PVC

BOREHOLE DIAMETER: 5 7/8 in.

ANNULAR SEAL
Type: ( ) Bentonite Slurry (X) Cement Slurry ( ) Non Slurry Bentonite

BENTONITE SEAL
Type: (X) Bentonite Slurry ( ) Non Slurry Bentonite
Length of Seal: 10.5 Ft.

SECONDARY FILTER PACK (Optional)
Type: (X) Sand ( ) Manufactured
Grain Size: <50
Length: 3'

PRIMARY FILTER PACK
Type: (X) Sand ( ) Manufactured
Grain Size: 16-35
Length: 12.5'

WELL SCREEN
Length: 10'
Slot Size: 0.010"
Type: SCH 80 PVC

SUMP DETAILS
Length: 0.3 FT.
Diameter: 2 In.
Type: PVC

TYPE OF BACKFILL: SAND

TYPE OF INSTALLATION
(X) ABOVE GROUND ( ) FLUSH MOUNT

STATIC WATER LEVEL
FEET FROM MEASURING POINT

DATE OF STATIC WATER LEVEL

ELEVATION OF MEASURING POINT: 483.6

MEASURING POINT IS
(X) TOP OF RISER PIPE
( ) OTHER

DRILLING EQUIPMENT
(X) AIR ROTARY (X) AUGER TYPE 6¼ H.S.A.
( ) REVERSE ROTARY ( ) OTHER

CENTRALIZERS USED
(X) YES, AT 5 TOTAL
(X) STAINLESS STEEL
( ) OTHER
( ) NO

MULTIPLE CASED WELLS
SUBMIT ADDITIONAL AS BUILT DIAGRAM SHOWING WELL CONSTRUCTION DETAILS INCLUDING TYPE AND SIZE OF ALL CASING, HOLE DIAMETERS, AND GROUT USED.

DATE WELL CONSTRUCTION WAS COMPLETED: 6-4-95

I HEREBY CERTIFY THAT THE MONITORING WELL HEREIN DESCRIBED WAS CONSTRUCTED IN ACCORDANCE WITH THE DEPARTMENT OF NATURAL RESOURCES REQUIREMENTS FOR THE CONSTRUCTION OF MONITORING WELLS.

SIGNATURE (MONITORING WELL CONTRACTOR): Michael P. Vogt

PERMIT NUMBER	DATE
001256 WM	7-07-95

SIGNATURE (DRILLING CONTRACTOR): Michael P. Vogt

PERMIT NUMBER	DATE
001256 WM	7-07-95

MO 780-1415 (2-94)

DISTRIBUTION: WHITE DIVISION CANARY-MONITORING WELL CONTRACTOR PINK-OWNER
THE WHITE COPY MUST BE SUBMITTED TO DIVISION OF GEOLOGY & LAND SURVEY, P.O. BOX 250 ROLLA, MO 65401

LAIDLAW WASTE SYSTEMS INC.

SOIL BOREHOLE LOG

SITE NAME AND LOCATION LAIDLAW/OU2 RI-FS/MO WEST LAKE LANDFILL OPERABLE UNIT 2	DRILLING METHOD: 6.25 inch I.D. Hollow Stem Auger	BORING NO. PZ-105-SS
	SAMPLING METHOD: SPLIT SPOON: 2.0 inch O.D./1.5 inch I.D. (SP) SHELBY TUBE: 3.0 inch O.D./2 13/16 inch I.D. (SH)	SHEET 1 OF 3
	WATER LEVEL / TIME / DATE / CASING DEPTH	DRILLING START TIME 14:20 DATE 5/19/95; FINISH TIME 17:15 DATE 5/19/95

DATUM NORTHING: 1066421.35 EASTING: 516230.23 ELEVATION 481.2

DRILL RIG CME 75 - TRUCK MOUNT

SURFACE CONDITIONS Grassy field

ANGLE -90 BEARING NA

SAMPLE HAMMER

DEPTH IN FEET (ELEVATION)	BLOW/ 6 IN. ON SAMPLER	RECOVERY	SYMBOL	SAMPLER SYMBOL	SAMPLE NUMBER AND DESCRIPTION OF MATERIAL	SAMPLER TYPE	REMARKS
1	1 3 3 2	1.3'/2.0' (65%)			(0.0-4.4 ft.) Firm, moderate yellowish brown (10YR 5/4), SILT, with trace fine Sand, NR, moist, (ML), (LOESS)	SP 1	
2	2 2 3 2	1.8'/2.0' (90%)				SP 2	
4	2 3 5 7	2.0'/2.0' (100%)			(476.8) 4.4 (4.4-18.5 ft.) Very soft to stiff, moderate yellowish brown (10YR 5/2), SILTY CLAY, NR, moist, (CL), (LOESS)	SP 3	
6	1 2 4 5	1.5'/2.0' (75%)				SP 4	
7					From 7.0-16.0 ft., grades to include trace fine sand, color grades to light olive gray (5Y 6/1) and moderate yellowish brown (10YR 5/2) (mottled)		
8	0 2 3 2	2.0'/2.0' (100%)				SP 5	
10	1 2 1 2	2.0'/2.0' (100%)				SP 6	
12	0 0 1 3	2.0'/2.0' (100%)				SP 7	
14	2 2 5 8	1.9'/2.0' (95%)				SP 8	

DRILLING CONTR LAYNE-WESTERN

LOGGED BY D. ALLOWAY

DATE 7/14/95 CHK'D BY W. HERST

JOB NO.: 943-2848

FILENAME: PZ105SS

SOIL BOREHOLE LOG

LAIDLAW WASTE SYSTEMS INC.

SITE NAME AND LOCATION: LAIDLAW/OU2 RI-FS/MD WEST LAKE LANDFILL OPERABLE UNIT 2	DRILLING METHOD: 6.25 inch I.D. Hollow Stem Auger SAMPLING METHOD: SPLIT SPOON: 2.0 inch O.D./1.5 inch I.D. (SP) SHELBY TUBE: 3.0 inch O.D./2 13/16 inch I.D. (SH)	BORING NO. PZ-105-SS SHEET 2 OF 3

					DRILLING START	DRILLING FINISH
WATER LEVEL					TIME	TIME
TIME					14:20	17:15
DATE					DATE	DATE
CASING DEPTH					5/19/95	5/19/95

NORTHING: 1066421.35
DATUM EASTING: 516230.23 ELEVATION 481.2

DRILL RIG CME 75 - TRUCK MOUNT — SURFACE CONDITIONS Grassy Field

ANGLE -90 BEARING NA

SAMPLE HAMMER

DEPTH IN FEET (ELEVATION)	BLOW/ 6 IN. ON SAMPLER	RECOVERY	SYMBOL	SAMPLER SYMBOL	SAMPLE NUMBER AND DESCRIPTION OF MATERIAL	SAMPLER TYPE	REMARKS
16	1 4 7 8	1.9' 2.0' (95%)			from 16.0-18.5 ft., grades to little fine sand, color grades to medium light gray (N6)	SP (8)	
17						SP (9)	
18	5 5 8 9	1.5' 2.0' (75%)			(18.5-20.5 ft.) Stiff, olive gray (5Y 4/1), fine SANDY CLAY, NR, wet, (CL), (ALLUVIUM)	SP (10)	
19							
20	3 6 9 13	1.7' 2.0' (85%)			(460.7) 20.5	SP (11)	
21					(20.5-27.1 ft.) Compact, medium gray (N5), f-m poorly graded SAND, NR, wet, (SP), (ALLUVIUM)		
22	1 4 8 9	1.3' 2.0' (65%)			@ 22.5 ft., grades to less silt	SP (12)	
23							
24	4 8 18 19	1.5' 2.0' (75%)			@ 24.7 ft., grades to more silt	SP (13)	
25							
26	1 4 5 9	1.3' 2.0' (65%)				SP (14)	
27					(454.1) 27.1		
28	1 1 3 12	1.7' 2.0' (85%)			(27.1-29.6 ft.) Loose to compact, medium gray (N5), SILT with little fine Sand, NR, wet, (ML), (ALLUVIUM)	SP (15)	
29					(451.6) 29.6		
					(29.6-33.8 ft.) Very loose to dense, medium gray (N5), f-m poorly graded SAND, NR, wet, (SP), (ALLUVIUM)		

DRILLING CONTR LAYNE-WESTERN

LOGGED BY D. ALLOWAY

DATE 7/14/95 CHK'D BY W. HERST

JOB NO.: 943-2848

FILENAME: PZ105SS

LAIDLAW WASTE SYSTEMS INC.

SOIL BOREHOLE LOG

SITE NAME AND LOCATION

LAIDLAW/OU2 RI-FS/MD
WEST LAKE LANDFILL
OPERABLE UNIT 2

NORTHING: 1066421.35
DATUM EASTING: 516230.23 ELEVATION 481.2

DRILLING METHOD: 6.25 inch I.D. Hollow Stem Auger

SAMPLING METHOD:
SPLIT SPOON: 2.0 inch O.D./1.5 inch I.D. (SP)
SHELBY TUBE: 3.0 inch O.D./2 13/16 inch I.D. (SH)

					DRILLING START	DRILLING FINISH
WATER LEVEL						
TIME					14:20	17:15
DATE					5/19/95	5/19/95
CASING DEPTH						

BORING NO. PZ-105-SS

SHEET 3 OF 3

DRILL RIG CME 75 - TRUCK MOUNT

SURFACE CONDITIONS Grassy Field

ANGLE -90 BEARING NA

SAMPLE HAMMER

DEPTH IN FEET (ELEVATION)	BLOW/ 6 IN. ON SAMPLER	RECOVERY	SYMBOL	SAMPLER SYMBOL	SAMPLE NUMBER AND DESCRIPTION OF MATERIAL	SAMPLER TYPE	REMARKS
31	2 8 18 29	2.0' 2.0' (100%)			(29.6-33.8 Ft.) Very loose to dense, medium gray (N5), f-m poorly graded SAND, NR, wet, (SP), (ALLUVIUM)	SP 16	
32	1 10 37 33	2.0' 2.0' (100%)				SP 17	
33							
34	45 50/3'	0.5' 1.0' (50%)			(33.8-35.0 Ft.) Very dense, light olive gray (5Y 6/1), LIMESTONE GRAVEL, SR, wet, (WEATHERED LIMESTONE BEDROCK) (446.2) 35.0	SP 18	
35					End of Soil Borehole Log at 35.0 Ft. See PZ-105-SS Record of Drillhole for rock descriptions		
36							
37							
38							
39							
40							
41							
42							
43							
44							

DRILLING CONTR LAYNE-WESTERN

LOGGED BY D. ALLOWAY

DATE 7/14/95 CHK'D BY W. HERST

JOB NO.: 943-2848

FILENAME: PZ105SS

RECORD OF DRILLHOLE PZ-105-SS

Sheet 1 of 6

PROJECT: LAIDLAW/RI-FS
PROJECT NO: 843-2648
LOCATION: BRIDGETON, MO

BORING METHOD: NS Core & water
DRILLING DATE: 5/20/95 - 5/21/95
DRILL RIG: CME 75

DATUM: MSL
COORDINATES N: 1066421.35
AZIMUTH: 0

COLLAR ELEV: 481.2
E: 518230.23
INCLINATION: -90

ROCK TYPE
J-Joint, F-Fault, S-Shear, B-Bedding, F-Foliation
PL-Planar, C-Curved, U-Undulating, ST-Stepped, I-Irregular
P-Polished, K-Slickensided, SM-Smooth, R-Rough, VR-V. Rough
Fe-FeOxide, CL-Clay Infill, CH-Chlorite, H-Healed, GRF-Gravel Filled

DEPTH SCALE (FEET)	DESCRIPTION	GRAPHIC LOG	ELEV / DEPTH (FT)	RUN NO	CORE RECOVERY	RQD	FRACTURES PER FOOT	DISCONTINUITY DATA: DIP w/t CORE AXIS	DISCONTINUITY DATA: TYPE AND SURFACE DESCRIPTION	GRAPHIC LOG	WEATHERING INDEX: FR, SW, MW, HW, CW	STRENGTH INDEX: R6, R5, R4, R3, R2, R1	POINT LOAD INDEX (psi): R1, R2, R3, R4, R5, R6	TEST ORIENTATION	NOTES WATER LEVELS INSTRUMENTATION
32	0.0-35.0 ft. See Soil Borehole Log PZ-105-SS														
34	35.0-39.0 ft. Slightly weathered, thinly bedded, medium light gray (N6), fine grained, medium strong, LIMESTONE, 446.20 (ST. LOUIS FORMATION)		446.20 35.00												
	35.2-35.9 ft. 35.20 Dark yellowish orange (10YR 6/6), Claystone layer														5/20/95 @ 8:20 Began drilling Run 1
36				1	73%										
38			442.20						Core Loss						5/20/95 @ 9:00 End of Run 1
	39.0-52.9 ft. Slightly weathered, medium bedded, medium light gray (N6), fine grained, medium strong, LIMESTONE, (ST. LOUIS FORMATION) Clay filled joints and layers of Claystone		39.00												
40				2	77%										
42			438.30						Core Loss						5/20/95 @ 9:45 End of Run 2
			42.90												
44									J,I,VR,Fe (2)						43.0-44.0 ft. Healed seam at 0°
				3	93%										
46									J,PL,R,CL (3)						
48															

DEPTH SCALE: 1:2
DRILLING CONTRACTOR: LAYNE-WESTERN
DRILLER: D. MAHURIN

LOGGED: D. ALLOWAY
CHECKED: B. TILTON
DATE: 6/13/95

Golder Associates

RECORD OF DRILLHOLE PZ-105-SS

Sheet 2 of 6

PROJECT: LAIDLAW/RI-FS
PROJECT NO: 943-2848
LOCATION: BRIDGETON, MO

BORING METHOD: NS Core & water
DRILLING DATE: 5/20/95 - 5/21/95
DRILL RIG: CME 75

DATUM: MSL
COORDINATES N: 1068421.35
AZIMUTH: 0

COLLAR ELEV: 481.2
E: 516230.23
INCLINATION: -90

J-Joint, F-Fault, S-Shear, B-Bedding, F-Foliation
PL-Planar, C-Curved, U-Undulating, ST-Stepped, I-Irregular
P-Polished, K-Slickensided, SM-Smooth, R-Rough, VR-V. Rough
Fe-FeOxide, CL-Clay Infill, CH-Chlorite, H-Healed, GRF-Gravel Filled

DEPTH SCALE (FEET)	DESCRIPTION	GRAPHIC LOG	ELEV / DEPTH (FT)	RUN NO	CORE RECOVERY	RQD	FRACTURES PER FOOT	DISCONTINUITY DATA: DIP wrt CORE AXIS	DISCONTINUITY DATA: TYPE AND SURFACE DESCRIPTION	GRAPHIC LOG	WEATHERING INDEX	STRENGTH INDEX	POINT LOAD INDEX (psi)	TEST ORIENTATION	NOTES WATER LEVELS INSTRUMENTATION
48	39.0-52.9 ft. Slightly weathered, medium bedded, medium light gray (N6), fine grained, medium strong, LIMESTONE, (ST. LOUIS FORMATION)			3	93%				J,PL,R,CL						
			432.20						Core Loss						5/20/95 @ 10:20 End of Run 3
			49.00												
50	49.0 ft. Color grades to pale yellowish brown (10YR 6/2)								J,P,R (2)						
	50.5 ft. Pyrite present								J,P,R (2)						
	51.0-51.2 ft. Sandstone layer			4	100%										
52	51.9-52.3 ft. Sandstone layer														
			428.30												
	52.9-65.2 ft. Fresh, medium bedded, pale yellowish brown (10YR 6/2), fine to microcrystalline, medium strong, LIMESTONE, (ST. LOUIS FORMATION) Zones of thin clay or silicous laminations		52.90						J,PL,VR						
54									J,PL,VR						
	54.6-54.8 ft. Chert layer														
56				5	98%				J,I,R,CL						
	57.6-57.9 ft. Clay layer														
58	57.9-58.6 ft. Sandstone layer														
			422.20												5/20/95 @ 12:00 End of Run 5
			59.00												
60									J,PL,R						
									J,C,SM,CL						
				6	100%				J,PL,R (3)						
62									J,PL,R (2)						
									J,PL,R						
64															

DEPTH SCALE: 1:2
DRILLING CONTRACTOR: LAYNE-WESTERN
DRILLER: D. MAHURIN

LOGGED: D. ALLOWAY
CHECKED: B. TILTON
DATE: 5/13/95

Golder Associates

RECORD OF DRILLHOLE PZ-105-SS

Sheet 3 of 8

PROJECT: LAIDLAW/RI-FS
PROJECT NO: 943-2648
LOCATION: BRIDGETON, MO

BORING METHOD: NS Core & water
DRILLING DATE: 5/20/95 - 5/21/95
DRILL RIG: CME 75

DATUM: MSL
COORDINATES N: 1066421.35
AZIMUTH: 0

COLLAR ELEV: 481.2
E: 518230.23
INCLINATION: -90

J-Joint, F-Fault, S-Shear, B-Bedding, F-Foliation
PL-Planar, C-Curved, U-Undulating, ST-Stepped, I-Irregular
P-Polished, K-Slickensided, SM-Smooth, R-Rough, VR-V. Rough
Fe-FeOxide, CL-Clay Infill, CH-Chlorite, H-Healed, GRF-Gravel Filled

SCALE (FEET)	DESCRIPTION	GRAPHIC LOG	ELEV / DEPTH (FT)	RUN NO	CORE RECOVERY	ROD	FRACTURES PER FOOT	DISCONTINUITY DATA: DIP wrt CORE AXIS	DISCONTINUITY DATA: TYPE AND SURFACE DESCRIPTION	DISCONTINUITY DATA: GRAPHIC LOG	WEATHERING INDEX: SW FR, MW, HW, CW	STRENGTH INDEX: R6, R5, R4, R3, R2, R1	POINT LOAD INDEX (psi): R1 10, R2 150, R3 300, R4 600, R5 1500, R6	TEST ORIENTATION	NOTES WATER LEVELS INSTRUMENTATION
64	52.9-65.2 ft. Fresh, medium bedded, pale yellowish brown (10YR 6/2), fine to microcrystalline, medium strong, LIMESTONE, (ST. LOUIS FORMATION) 416.00								J,PL,R						
	65.2-79.0 ft. 65.20 Fresh, medium bedded, medium gray (N5), microcrystalline to fine grained, medium strong, ARENACEOUS DOLOMITE, (ST. LOUIS FORMATION) Pyrite and calcite filled fractures								J,PL,R						
66									J,PL,R (2)						
				6	100 %										
68									J,I,R (2)						5/20/95 @ 13:00 End of Run 6
			412.20 69.00												
									J,ST,SM						
70															
72															
									J,ST,R						
74				7	100 %										
									J,I,R						
76															
78	77.6-78.5 ft. Clayey layer														
	79.0-80.3 ft. 402.20 Fresh, thinly bedded, light olive gray (5Y 6/1), fine grained, medium strong, SANDSTONE, (ST. LOUIS FORMATION) 79.00 Includes thickly laminated clay layers		402.20 79.00												5/20/95 @ 14:00 End of Run 7
				8	99%										

DEPTH SCALE: 1:2
DRILLING CONTRACTOR: LAYNE-WESTERN
DRILLER: D. MAHURIN

LOGGED: D. ALLOWAY
CHECKED: B. TILTON
DATE: 9/13/95

Golder Associates

RECORD OF DRILLHOLE PZ-105-SS

PROJECT: LAIDLAW/RI-FS
PROJECT NO: 943-2848
LOCATION: BRIDGETON, MO

BORING METHOD: NS Core & water
DRILLING DATE: 5/20/95 - 5/21/95
DRILL RIG: CME 75

DATUM: MSL
COORDINATES N: 1068421.35
AZIMUTH: 0

COLLAR ELEV: 481.2
E: 518230.23
INCLINATION: -90

J-Joint, F-Fault, S-Shear, B-Bedding, F-Foliation
PL-Planar, C-Curved, U-Undulating, ST-Stepped, I-Irregular
P-Polished, K-Slickensided, SM-Smooth, R-Rough, VR-V. Rough
Fe-FeOxide, CL-Clay Infil, CH-Chlorite, H-Healed, GRF-Gravel Filled

DEPTH SCALE (FEET)	DESCRIPTION	GRAPHIC LOG	ELEV / DEPTH (FT)	RUN NO	CORE RECOVERY	RQD	FRACTURES PER FOOT	DISCONTINUITY DATA: DIP wrt CORE AXIS	DISCONTINUITY DATA: TYPE AND SURFACE DESCRIPTION	GRAPHIC LOG	WEATHERING INDEX: SW FR, MW, HW, CW	STRENGTH INDEX: R6, R5, R4, R3, R2, R1	POINT LOAD INDEX (psi): R1 30, R2 150, R3 300, R4 600, R5 1500, R6	TEST ORIENTATION	NOTES WATER LEVELS INSTRUMENTATION
80			400.90												
	80.3-89.3 ft. Fresh, medium bedded, pale yellowish brown (10YR 6/2), fine to medium crystalline, medium strong, LIMESTONE, (ST. LOUIS FORMATION)		80.30						J,I,R						
									J,I,SM,CL						
82									J,ST,CL (2)						
									J,I,R,CL (2)						
84	84.0-86.8 ft. Abundant chert, some clay layers (green clay)			8	99%										
									J,PL,SM						
									J,PL,SM,CL						
86									J,PL,SM,CL						86.7-86.8 ft. Broken zone
									J,PL,SM,CL						
88									J,PL,SM,CL						
			392.20												
	89.3-118.6 ft. Fresh, medium bedded, pale yellowish brown (10YR 6/2), fine grained, medium strong, ARGILLACEOUS LIMESTONE, (ST. LOUIS FORMATION) 89.3-92.7 ft. Silicified		89.00						J,I,R						
90															5/20/95 @ 15:00 End of Run 8
				9	100 %				J,PL,SM,CL						
92															
94															
96															

DEPTH SCALE: 1:2
DRILLING CONTRACTOR: LAYNE-WESTERN
DRILLER: D. MAHURIN

LOGGED: D. ALLOWAY
CHECKED: B. TILTON
DATE: 9/13/95

Golder Associates

RECORD OF DRILLHOLE PZ-105-SS

Sheet 5 of 8

PROJECT: LAIDLAW/RI-FS
PROJECT NO: 943-2848
LOCATION: BRIDGETON, MO

BORING METHOD: NS Core & water
DRILLING DATE: 5/20/95 - 5/21/95
DRILL RIG: CME 75

DATUM: MSL
COORDINATES N: 1066421.35
AZIMUTH: 0

COLLAR ELEV: 481.2
E: 516230.23
INCLINATION: -90

J-Joint, F-Fault, S-Shear, B-Bedding, F-Foliation
PL-Planar, C-Curved, U-Undulating, ST-Stepped, I-Irregular
P-Polished, K-Slikensided, SM-Smooth, R-Rough, VR-V. Rough
Fe-FeOxide, CL-Clay Infill, CH-Chlorite, H-Healed, GRF-Gravel Filled

DEPTH SCALE (FEET)	DESCRIPTION	GRAPHIC LOG	ELEV / DEPTH (FT)	RUN NO.	CORE RECOVERY	RQD	FRACTURES PER FOOT	DISCONTINUITY DATA: DIP wrt CORE AXIS	DISCONTINUITY DATA: TYPE AND SURFACE DESCRIPTION	GRAPHIC LOG	WEATHERING INDEX (SW FR, MW, HW, CW)	STRENGTH INDEX (R6 R5 R4 R3 R2 R1)	POINT LOAD INDEX (psi) (R1 10, R2 150, R3 300, R4 600, R5 1500, R6)	TEST ORIENTATION	NOTES WATER LEVELS INSTRUMENTATION
96	89.3-118.6 ft. Fresh, medium bedded, pale yellowish brown (10YR 6/2), fine grained, medium strong, ARGILLACEOUS LIMESTONE, (ST. LOUIS FORMATION)														
				9	100				J,PL,SM						
98									J,PL,SM						5/20/95 @ 15:30 End of Run 9
			382.20 / 99.00												
100									J,PL,SM						
	101.5-105.0 ft. Silicified														
102															
									F,PL,SM						
104				10	100										
									J,C,SM,CL						
	105.0-115.5 ft. Scattered stylolites, chert														
106															
									J,PL,SM,CL						
									J,PL,SM,CL						
108															
			372.20 / 109.00												5/20/95 @ 16:15 End of Run 10
									J,PL,R,CL						
110															
				11	100				J,PL,R,CL						
									J,PL,SM						
112															

DEPTH SCALE: 1:2
DRILLING CONTRACTOR: LAYNE-WESTERN
DRILLER: D. MAHURIN

LOGGED: D. ALLOWAY
CHECKED: B. TILTON
DATE: 6/13/95

Golder Associates

RECORD OF DRILLHOLE PZ-105-SS

Sheet 8 of 8

PROJECT: LAIDLAW/RI-FS
PROJECT NO: 943-2848
LOCATION: BRIDGETON, MO

BORING METHOD: NS Core & water
DRILLING DATE: 5/20/95 - 5/21/95
DRILL RIG: CME 75

DATUM: MSL
COORDINATES N: 1066421.35
AZIMUTH: 0

COLLAR ELEV: 481.2
E: 516230.23
INCLINATION: -90

J-Joint, F-Fault, S-Shear, B-Bedding, F-Foliation
PL-Planar, C-Curved, U-Undulating, ST-Stepped, I-Irregular
P-Polished, K-Slickensided, SM-Smooth, R-Rough, VR-V. Rough
Fe-FeOxide, CL-Clay Infill, CH-Chlorite, H-Healed, GRF-Gravel Filled

DEPTH SCALE (FEET)	DESCRIPTION	GRAPHIC LOG	ELEV / DEPTH (FT)	RUN NO	CORE RECOVERY	RQD	FRACTURES PER FOOT	DISCONTINUITY DATA: DIP wrt CORE AXIS	DISCONTINUITY DATA: TYPE AND SURFACE DESCRIPTION	GRAPHIC LOG	WEATHERING INDEX (SW, FR, HW, MW, CW)	STRENGTH INDEX (R6, R5, R4, R3, R2, R1)	POINT LOAD INDEX (psi) (R6, R5, R4, R3, R2, R1)	TEST ORIENTATION	NOTES WATER LEVELS INSTRUMENTATION
112	89.3-118.6 ft. Fresh, medium bedded, pale yellowish brown (10YR 6/2), fine grained, medium strong, ARGILLACEOUS LIMESTONE, (ST. LOUIS FORMATION)								J,PL,SM						
									J,PL,SM (3)						
114									J,ST,R						
				11	100 %				J,PL,SM,CL (2)						
116															
									J,PL,SM						
118															5/20/95 @ 17:15 End of Run 11 Ended drilling for the day 5/21/95 @ 7:30 Resume drilling
	118.6-131.5 ft. Fresh, medium bedded, pale yellowish brown (10YR 6/2), microcrystalline, medium strong, LIMESTONE, fossiliferous, (ST. LOUIS FORMATION)		362.20 / 119.00						J,PL,SM,CL						
120	120.5-121.4 ft. Claystone layer														
122	123.0 ft. Calcite crystals on fracture								B,PL,SM,CL J,PL,R						
	123.7-125.3 ft. ARGILLACEOUS LIMESTONE			12	100 %										
124	124.0 ft. Calcite crystals on fractures														
126									B,PL,SM,CL						
									B,PL,SM,CL						
128	128.0 ft. Calcite crystals on fractures														

DEPTH SCALE: 1:2
DRILLING CONTRACTOR: LAYNE-WESTERN
DRILLER: D. MAHURIN

LOGGED: D. ALLOWAY
CHECKED: B. TILTON
DATE: 6/13/95

Golder Associates

RECORD OF DRILLHOLE PZ-105-SS

PROJECT: LAIDLAW/RI-FS
PROJECT NO: 943-2648
LOCATION: BRIDGETON, MO

BORING METHOD: NS Core & water
DRILLING DATE: 5/20/95 - 5/21/95
DRILL RIG: CME 75

DATUM: MSL
COORDINATES N: 1056421.35
AZIMUTH: 0

COLLAR ELEV: 481.2
E: 516230.23
INCLINATION: -90

J-Joint, F-Fault, S-Shear, B-Bedding, F-Foliation
PL-Planar, C-Curved, U-Undulating, ST-Stepped, I-Irregular
P-Polished, K-Slickensided, SM-Smooth, R-Rough, VR-V. Rough
Fe-FeOxide, CL-Clay Infill, CH-Chlorite, H-Healed, GRF-Gravel Filled

DEPTH SCALE (FEET)	DESCRIPTION	GRAPHIC LOG	ELEV / DEPTH (FT)	RUN NO.	CORE RECOVERY	RQD	FRACTURES PER FOOT	DISCONTINUITY DATA: DIP wrt CORE AXIS	DISCONTINUITY DATA: TYPE AND SURFACE DESCRIPTION	GRAPHIC LOG	WEATHERING INDEX	STRENGTH INDEX	POINT LOAD INDEX (psi)	TEST ORIENTATION	NOTES WATER LEVELS INSTRUMENTATION
128	128.0 ft. Calcite crystals on fractures								J,PL,R						
				12	100 %				B,PL,SM,CL						5/21/95 @ 8:30 End of Run 12
			352.20												
			129.00						B,PL,SM,CL (2)						
130	129.5 ft. Color grades to light olive gray (5Y 5/2)														
	131.5-141.6 ft. Fresh, medium bedded, light olive gray (5Y 5/2), fine grained, medium strong, ARGILLACEOUS LIMESTONE, (ST. LOUIS FORMATION)														
132															
134				13	100 %										
									J,PL,SM,CL						
136															
									J,PL,SM,CL						
138															
			342.20												5/21/95 @ 9:40 End of Run 13
			139.00												
140															
				14	100 %				J,PL,SM,CL						
142	141.6-148.7 ft. Fresh, medium bedded, pale yellowish brown (10Y 6/2) to light olive gray (5Y 5/2), fine grained, medium strong, LIMESTONE, (ST. LOUIS FORMATION) Stylolitic, clay filled fractures								J,PL,SM,CL						
144															

DEPTH SCALE: 1:2
DRILLING CONTRACTOR: LAYNE-WESTERN
DRILLER: D. MAHURIN

LOGGED: D. ALLOWAY
CHECKED: B. TILTON
DATE: 6/13/95

Golder Associates

RECORD OF DRILLHOLE PZ-105-SS

PROJECT: LAIDLAW/RI-FS
PROJECT NO: 943-2848
LOCATION: BRIDGETON, MO

BORING METHOD: NS Core & water
DRILLING DATE: 5/20/95 - 5/21/95
DRILL RIG: CME 75

DATUM: MSL
COORDINATES N: 1066421.35
AZIMUTH: 0

COLLAR ELEV: 481.2
E: 518230.23
INCLINATION: -90

J-Joint, F-Fault, S-Shear, B-Bedding, F-Foliation
PL-Planar, C-Curved, U-Undulating, ST-Stepped, I-Irregular
R-Polished, K-Slikensided, SM-Smooth, R-Rough, VR-V. Rough
Fe-FeOxide, CL-Clay Infill, CH-Chlorite, H-Healed, GRF-Gravel Filled

SCALE (FEET)	DESCRIPTION	GRAPHIC LOG	ELEV / DEPTH (FT)	RUN NO.	CORE RECOVERY	RQD	FRACTURES PER FOOT	DISCONTINUITY DATA: DIP wrt CORE AXIS	DISCONTINUITY DATA: TYPE AND SURFACE DESCRIPTION	GRAPHIC LOG	WEATHERING INDEX: SW FR, MW, HW, CW	STRENGTH INDEX: R6, R5, R4, R3, R2, R1	POINT LOAD INDEX (psi): R1 30, R2 150, R3 300, R4 600, R5 1500, R6	TEST ORIENTATION	NOTES WATER LEVELS INSTRUMENTATION
144	141.6-148.7 ft. Fresh, medium bedded, pale yellowish brown (10Y 6/2) to light olive gray (5Y 5/2), fine grained, medium strong, LIMESTONE, (ST. LOUIS FORMATION) Stylolitic, clay filled fractures								J,PL,SM,CL (2)						
146	146.0-147.0 ft. Clay filled vugs and fractures abundant			14	100 %				J,PL,SM,CL J,PL,SM,CL						
148	148.7-149.0 ft. Slightly weathered, thinly bedded, grayish orange (10YR 7/4), fine grained, medium strong DOLOMITE, very shallow vugs, (ST. LOUIS FORMATION) 332.50		148.70 332.20						J,PL,SM,CL						5/21/95 @ 10:30 End of drilling
	End of Record of Drillhole at 149.0 ft. 149.00		149.00												
150															
152															
154															
156															
158															
160															

DEPTH SCALE: 1:2
DRILLING CONTRACTOR: LAYNE-WESTERN
DRILLER: D. MAHURIN

LOGGED: D. ALLOWAY
CHECKED: B. TILTON
DATE: 6/13/95

Golder Associates

Well No. PZ-105-SS

Boring No. X-Ref: PZ-105-SS

PIEZOMETER CONSTRUCTION SUMMARY

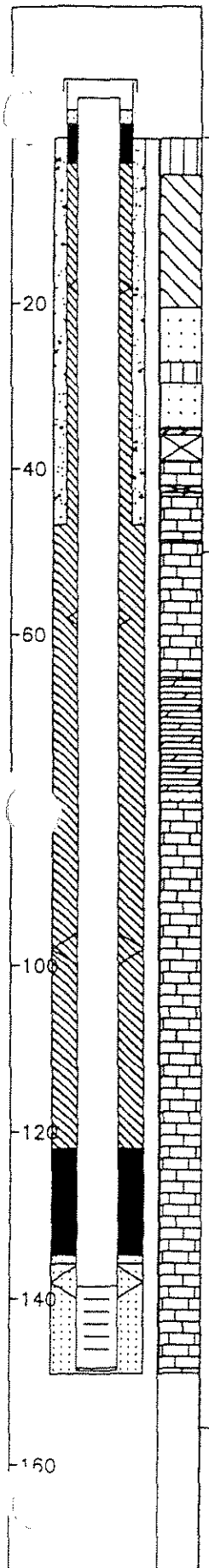

Not to Scale

Survey Coords: Northing: 1066421 ft.
Easting: 516230 ft.

Elevation Ground Level 481.2 ft. NGVD
Top of PVC Casing 483.61 ft. NGVD

Drilling Summary:

Total Depth 149.0 ft.
Borehole Diameter 9 7/8 in. (0.0–45.0 ft.) 5 7/8 in. (45.0–149.0 ft.)
Casing Stickup Height 2.39 ft.
Driller Layne-Western
St. Louis, MO

Rig CME 75, Schramm Portadrill T660H
Bit(s) 6 1/4 in. ID Hollow Stem Auger Bit, NX Core,
5 7/8 in. Button Bit and 7 7/8 in. Tricone Bit
Drilling Fluid Auger–None, NX Core Water,
Air and Mud Rotary
Protective Casing 8x8 in. Square Steel, by 5 ft. long

Construction Time log:

Task	Start Date	Start Time	Finish Date	Finish Time
Drilling				
CME 75	5/19/95	14:20	5/21/95	10:30
Schramm Rotary	5/24/95	7:45	5/24/95	12:00
Geophys.Logging:				
Casing:				
2" PVC	5/24/95	12:00	5/24/95	12:20
6" Steel	5/23/95	7:30	5/23/95	13:00
Filter Placement:	5/24/95	12:30	5/24/95	13:05
Cementing:				
Development				
Bentonite Grout	5/24/95	14:15	5/24/95	15:00
Bentonite Seal	5/24/95	14:00	5/24/95	14:15

Well Design & Specifications

Basis: Geologic Log X Geophysical Log
Casing string(s): C = Casing S = Screen

Depth			String(s)	Elevation		
+ 2.39	–	138.50	C1	483.61	–	342.72
138.50	–	148.30	S1	342.72	–	332.92
148.30	–	148.63	C2	332.92	–	332.59
+ 1.50	–	45.00	C3	482.70	–	438.22
	–				–	
	–				–	

Casing: C1 2 in. dia. Schedule 80 PVC, flush threaded with O-rings
C2 2 in. dia. threaded PVC end cap (4 in. long or 0.33 ft.) (C3–see comments)
Screen: S1 2 in. dia. Schedule 80 PVC, 0.010 in. machine cut slot, flush threaded with O-rings
Sand Pack: 16–35 mesh Silica Sand, 135.8–149.0 ft.
Filter Pack: Less than 50 mesh Silica Sand, 134.8–135.8 ft.
Grout Seal: Wyo-Ben Grout Well Bentonite Slurry, 3.0–122.0 ft., Neat cement, 3.0–45.0 ft.
Bentonite Seal: Extra high yield Wyo-Ben (100%) Slurry, 122.0–134.8 ft.
Concrete: 0.0–3.0 ft.

Well Development

Stabilization Test Data:

Time	pH	Spec. Cond.	Temp (°C)

Recovery Data:

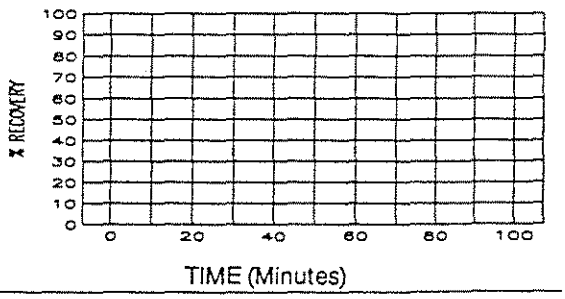

Comments: Surface Casing C3: 6 1/2 in. ID / 6 5/8 in. OD Steel Casing

Supervised by B. Tilton
Job Number 943-2848
Site LAIDLAW/OU2 RI-FS/MO
File Name PZ105SS

MISSOURI DEPARTMENT OF NATURAL RESOURCES
DIVISION OF GEOLOGY AND LAND SURVEY

MONITORING WELL CERTIFICATION RECORD

OFFICE USE ONLY	DATE RECEIVED
REF NO 122510	CHECK NO.
ROUTE	TRANSMITTAL NO
STATE WELL NUMBER	CROSS REFERENCE NO.
CHECKED BY	ENTERED Ph 1 Ph 2 Ph 3
APPROVED BY	DATE APPROVED

INFORMATION SUPPLIED BY OWNER

SITE NAME	WELL NUMBER
LAIDLAW BRIDGETON SANITARY LANDFILL	PZ-1055S

SITE ADDRESS	CITY	STATE	ZIP CODE
51. CHARLES ROCK RD.	BRIDGETON	MO	63044

NAME	TELEPHONE
LAIDLAW WASTE SYSTEMS, INC.	314-241-3710

ADDRESS	CITY	STATE	ZIP CODE
12 SE N BROADWAY	ST. LOUIS	MO	63102

INFORMATION SUPPLIED BY MONITORING WELL CONTRACTOR

LOCATION OF WELL
SHOW LOCATION IN SECTION PLAT

COUNTY ST LOUIS
ELEVATION 481.2
AREA NO.

SMALLEST ¼ LARGEST ¼

SEC. ____ TWN. 47 N,RNG 5 E OR W

LAT. 38 ° 45 ' 44 " LONG. 90 ° 30 ' 35 "

SKETCH THE LOCATION TO THE WELL INCLUDING MILEAGE ON ALL ROADS TRAVELED FROM NEAREST TOWNS OR HIGHWAYS

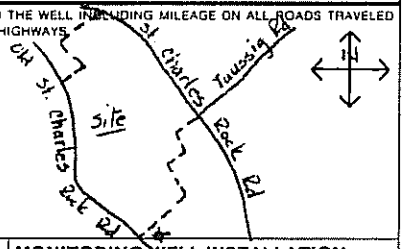

DESCRIBE LOCATION OF THE WELL SO WE WOULD BE ABLE TO VISIT IT

MONITORING WELL INSTALLATION CONTRACTOR'S NAME
LAYNE WESTERN Co, Inc.

DRILLING CONTRACTOR'S NAME
LAYNE WESTERN Co, Inc.

TYPE OF INSTALLATION
☒ ABOVE GROUND ☐ FLUSH MOUNT

STATIC WATER LEVEL
FEET FROM MEASURING POINT

DATE OF STATIC WATER LEVEL

ELEVATION OF MEASURING POINT
483.6

MEASURING POINT IS
☒ TOP OF RISER PIPE
☐ OTHER

DRILLING EQUIPMENT
☒ AIR ROTARY ☒ AUGER TYPE 6¼ H.S.A
☐ REVERSE ROTARY ☐ OTHER

CENTRALIZERS USED
☒ YES, AT 4 TOTAL
☒ STAINLESS STEEL
☐ OTHER
☐ NO

MULTIPLE CASED WELLS
SUBMIT ADDITIONAL AS BUILT DIAGRAM SHOWING WELL CONSTRUCTION DETAILS INCLUDING TYPE AND SIZE OF ALL CASING, HOLE DIAMETERS, AND GROUT USED.

DATE WELL CONSTRUCTION WAS COMPLETED
5-24-95

I HEREBY CERTIFY THAT THE MONITORING WELL HEREIN DESCRIBED WAS CONSTRUCTED IN ACCORDANCE WITH THE DEPARTMENT OF NATURAL RESOURCES REQUIREMENTS FOR THE CONSTRUCTION OF MONITORING WELLS.

SIGNATURE (MONITORING WELL CONTRACTOR) Michael P. Vogl
PERMIT NUMBER 001256WIM DATE 7-07-95
SIGNATURE (DRILLING CONTRACTOR) Michael P. Vogl
PERMIT NUMBER 001256WIM DATE 7-07-95

NOTE: Record the fraction of a foot in decimal, not in inches

Top of Riser Elevation: 483.6

Ground Surface Elevation: 481.2 Ft

Feet from Surface	Description of Formation
Information in this column to be supplied in the Feet from Surface column	0-35 no sample
3.0	Depth to bottom of Protective Casing Seal
35-147	Limestone
122.0	Depth to Base of Annular Seal
134.8	Depth to Base of Bentonite Seal
135.8	Depth to Base of Secondary Filter Pack
138.3	Depth to Top of the Screen
148.3	Depth to Bottom of the Screen
	Plug Back Total Depth
149.0	Original Total Depth

LOCKING CAP - Y / N (Circle one)
CAP VENT - Y / N (Circle one)

PROTECTIVE CASING
Type: STEEL
Size: 8"x6"x5'
Bore Hole Diameter: 9⅛
WEEP HOLE - Y / N (Circle one)

PROTECTIVE CASING SEAL
Type: ☒ Concrete ☐ Cement Slurry

RISER PIPE
Length: 140.7'
Diameter: 2"
Type of Material: SCH 80 PVC

BOREHOLE DIAMETER: 5⅞ In.

ANNULAR SEAL
Type: ☐ Bentonite Slurry ☒ Cement Slurry ☐ Non Slurry Bentonite

BENTONITE SEAL
Type: ☒ Bentonite Slurry ☐ Non Slurry Bentonite
Length of Seal: 12.8 FL

SECONDARY FILTER PACK (Optional)
Type: ☒ Sand ☐ Manufactured
Grain Size: < 50
Length: 1'

PRIMARY FILTER PACK
Type: ☒ Sand ☐ Manufactured
Grain Size: 16-35
Length: 13.2'

WELL SCREEN
Length: 10'
Slot Size: 0.010
Type: SCH 80 PVC

SUMP DETAILS
Length: 0.5 FL
Diameter: 2 In.
Type: PVC

TYPE OF BACKFILL: SAND

MO 780-1415 (2-94) DISTRIBUTION: WHITE DIVISION CANARY MONITORING WELL CONTRACTOR PINK/OWNER

LAIDLAW WASTE SYSTEMS INC.

SOIL BOREHOLE LOG

SITE NAME AND LOCATION	DRILLING METHOD:		BORING NO.
	4.25 inch I.D. Hollow Stem Auger		PZ-106-KS
			SHEET 1 OF 2
	SAMPLING METHOD:		
	SPLIT SPOON: 2.0 inch O.D./1.5 inch I.D. (SP)		DRILLING
	SHELBY TUBE: 3.0 inch O.D./2 13/16 inch I.D. (SH)		START / FINISH
	WATER LEVEL		TIME: 10:30 / 13:55
	TIME		
	DATE		DATE: 2/28/95 / 2/28/95
	CASING DEPTH		

LAIDLAW\RI-FS\MD
WEST LAKE LANDFILL
OPERABLE UNIT 2

NORTHING: 1066704.02
DATUM EASTING: 515431.62 ELEVATION 460.8

DRILL RIG CME 75 - TRUCK MOUNT

SURFACE CONDITIONS

ANGLE BEARING

SAMPLE HAMMER

DRILLING CONTR LAYNE-WESTERN

LOGGED BY H. HIRT

DATE 2/28/95 CHK'D BY W. HERST

JOB NO.: 943-2848

FILENAME: PZ106KS

DEPTH IN FEET (ELEVATION)	BLOW/ 6 IN. ON SAMPLER	RECOVERY	SYMBOL	SAMPLER SYMBOL	SAMPLE NUMBER AND DESCRIPTION OF MATERIAL	SAMPLER TYPE	REMARKS
1					(0.0-2.0 Ft.) No sample collected		Note: All depth measured from top of 1 foot thick gravel pad
					(458.8) 2.0		
2	2 2 2 4	1.5' / 2.0' (75%)			(2.0-4.7 Ft.) Firm, brownish gray (5YR 4/1), CLAYEY SILT, NR, damp, (CL-ML), (LOESS)	SP (2)	
3							
4	2 4 8 10	1.7' / 2.0' (85%)					
					(456.1) 4.7		
5					(4.7-8.8 Ft.) Very stiff, brownish gray (5YR 4/1), CLAY, little silt, NR, damp, (CH), (LOESS)	SP (3)	
6		2.0' / 2.0' (100%)				SH (4)	
7							
8	3 6 8 9	1.2' / 2.0' (60%)				SP (5)	
9					(8.8-11.9 Ft.) Very stiff, mottled pale yellowish brown (10YR 6/2) and moderate yellowish brown (10YR 5/4), CLAY, little silt, iron stained, NR, damp, (CL), (LOESS)		
10	4 4 6 7	0.1' / 2.0' (5%)			@ 10.0-12.0 Ft., stiff	SP (6)	
11							
12					(448.9) 11.9		
	1 5 5 5	0.9' / 2.0' (45%)			(11.9-15.0 Ft.) Stiff, light olive gray (5Y 5/2), CLAYEY SILT, iron stained, NR, damp, (CL-ML), (LOESS)	SP (7)	
13							
14	8 13 23 19	1.0' / 2.0' (50%)				SP (8)	

SOIL BOREHOLE LOG

LAIDLAW WASTE SYSTEMS INC.

SITE NAME AND LOCATION: LAIDLAW\RI-FS\MO WEST LAKE LANDFILL OPERABLE UNIT 2	DRILLING METHOD: 4.25 inch I.D. Hollow Stem Auger SAMPLING METHOD: SPLIT SPOON: 2.0 inch O.D./1.5 inch I.D. (SP) SHELBY TUBE: 3.0 inch O.D./2 13/16 inch I.D. (SH)	BORING NO. PZ-106-KS SHEET 2 OF 2
NORTHING: 1066704.02 DATUM EASTING: 515431.62 ELEVATION 460.8	WATER LEVEL / TIME / DATE / CASING DEPTH	DRILLING START: TIME 10:30, DATE 2/28/95 DRILLING FINISH: TIME 13:55, DATE 2/28/95
DRILL RIG: CME 75 - TRUCK MOUNT ANGLE: BEARING: SAMPLE HAMMER:	SURFACE CONDITIONS	

DRILLING CONTR: LAYNE-WESTERN

LOGGED BY: M. HURT DATE: 2/28/95 CHK'D BY: W. HERST

JOB NO.: 943-2848 FILENAME: PZ106KS

DEPTH IN FEET (ELEVATION)	BLOW/6 IN. ON SAMPLER	RECOVERY	SYMBOL	SAMPLER SYMBOL	SAMPLE NUMBER AND DESCRIPTION OF MATERIAL	SAMPLER TYPE	REMARKS
16	50/5"	0.0" / 2.0" (0%)			(15.0-15.5 Ft.) Compact, pale yellowish brown (10YR 6/2), Fine SAND, to gravel, NR, dry, (SP), (ALLUVIAL) (445.3) 15.5	SP 8	
17					(15.5-21.2 Ft.) Dense, very light gray (N8), LIMESTONE GRAVEL interbedded, with medium dark gray (N4), Fine SAND, (SR gravel, NR sand), dry, (GP), (ALLUVIAL)	SP 9	
18	10 26 14 15	0.8" / 2.0" (40%)				SP 10	
19							
20	6 15 23 32	1.0" / 2.0" (50%)				SP 11	
21					(439.6) 21.2		
22	8 18 24 30	0.6" / 2.0" (30%)			(21.2-27.7 Ft.) Hard, medium dark gray (N4), CLAY, NR, damp, (CH), (ALLUVIUM)	SP 12	
23							
24	6 13 20 29	1.3" / 2.0" (65%)			@ 24.7 ft., becoming dark gray (N3)	SP 13	
25							
26	9 17 38 40	0.8" / 2.0" (40%)				SP 14	
27					(433.1) 27.7		
28	19 39 50/3"	0.9" / 2.0" (45%)			(27.7-29.3 Ft.) Hard, medium light gray (N6), SILTY CLAY, NR, dry, (CL), (ALLUVIUM) (431.5) 29.3		
29					(29.3-30.0 Ft.) Very dense, very light gray, (N8), LIMESTONE GRAVEL, SR, dry, (GP)	SP 15	
					End of Soil Borehole Log at 30.0 ft.		Auger/split spoon refusal at 30.0 Feet
					See PZ-106-KS Record of Drillhole for rock descriptions		

RECORD OF DRILLHOLE PZ-106-KS

Sheet 1 of 23

PROJECT: LAIDLAW/RI-FS
PROJECT NO: 643-2848
LOCATION: BRIDGETON, MO

BORING METHOD: NX Core & water
DRILLING DATE: 2/28/95-3/13/95
DRILL RIG: CME 75

DATUM: MSL
COORDINATES N: 106703.9
AZIMUTH: 0

COLLAR ELEV: 461.8
E: 515432.1
INCLINATION: -90

J-Joint, F-Fault, S-Shear, B-Bedding, F-Foliation
PL-Planar, C-Curved, U-Undulating, ST-Stepped, I-Irregular
P-Polished, K-Slickensided, SM-Smooth, R-Rough, VR-V. Rough
Fe-FeOxide, CL-Clay Infill, CH-Chlorite, H-Healed, GRF-Gravel Filled

DEPTH SCALE (FEET)	DESCRIPTION	GRAPHIC LOG	ELEV / DEPTH (FT)	RUN NO	CORE RECOVERY	RQD	FRACTURES PER FOOT	DISCONTINUITY DATA: DIP wrt CORE AXIS	TYPE AND SURFACE DESCRIPTION	GRAPHIC LOG	WEATHERING INDEX: SW FR, MW, HW, CW	STRENGTH INDEX: R6, R5, R4, R3, R2, R1	POINT LOAD INDEX (psi): R1 30, R2 150, R3 300, R4 600, R5 1500, R6	TEST ORIENTATION	NOTES WATER LEVELS INSTRUMENTATION
16	0.0-30.0 ft. See Soil Borehole Log PZ-106-KS														
18															
20															
22															
24															
26															
28															
30	431.80		431.80												
	30.0-36.5 ft. 30.00 Fresh, medium bedded, yellowish gray (5Y 8/1) to light olive gray (5Y 6/1), medium grained, medium strong, ARENACEOUS LIMESTONE, (ST. LOUIS FORMATION)		30.00	1	69%				J,I,R (2) J,ST,R J,I,R J,PL,SM						2/28/95 @ 14:45 Begin coring
32															

DEPTH SCALE: 1:2
DRILLING CONTRACTOR: LAYNE-WESTERN
DRILLER: D. MAHURIN

LOGGED: M. HIRT
CHECKED: R. BOOTH
DATE: 3/29/95

Golder Associates

RECORD OF DRILLHOLE PZ-106-KS

Sheet 2 of 23

PROJECT: LAIDLAW/RI-FS
PROJECT NO: 843-2848
LOCATION: BRIDGETON, MO

BORING METHOD: NX Core & Water
DRILLING DATE: 2/28/95-3/13/95
DRILL RIG: CME 75

DATUM: MSL
COORDINATES N: 106703.9
AZIMUTH: ° 0

COLLAR ELEV: 461.8
E: 515432.1
INCLINATION: -90

J-Joint, F-Fault, S-Shear, B-Bedding, F-Foliation
PL-Planar, C-Curved, U-Undulating, ST-Stepped, I-Irregular
P-Polished, X-Slickensided, SM-Smooth, R-Rough, VR-V. Rough
Fe-FeOxide, CL-Clay Infill, CH-Chlorite, H-Healed, GRF-Gravel Filled

DEPTH SCALE (FEET)	DESCRIPTION	GRAPHIC LOG	ELEV / DEPTH (FT)	RUN NO	CORE RECOVERY	RQD	FRACTURES PER FOOT	DISCONTINUITY DATA: DIP w/r CORE AXIS	DISCONTINUITY DATA: TYPE AND SURFACE DESCRIPTION	GRAPHIC LOG	WEATHERING INDEX	STRENGTH INDEX	POINT LOAD INDEX (psi)	TEST ORIENTATION	NOTES WATER LEVELS INSTRUMENTATION
32	30.0-36.5 ft. Fresh, medium bedded, yellowish gray (5Y 8/1) to light olive gray (5Y 6/1), medium grained, medium strong, ARENACEOUS LIMESTONE, (ST. LOUIS FORMATION)								J,I,R						
	33.5-34.0 ft. Hard clay infilling								J,ST,R						
34	34.0-34.5 ft. ARENACEOUS DOLOMITE 427.30			1	69%				J,PL,R,CL						Core loss probably due to highly fractured nature of rock
	34.50								Core Loss						
36			425.30												
	36.5-37.9 ft. Highly weathered, thickly laminated, medium dark gray (N4), fine grained, medium strong, SILTSTONE, (ST. LOUIS FORMATION)		36.50												
	Cross bedded, Limestone breccia 423.90 37.90														
38	37.9-41.5 ft. Completely weathered, thinly laminated, grayish black (N2), very fine grained, extremely weak, CLAYSTONE, (ST. LOUIS FORMATION)														
	38.5-38.8 ft. 60° silt crossbeds, pyrite crystals abundant			2	93%				B,PL,SM (3)						
40									J,I,SM (5)						
	41.0-41.5 ft. Greenish gray (5GY 6/1) clay layer 420.30								J,I,SM (2)						
	41.5-42.7 ft. Fresh, medium bedded, light greenish gray (5GY 8/1), medium grained, medium strong, ARENACEOUS LIMESTONE, (ST. LOUIS FORMATION) 419.10								J,I,R						
42	42.5-42.7 ft. Clay infilling 42.70		419.30						B,PL,SM						
	42.7-48.4 ft. Fresh, thickly bedded, medium light gray (N6), medium grained, medium strong, SANDSTONE, (ST. LOUIS FORMATION)		42.50												Bit getting plugged off
44				3	96%										
46	46.0-46.5 ft. Siltstone								B,I,R						
	46.7-46.8 ft. Claystone								J,I,R						
	46.8-47.1 ft. Chert														
	47.3-47.5 ft. Siltstone		414.50												
	47.5-48.1 ft. Clay layer		47.30	4	96%										
48															

DEPTH SCALE: 1:2
DRILLING CONTRACTOR: LAYNE-WESTERN
DRILLER: D. MAHURIN

LOGGED: M. HIRT
CHECKED: R. BOOTH
DATE: 3/29/95

Golder Associates

RECORD OF DRILLHOLE PZ-106-KS

PROJECT: LAIDLAW/RI-FS
PROJECT NO: 943-2848
LOCATION: BRIDGETON, MO

BORING METHOD: NX Core & water
DRILLING DATE: 2/28/95-3/13/95
DRILL RIG: CME 75

DATUM: MSL
COORDINATES N: 106703.9
AZIMUTH: 0

COLLAR ELEV: 481.8
E: 515432.1
INCLINATION: -90

J-Joint, F-Fault, S-Shear, B-Bedding, F-Foliation
PL-Planar, C-Curved, U-Undulating, ST-Stepped, I-Irregular
P-Polished, K-Slickensided, SM-Smooth, R-Rough, VR-V. Rough
Fe-FeOxide, CL-Clay Infill, CH-Chlorite, H-Healed, GRF-Gravel Filled

DEPTH SCALE (FEET)	DESCRIPTION	GRAPHIC LOG	ELEV / DEPTH (FT)	RUN NO.	CORE RECOVERY	RQD	FRACTURES PER FOOT	DISCONTINUITY DATA: DIP wrt CORE AXIS	DISCONTINUITY DATA: TYPE AND SURFACE DESCRIPTION	GRAPHIC LOG	WEATHERING INDEX	STRENGTH INDEX	POINT LOAD INDEX (psi)	TEST ORIENTATION	NOTES WATER LEVELS INSTRUMENTATION
48			413.40												
	48.4-52.3 ft. 48.40 Moderately weathered, medium bedded, medium light gray (N6), fine grained, medium strong, LIMESTONE, (ST. LOUIS FORMATION) Stylolitic														
50	49.6-50.6 ft. Chert nodules 50.0-50.1 ft. Claystone 50.3-50.6 ft. Claystone 51.0-51.5 ft. Claystone			4	98%				J,I,R,CL						
52			409.50 52.30												
	52.3-55.7 ft. Slightly weathered, medium bedded, light olive gray (5Y 6/1), microcrystalline, medium strong, LIMESTONE, (ST. LOUIS FORMATION) Stylolitic, numerous pyrite crystals								J,I,R (2) J,I,R J,I,R J,I,R,CL J,I,R (2)						
54															
									J,I,R (2)						
56	55.7-59.6 ft. Slightly weathered, medium bedded, medium light gray (N6), fine grained, medium strong, ARENACEOUS LIMESTONE, (ST. LOUIS FORMATION) Porous/vuggy, some pyrite crystals and chert nodules, vugs <1 mm. diameter			5	99%				J,PL,R,CL						
58															
			402.40 59.40												
	59.6-70.0 ft. 59.60 Slightly weathered, medium bedded, light olive gray (5Y 6/1), fine grained, medium strong, ARENACEOUS DOLOMITE, (ST. LOUIS FORMATION) Porous/vuggy, vugs <1 mm.		402.20												
60															
				6	98%				J,PL,SM						
62									B,PL,SM						
	62.2-62.8 ft. Claystone 62.8-63.4 ft. Calcite crystals								B,PL,SM J,I,R, calcite crystals						
									J,I,R						
64															

DEPTH SCALE: 1:2
DRILLING CONTRACTOR: LAYNE-WESTERN
DRILLER: D. MAHURIN

LOGGED: M. HIRT
CHECKED: R. BOOTH
DATE: 3/29/95

Golder Associates

RECORD OF DRILLHOLE PZ-106-KS

PROJECT: LAIDLAW/RI-FS
PROJECT NO: 943-2848
LOCATION: BRIDGETON, MO

BORING METHOD: NX Core & water
DRILLING DATE: 2/28/95-3/13/95
DRILL RIG: CME 75

DATUM: MSL
COORDINATES N: 106703.9
AZIMUTH: 0

COLLAR ELEV: 481.8
E: 515432.1
INCLINATION: -90

J-Joint, F-Fault, S-Shear, B-Bedding, F-Foliation
PL-Planar, C-Curved, U-Undulating, ST-Stepped, I-Irregular
P-Polished, K-Slickensided, SM-Smooth, R-Rough, VR-V. Rough
Fe-FeOxide, CL-Clay Infill, CH-Chlorite, H-Healed, GRF-Gravel Filled

DEPTH SCALE (FEET)	ROCK TYPE: DESCRIPTION	GRAPHIC LOG	ELEV / DEPTH (FT)	RUN NO	CORE RECOVERY	RQD (80 60 40 20)	FRACTURES PER FOOT (2 4 6 8 10)	DISCONTINUITY DATA: DIP wrt CORE AXIS (0 30 60 90)	TYPE AND SURFACE DESCRIPTION	GRAPHIC LOG	WEATHERING INDEX (SW FR, MW HW CW)	STRENGTH INDEX (R6 R5 R4 R3 R2 R1)	POINT LOAD INDEX (psi) (R1 30 R2 150 R3 300 R4 600 R5 1500 R6)	TEST ORIENTATION	NOTES WATER LEVELS INSTRUMENTATION
64									J,I,R calcite crystals						
	64.7-65.2 ft. calcite crystals								J,I,R						
									J,I,R						
									J,I,R calcite crystals						
66	65.9-66.9 ft. Calcite crystals and iron staining			6	98%										
			394.20 / 67.60												8:45 End Core Run 6
68	67.8-68.6 ft. Calcite crystals, some iron staining								J,I,SM						
									J,I,R						
									J,I,SM						
	69.7-70.7 ft. Calcite crystals								J,PL,SM						
70	70.0-98.0 ft. Fresh, medium bedded, light olive gray (5Y 6/1), medium grained, medium strong, LIMESTONE, (ST. LOUIS FORMATION)	391.80 / 70.00							J,PL,SM						
									J,I,SM						
									J,I,R,CL						
									J,I,R,Fe						
				7	99%				J,I,R						
72															
	72.6-73.3 ft. 0° calcite vein														
	73.4-73.6 ft. Arenaceous, slightly weathered								J,I,R,CL (2)						
74			387.40 / 74.40												9:30 End Core Run 7
									J,I,R (2)						
76	76.4-80.9 ft. Microcrystalline, stylolitic								J,I,R						
				8	100 %				J,I,SM (3)						
78									J,I,R (2)						
	79.6-79.8 ft. Dolomite layer								J,PL,SM,CL						
80															

DEPTH SCALE: 1:2
DRILLING CONTRACTOR: LAYNE-WESTERN
DRILLER: D. MAHURIN

LOGGED: M. HIRT
CHECKED: R. BOOTH
DATE: 3/29/95

Golder Associates

RECORD OF DRILLHOLE PZ-106-KS

Sheet 5 of 23

PROJECT: LAIDLAW/RI-FS
PROJECT NO: 943-2848
LOCATION: BRIDGETON, MO

BORING METHOD: NX Core & water
DRILLING DATE: 2/28/95-3/13/95
DRILL RIG: CME 75

DATUM: MSL
COORDINATES N: 106703.9
AZIMUTH: 0

COLLAR ELEV: 461.6
E: 815432.1
INCLINATION: -90

J-Joint, F-Fault, S-Shear, B-Bedding, F-Foliation
PL-Planar, C-Curved, U-Undulating, ST-Stepped, I-Irregular
P-Polished, K-Slickensided, SM-Smooth, R-Rough, VR-V. Rough
Fe-FeOxide, CL-Clay Infil, CH-Chlorite, H-Healed, GRF-Gravel Filled

SCALE (FEET)	DESCRIPTION	GRAPHIC LOG	ELEV / DEPTH (FT)	RUN NO.	CORE RECOVERY	RQD	FRACTURES PER FOOT	DISCONTINUITY DATA: DIP wrt CORE AXIS	DISCONTINUITY DATA: TYPE AND SURFACE DESCRIPTION	GRAPHIC LOG	WEATHERING INDEX	STRENGTH INDEX	POINT LOAD INDEX (psi)	TEST ORIENTATION	NOTES WATER LEVELS INSTRUMENTATION
80	70.0-98.0 ft. Fresh, medium bedded, light olive gray (5Y 6/1), medium grained, medium strong, LIMESTONE, (ST. LOUIS FORMATION)														
	80.9-82.8 ft. Fine grained, arenaceous			8	100 %				J,I,R (2)						
82			379.00												
			82.80												10:15 End Core Run 8
									J,PL,SM,CL						
84	83.9-84.2 ft. Calcite filled vugs								J,I,R						
	85.0-87.1 ft. Microcrystalline, stylolitic								J,I,R						
86				9	100 %				J,PL,SM						
	87.1-88.3 ft. Porous/vuggy Dolomite								J,PL,SM						
88	88.3-90.6 ft. Microcrystalline, stylolitic								B,I,R						
									J,I,R						
			372.40												
			89.40						J,I,R						11:05 End Core Run 9
90	90.6-92.0 ft. Porous/vuggy Dolomite														
									J,PL,R						
92	92.2-94.1 ft. Microcrystalline, some silty laminae								J,I,R,CL						
									J,I,SM						
				10	95%				J,I,R						
									J,I,R						
94									J,I,R,CL						
									J,I,R,CL						
	95.9-96.1 ft. Moderately weathered, arenaceous														

DEPTH SCALE: 1:2
DRILLING CONTRACTOR: LAYNE-WESTERN
DRILLER: D. MAHURIN

LOGGED: M. HIRT
CHECKED: R. BOOTH
DATE: 3/29/95

Golder Associates

RECORD OF DRILLHOLE PZ-106-KS

Sheet 6 of 23

PROJECT: LAIDLAW/RI-FS
PROJECT NO: 943-2648
LOCATION: BRIDGETON, MO

BORING METHOD: NX Core & water
DRILLING DATE: 2/28/95-3/13/95
DRILL RIG: CME 75

DATUM: MSL
COORDINATES N: 106703.9
AZIMUTH: 0

COLLAR ELEV: 461.8
E: 515432.1
INCLINATION: -90

J-Joint, F-Fault, S-Shear, B-Bedding, F-Foliation
PL-Planar, C-Curved, U-Undulating, ST-Stepped, I-Irregular
P-Polished, K-Slickensided, SM-Smooth, R-Rough, VR-V. Rough
Fe-FeOxide, CL-Clay Infill, CH-Chlorite, H-Healed, GRF-Gravel Filled

LENGTH SCALE (FEET)	ROCK TYPE DESCRIPTION	GRAPHIC LOG	ELEV / DEPTH (FT)	RUN NO.	CORE RECOVERY	RQD	FRACTURES PER FOOT	DISCONTINUITY DATA: DIP wrt CORE AXIS	DISCONTINUITY DATA: TYPE AND SURFACE DESCRIPTION	GRAPHIC LOG	WEATHERING INDEX: FR, SW, HW, CW	STRENGTH INDEX: R6, R5, R4, R3, R2, R1	POINT LOAD INDEX (psi): R1 30, R2 150, R3 300, R4 600, R5 1500, R6	TEST ORIENTATION	NOTES WATER LEVELS INSTRUMENTATION
96	70.0-98.0 ft. Fresh, medium bedded, light olive gray (5Y 6/1), medium grained, medium strong, LIMESTONE, (ST. LOUIS FORMATION)								J,PL,SM,CL						
	97.5-97.8 ft. Dolomitic		363.80	10	99%										
98	98.0-119.3 ft. Slightly weathered, medium bedded, light olive gray (5Y 6/1), fine grained, medium strong, DOLOMITE, (ST. LOUIS FORMATION) Porous/vuggy		98.00												
			382.40												
			98.40												11:55 End Core Run 10
100															
	101.2-104.3 ft. Medium grained Limestone								J,PL,SM,CL J,PL,SM J,I,R						
102									J,PL,R J,PL,R (2)						
104				11	100%				J,PL,SM,CL						
106															
	107.1-108.0 ft. Interbedded Limestone and Dolomite														
108	108.0-110.9 ft. Arenaceous Limestone								J,I,R J,I,SM,CL						
			352.40						J,I,R						
			109.40												13:25 End Core Run 11
110	110.0-110.3 ft. 45° healed fracture								J,I,R (2) J,I,R						
				12	98%				J,I,R,CL						
	111.0-111.9 ft. Moderate to highly weathered, arenaceous Dolomite, some chert														
112															

DEPTH SCALE: 1:2
DRILLING CONTRACTOR: LAYNE-WESTERN
DRILLER: D. MAHURIN

LOGGED: M. HIRT
CHECKED: R. BOOTH
DATE: 3/29/95

Golder Associates

RECORD OF DRILLHOLE PZ-106-KS

Sheet 7 of 23

PROJECT: LAIDLAW/RI-FS
PROJECT NO: 943-2848
LOCATION: BRIDGETON, MO

BORING METHOD: NX Core & water
DRILLING DATE: 2/28/95-3/13/95
DRILL RIG: CME 75

DATUM: MSL
COORDINATES N: 106703.9
AZIMUTH: 0

COLLAR ELEV: 481.8
E: 515432.1
INCLINATION: -90

J-Joint, F-Fault, S-Shear, B-Bedding, F-Foliation
PL-Planar, C-Curved, U-Undulating, ST-Stepped, I-Irregular
P-Polished, K-Slickensided, SN-Smooth, R-Rough, VR-V. Rough
Fe-FeOxide, CL-Clay Infill, CH-Chlorite, H-Healed, GRF-Gravel Filled

DEPTH SCALE (FEET)	DESCRIPTION	GRAPHIC LOG	ELEV / DEPTH (FT)	RUN NO.	CORE RECOVERY	RQD	FRACTURES PER FOOT	DISCONTINUITY DATA: DIP wrt CORE AXIS	DISCONTINUITY DATA: TYPE AND SURFACE DESCRIPTION	DISCONTINUITY DATA: GRAPHIC LOG	WEATHERING INDEX (SW FR, MW, HW, CW)	STRENGTH INDEX (R6, R5, R4, R3, R2, R1)	POINT LOAD INDEX (psi) (R1 30, R2 150, R3 300, R4 600, R5 1500, R6)	TEST ORIENTATION	NOTES WATER LEVELS INSTRUMENTATION
112	112.0-112.4 ft. Crystalline Limestone, moderately weathered								J,I,R,CL						
									J,ST,SM						
									J,I,SM (2)						
	113.2-115.0 ft. Crystalline Limestone								J,I,SM,CL (2)						
									J,PL,SM						
114									J,I,SM						
	115.0-115.3 ft. 10° calcite filled vein (2 mm. thick)								J,I,SM						
				12	95%										
116									J,I,SM						
	117.0-119.0 ft. 10° calcite filled veins (2 mm. thick)														
118															
			342.40												
	119.3-133.8 ft. Fresh, medium bedded, light olive gray (5Y 5/2), medium grained, medium strong, ARGILLACEOUS LIMESTONE, (ST. LOUIS FORMATION) Some braciopod fossils		119.40												14:05 End Core Run 12
120															
122															
	123.1-124.9 ft. Greenish gray (5GY 6/1) to dark greenish gray (5GY 4/1). Dolomite with calcite veins and vugs			13	98%										
124									J,I,R						
	124.9-126.0 ft. 10° calcite filled veins								J,I,R,calcite						
	125.6-133.2 ft. Microcrystalline to fine grained, thinly laminated, Silt and Dolomite interbeds								J,PL,R (2)						
126									J,I,R,CL (2)						
	127.6-131.7 ft. Large chert nodules														
128															

DEPTH SCALE: 1:2
DRILLING CONTRACTOR: LAYNE-WESTERN
DRILLER: D. MAHURIN

LOGGED: M. HIRT
CHECKED: R. BOOTH
DATE: 3/29/95

Golder Associates

RECORD OF DRILLHOLE PZ-106-KS

PROJECT: LAIDLAW/RI-FS
PROJECT NO: 943-2648
LOCATION: BRIDGETON, MO

BORING METHOD: NX Core & water
DRILLING DATE: 2/28/95-3/13/95
DRILL RIG: CME 75

DATUM: MSL
COORDINATES N: 106763.9
AZIMUTH: 0

COLLAR ELEV: 481.8
E: 515432.1
INCLINATION: -90

J-Joint, F-Fault, S-Shear, B-Bedding, F-Foliation
PL-Planar, C-Curved, U-Undulating, ST-Stepped, I-Irregular
P-Polished, K-Slickensided, SM-Smooth, R-Rough, VR-V. Rough
Fe-FeOxide, CL-Clay Infill, CH-Chlorite, H-Healed, GRF-Gravel Filled

SCALE (FEET)	DESCRIPTION	GRAPHIC LOG	ELEV / DEPTH (FT)	RUN NO.	CORE RECOVERY	RQD	FRACTURES PER FOOT	DISCONTINUITY DATA: DIP WRT CORE AXIS	TYPE AND SURFACE DESCRIPTION	GRAPHIC LOG	WEATHERING INDEX (SW FR, MW, HW, CW)	STRENGTH INDEX (R6 R5 R4 R3 R2 R1)	POINT LOAD INDEX (psi) (R1 30, R2 150, R3 300, R4 600, R5 1500, R6)	TEST ORIENTATION	NOTES WATER LEVELS INSTRUMENTATION
128	119.3-133.8 ft. Fresh, medium bedded, light olive gray (5Y 5/2), medium grained, medium strong, ARGILLACEOUS LIMESTONE, (ST. LOUIS FORMATION) Some braciopod fossils			13	98%	80 60 40 20	2 4 6 8 10	0 30 60 90	J,PL,SM						
			332.40												
			129.40						J,PL,SM						14:50 End Core Run 13
130									J,I,SM						
									J,I,SM (2)						
132	132.4-132.5 ft. Claystone								B,PL,SM						
			328.00												
134	133.8-146.6 ft. Fresh, thinly bedded, light olive gray (5Y 5/2), very coarse grained, medium strong, FOSSILIFEROUS LIMESTONE, (SALEM FORMATION)		133.80	14	100 %										@ 133.8 ft. Inferred top of SALEM FORMATION
136															
138	138.7-139.7 ft. Fine to medium grained arenaceous Limestone, cross bedded														
			322.60						J,I,SM						
			139.20						J,PL,SM						8:45 End Core Run 14
	139.7-142.1 ft. Fine grained to microcrystalline														
140	140.4-140.7 ft. Chert layer														
									J,PL,SM						
				15	99%				J,PL,SM,CL						
142	142.1-142.4 ft. Clay layer														
									J,I,SM,CL (2)						
	142.5-142.7 ft. Chert nodules														
									J,I,R						
	143.4-146.1 ft. Medium grained Limestone														
144															

DEPTH SCALE: 1:2
DRILLING CONTRACTOR: LAYNE-WESTERN
DRILLER: D. MAHURIN

LOGGED: M. HIRT
CHECKED: R. BOOTH
DATE: 3/29/95

Golder Associates

RECORD OF DRILLHOLE PZ-106-KS

Sheet 8 of 23

PROJECT: LAIDLAW/RI-FS
PROJECT NO: 943-2848
LOCATION: BRIDGETON, MO

BORING METHOD: NX Core & water
DRILLING DATE: 2/28/95-3/13/95
DRILL RIG: CME 75

DATUM: MSL
COORDINATES N: 106703.9
AZIMUTH: 0

COLLAR ELEV: 461.8
E: 515432.1
INCLINATION: -90

J-Joint, F-Fault, S-Shear, B-Bedding, F-Foliation
PL-Planar, C-Curved, U-Undulating, ST-Stepped, I-Irregular
P-Polished, K-Slikensided, SM-Smooth, R-Rough, VR-V. Rough
Fe-FeOxide, CL-Clay Infill, CH-Chlorite, H-Healed, GRF-Gravel Filled

SCALE (FEET)	DESCRIPTION	GRAPHIC LOG	ELEV / DEPTH (FT)	RUN NO.	CORE RECOVERY	RQD	FRACTURES PER FOOT	DISCONTINUITY DATA: DIP wrt CORE AXIS	DISCONTINUITY DATA: TYPE AND SURFACE DESCRIPTION	GRAPHIC LOG	WEATHERING INDEX	STRENGTH INDEX	POINT LOAD INDEX (psi)	TEST ORIENTATION	NOTES WATER LEVELS INSTRUMENTATION
128	119.3-133.8 ft. Fresh, medium bedded, light olive gray (5Y 5/2), medium grained, medium strong, ARGILLACEOUS LIMESTONE, (ST. LOUIS FORMATION) Some braciopod fossils			13	98%				J,PL,SM						
			332.40												
			129.40												14:50 End Core Run 13
130									J,PL,SM						
									J,I,SM						
									J,I,SM (2)						
132	132.4-132.5 ft. Claystone														
			326.00												
134	133.8-146.6 ft. Fresh, thinly bedded, light olive gray (5Y 5/2), very coarse grained, medium strong, FOSSILIFEROUS LIMESTONE, (SALEM FORMATION)		133.80	14	100 %				B,PL,SM						@ 133.8 ft. Inferred top of SALEM FORMATION
136															
138	138.7-139.7 ft. Fine to medium grained arenaceous Limestone, cross bedded		322.60						J,I,SM						
			139.20						J,PL,SM						8:45 End Core Run 14
140	139.7-142.1 ft. Fine grained to microcrystalline														
	140.4-140.7 ft. Chert layer														
									J,PL,SM						
				15	99%				J,PL,SM,CL						
142	142.1-142.4 ft. Clay layer														
	142.5-142.7 ft. Chert nodules								J,I,SM,CL (2)						
	143.4-146.1 ft. Medium grained Limestone								J,I,R						
144															

DEPTH SCALE: 1:2
DRILLING CONTRACTOR: LAYNE-WESTERN
DRILLER: D. MAHURIN

LOGGED: M. HIRT
CHECKED: R. BOOTH
DATE: 3/29/95

Golder Associates

RECORD OF DRILLHOLE PZ-106-KS

Sheet 9 of 23

PROJECT: LAIDLAW/RI-FS
PROJECT NO: 943-2848
LOCATION: BRIDGETON, MO

BORING METHOD: NX Core & water
DRILLING DATE: 2/28/95-3/13/95
DRILL RIG: CME 75

DATUM: MSL
COORDINATES N: 106703.9
AZIMUTH: 0

COLLAR ELEV: 481.8
E: 515432.1
INCLINATION: -90

J-Joint, F-Fault, S-Shear, B-Bedding, F-Foliation
PL-Planar, C-Curved, U-Undulating, ST-Stepped, I-Irregular
P-Polished, K-Slickensided, SM-Smooth, R-Rough, VR-V. Rough
Fe-FeOxide, CL-Clay Infill, CH-Chlorite, H-Healed, GRF-Gravel Filled

DEPTH SCALE (FEET)	DESCRIPTION	ELEV / DEPTH (FT)	RUN NO.	CORE RECOVERY	RQD	FRACTURES PER FOOT	DISCONTINUITY DATA: DIP w/r CORE AXIS	DISCONTINUITY DATA: TYPE AND SURFACE DESCRIPTION	WEATHERING INDEX	STRENGTH INDEX	POINT LOAD INDEX (psi)	TEST ORIENTATION	NOTES WATER LEVELS INSTRUMENTATION
144	144.0-144.4 ft. Chert layer												
	146.1-146.2 ft. Chert nodule												
146	146.2-146.6 ft. Thinly laminated, arenaceous Limestone, cross bedded	315.20	15	99%				J,I,R (2)					
	146.6-152.6 ft. Slightly weathered, medium bedded, pale yellowish brown (10YR 6/2) to dark yellowish brown (10YR 4/2), fine grained, medium strong, ARGILLACEOUS DOLOMITE, (SALEM FORMATION) Slightly porous/vuggy, interbedded chert nodules	146.60											
148	148.8-149.0 ft. Chert zone	313.00											
		148.80											9:50 End Core Run 15
150	150.4-150.7 ft. Chert zone		16	100 %				J,U,R					
								J,I,SM					Driller reports rock is very hard
	151.8-152.0 ft. Chert zone							J,I,R (2)					
152	152.5 ft. 1 in. diameter, black claystone clast	309.20											
	152.6-160.5 ft. Fresh, thinly laminated, light olive gray (5Y 5/2), fine grained, medium strong, ARGILLACEOUS LIMESTONE, (SALEM FORMATION) Crossbedded, numerous chert nodules/beds	152.60						J,I,R					
		308.70						J,PL,SM					
		153.10											10:40 End Core Run 16
154	153.0-153.6 ft. Chert zone							J,PL,SM					
								J,I,R					Driller reports rock is very hard
	155.5-155.6 ft. Chert zone												
156	156.1-157.5 ft. Pale yellowish brown (10YR 6/2) to dark yellowish brown (10YR 4/2)		17	97%									
	156.4 ft. Brachiopod fossils												
	157.0-157.2 ft. Chert zone												
158								J,I,SM					
	158.2-158.4 ft. Chert zone							J,U,SM					
								J,U,SM (2)					
	159.0-159.4 ft. Chert zone							J,U,SM					
		302.50						J,PL,SM					
		159.30						J,I,SM					11:50 End Core Run 17
	159.6-159.7 ft. Chert nodule		18	100 %									
160													

DEPTH SCALE: 1:2
DRILLING CONTRACTOR: LAYNE-WESTERN
DRILLER: D. MAHURIN

LOGGED: M. HIRT
CHECKED: R. BOOTH
DATE: 3/29/95

Golder Associates

RECORD OF DRILLHOLE PZ-106-KS

Sheet 10 of 23

PROJECT: LAIDLAW/RI-FS
PROJECT NO: 943-2848
LOCATION: BRIDGETON, MO

BORING METHOD: NX Core & water
DRILLING DATE: 2/28/95-3/13/95
DRILL RIG: CME 75

DATUM: MSL
COORDINATES N: 106703.9
AZIMUTH: 0

COLLAR ELEV: 461.8
E: 515432.1
INCLINATION: -90

J-Joint, F-Fault, S-Shear, B-Bedding, F-Foliation
PL-Planar, C-Curved, U-Undulating, ST-Stepped, I-Irregular
P-Polished, K-Slickensided, SM-Smooth, R-Rough, VR-V. Rough
Fe-FeOxide, CL-Clay Infill, CH-Chlorite, H-Healed, GRF-Gravel Filled

DEPTH SCALE (FEET)	DESCRIPTION	GRAPHIC LOG	ELEV / DEPTH (FT)	RUN NO.	CORE RECOVERY	RQD	FRACTURES PER FOOT	DISCONTINUITY DATA: DIP wrt CORE AXIS	DISCONTINUITY DATA: TYPE AND SURFACE DESCRIPTION	GRAPHIC LOG	WEATHERING INDEX	STRENGTH INDEX	POINT LOAD INDEX (psi)	TEST ORIENTATION	NOTES WATER LEVELS INSTRUMENTATION
160	160.2-160.4 ft. Chert zone 160.5-174.3 ft. Fresh, thickly laminated, medium light gray (N6), coarse grained, medium strong, FOSSILIFEROUS DOLOMITIC LIMESTONE, (SALEM FORMATION)								J,I,SM						
162									J,U,R						
164				18	100 %				J,ST,R						
166															
168									J,PL,SM						
			292.50 / 169.30												13:45 End Core Run 18
170				19	100 %										
172															
174	287.50														
	174.3-178.8 ft. Fresh, thinly bedded, pale yellowish brown (10YR 6/2) to medium light gray (N6), f-c grained, medium strong, CALCAREOUS DOLOMITE, (SALEM FORMATION) Some fossils, cross bedding		174.30												
176															

DEPTH SCALE: 1:2
DRILLING CONTRACTOR: LAYNE-WESTERN
DRILLER: D. MAHURIN

LOGGED: M. HIRT
CHECKED: R. BOOTH
DATE: 3/29/95

Golder Associates

RECORD OF DRILLHOLE PZ-106-KS

Sheet 11 of 23

PROJECT: LAIDLAW/RI-FS
PROJECT NO: 943-2848
LOCATION: BRIDGETON, MO

BORING METHOD: NX Core & water
DRILLING DATE: 2/28/95-3/13/95
DRILL RIG: CME 75

DATUM: MSL
COORDINATES N: 106703.9
AZIMUTH: 0

COLLAR ELEV: 461.6
E: 515432.1
INCLINATION: -90

J-Joint, F-Fault, S-Shear, B-Bedding, F-Foliation
PL-Planar, C-Curved, U-Undulating, ST-Stepped, I-Irregular
P-Polished, K-Slickensided, SM-Smooth, R-Rough, VR-V. Rough
Fe-FeOxide, CL-Clay Infill, CH-Chlorite, H-Healed, GRF-Gravel Filled

DEPTH SCALE (FEET)	DESCRIPTION	GRAPHIC LOG	ELEV / DEPTH (FT)	RUN NO.	CORE RECOVERY	RQD	FRACTURES PER FOOT	DISCONTINUITY DATA: DIP wrt CORE AXIS	DISCONTINUITY DATA: TYPE AND SURFACE DESCRIPTION	GRAPHIC LOG	WEATHERING INDEX	STRENGTH INDEX	POINT LOAD INDEX (psi)	TEST ORIENTATION	NOTES WATER LEVELS INSTRUMENTATION
176	174.3-178.8 ft. Fresh, thinly bedded, pale yellowish brown (10YR 6/2) to medium light gray (N6), fine to coarse grained, medium strong, CALCAREOUS DOLOMITE, (SALEM FORMATION) Some fossils, cross bedding								J,PL,SM; J,PL,R						
				19	100 %										
178	176.9-177.2 ft. Chert zone 178.3-178.5 ft. Chert zone														
	178.8-187.0 ft. Slightly weathered, medium bedded, moderate yellowish brown (10YR 5/4), medium grained, medium strong, DOLOMITE, (SALEM FORMATION) Some fossils, calcite crystals, porous/vuggy 180.2-180.3 ft. Chert nodule		282.50 / 179.30						J,I,R; J,PL,R						14:30 End Core Run 19
180															
182															
184	183.9-184.1 ft. Chert zone			20	99%				J,I,R; J,I,R						
186															
			274.80 / 187.00						J,I,SM (2)						
	187.0-189.3 ft. Fresh, thinly laminated, pale yellowish brown (10YR 6/2), medium grained, medium strong, DOLOMITIC LIMESTONE, (SALEM FORMATION) Some cross bedding, fossils														
188															
			272.50 / 189.30												15:30 End Core Run 20
	189.3-201.3 ft. Fresh, thickly laminated, light olive gray (5Y 6/1), interbedded medium and very coarse grained, medium strong, ARGILLACEOUS FOSSILIFEROUS LIMESTONE, (SALEM FORMATION) 190.8-191.4 ft. Brecciated			21	98%										
190															
192															

DEPTH SCALE: 1:2
DRILLING CONTRACTOR: LAYNE-WESTERN
DRILLER: D. MAHURIN

LOGGED: M. HIRT
CHECKED: R. BOOTH
DATE: 3/29/95

Golder Associates

RECORD OF DRILLHOLE PZ-106-KS

Sheet 12 of 23

PROJECT: LAIDLAW/RI-FS
PROJECT NO: 943-2648
LOCATION: BRIDGETON, MO

BORING METHOD: NX Core & water
DRILLING DATE: 2/28/95-3/13/95
DRILL RIG: CME 75

DATUM: MSL
COORDINATES N: 106703.9
AZIMUTH: 0

COLLAR ELEV: 461.8
E: 515432.1
INCLINATION: -90

J-Joint, F-Fault, S-Shear, B-Bedding, F-Foliation
PL-Planar, C-Curved, U-Undulating, ST-Stepped, I-Irregular
P-Polished, K-Slickensided, SM-Smooth, R-Rough, VR-V. Rough
Fe-FeOxide, CL-Clay Infill, CH-Chlorite, H-Healed, GRF-Gravel Filled

DEPTH (FEET)	ROCK TYPE DESCRIPTION	GRAPHIC LOG	ELEV / DEPTH (FT)	RUN NO.	CORE RECOVERY	RQD	FRACTURES PER FOOT	DISCONTINUITY DATA: DIP wrt CORE AXIS	DISCONTINUITY DATA: TYPE AND SURFACE DESCRIPTION	GRAPHIC LOG	WEATHERING INDEX: SW FR, MW HW, CW	STRENGTH INDEX: R6 R5 R4 R3 R2 R1	POINT LOAD INDEX (psi): R1 30, R2 150, R3 300, R4 600, R5 1500, R6	TEST ORIENTATION	NOTES WATER LEVELS INSTRUMENTATION
192	189.3-201.3 ft. Fresh, thickly laminated, light olive gray (5Y 6/1), interbedded medium and very coarse grained, medium strong, ARGILLACEOUS FOSSILIFEROUS LIMESTONE, (SALEM FORMATION)														
194															
	195.4-195.7 ft. Cross bedded, brecciated			21	98%										
196															
198															
			262.60												
			199.30												16:35 End Core Run 21
200															
	200.5-201.2 ft. Cross bedded, brecciated														
			260.60 201.20						J,PL,SM,CL						
	201.2-209.2 ft. Fresh, thinly laminated, medium dark gray (N4), very fine grained, weak, CALCAREOUS CLAYSTONE, (WARSAW FORMATION) Brachiopod fossils														201.9-202.5 ft. GTS-1 collected for perm. testing at laboratory
202															
				22	99%										
204															
	205.1-207.2 ft. Medium gray (N5), fine to medium grained														
206									J,I,R,CL						
	207.1-207.2 ft. Brecciated														
	207.3-End of Borehole Olive gray (5Y 4/1), medium strong								J,PL,SM,CL						
208															

DEPTH SCALE: 1:2
DRILLING CONTRACTOR: LAYNE-WESTERN
DRILLER: D. MAHURIN

LOGGED: M. HIRT
CHECKED: R. BOOTH
DATE: 3/29/95

Golder Associates

RECORD OF DRILLHOLE PZ-106-KS

Sheet 13 of 23

PROJECT: LAIDLAW/RI-FS
PROJECT NO: 943-2848
LOCATION: BRIDGETON, MO

BORING METHOD: NX Core & water
DRILLING DATE: 2/28/95-3/13/95
DRILL RIG: CME 75

DATUM: MSL
COORDINATES N: 106703.9
AZIMUTH: 0

COLLAR ELEV: 481.6
E: 515432.1
INCLINATION: -90

J-Joint, F-Fault, S-Shear, B-Bedding, F-Foliation
PL-Planar, C-Curved, U-Undulating, ST-Stepped, I-Irregular
P-Polished, K-Slikensided, SM-Smooth, R-Rough, VR-V. Rough
Fe-FeOxide, CL-Clay Infill, CH-Chlorite, H-Healed, GRF-Gravel Filled

DEPTH SCALE (FEET)	ROCK TYPE DESCRIPTION	GRAPHIC LOG	ELEV / DEPTH (FT)	RUN NO.	CORE RECOVERY	RQD	FRACTURES PER FOOT	DISCONTINUITY DATA: DIP wrt CORE AXIS	DISCONTINUITY DATA: TYPE AND SURFACE DESCRIPTION	GRAPHIC LOG	WEATHERING INDEX (SW FR, MW HW, CW)	STRENGTH INDEX (R6 R5 R4 R3 R2 R1)	POINT LOAD INDEX (psi) (R1 R2 R3 R4 R5 R6)	TEST ORIENTATION	NOTES WATER LEVELS INSTRUMENTATION
208	201.2-209.2 ft. Fresh, thinly laminated, medium dark gray (N4), very fine grained, weak, CALCAREOUS CLAYSTONE, (WARSAW FORMATION) 252.60		252.50	22	99%										17:35 End Core Run 22
	Brachiopod fossils 209.20		209.30												
210	209.2-225.4 ft. Fresh, medium bedded, olive gray (5Y 4/1), very coarse grained, medium strong, FOSSILIFEROUS LIMESTONE, (WARSAW FORMATION)								J,PL,SM						3/11/95 @ 10:15 Begin coring Run 23 after installing 6 in. dia. casing to 204 ft.
212	212.2-213.7 ft. Slightly weathered, porous/vuggy, calcareous Dolomite, some fossils								B,PL,SM						
									J,I,SM (2)						
214				23	98%				J,I,SM						
216															
	217.3-218.5 ft. Medium grained														
218															
			242.50												
			219.30												12:30 End Core Run 23
220	220.1-221.9 ft. Medium grained								J,PL,R						
									J,I,R						
222				24	101%										
224															

DEPTH SCALE: 1:2
DRILLING CONTRACTOR: LAYNE-WESTERN
DRILLER: D. MAHURIN

LOGGED: M. HIRT
CHECKED: R. BOOTH
DATE: 3/29/95

Golder Associates

RECORD OF DRILLHOLE PZ-106-KS

PROJECT: LAIDLAW/RI-FS
PROJECT NO: 943-2848
LOCATION: BRIDGETON, MO

BORING METHOD: NX Core & water
DRILLING DATE: 2/28/95-3/13/95
DRILL RIG: CME 75

DATUM: MSL
COORDINATES N: 106703.9
AZIMUTH: 0

COLLAR ELEV: 461.6
E: 515432.1
INCLINATION: -90

J-Joint, F-Fault, S-Shear, B-Bedding, F-Foliation
PL-Planar, C-Curved, U-Undulating, ST-Stepped, I-Irregular
P-Polished, K-Slikensided, SM-Smooth, R-Rough, VR-V. Rough
Fe-FeOxide, CL-Clay Infill, CH-Chlorite, H-Healed, GRF-Gravel Filled

DEPTH SCALE (FEET)	DESCRIPTION	GRAPHIC LOG	ELEV / DEPTH (FT)	RUN NO.	CORE RECOVERY	RQD	FRACTURES PER FOOT	DISCONTINUITY DATA: DIP wrt CORE AXIS	DISCONTINUITY DATA: TYPE AND SURFACE DESCRIPTION	GRAPHIC LOG	WEATHERING INDEX: SW FR, MW HW, CW	STRENGTH INDEX: R0 R5, R1 R4, R2 R3, R3 R2, R4 R1, R5 R0	POINT LOAD INDEX (psi): R1 30, R2 150, R3 300, R4 600, R5 1360	TEST ORIENTATION	NOTES WATER LEVELS INSTRUMENTATION
224	209.2-225.4 ft. Fresh, medium bedded, olive gray (5Y 4/1), very coarse grained, medium strong, FOSSILIFEROUS LIMESTONE, (WARSAW FORMATION)														
	236.40														
	225.4-233.2 ft. 225.40 Fresh, medium bedded, olive gray (5Y 4/1), fine grained, weak, CALCAREOUS CLAYSTONE, (WARSAW FORMATION) Some calcite crystals, fossils 225.4-228.3 ft. Slightly porous/vuggy (<1 mm.)														
226				24	101 %				J,ST,SM,CL						
228															
			232.50												
			229.30												13:55 End Core Run 24 229.6-230.1 ft. GTS-2 collected for perm. testing at laboratory
230															
232									J,I,SM,CL						
	226.60														
	233.2-251.3 ft. 233.20 Fresh, medium bedded, olive gray (5Y 4/1), very coarse grained, medium strong, FOSSILIFEROUS LIMESTONE, (WARSAW FORMATION) Stylolitic, some calcite crystals								J,PL,SM						
234				25	98%										
236	235.9-238.3 ft. Slightly weathered								J,I,R						
238															
	239.0-240.0 ft. Slightly weathered		222.50						J,I,R						
			239.30						J,I,R						14:50 End Core Run 25
				26	100 %				J,I,R						
240															

DEPTH SCALE: 1:2
DRILLING CONTRACTOR: LAYNE-WESTERN
DRILLER: D. MAHURIN

LOGGED: M. HIRT
CHECKED: R. BOOTH
DATE: 3/29/95

Golder Associates

RECORD OF DRILLHOLE PZ-106-KS

PROJECT: LAIDLAW/RI-FS
PROJECT NO: 943-2848
LOCATION: BRIDGETON, MO

BORING METHOD: NX Core & water
DRILLING DATE: 2/28/95-3/13/95
DRILL RIG: CME 75

DATUM: MSL
COORDINATES N: 106703.9
AZIMUTH: 0

COLLAR ELEV: 481.6
E: 515432.1
INCLINATION: -90

J-Joint, F-Fault, S-Shear, B-Bedding, F-Foliation
PL-Planar, C-Curved, U-Undulating, ST-Stepped, I-Irregular
P-Polished, K-Slikensided, SM-Smooth, R-Rough, VR-V. Rough
Fe-FeOxide, CL-Clay Infill, CH-Chlorite, H-Healed, GRF-Gravel Filled

DEPTH SCALE (FEET)	DESCRIPTION	GRAPHIC LOG	ELEV / DEPTH (FT)	RUN NO.	CORE RECOVERY	RQD	FRACTURES PER FOOT	DISCONTINUITY DATA: DIP w/t CORE AXIS	DISCONTINUITY DATA: TYPE AND SURFACE DESCRIPTION	GRAPHIC LOG	WEATHERING INDEX: SW FR, MW MW, HW CW	STRENGTH INDEX: R6 R5 R4 R3 R2 R1	POINT LOAD INDEX (psi): R1 30, R2 150, R3 300, R4 600, R5 1500, R6	TEST ORIENTATION	NOTES WATER LEVELS INSTRUMENTATION
240	233.2-251.3 ft. Fresh, medium bedded, olive gray (5Y 4/1), very coarse grained, medium strong, FOSSILIFEROUS LIMESTONE, (WARSAW FORMATION) Stylolitic, some calcite crystals							90	J,I,R						
242															
244				26	100%										
246	246.3-246.5 ft. Fine grained, Dolomitic Limestone														
248			212.50												
			249.30												15:40 End Core Run 26
250	250.3-251.3 ft. Medium grained							90	J,I,R						
			210.50					90	J,I,R						
			251.30					90	J,I,R						
252	251.3-257.7 ft. Slightly weathered, medium bedded, olive gray (5Y 4/1), fine grained, weak, CALCAREOUS CLAYSTONE, (WARSAW FORMATION) Porous/vuggy (<1 mm.)			27	98%			90	J,PL,SM,CL (2)						
254															
256															

DEPTH SCALE: 1:2
DRILLING CONTRACTOR: LAYNE-WESTERN
DRILLER: D. MAHURIN

LOGGED: M. HIRT
CHECKED: R. BOOTH
DATE: 3/29/95

Golder Associates

RECORD OF DRILLHOLE PZ-106-KS

Sheet 18 of 23

PROJECT: LAIDLAW/RI-FS
PROJECT NO: 943-2848
LOCATION: BRIDGETON, MO

BORING METHOD: NX Core & water
DRILLING DATE: 2/28/95-3/13/95
DRILL RIG: CME 75

DATUM: MSL
COORDINATES N: 106703.9
AZIMUTH: 0

COLLAR ELEV: 461.8
E: 515432.1
INCLINATION: -90

J-Joint, F-Fault, S-Shear, B-Bedding, F-Foliation
PL-Planar, C-Curved, U-Undulating, ST-Stepped, I-Irregular
P-Polished, K-Slickensided, SM-Smooth, R-Rough, VR-V. Rough
Fe-FeOxide, CL-Clay Infill, CH-Chlorite, H-Healed, GRF-Gravel Filled

DEPTH SCALE (FEET)	DESCRIPTION	GRAPHIC LOG	ELEV / DEPTH (FT)	RUN NO.	CORE RECOVERY	RQD	FRACTURES PER FOOT	DISCONTINUITY DATA: DIP wrt CORE AXIS	DISCONTINUITY DATA: TYPE AND SURFACE DESCRIPTION	GRAPHIC LOG	WEATHERING INDEX	STRENGTH INDEX	POINT LOAD INDEX (psi)	TEST ORIENTATION	NOTES WATER LEVELS INSTRUMENTATION
256	251.3-257.7 ft. Slightly weathered, medium bedded, olive gray (5Y 4/1), fine grained, weak, CALCAREOUS CLAYSTONE, (WARSAW FORMATION) Porous/vuggy (<1 mm.)								J,PL,SM						
	204.10														
	257.7-259.7 ft. 257.70 Fresh, medium bedded, olive gray (5Y 4/1), medium grained, medium strong, FOSSILIFEROUS LIMESTONE, (WARSAW FORMATION)			27	98%				J,PL,SM,CL						
			202.50												
	202.10		259.30												16:25 End Core Run 27
260	259.7-263.7 ft. 259.70 Fresh, medium bedded, olive gray (5Y 4/1), fine grained, weak, CALCAREOUS CLAYSTONE, (WARSAW FORMATION)								B,I,SM,CL						
262	261.8-262.3 ft. Calcite crystals, some large vugs (>10 mm.)								J,PL,SM						
									J,I,SM brecciated						
	263.5-163.7 ft. Highly weathered								B,I,SM (4)						
	198.10														
264	263.7-269.3 ft. 263.70 Fresh, medium bedded, olive gray (5Y 4/1), coarse grained, strong, FOSSILIFEROUS LIMESTONE, (WARSAW FORMATION)			28	98%				J,I,SM,CL						
266	266.3-266.4 ft. Claystone								J,I,SM,CL						
268	268.3-269.3 ft. Calcareous claystone								J,I,SM,CL J,PL,SM						
	192.50		192.50												
	269.3-284.2 ft. 269.30 Fresh, medium bedded, medium dark gray (N4), very fine grained, very weak, CLAYSTONE, (WARSAW FORMATION) Some calcite crystals		269.30						J,PL,SM						17:15 End Core Run 28
270				29	96%										
	271.3-271.7 ft. Slightly wethered, porous								J,PL,SM (2)						
272															

DEPTH SCALE: 1:2
DRILLING CONTRACTOR: LAYNE-WESTERN
DRILLER: D. MAHURIN

LOGGED: M. HIRT
CHECKED: R. BOOTH
DATE: 3/29/95

Golder Associates

RECORD OF DRILLHOLE PZ-106-KS

Sheet 17 of 23

PROJECT: LAIDLAW/RI-FS
PROJECT NO: 943-2848
LOCATION: BRIDGETON, MO

BORING METHOD: NX Core & water
DRILLING DATE: 2/28/95-3/13/95
DRILL RIG: CME 75

DATUM: MSL
COORDINATES N: 106703.9
AZIMUTH: 0

COLLAR ELEV: 481.8
E: 515432.1
INCLINATION: -90

J-Joint, F-Fault, S-Shear, B-Bedding, F-Foliation
PL-Planar, C-Curved, U-Undulating, ST-Stepped, I-Irregular
P-Polished, K-Slickensided, SM-Smooth, R-Rough, VR-V. Rough
Fe-FeOxide, CL-Clay Infil, CH-Chlorite, H-Healed, GRF-Gravel Filled

DEPTH (FEET)	DESCRIPTION	GRAPHIC LOG	ELEV / DEPTH (FT)	RUN NO	CORE RECOVERY	RQD	FRACTURES PER FOOT	DISCONTINUITY DATA: DIP wrt CORE AXIS	DISCONTINUITY DATA: TYPE AND SURFACE DESCRIPTION	GRAPHIC LOG	WEATHERING INDEX	STRENGTH INDEX	POINT LOAD INDEX (psi)	TEST ORIENTATION	NOTES WATER LEVELS INSTRUMENTATION
272	269.3-284.2 ft. Fresh, medium bedded, medium dark gray (N4), very fine grained, very weak, CLAYSTONE, (WARSAW FORMATION) Some calcite crystals			29	96%				J,PL,SM						
274			187.50												
			274.30												8:45 End Core Run 29 Problems coring, drill string very wobbly due to large diameter casing
276	275.1-276.0 ft. Slightly weathered, porous														
278	277.6 ft. Calcite filled vug (3 cm.)			30	103 %										
280															
282	282.7-283.2 ft. Calcareous, weak 283.3-284.1 ft. Slightly weathered, porous														
284			177.60												
	284.2-301.4 ft. Fresh, medium bedded, medium dark gray (N4), fine grained, medium strong, CALCAREOUS CLAYSTONE, (WARSAW FORMATION)		284.20						J,I,SM						10:00 End Core Run 30 Cuttings not coming out with return; flush hole
286				31	100 %				J,PL,SM J,I,SM						
288															

DEPTH SCALE: 1:2
DRILLING CONTRACTOR: LAYNE-WESTERN
DRILLER: D. MAHURIN

LOGGED: M. HIRT
CHECKED: R. BOOTH
DATE: 3/29/95

Golder Associates

RECORD OF DRILLHOLE PZ-106-KS

Sheet 18 of 23

PROJECT: LAIDLAW/RI-FS
PROJECT NO: 943-2848
LOCATION: BRIDGETON, MO

BORING METHOD: NX Core & water
DRILLING DATE: 2/28/95-3/13/95
DRILL RIG: CME 75

DATUM: MSL
COORDINATES N: 106703.9
AZIMUTH: 0

COLLAR ELEV: 461.8
E: 515432.1
INCLINATION: -90

J-Joint, F-Fault, S-Shear, B-Bedding, F-Foliation
PL-Planar, C-Curved, U-Undulating, ST-Stepped, I-Irregular
P-Polished, K-Slickensided, SM-Smooth, R-Rough, VR-V. Rough
Fe-FeOxide, CL-Clay Infill, CH-Chlorite, H-Healed, GRF-Gravel Filled

DEPTH SCALE (FEET)	DESCRIPTION	GRAPHIC LOG	ELEV / DEPTH (FT)	RUN NO.	CORE RECOVERY	RQD	FRACTURES PER FOOT	DISCONTINUITY DATA: DIP wrt CORE AXIS	DISCONTINUITY DATA: TYPE AND SURFACE DESCRIPTION	GRAPHIC LOG	WEATHERING INDEX: SW FR, MW, HW, CW	STRENGTH INDEX: R6, R5, R4, R3, R2, R1	POINT LOAD INDEX (psi): R1 30, R2 150, R3 300, R4 600, R5 1500, R6	TEST ORIENTATION	NOTES WATER LEVELS INSTRUMENTATION
288	284.2-301.4 ft. Fresh, medium bedded, medium dark gray (N4), fine grained, medium strong, CALCAREOUS CLAYSTONE, (WARSAW FORMATION)		172.60	31	100%										
	289.2-290.6 ft. Dolomite		289.20												12:00 End Core Run 31
290															
292									J,I,SM J,I,SM,CL						
294	293.4-295.6 ft. Dolomite			32	99%										
296															
298															
			162.60												13:50 End Core Run 32
300			299.20												
	160.40														
	301.4-346.4 ft. Fresh, thinly bedded, medium dark gray (N4), m-vc grained, medium strong, LIMESTONE, (WARSAW FORMATION) Some Claystone partings	301.40		33	100%										
302	302.6-304.3 ft. Dolomitic Claystone, some fossils														
304															

DEPTH SCALE: 1:2
DRILLING CONTRACTOR: LAYNE-WESTERN
DRILLER: D. MAHURIN

LOGGED: M. HIRT
CHECKED: R. BOOTH
DATE: 3/29/95

Golder Associates

RECORD OF DRILLHOLE PZ-106-KS

PROJECT: LAIDLAW/RI-FS
PROJECT NO: 943-2848
LOCATION: BRIDGETON, MO

BORING METHOD: NX Core & water
DRILLING DATE: 2/26/95-3/13/95
DRILL RIG: CME 75

DATUM: MSL
COORDINATES N: 106703.9
AZIMUTH: 0

COLLAR ELEV: 461.8
E: 515432.1
INCLINATION: -90

J-Joint, F-Fault, S-Shear, B-Bedding, F-Foliation
PL-Planar, C-Curved, U-Undulating, ST-Stepped, I-Irregular
P-Polished, K-Slickensided, SM-Smooth, R-Rough, VR-V. Rough
Fe-FeOxide, CL-Clay Infill, CH-Chlorite, H-Healed, GRF-Gravel Filled

DEPTH SCALE (FEET)	DESCRIPTION	GRAPHIC LOG	ELEV / DEPTH (FT)	RUN NO.	CORE RECOVERY	RQD	FRACTURES PER FOOT	DISCONTINUITY DATA: DIP wrt CORE AXIS	DISCONTINUITY DATA: TYPE AND SURFACE DESCRIPTION	DISCONTINUITY DATA: GRAPHIC LOG	WEATHERING INDEX	STRENGTH INDEX	POINT LOAD INDEX (psi)	TEST ORIENTATION	NOTES WATER LEVELS INSTRUMENTATION
304	301.4-346.4 ft. Fresh, thinly bedded, medium dark gray (N4), m-vc grained, medium strong, LIMESTONE, (WARSAW FORMATION) Some Claystone partings		157.80 / 304.20	33	100 %										14:15 End Core Run 33
306															
308	307.9 ft. Calcite filled vug (3 cm.)														
				34	99%										
310															
312															
314			147.80 / 314.20												14:50 End Core Run 34
	315.5 ft. Chert zone														
316	316.2 ft. Chert zone														
				35	100 %										
318									J,U,SM,CL						
320															

DEPTH SCALE: 1:2
DRILLING CONTRACTOR: LAYNE-WESTERN
DRILLER: D. MAHURIN

LOGGED: M. HIRT
CHECKED: R. BOOTH
DATE: 3/29/95

Golder Associates

RECORD OF DRILLHOLE PZ-106-KS

Sheet 20 of 23

PROJECT: LAIDLAW/R-FS
PROJECT NO: 943-2848
LOCATION: BRIDGETON, MO

BORING METHOD: NX Core & water
DRILLING DATE: 2/28/95-3/13/95
DRILL RIG: CME 75

DATUM: MSL
COORDINATES N: 106703.9
AZIMUTH: 0

COLLAR ELEV: 461.8
E: 515432.1
INCLINATION: -90

J-Joint, F-Fault, S-Shear, B-Bedding, F-Foliation
PL-Planar, C-Curved, U-Undulating, ST-Stepped, I-Irregular
P-Polished, K-Slikensided, SM-Smooth, R-Rough, VR-V. Rough
Fe-FeOxide, CL-Clay Infill, CH-Chlorite, H-Healed, GRF-Gravel Filled

DEPTH SCALE (FEET)	DESCRIPTION	GRAPHIC LOG	ELEV / DEPTH (FT)	RUN NO.	CORE RECOVERY	RQD	FRACTURES PER FOOT	DISCONTINUITY DATA: DIP wrt CORE AXIS	DISCONTINUITY DATA: TYPE AND SURFACE DESCRIPTION	GRAPHIC LOG	WEATHERING INDEX: SW FR, MW, HW, CW	STRENGTH INDEX: R6, R5, R4, R3, R2, R1	POINT LOAD INDEX (psi): RT 30, R2 150, R3 300, R4 600, R5 1500, R6	TEST ORIENTATION	NOTES WATER LEVELS INSTRUMENTATION
320	301.4-346.4 ft. Fresh, thinly bedded, medium dark gray (N4), m-vc grained, medium strong, LIMESTONE. (WARSAW FORMATION) Some Claystone partings														
322				35	100 %										
	323.2-323.3 ft. Chert zone														
324			137.60 / 324.20												15:45 End Core Run 35
	324.8 ft. Chert zone														
	325.3, 325.8, and 326.3 ft. Chert zones														
326															
	327.4 ft. Chert zone														
328															
	328.5 ft. Chert zone														
	329.1 ft. Chert zone			36	99%										
	329.6-329.9 ft. Chert zone														
330															
332															
	333.4 ft. Chert zone								J,I,SM,CL						
334			127.60						J,I,SM						
			334.20												16:40 End Core Run 36
				37	100 %										
336	335.8 ft. Chert zone														

DEPTH SCALE: 1:2
DRILLING CONTRACTOR: LAYNE-WESTERN
DRILLER: D. MAHURIN

LOGGED: M. HIRT
CHECKED: R. BOOTH
DATE: 3/29/95

Golder Associates

RECORD OF DRILLHOLE PZ-106-KS

PROJECT: LAIDLAW/RI-FS
PROJECT NO: 943-2848
LOCATION: BRIDGETON, MO

BORING METHOD: NX Core & water
DRILLING DATE: 2/28/95-3/13/95
DRILL RIG: CME 75

DATUM: MSL
COORDINATES N: 106703.9
AZIMUTH: 0

COLLAR ELEV: 481.8
E: 515432.1
INCLINATION: -90

J-Joint, F-Fault, S-Shear, B-Bedding, F-Foliation
PL-Planar, C-Curved, U-Undulating, ST-Stepped, I-Irregular
P-Polished, K-Slickensided, SM-Smooth, R-Rough, VR-V. Rough
Fe-FeOxide, CL-Clay Infill, CH-Chlorite, H-Healed, GRF-Gravel Filled

DEPTH (FEET)	DESCRIPTION	GRAPHIC LOG	ELEV / DEPTH (FT)	RUN NO.	CORE RECOVERY	RQD	FRACTURES PER FOOT	DISCONTINUITY DATA: DIP w/r CORE AXIS	DISCONTINUITY DATA: TYPE AND SURFACE DESCRIPTION	GRAPHIC LOG	WEATHERING INDEX (SW FR, MW, HW, CW)	STRENGTH INDEX (R6, R5, R4, R3, R2, R1)	POINT LOAD INDEX (psi) (R1 30, R2 150, R3 300, R4 600, R5 1500, R6)	TEST ORIENTATION	NOTES WATER LEVELS INSTRUMENTATION
338	301.4-346.4 ft. Fresh, thinly bedded, medium dark gray (N4), m-vc grained, medium strong, LIMESTONE, (WARSAW FORMATION) Some Claystone partings														
	336.6-346.4 ft. No more claystone partings														
	336.9 ft. Chert zone														
338	337.9-339.2 ft. Chert zone							40	J,I,R calcite crystals						
340	339.9 ft. Chert zone			37	100 %										
	340.9-341.3 ft. Chert zone														
342	342.0-342.2 ft. Chert zone							80	J,I,SM,chert						
	342.3-343.5 ft. Chert zone														
	343.8 ft. Chert zone							80	J,I,SM						
344			117.60					90	J,I,SM						8:30 End Core Run 37
			344.20												
	344.6 ft. Chert zone														
								80	J,I,R,fossils						
346															
	115.40														
	346.4-363.6 ft. 348.40 Slightly weathered, thinly to medium bedded, light gray (N7), medium grained, medium strong, CALCAREOUS DOLOMITE, (KEOKUK FORMATION) Interbedded with chert zones and nodules; porous/vuggy; some filled with calcite crystals; some calcite veins							80	J,I,R,chert						
348				38	98%										
350								80	J,I,SM						
352								80	J,I,SM,chert						

DEPTH SCALE: 1:2
DRILLING CONTRACTOR: LAYNE-WESTERN
DRILLER: D. MAHURIN

LOGGED: M. HIRT
CHECKED: R. BOOTH
DATE: 3/29/95

Golder Associates

RECORD OF DRILLHOLE PZ-106-KS

Sheet 22 of 23

PROJECT: LAIDLAW/RI-FS
PROJECT NO: 943-2848
LOCATION: BRIDGETON, MO

BORING METHOD: NX Core & water
DRILLING DATE: 2/28/95-3/13/95
DRILL RIG: CME 75

DATUM: MSL
COORDINATES N: 106703.9
AZIMUTH: 0

COLLAR ELEV: 481.8
E: 515432.1
INCLINATION: -90

J-Joint, F-Fault, S-Shear, B-Bedding, F-Foliation
PL-Planar, C-Curved, U-Undulating, ST-Stepped, I-Irregular
P-Polished, K-Slickensided, SM-Smooth, R-Rough, VR-V. Rough
Fe-FeOxide, CL-Clay Infill, CH-Chlorite, H-Healed, GRF-Gravel Filled

DEPTH (FEET)	DESCRIPTION	GRAPHIC LOG	ELEV / DEPTH (FT)	RUN NO.	CORE RECOVERY	RQD	FRACTURES PER FOOT	DISCONTINUITY DATA: DIP wrt CORE AXIS	DISCONTINUITY DATA: TYPE AND SURFACE DESCRIPTION	GRAPHIC LOG	WEATHERING INDEX	STRENGTH INDEX	POINT LOAD INDEX (psi)	TEST ORIENTATION	NOTES WATER LEVELS INSTRUMENTATION
352	346.4-363.6 ft. Slightly weathered, thinly to medium bedded, light gray (N7), medium grained, medium strong, CALCAREOUS DOLOMITE (KEOKUK FORMATION) interbedded with chert zones and nodules; porous/vuggy: some filled with calcite crystals; some calcite veins			38	98%				J,I,R						
354			107.60 / 354.20						J,I,SM J,I,R						9:30 End Core Run 38
356									J,I,R						
358	358.0-361.1 ft. Moderately weathered, very vuggy								J,I,R J,I,R calcite crystals J,I,R						
				39	95%										
360															Drilling rate much slower due to presence of chert
362									J,I,R (2)						
									J,PL,R (2)						
	98.80 / 363.00		98.40 / 363.40						Core Loss						362.9-363.4 ft. Core loss 11:00 End Core Run 39
364	363.6-370.1 ft. Slightly weathered, thinly bedded, light gray (N7), m-vc grained, medium strong, DOLOMITIC LIMESTONE, (KEOKUK FORMATION) Slightly vuggy, some chert nodules								J,I,R (3)						
									J,I,SM						
366				40	100 %				J,I,R						
368															

DEPTH SCALE: 1:2
DRILLING CONTRACTOR: LAYNE-WESTERN
DRILLER: D. MAHURIN

LOGGED: M. HIRT
CHECKED: R. BOOTH
DATE: 3/29/95

Golder Associates

RECORD OF DRILLHOLE PZ-106-KS

PROJECT: LAIDLAW/RI-FS
PROJECT NO: 943-2848
LOCATION: BRIDGETON, MO

BORING METHOD: NX Core & water
DRILLING DATE: 2/28/95-3/13/95
DRILL RIG: CME 75

DATUM: MSL
COORDINATES N: 106703.9
AZIMUTH: 0

COLLAR ELEV: 481.8
E: 515432.1
INCLINATION: -90

J-Joint, F-Fault, S-Shear, B-Bedding, F-Foliation
PL-Planar, C-Curved, U-Undulating, ST-Stepped, I-Irregular
P-Polished, K-Slickensided, SM-Smooth, R-Rough, VR-V. Rough
Fe-FeOxide, CL-Clay Infill, CH-Chlorite, H-Healed, GRF-Gravel Filled

DEPTH SCALE (FEET)	ROCK TYPE DESCRIPTION	GRAPHIC LOG	ELEV / DEPTH (FT)	RUN NO.	CORE RECOVERY	RQD	FRACTURES PER FOOT	DISCONTINUITY DATA: DIP wrt CORE AXIS	DISCONTINUITY DATA: TYPE AND SURFACE DESCRIPTION	DISCONTINUITY DATA: GRAPHIC LOG	WEATHERING INDEX	STRENGTH INDEX	POINT LOAD INDEX (psi)	TEST ORIENTATION	NOTES WATER LEVELS INSTRUMENTATION
368	363.6-370.1 ft. Slightly weathered, thinly bedded, light gray (N7), m-vc grained, medium strong, DOLOMITIC LIMESTONE, (KEOKUK FORMATION) Slightly vuggy, some chert nodules								J,I,SM,chert		SW FR / MW HW / CW	R5 R6 / R4 / R3 / R2 R1	R1 30 / R2 150 / R3 300 / R4 600 / R5 1500 / R6		
370	369.4-370.1 ft. Chert layer 91.70 / 370.10								J,PL,SM						
	370.1-373.4 ft. Moderately weathered, medium bedded, medium light gray (N6), fine grained, medium strong, DOLOMITE, (KEOKUK FORMATION) Porous/vuggy, some chert nodules and calcite crystals			40	100 %										
372									J,I,SM (2)						3/13/95 @ 12:05 Core Run 40
	88.40		88.40						J,I,SM						
	End of Record of Drillhole at 373.4 ft. 373.40		373.40						J,I,SM						
374															
376															
378															
380															
382															
384															

DEPTH SCALE: 1:2
DRILLING CONTRACTOR: LAYNE-WESTERN
DRILLER: D. MAHURIN

LOGGED: M. HIRT
CHECKED: R. BOOTH
DATE: 3/29/95

Golder Associates

Well No. PZ-106-KS

Boring No. X-Ref: PZ-106-KS

PIEZOMETER CONSTRUCTION SUMMARY

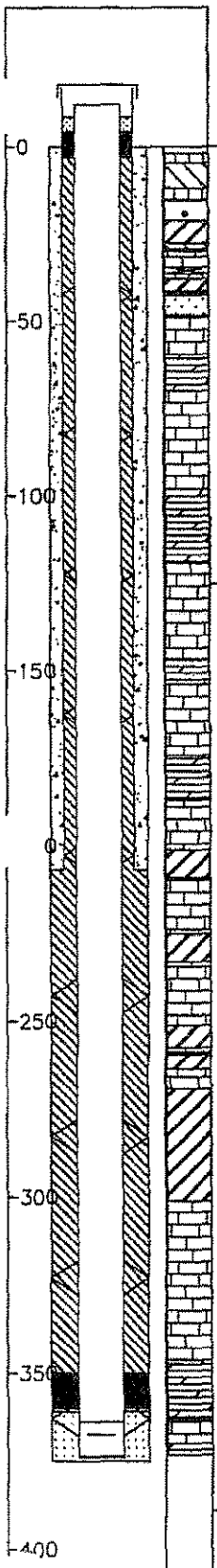

Not to Scale

Survey Coords: Northing: 1066704 ft. Easting: 515432 ft.

Elevation Ground Level 461.8 ft. NGVD

Top of PVC Casing 464.26 ft. NGVD

Drilling Summary:

Total Depth 375.0 ft.

Borehole Diameter 9 7/8 in. (0.0-204.0 ft.) 5 7/8 in. (204.0-375.0 ft.)

Casing Stickup Height 2.49 ft.

Driller Layne-Western St. Louis, MO

Rig CME 75, Schramm Portadrill T660H

Bit(s) 6 1/4 in. ID Hollow Stem Auger Bit, NX Core, 5 7/8 in. and 9 7/8 in. Button Bits

Drilling Fluid Auger-None, NX Core Water, Air Rotary

Protective Casing 8x8 in. Square Steel, by 5 ft. long

Construction Time log:

Task	Start Date	Start Time	Finish Date	Finish Time
Drilling				
CME 75	2/28/95	10:30	3/6/95	17:30
Schramm Rotary	3/20/95	7:30	3/20/95	11:30
Geophys.Logging:	3/20/95	12:45	3/20/95	16:30
Casing:				
2" PVC	3/23/95	8:30	3/23/95	9:40
6" Steel	3/9/95	11:45	3/10/95	8:00
Filter Placement:	3/23/95	9:40	3/23/95	10:45
Cementing:	3/9/95	14:15	3/9/95	9:00
Development				
Bentonite Grout	3/23/95	11:15	3/23/95	13:15
Bentonite Seal	3/23/95	10:45	3/23/95	11:15

Well Design & Specifications

Basis: Geologic Log X Geophysical Log X

Casing string(s): C = Casing S = Screen

Depth			String(s)	Elevation		
+ 2.49	-	363.75	C1	464.26	-	98.02
363.75	-	373.57	S1	98.02	-	88.20
373.57	-	373.90	C2	88.20	-	87.87
+ 1.50	-	204.00	C3	463.30	-	257.77
	-				-	
	-				-	

Casing: C1 2 in. dia. Schedule 80 PVC, flush threaded with O-rings

C2 2 in. dia. threaded PVC end cap (4 in. long or 0.33 ft.) (C3-see comments)

Screen: S1 2 in. dia. Schedule 80 PVC, 0.010 in. machine cut slot, flush threaded with O-rings

Sand Pack: 16-35 mesh Silica Sand, 361.0-375.0 ft.

Filter Pack: Less than 50 mesh Silica Sand, 360.0-361.0 ft.

Grout Seal: Wyo-Ben Grout Well Bentonite Slurry, 3.0-350.0 ft., Neat cement, 3.0-204.0 ft.

Bentonite Seal: Extra high yield Wyo-Ben (100%) Slurry, 350.0-360.0 ft.

Concrete: 0.0-3.0 ft.

Well Development

Stabilization Test Data:

Time	pH	Spec. Cond.	Temp (°C)

Recovery Data:

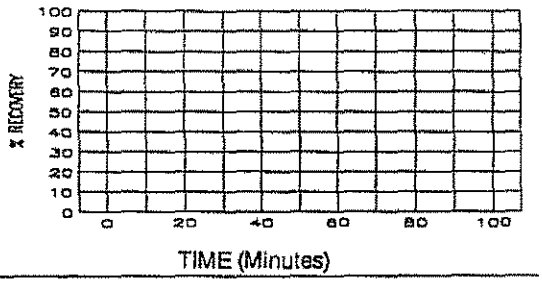

Comments: Surface Casing C3: 6 1/8 in. ID / 6 5/8 OD Steel Casing

Supervised by B. Tilton

Job Number 943-2848

Site LAIDLAW/OU2 RI-FS/MO

File Name PZ106KS

MISSOURI DEPARTMENT OF NATURAL RESOURCES
DIVISION OF GEOLOGY AND LAND SURVEY

MONITORING WELL CERTIFICATION RECORD

OFFICE USE ONLY	
REF NO 115092	DATE RECEIVED
ROUTE	CHECK NO.
STATE WELL NUMBER	TRANSMITTAL NO.
CHECKED BY	CROSS REFERENCE NO
APPROVED BY	ENTERED Ph 1 Ph 2 Ph 3
	DATE APPROVED

INFORMATION SUPPLIED BY OWNER

SITE NAME	WELL NUMBER
LAIDLAW BRIDGETON SANITARY LANDFILL	PZ-106-KS

SITE ADDRESS	CITY	STATE	ZIP CODE
ST. CHARLES ROCK RD.	BRIDGETON	MO	63044

NAME	TELEPHONE
LAIDLAW WASTE SYSTEMS, INC.	314-241-3710

ADDRESS	CITY	STATE	ZIP CODE
1838 N. BROADWAY	ST. LOUIS	MO	63102

INFORMATION SUPPLIED BY MONITORING WELL CONTRACTOR

LOCATION OF WELL SHOW LOCATION IN SECTION PLAT

COUNTY ST. LOUIS
ELEVATION 461.8
AREA NO.

SMALLEST ¼ ____ ¼ ____ ¼ ____ ¼ LARGEST ¼

SEC. ____ TWN. 47 N.RNG. 5 (E) OR W

LAT. 38 ° 45 ' 47 " LONG. 90 ° 26 ' 45 "

SKETCH THE LOCATION TO THE WELL INCLUDING MILEAGE ON ALL ROADS TRAVELED FROM NEAREST TOWNS OR HIGHWAYS

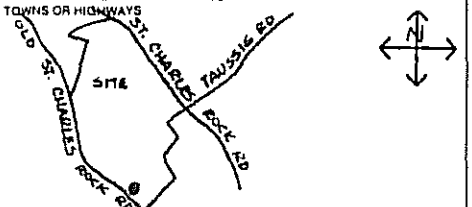

DESCRIBE LOCATION OF THE WELL SO WE WOULD BE ABLE TO VISIT IT

MONITORING WELL INSTALLATION CONTRACTOR'S NAME

LAYNE WESTERN CO., INC.

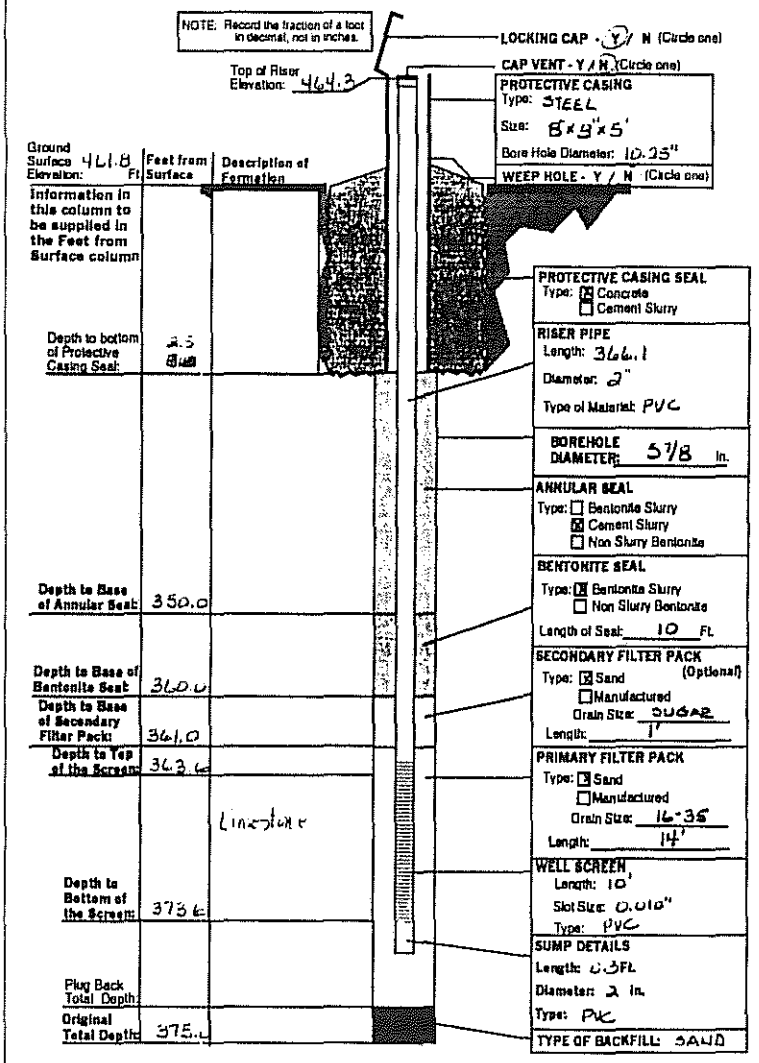

DRILLING CONTRACTOR'S NAME

LAYNE WESTERN CO., INC.

TYPE OF INSTALLATION
☒ ABOVE GROUND ☐ FLUSH MOUNT

STATIC WATER LEVEL
FEET FROM MEASURING POINT

DATE OF STATIC WATER LEVEL

ELEVATION OF MEASURING POINT
464.26

MEASURING POINT IS
☒ TOP OF RISER PIPE
☐ OTHER

DRILLING EQUIPMENT
☒ AIR ROTARY ☒ AUGER TYPE 6¼" H.S.A.
☐ REVERSE ROTARY ☐ OTHER

CENTRALIZERS USED
☒ YES, AT 10 TOTAL
☒ STAINLESS STEEL
☐ OTHER
☐ NO

MULTIPLE CASED WELLS

SUBMIT ADDITIONAL AS BUILT DIAGRAM SHOWING WELL CONSTRUCTION DETAILS INCLUDING TYPE AND SIZE OF ALL CASING, HOLE DIAMETERS, AND GROUT USED.

DATE WELL CONSTRUCTION WAS COMPLETED
3-23-95

I HEREBY CERTIFY THAT THE MONITORING WELL HEREIN DESCRIBED WAS CONSTRUCTED IN ACCORDANCE WITH THE DEPARTMENT OF NATURAL RESOURCES REQUIREMENTS FOR THE CONSTRUCTION OF MONITORING WELLS.

SIGNATURE (MONITORING WELL CONTRACTOR) Michael P. Vogl

PERMIT NUMBER	DATE
001256WMM	5-10-95

SIGNATURE (DRILLING CONTRACTOR) Michael P. Vogl

PERMIT NUMBER	DATE
001256WMM	5-10-95

MO 780-1415 (2-94) DISTRIBUTION: WHITE DIVISION CANARY MONITORING WELL CONTRACTOR PINK OWNER

RECORD OF DRILLHOLE PZ-106-SD

Sheet 1 of 2

PROJECT: LAIDLAW/RI-FS
PROJECT NO: 943-2848
LOCATION: BRIDGETON, MO

BORING METHOD: NX Core & water
DRILLING DATE: 3/24/95
DRILL RIG: SCRAMM

DATUM: MSL
COORDINATES N: 1066715.1
AZIMUTH: 0

COLLAR ELEV: 461.5
E: 515418.0
INCLINATION: -90

ROCK TYPE

J-Joint, F-Fault, S-Shear, B-Bedding, F-Foliation
PL-Planar, C-Curved, U-Undulating, ST-Stepped, I-Irregular
P-Polished, K-Slikensided, SM-Smooth, R-Rough, VR-V. Rough
Fe-FeOxide, CL-Clay Infill, CH-Chlorite, H-Healed, GRF-Gravel Filled

DEPTH (FEET)	DESCRIPTION	GRAPHIC LOG	ELEV / DEPTH (FT)	RUN NO.	CORE RECOVERY	RQD (80, 60, 40, 20)	FRACTURES PER FOOT (2, 4, 6, 8, 10)	DISCONTINUITY DATA: DIP wrt CORE AXIS (0, 30, 60, 90)	DISCONTINUITY DATA: TYPE AND SURFACE DESCRIPTION	DISCONTINUITY DATA: GRAPHIC LOG	WEATHERING INDEX (SW FR, MW, HW, CW)	STRENGTH INDEX (R6, R5, R4, R3, R2, R1)	POINT LOAD INDEX (psi) (R1 30, R2 150, R3 300, R4 600, R5 1500, R6)	TEST ORIENTATION	NOTES WATER LEVELS INSTRUMENTATION
178	0.0-189.9 ft. No sampling conducted See Record of Drillhole for PZ-106-KS														0.0-30.0 ft. Drilling conducted with 6 1/4 in. ID hollow stem augers, then borehole advanced to 189.9 ft. with 5 7/8 in. air rotary bit
176															
180															
182															
184															
186															
188															
	271.60		271.60												
190	189.9-199.9 ft. 189.90 Fresh, thinly laminated, light olive gray (5Y 6/1), f-m grained, medium strong, ARENACEOUS LIMESTONE. (SALEM FORMATION) Fossilliferous		189.90	1	99%				J,I,R						3/24/95 @ 11:00 Began coring
192															

DEPTH SCALE: 1:2
DRILLING CONTRACTOR: LAYNE-WESTERN
DRILLER: M. VOGT

LOGGED: B. TILTON
CHECKED: R. BOOTH
DATE: 5/25/95

Golder Associates

RECORD OF DRILLHOLE PZ-106-SD

PROJECT: LAIDLAW/RI-FS
PROJECT NO: 943-2848
LOCATION: BRIDGETON, MO

BORING METHOD: NX Core & water
DRILLING DATE: 3/24/95
DRILL RIG: SCRAMM

DATUM: MSL
COORDINATES N: 1068715.1
AZIMUTH: 0

COLLAR ELEV: 461.5
E: 515416.0
INCLINATION: -90

J-Joint, F-Fault, S-Shear, B-Bedding, F-Foliation
PL-Planar, C-Curved, U-Undulating, ST-Stepped, I-Irregular
P-Polished, K-Slickensided, SM-Smooth, R-Rough, VR-V. Rough
Fe-FeOxide, CL-Clay Infill, CH-Chlorite, H-Healed, GRF-Gravel Filled

DEPTH (FEET)	DESCRIPTION	GRAPHIC LOG	ELEV / DEPTH (FT)	RUN NO.	CORE RECOVERY	RQD	FRACTURES PER FOOT	DISCONTINUITY DATA: DIP wrt CORE AXIS	DISCONTINUITY DATA: TYPE AND SURFACE DESCRIPTION	DISCONTINUITY DATA: GRAPHIC LOG	WEATHERING INDEX (SW FR MW HW CW)	STRENGTH INDEX (R6 R5 R4 R3 R2 R1)	POINT LOAD INDEX (psi) (R1 R2 130 R3 330 R4 600 R5 1500 R6)	TEST ORIENTATION	NOTES WATER LEVELS INSTRUMENTATION
192	189.9-199.9 ft. Fresh, thinly laminated, light olive gray (5Y 6/1), f-m grained, medium strong, ARENACEOUS LIMESTONE, (SALEM FORMATION) Fossiliferous								J,I,SM						
194									J,I,R						
196				1	99%										
198															
	261.60		261.60												3/24/95 @ 13:15 Finish Run 1
200	199.90 End of Record of Drillhole at 208.0 ft.		199.90												
202															
204															
206															
208															

DEPTH SCALE: 1:2
DRILLING CONTRACTOR: LAYNE-WESTERN
DRILLER: M. VOGT

LOGGED: S. TILTON
CHECKED: R. BOOTH
DATE: 5/26/95

Golder Associates

Well No. PZ-106-SD

Boring No. X-Ref: PZ-106-SD

PIEZOMETER CONSTRUCTION SUMMARY

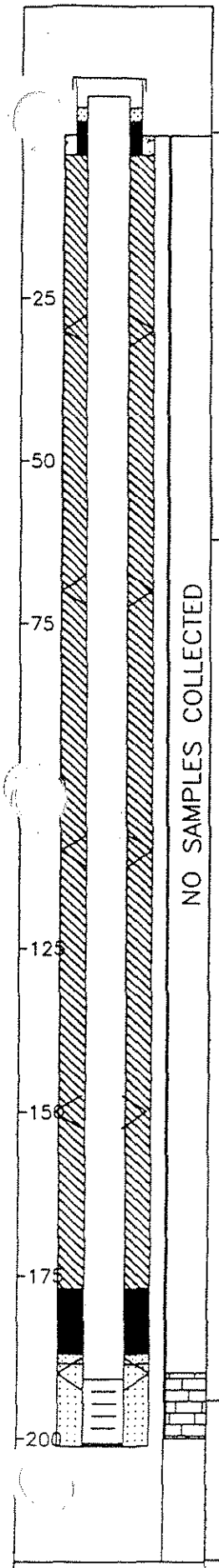

Not to Scale

Survey Coords: Northing: 1066715 ft.
Easting: 515416 ft.

Elevation Ground Level 461.5 ft. NGVD
Top of PVC Casing 463.42 ft. NGVD

Drilling Summary:

Total Depth 201.1 ft.
Borehole Diameter 10 1/4 in. (0.0-26.0 ft.) 5 7/8 in. (26.0-201.1 ft.)
Casing Stickup Height 1.97 ft.
Driller Layne-Western
St. Louis, MO

Rig CME 75, Schramm Portadrill T660H
Bit(s) 6 1/4 in. ID Hollow Stem Auger Bit,
NX Core, 5 7/8 in. Button Bit for Reaming
Drilling Fluid Auger-None, NX Core Water,
Air Rotary
Protective Casing 8x8 in. Square Steel, by 5 ft. long

Construction Time log:

Task	Start Date	Start Time	Finish Date	Finish Time
Drilling				
CME 75				
Schramm Rotary	3/23/95	16:15	3/24/95	13:00
Geophys.Logging:	3/24/95	16:15	3/24/95	18:30
Casing:	3/24/95	12:40	3/24/95	13:00
Filter Placement:	3/24/95	13:10	3/24/95	13:40
Cementing:				
Development				
Bentonite Grout	3/24/95	14:00	3/24/95	14:45
Bentonite Seal	3/24/95	13:40	3/24/95	13:55

Well Design & Specifications

Basis: Geologic Log X Geophysical Log X
Casing string(s): C = Casing S = Screen

Depth			String(s)	Elevation		
+ 1.97	-	190.79	C1	463.42	-	270.68
190.79	-	200.59	S1	270.66	-	260.86
200.59	-	200.93	C2	260.86	-	260.52
	-				-	
	-				-	
	-				-	

Casing: C1 2 in. dia. Schedule 80 PVC, flush threaded with O-rings
C2 2 in. dia. threaded PVC end cap (4 in. long or 0.33 ft.)
Screen: S1 2 in. dia. Schedule 80 PVC, 0.010 in. machine cut slot, flush threaded with O-rings
Sand Pack: 16-35 mesh Silica Sand, 188.5-201.1 ft.
Filter Pack: Less than 50 mesh Silica Sand, 187.0-188.5 ft.
Grout Seal: Wyo-Ben Grout Well Bentonite Slurry, 3.0-177.0 ft.
Bentonite Seal: Extra high yield Wyo-Ben (100%) Slurry, 177.0-187.0 ft.
Concrete: 0.0-3.0 ft.

Well Development

Stabilization Test Data:

Time	pH	Spec. Cond.	Temp (°C)

Recovery Data:

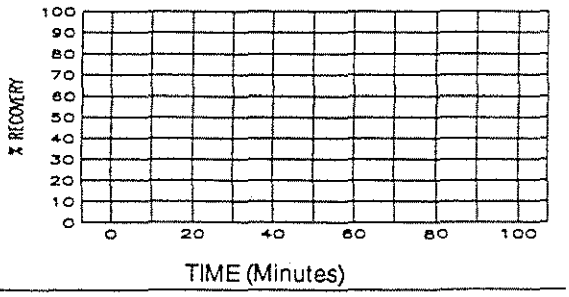

Comments:

Supervised by W. Herst
Job Number 943-2848

Site LAIDLAW/OU2 RI-FS/MO
File Name PZ106SD

MISSOURI DEPARTMENT OF NATURAL RESOURCES
DIVISION OF GEOLOGY AND LAND SURVEY

MONITORING WELL CERTIFICATION RECORD

OFFICE USE ONLY	DATE RECEIVED
REF NO 115091	CHECK NO.
ROUTE	TRANSMITTAL NO.
STATE WELL NUMBER	CROSS REFERENCE NO
CHECKED BY	ENTERED Ph 1 Ph 2 Ph 3
APPROVED BY	DATE APPROVED

INFORMATION SUPPLIED BY OWNER

SITE NAME	WELL NUMBER		
LAIDLAW BRIDGETON SANITARY LANDFILL	PZ-106-SD		
SITE ADDRESS	CITY	STATE	ZIP CODE
St. CHARLES ROCK RD.	BRIDGETON	Mo.	63044
NAME		TELEPHONE	
LAIDLAW WASTE SYSTEMS, INC.		314-341-3710	
ADDRESS	CITY	STATE	ZIP CODE
1838 N. BROADWAY	St. LOUIS	Mo.	63102

INFORMATION SUPPLIED BY MONITORING WELL CONTRACTOR

LOCATION OF WELL SHOW LOCATION IN SECTION PLAT

COUNTY St. LOUIS
ELEVATION 461.4
AREA NO.

SMALLEST ¼ LARGEST ¼

SEC. ____ TWN. 47 N,RNG. 5 (E) OR W

LAT. 38 · 45 · 47 " LONG. 90 · 26 · 46 "

SKETCH THE LOCATION TO THE WELL INCLUDING MILEAGE ON ALL ROADS TRAVELED FROM NEAREST TOWNS OR HIGHWAYS

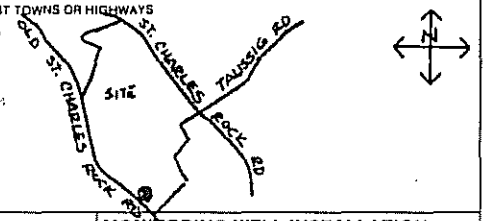

DESCRIBE LOCATION OF THE WELL SO WE WOULD BE ABLE TO VISIT IT

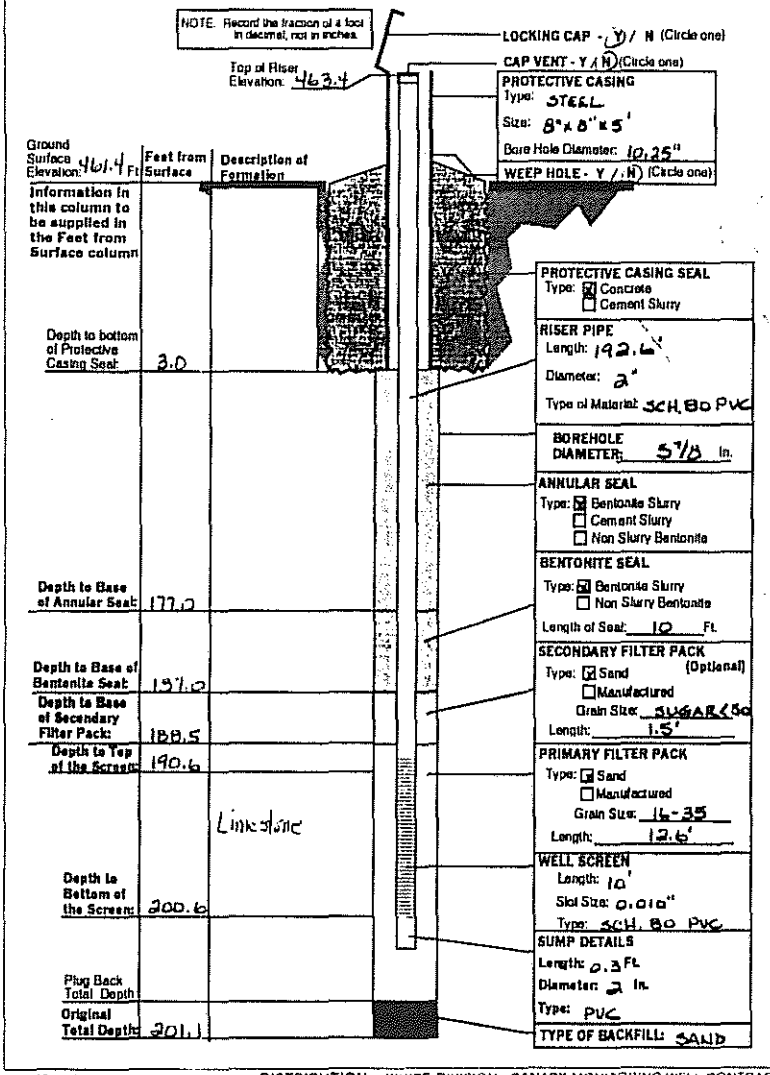

MONITORING WELL INSTALLATION CONTRACTOR'S NAME

LAYNE WESTERN Co., INC.

DRILLING CONTRACTOR'S NAME

LAYNE WESTERN Co, INC.

TYPE OF INSTALLATION
[X] ABOVE GROUND [ ] FLUSH MOUNT

STATIC WATER LEVEL
FEET FROM MEASURING POINT

DATE OF STATIC WATER LEVEL

ELEVATION OF MEASURING POINT
463.42

MEASURING POINT IS
[X] TOP OF RISER PIPE
[ ] OTHER

DRILLING EQUIPMENT
[X] AIR ROTARY [X] AUGER TYPE 6¼ H.S.A.
[ ] REVERSE ROTARY [ ] OTHER

CENTRALIZERS USED
[X] YES, AT 6 TOTAL
[X] STAINLESS STEEL
[ ] OTHER
[ ] NO

MULTIPLE CASED WELLS
SUBMIT ADDITIONAL AS BUILT DIAGRAM SHOWING WELL CONSTRUCTION DETAILS INCLUDING TYPE AND SIZE OF ALL CASING, HOLE DIAMETERS, AND GROUT USED.

DATE WELL CONSTRUCTION WAS COMPLETED
3-26-95

I HEREBY CERTIFY THAT THE MONITORING WELL HEREIN DESCRIBED WAS CONSTRUCTED IN ACCORDANCE WITH THE DEPARTMENT OF NATURAL RESOURCES REQUIREMENTS FOR THE CONSTRUCTION OF MONITORING WELLS.

SIGNATURE (MONITORING WELL CONTRACTOR)		
Michael P. Vogt		
PERMIT NUMBER	DATE	
001256WM	5-10-95	
SIGNATURE (DRILLING CONTRACTOR)		
Michael P. Vogt		
PERMIT NUMBER	DATE	
001256WM	5-10-95	

MO 780-1415 (2-94) DISTRIBUTION: WHITE-DIVISION CANARY-MONITORING WELL CONTRACTOR PINK-OWNER

RECORD OF DRILLHOLE PZ-106-SS

Sheet 1 of 2

PROJECT: LAIDLAW/RI-FS
PROJECT NO: 943-2848
LOCATION: BRIDGETON, MO

BORING METHOD: NX Core & water
DRILLING DATE: 4/4/95 - 4/5/95
DRILL RIG: SCHRAMM

DATUM: MSL
COORDINATES N: 1068728.3
AZIMUTH: 0

COLLAR ELEV: 461.0
E: 515399.9
INCLINATION: -90

J-Joint, F-Fault, S-Shear, B-Bedding, F-Foliation
PL-Planar, C-Curved, U-Undulating, ST-Stepped, I-Irregular
P-Polished, K-Slickensided, SM-Smooth, R-Rough, VR-V. Rough
Fe-FeOxide, CL-Clay Infill, CH-Chlorite, H-Healed

DEPTH (FEET)	DESCRIPTION	GRAPHIC LOG	ELEV / DEPTH (FT)	RUN NO.	CORE RECOVERY	RQD	FRACTURES PER FOOT	DISCONTINUITY DATA: DIP wrt CORE AXIS	DISCONTINUITY DATA: TYPE AND SURFACE DESCRIPTION	GRAPHIC LOG	WEATHERING INDEX (SW FR, MW, HW, CW)	STRENGTH INDEX (R5, R4, R3, R2, R1)	POINT LOAD INDEX (psi) (R1 30, R2 150, R3 300, R4 600, R5 1500, R6)	TEST ORIENTATION	NOTES WATER LEVELS INSTRUMENTATION
144	0.0-154.9 ft. No sampling conducted See Record of Drillhole for PZ-106-KS														0.0-30.0 ft. Drilling conducted with 6 1/4 in. ID hollow stem augers, then borehole advanced to 154.9 ft. with 5 7/8 in. air rotary bit
146															
148															
150															
152															
154															
	306.10		306.10												
	154.9-160.3 ft. 154.90 Fresh, thinly bedded to thinly laminated, light olive gray (5Y 6/1), f-m grained, medium strong, AGILLACEOUS LIMESTONE. (SALEM FORMATION) Chert nodules, silt lenses, stylolitic, fossiliferous		154.90												4/4/95 @ 12:20 Begin Run 1 @ 13:30 Rig breaks down
156									J,I,R						
				1	100 %				J,C,R J,I,R						
158															
									J,I,SM						4/5/95 @ 7:30 Resume drilling at 159.5 ft.
160															

DEPTH SCALE: 1:2
DRILLING CONTRACTOR: LAYNE-WESTERN
DRILLER: M. VOGT

LOGGED: J. MILLER
CHECKED: B. TILTON
DATE: 5/26/95

Golder Associates

RECORD OF DRILLHOLE PZ-106-SS

PROJECT: LAIDLAW/RI-FS
PROJECT NO: 943-2848
LOCATION: BRIDGETON, MO

BORING METHOD: NX Core & water
DRILLING DATE: 4/4/95 - 4/5/95
DRILL RIG: SCHRAMM

DATUM: MSL
COORDINATES N: 1066726.3
AZIMUTH: 0

COLLAR ELEV: 481.0
E: 515398.9
INCLINATION: -90

J-Joint, F-Fault, S-Shear, B-Bedding, F-Foliation
PL-Planar, C-Curved, U-Undulating, ST-Stepped, I-Irregular
P-Polished, K-Slickensided, SM-Smooth, R-Rough, VR-V. Rough
Fe-FeOxide, CL-Clay Infill, CH-Chlorite, H-Healed

DEPTH (FEET)	DESCRIPTION	GRAPHIC LOG	ELEV / DEPTH (FT)	RUN NO.	CORE RECOVERY	RQD	FRACTURES PER FOOT	DISCONTINUITY DATA: DIP wrt CORE AXIS	DISCONTINUITY DATA: TYPE AND SURFACE DESCRIPTION	GRAPHIC LOG	WEATHERING INDEX (FR, SW, MW, HW, CW)	STRENGTH INDEX (R6, R5, R4, R3, R2, R1)	POINT LOAD INDEX (psi) (R1 10, R2 150, R3 300, R4 600, R5 1500, R6)	TEST ORIENTATION	NOTES WATER LEVELS INSTRUMENTATION
160	160.3-165.0 ft. Slightly weahtered, thickly laminated, yellowish gray (5Y 7/2), coarse grained, strong, ARENACEOUS LIMESTONE, (SALEM FORMATION)								J,C,SM						
162				1	100 %				J,I,R (2)						
164	Fossil fragments, sandy														
	296.00		296.00												4/5/95 @ 10:00 End Run 1
	End of Record of Drillhole at 165.0 ft. 165.00		165.00												
166															
168															
170															
172															
174															
176															

DEPTH SCALE: 1:2
DRILLING CONTRACTOR: LAYNE-WESTERN
DRILLER: M. VOGT

LOGGED: J. MILLER
CHECKED: B. TILTON
DATE: 5/26/95

Golder Associates

Well No. PZ-106-SS

Boring No. X-Ref: PZ-106-SS

PIEZOMETER CONSTRUCTION SUMMARY

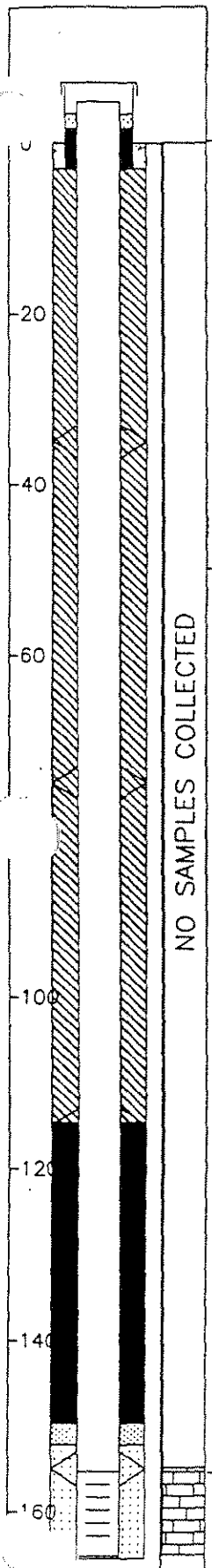

Not to Scale

Survey Coords: Northing: 1068726 ft. Easting: 515400 ft.

Elevation Ground Level 461.0 ft. NGVD

Top of PVC Casing 462.70 ft. NGVD

Drilling Summary:

Total Depth 165.4 ft.

Borehole Diameter 10 1/4 in. (0.0-23.0 ft.) 5 7/8 in. (23.0-165.4 ft.)

Casing Stickup Height 1.75 ft.

Driller Layne-Western, St. Louis, MO

Rig CME 75, Schramm Portadrill T660H

Bit(s) 6 1/4 in. ID Hollow Stem Auger Bit, NX Core, 5 7/8 in. Button Bit for Reaming

Drilling Fluid Auger-None, NX Core Water, Air Rotary

Protective Casing 8x8 in. Square Steel, by 5 ft. long

Construction Time log:

Task	Start Date	Start Time	Finish Date	Finish Time
Drilling				
CME 75				
Schramm Rotary	4/4/95	8:25	4/5/95	10:00
Geophys.Logging:				
Casing:	4/5/95	11:45	4/5/95	12:10
Filter Placement:	4/5/95	12:15	4/5/95	12:30
Cementing:				
Development				
Bentonite Grout	4/5/95	13:05	4/5/95	13:41
Bentonite Seal	4/5/95	12:30	4/5/95	13:05

Well Design & Specifications

Basis: Geologic Log X Geophysical Log

Casing string(s): C = Casing S = Screen

Depth			String(s)	Elevation		
+ 1.75	-	155.30	C1	462.70	-	305.65
155.30	-	165.10	S1	305.65	-	295.85
165.10	-	165.43	C2	295.85	-	295.52
	-				-	
	-				-	
	-				-	

Casing: C1 2 in. dia. Schedule 80 PVC, flush threaded with O-rings

C2 2 in. dia. threaded PVC end cap (4 in. long or 0.33 ft.)

Screen: S1 2 in. dia. Schedule 80 PVC, 0.010 in. machine cut slot, flush threaded with O-rings

Sand Pack: 16-35 mesh Silica Sand, 152.2-165.0 ft.

Filter Pack: Less than 50 mesh Silica Sand, 149.7-152.2 ft.

Grout Seal: Wyo-Ben Grout Well Bentonite Slurry, 3.0-114.7 ft.

Bentonite Seal: Extra high yield Wyo-Ben (100%) Slurry, 114.7-149.7 ft.

Concrete: 0.0-3.0 ft.

Well Development

Stabilization Test Data:

Time	pH	Spec. Cond.	Temp (°C)

Recovery Data:

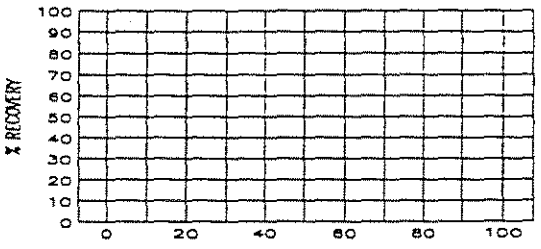

Comments:

Supervised by J. Miller

Job Number 943-2848

Site LAIDLAW/OU2 RI-FS/MO

File Name PZ106SS

MISSOURI DEPARTMENT OF NATURAL RESOURCES
DIVISION OF GEOLOGY AND LAND SURVEY

MONITORING WELL CERTIFICATION RECORD

OFFICE USE ONLY	DATE RECEIVED
REF NO 122480	CHECK NO.
ROUTE	TRANSMITTAL NO.
STATE WELL NUMBER	CROSS REFERENCE NO
CHECKED BY	ENTERED Ph 1 Ph 2 Ph 3
APPROVED BY	DATE APPROVED

INFORMATION SUPPLIED BY OWNER

SITE NAME: LAIDLAW BRIDGETON SANITARY LANDFILL
WELL NUMBER: PZ-106-SS

SITE ADDRESS: ST. CHARLES ROCK RD. | CITY: BRIDGETON | STATE: Mo | ZIP CODE: 63044

NAME: LAIDLAW WASTE SYSTEMS, INC. | TELEPHONE: 314-241-3710

ADDRESS: 1838 N. BROADWAY | CITY: ST. LOUIS | STATE: Mo | ZIP CODE: 63102

INFORMATION SUPPLIED BY MONITORING WELL CONTRACTOR

LOCATION OF WELL
SHOW LOCATION IN SECTION PLAT

COUNTY: ST. LOUIS
ELEVATION: 460.9
AREA NO.:

SMALLEST ¼ ____ ¼ ____ ¼ ____ ¼ LARGEST ¼

SEC. ____ TWN. 47 N,RNG 5 (E) OR W

LAT. 38 ° 45 ' 47 " LONG. 90 ° 26 ' 46 "

SKETCH THE LOCATION TO THE WELL INCLUDING MILEAGE ON ALL ROADS TRAVELED FROM NEAREST TOWNS OR HIGHWAYS

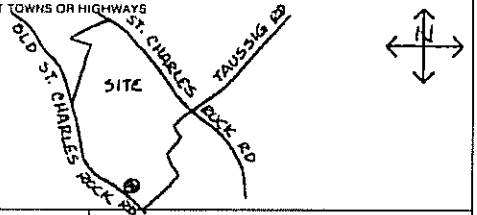

DESCRIBE LOCATION OF THE WELL SO WE WOULD BE ABLE TO VISIT IT

MONITORING WELL INSTALLATION CONTRACTOR'S NAME: LAYNE WESTERN CO., INC.

DRILLING CONTRACTOR'S NAME: LAYNE WESTERN CO., INC.

TYPE OF INSTALLATION: ☒ ABOVE GROUND ☐ FLUSH MOUNT

STATIC WATER LEVEL: FEET FROM MEASURING POINT

DATE OF STATIC WATER LEVEL:

ELEVATION OF MEASURING POINT: 462.70

MEASURING POINT IS: ☒ TOP OF RISER PIPE ☐ OTHER

DRILLING EQUIPMENT: ☒ AIR ROTARY ☒ AUGER TYPE 6¼ H.S.A. ☐ REVERSE ROTARY ☐ OTHER

CENTRALIZERS USED: ☒ YES, AT 15', 35', 75', 115', 155' ☒ STAINLESS STEEL ☐ OTHER ☐ NO

MULTIPLE CASED WELLS: SUBMIT ADDITIONAL AS BUILT DIAGRAM SHOWING WELL CONSTRUCTION DETAILS INCLUDING TYPE AND SIZE OF ALL CASING, HOLE DIAMETERS, AND GROUT USED.

DATE WELL CONSTRUCTION WAS COMPLETED: 4-05-95

I HEREBY CERTIFY THAT THE MONITORING WELL HEREIN DESCRIBED WAS CONSTRUCTED IN ACCORDANCE WITH THE DEPARTMENT OF NATURAL RESOURCES REQUIREMENTS FOR THE CONSTRUCTION OF MONITORING WELLS.

SIGNATURE (MONITORING WELL CONTRACTOR): Michael P. Vogl
PERMIT NUMBER: 001256WIM | DATE: 5-10-95

SIGNATURE (DRILLING CONTRACTOR): Michael P. Vogl
PERMIT NUMBER: 001256WIM | DATE: 5-10-95

NOTE: Record the fraction of a foot in decimal, not in inches

LOCKING CAP - (Y) / N (Circle one)
CAP VENT - Y / N (Circle one)
Top of Riser Elevation: 462.7

PROTECTIVE CASING
Type: STEEL
Size: 8"x8"x5'
Bore Hole Diameter: 10.25'
WEEP HOLE - Y / N (Circle one)

Ground Surface Elevation: 460.7 Ft

Information in this column to be supplied in the Feet from Surface column	Feet from Surface	Description of Formation
Depth to bottom of Protective Casing Seal:	3.0	
Depth to Base of Annular Seal:	114.7	
Depth to Base of Bentonite Seal:	147.7	
Depth to Base of Secondary Filter Pack:	152.2	
Depth to Top of the Screen:	155.1	Limestone
Depth to Bottom of the Screen:	165.1	
Plug Back Total Depth		
Original Total Depth:	165.4	

PROTECTIVE CASING SEAL
Type: ☒ Concrete ☐ Cement Slurry

RISER PIPE
Length: 156.9'
Diameter: 2"
Type of Material: SCH. 80 PVC

BOREHOLE DIAMETER: 5 7/8 in.

ANNULAR SEAL
Type: ☒ Bentonite Slurry ☐ Cement Slurry ☐ Non Slurry Bentonite

BENTONITE SEAL
Type: ☒ Bentonite Slurry ☐ Non Slurry Bentonite
Length of Seal: 35 Ft.

SECONDARY FILTER PACK (Optional)
Type: ☒ Sand ☐ Manufactured
Grain Size: SUGAR <50
Length: 2.5'

PRIMARY FILTER PACK
Type: ☒ Sand ☐ Manufactured
Grain Size: 16-35
Length: 13.2'

WELL SCREEN
Length: 10'
Slot Size: 0.010"
Type: SCH. 80 PVC

SUMP DETAILS
Length: 0.3 FT.
Diameter: 2 In.
Type: PVC

TYPE OF BACKFILL: SAND

DISTRIBUTION: WHITE-DIVISION CANARY-MONITORING WELL CONTRACTOR PINK-OWNER

LAIDLAW WASTE SYSTEMS INC.

SOIL BOREHOLE LOG

SITE NAME AND LOCATION	DRILLING METHOD:		BORING NO.
	6.25 inch I.D. Hollow Stem Auger		PZ-107-SS
			SHEET 1 OF 3
	SAMPLING METHOD:		DRILLING START / FINISH
LAIDLAW/OU2 RI-FS/MO WEST LAKE LANDFILL OPERABLE UNIT 2	SPLIT SPOON: 2.0 inch O.D./1.5 inch I.D. (SP)		
	SHELBY TUBE: 3.0 inch O.D./2 13/16 inch I.D. (SH)		
	WATER LEVEL		TIME: 13:00 / TIME: 16:25
	TIME		
	DATE		DATE: 3/26/95 / DATE: 3/26/95
NORTHING: 1067163.45 DATUM EASTING: 515254.52 ELEVATION 462.6	CASING DEPTH		
DRILL RIG CME 75	SURFACE CONDITIONS		
ANGLE -90° BEARING			
SAMPLE HAMMER			

DRILLING CONTR LAYNE-WESTERN

LOGGED BY S. COSIO CHK'D BY W. HERST

DATE 6/1/95

JOB NO.: 943-2848

FILENAME: PZ107SS

DEPTH IN FEET (ELEVATION)	BLOW/6 IN. ON SAMPLER	RECOVERY	SYMBOL	SAMPLER SYMBOL	SAMPLE NUMBER AND DESCRIPTION OF MATERIAL	SAMPLER TYPE	REMARKS
1	3 5 5 5	0.9" 2.0" (45%)			(0.0-2.0 ft.) Stiff, moderate yellowish brown (10YR 5/4), SILTY CLAY, trace of very fine Sand, WR, damp, (CL), (FILL)	SP ①	
2 3	2 2 4 18	1.0" 2.0" (50%)			(2.0-4.0 ft.) Firm, yellowish brown (10YR 5/4), SILTY CLAY, little Gravel, trace amount of trash at bottom, WR, damp, (CL), (FILL)	SP ②	
4 5	3 8 11 10	1.1" 2.0" (55%)			(4.0-6.0 ft.) Very stiff, medium light gray (N5) to dark greenish gray (5GY 4/1), SILTY CLAY, some Gravel, SR, moist, (CL), (FILL)	SP ③	
6	4 8 23 5	1.1" 2.0" (55%)			(456.6) 6.0 (6.0-8.0 ft.) Mixed damp waste and silty clay	SP ④	
7 8 9	7 2 4 1	0.3" 2.0" (15%)			(8.0-10.0 ft.) Trash	SP ⑤	
10 11	3 3 4 4	0.0" 2.0" (0%)			(10.0-12.0 ft.) Waste becomes wet	SP ⑥	
12	8 32 15 9	0.0" 2.0" (0%)	NO RECOVERY		(450.6) 12.0 (12.0-14.0 ft.) No Recovery	SP ⑦	From 12.0-28.0 ft., no samples recovered, but drilling indicated mixed waste and silty clay layers
13 14	6 12 8 5	0.0" 2.0" (0%)			(14.0-15.0 ft.) No Recovery	SP ⑧	

LAIDLAW WASTE SYSTEMS INC.

SOIL BOREHOLE LOG

SITE NAME AND LOCATION	DRILLING METHOD:	BORING NO.
LAIDLAW/OU2 RI-FS/MO WEST LAKE LANDFILL OPERABLE UNIT 2	6.25 inch I.D. Hollow Stem Auger	PZ-107-SS
	SAMPLING METHOD:	SHEET 2 OF 3
	SPLIT SPOON: 2.0 inch O.D./1.5 inch I.D. (SP)	DRILLING
	SHELBY TUBE: 3.0 inch O.D./2 13/16 inch I.D. (SH)	START / FINISH

WATER LEVEL					TIME	TIME
TIME					13:00	16:25
DATE					DATE	DATE
CASING DEPTH					3/26/95	3/26/95

DATUM NORTHING: 1067163.45 EASTING: 515254.52 ELEVATION 462.6

DRILL RIG CME 75

ANGLE -90° BEARING

SAMPLE HAMMER

SURFACE CONDITIONS

DEPTH IN FEET (ELEVATION)	BLOW/ 6 IN. ON SAMPLER	RECOVERY	SYMBOL	SAMPLER SYMBOL	SAMPLE NUMBER AND DESCRIPTION OF MATERIAL	SAMPLER TYPE		REMARKS
					(15.0-16.0 ft.) No Recovery	SP 8		
16	5 8 13 6	0.0' 2.0' (0%)			(16.0-18.0 ft.) No Recovery	SP 9		
17								
18	5 7 35 41	0.0' 2.0' (0%)			(18.0-20.0 ft.) No Recovery	SP 10		
19								
20	5 5 5 3	0.0' 2.0' (0%)	NO RECOVERY		(20.0-22.0 ft.) No Recovery	SP 11		
21								
22	5 4 7 9	0.0' 2.0' (0%)			(22.0-24.0 ft.) No Recovery	SP 12		
23								
24	6 7 7 10	0.0' 2.0' (0%)			(24.0-26.0 ft.) No Recovery	SP 13		
25								
26	5 5 9 12	0.4' 2.0' (20%)			(26.0-28.0 ft.) Waste	SP 14		
27								
28					(434.6) 28.0 (28.0-32.0 ft.) Stiff, dark greenish gray (5GY 4/1), SILTY CLAY, NR, wet, (CL), (LOESS)			
29								

DRILLING CONTR LAYNE-WESTERN

LOGGED BY S. COSIO

DATE 6/1/95 CHK'D BY W. HERST

JOB NO.: 943-2848

FILENAME: PZ107SS

LAIDLAW
LAIDLAW WASTE SYSTEMS INC.

SOIL BOREHOLE LOG

SITE NAME AND LOCATION	DRILLING METHOD:	BORING NO.
LAIDLAW/OU2 RI-FS/MO WEST LAKE LANDFILL OPERABLE UNIT 2	6.25 inch I.D. Hollow Stem Auger	PZ-107-SS
	SAMPLING METHOD:	SHEET 3 OF 3
	SPLIT SPOON: 2.0 inch O.D./1.5 inch I.D. (SP)	DRILLING
	SHELBY TUBE: 3.0 inch O.D./2 13/16 inch I.D. (SH)	START / FINISH

WATER LEVEL					TIME	TIME
TIME					13:00	16:25
DATE					DATE	DATE
CASING DEPTH					3/26/95	3/26/95

DATUM NORTHING: 1067163.45 EASTING: 515254.52 ELEVATION 462.6

DRILL RIG CME 75

SURFACE CONDITIONS

ANGLE -90° BEARING

SAMPLE HAMMER

DEPTH IN FEET (ELEVATION)	BLOW/ 6 IN. ON SAMPLER	RECOVERY	SYMBOL	SAMPLER SYMBOL	SAMPLE NUMBER AND DESCRIPTION OF MATERIAL	SAMPLER TYPE		REMARKS
31					(28.0-32.0 ft.) Stiff, dark greenish gray (5GY 4/1), SILTY CLAY, NR, wet, (CL), (LOESS)			
32					(430.6) 32.0 End of Soil Borehole Log at 32.0 ft. See PZ-107-SS Record of Drillhole for rock descriptions below 55.0 ft.			
33								
34								
35								
36								
37								
38								
39								
40								
41								
42								
43								
44								

DRILLING CONTR LAYNE-WESTERN

LOGGED BY S. COSIO

DATE 6/1/95 CHK'D BY W. HERST

JOB NO.: 943-2848

FILENAME: PZ107SS

RECORD OF DRILLHOLE PZ-107-SS

Sheet 1 of 4

PROJECT: LAIDLAW/RI-FS
PROJECT NO: 943-2848
LOCATION: BRIDGETON, MO

BORING METHOD: NX Core & water
DRILLING DATE: 5/21/95 - 5/22/95
DRILL RIG: CME 75

DATUM: MSL
COORDINATES N: 1067183.45
AZIMUTH: 0

COLLAR ELEV: 462.6
E: 515254.52
INCLINATION: -90

ROCK TYPE

J-Joint, F-Fault, S-Shear, B-Bedding, F-Foliation
PL-Planar, C-Curved, U-Undulating, ST-Stepped, I-Irregular
P-Polished, K-Slikensided, SM-Smooth, R-Rough, VR-V. Rough
Fe-FeOxide, CL-Clay Infill, CH-Chlorite, H-Healed, GRF-Gravel Filled

DEPTH SCALE (FEET)	DESCRIPTION	GRAPHIC LOG	ELEV / DEPTH (FT)	RUN NO.	CORE RECOVERY	RQD	FRACTURES PER FOOT	DISCONTINUITY DATA: DIP wrt CORE AXIS	DISCONTINUITY DATA: TYPE AND SURFACE DESCRIPTION	GRAPHIC LOG	WEATHERING INDEX	STRENGTH INDEX	POINT LOAD INDEX (psi)	TEST ORIENTATION	NOTES WATER LEVELS INSTRUMENTATION
48	0.0-32.0 ft. See Soil Borehole Log PZ-107-SS 32.0-54.0 ft. No samples collected														5/18/95 - 5/19/95 A 9 7/8 in. borehole (air rotary) was advanced through 10 1/4 in. ID hollow stem augers from 30.0-55.0 ft., and 6 in. steel was sealed in borehole from surface to 55.0 ft. with neat cement. Bedrock was encountered at 51.0 ft. BGS during drilling
50															
52															
54	408.60 54.0-59.0 ft. Fresh, medium bedded, pale yellowish brown (10YR 6/2), fine grained, medium strong, LIMESTONE, (ST. LOUIS FORMATION)		408.60 54.00												5/21/95 @ 15:30 Began coring
56				1	92%				J,PL,SM,CL						
58									J,PL,SM						5/21/95 @ 15:50 End of Run 1
	403.60 59.0-63.5 ft. Slightly weathered, medium bedded, light olive gray (5Y 5/2), medium grained, medium strong, ARGILLACEOUS LIMESTONE, (ST. LOUIS FORMATION)		59.00						J,PL,R						
60	60.0 ft. Fossiliferous								B,PL,SM						
				2	98%				J,PL,SM,CL J,PL,R						
62															
	63.5-82.3 ft. Fresh, medium to thinly bedded, pale yellowish brown (10YR 6/2), m-c grained, medium strong LIMESTONE, (ST. LOUIS FORMATION)								B,PL,SM						
64															

DEPTH SCALE: 1:2
DRILLING CONTRACTOR: LAYNE-WESTERN
DRILLER: D. MAHURIN

LOGGED: D. ALLOWAY
CHECKED: B. TILTON
DATE: 6/20/95

Golder Associates

RECORD OF DRILLHOLE PZ-107-SS

Sheet 2 of 4

PROJECT: LAIDLAW/RI-FS
PROJECT NO: 943-2848
LOCATION: BRIDGETON, MO

BORING METHOD: NX Core & water
DRILLING DATE: 5/21/95 - 5/22/95
DRILL RIG: CME 75

DATUM: MSL
COORDINATES N: 1067183.45
AZIMUTH: 0

COLLAR ELEV: 462.6
E: 515254.52
INCLINATION: -90

J-Joint, F-Fault, S-Shear, B-Bedding, F-Foliation
PL-Planar, C-Curved, U-Undulating, ST-Stepped, I-Irregular
P-Polished, K-Slikensided, SM-Smooth, R-Rough, VR-V. Rough
Fe-FeOxide, CL-Clay Infil, CH-Chlorite, H-Healed, GRF-Gravel Filled

DEPTH SCALE (FEET)	DESCRIPTION	GRAPHIC LOG	ELEV / DEPTH (FT)	RUN NO.	CORE RECOVERY	RQD	FRACTURES PER FOOT	DISCONTINUITY DATA: DIP wrt CORE AXIS	DISCONTINUITY DATA: TYPE AND SURFACE DESCRIPTION	GRAPHIC LOG	WEATHERING INDEX	STRENGTH INDEX	POINT LOAD INDEX (psi)	TEST ORIENTATION	NOTES WATER LEVELS INSTRUMENTATION
64	63.5-82.3 ft. Fresh, medium to thinly bedded, pale yellowish brown (10YR 6/2), m-c grained, medium strong LIMESTONE, (ST. LOUIS FORMATION)								B,PL,SM						
	64.3 ft. Argillaceous layers common, stylolites common								B,PL,SM,CL						
66				2	98%										
									J,PL,SM						
									J,PL,SM,CL						
68									J,PL,SM,CL						5/21/95 @ 16:15 End of Run 2
			383.60 / 69.00												
									J,PL,R						
70									B,PL,SM,CL (5)						
72	72.1-72.6 ft. Argillaceous layer								B,PL,SM,CL						
									J,I,R						
74				3	100 %				B,PL,SM,CL						
76	76.7-77.2 ft. Argillaceous layer														
78	78.4-79.9 ft. Argillaceous layer								J,PL,SM (2)						5/21/95 @ 17:40 End of Run 3
			383.60 / 79.00												
				4	100 %				J,PL,SM						
80															

DEPTH SCALE: 1:2
DRILLING CONTRACTOR: LAYNE-WESTERN
DRILLER: D. MAHURIN

LOGGED: D. ALLOWAY
CHECKED: B. TILTON
DATE: 6/20/95

Golder Associates

RECORD OF DRILLHOLE PZ-107-SS

Sheet 3 of 4

PROJECT: LAIDLAW/RI-FS
PROJECT NO: 943-2848
LOCATION: BRIDGETON, MO

BORING METHOD: NX Core & water
DRILLING DATE: 5/21/95 - 5/22/95
DRILL RIG: CME 75

DATUM: MSL
COORDINATES N: 1067163.45
AZIMUTH: 0

COLLAR ELEV: 482.6
E: 515254.52
INCLINATION: -90

J-Joint, F-Fault, S-Shear, B-Bedding, F-Foliation
PL-Planar, C-Curved, U-Undulating, ST-Stepped, I-Irregular
P-Polished, K-Slickensided, SM-Smooth, R-Rough, VR-V. Rough
Fe-FeOxide, CL-Clay infill, CH-Chlorite, H-Healed, GRP-Gravel Filled

DEPTh (FEET)	DESCRIPTION	GRAPHIC LOG	ELEV / DEPTH (FT)	RUN NO.	CORE RECOVERY	RQD	FRACTURES PER FOOT	DISCONTINUITY DATA: DIP wrt CORE AXIS	DISCONTINUITY DATA: TYPE AND SURFACE DESCRIPTION	DISCONTINUITY DATA: GRAPHIC LOG	WEATHERING INDEX	STRENGTH INDEX	POINT LOAD INDEX (psi)	TEST ORIENTATION	NOTES WATER LEVELS INSTRUMENTATION
80	63.5-82.3 ft. Fresh, medium to thinly bedded, pale yellowish brown (10YR 6/2), m-c grained, medium strong LIMESTONE, (ST. LOUIS FORMATION)								J,PL,SM (3) J,PL,SM (2)		SW FR MW HW CW	R6 R5 R4 R3 R2 R1	R1 30 R2 150 R3 300 R4 600 R5 1500 R6		
82	82.3-84.6 ft. Slightly weathered, medium bedded, light olive gray (5Y 5/2), medium grained, medium strong, ARGILLACEOUS LIMESTONE, (ST. LOUIS FORMATION)														
84				4	100 %										
86	84.6-88.5 ft. Fresh, medium bedded, pale yellowish brown (10YR 6/2), fine grained, medium strong, LIMESTONE, (ST. LOUIS FORMATION) Thinly laminated Clay layers abundant								J,PL,SM,CL (2) J,C,SM						
88	88.5-94.1 ft. Fresh, medium bedded, light olive gray (5Y 5/2), fine grained, medium strong, ARGILLACEOUS LIMESTONE, (ST. LOUIS FORMATION) Stylolites abundant		373.60 89.00												5/21/95 @ 18:40 End of Run 4 Quit drilling for the day 5/22/95 @ 7:30 Began drilling
90															
92				5	100 %										
94	94.1-97.2 ft. Fresh, thinly bedded, pale yellowish brown (10YR 6/2), fine grained, medium strong, LIMESTONE, (ST. LOUIS FORMATION) Abundant thinly laminated Clay layers								B,PL,SM,CL (3)						
96															

DEPTH SCALE: 1:2
DRILLING CONTRACTOR: LAYNE-WESTERN
DRILLER: D. MAHURIN

LOGGED: D. ALLOWAY
CHECKED: B. TILTON
DATE: 6/20/95

Golder Associates

RECORD OF DRILLHOLE PZ-107-SS

Sheet 4 of 4

PROJECT: LAIDLAW/RI-FS
PROJECT NO: 943-2848
LOCATION: BRIDGETON, MO

BORING METHOD: NX Core & water
DRILLING DATE: 5/21/95 - 5/22/95
DRILL RIG: CME 75

DATUM: MSL
COORDINATES N: 1087163.45
AZIMUTH: 0

COLLAR ELEV: 462.6
E: 515254.52
INCLINATION: -90

J-Joint, F-Fault, S-Shear, B-Bedding, F-Foliation
PL-Planar, C-Curved, U-Undulating, ST-Stepped, I-Irregular
P-Polished, K-Slikensided, SM-Smooth, R-Rough, VR-V. Rough
Fe-FeOxide, CL-Clay Infill, CH-Chlorite, H-Healed, GRF-Gravel Filled

DEPTH (FEET)	DESCRIPTION	GRAPHIC LOG	ELEV / DEPTH (FT)	RUN NO.	CORE RECOVERY	RQD	FRACTURES PER FOOT	DISCONTINUITY DATA: DIP wrt CORE AXIS	DISCONTINUITY DATA: TYPE AND SURFACE DESCRIPTION	GRAPHIC LOG	WEATHERING INDEX: SW FR, MW, HW, CW	STRENGTH INDEX: R6, R5, R4, R3, R2, R1	POINT LOAD INDEX (psi): R6 1500, R5 600, R4 300, R3 150, R2 30	TEST ORIENTATION	NOTES WATER LEVELS INSTRUMENTATION
96	94.1-97.2 ft. Fresh, thinly bedded, pale yellowish brown (10YR 6/2), fine grained, medium strong, LIMESTONE,(ST. LOUIS FORMATION) Abundant thinly laminated Clay layers								B,PL,SM						
	97.2-100.7 ft. Slightly weathered, medium bedded, light olive gray (5Y 5/2), fine to medium grained, medium strong, ARGILLACEOUS LIMESTONE, (ST. LOUIS FORMATION) Calcite filled healed fractures common		363.60	5	100 %										5/22/95 @ 8:10 End of Run 5
98			99.00												
100									J,PL,R,CL						
	100.7-104.0 ft. Fresh, thinly bedded, pale yellowish brown (10YR 6/2), f-m grained, medium strong, LIMESTONE, (ST. LOUIS FORMATION) Abundant thinly laminated clay layers			6	100 %				J,PL,R						
102									J,PL,R						
									J,PL,R						5/22/95 @ 8:30 Finished coring
	358.60		358.60												
104	End of Record of Borehole at 104.0 ft. 104.00		104.00												
106															
108															
110															
112															

DEPTH SCALE: 1:2
DRILLING CONTRACTOR: LAYNE-WESTERN
DRILLER: D. MAHURIN

LOGGED: D. ALLOWAY
CHECKED: B. TILTON
DATE: 6/20/95

Golder Associates

Well No. PZ-107-SS

Boring No. X-Ref: PZ-107-SS

PIEZOMETER CONSTRUCTION SUMMARY

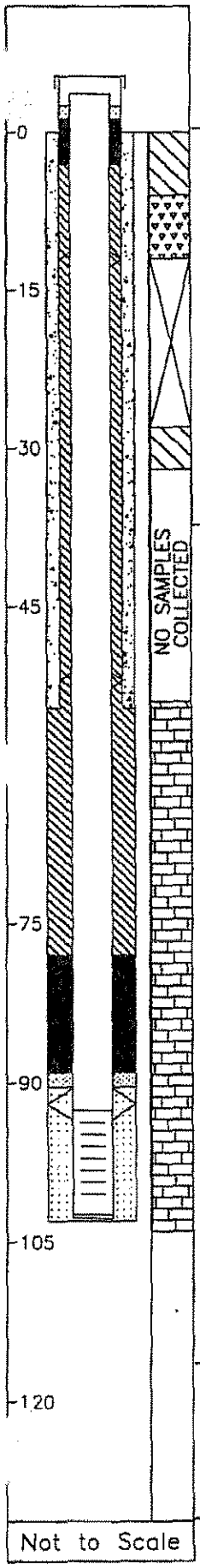

Not to Scale

Survey Coords: Northing: 1067163 ft. Easting: 515255 ft.

Elevation Ground Level 462.6 ft. NGVD

Top of PVC Casing 464.66 ft. NGVD

Drilling Summary:

Total Depth 103.0 ft.

Borehole Diameter 14 1/4 in. (0.0-32.0 ft.) 5 7/8 in. (32.0-103.0 ft.)

Casing Stickup Height 2.03 ft.

Driller Layne-Western St. Louis, MO

Rig CME 75, Schramm Portadrill T660H

Bit(s) 6 1/4 in. ID Hollow Stem Auger Bit, NX Core, 5 7/8 in. Button Bit for Reaming

Drilling Fluid Auger-None, NX Core Water, Air and Mud Rotary

Protective Casing 8x8 in. Square Steel, by 5 ft. long

Construction Time log:

Task	Start Date	Start Time	Finish Date	Finish Time
Drilling				
CME 75 (augers)	3/28/95	13:00	3/28/95	16:25
CME 75 (core)	5/21/95	15:30	5/22/95	8:30
Schramm Rotary	5/22/95	11:00	5/22/95	11:30
Geophys.Logging:				
Casing:				
2" PVC	5/22/95	11:30	5/22/95	11:35
6" Steel	5/18/95	9:00	5/18/95	14:00
Filter Placement:	5/22/95	11:40	5/22/95	11:55
Cementing:				
Development				
Bentonite Grout	5/22/95	12:10	5/22/95	12:45
Bentonite Seal	5/22/95	11:55	5/22/95	12:10

Well Design & Specifications

Basis: Geologic Log X Geophysical Log

Casing string(s): C = Casing S = Screen

Depth			String(s)	Elevation		
+ 2.03	-	92.60	C1	464.86	-	370.03
92.60	-	102.40	S1	370.03	-	360.23
102.40	-	102.73	C2	360.23	-	359.90
+ 1.00	-	55.00	C3	463.60	-	407.63
	-				-	
	-				-	

Casing: C1 2 in. dia. Schedule 80 PVC, flush threaded with O-rings

C2 2 in. dia. threaded PVC end cap (4 in. long or 0.33 ft.) (C3-see comments)

Screen: S1 2 in. dia. Schedule 80 PVC, 0.010 in. machine cut slot, flush threaded with O-rings

Sand Pack: 16-35 mesh Silica Sand, 90.4-103.0 ft.

Filter Pack: Less than 50 mesh Silica Sand, 89.0-90.4 ft.

Grout Seal: Wyo-Ben Grout Well Bentonite Slurry, 3.0-78.0 ft.

Bentonite Seal: Extra high yield Wyo-Ben (100%) Slurry, 78.0-89.0 ft.

Concrete: 0.0-3.0 ft.

Well Development

Stabilization Test Data:

Time	pH	Spec. Cond.	Temp (°C)

Recovery Data:

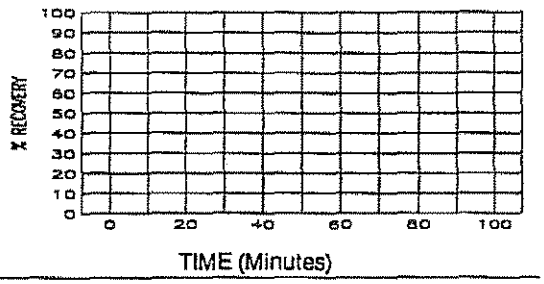

Comments:

Surface Casing C3: 6 1/8 ID / 6 5/8 in. OD Steel Casing

Supervised by B. Tilton

Job Number 943-2848

Site LAIDLAW/OU2 RI-FS/MO

File Name PZ107SS

MISSOURI DEPARTMENT OF NATURAL RESOURCES
DIVISION OF GEOLOGY AND LAND SURVEY

MONITORING WELL CERTIFICATION RECORD

OFFICE USE ONLY	DATE RECEIVED
REF NO 122508	CHECK NO.
ROUTE	TRANSMITTAL NO
STATE WELL NUMBER	CROSS REFERENCE NO
CHECKED BY	ENTERED Ph 1 Ph 2 Ph 3
APPROVED BY	DATE APPROVED

INFORMATION SUPPLIED BY OWNER

SITE NAME	WELL NUMBER
LAIDLAW BRIDGETON SANITARY LANDFILL	P2 - 10755

SITE ADDRESS	CITY	STATE	ZIP CODE
9T CHARLES ROCK RD	BRIDGETON	MO	63044

NAME	TELEPHONE
LAIDLAW WASTE SYSTEMS, INC.	314-344-3710

ADDRESS	CITY	STATE	ZIP CODE
1638 N. BROADWAY	ST. LOUIS	MO	63102

INFORMATION SUPPLIED BY MONITORING WELL CONTRACTOR

LOCATION OF WELL
SHOW LOCATION IN SECTION PLAT

COUNTY ST. LOUIS
ELEVATION 450.6
AREA NO.

SMALLEST ¼ LARGEST ¼

SEC. ____ TWN. 47 N,RNG. 5 E OR W

LAT. 38° 45' 53" LONG. 90° 26' 48"

SKETCH THE LOCATION TO THE WELL INCLUDING MILEAGE ON ALL ROADS TRAVELED FROM NEAREST TOWNS OR HIGHWAYS

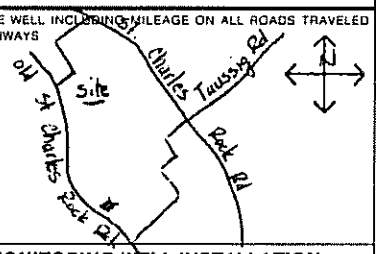

DESCRIBE LOCATION OF THE WELL SO WE WOULD BE ABLE TO VISIT IT

MONITORING WELL INSTALLATION CONTRACTOR'S NAME
LAYNE WESTERN Co, INC.

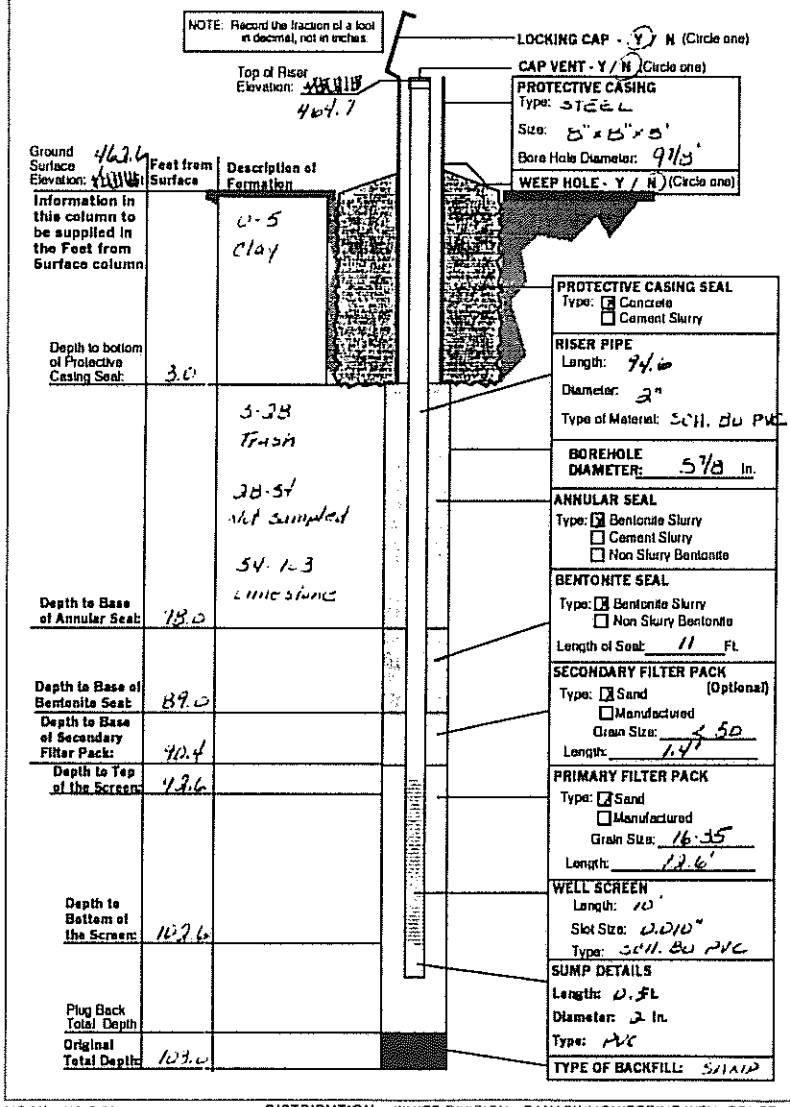

DRILLING CONTRACTOR'S NAME
LAYNE WESTERN Co, INC.

TYPE OF INSTALLATION
☒ ABOVE GROUND ☐ FLUSH MOUNT

STATIC WATER LEVEL
FEET FROM MEASURING POINT

DATE OF STATIC WATER LEVEL

ELEVATION OF MEASURING POINT
464.7

MEASURING POINT IS
☒ TOP OF RISER PIPE
☐ OTHER

DRILLING EQUIPMENT
☒ AIR ROTARY ☒ AUGER TYPE 6¼ HSA
☐ REVERSE ROTARY ☐ OTHER

CENTRALIZERS USED
☒ YES, AT 4 TOTAL
☒ STAINLESS STEEL
☐ OTHER
☐ NO

MULTIPLE CASED WELLS
SUBMIT ADDITIONAL AS BUILT DIAGRAM SHOWING WELL CONSTRUCTION DETAILS INCLUDING TYPE AND SIZE OF ALL CASING, HOLE DIAMETERS, AND GROUT USED.

DATE WELL CONSTRUCTION WAS COMPLETED
5-22-95

I HEREBY CERTIFY THAT THE MONITORING WELL HEREIN DESCRIBED WAS CONSTRUCTED IN ACCORDANCE WITH THE DEPARTMENT OF NATURAL RESOURCES REQUIREMENTS FOR THE CONSTRUCTION OF MONITORING WELLS.

SIGNATURE (MONITORING WELL CONTRACTOR) Michael P. Vogt

PERMIT NUMBER	DATE
001256WM	6-02-95

SIGNATURE (DRILLING CONTRACTOR) Michael P. Vogt

PERMIT NUMBER	DATE
001256WM	6-02-95

MO 780-1415 (2-94) DISTRIBUTION: WHITE DIVISION CANARY MONITORING WELL CONTRACTOR PINK/OWNER

LAIDLAW WASTE SYSTEMS INC.

SOIL BOREHOLE LOG

SITE NAME AND LOCATION LAIDLAW/OU2 RI-FS/MO WEST LAKE LANDFILL OPERABLE UNIT 2	DRILLING METHOD: 6.25 inch I.D. Hollow Stem Auger	BORING NO. PZ-108-SS
		SHEET 1 OF 2
	SAMPLING METHOD: SPLIT SPOON: 2.0 inch O.D./1.5 inch I.D. (SP) SHELBY TUBE: 3.0 inch O.D./2 13/16 inch I.D. (SH)	DRILLING

WATER LEVEL					START	FINISH
TIME					TIME 16:30	TIME 7:50
DATE					DATE 3/21/95	DATE 3/22/95
CASING DEPTH						

DATUM NORTHING: 1067678.37 EASTING: 515972.61 ELEVATION 454.1

DRILL RIG CME 75

SURFACE CONDITIONS

ANGLE BEARING

SAMPLE HAMMER

DEPTH IN FEET (ELEVATION)	BLOW/ 6 IN. ON SAMPLER	RECOVERY	SYMBOL	SAMPLER SYMBOL	SAMPLE NUMBER AND DESCRIPTION OF MATERIAL	SAMPLER TYPE	REMARKS
1	20 25 13 9	1.2'/2.0' (60%)			(0.0-2.0 ft.) Dense, pale yellowish brown (10YR 6/2), CLAYEY GRAVEL, some fine to coarse Sand, SR, damp, (GC), (FILL) (452.1) 2.0	SP 1	
2 3	3 6 7 6	1.0'/2.0' (50%)			(2.0-6.0 ft.) Stiff to very stiff, dark yellowish brown (10YR 4/2), SILTY CLAY, some Gravel, little fine to coarse Sand, SR, damp, (CL), (FILL)	SP 2	
4 5	6 11 11 11	0.8'/2.0' (40%)				SP 3	
6 7	3 8 11 15	0.9'/2.0' (45%)			(6.0-12.0 ft.) Stiff to very stiff, dark yellowish brown (10YR 4/2), SILTY CLAY, trace Gravel, trace to some fine to coarse Sand, SR, damp, (CL), (FILL)	SP 4	
8 9	6 6 8 7	0.5'/2.0' (25%)				SP 5	
10 11	8 8 10 12	0.4'/2.0' (20%)				SP 6	
12 13	8 8 12 15	1.6'/2.0' (80%)			(12.0-19.0 ft.) Very stiff, yellowish gray (5Y 7/2), SILTY CLAY, trace fine Gravel consisting of limestone, trace to little fine to coarse Sand, moderate amount of iron oxide staining, SR, damp, (CL), (ALLUVIUM)	SP 7	
14	4 8 11 14	1.8'/2.0' (90%)				SP 8	

DRILLING CONTR LAYNE-WESTERN

LOGGED BY S. COSIO

DATE 6/1/95

CHK'D BY W. HERST

JOB NO.: 943-2848

FILENAME: PZ108SS

LAIDLAW WASTE SYSTEMS INC.

SOIL BOREHOLE LOG

SITE NAME AND LOCATION

LAIDLAW/OU2 RI-FS/MO
WEST LAKE LANDFILL
OPERABLE UNIT 2

NORTHING: 1067678.37
DATUM EASTING: 515972.61 ELEVATION 454.1

DRILLING METHOD: 6.25 inch I.D. Hollow Stem Auger

SAMPLING METHOD:
SPLIT SPOON: 2.0 inch O.D./1.5 inch I.D. (SP)
SHELBY TUBE: 3.0 inch O.D./2 13/16 inch I.D. (SH)

					DRILLING START	DRILLING FINISH
WATER LEVEL						
TIME					16:30	7:50
DATE					3/21/95	3/22/95
CASING DEPTH						

BORING NO. PZ-108-SS

SHEET 2 OF 2

DRILL RIG CME 75

ANGLE BEARING

SAMPLE HAMMER

SURFACE CONDITIONS

DEPTH IN FEET (ELEVATION)	BLOW/ 6 IN. ON SAMPLER	RECOVERY	SYMBOL	SAMPLER SYMBOL	SAMPLE NUMBER AND DESCRIPTION OF MATERIAL	SAMPLER TYPE	REMARKS
16	5 9 7 9	1.8'/2.0' (90%)			(12.0-19.0 ft.) Very stiff, yellowish gray (5Y 7/2), SILTY CLAY, trace fine Gravel consisting of limestone, trace to little fine to coarse Sand, moderate amount of iron oxide staining, SR, damp, (CL), (ALLUVIUM)	SP (8)	
17						SP (9)	
18	3 5 9 38	1.2'/2.0' (60%)					
19					(19.0-20.0 ft.) Very stiff, light olive gray (10Y 5/4), SILTY CLAY, little highly weathered limestone, gravel pieces, little fine to coarse Sand, moderate iron oxide staining, NR, damp, (CL), (ALLUVIUM)	SP (10)	
20					(434.1) 20.0 End of Soil Borehole Log at 20.0 ft. See PZ-108-SS Record of Drillhole for rock descriptions		Top of weathered bedrock encountered @ 20.0 ft.
21							
22							
23							
24							
25							
26							
27							
28							
29							

DRILLING CONTR LAYNE-WESTERN

LOGGED BY S. COSIO CHK'D BY W. HERST

DATE 6/1/95

JOB NO.: 943-2848

FILENAME: PZ108SS

RECORD OF DRILLHOLE PZ-108-SS

Sheet 1 of 9

PROJECT: LAIDLAW/RI-FS
PROJECT NO: 943-2848
LOCATION: BRIDGETON, MO

BORING METHOD: NX Core & water
DRILLING DATE: 3/22/95-3/23/95
DRILL RIG: CME 75

DATUM: MSL
COORDINATES N: 1067678.4
AZIMUTH: 0

COLLAR ELEV: 454.1
E: 515972.8
INCLINATION: -90

J-Joint, F-Fault, S-Shear, B-Bedding, F-Foliation
PL-Planar, C-Curved, U-Undulating, ST-Stepped, I-Irregular
P-Polished, K-Slikensided, SM-Smooth, R-Rough, VR-V. Rough
Fe-FeOxide, CL-Clay Infill, CH-Chlorite, H-Healed, GRF-Gravel Filled

DEPTH SCALE (FEET)	DESCRIPTION	GRAPHIC LOG	ELEV / DEPTH (FT)	RUN NO	CORE RECOVERY	RQD (60 60 40 20)	FRACTURES PER FOOT (2 4 6 8 10)	DISCONTINUITY DATA: DIP wrt CORE AXIS (0 30 60 90)	DISCONTINUITY DATA: TYPE AND SURFACE DESCRIPTION	DISCONTINUITY DATA: GRAPHIC LOG	WEATHERING INDEX (SW FR MW HW CW)	STRENGTH INDEX (R6 R5 R4 R3 R2 R1)	POINT LOAD INDEX (psi) (RT 30 R2 150 R3 300 R4 600 R5 1500 R6)	TEST ORIENTATION	NOTES WATER LEVELS INSTRUMENTATION
16	0.0-20.0 ft. See Soil Borehole Log PZ-108-SS														
18															
20	434.10		434.10												
	20.0-24.4 ft. 20.00 Highly weathered, thinly bedded, pale olive (10Y 6/2), fine grained, medium strong, LIMESTONE, (ST. LOUIS FORMATION) Clay infillings 20.2-20.4 ft. Bluish-gray Shale 20.7-20.9 ft. Bluish-gray Shale		20.00												3/22/95 @ 8:30 Started coring Run 1
22	21.6-22.1 ft. Chert (Brown-angular)			1	59%				Core Loss						Core loss probably due to highly fractured nature of rock, clay infilling may also be the reason
24			429.70												
	24.4-29.6 ft. Fresh, thickly bedded, light olive gray (5Y 5/2), fine grained, medium strong, FOSSILIFEROUS LIMESTONE, (ST. LOUIS FORMATION)		24.40						J,I,R J,I,R						
28	426.70 27.40 27.4-28.6 ft. Thin layers of bluish-gray Siltstone			2	100 %										
	425.50 28.60		424.50												
30	29.6-36.3 ft. Fresh, thickly bedded, yellowish gray (5Y 7/2), fine grained, medium strong, ARENACEOUS LIMESTONE, (ST. LOUIS FORMATION) Fossils common, stylolitic, little pyrite crystals		29.60	3	99%				J,I,R J,I,R J,I,R						
32															

DEPTH SCALE: 1:2
DRILLING CONTRACTOR: LAYNE-WESTERN
DRILLER: D. MAHURIN

LOGGED: S. COSIO
CHECKED: R. BOOTH
DATE: 5/2/95

Golder Associates

RECORD OF DRILLHOLE PZ-108-SS

PROJECT: LAIDLAW/RI-FS
PROJECT NO: 943-2848
LOCATION: BRIDGETON, MO

BORING METHOD: NX Core & water
DRILLING DATE: 3/22/95-3/23/95
DRILL RIG: CME 75

DATUM: MSL
COORDINATES N: 1067878.4
AZIMUTH: 0

COLLAR ELEV: 454.1
E: 515972.8
INCLINATION: -90

J-Joint, F-Fault, S-Shear, B-Bedding, F-Foliation
PL-Planar, C-Curved, U-Undulating, ST-Stepped, I-Irregular
P-Polished, K-Slikensided, SM-Smooth, R-Rough, VR-V. Rough
Fe-FeOxide, CL-Clay Infill, CH-Chlorite, H-Healed, GRF-Gravel Filled

DEPTH (FEET)	DESCRIPTION	GRAPHIC LOG	ELEV / DEPTH (FT)	RUN NO.	CORE RECOVERY	RQD	FRACTURES PER FOOT	DISCONTINUITY DATA: DIP w/r CORE AXIS	DISCONTINUITY DATA: TYPE AND SURFACE DESCRIPTION	DISCONTINUITY DATA: GRAPHIC LOG	WEATHERING INDEX (SW FR, MW, HW, CW)	STRENGTH INDEX (R6, R5, R4, R3, R2, R1)	POINT LOAD INDEX (psi) (R1 30, R2 150, R3 300, R4 600, R5 1500, R6)	TEST ORIENTATION	NOTES WATER LEVELS INSTRUMENTATION
32	422.00														
	32.1-33.3 ft. 32.10 Dolomitic Limestone								J,I,CL						
									J,I,R						
	33.3-35.0 ft. Arenaceous Dolomite								J,I,R						
									J,PL,CL						
34				3	99%				J,I,CL						
	419.10														
	35.0-36.2 ft. 35.00 Bluish-gray Shale layer														
36	417.90		417.80												
	36.20 36.3-41.3 ft. Slightly weathered, medium bedded, light olive gray (5Y 6/1), fine grained, strong, LIMESTONE, (ST. LOUIS FORMATION) Scattered pyrite crystals, trace of fossils		36.30						J,PL,CL						
38	38.1-40.2 ft. Arenaceous Limestone with Shale thin beds			4	96%				J,PL,CL						
40	40.2-41.3 ft. Arenaceous Dolomite								J,PL,SM						
	412.80		412.80												
	41.30 41.3-50.6 ft. Moderately weathered, medium bedded, light olive gray (5Y 6/1), fine grained, medium strong, LIMESTONE, (ST. LOUIS FORMATION) Few large (~5 mm.) pyrite crystals, thin layers of bluish-gray Shale, vugs <1 mm., crystals and chert nodules, abundant intact open joints		41.30						J,I,R (6)						
42									J,I,CL (2)						
				5	93%				J,I,R (2)						
									J,I,CL						
44									J,I,CL (3)						This zone may show high permeability due to the open joints intact
			408.40												
	45.7-46.1 ft. Arenaceous Limestone		45.70												
46	46.1-47.1 ft. Stylolitic with joints, filled with glauconite crystals, Limestone			6	100 %										
			407.00												
	47.1-47.5 ft. Stylolitic, microcrystalline, abundant crystals of quartz		47.10												
				7	100 %				J,I,R (3)						
48															

DEPTH SCALE: 1:2
DRILLING CONTRACTOR: LAYNE-WESTERN
DRILLER: D. MAHURIN

LOGGED: S. COSIO
CHECKED: R. BOOTH
DATE: 5/2/95

Golder Associates

RECORD OF DRILLHOLE PZ-108-SS

PROJECT: LAIDLAW/RI-FS
PROJECT NO: 943-2648
LOCATION: BRIDGETON, MO

BORING METHOD: NX Core & water
DRILLING DATE: 3/22/95-3/23/95
DRILL RIG: CME 75

DATUM: MSL
COORDINATES N: 1067678.4
AZIMUTH: 0

COLLAR ELEV: 454.1
E: 515972.8
INCLINATION: -90

J-Joint, F-Fault, S-Shear, B-Bedding, F-Foliation
PL-Planar, C-Curved, U-Undulating, ST-Stepped, I-Irregular
P-Polished, K-Slickensided, SM-Smooth, R-Rough, VR-V. Rough
Fe-FeOxide, CL-Clay Infill, CH-Chlorite, H-Healed, GRF-Gravel Filled

DEPTH SCALE (FEET)	DESCRIPTION	GRAPHIC LOG	ELEV / DEPTH (FT)	RUN NO.	CORE RECOVERY	RQD	FRACTURES PER FOOT	DISCONTINUITY DATA: DIP wrt CORE AXIS	DISCONTINUITY DATA: TYPE AND SURFACE DESCRIPTION	DISCONTINUITY DATA: GRAPHIC LOG	WEATHERING INDEX (SW FR, MW, HW, CW)	STRENGTH INDEX (R5 R6, R4, R3, R2, R1)	POINT LOAD INDEX (psi) (RT, R2 30, R3 150, R4 300, R4 600, R5 1500, R6)	TEST ORIENTATION	NOTES WATER LEVELS INSTRUMENTATION
48	41.3-50.6 ft. Moderately weathered, medium bedded, light olive gray (5Y 6/1), fine grained, medium strong, LIMESTONE, (ST. LOUIS FORMATION) Few large (~5 mm.) pyrite crystals, thin layers of bluish-gray Shale, vugs <1 mm., crystals and chert nodules, abundant intact open joints		404.70 / 49.40	7	100 %										Intact open joints observed in bottom 8 inches
50	48.6-49.4 ft. Abundant open intact joints							90	J,I,R (2)						
	50.6-54.4 ft. Fresh, medium bedded, light olive gray (5Y 6/1), f-m grained, medium strong, ARENACEOUS LIMESTONE, (ST. LOUIS FORMATION) Porous, vugs up to 3 mm., semi-filled with quartz crystals							90	J,I,CL (2)						
								90	J,I,R (2)						
52				8	100 %			90	J,I,R						
	Lenses/big crystals of pyrite at 50.9 ft., abundant veins of calcite throughout sample							90	J,I,R (2)						
								90	J,I,R						
54	54.4-60.0 ft. Fresh, thickly bedded, light olive gray (5Y 6/1), medium grained, medium strong, ARGILLACEOUS LIMESTONE, (ST. LOUIS FORMATION) Little veins of calcite <2 mm., few porous areas showing vugs up to 3 mm., trace of pyrite at 58.4 ft.		399.70 / 54.40												
56															
58				9	100 %			90	J,I,R (2)						
								90	J,I,R						
60	60.0-66.5 ft. Fresh, thickly bedded, light olive gray (5Y 6/1), medium grained, medium strong, ARGILLACEOUS LIMESTONE, (ST. LOUIS FORMATION) Few 1-3 mm. calcite veins, stylolitic, few zones showing 1 mm. or less vugs							90	J,I,R						
								90	J,I,R						
								90	J,I,R						
62								90	J,I,R						
								90	J,I,R						
								90	J,I,R						
64															

DEPTH SCALE: 1:2
DRILLING CONTRACTOR: LAYNE-WESTERN
DRILLER: D. MAHURIN

LOGGED: S. COSIO
CHECKED: R. BOOTH
DATE: 5/2/95

Golder Associates

RECORD OF DRILLHOLE PZ-108-SS

PROJECT: LAIDLAW/RI-FS
PROJECT NO: 943-2848
LOCATION: BRIDGETON, MO

BORING METHOD: NX Core & water
DRILLING DATE: 3/22/95-3/23/95
DRILL RIG: CME 75

DATUM: MSL
COORDINATES N: 1067678.4
AZIMUTH: 0

COLLAR ELEV: 454.1
E: 515872.6
INCLINATION: -90

J-Joint, F-Fault, S-Shear, B-Bedding, F-Foliation
PL-Planar, C-Curved, U-Undulating, ST-Stepped, I-Irregular
P-Polished, K-Slickensided, SM-Smooth, R-Rough, VR-V. Rough
Fe-FeOxide, CL-Clay Infill, CH-Chlorite, H-Healed, GRF-Gravel Filled

DEPTH SCALE (FEET)	DESCRIPTION	GRAPHIC LOG	ELEV / DEPTH (FT)	RUN NO	CORE RECOVERY	RQD	FRACTURES PER FOOT	DISCONTINUITY DATA: DIP wrt CORE AXIS	DISCONTINUITY DATA: TYPE AND SURFACE DESCRIPTION	GRAPHIC LOG	WEATHERING INDEX (SW FR, MW HW, CW)	STRENGTH INDEX (R6, R5, R4, R3, R2, R1)	POINT LOAD INDEX (psi) (R1 30, R2 150, R3 300, R4 600, R5 1500, R6)	TEST ORIENTATION	NOTES WATER LEVELS INSTRUMENTATION
64	60.0-66.5 ft. Fresh, thickly bedded, light olive gray (5Y 6/1), medium grained, medium strong, ARGILLACEOUS LIMESTONE, (ST. LOUIS FORMATION), Few 1-3 mm. calcite veins, stylolitic, few zones showing 1 mm. or less vugs		389.70	9	100%										
	64.4-65.6 ft. Little gray quartzose chert rosettes are observed		64.40						J,I,R						
66									J,I,R						
									J,I,CL						
	66.5-71.2 ft. Fresh, thickly bedded, light olive gray (5Y 6/1), fine grained, medium strong, LIMESTONE, (ST. LOUIS FORMATION) Scattered fossils throughout								J,I,R						
68									J,I,R						
				10	99%				J,I,CL (4)						
70									J,I,R						
	71.2-72.7 ft. Fresh, medium bedded, greenish gray (5GY 6/1), f-m grained, medium strong, ARENACEOUS LIMESTONE, (ST. LOUIS FORMATION) Cross bedded								J,I,R (2)						
									J,I,CL						
72									J,I,CL (4)						
	72.7-76.3 ft. Strongly weathered, medium bedded, light olive gray (5Y 6/1), microcrystalline, medium strong, LIMESTONE, (ST. LOUIS FORMATION) Stylolitic, highly laminated														
74			379.70												
			74.40												3/23/95 @ 7:30 Began drilling, water level at start was 11.9 ft. BGS
76															
	76.3-79.4 ft. Moderately weathered, medium bedded, light olive gray (5Y 6/1), very fine grained, medium strong, LIMESTONE, (ST. LOUIS FORMATION) Stylolitic, few intact open joints filled with clayey material, trace of quartz crystals and trace of pyrite			11	100%				J,I,R (3)						
									J,I,R						
78									J,I,CL						
									J,I,R (4)						
	79.4-93.6 ft. Fresh, medium bedded, yellowish gray (5Y 8/1) to light olive gray (5Y 6/1), fine grained, medium strong, STYLOLITIC LIMESTONE, (ST. LOUIS FORMATION)								J,I,CL (2)						
			374.70												
			79.40	12	98%										
80	79.5 ft. Calcite vein of approximately 5-10 mm. thick														

DEPTH SCALE: 1:2
DRILLING CONTRACTOR: LAYNE-WESTERN
DRILLER: D. MAHURIN

LOGGED: S. COSIO
CHECKED: R. BOOTH
DATE: 5/2/95

Golder Associates

RECORD OF DRILLHOLE PZ-108-SS

PROJECT: LAIDLAW/RI-FS
PROJECT NO: 943-2848
LOCATION: BRIDGETON, MO

BORING METHOD: NX Core & water
DRILLING DATE: 3/22/95-3/23/95
DRILL RIG: CME 75

DATUM: MSL
COORDINATES N: 1067878.4
AZIMUTH: 0

COLLAR ELEV: 454.1
E: 515972.8
INCLINATION: -90

J-Joint, F-Fault, S-Shear, B-Bedding, F-Foliation
PL-Planar, C-Curved, U-Undulating, ST-Stepped, I-Irregular
P-Polished, K-Slikensided, SM-Smooth, R-Rough, VR-V. Rough
Fe-FeOxide, CL-Clay Infill, CH-Chlorite, H-Healed, GRF-Gravel Filled

DEPTH SCALE (FEET)	DESCRIPTION	GRAPHIC LOG	ELEV / DEPTH (FT)	RUN NO.	CORE RECOVERY	RQD	FRACTURES PER FOOT	DISCONTINUITY DATA: DIP wrt CORE AXIS	DISCONTINUITY DATA: TYPE AND SURFACE DESCRIPTION	GRAPHIC LOG	WEATHERING INDEX	STRENGTH INDEX	POINT LOAD INDEX (psi)	TEST ORIENTATION	NOTES WATER LEVELS INSTRUMENTATION
80	79.4-93.6 ft. Fresh, medium bedded, yellowish gray (5Y 8/1) to light olive gray (5Y 6/1), fine grained, medium strong, STYLOLITIC LIMESTONE, (ST. LOUIS FORMATION) 79.5 ft. Calcite vein of approximately 5-10 mm. thick							90	J,I,R						
								60	J,P,R						
								90	J,I,R						
82								90	J,I,R (2)						
				12	98%										
								90	J,I,R						
84															
	84.4-85.8 ft. Crystalline Stylolitic Limestone		369.70					90	J,I,R						
			84.40					90	J,I,CL						
								60	J,I,R						
	85.8-87.6 ft. Fine grained, Limestone, stylolitic, abundant quartz and pyrite cyrstals							90	J,I,R (2)						
86								90	J,I,R						
								90	J,I,CL						
88	87.9 ft. 5 mm. joint filled with a dark greenish-gray (5G 4/1), clayey material 87.9-93.6 ft. Stylolitic crystalline Limestone														
				13	99%										
90	90.1-91.9 ft. Abundant silicified fossils							90	J,I,CL (2)						
92								90	J,I,CL						
								90	J,I,R						
	93.6-96.4 ft. Fresh, medium bedded, light olive gray (5Y 6/1), fine grained, strong, ARGILLACEOUS LIMESTONE, (ST. LOUIS FORMATION) Few calcite veins (1 mm.)							0	J,P,SM						
94			359.70												
			94.40												
				14	100 %										
96															

DEPTH SCALE: 1:2
DRILLING CONTRACTOR: LAYNE-WESTERN
DRILLER: D. MAHURIN

LOGGED: S. COSIO
CHECKED: R. BOOTH
DATE: 5/2/95

Golder Associates

RECORD OF DRILLHOLE PZ-108-SS

PROJECT: LAIDLAW/RI-FS
PROJECT NO: 943-2848
LOCATION: BRIDGETON, MO

BORING METHOD: NX Core & water
DRILLING DATE: 3/22/95-3/23/95
DRILL RIG: CME 75

DATUM: MSL
COORDINATES N: 1067878.4
AZIMUTH: 0

COLLAR ELEV: 454.1
E: 515972.6
INCLINATION: -90

J-Joint, F-Fault, S-Shear, B-Bedding, F-Foliation
PL-Planar, C-Curved, U-Undulating, ST-Stepped, I-Irregular
P-Polished, K-Slickensided, SM-Smooth, R-Rough, VR-V. Rough
Fe-FeOxide, CL-Clay Infil, CH-Chlorite, H-Healed, GRF-Gravel Filled

DEPTH SCALE (FEET)	DESCRIPTION	GRAPHIC LOG	ELEV / DEPTH (FT)	RUN NO.	CORE RECOVERY	RQD (80 60 40 20)	FRACTURES PER FOOT (2 4 6 8 10)	DISCONTINUITY DATA: DIP wrt CORE AXIS (0 30 60 90)	DISCONTINUITY DATA: TYPE AND SURFACE DESCRIPTION	DISCONTINUITY DATA: GRAPHIC LOG	WEATHERING INDEX (SW FR MW HW CW)	STRENGTH INDEX (R6 R5 R4 R3 R2 R1)	POINT LOAD INDEX (psi) (R1 30 R2 150 R3 300 R4 600 R5 1500 R6)	TEST ORIENTATION	NOTES WATER LEVELS INSTRUMENTATION
96	96.4-109.4 ft. Fresh, thickly bedded, light olive gray (5Y 6/1) to olive gray (5Y 4/1), fine grained, medium strong, LIMESTONE, (ST. LOUIS FORMATION) Stylolitic, abundant calcite veins, pyrite crystals observed in clay filled joints, large (<4 mm.) calcite crystals at 98.0 ft. 96.4-104.0 ft. Abundant clayey filled intact joints								J,I,R J,I,CL J,I,R J,I,R						
98															
100	100.0-102.5 ft. Oolitic Limestone			14	100 %				J,I,CL (2)						
102	101.0-102.0 ft. Brecciated Limestone, cemented with greenish-blue clayey material								J,I,CL (2) J,I,R						
104			349.70 104.40												
106	104.8-104.9 ft. Layer of bluish-green clayey material, foliated								J,I,R						
108	107.2-107.7 ft. Highly brecciated 100.0-108.4 ft. Scattered calcite veins (1-2 mm.) throughout this core section			15	100 %				J,P,SM J,I,R						
110	109.4-114.8 ft. Fresh, medium to thickly bedded, light olive gray (5Y 6/1), f-m grained, medium strong, ARGILLACEOUS LIMESTONE, (ST. LOUIS FORMATION) Few chert nodules, banded down to 111.4 ft. with finely crystalline Limestone (.20-1 mm.)								J,I,R J,I,CL						
112															

DEPTH SCALE: 1:2
DRILLING CONTRACTOR: LAYNE-WESTERN
DRILLER: D. MAHURIN

LOGGED: S. COSIO
CHECKED: R. BOOTH
DATE: 5/2/95

Golder Associates

RECORD OF DRILLHOLE PZ-108-SS

PROJECT: LAIDLAW/RI-FS
PROJECT NO: 943-2848
LOCATION: BRIDGETON, MO

BORING METHOD: NX Core & water
DRILLING DATE: 3/22/95-3/23/95
DRILL RIG: CME 75

DATUM: MSL
COORDINATES N: 1067678.4
AZIMUTH: 0

COLLAR ELEV: 454.1
E: 515972.6
INCLINATION: -90

J-Joint, F-Fault, S-Shear, B-Bedding, F-Foliation
PL-Planar, C-Curved, U-Undulating, ST-Stepped, Irregular
P-Polished, K-Slickensided, SM-Smooth, R-Rough, VR-V. Rough
Fe-FeOxide, CL-Clay Infill, CH-Chlorite, H-Healed, GRF-Gravel Filled

DEPTH SCALE (FEET)	DESCRIPTION	GRAPHIC LOG	ELEV / DEPTH (FT)	RUN NO	CORE RECOVERY	RQD	FRACTURES PER FOOT	DISCONTINUITY DATA: DIP wrt CORE AXIS	DISCONTINUITY DATA: TYPE AND SURFACE DESCRIPTION	GRAPHIC LOG	WEATHERING INDEX	STRENGTH INDEX	POINT LOAD INDEX (psi)	TEST ORIENTATION	NOTES WATER LEVELS INSTRUMENTATION
112	109.4-114.8 ft. Fresh, medium to thickly bedded, light olive gray (5Y 6/1), f-m grained, medium strong, ARGILLACEOUS LIMESTONE, (ST. LOUIS FORMATION) Few chert nodules, banded down to 111.4 ft. with finely crystalline Limestone (.20-1 mm.) 111.9-112.9 ft. Abundant rounded pyrite crystals			15	100 %										
114			339.70 / 114.40												
116	114.8-119.4 ft. Fresh, medium to thickly bedded, olive gray (5Y 4/1), fine grained, medium strong, FOSSILIFEROUS LIMESTONE, (SALEM FORMATION) Very large brachiopods from 115.4-118.7 ft.								J,C,SM						@ 114.8 ft. top of Salem Limestone encountered
118	118.3-119.5 ft. Dark greenish gray (5GY 4/1), Oolitic Limestone with calcite veins and large crystals of calcite (10 mm.)			16	100 %				J,I,CL J,I,CL						
120	120.4-120.7 ft. Highly brecciated 121.0-121.3 ft. Highly brecciated								J,I,R J,I,CL						
122	121.8-124.4 ft. Dolomitic Limestone 122.4-124.4 ft. Very large chert nodules								J,I,CL J,PL,SM J,PL,CL						
124	124.4-130.4 ft. Fresh, thickly bedded, olive gray (5Y 4/1), fine grained, medium strong, LIMESTONE, (SALEM FORMATION) Large beds of chert, large chert nodules		329.70 / 124.40						J,I,R						
126				17	100 %				J,PL,SM						
128															

DEPTH SCALE: 1:2
DRILLING CONTRACTOR: LAYNE-WESTERN
DRILLER: D. MAHURIN

LOGGED: S. COSIO
CHECKED: R. BOOTH
DATE: 5/2/95

Golder Associates

RECORD OF DRILLHOLE PZ-108-SS

PROJECT: LAIDLAW/RI-FS
PROJECT NO: 943-2848
LOCATION: BRIDGETON, MO

BORING METHOD: NX Core & water
DRILLING DATE: 3/22/95-3/23/95
DRILL RIG: CME 75

DATUM: MSL
COORDINATES N: 1067678.4
AZIMUTH: 0

COLLAR ELEV: 454.1
E: 515972.6
INCLINATION: -90

J-Joint, F-Fault, S-Shear, B-Bedding, F-Foliation
PL-Planar, C-Curved, U-Undulating, ST-Stepped, I-Irregular
P-Polished, K-Slikensided, SM-Smooth, R-Rough, VR-V. Rough
Fe-FeOxide, CL-Clay Infill, CH-Chlorite, H-Heated, GRF-Gravel Filled

DEPTH (FEET)	DESCRIPTION	GRAPHIC LOG	ELEV / DEPTH (FT)	RUN NO.	CORE RECOVERY	RQD	FRACTURES PER FOOT	DISCONTINUITY DATA: DIP wrt CORE AXIS	DISCONTINUITY DATA: TYPE AND SURFACE DESCRIPTION	GRAPHIC LOG	WEATHERING INDEX	STRENGTH INDEX	POINT LOAD INDEX (psi)	TEST ORIENTATION	NOTES WATER LEVELS INSTRUMENTATION
128	124.4-130.4 ft. Fresh, thickly bedded, olive gray (5Y 4/1), fine grained, medium strong, LIMESTONE, (SALEM FORMATION) Large beds of chert, large chert nodules														
130	130.4-134.2 ft. Fresh, thickly bedded, light olive gray (5Y 6/1), medium grained, strong, FOSSILIFEROUS LIMESTONE, (SALEM FORMATION)			17	100 %				J,I,R						
132															
134	134.2-134.6 ft. Crystalline Limestone 134.6-139.0 ft. Fresh, medium bedded, light olive gray (5Y 6/1), f-m grained, medium strong, LIMESTONE, (SALEM FORMATION) Stylolitic, large (10 mm.) calcite crystals, abundant clay filled intact joints, abundant chert nodules		319.70 / 134.40												
136									J,I,CL						
138									J,I,CL						
	138.6-139.0 ft. Crinoid fragments 139.0-140.8 ft. Finely grained Arenaceous Limestone			18	100 %										
140	140.8-144.4 ft. Fresh, medium bedded, olive gray (5Y 4/1), fine grained, strong, ARGILLACEOUS LIMESTONE, (SALEM FORMATION) Interbedded with Dolomite								J,I,R						
142															
144															

DEPTH SCALE: 1:2
DRILLING CONTRACTOR: LAYNE-WESTERN
DRILLER: D. MAHURIN

LOGGED: S. COSIO
CHECKED: R. BOOTH
DATE: 5/2/95

Golder Associates

RECORD OF DRILLHOLE PZ-108-SS

PROJECT: LAIDLAW/RI-FS
PROJECT NO: 943-2848
LOCATION: BRIDGETON, MO

BORING METHOD: NX Core & water
DRILLING DATE: 3/22/95-3/23/95
DRILL RIG: CME 75

DATUM: MSL
COORDINATES N: 1067678.4
AZIMUTH: 0

COLLAR ELEV: 454.1
E: 515872.6
INCLINATION: -90

ROCK TYPE

J-Joint, F-Fault, S-Shear, B-Bedding, F-Foliation
PL-Planar, C-Curved, U-Undulating, ST-Stepped, I-Irregular
P-Polished, K-Slikensided, SM-Smooth, R-Rough, VR-V. Rough
Fe-FeOxide, CL-Clay Infill, CH-Chlorite, H-Healed, GRF-Gravel Filled

DEPTH SCALE (FEET)	DESCRIPTION	GRAPHIC LOG	ELEV / DEPTH (FT)	RUN NO.	CORE RECOVERY	RQD	FRACTURES PER FOOT	DISCONTINUITY DATA: DIP wrt CORE AXIS	DISCONTINUITY DATA: TYPE AND SURFACE DESCRIPTION	DISCONTINUITY DATA: GRAPHIC LOG	WEATHERING INDEX (SW FR, MW, HW, CW)	STRENGTH INDEX (R5 R6, R4, R3, R2, R1)	POINT LOAD INDEX (psi) (R1 30, R2 150, R3 300, R4 600, R5 1500, R6)	TEST ORIENTATION	NOTES WATER LEVELS INSTRUMENTATION
144	140.8-144.4 ft. Fresh, medium bedded, olive gray (5Y 4/1), fine grained, strong, ARGILLACEOUS LIMESTONE, (SALEM FORMATION) Interbedded with Dolomite		309.70 / 144.40	18	100 %			90	J,I,R			R6			3/23/95 @ 16:35 Coring completed
148	End of Record of Drillhole at 144.4 ft.														
150															
152															
154															
156															
158															
160															

DEPTH SCALE: 1:2
DRILLING CONTRACTOR: LAYNE-WESTERN
DRILLER: D. MAHURIN

LOGGED: S. COSIO
CHECKED: R. BOOTH
DATE: 5/2/95

Golder Associates

Well No. PZ-108-SS

Boring No. X-Ref: PZ-108-SS

PIEZOMETER CONSTRUCTION SUMMARY

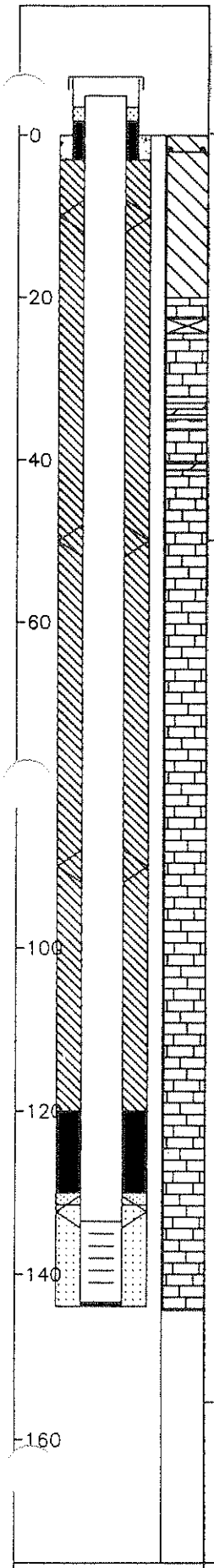

Survey Coords: Northing: 1067678 ft. Easting: 515973 ft.

Elevation Ground Level 454.1 ft. NGVD

Top of PVC Casing 456.20 ft. NGVD

Drilling Summary:

Total Depth	143.9 ft.
Borehole Diameter	10 1/4 in. (0.0-20.0 ft.) 5 7/8 in. (20.0-143.9 ft.)
Casing Stickup Height	2.08 ft.
Driller	Layne-Western
	St. Louis, MO
Rig	CME 75, Schramm Portadrill T660H
Bit(s)	6 1/4 in. ID Hollow Stem Auger Bit,
	NX Core, 5 7/8 in. Button Bit for Reaming
Drilling Fluid	Auger-None, NX Core Water,
	Air Rotary
Protective Casing	8x in. Square Steel, by 5 ft. long

Construction Time log:

Task	Start Date	Start Time	Finish Date	Finish Time
Drilling				
CME 75	3/21/95	16:30	3/23/95	16:35
Schramm Rotary	3/29/95	7:30	3/29/95	9:15
Geophys.Logging:				
Casing:	3/29/95	9:30	3/29/95	9:45
Filter Placement:	3/29/95	9:50	3/29/95	10:15
Cementing:				
Development				
Bentonite Grout	3/29/95	11:00	3/29/95	13:15
Bentonite Seal	3/29/95	10:20	3/29/95	11:00

Well Design & Specifications

Basis: Geologic Log X Geophysical Log

Casing string(s): C = Casing S = Screen

Depth			String(s)	Elevation		
+ 2.08	-	133.54	C1	456.20	-	320.58
133.54	-	143.35	S1	320.58	-	310.77
143.35	-	143.68	C2	310.77	-	310.44
	-				-	
	-				-	
	-				-	

Casing: C1 2 in. dia. Schedule 80 PVC, flush threaded with O-rings

C2 2 in. dia. threaded PVC end cap (4 in. long or 0.33 ft.)

Screen: S1 2 in. dia. Schedule 80 PVC, 0.010 in. machine cut slot, flush threaded with O-rings

Sand Pack: 16-35 mesh Silica Sand, 131.5-143.9 ft.

Filter Pack: Less than 50 mesh Silica Sand, 130.0-131.5 ft.

Grout Seal: Wyo-Ben Grout Well Bentonite Slurry, 3.0-120.0 ft.

Bentonite Seal: Extra high yield Wyo-Ben (100%) Slurry, 120.0-131.5 ft.

Concrete: 0.0-3.0 ft.

Well Development

Stabilization Test Data:

Time	pH	Spec. Cond.	Temp (°C)

Recovery Data:

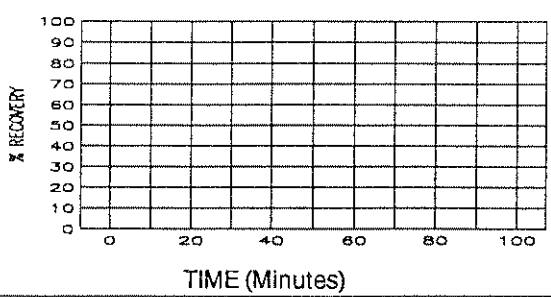

Comments:

Not to Scale

Supervised by B. Tilton

Job Number 943-2848

Site LAIDLAW/OU2 RI-FS/MO

File Name PZ108SS

MISSOURI DEPARTMENT OF NATURAL RESOURCES
DIVISION OF GEOLOGY AND LAND SURVEY

MONITORING WELL CERTIFICATION RECORD

OFFICE USE ONLY	
REF NO 115090	DATE RECEIVED
ROUTE	CHECK NO.
STATE WELL NUMBER	TRANSMITTAL NO.
CHECKED BY	CROSS REFERENCE NO.
APPROVED BY	ENTERED Ph 1 Ph 2 Ph 3
	DATE APPROVED

INFORMATION SUPPLIED BY OWNER

SITE NAME: LAIDLAW BRIDGETON SANITARY LANDFILL
WELL NUMBER: P2-108-SS

SITE ADDRESS: ST. CHARLES ROCK RD. | CITY: BRIDGETON | STATE: Mo | ZIP CODE: 63044

NAME: LAIDLAW WASTE SYSTEMS, INC. | TELEPHONE: 314-241-3710

ADDRESS: 1838 N. BROADWAY | CITY: ST. LOUIS | STATE: Mo. | ZIP CODE: 63102

INFORMATION SUPPLIED BY MONITORING WELL CONTRACTOR

LOCATION OF WELL SHOW LOCATION IN SECTION PLAT

COUNTY: St. Louis
ELEVATION: 454.1
AREA NO.:

SMALLEST ¼ ____ ¼ ____ ¼ ____ ¼ LARGEST ¼

SEC. ____ TWN. 47 N,RNG. 5 (E) OR W

LAT. 38 ° 45 ' 57 " LONG. 90 ° 26 ' 39 "

SKETCH THE LOCATION TO THE WELL INCLUDING MILEAGE ON ALL ROADS TRAVELED FROM NEAREST TOWNS OR HIGHWAYS

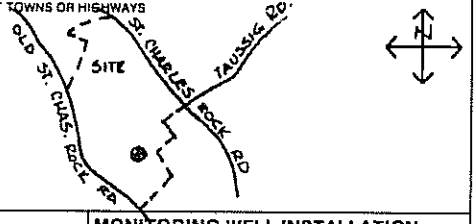

DESCRIBE LOCATION OF THE WELL SO WE WOULD BE ABLE TO VISIT IT

MONITORING WELL INSTALLATION CONTRACTOR'S NAME
LAYNE WESTERN Co., INC.

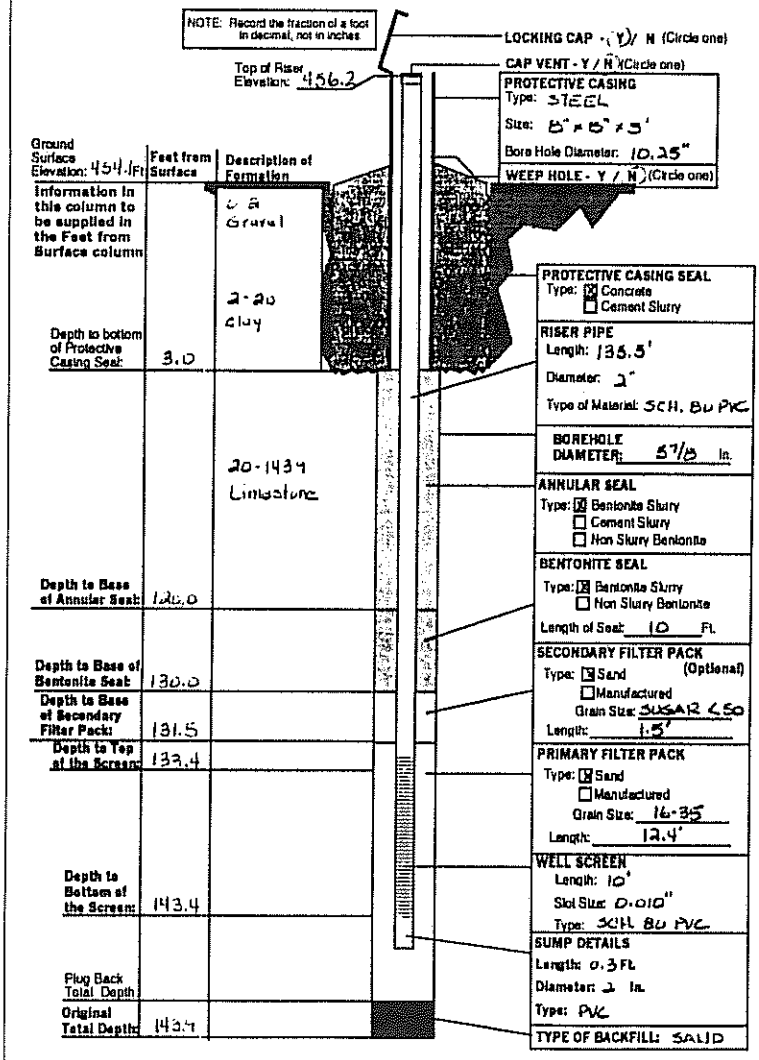

DRILLING CONTRACTOR'S NAME
LAYNE WESTERN Co., INC.

TYPE OF INSTALLATION
☒ ABOVE GROUND ☐ FLUSH MOUNT

STATIC WATER LEVEL
FEET FROM MEASURING POINT

DATE OF STATIC WATER LEVEL

ELEVATION OF MEASURING POINT
456.2

MEASURING POINT IS
☒ TOP OF RISER PIPE
☐ OTHER

DRILLING EQUIPMENT
☒ AIR ROTARY ☒ AUGER TYPE 6¼ H.S.A.
☐ REVERSE ROTARY ☐ OTHER

CENTRALIZERS USED
☒ YES, AT 4 TOTAL
☒ STAINLESS STEEL
☐ OTHER
☐ NO

MULTIPLE CASED WELLS
SUBMIT ADDITIONAL AS BUILT DIAGRAM SHOWING WELL CONSTRUCTION DETAILS INCLUDING TYPE AND SIZE OF ALL CASING, HOLE DIAMETERS, AND GROUT USED.

DATE WELL CONSTRUCTION WAS COMPLETED
3-29-95

I HEREBY CERTIFY THAT THE MONITORING WELL HEREIN DESCRIBED WAS CONSTRUCTED IN ACCORDANCE WITH THE DEPARTMENT OF NATURAL RESOURCES REQUIREMENTS FOR THE CONSTRUCTION OF MONITORING WELLS.

SIGNATURE (MONITORING WELL CONTRACTOR) Michael P. Vogl
PERMIT NUMBER 001256WM1 | DATE 5-10-95
SIGNATURE (DRILLING CONTRACTOR) Michael P. Vogl
PERMIT NUMBER 001256WM1 | DATE 5-10-95

MO 780-1415 (2-94) DISTRIBUTION: WHITE/DIVISION CANARY/MONITORING WELL CONTRACTOR PINK/OWNER

LAIDLAW WASTE SYSTEMS INC.

SOIL BOREHOLE LOG

SITE NAME AND LOCATION	DRILLING METHOD:		BORING NO.
	6.25 inch I.D. Hollow Stem Auger		PZ-109-SS
			SHEET 1 OF 2
	SAMPLING METHOD:		DRILLING START / FINISH
LAIDLAW/OU2 RI-FS/MO WEST LAKE LANDFILL OPERABLE UNIT 2	SPLIT SPOON: 2.0 inch O.D./1.5 inch I.D. (SP)		
	SHELBY TUBE: 3.0 inch O.D./2 13/16 inch I.D. (SH)		
	WATER LEVEL		TIME 7:48 / TIME 8:48
	TIME		
	DATE		DATE 4/7/95 / DATE 4/7/95
NORTHING: 1068011.70 DATUM EASTING: 516144.36 ELEVATION 456.8	CASING DEPTH		

DRILL RIG CME 75 - TRUCK MOUNT	SURFACE CONDITIONS
ANGLE -90° BEARING NA	
SAMPLE HAMMER 140 lbs.	

DEPTH IN FEET (ELEVATION)	BLOW/ 6 IN. ON SAMPLER	RECOVERY	SYMBOL	SAMPLER SYMBOL	SAMPLE NUMBER AND DESCRIPTION OF MATERIAL	SAMPLER TYPE	REMARKS
1	1 1 1 2	2.0'/2.0' (100%)			(0.0-2.0 Ft.) Very loose, light olive gray (5Y 6/1), SILT, trace of fine to coarse Gravel, trace very fine Sand, NR, moist, (ML), (FILL)	SP ①	
					(454.8) 2.0		
2	50/4"	0.4'/2.0' (20%)			(2.0-6.0 Ft.) Very dense, light olive gray (5Y 6/1), f-c GRAVEL, little Fines, SR, damp, (GP), (FILL)	SP ②	
3							
4	50/3"	0.2'/2.0' (10%)				SP ③	
5							
					(450.8) 6.0		
6	5 6 8 8	1.8'/2.0' (90%)			(6.0-12.0 Ft.) Stiff, dark yellowish brown (10YR 4/2), mottled CLAYEY SILT, NR, damp, (CL-ML), (LOESS)	SP ④	
7							
8	5 7 8 11	1.6'/2.0' (80%)				SP ⑤	
9							
10	4 5 6 8	2.0'/2.0' (100%)				SP ⑥	
11							
12	4 3 5 7	1.8'/2.0' (90%)			(12.0-16.0 Ft.) Firm, mottled moderate yellowish brown (10YR 5/4) to light olive gray (5Y 6/1), CLAYEY SILT, NR, damp, (CL-ML), (LOESS)	SP ⑦	
13							
14	4 8 39 50/2"	1.9'/2.0' (95%)			@ 14.5 Ft., little Fine Gravel	SP ⑧	

DRILLING CONTR LAYNE-WESTERN

LOGGED BY S. COSIO

DATE 5/31/95 CHK'D BY W. HERST

JOB NO.: 943-2848

FILENAME: PZ109SS

LAIDLAW WASTE SYSTEMS INC.

SOIL BOREHOLE LOG

SITE NAME AND LOCATION

LAIDLAW/OU2 RI-FS/MO
WEST LAKE LANDFILL
OPERABLE UNIT 2

NORTHING: 1068011.70
DATUM EASTING: 516144.36 ELEVATION 456.8

DRILLING METHOD: 6.25 inch I.D. Hollow Stem Auger

SAMPLING METHOD:
SPLIT SPOON: 2.0 inch O.D./1.5 inch I.D. (SP)
SHELBY TUBE: 3.0 inch O.D./2 13/16 inch I.D. (SH)

					DRILLING START	DRILLING FINISH
WATER LEVEL						
TIME					7:48	8:48
DATE						
CASING DEPTH					4/7/95	4/7/95

BORING NO. PZ-109-SS

SHEET 2 OF 2

DRILL RIG CME 75 - TRUCK MOUNT

ANGLE -90° BEARING NA

SAMPLE HAMMER 140 lbs.

SURFACE CONDITIONS

DEPTH IN FEET (ELEVATION)	BLOW/ 6 IN. ON SAMPLER	RECOVERY	SYMBOL	SAMPLER SYMBOL	SAMPLE NUMBER AND DESCRIPTION OF MATERIAL	SAMPLER TYPE		REMARKS
16					(12.0-16.0 Ft.) Firm, mottled moderate yellowish brown (10YR 5/4) to light olive gray (5Y 6/1), CLAYEY SILT, NR, damp, (CL-ML), (LOESS) (440.8) 16.0	SP	8	Top of weathered bedrock encountered @ 15.7 ft.
					End of Soil Borehole Log at 16.0 ft.			
					See PZ-109-SS Record of Drillhole for rock descriptions			
17								
18								
19								
20								
21								
22								
23								
24								
25								
26								
27								
28								
29								

DRILLING CONTR LAYNE-WESTERN

LOGGED BY S. COSIO DATE 5/31/95 CHK'D BY W. HEKSTRA

JOB NO.: 943-2848

FILENAME: PZ109SS

RECORD OF DRILLHOLE PZ-109-SS

Sheet 1 of 9

PROJECT: LAIDLAW/RI-FS
PROJECT NO: 943-2848
LOCATION: BRIDGETON, MO

BORING METHOD: NX Core & water
DRILLING DATE: 4/7/95-4/8/95
DRILL RIG: CME 75

DATUM: MSL
COORDINATES N: 1068011.70
AZIMUTH: 0

COLLAR ELEV: 456.8
E: 516144.38
INCLINATION: -90

J-Joint, F-Fault, S-Shear, B-Bedding, F-Foliation
PL-Planar, C-Curved, U-Undulating, ST-Stepped, I-Irregular
P-Polished, K-Slickensided, SM-Smooth, R-Rough, VR-V. Rough
Fe-FeOxide, CL-Clay Infill, CH-Chlorite, H-Healed, GRF-Gravel Filled

DEPTH SCALE (FEET)	DESCRIPTION	GRAPHIC LOG	ELEV / DEPTH (FT)	RUN NO.	CORE RECOVERY	RQD (80, 60, 40, 20)	FRACTURES PER FOOT (2, 4, 6, 8, 10)	DISCONTINUITY DATA: DIP wrt CORE AXIS (0, 30, 60, 90)	DISCONTINUITY DATA: TYPE AND SURFACE DESCRIPTION	DISCONTINUITY DATA: GRAPHIC LOG	WEATHERING INDEX (SW, FR, MW, HW, CW)	STRENGTH INDEX (R5, R4, R3, R2, R1, R0)	POINT LOAD INDEX (psi) (HT, R2 150, R3 300, R4 600, R5 1500, R6)	TEST ORIENTATION	NOTES WATER LEVELS INSTRUMENTATION
0	0.0-15.7 ft. See Soil Borehole Log PZ-109-SS														
2															
4															
6															
8															
10															
12															
14															
16	15.7-20.7 ft. Moderately weathered, thickly bedded, light olive gray (5Y 6/1), f-m grained, medium strong, LIMESTONE, (ST. LOUIS FORMATION) Fossiliferous, pyrite and calcite crystals common, stylolitic, abundant clay filled intact joints		441.10 / 15.70	1	100 %										4/7/95 @ 9:47 Begin coring Run 1

DEPTH SCALE: 1:2
DRILLING CONTRACTOR: LAYNE-WESTERN
DRILLER: D. MAHURIN

LOGGED: S. COSIO
CHECKED: R. BOOTH
DATE: 5/5/95

Golder Associates

RECORD OF DRILLHOLE PZ-109-SS

PROJECT: LAIDLAW/RI-FS
PROJECT NO: 943-2848
LOCATION: BRIDGETON, MO

BORING METHOD: NX Core & water
DRILLING DATE: 4/7/95-4/8/95
DRILL RIG: CME 75

DATUM: MSL
COORDINATES N: 1068011.70
AZIMUTH: 0

COLLAR ELEV: 456.8
E: 518144.38
INCLINATION: -90

J-Joint, F-Fault, S-Shear, B-Bedding, F-Foliation
PL-Planar, C-Curved, U-Undulating, ST-Stepped, I-Irregular
P-Polished, K-Slickensided, SM-Smooth, R-Rough, VR-V. Rough
Fe-FeOxide, CL-Clay Infill, CH-Chlorite, H-Healed, GRF-Gravel Filled

DEPTH SCALE (FEET)	DESCRIPTION	ELEV / DEPTH (FT)	RUN NO	CORE RECOVERY	TYPE AND SURFACE DESCRIPTION	NOTES WATER LEVELS INSTRUMENTATION
16	15.7-20.7 ft. Moderately weathered, thickly bedded, light olive gray (5Y 6/1), f-m grained, medium strong, LIMESTONE, (ST. LOUIS FORMATION) Fossiliferous, pyrite and calcite crystals common, stylolitic, abundant clay filled intact joints				J,PL,SM (2); J,I,R (2); J,I,R (2); J,PL,SM	
18					J,I,R (2); J,U,R	
20	19.8-20.0 ft. Layer of brown chert		1	100 %	J,PL,R (2)	
	20.7-31.5 ft. Fresh, thickly bedded, light olive gray (5Y 6/1), f-m grained, medium strong, LIMESTONE, (ST. LOUIS FORMATION) Fossiliferous, stylolitic, pyrite and calcite crystals common, abundant argillaceous partings				J,PL,R; J,I,R	
22						
24		432.30 / 24.50			J,I,R	4/7/95 @ 10:47 Begin coring Run 2
	25.0-25.5 ft. Bioclastic Limestone				J,I,CL	
	25.5-27.2 ft. Microcrystalline Limestone				J,U,SM (2); J,I,R	
28					J,I,R (3); J,PL,R (3); J,I,CL (2)	
28			2	100 %	J,I,CL (2); J,I,R; J,I,CL (2)	
30	29.9-31.3 ft. Dark greenish gray (5GY 4/1), intraclastic Limestone				J,I,CL (3)	
	31.3-31.4 ft. Layer of dark greenish yellow clay				J,I,R; J,I,CL	
	31.5-32.5 ft. Fresh, thinly bedded, greenish black (5G 2/1), fine grained, medium strong, DOLOMITE, (ST. LOUIS FORMATION) Large (3 mm.) calcite veins	425.30 / 31.50			J,I,CL (2); J,I,CL	
32						

DEPTH SCALE: 1:2
DRILLING CONTRACTOR: LAYNE-WESTERN
DRILLER: D. MAHURIN

LOGGED: S. COSIO
CHECKED: R. BOOTH
DATE: 5/5/95

Golder Associates

RECORD OF DRILLHOLE PZ-109-SS

Sheet 3 of 9

PROJECT: LAIDLAW/RI-FS
PROJECT NO: 643-2848
LOCATION: BRIDGETON, MO

BORING METHOD: NX Core & water
DRILLING DATE: 4/7/95-4/8/95
DRILL RIG: CME 75

DATUM: MSL
COORDINATES N: 1068011.70
AZIMUTH: 0

COLLAR ELEV: 456.8
E: 516144.36
INCLINATION: -90

J-Joint, F-Fault, S-Shear, B-Bedding, F-Foliation
PL-Planar, C-Curved, U-Undulating, ST-Stepped, I-Irregular
P-Polished, K-Slickensided, SM-Smooth, R-Rough, VR-V. Rough
Fe-FeOxide, CL-Clay Infill, CH-Chlorite, H-Healed, GRF-Gravel Filled

SCALE DL (FEET)	DESCRIPTION	GRAPHIC LOG	ELEV / DEPTH (FT)	RUN NO.	CORE RECOVERY	RQD	FRACTURES PER FOOT	DISCONTINUITY DATA: DIP wrt CORE AXIS	DISCONTINUITY DATA: TYPE AND SURFACE DESCRIPTION	GRAPHIC LOG	WEATHERING INDEX	STRENGTH INDEX	POINT LOAD INDEX (psi)	TEST ORIENTATION	NOTES WATER LEVELS INSTRUMENTATION
32			424.30						J,I,R						
	32.5-34.9 ft. 32.50 Fresh, thickly bedded, light olive gray (5Y 6/1), fine grained, medium strong, LIMESTONE, (ST. LOUIS FORMATION) Little argillaceous partings, pyrite crystals present			2	100 %				J,PL,CL J,I,CL						
34			422.30												
	34.9-40.5 ft. Slightly weathered, thickly bedded, grayish orange (10YR 7/4) to light olive gray (5Y 6/1), f-m grained, strong, ARGILLACEOUS LIMESTONE, (ST. LOUIS FORMATION) Vugs up to 2 mm., calcite crystals and veins up to 3 mm. present, little pyrite crystals		34.50												4/7/95 @ 12:55 Begin coring Run 3
36	35.0-38.7 ft. Very porous material								J,I,R						
38									J,I,CL						
	39.0-39.2 ft. Layer of brown chert			3	99%				J,I,R						
40									J,I,CL						
	40.5-45.6 ft. Fresh, thickly bedded, light olive gray (5Y 6/1), fine grained, medium strong, LIMESTONE, (ST. LOUIS FORMATION) Fossiliferous, chert nodules common, abundant argillaceous partings, calcite veins up to 8 mm., pyrite crystals *scattered*														
42															
									J,I,R						
44			412.30												
			44.50												4/7/95 @ 13:50 Begin coring Run 4
	45.6-58.2 ft. Fresh, thickly bedded, light olive gray (5Y 6/1), fine grained to microcrystalline, medium strong to strong, LIMESTONE, (ST. LOUIS FORMATION) Stylolitic, abundant calcite crystals and veins up to 2 mm., little pyrite crystals								J,I,CL						
46				4	99%				J,I,CL						
									J,I,R (2)						
48															

DEPTH SCALE: 1:2
DRILLING CONTRACTOR: LAYNE-WESTERN
DRILLER: D. MAHURIN

LOGGED: S. COSIO
CHECKED: R. BOOTH
DATE: 5/5/95

Golder Associates

RECORD OF DRILLHOLE PZ-109-SS

PROJECT: LAIDLAW/RI-FS
PROJECT NO: 843-2848
LOCATION: BRIDGETON, MO

BORING METHOD: NX Core & water
DRILLING DATE: 4/7/95-4/8/95
DRILL RIG: CME 75

DATUM: MSL
COORDINATES N: 1068011.70
AZIMUTH: 0

COLLAR ELEV: 456.6
E: 516144.38
INCLINATION: -90

J-Joint, F-Fault, S-Shear, B-Bedding, F-Foliation
PL-Planar, C-Curved, U-Undulating, ST-Stepped, I-Irregular
P-Polished, K-Slikensided, SM-Smooth, R-Rough, VR-V. Rough
Fe-FeOxide, CL-Clay Infill, CH-Chlorite, H-Healed, GRF-Gravel Filled

DEPTH SCALE (FEET)	DESCRIPTION	GRAPHIC LOG	ELEV / DEPTH (FT)	RUN NO	CORE RECOVERY	RQD	FRACTURES PER FOOT	DISCONTINUITY DATA: DIP wrt CORE AXIS	DISCONTINUITY DATA: TYPE AND SURFACE DESCRIPTION	GRAPHIC LOG	WEATHERING INDEX	STRENGTH INDEX	POINT LOAD INDEX (psi)	TEST ORIENTATION	NOTES WATER LEVELS INSTRUMENTATION
48	48.5-51.6 ft. Abundant argillaceous partings and clay filled intact open joints 48.9-53.8 ft. Highly brecciated Limestone, cemented with a greenish gray clayey material								J,I,R						
50				4	99%				J,I,CL J,I,CL						
52	52.0-53.3 ft. Intraclastic Limestone								J,PL,SM						
54	53.8-54.2 ft. Greenish black (5G 2/1), fine grained Dolomite		403.00 53.60 402.60 54.20 402.30 54.50						J,I,R						4/7/95 @ 14:42 Begin coring Run 5
56	54.9-55.3 ft. Intraclastic Limestone 55.5-58.2 ft. Fossiliferous Limestone, abundant argillaceous partings														
58	58.2-74.6 ft. Fresh, thickly bedded, light olive gray (5Y 6/1), f-m grained, strong, ARGILLACEOUS LIMESTONE, (ST. LOUIS FORMATION) Little fossils, vugs up to 8 mm., calcite veins with pyrite common, some calcite crystals 58.2-62.3 ft. Limestone shows high porosity			5	100 %				J,I,CL (2) J,I,R						
60															
62									J,I,R J,I,R						
64									J,I,R J,I,R						

DEPTH SCALE: 1:2
DRILLING CONTRACTOR: LAYNE-WESTERN
DRILLER: D. MAHURIN

LOGGED: S. COSIO
CHECKED: R. BOOTH
DATE: 5/5/95

Golder Associates

RECORD OF DRILLHOLE PZ-109-SS

PROJECT: LAIDLAW/RI-FS
PROJECT NO: 943-2848
LOCATION: BRIDGETON, MO

BORING METHOD: NX Core & water
DRILLING DATE: 4/7/95-4/8/95
DRILL RIG: CME 75

DATUM: MSL
COORDINATES N: 1056011.70
AZIMUTH: 0

COLLAR ELEV: 456.8
E: 518144.38
INCLINATION: -90

J-Joint, F-Fault, S-Shear, B-Bedding, F-Foliation
Pl-Planar, C-Curved, U-Undulating, ST-Stepped, I-Irregular
P-Polished, K-Slickensided, SM-Smooth, R-Rough, VR-V. Rough
Fe-FeOxide, CL-Clay Infill, CH-Chlorite, H-Healed, GRF-Gravel Filled

SCALE (FEET)	DESCRIPTION	GRAPHIC LOG	ELEV / DEPTH (FT)	RUN NO.	CORE RECOVERY	RQD	FRACTURES PER FOOT	DISCONTINUITY DATA: DIP wrt CORE AXIS	DISCONTINUITY DATA: TYPE AND SURFACE DESCRIPTION	DISCONTINUITY DATA: GRAPHIC LOG	WEATHERING INDEX	STRENGTH INDEX	POINT LOAD INDEX (psi)	TEST ORIENTATION	NOTES WATER LEVELS INSTRUMENTATION
64															
			382.30	5	100 %										4/7/95 @ 15:30 Begin coring Run 6
			64.50												
	65.0-69.4 ft. Apparent low porosity Limestone, vugs <1 mm.														
66	65.7-66.7 ft. Stylolitic Limestone, becomes medium strong														
									J,I,R						
68															
	69.4-72.8 ft. Apparent moderate porosity Limestone, vugs 1-2 mm.			6	100 %				J,PL,SM						
									J,I,R						
70									J,I,R						
									J,I,R						
									J,I,CL						
72	72.0-73.2 ft. Large (25 mm.) calcite crystals observed														
	72.8-74.3 ft. Apparent high porosity Limestone, vugs up to 8 mm.								J,I,CL						
74									J,I,R						
			382.30												
	74.6-75.7 ft. Fresh, thickly bedded, light olive gray (5Y 6/1), fine grained, strong, LIMESTONE, (ST. LOUIS FORMATION) Oolitic, little fossils, abundant calcite crystals, little chert		74.50						J,I,CL (2)						4/7/95 @ 16:21 Begin coring Run 7
									J,I,R						
76	75.7-77.8 ft. Fresh, thickly bedded, light olive gray (5Y 6/1), fine grained, medium strong, ARGILLACEOUS LIMESTONE, (ST. LOUIS FORMATION) Vugs up to 5 mm., abundant calcite crystals, glauconite in defined places, Limestone has an apparent moderate to high porosity			7	100 %										
78	77.8-90.8 ft. Fresh, thickly bedded, light olive gray (5Y 6/1), fine grained to microcrystalline, medium strong to strong, LIMESTONE, (ST. LOUIS FORMATION) Some fossils, little chert, stylolites, large calcite crystals, some pyrite								J,I,CL						
80															

DEPTH SCALE: 1:2
DRILLING CONTRACTOR: LAYNE-WESTERN
DRILLER: D. MAHURIN

LOGGED: S. COSIO
CHECKED: R. BOOTH
DATE: 5/5/95

Golder Associates

RECORD OF DRILLHOLE PZ-109-SS

PROJECT: LAIDLAW/RI-FS
PROJECT NO: 943-2848
LOCATION: BRIDGETON, MO

BORING METHOD: NX Core & water
DRILLING DATE: 4/7/95-4/8/95
DRILL RIG: CME 75

DATUM: MSL
COORDINATES N: 1068011.70
AZIMUTH: 0

COLLAR ELEV: 456.8
E: 516144.36
INCLINATION: -90

J-Joint, F-Fault, S-Shear, B-Bedding, F-Foliation
PL-Planar, C-Curved, U-Undulating, ST-Stepped, I-Irregular
P-Polished, K-Slikensided, SM-Smooth, R-Rough, VR-V. Rough
Fe-FeOxide, CL-Clay Infill, CH-Chlorite, H-Healed, GRF-Gravel Filled

SCALE (FEET)	DESCRIPTION	GRAPHIC LOG	ELEV / DEPTH (FT)	RUN NO.	CORE RECOVERY	RQD	FRACTURES PER FOOT	DISCONTINUITY DATA: DIP w/r CORE AXIS	DISCONTINUITY DATA: TYPE AND SURFACE DESCRIPTION	GRAPHIC LOG	WEATHERING INDEX	STRENGTH INDEX	POINT LOAD INDEX (psi)	TEST ORIENTATION	NOTES WATER LEVELS INSTRUMENTATION
80	80.0-82.4 ft. Some intact joings filled with clayey material								J,I,CL						
	81.1-82.6 ft. Interbedded layers of argillaceous Limestone (5 mm.)								J,I,CL						
									J,PL,CL						
82				7	100 %										
	83.0-84.2 ft. Argillaceous Limestone, large calcite crystals, vugs up to 1 mm., relative low porosity								J,I,R						
84									J,I,R						4/7/95 @ 15:05 Stop coring
			372.30												
			84.50												4/8/95 @ 8:00 Begin coring Run 8
	85.5-87.3 ft. Limestone with numerous argillaceous partings and intact joints filled with clayey material								J,I,R						
86															
	87.3-88.2 ft. Argillaceous Limestone, bioturbated top 2 in.														
88	88.2-89.0 ft. Limestone, stylolitic microcrystalline								J,PL,CL						
	89.4-90.8 ft. Medium bluish gray (5B 5/1), fine grained, Argillaceous Limestone			8	100 %				J,I,R						
90									J,PL,SM						
	90.8-93.3 ft. Fresh, thickly bedded, light olive gray (5Y 6/1), micro-crystalline, medium strong, LIMESTONE, (ST. LOUIS FORMATION)								J,I,R						
									J,I,CL						
92	Interbedded with Argillaceous Limestone and bluish gray Limestone, stylolites present, calcite veins and pyrite crystals observed								J,I,CL						
	93.3-95.3 ft. Fresh, thickly bedded, light olive gray (5Y 6/1), fine grained, medium strong, ARGILLACEOUS LIMESTONE, (ST. LOUIS FORMATION)														
94	Few layers (up to 20 mm.) of Dolomitic Limestone, argillaceous partings present, pyrite and calcite common								J,I,CL						
			362.30												
			94.50												4/8/95 @ 9:04 Begin coring Run 9
				9	100 %										
	95.3-99.8 ft. (see next page)								J,PL,SM						
96															

DEPTH SCALE: 1:2
DRILLING CONTRACTOR: LAYNE-WESTERN
DRILLER: D. MAHURIN

LOGGED: S. COSIO
CHECKED: R. BOOTH
DATE: 5/5/95

Golder Associates

RECORD OF DRILLHOLE PZ-109-SS

Sheet 7 of 9

PROJECT: LAIDLAW/RI-FS
PROJECT NO: 943-2848
LOCATION: BRIDGETON, MO

BORING METHOD: NX Core & water
DRILLING DATE: 4/7/95-4/8/95
DRILL RIG: CME 75

DATUM: MSL
COORDINATES N: 1068011.70
AZIMUTH: 0

COLLAR ELEV: 456.6
E: 516144.36
INCLINATION: -90

J-Joint, F-Fault, S-Shear, B-Bedding, F-Foliation
PL-Planar, C-Curved, U-Undulating, ST-Stepped, I-Irregular
P-Polished, K-Slickensided, SM-Smooth, R-Rough, VR-V. Rough
Fe-FeOxide, CL-Clay Infill, CH-Chlorite, H-Healed, GRF-Gravel Filled

SCALE (FEET)	DESCRIPTION	GRAPHIC LOG	ELEV / DEPTH (FT)	RUN NO.	CORE RECOVERY	ROD (80 60 40 20)	FRACTURES PER FOOT (2 4 6 8 10)	DISCONTINUITY DATA: DIP wrt CORE AXIS (0 30 60 90)	DISCONTINUITY DATA: TYPE AND SURFACE DESCRIPTION	GRAPHIC LOG	WEATHERING INDEX (SW FR, MW, HW, CW)	STRENGTH INDEX (R6 R5 R4 R3 R2 R1)	POINT LOAD INDEX (psi) (RT 30 R2 150 R3 300 R4 600 R5 1500 R6)	TEST ORIENTATION	NOTES WATER LEVELS INSTRUMENTATION
96	95.3-99.8 ft. Fresh, thickly bedded, light olive gray (5Y 6/1), fine grained to microcrystalline, strong LIMESTONE, (ST. LOUIS FORMATION) Stylolites not common, pyrite and calcite veins <1 mm. observed, argillaceous partings common, few open joints filled with clayey material								J,PL,CL						
98									J,PL,CL						
									J,I,CL						
									J,I,CL						
100	99.8-104.7 ft. Fresh, thickly bedded, light olive gray (5Y 6/1), fine grained, medium strong, ARGILLACEOUS LIMESTONE, (ST. LOUIS FORMATION) Vugs up to 2 mm. present, bioturbated in places, calcite crystals common			9	100 %										
102															
									J,U,CL						
104			352.30 / 104.50												4/8/95 @ 9:52 Begin coring Run 10
	104.7-107.9 ft. Fresh, thickly bedded, olive gray (5Y 6/1), micro-crystalline, strong, LIMESTONE, (ST. LOUIS FORMATION) Pyrite and calcite veins common, few large calcite crystals														
106	106.5-106.6 ft. Layer of olive black (5Y 2/1), clayey material, folliated 106.9-107.9 ft. Fossils common								J,C,R						
108	107.9-111.0 ft. Fresh, thickly bedded, olive gray (5Y 6/1), fine grained, medium strong, LIMESTONE, (ST. LOUIS FORMATION) Stylolites present, vugs up to 1 mm., bioturbated in places, calcite crystals are common, more porous in bottom foot			10	100 %				J,PL,CL						
110	111.0-116.0 ft. Fresh, thickly bedded, light olive gray (5Y 6/1), fine grained, medium strong, LIMESTONE, (ST. LOUIS FORMATION) Stylolitic, little fossils, abundant pyrite and calcite crystals, abundant argillaceous partings, intra-clasts common								J,I,CL						
112															

DEPTH SCALE: 1:2
DRILLING CONTRACTOR: LAYNE-WESTERN
DRILLER: D. MAHURIN

LOGGED: S. COSIO
CHECKED: R. BOOTH
DATE: 5/5/95

Golder Associates

RECORD OF DRILLHOLE PZ-109-SS

PROJECT: LAIDLAW/RI-FS
PROJECT NO: 843-2848
LOCATION: BRIDGETON, MO

BORING METHOD: NX Core & water
DRILLING DATE: 4/7/95-4/8/95
DRILL RIG: CME 75

DATUM: MSL
COORDINATES N: 1068011.70
AZIMUTH: 0

COLLAR ELEV: 456.8
E: 518144.38
INCLINATION: -90

J-Joint, F-Fault, S-Shear, B-Bedding, F-Foliation
PL-Planar, C-Curved, U-Undulating, ST-Stepped, I-Irregular
P-Polished, X-Slikensided, SM-Smooth, R-Rough, VR-V. Rough
Fe-FeOxide, CL-Clay Infil, CH-Chlorite, H-Healed, GRF-Gravel Filled

SCALE (FEET)	DESCRIPTION	ROCK TYPE / GRAPHIC LOG	ELEV / DEPTH (FT)	RUN NO.	CORE RECOVERY	RQD	FRACTURES PER FOOT	DISCONTINUITY DATA: DIP wrt CORE AXIS	DISCONTINUITY DATA: TYPE AND SURFACE DESCRIPTION	DISCONTINUITY DATA: GRAPHIC LOG	WEATHERING INDEX (SW FR, MW, HW, CW)	STRENGTH INDEX (R6, R5, R4, R3, R2, R1)	POINT LOAD INDEX (psi) (R1 30, R2 150, R3 300, R4 600, R5 1500, R6)	TEST ORIENTATION	NOTES WATER LEVELS INSTRUMENTATION
112	111.0-118.0 ft. Fresh, thickly bedded, light olive gray (5Y 6/1), fine grained, medium strong, LIMESTONE, (ST. LOUIS FORMATION) Stylolitic, little fossils, abundant pyrite and calcite crystals, abundant argillaceous partings, intraclasts common		343.10	10	100%										
114			113.70												4/8/95 @ 10:55 Begin coring Run 11
116	115.3-115.6 ft. Layer of grayish green (10G 4/6) Shale, intraclastic							30	J,I,CL						
								30	J,I,CL						
								55	J,I,CL						
								55	J,I,CL						
	116.5-117.1 ft. Slightly weathered Limestone							30	J,I,R						
								55	J,I,R						
118	118.0-123.2 ft. Fresh, thickly bedded, light olive gray (5Y 6/1), fine grained, medium strong, ARENACEOUS LIMESTONE, (ST. LOUIS FORMATION) Banded with fine to medium grained Limestone, large crystals of calcite, few calcite veins and little pyrite			11	100%			90	J,I,R						
								90	J,PL,CL						
120								55	J,I,CL						
122			333.60												
	123.2-130.0 ft. Fresh, thickly bedded, light olive gray (5Y 6/1), fine grained to microcrystalline, strong to medium strong, LIMESTONE, (SALEM FORMATION) Stylolites observed, abundant fossils, oolitic, chert nodules common, large calcite crystals, little pyrite crystals scattered, calcite veins present but not abundant 125.4-125.5 ft. Bed of chert	123.20	333.10					90	J,PL,SM						123.2 ft. Top of SALEM FORMATION encountered
124			123.70					30	J,I,R						4/8/95 @ 12:50 Begin coring Run 12
126				12	99%			55	J,I,R						
	127.6-128.3 ft. Intraclastic Limestone cemented with dark greenish gray (5GY 4/1) clayey material							90	J,I,R						
128															

DEPTH SCALE: 1:2
DRILLING CONTRACTOR: LAYNE-WESTERN
DRILLER: D. MAHURIN

LOGGED: S. COSIO
CHECKED: R. BOOTH
DATE: 5/5/95

Golder Associates

RECORD OF DRILLHOLE PZ-109-SS

PROJECT: LAIDLAW/RI-FS
PROJECT NO: 943-2848
LOCATION: BRIDGETON, MO

BORING METHOD: NX Core & water
DRILLING DATE: 4/7/95-4/8/95
DRILL RIG: CME 75

DATUM: MSL
COORDINATES N: 1068011.70
AZIMUTH: 0

COLLAR ELEV: 456.8
E: 516144.38
INCLINATION: -90

ROCK TYPE

J-Joint, F-Fault, S-Shear, B-Bedding, F-Foliation
PL-Planar, C-Curved, U-Undulating, ST-Stepped, I-Irregular
P-Polished, K-Slikensided, SM-Smooth, R-Rough, VR-V. Rough
Fe-FeOxide, CL-Clay Infill, CH-Chlorite, H-Healed, GRF-Gravel Filled

DEPTH SCALE (FEET)	DESCRIPTION	GRAPHIC LOG	ELEV / DEPTH (FT)	RUN NO.	CORE RECOVERY	RQD	FRACTURES PER FOOT	DISCONTINUITY DATA: DIP wrt CORE AXIS	DISCONTINUITY DATA: TYPE AND SURFACE DESCRIPTION	GRAPHIC LOG	WEATHERING INDEX (SW, FR, MW, HW, CW)	STRENGTH INDEX (R5, R4, R3, R2, R1)	POINT LOAD INDEX (psi) (R6, R5, R4, R3, R2, R1)	TEST ORIENTATION	NOTES WATER LEVELS INSTRUMENTATION
128															
	129.0-129.3 ft. Intraclastic Limestone and chert cemented with dark greenish gray (5Y 4/1) clayey material								J,I,CL						
									J,PL,SM						
130	130.0-135.7 ft. Fresh, thickly bedded, light olive gray (5Y 6/1), fine grained, medium strong, LIMESTONE, (SALEM FORMATION)								J,PL,SM						
				12	99%				J,PL,R						
	Chert nodules and layers up to 15 mm. are abundant, abundant calcite crystals, pyrite common, some very thin calcite veins								J,PL,SM (2)						
									J,I,R						
132									J,PL,SM						
									J,PL,SM						
									J,PL,R						Fragmented rock may be drill induced
			323.10												
			133.70												
134									J,PL,SM						
				13	100%				J,PL,SM						
									J,I,CL						
	321.10		321.10						J,I,R						4/8/95 @ 15:30 Coring completed
	End of Record of Drillhole at 135.7 ft. 135.70		135.70												
136															
138															
140															
142															
144															

DEPTH SCALE: 1:2
DRILLING CONTRACTOR: LAYNE-WESTERN
DRILLER: D. MAHURIN

LOGGED: S. COSIO
CHECKED: R. BOOTH
DATE: 5/5/95

Golder Associates

Well No. PZ-109-SS

Boring No. X-Ref: PZ-109-SS

PIEZOMETER CONSTRUCTION SUMMARY

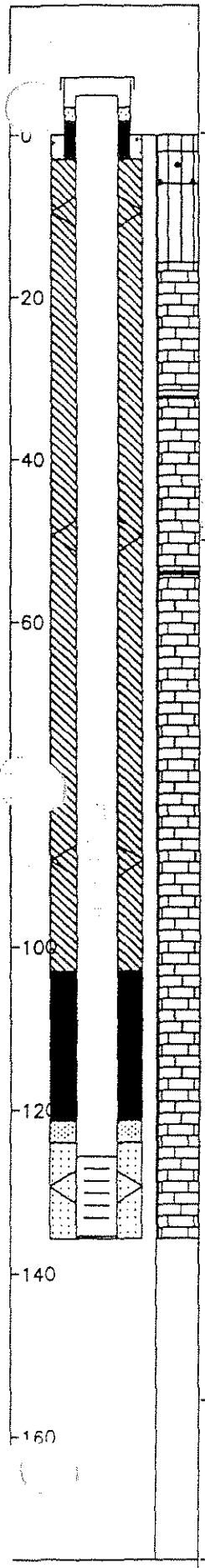

Not to Scale

Survey Coords: Northing: 1068012 ft.
Easting: 516144 ft.

Elevation Ground Level 456.8 ft. NGVD
Top of PVC Casing 458.50 ft. NGVD

Drilling Summary:

Total Depth	135.7 ft.
Borehole Diameter	10 1/4 in. (0.0–15.0 ft.) 5 7/8 in. (15.0–135.7 ft.)
Casing Stickup Height	1.73 ft.
Driller	Layne-Western St. Louis, MO
Rig	CME 75, Schramm Portadrill T660H
Bit(s)	6 1/4 in. ID Hollow Stem Auger Bit, NX Core, 5 7/8 in. Button Bit for Reaming
Drilling Fluid	Auger-None, NX Core Water, Air Rotary
Protective Casing	8x8 in. Square Steel, by 5 ft. long

Construction Time log:

Task	Start Date	Start Time	Finish Date	Finish Time
Drilling				
CME 75	4/7/95	7:48	4/8/95	15:30
Schramm Rotary	4/25/95	9:30	4/25/95	11:40
Geophys.Logging:				
Casing:	4/25/95	12:00	4/25/95	12:10
Filter Placement:	4/25/95	12:10	4/25/95	12:20
Cementing:				
Development				
Bentonite Grout	4/25/95	12:45	4/25/95	13:15
Bentonite Seal	4/25/95	12:20	4/25/95	12:45

Well Design & Specifications

Basis: Geologic Log X Geophysical Log ____

Casing string(s): C = Casing S = Screen

Depth			String(s)	Elevation		
+ 1.73	-	125.70	C1	458.50	-	331.07
125.70	-	135.50	S1	331.07	-	321.27
135.50	-	135.83	C2	321.27	-	320.94
	-				-	
	-				-	
	-				-	

Casing: C1 2 in. dia. Schedule 80 PVC, flush threaded with O-rings
C2 2 in. dia. threaded PVC end cap (4 in. long or 0.33 ft.)

Screen: S1 2 in. dia. Schedule 80 PVC, 0.010 in. machine cut slot, flush threaded with O-rings

Sand Pack: 16-35 mesh Silica Sand, 124.0-135.7 ft.

Filter Pack: Less than 50 mesh Silica Sand, 121.3-124.0 ft.

Grout Seal: Wyo-Ben Grout Well Bentonite Slurry, 3.0-103.0 ft.

Bentonite Seal: Extra high yield Wyo-Ben (100%) Slurry, 103.0-121.3 ft.

Concrete: 0.0-3.0 ft.

Well Development

Stabilization Test Data:

Time	pH	Spec. Cond.	Temp (°C)

Recovery Data:

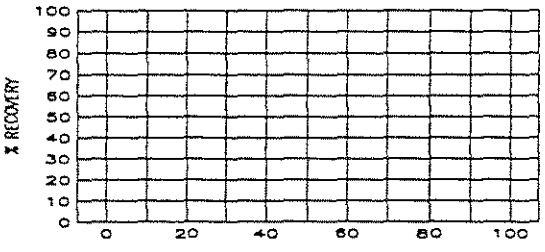

Comments:

Supervised by D. Alloway
Job Number 943-2848

Site LAIDLAW/OU2 RI-FS/MO
File Name PZ109SS

6 1574

OFFICE USE ONLY	DATE RECEIVED
REF NO 122485	CHECK NO
ROUTE	TRANSMITTAL NO
STATE WELL NUMBER	CROSS REFERENCE NO
CHECKED BY	ENTERED Ph 1 Ph 2 Ph 3
APPROVED BY	DATE APPROVED

MISSOURI DEPARTMENT OF NATURAL RESOURCES
DIVISION OF GEOLOGY AND LAND SURVEY

MONITORING WELL CERTIFICATION RECORD

INFORMATION SUPPLIED BY OWNER

SITE NAME	WELL NUMBER		
LAIDLAW BRIDGETON SANITARY LANDFILL	PZ-109-SS		
SITE ADDRESS	**CITY**	**STATE**	**ZIP CODE**
ST. CHARLES ROCK RD.	BRIDGETON	MO	63044
NAME		**TELEPHONE**	
LAIDLAW WASTE SYSTEMS, INC.		314-241-3710	
ADDRESS	**CITY**	**STATE**	**ZIP CODE**
1838 N. BROADWAY	ST. LOUIS	MO	63102

INFORMATION SUPPLIED BY MONITORING WELL CONTRACTOR

LOCATION OF WELL SHOW LOCATION IN SECTION PLAT

COUNTY St. Louis
ELEVATION
AREA NO.

SMALLEST ¼ LARGEST ¼

SEC. TWN. 47 N,RNG. 5 (E) OR W

LAT. 38 ° 46 ' 00 " LONG. 90 ° 26 ' 36 "

SKETCH THE LOCATION TO THE WELL INCLUDING MILEAGE ON ALL ROADS TRAVELED FROM NEAREST TOWNS OR HIGHWAYS

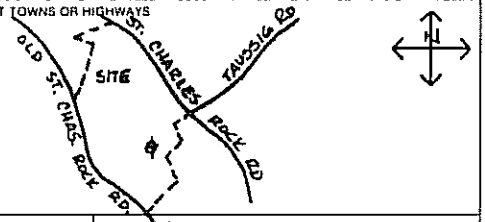

DESCRIBE LOCATION OF THE WELL SO WE WOULD BE ABLE TO VISIT IT

MONITORING WELL INSTALLATION CONTRACTOR'S NAME
LAYNE WESTERN CO., INC.

DRILLING CONTRACTOR'S NAME
LAYNE WESTERN CO., INC.

TYPE OF INSTALLATION
☒ ABOVE GROUND ☐ FLUSH MOUNT

STATIC WATER LEVEL
FEET FROM MEASURING POINT

DATE OF STATIC WATER LEVEL

ELEVATION OF MEASURING POINT

MEASURING POINT IS
☐ TOP OF RISER PIPE
☐ OTHER

DRILLING EQUIPMENT
☒ AIR ROTARY ☒ AUGER TYPE 6¼ H.S.A.
☐ REVERSE ROTARY ☐ OTHER

CENTRALIZERS USED
☒ YES, AT 4 TOTAL
☒ STAINLESS STEEL
☐ OTHER
☐ NO

MULTIPLE CASED WELLS
SUBMIT ADDITIONAL AS BUILT DIAGRAM SHOWING WELL CONSTRUCTION DETAILS INCLUDING TYPE AND SIZE OF ALL CASING, HOLE DIAMETERS, AND GROUT USED.

DATE WELL CONSTRUCTION WAS COMPLETED
4-25-95

I HEREBY CERTIFY THAT THE MONITORING WELL HEREIN DESCRIBED WAS CONSTRUCTED IN ACCORDANCE WITH THE DEPARTMENT OF NATURAL RESOURCES REQUIREMENTS FOR THE CONSTRUCTION OF MONITORING WELLS.

SIGNATURE (MONITORING WELL CONTRACTOR) Michael P. Vogl

PERMIT NUMBER	DATE
001256WM	6-02-95

SIGNATURE (DRILLING CONTRACTOR) Michael P. Vogl

PERMIT NUMBER	DATE
001256WM	6-02-95

NOTE: Record the fraction of a foot in decimal, not in inches.

Top of Riser Elevation:

LOCKING CAP - (Y) N (Circle one)
CAP VENT (Y) N (Circle one)
PROTECTIVE CASING Type: STEEL Size: 8"x8"x5' Bore Hole Diameter: 10"
WEEP HOLE - Y / N (Circle one)

Ground Surface Elevation: Ft

Information in this column to be supplied in the Feet from Surface column	Feet from Surface	Description of Formation
		0-2' silt
		2'-6' Silt & gravel
Depth to bottom of Protective Casing Seal:	3.0	
		6'-14' silt
		6'-135.7' Limestone
Depth to Base of Annular Seal:	103	
Depth to Base of Bentonite Seal:	121.3	
Depth to Base of Secondary Filter Pack:	124.0	
Depth to Top of the Screen:	125.4	
Depth to Bottom of the Screen:	135.4	
Plug Back Total Depth:		
Original Total Depth:	135.7	

PROTECTIVE CASING SEAL Type: ☒ Concrete ☐ Cement Slurry

RISER PIPE Length: 127.1' Diameter: 2" Type of Material: Sch. 80 PVC

BOREHOLE DIAMETER: 5 7/8 In.

ANNULAR SEAL Type: ☒ Bentonite Slurry ☐ Cement Slurry ☐ Non Slurry Bentonite

BENTONITE SEAL Type: ☒ Bentonite Slurry ☐ Non Slurry Bentonite Length of Seal: 18.3 FL

SECONDARY FILTER PACK (Optional) Type: ☒ Sand ☐ Manufactured Grain Size: < 50 Length: 2.7'

PRIMARY FILTER PACK Type: ☒ Sand ☐ Manufactured Grain Size: 16/35 Length: 11.7

WELL SCREEN Length: 10' Slot Size: 0.010" Type: Sch. 80 PVC

SUMP DETAILS Length: 0.3 FL Diameter: 2 In. Type: PVC

TYPE OF BACKFILL: SAND

MO 780-1415 (2-94) DISTRIBUTION: WHITE/DIVISION CANARY/MONITORING WELL CONTRACTOR PINK/OWNER

LAIDLAW
LAIDLAW WASTE SYSTEMS INC.

SOIL BOREHOLE LOG

SITE NAME AND LOCATION	DRILLING METHOD:	BORING NO.
LAIDLAW\RI-FS\MO WEST LAKE LANDFILL OPERABLE UNIT 2	6.25 inch I.D. Hollow Stem Auger	PZ-110-SS
	SAMPLING METHOD:	SHEET 1 OF 5
	SPLIT SPOON: 2.0 inch O.D./1.5 inch I.D. (SP)	DRILLING
	SHELBY TUBE: 3.0 inch O.D./2 13/16 inch I.D. (SH)	START / FINISH
	WATER LEVEL	TIME 13:30 / TIME 14:00
	TIME	
	DATE	DATE 3/13/95 / DATE 3/14/95
DATUM NORTHING: 1068336.09 EASTING: 515919.72 ELEVATION 456.8	CASING DEPTH	

DRILL RIG SCHRAMM - ROTADRILL	SURFACE CONDITIONS
ANGLE BEARING	
SAMPLE HAMMER	

DEPTH IN FEET (ELEVATION)	BLOW/ 6 IN. ON SAMPLER	RECOVERY	SYMBOL	SAMPLER SYMBOL	SAMPLE NUMBER AND DESCRIPTION OF MATERIAL	SAMPLER TYPE	REMARKS
1	7 9 21 19	0.4' / 2.0' (20%)			(0.0-4.0 ft.) Dense, pale yellowish brown (10YR 6/2), SANDY CLAY, little Gravel, damp, SR, (CL), (FILL)	SP ①	
2 3	10 11 12 18	0.6' / 2.0' (30%)			(452.8) 4.0	SP ②	
4 5	5 6 7 8	1.7' / 2.0' (85%)			(4.0-12.0 ft.) Stiff, mottled medium gray (N5) to moderate yellowish brown (10YR 5/4), CLAYEY SILT, trace fine Sand, trace Gravel, SR, damp, (CL-ML), (LOESS)	SP ③	
6 7	8 8 7 7	1.3' / 2.0' (65%)				SP ④	
8 9	4 3 4 4	0.3' / 2.0' (15%)				SP ⑤	
10 11	4 4 4 5	1.3' / 2.0' (65%)			(444.8) 12.0	SP ⑥	
12 13	5 8 9 16	1.3' / 2.0' (65%)			(12.0-15.8 ft.) Compact, pale yellowish brown (10YR 6/2), SILTY fine SAND, trace fine Gravel, SR, moist, (SM), (ALLUVIAL)	SP ⑦	
14	3 6 6 5	1.5' / 2.0' (75%)				SP ⑧	

DRILLING CONTR LAYNE-WESTERN

LOGGED BY B. TILTON

DATE 3/13/95 CHK'D BY W. HENSI

JOB NO.: 943-2848

FILENAME: PZ11055

SOIL BOREHOLE LOG

LAIDLAW WASTE SYSTEMS INC.

SITE NAME AND LOCATION

LAIDLAW\RI-FS\MO
WEST LAKE LANDFILL
OPERABLE UNIT 2

NORTHING: 1068336.09
DATUM EASTING: 515919.72 ELEVATION 456.8

DRILLING METHOD: 6.25 inch I.D. Hollow Stem Auger

SAMPLING METHOD:
SPLIT SPOON: 2.0 inch O.D./1.5 inch I.D. (SP)
SHELBY TUBE: 3.0 inch O.D./2 13/16 inch I.D. (SH)

WATER LEVEL				
TIME				
DATE				
CASING DEPTH				

BORING NO. PZ-110-SS

SHEET 2 OF 5

DRILLING

START	FINISH
TIME 13:30	TIME 14:00
DATE 3/13/95	DATE 3/14/95

DRILL RIG SCHRAMM - ROTADRILL

ANGLE BEARING

SAMPLE HAMMER

SURFACE CONDITIONS

DRILLING CONTR LAYNE-WESTERN

LOGGED BY B. TILTON

DATE 3/13/95

CHK'D BY W. HERST

JOB NO.: 943-2848

FILENAME: PZ110SS

DEPTH IN FEET (ELEVATION)	BLOW/ 6 IN. ON SAMPLER	RECOVERY	SYMBOL	SAMPLER SYMBOL	SAMPLE NUMBER AND DESCRIPTION OF MATERIAL			SAMPLER TYPE	REMARKS
16	3 5 6 4	1.9' / 2.0' (95%)			(12.0-15.8 ft.) Compact, pale yellowish brown (10YR 6/2), SILTY Fine SAND, trace Fine Gravel, SR, moist, (SM), (ALLUVIAL)	(441.0)	15.8	SP 8	
17					(15.8-16.8 ft.) Stiff, dark yellowish brown (10YR 4/2), CLAYEY SILT, little Fine Sand, NR, damp, (CL-ML), (LOESS) from 16.8-16.9 ft., moist, silty Fine Sand layer	(439.9)	16.9	SP 9	
18	3 4 5 3	1.5' / 2.0' (75%)			(16.9-18.3 ft.) Stiff, grayish black (N2), CLAY, trace organics consisting of fine roots, NR, damp, (CL), (LOESS)	(438.5)	18.3	SP 10	
19					(18.3-20.3 ft.) Stiff, olive gray (5Y 4/1), CLAYEY SILT, trace very fine Sand, NR, damp to moist, (CL-ML), (LOESS)				
20	3 4 5 7	2.0' / 2.0' (100%)				(436.5)	20.3		
21					(20.3-24.5 ft.) Stiff, medium gray (N5), SILTY CLAY, NR, damp, (CL)			SP 11	
22	1 3 3 3	2.0' / 2.0' (100%)			@ 21.7 ft., silty clay becomes moist				
23					@ 22.3 ft., thin wet zone (<1 inch)			SP 12	
24	1 2 2 3	1.6' / 2.0' (80%)				(432.3)	24.5		
25					(24.5-26.0 ft.) Soft, olive gray (5Y 4/1), SILT, trace Clay, NR, wet, (ML), (LOESS)			SP 13	
26	3 9 19 20	1.2' / 2.0' (60%)			(26.0-28.0 ft.) Compact, olive gray (5Y 4/1), SILTY Fine SAND, NR, wet, (SM), (LOESS)	(430.8)	26.0		
27								SP 14	@ 26.0 Feet first groundwater encountered in borehole
28	26 46 46 46	1.3' / 2.0' (65%)			@ 28.0 ft., silty Fine sand becomes very dense and color changes to dark yellowish brown (10YR 4/2)				
29					(28.0-46.0 ft.) Very dense to compact, dark yellowish brown (10YR 4/2), SILTY Fine SAND, NR, wet, (SM), (ALLUVIAL)			SP 15	

LAIDLAW WASTE SYSTEMS INC.

SOIL BOREHOLE LOG

SITE NAME AND LOCATION	DRILLING METHOD: 6.25 inch I.D. Hollow Stem Auger		BORING NO. PZ-110-SS
			SHEET 3 OF 5
LAIDLAW\RI-FS\MD WEST LAKE LANDFILL OPERABLE UNIT 2	SAMPLING METHOD: SPLIT SPOON: 2.0 inch O.D./1.5 inch I.D. (SP) SHELBY TUBE: 3.0 inch O.D./2 13/16 inch I.D. (SH)		DRILLING START / FINISH
	WATER LEVEL		TIME 13:30 / TIME 14:00
	TIME		
	DATE		DATE 3/13/95 / DATE 3/14/95
NORTHING: 1068336.09 DATUM EASTING: 515919.72 ELEVATION 456.8	CASING DEPTH		
DRILL RIG SCHRAMM - ROTADRILL	SURFACE CONDITIONS		
ANGLE BEARING			
SAMPLE HAMMER			

DEPTH IN FEET (ELEVATION)	BLOW/ 6 IN. ON SAMPLER	RECOVERY	SYMBOL	SAMPLER SYMBOL	SAMPLE NUMBER AND DESCRIPTION OF MATERIAL	SAMPLER TYPE	REMARKS
31	26 49 >50	1.0'/2.0' (50%)			(28.0-46.0 Ft.) Very dense to compact, dark yellowish brown (10YR 4/2), SILTY Fine SAND, NR, wet, (SM), (ALLUVIAL)	SP 16	
32	4 10 10	1.0'/2.0' (50%)				SP 17	
33	12						
34	21 50 >50	1.2'/2.0' (60%)				SP 18	
35							
36	7 7 15	1.1'/2.0' (55%)				SP 19	
37							
38	7 9 9	1.2'/2.0' (60%)				SP 20	
39							
40	6 18 30	1.4'/2.0' (70%)				SP 21	
41							
42	7 9 9	1.2'/2.0' (60%)			@ 42.0 Ft., color changes to olive gray (5Y 4/1)	SP 22	
43							
44	7 11 12	0.7'/2.0' (35%)				SP 23	

DRILLING CONTR LAYNE-WESTERN

LOGGED BY B. TILTON

DATE 3/13/95 CHK'D BY W. HERST

JOB NO.: 943-2848

FILENAME: PZ110SS

LAIDLAW WASTE SYSTEMS INC.

SOIL BOREHOLE LOG

SITE NAME AND LOCATION	DRILLING METHOD: 6.25 inch I.D. Hollow Stem Auger	BORING NO. PZ-110-SS
LAIDLAW\RI-FS\MD WEST LAKE LANDFILL OPERABLE UNIT 2	SAMPLING METHOD: SPLIT SPOON: 2.0 inch O.D./1.5 inch I.D. (SP) SHELBY TUBE: 3.0 inch O.D./2 13/16 inch I.D. (SH)	SHEET 4 OF 5
NORTHING: 1068336.09 DATUM EASTING: 515919.72 ELEVATION 456.8	WATER LEVEL / TIME / DATE / CASING DEPTH	DRILLING START: TIME 13:30, DATE 3/13/95; FINISH: TIME 14:00, DATE 3/14/95
DRILL RIG SCHRAMM - ROTADRILL	SURFACE CONDITIONS	
ANGLE BEARING		
SAMPLE HAMMER		

DRILLING CONTR LAYNE-WESTERN

LOGGED BY B. TILTON DATE 3/13/95 CHK'D BY W. HERST

JOB NO.: 943-2848

FILENAME: PZ110SS

DEPTH IN FEET (ELEVATION)	BLOW/ 6 IN. ON SAMPLER	RECOVERY	SYMBOL	SAMPLER SYMBOL	SAMPLE NUMBER AND DESCRIPTION OF MATERIAL		SAMPLER TYPE	REMARKS
46					(28.0-46.0 Ft.) Very dense to compact, dark yellowish brown (10YR 4/2), SILTY fine SAND, NR, wet, (SM), (ALLUVIAL)	(410.8) 46.0	SP (23)	
47	7 9 13	1.0' 2.0' (50%)			(46.0-48.3 Ft.) Compact, medium light gray (N6), fine to medium SAND, trace silt, trace fine Gravel, NR, wet, (SP), (ALLUVIAL)		SP (24)	
48	7 11 15	1.3' 2.0' (65%)				(408.5) 48.3		
49					(48.3-59.0 Ft.) Compact, olive gray (5Y 4/1), SILTY fine SAND, trace fine Gravel, NR, wet, (SM), (ALLUVIAL)		SP (25)	
50	11 25 41	1.4' 2.0' (70%)						
51							SP (26)	
52	12 23 35	1.2' 2.0' (60%)			from 52.0-52.5 ft., silty medium grained sand layer			
53							SP (27)	
54	12 19 23	0.0' 2.0' (0%)						
55							SP (28)	
56	9 13 30	1.3' 2.0' (65%)						
57							SP (29)	
58	4 2 40	1.6' 2.0' (80%)			(59.0-59.5 Ft.) Very stiff, olive gray (5Y 4/1), CLAY, trace Silt, NR, moist, grayish black (N2), fibrous wood piece at 59.5 ft., (CL), (ALLUVIAL)	(397.3) 59.5		
59					(59.5-60.5 Ft.) Hard, light olive gray (5Y 6/1), highly weathered LIMESTONE, SR, (BEDROCK), (ST. LOUIS LIMESTONE)		SP (30)	

LAIDLAW WASTE SYSTEMS INC.

SOIL BOREHOLE LOG

SITE NAME AND LOCATION	DRILLING METHOD:					BORING NO.	
	6.25 inch I.D. Hollow Stem Auger					PZ-110-SS	
						SHEET	
	SAMPLING METHOD:					5 OF 5	
	SPLIT SPOON: 2.0 inch O.D./1.5 inch I.D. (SP)					DRILLING	
LAIDLAW\RI-FS\MD WEST LAKE LANDFILL OPERABLE UNIT 2	SHELBY TUBE: 3.0 inch O.D./2 13/16 inch I.D. (SH)					START	FINISH
	WATER LEVEL					TIME	TIME
	TIME					13:30	14:00
	DATE					DATE	DATE
NORTHING: 1068336.09 DATUM EASTING: 515919.72 ELEVATION 456.8	CASING DEPTH					3/13/95	3/14/95

DRILL RIG SCHRAMM - ROTADRILL	SURFACE CONDITIONS
ANGLE BEARING	
SAMPLE HAMMER	

DEPTH IN FEET (ELEVATION)	BLOW/ 6 IN. ON SAMPLER	RECOVERY	SYMBOL	SAMPLER SYMBOL	SAMPLE NUMBER AND DESCRIPTION OF MATERIAL	SAMPLER TYPE		REMARKS
61	50	0.5' 0.5' (100%)			(59.5-60.5 ft.) Hard, light olive gray (5Y 6/1), highly weathered LIMESTONE, SR, (BEDROCK), (ST. LOUIS LIMESTONE) (396.3) 60.5 End of Soil Borehole Log at 60.5 ft. See PZ-110-SS Record of Drillhole for rock descriptions	SP 31		
62								
63								
64								
65								
66								
67								
68								
69								
70								
71								
72								
73								
74								

DRILLING CONTR LAYNE-WESTERN

LOGGED BY B. TILTON CHK'D BY W. HERST

DATE 3/13/95

JOB NO.: 943-2848

FILENAME: PZ110SS

RECORD OF DRILLHOLE PZ-110-SS

Sheet 1 of 4

PROJECT: LAIDLAW/RI-FS
PROJECT NO: 943-2848
LOCATION: BRIDGETON, MO

BORING METHOD: NX Core & water
DRILLING DATE: 3/24/95-3/25/95
DRILL RIG: CME 75

DATUM: MSL
COORDINATES N: 1068336.1
AZIMUTH: 0

COLLAR ELEV: 456.6
E: 515919.7
INCLINATION: -90

J-Joint, F-Fault, S-Shear, B-Bedding, F-Foliation
PL-Planar, C-Curved, U-Undulating, ST-Stepped, I-Irregular
P-Polished, K-Slikensided, SM-Smooth, R-Rough, VR-V. Rough
Fe-FeOxide, CL-Clay Infill, CH-Chlorite, H-Healed, GRF-Gravel Filled

DEPTH SCALE (FEET)	DESCRIPTION	GRAPHIC LOG	ELEV / DEPTH (FT)	RUN NO.	CORE RECOVERY	RQD	FRACTURES PER FOOT	DISCONTINUITY DATA: DIP wrt CORE AXIS	DISCONTINUITY DATA: TYPE AND SURFACE DESCRIPTION	GRAPHIC LOG	WEATHERING INDEX	STRENGTH INDEX	POINT LOAD INDEX (psi)	TEST ORIENTATION	NOTES WATER LEVELS INSTRUMENTATION
48	0.0-60.0 ft. See Soil Borehole Log PZ-110-SS														
50															
52															
54															
56															
58															
60	396.80		396.80												
	60.0-70.4 ft. 60.00 Fresh, thickly bedded, light olive gray (5Y 6/1), fine grained, medium strong, ARENACEOUS LIMESTONE. (ST. LOUIS FORMATION) Calcite veins and crystals observed throughout core run 61.6-63.0 ft. Porous/vuggy (up to 2 mm.)		60.00	1	85%				J,PL,SM J,I,R J,I,R J,I,R J,I,R J,I,R						3/24/95 @ 15:25 Began coring Run 1
62															
64															

DEPTH SCALE: 1:2
DRILLING CONTRACTOR: LAYNE-WESTERN
DRILLER: D. MAHURIN

LOGGED: S. COSIO
CHECKED: B. TILTON
DATE: 5/24/95

Golder Associates

RECORD OF DRILLHOLE PZ-110-SS

Sheet 2 of 4

PROJECT: LAIDLAW/RI-FS
PROJECT NO: 943-2648
LOCATION: BRIDGETON, MO

BORING METHOD: NX Core & water
DRILLING DATE: 3/24/95-3/25/95
DRILL RIG: CME 75

DATUM: MSL
COORDINATES N: 1088336.1
AZIMUTH: 0

COLLAR ELEV: 456.6
E: 515918.7
INCLINATION: -90

J-Joint, F-Fault, S-Shear, B-Bedding, F-Foliation
PL-Planar, C-Curved, U-Undulating, ST-Stepped, I-Irregular
P-Polished, K-Slickensided, SM-Smooth, R-Rough, VR-V. Rough
Fe-FeOxide, CL-Clay Infill, CH-Chlorite, H-Healed, GRF-Gravel Filled

DEPTH SCALE (FEET)	DESCRIPTION	GRAPHIC LOG	ELEV / DEPTH (FT)	RUN NO.	CORE RECOVERY	RQD	FRACTURES PER FOOT	DISCONTINUITY DATA: DIP w/r CORE AXIS	DISCONTINUITY DATA: TYPE AND SURFACE DESCRIPTION	GRAPHIC LOG	WEATHERING INDEX (SW FR, MW, HW, CW)	STRENGTH INDEX (R6, R5, R4, R3, R2, R1)	POINT LOAD INDEX (psi) (R1 30, R2 150, R3 300, R4 600, R5 1500, R6)	TEST ORIENTATION	NOTES WATER LEVELS INSTRUMENTATION
64	60.0-70.4 ft. Fresh, thickly bedded, light olive gray (5Y 6/1), fine grained, medium strong, ARENACEOUS LIMESTONE, (ST. LOUIS FORMATION) Calcite veins and crystals observed throughout core run								J,I,R (3)						
	65.0 ft. A 2 mm. pyrite layer								J,I,R						
66									J,I,R						
				1	65%				J,I,R (2)						
									J,I,R						
68			388.60												
			68.00						Core Loss						Core Loss Reason unknown
			387.40												
	69.4-70.4 ft. Porous/vuggy, voids up to 3 mm., abundant veins of pyrite/calcite		69.40						J,I,R						3/24/95 @ 16:15 Began coring Run 2
70									J,I,R						
	70.4-70.9 ft. Light olive brown (5Y 4/4), Claystone														
	70.9-75.0 ft. Fresh, thickly bedded, light olive gray (5Y 6/1), very fine grained, medium strong, ARGILLACEOUS LIMESTONE, (ST. LOUIS FORMATION) Abundant 1-2 mm. pyrite veins, porous, some small <1 mm. calcite crystals, iron staining in places								J,I,R						
72									J,I,R						
									J,PL,SM (2)						
74				2	100%				J,I,R						
			381.80						J,I,R						
	75.0-80.8 ft. Fresh, thickly bedded, light olive gray (5Y 6/1), f-m grained, medium strong, DOLOMITIC LIMESTONE, (ST. LOUIS FORMATION) Abundant pyrite crystals and calcite veins up to 3 mm., stylolites common		75.00						J,I,R (2)						
76									J,I,R (2)						
									J,I,R (3)						
78									J,I,R (3)						
									J,I,R						
			377.60						J,I,R						
			79.20												3/24/95 @ 17:15 Began coring Run 3
	79.7-80.8 ft. Highly weathered, Dolomitic Limestone with very large calcite crystals (up to 15 mm.)			3	100%				J,I,R (2)						
80															

DEPTH SCALE: 1:2
DRILLING CONTRACTOR: LAYNE-WESTERN
DRILLER: D. MAHURIN

LOGGED: S. COSIO
CHECKED: B. TILTON
DATE: 5/24/95

Golder Associates

RECORD OF DRILLHOLE PZ-110-SS

Sheet 3 of 4

PROJECT: LAIDLAW/RI-FS
PROJECT NO: 843-2848
LOCATION: BRIDGETON, MO

BORING METHOD: NX Core & water
DRILLING DATE: 3/24/95-3/25/95
DRILL RIG: CME 75

DATUM: MSL
COORDINATES N: 1088338.1
AZIMUTH: 0

COLLAR ELEV: 456.8
E: 515918.7
INCLINATION: -90

J-Joint, F-Fault, S-Shear, B-Bedding, F-Foliation
PL-Planar, C-Curved, U-Undulating, ST-Stepped, I-Irregular
P-Polished, K-Slikensided, SM-Smooth, R-Rough, VR-V. Rough
Fe-FeOxide, CL-Clay Infill, CH-Chlorite, H-Healed, GRF-Gravel Filled

DEPTH SCALE (FEET)	DESCRIPTION	GRAPHIC LOG	ELEV / DEPTH (FT)	RUN NO	CORE RECOVERY	RQD	FRACTURES PER FOOT	DISCONTINUITY DATA: DIP wrt CORE AXIS	DISCONTINUITY DATA: TYPE AND SURFACE DESCRIPTION	GRAPHIC LOG	WEATHERING INDEX	STRENGTH INDEX	POINT LOAD INDEX (psi)	TEST ORIENTATION	NOTES WATER LEVELS INSTRUMENTATION
80	79.7-80.8 ft. Highly weathered, Dolomitic Limestone with very large calcite crystals (up to 15 mm.) 376.00 / 80.80								J,I,CL						
									J,I,CL						
									J,I,R						
	80.8-93.4 ft. Slightly weathered, thickly bedded, olive gray (5Y 4/1), micro-crystalline, medium strong, LIMESTONE, (ST. LOUIS FORMATION) Stylolitic, some pyrite crystals in clay filled joints, abundant argillaceous partings								J,I,R						
									J,I,R						
82									J,I,CL						
									J,I,CL						
									J,I,R						
84									J,I,R						
				3	100 %				J,I,CL (2)						
									J,I,R						
									J,I,R						
86									J,I,R						
	87.0-89.4 ft. Interbedded layers of Argillaceous Limestone and Arenaceous Limestone								J,I,CL						
88															
			367.60 / 89.20												3/25/95 @ 8:15 Began coring Run 4
	89.2-90.8 ft. Abundant calcite veins (1-2 mm.) and abundant pyrite crystals								J,I,R (2)						
90									J,I,R						
									J,I,CL						
	90.7-92.8 ft. Fossiliferous with abundant argillaceous partings								J,I,CL						
									J,I,R						
									J,I,CL						
92									J,I,R						
				4	100 %				J,I,R (2)						
	93.4-98.4 ft. Fresh, thickly bedded, light olive gray (5Y 6/1), fine grained, medium strong, ARGILLACEOUS LIMESTONE, (ST. LOUIS FORMATION) Few calcite veins and some calcite crystals Few interbedded layers of Dolomitic Limestone								J,PL,SM						
94															
96															

DEPTH SCALE: 1:2
DRILLING CONTRACTOR: LAYNE-WESTERN
DRILLER: D. MAHURIN

LOGGED: S. COSIO
CHECKED: B. TILTON
DATE: 5/24/95

Golder Associates

RECORD OF DRILLHOLE PZ-110-SS

PROJECT: LAIDLAW/RI-FS
PROJECT NO: 943-2848
LOCATION: BRIDGETON, MO

BORING METHOD: NX Core & water
DRILLING DATE: 3/24/95-3/25/95
DRILL RIG: CME 75

DATUM: MSL
COORDINATES N: 1088336.1
AZIMUTH: 0

COLLAR ELEV: 456.8
E: 515919.7
INCLINATION: -90

J-Joint, F-Fault, S-Shear, B-Bedding, F-Foliation
PL-Planar, C-Curved, U-Undulating, ST-Stepped, I-Irregular
P-Polished, K-Slikensided, SM-Smooth, R-Rough, VR-V. Rough
Fe-FeOxide, CL-Clay Infill, CH-Chlorite, H-Healed, GRF-Gravel Filled

Depth Scale (Feet)	Description	Graphic Log	Elev / Depth (Ft)	Run No	Core Recovery	RQD	Fractures per Foot	Discontinuity Data: Dip w.r.t. Core Axis	Discontinuity Data: Type and Surface Description	Graphic Log	Weathering Index	Strength Index	Point Load Index (psi)	Test Orientation	Notes, Water Levels, Instrumentation
96	93.4-98.4 ft. Fresh, thickly bedded, light olive gray (5Y 6/1), fine grained, medium strong, ARGILLACEOUS LIMESTONE, (ST. LOUIS FORMATION) Few calcite veins and some calcite crystals Few interbedded layers of Dolomitic Limestone			4	100 %										
98	98.4-112.8 ft. Fresh, medium to thickly bedded, light olive gray (5Y 6/1), fine grained, LIMESTONE, (ST. LOUIS FORMATION) Stylolites common		357.80 / 99.20						J,I,CL J,I,R						3/25/95 @ 9:10 Began coring Run 5
100	99.7-102.0 ft. Abundant calcite crystals up to 3 mm. 100.4-100.7 ft. Argillaceous partings								J,I,R J,I,CL (3)						
102									J,I,R J,I,R (2)						
104	103.6-107.5 ft. Slightly weathered Limestone			5	99%				J,I,R J,PL,SM						
106	104.8-106.8 ft. Abundant pyrite and quartz veins up to 2 mm. 105.0-109.0 ft. Few calcite veins <2 mm., but large (5-10 mm.) calcite crystals								J,I,CL J,I,R						
108			347.60 / 109.20						J,I,R (3)						
110	End of Record of Drillhole at 109.2 ft.														
112															

DEPTH SCALE: 1:2
DRILLING CONTRACTOR: LAYNE-WESTERN
DRILLER: D. MAHURIN

LOGGED: S. COSIO
CHECKED: B. TILTON
DATE: 5/24/95

Golder Associates

Well No. PZ-110-SS

Boring No. X-Ref: PZ-110-SS

PIEZOMETER CONSTRUCTION SUMMARY

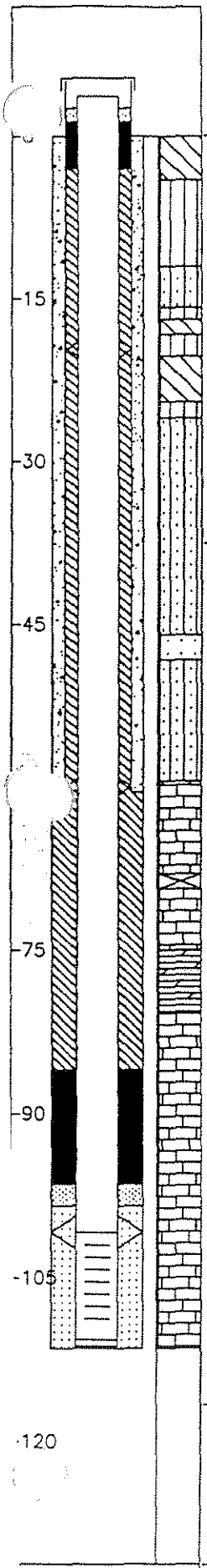

Not to Scale

Survey Coords: Northing: 1068336 ft. Easting: 515920 ft.

Elevation Ground Level 456.8 ft. NGVD

Top of PVC Casing 458.91 ft. NGVD

Drilling Summary:

Total Depth 111.5 ft.

Borehole Diameter 10 in. (0.0-61.0 ft.) 5 7/8 in. (61.0-111.5 ft.)

Casing Stickup Height 2.07 ft.

Driller Layne-Western, St. Louis, MO

Rig CME 75, Schramm Portadrill T660H

Bit(s) 6 1/4 in. and 10 1/4 in. ID Hollow Stem Auger Bits, NX Core, 5 7/8 in. and 10.0 in. Button Bits

Drilling Fluid Auger-None, NX Core Water, Air Rotary

Protective Casing 8x8 in. Square Steel, by 5 ft. long

Construction Time log:

Task	Start Date	Start Time	Finish Date	Finish Time
Drilling				
Schramm (augers)	3/13/95	13:30	3/13/95	14:00
CME 75 (Core)	3/24/95	15:25	3/23/95	13:15
Schramm Rotary	5/20/95	7:50	5/20/95	8:45
Geophys.Logging:				
Casing:				
2" PVC	5/20/95	9:05	5/20/95	9:15
6" Steel	5/19/95	11:30	5/19/95	15:00
Filter Placement:	5/20/95	9:20	5/20/95	10:05
Cementing:				
Development				
Bentonite Grout	5/20/95	10:15	5/20/95	10:45
Bentonite Seal	5/20/95	10:45	5/20/95	11:30

Well Design & Specifications

Basis: Geologic Log X Geophysical Log

Casing string(s): C = Casing S = Screen

Depth			String(s)	Elevation		
+ 2.07	-	100.90	C1	458.91	-	355.94
100.90	-	110.70	S1	355.94	-	346.14
110.70	-	111.30	C2	346.14	-	345.54
+ 0.50	-	61.00	C3	457.30	-	395.84
	-				-	
	-				-	

Casing: C1 2 in. dia. Schedule 80 PVC, flush threaded with O-rings

C2 2 in. dia. threaded PVC end cap (4 in. long or 0.33 ft.) (C3-see comments)

Screen: S1 2 in. dia. Schedule 80 PVC, 0.010 in. machine cut slot, flush threaded with O-rings

Sand Pack: 16-35 mesh Silica Sand, 98.5-111.5 ft.

Filter Pack: Less than 50 mesh Silica Sand, 96.5-98.5 ft.

Grout Seal: Wyo-Ben Grout Well Bentonite Slurry, 3.0-86.0 ft., Neat cement, 3.0-61.0 ft.

Bentonite Seal: Extra high yield Wyo-Ben (100%) Slurry, 86.0-96.5 ft.

Concrete: 0.0-3.0 ft.

Well Development

Stabilization Test Data:

Time	pH	Spec. Cond.	Temp (°C)

Recovery Data:

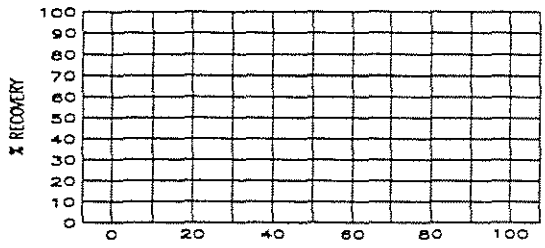

Comments: Surface Casing C3: 6 1/8 in. ID / 6 5/8 in. OD Steel Casing

Supervised by B. Tilton

Job Number 943-2848

Site LAIDLAW/OU2 RI-FS/MO

File Name PZ110SS

MISSOURI DEPARTMENT OF NATURAL RESOURCES
DIVISION OF GEOLOGY AND LAND SURVEY

MONITORING WELL CERTIFICATION RECORD

OFFICE USE ONLY	DATE RECEIVED
REF NO 115097	CHECK NO.
ROUTE	TRANSMITTAL NO.
STATE WELL NUMBER	CROSS REFERENCE NO
CHECKED BY	ENTERED Ph 1 Ph 2 Ph 3
APPROVED BY	DATE APPROVED

INFORMATION SUPPLIED BY OWNER

SITE NAME	WELL NUMBER
LAIDLAW BRIDGETON SANITARY LANDFILL	P2-110-55

SITE ADDRESS	CITY	STATE	ZIP CODE
ST. CHARLES ROCK RD.	BRIDGETON	MO.	63044

NAME	TELEPHONE
LAIDLAW WASTE SYSTEMS, INC.	314-241-3710

ADDRESS	CITY	STATE	ZIP CODE
1838 N. BROADWAY	ST. LOUIS	MO.	63102

INFORMATION SUPPLIED BY MONITORING WELL CONTRACTOR

LOCATION OF WELL SHOW LOCATION IN SECTION PLAT

COUNTY ST. LOUIS
ELEVATION USGS P 456.8
AREA NO.

SMALLEST ¼ LARGEST ¼

SEC. ____ TWN. 47 N.RNG. 5 (E) OR W

LAT. 38 ° 46 ' 03 " LONG. 90 ° 26 ' 34 "

SKETCH THE LOCATION TO THE WELL INCLUDING MILEAGE ON ALL ROADS TRAVELED FROM NEAREST TOWNS OR HIGHWAYS

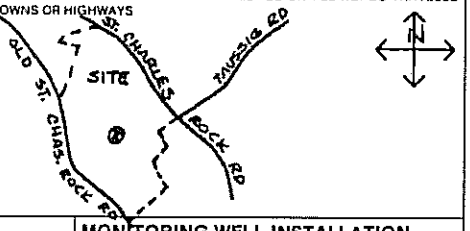

DESCRIBE LOCATION OF THE WELL SO WE WOULD BE ABLE TO VISIT IT

MONITORING WELL INSTALLATION CONTRACTOR'S NAME
LAYNE WESTERN CO., INC.

DRILLING CONTRACTOR'S NAME
LAYNE WESTERN CO., INC.

TYPE OF INSTALLATION
☒ ABOVE GROUND ☐ FLUSH MOUNT

STATIC WATER LEVEL
FEET FROM MEASURING POINT

DATE OF STATIC WATER LEVEL

ELEVATION OF MEASURING POINT
458.7

MEASURING POINT IS
☒ TOP OF RISER PIPE
☐ OTHER

DRILLING EQUIPMENT
☒ AIR ROTARY ☒ AUGER TYPE
☐ REVERSE ROTARY ☐ OTHER

CENTRALIZERS USED
☒ YES, AT 4 TOTAL
☒ STAINLESS STEEL
☐ OTHER
☐ NO

MULTIPLE CASED WELLS
SUBMIT ADDITIONAL AS BUILT DIAGRAM SHOWING WELL CONSTRUCTION DETAILS INCLUDING TYPE AND SIZE OF ALL CASING, HOLE DIAMETERS, AND GROUT USED.

DATE WELL CONSTRUCTION WAS COMPLETED
5-20-95

I HEREBY CERTIFY THAT THE MONITORING WELL HEREIN DESCRIBED WAS CONSTRUCTED IN ACCORDANCE WITH THE DEPARTMENT OF NATURAL RESOURCES REQUIREMENTS FOR THE CONSTRUCTION OF MONITORING WELLS.

SIGNATURE (MONITORING WELL CONTRACTOR) Michael P. Vogt

PERMIT NUMBER	DATE
001256WM1	6-02-95

SIGNATURE (DRILLING CONTRACTOR) Michael P. Vogt

PERMIT NUMBER	DATE
001256WM1	6-02-95

NOTE: Record the fraction of a foot in decimal, not in inches

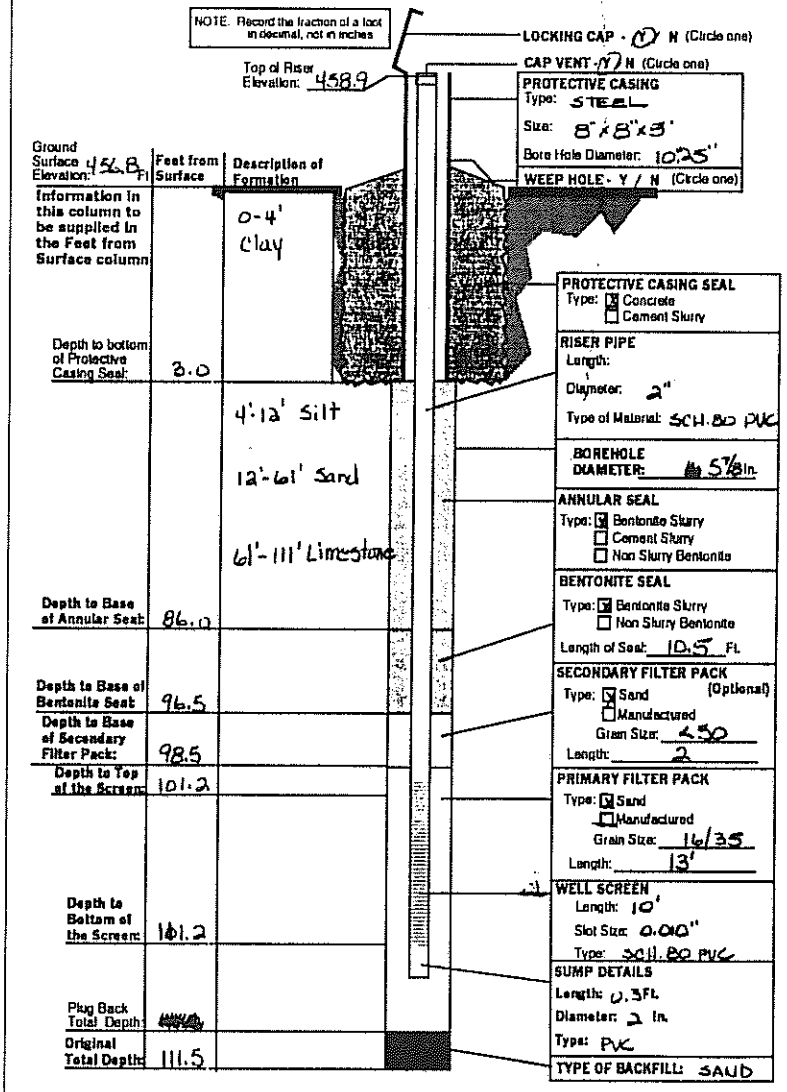

MO 780-1315 (2-94)

DISTRIBUTION: WHITE-DIVISION CANARY-MONITORING WELL CONTRACTOR PINK-OWNER

RECORD OF DRILLHOLE PZ-111-KS

Sheet 1 of 19

PROJECT: LAIDLAW/RI-FS
PROJECT NO: 943-2846
LOCATION: BRIDGETON, MO

BORING METHOD: NX Core & water
DRILLING DATE: 3/15/95-3/21/95
DRILL RIG: CME 75

DATUM: MSL
COORDINATES N: 1068620.76
AZIMUTH: 0

COLLAR ELEV: 459.2
E: 515850.23
INCLINATION: -90

J-Joint, F-Fault, S-Shear, B-Bedding, F-Foliation
PL-Planar, C-Curved, U-Undulating, ST-Stepped, I-Irregular
P-Polished, K-Slickensided, SM-Smooth, R-Rough, VR-V. Rough
Fe-FeOxide, CL-Clay Infill, CH-Chlorite, H-Healed, GRF-Gravel Filled

DEPTH SCALE (FEET)	DESCRIPTION	GRAPHIC LOG	ELEV / DEPTH (FT)	RUN NO.	CORE RECOVERY	RQD	FRACTURES PER FOOT	DISCONTINUITY DATA: DIP wrt CORE AXIS	DISCONTINUITY DATA: TYPE AND SURFACE DESCRIPTION	DISCONTINUITY DATA: GRAPHIC LOG	WEATHERING INDEX: SW FR, MW, HW, CW	STRENGTH INDEX: R6, R5, R4, R3, R2, R1	POINT LOAD INDEX (psi): R1 30, R2 150, R3 300, R4 600, R5 1500, R6	TEST ORIENTATION	NOTES WATER LEVELS INSTRUMENTATION
60	0.0-79.5ft. No sampling conducted See Foth & Van Dyke log F-1-D dated 9/1/90 79.5-80.0 ft. No samples collected														0.0-84.0 ft. Borehole advanced with 14 3/4 in. tricone bit using mud rotary, then 10 in. steel casing set in borehole to seal off saturated alluvial deposits. Extremely weathered bedrock encountered @ ~79.0 ft. and bedrock encountered @ 84.0 ft.
82															
84	374.60		374.60												
	84.6-86.8 ft. 84.60 Slightly weathered, medium bedded, light olive gray (5Y 5/2), very fine grained, medium strong, DOLOMITE, (ST. LOUIS FORMATION) 85.1-85.3 ft. Limestone 85.7 ft. Calcite crystals		84.60						Broken Zone J,U,SM						3/15/95 @ 7:45 Began coring
86	372.40 86.8-91.5 ft. 86.80 Fresh, medium bedded, light olive gray (5Y 5/2), very fine grained, strong, DOLOMITIC LIMESTONE, (ST. LOUIS FORMATION)			1	96%				J,PL,SM						
88									J,PL,SM J,I,R J,PL,SM,CL						
			369.80 89.40						J,I,R						End core Run 1 @ 8:20
90	90.4-90.5 ft. Argillaceous partings								J,I,SM (2)						
	367.70 91.5-96.8 ft. 91.50 Fresh, medium bedded, light olive gray (5Y 5/2), very fine grained, medium strong, DOLOMITE, (ST. LOUIS FORMATION) 92.1-93.6 ft. Slightly porous/vuggy, some calcite crystals			2	100 %										
92															
94															

DEPTH SCALE: 1:2
DRILLING CONTRACTOR: LAYNE-WESTERN
DRILLER: D. MAHURIN

LOGGED: S. COSIO
CHECKED: B. TILTON
DATE: 6/5/95

Golder Associates

RECORD OF DRILLHOLE PZ-111-KS

PROJECT: LA/DLAW/RI-FS
PROJECT NO: 943-2848
LOCATION: BRIDGETON, MO

BORING METHOD: NX Core & water
DRILLING DATE: 3/15/95-3/21/95
DRILL RIG: CME 75

DATUM: MSL
COORDINATES N: 1068620.78
AZIMUTH: 0

COLLAR ELEV: 459.2
E: 515850.23
INCLINATION: -90

J-Joint, F-Fault, S-Shear, B-Bedding, F-Foliation
PL-Planar, C-Curved, U-Undulating, ST-Stepped, I-Irregular
P-Polished, K-Slickensided, SM-Smooth, R-Rough, VR-V. Rough
Fe-FeOxide, CL-Clay Infill, CH-Chlorite, H-Healed, GRF-Gravel Filled

DEPTH SCALE (FEET)	ROCK TYPE DESCRIPTION	GRAPHIC LOG	ELEV / DEPTH (FT)	RUN NO.	CORE RECOVERY	ROD	FRACTURES PER FOOT	DISCONTINUITY DATA: DIP wrt CORE AXIS	DISCONTINUITY DATA: TYPE AND SURFACE DESCRIPTION	DISCONTINUITY DATA: GRAPHIC LOG	WEATHERING INDEX	STRENGTH INDEX	POINT LOAD INDEX (psi)	TEST ORIENTATION	NOTES WATER LEVELS INSTRUMENTATION
96															
	362.40														
	96.8-99.5 ft. 96.80 Fresh, medium bedded, light olive gray (5Y 5/2), very fine grained, strong DOLOMITIC LIMESTONE, (ST. LOUIS FORMATION)			2	100%				J,U,SM						
98									J,PL,SM						
	98.7-98.9 ft. Argillaceous partings								J,PL,SM,CL (2)						
	359.70		359.80												
	99.5-103.7 ft. 99.50 Fresh, medium bedded, light olive gray (5Y 5/2), very fine grained, medium strong, DOLOMITE, (ST. LOUIS FORMATION) Some calcite filled veins, pyrite crystals		99.40												End core Run 2 @ 9:20
100															
102															
	355.50														
	103.7-106.9 ft. 103.70 Fresh, medium bedded, light olive gray (5Y 5/2), medium grained, medium strong, DOLOMITIC LIMESTONE, (ST. LOUIS FORMATION) Some stylolites, argillaceous partings			3	98%				J,I,SM,CL						
104															
106									J,I,R						
	106.9-110.0 ft. Fresh, medium bedded, light olive gray (5Y 6/1), micro-crystalline, strong, LIMESTONE, (ST. LOUIS FORMATION)														
108	108.1-108.5 ft. Slightly weathered, some stylolites, argillaceous partings								J,U,SM J,I,SM,CL (2)						
			349.80												
			109.40						J,I,SM (2)						
110	110.0-112.1 ft. Fresh, medium bedded, light olive gray (5Y 6/1), medium grained, medium strong, DOLOMITIC LIMESTONE, (ST. LOUIS FORMATION)			4	100%										End Core Run 3 @ 10:25
112															

DEPTH SCALE: 1:2
DRILLING CONTRACTOR: LAYNE-WESTERN
DRILLER: D. MAHURIN

LOGGED: S. COSIO
CHECKED: B. TILTON
DATE: 8/5/95

Golder Associates

RECORD OF DRILLHOLE PZ-111-KS

PROJECT: LAIDLAW/RI-FS
PROJECT NO: 943-2848
LOCATION: BRIDGETON, MO

BORING METHOD: NX Core & water
DRILLING DATE: 3/15/95-3/21/95
DRILL RIG: CME 75

DATUM: MSL
COORDINATES N: 1068820.78
AZIMUTH: 0

COLLAR ELEV: 459.2
E: 515850.23
INCLINATION: -90

J-Joint, F-Fault, S-Shear, B-Bedding, F-Foliation
PL-Planar, C-Curved, U-Undulating, ST-Stepped, I-Irregular
P-Polished, K-Slickensided, SM-Smooth, R-Rough, VR-V. Rough
Fe-FeOxide, CL-Clay Infill, CH-Chlorite, H-Healed, GRF-Gravel Filled

DEPTH SCALE (FEET)	ROCK TYPE DESCRIPTION	GRAPHIC LOG	ELEV / DEPTH (FT)	RUN NO	CORE RECOVERY	RQD (80 60 40 20)	FRACTURES PER FOOT (2 4 6 8 10)	DISCONTINUITY DATA: DIP wrt CORE AXIS (0 30 60 90)	TYPE AND SURFACE DESCRIPTION	GRAPHIC LOG	WEATHERING INDEX (SW FR MW HW CW)	STRENGTH INDEX (R6 R5 R4 R3 R2 R1)	POINT LOAD INDEX (psi) (R1 30 R2 150 R3 300 R4 600 R5 1500 R6)	TEST ORIENTATION	NOTES WATER LEVELS INSTRUMENTATION
112	347.10 / 112.10 112.1-115.8 ft. Fresh, medium bedded, light olive gray (5Y 6/1), very fine grained, weak, ARGILLACEOUS DOLOMITE, (ST. LOUIS FORMATION)								J,I,SM						
114															
	343.40 / 115.80 115.8-120.6 ft. Fresh, medium bedded, olive gray (5Y 4/1), fine grained, medium strong, DOLOMITIC LIMESTONE, (ST. LOUIS FORMATION)			4	100 %										
116															
118															
	119.0-119.4 ft. Some calcite filled vugs (<2 mm)		339.60 / 119.40												
	119.4-120.3 ft. Argillaceous, weak														
120									J,I,SM						
	120.6-127.0 ft. Fresh, thinly bedded, light olive gray (5Y 6/1), very fine grained, medium strong, LIMESTONE, (ST. LOUIS FORMATION) Some calcite crystals								J,I,SM						
									J,I,R						
									J,PL,SM,CL						
122															
	123.0-127.0 ft. Thinly laminated argillaceous partings								J,U,SM,CL						
				5	98%				J,PL,SM						
124															
									J,PL,SM						
									J,PL,SM						
126									J,I,R						
	127.0-136.9 ft. Fresh, medium bedded, light olive gray (5Y 6/1), fine to medium grained, medium strong, DOLOMITIC LIMESTONE, (SALEM FORMATION)		332.20 / 127.00												127.0 ft. Inferred top of SALEM FORMATION encountered
128	127.0-128.5 ft. Numerous chert zones														

DEPTH SCALE: 1:2
DRILLING CONTRACTOR: LAYNE-WESTERN
DRILLER: D. MAHURIN

LOGGED: S. COSIO
CHECKED: B. TILTON
DATE: 6/5/95

Golder Associates

RECORD OF DRILLHOLE PZ-111-KS

PROJECT: LAIDLAW/RI-FS
PROJECT NO: 943-2648
LOCATION: BRIDGETON, MO

BORING METHOD: NX Core & water
DRILLING DATE: 3/15/95-3/21/95
DRILL RIG: CME 75

DATUM: MSL
COORDINATES N: 1068620.76
AZIMUTH: 0

COLLAR ELEV: 459.2
E: 515850.23
INCLINATION: -90

J-Joint, F-Fault, S-Shear, B-Bedding, F-Foliation
PL-Planar, C-Curved, U-Undulating, ST-Stepped, I-Irregular
P-Polished, K-Slikensided, SM-Smooth, R-Rough, VR-V. Rough
Fe-FeOxide, CL-Clay Infill, CH-Chlorite, H-Healed, GRF-Gravel Filled

DEPTH SCALE (FEET)	DESCRIPTION	GRAPHIC LOG	ELEV / DEPTH (FT)	RUN NO.	CORE RECOVERY	RQD (60 40 20)	FRACTURES PER FOOT (2 4 6 8 10)	DISCONTINUITY DATA: DIP wrt CORE AXIS (0 30 60 90)	TYPE AND SURFACE DESCRIPTION	GRAPHIC LOG	WEATHERING INDEX (SW FR HW HW CW)	STRENGTH INDEX (R6 R5 R4 R3 R2 R1)	POINT LOAD INDEX (psi) (R1 30, R2 150, R3 300, R4 600, R5 1500, R6)	TEST ORIENTATION	NOTES WATER LEVELS INSTRUMENTATION
128	127.0-136.9 ft. Fresh, medium bedded, light olive gray (5Y 6/1), fine to medium grained, medium strong, DOLOMITIC LIMESTONE, (SALEM FORMATION)			5	98%										
			329.60												
			129.40												
130															
132									J,PL,SM						
									J,I,SM (2)						
									J,I,SM (2)						
134															
	134.4-135.4 ft. Chert zones (<1/2 in. thick)			6	99%										
									B,P,SM (2)						
136	136.9-144.3 ft. Fresh, medium bedded, light olive gray (5Y 6/1), fine grained, medium strong, ARGILLACEOUS LIMESTONE, (ST. LOUIS FORMATION)		322.00												
	137.2-137.7 ft. ARGILLACEOUS DOLOMITE layer		137.20						J,I,R,CL						
	137.0 ft. Stylolites								J,PL,R						
138	138.0-139.4 ft. Numerous stylolites								J,I,SM,CL						
									J,I,R						
			319.80												
	139.4-141.8 ft. Four chert zones (1-5 in. thick)		139.40						B,PL,SM						139.4-141.8 ft. Very slow drilling
140				7	100 %				J,I,SM (2)						3/15/95 @ 15:00 Stop drilling for the day 3/20/95 @ 7:30 Began Run 8
			317.40												
			141.80												
142									B,I,R						
									B,U,SM						
	142.9 and 143.8 ft. Light olive gray (5Y 6/1), arenaceous DOLOMITE layers (<4 in. thick)			8	92%										
									J,I,R						

DEPTH SCALE: 1:2
DRILLING CONTRACTOR: LAYNE-WESTERN
DRILLER: D. MAHURIN

LOGGED: S. COSIO
CHECKED: B. TILTON
DATE: 6/5/95

Golder Associates

RECORD OF DRILLHOLE PZ-111-KS

Sheet 5 of 19

PROJECT: LAIDLAW/RI-FS
PROJECT NO: 943-2848
LOCATION: BRIDGETON, MO

BORING METHOD: NX Core & water
DRILLING DATE: 3/15/95-3/21/95
DRILL RIG: CME 75

DATUM: MSL
COORDINATES N: 1068620.78
AZIMUTH: 0

COLLAR ELEV: 459.2
E: 515850.23
INCLINATION: -90

J-Joint, F-Fault, S-Shear, B-Bedding, F-Foliation
PL-Planar, C-Curved, U-Undulating, ST-Stepped, I-Irregular
P-Polished, K-Slickensided, SM-Smooth, R-Rough, VR-V. Rough
Fe-FeOxide, CL-Clay Infill, CH-Chlorite, H-Healed, GRF-Gravel Filled

SCALE (FEET)	DESCRIPTION	GRAPHIC LOG	ELEV / DEPTH (FT)	RUN NO.	CORE RECOVERY	RQD	FRACTURES PER FOOT	DISCONTINUITY DATA: DIP wrt CORE AXIS	TYPE AND SURFACE DESCRIPTION	GRAPHIC LOG	WEATHERING INDEX	STRENGTH INDEX	POINT LOAD INDEX (psi)	TEST ORIENTATION	NOTES WATER LEVELS INSTRUMENTATION
144			314.90	8	92%										
	314.80														
	144.3-147.5 ft. 144.30 Fresh, thinly bedded, olive gray (5Y 4/1), fine grained, strong, CHERT, (SALEM FORMATION) Arenaceous								J,I,SM						
146															
	146.5 and 146.8 ft. Thin olive gray (5Y 4/1), arenaceous Dolomite layers (<3 in. thick)			9	100 %				J,I,R						
	311.70														
	147.5-157.5 ft. 147.50 Fresh, thinly bedded, light olive gray (5Y 6/1), fine grained, medium strong, ARENACEOUS DOLOMITE, (SALEM FORMATION) Some chert nodules (5-10 mm. dia.), some thin chert layers (<2 in. thick)								J,I,R						
148									J,I,R						
			309.90												
	149.3-149.6 ft. Chert layers		149.30												
	149.7 ft. Coarse calcite crystals (<1/2 in. dia.)														
150									B,PL,SM						
									B,I,R						
									J,I,R (2)						
152									J,I,SM						
	152.5-153.5 ft. Porous zone, open vugs (<1 in. dia.)														
	153.4 and 154.2 ft. Chert layers (<5 in.)														
154									J,C,SM						
				10	100 %										
	155.8 and 156.9 ft. Chert layers (<5 in.)								J,I,R						
156									J,I,R						
									J,I,R						
	157.5-174.5 ft. Fresh, thinly bedded, light olive gray (5Y 6/1), fine grained, medium strong, ARENACEOUS DOLOMITE, (SALEM FORMATION) Few chert nodules, (~5 mm.), scattered chert (thin layers of chert <3 mm.)								J,PL,SM						
158									J,PL,SM						
			299.70												
	159.5-159.8 ft. Chert layer		159.50	11	100 %										

DEPTH SCALE: 1:2
DRILLING CONTRACTOR: LAYNE-WESTERN
DRILLER: D. MAHURIN

LOGGED: S. COSIO
CHECKED: B. TILTON
DATE: 6/5/95

Golder Associates

RECORD OF DRILLHOLE PZ-111-KS

PROJECT: LAIDLAW/RI-FS
PROJECT NO: 943-2848
LOCATION: BRIDGETON, MO

BORING METHOD: NX Core & water
DRILLING DATE: 3/15/95-3/21/95
DRILL RIG: CME 75

DATUM: MSL
COORDINATES N: 1068820.78
AZIMUTH: 0

COLLAR ELEV: 459.2
E: 515850.23
INCLINATION: -90

J-Joint, F-Fault, S-Shear, B-Bedding, F-Foliation
PL-Planar, C-Curved, U-Undulating, ST-Stepped, I-Irregular
P-Polished, X-Slickensided, SM-Smooth, R-Rough, VR-V. Rough
Fe-FeOxide, CL-Clay Infil, CH-Chlorite, H-Healed, GRF-Gravel Filled

DEPTH SCALE (FEET)	DESCRIPTION	ELEV / DEPTH (FT)	RUN NO.	CORE RECOVERY	RQD	FRACTURES PER FOOT	DISCONTINUITY DATA: DIP wrt CORE AXIS	DISCONTINUITY DATA: TYPE AND SURFACE DESCRIPTION	WEATHERING INDEX	STRENGTH INDEX	POINT LOAD INDEX (psi)	TEST ORIENTATION	NOTES WATER LEVELS INSTRUMENTATION
160	157.5-174.5 ft. Fresh, thinly bedded, light olive gray (5Y 6/1), fine grained, medium strong, ARENACEOUS DOLOMITE, (SALEM FORMATION) Few chert nodules, (~5 mm.), scattered chert (thin layers of chert <3 mm.)												Most fractures observed are characterized as drill induced
162	160.5-160.7 ft. Chert layer 161.5-161.7 ft. Chert layer		11	100 %				J,PL,SM (3)					
	163.3-163.6 ft. Calcite crystals layer (large crystals)							J,I,R (2)					
164								J,I,R					
		294.70											
		164.50											
	294.20												
	165.0-167.0 ft. Fresh, thinly bedded, light olive gray (5Y 6/1), fine grained, medium strong, ARGILLACEOUS LIMESTONE, (SALEM FORMATION)												165.1-169.5 ft. 4-8 breaks per foot that were drill incuded
166													
168													
			12	100 %									
170	Scattered chert clasts throughout the sample 170.0-171.5 ft. Zone showing moderate porosity, open vugs (<2 mm.)												
172													
	172.8-173.2 ft. Conglomerate limestone with shale fragments 173.2-174.5 ft. Abundant fossil fragments replaced by silica												
174													
		284.70											
	174.5-176.6 ft. Fresh, thickly bedded, pale olive (10Y 6/2), fine to medium crystalline, strong, ARGILACEOUS LIMESTONE, (SALEM FORMATION) Abundant fossil fragments	174.50	13	100 %									
176													

DEPTH SCALE: 1:2
DRILLING CONTRACTOR: LAYNE-WESTERN
DRILLER: D. MAHURIN

LOGGED: S. COSIO
CHECKED: B. TILTON
DATE: 6/5/95

Golder Associates

RECORD OF DRILLHOLE PZ-111-KS

PROJECT: LAIDLAW/RI-FS
PROJECT NO: 943-2848
LOCATION: BRIDGETON, MO

BORING METHOD: NX Core & water
DRILLING DATE: 3/15/95-3/21/95
DRILL RIG: CME 75

DATUM: MSL
COORDINATES N: 1068820.78
AZIMUTH: 0

COLLAR ELEV: 459.2
E: 515850.23
INCLINATION: -90

J-Joint, F-Fault, S-Shear, B-Bedding, F-Foliation
PL-Planar, C-Curved, U-Undulating, ST-Stepped, I-Irregular
P-Polished, K-Slickensided, SM-Smooth, R-Rough, VR-V. Rough
Fe-FeOxide, CL-Clay Infill, CH-Chlorite, H-Healed, GRF-Gravel Filled

Depth Scale (Feet)	Description	Graphic Log	Elev / Depth (Ft)	Run No.	Core Recovery	RQD (80, 60, 40, 20)	Fractures per Foot (2, 4, 6, 8, 10)	Discontinuity Data: Dip wrt Core Axis (0, 30, 60, 90)	Discontinuity Data: Type and Surface Description	Graphic Log	Weathering Index (SW, FR, MW, HW, CW)	Strength Index (R5, R6, R4, R3, R2, R1)	Point Load Index (psi) (R2 30, R3 150, R4 300, R5 600, R6 1500)	Test Orientation	Notes: Water Levels, Instrumentation
176															
	176.6-179.1 ft. Fresh, medium bedded, pale olive (10Y 6/2), fine to medium grained, strong, SILICEOUS LIMESTONE, (SALEM FORMATION) Abundant fossil fragments														
178															
	179.1-184.5 ft. Fresh, thickly bedded, pale olive (10Y 6/2), fine to medium coarse, strong, ARENACEOUS LIMESTONE, (SALEM FORMATION) Abundant fossil fragments Some layers of grayish yellow (5Y 8/4), clay material			13	100 %										
180															
182															
184			274.70												
	184.5-188.5 ft. Fresh, medium bedded, yellowish gray (5Y 7/2), f-c grained, strong ARENACEOUS LIMESTONE, (SALEM FORMATION) Some fossil fragments, and some grayish yellow (5Y 2/4), clay material layers		184.50												
186															
188				14	100 %										
	188.5-194.5 ft. Slightly weathered, pale olive (10Y 6/2), medium bedded, very coarse, strong, BIOCLASTIC LIMESTONE, (SALEM FORMATION) Few chert nodules, few stylolites in bottom 4 ft., abundant layers of grayish yellow (5Y 8/4) clay, fossiliferous								B,PL,SM						
190									B,PL,SM						
															Stopped drilling for the day
192															

DEPTH SCALE: 1:2
DRILLING CONTRACTOR: LAYNE-WESTERN
DRILLER: D. MAHURIN

LOGGED: S. COSIO
CHECKED: B. TILTON
DATE: 6/5/95

Golder Associates

RECORD OF DRILLHOLE PZ-111-KS

PROJECT: LAIDLAW/RI-FS
PROJECT NO: 943-2848
LOCATION: BRIDGETON, MO

BORING METHOD: NX Core & water
DRILLING DATE: 3/15/95-3/21/95
DRILL RIG: CME 75

DATUM: MSL
COORDINATES N: 1068820.78
AZIMUTH: 0

COLLAR ELEV: 459.2
E: 515850.23
INCLINATION: -90

J-Joint, F-Fault, S-Shear, B-Bedding, F-Foliation
PL-Planar, C-Curved, U-Undulating, ST-Stepped, I-Irregular
P-Polished, K-Slikensided, SM-Smooth, R-Rough, VR-V. Rough
Fe-FeOxide, CL-Clay Infill, CH-Chlorite, H-Healed, GRF-Gravel Filled

DEPTH SCALE (FEET)	DESCRIPTION	GRAPHIC LOG	ELEV / DEPTH (FT)	RUN NO.	CORE RECOVERY	RQD	FRACTURES PER FOOT	DISCONTINUITY DATA: DIP wrt CORE AXIS	DISCONTINUITY DATA: TYPE AND SURFACE DESCRIPTION	DISCONTINUITY DATA: GRAPHIC LOG	WEATHERING INDEX	STRENGTH INDEX	POINT LOAD INDEX (psi)	TEST ORIENTATION	NOTES WATER LEVELS INSTRUMENTATION
192	188.5-194.5 ft. Slightly weathered, pale olive (10Y 6/2), medium bedded, very coarse, strong, BIOCLASTIC LIMESTONE, (SALEM FORMATION) Few chert nodules, few stylolites in bottom 4 ft., abundant layers of grayish yellow (5Y 8/4) clay, fossiliferous			14	100 %										
194	194.5-197.5 ft. Fresh, thinly bedded, light olive gray (5Y 6/1), fine grained, strong, ARGILLACEOUS LIMESTONE, (SALEM FORMATION) Few chert nodules stylolitic, abundant fossil fragments		264.70 / 194.50												3/21/95 @ 7:30 Water level = 20.1 ft. BGS
196															
198	197.5-204.5 ft. Fresh, thinly bedded, light olive gray (5Y 4/1), fine grained, medium strong, ARGILLACEOUS LIMESTONE, (SALEM FORMATION) Few chert nodules, few stylolites, abundant fossil fragments and abundant layers of grayish yellow (5Y 8/4) clay throughout sample			15	100 %										
200															
202															
204	204.5-210.8 ft. Fresh, thinly bedded, dark greenish gray (5GY 4/1), f-c grained, medium strong, LIMESTONE, (SALEM FORMATION) Few chert nodules, stylolites, few clay layers of a grayish yellow color, <3 mm. vugs, with calcite crystals		254.70 / 204.50												
206				16	100 %										
208															

DEPTH SCALE: 1:2
DRILLING CONTRACTOR: LAYNE-WESTERN
DRILLER: D. MAHURIN

LOGGED: S. COSIO
CHECKED: B. TILTON
DATE: 6/5/95

Golder Associates

RECORD OF DRILLHOLE PZ-111-KS

PROJECT: LAIDLAW/RI-FS
PROJECT NO: 943-2848
LOCATION: BRIDGETON, MO

BORING METHOD: NX Core & water
DRILLING DATE: 3/15/95-3/21/95
DRILL RIG: CME 75

DATUM: MSL
COORDINATES N: 1068820.78
AZIMUTH: 0

COLLAR ELEV: 459.2
E: 515850.23
INCLINATION: -90

J-Joint, F-Fault, S-Shear, B-Bedding, F-Foliation
PL-Planar, C-Curved, U-Undulating, ST-Stepped, I-Irregular
P-Polished, K-Slickensided, SM-Smooth, R-Rough, VR-V. Rough
Fe-FeOxide, CL-Clay Infill, CH-Chlorite, H-Healed, GRF-Gravel Filled

SCALE (FEET)	DESCRIPTION	GRAPHIC LOG	ELEV / DEPTH (FT)	RUN NO.	CORE RECOVERY	RQD	FRACTURES PER FOOT	DISCONTINUITY DATA: DIP wrt CORE AXIS	DISCONTINUITY DATA: TYPE AND SURFACE DESCRIPTION	GRAPHIC LOG	WEATHERING INDEX (SW FR, MW, HW, CW)	STRENGTH INDEX (R6, R5, R4, R3, R2, R1)	POINT LOAD INDEX (psi) (R1, R2 35, R3 150, R3 300, R4 500, R5 1500, R6)	TEST ORIENTATION	NOTES WATER LEVELS INSTRUMENTATION
208	204.5-210.8 ft. Fresh, thinly bedded, dark greenish gray (5GY 4/1), f-c grained, medium strong, LIMESTONE, (SALEM FORMATION) Few chert nodules, stylolites, few clay layers of a grayish yellow color, <3 mm. vugs, with calcite crystals														
210			248.40												
	210.8-212.8 ft. Fresh, thickly bedded, dark greenish gray (5GY 4/1) to greenish black (5GY 2/1), very fine grained, weak, SILTSTONE, (WARSAW FORMATION)		210.80	18	100 %										210.8 ft. Encountered top of WARSAW FORMATION
212			246.40												
	212.8-219.7 ft. Fresh, thinly bedded, light olive gray, fine to coarse grained, medium strong, DOLOMITIC LIMESTONE, (WARSAW FORMATION) Fossiliferous, few chert nodules, stylolites		212.80												
214			244.70												
			214.50												
216															
				17	100 %										
218															3/21/95 @ 11:00 End Run 17 Drilling stopped until surface casing installed to top of WARSAW FORMATION 4/9/95 Borehole reamed out to 84.0 ft. with 14 3/4 in. tricone bit and mud rotary then 10 in. casing set in hole
			239.50												
			239.60												
			219.70												
220	220.2-224.3 ft. Slightly weathered, thickly bedded, light olive gray (5Y 6/1), finely crystalline, medium strong, DOLOMITE, (WARSAW FORMATION)								J,PL,SM,CL						
222				16	100 %										4/9/95 6 in. steel casing set to 215.3 ft. and sealed with neat cement. A 10 in. air rotary bit was used to drill borehole. 4/22/95 @ 11:02 Begin drilling Run 18 with NX core
									J,U,SM-calcite						
224															

DEPTH SCALE: 1:2
DRILLING CONTRACTOR: LAYNE-WESTERN
DRILLER: D. MAHURIN

LOGGED: S. COSIO
CHECKED: B. TILTON
DATE: 6/5/95

Golder Associates

RECORD OF DRILLHOLE PZ-111-KS

PROJECT: LAIDLAW/RI-FS
PROJECT NO: 943-2848
LOCATION: BRIDGETON, MO

BORING METHOD: NX Core & water
DRILLING DATE: 3/15/95-3/21/95
DRILL RIG: CME 75

DATUM: MSL
COORDINATES N: 1058820.78
AZIMUTH: 0

COLLAR ELEV: 458.2
E: 515850.23
INCLINATION: -90

J-Joint, F-Fault, S-Shear, B-Bedding, F-Foliation
PL-Planar, C-Curved, U-Undulating, ST-Stepped, I-Irregular
P-Polished, K-Slickensided, SM-Smooth, R-Rough, VR-V. Rough
Fe-FeOxide, CL-Clay Infill, CH-Chlorite, H-Healed, GRF-Gravel Filled

DEPTH SCALE (FEET)	DESCRIPTION	GRAPHIC LOG	ELEV / DEPTH (FT)	RUN NO.	CORE RECOVERY	ROD	FRACTURES PER FOOT	DISCONTINUITY DATA: DIP wrt CORE AXIS	DISCONTINUITY DATA: TYPE AND SURFACE DESCRIPTION	GRAPHIC LOG	WEATHERING INDEX (SW FR, MW, HW, CW)	STRENGTH INDEX (R6 R5 R4 R3 R2 R1)	POINT LOAD INDEX (psi) (R1 30, R2 150, R3 300, R4 600, R5 1500, R6)	TEST ORIENTATION	NOTES WATER LEVELS INSTRUMENTATION
224			234.90												
	224.3-227.4 ft. Fresh, thickly bedded, light brownish gray (5YR 6/1) to medium gray (N5), coarse grained, medium strong, FOSSILIFEROUS LIMESTONE, (WARSAW FORMATION) Not porous, sandy, fine fossil debris, clast supported		224.30						J,I,SM						
226				18	100 %				J,U,SM,CL						
			231.80												
	227.4-231.6 ft. Slightly weathered, thickly bedded, light olive gray (5Y 6/1), finely crystalline, medium strong, DOLOMITE, (WARSAW FORMATION) Porous-vuggy, crystallized, numerous calcite filled vugs and veins		227.40												
228									J,I,R						
			230.10												
			229.10												
230															
			227.60						J,I,R						
	231.6-233.3 ft. Fresh, thickly bedded, light olive gray (5Y 6/1), fine grained, medium strong, ARGILLACEOUS LIMESTONE, (WARSAW FORMATION) Bioturbated		231.60												
232									J,I,SM,CL						
	233.3-236.1 ft. Fresh, thickly laminated, medium dark gray (N4), very fine grained, weak, ARGILLACEOUS LIMESTONE, (WARSAW FORMATION) Bioturbated, almost Claystone			19	100 %										
234															
			223.10												
	236.1-239.4 ft. Fresh, thickly laminated to thinly bedded, medium gray (N5), very fine grained, medium strong, ARGILLACEOUS CALCAREOUS DOLOMITE, (WARSAW FORMATION) Stylolitic, greenish clay infilled vug and vein @ 238.6 ft.		236.10						J,PL,SM,CL						
236															
			220.10						J,PL,R-calcite						
	239.4-243.5 ft. Fresh, thickly bedded, medium dark gray (N4), coarse grained, medium strong, FOSSILIFEROUS LIMESTONE, (WARSAW FORMATION) Few stylolites, <0.1 ft. clay seams		239.10												
238			219.80						J,I,SM,CL						
			239.40	20	100 %										
240															

DEPTH SCALE: 1:2
DRILLING CONTRACTOR: LAYNE-WESTERN
DRILLER: D. MAHURIN

LOGGED: S. COSIO
CHECKED: B. TILTON
DATE: 6/5/95

Golder Associates

RECORD OF DRILLHOLE PZ-111-KS

Sheet 11 of 19

PROJECT: LAIDLAW/RI-FS
PROJECT NO: 843-2848
LOCATION: BRIDGETON, MO

BORING METHOD: NX Core & water
DRILLING DATE: 3/15/95-3/21/95
DRILL RIG: CME 75

DATUM: MSL
COORDINATES N: 1088820.78
AZIMUTH: 0

COLLAR ELEV: 458.2
E: 515850.23
INCLINATION: -90

J-Joint, F-Fault, S-Shear, B-Bedding, F-Foliation
PL-Planar, C-Curved, U-Undulating, ST-Stepped, I-Irregular
P-Polished, K-Slickensided, SM-Smooth, R-Rough, VR-V. Rough
Fe-FeOxide, CL-Clay Infill, CH-Chlorite, H-Healed, GRF-Gravel Filled

LENGTH SCALE (FEET)	DESCRIPTION	GRAPHIC LOG	ELEV / DEPTH (FT)	RUN NO.	CORE RECOVERY	ROD	FRACTURES PER FOOT	DISCONTINUITY DATA: DIP WRT CORE AXIS	DISCONTINUITY DATA: TYPE AND SURFACE DESCRIPTION	GRAPHIC LOG	WEATHERING INDEX (SW FR, MW, HW, CSV)	STRENGTH INDEX (R6–R1)	POINT LOAD INDEX (psi) (R1 30, R2 150, R3 300, R4 600, R5 1500, R6)	TEST ORIENTATION	NOTES WATER LEVELS INSTRUMENTATION
240															
242															
	215.70														
244	243.5-244.0 ft. Fresh, thickly bedded, medium dark gray (N4), fine grained, medium strong, ARGILLACEOUS DOLOMITE, (WARSAW FORMATION) 243.50 215.20 244.00														
				20	100 %										
246	244.0-250.3 ft. Fresh, thickly bedded, medium dark gray (N4), coarse grained, medium strong, FOSSILIFEROUS LIMESTONE, (WARSAW FORMATION) 246.1-246.5 ft. Argillaceous Limestone, stylolitic								J,PL,SM,CL						
248			210.00												
			249.20												
250															
	208.50														
	250.7-251.3 ft. Fresh, thinly to thickly laminated, medium gray (N5), very fine grained, medium strong, ARGILLACEOUS DOLOMITE, (WARSAW FORMATION) 250.70 207.90 251.30								J,I,SM,CL						
252	251.3-256.5 ft. Fresh, thickly bedded, medium light gray (N6) to light olive gray (5Y 2/1), coarse grained, medium strong, FOSSILIFEROUS LIMESTONE, (WARSAW FORMATION)			21	100 %										
254															
	Fossil fragments at 255.6 ft., few Clay partings, some porosity, vugs in lower 2 in.								J,I,SM						
256															

DEPTH SCALE: 1:2
DRILLING CONTRACTOR: LAYNE-WESTERN
DRILLER: D. MAHURIN

LOGGED: S. COSIO
CHECKED: B. TILTON
DATE: 6/5/95

Golder Associates

RECORD OF DRILLHOLE PZ-111-KS

Sheet 12 of 19

PROJECT: LAIDLAW/RI-FS
PROJECT NO: 943-2846
LOCATION: BRIDGETON, MO

BORING METHOD: NX Core & water
DRILLING DATE: 3/15/95-3/21/95
DRILL RIG: CME 75

DATUM: MSL
COORDINATES N: 1068820.76
AZIMUTH: 0

COLLAR ELEV: 459.2
E: 515850.23
INCLINATION: -90

J-Joint, F-Fault, S-Shear, B-Bedding, F-Foliation
PL-Planar, C-Curved, U-Undulating, ST-Stepped, I-Irregular
P-Polished, K-Slickensided, SM-Smooth, R-Rough, VR-V. Rough
Fe-FeOxide, CL-Clay Infill, CH-Chlorite, H-Healed, GRF-Gravel Filled

SCALE (FEET)	DESCRIPTION	GRAPHIC LOG	ELEV / DEPTH (FT)	RUN NO.	CORE RECOVERY	RQD	FRACTURES PER FOOT	DISCONTINUITY DATA: DIP w/r CORE AXIS	DISCONTINUITY DATA: TYPE AND SURFACE DESCRIPTION	GRAPHIC LOG	WEATHERING INDEX	STRENGTH INDEX	POINT LOAD INDEX (psi)	TEST ORIENTATION	NOTES WATER LEVELS INSTRUMENTATION
256									J,I,R,CL						
	202.70														
	256.5-260.1 ft. 256.50 Slightly weathered, thickly bedded, medium gray (N5), very finely crystalline, medium strong, ARGILLACEOUS DOLOMITE, (WARSAW FORMATION)														
				21	100%				J,PL,SM,CL						
258															
	Some porosity, large vug @ 258.8 ft., some smaller vugs elsewhere, some calcite filled, black organic laminae		200.10												
			259.10												4/22/95 @ 17:45 End Run 21 Quit drilling for the day 4/23/95 @ 7:30 Begin Run 22
260															
	260.1-265.5 ft. Fresh, thinly to thickly laminated, greenish black (5GY 2/1), very fine grained, weak, DOLOMITIC SILTSTONE, (WARSAW FORMATION)								J,I,SM,CL						
262															
264				22	98%										
	193.70								J,PL,SM,CL						
	265.5-269.0 ft. 265.50 Fresh, thickly bedded, medium light gray (N6) to light olive gray (5Y 6/1), coarse grained, medium strong, FOSSILIFEROUS LIMESTONE, (WARSAW FORMATION)														
266															
268															
	190.20														
	269.0-272.8 ft. 269.00 Fresh, thickly laminated to thinly bedded, medium dark gray (N4), very fine grained, medium strong, DOLOMITIC SILTSTONE, (WARSAW FORMATION) Abundant 0.1-0.4 ft. interbeds of coarse crystalline arenaceous Dolomite		190.10 269.10												
270				23	98%										
									J,PL,SM,CL						
272															

DEPTH SCALE: 1:2
DRILLING CONTRACTOR: LAYNE-WESTERN
DRILLER: D. MAHURIN

LOGGED: S. COSIO
CHECKED: B. TILTON
DATE: 8/5/95

Golder Associates

RECORD OF DRILLHOLE PZ-111-KS

Sheet 13 of 19

PROJECT: LA/DLAW/RI-FS
PROJECT NO: 843-2848
LOCATION: BRIDGETON, MO

BORING METHOD: NX Core & water
DRILLING DATE: 3/15/95-3/21/95
DRILL RIG: CME 75

DATUM: MSL
COORDINATES N: 1066820.78
AZIMUTH: 0

COLLAR ELEV: 459.2
E: 515850.23
INCLINATION: -90

J-Joint, F-Fault, S-Shear, B-Bedding, F-Foliation
PL-Planar, C-Curved, U-Undulating, ST-Stepped, I-Irregular
P-Polished, K-Slickensided, SM-Smooth, R-Rough, VR-V. Rough
Fe-FeOxide, CL-Clay Infill, CH-Chlorite, H-Healed, GRF-Gravel Filled

DEPTH SCALE (FEET)	ROCK TYPE / DESCRIPTION	GRAPHIC LOG	ELEV / DEPTH (FT)	RUN NO.	CORE RECOVERY	RQD	FRACTURES PER FOOT	DISCONTINUITY DATA: DIP w/r CORE AXIS	DISCONTINUITY DATA: TYPE AND SURFACE DESCRIPTION	GRAPHIC LOG	WEATHERING INDEX: SW FR, MW, HW, CW	STRENGTH INDEX: R6, R5, R4, R3, R2, R1	POINT LOAD INDEX (psi): R1 30, R2 150, R3 300, R4 600, R5 1500, R6	TEST ORIENTATION	NOTES WATER LEVELS INSTRUMENTATION
272									J,PL,SM,CL						
	166.40														
	272.8-274.0 ft. 272.80 Fresh, thickly laminated, greenish black (5GY 2/1), very fine grained, weak, CLAYSTONE, (WARSAW FORMATION) 185.20								J,PL,SM,CL (2)						
274	274.0-290.2 ft. 274.00 Fresh, thickly laminated to medium bedded, medium light gray (N6) to medium dark gray (N4), vf-m grained, weak to medium strong, SILTSTONE, (WARSAW FORMATION) Calcite filled vugs, interbeds of Silty to Sandy Dolomitic Siltstone														
				23	98%				J,U,SM,CL						
278															
			180.20 279.00												
280															
282															
				24	100 %										
284									J,I,SM						
286															
288															

DEPTH SCALE: 1:2
DRILLING CONTRACTOR: LAYNE-WESTERN
DRILLER: D. MAHURIN

LOGGED: S. COSIO
CHECKED: B. TILTON
DATE: 8/5/95

Golder Associates

RECORD OF DRILLHOLE PZ-111-KS

PROJECT: LAIDLAW/RI-FS
PROJECT NO: 943-2848
LOCATION: BRIDGETON, MO

BORING METHOD: NX Core & water
DRILLING DATE: 3/15/95-3/21/95
DRILL RIG: CME 75

DATUM: MSL
COORDINATES N: 1068820.78
AZIMUTH: 0

COLLAR ELEV: 458.2
E: 515850.23
INCLINATION: -90

J-Joint, F-Fault, S-Shear, B-Bedding, F-Foliation
Pl-Planar, C-Curved, U-Undulating, ST-Stepped, I-Irregular
P-Polished, K-Slikensided, SM-Smooth, R-Rough, VR-V. Rough
Fe-FeOxide, CL-Clay Infill, CH-Chlorite, H-Healed, GRF-Gravel Filled

SCALE (FEET)	ROCK TYPE DESCRIPTION	GRAPHIC LOG	ELEV / DEPTH (FT)	RUN NO.	CORE RECOVERY	RQD	FRACTURES PER FOOT	DISCONTINUITY DATA: DIP wrt CORE AXIS	DISCONTINUITY DATA: TYPE AND SURFACE DESCRIPTION	DISCONTINUITY DATA: GRAPHIC LOG	WEATHERING INDEX: SW FR, MW, HW, CW	STRENGTH INDEX: R6, R5, R4, R3, R2, R1	POINT LOAD INDEX (psi): R1 30, R2 150, R3 300, R4 600, R5 1500, 38	TEST ORIENTATION	NOTES WATER LEVELS INSTRUMENTATION
288	274.0-290.2 ft. Fresh, thickly laminated to medium bedded, medium light gray (N6) to medium dark gray (N4), vf-m grained, weak to medium strong, SILTSTONE, (WARSAW FORMATION) Calcite filled vugs, interbeds of Silty to Sandy Dolomitic Siltstone		170.30	24	100 %										
			288.90	25	100 %										
290			169.00												
	290.2-293.7 ft. Fresh, thickly laminated to thinly bedded, medium gray (N5), finely crystalline, medium strong, ARENACEOUS DOLOMITE, (WARSAW FORMATION) Dark gray (N3) argillaceous laminae, bioturbated		290.20												
292			165.50												
	293.7-295.2 ft. Fresh, thinly laminated, medium dark gray (N8), very fine grained, weak, SILTSTONE, (WARSAW FORMATION)		293.70												
294			164.00	26	100 %										
	295.2-306.8 ft. Fresh, thickly laminated to thinly bedded, medium gray (N5), finely crystalline, medium strong, ARENACEOUS DOLOMITE, (WARSAW FORMATION) Argillaceous laminae, no porosity		295.20					90	J,U,SM						
296															
298															
			160.20												
			299.00												
300															
				27	100 %										
302	302.8-303.6 ft. Fossiliferous Dolomite interbed														
304															

DEPTH SCALE: 1:2
DRILLING CONTRACTOR: LAYNE-WESTERN
DRILLER: D. MAHURIN

LOGGED: S. COSIO
CHECKED: B. TILTON
DATE: 6/6/95

Golder Associates

RECORD OF DRILLHOLE PZ-111-KS

PROJECT: LAIDLAW/RI-FS
PROJECT NO: 943-2648
LOCATION: BRIDGETON, MO

BORING METHOD: NX Core & water
DRILLING DATE: 3/15/95-3/21/95
DRILL RIG: CME 75

DATUM: MSL
COORDINATES N: 1088620.78
AZIMUTH: 0

COLLAR ELEV: 459.2
E: 515850.23
INCLINATION: -90

J-Joint, F-Fault, S-Shear, B-Bedding, F-Foliation
PL-Planar, C-Curved, U-Undulating, ST-Stepped, I-Irregular
P-Polished, K-Slickensided, SM-Smooth, R-Rough, VR-V. Rough
Fe-FeOxide, CL-Clay Infil, CH-Chlorite, H-Healed, GRF-Gravel Filled

DEPTH SCALE (FEET)	DESCRIPTION	GRAPHIC LOG	ELEV / DEPTH (FT)	RUN NO.	CORE RECOVERY	RQD	FRACTURES PER FOOT	DISCONTINUITY DATA: DIP w/t CORE AXIS	DISCONTINUITY DATA: TYPE AND SURFACE DESCRIPTION	GRAPHIC LOG	WEATHERING INDEX	STRENGTH INDEX	POINT LOAD INDEX (psi)	TEST ORIENTATION	NOTES WATER LEVELS INSTRUMENTATION
304	295.2-306.8 ft. Fresh, thickly laminated to thinly bedded, medium gray (N5), finely crystalline, medium strong, ARENACEOUS DOLOMITE, (WARSAW FORMATION) Argillaceous laminae, no porosity														
308	152.40 306.80 306.8-315.2 ft. Fresh, thickly laminated to thinly bedded, very light gray (N8) to dark greenish gray (5GY 4/1), f-m grained, medium strong, FOSSILIFEROUS LIMESTONE and DOLOMITIC SILTSTONE, (WARSAW FORMATION) Interbedded fossiliferous beds and shaley beds			27	100 %										
308			150.30 308.90												
310									J,PL,SMC,L						
312									J,PL,SM,CL						
314				28	100 %				J,PL,SM,CL						
316	315.2-328.7 ft. Fresh, thickly laminated to medium bedded, medium light gray (N6) to olive gray (5Y 4/1), ? to medium sand, medium strong, FOSSILIFEROUS LIMESTONE and CALCAREOUS SILTSTONE, (WARSAW FORMATION)								J,PL,SM						
318			140.10 319.10						J,PL,SM,CL						4/23/95 @ 15:02 End Run 28 Quit drilling for the day 4/24/95 @ 12:00 Begin Run 29
.0				29	100 %										

DEPTH SCALE: 1:2
DRILLING CONTRACTOR: LAYNE-WESTERN
DRILLER: D. MAHURIN

LOGGED: S. COSIO
CHECKED: B. TILTON
DATE: 6/5/95

Golder Associates

RECORD OF DRILLHOLE PZ-111-KS

Sheet 16 of 19

PROJECT: LAIDLAW/RI-FS
PROJECT NO: 943-2848
LOCATION: BRIDGETON, MO

BORING METHOD: NX Core & water
DRILLING DATE: 3/15/95-3/21/95
DRILL RIG: CME 75

DATUM: MSL
COORDINATES N: 1068820.78
AZIMUTH: 0

COLLAR ELEV: 459.2
E: 515850.23
INCLINATION: -90

J-Joint, F-Fault, S-Shear, B-Bedding, F-Foliation
PL-Planar, C-Curved, U-Undulating, ST-Stepped, I-Irregular
P-Polished, K-Slickensided, SM-Smooth, R-Rough, VR-V. Rough
Fe-FeOxide, CL-Clay Infill, CH-Chlorite, H-Healed, GRF-Gravel Filled

DEPTH SCALE (FEET)	DESCRIPTION	GRAPHIC LOG	ELEV / DEPTH (FT)	RUN NO.	CORE RECOVERY	RQD	FRACTURES PER FOOT	DISCONTINUITY DATA: DIP wrt CORE AXIS	DISCONTINUITY DATA: TYPE AND SURFACE DESCRIPTION	GRAPHIC LOG	WEATHERING INDEX: FR, SW, MW, HW, CW	STRENGTH INDEX: R6, R5, R4, R3, R2, R1	POINT LOAD INDEX (psi): RT, R1 30, R2 150, R3 300, R4 600, R5 1500, R6	TEST ORIENTATION	NOTES WATER LEVELS INSTRUMENTATION
320	315.2-328.7 ft. Fresh, thickly laminated to medium bedded, medium light gray (N6) to olive gray (5Y 4/1), medium sand, medium strong, FOSSILIFEROUS LIMESTONE and CALCAREOUS SILTSTONE, (WARSAW FORMATION)								J,PL,R						
322	Calcareous Shale interbeds <0.1-0.5 ft. thick, some lithographic textures, commonly silicified														
324				29	100 %										
326															
328	328.7-330.8 ft. Fresh, thickly laminated, light gray (N7) to light olive gray (5Y 6/1), clay sized to coarse silt sized, medium strong, ARGILLACEOUS LIMESTONE, (WARSAW FORMATION) Chert common, calcite vugs		130.10 / 329.10						J,I,SM,CL						
330	330.8-336.4 ft. Fresh, thickly laminated to medium bedded, medium light gray (N6), clay sized to very coarse sand sized, medium strong, LITHOCLASTIC LIMESTONE and CALCAREOUS SILTSTONE, (WARSAW FORMATION) Interbedded <0.1-0.3 lithoclastic beds with clayey shales, silicification common, few stylolites														
332				30	100 %										
334									J,I,R-open						
336									J,U,SM						

DEPTH SCALE: 1:2
DRILLING CONTRACTOR: LAYNE-WESTERN
DRILLER: D. MAHURIN

LOGGED: S. COSIO
CHECKED: B. TILTON
DATE: 6/5/95

Golder Associates

RECORD OF DRILLHOLE PZ-111-KS

Sheet 17 of 19

PROJECT: LAIDLAW/RI-FS
PROJECT NO: 943-2848
LOCATION: BRIDGETON, MO

BORING METHOD: NX Core & water
DRILLING DATE: 3/15/95-3/21/95
DRILL RIG: CME 75

DATUM: MSL
COORDINATES N: 1068620.78
AZIMUTH: 0

COLLAR ELEV: 459.2
E: 515850.23
INCLINATION: -90

J-Joint, F-Fault, S-Shear, B-Bedding, F-Foliation
PL-Planar, C-Curved, U-Undulating, ST-Stepped, I-Irregular
P-Polished, K-Slikensided, SM-Smooth, R-Rough, VR-V. Rough
Fe-FeOxide, CL-Clay Infill, CH-Chlorite, H-Healed, GRF-Gravel Filled

DEPTH (FEET)	DESCRIPTION	GRAPHIC LOG	ELEV / DEPTH (FT)	RUN NO.	CORE RECOVERY	RQD	FRACTURES PER FOOT	DISCONTINUITY DATA: DIP wrt CORE AXIS	DISCONTINUITY DATA: TYPE AND SURFACE DESCRIPTION	DISCONTINUITY DATA: GRAPHIC LOG	WEATHERING INDEX (SW FR, MW HW, CW)	STRENGTH INDEX	POINT LOAD INDEX (psi)	TEST ORIENTATION	NOTES WATER LEVELS INSTRUMENTATION
336	336.4-343.7 ft. Fresh, thickly laminated to medium bedded, medium light gray (N6), clay sized to very coarse sand sized, medium strong, ARENACEOUS LIMESTONE and ARGILLACEOUS LIMESTONE, (WARSAW FORMATION) Highly silicified, some lithographic textures								J,PL,SM			R5 R6	R1 R2	
338				30	100 %				J,U,SM,CL			R4 R3	R1 R2	
			120.10											
			339.10											
340														
342														
			115.50											
	343.7-368.8 ft. Fresh, thickly laminated to medium bedded, very light gray (N8) to medium light gray (N6), fine silt sized to coarse silt sized, medium strong, SILICEOUS LIMESTONE and ARENACEOUS LIMESTONE, (KEOKUK FORMATION) Diseminated chert abundant, calcareous dolomitic, silty Clay interbeds, differential compaction features		343.70											343.7 ft. Top of KEOKUK FORMATION encountered
344				31	100 %									
346														
									J,I,R					
348														
			110.60											
			348.60											
350														
				32	100 %									
	350.5-350.9 ft. Porous								J,I,R					
	351.6-363.8 ft. Porous, vuggy													
352														

DEPTH SCALE: 1:2
DRILLING CONTRACTOR: LAYNE-WESTERN
DRILLER: D. MAHURIN

LOGGED: S. COSIO
CHECKED: B. TILTON
DATE: 6/5/95

Golder Associates

RECORD OF DRILLHOLE PZ-111-KS

PROJECT: LAIDLAW/RI-FS
PROJECT NO: 943-2648
LOCATION: BRIDGETON, MO

BORING METHOD: NX Core & water
DRILLING DATE: 3/15/95-3/21/95
DRILL RIG: CME 75

DATUM: MSL
COORDINATES N: 1068920.78
AZIMUTH: 0

COLLAR ELEV: 458.2
E: 515850.23
INCLINATION: -90

J-Joint, F-Fault, S-Shear, B-Bedding, F-Foliation
PL-Planar, C-Curved, U-Undulating, ST-Stepped, I-Irregular
P-Polished, K-Slickensided, SM-Smooth, R-Rough, VR-V, Rough
Fe-FeOxide, CL-Clay Infill, CH-Chlorite, H-Healed, GRF-Gravel Filled

DEPTH SCALE (FEET)	DESCRIPTION	GRAPHIC LOG	ELEV / DEPTH (FT)	RUN NO.	CORE RECOVERY	RQD (60, 50, 40, 20)	FRACTURES PER FOOT (2, 4, 6, 8, 10)	DISCONTINUITY DATA: DIP wrt CORE AXIS (0, 30, 60, 90)	DISCONTINUITY DATA: TYPE AND SURFACE DESCRIPTION	GRAPHIC LOG	WEATHERING INDEX (SW, FR, MW, HW, CW)	STRENGTH INDEX (R6, R5, R4, R3, R2, R1)	POINT LOAD INDEX (psi) (R1 30, R2 150, R3 300, R4 600, R5 1500, R6)	TEST ORIENTATION	NOTES WATER LEVELS INSTRUMENTATION
352	343.7-368.8 ft. Fresh, thickly laminated to medium bedded, very light gray (N8) to medium light gray (N6), fine silt sized to coarse silt sized, medium strong, SILICIOUS LIMESTONE and ARENACEOUS LIMESTONE, (KEOKUK FORMATION) Disseminated chert abundant, calcareous dolomitic, silty Clay interbeds, differential compaction features														
354				32	100 %										
356															
358								•	J,I,R (2)						
			100.40 / 358.80												
									J,I,VR						
360									J,I,VR						
362									J,PL,VR						
				33	100 %				J,PL,R						
364									J,I,R						
366															
368															

DEPTH SCALE: 1:2
DRILLING CONTRACTOR: LAYNE-WESTERN
DRILLER: D. MAHURIN

LOGGED: S. COSIO
CHECKED: B. TILTON
DATE: 6/5/95

Golder Associates

RECORD OF DRILLHOLE PZ-111-KS

PROJECT: LAIDLAW/RI-FS
PROJECT NO: 943-2848
LOCATION: BRIDGETON, MO

BORING METHOD: NX Core & water
DRILLING DATE: 3/15/95-3/21/95
DRILL RIG: CME 75

DATUM: MSL
COORDINATES N: 1068620.78
AZIMUTH: 0

COLLAR ELEV: 459.2
E: 515850.23
INCLINATION: -90

ROCK TYPE

J-Joint, F-Fault, S-Shear, B-Bedding, F-Foliation
PL-Planar, C-Curved, U-Undulating, ST-Stepped, I-Irregular
P-Polished, K-Slickensided, SM-Smooth, R-Rough, VR-V. Rough
Fe-FeOxide, CL-Clay Infill, CH-Chlorite, H-Healed, GRF-Gravel Filled

DEPTH SCALE (FEET)	DESCRIPTION	GRAPHIC LOG	ELEV / DEPTH (FT)	RUN NO.	CORE RECOVERY	RQD (80 60 40 20)	FRACTURES PER FOOT (2 4 6 8 10)	DISCONTINUITY DATA: DIP w/r CORE AXIS (0 30 60 90)	DISCONTINUITY DATA: TYPE AND SURFACE DESCRIPTION	DISCONTINUITY DATA: GRAPHIC LOG	WEATHERING INDEX (SW FR, MW, HW, CW)	STRENGTH INDEX (R6 R5 R4 R3 R2 R1)	POINT LOAD INDEX (psi) (R1 30, R2 150, R3 300, R4 600, R5 1500, R6)	TEST ORIENTATION	NOTES WATER LEVELS INSTRUMENTATION
368				33	100 %										4/24/95 @ 18:45 End Run 33
	90.40		90.40												
	End of Record of Drillhole at 368.8 ft. 368.80		368.80												
370															
372															
374															
376															
378															
380															
382															
384															

DEPTH SCALE: 1:2
DRILLING CONTRACTOR: LAYNE-WESTERN
DRILLER: D. MAHURIN

LOGGED: S. COSIO
CHECKED: B. TILTON
DATE: 6/5/95

Golder Associates

Well No. PZ-111-KS

Boring No. X-Ref: PZ-111-KS

PIEZOMETER CONSTRUCTION SUMMARY

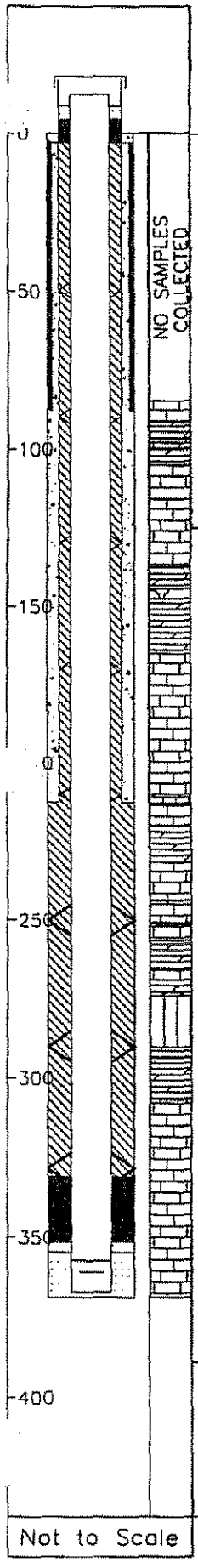

Not to Scale

Survey Coords: Northing: 1068821 ft. Easting: 515850 ft.

Elevation Ground Level 459.2 ft. NGVD

Top of PVC Casing 460.87 ft. NGVD

Drilling Summary:

Total Depth 368.8 ft.

Borehole Diameter See comments

Casing Stickup Height 1.69 ft.

Driller Layne-Western, St. Louis, MO

Rig CME 75, Schramm Portadrill T660H

Bit(s) 6 1/4 in. ID Hollow Stem Auger Bit, NX Core, 14 3/4 in. Tricone Bit, 10 in. and 5 7/8 in. Button Bits

Drilling Fluid Auger-None, NX Core Water, Air and Mud Rotary

Protective Casing 8x8 in. Square Steel, by 5 ft. long

Construction Time log:

Task	Start Date	Start Time	Finish Date	Finish Time
Drilling				
CME 75	3/15/95	7:45	4/24/95	16:45
Schramm Rotary	4/26/95	8:20	4/26/95	10:30
Geophys.Logging:				
Casing:				
2" PVC	5/6/95	7:30	5/6/95	9:00
6" Steel	4/9/95	11:00	4/9/95	15:15
10" Steel	4/8/95	8:00	4/8/95	11:00
Filter Placement:	5/6/95	9:00	5/6/95	10:15
Cementing:				
Development				
Bentonite Grout	5/6/95	10:30	5/6/95	12:30
Bentonite Seal	5/6/95	10:15	5/6/95	10:30

Well Design & Specifications

Basis: Geologic Log X Geophysical Log

Casing string(s): C = Casing S = Screen

Depth			String(s)	Elevation		
+ 1.69	-	357.15	C1	460.87	-	102.03
357.15	-	366.96	S1	102.03	-	92.22
366.96	-	367.30	C2	92.22	-	91.88
+ 0.50	-	83.80	C3	459.70	-	375.38
+ 1.00	-	215.30	C4	460.20	-	243.88
	-				-	

Casing: C1 2 in. dia. Schedule 80 PVC, flush threaded with O-rings

C2 2 in. dia. threaded PVC end cap (4 in. long or 0.33 ft.) (C3&C4-see comments)

Screen: S1 2 in. dia. Schedule 80 PVC, 0.010 in. machine cut slot, flush threaded with O-rings

Sand Pack: 16-35 mesh Silica Sand, 354.7-368.8 ft.

Filter Pack: Less than 50 mesh Silica Sand, 351.4-354.7 ft.

Grout Seal: Wyo-Ben Grout Well Bentonite Slurry, 3.0-330.97 ft., Neat cement, 3.0-215.3 ft.

Bentonite Seal: Extra high yield Wyo-Ben (100%) Slurry, 330.97-351.4 ft.

Concrete: 0.0-3.0 ft.

Well Development

Stabilization Test Data:

Time	pH	Spec. Cond.	Temp (°C)

Recovery Data:

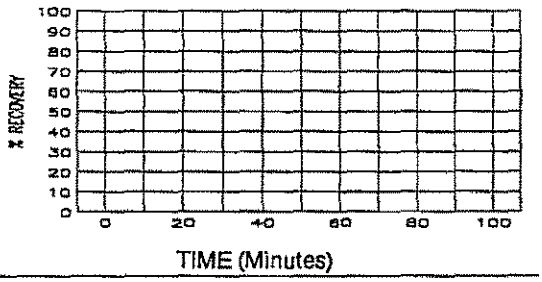

Comments:

14 3/4 in. (0.0-84.0 ft.), 10 in. (84.0-215.5 ft.), 5 7/8 in. (215.5-368.8 ft.)

Surface Casing C3: 10 in. ID / 10 7/8 in. OD Steel Casing

Surface Casing C4: 6 1/8 in. ID / 6 5/8 in. OD Steel Casing

Supervised by D. Alloway

Job Number 943-2848

Site LAIDLAW/OU2 RI-FS/MO

File Name PZ111KS

MISSOURI DEPARTMENT OF NATURAL RESOURCES
DIVISION OF GEOLOGY AND LAND SURVEY

MONITORING WELL CERTIFICATION RECORD

OFFICE USE ONLY	DATE RECEIVED
REF NO 122481	CHECK NO.
ROUTE	TRANSMITTAL NO
STATE WELL NUMBER	CROSS REFERENCE NO
CHECKED BY	ENTERED Ph 1 Ph 2 Ph 3
APPROVED BY	DATE APPROVED

INFORMATION SUPPLIED BY OWNER

SITE NAME: LAIDLAW BRIDGETON SANITARY LANDFILL
WELL NUMBER: P2-111-KS

SITE ADDRESS: ST. CHARLES ROCK RD. | CITY: BRIDGETON | STATE: Mo. | ZIP CODE: 63044

NAME: LAIDLAW WASTE SYSTEMS, INC. | TELEPHONE: 314-241-3710

ADDRESS: 1838 N. BROADWAY | CITY: ST. LOUIS | STATE: Mo. | ZIP CODE: 63102

INFORMATION SUPPLIED BY MONITORING WELL CONTRACTOR

LOCATION OF WELL SHOW LOCATION IN SECTION PLAT

COUNTY: ST. LOUIS
ELEVATION: 459.2
AREA NO.:

SMALLEST ¼ ____ ¼ ____ ¼ ____ ¼ LARGEST ¼

SEC. ____ TWN. 47 N,RNG. 5 (E) OR W

LAT. 38° 46' 06" LONG. 90° 26' 40"

SKETCH THE LOCATION TO THE WELL INCLUDING MILEAGE ON ALL ROADS TRAVELED FROM NEAREST TOWNS OR HIGHWAYS

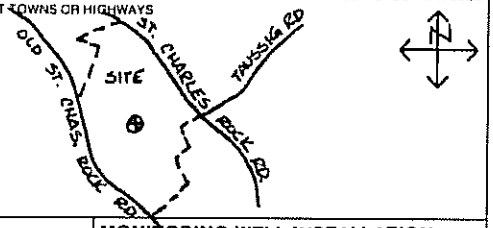

DESCRIBE LOCATION OF THE WELL SO WE WOULD BE ABLE TO VISIT IT

MONITORING WELL INSTALLATION CONTRACTOR'S NAME
LAYNE WESTERN Co., INC.

DRILLING CONTRACTOR'S NAME
LAYNE WESTERN Co., INC.

TYPE OF INSTALLATION: ☒ ABOVE GROUND ☐ FLUSH MOUNT

STATIC WATER LEVEL ____ FEET FROM MEASURING POINT

DATE OF STATIC WATER LEVEL

ELEVATION OF MEASURING POINT: 460.37

MEASURING POINT IS: ☒ TOP OF RISER PIPE ☐ OTHER

DRILLING EQUIPMENT: ☒ AIR ROTARY ☒ AUGER TYPE 6¼ H.S.A. ☐ REVERSE ROTARY ☐ OTHER

CENTRALIZERS USED: ☒ YES, AT 10 TOTAL ☒ STAINLESS STEEL ☐ OTHER ☐ NO

MULTIPLE CASED WELLS: SUBMIT ADDITIONAL AS BUILT DIAGRAM SHOWING WELL CONSTRUCTION DETAILS INCLUDING TYPE AND SIZE OF ALL CASING, HOLE DIAMETERS, AND GROUT USED.

DATE WELL CONSTRUCTION WAS COMPLETED: 5-06-95

I HEREBY CERTIFY THAT THE MONITORING WELL HEREIN DESCRIBED WAS CONSTRUCTED IN ACCORDANCE WITH THE DEPARTMENT OF NATURAL RESOURCES REQUIREMENTS FOR THE CONSTRUCTION OF MONITORING WELLS.

SIGNATURE (MONITORING WELL CONTRACTOR): Michael P. Vogt
PERMIT NUMBER: 001256WM | DATE: 6-02-95
SIGNATURE (DRILLING CONTRACTOR): Michael P. Vogt
PERMIT NUMBER: 001256WM | DATE: 6-02-95

NOTE: Record the fraction of a foot in decimal, not in inches.

Top of Riser Elevation: 460.37

LOCKING CAP - (Y) N (Circle one)
CAP VENT - (Y) N (Circle one)
PROTECTIVE CASING Type: STEEL Size: 8" x 8" x 5' Bore Hole Diameter: 15"
WEEP HOLE - Y / (N) (Circle one)

Ground Surface Elevation: 457.0

Feet from Surface	Description of Formation
Information in this column to be supplied in the Feet from Surface column	
Depth to bottom of Protective Casing Seal: 3.0	
	84-272 ~~Shale~~ Limestone
	272-300 Shale
	300-302 Limestone
Depth to Base of Annular Seal: 331.0	
	302-329 Shale
Depth to Base of Bentonite Seal: 351.4	
Depth to Base of Secondary Filter Pack: 354.7	329-368.8 Limestone
Depth to Top of the Screen: 357.0	
Depth to Bottom of the Screen: 367.0	
Plug Back Total Depth	
Original Total Depth: 368.8	

PROTECTIVE CASING SEAL Type: ☒ Concrete ☐ Cement Slurry
RISER PIPE Length: 368.7' Diameter: 2" Type of Material: SCH. 80 PVC
BOREHOLE DIAMETER: 5⅞ In.
ANNULAR SEAL Type: ☒ Bentonite Slurry ☐ Cement Slurry ☐ Non Slurry Bentonite
BENTONITE SEAL Type: ☒ Bentonite Slurry ☐ Non Slurry Bentonite Length of Seal: 20.4 Ft.
SECONDARY FILTER PACK Type: ☒ Sand (Optional) ☐ Manufactured Grain Size: <50 Length: 3.3
PRIMARY FILTER PACK Type: ☒ Sand ☐ Manufactured Grain Size: 16-35 Length: 14.1'
WELL SCREEN Length: 10 Slot Size: 0.010" Type: SCH. 80 PVC
SUMP DETAILS Length: 0.3FL Diameter: 2 In. Type: PVC
TYPE OF BACKFILL: SAND

MO 780-1415 (2-94)

DISTRIBUTION: WHITE-DIVISION CANARY-MONITORING WELL CONTRACTOR PINK-OWNER
GOLDENROD-RETURN TO DEPARTMENT OF NATURAL RESOURCES P.O. BOX 250 ROLLA, MO 65401

RECORD OF DRILLHOLE PZ-111-SD

Sheet 1 of 2

PROJECT: LAIDLAW/RI-FS
PROJECT NO: 943-2648
LOCATION: BRIDGETON, MO

BORING METHOD: NX Core & water
DRILLING DATE: 4/11/95
DRILL RIG: Schramm

DATUM: MSL
COORDINATES N: 1068636.1
AZIMUTH: 0

COLLAR ELEV: 459.2
E: 515834.6
INCLINATION: -90

J-Joint, F-Fault, S-Shear, B-Bedding, F-Foliation
PL-Planar, C-Curved, U-Undulating, ST-Stepped, I-Irregular
P-Polished, K-Slickensided, SM-Smooth, R-Rough, VR-V. Rough

DEPTH SCALE (FEET)	DESCRIPTION	GRAPHIC LOG	ELEV / DEPTH (FT)	RUN NO.	CORE RECOVERY	RQD (60 40 20)	FRACTURES PER FOOT (2 4 6 8 10)	DISCONTINUITY DATA: DIP wrt CORE AXIS (0 30 60 90)	DISCONTINUITY DATA: TYPE AND SURFACE DESCRIPTION	DISCONTINUITY DATA: GRAPHIC LOG	WEATHERING INDEX (SW FR MW HW CW)	STRENGTH INDEX (R6 R5 R4 R3 R2 R1)	POINT LOAD INDEX (psi) (R1 30 R2 150 R3 300 R4 600 R5 1500 R6)	TEST ORIENTATION	NOTES WATER LEVELS INSTRUMENTATION
192	0.0-199.9 ft. No sampling conducted See Record of Drillhole for PZ-111-KS														0.0-98.0 ft. On 4/10/95 borehole advanced with 9 7/8 in. bit using mud rotary then 6 in. steel casing grouted in annulas with neat cement, at 91.0 ft. component bedrock encountered
194															
196															
198															
200	199.9-209.9 ft. 199.90 Fresh, very thickly bedded, medium gray (N5), coarsely crystalline, medium strong, FOSSILIFEROUS LIMESTONE Upper 0.1 ft. abundantly fossiliferous Argillaceous, arenaceous, abundantly fossiliferous, few stylolites, few calcite filled vugs		259.30 199.90	1	99%				J,PL,SM (3) J,PL,R						4/11/95 @ 10:24 Began Run 1
202															
204															
206															
208															

DEPTH SCALE: 1:2
DRILLING CONTRACTOR: LAYNE-WESTERN
DRILLER: M. VOGT

LOGGED: J. MILLER
CHECKED: S. TILTON
DATE: 5/24/95

Golder Associates

RECORD OF DRILLHOLE PZ-111-SD

PROJECT: LADLAW/RI-FS
PROJECT NO: 943-2848
LOCATION: BRIDGETON, MO

BORING METHOD: NX Core & water
DRILLING DATE: 4/11/95
DRILL RIG: Schramm

DATUM: MSL
COORDINATES N: 1068638.1
AZIMUTH: 0

COLLAR ELEV: 459.2
E: 515834.6
INCLINATION: -90

J-Joint, F-Fault, S-Shear, B-Bedding, F-Foliation
PL-Planar, C-Curved, U-Undulating, ST-Stepped, I-Irregular
P-Polished, K-Slikensided, SM-Smooth, R-Rough, VR-V. Rough

DEPTH SCALE (FEET)	DESCRIPTION	GRAPHIC LOG	ELEV / DEPTH (FT)	RUN NO.	CORE RECOVERY	RQD	FRACTURES PER FOOT	DISCONTINUITY DATA: DIP wrt CORE AXIS	DISCONTINUITY DATA: TYPE AND SURFACE DESCRIPTION	DISCONTINUITY DATA: GRAPHIC LOG	WEATHERING INDEX	STRENGTH INDEX	POINT LOAD INDEX (psi)	TEST ORIENTATION	NOTES WATER LEVELS INSTRUMENTATION
208	199.9-209.9 ft. Fresh, very thickly bedded, medium gray (N5), coarsely crystalline, medium strong, FOSSILIFEROUS LIMESTONE Upper 0.1 ft. abundantly fossiliferous			1	98%										4/11/95 @ 12:08 End Run 1
	249.30		249.30												
210	End of Record of Drillhole at 209.9 ft. 209.90		209.90												
212															
214															
216															
218															
220															
222															
224															

DEPTH SCALE: 1:2
DRILLING CONTRACTOR: LAYNE-WESTERN
DRILLER: M. VOGT

LOGGED: J. MILLER
CHECKED: B. TILTON
DATE: 5/24/95

Golder Associates

Well No. PZ-111-SD

Boring No. X-Ref: PZ-111-SD

PIEZOMETER CONSTRUCTION SUMMARY

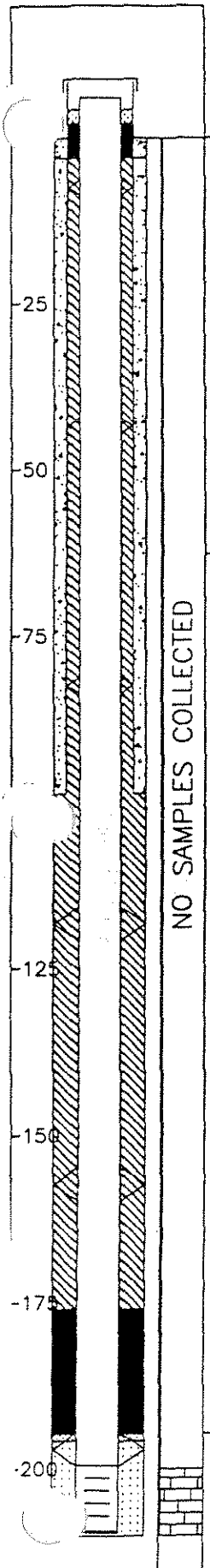

Not to Scale

Survey Coords: Northing: 1068638 ft. Easting: 515835 ft.

Elevation Ground Level 459.2 ft. NGVD

Top of PVC Casing 461.55 ft. NGVD

Drilling Summary:

Total Depth 210.0 ft.

Borehole Diameter 10 in. (0.0–98.0 ft.) 5 7/8 in. (98.0–210.0 ft.)

Casing Stickup Height 2.33 ft.

Driller Layne-Western, St. Louis, MO

Rig CME 75, Schramm Portadrill T660H

Bit(s) 6 1/4 in. ID Hollow Stem Auger Bit, NX Core 5 7/8 in. Button Bit and 9 7/8 in. Tricone Bit

Drilling Fluid Auger-None, NX Core Water, Air and Mud Rotary

Protective Casing 8x8 in. Square Steel, by 5 ft. long

Construction Time log:

Task	Start Date	Start Time	Finish Date	Finish Time
Drilling				
CME 75				
Schramm Rotary	4/10/95	9:45	4/11/95	13:38
Geophys.Logging:	4/14/95	13:00	4/14/95	16:00
Casing:				
2" PVC	4/21/95	8:00	4/21/95	8:18
8" Steel	4/10/95	14:05	4/10/95	16:21
Filter Placement:	4/21/95	8:32	4/21/95	9:12
Cementing:				
Development				
Bentonite Grout	4/21/95	9:20	4/21/95	9:50
Bentonite Seal	4/21/95	9:15	4/21/95	9:18

Well Design & Specifications

Basis: Geologic Log X Geophysical Log X

Casing string(s): C = Casing S = Screen

Depth			String(s)	Elevation		
+ 2.33	-	199.40	C1	461.55	-	259.82
199.40	-	209.20	S1	259.82	-	250.02
209.20	-	209.50	C2	250.02	-	249.72
+ 0.50	-	98.00	C3	459.70	-	361.22
	-				-	
	-				-	

Casing: C1 2 in. dia. Schedule 80 PVC, flush threaded with O-rings

C2 2 in. dia. threaded PVC end cap (4 in. long or 0.33 ft.) (C3-see comments)

Screen: S1 2 in. dia. Schedule 80 PVC, 0.010 in. machine cut slot, flush threaded with O-rings

Sand Pack: 16-35 mesh Silica Sand, 195.8–210.0 ft.

Filter Pack: Less than 50 mesh Silica Sand, 194.7–195.8 ft.

Grout Seal: Wyo-Ben Grout Well Bentonite Slurry, 3.0–176.0 ft., Neat cement, 3.0–98.0 ft.

Bentonite Seal: Extra high yield Wyo-Ben (100%) Slurry, 176.0–194.7 ft.

Concrete: 0.0–3.0 ft.

Well Development

Stabilization Test Data:

Time	pH	Spec. Cond.	Temp (°C)

Recovery Data:

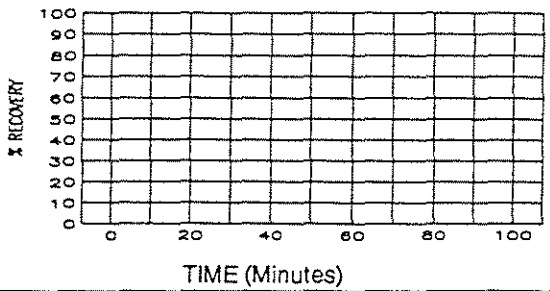

Comments: Surface Casing C3: 6 1/8 in. ID / 6 5/8 in. OD Steel Casing

Supervised by J. Miller

Job Number 943-2848

Site LAIDLAW/OU2 RI-FS/MO

File Name PZ111SD

MISSOURI DEPARTMENT OF NATURAL RESOURCES
DIVISION OF GEOLOGY AND LAND SURVEY

MONITORING WELL CERTIFICATION RECORD

OFFICE USE ONLY	DATE RECEIVED
REF NO 122482	CHECK NO
ROUTE	TRANSMITTAL NO
STATE WELL NUMBER	CROSS REFERENCE NO.
CHECKED BY	ENTERED Ph 1 Ph 2 Ph 3
APPROVED BY	DATE APPROVED

INFORMATION SUPPLIED BY OWNER

SITE NAME	WELL NUMBER		
LAIDLAW BRIDGETON SANITARY LANDFILL	PZ-111-SD		
SITE ADDRESS	CITY	STATE	ZIP CODE
ST. CHARLES ROCK RD.	BRIDGETON	Mo	63044
NAME		TELEPHONE	
LAIDLAW WASTE SYSTEMS, INC.		314-241-3710	
ADDRESS	CITY	STATE	ZIP CODE
1338 N. BROADWAY	ST. LOUIS	Mo.	63102

INFORMATION SUPPLIED BY MONITORING WELL CONTRACTOR

LOCATION OF WELL SHOW LOCATION IN SECTION PLAT

COUNTY St. Louis
ELEVATION 459.2
AREA NO.

SMALLEST ¼ LARGEST ¼

SEC. ____ TWN. 47 N,RNG. 5 (E) OR W

LAT. 38 ° 46 ' 06 " LONG. 90 ° 26 ' 39 "

SKETCH THE LOCATION TO THE WELL INCLUDING MILEAGE ON ALL ROADS TRAVELED FROM NEAREST TOWNS OR HIGHWAYS

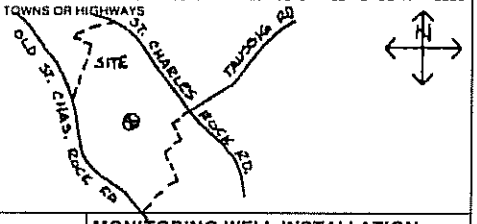

DESCRIBE LOCATION OF THE WELL SO WE WOULD BE ABLE TO VISIT IT

MONITORING WELL INSTALLATION CONTRACTOR'S NAME

LAYNE WESTERN Co, INC.

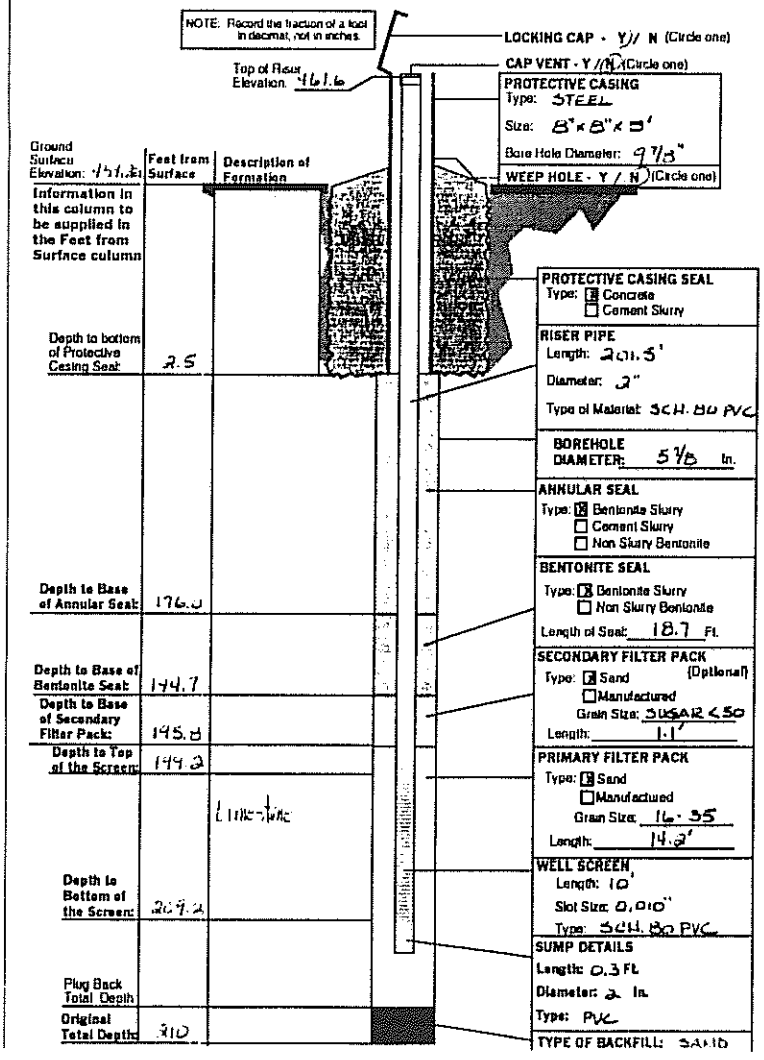

DRILLING CONTRACTOR'S NAME

LAYNE WESTERN Co, INC.

TYPE OF INSTALLATION
☒ ABOVE GROUND ☐ FLUSH MOUNT

STATIC WATER LEVEL
FEET FROM MEASURING POINT

DATE OF STATIC WATER LEVEL

ELEVATION OF MEASURING POINT
461.55

MEASURING POINT IS
☒ TOP OF RISER PIPE
☐ OTHER

DRILLING EQUIPMENT
☒ AIR ROTARY ☐ AUGER TYPE
☐ REVERSE ROTARY ☐ OTHER

CENTRALIZERS USED
☒ YES, AT 5 TOTAL
☒ STAINLESS STEEL
☐ OTHER
☐ NO

MULTIPLE CASED WELLS

SUBMIT ADDITIONAL AS BUILT DIAGRAM SHOWING WELL CONSTRUCTION DETAILS INCLUDING TYPE AND SIZE OF ALL CASING, HOLE DIAMETERS, AND GROUT USED.

DATE WELL CONSTRUCTION WAS COMPLETED
4-21-95

I HEREBY CERTIFY THAT THE MONITORING WELL HEREIN DESCRIBED WAS CONSTRUCTED IN ACCORDANCE WITH THE DEPARTMENT OF NATURAL RESOURCES REQUIREMENTS FOR THE CONSTRUCTION OF MONITORING WELLS.

SIGNATURE (MONITORING WELL CONTRACTOR)
Michael P. Vogt

PERMIT NUMBER	DATE
001256WM	5-10-95

SIGNATURE (DRILLING CONTRACTOR)
Michael P. Vogt

PERMIT NUMBER	DATE

LAIDLAW WASTE SYSTEMS INC.

SOIL BOREHOLE LOG

SITE NAME AND LOCATION

LAIDLAW/OU2 RI-FS/MO
WEST LAKE LANDFILL
OPERABLE UNIT 2

DATUM NORTHING: 1069002.00 EASTING: 515674.01 ELEVATION 457.9

DRILLING METHOD: 4.25 inch I.D. Hollow Stem Auger

SAMPLING METHOD:
SPLIT SPOON: 2.0 inch O.D./1.5 inch I.D. (SP)
SHELBY TUBE: 3.0 inch O.D./2 13/16 inch I.D. (SH)

BORING NO. PZ-112-AS

SHEET 1 OF 3

					DRILLING START	DRILLING FINISH
WATER LEVEL						
TIME					13:20	15:29
DATE					4/10/95	4/10/95
CASING DEPTH						

DRILL RIG CME 75

ANGLE VERTICAL BEARING

SAMPLE HAMMER 140 lbs.

SURFACE CONDITIONS

DRILLING CONTR LAYNE-WESTERN

LOGGED BY S. CUSID DATE 5/31/95 CHK'D BY W. HERST

JOB NO.: 943-2848

FILENAME: PZ112AS

DEPTH IN FEET (ELEVATION)	BLOW/ 6 IN. ON SAMPLER	RECOVERY	SYMBOL	SAMPLER SYMBOL	SAMPLE NUMBER AND DESCRIPTION OF MATERIAL		SAMPLER TYPE	REMARKS
1	2 2 2 7	1.1' / 2.0' (55%)			(0.0-4.0 ft.) Loose to compact, moderate yellowish brown (10YR 5/4) to dark greenish gray (5G 4/1), SILT, trace Fine Gravel, NR, damp, (ML), (FILL)		SP 1	
2	5 12 7	0.0' / 2.0' (0%)					SP 2	
3	6							
4	6 50/6"	0.8' / 2.0' (40%)				(453.9) 4.0	SP 3	
5					(4.0-8.5 Ft.) Very dense, medium bluish gray (5GY 5/1), f-c SAND, trace of Fine Gravel, SR, damp, (SP), (FILL)			
6					@ 5.0 ft., cobbles and rock encountered			Drilling very hard from 5.0-8.0 ft. Split Spoons not collected
7								
8	6 7 11	1.6' / 2.0' (80%)				(449.4) 8.5		
9	9				(8.5-10.0 ft.) Waste		SP 4	
10	3 4 9	0.6' / 2.0' (30%)				(447.9) 10.0		
11	5				(10.0-10.6 Ft.) Compact, medium bluish gray (5B 5/1), f-c SAND, trace of Fine Gravel, SR, moist, (SP), (FILL)	(447.3) 10.6	SP 5	
12	4 20 14	0.8' / 2.0' (40%)			(10.6-20.0 ft.) Waste			
13	9						SP 6	
14	3 3 8 18	0.2' / 2.0' (10%)					SP 7	

LAIDLAW WASTE SYSTEMS INC.

SOIL BOREHOLE LOG

SITE NAME AND LOCATION

LAIDLAW/OU2 RI-FS/MO
WEST LAKE LANDFILL
OPERABLE UNIT 2

NORTHING: 1069002.00
DATUM EASTING: 515674.01 ELEVATION 457.9

DRILLING METHOD: 4.25 inch I.D. Hollow Stem Auger

SAMPLING METHOD:
SPLIT SPOON: 2.0 inch O.D./1.5 inch I.D. (SP)
SHELBY TUBE: 3.0 inch O.D./2 13/16 inch I.D. (SH)

					DRILLING START	DRILLING FINISH
WATER LEVEL					TIME	TIME
TIME					13:20	15:29
DATE					DATE	DATE
CASING DEPTH					4/10/95	4/10/95

BORING NO. PZ-112-AS

SHEET 2 OF 3

DRILL RIG CME 75

ANGLE VERTICAL BEARING

SAMPLE HAMMER 140 lbs.

SURFACE CONDITIONS

DEPTH IN FEET (ELEVATION)	BLOW/ 6 IN. ON SAMPLER	RECOVERY	SYMBOL	SAMPLER SYMBOL	SAMPLE NUMBER AND DESCRIPTION OF MATERIAL	SAMPLER TYPE	REMARKS
16	9 10 11 25	0.8' / 2.0' (40%)			(10.6-20.0 Ft.) Waste	SP 7	
17						SP 8	
18	50/5"	0.1' / 2.0' (5%)				SP 9	
19							
20	5 3 3 3	1.5' / 2.0' (75%)			(437.9) 20.0 (20.0-20.5 Ft.) Firm, greenish black (5G 2/1), CLAYEY SILT, NR, damp, (CL-ML), (FILL) (437.4) 20.5	SP 10	
21					(20.5-22.0 Ft.) Loose, medium light gray (N6), f-c SAND, NR, damp to moist, (SP), (FILL)		
22	3 4 6 8	0.4' / 2.0' (20%)			(435.9) 22.0 (22.0-24.0 Ft.) Stiff, greenish black (5G 2/1), CLAYEY SILT, NR, wet, (CL-ML), (ALLUVIUM)	SP 11	First water encountered @ 23.0 Ft.
23							
24	12 17 16 15	2.0' / 2.0' (100%)			(433.9) 24.0 (24.0-26.0 Ft.) Dense, dark greenish gray (5GY 4/1), fine SAND, NR, wet, (SP), (ALLUVIUM)	SP 12	
25							
26	4 2 3 7	1.8' / 2.0' (90%)			(431.9) 26.0 (26.0-28.0 Ft.) Loose, olive gray (5Y 4/1), CLAYEY fine SAND, NR, wet, (SC), (ALLUVIUM)	SP 13	
27							
28	3 3 10 21	1.3' / 2.0' (65%)			(429.9) 28.0 (28.0-36.0 Ft.) Compact to dense, olive gray (5Y 4/1), fine SAND, NR, wet, (SP), (ALLUVIUM)	SP 14	
29							

DRILLING CONTR LAYNE-WESTERN

LOGGED BY S. COSIO CHK'D BY W. HIRST

DATE 5/31/95

JOB NO.: 943-2848

FILENAME: PZ112AS

LAIDLAW WASTE SYSTEMS INC.

SOIL BOREHOLE LOG

SITE NAME AND LOCATION LAIDLAW/OU2 RI-FS/MO WEST LAKE LANDFILL OPERABLE UNIT 2	DRILLING METHOD: 4.25 inch I.D. Hollow Stem Auger	BORING NO. PZ-112-AS
	SAMPLING METHOD: SPLIT SPOON: 2.0 inch O.D./1.5 inch I.D. (SP) SHELBY TUBE: 3.0 inch O.D./2 13/16 inch I.D. (SH)	SHEET 3 OF 3
		DRILLING START / FINISH
	WATER LEVEL / TIME / DATE / CASING DEPTH	TIME 13:20 / TIME 15:29
		DATE 4/10/95 / DATE 4/10/95

DATUM NORTHING: 1069002.00 EASTING: 515674.01 ELEVATION 457.9

DRILL RIG CME 75

ANGLE VERTICAL BEARING

SAMPLE HAMMER 140 lbs.

SURFACE CONDITIONS

DEPTH IN FEET (ELEVATION)	BLOW/ 6 IN. ON SAMPLER	RECOVERY	SYMBOL	SAMPLER SYMBOL	SAMPLE NUMBER AND DESCRIPTION OF MATERIAL	SAMPLER TYPE		REMARKS
31	10 30 50/6"	1.2' 2.0' (60%)			(28.0-36.0 ft.) Compact to dense, olive gray (5Y 4/1), fine SAND, NR, wet, (SP), (ALLUVIUM)	SP (15)		
32 33	9 11 11 16	1.0' 2.0' (50%)			from 32.0-34.0 ft., sand becomes f-m grained	SP (16)		
34 35	10 13 15 20	2.0' 2.0' (100%)			from 34.0-36.0 ft., sand becomes f-c grained	SP (17)		
36					(421.9) 36.0 End of Soil Borehole Log at 36.0 ft.			
37								
38								
39								
40								
41								
42								
43								
44								

DRILLING CONTR LAYNE-WESTERN

LOGGED BY S. COSIO

DATE 5/31/95 CHK'D BY W. HURST

JOB NO.: 943-2848

FILENAME: PZ112AS

Well No. PZ-112-AS

Boring No. X-Ref: PZ-112-AS

PIEZOMETER CONSTRUCTION SUMMARY

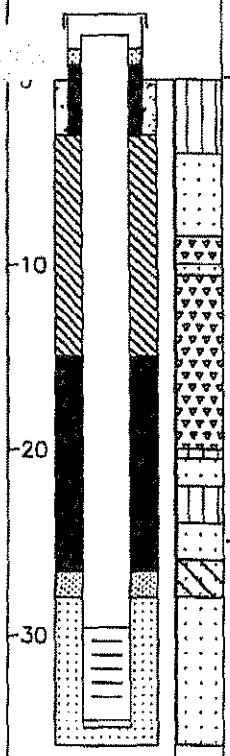

Not to Scale

Survey Coords: Northing: 1069002 ft.
Easting: 515674 ft.

Elevation Ground Level 457.9 ft. NGVD
Top of PVC Casing 459.83 ft. NGVD

Drilling Summary:

Total Depth 36.0 ft.
Borehole Diameter 8 1/4 in.
Casing Stickup Height 1.90 ft.
Driller Layne-Western
St. Louis, MO

Rig CME 75
Bit(s) 4 1/4 in. ID Hollow Stem Auger Bit

Drilling Fluid Auger-None

Protective Casing 8x8 in. Square Steel, by 5 ft. long

Construction Time log:

Task	Start Date	Start Time	Finish Date	Finish Time
Drilling				
CME 75	4/10/95	13:20	4/10/95	15:45
Schramm Rotary				
Geophys.Logging:				
Casing:	4/10/95	16:30	4/10/95	16:40
Filter Placement:	4/10/95	16:40	4/10/95	16:59
Cementing:				
Development				
Bentonite Grout	4/10/95	17:15	4/10/95	17:40
Bentonite Seal	4/10/95	17:12	4/10/95	17:15

Well Design & Specifications

Basis: Geologic Log X Geophysical Log

Casing string(s): C = Casing S = Screen

Depth			String(s)	Elevation		
+ 1.90	-	29.60	C1	459.83	-	428.33
29.60	-	34.40	S1	428.33	-	423.53
34.40	-	34.73	C2	423.53	-	423.20
	-				-	
	-				-	
	-				-	

Casing: C1 2 in. dia. Schedule 80 PVC, flush threaded with O-rings
C2 2 in. dia. threaded PVC end cap (4 in. long or 0.33 ft.)

Screen: S1 2 in. dia. Schedule 80 PVC, 0.010 in. machine cut slot, flush threaded with O-rings

Sand Pack: 16-35 mesh Silica Sand, 28.0-36.0 ft.

Filter Pack: Less than 50 mesh Silica Sand, 26.6-28.0 ft.

Grout Seal: Wyo-Ben Grout Well Bentonite Slurry, 3.0-15.0 ft.

Bentonite Seal: Extra high yield Wyo-Ben (100%) Slurry, 15.0-26.6 ft.

Concrete: 0.0-3.0 ft.

Well Development

Stabilization Test Data:

Time	pH	Spec. Cond.	Temp (°C)

Recovery Data:

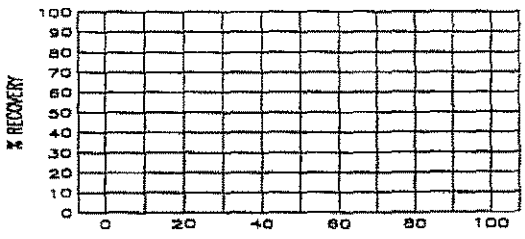

Comments:

Supervised by S. Cosio
Job Number 943-2848

Site LAIDLAW/OU2 RI-FS/MO
File Name PZ112AS

MISSOURI DEPARTMENT OF NATURAL RESOURCES
DIVISION OF GEOLOGY AND LAND SURVEY

MONITORING WELL CERTIFICATION RECORD

OFFICE USE ONLY	DATE RECEIVED
REF NO 122489	CHECK NO
ROUTE	TRANSMITTAL NO.
STATE WELL NUMBER	CROSS REFERENCE NO
CHECKED BY	ENTERED Ph 1 Ph 2 Ph 3
APPROVED BY	DATE APPROVED

INFORMATION SUPPLIED BY OWNER

SITE NAME: LAIDLAW BRIDGETON SANITARY LANDFILL
WELL NUMBER: PZ-112-AS
SITE ADDRESS: ST. CHARLES ROCK RD.
CITY: BRIDGETON
STATE: Mo
ZIP CODE: 63044
NAME: LAIDLAW WASTE SYSTEMS, INC.
TELEPHONE: 314-341-3710
ADDRESS: 1838 N. BROADWAY
CITY: ST. LOUIS
STATE: Mo
ZIP CODE: 63102

INFORMATION SUPPLIED BY MONITORING WELL CONTRACTOR

LOCATION OF WELL
SHOW LOCATION IN SECTION PLAT

COUNTY: ST. LOUIS
ELEVATION: 457.9
AREA NO.

SMALLEST ¼ LARGEST ¼

SEC. ____ TWN. 47 N,RNG. 5 (E) OR W

LAT. 38 ° 46 ' 10 " LONG. 90 ° 26 ' 42 "

SKETCH THE LOCATION TO THE WELL INCLUDING MILEAGE ON ALL ROADS TRAVELED FROM NEAREST TOWNS OR HIGHWAYS

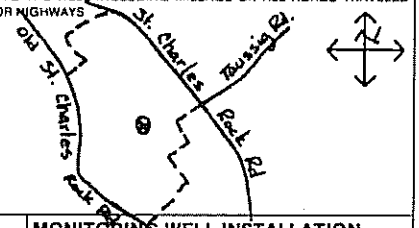

DESCRIBE LOCATION OF THE WELL SO WE WOULD BE ABLE TO VISIT IT

MONITORING WELL INSTALLATION CONTRACTOR'S NAME
LAYNE WESTERN CO., INC.

DRILLING CONTRACTOR'S NAME
LAYNE WESTERN CO, INC.

TYPE OF INSTALLATION
☒ ABOVE GROUND ☐ FLUSH MOUNT

STATIC WATER LEVEL
FEET FROM MEASURING POINT

DATE OF STATIC WATER LEVEL

ELEVATION OF MEASURING POINT
457.83

MEASURING POINT IS
☒ TOP OF RISER PIPE
☐ OTHER

DRILLING EQUIPMENT
☐ AIR ROTARY ☒ AUGER TYPE 4¼ H.S.A.
☐ REVERSE ROTARY ☐ OTHER

CENTRALIZERS USED
☐ YES, AT
☐ STAINLESS STEEL
☐ OTHER
☒ NO

MULTIPLE CASED WELLS
SUBMIT ADDITIONAL AS BUILT DIAGRAM SHOWING WELL CONSTRUCTION DETAILS INCLUDING TYPE AND SIZE OF ALL CASING, HOLE DIAMETERS, AND GROUT USED.

DATE WELL CONSTRUCTION WAS COMPLETED
4-10-95

I HEREBY CERTIFY THAT THE MONITORING WELL HEREIN DESCRIBED WAS CONSTRUCTED IN ACCORDANCE WITH THE DEPARTMENT OF NATURAL RESOURCES REQUIREMENTS FOR THE CONSTRUCTION OF MONITORING WELLS.

SIGNATURE (MONITORING WELL CONTRACTOR)
Terrence J. Mahoney II

PERMIT NUMBER	DATE
00125BWPM1	5-10-95

SIGNATURE (DRILLING CONTRACTOR)
T. Mahoney II

PERMIT NUMBER	DATE
00125BWPM1	5-10-95

NOTE: Record the fraction of a foot in decimal, not in inches.

Top of Riser Elevation: 459.8

LOCKING CAP - (Y) N (Circle one)
CAP VENT - Y / N (Circle one)
PROTECTIVE CASING Type: STEEL Size: 8"x8"x5' Bore Hole Diameter: 8"
WEEP HOLE - Y / N (Circle one)

Ground Surface Elevation: 457.4 Ft

Information in this column to be supplied in the Feet from Surface column	Feet from Surface	Description of Formation
Depth to bottom of Protective Casing Seal:	3.0	
Depth to Base of Annular Seal:	34.6	
Depth to Base of Bentonite Seal:	26.6	
Depth to Base of Secondary Filter Pack:	28.0	
Depth to Top of the Screen:	29.6	Alluvium
Depth to Bottom of the Screen:	34.6	
Plug Back Total Depth:		
Original Total Depth:	34.0	

PROTECTIVE CASING SEAL Type: ☒ Concrete ☐ Cement Slurry
RISER PIPE Length: 31.5' Diameter: 2" Type of Material: SCH 80 PVC
BOREHOLE DIAMETER: 8 In.
ANNULAR SEAL Type: ☒ Bentonite Slurry ☐ Cement Slurry ☐ Non Slurry Bentonite
BENTONITE SEAL Type: ☒ Bentonite Slurry ☐ Non Slurry Bentonite Length of Seal: 2 Ft.
SECONDARY FILTER PACK (Optional) Type: ☒ Sand ☐ Manufactured Grain Size: SILICA #50 Length: 1.4'
PRIMARY FILTER PACK Type: ☒ Sand ☐ Manufactured Grain Size: 16-35 Length: 18'
WELL SCREEN Length: 5' Slot Size: 0.010' Type: SCH. 80 PVC
SUMP DETAILS Length: 0.3 Ft. Diameter: 2 In. Type: PVC
TYPE OF BACKFILL: SAND

MO 780-1415 (2-94) DISTRIBUTION: WHITE/DIVISION CANARY/MONITORING WELL CONTRACTOR PINK/OWNER

LAIDLAW WASTE SYSTEMS INC.

SOIL BOREHOLE LOG

SITE NAME AND LOCATION

LAIDLAW/OU2 RI-FS/MO
WEST LAKE LANDFILL
OPERABLE UNIT 2

NORTHING: 1069233.33
DATUM EASTING: 515759.85 ELEVATION 459.9

DRILLING METHOD:
0.0-40.0 ft.: 4.25 inch I.D. Hollow Stem Auger
40.0-108.3 ft.: 3.875 inch Mud Rotary (Tricone)

SAMPLING METHOD:
SPLIT SPOON: 2.0 inch O.D./1.5 inch I.D. (SP)
SPLIT SPOON: 3.0 inch O.D./.375 inch I.D. (HD)

WATER LEVEL				
TIME				
DATE				
CASING DEPTH				

BORING NO. PZ-113-AD

SHEET 1 OF 7

DRILLING

START	FINISH
TIME 11:03	TIME 15:50
DATE 4/26/95	DATE 4/27/95

DRILL RIG CME 75 - TRUCK MOUNT

SURFACE CONDITIONS Paved road

ANGLE VERTICAL BEARING NA

SAMPLE HAMMER 140

DEPTH IN FEET (ELEVATION)	BLOW/ 6 IN. ON SAMPLER	RECOVERY	SYMBOL	SAMPLER SYMBOL	SAMPLE NUMBER AND DESCRIPTION OF MATERIAL	SAMPLER TYPE	REMARKS
16					(0.0-20.0 ft.) No samples collected, see Soil Borehole Log PZ-113-AS for descriptions		
17							
18							
19							
20					(439.9) 20.0		
	2 5 9	0.9' 1.5' (60%)			(20.0-27.0 ft.) Stiff, olive gray (5Y 4/1), SILTY CLAY, trace very fine Sand, NR, moist, (CH), (ALLUVIUM)	SP (1)	
21							
22	6 8 13	1.0' 1.5' (67%)				SP (2)	
23	5 7 7	1.5' 1.5' (100%)				SP (3)	
24							
25	2 7 7	1.3' 1.5' (87%)				SP (4)	
26	4 6 8	1.2' 1.5' (80%)				SP (5)	
27					(432.9) 27.0		
					(27.0-40.0 ft.) Compact, dark greenish gray (5GY 4/1), fine SAND, some Clay, NR, wet, (SC), (ALLUVIUM)		
28							
29							

DRILLING CONTR LAYNE-WESTERN

LOGGED BY J. MILLER DATE 6/21/95 CHK'D BY W. HERST

JOB NO.: 943-2848

FILENAME: PZ113AD

LAIDLAW
LAIDLAW WASTE SYSTEMS INC.

SOIL BOREHOLE LOG

SITE NAME AND LOCATION	DRILLING METHOD:	BORING NO.
LAIDLAW/OU2 RI-FS/MO WEST LAKE LANDFILL OPERABLE UNIT 2	0.0-40.0 ft.: 4.25 inch I.D. Hollow Stem Auger 40.0-108.3 ft.: 3.875 inch Mud Rotary (Tricone)	PZ-113-AD
	SAMPLING METHOD:	SHEET 2 OF 7
	SPLIT SPOON: 2.0 inch O.D./1.5 inch I.D. (SP) SPLIT SPOON: 3.0 inch O.D./.375 inch I.D. (HD)	DRILLING

WATER LEVEL					START	FINISH
TIME					TIME 11:03	TIME 15:50
DATE					DATE 4/26/95	DATE 4/27/95
CASING DEPTH						

DATUM NORTHING: 1069233.33 EASTING: 515759.85 ELEVATION 459.9

DRILL RIG CME 75 - TRUCK MOUNT

SURFACE CONDITIONS Paved road

ANGLE VERTICAL BEARING NA

SAMPLE HAMMER 140

DEPTH IN FEET (ELEVATION)	BLOW/ 6 IN. ON SAMPLER	RECOVERY	SYMBOL	SAMPLER SYMBOL	SAMPLE NUMBER AND DESCRIPTION OF MATERIAL	SAMPLER TYPE	REMARKS
31					(27.0-40.0 ft.) Compact, dark greenish gray (5GY 4/1), fine SAND, some Clay, NR, wet, (SC), (ALLUVIUM)		
32							
33							
34							
35							
36							
37							
38							
39					(419.9) 40.0		
40	4 8 9	0.5' / 1.5' (33%)			(40.0-41.5 ft.) Compact, light brown (5YR 5/6) to pale yellowish brown (10YR 6/2), medium SAND, trace very fine Sand, NR, wet, (SP), (ALLUVIUM)	SP 6	
41					(418.4) 41.5		
42	6 6 8	0.3' / 1.5' (17%)			(41.5-44.0 ft.) Compact, light brown (5YR 5/6) to light brown (5YR 6/4), fine GRAVEL, NR, wet, (GW), (ALLUVIUM)	SP 7	
43	4 7 11 13	0.9' / 2.0' (45%)			(415.9) 44.0	SP 8	
44					(44.0-48.5 ft.) Compact, dark yellowish brown (10YR 4/2), medium SAND, trace coarse Sand, trace fine Sand, NR, wet, (SP), (ALLUVIUM)		

DRILLING CONTR LAYNE-WESTERN

LOGGED BY J. MILLER

DATE 6/21/95 CHK'D BY W. HERST

JOB NO.: 943-2848

FILENAME: PZ113AD

LAIDLAW WASTE SYSTEMS INC.

SOIL BOREHOLE LOG

SITE NAME AND LOCATION

LAIDLAW/OU2 RI-FS/MD
WEST LAKE LANDFILL
OPERABLE UNIT 2

NORTHING: 1069233.33
DATUM EASTING: 515759.85 ELEVATION 459.9

DRILLING METHOD:
0.0-40.0 ft: 4.25 inch I.D. Hollow Stem Auger
40.0-108.3 ft: 3.875 inch Mud Rotary (Tricone)

SAMPLING METHOD:
SPLIT SPOON: 2.0 inch O.D./1.5 inch I.D. (SP)
SPLIT SPOON: 3.0 inch O.D./.375 inch I.D. (HD)

					DRILLING START	DRILLING FINISH
WATER LEVEL					TIME	TIME
TIME					11:03	15:50
DATE					DATE	DATE
CASING DEPTH					4/26/95	4/27/95

BORING NO. PZ-113-AD

SHEET 3 OF 7

DRILL RIG CME 75 - TRUCK MOUNT
SURFACE CONDITIONS Paved road
ANGLE VERTICAL BEARING NA
SAMPLE HAMMER 140

DRILLING CONTR LAYNE-WESTERN
LOGGED BY J. HILLER
DATE 6/21/95
CHK'D BY W. HERST
JOB NO.: 943-2848
FILENAME: PZ113AD

DEPTH IN FEET (ELEVATION)	BLOW/ 6 IN. ON SAMPLER	RECOVERY	SYMBOL	SAMPLER SYMBOL	SAMPLE NUMBER AND DESCRIPTION OF MATERIAL	SAMPLER TYPE	REMARKS
46	5 6 9 2	0.7' 2.0' (35%)			(44.0-48.5 ft.) Compact, dark yellowish brown (10YR 4/2), medium SAND, trace coarse Sand, trace Fine Sand, NR, wet, (SP), (ALLUVIUM)	SP (9)	
47	8 13 15 19	1.1' 2.0' (55%)				SP (10)	
48							
49	10 10 10 11	0.9' 2.0' (45%)			(48.5-49.5 ft.) Compact, olive gray (5Y 4/1), Fine SAND, some medium Sand, NR, wet, (SP), (ALLUVIUM)	SP (11)	
50					(49.5-53.0 ft.) Compact, olive gray (5Y 4/1), medium SAND, trace Fine Sand, trace coarse Sand and Fine Gravel, trace Silt, NR, wet, (SP), (ALLUVIUM)		
51	6 7 9 7	0.9' 2.0' (45%)				SP (12)	
52							
53	3 6 5 6	0.9' 2.0' (45%)			(406.9) 53.0 (53.0-61.5 ft.) Compact, olive gray (5Y 4/1), medium SAND, little Sand, trace Fine Gravel, trace Fine Sand and Silt, NR, wet, (SW), (ALLUVIUM)	SP (13)	
54							
55	6 4 5 6	0.9' 2.0' (45%)				SP (14)	
56							
57	4 4 5 6	0.9' 2.0' (45%)				SP (15)	
58							
59	5 6 6 7	1.0' 2.0' (50%)				SP (16)	

LAIDLAW WASTE SYSTEMS INC.

SOIL BOREHOLE LOG

SITE NAME AND LOCATION

LAIDLAW/OU2 RI-FS/MD
WEST LAKE LANDFILL
OPERABLE UNIT 2

NORTHING: 1069233.33
DATUM EASTING: 515759.85 ELEVATION 459.9

DRILLING METHOD:
0.0-40.0 Ft: 4.25 inch I.D. Hollow Stem Auger
40.0-108.3 ft: 3.875 inch Mud Rotary (Tricone)
SAMPLING METHOD:
SPLIT SPOON: 2.0 inch O.D./1.5 inch I.D. (SP)
SPLIT SPOON: 3.0 inch O.D./.375 inch I.D. (HD)

BORING NO. PZ-113-AD
SHEET 4 OF 7

					DRILLING START	DRILLING FINISH
WATER LEVEL						
TIME					11:03	15:50
DATE					4/26/95	4/27/95
CASING DEPTH						

DRILL RIG CME 75 - TRUCK MOUNT
ANGLE VERTICAL BEARING NA
SAMPLE HAMMER 140
SURFACE CONDITIONS Paved road

DEPTH IN FEET (ELEVATION)	BLOW/ 6 IN. ON SAMPLER	RECOVERY	SYMBOL	SAMPLER SYMBOL	SAMPLE NUMBER AND DESCRIPTION OF MATERIAL	SAMPLER TYPE	REMARKS
61	6 10 10 12	0.9' 2.0' (45%)			(53.0-61.5 Ft.) Compact, olive gray (5Y 4/1), medium SAND, little Sand, trace Fine Gravel, trace fine Sand and Silt, NR, wet, (SW), (ALLUVIUM) (398.4) 61.5	SP 16	
62					(61.5-65.0 Ft.) Compact, dark greenish gray (5GY 4/1), >95% fine to medium grained subrounded SAND, <5% Silt, NR, saturated, (SP), (ALLUVIUM), grades finer	SP 17	
63	10 20 27 45	1.2' 2.0' (60%)				HD 18	
64							
65		1.7' 2.0' (85%)			(65.0-92.0 Ft.) Compact to very dense, dark greenish gray (5GY 4/1), 75% Fine SAND, 20% medium Sand, 5% Silt, NR, saturated, (SP), (ALLUVIUM)	SP 19	
66							
67	7 20 25 28	0.9' 2.0' (45%)				SP 20	
68							
69	10 15 26 26	1.4' 2.0' (70%)				HD 21	
70							
71	8 10 14 22	1.2' 2.0' (60%)				SP 22	
72							
73	6 10 13 17	1.2' 2.0' (60%)				SP 23	
74							

DRILLING CONTR LAYNE-WESTERN
LOGGED BY J. MILLER
DATE 6/21/95
CHK'D BY W. HENRY
JOB NO.: 943-2848
FILENAME: PZ113AD

LAIDLAW WASTE SYSTEMS INC.

SOIL BOREHOLE LOG

SITE NAME AND LOCATION

LAIDLAW/OU2 RI-FS/MO
WEST LAKE LANDFILL
OPERABLE UNIT 2

NORTHING: 1069233.33
DATUM EASTING: 515759.85 ELEVATION 459.9

DRILLING METHOD:	
0.0-40.0 Ft.: 4.25 inch I.D. Hollow Stem Auger	
40.0-108.3 Ft.: 3.875 inch Mud Rotary (Tricone)	
SAMPLING METHOD:	
SPLIT SPOON: 2.0 inch O.D./1.5 inch I.D. (SP)	
SPLIT SPOON: 3.0 inch O.D./.375 inch I.D. (HD)	
WATER LEVEL	
TIME	
DATE	
CASING DEPTH	

BORING NO. PZ-113-AD

SHEET 5 OF 7

DRILLING START	DRILLING FINISH
TIME 11:03	TIME 15:50
DATE 4/26/95	DATE 4/27/95

DRILL RIG CME 75 - TRUCK MOUNT

SURFACE CONDITIONS Paved road

ANGLE VERTICAL BEARING NA

SAMPLE HAMMER 140

DEPTH IN FEET (ELEVATION)	BLOW/ 6 IN. ON SAMPLER	RECOVERY	SYMBOL	SAMPLER SYMBOL	SAMPLE NUMBER AND DESCRIPTION OF MATERIAL	SAMPLER TYPE	REMARKS
76	17 25 35 36	1.1'/2.0' (55%)			(65.0-92.0 Ft.) Compact to very dense, dark greenish gray (5GY 4/1), 75% fine SAND, 20% medium Sand, 5% Silt, NR, saturated, (SP), (ALLUVIUM)	HD (24)	
77	17 25 34 39	1.8'/2.0' (90%)				HD (25)	
78							
79	22 28 28 31	1.3'/2.0' (65%)				SP (26)	
80							
81	15 24 24 36	1.2'/2.0' (60%)				SP (27)	
82							
83	20 48 48 60	1.5'/2.0' (75%)				HD (28)	
84							
85	12 24 34 38	1.0'/2.0' (50%)				SP (29)	
86							
87	18 22 32 50+	1.2'/2.0' (60%)				SP (30)	
88							
89	48 50	0.6'/0.8' (75%)				HD (31)	

DRILLING CONTR LAYNE-WESTERN

LOGGED BY J. MILLER

DATE 6/21/95

CHK'D BY W. HERST

JOB NO.: 943-2848

FILENAME: PZ113AD

LAIDLAW WASTE SYSTEMS INC.

SOIL BOREHOLE LOG

SITE NAME AND LOCATION

LAIDLAW/OU2 RI-FS/MD
WEST LAKE LANDFILL
OPERABLE UNIT 2

NORTHING: 1869233.33
DATUM EASTING: 515759.85 ELEVATION 459.9

DRILLING METHOD:					BORING NO.
0.0-40.0 Ft: 4.25 inch I.D. Hollow Stem Auger					PZ-113-AD
40.0-108.3 Ft: 3.875 inch Mud Rotary (Tricone)					SHEET 6 OF 7
SAMPLING METHOD:					DRILLING
SPLIT SPOON: 2.0 inch O.D./1.5 inch I.D. (SP)					START / FINISH
SPLIT SPOON: 3.0 inch O.D./.375 inch I.D. (HD)					
WATER LEVEL					TIME: 11:03 / 15:50
TIME					
DATE					DATE: 4/26/95 / 4/27/95
CASING DEPTH					

DRILL RIG CME 75 - TRUCK MOUNT
SURFACE CONDITIONS Paved road
ANGLE VERTICAL BEARING NA
SAMPLE HAMMER 140

DEPTH IN FEET (ELEVATION)	BLOW/ 6 IN. ON SAMPLER	RECOVERY	SYMBOL	SAMPLER SYMBOL	SAMPLE NUMBER AND DESCRIPTION OF MATERIAL	SAMPLER TYPE	REMARKS
91					(65.0-92.0 Ft.) Compact to very dense, dark greenish gray (5GY 4/1), 75% fine SAND, 20% medium Sand, 5% Silt, NR, saturated, (SP), (ALLUVIUM)		
92					(367.9) 92.0		
93					(92.0-108.3 Ft.) Dense, dark greenish gray (5GY 4/1), Fine to coarse subrounded to well rounded SAND, NR, saturated, (SW), (ALLUVIUM)		
94	10 15 20 22	1.0" 1.0" <100%>				SP (32)	
95							
96							
97							
98							
99	9 13 17 23	1.1" 2.0" <55%>				SP (33)	
100							
101							
102							
103							
104	10 11 14 12	0.6" 2.0" <30%>				SP (34)	

DRILLING CONTR LAYNE-WESTERN
LOGGED BY J. MILLER
DATE 6/21/95
CHK'D BY W. HERST
JOB NO.: 943-2848
FILENAME: PZ113AD

LAIDLAW WASTE SYSTEMS INC.

SOIL BOREHOLE LOG

SITE NAME AND LOCATION

LAIDLAW/OU2 RI-FS/MD
WEST LAKE LANDFILL
OPERABLE UNIT 2

NORTHING: 1069233.33
DATUM EASTING: 515759.85 ELEVATION 459.9

DRILLING METHOD:
0.0-40.0 ft: 4.25 inch I.D. Hollow Stem Auger
40.0-108.3 ft: 3.875 inch Mud Rotary (Tricone)

SAMPLING METHOD:
SPLIT SPOON: 2.0 inch O.D./1.5 inch I.D. (SP)
SPLIT SPOON: 3.0 inch O.D./.375 inch I.D. (HD)

WATER LEVEL					DRILLING START	DRILLING FINISH
TIME					11:03	15:50
DATE					4/26/95	4/27/95
CASING DEPTH						

BORING NO. PZ-113-AD

SHEET 7 OF 7

ORILL RIG CME 75 - TRUCK MOUNT
ANGLE VERTICAL BEARING NA
SAMPLE HAMMER 140
SURFACE CONDITIONS Paved road

DEPTH IN FEET (ELEVATION)	BLOW/ 6 IN. ON SAMPLER	RECOVERY	SYMBOL	SAMPLER SYMBOL	SAMPLE NUMBER AND DESCRIPTION OF MATERIAL	SAMPLER TYPE		REMARKS
106					(92.0-108.3 ft.) Dense, dark greenish gray (5GY 4/1), fine to coarse subrounded to well rounded SAND, NR, saturated, (SW), (ALLUVIUM)	SP (34)		
107								
108					(351.6) 108.3			
					End of Soil Borehole Log at 108.3 ft.			
109					See PZ-113-AD Record of Drillhole for rock descriptions			
110								
111								
112								
113								
114								
115								
116								
117								
118								
119								

DRILLING CONTR LAYNE-WESTERN

LOGGED BY J. MILLER DATE 6/21/95 CHK'D BY W. HERST

JOB NO.: 943-2840

FILENAME: PZ113AD

Well No. PZ-113-AD

Boring No. X-Ref: PZ-113-AD

PIEZOMETER CONSTRUCTION SUMMARY

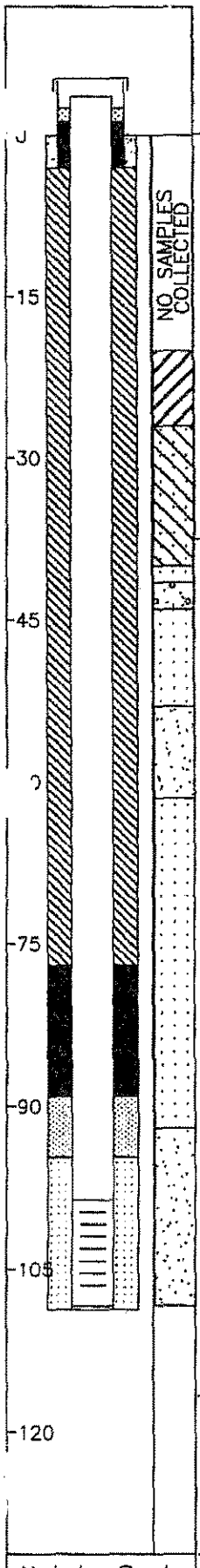

Not to Scale

Survey Coords: Northing: 1069233 ft. Easting: 515760 ft.

Elevation Ground Level 459.9 ft. NGVD

Top of PVC Casing 461.46 ft. NGVD

Drilling Summary:

Total Depth 108.7 ft.

Borehole Diameter 10 1/4 in.

Casing Stickup Height 1.60 ft.

Driller Layne-Western St. Louis, MO

Rig CME 75

Bit(s) 6 1/4 in. ID Hollow Stem Auger Bit

Drilling Fluid Auger-None

Protective Casing 8x8 in. Square Steel, by 5 ft. long

Construction Time log:

Task	Start Date	Start Time	Finish Date	Finish Time
Drilling				
CME 75	5/3/95	8:00	5/3/95	9:30
Schramm Rotary				
Geophys.Logging:				
Casing:	5/3/95	13:20	5/3/95	13:30
Filter Placement:	5/3/95	13:30	5/3/95	15:10
Cementing:				
Development				
Bentonite Grout	5/3/95	15:30	5/3/95	15:30
Bentonite Seal	5/3/95	15:10	5/3/95	15:30

Well Design & Specifications

Basis: Geologic Log X Geophysical Log

Casing string(s): C = Casing S = Screen

Depth			String(s)	Elevation		
+ 1.60	-	98.60	C1	461.46	-	361.26
98.60	-	108.40	S1	361.26	-	351.46
108.40	-	108.73	C2	351.46	-	351.13
	-				-	
	-				-	
	-				-	

Casing: C1 2 in. dia. Schedule 80 PVC, flush threaded with O-rings

C2 2 in. dia. threaded PVC end cap (4 in. long or 0.33 ft.)

Screen: S1 2 in. dia. Schedule 80 PVC, 0.010 in. machine cut slot, flush threaded with O-rings

Sand Pack: 16-35 mesh Silica Sand, 94.7-108.7 ft.

Filter Pack: Less than 50 mesh Silica Sand, 89.1-94.7 ft.

Grout Seal: Wyo-Ben Grout Well Bentonite Slurry, 3.0-77.0 ft.

Bentonite Seal: Extra high yield Wyo-Ben (100%) Slurry, 77.0-89.1 ft.

Concrete: 0.0-3.0 ft.

Well Development

Stabilization Test Data:

Time	pH	Spec. Cond.	Temp (°C)

Recovery Data:

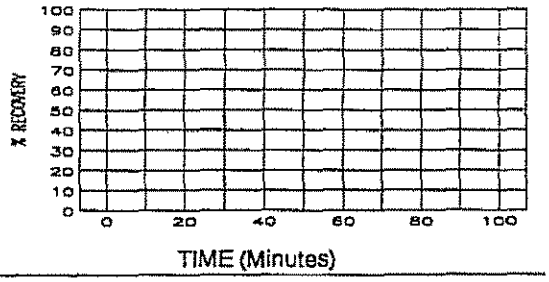

Comments:

Supervised by D. Alloway

Job Number 943-2848

Site LAIDLAW/OU2 RI-FS/MO

File Name PZ113AD

MISSOURI DEPARTMENT OF NATURAL RESOURCES
DIVISION OF GEOLOGY AND LAND SURVEY

MONITORING WELL CERTIFICATION RECORD

REF. NO. 122527	CHECK NO.
ROUTE	TRANSMITTAL NO.
STATE WELL NUMBER	CROSS REFERENCE NO.
CHECKED BY	ENTERED Ph 1 Ph 2 Ph 3
APPROVED BY	DATE APPROVED

INFORMATION SUPPLIED BY OWNER

SITE NAME: LAIDLAW BRIDGETON SANITARY LANDFILL
WELL NUMBER: P2-113-AD

SITE ADDRESS: ST. CHARLES ROCK RD. | CITY: BRIDGETON | STATE: MO | ZIP CODE: 63044

NAME: LAIDLAW WASTE SYSTEMS, INC. | TELEPHONE: 314-291-3700

ADDRESS: 1838 N. BROADWAY | CITY: ST. LOUIS | STATE: MO | ZIP CODE: 63102

INFORMATION SUPPLIED BY MONITORING WELL CONTRACTOR

LOCATION OF WELL
SHOW LOCATION IN SECTION PLAT

COUNTY: ST. LOUIS
ELEVATION: 459.9
AREA NO.:

SMALLEST ¼ ____ ¼ ____ ¼ ____ ¼ LARGEST ¼

SEC. ____ TWN. 47 N,RNG. 5 (E) OR W

LAT. 38 ° 46 ' 12 " LONG. 90 ° 26 ' 41 "

SKETCH THE LOCATION TO THE WELL INCLUDING MILEAGE ON ALL ROADS TRAVELED FROM NEAREST TOWNS OR HIGHWAYS

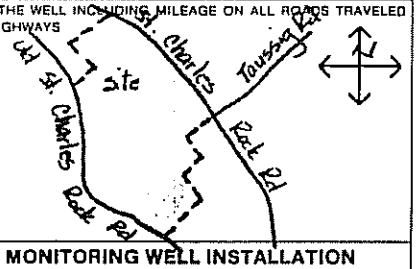

DESCRIBE LOCATION OF THE WELL SO WE WOULD BE ABLE TO VISIT IT

MONITORING WELL INSTALLATION CONTRACTOR'S NAME: LAYNE WESTERN CO., INC.

DRILLING CONTRACTOR'S NAME: LAYNE WESTERN CO., INC.

NOTE: Record the fraction of a foot in decimal, not in inches.

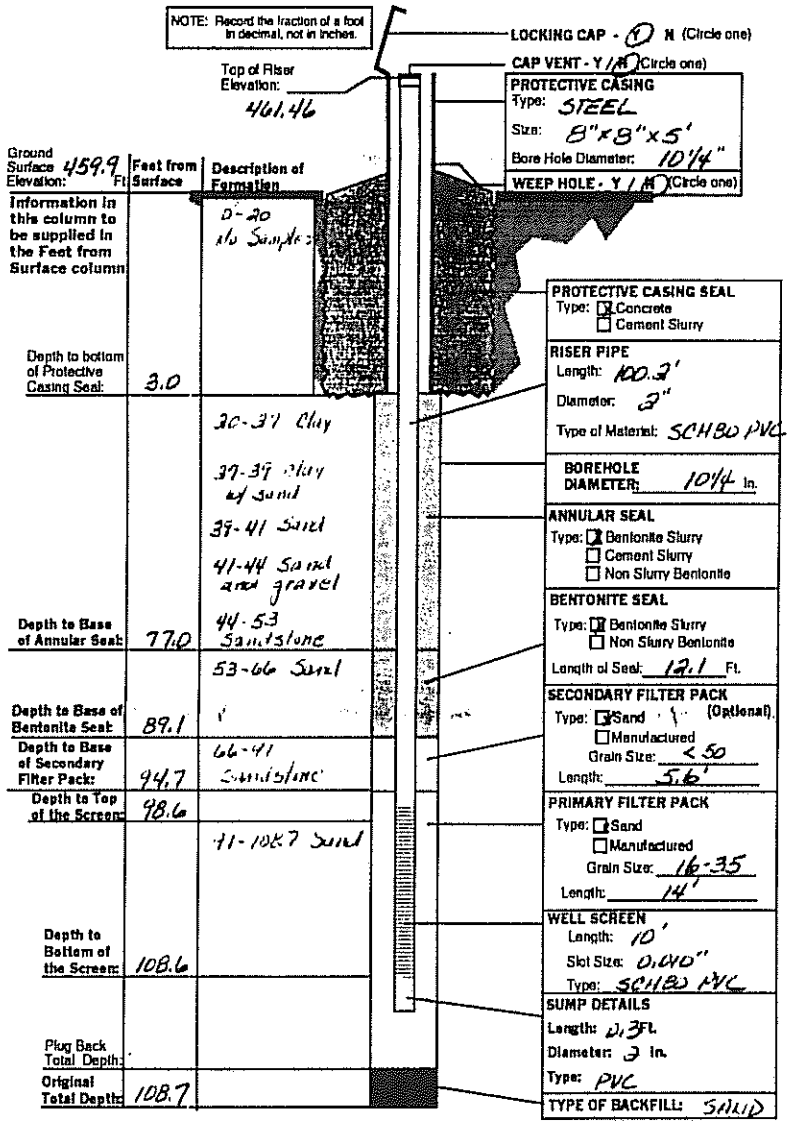

DRILLING CONTRACTOR'S NAME: LAYNE WESTERN CO., INC.

TYPE OF INSTALLATION: ☒ ABOVE GROUND ☐ FLUSH MOUNT

STATIC WATER LEVEL
FEET FROM MEASURING POINT

DATE OF STATIC WATER LEVEL

ELEVATION OF MEASURING POINT: 461.46

MEASURING POINT IS: ☒ TOP OF RISER PIPE ☐ OTHER

DRILLING EQUIPMENT: ☐ AIR ROTARY ☒ AUGER TYPE 6¼ H.S.A. ☐ REVERSE ROTARY ☐ OTHER

CENTRALIZERS USED: ☒ YES, AT 2 TOTAL ☒ STAINLESS STEEL ☐ OTHER ☐ NO

MULTIPLE CASED WELLS
SUBMIT ADDITIONAL AS BUILT DIAGRAM SHOWING WELL CONSTRUCTION DETAILS INCLUDING TYPE AND SIZE OF ALL CASING, HOLE DIAMETERS, AND GROUT USED.

DATE WELL CONSTRUCTION WAS COMPLETED: 5-03-95

I HEREBY CERTIFY THAT THE MONITORING WELL HEREIN DESCRIBED WAS CONSTRUCTED IN ACCORDANCE WITH THE DEPARTMENT OF NATURAL RESOURCES REQUIREMENTS FOR THE CONSTRUCTION OF MONITORING WELLS.

SIGNATURE (MONITORING WELL CONTRACTOR): Leman N. Mahurin Jr.
PERMIT NUMBER: 001258 WPM | DATE: 7-31-95
SIGNATURE (DRILLING CONTRACTOR): Leman N. Mahurin Jr.
PERMIT NUMBER: 001258WPM | DATE: 7-31-95

MO 780-1415 (2-94)

DISTRIBUTION: WHITE/DIVISION CANARY/MONITORING WELL CONTRACTOR PINK/OWNER
MAIL WHITE COPY TO: DEPARTMENT OF NATURAL RESOURCES, P.O. BOX 250, ROLLA, MO 65401

RECYCLED PAPER

LAIDLAW WASTE SYSTEMS INC.

SOIL BOREHOLE LOG

SITE NAME AND LOCATION	DRILLING METHOD: 4.25 inch I.D. Hollow Stem Auger		BORING NO. PZ-113-AS
LAIDLAW/OU2 RI-FS/MO WEST LAKE LANDFILL OPERABLE UNIT 2	SAMPLING METHOD: SPLIT SPOON: 2.0 inch O.D./1.5 inch I.D. (SP) SHELBY TUBE: 3.0 inch O.D./2 13/16 inch I.D. (SH)		SHEET 1 OF 3
NORTHING: 1069224.31 DATUM EASTING: 515747.72 ELEVATION 459.9	WATER LEVEL / TIME / DATE / CASING DEPTH	DRILLING START: TIME 11:07, DATE 4/11/95	DRILLING FINISH: TIME 14:55, DATE 4/11/95
DRILL RIG CME 75 - TRUCK MOUNT	SURFACE CONDITIONS		
ANGLE VERTICAL BEARING NA			
SAMPLE HAMMER 140 lbs.			

DEPTH IN FEET (ELEVATION)	BLOW/6 IN. ON SAMPLER	RECOVERY	SYMBOL	SAMPLER SYMBOL	SAMPLE NUMBER AND DESCRIPTION OF MATERIAL	SAMPLER TYPE	REMARKS
1					(0.0-2.5 Ft.) Asphalt		
2					(457.4) 2.5		
3	10 11 11	1.5' 1.5' (100%)			(2.5-4.0 Ft.) Compact, light olive gray (5Y 6/1), CLAYEY GRAVEL, little f-c Sand, SR, damp, (GC), (FILL)	SP (1)	
4					(455.9) 4.0		
	6 10 11	1.7' 2.0' (85%)			(4.0-4.8 Ft.) Compact, olive gray (5Y 4/1), SILTY fine SAND, mottled NR, damp, (SM), (FILL)	SP (2)	
5	13				(455.1) 4.8 (4.8-10.0 Ft.) Stiff, mottled, light olive gray (5Y 6/1) to greenish black (5GY 2/1), CLAYEY SILT, mottled, NR, damp, (CL-ML), (LOESS)		
6	5 8 7	1.7' 2.0' (85%)				SP (3)	
7	9						
8	2 3 5	1.2' 2.0' (60%)				SP (4)	
9	6						
10	3 3 3	1.4' 2.0' (70%)			(449.9) 10.0 (10.0-18.0 Ft.) Loose, light olive gray (5Y 4/1), mottled SILT, NR, damp, (ML), (LOESS)	SP (5)	
11	4						
12	3 2 3	1.3' 2.0' (65%)				SP (6)	
13	6						
14	4 3 3 3	1.3' 2.0' (65%)				SP (7)	

DRILLING CONTR LAYNE-WESTERN

LOGGED BY J. MILLER CHK'D BY W. HERST

DATE 1/24/95

JOB NO.: 943-2848

FILENAME: P7113AS

LAIDLAW WASTE SYSTEMS INC.

SOIL BOREHOLE LOG

SITE NAME AND LOCATION

LAIDLAW/OU2 RI-FS/MO
WEST LAKE LANDFILL
OPERABLE UNIT 2

NORTHING: 1069224.31
DATUM EASTING: 515747.72 ELEVATION 459.92

DRILLING METHOD: 4.25 inch I.D. Hollow Stem Auger

SAMPLING METHOD:
SPLIT SPOON: 2.0 inch O.D./1.5 inch I.D. (SP)
SHELBY TUBE: 3.0 inch O.D./2 13/16 inch I.D. (SH)

WATER LEVEL				
TIME				
DATE				
CASING DEPTH				

BORING NO. PZ-113-AS

SHEET 2 OF 3

DRILLING

START	FINISH
TIME 11:07	TIME 14:55
DATE 4/11/95	DATE 4/11/95

DRILL RIG CME 75 - TRUCK MOUNT

SURFACE CONDITIONS

ANGLE VERTICAL BEARING NA

SAMPLE HAMMER 140 lbs.

DEPTH IN FEET (ELEVATION)	BLOW/ 6 IN. ON SAMPLER	RECOVERY	SYMBOL	SAMPLER SYMBOL	SAMPLE NUMBER AND DESCRIPTION OF MATERIAL	SAMPLER TYPE	REMARKS
16	2 2 2 3	1.6' 2.0' (80%)			(10.0-18.0 Ft.) Loose, light olive gray (5Y 4/1), SILT, mottled, NR, damp, (ML), (LOESS)	SP 7	
17						SP 8	
					(441.9) 18.0		
18	1 2 4 2	2.0' 2.0' (100%)			(18.0-21.3 Ft.) Firm to soft, dark greenish gray (5GY 4/1), mottled CLAYEY SILT, NR, moist, (CL-ML), (ALLUVIUM)		
19						SP 9	
20	0 0 3 6	2.0' 2.0' (100%)				SP 10	
21					(438.6) 21.3		
22	5 6 8 9	1.6' 2.0' (80%)			(21.3-26.2 Ft.) Firm to stiff, greenish black (5GY 2/1), CLAY, NR, moist, (CH), (ALLUVIUM)	SP 11	
23							
24	2 3 4 8	1.9' 2.0' (95%)				SP 12	First water encountered @ 24.5 Ft.
25							
26	7 9 12 14	2.0' 2.0' (100%)			(433.7) 26.2 (26.2-40.0 Ft.) Compact to dense, dark greenish gray (5GY 4/1), fine SAND, trace Silt, NR, wet, (SP), (ALLUVIUM)	SP 13	
27							
28	8 11 11 18	1.8' 2.0' (90%)				SP 14	
29							

DRILLING CONTR LAYNE-WESTERN

LOGGED BY J. MILLER CHK'D BY W. HERST

DATE 1/25/95

JOB NO.: 943-2848

FILENAME: PZ113AS

LAIDLAW WASTE SYSTEMS INC.

SOIL BOREHOLE LOG

SITE NAME AND LOCATION

LAIDLAW/OU2 RI-FS/MO
WEST LAKE LANDFILL
OPERABLE UNIT 2

NORTHING: 1069224.31
DATUM EASTING: 515747.72 ELEVATION 459.92

DRILLING METHOD: 4.25 inch I.D. Hollow Stem Auger

SAMPLING METHOD:
SPLIT SPOON: 2.0 inch O.D./1.5 inch I.D. (SP)
SHELBY TUBE: 3.0 inch O.D./2 13/16 inch I.D. (SH)

					DRILLING START	DRILLING FINISH
WATER LEVEL					TIME	TIME
TIME					11:07	14:55
DATE					DATE	DATE
CASING DEPTH					4/11/95	4/11/95

BORING NO. PZ-113-AS

SHEET 3 OF 3

DRILL RIG CME 75 - TRUCK MOUNT

ANGLE VERTICAL BEARING NA

SAMPLE HAMMER 140 lbs.

SURFACE CONDITIONS

DEPTH IN FEET (ELEVATION)	BLOW/6 IN. ON SAMPLER	RECOVERY	SYMBOL	SAMPLER SYMBOL	SAMPLE NUMBER AND DESCRIPTION OF MATERIAL	SAMPLER TYPE	REMARKS
31	10 14 18 21	1.8'/2.0' (90%)			(26.2-40.0 ft.) Compact to dense, dark greenish gray (5GY 4/1), fine SAND, trace Silt, NR, wet, (SP), (ALLUVIUM)	SP (15)	
32	8 12 17 15	1.2'/2.0' (60%)			From 32.0-34.0 ft., color changes to pale yellowish brown (10YR 6/2)	SP (16)	
34	8 10 15 16	2.0'/2.0' (100%)			From 34.0-34.5 ft., sand becomes fine to medium grained	SP (17)	
36	6 7 7 10	1.9'/2.0' (95%)			From 37.5-38.0 ft., some coarse sand	SP (18)	From 38.0-40.0 ft., unable to collect split spoon samples due to heaving sands
40					(419.9) 40.0 End of Soil Borehole Log at 40.0 ft.		
41							
42							
43							
44							

DRILLING CONTR LAYNE-WESTERN

LOGGED BY J. MILLER DATE 1/25/95 CHK'D BY W. HERST

JOB NO.: 943-2048

FILENAME: PZ113AS

Well No. PZ-113-AS

Boring No. X-Ref: PZ-113-AS

PIEZOMETER CONSTRUCTION SUMMARY

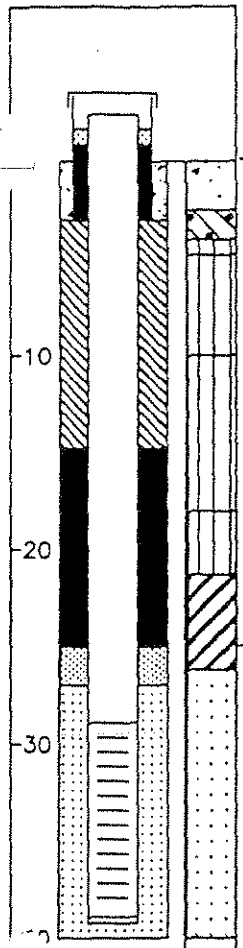

Survey Coords: Northing: 1069224 ft. Easting: 515748 ft.

Elevation Ground Level 459.9 ft. NGVD

Top of PVC Casing 461.42 ft. NGVD

Drilling Summary:

Total Depth 40.0 ft.

Borehole Diameter 8 1/4 in.

Casing Stickup Height 1.50 ft.

Driller Layne-Western
St. Louis, MO

Rig CME 75

Bit(s) 4 1/4 in. ID Hollow Stem Auger Bit

Drilling Fluid Auger-None

Protective Casing 8x8 in. Square Steel, by 5 ft. long

Construction Time log:

Task	Start Date	Start Time	Finish Date	Finish Time
Drilling				
CME 75	4/11/95	11:07	4/11/95	14:58
Schramm Rotary				
Geophys.Logging:				
Casing:	4/11/95	15:00	4/11/95	15:10
Filter Placement:	4/11/95	15:12	4/11/95	15:29
Cementing:				
Development				
Bentonite Grout	4/11/95	15:48	4/11/95	16:20
Bentonite Seal	4/11/95	15:40	4/11/95	15:48

Well Design & Specifications

Basis: Geologic Log X Geophysical Log

Casing string(s): C = Casing S = Screen

Depth			String(s)	Elevation		
+ 1.50	-	28.90	C1	461.42	-	431.02
28.90	-	38.70	S1	431.02	-	421.22
38.70	-	39.03	C2	421.22	-	420.89
	-				-	
	-				-	
	-				-	

Casing: C1 2 in. dia. Schedule 80 PVC, flush threaded with O-rings

C2 2 in. dia. threaded PVC end cap (4 in. long or 0.33 ft.)

Screen: S1 2 in. dia. Schedule 80 PVC, 0.010 in. machine cut slot, flush threaded with O-rings

Sand Pack: 16-35 mesh Silica Sand, 27.0-40.0 ft.

Filter Pack: Less than 50 mesh Silica Sand, 25.0-27.0 ft.

Grout Seal: Wyo-Ben Grout Well Bentonite Slurry, 3.0-15.0 ft.

Bentonite Seal: Extra high yield Wyo-Ben (100%) Slurry, 15.0-25.0 ft.

Concrete: 0.0-3.0 ft.

Well Development

Stabilization Test Data:

Time	pH	Spec. Cond.	Temp (°C)

Recovery Data:

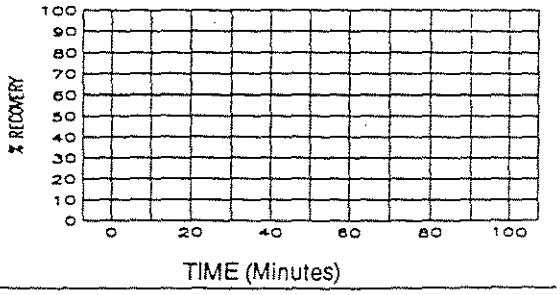

Comments:

Not to Scale

Supervised by S. Cosio

Job Number 943-2848

Site LAIDLAW/OU2 RI-FS/MO

File Name PZ113AS

MISSOURI DEPARTMENT OF NATURAL RESOURCES
DIVISION OF GEOLOGY AND LAND SURVEY

MONITORING WELL CERTIFICATION RECORD

OFFICE USE ONLY	DATE RECEIVED
REF NO 122488	CHECK NO.
ROUTE	TRANSMITTAL NO.
STATE WELL NUMBER	CROSS REFERENCE NO
CHECKED BY	ENTERED Ph 1 Ph 2 Ph 3
APPROVED BY	DATE APPROVED

INFORMATION SUPPLIED BY OWNER

SITE NAME: LAIDLAW BRIDGETON SANITARY LANDFILL		WELL NUMBER: P2-113-AS	
SITE ADDRESS: ST. CHARLES ROCK RD	CITY: BRIDGETON	STATE: MO	ZIP CODE: 63044
NAME: LAIDLAW WASTE SYSTEMS, INC.		TELEPHONE: 314-241-3710	
ADDRESS: 1838 N BROADWAY	CITY: ST. LOUIS	STATE: MO	ZIP CODE: 63102

INFORMATION SUPPLIED BY MONITORING WELL CONTRACTOR

LOCATION OF WELL SHOW LOCATION IN SECTION PLAT

COUNTY: ST. LOUIS
ELEVATION: 459.4
AREA NO.

SMALLEST ¼ ___ ¼ ___ ¼ ___ ¼ LARGEST ¼

SEC. ___ TWN. 47 N,RNG. 5 E OR W

LAT. 38 ° 46 ' 12 " LONG. 90 ° 26 ' 41 "

SKETCH THE LOCATION TO THE WELL INCLUDING MILEAGE ON ALL ROADS TRAVELED FROM NEAREST TOWNS OR HIGHWAYS

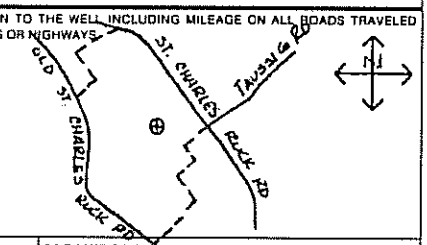

DESCRIBE LOCATION OF THE WELL SO WE WOULD BE ABLE TO VISIT IT

MONITORING WELL INSTALLATION CONTRACTOR'S NAME
LAYNE WESTERN CO., INC.

DRILLING CONTRACTOR'S NAME
LAYNE WESTERN CO., INC.

NOTE: Record the fraction of a foot in decimal, not in inches.

Top of Riser Elevation: 461.4

Ground Surface Elevation: 459.4 Ft

Information in this column to be supplied in the Feet from Surface column	Feet from Surface	Description of Formation
Depth to bottom of Protective Casing Seal:	3.0	
Depth to Base of Annular Seal:	23.0	
Depth to Base of Bentonite Seal:	25.0	
Depth to Base of Secondary Filter Pack:	27.0	
Depth to Top of the Screen:	28.7	
		Alluvium
Depth to Bottom of the Screen:	38.7	
Plug Back Total Depth:		
Original Total Depth:	40.0	

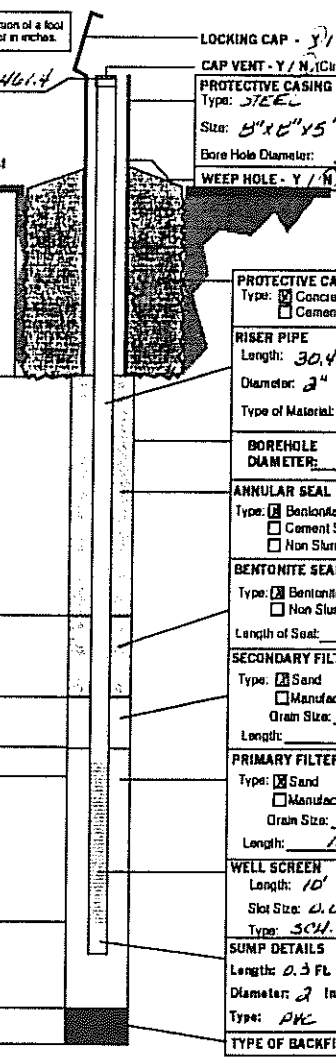

LOCKING CAP - Y / N (Circle one)
CAP VENT - Y / N (Circle one)

PROTECTIVE CASING
Type: STEEL
Size: 8"x8"x5'
Bore Hole Diameter: 8"
WEEP HOLE - Y / N (Circle one)

PROTECTIVE CASING SEAL
Type: ☒ Concrete ☐ Cement Slurry

RISER PIPE
Length: 30.4'
Diameter: 2"
Type of Material: SCH. 80 PVC

BOREHOLE DIAMETER: 8 In.

ANNULAR SEAL
Type: ☒ Bentonite Slurry ☐ Cement Slurry ☐ Non Slurry Bentonite

BENTONITE SEAL
Type: ☒ Bentonite Slurry ☐ Non Slurry Bentonite
Length of Seal: 2 Ft.

SECONDARY FILTER PACK (Optional)
Type: ☒ Sand ☐ Manufactured
Grain Size: SUGAR <50
Length: 2'

PRIMARY FILTER PACK
Type: ☒ Sand ☐ Manufactured
Grain Size: 16-35
Length: 13'

WELL SCREEN
Length: 10'
Slot Size: 0.010"
Type: SCH. 80 PVC

SUMP DETAILS
Length: 0.3 Ft.
Diameter: 2 In.
Type: PVC

TYPE OF BACKFILL: SAND

TYPE OF INSTALLATION
☒ ABOVE GROUND ☐ FLUSH MOUNT

STATIC WATER LEVEL
FEET FROM MEASURING POINT

DATE OF STATIC WATER LEVEL

ELEVATION OF MEASURING POINT
461.42

MEASURING POINT IS
☒ TOP OF RISER PIPE
☐ OTHER

DRILLING EQUIPMENT
☐ AIR ROTARY ☒ AUGER TYPE 4¼ H.S.A.
☐ REVERSE ROTARY ☐ OTHER

CENTRALIZERS USED
☐ YES, AT
☐ STAINLESS STEEL
☐ OTHER
☒ NO

MULTIPLE CASED WELLS
SUBMIT ADDITIONAL AS BUILT DIAGRAM SHOWING WELL CONSTRUCTION DETAILS INCLUDING TYPE AND SIZE OF ALL CASING, HOLE DIAMETERS, AND GROUT USED.

DATE WELL CONSTRUCTION WAS COMPLETED
4-11-95

I HEREBY CERTIFY THAT THE MONITORING WELL HEREIN DESCRIBED WAS CONSTRUCTED IN ACCORDANCE WITH THE DEPARTMENT OF NATURAL RESOURCES REQUIREMENTS FOR THE CONSTRUCTION OF MONITORING WELLS.

SIGNATURE (MONITORING WELL CONTRACTOR): [signature]
PERMIT NUMBER: 001258WPM DATE: 5-10-95

SIGNATURE (DRILLING CONTRACTOR): [signature]
PERMIT NUMBER: 001258WPM DATE: 5-10-95

MO 780-1415 (2-94) DISTRIBUTION: WHITE DIVISION CANARY MONITORING WELL CONTRACTOR PINK OWNER

RECORD OF DRILLHOLE PZ-113-SS

Sheet 1 of 3

PROJECT: LAIDLAW/RI-FS
PROJECT NO: 843-2648
LOCATION: BRIDGETON, MO

BORING METHOD: NX Core & water
DRILLING DATE: 5/9/95
DRILL RIG: CME 75

DATUM: MSL
COORDINATES N: 1069242.39
AZIMUTH: 0

COLLAR ELEV: 460.0
E: 515776.57
INCLINATION: -90

J-Joint, F-Fault, S-Shear, B-Bedding, F-Foliation
PL-Planar, C-Curved, U-Undulating, ST-Stepped, I-Irregular
P-Polished, K-Slickensided, SM-Smooth, R-Rough, VR-V. Rough
Fe-FeOxide, CL-Clay Infill, CH-Chlorite, H-Healed, GRF-Gravel Filled

DEPTH SCALE (FEET)	DESCRIPTION	GRAPHIC LOG	ELEV / DEPTH (FT)	RUN NO	CORE RECOVERY	RQD	FRACTURES PER FOOT	DISCONTINUITY DATA: DIP wrt CORE AXIS	DISCONTINUITY DATA: TYPE AND SURFACE DESCRIPTION	GRAPHIC LOG	WEATHERING INDEX: SW FR, MW, HW, CW	STRENGTH INDEX: R6, R5, R4, R3, R2, R1	POINT LOAD INDEX (psi): R7 30, R6 150, R5 300, R4 600, R3 1500, R2	TEST ORIENTATION	NOTES WATER LEVELS INSTRUMENTATION
112	0.0-114.6 ft. See Soil Borehole Log PZ-113-AD														0.0-114.5 ft. Borehole advanced using 9 7/8 in. diameter mud rotary bit then 6 in. casing sealed in borehole with neat cement
114	345.40		345.40												
	114.6-120.2 ft. Fresh, thickly to medium bedded, light olive gray (5Y 6/1), very fine grained, medium strong LIMESTONE, (ST. LOUIS FORMATION) Trace fossils, trace silicious zones		114.60						J,PL,SM						5/9/95 @ 9:30 Began coring
116									J,PL,R J,PL,R						
									J,C,R,CL J,C,R,CL						
	117.1-118.5 ft. Increase grain size and clay fraction, medium light gray (N6)			1	71%				J,PL,R J,PL,R,CL						
118															
	118.5-120.0 ft. Medium light gray (N6) to light gray (N7)								J,C,VR (3) J,C,VR (2)						
									J,C,VR J,ST,R (2)						5/9/95 @ 9:50 End of Run 1
120			340.00						Core Loss						
	120.2-142.3 ft. Fresh, medium bedded, light olive gray (5Y 6/1), fine grained, strong, ARGILLACEOUS LIMESTONE, (ST. LOUIS FORMATION) Scattered 1 in. thick chert nodules		120.00						J,PL,R (4)						
									J,PL,R (4)						
122									J,PL,SM						
									J,PL,R (3) J,PL,R,CL						
									J,PL,SM (5)						
124				2	100 %				J,PL,SM						
									J,PL,SM						
126									J,PL,R						
128															

DEPTH SCALE: 1:2
DRILLING CONTRACTOR: LAYNE-WESTERN
DRILLER: D. MAHURIN

LOGGED: D. ALLOWAY
CHECKED: B. TILTON
DATE: 6/15/95

Golder Associates

RECORD OF DRILLHOLE PZ-113-SS

Sheet 2 of 3

PROJECT: LAIDLAW/RI-FS
PROJECT NO: 943-2848
LOCATION: BRIDGETON, MO

BORING METHOD: NX Core & water
DRILLING DATE: 5/9/95
DRILL RIG: CME 75

DATUM: MSL
COORDINATES N: 1069242.39
AZIMUTH: 0

COLLAR ELEV: 460.0
E: 515778.57
INCLINATION: -90

J-Joint, F-Fault, S-Shear, B-Bedding, F-Foliation
PL-Planar, C-Curved, U-Undulating, ST-Stepped, I-Irregular
P-Polished, K-Slikensided, SM-Smooth, R-Rough, VR-V. Rough
Fe-FeOxide, CL-Clay Infil, CH-Chlorite, H-Healed, GRF-Gravel Filled

DEPTH (FEET)	DESCRIPTION	GRAPHIC LOG	ELEV / DEPTH (FT)	RUN NO	CORE RECOVERY	RQD	FRACTURES PER FOOT	DISCONTINUITY DATA: DIP wrt CORE AXIS	DISCONTINUITY DATA: TYPE AND SURFACE DESCRIPTION	GRAPHIC LOG	WEATHERING INDEX (SW, FR, MW, HW, CW)	STRENGTH INDEX (R6, R5, R4, R3, R2, R1)	POINT LOAD INDEX (psi) (R1 30, R2 150, R3 300, R4 600, R5 1500, R6)	TEST ORIENTATION	NOTES WATER LEVELS INSTRUMENTATION
128	120.2-142.3 ft. Fresh, medium bedded, light olive gray (5Y 6/1), fine grained, strong, ARGILLACEOUS LIMESTONE, (ST. LOUIS FORMATION) Scattered 1 in. thick chert nodules		330.60	2	100 %				J,PL,R						5/9/95 @ 11:00 End of Run 2
130			129.40						B,PL,SM (4)						
									B,PL,SM						
132				3	100 %										
134	134.2-134.8 ft. Coarse grained		325.60												5/9/95 @ 11:50 End of Run 3
			134.40												
	134.8-135.4 ft. Occasional stylolites present, fine to medium grained														
136									J,C,SM						
									J,I,R						
138	137.8-139.1 ft. Silty Claystone interbedded with Limestone								J,PL,R						
				4	100 %				B,I,R,CL						
									B,PL,SM (3)						
140															
	141.4-142.3 ft. Chert zone								J,PL,SM						
142			317.70												
	142.3-159.4 ft. Fresh, thickly bedded, light olive gray (5Y 5/2) to pale yellowish brown (10YR 6/2), very fine grained, medium strong, DOLOMITIC LIMESTONE, (SALEM FORMATION) Scattered 1/2 in. -1 in. chert nodules, vuggy		142.30												142.3 ft. Inferred top of SALEM FORMATION encountered
144															5/9/95 @ 12:40 End of Run 4

DEPTH SCALE: 1:2
DRILLING CONTRACTOR: LAYNE-WESTERN
DRILLER: D. MAHURIN

LOGGED: D. ALLOWAY
CHECKED: B. TILTON
DATE: 6/15/95

Golder Associates

RECORD OF DRILLHOLE PZ-113-SS

Sheet 3 of 3

PROJECT: LAIDLAW/RI-FS
PROJECT NO: 943-2848
LOCATION: BRIDGETON, MO

BORING METHOD: NX Core & water
DRILLING DATE: 5/9/95
DRILL RIG: CME 75

DATUM: MSL
COORDINATES N: 1069242.39
AZIMUTH: 0

COLLAR ELEV: 460.0
E: 515776.57
INCLINATION: -90

J-Joint, F-Fault, S-Shear, B-Bedding, F-Foliation
PL-Planar, C-Curved, U-Undulating, ST-Stepped, I-Irregular
P-Polished, K-Slickensided, SM-Smooth, R-Rough, VR-V. Rough
Fe-FeOxide, CL-Clay Infill, CH-Chlorite, H-Healed, GRF-Gravel Filled

DEPTH (FEET)	DESCRIPTION	GRAPHIC LOG	ELEV / DEPTH (FT)	RUN NO.	CORE RECOVERY	RQD (%)	FRACTURES PER FOOT	DISCONTINUITY DATA: DIP wrt CORE AXIS	DISCONTINUITY DATA: TYPE AND SURFACE DESCRIPTION	GRAPHIC LOG	WEATHERING INDEX (SW FR, MW, HW, CW)	STRENGTH INDEX (R6 R5 R4 R3 R2 R1)	POINT LOAD INDEX (psi) (R1 30, R2 150, R3 300, R4 600, R5 1500, R6)	TEST ORIENTATION	NOTES WATER LEVELS INSTRUMENTATION
144	142.3-159.4 ft. Fresh, thickly bedded, light olive gray (5Y 5/2) to pale yellowish brown (10YR 6/2), very fine grained, medium strong, DOLOMITIC LIMESTONE, (SALEM FORMATION) Scattered 1/2 in. - 1 in. chert nodules, vuggy		315.60 144.40	4	100 %										5/9/95 @ 12:40 End of Run 4
146															
148															
150	149.7-150.2 ft. Increased percentage of Dolomite 150.2-150.7 ft. Chert zone			5	99%										
152															
154	152.9-155.5 ft. Fresh, thickly bedded, medium dark gray (N4), vf-f grained, medium strong, LIMESTONE, (SALEM FORMATION)		305.60 154.40												5/9/95 @ 14:30 End of Run 5
			304.50												
	155.5-155.8 ft. Fresh, thinly bedded, medium dark gray (N4), very weak, CLAYSTONE, (SALEM FORMATION)		155.50 304.20 155.80												
156	155.8-159.4 ft. Fresh, medium bedded, pale yellowish brown (10YR 6/2), fine grained, strong, DOLOMITIC LIMESTONE with abundant chert nodules 157.0-159.4 ft. Scattered chert nodules			6	100 %				B,PL,SM (2) J,PL,R						
158															
			300.60												5/9/95 @ 15:40 Ended coring
	End of Record of Drillhole at 159.4 ft.		159.40												
160															

DEPTH SCALE: 1:2
DRILLING CONTRACTOR: LAYNE-WESTERN
DRILLER: D. MAHURIN

LOGGED: D. ALLOWAY
CHECKED: B. TILTON
DATE: 8/15/95

Golder Associates

Well No. PZ-113-SS

Boring No. X-Ref: PZ-113-SS

PIEZOMETER CONSTRUCTION SUMMARY

Survey Coords: Northing: 1089242 ft. Easting: 515777 ft.

Elevation Ground Level 460.0 ft. NGVD

Top of PVC Casing 461.77 ft. NGVD

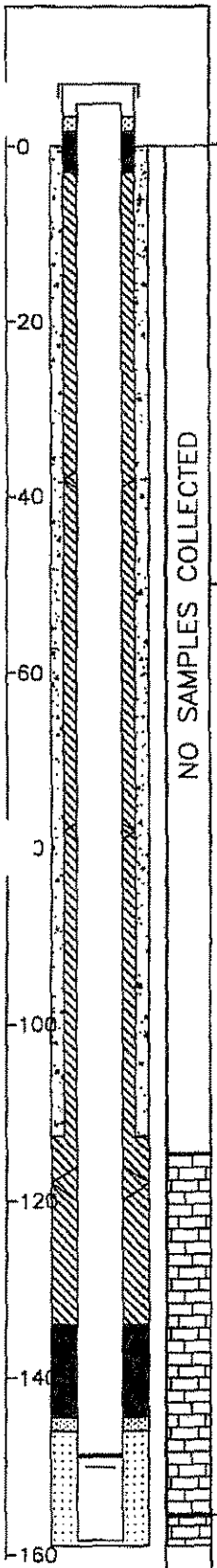

Not to Scale

Drilling Summary:

Total Depth 159.0 ft.

Borehole Diameter 9 3/4 in. (0.0–115.0 ft.) 6 7/8 in. (115.0–159.0 ft.)

Casing Stickup Height 1.81 ft.

Driller Layne-Western St. Louis, MO

Rig CME 75, Schramm Portadrill T660H

Bit(s) 6 1/4 in. ID Hollow Stem Auger Bit, NX Core, 5 7/8 in. Button Bit and 9 3/4 in. Tricone Bit

Drilling Fluid Auger–None, NX Core Water, Air and Mud Rotary

Protective Casing 8x8 in. Square Steel, by 5 ft. long

Construction Time log:

Task	Start Date	Start Time	Finish Date	Finish Time
Drilling				
CME 75	5/9/95	9:30	5/9/95	15:40
Schramm Rotary	5/20/95	13:30	5/20/95	14:30
Geophys.Logging:				
Casing:				
2" PVC	5/20/95	14:35	5/20/95	14:45
6" Steel	5/7/95	7:30	5/7/95	16:00
Filter Placement:	5/20/95	14:50	5/20/95	15:40
Cementing:				
Development				
Bentonite Grout	5/20/95	16:05	5/20/95	16:30
Bentonite Seal	5/20/95	15:55	5/20/95	16:05

Well Design & Specifications

Basis: Geologic Log X Geophysical Log

Casing string(s): C = Casing S = Screen

Depth			String(s)	Elevation		
+ 1.81	–	148.57	C1	461.77	–	311.39
148.57	–	158.37	S1	311.39	–	301.59
158.37	–	158.70	C2	301.59	–	301.26
+ 0.50	–	115.00	C3	460.40	–	344.96
	–				–	
	–				–	

Casing: C1 2 in. dia. Schedule 80 PVC, flush threaded with O-rings

C2 2 in. dia. threaded PVC end cap (4 in. long or 0.33 ft.) (C3–see comments)

Screen: S1 2 in. dia. Schedule 80 PVC, 0.010 in. machine cut slot, flush threaded with O-rings

Sand Pack: 16–35 mesh Silica Sand, 146.0–159.0 ft.

Filter Pack: Less than 50 mesh Silica Sand, 144.5–146.0 ft.

Grout Seal: Wyo-Ben Grout Well Bentonite Slurry, 3.0–134.0 ft., Neat cement, 3.0–115.0 ft.

Bentonite Seal: Extra high yield Wyo-Ben (100%) Slurry, 134.0–144.5 ft.

Concrete: 0.0–3.0 ft.

Well Development

Stabilization Test Data:

Time	pH	Spec. Cond.	Temp (°C)

Recovery Data:

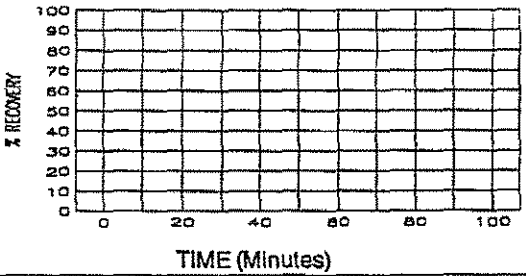

Comments: Surface Casing C3: 6 1/8 in. ID / 6 5/8 in. OD Steel Casing

Supervised by B. Tilton

Job Number 943-2848

Site LAIDLAW/OU2 RI-FS/MO

File Name PZ113SS

MISSOURI DEPARTMENT OF NATURAL RESOURCES
DIVISION OF GEOLOGY AND LAND SURVEY

MONITORING WELL CERTIFICATION RECORD

OFFICE USE ONLY	DATE RECEIVED
REF NO 122509	CHECK NO.
ROUTE	TRANSMITTAL NO.
STATE WELL NUMBER	CROSS REFERENCE NO
CHECKED BY	ENTERED Ph 1 Ph 2 Ph 3
APPROVED BY	DATE APPROVED

INFORMATION SUPPLIED BY OWNER

SITE NAME: LAIDLAW WASTE SYSTEMS SANITARY LANDFILL
WELL NUMBER: PZ-1135S
SITE ADDRESS: ST. CHARLES ROCK RD.
CITY: BRIDGETON
STATE: MO
ZIP CODE: 63044
NAME: LAIDLAW WASTE SYSTEMS, INC.
TELEPHONE: 314-241-3710
ADDRESS: 1838 N. BROADWAY
CITY: ST. LOUIS
STATE: MO
ZIP CODE: 63102

INFORMATION SUPPLIED BY MONITORING WELL CONTRACTOR

LOCATION OF WELL SHOW LOCATION IN SECTION PLAT

COUNTY ST. LOUIS
ELEVATION 459.4
AREA NO.

SMALLEST ¼ LARGEST ¼

SEC. ____ TWN. 47 N,RNG. 5 (E) OR W

LAT. 38 ° 46 ' 13 " LONG. 90 ° 26 ' 41 "

SKETCH THE LOCATION TO THE WELL INCLUDING MILEAGE ON ALL ROADS TRAVELED FROM NEAREST TOWNS OR HIGHWAYS

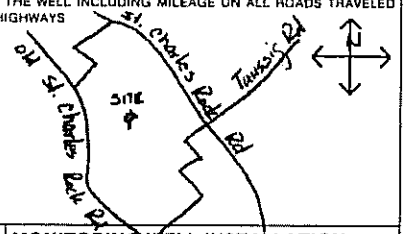

DESCRIBE LOCATION OF THE WELL SO WE WOULD BE ABLE TO VISIT IT

MONITORING WELL INSTALLATION CONTRACTOR'S NAME
LAYNE WESTERN Co, INC.

DRILLING CONTRACTOR'S NAME
LAYNE WESTERN Co., INC.

TYPE OF INSTALLATION: ☒ ABOVE GROUND ☐ FLUSH MOUNT

STATIC WATER LEVEL
FEET FROM MEASURING POINT
DATE OF STATIC WATER LEVEL

ELEVATION OF MEASURING POINT: 461.8

MEASURING POINT IS: ☒ TOP OF RISER PIPE ☐ OTHER

DRILLING EQUIPMENT: ☒ AIR ROTARY ☒ AUGER TYPE 6¼ H.S.A. ☐ REVERSE ROTARY ☐ OTHER

CENTRALIZERS USED: ☒ YES, AT 5 TOTAL ☒ STAINLESS STEEL ☐ OTHER ☐ NO

MULTIPLE CASED WELLS
SUBMIT ADDITIONAL AS BUILT DIAGRAM SHOWING WELL CONSTRUCTION DETAILS INCLUDING TYPE AND SIZE OF ALL CASING, HOLE DIAMETERS, AND GROUT USED.

DATE WELL CONSTRUCTION WAS COMPLETED: 5-20-95

I HEREBY CERTIFY THAT THE MONITORING WELL HEREIN DESCRIBED WAS CONSTRUCTED IN ACCORDANCE WITH THE DEPARTMENT OF NATURAL RESOURCES REQUIREMENTS FOR THE CONSTRUCTION OF MONITORING WELLS.

SIGNATURE (MONITORING WELL CONTRACTOR): Michael P. Vogt
PERMIT NUMBER: 001256 WM — DATE: 6-02-95
SIGNATURE (DRILLING CONTRACTOR): Michael P. Vogt
PERMIT NUMBER: 001256 WM — DATE: 6-02-95

NOTE: Record the fraction of a foot in decimal, not in inches

Top of Riser Elevation: 461.8
LOCKING CAP - (Y) N (Circle one)
CAP VENT - Y / N (Circle one)
PROTECTIVE CASING Type: STEEL Size: 8"x8"x5' Bore Hole Diameter: 9⅞
WEEP HOLE - Y / (N) (Circle one)

Ground Surface Elevation: 459.4

Information in this column to be supplied in the Feet from Surface column	Feet from Surface	Description of Formation
Depth to bottom of Protective Casing Seal:	3.0	
		111-159 Limestone
Depth to Base of Annular Seal:	134.0	
Depth to Base of Bentonite Seal:	144.5	
Depth to Base of Secondary Filter Pack:	146.0	
Depth to Top of the Screen:	148.4	
Depth to Bottom of the Screen:	158.4	
Plug Back Total Depth:	158.7	
Original Total Depth:	159.0	

PROTECTIVE CASING SEAL Type: ☒ Concrete ☐ Cement Slurry
RISER PIPE Length: 150.2' Diameter: 3" Type of Material: PVC
BOREHOLE DIAMETER: 5⅞ in.
ANNULAR SEAL Type: ☒ Bentonite Slurry ☐ Cement Slurry ☐ Non Slurry Bentonite
BENTONITE SEAL Type: ☒ Bentonite Slurry ☐ Non Slurry Bentonite Length of Seal: 10.5 Ft.
SECONDARY FILTER PACK (Optional) Type: ☒ Sand ☐ Manufactured Grain Size: < 50 Length: 1.5'
PRIMARY FILTER PACK Type: ☒ Sand ☐ Manufactured Grain Size: 16/35 Length: 13'
WELL SCREEN Length: 10' Slot Size: 0.010" Type: PVC
SUMP DETAILS Length: 0.5 Ft. Diameter: 3 In. Type: PVC
TYPE OF BACKFILL: SAND

MO 780-1415 (2-94) DISTRIBUTION: WHITE-DIVISION CANARY-MONITORING WELL CONTRACTOR PINK-OWNER

LAIDLAW WASTE SYSTEMS INC.

SOIL BOREHOLE LOG

SITE NAME AND LOCATION	DRILLING METHOD: 6.25 inch I.D. Hollow Stem Auger		BORING NO. PZ-114-AS
			SHEET 1 OF 2
LAIDLAW/OU2 RI-FS/MD WEST LAKE LANDFILL OPERABLE UNIT 2	SAMPLING METHOD: SPLIT SPOON: 2.0 inch O.D./1.5 inch I.D. (SP) SHELBY TUBE: 3.0 inch O.D./2 13/16 inch I.D. (SH)		DRILLING START: TIME 11:50, DATE 4/20/95; FINISH: TIME 12:40, DATE 4/20/95
NORTHING: 1069418.88 DATUM EASTING: 516768.25 ELEVATION 449.8	WATER LEVEL / TIME / DATE / CASING DEPTH		
DRILL RIG CME 75	SURFACE CONDITIONS Grassy		
ANGLE -90° BEARING NA			
SAMPLE HAMMER 140 lbs.			

DEPTH IN FEET (ELEVATION)	BLOW/ 6 IN. ON SAMPLER	RECOVERY	SYMBOL	SAMPLER SYMBOL	SAMPLE NUMBER AND DESCRIPTION OF MATERIAL	SAMPLER TYPE	REMARKS
1	3, 4, 8, 9	1.7'/2.0' (85%)			(0.0-2.0 Ft.) Compact, dark yellowish brown (10YR 4/2), f-m SAND, some clayey Silt, NR, moist, (SM), (FILL)	SP ①	
(447.8) 2.0							
2	8, 14, 10, 5	1.3'/2.0' (65%)			(2.0-4.0 Ft.) Concrete, (FILL)	SP ②	
(445.8) 4.0							
4	2, 7, 7, 5	1.3'/2.0' (65%)			(4.0-6.0 Ft.) Loose, moderate gray (N5), moist, f-c subrounded SAND, some clayey Silt, (SM), (FILL), lower 0.3 Ft. is concrete	SP ③	
(443.8) 6.0							
6	1, 2, 1, 3	0.7'/2.0' (35%)			(6.0-8.0 Ft.) Soft to firm, medium dark gray (N4) to olive gray (5Y 4/1), clayey SILT, some fine and medium Sand, trace subrounded coarse Sand, (ML), (FILL)	SP ④	
(441.8) 8.0							
8	2, 2, 3, 3	0.7'/2.0' (35%)			(8.0-12.0 Ft.) Soft, greenish black (5GY 2/1) to medium gray (N5), silty CLAY, little fine Sand, NR, moist, (CL), (FILL)	SP ⑤	
10	1, 1, 2, 2	2.0'/2.0' (100%)				SP ⑥	
12	1, 3, 4, 6	1.8'/2.0' (90%)			(12.0-15.5 Ft.) Firm, medium dark gray (N4), SILTY CLAY, little fine Sand, NR, moist, (CL), (ALLUVIUM) below 14.0 Ft., grades sandier with depth	SP ⑦	
14	1, 3, 4, 2	1.9'/2.0' (95%)				SP ⑧	

DRILLING CONTR LAYNE-WESTERN

LOGGED BY D. ALLOWAY CHK'D BY

DATE 4/20/95

JOB NO.: 943-2848

FILENAME: PZ114AS

LAIDLAW WASTE SYSTEMS INC.

SOIL BOREHOLE LOG

SITE NAME AND LOCATION

LAIDLAW/OU2 RI-FS/MD
WEST LAKE LANDFILL
OPERABLE UNIT 2

DATUM NORTHING: 1069418.88 EASTING: 516768.25 ELEVATION 449.8

DRILLING METHOD: 6.25 inch I.D. Hollow Stem Auger

SAMPLING METHOD: SPLIT SPOON: 2.0 inch O.D./1.5 inch I.D. (SP)
SHELBY TUBE: 3.0 inch O.D./2 13/16 inch I.D. (SH)

BORING NO. PZ-114-AS

SHEET 2 OF 2

					DRILLING START	DRILLING FINISH
WATER LEVEL					TIME	TIME
TIME					11:50	12:40
DATE					DATE	DATE
CASING DEPTH					4/20/95	4/20/95

DRILL RIG CME 75

ANGLE -90° BEARING NA

SAMPLE HAMMER 140 lbs.

SURFACE CONDITIONS Grassy

DRILLING CONTR LAYNE-WESTERN

DEPTH IN FEET (ELEVATION)	BLOW/ 6 IN. ON SAMPLER	RECOVERY	SYMBOL	SAMPLER SYMBOL	SAMPLE NUMBER AND DESCRIPTION OF MATERIAL	SAMPLER TYPE	REMARKS
16	0 1 3 4	2.0' / 2.0' (100%)			(12.0-15.5 ft.) Firm, medium dark gray (N4), SILTY CLAY, little Fine Sand, NR, moist, (CL), (ALLUVIUM)	SP (8)	
17					(15.5-17.4 ft.) Firm, medium gray (N5), SILTY CLAY, some F-m Sand, NR, moist to wet, (CL), (ALLUVIUM), grades sandier	SP (9)	
					(432.4) 17.4		
18	3 3 5 2	1.2' / 2.0' (60%)			(17.4-18.5 ft.) Loose, medium gray (N5), F-m SAND, some silty Clay, NR, wet, (SP), (ALLUVIUM), grades sandier and coarser		
19					(18.5-30.0 ft.) Loose to compact, medium gray (N5), F-m SAND, trace fines, thin layers of mica (<1/4" thick), NR, moist, (SP), (ALLUVIUM)	SP (10)	
20	2 3 3 3	1.8' / 2.0' (90%)					
21						SP (11)	
22	3 2 5 3	1.3' / 2.0' (65%)					
23						SP (12)	
24	4 7 8 13	1.5' / 2.0' (75%)			@ 23.7 ft., color changes to moderate brown (5YR 4/4) and moderate yellowish brown (10YR 5/2)		
25						SP (13)	
26	9 7 4 3	0.3' / 2.0' (15%)					
27						SP (14)	
28	2 6 6 7	1.6' / 2.0' (80%)					
29					@ 29.1-29.6 ft., organics present, bits of wood and grass	SP (15)	

LOGGED BY D. ALLOWAY

DATE 4/20/95 CHK'D BY W. HERST

JOB NO.: 943-2848

FILENAME: PZ114AS

Well No. PZ-114-AS

Boring No. X-Ref: PZ-114-AS

PIEZOMETER CONSTRUCTION SUMMARY

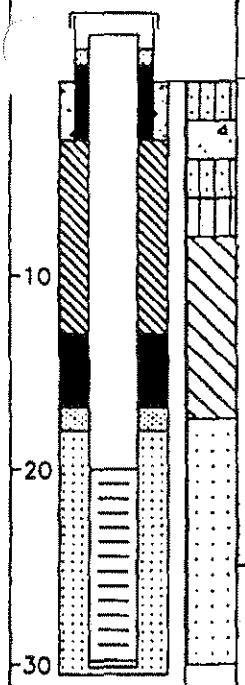

Not to Scale

Survey Coords: Northing: 1069419 ft. Easting: 516768 ft.

Elevation Ground Level 449.8 ft. NGVD

Top of PVC Casing 451.31 ft. NGVD

Drilling Summary:

Total Depth 30.5 ft.

Borehole Diameter 10 1/4 in.

Casing Stickup Height 1.53 ft.

Driller Layne-Western, St. Louis, MO

Rig CME 75

Bit(s) 6 1/4 in. ID Hollow Stem Auger Bit

Drilling Fluid Auger-None

Protective Casing 8x8 in. Square Steel, by 5 ft. long

Construction Time log:

Task	Start Date	Start Time	Finish Date	Finish Time
Drilling				
CME 75	4/20/95	11:50	4/20/95	12:40
Schramm Rotary				
Geophys.Logging:				
Casing:	4/20/95	13:00	4/20/95	13:30
Filter Placement:	4/20/95	13:15	4/20/95	14:00
Cementing:				
Development				
Bentonite Grout	4/20/95	13:45	4/20/95	14:45
Bentonite Seal	4/20/95	13:30	4/20/95	13:45

Well Design & Specifications

Basis: Geologic Log X Geophysical Log

Casing string(s): C = Casing S = Screen

Depth			String(s)	Elevation		
+ 1.53	-	19.90	C1	451.31	-	429.88
19.90	-	29.70	S1	429.88	-	420.08
29.70	-	30.03	C2	420.08	-	419.75

Casing: C1 2 in. dia. Schedule 80 PVC, flush threaded with O-rings

C2 2 in. dia. threaded PVC end cap (4 in. long or 0.33 ft.)

Screen: S1 2 in. dia. Schedule 80 PVC, 0.010 in. machine cut slot, flush threaded with O-rings

Sand Pack: 16-35 mesh Silica Sand, 18.0-30.5 ft.

Filter Pack: Less than 50 mesh Silica Sand, 16.8-18.0 ft.

Grout Seal: Wyo-Ben Grout Well Bentonite Slurry, 3.0-13.0 ft.

Bentonite Seal: Extra high yield Wyo-Ben (100%) Slurry, 13.0-16.8 ft.

Concrete: 0.0-3.0 ft.

Well Development

Stabilization Test Data:

Time	pH	Spec. Cond.	Temp (°C)

Recovery Data:

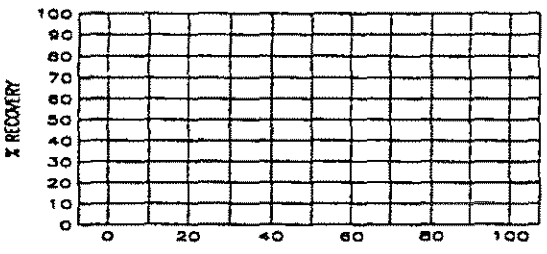

Comments:

Supervised by D. Alloway

Job Number 943-2848

Site LAIDLAW/OU2 RI-FS/MO

File Name PZ114AS

MISSOURI DEPARTMENT OF NATURAL RESOURCES
DIVISION OF GEOLOGY AND LAND SURVEY

MONITORING WELL CERTIFICATION RECORD

OFFICE USE ONLY	
REF NO 122487	DATE RECEIVED
ROUTE	CHECK NO
STATE WELL NUMBER	TRANSMITTAL NO
CHECKED BY	CROSS REFERENCE NO
APPROVED BY	ENTERED Ph 1 Ph 2 Ph 3
	DATE APPROVED

INFORMATION SUPPLIED BY OWNER

SITE NAME	WELL NUMBER		
LAIDLAW BRIDGETON SANITARY LANDFILL	PZ-114-AS		
SITE ADDRESS	CITY	STATE	ZIP CODE
ST. CHARLES ROCK RD.	BRIDGETON	MO	63044
NAME		TELEPHONE	
LAIDLAW WASTE SYSTEMS, INC.		314-241-3710	
ADDRESS	CITY	STATE	ZIP CODE
13.3E N. BROADWAY	ST. LOUIS	MO	63102

INFORMATION SUPPLIED BY MONITORING WELL CONTRACTOR

LOCATION OF WELL SHOW LOCATION IN SECTION PLAT

COUNTY ST. LOUIS
ELEVATION 447.8
AREA NO.

SMALLEST ¼ LARGEST ¼

SEC. ____ TWN. 47 N.RNG. 5 (E) OR W

LAT. 38 ° 46 ' 14 " LONG. 90 ° 26 ' 28 "

SKETCH THE LOCATION TO THE WELL INCLUDING MILEAGE ON ALL ROADS TRAVELED FROM NEAREST TOWNS OR HIGHWAYS

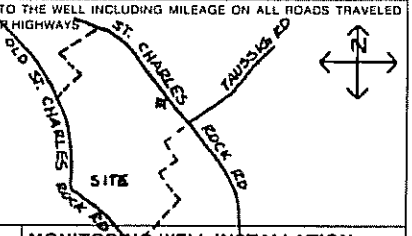

DESCRIBE LOCATION OF THE WELL SO WE WOULD BE ABLE TO VISIT IT

MONITORING WELL INSTALLATION CONTRACTOR'S NAME
LAYNE WESTERN Co., Inc.

DRILLING CONTRACTOR'S NAME
LAYNE WESTERN Co, Inc.

TYPE OF INSTALLATION
☒ ABOVE GROUND ☐ FLUSH MOUNT

STATIC WATER LEVEL
FEET FROM MEASURING POINT

DATE OF STATIC WATER LEVEL

ELEVATION OF MEASURING POINT
451.31

MEASURING POINT IS
☒ TOP OF RISER PIPE
☐ OTHER

DRILLING EQUIPMENT
☐ AIR ROTARY ☒ AUGER TYPE 8¼ HSA
☐ REVERSE ROTARY ☐ OTHER

CENTRALIZERS USED
☐ YES, AT
☐ STAINLESS STEEL
☐ OTHER
☒ NO

MULTIPLE CASED WELLS
SUBMIT ADDITIONAL AS BUILT DIAGRAM SHOWING WELL CONSTRUCTION DETAILS INCLUDING TYPE AND SIZE OF ALL CASING, HOLE DIAMETERS, AND GROUT USED.

DATE WELL CONSTRUCTION WAS COMPLETED
4-20-95

I HEREBY CERTIFY THAT THE MONITORING WELL HEREIN DESCRIBED WAS CONSTRUCTED IN ACCORDANCE WITH THE DEPARTMENT OF NATURAL RESOURCES REQUIREMENTS FOR THE CONSTRUCTION OF MONITORING WELLS.

SIGNATURE (MONITORING WELL CONTRACTOR) Kirman H. Nicholson Jr

PERMIT NUMBER 001258 WIPM — DATE 5-10-95

SIGNATURE (DRILLING CONTRACTOR) Kirman H. Nicholson Jr

PERMIT NUMBER 001259 WIPM — DATE 5-18-95

NOTE: Record the fraction of a foot in decimal, not in inches.

LOCKING CAP - (Y) / N (Circle one)
CAP VENT - Y / N (Circle one)
Top of Riser Elevation: 451.3
PROTECTIVE CASING Type: STEEL Size: 8"x8"x5' Bore Hole Diameter: 8"
WEEP HOLE - Y / N) (Circle one)

Ground Surface Elevation: 447.8 ft.	Feet from Surface	Description of Formation
Information in this column to be supplied in the Feet from Surface column		0-12.0 Fill
Depth to bottom of Protective Casing Seal:	3.0	
		12-12.5 Clay
Depth to Base of Annular Seal:		
Depth to Base of Bentonite Seal:	16.8	
Depth to Base of Secondary Filter Pack:	18.0	17.5-18.5 Sandy silt
Depth to Top of the Screen:	19.7	
		14.5-30 Sand
Depth to Bottom of the Screen:	39.7	
Plug Back Total Depth		
Original Total Depth:	30.0	

PROTECTIVE CASING SEAL Type: ☒ Concrete ☐ Cement Slurry
RISER PIPE Length: 31.2' Diameter: 2" Type of Material: SCH 80 PVC
BOREHOLE DIAMETER: 8 in.
ANNULAR SEAL Type: ☐ Bentonite Slurry ☐ Cement Slurry ☐ Non Slurry Bentonite
BENTONITE SEAL Type: ☒ Bentonite Slurry ☐ Non Slurry Bentonite Length of Seal: 13.8 FL
SECONDARY FILTER PACK Type: ☒ Sand (Optional) ☐ Manufactured Grain Size: SUGAR 250 Length: 1.2'
PRIMARY FILTER PACK Type: ☒ Sand ☐ Manufactured Grain Size: 16-35 Length: 12'
WELL SCREEN Length: 10' Slot Size: 0.010" Type: SCH 80 PVC
SUMP DETAILS Length: 0.3 FL. Diameter: 2 in. Type: PVC
TYPE OF BACKFILL: SAND

MO 780-1415 (2-94)

DISTRIBUTION: WHITE-DIVISION CANARY-MONITORING WELL CONTRACTOR PINK-OWNER
MAIL WHITE COPY TO DEPARTMENT OF NATURAL RESOURCES, P.O. BOX 250, ROLLA, MO 65401

LAIDLAW WASTE SYSTEMS INC.

SOIL BOREHOLE LOG

SITE NAME AND LOCATION	LAIDLAW/OU2 RI-FS/MO WEST LAKE LANDFILL OPERABLE UNIT 2
DATUM	NORTHING: 1069408.54 EASTING: 516755.35 ELEVATION 450.6
DRILLING METHOD:	4.25 inch I.D. Hollow Stem Auger 4.0 inch Tricone Bit with Bentonite
SAMPLING METHOD:	SPLIT SPOON: 2.0 inch O.D./1.5 inch I.D. (SP) SHELBY TUBE: 3.0 inch O.D./2 13/16 inch I.D. (SH)
BORING NO.	PZ-115-SS
SHEET	1 OF 1
DRILLING	START / FINISH
WATER LEVEL	
TIME	START: 8:30 / FINISH: 9:55
DATE	START: 5/5/95 / FINISH: 5/5/95
CASING DEPTH	
DRILL RIG	CME 75 - TRUCK MOUNT
ANGLE	-90° BEARING NA
SAMPLE HAMMER	
SURFACE CONDITIONS	

DEPTH IN FEET (ELEVATION)	BLOW/ 6 IN. ON SAMPLER	RECOVERY	SYMBOL	SAMPLER SYMBOL	SAMPLE NUMBER AND DESCRIPTION OF MATERIAL	SAMPLER TYPE	REMARKS
31	6 7 7 6	1.0' 2.0' (50%)			(0.0-30.0 Ft.) No samples collected, see Soil Borehole Log PZ-114-AS for descriptions (30.0-33.5 Ft.) Compact, olive gray (5Y 4/1), SILTY f-m SAND, wet, NR, (SM), (ALLUVIUM)	SP ①	0.0-30.0 ft. Drilling conducted with 4.25-inch augers Below 30.0 Ft. Drilling conducted with mud rotary techniques to control heaving sands.
32	8 8 50/3"	1.0' 1.5' (67%)				SP ②	
33					(417.1) 33.5 End of Soil Borehole Log at 33.5 ft. See PZ-115-SS Record of Drillhole for rock descriptions		
34							
35							
36							
37							
38							
39							
40							
41							
42							
43							
44							

DRILLING CONTR LAYNE-WESTERN

LOGGED BY B. TILTON CHK'D BY W. HURST

DATE 6/21/95

JOB NO.: 943-2848

FILENAME: PZ115SS

RECORD OF DRILLHOLE PZ-115-SS

Sheet 1 of 4

PROJECT: LAIDLAW/RI-FS
PROJECT NO: 943-2648
LOCATION: BRIDGETON, MO

BORING METHOD: NX Core & water
DRILLING DATE: 5/10/95
DRILL RIG: CME 75

DATUM: MSL
COORDINATES N: 1069408.54
AZIMUTH: 0

COLLAR ELEV: 450.6
E: 516755.35
INCLINATION: -90

J-Joint, F-Fault, S-Shear, B-Bedding, F-Foliation
PL-Planar, C-Curved, U-Undulating, ST-Stepped, I-Irregular
P-Polished, K-Slickensided, SM-Smooth, R-Rough, VR-V. Rough
Fe-FeOxide, CL-Clay Infill, CH-Chlorite, H-Healed, GRF-Gravel Filled

DEPTH SCALE (FEET)	DESCRIPTION	GRAPHIC LOG	ELEV / DEPTH (FT)	RUN NO.	CORE RECOVERY	RQD	FRACTURES PER FOOT	DISCONTINUITY DATA: DIP wrt CORE AXIS	DISCONTINUITY DATA: TYPE AND SURFACE DESCRIPTION	DISCONTINUITY DATA: GRAPHIC LOG	WEATHERING INDEX	STRENGTH INDEX	POINT LOAD INDEX (psi)	TEST ORIENTATION	NOTES WATER LEVELS INSTRUMENTATION
32	0.0-33.5 ft. See Soil Borehole Log PZ-115-SS 33.5-38.0 ft. No samples collected														3/9/95 9 7/8 in. mud rotary bit used to drill into bedrock then 6 in. steel casing grouted into borehole with neat cement
34															
36															
38	412.60 38.0-47.3 ft. Fresh, thickly bedded, light olive gray (5Y 6/1), very fine grained, medium strong, LIMESTONE, (ST. LOUIS FORMATION)		412.60 38.00 410.90	1	98%										5/10/95 @ 8:30 Began drilling
40	40.0-41.8 ft. Scattered silica zones and veins		39.70						J,PL,VR (2) J,PL,VR (3)						5/10/95 @ 8:50 End of Run 1
42	41.2-47.7 ft. Microcrystalline, pale yellowish brown (10YR 6/2), slightly weathered 41.8-42.8 and 43.6-47.3 ft. Layers of green clay and clay filling around inplace pieces of rock								J,IR,VR (4) J,PL,VR (2) J,IR,VR (3)						
44				2	97%				J,IR,VR (7)						
46									J,IR,VR (6) J,IR,VR (7)						
48	47.7-49.0 ft. Slightly weathered, thickly bedded, pale yellowish brown (10YR 6/2), microcrystalline, strong, DOLOMITIC LIMESTONE, (ST. LOUIS FORMATION) Vuggy (1 mm. to 5 mm. in diameter), some vugs filled with calcite or quartz								J,I,VR (7)						

DEPTH SCALE: 1:2
DRILLING CONTRACTOR: LAYNE-WESTERN
DRILLER: D. MAHURIN

LOGGED: D. ALLOWAY
CHECKED: B. TILTON
DATE: 6/15/95

Golder Associates

RECORD OF DRILLHOLE PZ-115-SS

Sheet 2 of 4

PROJECT: LAIDLAW/RI-FS
PROJECT NO: 943-2848
LOCATION: BRIDGETON, MO

BORING METHOD: NX Core & water
DRILLING DATE: 5/10/95
DRILL RIG: CME 75

DATUM: MSL
COORDINATES N: 1069408.54
AZIMUTH: 0

COLLAR ELEV: 450.8
E: 516755.35
INCLINATION: -90

J-Joint, F-Fault, S-Shear, B-Bedding, F-Foliation
PL-Planar, C-Curved, U-Undulating, ST-Stepped, I-Irregular
P-Polished, K-Slikensided, SM-Smooth, R-Rough, VR-V. Rough
Fe-FeOxide, CL-Clay Infill, CH-Chlorite, H-Healed, GRF-Gravel Filled

DEPTH SCALE (FEET)	DESCRIPTION	GRAPHIC LOG	ELEV / DEPTH (FT)	RUN NO	CORE RECOVERY	RQD	FRACTURES PER FOOT	DISCONTINUITY DATA: DIP w/r CORE AXIS	DISCONTINUITY DATA: TYPE AND SURFACE DESCRIPTION	DISCONTINUITY DATA: GRAPHIC LOG	WEATHERING INDEX: SW FR, MW HW, CW	STRENGTH INDEX: R6, R5, R4, R3, R2, R1	POINT LOAD INDEX (psi): R1 30, R2 150, R3 300, R4 600, R5 1500, R6	TEST ORIENTATION	NOTES WATER LEVELS INSTRUMENTATION
48	48.8-48.9 ft. Claystone layers 49.0-50.2 ft. Slightly weathered, thickly bedded, pale yellowish brown (10YR 6/2), microcrystalline, medium strong, LIMESTONE, (ST. LOUIS FORMATION) Dolomite and clay zones, vuggy			2	97%										5/10/95 @ 10:10 End of Run 2
			400.90 49.70												
50	50.2-58.5 ft. Fresh, thickly bedded, pale yellowish brown (10YR 6/2), microcrystalline, medium strong, LIMESTONE, (ST. LOUIS FORMATION)								J,PL,VR						
52	50.2-51.4 ft. Thin clay laminations within rock visible but no preferential breaks or weak zones are associated														
	53.0-55.1 ft. Thin clay laminations, healed and unhealed bedding partings								B,PL,SM						
									B,PL,SM (3)						
54									J,PL,R,CL						
									J,PL,SM						
				3	100 %										
	55.1-55.4 ft. Highly weathered, extremely weak Claystone zone								J,PL,SM						
56	55.4-58.5 ft. Thin clay laminations and healed bedding partings, trace stylolites														
									J,PL,SM						
									J,PL,SM						
58															
	58.5-64.6 ft. Fresh, thickly bedded, pale yellowish brown (10YR 6/2), very fine, medium strong, ARGILLACEOUS LIMESTONE, (ST. LOUIS FORMATION) Vuggy		390.90 59.70												5/10/95 @ 11:45 End of Run 3
60															
82				4	100 %										
84															

DEPTH SCALE: 1:2
DRILLING CONTRACTOR: LAYNE-WESTERN
DRILLER: D. MAHURIN

LOGGED: D. ALLOWAY
CHECKED: B. TILTON
DATE: 6/15/95

Golder Associates

RECORD OF DRILLHOLE PZ-115-SS

Sheet 3 of 4

PROJECT: LAIDLAW/RI-FS
PROJECT NO: 943-2848
LOCATION: BRIDGETON, MO

BORING METHOD: NX Core & water
DRILLING DATE: 5/10/95
DRILL RIG: CME 75

DATUM: MSL
COORDINATES N: 1069408.54
AZIMUTH: 0

COLLAR ELEV: 450.6
E: 516755.35
INCLINATION: -90

J-Joint, F-Fault, S-Shear, B-Bedding, F-Foliation
PL-Planar, C-Curved, U-Undulating, ST-Stepped, I-Irregular
P-Polished, K-Slickensided, SM-Smooth, R-Rough, VR-V. Rough
Fe-FeOxide, CL-Clay Infill, CH-Chlorite, H-Healed, GRF-Gravel Filled

DEPTH SCALE (FEET)	DESCRIPTION	GRAPHIC LOG	ELEV / DEPTH (FT)	RUN NO.	CORE RECOVERY	RQD	FRACTURES PER FOOT	DISCONTINUITY DATA: DIP wrt CORE AXIS	DISCONTINUITY DATA: TYPE AND SURFACE DESCRIPTION	GRAPHIC LOG	WEATHERING INDEX	STRENGTH INDEX	POINT LOAD INDEX (psi)	TEST ORIENTATION	NOTES WATER LEVELS INSTRUMENTATION
64	64.6-65.8 ft. Fresh, medium bedded, pale yellowish brown (10YR 6/2), fine grained, strong, LIMESTONE, (ST. LOUIS FORMATION) Scattered stylolites and silica replacement of stylolites								J,IR,VR J,C,SM						
									J,PL,VR						
66	65.8-66.7 ft. Fresh, medium bedded, pale yellowish brown (10YR 6/2), fine grained, medium strong, ARGILLACEOUS LIMESTONE, (ST. LOUIS FORMATION) Vuggy			4	100 %				J,PL,VR						
									J,PL,SM						
68	66.7-69.7 ft. Slightly weathered, medium bedded, pale yellowish brown (10YR 6/2), f-vf grained, medium strong, LIMESTONE, (ST. LOUIS FORMATION) Zones of Claystone interbedded (1/2 in. - 1 1/2 in.)								B,PL,R						
			380.90						B,PL,R,CL						5/10/95 @ 12:30 End of Run 4
70	69.7-84.7 ft. Fresh, medium bedded, pale yellowish brown (10YR 6/2), microcrystalline to fine grained, strong, LIMESTONE, (ST. LOUIS FORMATION)		69.70						J,PL,VR						
	69.7-75.7 ft. Fine to medium grained, trace fossils								J,IR,R						
72	72.0-72.2 ft. Highly weathered, weak, Claystone seam								B,PL,SM (2)						
	72.2-73.3 ft. Scattered chert								B,PL,SM						
74				5	100 %				J,C,SM (2)						
									J,PL,SM						
76	76.2 ft. *Void filled with calcite crystals*								J,PL,R						
	77.2-78.0 ft. Abundant stylolites								J,PL,R J,I,R J,I,R						
78									J,PL,SM						
	79.1-84.7 ft. Dolomite content increases, slightly weathered								J,I,R (2)						5/10/95 @ 13:50 End of Run 5
			370.90												
	79.4-81.0 ft. Abundant stylolites		79.70	6	100 %				J,I,R						
80															

DEPTH SCALE: 1:2
DRILLING CONTRACTOR: LAYNE-WESTERN
DRILLER: D. MAHURIN

LOGGED: D. ALLOWAY
CHECKED: B. TILTON
DATE: 6/15/95

Golder Associates

RECORD OF DRILLHOLE PZ-115-SS

PROJECT: LAIDLAW/RI-FS
PROJECT NO: 943-2848
LOCATION: BRIDGETON, MO

BORING METHOD: NX Core & water
DRILLING DATE: 5/10/95
DRILL RIG: CME 75

DATUM: MSL
COORDINATES N: 1069408.54
AZIMUTH: 0

COLLAR ELEV: 450.6
E: 516755.35
INCLINATION: -90

J-Joint, F-Fault, S-Shear, B-Bedding, F-Foliation
PL-Planar, C-Curved, U-Undulating, ST-Stepped, I-Irregular
P-Polished, K-Slikensided, SM-Smooth, R-Rough, VR-V. Rough
Fe-FeOxide, CL-Clay Infill, CH-Chlorite, H-Healed, GRF-Gravel Filled

DEPTH SCALE (FEET)	ROCK TYPE DESCRIPTION	GRAPHIC LOG	ELEV / DEPTH (FT)	RUN NO.	CORE RECOVERY	RQD	FRACTURES PER FOOT	DISCONTINUITY DATA: DIP wrt CORE AXIS	DISCONTINUITY DATA: TYPE AND SURFACE DESCRIPTION	DISCONTINUITY DATA: GRAPHIC LOG	WEATHERING INDEX	STRENGTH INDEX	POINT LOAD INDEX (psi)	TEST ORIENTATION	NOTES WATER LEVELS INSTRUMENTATION
80	69.7-84.7 ft. Fresh, medium bedded, pale yellowish brown (10YR 6/2), microcrystalline to fine grained, strong, LIMESTONE, (ST. LOUIS FORMATION)								J,I,R						
									J,I,R (2)						
82				6	100 %				J,I,R						
									J,I,R (2)						
84	84.2-84.7 ft. Abundant stylolites		365.90						B,PL,R						5/10/95 @ 15:00 End of coring
	End of Record of Drillhole at 84.7 ft.		84.70												
86															
88															
90															
92															
94															
96															

DEPTH SCALE: 1:2
DRILLING CONTRACTOR: LAYNE-WESTERN
DRILLER: D. MAHURIN

LOGGED: D. ALLOWAY
CHECKED: B. TILTON
DATE: 6/15/95

Golder Associates

Well No. PZ-115-SS

Boring No. X-Ref: PZ-115-SS

PIEZOMETER CONSTRUCTION SUMMARY

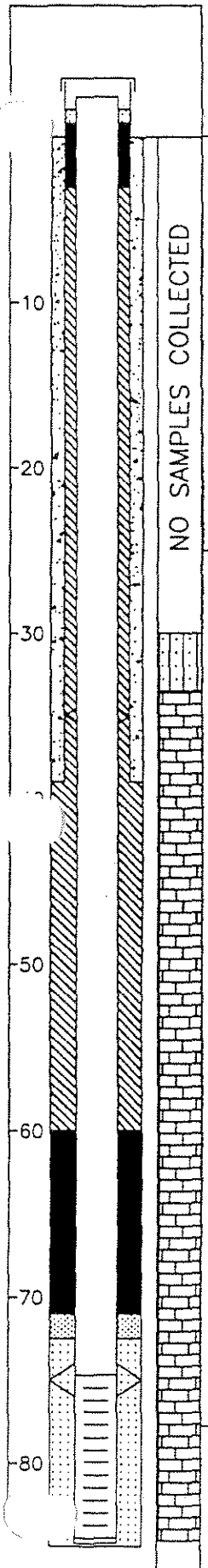

Not to Scale

Survey Coords: Northing: 1069409 ft. Easting: 516755 ft.

Elevation Ground Level 450.6 ft. NGVD

Top of PVC Casing 452.30 ft. NGVD

Drilling Summary:

Total Depth 85.0 ft.

Borehole Diameter 9 7/8 in. (0.0-39.0 ft.) 5 7/8 in. (39.0-85.0 ft.)

Casing Stickup Height 1.69 ft.

Driller Layne-Western, St. Louis, MO

Rig CME 75, Schramm Portadrill T660H

Bit(s) 6 1/4 in. ID Hollow Stem Auger Bit, NX Core, 5 7/8 in. Button Bit and 9 7/8 in. Tricone Bit

Drilling Fluid Auger-None, NX Core Water, Air and Mud Rotary

Protective Casing 8x8 in. Square Steel, by 5 ft. long

Construction Time log:

Task	Start Date	Start Time	Finish Date	Finish Time
Drilling				
CME 75	5/5/95	8:30	5/5/95	10:00
Schramm Rotary	5/21/95	8:30	5/21/95	10:00
Geophys.Logging:				
Casing:				
2" PVC	5/21/95	10:15	5/21/95	10:20
6" Steel	5/9/95	9:15	5/9/95	12:00
Filter Placement:	5/21/95	10:40	5/21/95	11:00
Cementing:				
Development				
Bentonite Grout	5/21/95	11:10	5/21/95	11:30
Bentonite Seal	5/21/95	11:00	5/21/95	11:10

Well Design & Specifications

Basis: Geologic Log X Geophysical Log

Casing string(s): C = Casing S = Screen

Depth			String(s)	Elevation		
+ 1.69	-	74.68	C1	452.30	-	375.93
74.68	-	84.48	S1	375.93	-	366.13
84.48	-	84.81	C2	366.13	-	365.80
+ 1.00	-	39.00	C3	451.60	-	411.81
	-				-	
	-				-	

Casing: C1 2 in. dia. Schedule 80 PVC, flush threaded with O-rings

C2 2 in. dia. threaded PVC end cap (4 in. long or 0.33 ft.) (C3-see comments)

Screen: S1 2 in. dia. Schedule 80 PVC, 0.010 in. machine cut slot, flush threaded with O-rings

Sand Pack: 16-35 mesh Silica Sand, 72.5-85.0 ft.

Filter Pack: Less than 50 mesh Silica Sand, 71.0-72.5 ft.

Grout Seal: Wyo-Ben Grout Well Bentonite Slurry, 3.0-60.0 ft., Neat cement, 3.0-39.0 ft.

Bentonite Seal: Extra high yield Wyo-Ben (100%) Slurry, 60.0-71.0 ft.

Concrete: 0.0-3.0 ft.

Well Development

Stabilization Test Data:

Time	pH	Spec. Cond.	Temp (°C)

Recovery Data:

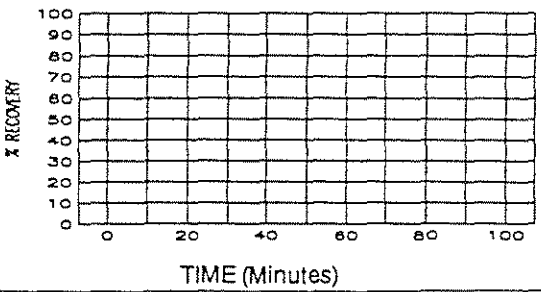

Comments: Surface Casing C3: 6 1/8 in. ID / 6 5/8 in. OD Steel Casing

Supervised by B. Tilton

Job Number 943-2848

Site LAIDLAW/OU2 RI-FS/MO

File Name PZ115SS

MISSOURI DEPARTMENT OF NATURAL RESOURCES
OIVISION OF GEOLOGY AND LAND SURVEY

MONITORING WELL CERTIFICATION RECORD

OFFICE USE ONLY	DATE RECEIVED
REF NO 122507	CHECK NO
ROUTE	TRANSMITTAL NO.
STATE WELL NUMBER	CROSS REFERENCE NO
CHECKED BY	ENTERED Ph 1 Ph 2 Ph 3
APPROVED BY	DATE APPROVED

INFORMATION SUPPLIED BY OWNER

SITE NAME	WELL NUMBER		
LAIDLAW BRIDGETON SANITARY LANDFILL	PZ-1155S		
SITE ADDRESS	**CITY**	**STATE**	**ZIP CODE**
ST. CHARLES ROCK RD.	BRIDGETON	MO	63044
NAME		**TELEPHONE**	
LAIDLAW WASTE SYSTEMS, INC.		314-341-3710	
ADDRESS	**CITY**	**STATE**	**ZIP CODE**
1838 N. BROADWAY	ST. LOUIS	MO.	63102

INFORMATION SUPPLIED BY MONITORING WELL CONTRACTOR

LOCATION OF WELL SHOW LOCATION IN SECTION PLAT

COUNTY ST. LOUIS
ELEVATION 450.6
AREA NO.

SMALLEST ¼ LARGEST ¼

SEC. ____ TWN. 47 N,RNG. 5 E OR W

LAT. 38° 46' 14" LONG. 90° 26' 29"

SKETCH THE LOCATION TO THE WELL INCLUDING MILEAGE ON ALL ROADS TRAVELED FROM NEAREST TOWNS OR HIGHWAYS

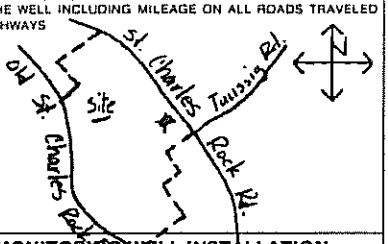

DESCRIBE LOCATION OF THE WELL SO WE WOULD BE ABLE TO VISIT IT

MONITORING WELL INSTALLATION CONTRACTOR'S NAME

LAYNE WESTERN Co., INC.

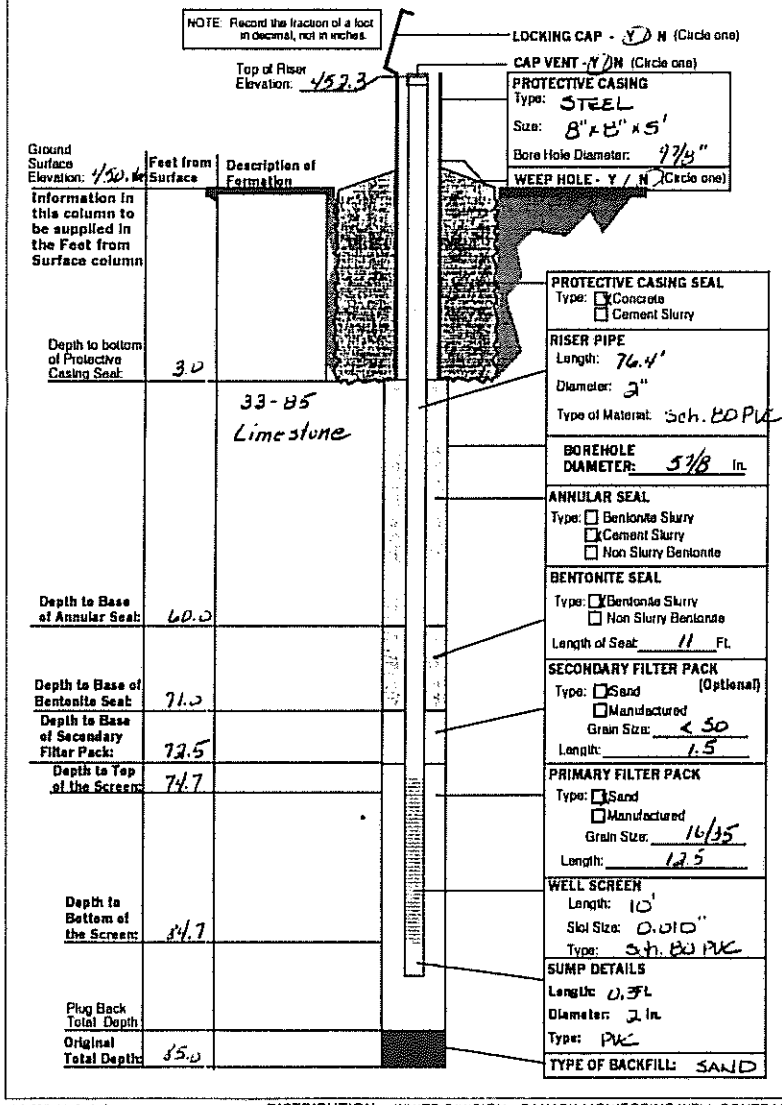

DRILLING CONTRACTOR'S NAME

LAYNE WESTERN Co., INC.

TYPE OF INSTALLATION
( ) ABOVE GROUND ( ) FLUSH MOUNT

STATIC WATER LEVEL
FEET FROM MEASURING POINT

DATE OF STATIC WATER LEVEL

ELEVATION OF MEASURING POINT
452.3

MEASURING POINT IS
(X) TOP OF RISER PIPE
( ) OTHER

DRILLING EQUIPMENT
(X) AIR ROTARY ( ) AUGER TYPE 6¼ H.S.A.
( ) REVERSE ROTARY ( ) OTHER

CENTRALIZERS USED
(X) YES, AT 3 TOTAL
(X) STAINLESS STEEL
( ) OTHER
( ) NO

MULTIPLE CASED WELLS
SUBMIT ADDITIONAL AS BUILT DIAGRAM SHOWING WELL CONSTRUCTION DETAILS INCLUDING TYPE AND SIZE OF ALL CASING, HOLE DIAMETERS, AND GROUT USED.

DATE WELL CONSTRUCTION WAS COMPLETED
5-21-95

I HEREBY CERTIFY THAT THE MONITORING WELL HEREIN DESCRIBED WAS CONSTRUCTED IN ACCORDANCE WITH THE DEPARTMENT OF NATURAL RESOURCES REQUIREMENTS FOR THE CONSTRUCTION OF MONITORING WELLS.

SIGNATURE (MONITORING WELL CONTRACTOR) Michael P. Vogt

PERMIT NUMBER	DATE
001256 WM	6-22-95

SIGNATURE (DRILLING CONTRACTOR) Michael P. Vogt

PERMIT NUMBER	DATE
001256 WM	6-22-95

MO 780-1415 (2-94) DISTRIBUTION: WHITE-DIVISION CANARY-MONITORING WELL CONTRACTOR PINK/OWNER

LAIDLAW WASTE SYSTEMS INC.

SOIL BOREHOLE LOG

SITE NAME AND LOCATION	DRILLING METHOD: 6.25 inch I.D. Hollow Stem Auger		BORING NO. PZ-116-SS
			SHEET 1 OF 3
LAIDLAW/OU2 RI-FS/MO WEST LAKE LANDFILL OPERABLE UNIT 2	SAMPLING METHOD: SPLIT SPOON: 2.0 inch O.D./1.5 inch I.D. (SP) SHELBY TUBE: 3.0 inch O.D./2 13/16 inch I.D. (SH)		DRILLING START / FINISH
	WATER LEVEL		TIME 12:45 / TIME 15:00
	TIME		
	DATE		DATE 6/5/95 / DATE 6/5/95
	CASING DEPTH		
NORTHING: 1066410.28 DATUM EASTING: 515843.88 ELEVATION 483.1			
DRILL RIG CME 75 - TRUCK MOUNT	SURFACE CONDITIONS Edge of haul road and flat fill area.		
ANGLE BEARING			
SAMPLE HAMMER			

DRILLING CONTR LAYNE-WESTERN

DEPTH IN FEET (ELEVATION)	BLOW/ 6 IN. ON SAMPLER	RECOVERY	SYMBOL	SAMPLER SYMBOL	SAMPLE NUMBER AND DESCRIPTION OF MATERIAL	SAMPLER TYPE	REMARKS
					(0.0-1.0 ft.) No samples collected, gravel road base encountered (482.1) 1.0		
1	5 6 4 5	0.9' / 2.0' (45%)			(1.0-5.0 ft.) Stiff, dark yellowish brown (10YR 4/2), CLAYEY SILT, trace Gravel, WR, damp, (ML), (FILL)	SP (1)	
2							
3	2 2 4 5	0.7' / 2.0' (35%)				SP (2)	
4							
5	3 3 5 5	1.5' / 2.0' (75%)			(5.0-15.0 ft.) Loose, moderate yellowish brown (10YR 5/4), thinly laminated, SILT, SR, (ML), (LOESS)	SP (3)	
6							
7	3 5 8 9	1.7' / 2.0' (85%)			@ 7.0 ft., color changes to mottled pale yellowish brown (10YR 6/2) to moderate yellowish brown (10YR 5/4), and silt becomes compact	SP (4)	
8							
9	7 8 8 9	1.6' / 2.0' (80%)				SP (5)	
10							
11	5 8 9 10	1.2' / 2.0' (60%)			@ 11.0 ft., color is predominantly pale yellowish brown (10YR 6/2)	SP (6)	
12							
13	6 7 7 6	1.3' / 2.0' (65%)				SP (7)	
14							

LOGGED BY B. TILTON CHK'D BY W. HERST

DATE 6/20/95

JOB NO.: 943-2848

FILENAME: PZ116SS

LAIDLAW
LAIDLAW WASTE SYSTEMS INC.

SOIL BOREHOLE LOG

SITE NAME AND LOCATION LAIDLAW/OU2 RI-FS/MO WEST LAKE LANDFILL OPERABLE UNIT 2	DRILLING METHOD: 6.25 inch I.D. Hollow Stem Auger	BORING NO. PZ-116-SS
	SAMPLING METHOD: SPLIT SPOON: 2.0 inch O.D./1.5 inch I.D. (SP) SHELBY TUBE: 3.0 inch O.D./2 13/16 inch I.D. (SH)	SHEET 2 OF 3
	WATER LEVEL / TIME / DATE / CASING DEPTH	DRILLING START TIME 12:45 DATE 6/5/95; FINISH TIME 15:00 DATE 6/5/95
DATUM NORTHING: 1066410.28 EASTING: 515843.88 ELEVATION 483.1		
DRILL RIG CME 75 - TRUCK MOUNT	SURFACE CONDITIONS Edge of haul road and flat fill area.	
ANGLE BEARING		
SAMPLE HAMMER		

DEPTH IN FEET (ELEVATION)	BLOW/ 6 IN. ON SAMPLER	RECOVERY	SYMBOL	SAMPLER SYMBOL	SAMPLE NUMBER AND DESCRIPTION OF MATERIAL	SAMPLER TYPE	REMARKS
16	5 6 6 10	1.4' / 2.0' (70%)			(15.0-22.8 ft.) Compact, pale yellowish brown (10YR 6/2), SILT, SR-NR, damp, (ML), (LOESS)	SP (8)	
17 18	9 5 4 6	1.3' / 2.0' (65%)				SP (9)	
19 20	4 6 5 4	1.7' / 2.0' (85%)				SP (10)	
21 22	1 4 6 9	1.6' / 2.0' (80%)			(460.3) 22.8	SP (11)	
23 24	6 7 5 6	2.0' / 2.0' (100%)			(22.8-24.2 ft.) Compact, moderate yellowish brown (10YR 5/4), SILTY fine SAND, WR, damp, (SM), (ALLUVIUM) (458.9) 24.2	SP (12)	
25	8 14 22 14	2.0' / 2.0' (100%)			(24.2-25.6 ft.) Compact, medium gray (N5), SILT, trace iron oxide staining, NR, moist, (ML), (LOESS) (457.5) 25.6		
26					(25.6-27.0 ft.) Dense, pale yellowish brown (10YR 6/2), fine SAND, trace Silt, NR, damp (SP), (ALLUVIUM) (456.1) 27.0	SP (13)	
27 28	4 11 17 18	2.0' / 2.0' (100%)			(27.0-28.0 ft.) Compact, medium gray (N5), SILT, NR, moist, (ML), (ALLUVIUM) (455.1) 28.0	SP (14)	
29	8 9 11 10	2.0' / 2.0' (100%)			(28.0-32.0 ft.) Compact, medium light gray (N6), fine SAND, trace Silt, NR, moist, (SP)	SP (15)	

DRILLING CONTR LAYNE-WESTERN

LOGGED BY B. TILTON CHK'D BY W. HERST

DATE 6/20/95

JOB NO.: 943-2848

FILENAME: PZ116SS

LAIDLAW WASTE SYSTEMS INC.

SOIL BOREHOLE LOG

SITE NAME AND LOCATION

LAIDLAW/OU2 RI-FS/MO
WEST LAKE LANDFILL
OPERABLE UNIT 2

NORTHING: 1066410.28
DATUM EASTING: 515843.88 ELEVATION 483.1

DRILLING METHOD: 6.25 inch I.D. Hollow Stem Auger

SAMPLING METHOD:
SPLIT SPOON: 2.0 inch O.D./1.5 inch I.D. (SP)
SHELBY TUBE: 3.0 inch O.D./2 13/16 inch I.D. (SH)

					START	FINISH
WATER LEVEL					TIME	TIME
TIME					12:45	15:00
DATE					DATE	DATE
CASING DEPTH					6/5/95	6/5/95

BORING NO. PZ-116-SS

SHEET 3 OF 3

DRILLING START TIME 12:45 DATE 6/5/95
DRILLING FINISH TIME 15:00 DATE 6/5/95

DRILL RIG CME 75 - TRUCK MOUNT

SURFACE CONDITIONS Edge of haul road and flat fill area.

ANGLE BEARING

SAMPLE HAMMER

DRILLING CONTR LAYNE-WESTERN

DEPTH IN FEET (ELEVATION)	BLOW/ 6 IN. ON SAMPLER	RECOVERY	SYMBOL	SAMPLER SYMBOL	SAMPLE NUMBER AND DESCRIPTION OF MATERIAL	SAMPLER TYPE		REMARKS
31	15 50/5"	0.5' 1.0" (50%)			(28.0-32.0 ft.) Compact, medium light gray (N6), fine SAND, trace Silt, NR, moist, (SP)	SP	15	
					@ 30.8 ft, some black organic material in sand	SP	16	
32					@ 31.5 ft, gravel size pieces of Limestone in Sand, water encountered at 31.0 ft, on top of bedrock (451.1) 32.0			
					End of Soil Borehole Log at 32.0 ft.			
33					See PZ-116-SS Record of Drillhole for rock descriptions			
34								
35								
36								
37								
38								
39								
40								
41								
42								
43								
44								

LOGGED BY B. FILTON
DATE 6/20/95 CHK'D BY W. HERST

JOB NO.: 943-2848
FILENAME: PZ116SS

RECORD OF DRILLHOLE PZ-116-SS

Sheet 1 of 9

PROJECT: LAIDLAW/RI-FS
PROJECT NO: 943-2848
LOCATION: BRIDGETON, MO

BORING METHOD: NX Core & water
DRILLING DATE: 6/5/95 - 6/14/95
DRILL RIG: CME 75

DATUM: MSL
COORDINATES N: 1066410.28
AZIMUTH: 0

COLLAR ELEV: 483.1
E: 515843.68
INCLINATION: -90

J-Joint, F-Faun, S-Shear, B-Bedding, F-Foliation
PL-Planar, C-Curved, U-Undulating, ST-Stepped, I-Irregular
P-Polished, K-Slickensided, SM-Smooth, R-Rough, VR-V. Rough
Fe-FeOxide, CL-Clay Infill, CH-Chlorite, H-Healed, GRF-Gravel Filled

DEPTH SCALE (FEET)	DESCRIPTION	GRAPHIC LOG	ELEV / DEPTH (FT)	RUN NO	CORE RECOVERY	RQD	FRACTURES PER FOOT	DISCONTINUITY DATA: DIP wrt CORE AXIS	DISCONTINUITY DATA: TYPE AND SURFACE DESCRIPTION	GRAPHIC LOG	WEATHERING INDEX	STRENGTH INDEX	POINT LOAD INDEX (psi)	TEST ORIENTATION	NOTES WATER LEVELS INSTRUMENTATION
32	0.0-32.0 ft. See Soil Borehole Log PZ-116-SS 32.0-33.4 ft. No samples collected		449.70												
			448.70												
	33.4-60.2 ft. Fresh, thickly laminated, light olive gray (5Y 6/1), very fine grained, medium strong, LIMESTONE, (ST. LOUIS FORMATION) Occasional 0.5 - 2 mm. pyrite grains, weathered and grading into fresh at depth		33.40												RQD of Run 1 was unassessable due to uncertainty in fracture origin. Drill bit was worn, poor quality recovery
34				1	71%										
			447.10												
36			36.00												
			446.20												
			36.90						J,I,R,Fe						
			445.50						J,I,R						
	37.6-38.7 ft. Stiff, Clay layer, light olive gray (5Y 6/1)		37.60												
38			444.40												
			38.70												
				2	51%										
40									J,I,R (3)						
42			440.90												
			42.20												
			439.90												
	43.2-43.4 ft. Very stiff, Clay layer, light olive gray (5Y 6/1)		439.70												
			43.40												
44				3	88%				J,PL,R						
									J,PL,R,CL						
			436.20						J,I,R						
			44.90						J,I,R						6/8/95 @ 13:10 Began Run 4
	45.1-45.3 ft. Soft Clay layer		437.80												
			45.30												
46									J,I,R,CL						
			436.90												
	46.2-48.0 ft. Highly weathered, thinly bedded, medium light gray (N6), fine grained, weak, BRECCIATED LIMESTONE in medium bluish gray (5B 5/1), clay matrix, (COLLAPSE ZONE)		46.20												
				4	96%										
48			435.10												
			48.00												

DEPTH SCALE: 1:2
DRILLING CONTRACTOR: LAYNE-WESTERN
DRILLER: D. MAHURIN

LOGGED: E. SWANSON
CHECKED: B. TILTON
DATE: 7/12/95

== Golder Associates

RECORD OF DRILLHOLE PZ-116-SS

Sheet 2 of 9

PROJECT: LAIDLAW/RI-FS
PROJECT NO: 943-2848
LOCATION: BRIDGETON, MO

BORING METHOD: NX Core & water
DRILLING DATE: 6/5/95 - 6/14/95
DRILL RIG: CME 75

DATUM: MSL
COORDINATES N: 1066410.28
AZIMUTH: 0

COLLAR ELEV: 483.1
E: 515843.68
INCLINATION: -90

J-Joint, F-Fault, S-Shear, B-Bedding, F-Foliation
PL-Planar, C-Curved, U-Undulating, ST-Stepped, I-Irregular
P-Polished, K-Slickensided, SM-Smooth, R-Rough, VR-V. Rough
Fe-FeOxide, CL-Clay Infill, CH-Chlorite, H-Healed, GRF-Gravel Filled

DEPTH SCALE (FEET)	DESCRIPTION	GRAPHIC LOG	ELEV / DEPTH (FT)	RUN NO	CORE RECOVERY	RQD	FRACTURES PER FOOT	DISCONTINUITY DATA: DIP w/r CORE AXIS	DISCONTINUITY DATA: TYPE AND SURFACE DESCRIPTION	GRAPHIC LOG	WEATHERING INDEX: SW FR, MW, HW, CW	STRENGTH INDEX: R6, R5, R4, R3, R2, R1	POINT LOAD INDEX (psi): R1 30, R2 150, R3 300, R4 600, R5 1500, R6	TEST ORIENTATION	NOTES WATER LEVELS INSTRUMENTATION
48	435.10 48.00 48.0-60.2 ft. Fresh, thinly bedded, light olive gray (5Y 6/1), micro-crystalline, strong, LIMESTONE, (ST. LOUIS FORMATION) Stylolitic								J,I,R,CL						
				4	96%				J,PL,SM,Fe						
50			433.20 49.90						J,PL,R						
									J,U,R						
52									J,PL,R						
									J,PL,R (3)						
									J,PL,R,CL						
54									J,C,R						
									J,PL,R,CL						
				5	100%				J,I,R						
56															
									J,PL,R,CL (2)						
									J,PL,R						
									J,PL,R,CL						
58									J,PL,R (3)						
									J,PL,R (2)						
60	422.90 60.20 60.2-64.8 ft. Fresh, thinly bedded, olive gray (5Y 4/1), fine grained, very strong, DOLOMITE, (ST. LOUIS FORMATION)		423.10 60.00						J,I,R						
	61.9-62.5 ft. Light olive gray (5Y 6/1), very fine grained Limestone layer			6	100%				J,I,R						
									J,PL,R						
									J,PL,R,CL						
62									J,PL,R,CL						
64															

DEPTH SCALE: 1:2
DRILLING CONTRACTOR: LAYNE-WESTERN
DRILLER: D. MAHURIN

LOGGED: E. SWANSON
CHECKED: B. TILTON
DATE: 7/12/95

Golder Associates

RECORD OF DRILLHOLE PZ-116-SS

Sheet 3 of 9

PROJECT: LAIDLAW/RI-FS
PROJECT NO: 943-2548
LOCATION: BRIDGETON, MO

BORING METHOD: NX Core & Water
DRILLING DATE: 6/5/95 - 6/14/95
DRILL RIG: CME 75

DATUM: MSL
COORDINATES N: 1066410.28
AZIMUTH: 0

COLLAR ELEV: 483.1
E: 515843.88
INCLINATION: -90

J-Joint, F-Fault, S-Shear, B-Bedding, F-Foliation
PL-Planar, C-Curved, U-Undulating, ST-Stepped, I-Irregular
P-Polished, K-Slickensided, SM-Smooth, R-Rough, VR-V. Rough
Fe-FeOxide, CL-Clay Infill, CH-Chlorite, H-Healed, GRF-Gravel Filled

DEPTH SCALE (FEET)	ROCK TYPE / DESCRIPTION	GRAPHIC LOG	ELEV / DEPTH (FT)	RUN NO	CORE RECOVERY	RQD	FRACTURES PER FOOT	DISCONTINUITY DATA: DIP wrt CORE AXIS	DISCONTINUITY DATA: TYPE AND SURFACE DESCRIPTION	GRAPHIC LOG	WEATHERING INDEX	STRENGTH INDEX	POINT LOAD INDEX (psi)	TEST ORIENTATION	NOTES WATER LEVELS INSTRUMENTATION
64			418.30												
	64.8-71.2 ft. 64.80 Fresh, medium bedded, light olive ray (5Y 6/1), very fine grained, medium strong, ARGILLACEOUS LIMESTONE, (ST. LOUIS FORMATION)														
66									J,PL,R,CL						
				6	100 %				J,PL,R,CL						
68															
70			413.10 70.00												
72									J,PL,R,CL J,PL,R,CL B,PL,R						
	72.4-87.0 ft. Fresh, medium bedded, light olive gray (5Y 6/1), micro-crystalline, medium strong, LIMESTONE, (ST. LOUIS FORMATION) Stylolitic 72.6-73.0 ft. Abundant chert zones (<3 in. thick)								J,PL,R,CL						
74															
	75.1-75.8 ft. 408.00 75.10 Hard, Clay layer			7	99%										
			407.30 75.80												
76									J,PL,R,CL (2)						
78									J,PL,R,CL (2)						
									J,I,R,CL						
80			403.10 80.00												

DEPTH SCALE: 1:2
DRILLING CONTRACTOR: LAYNE-WESTERN
DRILLER: D. MAHURIN

LOGGED: E. SWANSON
CHECKED: B. TILTON
DATE: 7/12/95

Golder Associates

RECORD OF DRILLHOLE PZ-116-SS

Sheet 4 of 9

PROJECT: LAIDLAW/RI-FS
PROJECT NO: 943-2846
LOCATION: BRIDGETON, MO

BORING METHOD: NX Core & water
DRILLING DATE: 6/5/95 - 6/14/95
DRILL RIG: CME 75

DATUM: MSL
COORDINATES N: 1056410.28
AZIMUTH: 0

COLLAR ELEV: 483.1
E: 515843.86
INCLINATION: -90

J-Joint, F-Fault, S-Shear, B-Bedding, F-Foliation
PL-Planar, C-Curved, U-Undulating, ST-Stepped, I-Irregular
P-Polished, K-Slickensided, SM-Smooth, R-Rough, VR-V. Rough
Fe-FeOxide, CL-Clay Infill, CH-Chlorite, H-Healed, GRF-Gravel Filled

DEPTH (FEET)	DESCRIPTION	GRAPHIC LOG	ELEV / DEPTH (FT)	RUN NO.	CORE RECOVERY	RQD	FRACTURES PER FOOT	DISCONTINUITY DATA: DIP wrt CORE AXIS	DISCONTINUITY DATA: TYPE AND SURFACE DESCRIPTION	GRAPHIC LOG	WEATHERING INDEX	STRENGTH INDEX	POINT LOAD INDEX (psi)	TEST ORIENTATION	NOTES WATER LEVELS INSTRUMENTATION
	ROCK TYPE										SW FR MW HW CW	R5 R4 R3 R2 R1	R1 30 R2 150 R3 300 R4 600 R5 1500 R6		
80	72.4-87.0 ft. Fresh, medium bedded, light olive gray (5Y 6/1), micro-crystalline, medium strong, LIMESTONE, (ST. LOUIS FORMATION) Stylolitic		403.10 80.00						J,C,R J,PL,R (2)						
82	82.2-83.3 ft. Glauconitic intraclasts, argillaceous								B,PL,R J,U,R,CL J,I,R J,I,R,CL						
84									J,PL,R,CL						
				8	100 %										
86									B,C,R,CL J,I,R,CL						
	87.0-101.3 ft. Fresh, medium bedded, light olive gray (5Y 6/1), very fine crystalline, medium strong, ARGILLACEOUS LIMESTONE, (ST. LOUIS FORMATION)														
88	87.8-91.3 ft. Porous zone, open vugs (<2 mm. dia.)								J,PL,R,CL						
									J,I,R						
90			393.00 90.10												
92															
				9	100 %										
94															
96															

DEPTH SCALE: 1:2
DRILLING CONTRACTOR: LAYNE-WESTERN
DRILLER: D. MAHURIN

LOGGED: E. SWANSON
CHECKED: B. TILTON
DATE: 7/12/95

Golder Associates

RECORD OF DRILLHOLE PZ-116-SS

Sheet 5 of 9

PROJECT: LAIDLAW/RI-FS
PROJECT NO: 943-2848
LOCATION: BRIDGETON, MO

BORING METHOD: NX Core & water
DRILLING DATE: 6/5/95 - 6/14/95
DRILL RIG: CME 75

DATUM: MSL
COORDINATES N: 1066410.28
AZIMUTH: 0

COLLAR ELEV: 483.1
E: 515843.88
INCLINATION: -90

J-Joint, F-Fault, S-Shear, B-Bedding, F-Foliation
PL-Planar, C-Curved, U-Undulating, ST-Stepped, I-Irregular
P-Polished, K-Slickensided, SM-Smooth, R-Rough, VR-V. Rough
Fe-FeOxide, CL-Clay Infill, CH-Chlorite, H-Healed, GRF-Gravel Filled

DEPTH SCALE (FEET)	ROCK TYPE DESCRIPTION	GRAPHIC LOG	ELEV / DEPTH (FT)	RUN NO	CORE RECOVERY	RQD	FRACTURES PER FOOT	DISCONTINUITY DATA: DIP w/r CORE AXIS	DISCONTINUITY DATA: TYPE AND SURFACE DESCRIPTION	GRAPHIC LOG	WEATHERING INDEX: SW FR, MW, HW, CW	STRENGTH INDEX: R6, R5, R4, R3, R2, R1	POINT LOAD INDEX (psi): FT, R2 30, R3 150, R4 300, R5 600, R6 1500	TEST ORIENTATION	NOTES WATER LEVELS INSTRUMENTATION
96	87.0-101.3 ft. Fresh, medium bedded, light olive gray (5Y 6/1), very fine crystalline, medium strong, ARGILLACEOUS LIMESTONE, (ST. LOUIS FORMATION)														
98				9	100%										
100			383.10												
			100.00						B,PL,R,CL						
102	101.3-106.3 ft. Fresh, thickly bedded, light brownish gray (5YR 6/1), medium crystalline, medium strong, LIMESTONE, (ST. LOUIS FORMATION)								B,PL,R,CL						
				10	98%				J,PL,R						
104									J,PL,R						
	105.1-105.7 ft. Abundant, thinly laminated, shaley partings								J,PL,R (3)						
									J,PL,R,CL						
106									J,PL,R,CL						
			376.80												
	106.3-108.8 ft. Fresh, thinly bedded, light brownish gray (5YR 6/1), fine crystalline, extremely strong, SILICIFIED LIMESTONE, (ST. LOUIS FORMATION)		106.30												
108				11	100%				J,I,R,SPUN						
			374.30												
	108.8-135.5 ft. Fresh, medium bedded, light olive gray (5Y 6/1), micro-crystalline, medium strong to strong, LIMESTONE (ST. LOUIS FORMATION) Stylolitic		108.80						J,PL,R						
									J,I,R (2)						
110				12	100%										
									B,PL,SM						
									B,PL,SM						
112															

DEPTH SCALE: 1:2
DRILLING CONTRACTOR: LAYNE-WESTERN
DRILLER: D. MAHURIN

LOGGED: E. SWANSON
CHECKED: B. TILTON
DATE: 7/12/95

Golder Associates

RECORD OF DRILLHOLE PZ-116-SS

Sheet 6 of 9

PROJECT: LAIDLAW/RI-FS
PROJECT NO: 943-2848
LOCATION: BRIDGETON, MO

BORING METHOD: NX Core & water
DRILLING DATE: 6/5/95 - 6/14/95
DRILL RIG: CME 75

DATUM: MSL
COORDINATES N: 1068410.28
AZIMUTH: 0

COLLAR ELEV: 483.1
E: 515843.88
INCLINATION: -90

J-Joint, F-Fault, S-Shear, B-Bedding, F-Foliation
PL-Planar, C-Curved, U-Undulating, ST-Stepped, I-Irregular
P-Polished, K-Slikensided, SM-Smooth, R-Rough, VR-V. Rough
Fe-FeOxide, CL-Clay Infill, CH-Chlorite, H-Healed, GRF-Gravel Filled

DEPTH SCALE (FEET)	DESCRIPTION	GRAPHIC LOG	ELEV / DEPTH (FT)	RUN NO	CORE RECOVERY	RQD	FRACTURES PER FOOT	DISCONTINUITY DATA: DIP WRT CORE AXIS	DISCONTINUITY DATA: TYPE AND SURFACE DESCRIPTION	GRAPHIC LOG	WEATHERING INDEX	STRENGTH INDEX	POINT LOAD INDEX (psi)	TEST ORIENTATION	NOTES WATER LEVELS INSTRUMENTATION
112	108.8-135.5 ft. Fresh, medium bedded, light olive gray (5Y 6/1), micro-crystalline, medium strong to strong, LIMESTONE, (ST. LOUIS FORMATION) Stylolitic			12	100 %			90	J,PL,R,CL (3)						
114			369.10 / 114.00						J,PL,R (2)						
116				13	100 %				J,PL,R J,I,R (2) PL,R (6)						
118			364.10 / 119.00												6/9/95 @ 14:30 Completed Run 13 6/14/95 @ 8:00 Began Run 4 Water level in open corehole = 21.1 ft. bgs prior to drilling @ 120.3, 122.8, 123.3, 125.5 and 126.7 ft., possible open intact joints, (<5 breaks/in.)
120									J,I,R B,I,R (3) J,I,R (2)						
122	121.2-122.2 ft. Argillaceous Limestone @ 122.5 ft. Very stiff, light olive gray (5Y 6/1), Silt layer (< 1/2 in. thick)			14	100 %				J,I,R						
124	124.7-127.0 ft. Limestone becomes fine to medium crystalline								J,I,SM B,I,SM,CL						
126	126.4-127.0 ft. Moderately weathered zone								J,I,R						
128															

DEPTH SCALE: 1:2
DRILLING CONTRACTOR: LAYNE-WESTERN
DRILLER: D. MAHURIN

LOGGED: E. SWANSON
CHECKED: S. TILTON
DATE: 7/12/95

Golder Associates

RECORD OF DRILLHOLE PZ-116-SS

PROJECT: LAIDLAW/RI-FS
PROJECT NO: 943-2846
LOCATION: BRIDGETON, MO

BORING METHOD: NX Core & water
DRILLING DATE: 6/5/95 - 6/14/95
DRILL RIG: CME 75

DATUM: MSL
COORDINATES N: 1065410.28
AZIMUTH: 0

COLLAR ELEV: 483.1
E: 515843.88
INCLINATION: -90

J-Joint, F-Fault, S-Shear, B-Bedding, F-Foliation
PL-Planar, C-Curved, U-Undulating, ST-Stepped, I-Irregular
P-Polished, K-Slickensided, SM-Smooth, R-Rough, VR-V. Rough
Fe-FeOxide, CL-Clay Infill, CH-Chlorite, H-Healed, GRF-Gravel Filled

DEPTH (FEET)	DESCRIPTION	GRAPHIC LOG	ELEV / DEPTH (FT)	RUN NO.	CORE RECOVERY	RQD	FRACTURES PER FOOT	DISCONTINUITY DATA: DIP wrt CORE AXIS	DISCONTINUITY DATA: TYPE AND SURFACE DESCRIPTION	DISCONTINUITY DATA: GRAPHIC LOG	WEATHERING INDEX	STRENGTH INDEX	POINT LOAD INDEX (psi)	TEST ORIENTATION	NOTES WATER LEVELS INSTRUMENTATION
128	108.8-135.5 ft. Fresh, medium bedded, light olive gray (5Y 6/1), micro-crystalline, medium strong to strong, LIMESTONE, (ST. LOUIS FORMATION) Stylolitic			14	100 %				J,PL,SM						6/14/95 @ 9:10 Completed Run 14
			354.10 / 129.00												
130															
									J,PL,SM						
132									J,PL,SM						
									J,I,R (3)						
															133.0-133.5 ft. Possible open intact joints, highly broken zone
									J,I,R						
134				15	98%										
									B,I,R,CL						
	134.9-135.7 ft. Limestone becomes fine grained		347.60 / 135.50												
	135.5-139.1 ft. Fresh, thickly bedded, olive gray (5Y 4/1), very fine grained, medium strong, ARGILLACEOUS LIMESTONE, (SALEM FORMATION)														@ 135.5 ft. Inferred top of Salem Formation
138															
			344.10 / 139.00												6/14/95 @ 10:11 Completed Run 15
	139.1-141.8 ft. Fresh, thinly bedded, light olive gray (5Y 6/1), fine grained, medium strong, ARENACEOUS LIMESTONE, (SALEM FORMATION)								B,PL,SM,CL						
140	@ 139.6 ft. Very stiff, olive gray (5Y 4/1), Silt layer (<1 in. thick)														
									J,PL,SM						
				16	92%				J,I,R (2)						
142	141.8-151.2 ft. Fresh, thinly bedded, light olive gray (5Y 6/1), micro-crystalline, medium strong LIMESTONE, (SALEM FORMATION) Thin layers of glauconite Clay, surrounding Limestone matrix								J,I,R						
									J,I,R,CL (2)						
									B,I,SM						6/14/95 @ 11:00 Completed Run 16 Stopped short as bit plugged, core loss in highly broken rock
			339.10 / 144.00												
144															

DEPTH SCALE: 1:2
DRILLING CONTRACTOR: LAYNE-WESTERN
DRILLER: D. MAHURIN

LOGGED: E. SWANSON
CHECKED: B. TILTON
DATE: 7/12/95

Golder Associates

RECORD OF DRILLHOLE PZ-116-SS

PROJECT: LAIDLAW/RI-FS
PROJECT NO: 943-2848
LOCATION: BRIDGETON, MO

BORING METHOD: NX Core & water
DRILLING DATE: 6/5/95 - 6/14/95
DRILL RIG: CME 75

DATUM: MSL
COORDINATES N: 1066410.26
AZIMUTH: 0

COLLAR ELEV: 483.1
E: 515843.88
INCLINATION: -90

J-Joint, F-Fault, S-Shear, B-Bedding, F-Foliation
PL-Planar, C-Curved, U-Undulating, ST-Stepped, I-Irregular
P-Polished, K-Slikensided, SM-Smooth, R-Rough, VR-V. Rough
Fe-FeOxide, CL-Clay Infil, CH-Chlorite, H-Healed, GRF-Gravel Filled

DEPTH (FEET)	DESCRIPTION	GRAPHIC LOG	ELEV / DEPTH (FT)	RUN NO.	CORE RECOVERY	ROD	FRACTURES PER FOOT	DISCONTINUITY DATA: DIP wrt CORE AXIS	DISCONTINUITY DATA: TYPE AND SURFACE DESCRIPTION	GRAPHIC LOG	WEATHERING INDEX (SW, FR, HW, CW)	STRENGTH INDEX (R6, R5, R4, R3, R2, R1)	POINT LOAD INDEX (psi) (R1 30, R2 150, R3 300, R4 600, R5 1500, R6)	TEST ORIENTATION	NOTES WATER LEVELS INSTRUMENTATION
144	141.8-151.2 ft. Fresh, thinly bedded, light olive gray (5Y 6/1), micro-crystalline, medium strong LIMESTONE, (SALEM FORMATION) Thin layers of glauconite Clay, surrounding Limestone matrix @ 144.7 ft. Vug with calcite crystals (<1/2 in. dia.) 146.0-151.2 ft. Limestone becomes argillaceous		339.10 / 144.00					0 30 60 90	B,U,R,CL J,I,R (2) J,I,R (3)						
146															
148				17	100 %										
150															
152	151.2-162.5 ft. Fresh, thinly bedded, olive gray (5Y 4/1), fine crystalline, medium strong, FOSSILIFEROUS LIMESTONE, (SALEM FORMATION) Thinly laminated, shaley partings common, some chert nodules (<2 in. dia.)								J,I,R						
154			329.10 / 154.00						J,I,R						6/14/95 @ 12:00 End Run 17
	154.5-155.2 ft. Limestone becomes argillaceous								J,I,R (2) B,PL,SM,CL						
156				18	100 %				J,I,R (2) B,I,SM						@ 157.0 and 158.8 ft. Possible open/intact joints, highly broken zone
	157.5-162.5 ft. Abundant chert zones (<2 in. thick)														
158									J,PL,SM B,PL,SM						
160															

DEPTH SCALE: 1:2
DRILLING CONTRACTOR: LAYNE-WESTERN
DRILLER: D. MAHURIN

LOGGED: E. SWANSON
CHECKED: B. TILTON
DATE: 7/12/95

Golder Associates

RECORD OF DRILLHOLE PZ-116-SS

Sheet 9 of 9

PROJECT: LAIDLAW/RI-FS
PROJECT NO: 943-2846
LOCATION: BRIDGETON, MO

BORING METHOD: NX Core & water
DRILLING DATE: 6/5/95 - 6/14/95
DRILL RIG: CME 75

DATUM: MSL
COORDINATES N: 1066410.28
AZIMUTH: 0

COLLAR ELEV: 483.1
E: 515843.68
INCLINATION: -90

J-Joint, F-Fault, S-Shear, B-Bedding, F-Foliation
PL-Planar, C-Curved, U-Undulating, ST-Stepped, I-Irregular
P-Polished, K-Slickensided, SM-Smooth, R-Rough, VR-V. Rough
Fe-FeOxide, CL-Clay Infill, CH-Chlorite, H-Healed, GRF-Gravel Filled

DEPTH SCALE (FEET)	DESCRIPTION	GRAPHIC LOG	ELEV / DEPTH (FT)	RUN NO.	CORE RECOVERY	RQD	FRACTURES PER FOOT	DISCONTINUITY DATA: DIP wrt CORE AXIS	DISCONTINUITY DATA: TYPE AND SURFACE DESCRIPTION	DISCONTINUITY DATA: GRAPHIC LOG	WEATHERING INDEX (SW FR, MW, HW, CW)	STRENGTH INDEX (R6, R5, R4, R3, R2, R1)	POINT LOAD INDEX (psi) (R1 30, R2 150, R3 300, R4 600, R5 1500, R6)	TEST ORIENTATION	NOTES WATER LEVELS INSTRUMENTATION
160	151.2-162.5 ft. Fresh, thinly bedded, olive gray (5Y 4/1), fine crystalline, medium strong, FOSSILIFEROUS LIMESTONE, (SALEM FORMATION) Thinly laminated, shaley partings common, some chert nodules (<2 in. dia.)			18	100 %										
162	320.80		320.60												6/14/95 @ 13:25 End Run 18
	End of Record of Drillhole at 162.5 ft. 162.50		162.50												
164															
166															
168															
170															
172															
174															
176															

DEPTH SCALE: 1:2
DRILLING CONTRACTOR: LAYNE-WESTERN
DRILLER: D. MAHURIN

LOGGED: E. SWANSON
CHECKED: B. TILTON
DATE: 7/12/95

Golder Associates

Well No. PZ-116-SS

Boring No. X-Ref: PZ-116-SS

PIEZOMETER CONSTRUCTION SUMMARY

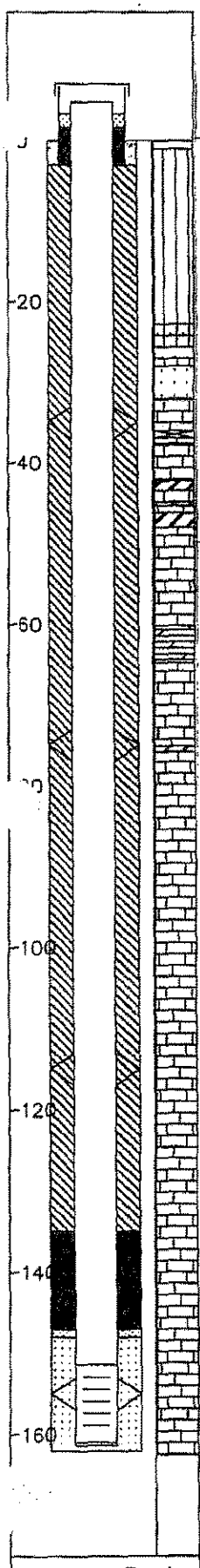

Not to Scale

Survey Coords: Northing: 1066410 ft. Easting: 515844 ft.

Elevation Ground Level 483.1 ft. NGVD

Top of PVC Casing 484.87 ft. NGVD

Drilling Summary:

Total Depth 162.0 ft.

Borehole Diameter 10 1/4 in. (0.0–33.0 ft.) 5 7/8 in. (33.0–162.0 ft.)

Casing Stickup Height 1.80 ft.

Driller Layne-Western, St. Louis, MO

Rig CME 75, Schramm Portadrill T660H

Bit(s) 6 1/4 in. ID Hollow Stem Auger Bit, NX Core, 5 7/8 in. Button Bit for Reaming

Drilling Fluid Auger–None, NX Core Water, Air Rotary

Protective Casing 8x8 in. Square Steel, by 5 ft. long

Construction Time log:

Task	Start Date	Start Time	Finish Date	Finish Time
Drilling				
CME 75	6/5/95	7:30	6/14/95	13:25
Schramm Rotary	6/20/95	8:00	6/20/95	11:45
Geophys.Logging:				
Casing:	6/20/95	12:30	6/20/95	12:50
Filter Placement:	6/20/95	12:55	6/20/95	13:00
Cementing:				
Development				
Bentonite Grout	6/20/95	13:30	6/20/95	15:30
Bentonite Seal	6/20/95	13:15	6/20/95	13:30

Well Design & Specifications

Basis: Geologic Log X Geophysical Log

Casing string(s): C = Casing S = Screen

Depth			String(s)	Elevation		
+ 1.80	-	151.40	C1	484.87	-	331.67
151.40	-	161.00	S1	331.67	-	322.07
161.00	-	161.33	C2	322.07	-	321.74
	-				-	
	-				-	
	-				-	

Casing: C1 2 in. dia. Schedule 80 PVC, flush threaded with O-rings

C2 2 in. dia. threaded PVC end cap (4 in. long or 0.33 ft.)

Screen: S1 2 in. dia. Schedule 80 PVC, 0.010 in. machine cut slot, flush threaded with O-rings

Sand Pack: 16-35 mesh Silica Sand, 148.0–162.0 ft.

Filter Pack: Less than 50 mesh Silica Sand, 147.0–148.0 ft.

Grout Seal: Wyo-Ben Grout Well Bentonite Slurry, 3.0–135.0 ft.

Bentonite Seal: Extra high yield Wyo-Ben (100%) Slurry, 135.0–147.0 ft.

Concrete: 0.0–3.0 ft.

Well Development

Stabilization Test Data:

Time	pH	Spec. Cond.	Temp (°C)

Recovery Data:

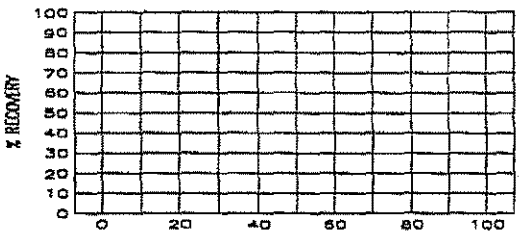

Comments:

Supervised by B. Tilton

Job Number 943-2848

Site LAIDLAW/OU2 RI-FS/MO

File Name PZ116SS

MISSOURI DEPARTMENT OF NATURAL RESOURCES
DIVISION OF GEOLOGY AND LAND SURVEY

MONITORING WELL CERTIFICATION RECORD

OFFICE USE ONLY	DATE RECEIVED
REF NO 122519	CHECK NO
ROUTE	TRANSMITTAL NO
STATE WELL NUMBER	CROSS REFERENCE NO
CHECKED BY	ENTERED Ph 1 Ph 2 Ph 3
APPROVED BY	DATE APPROVED

INFORMATION SUPPLIED BY OWNER

SITE NAME	WELL NUMBER
LAIDLAW BRIDGETON SANITARY LANDFILL	PZ-116-55

SITE ADDRESS	CITY	STATE	ZIP CODE
ST. CHARLES ROCK RD.	BRIDGETON	MO	63044

NAME	TELEPHONE
LAIDLAW WASTE SYSTEMS, INC.	314-291-3710

ADDRESS	CITY	STATE	ZIP CODE
1238 N BROADWAY	ST. LOUIS	MO	63102

INFORMATION SUPPLIED BY MONITORING WELL CONTRACTOR

LOCATION OF WELL
SHOW LOCATION IN SECTION PLAT

COUNTY ST LOUIS
ELEVATION 493.07
AREA NO.

SMALLEST ¼ LARGEST ¼

SEC. ____ TWN. 47 N,RNG 5 E OR W

LAT. 38 ° 45 ' 44 " LONG. 90 ° 26 ' 40 "

SKETCH THE LOCATION TO THE WELL INCLUDING MILEAGE ON ALL ROADS TRAVELED FROM NEAREST TOWNS OR HIGHWAYS

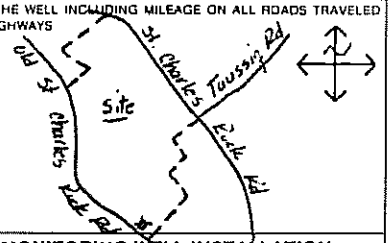

DESCRIBE LOCATION OF THE WELL SO WE WOULD BE ABLE TO VISIT IT

MONITORING WELL INSTALLATION CONTRACTOR'S NAME
LAYNE WESTERN CO., INC.

DRILLING CONTRACTOR'S NAME
LAYNE WESTERN CO., INC.

TYPE OF INSTALLATION
☒ ABOVE GROUND ☐ FLUSH MOUNT

STATIC WATER LEVEL
FEET FROM MEASURING POINT

DATE OF STATIC WATER LEVEL

ELEVATION OF MEASURING POINT
493.07

MEASURING POINT IS
☒ TOP OF RISER PIPE
☐ OTHER

DRILLING EQUIPMENT
☒ AIR ROTARY ☒ AUGER TYPE 6¼ H.S.A.
☐ REVERSE ROTARY ☐ OTHER

CENTRALIZERS USED
☒ YES, AT 5 TOTAL
☒ STAINLESS STEEL
☐ OTHER
☐ NO

MULTIPLE CASED WELLS
SUBMIT ADDITIONAL AS BUILT DIAGRAM SHOWING WELL CONSTRUCTION DETAILS INCLUDING TYPE AND SIZE OF ALL CASING, HOLE DIAMETERS, AND GROUT USED.

DATE WELL CONSTRUCTION WAS COMPLETED
6-20-95

I HEREBY CERTIFY THAT THE MONITORING WELL HEREIN DESCRIBED WAS CONSTRUCTED IN ACCORDANCE WITH THE DEPARTMENT OF NATURAL RESOURCES REQUIREMENTS FOR THE CONSTRUCTION OF MONITORING WELLS.

SIGNATURE (MONITORING WELL CONTRACTOR) Michael P. Vogt
PERMIT NUMBER OWI256WM DATE 7-27-95
SIGNATURE (DRILLING CONTRACTOR) Michael P. Vogt
PERMIT NUMBER OWI256WM DATE 7-27-95

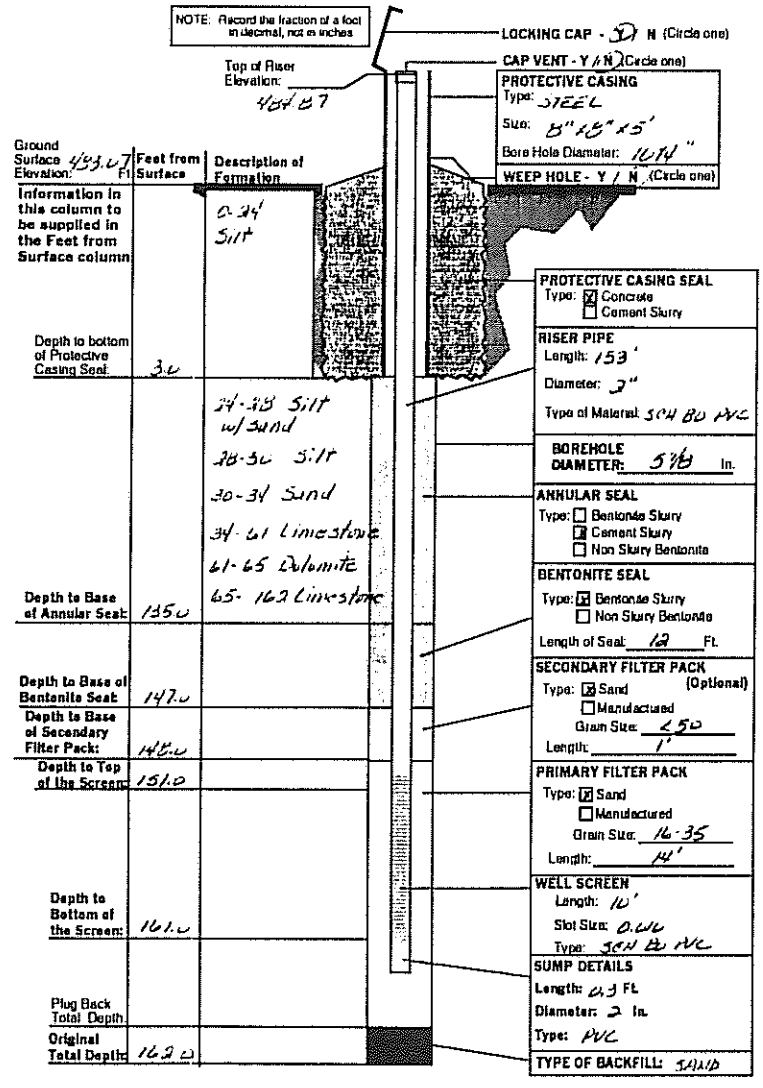

DISTRIBUTION: WHITE (RETURNED) CANARY (MONITORING WELL CONTRACTOR) PINK (OWNER)

LAIDLAW WASTE SYSTEMS INC.

SOIL BOREHOLE LOG

SITE NAME AND LOCATION

LAIDLAW/OU2 RI-FS/MO
WEST LAKE LANDFILL
OPERABLE UNIT 2

NORTHING: 1068496.19
DATUM EASTING: 516972.30 ELEVATION 483.6

DRILLING METHOD: 4.25 inch I.D. Hollow Stem Auger

SAMPLING METHOD:
SPLIT SPOON: 2.0 inch O.D./1.5 inch I.D. (SP)
SHELBY TUBE: 3.0 inch O.D./2 13/16 inch I.D. (SH)

BORING NO. PZ-200-SS

SHEET 1 OF 2

					DRILLING START	DRILLING FINISH
WATER LEVEL					TIME	TIME
TIME					10:56	14:05
DATE					DATE	DATE
CASING DEPTH					2/10/95	2/10/95

DRILL RIG CME 75 - TRUCK MOUNT
SURFACE CONDITIONS
ANGLE BEARING
SAMPLE HAMMER

DRILLING CONTR LAYNE-WESTERN

DEPTH IN FEET (ELEVATION)	BLOW/ 6 IN. ON SAMPLER	RECOVERY	SYMBOL	SAMPLER SYMBOL	SAMPLE NUMBER AND DESCRIPTION OF MATERIAL	SAMPLER TYPE	REMARKS
1							No sample 0.0-2.0 ft., due to gravel pad
					(481.6) 2.0		
2	6 8 8 6	0.8'/2.0' (40%)			(2.0-8.1 ft.) Very stiff, dark yellowish brown (10YR 4/2), homogenous, CLAYEY SILT, NR, moist, (CL-ML), (LOESS)	SP (2)	
3							
4	3 8 12 15	1.3'/2.0' (65%)				SP (3)	
5							
6		2.3'/2.0' (115%)				SH (4)	
7							
8	6 8 10 13	2.0'/2.0' (100%)			(8.1-16.5 ft.) Stiff to very stiff, light olive gray (5Y 6/1) to light brown (5YR 5/6), homogenous, mottled CLAYEY SILT, NR, damp, (CL-ML), (LOESS)	SP (5)	
9							
10	3 7 11 13	1.7'/2.0' (85%)				SP (6)	
11							
12	8 6 7 8	1.9'/2.0' (95%)				SP (7)	
13							
14		2.3'/2.0' (115%)				SH (8)	

LOGGED BY J. MILLER DATE 2/10/95 CHK'D BY W. HERST

JOB NO.: 943-2848

FILENAME: PZ200SS

LAIDLAW WASTE SYSTEMS INC.

SOIL BOREHOLE LOG

SITE NAME AND LOCATION

LAIDLAW/OU2 RI-FS/MO
WEST LAKE LANDFILL
OPERABLE UNIT 2

NORTHING: 1068496.19
DATUM EASTING: 516972.30 ELEVATION 483.6

DRILLING METHOD: 4.25 inch I.D. Hollow Stem Auger

SAMPLING METHOD:
SPLIT SPOON: 2.0 inch O.D./1.5 inch I.D. (SP)
SHELBY TUBE: 3.0 inch O.D./2 13/16 inch I.D. (SH)

					DRILLING START	DRILLING FINISH
WATER LEVEL						
TIME					10:56	14:05
DATE					2/10/95	2/10/95
CASING DEPTH						

BORING NO. PZ-200-SS

SHEET 2 OF 2

DRILL RIG CME 75 - TRUCK MOUNT

SURFACE CONDITIONS

ANGLE BEARING

SAMPLE HAMMER

DEPTH IN FEET (ELEVATION)	BLOW/ 6 IN. ON SAMPLER	RECOVERY	SYMBOL	SAMPLER SYMBOL	SAMPLE NUMBER AND DESCRIPTION OF MATERIAL	SAMPLER TYPE	REMARKS
16	4 5 7 9	1.5' 2.0' (75%)			(8.1-16.5 ft.) Stiff to very stiff, light olive gray (5Y 6/1) to light brown (5YR 5/6), homogenous, mottled CLAYEY SILT, NR, damp, (CL-ML), (LOESS)	SH (8)	
17					(16.5-19.7 ft.) Stiff, light olive gray (5Y 6/1) to moderate brown (5YR 4/4), homogenous, mottled CLAYEY SILT, NR, moist, (CL-ML), (LOESS)	SP (9)	
18	3 5 15 18	1.5' 2.0' (75%)				SP (10)	
19					(463.9) 19.7		
20	5 15 14 12	0.0' 2.0' (0%)			(19.7-20.5 ft.) Compact, moderate yellowish brown (10YR 5/4), homogenous, fine SAND, trace Silt, NR, dry, (SM), (ALLUVIUM) (463.1) 20.5	SP (11)	
21					(20.5-25.5 ft.) Very stiff, light olive gray (5Y 6/1) to light brown (5YR 5/6), stratified, CLAYEY SILT, mottled with black manganese stains, NR, moist, (CL-ML), (ALLUVIUM)		
22	5 6 9 9	1.2' 2.0' (60%)				SP (12)	
23							
24	8 14 26 28	1.4' 2.0' (70%)			@ 24.3 ft., <1 inch fine sand lenses	SP (13)	
25					(458.1) 25.5		
26	14 33 40/4"	0.7' 1.5' (54%)			(25.5-27.6 ft.) Dense, light brown (5YR 5/6), stratified, fine SAND, NR, dry, (SP), (ALLUVIUM)	SP (14)	
27					@ 27.3 ft., <1 inch clayey silt lenses (456.3) 27.3		2/10/95 - 14:05 Finish drilling at 27.3 ft. - hit bedrock
28					End of Soil Borehole Log at 27.3 ft. See PZ-200-SS Record of Drillhole for rock descriptions		End of soil borehole at 27.3 ft.
29							

DRILLING CONTR LAYNE-WESTERN

LOGGED BY J. MILLER CHK'D BY W. HERST

DATE 2/10/95

JOB NO.: 943-2848

FILENAME: PZ200SS

RECORD OF DRILLHOLE PZ-200-SS

Sheet 1 of 6

PROJECT: LAIDLAW/RI-FS
PROJECT NO: 943-2848
LOCATION: BRIDGETON, MO

BORING METHOD: NX core & water
DRILLING DATE: 2/10/95 -2/13/95
DRILL RIG: CME 75

DATUM: MSL
COORDINATES N: 1068456.2
AZIMUTH: 0

COLLAR ELEV: 483.61
E: 516972.2
INCLINATION: -90

ROCK TYPE: J-Joint, F-Fault, S-Shear, B-Bedding, F-Foliation; PL-Planar, C-Curved, U-Undulating, ST-Stepped, I-Irregular; P-Polished, K-Slikensided, SM-Smooth, R-Rough, VR-V. Rough; Fe-Fe Oxide, CL-Clay Infill, CH-Chlorite, H-Healed, GRF-Gravel Filled

DEPTH SCALE (FEET)	DESCRIPTION	GRAPHIC LOG	ELEV / DEPTH (FT)	RUN NO.	CORE RECOVERY	RQD (90 60 40 20)	FRACTURES PER FOOT (2 4 6 8 10)	DISCONTINUITY DATA: DIP wrt CORE AXIS (0 30 60 90)	DISCONTINUITY DATA: TYPE AND SURFACE DESCRIPTION	GRAPHIC LOG	WEATHERING INDEX (FR SW MW HW CW)	STRENGTH INDEX (R6 R5 R4 R3 R2 R1)	POINT LOAD INDEX (psi) (R1 R2 30 R3 150 R4 300 R5 600 R6 1500)	TEST ORIENTATION	NOTES WATER LEVELS INSTRUMENTATION
16	0.0-27.3 ft. See Soil Borehole Log PZ-200-SS														
18															
20															
22															
24															
26			456.31												2/10/95 @ 16:12 Start Run 1 16:16 Stop-no circulation, pull core, quit for the day at 16:30
	27.3-44.5 ft. 27.30 Slightly weathered, medium bedded, light olive gray (5Y 6/1), medium crystalline, weak, LIMESTONE, (ST. LOUIS FORMATION) Stylolitic, iron staining, calcite mineralization, 1 in. clay parting at 30.1 ft.		27.30						J,C,R (3)						2/11/95 Measure water level in augers, dry to 27.0 ft.
28				1	68%				J,I,R,calcite J,PL,R-CL J,PL-J,R J,PL,R (3) J,I,R J,PL,R (3) J,PL,R (2) J,I,R						
30			453.11						Core Loss						
			30.50						J,I,R J,PL,R-CL						2/11/95 @ 10:50
				2	100 %				J,I,R (4)						
32									J,I,R (3)						

DEPTH SCALE: 1:2
DRILLING CONTRACTOR: LAYNE-WESTERN
DRILLER: D. MAHURIN

LOGGED: J. MILLER
CHECKED: R. BOOTH
DATE: 3/9/95

Golder Associates

RECORD OF DRILLHOLE PZ-200-SS

Sheet 2 of 6

PROJECT: LAIDLAW/RI-FS
PROJECT NO: 843-2648
LOCATION: BRIDGETON, MO

BORING METHOD: NX core & water
DRILLING DATE: 2/10/95 -2/13/95
DRILL RIG: CME 75

DATUM: MSL
COORDINATES N: 1056496.2
AZIMUTH: 0

COLLAR ELEV: 483.61
E: 516972.2
INCLINATION: -90

ROCK TYPE

J-Joint, F-Fault, S-Shear, B-Bedding, F-Foliation
PL-Planar, C-Curved, U-Undulating, ST-Stepped, I-Irregular
P-Polished, K-Slickensided, SM-Smooth, R-Rough, VR-V. Rough
Fe-Fe Oxide, CL-Clay Infill, CH-Chlorite, H-Healed, GRF-Gravel Filled

DEPTH (FEET)	DESCRIPTION	GRAPHIC LOG	ELEV / DEPTH (FT)	RUN NO.	CORE RECOVERY	ROD (80 60 40 20)	FRACTURES PER FOOT (2 4 6 8 10)	DISCONTINUITY DATA: DIP wrt CORE AXIS (0 30 60 90)	DISCONTINUITY DATA: TYPE AND SURFACE DESCRIPTION	GRAPHIC LOG	WEATHERING INDEX (SW FR, MW, HW, WT CW)	STRENGTH INDEX (R6 R5 R4 R3 R2 R1)	POINT LOAD INDEX (psi) (R1 30, R2 150, R3 300, R4 600, R5 1500, R6)	TEST ORIENTATION	NOTES WATER LEVELS INSTRUMENTATION
32	27.3-44.5 ft. Slightly weathered, medium bedded, light olive gray (5Y 6/1), medium crystalline, weak, LIMESTONE, (ST. LOUIS FORMATION)								J,ST,R						
									J,I,R-calcite						
									J,PL,R-open						
									J,PL,R						
									J,I,R-open						
									J,I,R (4)						
34									J,C,R						
									J,PL,SM (2)						
									J,C,R-CL						
									J,C,R						
									J,I,R						
									J,PL,R						
									J,C,R-CL						
36				2	100 %										
									J,I,R,CL (2)						
									J,I,R-open						
38									J,I,R-CL (2)						
									J,I,R (2)						
									J,PL,R-open						
									J,PL,SM						
40			443.51 / 40.10						J,PL,R (2)						
									J,I,R-CL (2)						
									J,PL,SM-open						
									J,I,R (2)						
42									J,I,R (3)						
									J,I,R-CL-open (5)						
									J,I,R (2)						
44				3	100 %				J,PL,SM-open (3)						
	44.5-68.7 ft. Fresh, medium bedded, light olive gray (5Y 6/1), medium crystalline, medium strong, LIMESTONE, (ST. LOUIS FORMATION)								J,I,R						
									J,PL,R-open						
									J,I,R (2)						
46									J,I,R						
									J,I,R-open						
									J,I,R (2)						
48									J,I,R-CL						

DEPTH SCALE: 1:2
DRILLING CONTRACTOR: LAYNE-WESTERN
DRILLER: D. MAHURIN

LOGGED: J. MILLER
CHECKED: R. BOOTH
DATE: 3/9/95

Golder Associates

RECORD OF DRILLHOLE PZ-200-SS

PROJECT: LAIDLAW/RI-FS
PROJECT NO: 943-2848
LOCATION: BRIDGETON, MO

BORING METHOD: NX core & water
DRILLING DATE: 2/10/95 -2/13/95
DRILL RIG: CME 75

DATUM: MSL
COORDINATES N: 1068496.2
AZIMUTH: 0

COLLAR ELEV: 483.61
E: 516972.2
INCLINATION: -90

J-Joint, F-Fault, S-Shear, B-Bedding, F-Foliation
PL-Planar, C-Curved, U-Undulating, ST-Stepped, I-Irregular
P-Polished, K-Slickensided, SM-Smooth, R-Rough, VR-V. Rough
Fe-Fe Oxide, CL-Clay Infill, CH-Chlorite, H-Healed, GRF-Gravel Filled

DEPTH (FEET)	ROCK TYPE: DESCRIPTION	GRAPHIC LOG	ELEV / DEPTH (FT)	RUN NO	CORE RECOVERY	RQD (80 60 40 20)	FRACTURES PER FOOT (2 4 6 8 10)	DISCONTINUITY DATA: DIP w/r CORE AXIS (0 30 60 90)	TYPE AND SURFACE DESCRIPTION	GRAPHIC LOG	WEATHERING INDEX (SW FR, MW HW, CW)	STRENGTH INDEX (R5 R6, R4 R3, R2 R1)	POINT LOAD INDEX (psi) (R1 30, R2 150, R3 300, R4 600, R5 1500, R6)	TEST ORIENTATION	NOTES WATER LEVELS INSTRUMENTATION
48	44.5-68.7 ft. Fresh, medium bedded, light olive gray (5Y 6/1), medium crystalline, medium strong, LIMESTONE, (ST. LOUIS FORMATION)			3	100 %				J,I,R						
50	Argillaceous laminae, clay partings, stylolitic, brachiopod fossils		433.51 / 50.10												
52									J,PL,SM						
									J,PL,SM						
54									J,PL,SM						
				4	99%										
56									J,PL,SM						
									J,I,R						
									J,I,R						
58									J,I,R						
									J,I,R-CL (3)						
									J,I,R (2)						
									J,PL,SM-open						
									J,PL,SM-CL (3)						
60			423.51 / 60.10												
									J,PL,SM-CL (5)						
									J,PL,R						
									J,PL,R (2)						
									J,PL,SM-CL (2)						
62				5	85%										
									J,PL,R (2)						
									J,ST,R						
									J,PL,R						
	Argillaceous laminae, clay partings, stylolitic, brachiopods								J,PL,SM						
64															

DEPTH SCALE: 1:2
DRILLING CONTRACTOR: LAYNE-WESTERN
DRILLER: D. MAHURIN

LOGGED: J. MILLER
CHECKED: R. BOOTH
DATE: 3/9/95

Golder Associates

RECORD OF DRILLHOLE PZ-200-SS

PROJECT: LAIDLAW/RI-FS
PROJECT NO: 943-2848
LOCATION: BRIDGETON, MO

BORING METHOD: NX core & water
DRILLING DATE: 2/10/95 -2/13/95
DRILL RIG: CME 75

DATUM: MSL
COORDINATES N: 1066498.2
AZIMUTH: 0

COLLAR ELEV: 483.61
E: 518872.2
INCLINATION: -90

J-Joint, F-Fault, S-Shear, B-Bedding, F-Foliation
PL-Planar, C-Curved, U-Undulating, ST-Stepped, I-Irregular
P-Polished, K-Slickensided, SM-Smooth, R-Rough, VR-V. Rough
Fe-Fe Oxide, CL-Clay Infill, CH-Chlorite, H-Healed, GRF-Gravel Filled

DEPTH (FEET)	DESCRIPTION	GRAPHIC LOG	ELEV / DEPTH (FT)	RUN NO.	CORE RECOVERY	RQD	FRACTURES PER FOOT	DISCONTINUITY DATA: DIP wrt CORE AXIS	DISCONTINUITY DATA: TYPE AND SURFACE DESCRIPTION	GRAPHIC LOG	WEATHERING INDEX	STRENGTH INDEX	POINT LOAD INDEX (psi)	TEST ORIENTATION	NOTES WATER LEVELS INSTRUMENTATION
84	44.5-68.7 ft. Fresh, medium bedded, light olive gray (5Y 6/1), medium crystalline, medium strong, LIMESTONE, (ST. LOUIS FORMATION)								J,PL,SM-CL						
									J,PL,SM-CL						
86				5	85%				J,I,R-open (2)						
									J,PL,SM-CL						
									J,PL,R						
88															
	414.91		415.01												
	68.7-76.0 ft. 68.70 Slightly weathered, thickly bedded, light olive gray (5Y 6/1), fine grained, medium strong, ARENACEOUS DOLOMITE, (ST. LOUIS FORMATION)		68.60						J,I,R-intact						2/11/95 @ 16:30 Quit drilling for the day at 68.6 ft. after Run 5 2/12/95 @ 8:00 Begin coring Run 6
									J,I,R-intact						
70									J,I,R						
	Vuggy, fossiliferous								J,I,R-intact						
72									J,I,R-intact						
									J,PL,SM						
	73.0-74.0 ft. Medium crystalline, non-vuggy								J,I,R						
	Chert at 74.2-74.5 ft., fractured, solutionized immediately below			6	100 %				J,I,R						
74									J,I,R						
									J,I,R						
									J,I,R (2)						
									J,I,R						
	407.81								J,C,R-CL						
76	76.0-78.5 ft. 76.00 Fresh, thinly bedded, light olive gray (5Y 5/2), microcrystalline, medium strong, LIMESTONE, (ST. LOUIS FORMATION)								J,I,R-intact						
									J,I,SM-CL						
78															
	78.5-86.0 ft. Fresh, thinly bedded, yellowish gray (5Y 7/2), medium crystalline, weak, ARGILLACEOUS LIMESTONE, (ST. LOUIS FORMATION)		404.91 78.70												
				7	100 %				J,I,R-CL						
80															

DEPTH SCALE: 1:2
DRILLING CONTRACTOR: LAYNE-WESTERN
DRILLER: D. MAHURIN

LOGGED: J. MILLER
CHECKED: R. BOOTH
DATE: 3/9/95

Golder Associates

RECORD OF DRILLHOLE PZ-200-SS

PROJECT: LAIDLAW/RI-FS
PROJECT NO: 943-2848
LOCATION: BRIDGETON, MO

BORING METHOD: NX core & water
DRILLING DATE: 2/10/95 -2/13/95
DRILL RIG: CME 75

DATUM: MSL
COORDINATES N: 1068486.2
AZIMUTH: 0

COLLAR ELEV: 483.61
E: 518972.2
INCLINATION: -90

J-Joint, F-Fault, S-Shear, B-Bedding, F-Foliation
PL-Planar, C-Curved, U-Undulating, ST-Stepped, I-Irregular
P-Polished, K-Slickensided, SM-Smooth, R-Rough, VR-V. Rough
Fe-Fe Oxide, CL-Clay Infill, CH-Chlorite, H-Healed, GRF-Gravel Filled

DEPTH (FEET)	DESCRIPTION	GRAPHIC LOG	ELEV / DEPTH (FT)	RUN NO.	CORE RECOVERY	RQD	FRACTURES PER FOOT	DISCONTINUITY DATA: DIP wrt CORE AXIS	DISCONTINUITY DATA: TYPE AND SURFACE DESCRIPTION	GRAPHIC LOG	WEATHERING INDEX	STRENGTH INDEX	POINT LOAD INDEX (psi)	TEST ORIENTATION	NOTES WATER LEVELS INSTRUMENTATION
80	78.5-86.0 ft. Fresh, thinly bedded, yellowish gray (5Y 7/2), medium crystalline, weak, ARGILLACEOUS LIMESTONE, (ST. LOUIS FORMATION)							90	J,I,R-CL						
								90	J,I,R						
								90	J,I,R						
								60	J,I,R-calcite						
82								90	J,I,R						
								60	J,I,R						
								90	J,I,R						
								60	J,I,R						
								90	J,I,R						
84				7	100			90	J,I,R-CL						
								90	J,I,R-CL						
86	86.0-92.0 ft. Fresh, thickly bedded, light olive gray (5Y 6/1), microcrystalline, medium strong, ARGILLACEOUS LIMESTONE, (ST. LOUIS FORMATION)							90	J,I,R-CL						
								90	J,I,R-CL-intact						
								60	J,PL,SM						
88								90	J,I,R-CL						
			394.91												
			88.70												
	Stylolitic, brecciated, glauconite infillings 89.0-90.2 ft. Moderately weathered							60	J,I,R-CL						
90															
								90	J,I,R						
								60	J,I,R-CL						
				8	100			90	J,PL,SM-CL (2)						
	391.61														
92	92.0-98.7 ft. Fresh, thinly bedded, light olive gray (5Y 6/1), microcrystalline, medium strong, ARENACEOUS DOLOMITE, (ST. LOUIS FORMATION)		92.00					90	J,PL,SM (2)						
			389.91												
			93.70												
94				9	100										2/13/95 @ 12:53 Measure water level at 54.3 ft. below ground surface 2/14/95 @ 8:02 Measure water level at 69.5 ft. below ground surface 2/14/95 @ 17:15 Measure water level at 70.42 ft. below ground surface
								90	J,I,R						
96															

DEPTH SCALE: 1:2
DRILLING CONTRACTOR: LAYNE-WESTERN
DRILLER: D. MAHURIN

LOGGED: J. MILLER
CHECKED: R. BOOTH
DATE: 3/9/95

Golder Associates

RECORD OF DRILLHOLE PZ-200-SS

Sheet 6 of 6

PROJECT: LAIDLAW/RI-FS
PROJECT NO: 943-2648
LOCATION: BRIDGETON, MO

BORING METHOD: NX core & water
DRILLING DATE: 2/10/95 -2/13/95
DRILL RIG: CME 75

DATUM: MSL
COORDINATES N: 1058486.2
AZIMUTH: 0

COLLAR ELEV: 483.61
E: 518972.2
INCLINATION: -90

J-Joint, F-Fault, S-Shear, B-Bedding, F-Foliation
PL-Planar, C-Curved, U-Undulating, ST-Stepped, I-Irregular
P-Polished, K-Slickensided, SM-Smooth, R-Rough, VR-V. Rough
Fe-Fe Oxide, CL-Clay Infill, CH-Chlorite, H-Healed, GRF-Gravel Filled

DEPTH SCALE (FEET)	DESCRIPTION	GRAPHIC LOG	ELEV / DEPTH (FT)	RUN NO.	CORE RECOVERY	RQD	FRACTURES PER FOOT	DISCONTINUITY DATA: DIP wrt CORE AXIS	DISCONTINUITY DATA: TYPE AND SURFACE DESCRIPTION	GRAPHIC LOG	WEATHERING INDEX: SW FR, MW, HW, CW	STRENGTH INDEX: R6 R5 R4 R3 R2 R1	POINT LOAD INDEX (psi): R1 30, R2 150, R3 300, R4 600, R5 1500, R6	TEST ORIENTATION	NOTES WATER LEVELS INSTRUMENTATION
96	92.0-98.7 ft. Fresh, thinly bedded, light olive gray (5Y 6/1), microcrystalline, medium strong, ARENACEOUS DOLOMITE. (ST. LOUIS FORMATION)			9	100 %	80 60 40 20	2 4 6 8 10	0 30 60 90	J,I,R J,I,R-CL J,I,R J,I,R-CL J,PL,SM						
98															
	384.91		384.91												
	End of Record of Drillhole at 98.7 ft. 98.70		98.70												
100															
102															
104															
106															
108															
110															
112															

DEPTH SCALE: 1:2
DRILLING CONTRACTOR: LAYNE-WESTERN
DRILLER: D. MAHURIN

LOGGED: J. MILLER
CHECKED: R. BOOTH
DATE: 3/9/95

Golder Associates

Well No. PZ-200-SS

Boring No. X-Ref: PZ-200-SS

PIEZOMETER CONSTRUCTION SUMMARY

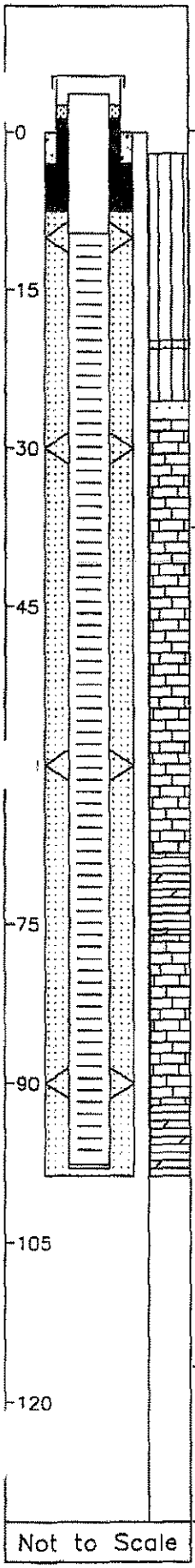

Not to Scale

Survey Coords: Northing: 1068496 ft.
Easting: 516972 ft.

Elevation Ground Level 483.6 ft. NGVD
Top of PVC Casing 485.63 ft. NGVD

Drilling Summary:

Total Depth 98.7 ft.
Borehole Diameter 10 1/4 in. (0.0-27.5 ft.) 5 7/8 in. (27.5-98.3 ft.)
Casing Stickup Height 2.02 ft.
Driller Layne-Western
St. Louis, MO

Rig CME 75, Schramm Portadrill T660H
Bit(s) 6 1/4 in. ID Hollow Stem Auger Bit,
NX Core, 5 7/8 in. Button Bit for Reaming
Drilling Fluid Auger-None, NX Core Water,
Air Rotary
Protective Casing 8x8 in. Square Steel, by 5 ft. long

Construction Time log:

Task	Start Date	Start Time	Finish Date	Finish Time
Drilling				
CME 75	2/10/95	10:56	2/10/95	14:05
Schramm Rotary	2/28/95	7:30	2/28/95	9:30
Geophys.Logging:				
Casing:	2/28/95	9:45	2/28/95	10:10
Filter Placement:	2/28/95	10:30	2/28/95	11:30
Cementing:				
Development				
Bentonite Grout Bentonite Seal	2/28/95	11:30	2/28/95	11:45

Well Design & Specifications

Basis: Geologic Log X Geophysical Log
Casing string(s): C = Casing S = Screen

Depth			String(s)	Elevation		
+ 2.02	-	9.62	C1	485.63	-	473.99
9.62	-	97.64	S1	473.99	-	385.97
97.64	-	97.97	C2	385.97	-	385.64

Casing: C1 2 in. Schedule 80 PVC, flush threaded with O-rings
C2 2 in. dia. threaded PVC end cap (4 in. long or 0.33 ft.)
Screen: S1 2 in. dia. Schedule 80 PVC, 0.010 in. machine cut slot, flush threaded with O-rings
Sand Pack: 16-35 mesh Silica Sand, 7.5-98.7 ft.
Filter Pack:
Grout Seal:
Bentonite Seal: Medium Bentonite Chips, 3.0-7.5 ft.
Concrete: 0.0-3.0 ft.

Well Development

Stabilization Test Data:

Time	pH	Spec. Cond.	Temp (°C)

Recovery Data:

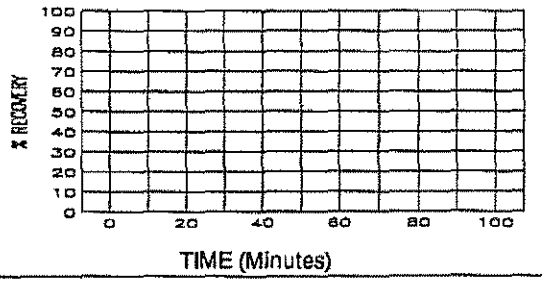

Comments:

Supervised by B. Tilton
Job Number 943-2848
Site LAIDLAW/OU2 RI-FS/MO
File Name PZ200SS

561574

MISSOURI DEPARTMENT OF NATURAL RESOURCES
DIVISION OF GEOLOGY AND LAND SURVEY

MONITORING WELL CERTIFICATION RECORD

OFFICE USE ONLY	
REF NO 115084	DATE RECEIVED
ROUTE	CHECK NO.
STATE WELL NUMBER	TRANSMITTAL NO.
CHECKED BY	CROSS REFERENCE NO.
APPROVED BY	ENTERED Ph 1 Ph 2 Ph 3
	DATE APPROVED

INFORMATION SUPPLIED BY OWNER

SITE NAME	WELL NUMBER	
LAIDLAW BRIDGETON SANITARY LANDFILL	~~RW-100-55~~ PZ-200-55	
SITE ADDRESS: ST. CHARLES ROCK RD.	CITY: BRIDGETON	STATE: MO ZIP CODE: 63044
NAME: LAIDLAW WASTE SYSTEMS, INC.		TELEPHONE: 314-341-3710
ADDRESS: 1138 N. BROADWAY	CITY: ST. LOUIS	STATE: MO. ZIP CODE: 63102

INFORMATION SUPPLIED BY MONITORING WELL CONTRACTOR

LOCATION OF WELL SHOW LOCATION IN SECTION PLAT

COUNTY: ST. LOUIS
ELEVATION: 493.61
AREA NO:

SMALLEST ¼ ____ ¼ ____ ¼ ____ ¼ LARGEST ¼

SEC. ____ TWN. 47 N,RNG. 5 E OR W

LAT. 38 ° 46 ' 07 " LONG. 90 ° 26 ' 26 "

SKETCH THE LOCATION TO THE WELL INCLUDING MILEAGE ON ALL ROADS TRAVELED FROM NEAREST TOWNS OR HIGHWAYS

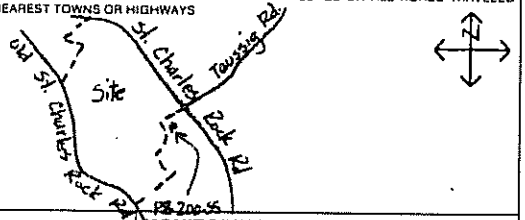

DESCRIBE LOCATION OF THE WELL SO WE WOULD BE ABLE TO VISIT IT

MONITORING WELL INSTALLATION CONTRACTOR'S NAME
LAYNE WESTERN CO, INC.

DRILLING CONTRACTOR'S NAME
LAYNE WESTERN CO, INC.

TYPE OF INSTALLATION: ☒ ABOVE GROUND ☐ FLUSH MOUNT

STATIC WATER LEVEL ____ FEET FROM MEASURING POINT

DATE OF STATIC WATER LEVEL

ELEVATION OF MEASURING POINT

MEASURING POINT IS ☐ TOP OF RISER PIPE ☐ OTHER ____

DRILLING EQUIPMENT: ☒ AIR ROTARY ☒ AUGER TYPE 6¼ H.S.A. ☐ REVERSE ROTARY ☐ OTHER ____

CENTRALIZERS USED ☐ YES, AT 1 WITNL ☐ STAINLESS STEEL ☐ OTHER ____ ☐ NO

MULTIPLE CASED WELLS

SUBMIT ADDITIONAL AS BUILT DIAGRAM SHOWING WELL CONSTRUCTION DETAILS INCLUDING TYPE AND SIZE OF ALL CASING, HOLE DIAMETERS, AND GROUT USED.

DATE WELL CONSTRUCTION WAS COMPLETED: 2-28-95

I HEREBY CERTIFY THAT THE MONITORING WELL HEREIN DESCRIBED WAS CONSTRUCTED IN ACCORDANCE WITH THE DEPARTMENT OF NATURAL RESOURCES REQUIREMENTS FOR THE CONSTRUCTION OF MONITORING WELLS.

SIGNATURE (MONITORING WELL CONTRACTOR): Michael P. Vogl
PERMIT NUMBER: 001256 WIA DATE: 4-11-95

SIGNATURE (DRILLING CONTRACTOR): Michael P. Vogl
PERMIT NUMBER: 001256 WIA DATE: 4-11-95

NOTE: Record the fraction of a foot in decimal, not in inches

Top of Riser Elevation: 495.63

Ground Surface Elevation: 493.61 Ft

Information in this column to be supplied in the Feet from Surface column	Feet from Surface	Description of Formation
		0-27 Silt
Depth to bottom of Protective Casing Seal:	3	
Depth to Base of Annular Seal:	3	
Depth to Base of Bentonite Seal:	7.5	
Depth to Base of Secondary Filter Pack:		
Depth to Top of the Screen:	9.6	
		27-37 Sandstone
		37-68 Limestone
Depth to Bottom of the Screen:	47.6	68-76 Dolomite
		76-93 Limestone
Plug Back Total Depth:		73-76 Dolomite
Original Total Depth:	99.7	

LOCKING CAP - Y / N (Circle one)
CAP VENT - Y / N (Circle one)
PROTECTIVE CASING Type: Size: Bore Hole Diameter:
WEEP HOLE - Y / N (Circle one)

PROTECTIVE CASING SEAL Type: ☒ Concrete ☐ Cement Slurry
RISER PIPE Length: 11.63' Diameter: 2" Type of Material: SCH80 PVC
BOREHOLE DIAMETER: 5 7/8 In.
ANNULAR SEAL Type: ☐ Bentonite Slurry ☐ Cement Slurry ☐ Non Slurry Bentonite
BENTONITE SEAL Type: ☐ Bentonite Slurry ☒ Non Slurry Bentonite Length of Seal: 4.5 Ft
SECONDARY FILTER PACK Type: ☐ Sand ☐ Manufactured (Optional) Grain Size: Length:
PRIMARY FILTER PACK Type: ☒ Sand ☐ Manufactured Grain Size: 16-35 Length: 91.2
WELL SCREEN Length: 10' Slot Size: 0.010" Type: SCH80 PVC
SUMP DETAILS Length: 0.3 Ft. Diameter: 2 In. Type: PVC
TYPE OF BACKFILL: SAND

MO 780-1415 (2-94) DISTRIBUTION: WHITE DIVISION CANARY: MONITORING WELL CONTRACTOR PINK: OWNER

LAIDLAW
LAIDLAW WASTE SYSTEMS INC.

SOIL BOREHOLE LOG

SITE NAME AND LOCATION LAIDLAW\RI-FS\MO WEST LAKE LANDFILL OPERABLE UNIT 2	DRILLING METHOD: 4.25 inch I.D. Hollow Stem Auger	BORING NO. PZ-201-SS
	SAMPLING METHOD: SPLIT SPOON: 2.0 inch O.D./1.5 inch I.D. (SP) SHELBY TUBE: 3.0 inch O.D./2 13/16 inch I.D. (SH)	SHEET 1 OF 3

					DRILLING START	DRILLING FINISH
WATER LEVEL					TIME	TIME
TIME					8:30	10:30
DATE					DATE	DATE
CASING DEPTH					2/15/95	2/15/95

DATUM NORTHING: 1067819.55 EASTING: 516862.06 ELEVATION 478.0

DRILL RIG CME 75 - TRUCK MOUNT

SURFACE CONDITIONS

ANGLE BEARING

SAMPLE HAMMER

DEPTH IN FEET (ELEVATION)	BLOW/ 6 IN. ON SAMPLER	RECOVERY	SYMBOL	SAMPLER SYMBOL	SAMPLE NUMBER AND DESCRIPTION OF MATERIAL	SAMPLER TYPE	REMARKS
1	2 2 3 3	2.0' / 2.0' (100%)			(0.0-3.4 Ft.) Firm, dark yellowish brown (10YR 4/2), CLAYEY SILT, NR, damp, (CL-ML), (LOESS)	SP 1	
2 3	2 2 4 5	1.3' / 2.0' (65%)				SP 2	
4 5	1 2 3 3	2.0' / 2.0' (100%)			(3.4-17.4 Ft.) Soft to firm, yellowish brown (10YR 6/2), CLAYEY SILT, trace fine Sand, little iron staining and black organic nodules, NR, moist, (CL-ML), (LOESS)	SP 3	
6 7	1 2 3 4	2.0' / 2.0' (100%)				SP 4	Air monitoring 9:00 20% O2 0.0 ppm H2S 0% LEL 0.0 ppm PID
8 9	2 4 3 4	2.0' / 2.0' (100%)				SP 5	
10 11	1 2 2 2	2.0' / 2.0' (100%)				SP 6	
12 13	1 1 1 2	2.0' / 2.0' (100%)				SP 7	Air monitoring 9:15 20% O2 0.0 ppm H2S 0% LEL 0.0 ppm PID
14	1 1 2 3	2.0' / 2.0' (100%)				SP 8	

DRILLING CONTR LAYNE-WESTERN

LOGGED BY J. MILLER CHK'D BY W. HERST

DATE 2/15/95

JOB NO.: 943-2848

FILENAME: PZ201SS

LAIDLAW WASTE SYSTEMS INC.

SOIL BOREHOLE LOG

SITE NAME AND LOCATION	DRILLING METHOD:		BORING NO.
	4.25 inch I.D. Hollow Stem Auger		PZ-201-SS
			SHEET 2 OF 3
	SAMPLING METHOD:		DRILLING
LAIDLAW\RI-FS\MO WEST LAKE LANDFILL OPERABLE UNIT 2	SPLIT SPOON: 2.0 inch O.D./1.5 inch I.D. (SP)		START / FINISH
	SHELBY TUBE: 3.0 inch O.D./2 13/16 inch I.D. (SH)		
	WATER LEVEL		TIME 8:30 / TIME 10:30
	TIME		
	DATE		DATE 2/15/95 / DATE 2/15/95
NORTHING: 1067819.55 DATUM EASTING: 516862.06 ELEVATION 478.0	CASING DEPTH		

DRILL RIG CME 75 - TRUCK MOUNT — SURFACE CONDITIONS

ANGLE — BEARING

SAMPLE HAMMER

DEPTH IN FEET (ELEVATION)	BLOW/ 6 IN. ON SAMPLER	RECOVERY	SYMBOL	SAMPLER SYMBOL	SAMPLE NUMBER AND DESCRIPTION OF MATERIAL	SAMPLER TYPE	REMARKS
16	1 5 6 7	1.3' / 2.0' (65%)			(3.4-17.4 Ft.) Soft to Firm, yellowish brown (10YR 6/2), CLAYEY SILT, trace fine Sand, little iron staining and black organic nodules, NR, moist, (CL-ML), (LOESS) @ 15.5-16.0 Ft., CLAYEY SILT becomes wet	SP 8	
17					(460.6) 17.4	SP 9	
18		0.5' / 2.0' (25%)			(17.4-20.5 Ft.) Compact, pale yellowish brown (10YR 5/4), fine SAND, little Silt, NR, damp, (SP), (ALLUVIUM)		
19						SH 10	
20	3 3 5 5	1.5' / 2.0' (75%)			(457.5) 20.5		
21	6				(20.5-30.0 Ft.) Firm to stiff, olive gray (5Y 4/1) to moderate yellowish brown (10YR 5/4), laminated CLAYEY SILT, NR, moist, (CL-ML), (LACUSTRINE)	SP 11	
22	3 5 6 7	1.2' / 2.0' (60%)				SP 12	
23							
24	3 5 7 8	1.7' / 2.0' (85%)			@ 23.7-24.0 Ft., medium dark gray (N4), SILTY fine sand layer, damp, (SM)	SP 13	
25					@ 24.8, 25.2, and 25.6 Ft., thin silty fine sand layers (<1 inch)		
26		1.8' / 2.0' (90%)				SH 14	
27							
28	13 50/3"	0.6' / 2.0' (30%)				SP 15	
29					@ 29.0 Ft., limestone rock encountered		

DRILLING CONTR LAYNE-WESTERN

LOGGED BY J. MILLER CHK'D BY W. HERST

DATE 2/15/95

JOB NO.: 943-2848

FILENAME: PZ201SS

LAIDLAW WASTE SYSTEMS INC.

SOIL BOREHOLE LOG

SITE NAME AND LOCATION

LAIDLAW\RI-FS\MD
WEST LAKE LANDFILL
OPERABLE UNIT 2

NORTHING: 1067819.55
DATUM EASTING: 516862.06 ELEVATION 478.0

DRILLING METHOD: 4.25 inch I.D. Hollow Stem Auger

SAMPLING METHOD:
SPLIT SPOON: 2.0 inch O.D./1.5 inch I.D. (SP)
SHELBY TUBE: 3.0 inch O.D./2 13/16 inch I.D. (SH)

					DRILLING START	DRILLING FINISH
WATER LEVEL					TIME	TIME
TIME					8:30	10:30
DATE					DATE	DATE
CASING DEPTH					2/15/95	2/15/95

BORING NO. PZ-201-SS

SHEET 3 OF 3

DRILL RIG CME 75 - TRUCK MOUNT

SURFACE CONDITIONS

ANGLE BEARING

SAMPLE HAMMER

DRILLING CONTR LAYNE-WESTERN

LOGGED BY J. MILLER DATE 2/15/95 CHK'D BY W. HIRST

JOB NO.: 943-2848

FILENAME: PZ201SS

DEPTH IN FEET (ELEVATION)	BLOW/ 6 IN. ON SAMPLER	RECOVERY	SYMBOL	SAMPLER SYMBOL	SAMPLE NUMBER AND DESCRIPTION OF MATERIAL	SAMPLER TYPE	REMARKS
31	10 12 6 6	1.5' 2.0' (75%)			(30.0-30.7 ft.) Very stiff, medium gray (N4), CLAYEY SILT, some fine Gravel, little Fine to coarse Sand, NR, moist, (CL-ML), (ALLUVIUM) (447.3) 30.7	SP (16)	Air monitoring 10:30 20% O2 0.0 ppm H2S 0% LEL 0.0 ppm PID
32	50/5"	0.3' 1.0' (30%)			(30.7-32.0 ft.) Stiff, dark greenish gray (5G 4/1), SILTY CLAY, trace Fine sand, contains pieces of weathered limestone, NR-SR, damp, (CL), (ALLUVIUM) (445.0) 33.0	SP (17)	
33					End of Soil Borehole Log at 32.0 ft. See PZ-201-SS Record of Drillhole for rock descriptions		
34							
35							
36							
37							
38							
39							
40							
41							
42							
43							
44							

RECORD OF DRILLHOLE PZ-201-SS

Sheet 1 of 4

PROJECT: LAIDLAW/RI-FS
PROJECT NO: 943-2646
LOCATION: BRIDGETON, MO

BORING METHOD: NX Core & water
DRILLING DATE: 2/15/95
DRILL RIG: CME 75

DATUM: MSL
COORDINATES N: 1067619.55
AZIMUTH: 0

COLLAR ELEV: 481.05
E: 518582.08
INCLINATION: -90

J-Joint, F-Fault, S-Shear, B-Bedding, F-Foliation
PL-Planar, C-Curved, U-Undulating, ST-Stepped, I-Irregular
P-Polished, K-Slickensided, SM-Smooth, R-Rough, VR-V. Rough
Fe-Fe Oxide, CL-Clay Infill, CH-Chlorite, H-Healed

DEPTH (FEET)	DESCRIPTION	GRAPHIC LOG	ELEV / DEPTH (FT)	RUN NO	CORE RECOVERY	RQD (80 60 40 20)	FRACTURES PER FOOT (2 4 6 8 10)	DISCONTINUITY DATA: DIP w/rt CORE AXIS (0 30 60 90) TYPE AND SURFACE DESCRIPTION	GRAPHIC LOG	WEATHERING INDEX (SW FR, MW, HW, CW)	STRENGTH INDEX (R6 R5 R4 R3 R2 R1)	POINT LOAD INDEX (psi) (R1 3.0, R2 150, R3 300, R4 600, R5 1500, R6)	TEST ORIENTATION	NOTES WATER LEVELS INSTRUMENTATION
32	0.0-32.8 ft. See Soil Borehole Log PZ-201-SS		448.25											
	32.8-38.7 ft. Slightly weathered, thinly bedded, light olive gray (5Y 6/1), medium crystalline, weak, CRYSTALLINE LIMESTONE, (ST. LOUIS FORMATION) Stylolitic, calcite crystals (<1 cm.)		32.80	1	94%			J,PL,R,CL (2)						
34			446.55											
			34.50					J,I,R						
								J,I,R						
								J,PL,SM-intact						
36								J,I,R						
								J,I,R,CL						
								J,PL,SM,CL-intact						
								J,I,R,CL						
				2	100%			J,PL,S,CL						
38								J,PL,SM,CL						
								J,I,R,CL						
								J,PL,SM,CL-intact						
	38.7-49.5 ft. Slightly weathered, medium bedded, light olive gray (5Y 6/1) to greenish gray (5GY 6/1), fine crystalline, medium strong, CRYSTALLINE LIMESTONE, (ST. LOUIS FORMATION) Weathered, pyrite nodules (<2 mm.), stylolitic							J,I,R,CL (2)						
								J,I,R,CL						
			441.55											
			39.50					J,I,R						
40								J,I,R,CL						
								J,I,R						
								J,I,R,CL						
								J,I,R,CL (3)						
42								J,P,SM,CL						
								J,I,R,CL (2)						
								J,P,SM,CL (2)						
				3	100%			J,I,R,CL (3)						
44								J,PL,SM,CL						
								J,PL,SM,CL						
								J,PL,SM,CL						
								J,PL,SM,CL						
								J,PL,SM,CL						
46								J,PL,SM,CL (2)						
								J,PL,SM,CL						
								J,PL,SM,CL (3)						
								J,PL,SM,CL (2)						
								J,PL,SM,CL						
48								J,PL,SM						

DEPTH SCALE: 1:2
DRILLING CONTRACTOR: LAYNE-WESTERN
DRILLER: D. MAHURIN

LOGGED: B. TILTON
CHECKED: W. HERST
DATE: 3/2/95

Golder Associates

RECORD OF DRILLHOLE PZ-201-SS

PROJECT: LAIDLAW/RI-FS
PROJECT NO: 943-2848
LOCATION: BRIDGETON, MO

BORING METHOD: NX Core & water
DRILLING DATE: 2/15/95
DRILL RIG: CME 75

DATUM: MSL
COORDINATES N: 1067819.55
AZIMUTH: 0

COLLAR ELEV: 481.05
E: 516862.08
INCLINATION: -90

J-Joint, F-Fault, S-Shear, B-Bedding, F-Foliation
PL-Planar, C-Curved, U-Undulating, ST-Stepped, I-Irregular
P-Polished, K-Slickensided, SM-Smooth, R-Rough, VR-V. Rough
Fe-Fe Oxide, CL-Clay Infill, CH-Chlorite, H-Healed

DEPTH (FEET)	DESCRIPTION	GRAPHIC LOG	ELEV / DEPTH (FT)	RUN NO	CORE RECOVERY	ROD	FRACTURES PER FOOT	DISCONTINUITY DATA: DIP wrt CORE AXIS	DISCONTINUITY DATA: TYPE AND SURFACE DESCRIPTION	GRAPHIC LOG	WEATHERING INDEX	STRENGTH INDEX	POINT LOAD INDEX (psi)	TEST ORIENTATION	NOTES WATER LEVELS INSTRUMENTATION
48	38.7-49.5 ft. Slightly weathered, medium bedded, light olive gray (5Y 6/1) to greenish gray (5GY 6/1), fine crystalline, medium strong, CRYSTALLINE LIMESTONE, (ST. LOUIS FORMATION) Weathered, pyrite nodules (<2 mm.), stylolitic								J,PL,SM,CL						
				3	100				J,PL,SM,CL						@ 49.5 ft. Drilling rate slows down
			431.55												
			49.50						J,I,R (2)						
50	49.5-59.5 ft. Fresh, medium bedded, olive gray (5Y 6/1), micro-crystalline, strong, CRYSTALLINE LIMESTONE, (ST. LOUIS FORMATION) Fossiliferous, stylolites														
									B,I,R						
	50.9-51.8 ft. Argillaceous Limestone @ 51.5 ft. Light olive gray (5Y 6/1), Clay seam (~1/2 in.)														
52									J,P,R						
54	54.0-55.0 ft. Moderately silicified Limestone								B,I,R (3)						
				4	100				J,C-intact						
	55.0-55.1 ft. Light brown (5YR 5/6), chert zone								B,PL,R						
									B,PL,SM						
56									J,PL,SM,CL (2)						
									J,PL,SM,CL (2)						
58									J,I,R						
	@ 58.4 ft. Light brown (5G 6/1), Clay seam (~1/2 in.)														
									J,P,R						
			421.55												
	59.5-69.5 ft. Fresh, medium to thinly bedded, light olive gray (5Y 6/1), fine grained, medium strong, LIMESTONE, (ST. LOUIS FORMATION) Stylolites common, medium grained calcite crystals		59.50												2/15/95 @ 16:00 Stop drilling 2/20/95 @ 8:30 Begin drilling @ 59.5 ft.
60									J,I,VR						
									J,I,VR (3)						
				5	100				J,I,R (3)						
62									J,I,R						
									J,I,R (2)						
									J,I,R (2)						
64															

DEPTH SCALE: 1:2
DRILLING CONTRACTOR: LAYNE-WESTERN
DRILLER: D. MAHURIN

LOGGED: B. TILTON
CHECKED: W. HERST
DATE: 3/2/95

Golder Associates

RECORD OF DRILLHOLE PZ-201-SS

PROJECT: LAIDLAW/RI-FS
PROJECT NO: 943-2846
LOCATION: BRIDGETON, MO

BORING METHOD: NX Core & water
DRILLING DATE: 2/15/95
DRILL RIG: CME 75

DATUM: MSL
COORDINATES N: 1067819.55
AZIMUTH: 0

COLLAR ELEV: 481.05
E: 515662.06
INCLINATION: -90

J-Joint, F-Fault, S-Shear, B-Bedding, F-Foliation
PL-Planar, C-Curved, U-Undulating, ST-Stepped, I-Irregular
P-Polished, K-Slikensided, SM-Smooth, R-Rough, VR-V. Rough
Fe-Fe Oxide, CL-Clay Infill, CH-Chlorite, H-Healed

DEPTH (FEET)	DESCRIPTION	ELEV / DEPTH (FT)	RUN NO.	CORE RECOVERY	TYPE AND SURFACE DESCRIPTION
64	59.5-69.5 ft. Fresh, medium to thinly bedded, light olive gray (5Y 6/1), fine grained, medium strong, LIMESTONE, (ST. LOUIS FORMATION) Stylolites common, medium grained calcite crystals				
66			5	100 %	
68					J,I,R,CL,Fe
		411.55			
	69.5-89.5 ft. Fresh, medium bedded, light olive gray (5Y 6/1), f-m grained, medium strong, LIMESTONE, (ST. LOUIS FORMATION) Stylolites common	69.50			
70					J,I,R,Fe
					J,I,R
72					J,I,R
					J,I,R
74					J,I,R
	@ 75.0 and 76.5 ft. Medium bluish gray (5B 5/1), glauconite zones (less than 1 in.)		6	100 %	J,U,K,CL
					B,U,K,CL
	75.2-75.6 ft. Medium bluish gray (5B 5/1), chert layer				J,U,SM
76	75.6-77.1 ft. Argillaceous, moderately porous, some open vugs (<2 mm.)				
					B,I,R,CL
					J,I,R
78	78.0-79.5 ft. Moderate to highly weathered fractures				J,I,R
					J,I,R
		401.55			
		79.50	7	96%	
80					

DEPTH SCALE: 1:2
DRILLING CONTRACTOR: LAYNE-WESTERN
DRILLER: D. MAHURIN

LOGGED: B. TILTON
CHECKED: W. HERST
DATE: 3/2/95

Golder Associates

RECORD OF DRILLHOLE PZ-201-SS

Sheet 4 of 4

PROJECT: LAIDLAW/RI-FS
PROJECT NO: 943-2848
LOCATION: BRIDGETON, MO

BORING METHOD: NX Core & water
DRILLING DATE: 2/15/95
DRILL RIG: CME 75

DATUM: MSL
COORDINATES N: 1067819.55
AZIMUTH: 0

COLLAR ELEV: 481.05
E: 516852.06
INCLINATION: -90

J-Joint, F-Fault, S-Shear, B-Bedding, F-Foliation
PL-Planar, C-Curved, U-Undulating, ST-Stepped, I-Irregular
P-Polished, K-Slikensided, SM-Smooth, R-Rough, VR-V. Rough
Fe-Fe Oxide, CL-Clay Infill, CH-Chlorite, H-Healed

DEPTH (FEET)	DESCRIPTION	GRAPHIC LOG	ELEV / DEPTH (FT)	RUN NO.	CORE RECOVERY	ROD (80 60 40 20)	FRACTURES PER FOOT (2 4 6 8 10)	DISCONTINUITY DATA: DIP wrt CORE AXIS (0 30 60 90)	TYPE AND SURFACE DESCRIPTION	GRAPHIC LOG	WEATHERING INDEX (SW FR MW HW CW)	STRENGTH INDEX (R6 R5 R4 R3 R2 R1)	POINT LOAD INDEX (psi) (R1 10 R2 150 R3 300 R4 600 R5 1500 R6)	TEST ORIENTATION	NOTES WATER LEVELS INSTRUMENTATION
80	69.5-89.5 ft. Fresh, medium bedded, light olive gray (5Y 6/1), f-m grained, medium strong, LIMESTONE, (ST. LOUIS FORMATION) Stylolites common 81.3-81.4 ft. Medium dark gray (N4), Claystone laminae @ 81.6 ft. Becoming intermittently siliceous (zones <1 in. thick), some pyritized fractures/vugs								J,U,R,Fe						@ 80.7 ft. Core loss
									J,I,R						
									J,PL,SM						
									J,I,R						
82									J,I,K						
									J,I,R						
				7	90%										
84									J,I,R						
									J,I,R						
									J,I,R						
									J,I,R						
86	@ 85.5 and 86.5 ft. Thin zones of glauconite in fractures								J,I,R,CL						
									J,I,R,CL						
			393.55 87.50												
									J,I,R						
88									J,I,R						
				8	85%										
									J,I,R,CL						
	391.55		391.55												
	End of Record of Drillhole at 89.5 ft. 89.50		89.50												
90															
92															
94															
96															

DEPTH SCALE: 1:2
DRILLING CONTRACTOR: LAYNE-WESTERN
DRILLER: D. MAHURIN

LOGGED: B. TILTON
CHECKED: W. HERST
DATE: 3/2/95

Golder Associates

Well No. PZ-201-SS

Boring No. X-Ref: PZ-201-SS

PIEZOMETER CONSTRUCTION SUMMARY

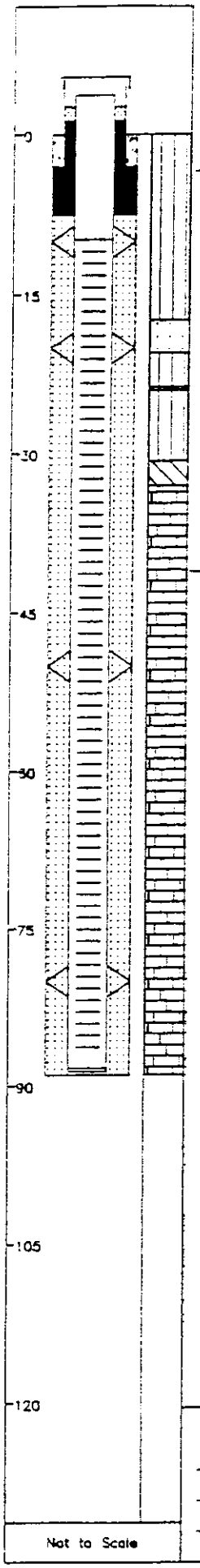

Survey Coords: Northing: 1067820 ft.
Easting: 516862 ft.

Elevation Ground Level 478.0 ft. NGVD
Top of PVC Casing 480.33 ft. NGVD

Drilling Summary:

Total Depth 89.0 ft.
Borehole Diameter 6 1/4 in. (0.0–33.3 ft.) 5 7/8 in. (33.0–89.0 ft.)
Casing Stickup Height 2.32 ft.
Driller Layne-Western
St. Louis, MO

Rig CME 75, Schramm Portacrill T660H
Bit(s) 6 1/4 in. ID Hollow Stem Auger Bit,
NX Core, 5 7/8 in. Button Bit for Reaming
Drilling Fluid Auger-None, NX Core Water,
Air Rotary
Protective Casing 8x8 in. Square Steel, by 5 ft. long

Construction Time log:

Task	Start Date	Start Time	Finish Date	Finish Time
Drilling				
CME 75	2/15/95	8:30	2/15/95	10:30
Schramm Rotary	3/6/95	15:30	3/6/95	16:00
Geophys.Logging:				
Casing:	3/6/95	16:00	3/6/95	16:15
Filter Placement:	3/6/95	16:00	3/6/95	17:40
Cementing:				
Development				
Bentonite Grout				
Bentonite Seal	3/6/95	17:40	3/6/95	17:45

Well Design & Specifications

Basis: Geologic Log X Geophysical Log
Casing string(s): C = Casing S = Screen

Depth			String(s)	Elevation		
+ 2.32	-	9.75	C1	480.33	-	468.29
9.75	-	88.31	S1	468.26	-	389.70
88.31	-	88.64	C2	389.70	-	389.37
	-				-	
	-				-	
	-				-	

Casing: C1 2 in. dia. Schedule 80 PVC, flush threaded with O-rings
C2 2 in. dia. threaded PVC end cap (4 in. long or 0.33 ft.)
Screen: S1 2 in. dia. Schedule 80 PVC, 0.010 in. machine cut slot, flush threaded with O-rings
Sand Pack: 16-35 mesh Silica Sand, 7.5-89.0 ft.
Filter Pack:
Grout Seal:
Bentonite Seal: Medium Bentonite Chips, 3.0-7.5 ft.
Concrete: 0.0-3.0 ft.

Well Development

Stabilization Test Data:

Time	pH	Spec. Cond.	Temp (°C)

Recovery Data:

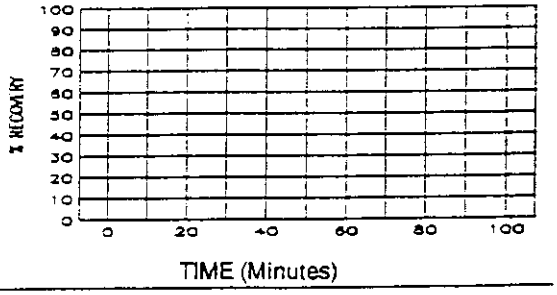

Comments:

Supervised by B. Tilton
Job Number 943-2848

Site LAIDLAW/OU2 RI-FS/MO
File Name PZ201SS

Source: Golder A-

661574

MISSOURI DEPARTMENT OF NATURAL RESOURCES
DIVISION OF GEOLOGY AND LAND SURVEY

MONITORING WELL CERTIFICATION RECORD

OFFICE USE ONLY	
REF. NO. 115085	DATE RECEIVED
ROUTE	CHECK NO.
STATE WELL NUMBER	TRANSMITTAL NO.
CHECKED BY	CROSS REFERENCE NO.
APPROVED BY	ENTERED Ph 1 Ph 2 Ph 3
	DATE APPROVED

INFORMATION SUPPLIED BY OWNER

SITE NAME	WELL NUMBER	
LAIDLAW BRIDGETON SANITARY LANDFILL	PZ-201-SS	
SITE ADDRESS	**CITY**	**STATE / ZIP CODE**
ST. CHARLES ROCK RD.	BRIDGETON	MO. 63044
NAME		**TELEPHONE**
LAIDLAW WASTE SYSTEMS, INC		314-841-3710
ADDRESS	**CITY**	**STATE / ZIP CODE**
1838 N. BROADWAY	ST. LOUIS	MO. 63102

INFORMATION SUPPLIED BY MONITORING WELL CONTRACTOR

LOCATION OF WELL (SHOW LOCATION IN SECTION PLAT)

COUNTY ST. LOUIS
ELEVATION 478.0
AREA NO.

SMALLEST ¼ ____ ¼ ____ ¼ ____ ¼ LARGEST ¼

SEC. ____ TWN. 47 N.RNG. 5 E OR W

LAT. 38 ° 45 ' 57 " LONG. 90 ° 26 ' 27 "

SKETCH THE LOCATION TO THE WELL INCLUDING MILEAGE ON ALL ROADS TRAVELED FROM NEAREST TOWNS OR HIGHWAYS

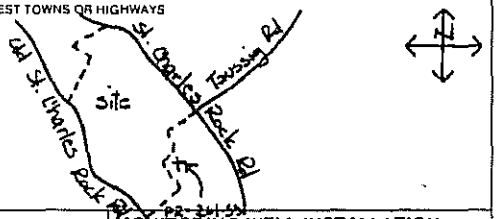

DESCRIBE LOCATION OF THE WELL SO WE WOULD BE ABLE TO VISIT IT

MONITORING WELL INSTALLATION CONTRACTOR'S NAME
LAYNE WESTERN Co, INC.

DRILLING CONTRACTOR'S NAME
LAYNE WESTERN Co, INC.

TYPE OF INSTALLATION
☒ ABOVE GROUND ☐ FLUSH MOUNT

STATIC WATER LEVEL
FEET FROM MEASURING POINT

DATE OF STATIC WATER LEVEL

ELEVATION OF MEASURING POINT

MEASURING POINT IS
☐ TOP OF RISER PIPE
☐ OTHER

DRILLING EQUIPMENT
☒ AIR ROTARY ☒ AUGER TYPE 6¼ H.S.A.
☐ REVERSE ROTARY ☐ OTHER

CENTRALIZERS USED
☒ YES, AT 3 TOTAL
☐ STAINLESS STEEL
☐ OTHER
☐ NO

MULTIPLE CASED WELLS
SUBMIT ADDITIONAL AS BUILT DIAGRAM SHOWING WELL CONSTRUCTION DETAILS INCLUDING TYPE AND SIZE OF ALL CASING, HOLE DIAMETERS, AND GROUT USED.

DATE WELL CONSTRUCTION WAS COMPLETED
3-06-95

I HEREBY CERTIFY THAT THE MONITORING WELL HEREIN DESCRIBED WAS CONSTRUCTED IN ACCORDANCE WITH THE DEPARTMENT OF NATURAL RESOURCES REQUIREMENTS FOR THE CONSTRUCTION OF MONITORING WELLS.

SIGNATURE (MONITORING WELL CONTRACTOR) Michael P. Vogl
PERMIT NUMBER 001256WIM DATE 4-11-95
SIGNATURE (DRILLING CONTRACTOR) Michael P. Vogl
PERMIT NUMBER 001256WIM DATE 4-11-95

NOTE: Record the fraction of a foot in decimal, not in inches

Top of Riser Elevation: 481.05

LOCKING CAP - Y / N (Circle one)
CAP VENT - Y / N (Circle one)

PROTECTIVE CASING
Type: STEEL
Size: 8" x 5' x 5'
Bore Hole Diameter: 10.25"
WEEP HOLE - Y / N (Circle one)

Ground Surface Elevation: 478.01 Ft

Information in this column to be supplied in the Feet from Surface column	Feet from Surface	Description of Formation
		0-17.5 Silt
Depth to bottom of Protective Casing Seal:	3	
Depth to Base of Annular Seal:	3	
Depth to Base of Bentonite Seal:	7.5	
Depth to Base of Secondary Filter Pack:		
Depth to Top of the Screen:	9.75	17.5-21 Sandstone 21-31 Silt 31-33.5 Clay 33.5-89.5 Limestone
Depth to Bottom of the Screen:	18.35	
Plug Back Total Depth		
Original Total Depth:	91.5	

PROTECTIVE CASING SEAL
Type: ☒ Concrete ☐ Cement Slurry

RISER PIPE
Length: 12.71
Diameter: 2
Type of Material: SCHED PVC

BOREHOLE DIAMETER: 5.75 in.

ANNULAR SEAL
Type: ☐ Bentonite Slurry ☐ Cement Slurry ☐ Non Slurry Bentonite

BENTONITE SEAL
Type: ☐ Bentonite Slurry ☒ Non Slurry Bentonite
Length of Seal: 4.5 FT.

SECONDARY FILTER PACK (Optional)
Type: ☐ Sand ☐ Manufactured
Grain Size: ____
Length: ____

PRIMARY FILTER PACK
Type: ☒ Sand ☐ Manufactured
Grain Size: 16-35
Length: 82'

WELL SCREEN
Length: 78.5'
Slot Size: 0.010"
Type: SCH. 80 PVC

SUMP DETAILS
Length: 0.5 FT.
Diameter: 2 in.
Type: PVC

TYPE OF BACKFILL: SAND

DISTRIBUTION: WHITE-DIVISION CANARY-MONITORING WELL CONTRACTOR PINK-OWNER

MO 780-1415 (2-94)

RECORD OF DRILLHOLE PZ-201A-SS

Sheet 1 of 1

PROJECT: LAIDLAW/RI-FS
PROJECT NO: 943-2846
LOCATION: BRIDGETON, MO

BORING METHOD: NX Core & water
DRILLING DATE: 4/22/95
DRILL RIG: SCHRAMM

DATUM: MSL
COORDINATES N: 1067831.8
AZIMUTH: 0

COLLAR ELEV: 478.4
E: 516846.4
INCLINATION: -90

J-Joint, F-Fault, S-Shear, B-Bedding, F-Foliation
PL-Planar, C-Curved, U-Undulating, ST-Stepped, I-Irregular
P-Polished, K-Slickensided, SM-Smooth, R-Rough, VR-V. Rough
Fe-FeOxide, CL-Clay Infill, CH-Chlorite, H-Healed, GRF-Gravel Filled

DEPTH SCALE (FEET)	ROCK TYPE DESCRIPTION	GRAPHIC LOG	ELEV / DEPTH (FT)	RUN NO.	CORE RECOVERY	RQD	FRACTURES PER FOOT	DISCONTINUITY DATA: DIP wrt CORE AXIS	DISCONTINUITY DATA: TYPE AND SURFACE DESCRIPTION	GRAPHIC LOG	WEATHERING INDEX: SW FR, SW HW, HW CW	STRENGTH INDEX: R6, R5, R4, R3, R2, R1	POINT LOAD INDEX (psi): HT, R2 30, R3 150, R4 300, R5 600, R6 1500	TEST ORIENTATION	NOTES WATER LEVELS INSTRUMENTATION
80	0.0-80.0 ft. 398.20 See Soil Borehole Log PZ-201-SS 80.20 80.0-80.2 ft. Slightly weathered, thinly laminated, dark greenish gray (5GY 4/1), very fine grained, extremely weak, SILTSTONE, (ST. LOUIS FORMATION)		398.40 80.00			85 60 40 20	2 4 6 8 10	0 30 60 90	B,U,SM-CL		SW FR SW HW HW CW	R6 R5 R4 R3 R2 R1	HT R2 30 R3 150 R4 300 R5 600 R6 1500		3/22/95 6 1/4 in. ID hollow stem auger advanced to 31.0 ft. then advanced borehole to 80.0 ft. with 5 7/8 in. air rotary bit
82	80.2-88.3 ft. Fresh, thickly bedded, light brownish gray (5YR 6/1), microcrystalline, weak, LIMESTONE, (ST. LOUIS FORMATION)								J,U,VR,CL J,I,VR,CL,Fe J,C,R,CL J,ST,R,CL J,ST,R,CL						4/22/95 @ 13:45 Began coring
84									J,I,R J,ST,R						
86				1	97%				J,I,R						
88	390.10 88.30								J,U,ST,CL (3)						
	88.3-90.0 ft. Fresh, thickly bedded, dark yellowish orange (10YR 6/6) grading to moderate yellowish brown (10YR 5/2), very fine grained, extremely weak to very weak, SILTSTONE, (ST. LOUIS FORMATION)								B,I,R						4/22/95 @ 16:30 Ended coring
90	388.40 90.00 Grades stronger with depth End of Record of Drillhole at 90.0 ft.		388.40 90.00												
92															
94															
96															

DEPTH SCALE: 1:2
DRILLING CONTRACTOR: LAYNE-WESTERN
DRILLER: M. VOGT

LOGGED: B. TILTON
CHECKED: B. TILTON
DATE: 5/16/95

Golder Associates

Well No. PZ-201A-SS

Boring No. X-Ref: PZ-201A-SS

PIEZOMETER CONSTRUCTION SUMMARY

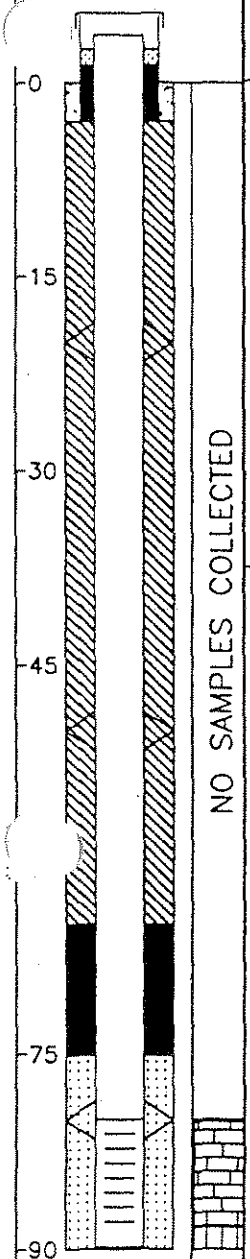

Not to Scale

Survey Coords: Northing: 1067832 ft. Easting: 516746 ft.

Elevation Ground Level 478.4 ft. NGVD

Top of PVC Casing 480.16 ft. NGVD

Drilling Summary:

Total Depth 90.0 ft.

Borehole Diameter 10 1/4 in. (0.0–33.0 ft.) 5 7/8 in. (33.0–90.0 ft.)

Casing Stickup Height 1.81 ft.

Driller Layne-Western, St. Louis, MO

Rig CME 75, Schramm Portadrill T660H

Bit(s) 6 1/4 in. ID Hollow Stem Auger Bit, NX Core, 5 7/8 in. Button Bit for Reaming

Drilling Fluid Auger-None, NX Core Water, Air Rotary

Protective Casing 8x8 in. Square Steel, by 5 ft. long

Construction Time log:

Task	Start Date	Start Time	Finish Date	Finish Time
Drilling				
CME 75				
Schramm Rotary	4/22/95	11:00	4/23/95	7:45
Geophys.Logging:				
Casing:	4/23/95	7:50	4/22/95	8:00
Filter Placement:	4/23/95	8:00	4/23/95	9:10
Cementing:				
Development				
Bentonite Grout	4/23/95	9:20	4/23/95	11:00
Bentonite Seal	4/23/95	9:00	4/23/95	9:20

Well Design & Specifications

Basis: Geologic Log X Geophysical Log

Casing string(s): C = Casing S = Screen

Depth			String(s)	Elevation		
+ 1.81	-	80.00	C1	480.16	-	398.35
80.00	-	89.80	S1	398.35	-	388.55
89.80	-	90.13	C2	388.55	-	388.22
	-				-	
	-				-	
	-				-	

Casing: C1 2 in. dia. Schedule 80 PVC, flush threaded with O-rings

C2 2 in. dia. threaded PVC end cap (4 in. long or 0.33 ft.)

Screen: S1 2 in. dia. Schedule 80 PVC, 0.010 in. machine cut slot, flush threaded with O-rings

Sand Pack: 16-35 mesh Silica Sand, 75.1-90.0 ft.

Filter Pack:

Grout Seal: Wyo-Ben Grout Well Bentonite Slurry, 3.0-65.0 ft.

Bentonite Seal: Extra high yield Wyo-Ben (100%) Slurry, 65.0-75.1 ft.

Concrete: 0.0-3.0 ft.

Well Development

Stabilization Test Data:

Time	pH	Spec. Cond.	Temp (°C)

Recovery Data:

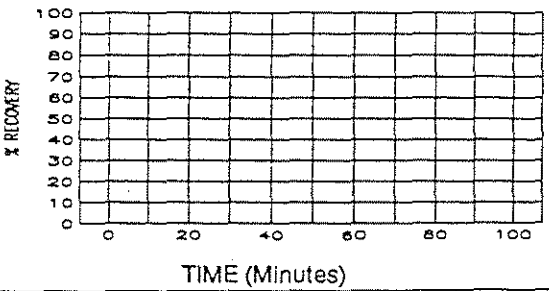

Comments:

Supervised by D. Alloway

Job Number 943-2848

Site LAIDLAW/OU2 RI-FS/MO

File Name PZ201ASS

661574

MISSOURI DEPARTMENT OF NATURAL RESOURCES
DIVISION OF GEOLOGY AND LAND SURVEY

MONITORING WELL CERTIFICATION RECORD

OFFICE USE ONLY	DATE RECEIVED
REF NO 122484	CHECK NO
ROUTE	TRANSMITTAL NO
STATE WELL NUMBER	CROSS REFERENCE NO
CHECKED BY	ENTERED Pn 1 Pn 2 Pn 3
APPROVED BY	DATE APPROVED

INFORMATION SUPPLIED BY OWNER

SITE NAME	WELL NUMBER	
LAIDLAW BRIDGETON SANITARY LANDFILL	PZ-201-A-SS	
SITE ADDRESS: ST. CHARLES ROCK RD.	CITY: BRIDGETON	STATE: MO. ZIP CODE: 63044
NAME: LAIDLAW WASTE SYSTEMS, INC.		TELEPHONE: 314-241-3710
ADDRESS: 1638 N. BROADWAY	CITY: ST. LOUIS	STATE: MO ZIP CODE: 63102

INFORMATION SUPPLIED BY MONITORING WELL CONTRACTOR

LOCATION OF WELL SHOW LOCATION IN SECTION PLAT

COUNTY: ST. LOUIS
ELEVATION: 472.4
AREA NO

SMALLEST ¼ LARGEST ¼

SEC. ____ TWN. 47 N,RNG. 5 (E) OR W

LAT. 38° 45' 58" LONG. 90° 26' 28"

SKETCH THE LOCATION TO THE WELL INCLUDING MILEAGE ON ALL ROADS TRAVELED FROM NEAREST TOWNS OR HIGHWAYS

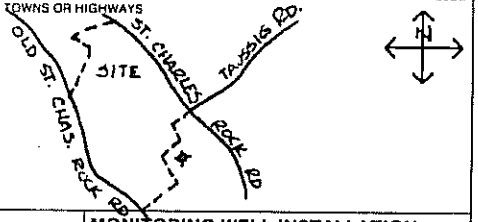

DESCRIBE LOCATION OF THE WELL SO WE WOULD BE ABLE TO VISIT IT

MONITORING WELL INSTALLATION CONTRACTOR'S NAME
LAYNE WESTERN Co, INC.

DRILLING CONTRACTOR'S NAME
LAYNE WESTERN Co, INC.

TYPE OF INSTALLATION
☒ ABOVE GROUND ☐ FLUSH MOUNT

STATIC WATER LEVEL
FEET FROM MEASURING POINT

DATE OF STATIC WATER LEVEL

ELEVATION OF MEASURING POINT

MEASURING POINT IS
☐ TOP OF RISER PIPE
☐ OTHER

DRILLING EQUIPMENT
☒ AIR ROTARY ☒ AUGER TYPE 6.25" HSA,
☐ REVERSE ROTARY NX CORE ☐ OTHER

CENTRALIZERS USED
☒ YES, AT 3 TOTAL
☒ STAINLESS STEEL
☐ OTHER
☐ NO

MULTIPLE CASED WELLS
SUBMIT ADDITIONAL AS BUILT DIAGRAM SHOWING WELL CONSTRUCTION DETAILS INCLUDING TYPE AND SIZE OF ALL CASING, HOLE DIAMETERS, AND GROUT USED.

DATE WELL CONSTRUCTION WAS COMPLETED
4-23-95

I HEREBY CERTIFY THAT THE MONITORING WELL HEREIN DESCRIBED WAS CONSTRUCTED IN ACCORDANCE WITH THE DEPARTMENT OF NATURAL RESOURCES REQUIREMENTS FOR THE CONSTRUCTION OF MONITORING WELLS.

SIGNATURE (MONITORING WELL CONTRACTOR) Michael P. Vogl
PERMIT NUMBER 001256WM DATE 6-02-95

SIGNATURE (DRILLING CONTRACTOR) Michael P. Vogl
PERMIT NUMBER 001256WM DATE 6-02-95

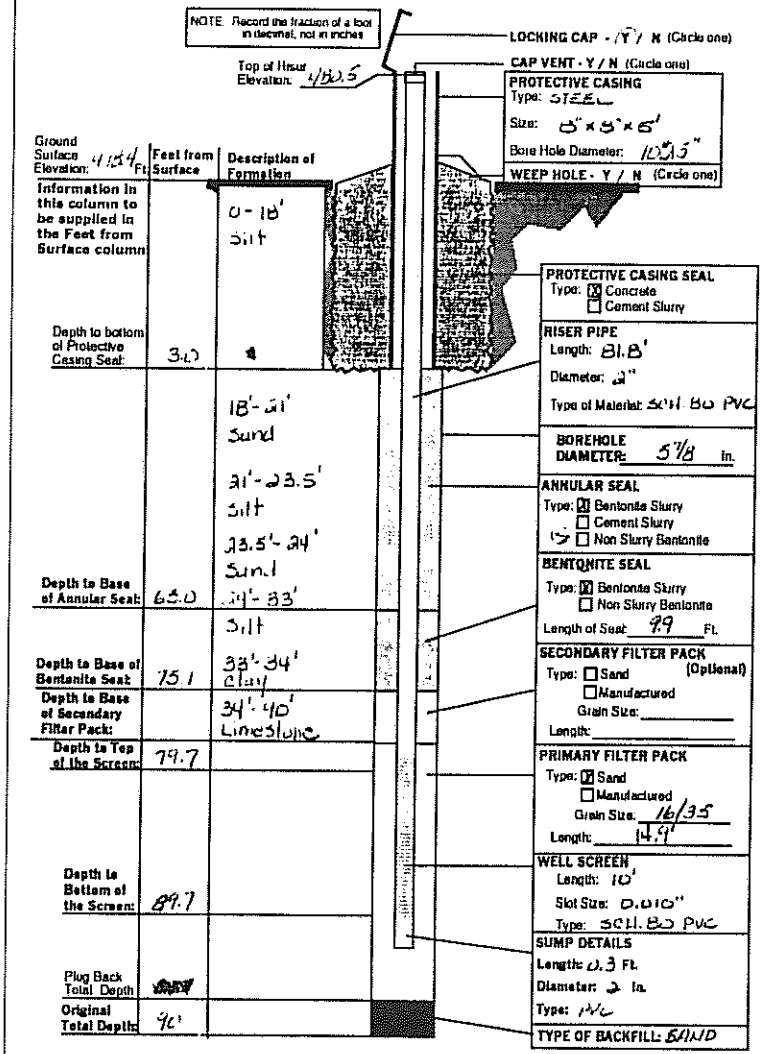

MO 780-1415 (2-94) DISTRIBUTION: WHITE DIVISION CANARY MONITORING WELL CONTRACTOR PINK OWNER

LAIDLAW WASTE SYSTEMS INC.

SOIL BOREHOLE LOG

SITE NAME AND LOCATION	DRILLING METHOD: 6.25 inch I.D. Hollow Stem Auger		BORING NO. PZ-202-SS
LAIDLAW/OU2 RI-FS/MD WEST LAKE LANDFILL OPERABLE UNIT 2	SAMPLING METHOD: SPLIT SPOON: 2.0 inch O.D./1.5 inch I.D. (SP) SHELBY TUBE: 3.0 inch O.D./2 13/16 inch I.D. (SH)		SHEET 1 OF 3
			DRILLING START / FINISH
	WATER LEVEL		
	TIME		07:50 / 09:45
	DATE		2/26/95 / 2/26/95
	CASING DEPTH		
NORTHING: 1067320.25 DATUM EASTING: 517101.58 ELEVATION 479.0			
DRILL RIG CME 75 - TRUCK MOUNT	SURFACE CONDITIONS		
ANGLE BEARING			
SAMPLE HAMMER			

DRILLING CONTR LAYNE-WESTERN

LOGGED BY M. HIRT DATE 2/26/95 CHK'D BY V. HERST

JOB NO.: 943-2848

FILENAME: PZ202SS

DEPTH IN FEET (ELEVATION)	BLOW/ 6 IN. ON SAMPLER	RECOVERY	SYMBOL	SAMPLER SYMBOL	SAMPLE NUMBER AND DESCRIPTION OF MATERIAL	SAMPLER TYPE	REMARKS
1	1 2 2 3	1.6'/2.0' (80%)			(0.0-4.6 ft.) Firm, dark yellowish brown (10YR 4/2), homogenous, CLAYEY SILT, NR, moist, (CL-ML), (LOESS)	SP (1)	
2	6 2 2 4	1.4'/2.0' (70%)				SP (2)	
3					@ 3.4 ft., color changes to dusky yellowish brown (10YR 2/2)		
4	1 3	1.6'/2.0' (80%)			(474.4) 4.6		
5	6 7				(4.6-8.3 ft.) Stiff, mottled light olive gray (5Y 5/2) and olive gray (5Y 4/1), CLAY, little Silt, trace Gravel, NR, moist, (CL), (LOESS)	SP (3)	
6		0.0'/2.0' (0%)				SH (4)	
7							
8	1	1.7'/2.0' (85%)			(470.7) 8.3		
9	2 4 4				(8.3-19.1 ft.) Soft to Firm, light olive gray (5Y 6/1), SILTY CLAY, iron stained, NR, moist, (CL-ML), (LOESS)	SP (5)	
10	2 4	1.6'/2.0' (80%)					
11	4					SP (6)	
12	2 2	1.1'/2.0' (55%)				SP (7)	
13	4 6				@ 13.5 ft., becoming increasingly iron stained		
14	weight of hammer for 12" 1 2	1.5'/2.0' (75%)			@ 14.0 ft., becoming wet, very soft	SP (8)	

LAIDLAW
LAIDLAW WASTE SYSTEMS INC.

SOIL BOREHOLE LOG

SITE NAME AND LOCATION LAIDLAW/OU2 RI-FS/MO WEST LAKE LANDFILL OPERABLE UNIT 2	DRILLING METHOD: 6.25 inch I.D. Hollow Stem Auger SAMPLING METHOD: SPLIT SPOON: 2.0 inch O.D./1.5 inch I.D. (SP) SHELBY TUBE: 3.0 inch O.D./2 13/16 inch I.D. (SH)	BORING NO. PZ-202-SS SHEET 2 OF 3

WATER LEVEL					DRILLING START	DRILLING FINISH
TIME					TIME 07:50	TIME 09:45
DATE					DATE 2/26/95	DATE 2/26/95
CASING DEPTH						

DATUM NORTHING: 1067320.25 EASTING: 517101.58 ELEVATION 479.0

DRILL RIG CME 75 - TRUCK MOUNT

SURFACE CONDITIONS

ANGLE BEARING

SAMPLE HAMMER

DEPTH IN FEET (ELEVATION)	BLOW/ 6 IN. ON SAMPLER	RECOVERY	SYMBOL	SAMPLER SYMBOL	SAMPLE NUMBER AND DESCRIPTION OF MATERIAL	SAMPLER TYPE	REMARKS
					(8.3-19.1 ft.) Soft to firm, light olive gray (5Y 6/1), SILTY CLAY, iron stained, NR, moist, (CL-ML), (LOESS)	SP (8)	
16	weight of hammer for 18" 1	1.4'/2.0' (70%)				SP (9)	
17							
18	weight of hammer for 6" 2 3 5	2.0'/2.0' (100%)				SP (10)	
19					(19.1-19.4 ft.) Firm, light olive gray (5Y 5/2), SILTY CLAY, NR, moist, (CL-ML), (LOESS)		
20	2 3 5 6	1.4'/2.0' (70%)			(19.4-21.9 ft.) Firm, olive gray (5Y 4/1), SILTY CLAY, iron stained, NR, moist, (CL-ML), (LOESS)	SP (11)	
21							
22	1 3 4 5	0.4'/2.0' (20%)			(21.9-24.5 ft.) Loose, olive gray (5Y 4/1), fine SANDY SILT, NR, damp, (ML), (LOESS)	SP (12)	
23							
24	1 5 9 12	1.5'/2.0' (75%)			(24.5-25.0 ft.) Firm, olive gray (5Y 4/1), laminated, SILTY CLAY, NR, damp, (CL-ML), (LOESS) (454.0) 25.0	SP (13)	
25					(25.0-29.5 ft.) Compact, olive gray (5Y 4/1), laminated, fine SANDY SILT, NR, dry, (SM), (ALLUVIUM)		
26	2 8 9 9	0.1'/2.0' (5%)			@ 25.5 ft., becoming moist	SP (14)	
27							
28	5 7 6 9	1.5'/2.0' (75%)				SP (15)	
29					(29.5-30.8 ft.) Compact, olive gray (5Y 4/1), fine SAND interbedded with SILT, NR, moist, (SM), (ALLUVIUM)		

DRILLING CONTR LAYNE-WESTERN

LOGGED BY M. HIRT

DATE 2/26/95 CHK'D BY W. HERST

JOB NO.: 943-2848

FILENAME: PZ202SS

LAIDLAW WASTE SYSTEMS INC.

SOIL BOREHOLE LOG

SITE NAME AND LOCATION

LAIDLAW/OU2 RI-FS/MO
WEST LAKE LANDFILL
OPERABLE UNIT 2

NORTHING: 1067320.25
DATUM EASTING: 517101.58 ELEVATION 479.0

DRILLING METHOD: 6.25 inch I.D. Hollow Stem Auger

SAMPLING METHOD:
SPLIT SPOON: 2.0 inch O.D./1.5 inch I.D. (SP)
SHELBY TUBE: 3.0 inch O.D./2 13/16 inch I.D. (SH)

BORING NO. PZ-202-SS

SHEET 3 OF 3

					DRILLING START	DRILLING FINISH
WATER LEVEL						
TIME					07:50	09:45
DATE					2/26/95	2/26/95
CASING DEPTH						

DRILL RIG CME 75 - TRUCK MOUNT
ANGLE BEARING
SAMPLE HAMMER
SURFACE CONDITIONS

DEPTH IN FEET (ELEVATION)	BLOW/ 6 IN. ON SAMPLER	RECOVERY	SYMBOL	SAMPLER SYMBOL	SAMPLE NUMBER AND DESCRIPTION OF MATERIAL			SAMPLER TYPE		REMARKS
31	2 50/2"	0.8" 0.8" (100%)			(29.5-30.8 ft.) Compact, olive gray (5Y 4/1), fine SAND interbedded with SILT, NR, moist, (SM), (ALLUVIUM)	(448.2)	30.8	SP	(16)	Split spoon and auger refusal at 30.8 ft.
32					End of Soil Borehole Log at 30.8 ft.					
33					See PZ-202-SS Record of Drillhole for rock descriptions					
34										
35										
36										
37										
38										
39										
40										
41										
42										
43										
44										

DRILLING CONTR LAYNE-WESTERN

LOGGED BY M. HIRT CHK'D BY W. HERST

DATE 2/26/95

JOB NO.: 943-2848

FILENAME: PZ202SS

RECORD OF DRILLHOLE PZ-202-SS

Sheet 1 of 5

PROJECT: LAIDLAW/RI-FS
PROJECT NO: 943-2848
LOCATION: BRIDGETON, MO

BORING METHOD: NX Core & water
DRILLING DATE: 2/26/95 - 2/27/95
DRILL RIG: CME 75

DATUM: MSL
COORDINATES N: 1087320.2
AZIMUTH: 0

COLLAR ELEV: 479.01
E: 517101.8
INCLINATION: -90

ROCK TYPE

J-Joint, F-Fault, S-Shear, B-Bedding, F-Foliation
PL-Planar, C-Curved, U-Undulating, ST-Stepped, I-Irregular
P-Polished, K-Slickensided, SM-Smooth, R-Rough, VR-V, Rough
Fe-Fe Oxide, CL-Clay Infill, CH-Chlorite, H-Healed, GRF-Gravel Filled

DEPTH (Feet)	DESCRIPTION	GRAPHIC LOG	ELEV / DEPTH (FT)	RUN NO.	CORE RECOVERY	RQD (80, 90, 100, 120)	FRACTURES PER FOOT (2, 4, 6, 8, 10)	DISCONTINUITY DATA: DIP wrt CORE AXIS (0, 30, 60, 90)	DISCONTINUITY DATA: TYPE AND SURFACE DESCRIPTION	DISCONTINUITY DATA: GRAPHIC LOG	WEATHERING INDEX (SW, FR, MW, HW, CW)	STRENGTH INDEX (R6, R5, R4, R3, R2, R1)	POINT LOAD INDEX (psi) (R1 30, R2 150, R3 300, R4 600, R5 1500, R6)	TEST ORIENTATION	NOTES WATER LEVELS INSTRUMENTATION
16	0.0-30.8 ft. See Soil Borehole Log PZ-202-SS														
18															
20															
22															
24															
26															
28															
30															
32	30.8-44.1 ft. 448.21 Slightly weathered, medium bedded, light olive gray (5Y 6/1), medium grained, medium strong, LIMESTONE, (ST. LOUIS FORMATION) 30.80 31.4 and 31.9 ft. iron stained clay infilling		448.21 30.80	1	63%				Broken Zone						Some sand in return water; driller says material seems to be very rubbly

DEPTH SCALE: 1:2
DRILLING CONTRACTOR: LAYNE-WESTERN
DRILLER: D. MAHURIN

LOGGED: M. HIRT
CHECKED: R. BOOTH
DATE: 3/13/95

Golder Associates

RECORD OF DRILLHOLE PZ-202-SS

Sheet 2 of 5

PROJECT: LAIDLAW/RI-FS
PROJECT NO: 943-2648
LOCATION: BRIDGETON, MO

BORING METHOD: NX Core & water
DRILLING DATE: 2/28/95 - 2/27/95
DRILL RIG: CME 75

DATUM: MSL
COORDINATES N: 1067320.2
AZIMUTH: 0

COLLAR ELEV: 478.01
E: 517101.6
INCLINATION: -90

J-Joint, F-Fault, S-Shear, B-Bedding, F-Foliation
PL-Planar, C-Curved, U-Undulating, ST-Stepped, I-Irregular
P-Polished, K-Slikensided, SM-Smooth, R-Rough, VR-V. Rough
Fe-Fe Oxide, CL-Clay Infil, CH-Chlorite, H-Healed, GRF-Gravel Filled

DEPTH SCALE (FEET)	DESCRIPTION	GRAPHIC LOG	ELEV / DEPTH (FT)	RUN NO	CORE RECOVERY	RQD	FRACTURES PER FOOT	DISCONTINUITY DATA: DIP w/r CORE AXIS	DISCONTINUITY DATA: TYPE AND SURFACE DESCRIPTION	GRAPHIC LOG	WEATHERING INDEX	STRENGTH INDEX	POINT LOAD INDEX (psi)	TEST ORIENTATION	NOTES WATER LEVELS INSTRUMENTATION
32	ROCK TYPE 30.8-44.1 ft. Slightly weathered, medium bedded, light olive gray (5Y 6/1), medium grained, medium strong, LIMESTONE, (ST. LOUIS FORMATION)														
34	33.4-34.7 ft. Limestone becomes moderately weathered, grayish orange (10YR 7/4) with dark yellowish orange (10YR 6/6) staining and cross bedded								J,I,R (2) J,U,R J,U,R J,PL,SM						
				1	63%				J,PL,SM J,U,R						
36									Core Loss						35.8 ft. Drilling is slow due to rubbly conditions
			441.41												37.0 ft. Water pump keeps shutting down, driller reports that bit is getting plugged off
38			37.60						J,C,SM J,C,SM J,I,R J,C,SM (2) J,PL,SM J,I,R J,I,R,Fe J,C,SM (3)						
40									J,C,SM J,I,SM J,C,SM (2)						
				2	82%				J,I,SM (3)						
42									Core Loss						
44			434.91												
	44.1-59.1 ft. Fresh, thickly bedded, light olive gray (5Y 6/1), micro-crystalline, strong, LIMESTONE, (ST. LOUIS FORMATION)		44.10						J,I,R (4) J,I,R J,C,R						
	45.1-46.1 ft. Large pyrite crystals Some calcite crystals								J,U,SM,CL J,I,SM J,I,SM,CL						
46				3	96%				J,I,SM,CL J,I,SM J,C,SM J,PL,SM						
									J,PL,SM,CL J,I,R J,I,SM,CL (2) J,I,SM (2)						
48															

DEPTH SCALE: 1:2
DRILLING CONTRACTOR: LAYNE-WESTERN
DRILLER: D. MAHURIN

LOGGED: M. HIRT
CHECKED: R. BOOTH
DATE: 3/13/95

Golder Associates

RECORD OF DRILLHOLE PZ-202-SS

Sheet 3 of 5

PROJECT: LAIDLAW/RI-FS
PROJECT NO: 943-2848
LOCATION: BRIDGETON, MO

BORING METHOD: NX Core & water
DRILLING DATE: 2/28/95 - 2/27/95
DRILL RIG: CME 75

DATUM: MSL
COORDINATES N: 1067320.2
AZIMUTH: 0

COLLAR ELEV: 479.01
E: 517101.8
INCLINATION: -90

J-Joint, F-Fault, S-Shear, B-Bedding, F-Foliation
PL-Planar, C-Curved, U-Undulating, ST-Stepped, I-Irregular
P-Polished, K-Slickensided, SM-Smooth, R-Rough, VR-V. Rough
Fe-Fe Oxide, CL-Clay Infill, CH-Chlorite, H-Healed, GRF-Gravel Filled

DEPTH SCALE (FEET)	DESCRIPTION	GRAPHIC LOG	ELEV / DEPTH (FT)	RUN NO.	CORE RECOVERY	RQD	FRACTURES PER FOOT	DISCONTINUITY DATA: DIP wrt CORE AXIS	DISCONTINUITY DATA: TYPE AND SURFACE DESCRIPTION	DISCONTINUITY DATA: GRAPHIC LOG	WEATHERING INDEX	STRENGTH INDEX	POINT LOAD INDEX (psi)	TEST ORIENTATION	NOTES WATER LEVELS INSTRUMENTATION
48	44.1-59.1 ft. Fresh, thickly bedded, light olive gray (5Y 6/1), micro-crystalline, strong, LIMESTONE, (ST. LOUIS FORMATION)			3	96%				J,I,SM J,I,SM J,PL,SM,CL						
			429.91 49.10												
	49.4-49.8 ft. Medium to coarse grained								J,I,R,CL J,C,SM,CL J,I,R						
50									J,I,R J,I,SM J,I,R J,C,R						
	51.0 ft. Iron stained nodules 51.0-51.6 ft. 0° healed fractures 51.6-52.4 ft. Slightly weathered, aranaceous, thinly laminated														
52									J,PL,R,CL						
	52.9-53.9 ft. 0° healed fracture														
54				4	99%				J,I,R						
	55.3-56.6 ft. Medium to coarse grained 55.9 ft. Chert filled vein								J,PL,R (2)						
56									J,PL,R						
									J,I,SM,CL						
58									J,I,SM,CL J,I,SM J,I,R,CL						
			419.91 59.10												
	59.1-67.8 ft. Fresh, thickly bedded, light olive gray (5Y 6/1), coarse grained, medium strong, LIMESTONE, (ST. LOUIS FORMATION) 60.3-61.3 ft. Stylolitic								J,I,R (4)						
60															
				5	100%				J,I,R J,I,SM J,I,SM (2)						
62									J,I,R J,I,R						
									J,I,SM,CL J,I,R J,I,R						
64	63.8-64.3 ft. 20° healed fracture														

DEPTH SCALE: 1:2
DRILLING CONTRACTOR: LAYNE-WESTERN
DRILLER: D. MAHURIN

LOGGED: M. HIRT
CHECKED: R. BOOTH
DATE: 3/13/95

Golder Associates

RECORD OF DRILLHOLE PZ-202-SS

Sheet 4 of 5

PROJECT: LAIDLAW/RI-FS
PROJECT NO: 943-2848
LOCATION: BRIDGETON, MO

BORING METHOD: NX Core & water
DRILLING DATE: 2/28/95 - 2/27/95
DRILL RIG: CME 75

DATUM: MSL
COORDINATES N: 1067320.2
AZIMUTH: 0

COLLAR ELEV: 479.01
E: 517101.6
INCLINATION: -90

J-Joint, F-Fault, S-Shear, B-Bedding, F-Foliation
PL-Planar, C-Curved, U-Undulating, ST-Stepped, I-Irregular
P-Polished, K-Slickensided, SM-Smooth, R-Rough, VR-V. Rough
Fe-Fe Oxide, CL-Clay Infill, CH-Chlorite, H-Healed, GRF-Gravel Filled

DEPTH SCALE (FEET)	DESCRIPTION	GRAPHIC LOG	ELEV / DEPTH (FT)	RUN NO	CORE RECOVERY	RQD	FRACTURES PER FOOT	DISCONTINUITY DATA: DIP wrt CORE AXIS	DISCONTINUITY DATA: TYPE AND SURFACE DESCRIPTION	GRAPHIC LOG	WEATHERING INDEX	STRENGTH INDEX	POINT LOAD INDEX (psi)	TEST ORIENTATION	NOTES WATER LEVELS INSTRUMENTATION
64	59.1-67.8 ft. Fresh, thickly bedded, light olive gray (5Y 6/1), coarse grained, medium strong, LIMESTONE, (ST. LOUIS FORMATION)							90	J,I,R						
	64.5-65.1 ft. Silty interbeds														
	64.3-66.4 ft. Fine to medium grained														
66				5	100 %			90	J,PL,SM (3)						
			412.01												
	67.0-69.7 ft. Fresh thickly bedded, light olive gray (5Y 6/1) to greenish gray (5GY 6/1), medium grained, medium strong, DOLOMITE (ST. LOUIS FORMATION)		67.00												
								90	J,PL,SM (3)						
68	69.0-69.2 ft. Becomes slightly weathered, dark yellowish orange (10YR 6/6) to moderate yellowish brown (10YR 5/4)							90	J,I,SM						
			409.91												
	67.6-67.8 ft. Clay infilling		69.10												
	69.7-78.9 ft. Moderately weathered, medium bedded, dark yellowish orange (10YR 6/6) to moderate yellowish brown (10YR 5/4), m-c grained, medium strong, ARGILLACEOUS DOLOMITE, (ST. LOUIS FORMATION)														
70															
				6	94%										
72															
	72.5-76.1 ft. Vuggy, moderately to highly weathered, some calcite crystals							90	J,I,R (3)						
								90	J,I,R						
								90	J,I,R						
								90	J,I,R						
74			404.91						Core Loss						
			74.10												
								90	J,I,R (2)						
								90	J,I,R (4)						
76															
				7	87%			90	J,I,R						
	76.9-77.2 ft. Chert							90	J,I,R,CL						
	77.3-77.4 ft. Highly weathered							90	J,I,R						
								90	J,PL,R,CL						
78	78.0-78.1 ft. Highly weathered		400.91					90	J,I,R						
			78.10												
			400.31						Core Loss						
			78.70					90	J,C,R,CL						
	78.9-89.2 ft. Fresh, medium bedded, yellowish gray (5Y 7/2), very fine grained, medium strong, LIMESTONE, (ST. LOUIS FORMATION)														
				8	100 %			90	J,U,SM						
80								90	J,I,SM						

DEPTH SCALE: 1:2
DRILLING CONTRACTOR: LAYNE-WESTERN
DRILLER: D. MAHURIN

LOGGED: M. HIRT
CHECKED: R. BOOTH
DATE: 3/13/95

Golder Associates

RECORD OF DRILLHOLE PZ-202-SS

Sheet 5 of 5

PROJECT: LAIDLAW/RI-FS
PROJECT NO: 943-2848
LOCATION: BRIDGETON, MO

BORING METHOD: NX Core & water
DRILLING DATE: 2/26/95 - 2/27/95
DRILL RIG: CME 75

DATUM: MSL
COORDINATES N: 1067320.2
AZIMUTH: 0

COLLAR ELEV: 479.01
E: 517101.8
INCLINATION: -90

J-Joint, F-Fault, S-Shear, B-Bedding, F-Foliation
PL-Planar, C-Curved, U-Undulating, ST-Stepped, I-Irregular
P-Polished, K-Slickensided, SM-Smooth, R-Rough, VR-V. Rough
Fe-Fe Oxide, CL-Clay Infill, CH-Chlorite, H-Healed, GRF-Gravel Filled

DEPTH SCALE (Feet)	DESCRIPTION	GRAPHIC LOG	ELEV / DEPTH (FT)	RUN NO	CORE RECOVERY	RQD	FRACTURES PER FOOT	DISCONTINUITY DATA: DIP wrt CORE AXIS	DISCONTINUITY DATA: TYPE AND SURFACE DESCRIPTION	GRAPHIC LOG	WEATHERING INDEX	STRENGTH INDEX	POINT LOAD INDEX (psi)	TEST ORIENTATION	NOTES WATER LEVELS INSTRUMENTATION
80	78.9-89.2 ft. Fresh, medium bedded, yellowish gray (5Y 7/2), very fine grained, medium strong, LIMESTONE, (ST. LOUIS FORMATION)								J,PL,SM J,PL,SM						
82	82.1-82.2 ft. Porous/vuggy								J,I,SM,CL						
	83.6 ft. 1" thick clay infilling								J,I,R,CL						
84	83.7-84.3 ft. Micrycrystalline			6	100				J,I,R (3)						
	85.0-85.2 ft. Moderately weathered between joints 85.6-87.1 ft. Pyrite crystals								J,I,R (2)						
86	85.7-86.4 ft. Slightly weathered, some cross bedding								J,I,SM (2) J,I,SM						
									J,PL,SM J,U,R J,I,R						
88	86.4-86.9 ft. Coarse grained		390.31												
	89.0-89.2 ft. Moderately weathered		389.81						J,PL,SM						
	89.2-89.9 ft. Moderately weathered, thinly laminated, medium dark gray (N4), very fine grained, extremely weak rock, SILTSTONE, with claystone interbeds, (ST. LOUIS FORMATION)		389.11	9	97%				J,I,SM,CL						
90	89.9-92.0 ft. Fresh, thickly laminated to medium bedded, medium gray (N5), fine grained, medium strong, SANDSTONE, (ST. LOUIS FORMATION)		387.01												
92	End of Record of Drillhole at 92.0 ft.		92.00												
94															
96															

DEPTH SCALE: 1:2
DRILLING CONTRACTOR: LAYNE-WESTERN
DRILLER: D. MAHURIN

LOGGED: M. HIRT
CHECKED: R. BOOTH
DATE: 3/13/95

Golder Associates

Well No. PZ-202-SS

Boring No. X-Ref: PZ-202-SS

PIEZOMETER CONSTRUCTION SUMMARY

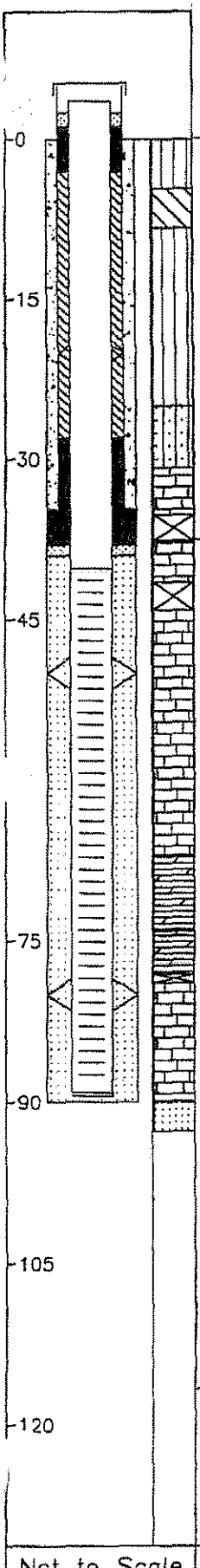

Not to Scale

Survey Coords: Northing: 1067320 ft. Easting: 517102 ft.

Elevation Ground Level 479.0 ft. NGVD

Top of PVC Casing 481.17 ft. NGVD

Drilling Summary:

Total Depth 90.0 ft.

Borehole Diameter 10 1/4 in. (0.0-33.5 ft.) 5 7/8 in. (33.5-90.0 ft.)

Casing Stickup Height 2.16 ft.

Driller Layne-Western, St. Louis, MO

Rig CME 75, Schramm Portadrill T660H

Bit(s) 6 1/4 in. ID Hollow Stem Auger Bit, NX Core, 5 7/8 in. Button Bit for Reaming

Drilling Fluid Auger-None, NX Core Water, Air Rotary

Protective Casing 8x8 in. Square Steel, by 5 ft. long

Construction Time log:

Task	Start Date	Start Time	Finish Date	Finish Time
Drilling				
CME 75	2/26/95	7:50	2/27/95	11:05
Schramm Rotary	3/11/95	10:30	3/12/95	8:00
Geophys.Logging:				
Casing:				
2" PVC	3/12/95	8:10	3/12/95	8:30
6" Steel	3/11/95	14:15	3/11/95	14:30
Filter Placement:	3/12/95	8:35	3/12/95	9:10
Cementing:				
Development				
Bentonite Grout	3/12/95	9:35	3/12/95	10:30
Bentonite Seal	3/12/95	9:20	3/12/95	9:35

Well Design & Specifications

Basis: Geologic Log X Geophysical Log

Casing string(s): C = Casing S = Screen

Depth			String(s)	Elevation		
+ 2.16	-	40.20	C1	481.17	-	438.81
40.20	-	89.10	S1	438.81	-	389.91
89.10	-	89.43	C2	389.91	-	389.58
+ 1.00	-	34.00	C3	480.00	-	445.01
	-				-	
	-				-	

Casing: C1 2 in. dia. Schedule 80 PVC, flush threaded with O-rings

C2 2 in. dia. threaded PVC end cap (4 in. long or 0.33 ft.) (C3-see comments)

Screen: S1 2 in. dia. Schedule 80 PVC, 0.010 in. machine cut slot, flush threaded with O-rings

Sand Pack: 16-35 mesh Silica Sand, 39.0-90.0 ft.

Filter Pack: Less than 50 mesh Silica Sand, 38.0-39.0ft.

Grout Seal: Wyo-Ben Grout Well Bentonite Slurry, 3.0-28.0 ft., Neat cement, 3.0-34.0 ft.

Bentonite Seal: Extra high yield Wyo-Ben (100%) Slurry, 28.0-38.0 ft.

Concrete: 0.0-3.0 ft.

Well Development

Stabilization Test Data:

Time	pH	Spec. Cond.	Temp (°C)

Recovery Data:

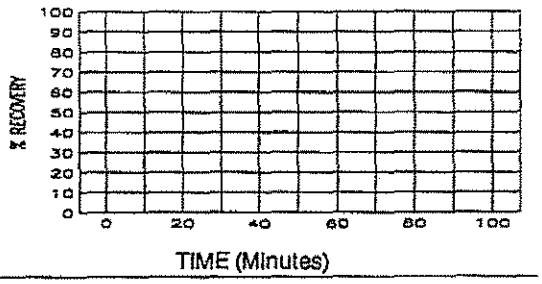

Comments: Surface Casing C3: 6 1/8 in. ID / 6 5/8 in. OD Steel Casing

Supervised by B. Tilton

Job Number 943-2848

Site LAIDLAW/OU2 RI-FS/MO

File Name PZ202SS

601574

MISSOURI DEPARTMENT OF NATURAL RESOURCES
DIVISION OF GEOLOGY AND LAND SURVEY

MONITORING WELL CERTIFICATION RECORD

OFFICE USE ONLY	
REF NO 115089	CHECK NO
ROUTE	TRANSMITTAL NO.
STATE WELL NUMBER	CROSS REFERENCE NO.
CHECKED BY	ENTERED Ph 1 Ph 2 Ph 3
APPROVED BY	DATE APPROVED

DATE RECEIVED

INFORMATION SUPPLIED BY OWNER

SITE NAME: LAIDLAW BRIDGETON SANITARY LANDFILL
WELL NUMBER: PZ-302-SS

SITE ADDRESS: ST. CHARLES ROCK ROAD | CITY: BRIDGETON | STATE: MO | ZIP CODE: 63044

NAME: LAIDLAW WASTE SYSTEMS, INC. | TELEPHONE: 314-741-3710

ADDRESS: 1834 N. BROADWAY | CITY: ST. LOUIS | STATE: MO | ZIP CODE: 63102

INFORMATION SUPPLIED BY MONITORING WELL CONTRACTOR

LOCATION OF WELL
SHOW LOCATION IN SECTION PLAT

SMALLEST ¼ ____ ¼ ____ ¼ ____ ¼ LARGEST ¼

SEC. ____ TWN. 47 N.RNG. 5 E OR W

LAT. 38 ° 45 ' 54 " LONG. 90 ° 26 ' 24 "

COUNTY: ST. LOUIS
ELEVATION: 479.0
AREA NO.

SKETCH THE LOCATION TO THE WELL INCLUDING MILEAGE ON ALL ROADS TRAVELED FROM NEAREST TOWNS OR HIGHWAYS

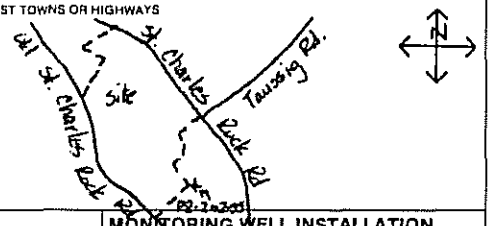

DESCRIBE LOCATION OF THE WELL SO WE WOULD BE ABLE TO VISIT IT

NOTE: Record the fraction of a foot in decimal, not in inches.

Top of Riser Elevation: 481.3

LOCKING CAP - Y / N (Circle one)
CAP VENT - Y / N (Circle one)
PROTECTIVE CASING
Type: STEEL
Size: 8" x 6" x 5'
Bore Hole Diameter: 10.25"
WEEP HOLE - Y / N (Circle one)

Ground Surface Elevation: 479.0 Ft	Feet from Surface	Description of Formation
Information in this column to be supplied in the Feet from Surface column		0-3 Silt
Depth to bottom of Protective Casing Seal:	3	
		3-22 Clay
		22-32 Silt
Depth to Base of Annular Seal:	28.0	
Depth to Base of Bentonite Seal:	38.0	32-67 Limestone
Depth to Base of Secondary Filter Pack:	39.0	
Depth to Top of the Screen:	40.2	
		67-78 Dolomite
Depth to Bottom of the Screen:	90.2	78-90.2 Limestone
Plug Back Total Depth		
Original Total Depth:	90.2	

PROTECTIVE CASING SEAL
Type: [X] Concrete [ ] Cement Slurry

RISER PIPE
Length: 43'
Diameter: 2
Type of Material: SCHED PVC

BOREHOLE DIAMETER: 5 7/8 In.

ANNULAR SEAL
Type: [X] Bentonite Slurry [ ] Cement Slurry [ ] Non Slurry Bentonite

BENTONITE SEAL
Type: [X] Bentonite Slurry [ ] Non Slurry Bentonite
Length of Seal: 10' Ft.

SECONDARY FILTER PACK (Optional)
Type: [X] Sand [ ] Manufactured
Grain Size: SILICA
Length: 1'

PRIMARY FILTER PACK
Type: [X] Sand [ ] Manufactured
Grain Size: 16-35
Length: 51.2'

WELL SCREEN
Length: 50'
Slot Size: 0.010"
Type: SCHED PVC

SUMP DETAILS
Length: 2.3 FL
Diameter: 2 In.
Type: PVC

TYPE OF BACKFILL: CUTTINGS

MONITORING WELL INSTALLATION CONTRACTOR'S NAME
LAYNE WESTERN CO., INC.

DRILLING CONTRACTOR'S NAME
LAYNE WESTERN CO., INC.

TYPE OF INSTALLATION
[X] ABOVE GROUND [ ] FLUSH MOUNT

STATIC WATER LEVEL
FEET FROM MEASURING POINT

DATE OF STATIC WATER LEVEL

ELEVATION OF MEASURING POINT

MEASURING POINT IS
[ ] TOP OF RISER PIPE
[ ] OTHER

DRILLING EQUIPMENT
[X] AIR ROTARY [X] AUGER TYPE 6¼ H.S.A.
[ ] REVERSE ROTARY [ ] OTHER

CENTRALIZERS USED
[X] YES, AT 3 TOTAL
[ ] STAINLESS STEEL
[ ] OTHER
[ ] NO

MULTIPLE CASED WELLS
SUBMIT ADDITIONAL AS BUILT DIAGRAM SHOWING WELL CONSTRUCTION DETAILS INCLUDING TYPE AND SIZE OF ALL CASING, HOLE DIAMETERS, AND GROUT USED.

DATE WELL CONSTRUCTION WAS COMPLETED
3-12-75

I HEREBY CERTIFY THAT THE MONITORING WELL HEREIN DESCRIBED WAS CONSTRUCTED IN ACCORDANCE WITH THE DEPARTMENT OF NATURAL RESOURCES REQUIREMENTS FOR THE CONSTRUCTION OF MONITORING WELLS.

SIGNATURE (MONITORING WELL CONTRACTOR) Michael J. Vogt
PERMIT NUMBER OWI256WM | DATE 4-11-75

SIGNATURE (DRILLING CONTRACTOR) Michael J. Vogt
PERMIT NUMBER OWI256WM | DATE 4-11-75

MO 780-1416 (2-94)

DISTRIBUTION: WHITE-DIVISION CANARY/MONITORING WELL CONTRACTOR PINK/OWNER

SOIL BOREHOLE LOG

LAIDLAW WASTE SYSTEMS INC.

SITE NAME AND LOCATION	DRILLING METHOD: 6.25 inch I.D. Hollow Stem Auger	BORING NO. PZ-203-SS
LAIDLAW/OU2 RI-FS/MD WEST LAKE LANDFILL OPERABLE UNIT 2	SAMPLING METHOD: SPLIT SPOON: 2.0 inch O.D./1.5 inch I.D. (SP)	SHEET 1 OF 3
NORTHING: 1066661.50 DATUM EASTING: 516607.70 ELEVATION 484.2	WATER LEVEL / TIME / DATE / CASING DEPTH	DRILLING START: TIME 15:00, DATE 5/25/95; FINISH: TIME 18:00, DATE 5/25/95
DRILL RIG CME 75 - TRUCK MOUNT	SURFACE CONDITIONS	
ANGLE -90 BEARING NA		
SAMPLE HAMMER 140 lb. - Falling 30 inches		

DRILLING CONTR LAYNE-WESTERN

DEPTH IN FEET (ELEVATION)	BLOW/ 6 IN. ON SAMPLER	RECOVERY	SYMBOL	SAMPLER SYMBOL	SAMPLE NUMBER AND DESCRIPTION OF MATERIAL	SAMPLER TYPE	REMARKS
1					(0.0-4.2 ft.) Soft, dark yellowish brown (10YR 4/2), fine sandy SILT, moist, (ML), (LOESS)		
2	1	1.3'/2.0' (65%)				SP (1)	
3	2 2						
4	1	0.8'/2.0' (40%)			(480.0) 4.2		
5	2 3 3				(4.2-16.2 ft.) Firm, moderate yellowish brown (10YR 5/2) to light gray (N7), silty CLAY, moist, (CL), (ALLUVIUM)	SP (2)	
6	1	2.0'/2.0' (100%)				SP (3)	
7	3 5						
8	1	1.7'/2.0' (85%)				SP (4)	
9	3 6						
10	2	2.0'/2.0' (100%)			@ 10.4-16.0 ft., wet	SP (5)	
11	4 3 5						
12	0	1.5'/2.0' (75%)				SP (6)	
13	1 2 3						
14	1	2.0'/2.0' (100%)				SP (7)	
	1 2 3						

LOGGED BY D. ALLOWAY CHK'D BY W. HERST

DATE 6/20/95

JOB NO.: 943-2848

FILENAME: PZ203SS

LAIDLAW WASTE SYSTEMS INC.

SOIL BOREHOLE LOG

SITE NAME AND LOCATION	DRILLING METHOD:		BORING NO.
	6.25 inch I.D. Hollow Stem Auger		PZ-203-SS
			SHEET
	SAMPLING METHOD:		2 OF 3
	SPLIT SPOON: 2.0 inch O.D./1.5 inch I.D. (SP)		DRILLING
		START	FINISH
	WATER LEVEL	TIME	TIME
	TIME	15:00	18:00
	DATE	DATE	DATE
	CASING DEPTH	5/25/95	5/25/95

LAIDLAW/OU2 RI-FS/MO
WEST LAKE LANDFILL
OPERABLE UNIT 2

NORTHING: 1066661.50
DATUM EASTING: 516607.70 ELEVATION 484.2

DRILL RIG CME 75 - TRUCK MOUNT
SURFACE CONDITIONS

ANGLE -90 BEARING NA

SAMPLE HAMMER 140 lb. - falling 30 inches

DRILLING CONTR LAYNE-WESTERN

DEPTH IN FEET (ELEVATION)	BLOW/ 6 IN. ON SAMPLER	RECOVERY	SYMBOL	SAMPLER SYMBOL	SAMPLE NUMBER AND DESCRIPTION OF MATERIAL	SAMPLER TYPE		REMARKS
16	0 0 3 4	1.2' / 2.0' (60%)			(4.2-16.2 ft.) Firm, moderate yellowish brown (10YR 5/2) to light gray (N7), silty CLAY, moist, (CL), (ALLUVIUM) (468.0) 16.2	SP	7	
17					(16.2-26.4 Ft.) Soft to Firm, medium yellowish brown (10YR 5/2) and light gray (N7), clayey SILT, trace Fine Sand, moist, (ML), (LOESS)	SP	8	
18	2 2 5 6	1.6' / 2.0' (80%)				SP	9	
19								
20	4 3 5 6	2.0' / 2.0' (100%)				SP	10	
21								
22	1 2 5 6	0.9' / 2.0' (45%)			@ 22.0-25.8 ft., color changes to medium yellowish brown (10YR 5/2)	SP	11	
23								
24	3 4 4 5	1.8' / 2.0' (90%)				SP	12	
25								
26	1 4 6 9	1.4' / 2.0' (70%)			@ 25.8-26.4 ft., color is medium gray (N5) (457.8) 26.4	SP	13	
27					(26.4-41.2 Ft.) Loose to very dense, medium gray (N5), fine SAND, trace Silt, saturated, (SP), (ALLUVIUM)			
28	3 4 5 7	1.4' / 2.0' (70%)				SP	14	
29					@ 29.0-41.2 ft., occasional beds of SILT interbedded			

LOGGED BY D. ALLOWAY
DATE 6/20/95 CHK'D BY V. HERST

JOB NO.: 943-2848
FILENAME: PZ203SS

LAIDLAW WASTE SYSTEMS INC.

SOIL BOREHOLE LOG

SITE NAME AND LOCATION	DRILLING METHOD: 6.25 inch I.D. Hollow Stem Auger		BORING NO. PZ-203-SS
			SHEET 3 OF 3
LAIDLAW/OU2 RI-FS/MD WEST LAKE LANDFILL OPERABLE UNIT 2	SAMPLING METHOD: SPLIT SPOON: 2.0 inch O.D./1.5 inch I.D. (SP)		DRILLING
		START	FINISH
	WATER LEVEL	TIME	TIME
	TIME	15:00	18:00
	DATE	DATE	DATE
	CASING DEPTH	5/25/95	5/25/95

DATUM NORTHING: 1066661.50 EASTING: 516607.70 ELEVATION 484.2

DRILL RIG CME 75 - TRUCK MOUNT — SURFACE CONDITIONS

ANGLE -90 BEARING NA

SAMPLE HAMMER 140 lb. - falling 30 inches

DEPTH IN FEET (ELEVATION)	BLOW/ 6 IN. ON SAMPLER	RECOVERY	SYMBOL	SAMPLER SYMBOL	SAMPLE NUMBER AND DESCRIPTION OF MATERIAL	SAMPLER TYPE	REMARKS
31	5 6 7 12	1.5'/2.0' (75%)			@ 29.0-41.2 Ft., occasional beds of SILT interbedded	SP (15)	
32	4 5 12	1.7'/2.0' (85%)					
33	10					SP (16)	
34	1 4	1.6'/2.0' (80%)					
35	5 10					SP (17)	
36	4 7	0.8'/2.0' (40%)			@ 36.0-41.2 Ft., includes little medium sand		
37	11 13					SP (18)	
38	5 10	1.6'/2.0' (80%)					
39	25 50					SP (19)	
40	15 30	1.9'/1.9' (100%)					
41	30 50				(443.0) 41.2	SP (20)	
42					(41.2-42.0 Ft.) Hard, medium gray (N5) and dark reddish brown (10R 3/4), mottled, SILT, (ML), (ALLUVIUM) (442.2) 42.0 End of Soil Borehole Log at 42.0 Ft. See Record of Drillhole PZ-203-SS for rock descriptions		
43							
44							

DRILLING CONTR LAYNE-WESTERN

LOGGED BY B. ALLEWAY CHK'D BY W. HERST

DATE 6/20/95

JOB NO.: 943-2848

FILENAME: PZ203SS

RECORD OF DRILLHOLE PZ-203-SS

Sheet 1 of 5

PROJECT: LAIDLAW/RI-FS
PROJECT NO: 943-2648
LOCATION: BRIDGETON, MO

BORING METHOD: NX Core & water
DRILLING DATE: 5/26/95 & 5/31/95
DRILL RIG: CME 75

DATUM: MSL
COORDINATES N: 1066681.50
AZIMUTH: 0

COLLAR ELEV: 484.2
E: 516807.70
INCLINATION: -90

ROCK TYPE

J-Joint, F-Fault, S-Shear, B-Bedding, F-Foliation
PL-Planar, C-Curved, U-Undulating, ST-Stepped, I-Irregular
P-Polished, K-Slickensided, SM-Smooth, R-Rough, VR-V. Rough
Fe-FeOxide, CL-Clay Infill, CH-Chlorite, H-Healed, GRF-Gravel Filled

DEPTH SCALE (FEET)	DESCRIPTION	GRAPHIC LOG	ELEV / DEPTH (FT)	RUN NO.	CORE RECOVERY	RQD	FRACTURES PER FOOT	DISCONTINUITY DATA: DIP wrt CORE AXIS	DISCONTINUITY DATA: TYPE AND SURFACE DESCRIPTION	DISCONTINUITY DATA: GRAPHIC LOG	WEATHERING INDEX: SW FR MW HW CW	STRENGTH INDEX: R6 R5 R4 R3 R2 R1	POINT LOAD INDEX (psi): R1 30 R2 150 R3 300 R4 600 R5 1500 R6	TEST ORIENTATION	NOTES WATER LEVELS INSTRUMENTATION
32	0.0-42.0 ft. See Soil Borehole Log PZ-203-SS 42.0-44.8 ft. No samples collected														
34															
36															
38															
40															
42															
44	439.40		439.40												
	44.8-53.4 ft. 44.80 Hard, medium light gray (N6) to dark reddish brown (10R 3/4), SILTY CLAY, moist, (CL), (ALLUVIAL)		44.80												5/26/95 @ 9:15 Began drilling
48				1	100										
48															

DEPTH SCALE: 1:2
DRILLING CONTRACTOR: LAYNE-WESTERN
DRILLER: D. MAHURIN

LOGGED: D. ALLOWAY
CHECKED: B. TILTON
DATE: 6/13/95

Golder Associates

RECORD OF DRILLHOLE PZ-203-SS

Sheet 2 of 5

PROJECT: LAIDLAW/RI-FS
PROJECT NO: 943-2848
LOCATION: BRIDGETON, MO

BORING METHOD: NX Core & water
DRILLING DATE: 5/26/95 & 5/31/95
DRILL RIG: CME 75

DATUM: MSL
COORDINATES N: 1066661.50
AZIMUTH: 0

COLLAR ELEV: 484.2
E: 516607.70
INCLINATION: -90

J-Joint, F-Fault, S-Shear, B-Bedding, F-Foliation
PL-Planar, C-Curved, U-Undulating, ST-Stepped, I-Irregular
P-Polished, K-Slickensided, SM-Smooth, R-Rough, VR-V. Rough
Fe-FeOxide, CL-Clay Infill, CH-Chlorite, H-Healed, GRF-Gravel Filled

DL. SCALE (FEET)	DESCRIPTION	GRAPHIC LOG	ELEV / DEPTH (FT)	RUN NO	CORE RECOVERY	RQD	FRACTURES PER FOOT	DISCONTINUITY DATA: DIP wrt CORE AXIS	DISCONTINUITY DATA: TYPE AND SURFACE DESCRIPTION	GRAPHIC LOG	WEATHERING INDEX: SW FR, HW, MW, SW, CW	STRENGTH INDEX: R6, R5, R4, R3, R2, R1	POINT LOAD INDEX (psi): R1 10, R2 150, R3 300, R4 600, R5 1500, R6	TEST ORIENTATION	NOTES WATER LEVELS INSTRUMENTATION
48	48.1-57.5 ft. Pale green (10G 6/2)														
				1	100										
50															
			433.40												
			50.80												50.8-52.0 ft. and 52.3-53.7 ft. Core loss due to Clay washing out End of Run 1 @ 10:15
52									Core Loss						
			430.80												
	53.4-73.6 ft. Moderately weathered, thickly bedded, yellowish gray (5Y 7/2), f-m grained, medium strong, BRECCIATED LIMESTONE, (ST. LOUIS FORMATION) Clay and poorly lithified Sandstone around pieces of Limestone		53.40												
54									J,I,R,CL						
									J,I,R						
									J,I,R						
56									J,I,R						
									J,P,SM						
				2	66%										
58									J,I,R						
									J,I,R						
									J,I,R,CL						
60									J,I,R,CL						
			423.40						J,C,SM (2)						5/26/95 @ 11:00 End of Run 2
			60.80												
62									J,PL,SM						
				3	97%										
64															

DEPTH SCALE: 1:2
DRILLING CONTRACTOR: LAYNE-WESTERN
DRILLER: D. MAHURIN

LOGGED: D. ALLOWAY
CHECKED: B. TILTON
DATE: 6/13/95

Golder Associates

RECORD OF DRILLHOLE PZ-203-SS

PROJECT: LAIDLAW/RI-FS
PROJECT NO: 943-2848
LOCATION: BRIDGETON, MO

BORING METHOD: NX Core & water
DRILLING DATE: 5/26/95 & 5/31/95
DRILL RIG: CME 75

DATUM: MSL
COORDINATES N: 1066661.50
AZIMUTH: 0

COLLAR ELEV: 484.2
E: 515607.70
INCLINATION: -90

J-Joint, F-Fault, S-Shear, B-Bedding, F-Foliation
PL-Planar, C-Curved, U-Undulating, ST-Stepped, I-Irregular
P-Polished, K-Slickensided, SM-Smooth, R-Rough, VR-V. Rough
Fe-FeOxide, CL-Clay Infill, CH-Chlorite, H-Healed, GRF-Gravel Filled

Depth Scale (Feet)	Description	Graphic Log	Elev / Depth (Ft)	Run No	Core Recovery	RQD	Fractures per Foot	Discontinuity Data: Dip w.r.t. Core Axis	Type and Surface Description	Graphic Log	Weathering Index	Strength Index	Point Load Index (psi)	Test Orientation	Notes, Water Levels, Instrumentation
64	53.4-73.6 ft. Moderately weathered, thickly bedded, yellowish gray (5Y 7/2), f-m grained, medium strong, BRECCIATED LIMESTONE, (ST. LOUIS FORMATION) Clay and poorly lithified Sandstone around pieces of Limestone														
66									J,PL,SM						
				3	97%				J,PL,SM,CL						
68									J,PL,SM,CL (2)						
									B,PL,SM,CL						
70			413.40						J,I,R,CL						5/26/95 @ 12:00 End of Run 3
			70.80						J,PL,R,CL						
72									J,C,SM						
74	73.6-81.5 ft. Fresh, medium bedded, pale yellowish brown (10YR 6/2) to grayish orange pink (5YR 7/2), m-c grained, medium strong, LIMESTONE, (ST. LOUIS FORMATION) Stylolitic			4	100%										
76	76.1-77.1 ft. Clay layer														
	77.6-77.9 ft. Clay layer		406.50												
78			77.70	5	100%										
80															

DEPTH SCALE: 1:2
DRILLING CONTRACTOR: LAYNE-WESTERN
DRILLER: D. MAHURIN

LOGGED: D. ALLOWAY
CHECKED: B. TILTON
DATE: 8/13/95

Golder Associates

RECORD OF DRILLHOLE PZ-203-SS

Sheet 4 of 5

PROJECT: LAIDLAW/RI-FS
PROJECT NO: 943-2848
LOCATION: BRIDGETON, MO

BORING METHOD: NX Core & water
DRILLING DATE: 5/26/95 & 5/31/95
DRILL RIG: CME 75

DATUM: MSL
COORDINATES N: 1086881.50
AZIMUTH: 0

COLLAR ELEV: 484.2
E: 515807.70
INCLINATION: -90

J-Joint, F-Fault, S-Shear, B-Bedding, F-Foliation
PL-Planar, C-Curved, U-Undulating, ST-Stepped, I-Irregular
P-Polished, K-Slickensided, SM-Smooth, R-Rough, VR-V. Rough
Fe-FeOxide, CL-Clay Infill, CH-Chlorite, H-Healed, GRF-Gravel Filled

DEPTH SCALE (FEET)	DESCRIPTION	GRAPHIC LOG	ELEV / DEPTH (FT)	RUN NO	CORE RECOVERY	RQD	FRACTURES PER FOOT	DISCONTINUITY DATA: DIP wrt CORE AXIS	DISCONTINUITY DATA: TYPE AND SURFACE DESCRIPTION	GRAPHIC LOG	WEATHERING INDEX (SW FR, MW, HW, CW)	STRENGTH INDEX (R6, R5, R4, R3, R2, R1)	POINT LOAD INDEX (psi) (R1: 30, R2: 150, R3: 300, R4: 600, R5: 1500, R6)	TEST ORIENTATION	NOTES WATER LEVELS INSTRUMENTATION
80	73.6-81.5 ft. Fresh, medium bedded, pale yellowish brown (10YR 6/2) to grayish orange pink (5YR 7/2), m-c grained, medium strong, LIMESTONE, (ST. LOUIS FORMATION) Stylolitic		402.70 / 81.50												
82	81.5-98.0 ft. Highly weathered, pale yellowish brown (10YR 6/2), f-c grained, very weak, LIMESTONE boulders in SILT matric (Collapse Zone)		400.20 / 84.00	5	100%										81.5-98.0 ft. Collapse Zone, RQD measurements not valid
84	84.0-85.5 ft. Limestone boulder														
86	85.5-87.2 ft. Weak, dark gray (N3), thinly laminated Siltstone		398.70 / 85.50												
	87.2-90.0 ft. Limestone boulder		397.00 / 87.20	6	100%										5/26/95 @ 15:00 Stop drilling
88															
90	90.0-90.5 ft. Weak, light olive gray (5Y 6/1), Siltstone		394.20 / 90.00												5/31/95 @ 8:30 Resume drilling after 4-day break, water level in open hole @ 34.1 ft. bgs
	90.5-92.4 ft. Limestone boulder		393.70 / 90.50												
92	92.4-95.0 ft. Very weak, medium dark gray (N4) to grayish black (N2), thinly laminated, Siltstone layer		392.50 / 91.70	7	82%				Core Loss						92.5-93.4 ft. Core loss in soft unit
94	95.0-96.0 ft. Limestone boulder		389.20 / 95.00	8	100%										
96			388.20 / 96.00												

DEPTH SCALE: 1:2
DRILLING CONTRACTOR: LAYNE-WESTERN
DRILLER: D. MAHURIN

LOGGED: D. ALLOWAY
CHECKED: B. TILTON
DATE: 6/13/95

Golder Associates

RECORD OF DRILLHOLE PZ-203-SS

Sheet 5 of 5

PROJECT: LAIDLAW/RI-FS
PROJECT NO: 943-2848
LOCATION: BRIDGETON, MO

BORING METHOD: NX Core & water
DRILLING DATE: 5/26/95 & 5/31/95
DRILL RIG: CME 75

DATUM: MSL
COORDINATES N: 1086661.50
AZIMUTH: 0

COLLAR ELEV: 484.2
E: 516607.70
INCLINATION: -90

J-Joint, F-Fault, S-Shear, B-Bedding, F-Foliation
PL-Planar, C-Curved, U-Undulating, ST-Stepped, I-Irregular
P-Polished, K-Slickensided, SM-Smooth, R-Rough, VR-V. Rough
Fe-FeOxide, CL-Clay Infill, CH-Chlorite, H-Healed, GRF-Gravel Filled

DEPTH SCALE (FEET)	DESCRIPTION	GRAPHIC LOG	ELEV / DEPTH (FT)	RUN NO.	CORE RECOVERY	RQD	FRACTURES PER FOOT	DISCONTINUITY DATA: DIP wrt CORE AXIS	DISCONTINUITY DATA: TYPE AND SURFACE DESCRIPTION	GRAPHIC LOG	WEATHERING INDEX	STRENGTH INDEX	POINT LOAD INDEX (psi)	TEST ORIENTATION	NOTES WATER LEVELS INSTRUMENTATION
98	96.0-98.0 ft. Very weak, light olive gray (5Y 6/1), thinly laminated, Siltstone layer		386.20 / 98.00												
98	98.0-104.2 ft. Fresh, thinly bedded, light olive gray (5Y 6/1), very fine grained, medium strong, LIMESTONE, (ST. LOUIS FORMATION)		386.20 / 98.00	8	100%										
100	100.3-100.7 ft. Chert zone		384.20 / 100.00						J,PL,SM						
102									B,PL,SM,CL J,I,VR,Calcite						
102									B,I,R						
104									J,I,R						
104	104.2-110.0 ft. Slightly weathered, thinly bedded, olive gray (5Y 4/1), very fine grained, medium strong, ARGILLACEOUS LIMESTONE, (ST. LOUIS FORMATION)								J,I,R						
106	104.4-105.0 ft. Highly weathered zone and weak			9	98%				J,I,VR calcite crystals						
108	105.0-106.8 ft. Intermittent vuggy zone (<3 mm.), zones <2 in. thick														
108															
110															5/31/95 @ 11:00 Complete coring
110	End of Record of Drillhole at 110.0 ft.		374.20 / 110.00												
112															

DEPTH SCALE: 1:2
DRILLING CONTRACTOR: LAYNE-WESTERN
DRILLER: D. MAHURIN

LOGGED: D. ALLOWAY
CHECKED: B. TILTON
DATE: 6/13/95

Golder Associates

Well No. PZ-203-SS

Boring No. X-Ref: PZ-203-SS

PIEZOMETER CONSTRUCTION SUMMARY

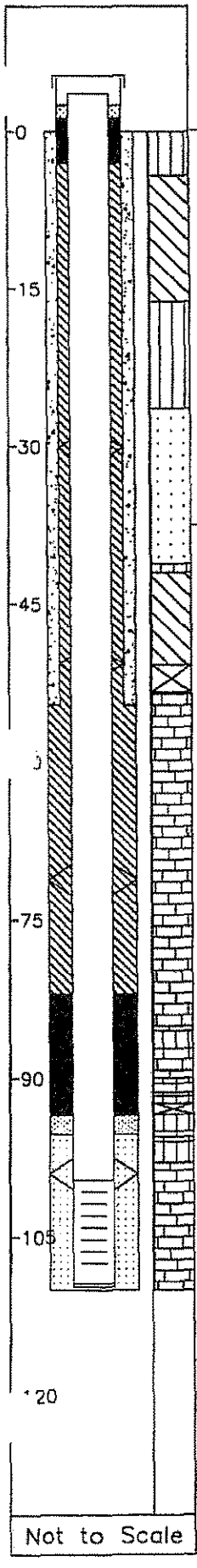

Not to Scale

Survey Coords: Northing: 1066662 ft. Easting: 516608 ft.

Elevation Ground Level 484.2 ft. NGVD

Top of PVC Casing 486.59 ft. NGVD

Drilling Summary:

Total Depth	110.0 ft.
Borehole Diameter	10 1/4 in. (0.0–56.0 ft.) 5 7/8 in. (56.0–110.0 ft.)
Casing Stickup Height	2.41 ft.
Driller	Layne-Western St. Louis, MO
Rig	CME 75, Schramm Portadrill T660H
Bit(s)	6 1/4 in. ID Hollow Stem Auger Bit, NX Core, 5 7/8 in. Button Bit and 9 7/8 in. Tricone Bit
Drilling Fluid	Auger–None, NX Core Water, Air and Mud Rotary
Protective Casing	8x8 in. Square Steel, by 5 ft. long

Construction Time log:

Task	Start Date	Start Time	Finish Date	Finish Time
Drilling				
CME 75	5/25/95	15:00	5/25/95	11:00
Schramm Rotary	6/3/95	7:20	6/3/95	8:30
Geophys.Logging:				
Casing:				
2" PVC	6/3/95	8:20	6/3/95	8:50
6" Steel	6/2/95	10:30	6/2/95	13:00
Filter Placement:	6/3/95	8:50	6/3/95	9:46
Cementing:				
Development				
Bentonite Grout	6/3/95	10:30	6/3/95	11:00
Bentonite Seal	6/3/95	9:40	6/3/95	10:30

Well Design & Specifications

Basis: Geologic Log X Geophysical Log

Casing string(s): C = Casing S = Screen

Depth			String(s)	Elevation		
+ 2.41	-	99.60	C1	486.59	-	384.58
99.60	-	109.40	S1	384.58	-	374.78
109.40	-	109.70	C2	374.78	-	374.48
+ 0.50	-	56.10	C3	484.70	-	428.08
	-				-	
	-				-	

Casing: C1 2 in. dia. Schedule 80 PVC, flush threaded with O-rings

C2 2 in. dia. threaded PVC end cap (4 in. long or 0.33 ft.) (C3–see comments)

Screen: S1 2 in. dia. Schedule 80 PVC, 0.010 in. machine cut slot, flush threaded with O-rings

Sand Pack: 16–35 mesh Silica Sand, 95.3–110.0 ft.

Filter Pack: Less than 50 mesh Silica Sand, 93.5–95.3 ft.

Grout Seal: Wyo-Ben Grout Well Bentonite Slurry, 3.0–82.0 ft., Neat cement, 3.0–56.1 ft.

Bentonite Seal: Extra high yield Wyo-Ben (100%) Slurry, 82.0–93.5 ft.

Concrete: 0.0–3.0 ft.

Well Development

Stabilization Test Data:

Time	pH	Spec. Cond.	Temp (°C)

Recovery Data:

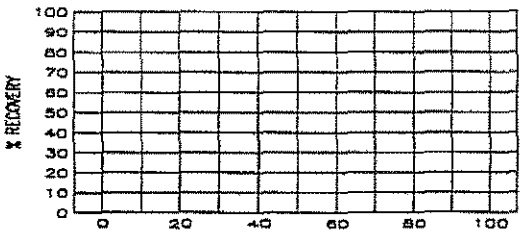

Comments: Surface Casing C3: 6 1/8 in. ID / 6 5/8 in. OD Steel Casing

Supervised by E. Swanson

Job Number 943-2848

Site LAIDLAW/OU2 RI-FS/MO

File Name PZ203SS

MISSOURI DEPARTMENT OF NATURAL RESOURCES
DIVISION OF GEOLOGY AND LAND SURVEY

MONITORING WELL CERTIFICATION RECORD

OFFICE USE ONLY	DATE RECEIVED
REF NO 122505	CHECK NO
ROUTE	TRANSMITTAL NO
STATE WELL NUMBER	CROSS REFERENCE NO
CHECKED BY	ENTERED Ph 1 Ph 2 Ph 3
APPROVED BY	DATE APPROVED

INFORMATION SUPPLIED BY OWNER

SITE NAME	WELL NUMBER		
LAIDLAW BRIDGETON SANITARY LANDFILL	[illegible] PZ-203-55		
SITE ADDRESS	CITY	STATE	ZIP CODE
ST. CHARLES ROCK RD.	BRIDGETON	MO	63044
NAME		TELEPHONE	
LAIDLAW WASTE SYSTEMS, INC.		314-241-3710	
ADDRESS	CITY	STATE	ZIP CODE
1838 N. BROADWAY	ST. LOUIS	MO	63102

INFORMATION SUPPLIED BY MONITORING WELL CONTRACTOR

LOCATION OF WELL SHOW LOCATION IN SECTION PLAT

COUNTY ST. LOUIS
ELEVATION 484.2
AREA NO.

SMALLEST ¼ LARGEST ¼

SEC. ____ TWN. 47 N,RNG. 5 (E) OR W

LAT. 38° 45' 47" LONG. 90° 26' 30"

SKETCH THE LOCATION TO THE WELL INCLUDING MILEAGE ON ALL ROADS TRAVELED FROM NEAREST TOWNS OR HIGHWAYS

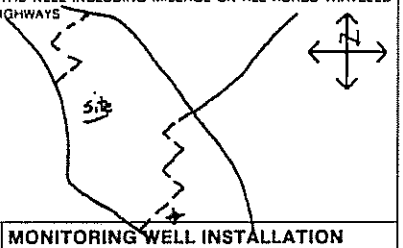

DESCRIBE LOCATION OF THE WELL SO WE WOULD BE ABLE TO VISIT IT

MONITORING WELL INSTALLATION CONTRACTOR'S NAME
LAYNE WESTERN CO., INC

DRILLING CONTRACTOR'S NAME
LAYLIE WESTERN CO., INC.

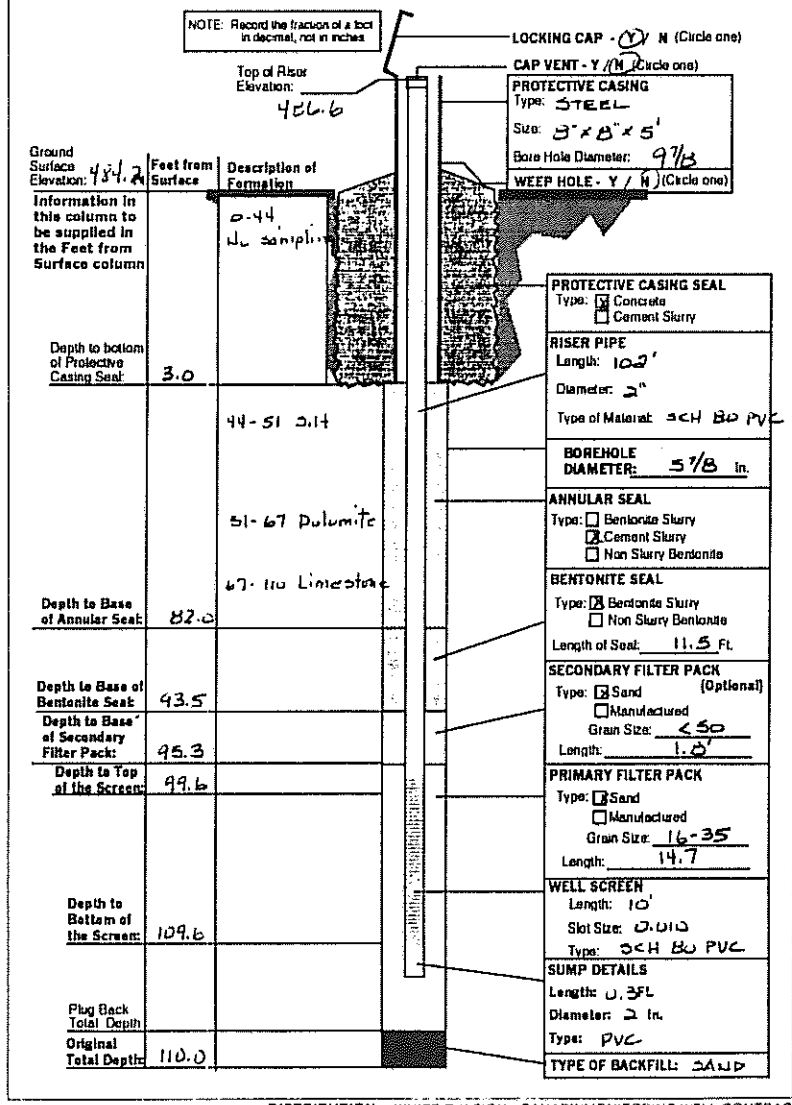

MONITORING WELL INSTALLATION CONTRACTOR'S NAME
LAYNE WESTERN CO., INC

DRILLING CONTRACTOR'S NAME
LAYLIE WESTERN CO., INC.

TYPE OF INSTALLATION
☒ ABOVE GROUND ☐ FLUSH MOUNT

STATIC WATER LEVEL
FEET FROM MEASURING POINT

DATE OF STATIC WATER LEVEL

ELEVATION OF MEASURING POINT
486.6

MEASURING POINT IS
☒ TOP OF RISER PIPE
☐ OTHER

DRILLING EQUIPMENT
☒ AIR ROTARY ☒ AUGER TYPE 6¼ H.S.A.
☐ REVERSE ROTARY ☐ OTHER

CENTRALIZERS USED
☒ YES, AT 4 TOTAL
☒ STAINLESS STEEL
☐ OTHER
☐ NO

MULTIPLE CASED WELLS
SUBMIT ADDITIONAL AS BUILT DIAGRAM SHOWING WELL CONSTRUCTION DETAILS INCLUDING TYPE AND SIZE OF ALL CASING, HOLE DIAMETERS, AND GROUT USED.

DATE WELL CONSTRUCTION WAS COMPLETED
6-23-95

I HEREBY CERTIFY THAT THE MONITORING WELL HEREIN DESCRIBED WAS CONSTRUCTED IN ACCORDANCE WITH THE DEPARTMENT OF NATURAL RESOURCES REQUIREMENTS FOR THE CONSTRUCTION OF MONITORING WELLS.

SIGNATURE (MONITORING WELL CONTRACTOR) Michael P. Vogt

PERMIT NUMBER	DATE
001256WM	7-07-95

SIGNATURE (DRILLING CONTRACTOR) Michael P. Vogt

PERMIT NUMBER	DATE
001256 WM	7-07 95

MO 780-1415 (2-94) DISTRIBUTE: WHITE DIVISION CANARY/MONITORING WELL CONTRACTOR PINK/OWNER

SOIL BOREHOLE LOG

LAIDLAW WASTE SYSTEMS INC.

SITE NAME AND LOCATION	DRILLING METHOD:	BORING NO.
	6.25 inch I.D. Hollow Stem Auger	PZ-204-SS
		SHEET 1 OF 1
	SAMPLING METHOD:	
	SPLIT SPOON: 2.0 inch O.D./1.5 inch I.D. (SP)	DRILLING
	SHELBY TUBE: 3.0 inch O.D./2 13/16 inch I.D. (SH)	START / FINISH
LAIDLAW\RI-FS\MO WEST LAKE LANDFILL OPERABLE UNIT 2	WATER LEVEL	TIME / TIME
	TIME	15:50 / 07:45
	DATE	DATE / DATE
NORTHING: 1066426.61 DATUM EASTING: 515533.49 ELEVATION 467.0	CASING DEPTH	3/7/95 / 3/7/95

DRILL RIG CME 75 - TRUCK MOUNT — SURFACE CONDITIONS Muddy, no vegetation.

ANGLE BEARING

SAMPLE HAMMER

DRILLING CONTR LAYNE-WESTERN

LOGGED BY M. HIRT CHK'D BY W. HERST

DATE 3/7/95

JOB NO.: 943-2848

FILENAME: PZ204SS

DEPTH IN FEET (ELEVATION)	BLOW/6 IN. ON SAMPLER	RECOVERY	SYMBOL	SAMPLER SYMBOL	SAMPLE NUMBER AND DESCRIPTION OF MATERIAL	SAMPLER TYPE	REMARKS
1					(0.0-6.0 Ft.) CONCRETE, (FILL)		Auger from 0.0-6.5 feet with no sampling
2							
3							
4							
5							
6							
7	1 2 2	0.5' 1.5' (33%)			@ 6.5-7.9 ft., crushed CONCRETE, (FILL)	SP (1)	Begin split spoon sampling at 6.5 feet
(459.1) 7.9							
8	2 4 6	1.1' 2.0' (55%)			(7.9-9.3 Ft.) Stiff, mottled moderate yellowish brown (10YR 5/4) and dark yellowish orange (10YR 6/6), CLAYEY SILT, iron stained, some roots, NR, damp, (CL-ML), (LOESS)		
9	5					SP (2)	
10	3 4 5	1.5' 2.0' (75%)			(9.3-10.5 Ft.) Stiff, pale yellowish brown (10YR 6/2) and medium dark gray (N4), CLAYEY SILT, some fine sand, NR, damp, (CL-ML), (LOESS)		
11	5				(10.5-14.6 Ft.) Stiff, medium dark gray (N4), CLAYEY SILT, little fine sand, NR, damp, (CL-ML), (LOESS) @ 11.2-11.5 ft., silty CLAY	SP (3)	
12	1 6 8	0.8' 2.0' (40%)					
13	9					SP (4)	
(453.0) 14.0							
14					End of Soil Borehole Log at 14.0 Ft. See PZ-204-SS Record of Drillhole for rock descriptions		Auger/split spoon refusal at 14.0 Feet

RECORD OF DRILLHOLE PZ-204-SS

Sheet 1 of 8

PROJECT: LAIDLAW/RI-FS
PROJECT NO: 943-2848
LOCATION: BRIDGETON, MO

BORING METHOD: NX Core & water
DRILLING DATE: 3/6/95 - 3/8/95
DRILL RIG: CME 75

DATUM: MSL
COORDINATES N: 1066426.61
AZIMUTH: 0

COLLAR ELEV: 467.0
E: 515533.49
INCLINATION: -90

J-Joint, F-Fault, S-Shear, B-Bedding, F-Foliation
PL-Planar, C-Curved, U-Undulating, ST-Stepped, I-Irregular
P-Polished, K-Slikensided, SM-Smooth, R-Rough, VR-V. Rough
Fe-Fe Oxide, CL-Clay Infill, CH-Chlorite, H-Healed, GRF-Gravel Filled

DEPTH SCALE (FEET)	DESCRIPTION	GRAPHIC LOG	ELEV / DEPTH (FT)	RUN NO.	CORE RECOVERY	RQD	FRACTURES PER FOOT	DISCONTINUITY DATA: DIP WRT CORE AXIS	DISCONTINUITY DATA: TYPE AND SURFACE DESCRIPTION	GRAPHIC LOG	WEATHERING INDEX (SW FR, MW, HW, CW)	STRENGTH INDEX (R6, R5, R4, R3, R2, R1)	POINT LOAD INDEX (psi) (R1 ≤10, R2 50, R3 100, R4 200, R5 600, R6 ≥1500)	TEST ORIENTATION	NOTES WATER LEVELS INSTRUMENTATION
0	0.0-14.0 ft. See Soil Borehole Log PZ-204-SS 14.0-14.6 ft. No samples collected														
2															
4															
6															
8															
10															
12															
14			452.40												
	14.6-45.1 ft. Fresh, medium bedded, light olive gray (5Y 6/1), micro-crystalline, strong, LIMESTONE, (ST. LOUIS FORMATION) Some calcite crystal veins (<1 mm. thick), few fossils		14.60	1	89%										3/8/95 @ 8:15 Begin coring
16															

DEPTH SCALE: 1:2
DRILLING CONTRACTOR: LAYNE-WESTERN
DRILLER: D. MAHURIN

LOGGED: M. HIRT
CHECKED: W. HERST
DATE: 3/29/95

Golder Associates

RECORD OF DRILLHOLE PZ-204-SS

Sheet 2 of 6

PROJECT: LAIDLAW/RI-FS
PROJECT NO: 943-2848
LOCATION: BRIDGETON, MO

BORING METHOD: NX Core & water
DRILLING DATE: 3/6/95 - 3/9/95
DRILL RIG: CME 75

DATUM: MSL
COORDINATES N: 1066426.61
AZIMUTH: 0

COLLAR ELEV: 467.0
E: 515533.49
INCLINATION: -90

J-Joint, F-Fault, S-Shear, B-Bedding, F-Foliation
PL-Planar, C-Curved, U-Undulating, ST-Stepped, I-Irregular
P-Polished, K-Slikensided, SM-Smooth, R-Rough, VR-V. Rough
Fe-Fe Oxide, CL-Clay Infill, CH-Chlorite, H-Healed, GRF-Gravel Filled

DEPTH (FEET)	DESCRIPTION	GRAPHIC LOG	ELEV / DEPTH (FT)	RUN NO	CORE RECOVERY	ROD	FRACTURES PER FOOT	DISCONTINUITY DATA: DIP wrt CORE AXIS	DISCONTINUITY DATA: TYPE AND SURFACE DESCRIPTION	GRAPHIC LOG	WEATHERING INDEX (SW FR MW HW CW)	STRENGTH INDEX (R6 R4 R3 R2 R1)	POINT LOAD INDEX (psi) (R1 30, R2 150, R3 300, R4 600, R5 1500, R6)	TEST ORIENTATION	NOTES WATER LEVELS INSTRUMENTATION
16	14.6-45.1 ft. Fresh, medium bedded, light olive gray (5Y 6/1), micro-crystalline, strong, LIMESTONE, (ST. LOUIS FORMATION) Some calcite crystal veins (< 1 mm. thick), few fossils								J,PL,SM,CL J,I,SM,CL J,I,SM J,I,SM,CL J,I,SM,CL J,I,SM J,ST,SM,CL J,I,SM,CL						
18				1	69%				J,I,SM J,I,SM J,PL,SM,CL J,I,SM						
			447.70 18.30						Core Loss J,I,SM (2)						Core loss due to highly fractured rock; core End Run 1 @ 9:50
20									J,I,SM (2) J,I,SM,CL (3) J,U,SM,CL						
				2	96%				J,I,SM,CL (3) J,U,SM,CL (2)						
22									J,I,SM,CL (2) J,I,SM						
	22.6-28.0 ft. Very fine grained								J,I,SM,CL (2)						
			443.00 24.00												3/8/95 @ 10:50 End Run 2
24									J,I,R						Use new bit during Run 3; slightly larger diameter, therefore hole reamed slightly
26				3	98%				J,PL,SM J,I,SM,CL J,I,SM,CL, J,I,SM J,I,SM,Fe J,U,SM						
28	28.0-30.7 ft. Medium grained 28.1-28.5 ft. 0 iron stained vein (1 mm. thick)														
	29.3-29.8 ft. Slightly weathered, iron stained		437.70 29.30						J,PL,SM,Fe						3/8/95 @ 13:15 End Run 3
30				4	98%				J,I,R J,PL,SM (2) J,I,R J,I,R						
									J,U,SM J,I,R						
32															

DEPTH SCALE: 1:2
DRILLING CONTRACTOR: LAYNE-WESTERN
DRILLER: D. MAHURIN

LOGGED: M. HIRT
CHECKED: W. HERST
DATE: 3/29/95

Golder Associates

RECORD OF DRILLHOLE PZ-204-SS

Sheet 3 of 6

PROJECT: LAIDLAW/RI-FS
PROJECT NO: 943-2648
LOCATION: BRIDGETON, MO

BORING METHOD: NX Core & water
DRILLING DATE: 3/8/95 - 3/9/95
DRILL RIG: CME 75

DATUM: MSL
COORDINATES N: 1066426.61
AZIMUTH: 0

COLLAR ELEV: 487.0
E: 515533.49
INCLINATION: -90

J-Joint, F-Fault, S-Shear, B-Bedding, F-Foliation
PL-Planar, C-Curved, U-Undulating, ST-Stepped, I-Irregular
P-Polished, K-Slikensided, SM-Smooth, R-Rough, VR-V. Rough
Fe-Fe Oxide, CL-Clay Infil, CH-Chlorite, H-Healed, GRF-Gravel Filled

DEPTH (FEET)	DESCRIPTION	GRAPHIC LOG	ELEV / DEPTH (FT)	RUN NO	CORE RECOVERY	RQD	FRACTURES PER FOOT	DISCONTINUITY DATA: DIP wrt CORE AXIS	DISCONTINUITY DATA: TYPE AND SURFACE DESCRIPTION	GRAPHIC LOG	WEATHERING INDEX: SW FR, MW, HW, CW	STRENGTH INDEX: R6, R5, R4, R3, R2, R1	POINT LOAD INDEX (psi): R1 30, R2 150, R3 300, R4 600, R5 1500, R6	TEST ORIENTATION	NOTES WATER LEVELS INSTRUMENTATION
32	14.6-45.1 ft. Fresh, medium bedded, light olive gray (5Y 6/1), micro-crystalline, strong, LIMESTONE, (ST. LOUIS FORMATION) Some calcite crystal veins (<1 mm. thick), few fossils							90	J,I,R						
34								90	J,I,R (4)						
36				4	98%			90	J,I,SM,CL (4)						
								90	J,I,SM,CL (5)						
38								90	J,I,SM,CL (2)						
			427.70 / 39.30					90	J,I,SM,CL						3/5895 @ 14:05 End Run 4
40								90	J,I,SM						
								90	J,I,SM,CL (6)						
								90	J,I,SM						
								90	J,I,SM,CL						
42	41.8-42.8 ft. Fine grained, calcareous dolomite														
	42.8-45.1 ft. Medium grained, dolomitic limestone							90	J,I,SM						
44				5	102 %										
			421.90 / 45.10					90	J,I,R (4)						
	45.1-49.3 ft. Slightly weathered, medium bedded, light olive gray (5Y 5/2), very fine grained, medium strong, DOLOMITE, (ST. LOUIS FORMATION) Porous/vuggy (vugs ~1 mm. thick); some 10 degree calcite veins (<2 mm. thick)							60	B,U,R						
46															
48															

DEPTH SCALE: 1:2
DRILLING CONTRACTOR: LAYNE-WESTERN
DRILLER: D. MAHURIN

LOGGED: M. HIRT
CHECKED: W. HERST
DATE: 3/29/95

Golder Associates

RECORD OF DRILLHOLE PZ-204-SS

Sheet 4 of 8

PROJECT: LAIDLAW/RI-FS
PROJECT NO: 943-2848
LOCATION: BRIDGETON, MO

BORING METHOD: NX Core & water
DRILLING DATE: 3/8/95 - 3/9/95
DRILL RIG: CME 75

DATUM: MSL
COORDINATES N: 1068428.61
AZIMUTH: 0

COLLAR ELEV: 467.0
E: 515533.49
INCLINATION: -90

J-Joint, F-Fault, S-Shear, B-Bedding, F-Foliation
PL-Planar, C-Curved, U-Undulating, ST-Stepped, I-Irregular
P-Polished, K-Slikensided, SM-Smooth, R-Rough, VR-V. Rough
Fe-Fe Oxide, CL-Clay Infil, CH-Chlorite, H-Healed, GRF-Gravel Filled

DEPTH SCALE (FEET)	DESCRIPTION	GRAPHIC LOG	ELEV / DEPTH (FT)	RUN NO	CORE RECOVERY	RQD	FRACTURES PER FOOT	DISCONTINUITY DATA: DIP wrt CORE AXIS	DISCONTINUITY DATA: TYPE AND SURFACE DESCRIPTION	GRAPHIC LOG	WEATHERING INDEX	STRENGTH INDEX	POINT LOAD INDEX (psi)	TEST ORIENTATION	NOTES WATER LEVELS INSTRUMENTATION
48	48.8-49.3 ft. Fine grained, dolomitic limestone		417.70	5	102 %										3/8/95 @ 14:40 End Run 5
	49.3-64.3 ft. Fresh, medium bedded, light olive gray (5Y 6/1), very fine grained, medium strong, LIMESTONE, (ST. LOUIS FORMATION)		49.30						J,I,SM (6)						
50	49.3-49.8 ft. Thinly laminated								J,I,SM (2)						
	49.8-50.9 ft. Chert zone								J,I,R,CL						
52									J,I,R,CL						
	52.8-54.5 ft. Intricate pattern of calcite veins														
54				6	98%				J,I,R,CL						
	54.8-55.9 ft. Moderately weathered								J,I,R,CL						
56															
	56.6-58.1 ft. Moderately weathered								J,PL,SM,CL						
	57.5-57.7 ft. 409.50 Claystone 57.70								J,I,R,CL						
									B,U,R,CL						
58	408.90								B,U,SM,CL						
	58.1-58.5 ft. Claystone 408.50		58.10						B,I,R,CL						
	58.5-59.9 ft. Siltstone, 45 degree crossbed		58.50						J,PL,SM,CL (2)						
									J,I,SM,CL						
			407.70 59.30						J,I,R						3/8/95 @ 15:35 End Run 6
									J,I,SM (2)						
	407.10								J,I,R						
60	60.0-60.4 ft. 59.90 Calcareous dolomite								J,I,R						
									J,PL,SM,CL						
									J,U,SM,CL						
									J,PL,R,CL						
	405.40														
	61.6-62.4 ft. 61.60 Calcareous dolomite, slightly weathered			7	100 %				J,PL,SM						
62	404.60														
	62.40								J,I,SM,CL (5)						
	63.0-64.3 ft. Microcrystalline														
64															

DEPTH SCALE: 1:2
DRILLING CONTRACTOR: LAYNE-WESTERN
DRILLER: D. MAHURIN

LOGGED: M. HIRT
CHECKED: W. HERST
DATE: 3/29/95

Golder Associates

RECORD OF DRILLHOLE PZ-204-SS

Sheet 5 of 6

PROJECT: LAIDLAW/RI-FS
PROJECT NO: 943-2848
LOCATION: BRIDGETON, MO

BORING METHOD: NX Core & water
DRILLING DATE: 3/8/95 - 3/9/95
DRILL RIG: CME 75

DATUM: MSL
COORDINATES N: 1066426.61
AZIMUTH: 0

COLLAR ELEV: 467.0
E: 515533.49
INCLINATION: -90

J-Joint, F-Fault, S-Shear, B-Bedding, F-Foliation
PL-Planar, C-Curved, U-Undulating, ST-Stepped, I-Irregular
P-Polished, K-Slikensided, SM-Smooth, R-Rough, VR-V. Rough
Fe-Fe Oxide, CL-Clay Infill, CH-Chlorite, H-Healed, GRF-Gravel Filled

DEPTH (FEET)	DESCRIPTION	GRAPHIC LOG	ELEV / DEPTH (FT)	RUN NO.	CORE RECOVERY	ROD	FRACTURES PER FOOT	DISCONTINUITY DATA: DIP w/t CORE AXIS	DISCONTINUITY DATA: TYPE AND SURFACE DESCRIPTION	GRAPHIC LOG	WEATHERING INDEX	STRENGTH INDEX	POINT LOAD INDEX (psi)	TEST ORIENTATION	NOTES WATER LEVELS INSTRUMENTATION
64	ROCK TYPE		402.70 / 64.30						J,I,SM,CL (2)		SW FR HW HW CW	R6 R5 R4 R3 R2 R1	R1 30 R2 150 R3 300 R4 600 R5 1500 R6		
	64.3-79.9 ft. Moderately weathered, thinly bedded, pale to dark yellowish brown (10YR 6/2-10YR 4/2), very fine grained, medium strong, DOLOMITE, (ST. LOUIS FORMATION) Very porous/vuggy (<1 mm.-5 mm.)								J,U,R J,I,SM,CL						
66				7	100										
68															
			397.70 / 69.30												3/8/95 @ 16:20 End Run 7
70	69.6-70.3 ft. Slightly weathered														
72															
74				8	100										
76															
78															
			387.70 / 79.30												3/8/95 @ 16:55 End Run 8
	387.10 / 79.90			9	98%				J,I,R						
80															

DEPTH SCALE: 1:2
DRILLING CONTRACTOR: LAYNE-WESTERN
DRILLER: O. MAHURIN

LOGGED: M. HIRT
CHECKED: W. HERST
DATE: 3/29/95

Golder Associates

RECORD OF DRILLHOLE PZ-204-SS

PROJECT: LAIDLAW/RI-FS
PROJECT NO: 943-2848
LOCATION: BRIDGETON, MO

BORING METHOD: NX Core & water
DRILLING DATE: 3/8/95 - 3/9/95
DRILL RIG: CME 75

DATUM: MSL
COORDINATES N: 1066426.61
AZIMUTH: 0

COLLAR ELEV: 487.0
E: 515533.49
INCLINATION: -90

J-Joint, F-Fault, S-Shear, B-Bedding, F-Foliation
PL-Planar, C-Curved, U-Undulating, ST-Stepped, I-Irregular
P-Polished, K-Slickensided, SM-Smooth, R-Rough, VR-V. Rough
Fe-Fe Oxide, CL-Clay Infill, CH-Chlorite, H-Healed, GRF-Gravel Filled

DEPTH (FEET)	DESCRIPTION	GRAPHIC LOG	ELEV / DEPTH (FT)	RUN NO.	CORE RECOVERY	RQD	FRACTURES PER FOOT	DISCONTINUITY DATA: DIP wrt CORE AXIS	DISCONTINUITY DATA: TYPE AND SURFACE DESCRIPTION	GRAPHIC LOG	WEATHERING INDEX (SW FR, MW, HW, CW)	STRENGTH INDEX (R5, R4, R3, R2, R1)	POINT LOAD INDEX (psi) (R1 30, R2 150, R3 300, R4 600, R5 1500, R6)	TEST ORIENTATION	NOTES WATER LEVELS INSTRUMENTATION
80	79.9-90.3 ft. Fresh, medium bedded, pale yellowish brown (10YR 6/2), coarse grained, medium strong, LIMESTONE, (ST. LOUIS FORMATION) Some calcite crystals, stylolites														
82				9	98%				J,PL,SM,CL J,U,SM,CL J,I,SM,CL						
84			382.70 84.30												3/8/95 @ 17:20 End Run 9
86	85.7-89.6 ft. Microcrystalline								J,I,R J,PL,SM J,I,SM (2) J,I,SM						
88				10	100%				J,I,SM J,I,SM J,I,SM,CL (2) J,I,R,CL (2) J,PL,SM						
90	End of Record of Drillhole at 90.3 ft.		378.70 90.30 378.70 90.30												3/8/95 @ 17:50 End Run 10
92															
94															
96															

DEPTH SCALE: 1:2
DRILLING CONTRACTOR: LAYNE-WESTERN
DRILLER: D. MAHURIN

LOGGED: M. HIRT
CHECKED: W. HERST
DATE: 3/29/95

Golder Associates

Well No. PZ-204-SS

Boring No. X-Ref: PZ-204-SS

PIEZOMETER CONSTRUCTION SUMMARY

Survey Coords: Northing: 1066427 ft. Easting: 515533 ft.

Elevation Ground Level 467.0 ft. NGVD

Top of PVC Casing 469.63 ft. NGVD

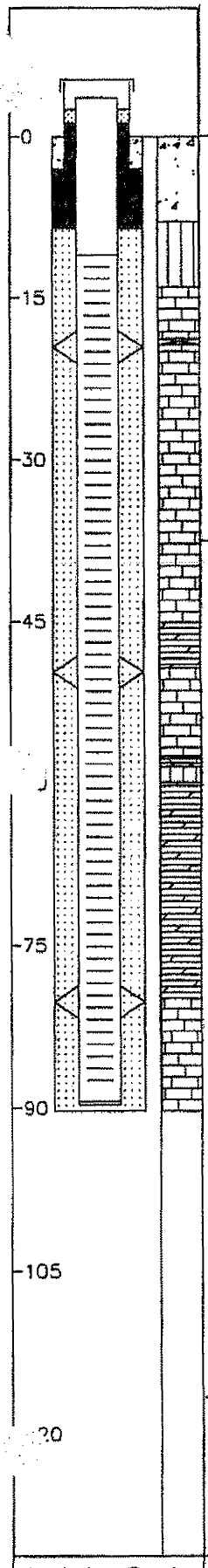

Not to Scale

Drilling Summary:

Total Depth 90.3 ft.

Borehole Diameter 10 1/4 in. (0.0–14.0 ft.) 5 7/8 in. (14.0–90.3 ft.)

Casing Stickup Height 2.60 ft.

Driller Layne-Western St. Louis, MO

Rig CME 75, Schramm Portadrill T660H

Bit(s) 6 1/4 in. ID Hollow Stem Auger Bit, NX Core, 5 7/8 in. Button Bit for Reaming

Drilling Fluid Auger–None, NX Core Water, Air Rotary

Protective Casing 8x8 in. Square Steel, by 5 ft. long

Construction Time log:

Task	Start Date	Start Time	Finish Date	Finish Time
Drilling				
CME 75	3/7/95	15:50	3/8/95	7:45
Schramm Rotary	3/10/95	12:15	3/10/95	14:15
Geophys.Logging:				
Casing:	3/10/95	14:15	3/10/95	14:35
Filter Placement:	3/10/95	14:35	3/10/95	15:05
Cementing:				
Development				
Bentonite Grout Bentonite Seal	3/10/95	15:05	3/10/95	15:15

Well Design & Specifications

Basis: Geologic Log X Geophysical Log

Casing string(s): C = Casing S = Screen

Depth			String(s)	Elevation		
+ 2.60	–	10.95	C1	469.63	–	456.08
10.95	–	89.35	S1	456.08	–	377.68
89.35	–	89.68	C2	377.68	–	377.35

Casing: C1 2 in. dia. Schedule 80 PVC, flush threaded with O-rings

C2 2 in. dia. threaded PVC end cap (4 in. long or 0.33 ft.)

Screen: S1 2 in. dia. Schedule 80 PVC, 0.010 in. machine cut slot, flush threaded with O-rings

Sand Pack: 16–35 mesh Silica Sand, 8.5–90.3 ft.

Filter Pack:

Grout Seal:

Bentonite Seal: Medium Bentonite Chips, 3.0–8.5 ft.

Concrete: 0.0–3.0 ft.

Well Development

Stabilization Test Data:

Time	pH	Spec. Cond.	Temp (°C)

Recovery Data:

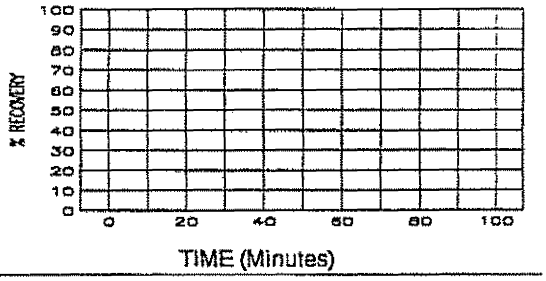

Comments:

Supervised by B. Tilton

Job Number 943-2848

Site LAIDLAW/OU2 RI-FS/MO

File Name PZ204SS

66134

MISSOURI DEPARTMENT OF NATURAL RESOURCES
DIVISION OF GEOLOGY AND LAND SURVEY

MONITORING WELL CERTIFICATION RECORD

OFFICE USE ONLY	DATE RECEIVED
REF. NO 115087	CHECK NO.
ROUTE	TRANSMITTAL NO
STATE WELL NUMBER	CROSS REFERENCE NO
CHECKED BY	ENTERED Ph 1 Ph 2 Ph 3
APPROVED BY	DATE APPROVED

INFORMATION SUPPLIED BY OWNER

SITE NAME	WELL NUMBER
LAIDLAW BRIDGETON SANITARY LANDFALL	P2-204-55

SITE ADDRESS	CITY	STATE	ZIP CODE
ST. CHARLES ROCK RD.	BRIDGETON	MO.	63044

NAME	TELEPHONE
LAIDLAW WASTE SYSTEMS, INC.	

ADDRESS	CITY	STATE	ZIP CODE
1338 N. BROADWAY	ST. LOUIS	MO.	63102

INFORMATION SUPPLIED BY MONITORING WELL CONTRACTOR

LOCATION OF WELL SHOW LOCATION IN SECTION PLAT

COUNTY ST. LOUIS
ELEVATION 467.0
AREA NO.

SMALLEST ¼ LARGEST ¼

SEC. ____ TWN. 47 N.RNG 5 (E OR W)

LAT. 38° 45' 45" LONG. 90° 26' 44"

SKETCH THE LOCATION TO THE WELL INCLUDING MILEAGE ON ALL ROADS TRAVELED FROM NEAREST TOWNS OR HIGHWAYS

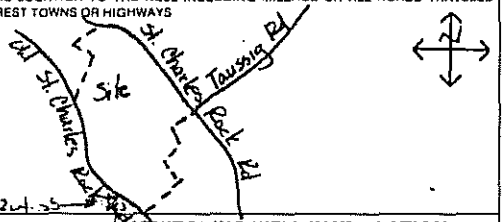

DESCRIBE LOCATION OF THE WELL SO WE WOULD BE ABLE TO VISIT IT

MONITORING WELL INSTALLATION CONTRACTOR'S NAME
LAYNE WESTERN CO, INC.

DRILLING CONTRACTOR'S NAME
LAYNE WESTERN CO, INC.

TYPE OF INSTALLATION
☒ ABOVE GROUND ☐ FLUSH MOUNT

STATIC WATER LEVEL
FEET FROM MEASURING POINT

DATE OF STATIC WATER LEVEL

ELEVATION OF MEASURING POINT

MEASURING POINT IS
☐ TOP OF RISER PIPE
☐ OTHER

DRILLING EQUIPMENT
☒ AIR ROTARY ☒ AUGER TYPE 6¼ H.S.A.
☐ REVERSE ROTARY ☐ OTHER

CENTRALIZERS USED
☒ YES, AT 4 TOTAL
☐ STAINLESS STEEL
☐ OTHER
☐ NO

MULTIPLE CASED WELLS
SUBMIT ADDITIONAL AS BUILT DIAGRAM SHOWING WELL CONSTRUCTION DETAILS INCLUDING TYPE AND SIZE OF ALL CASING, HOLE DIAMETERS, AND GROUT USED.

DATE WELL CONSTRUCTION WAS COMPLETED
3-10-95

I HEREBY CERTIFY THAT THE MONITORING WELL HEREIN DESCRIBED WAS CONSTRUCTED IN ACCORDANCE WITH THE DEPARTMENT OF NATURAL RESOURCES REQUIREMENTS FOR THE CONSTRUCTION OF MONITORING WELLS.

SIGNATURE (MONITORING WELL CONTRACTOR) Michael P. Vogl

PERMIT NUMBER	DATE
OU1256WM1	4-11-95

SIGNATURE (DRILLING CONTRACTOR) Michael P. Vogl

PERMIT NUMBER	DATE
OU1256WM1	4-11-95

NOTE: Record the fraction of a foot in decimal, not in inches

Top of Riser Elevation: 470.25

LOCKING CAP: Y / N (Circle one)
CAP VENT: Y / N (Circle one)

PROTECTIVE CASING
Type: STEEL
Size: 8" x 5" x 5'
Bore Hole Diameter: 10.25"
WEEP HOLE - Y / N (Circle one)

Ground Surface Elevation: 467.0 Ft

Information in this column to be supplied in the Feet from Surface column	Feet from Surface	Description of Formation
		0-7 Fill
Depth to bottom of Protective Casing Seal:	3	
Depth to Base of Annular Seal:	3	
		7-14 Silt
Depth to Base of Bentonite Seal:	8.5	
Depth to Base of Secondary Filter Pack:		
Depth to Top of the Screen:	10	
		14-64 Limestone
		64-81 Dolomite
Depth to Bottom of the Screen:	90	
		81-90.3 Limestone
Plug Back Total Depth:		
Original Total Depth:	90.3	

PROTECTIVE CASING SEAL
Type: ☒ Concrete ☐ Cement Slurry

RISER PIPE
Length: 13.25'
Diameter: 2"
Type of Material: SCH 80 PVC

BOREHOLE DIAMETER: 5⅞ In.

ANNULAR SEAL
Type: ☐ Bentonite Slurry ☐ Cement Slurry ☒ Non Slurry Bentonite

BENTONITE SEAL
Type: ☐ Bentonite Slurry ☒ Non Slurry Bentonite
Length of Seal: 5.5 Ft.

SECONDARY FILTER PACK (Optional)
Type: ☐ Sand ☐ Manufactured
Grain Size:
Length:

PRIMARY FILTER PACK
Type: ☒ Sand ☐ Manufactured
Grain Size: 16-35
Length: 81.8

WELL SCREEN
Length: 80'
Slot Size: 0.010"
Type: SCH 80 PVC

SUMP DETAILS
Length: 0.3 Ft.
Diameter: 2 In.
Type: PVC

TYPE OF BACKFILL: SAND

MO 780-1415 (2-94) DISTRIBUTION: WHITE DIVISION CANARY MONITORING WELL CONTRACTOR PINK/OWNER

RECORD OF DRILLHOLE PZ-204A-SS

Sheet 1 of 1

PROJECT: LAIDLAW/RI-FS
PROJECT NO: 943-2848
LOCATION: BRIDGETON, MO

BORING METHOD: NX Core & water
DRILLING DATE: 6/21/95
DRILL RIG: SCHRAMM

DATUM: MSL
COORDINATES N: 1066429.82
AZIMUTH: 0

COLLAR ELEV: 466.7
E: 515556.28
INCLINATION: -90

J-Joint, F-Fault, S-Shear, B-Bedding, F-Foliation
PL-Planar, C-Curved, U-Undulating, ST-Stepped, I-Irregular
P-Polished, K-Slickensided, SM-Smooth, R-Rough, VR-V. Rough
Fe-FeOxide, CL-Clay Infil, CH-Chlorite, H-Healed, GRF-Gravel Filled

DEPTH SCALE (FEET)	ROCK TYPE DESCRIPTION	GRAPHIC LOG	ELEV / DEPTH (FT)	RUN NO	CORE RECOVERY	ROD	FRACTURES PER FOOT	DISCONTINUITY DATA: DIP WRT CORE AXIS	DISCONTINUITY DATA: TYPE AND SURFACE DESCRIPTION	GRAPHIC LOG	WEATHERING INDEX (SW FR, SW MW, SW CW)	STRENGTH INDEX	POINT LOAD INDEX (psi)	TEST ORIENTATION	NOTES WATER LEVELS INSTRUMENTATION
80	0.0-80.0 ft. See Soil Borehole Log and Record of Drillhole for PZ-204-SS 80.0-90.0 ft. Fresh, medium to thickly bedded, light olive gray (5Y 6/1), finely crystalline, strong, LIMESTONE, (ST. LOUIS FORMATION) Stylolitic		386.70 80.00						J,PL,R,CL			R6			0.0-14.0 ft. Borehole advanced with 6 1/4 in. ID hollow stem augers 14.0-80.0 ft. Borehole advanced with 5 7/8 in. dia. air rotary bit 6/21/95 @ 13:00 Began coring
82	82.5-83.1 ft. Thinly laminated, fossiliferous 82.3-85.8 ft. Small vugs (1/4 in.) filled with glauconite								J,PL,R,CL			R5 R4 R3 R2 R1			
84									J,C,R,CL (3)						
				1	96%				J,C,VR-CL J,PL,R,CL						
86	@ 85.4 ft. Grades to microcrystalline Limestone								J,C,SM,CL						
									J,ST,R,CL						
									J,C,R,CL						
88									J,C,R,CL (2)						
			377.10 89.60						J,P,R Core Loss						6/21/95 @ 15:45 Ended coring
90	376.70 End of Record of Drillhole at 90.0 ft.		90.00												
92															
94															
96															

DEPTH SCALE: 1:2
DRILLING CONTRACTOR: LAYNE-WESTERN
DRILLER: D. MAHURIN

LOGGED: R. BOOTH
CHECKED: B. TILTON
DATE: 7/12/95

Golder Associates

Well No. PZ-204A-SS

Boring No. X-Ref: PZ-204A-SS

PIEZOMETER CONSTRUCTION SUMMARY

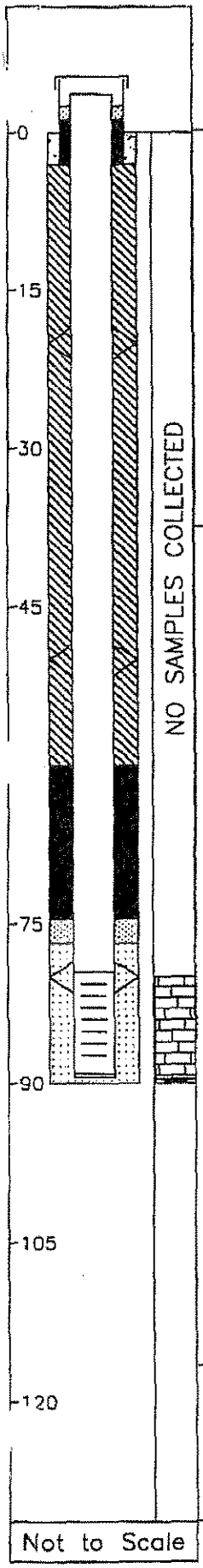

Not to Scale

Survey Coords: Northing: 1066430 ft. Easting: 515556 ft.

Elevation Ground Level 466.7 ft. NGVD

Top of PVC Casing 468.16 ft. NGVD

Drilling Summary:

Total Depth 90.0 ft.

Borehole Diameter 10 1/4 in. (0.0–14.0 ft.) 5 7/8 in. (14.0–90.0 ft.)

Casing Stickup Height 1.50 ft.

Driller Layne-Western, St. Louis, MO

Rig CME 75, Schramm Portadrill T660H

Bit(s) 6 1/4 in. ID Hollow Stem Auger Bit, NX Core, 5 7/8 in. Button Bit for Reaming

Drilling Fluid Auger-None, NX Core Water, Air Rotary

Protective Casing 8x8 in. Square Steel, by 5 ft. long

Construction Time log:

Task	Start Date	Start Time	Finish Date	Finish Time
Drilling				
CME 75				
Schramm Rotary	6/21/95	8:00	6/21/95	14:00
Geophys.Logging:				
Casing:	6/22/95	7:30	6/22/95	7:35
Filter Placement:	6/22/95	7:35	6/22/95	7:45
Cementing:				
Development				
Bentonite Grout	6/22/95	8:00	6/22/95	9:00
Bentonite Seal	6/22/95	7:45	6/22/95	8:00

Well Design & Specifications

Basis: Geologic Log X Geophysical Log

Casing string(s): C = Casing S = Screen

Depth			String(s)	Elevation		
+ 1.50	–	79.50	C1	468.16	–	387.16
79.50	–	89.10	S1	387.16	–	377.56
89.10	–	89.43	C2	377.56	–	377.23
	–				–	
	–				–	
	–				–	

Casing: C1 2 in. dia. Schedule 80 PVC, flush threaded with O-rings

C2 2 in. dia. threaded PVC end cap (4 in. long or 0.33 ft.)

Screen: S1 2 in. dia. Schedule 80 PVC, 0.010 in. machine cut slot, flush threaded with O-rings

Sand Pack: 16-35 mesh Silica Sand, 76.8-90.0 ft.

Filter Pack: Less than 50 mesh Silica Sand, 74.5-76.8 ft.

Grout Seal: Wyo-Ben Grout Well Bentonite Slurry, 3.0-60.0 ft.

Bentonite Seal: Extra high yield Wyo-Ben (100%) Slurry, 60.0-74.5 ft.

Concrete: 0.0-3.0 ft.

Well Development

Stabilization Test Data:

Time	pH	Spec. Cond.	Temp (°C)

Recovery Data:

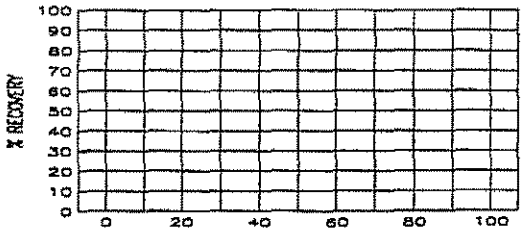

Comments:

Supervised by B. Tilton

Job Number 943-2848

Site LAIDLAW/OU2 RI-FS/MO

File Name PZ204ASS

MISSOURI DEPARTMENT OF NATURAL RESOURCES
DIVISION OF GEOLOGY AND LAND SURVEY

MONITORING WELL CERTIFICATION RECORD

OFFICE USE ONLY	DATE RECEIVED
REF NO. 122518	CHECK NO
ROUTE	TRANSMITTAL NO
STATE WELL NUMBER	CROSS REFERENCE NO
CHECKED BY	ENTERED Ph 1 Ph 2 Ph 3
APPROVED BY	DATE APPROVED

INFORMATION SUPPLIED BY OWNER

SITE NAME	WELL NUMBER
LANDFILL BRIDGETON SANITARY LANDFILL	PZ-104A-SS

SITE ADDRESS	CITY	STATE	ZIP CODE
51 CHARLES ROCK RD.	BRIDGETON	MO	63044

NAME	TELEPHONE
LANDFILL SERVICES, INC	314-291-3710

ADDRESS	CITY	STATE	ZIP CODE
1939 N. BROADWAY	ST LOUIS	MO	63102

INFORMATION SUPPLIED BY MONITORING WELL CONTRACTOR

LOCATION OF WELL
SHOW LOCATION IN SECTION PLAT

COUNTY ST. LOUIS
ELEVATION 466.66
AREA NO

SMALLEST ¼ LARGEST ¼

SEC. ____ TWN. 47 N.RNG. 5 (E.OR W)

LAT. 38° 45' 44" LONG. 90° 26' 44"

SKETCH THE LOCATION TO THE WELL INCLUDING MILEAGE ON ALL ROADS TRAVELED FROM NEAREST TOWNS OR HIGHWAYS

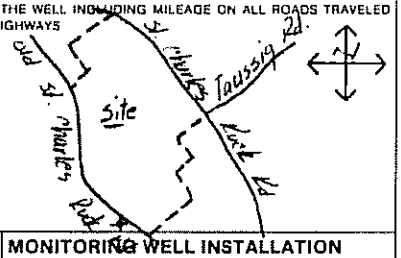

DESCRIBE LOCATION OF THE WELL SO WE WOULD BE ABLE TO VISIT IT

MONITORING WELL INSTALLATION CONTRACTOR'S NAME
LAYNE WESTERN CO., INC

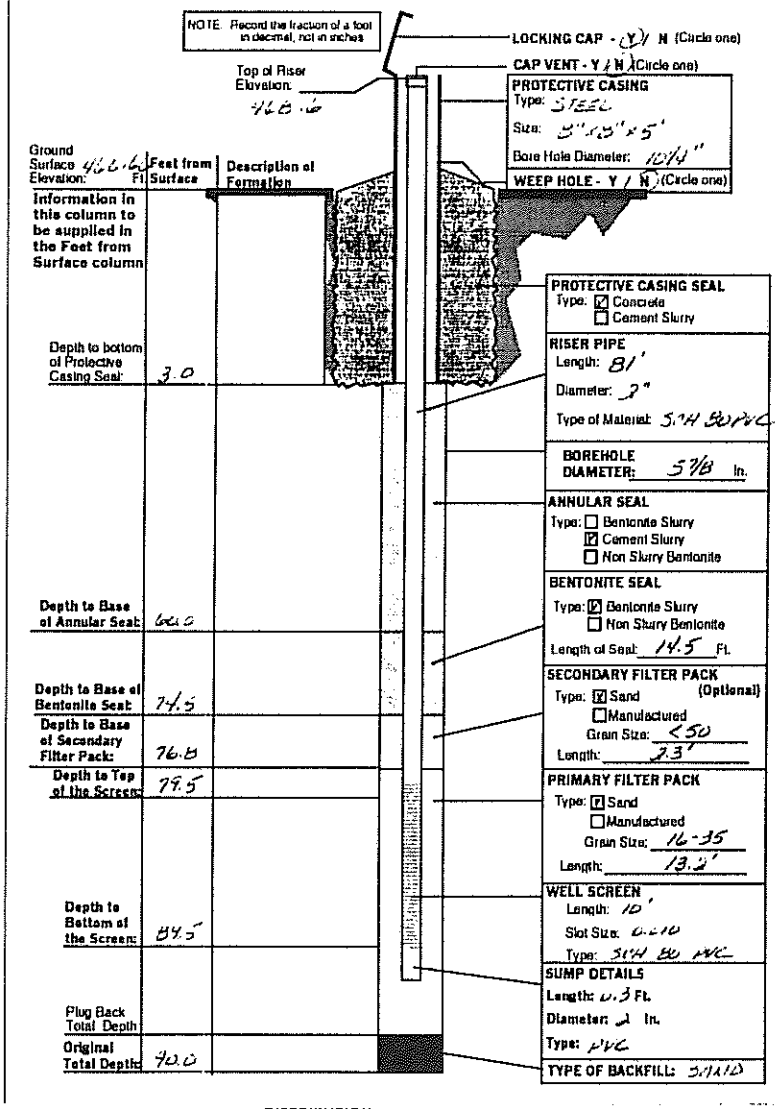

DRILLING CONTRACTOR'S NAME
LAYNE WESTERN CO., INC

TYPE OF INSTALLATION
☒ ABOVE GROUND ☐ FLUSH MOUNT

STATIC WATER LEVEL
FEET FROM MEASURING POINT

DATE OF STATIC WATER LEVEL

ELEVATION OF MEASURING POINT
468.16

MEASURING POINT IS
☒ TOP OF RISER PIPE
☐ OTHER

DRILLING EQUIPMENT
☒ AIR ROTARY ☒ AUGER TYPE 6¼ H.S.A.
☐ REVERSE ROTARY ☐ OTHER

CENTRALIZERS USED
☒ YES, AT 3 TOTAL
☒ STAINLESS STEEL
☐ OTHER
☐ NO

MULTIPLE CASED WELLS

SUBMIT ADDITIONAL AS BUILT DIAGRAM SHOWING WELL CONSTRUCTION DETAILS INCLUDING TYPE AND SIZE OF ALL CASING, HOLE DIAMETERS, AND GROUT USED.

DATE WELL CONSTRUCTION WAS COMPLETED
6-22-95

I HEREBY CERTIFY THAT THE MONITORING WELL HEREIN DESCRIBED WAS CONSTRUCTED IN ACCORDANCE WITH THE DEPARTMENT OF NATURAL RESOURCES REQUIREMENTS FOR THE CONSTRUCTION OF MONITORING WELLS.

SIGNATURE (MONITORING WELL CONTRACTOR)
Michael P. Vogt

PERMIT NUMBER	DATE
001256 WMI	7-07-95

SIGNATURE (DRILLING CONTRACTOR)
Michael P. Vogt

PERMIT NUMBER	DATE
001256 WMI	7-07-95

DISTRIBUTION: WHITE DIVISION CANARY MONITORING WELL CONTRACTOR PINK/OWNER

LAIDLAW WASTE SYSTEMS INC.

SOIL BOREHOLE LOG

SITE NAME AND LOCATION	DRILLING METHOD:				BORING NO.
LAIDLAW/OU2 RI-FS/MO WEST LAKE LANDFILL OPERABLE UNIT 2	6.25 inch I.D. Hollow Stem Auger				PZ-205-AS
					SHEET 1 OF 4
	SAMPLING METHOD:				DRILLING
	SPLIT SPOON: 2.0 inch O.D./1.5 inch I.D. (SP)				START / FINISH
	SHELBY TUBE: 3.0 inch O.D./2 13/16 inch I.D. (SH)				START / FINISH
	WATER LEVEL				TIME / TIME
	TIME				16:35 / 11:00
	DATE				DATE / DATE
NORTHING: 1067463.60 DATUM EASTING: 515463.34 ELEVATION 459.3	CASING DEPTH				3/25/95 / 3/25/95

DRILL RIG CME 75 - TRUCK MOUNT | SURFACE CONDITIONS

ANGLE -90° BEARING

SAMPLE HAMMER

DEPTH IN FEET (ELEVATION)	BLOW/ 6 IN. ON SAMPLER	RECOVERY	SYMBOL	SAMPLER SYMBOL	SAMPLE NUMBER AND DESCRIPTION OF MATERIAL	SAMPLER TYPE	REMARKS
1	4 7 7 10	1.5' / 2.0' (75%)			(0.0-2.2 Ft.) Stiff, dark greenish gray (5GY 4/1) to olive gray (5Y 6/1), SILTY CLAY, trace Fine Sand, SR, damp, (CL), (FILL)	SP (1)	
2					(457.1) 2.2		
3	1 2 2 4	0.5' / 2.0' (25%)			(2.2-6.0 Ft.) Soft, black (N1), CLAYEY SILT, trace Fine Sand, WR, moist to wet, (CL-ML), (FILL)	SP (2)	
4							
5	2 2 2 3	1.5' / 2.0' (75%)				SP (3)	Soil becomes wet @ 4.0 Ft.
6					(453.3) 6.0		
7	1 4 4 3	0.1' / 2.0' (5%)			(6.0-12.0 Ft.) Mixed wet waste and clayey silt	SP (4)	
8	6 5 6 4	0.1' / 2.0' (5%)			(8.0-10.0 Ft.) Mixed wet waste and clayey silt	SP (5)	
9							
10	2 2 2 3	0.6' / 2.0' (30%)				SP (6)	
11	3						
12					(447.3) 12.0		
13	2 3 3 2	0.0' / 2.0' (0%)	NO RECOVERY		(12.0-14.0 Ft.) No Recovery	SP (7)	From 12.0-28.0 Ft., no samples recovered, but drilling indicated mixed waste and silty clay layers
14	6 8 8 7	0.0' / 2.0' (0%)			(14.0-15.0 Ft.) No Recovery	SP (8)	

DRILLING CONTR LAYNE-WESTERN

LOGGED BY S. COSIO CHK'D BY V. HERST

DATE 6/1/95

JOB NO.: 943-2848

FILENAME: PZ205AS

LAIDLAW WASTE SYSTEMS INC.

SOIL BOREHOLE LOG

SITE NAME AND LOCATION	DRILLING METHOD:	BORING NO.
LAIDLAW/OU2 RI-FS/MO WEST LAKE LANDFILL OPERABLE UNIT 2	6.25 inch I.D. Hollow Stem Auger	PZ-205-AS
	SAMPLING METHOD:	SHEET 2 OF 4
	SPLIT SPOON: 2.0 inch O.D./1.5 inch I.D. (SP)	DRILLING
	SHELBY TUBE: 3.0 inch O.D./2 13/16 inch I.D. (SH)	START / FINISH

WATER LEVEL					START TIME	FINISH TIME
TIME					16:35	11:00
DATE					DATE	DATE
CASING DEPTH					3/25/95	3/25/95

DATUM NORTHING: 1067463.60 EASTING: 515463.34 ELEVATION 459.3

DRILL RIG CME 75 - TRUCK MOUNT

ANGLE -90° BEARING

SAMPLE HAMMER

SURFACE CONDITIONS

DEPTH IN FEET (ELEVATION)	BLOW/ 6 IN. ON SAMPLER	RECOVERY	SYMBOL	SAMPLER SYMBOL	SAMPLE NUMBER AND DESCRIPTION OF MATERIAL	SAMPLER TYPE	REMARKS
					(15.0-16.0 ft.) No Recovery	SP (8)	
16	5 5 5 4	0.0' 2.0' (0%)			(16.0-18.0 ft.) No Recovery	SP (9)	
17							
18	5 2 1 5	0.0' 2.0' (0%)			(18.0-20.0 ft.) No Recovery	SP (10)	
19							
20	1 2 3 3	0.0' 2.0' (0%)			(20.0-22.0 ft.) No Recovery	SP (11)	
21			NO RECOVERY				
22	3 2 1 4	0.0' 2.0' (0%)			(22.0-24.0 ft.) No Recovery	SP (12)	
23							
24	3 3 23 50/1"	0.0' 2.0' (0%)			(24.0-26.0 ft.) No Recovery	SP (13)	
25							
26	8 6 8 10	0.0' 2.0' (0%)			(26.0-28.0 ft.) No Recovery	SP (14)	
27							
28	1 2 4 5	0.0' 2.0' (0%)			(431.3) 28.0 (28.0-30.0 ft.) Loose, dark greenish gray (5GY 4/1), SANDY SILT, NR, wet, (ML)	SP (15)	
29							

DRILLING CONTR LAYNE-WESTERN

LOGGED BY S. COSIO

DATE 6/1/95 CHK'D BY W. HERSI

JOB NO.: 943-2848

FILENAME: PZ205AS

LAIDLAW WASTE SYSTEMS INC.

SOIL BOREHOLE LOG

SITE NAME AND LOCATION LAIDLAW/OU2 RI-FS/MO WEST LAKE LANDFILL OPERABLE UNIT 2	DRILLING METHOD: 6.25 inch I.D. Hollow Stem Auger SAMPLING METHOD: SPLIT SPOON: 2.0 inch O.D./1.5 inch I.D. (SP) SHELBY TUBE: 3.0 inch O.D./2 13/16 inch I.D. (SH)	BORING NO. PZ-205-AS SHEET 3 OF 4

WATER LEVEL					DRILLING START	DRILLING FINISH
TIME					TIME 16:35	TIME 11:00
DATE					DATE 3/25/95	DATE 3/25/95
CASING DEPTH						

DATUM NORTHING: 1067463.60 EASTING: 515463.34 ELEVATION 459.3

DRILL RIG CME 75 - TRUCK MOUNT

SURFACE CONDITIONS

ANGLE -90° BEARING

SAMPLE HAMMER

DEPTH IN FEET (ELEVATION)	BLOW/ 6 IN. ON SAMPLER	RECOVERY	SYMBOL	SAMPLER SYMBOL	SAMPLE NUMBER AND DESCRIPTION OF MATERIAL	SAMPLER TYPE	REMARKS
					(30.0-31.0 ft.) No samples collected (428.3) 31.0		5/21/95, 10.0 in. ID steel casing installed through 10.25 in. ID augers to 29.0 ft. Casing sealed in borehole with neat cement grout to surface.
31	6 5 5 8	1.2' / 2.0' (60%)			(31.0-36.5 ft.) Stiff, medium dark gray (N4), SILTY CLAY, with thin fine sand layers (1" thick), moist, NR, (CL), (ALLUVIUM)	SP (16)	
32							
33	9 3 5 12	1.3' / 2.0' (65%)				SP (17)	
34							
35	7 7 9 9	1.0' / 2.0' (50%)				SP (18)	
36					(422.8) 36.5		
37	7 14 21 17	1.1' / 2.0' (55%)			(36.5-39.0 ft.) Dense, olive gray (5Y 4/1), SILTY fine SAND, wet, NR, (SM), (ALLUVIUM)	SP (19)	
38					(420.3) 39.0		
39	4 3 3 4	1.4' / 2.0' (70%)			(39.0-44.2 ft.) Firm, olive gray (5Y 4/1), SILTY CLAY, moist to wet, NR, (CL) from 40.2-40.4 ft., wet, fine, sandy clay layer	SP (20)	
40							
41	3 4 4 5	1.7' / 2.0' (85%)			from 41.8-42.0 ft., wet, fine, sandy clay layer	SP (21)	
42							
43	2 7 11 18	1.3' / 2.0' (65%)				SP (22)	
44					(415.1) 44.2 (44.2-49.0 ft.) Compact, olive gray (5Y 4/1), fine SAND, trace silt, wet, NR, (SM), (ALLUVIUM)		

DRILLING CONTR LAYNE-WESTERN

LOGGED BY S. COSIO

CHK'D BY W. HERST

DATE 6/1/95

JOB NO.: 943-2848

FILENAME: PZ205AS

LAIDLAW WASTE SYSTEMS INC.

SOIL BOREHOLE LOG

SITE NAME AND LOCATION

LAIDLAW/OU2 RI-FS/MO
WEST LAKE LANDFILL
OPERABLE UNIT 2

NORTHING: 1067463.60
DATUM EASTING: 515463.34 ELEVATION 459.3

DRILLING METHOD: 6.25 inch I.D. Hollow Stem Auger

SAMPLING METHOD: SPLIT SPOON: 2.0 inch O.D./1.5 inch I.D. (SP)
SHELBY TUBE: 3.0 inch O.D./2 13/16 inch I.D. (SH)

					START	FINISH
WATER LEVEL					TIME	TIME
TIME					16:35	11:00
DATE					DATE	DATE
CASING DEPTH					3/25/95	3/25/95

BORING NO. PZ-205-AS

SHEET 4 OF 4

DRILLING

DRILL RIG CME 75 - TRUCK MOUNT

ANGLE -90° BEARING

SAMPLE HAMMER

SURFACE CONDITIONS

DEPTH IN FEET (ELEVATION)	BLOW/6 IN. ON SAMPLER	RECOVERY	SYMBOL	SAMPLER SYMBOL	SAMPLE NUMBER AND DESCRIPTION OF MATERIAL	SAMPLER TYPE	REMARKS
46	6 8 12 16	1.6'/2.0' (80%)			(44.2-49.0 Ft.) Compact, olive gray (5Y 4/1), Fine SAND, trace silt, wet, NR, (SM), (ALLUVIUM)	SP (23)	
47	3 5 50/4"	1.1'/2.0' (55%)					
48						SP (24)	
49					(410.3) 49.0		Top of weathered bedrock encountered @ 48.5 Ft.
					End of Soil Borehole Log at 49.0 ft.		
50							
51							
52							
53							
54							
55							
56							
57							
58							
59							

DRILLING CONTR LAYNE-WESTERN

LOGGED BY S. CISIO CHK'D BY W. HERST

DATE 6/1/95

JOB NO.: 943-2949

FILENAME: PZ205AS

Well No. PZ-205-AS

Boring No. X-Ref: PZ-205-AS

PIEZOMETER CONSTRUCTION SUMMARY

Survey Coords: Northing: 1067464 ft.
Easting: 515463 ft.

Elevation Ground Level 459.3 ft. NGVD
Top of PVC Casing 460.99 ft. NGVD

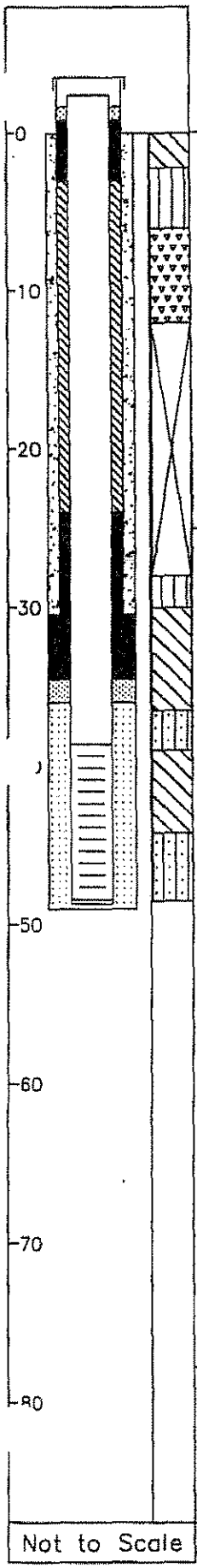

Not to Scale

Drilling Summary:

Total Depth 49.0 ft.
Borehole Diameter 14 1/4 in. (0.0–29.0 ft.) 8 1/4 in. (29.0–49.0 ft.)
Casing Stickup Height 1.66 ft.
Driller Layne-Western
St. Louis, MO

Rig CME 75, Schramm Portadrill T660H
Bit(s) 6 1/4 in. and 10 1/4 in. ID Hollow Stem Auger Bits
Drilling Fluid Auger-None

Protective Casing 8x8 in. Square Steel, by 5 ft. long

Well Design & Specifications

Basis: Geologic Log X Geophysical Log ____
Casing string(s): C = Casing S = Screen

Depth			String(s)	Elevation		
+ 1.66	-	38.55	C1	460.99	-	420.78
38.55	-	48.35	S1	420.78	-	410.98
48.35	-	48.68	C2	410.98	-	410.65
+ 0.70	-	29.00	C3	460.00	-	430.33
	-				-	
	-				-	

Casing: C1 2 in. dia. Schedule 80 PVC, flush threaded with O-rings
C2 2 in. dia. threaded PVC end cap (4 in. long or 0.33 ft.) (C3-see comments)
Screen: S1 2 in. dia. Schedule 80 PVC, 0.010 in. machine cut slot, flush threaded with O-rings
Sand Pack: 16-35 mesh Silica Sand, 36.0-49.0 ft.
Filter Pack: Less than 50 mesh Silica Sand, 34.5-36.0 ft.
Grout Seal: Wyo-Ben Grout Well Bentonite Slurry, 3.0-24.0 ft., Neat cement, 3.0-29.0 ft.
Bentonite Seal: Extra high yield Wyo-Ben (100%) Slurry, 24.0-34.5 ft.
Concrete: 0.0-3.0 ft.

Construction Time log:

Task	Start Date	Start Time	Finish Date	Finish Time
Drilling				
CME 75	3/25/95	16:35	3/25/95	11:00
CME 75	4/21/95	14:10	4/21/95	15:30
CME 75	5/5/95	13:30	5/5/95	15:30
Geophys.Logging:				
Casing:				
2" PVC	5/5/95	16:00	5/5/95	16:05
10" Steel	4/21/95	15:29	4/21/95	16:30
Filter Placement:	5/5/95	16:05	5/5/95	16:45
Cementing:				
Development				
Bentonite Grout	5/5/95	17:00	5/5/95	17:30
Bentonite Seal	5/5/95	16:45	5/5/95	17:00

Well Development

Stabilization Test Data:

Time	pH	Spec. Cond.	Temp (°C)

Recovery Data:

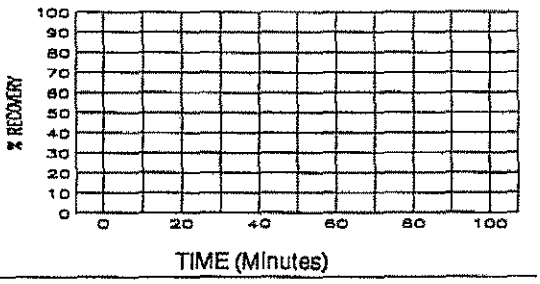

Comments: Surface Casing C3: 10 in. ID / 10 7/8 in. OD Steel Casing

Supervised by B. Tilton
Job Number 943-2848

Site LAIDLAW/OU2 RI-FS/MO
File Name PZ205AS

MISSOURI DEPARTMENT OF NATURAL RESOURCES
DIVISION OF GEOLOGY AND LAND SURVEY

MONITORING WELL CERTIFICATION RECORD

OFFICE USE ONLY	DATE RECEIVED
REF NO 122496	CHECK NO
ROUTE	TRANSMITTAL NO
STATE WELL NUMBER	CROSS REFERENCE NO
CHECKED BY	ENTERED Ph 1 Ph 2 Ph 3
APPROVED BY	DATE APPROVED

INFORMATION SUPPLIED BY OWNER

SITE NAME: LAIDLAW BRIDGETON SANITARY LANDFILL
WELL NUMBER: P2-205AS

SITE ADDRESS: ST. CHARLES ROCK RD.
CITY: BRIDGETON
STATE: MO.
ZIP CODE: 63044

NAME: LAIDLAW WASTE SYSTEMS, INC.
TELEPHONE: 314-344-3710

ADDRESS: 1838 N. BROADWAY
CITY: ST. LOUIS
STATE: MO
ZIP CODE: 63102

INFORMATION SUPPLIED BY MONITORING WELL CONTRACTOR

LOCATION OF WELL
SHOW LOCATION IN SECTION PLAT

COUNTY: ST. LOUIS
ELEVATION: 454.3
AREA NO.

SMALLEST ¼ ____ ¼ ____ ¼ ____ ¼
LARGEST ¼

SEC. ____ TWN. 47 N.RNG. 5 (E OR W)

LAT. 38 ° 45 ' 55 " LONG. 90 ° 36 ' 45 "

SKETCH THE LOCATION TO THE WELL INCLUDING MILEAGE ON ALL ROADS TRAVELED FROM NEAREST TOWNS OR HIGHWAYS

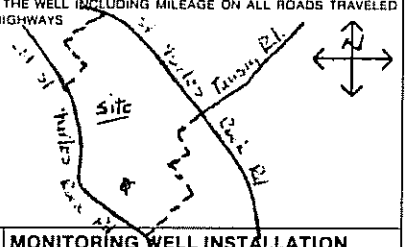

DESCRIBE LOCATION OF THE WELL SO WE WOULD BE ABLE TO VISIT IT

MONITORING WELL INSTALLATION CONTRACTOR'S NAME
LAYNE WESTERN CO, INC.

NOTE: Record the fraction of a foot in decimal, not in inches.

Top of Riser Elevation: 461.0

LOCKING CAP - (Y) N (Circle one)
CAP VENT (Y) N (Circle one)
PROTECTIVE CASING Type: STEEL Size: 8"x10"x 5' Bore Hole Diameter: 14"
WEEP HOLE - Y / N (Circle one)

Ground Surface Elevation: 454.3 Ft

Information in this column to be supplied in the Feet from Surface column	Feet from Surface	Description of Formation
		0-2 clay
		2-6 silt
Depth to bottom of Protective Casing Seal:	4.0	
		6-27 Trash
Depth to Base of Annular Seal:	34.0	
		27-31 silt
Depth to Base of Bentonite Seal:	34.5	
Depth to Base of Secondary Filter Pack:	36.0	31-38 clay
Depth to Top of the Screen:	38.4	
		38-47 silt w/ sand
Depth to Bottom of the Screen:	48.4	
Plug Back Total Depth		
Original Total Depth:	49.0	

PROTECTIVE CASING SEAL Type: [X] Concrete [ ] Cement Slurry
RISER PIPE Length: 40.1' Diameter: 2" Type of Material: SCH. 80 PVC
BOREHOLE DIAMETER: 8 In.
ANNULAR SEAL Type: [ ] Bentonite Slurry [X] Cement Slurry [ ] Non Slurry Bentonite
BENTONITE SEAL Type: [X] Bentonite Slurry [ ] Non Slurry Bentonite Length of Seal: 10.5 Ft.
SECONDARY FILTER PACK (Optional) Type: [X] Sand [ ] Manufactured Grain Size: 2-50 Length: 1.5'
PRIMARY FILTER PACK Type: [X] Sand [ ] Manufactured Grain Size: 16-35 Length: 13'
WELL SCREEN Length: 10 Slot Size: 0.020" Type: SCH. 80 PVC
SUMP DETAILS Length: 0.3 Ft. Diameter: 2 In. Type: PVC
TYPE OF BACKFILL: SAND

DRILLING CONTRACTOR'S NAME
LAYNE WESTERN CO, INC.

TYPE OF INSTALLATION
[X] ABOVE GROUND [ ] FLUSH MOUNT

STATIC WATER LEVEL
FEET FROM MEASURING POINT

DATE OF STATIC WATER LEVEL

ELEVATION OF MEASURING POINT: 461.0

MEASURING POINT IS
[X] TOP OF RISER PIPE
[ ] OTHER

DRILLING EQUIPMENT
[ ] AIR ROTARY [X] AUGER TYPE 4¼ H.S.A.
[ ] REVERSE ROTARY [ ] OTHER

CENTRALIZERS USED
[X] YES, AT 2 TOTAL
[X] STAINLESS STEEL
[ ] OTHER
[ ] NO

MULTIPLE CASED WELLS
SUBMIT ADDITIONAL AS BUILT DIAGRAM SHOWING WELL CONSTRUCTION DETAILS INCLUDING TYPE AND SIZE OF ALL CASING, HOLE DIAMETERS, AND GROUT USED.

DATE WELL CONSTRUCTION WAS COMPLETED: 5-06-95

I HEREBY CERTIFY THAT THE MONITORING WELL HEREIN DESCRIBED WAS CONSTRUCTED IN ACCORDANCE WITH THE DEPARTMENT OF NATURAL RESOURCES REQUIREMENTS FOR THE CONSTRUCTION OF MONITORING WELLS.

SIGNATURE (MONITORING WELL CONTRACTOR)
PERMIT NUMBER: OWI258 WWM DATE: 6-02-95

SIGNATURE (DRILLING CONTRACTOR)
PERMIT NUMBER: OWI258 WWM-1 DATE: 6-02-95

DISTRIBUTION: WHITE DIVISION CANARY MONITORING WELL CONTRACTOR PINK/OWNER

RECORD OF DRILLHOLE PZ-205-SS

Sheet 1 of 4

PROJECT: LAIDLAW/RI-FS
PROJECT NO: 943-2848
LOCATION: BRIDGETON, MO

BORING METHOD: NX Core & water
DRILLING DATE: 5/17/95 - 5/19/95
DRILL RIG: CME 75

DATUM: MSL
COORDINATES N: 1067483.54
AZIMUTH: 0

COLLAR ELEV: 459.5
E: 515477.78
INCLINATION: -90

J-Joint, F-Fault, S-Shear, B-Bedding, F-Foliation
PL-Planar, C-Curved, U-Undulating, ST-Stepped, I-Irregular
P-Polished, K-Slickensided, SM-Smooth, R-Rough, VR-V. Rough
Fe-FeOxide, CL-Clay Infill, CH-Chlorite, H-Healed, GRF-Gravel Filled

DEPTH SCALE (FEET)	DESCRIPTION	GRAPHIC LOG	ELEV / DEPTH (FT)	RUN NO.	CORE RECOVERY	RQD	FRACTURES PER FOOT	DISCONTINUITY DATA: DIP w/r CORE AXIS	DISCONTINUITY DATA: TYPE AND SURFACE DESCRIPTION	GRAPHIC LOG	WEATHERING INDEX: SW FR / MW / HW / CW	STRENGTH INDEX: R6 / R5 / R4 / R3 / R2 / R1	POINT LOAD INDEX (psi): R1 30 / R2 150 / R3 300 / R4 600 / R5 1500 / R6	TEST ORIENTATION	NOTES WATER LEVELS INSTRUMENTATION
48	0.0-49.0 ft. See Soil Borehole Log PZ-205-AS 49.0-54.0 ft. No samples collected														0.0-49.0 ft. Borehole advanced with 10.25 in. ID hollow stem augers 49.0-54.0 ft. Borehole advanced with 9 7/8 in. bit using mud rotary then 6 in. steel casing grouted into annulas with neat cement Bedrock encountered @ 48.5 ft.
50															
52															
54	405.50 54.00 54.0-67.5 ft. Fresh, medium to thinly bedded, pale yellowish brown (10YR 6/2), very fine grained, weak, ARGILLACEOUS LIMESTONE, (ST. LOUIS FORMATION)		405.50 54.00												5/18/95 @ 8:15 Began coring
56				1	93%				J,PL,SM,Fe						
									J,PL,SM						
58									J,ST,SM						
									J,C,SM,Fe						
	400.50 59.00		400.10 59.40						B,PL,SM						5/18/95 @ 8:40 End of Run 1
60															
62				2	89%				J,PL,SM (2)						
	62.3-69.5 ft. Grain size is medium grained								J,PL,SM						
64															

DEPTH SCALE: 1:2
DRILLING CONTRACTOR: LAYNE-WESTERN
DRILLER: D. MAHURIN

LOGGED: D. ALLOWAY
CHECKED: B. TILTON
DATE: 6/20/95

Golder Associates

RECORD OF DRILLHOLE PZ-205-SS

Sheet 2 of 4

PROJECT: LAIDLAW/RI-FS
PROJECT NO: 943-2848
LOCATION: BRIDGETON, MO

BORING METHOD: NX Core & water
DRILLING DATE: 5/17/95 - 5/19/95
DRILL RIG: CME 75

DATUM: MSL
COORDINATES N. 1067483.54
AZIMUTH: 0

COLLAR ELEV: 459.5
E: 515477.78
INCLINATION: -90

J-Joint, F-Fault, S-Shear, B-Bedding, F-Foliation
PL-Planar, C-Curved, U-Undulating, ST-Stepped, I-Irregular
P-Polished, K-Slikensided, SM-Smooth, R-Rough, VR-V. Rough
Fe-FeOxide, CL-Clay Infill, CH-Chlorite, H-Healed, GRF-Gravel Filled

SCALE (Feet)	DESCRIPTION	GRAPHIC LOG	ELEV / DEPTH (FT)	RUN NO	CORE RECOVERY	RQD	FRACTURES PER FOOT	DISCONTINUITY DATA: DIP wrt CORE AXIS	DISCONTINUITY DATA: TYPE AND SURFACE DESCRIPTION	GRAPHIC LOG	WEATHERING INDEX	STRENGTH INDEX	POINT LOAD INDEX (psi)	TEST ORIENTATION	NOTES WATER LEVELS INSTRUMENTATION
64	54.0-67.5 ft. Fresh, medium to thinly bedded, pale yellowish brown (10YR 6/2), very fine grained, weak, ARGILLACEOUS LIMESTONE, (ST. LOUIS FORMATION)								J,PL,R						
	65.0-75.9 ft. Scattered chert nodules								B,PL,SM (2)						
66	65.8-66.0 ft. Claystone layer								J,PL,SM,Fe						
				2	99%										
	67.5-99.5 ft. Fresh, medium to thinly bedded, pale yellowish brown (10YR 6/2), very fine grained, weak, LIMESTONE, (ST. LOUIS FORMATION) Stylolitic														
68															5/18/95 @ 10:40 End of Run 2
			390.10 69.40						J,PL,R,Fe J,PL,R						
	69.8-75.9 ft. Very fine to microcrystalline zones of thinly laminated layers of clay within the limestone, color is medium light gray (N6)								J,PL,R (2) J,I,R						
70															
				3	100%				J,PL,R J,I,R						
72															
			385.00 74.50						J,I,R (3) J,PL,R						5/18/95 @ 11:45 End of Run 3 Ended drilling for the day due to bad weather. 5/19/95 @ 7:40 Began drilling
74															
									J,PL,R,Fe						
	76.6-77.4 ft. Argillaceous layer								J,PL,R						
76				4	100%				J,PL,R						
	78.7-80.0 ft. Argillaceous zone, unfilled vugs (1-3 mm. in diameter)								J,I,R						
78									J,PL,R						
									J,PL,R (2)						
80															

DEPTH SCALE: 1:2
DRILLING CONTRACTOR: LAYNE-WESTERN
DRILLER: D. MAHURIN

LOGGED: D. ALLOWAY
CHECKED: B. TILTON
DATE: 6/20/95

Golder Associates

RECORD OF DRILLHOLE PZ-205-SS

Sheet 3 of 4

PROJECT: LAIDLAW/RI-FS
PROJECT NO: 943-2646
LOCATION: BRIDGETON, MO

BORING METHOD: NX Core & water
DRILLING DATE: 5/17/95 - 5/19/95
DRILL RIG: CME 75

DATUM: MSL
COORDINATES N: 1087483.54
AZIMUTH: 0

COLLAR ELEV: 459.5
E: 515477.78
INCLINATION: -90

J-Joint, F-Fault, S-Shear, B-Bedding, F-Foliation
PL-Planar, C-Curved, U-Undulating, ST-Stepped, I-Irregular
P-Polished, K-Slickensided, SM-Smooth, R-Rough, VR-V. Rough
Fe-FeOxide, CL-Clay Infill, CH-Chlorite, H-Healed, GRF-Gravel Filled

DEPTH SCALE (FEET)	DESCRIPTION	GRAPHIC LOG	ELEV / DEPTH (FT)	RUN NO.	CORE RECOVERY	RQD	FRACTURES PER FOOT	DISCONTINUITY DATA: DIP wrt CORE AXIS	DISCONTINUITY DATA: TYPE AND SURFACE DESCRIPTION	GRAPHIC LOG	WEATHERING INDEX	STRENGTH INDEX	POINT LOAD INDEX (psi)	TEST ORIENTATION	NOTES WATER LEVELS INSTRUMENTATION
80	67.5-99.5 ft. Fresh, medium to thinly bedded, pale yellowish brown (10YR 6/2), very fine grained, weak, LIMESTONE. (ST. LOUIS FORMATION) Stylolitic								J,PL,R (2)						
82	81.8-86.4 ft. Argillaceous zone, unfilled vugs, (1-3 mm. in diameter)			4	100%				J,PL,R						
84									J,PL,R						5/19/95 @ 9:15 End of Run 4
	84.5-86.4 ft. Color grades to light olive gray (5GY 6/1)		375.00 84.50						J,PL,R						
86									B,PL,SM						
									J,PL,SM						
									J,PL,SM						
									J,C,SM						
88									J,PL,R						
	88.6-93.8 ft. Argillaceous, vuggy, color is light olive gray (5GY 6/1)			5	100%										
90															
92									B,PL,SM						
94			365.00 94.50												5/19/95 @ 10:40 End of Run 5
	94.5-97.5 ft. Argillaceous, color is light olive gray (5GY 6/1)			6	100%				J,PL,SM						
96															

DEPTH SCALE: 1:2
DRILLING CONTRACTOR: LAYNE-WESTERN
DRILLER: D. MAHURIN

LOGGED: D. ALLOWAY
CHECKED: B. TILTON
DATE: 6/20/95

Golder Associates

RECORD OF DRILLHOLE PZ-205-SS

PROJECT: LAIDLAW/RI-FS
PROJECT NO: 943-2648
LOCATION: BRIDGETON, MO

BORING METHOD: NX Core & water
DRILLING DATE: 5/17/95 - 5/19/95
DRILL RIG: CME 75

DATUM: MSL
COORDINATES N: 1087483.54
AZIMUTH: 0

COLLAR ELEV: 459.5
E: 515477.78
INCLINATION: -90

J-Joint, F-Fault, S-Shear, B-Bedding, F-Foliation
PL-Planar, C-Curved, U-Undulating, ST-Stepped, I-Irregular
P-Polished, K-Slickensided, SM-Smooth, R-Rough, VR-V. Rough
Fe-FeOxide, CL-Clay Infill, CH-Chlorite, H-Healed, GRF-Gravel Filled

DEPTH SCALE (FEET)	DESCRIPTION	GRAPHIC LOG	ELEV / DEPTH (FT)	RUN NO	CORE RECOVERY	RQD	FRACTURES PER FOOT	DISCONTINUITY DATA: DIP w/r CORE AXIS	DISCONTINUITY DATA: TYPE AND SURFACE DESCRIPTION	DISCONTINUITY DATA: GRAPHIC LOG	WEATHERING INDEX	STRENGTH INDEX	POINT LOAD INDEX (psi)	TEST ORIENTATION	NOTES WATER LEVELS INSTRUMENTATION
96	ROCK TYPE 67.5-99.5 ft. Fresh, medium to thinly bedded, pale yellowish brown (10YR 6/2), very fine grained, weak, LIMESTONE, (ST. LOUIS FORMATION) Stylolitic 97.5-99.5 ft. Thin clay laminae										SW FR MW HW CW	R6 R5 R4 R3 R2 R1	R6 R5 R4 R3 R2 R1		
98				6	100 %				J,I,R,Fe J,PL,SM,CL						
	360.00		360.00						J,I,R						5/19/95 @ 11:30 Finished drilling
100	End of Record of Drillhole at 99.5 ft. 99.50		99.50												
102															
104															
106															
108															
110															
112															

DEPTH SCALE: 1:2
DRILLING CONTRACTOR: LAYNE-WESTERN
DRILLER: D. MAHURIN

LOGGED: D. ALLOWAY
CHECKED: B. TILTON
DATE: 6/20/95

Golder Associates

Well No. PZ-205-SS

Boring No. X-Ref: PZ-205-SS

PIEZOMETER CONSTRUCTION SUMMARY

Survey Coords: Northing: 1067484 ft.
Easting: 515478 ft.

Elevation Ground Level 459.5 ft. NGVD
Top of PVC Casing 461.78 ft. NGVD

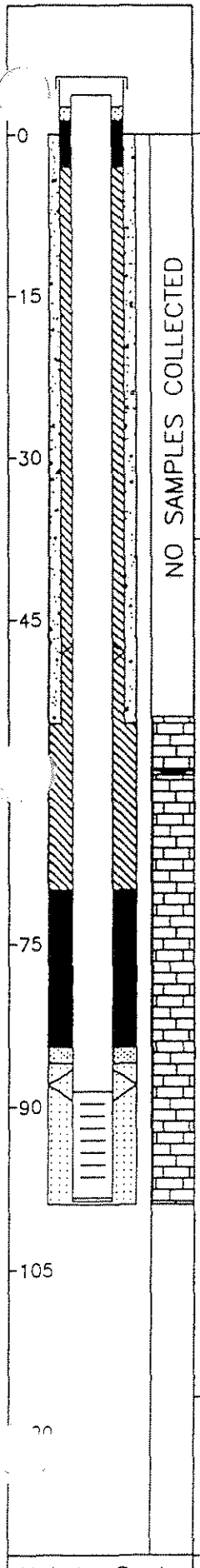

Drilling Summary:

Total Depth 99.0 ft.
Borehole Diameter 9 3/4 in. (0.0-54.0 ft.) 5 7/8 in. (54.0-99.0 ft.)
Casing Stickup Height 1.66 ft.
Driller Layne-Western
St. Louis, MO

Rig CME 75, Schramm Portadrill T660H
Bit(s) 6 1/4 in. ID Hollow Stem Auger Bit, NX Core,
5 7/8 in. Button Bit and 9 3/4 in. Tricone Bit
Drilling Fluid Auger-None, NX Core Water,
Air and Mud Rotary
Protective Casing 8x8 in. Square Steel, by 5 ft. long

Construction Time log:

Task	Start Date	Start Time	Finish Date	Finish Time
Drilling				
CME 75	5/18/95	8:15	5/19/95	11:30
Schramm Rotary	5/21/95	13:30	5/21/95	14:30
Geophys.Logging:				
Casing:				
2" PVC	5/21/95	14:25	5/21/95	14:30
8" Steel	5/11/95	7:30	5/11/95	11:00
Filter Placement:	5/21/95	14:40	5/21/95	15:15
Cementing:				
Development				
Bentonite Grout	5/21/95	15:20	5/21/95	15:35
Bentonite Seal	5/21/95	15:15	5/21/95	15:20

Well Design & Specifications

Basis: Geologic Log X Geophysical Log
Casing string(s): C = Casing S = Screen

Depth			String(s)	Elevation		
+ 1.66	-	88.57	C1	461.78	-	370.96
88.57	-	98.37	S1	370.96	-	361.16
98.37	-	98.70	C2	361.16	-	360.83
+ 1.00	-	54.00	C3	460.50	-	405.53
	-				-	
	-				-	

Casing: C1 2 in. dia. Schedule 80 PVC, flush threaded with O-rings
C2 2 in. dia. threaded PVC end cap (4 in. long or 0.33 ft.) (C3-see comments)
Screen: S1 2 in. dia. Schedule 80 PVC, 0.010 in. machine cut slot, flush threaded with O-rings
Sand Pack: 16-35 mesh Silica Sand, 86.0-99.0 ft.
Filter Pack: Less than 50 mesh Silica Sand, 84.5-86.0 ft.
Grout Seal: Wyo-Ben Grout Well Bentonite Slurry, 3.0-70.0 ft.
Bentonite Seal: Extra high yield Wyo-Ben (100%) Slurry, 70.0-84.5 ft.
Concrete: 0.0-3.0 ft.

Well Development

Stabilization Test Data:

Time	pH	Spec. Cond.	Temp (°C)

Recovery Data:

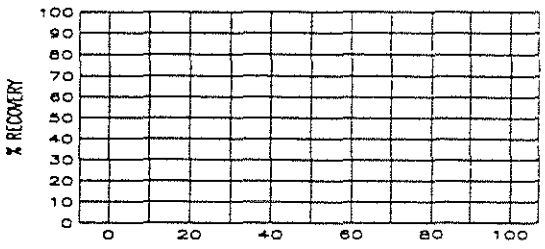

Comments: Surface Casing C3: 6 1/8 in. ID / 6 5/8 in. OD Steel Casing

Not to Scale

Supervised by W. Herst
Job Number 943-2848

Site LAIDLAW/OU2 RI-FS/MO
File Name PZ205SS

MISSOURI DEPARTMENT OF NATURAL RESOURCES
DIVISION OF GEOLOGY AND LAND SURVEY

MONITORING WELL CERTIFICATION RECORD

OFFICE USE ONLY	DATE RECEIVED
REF NO 122506	CHECK NO.
ROUTE	TRANSMITTAL NO
STATE WELL NUMBER	CROSS REFERENCE NO
CHECKED BY	ENTERED Ph 1 Ph 2 Ph 3
APPROVED BY	DATE APPROVED

INFORMATION SUPPLIED BY OWNER

SITE NAME: LAIDLAW BRIDGETON SANITARY LANDFILL
WELL NUMBER: PZ-20555

SITE ADDRESS: 21. CHARLES ROCK RD. | CITY: BRIDGETON | STATE: MO | ZIP CODE: 63044

NAME: LAIDLAW WASTE SYSTEMS, INC. | TELEPHONE: 314-241-3710

ADDRESS: 1838 N. BROADWAY | CITY: ST. LOUIS | STATE: MO | ZIP CODE: 63102

INFORMATION SUPPLIED BY MONITORING WELL CONTRACTOR

LOCATION OF WELL
SHOW LOCATION IN SECTION PLAT

COUNTY: ST. LOUIS
ELEVATION: 454.5
AREA NO.:

SMALLEST ¼ / LARGEST ¼

SEC. ____ TWN. 47 N,RNG. 5 (E) OR W

LAT. 38 ° 45 ' 35 " LONG. 90 ° 36 ' 45 "

SKETCH THE LOCATION TO THE WELL INCLUDING MILEAGE ON ALL ROADS TRAVELED FROM NEAREST TOWNS OR HIGHWAYS

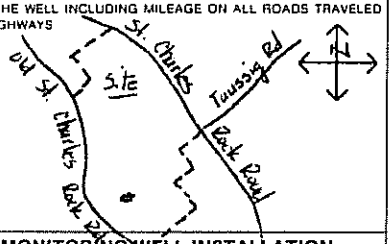

DESCRIBE LOCATION OF THE WELL SO WE WOULD BE ABLE TO VISIT IT

NOTE: Record the fraction of a foot in decimal, not in inches.

Top of Riser Elevation: 461.8

LOCKING CAP - (Y) N (Circle one)
CAP VENT - (Y) N (Circle one)

PROTECTIVE CASING
Type: STEEL
Size: 3" x 8" x 5'
Bore Hole Diameter: 9 7/8"
WEEP HOLE - Y / N (Circle one)

Ground Surface Elevation: 454.5 ft

Information in this column to be supplied in the Feet from Surface column	Feet from Surface	Description of Formation
Depth to bottom of Protective Casing Seal:	3.0	
		50-85 Limestone
Depth to Base of Annular Seal:	60.0	
Depth to Base of Bentonite Seal:	71.0	
Depth to Base of Secondary Filter Pack:	72.5	
Depth to Top of the Screen:	74.7	
Depth to Bottom of the Screen:	84.7	
Plug Back Total Depth:		
Original Total Depth:	85.0	

PROTECTIVE CASING SEAL
Type: [X] Concrete [ ] Cement Slurry

RISER PIPE
Length: 77'
Diameter: 2"
Type of Material: SCH. 80 PVC

BOREHOLE DIAMETER: 5 7/8 in.

ANNULAR SEAL
Type: [ ] Bentonite Slurry [X] Cement Slurry [ ] Non Slurry Bentonite

BENTONITE SEAL
Type: [X] Bentonite Slurry [ ] Non Slurry Bentonite
Length of Seal: 11 Ft.

SECONDARY FILTER PACK (Optional)
Type: [X] Sand [ ] Manufactured
Grain Size: <50
Length: 1.5'

PRIMARY FILTER PACK
Type: [X] Sand [ ] Manufactured
Grain Size: 16-35
Length: 12.5'

WELL SCREEN
Length: 10'
Slot Size: 0.010"
Type: SCH 80 PVC

SUMP DETAILS
Length: 0.3 Ft.
Diameter: 2 in.
Type: PVC

TYPE OF BACKFILL: SAND

MONITORING WELL INSTALLATION CONTRACTOR'S NAME
LAYNE WESTERN CO., INC.

DRILLING CONTRACTOR'S NAME
LAYNE WESTERN CO., INC.

TYPE OF INSTALLATION
[X] ABOVE GROUND [ ] FLUSH MOUNT

STATIC WATER LEVEL
FEET FROM MEASURING POINT

DATE OF STATIC WATER LEVEL

ELEVATION OF MEASURING POINT
461.8

MEASURING POINT IS
[X] TOP OF RISER PIPE
[ ] OTHER

DRILLING EQUIPMENT
[ ] AIR ROTARY [ ] AUGER TYPE
[ ] REVERSE ROTARY [ ] OTHER

CENTRALIZERS USED
[X] YES, AT 4 INTAL
[X] STAINLESS STEEL
[ ] OTHER
[ ] NO

MULTIPLE CASED WELLS
SUBMIT ADDITIONAL AS BUILT DIAGRAM SHOWING WELL CONSTRUCTION DETAILS INCLUDING TYPE AND SIZE OF ALL CASING, HOLE DIAMETERS, AND GROUT USED.

DATE WELL CONSTRUCTION WAS COMPLETED
5-21-95

I HEREBY CERTIFY THAT THE MONITORING WELL HEREIN DESCRIBED WAS CONSTRUCTED IN ACCORDANCE WITH THE DEPARTMENT OF NATURAL RESOURCES REQUIREMENTS FOR THE CONSTRUCTION OF MONITORING WELLS.

SIGNATURE (MONITORING WELL CONTRACTOR)
Michael P. Vogt

PERMIT NUMBER 001256 WIIM | DATE 6-20-95

SIGNATURE (DRILLING CONTRACTOR)
Michael P. Vogt

PERMIT NUMBER 001256 WIIM | DATE 6-23-95

LAIDLAW WASTE SYSTEMS INC.

SOIL BOREHOLE LOG

SITE NAME AND LOCATION	DRILLING METHOD: 6.25 inch I.D. Hollow Stem Auger		BORING NO. PZ-206-SS
			SHEET 1 OF 3
LAIDLAW\RI-FS\MD WEST LAKE LANDFILL OPERABLE UNIT 2	SAMPLING METHOD:		
	SPLIT SPOON: 2.0 inch O.D./1.5 inch I.D. (SP)		DRILLING START / FINISH
	SHELBY TUBE: 3.0 inch O.D./2 13/16 inch I.D. (SH)		
	WATER LEVEL		TIME 14:30 / TIME 8:50
	TIME		
	DATE		DATE 3/9/95 / DATE 3/10/95
NORTHING: 1068030.83 DATUM EASTING: 515809.45 ELEVATION 458.4	CASING DEPTH		

DRILL RIG CME 75 - TRUCK MOUNT	SURFACE CONDITIONS Wet to muddy sand adjacent to access road;
ANGLE VERTICAL BEARING	no vegetation.
SAMPLE HAMMER	

DEPTH IN FEET (ELEVATION)	BLOW/ 6 IN. ON SAMPLER	RECOVERY	SYMBOL	SAMPLER SYMBOL	SAMPLE NUMBER AND DESCRIPTION OF MATERIAL	SAMPLER TYPE	REMARKS
1	23, 29, 20, 22	0.8'/2.0' (40%)			(0.0-6.0 Ft.) Dense, medium light gray (N6), LIMESTONE GRAVEL and SAND, SR, dry, (GP), (FILL)	SP ①	
2	3, 15, 10, 30	0.9'/2.0' (45%)				SP ②	
3							
4	33, 25, 16, 18	0.1'/2.0' (5%)				SP ③	
5							
6	6, 5, 3, 4	0.4'/2.0' (20%)			(452.4) 6.0 (6.0-15.6 Ft.) Firm, moderate yellowish brown (10YR 5/4), CLAYEY SILT, little fine sand, iron stained, laminated, NR, damp, (CL-ML), (LOESS)	SP ④	
7							
8	3, 3, 3, 5	0.9'/2.0' (45%)				SP ⑤	
9							
10	2, 2, 3, 4	1.1'/2.0' (55%)				SP ⑥	
11							
12	1, 2, 3, 3	1.6'/2.0' (80%)			@ 12.7 Ft., becoming moist @ 13.2-13.3 Ft., medium dark gray (N4), SILTY CLAY	SP ⑦	
13							
14	2, 3, 5, 3	0.8'/2.0' (40%)				SP ⑧	

DRILLING CONTR LAYNE-WESTERN

LOGGED BY M. HIRT CHK'D BY W. HIRST

DATE 3/9/95

JOB NO.: 943-2848

FILENAME: PZ206SS

SOIL BOREHOLE LOG

LAIDLAW WASTE SYSTEMS INC.

SITE NAME AND LOCATION	DRILLING METHOD: 6.25 inch I.D. Hollow Stem Auger	BORING NO. PZ-206-SS
LAIDLAW\RI-FS\MD WEST LAKE LANDFILL OPERABLE UNIT 2	SAMPLING METHOD: SPLIT SPOON: 2.0 inch O.D./1.5 inch I.D. (SP) SHELBY TUBE: 3.0 inch O.D./2 13/16 inch I.D. (SH)	SHEET 2 OF 3 DRILLING START / FINISH
NORTHING: 1068030.83 DATUM EASTING: 515809.45 ELEVATION 458.4	WATER LEVEL / TIME / DATE / CASING DEPTH	TIME 14:30 / TIME 8:50 DATE 3/9/95 / DATE 3/10/95
DRILL RIG CME 75 - TRUCK MOUNT	SURFACE CONDITIONS Wet to muddy sand adjacent to access road; no vegetation.	
ANGLE VERTICAL BEARING		
SAMPLE HAMMER		

DRILLING CONTR LAYNE-WESTERN

LOGGED BY M. HIRT DATE 3/9/95 CHK'D BY W. HERST

JOB NO.: 943-2808 FILENAME: PZ206SS

DEPTH IN FEET (ELEVATION)	BLOW/ 6 IN. ON SAMPLER	RECOVERY	SYMBOL	SAMPLER SYMBOL	SAMPLE NUMBER AND DESCRIPTION OF MATERIAL	SAMPLER TYPE	REMARKS
16	1 2 5 7	1.2' / 2.0' (60%)			(6.0-15.6 Ft.) Firm, moderate yellowish brown (10YR 5/4), CLAYEY SILT, little fine sand, iron stained, laminated, NR, damp, (CL-ML), (LOESS) (442.8) 15.6	SP 8	
17					(15.6-17.6 Ft.) Firm, dark gray (N3), SILTY CLAY, damp, (CL), (LOESS) (440.8) 17.6	SP 9	
18	1 3 3 4	2.0' / 2.0' (100%)			(17.6-18.0 Ft.) Stiff, olive gray (5Y 4/1), CLAY, little silt, NR, moist, (CL), (LOESS)		
19					(18.0-22.8 Ft.) Firm, olive gray (5Y 4/1), CLAYEY SILT, trace fine sand, NR, moist, (CL-ML), (LOESS)	SP 10	
20	hammer weight 2 4 4	1.7' / 2.0' (85%)				SP 11	
21							
22	2 2 2 3	1.5' / 2.0' (75%)			@ 22.0 Ft., becoming some fine sand		
23					(22.8-29.7 Ft.) Firm, light olive gray (5Y 5/2), CLAYEY SILT, iron stained, laminated, NR, moist, (CL-ML), (LOESS)	SP 12	
24	3 2 3 5	1.5' / 2.0' (75%)			@ 24.5-24.8 Ft., some sand, wet		
25					@ 25.2-25.4 Ft., some sand, wet	SP 13	
26	1 1 5 5	1.2' / 2.0' (60%)					
27					@ 27.2-29.7 Ft., wet @ 27.4-27.6 Ft., fine to medium sand layers	SP 14	
28	1 2 3 3	1.7' / 2.0' (85%)			@ 28.6-29.7 Ft., little sand		
29					(29.7-31.3 Ft.) Firm, medium dark gray (N4), CLAYEY SILT, NR, damp, (CL-ML), (LOESS)	SP 15	

LAIDLAW WASTE SYSTEMS INC.

SOIL BOREHOLE LOG

SITE NAME AND LOCATION

LAIDLAW\RI-FS\MD
WEST LAKE LANDFILL
OPERABLE UNIT 2

NORTHING: 1068030.83
DATUM EASTING: 515809.45 ELEVATION 458.4

DRILLING METHOD: 6.25 inch I.D. Hollow Stem Auger

SAMPLING METHOD:
SPLIT SPOON: 2.0 inch O.D./1.5 inch I.D. (SP)
SHELBY TUBE: 3.0 inch O.D./2 13/16 inch I.D. (SH)

WATER LEVEL				
TIME				
DATE				
CASING DEPTH				

BORING NO. PZ-206-SS

SHEET 3 OF 3

DRILLING	START	FINISH
TIME	14:30	8:50
DATE	3/9/95	3/10/95

DRILL RIG CME 75 - TRUCK MOUNT
ANGLE VERTICAL BEARING
SAMPLE HAMMER

SURFACE CONDITIONS Wet to muddy sand adjacent to access road; no vegetation.

DRILLING CONTR LAYNE-WESTERN
LOGGED BY M. HIRT CHK'D BY W. HERST
DATE 3/9/95
JOB NO.: 943-2848
FILENAME: PZ206SS

DEPTH IN FEET (ELEVATION)	BLOW/ 6 IN. ON SAMPLER	RECOVERY	SYMBOL	SAMPLER SYMBOL	SAMPLE NUMBER AND DESCRIPTION OF MATERIAL	SAMPLER TYPE	REMARKS
31	1 4 12 16	1.8'/2.0' (90%)			(29.7-31.3 Ft.) Firm, medium dark gray (N4), CLAYEY SILT, NR, damp, (CL-ML), (LOESS) @ 31.1-31.3 Ft., wet (427.1) 31.3	SP 16	
32	2 6 7 8	2.0'/2.0' (100%)			(31.3-36.9 Ft.) Compact to loose, moderate to dark yellowish brown (10YR 5/4-10YR 4/2), f-m SAND, trace silt, NR, wet, (SP), (ALLUVIAL)	SP 17	Split spoon wet
34	0 2 2 4	2.0'/2.0' (100%)			@ 34.0 Ft., becoming medium sand	SP 18	Split spoon wet
36	7 8 7 8	1.3'/2.0' (65%)			@ 35.9-36.9 Ft., SAND and CLAY (421.5) 36.9	SP 19	Add water to inside of augers to prevent sand blow
38	6 2 3 11	0.7'/2.0' (35%)			(36.9-37.7 Ft.) Stiff, olive gray (5Y 4/1), CLAYEY f-m SAND, NR, MOIST, (SC), (ALLUVIAL) (420.7) 37.7 (37.7-41.1 Ft.) Stiff, olive gray (5Y 4/1), CLAYEY SILT, trace sand, laminated, NR, wet, (CL-ML), (LOESS)	SP 20	
40	6 7 12 16	1.0'/2.0' (50%)			(417.3) 41.1	SP 21	
42	2 23 50/0"	0.7'/2.0' (35%)			(41.1-43.0 Ft.) Compact, olive gray (5Y 4/1), fine SAND, trace silt, NR, wet, (SM), (ALLUVIAL) (415.4) 43.0	SP 22	Split spoon refusal at 43.0 feet; auger to 44.0 feet
44	50/1"	0.0'/1.0' (0%)			End of Soil Borehole Log at 43.0 Ft. See PZ-206-SS Record of Drillhole for rock descriptions	SP 23	Split spoon refusal at 44.0 feet

RECORD OF DRILLHOLE PZ-206-SS

Sheet 1 of 8

PROJECT: LAIDLAW/RI-FS
PROJECT NO: 943-2848
LOCATION: BRIDGETON, MO

BORING METHOD: NX Core & water
DRILLING DATE: 4/5/95 - 4/8/95
DRILL RIG: CME 75

DATUM: MSL
COORDINATES N: 1060830.8
AZIMUTH: 0

COLLAR ELEV: 456.4
E: 515809.5
INCLINATION: -90

J-Joint, F-Fault, S-Shear, B-Bedding, F-Foliation
PL-Planar, C-Curved, U-Undulating, ST-Stepped, I-Irregular
P-Polished, K-Slickensided, SM-Smooth, R-Rough, VR-V. Rough
Fe-Fe Oxide, CL-Clay Infill, CH-Chlorite, H-Healed, GRF-Gravel Filled

DEPTH (FEET)	DESCRIPTION	GRAPHIC LOG	ELEV / DEPTH (FT)	RUN NO.	CORE RECOVERY	RQD	FRACTURES PER FOOT	DISCONTINUITY DATA: DIP w/t CORE AXIS	DISCONTINUITY DATA: TYPE AND SURFACE DESCRIPTION	DISCONTINUITY DATA: GRAPHIC LOG	WEATHERING INDEX (FR, SW, MW, HW, CW)	STRENGTH INDEX (R6, R5, R4, R3, R2, R1)	POINT LOAD INDEX (psi) (RT 30, R2 150, R3 300, R4 600, R5 1500, R6)	TEST ORIENTATION	NOTES WATER LEVELS INSTRUMENTATION
32	0.0-43.0 ft. See Soil Borehole Log PZ-206-SS														
34															
36															
38															
40															
42			415.40												
	43.0-44.5 ft. No samples collected		43.00												Advanced 4" diam. HW casing to 46.0 ft., begin coring on top of rubble at 44.5 ft.
44			413.90												
	44.5-51.7 ft. Slightly weathered, medium bedded, light olive gray (5Y 6/1), microcrystalline, medium strong, LIMESTONE, (ST. LOUIS FORMATION)		44.50												
46	44.5-46.1 ft. Some chlorite on broken surfaces			1	77%				J,I,SM,CL (2) J,I,SM						
	47.7-49.4 ft. Moderately weathered, porous/ vuggy								J,U,SM,Fe J,I,SM,Fe						
48															

DEPTH SCALE: 1:2
DRILLING CONTRACTOR: LAYNE-WESTERN
DRILLER: D. MAHURIN

LOGGED: S. COSIO
CHECKED: J. MILLER
DATE: 5/16/95

Golder Associates

RECORD OF DRILLHOLE PZ-206-SS

Sheet 2 of 8

PROJECT: LAIDLAW/RI-FS
PROJECT NO: 943-2848
LOCATION: BRIDGETON, MO

BORING METHOD: NX Core & water
DRILLING DATE: 4/5/95 - 4/6/95
DRILL RIG: CME 75

DATUM: MSL
COORDINATES N: 1060830.8
AZIMUTH: 0

COLLAR ELEV: 458.4
E: 515809.5
INCLINATION: -90

J-Joint, F-Fault, S-Shear, B-Bedding, F-Foliation
PL-Planar, C-Curved, U-Undulating, ST-Stepped, I-Irregular
P-Polished, K-Slickensided, SM-Smooth, R-Rough, VR-V. Rough
Fe-Fe Oxide, CL-Clay Infill, CH-Chlorite, H-Healed, GRF-Gravel Filled

DEPTH SCALE (FEET)	DESCRIPTION	GRAPHIC LOG	ELEV / DEPTH (FT)	RUN NO.	CORE RECOVERY	RQD	FRACTURES PER FOOT	DISCONTINUITY DATA: DIP wrt CORE AXIS	DISCONTINUITY DATA: TYPE AND SURFACE DESCRIPTION	GRAPHIC LOG	WEATHERING INDEX	STRENGTH INDEX	POINT LOAD INDEX (psi)	TEST ORIENTATION	NOTES WATER LEVELS INSTRUMENTATION
48	44.5-51.7 ft. Slightly weathered, medium bedded, light olive gray (5Y 5/1), microcrystalline, medium strong, LIMESTONE, (ST. LOUIS FORMATION)		409.40	1	77%				Core Loss						Core loss due to fractured, weathered rock Core Run 1 at 11:55
			49.00						J,I,SM (6)						
50									J,PL,SM						
									J,I,R (2)						
	406.70								J,I,SM						
52	51.7-52.7 ft. Completely weathered, thickly laminated, greenish gray (5GY 6/1), very fine grained, extremely weak, CLAYSTONE, (ST. LOUIS FORMATION) 51.70 406.10 52.30								J,I,SM,CL						
									Core Loss						Core loss due to presence of weak claystone
	52.7-59.2 ft. Slightly weathered, medium bedded, light olive gray (5Y 5/2), very fine grained, medium strong, DOLOMITE, (ST. LOUIS FORMATION)								J,I,R						
54	54.2-55.3 ft. Moderately weathered, very porous/vuggy, (<1-3 mm.)			2	96%										
									J,I,R						
56															
58															
	399.20		399.40												
	59.2-66.5 ft. Fresh, thickly bedded, light olive gray (5Y 6/1), f-m grained, medium strong, ARGILLACEOUS LIMESTONE, (ST. LOUIS FORMATION) 1-2 mm. calcite veins common, stylolitic, few zones showing up to 5 mm. vugs, little pyrite crystals, few Arenaceous Limestone beds throughout up to 10 mm.		59.00												End Core Run 2 at 14:10 4/5/95 @ 13:15 Begin coring Run 3
60	59.20								J,I,R						
				3	100 %				J,I,R						
62									J,I,R (2)						
									J,I,R						
64			394.40												4/5/95 @ 13:40 Begin coring Run 4
			64.00												

DEPTH SCALE: 1:2
DRILLING CONTRACTOR: LAYNE-WESTERN
DRILLER: D. MAHURIN

LOGGED: S. COSIO
CHECKED: J. MILLER
DATE: 5/16/95

Golder Associates

RECORD OF DRILLHOLE PZ-206-SS

Sheet 3 of 6

PROJECT: LAIDLAW/RI-FS
PROJECT NO: 943-2846
LOCATION: BRIDGETON, MO

BORING METHOD: NX Core & water
DRILLING DATE: 4/5/95 - 4/6/95
DRILL RIG: CME 75

DATUM: MSL
COORDINATES N: 1060830.6
AZIMUTH: 0

COLLAR ELEV: 458.4
E: 515809.5
INCLINATION: -90

J-Joint, F-Fault, S-Shear, B-Bedding, F-Foliation
PL-Planar, C-Curved, U-Undulating, ST-Stepped, I-Irregular
P-Polished, K-Slickensided, SM-Smooth, R-Rough, VR-V. Rough
Fe-Fe Oxide, CL-Clay Infill, CH-Chlorite, H-Healed, GRF-Gravel Filled

DEPTH SCALE (FEET)	DESCRIPTION	GRAPHIC LOG	ELEV / DEPTH (FT)	RUN NO	CORE RECOVERY	RQD	FRACTURES PER FOOT	DISCONTINUITY DATA: DIP wrt CORE AXIS	DISCONTINUITY DATA: TYPE AND SURFACE DESCRIPTION	DISCONTINUITY DATA: GRAPHIC LOG	WEATHERING INDEX	STRENGTH INDEX	POINT LOAD INDEX (psi)	TEST ORIENTATION	NOTES WATER LEVELS INSTRUMENTATION
64	64.5-67.3 ft. Small (up to 1 mm.), glauconite lenses, few pyrite veins <1 mm., but abundant crystals		394.40 / 64.00						J,I,CL (3); J,I,R						4/5/95 @ 13:40 Begin coring Run 4
66	66.5-68.5 ft. Fresh, thickly bedded, olive gray (5Y 4/1), f-m grained, medium strong, ARENACEOUS LIMESTONE, (ST. LOUIS FORMATION) Abundant calcite crystals <1 mm.								J,I,R; J,I,R (2)						
68	66.6 ft. A large >20 mm. calcite crystals								J,I,R						
	68.5-70.0 ft. Fresh, thickly bedded, light olive gray (5Y 6/1), f-m grained, medium strong, LIMESTONE, (ST. LOUIS FORMATION) Calcite crystals common, argillaceous partings observed			4	100 %				J,I,CL; J,I,CL (2)						
70	70.2-71.8 ft. Arenaceous Limestone with abundant calcity crystals														
72	71.8-80.0 ft. Fresh, thickly bedded, light olive gray (5Y 6/1), f-m grained, medium strong, LIMESTONE, (ST. LOUIS FORMATION) Calcite crystals common, fossils present but not abundant, stylolitic, pyrite crystals and veins up to 1 mm. abundant								J,I,R						
74			384.40 / 74.00						J,I,SM,CL; J,I,R; J,I,SM,CL; J,I,R (5)						4/5/95 @ 14:25 Begin coring Run 5
76				5	100 %				J,I,R (2); J,I,SM,CL						
	77.3-77.8 ft. Argillaceous Limestone														
78	77.8-78.1 ft. Chert nodules								J,I,SM,CL (2)						
80									J,I,R (2)						

DEPTH SCALE: 1:2
DRILLING CONTRACTOR: LAYNE-WESTERN
DRILLER: D. MAHURIN

LOGGED: S. COSIO
CHECKED: J. MILLER
DATE: 5/16/95

Golder Associates

RECORD OF DRILLHOLE PZ-206-SS

PROJECT: LAIDLAW/RI-FS
PROJECT NO: 943-2846
LOCATION: BRIDGETON, MO

BORING METHOD: NX Core & water
DRILLING DATE: 4/5/95 - 4/8/95
DRILL RIG: CME 75

DATUM: MSL
COORDINATES N: 1060830.8
AZIMUTH: 0

COLLAR ELEV: 458.4
E: 515809.5
INCLINATION: -90

J-Joint, F-Fault, S-Shear, B-Bedding, F-Foliation
PL-Planar, C-Curved, U-Undulating, ST-Stepped, I-Irregular
P-Polished, K-Slikensided, SM-Smooth, R-Rough, VR-V. Rough
Fe-Fe Oxide, CL-Clay Infill, CH-Chlorite, H-Healed, GRF-Gravel Filled

DEPTH SCALE (FEET)	DESCRIPTION	GRAPHIC LOG	ELEV / DEPTH (FT)	RUN NO.	CORE RECOVERY	RQD	FRACTURES PER FOOT	DISCONTINUITY DATA: DIP wrt CORE AXIS	DISCONTINUITY DATA: TYPE AND SURFACE DESCRIPTION	GRAPHIC LOG	WEATHERING INDEX	STRENGTH INDEX	POINT LOAD INDEX (psi)	TEST ORIENTATION	NOTES WATER LEVELS INSTRUMENTATION
80	80.0-85.0 ft. Fresh, thickly bedded, light olive gray (5Y 6/1), f-m grained to microcrystalline, medium strong, LIMESTONE, (ST. LOUIS FORMATION) Large calcite veins up to 12 mm., abundant pyrite crystals and veins up to 1 mm., argillaceous partings scattered throughout, stylolitic								J,I,R (2)						
82				5	150 %				J,I,SM,CL						
									J,I,SM,CL						
									J,I,R						
84			374.40 / 84.00												4/5/95 @ 15:24 Begin coring Run 6
	85.0-87.5 ft. Fresh, thickly bedded, light olive gray (5Y 6/1), finely crystalline, medium strong, LIMESTONE, (ST. LOUIS FORMATION) Stylolites common, calcite and pyrite veins present, trace of glauconite, few chert nodules								J,I,SM,CL (2)						
86									J,I,R,CL						
	87.5-89.5 ft. Fresh, thickly bedded, light olive gray (5Y 6/1), fine grained, medium strong, ARGILLACEOUS LIMESTONE, (ST. LOUIS FORMATION) Calcite and pyrite crystals abundant, few calcite veins <1 mm.								J,I,R						
88				6	100 %										
	89.5-93.3 ft. Fresh, thickly bedded, light olive gray (5Y 6/1), fine grained to crystalline, medium strong, LIMESTONE, (ST. LOUIS FORMATION) Calcite and pyrite crystals abundant, few calcite veins <1 mm.								J,I,R						
90									J,I,R,CL						
									J,I,R,CL						
92									J,I,CL (2)						
	93.3-99.1 ft. Fresh, thickly bedded, light olive gray (5Y 6/1), fine grained, medium strong, ARGILLACEOUS LIMESTONE, (ST. LOUIS FORMATION) Stylolitic, bioturbated, abundant calcite veins up to 1 mm., few pyrite crystals		364.40 / 94.00												4/5/95 @ 16:16 Begin coring Run 7
94				7	100 %										
96															

DEPTH SCALE: 1:2
DRILLING CONTRACTOR: LAYNE-WESTERN
DRILLER: D. MAHURIN

LOGGED: S. COSIO
CHECKED: J. MILLER
DATE: 5/16/95

Golder Associates

RECORD OF DRILLHOLE PZ-206-SS

PROJECT: LAIDLAW/RI-FS
PROJECT NO: 943-2848
LOCATION: BRIDGETON, MO

BORING METHOD: NX Core & water
DRILLING DATE: 4/5/95 - 4/6/95
DRILL RIG: CME 75

DATUM: MSL
COORDINATES N: 1060830.8
AZIMUTH: 0

COLLAR ELEV: 458.4
E: 515809.5
INCLINATION: -90

J-Joint, F-Fault, S-Shear, B-Bedding, F-Foliation
PL-Planar, C-Curved, U-Undulating, ST-Stepped, I-Irregular
P-Polished, K-Slickensided, SM-Smooth, R-Rough, VR-V. Rough
Fe-Fe Oxide, CL-Clay Infl, CH-Chlorite, H-Healed, GRF-Gravel Filled

DEPTH (FEET)	DESCRIPTION	GRAPHIC LOG	ELEV / DEPTH (FT)	RUN NO.	CORE RECOVERY	RQD	FRACTURES PER FOOT	DISCONTINUITY DATA: DIP wrt CORE AXIS	DISCONTINUITY DATA: TYPE AND SURFACE DESCRIPTION	GRAPHIC LOG	WEATHERING INDEX (SW FR, MW, HW, CW)	STRENGTH INDEX (R6, R5, R4, R3, R2, R1)	POINT LOAD INDEX (psi) (R1 30, R2 150, R3 300, R4 600, R5 1500, R6)	TEST ORIENTATION	NOTES WATER LEVELS INSTRUMENTATION
96	93.3-99.1 ft. Fresh, thickly bedded, light olive gray (5Y 6/1), fine grained, medium strong, ARGILLACEOUS LIMESTONE, (ST. LOUIS FORMATION) Stylolitic, bioturbated, abundant calcite veins up to 1 mm., few pyrite crystals							90	J,I,R						
98															
100	99.1-102.5 ft. Fresh, thickly bedded, light olive gray (5Y 6/1), fine grained to crystalline, medium strong, LIMESTONE, (ST. LOUIS FORMATION) Abundant argillaceous partings, calcite veins up to 10 mm., pyrite crystals scattered			7	100 %			90	J,I,R,CL						
								90	J,I,R						
102	102.5-105.0 ft. Fresh, thickly bedded, light olive gray (5Y 6/1), fine grained, medium strong, LIMESTONE, (ST. LOUIS FORMATION) Stylolitic, calcite and pyrite crystals common, small <2 mm. vugs/porous, calcite veins <1 mm. scattered							90	J,I,R,CL						4/5/95 @ 17:00 Stop coring for the day
			354.40												
104			104.00												4/6/95 @ 8:13 Begin coring Run 8
	105.0-108.0 ft. Fresh, thickly bedded, light olive gray (5Y 6/1), f-m grained, medium strong, LIMESTONE, (ST. LOUIS FORMATION) Stylolitic, abundant calcite and pyrite veins up to 2 mm., fossiliferous, argillaceous partings common, few large crystals of calcite up to 8 mm.							90	J,I,R,CL (2)						
106				8	100 %			90	J,I,R						
								90	J,I,R						
								80	J,I,R,CL						
108	108.0-113.0 ft. Fresh, thickly bedded, light olive gray (5Y 6/1), micro-crystalline, medium strong, LIMESTONE, (ST. LOUIS FORMATION) Stylolitic abundant calcite and pyrite veins, chert nodules common							90	J,I,R						4/6/95 @ 9:17 Begin coring Run 9
			349.40												
			109.00												
								90	J,I,SM,CL						
110	109.4-110.1 ft. Bed of bluish green, clayey material, foliated, intra-clasts of Limestone							80	J,I,SM,CL						
				9	97%			90	J,I,SM,CL (2)						
								90	J,I,R						
112															

DEPTH SCALE: 1:2
DRILLING CONTRACTOR: LAYNE-WESTERN
DRILLER: D. MAHURIN

LOGGED: S. COSIO
CHECKED: J. MILLER
DATE: 5/16/95

Golder Associates

RECORD OF DRILLHOLE PZ-206-SS

PROJECT: LAIDLAW/RI-FS
PROJECT NO: 943-2848
LOCATION: BRIDGETON, MO

BORING METHOD: NX Core & water
DRILLING DATE: 4/5/95 - 4/6/95
DRILL RIG: CME 75

DATUM: MSL
COORDINATES N: 1060830.8
AZIMUTH: 0

COLLAR ELEV: 458.4
E: 515809.5
INCLINATION: -90

J-Joint, F-Fault, S-Shear, B-Bedding, F-Foliation
PL-Planar, C-Curved, U-Undulating, ST-Stepped, I-Irregular
P-Polished, K-Slickensided, SM-Smooth, R-Rough, VR-V. Rough
Fe-Fe Oxide, CL-Clay Infill, CH-Chlorite, H-Healed, GRF-Gravel Filled

DEPTH (ft.)	DESCRIPTION	GRAPHIC LOG	ELEV / DEPTH (FT)	RUN NO	CORE RECOVERY	RQD	FRACTURES PER FOOT	DISCONTINUITY DATA: DIP wrt CORE AXIS	DISCONTINUITY DATA: TYPE AND SURFACE DESCRIPTION	GRAPHIC LOG	WEATHERING INDEX (SW FR, MW, HW, CW)	STRENGTH INDEX (R6, R5, R4, R3, R2, R1)	POINT LOAD INDEX (psi) (R1, R2 30, R3 150, R4 300, R5 600, R6 1500)	TEST ORIENTATION	NOTES WATER LEVELS INSTRUMENTATION
112									J,I,SM,CL						
	113.0-117.0 ft. Fresh, thickly bedded, light olive gray (5Y 6/1), fine grained, medium strong, ARGILLACEOUS LIMESTONE, (ST. LOUIS FORMATION) Banded with fine to medium grained Limestone up to 8 mm. thick, calcite crystals and veins up to 1 mm. present, stylolites rare but present														
114									J,I,R,CL						
									J,I,R,CL						
116				9	97%										
	341.40														
	117.0-120.7 ft. Fresh, thickly bedded, light olive gray (5Y 6/1), fine grained, strong, LIMESTONE, (ST. LOUIS FORMATION) Stylolitic, fossiliferous, pyrite and calcite veins common, oolitic, fossils are brachiopods and crinoids. Argillaceous partings from 119.0-119.7 ft.	117.00													117.0 ft. Inferred top of SALEM FORMATION encountered
118			339.40						J,I,R,CL						
			119.00												4/6/95 @ 10:23 Begin coring Run 10
									J,I,R,CL						
120															
	120.7-122.5 ft. Fresh, thickly bedded, olive gray (5Y 6/1), fine grained, strong, ARGILLACEOUS LIMESTONE, (SALEM FORMATION) Abundant argillaceous partings and calcite crystals, partings appear like spider form														
122				10	98%				J,I,R,CL						
	122.5-125.0 ft. Fresh, thickly bedded, light olive gray (5Y 6/1), fine grained, medium strong, LIMESTONE, (SALEM FORMATION) Beds of chert up to 60 mm., stylolitic, abundant argillaceous partings								J,I,R						
									J,I,R,CL						
124									J,I,R						
									J,I,R (2)						4/6/95 @ 11:05 Coring completed
	333.40		333.40												
	End of Record of Drillhole at 125.0 ft.	125.00	125.00												
126															
128															

DEPTH SCALE: 1:2
DRILLING CONTRACTOR: LAYNE-WESTERN
DRILLER: D. MAHURIN

LOGGED: S. COSIO
CHECKED: J. MILLER
DATE: 5/16/95

Golder Associates

Well No. PZ-206-SS

Boring No. X-Ref: PZ-206-SS

PIEZOMETER CONSTRUCTION SUMMARY

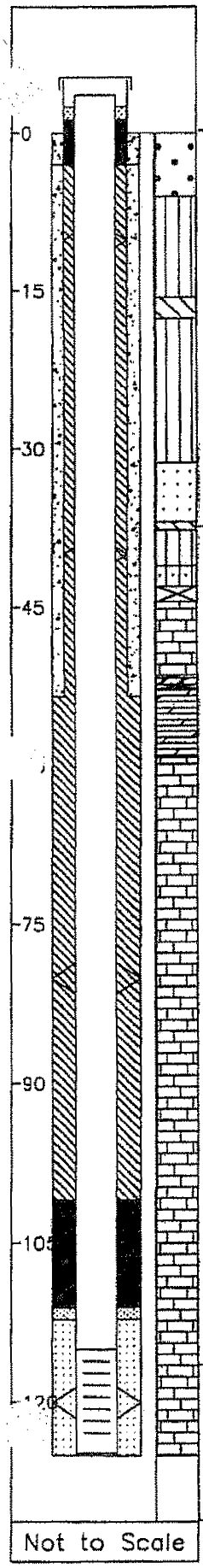

Not to Scale

Survey Coords: Northing: 1066031 ft. Easting: 515809 ft.

Elevation Ground Level 458.4 ft. NGVD

Top of PVC Casing 460.20 ft. NGVD

Drilling Summary:

Total Depth 125.5 ft.

Borehole Diameter 10 in. (0.0-52.0 ft.) 5 7/8 in. (52.0-125.5 ft.)

Casing Stickup Height 1.82 ft.

Driller Layne-Western St. Louis, MO

Rig CME 75, Schramm Portadrill T660H

Bit(s) 6 1/4 in. and 10 1/4 in. ID Hollow Stem Auger Bits, NX Core, 5 7/8 in. and 10 in. Button Bits

Drilling Fluid Auger-None, NX Core Water, Air Rotary

Protective Casing 8x8 in. Square Steel, by 5 ft. long

Construction Time log:

Task	Start Date	Start Time	Finish Date	Finish Time
Drilling				
CME 75	3/9/95	14:30	3/10/95	11:05
Schramm Rotary	4/24/95	11:30	4/24/95	13:30
Geophys.Logging:				
Casing:				
2" PVC	4/24/95	13:45	4/24/95	14:02
6" Steel	3/27/95	9:30	3/23/95	10:15
Filter Placement:	4/24/95	14:00	4/24/95	14:15
Cementing:				
Development				
Bentonite Grout	4/24/95	14:20	4/24/95	15:30
Bentonite Seal	4/24/95	14:10	4/24/95	14:20

Well Design & Specifications

Basis: Geologic Log X Geophysical Log

Casing string(s): C = Casing S = Screen

Depth			String(s)	Elevation		
+ 1.82	-	115.00	C1	460.20	-	343.38
115.00	-	124.80	S1	343.38	-	333.58
124.80	-	125.00	C2	333.58	-	333.38
+ 0.70	-	52.00	C3	459.10	-	406.38
	-				-	
	-				-	

Casing: C1 2 in. dia. Schedule 80 PVC, flush threaded with O-rings

C2 2 in. dia. threaded PVC end cap (4 in. long or 0.33 ft.) (C3-see comments)

Screen: S1 2 in. dia. Schedule 80 PVC, 0.010 in. machine cut slot, flush threaded with O-rings

Sand Pack: 16-35 mesh Silica Sand, 112.2-125.5 ft.

Filter Pack: Less than 50 mesh Silica Sand, 111.1-112.2 ft.

Grout Seal: Wyo-Ben Grout Well Bentonite Slurry, 3.0-101.0 ft., Neat cement, 3.0-52.0 ft.

Bentonite Seal: Extra high yield Wyo-Ben (100%) Slurry, 101.0-111.1 ft.

Concrete: 0.0-3.0 ft.

Well Development

Stabilization Test Data:

Time	pH	Spec. Cond.	Temp (°C)

Recovery Data:

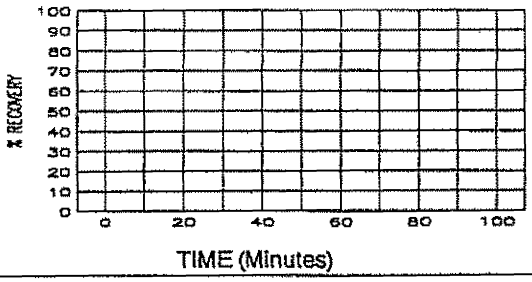

Comments: Surface Casing C3: 6 1/8 in. ID / 6 5/8 in. OD Steel Casing

Supervised by D. Alloway

Job Number 943-2848

Site LAIDLAW/OU2 RI-FS/MO

File Name PZ206SS

MISSOURI DEPARTMENT OF NATURAL RESOURCES
DIVISION OF GEOLOGY AND LAND SURVEY

MONITORING WELL CERTIFICATION RECORD

OFFICE USE ONLY	DATE RECEIVED
REF. NO 115096	CHECK NO.
ROUTE	TRANSMITTAL NO
STATE WELL NUMBER	CROSS REFERENCE NO.
CHECKED BY	ENTERED Ph 1 Ph 2 Ph 3
APPROVED BY	DATE APPROVED

INFORMATION SUPPLIED BY OWNER

SITE NAME	WELL NUMBER
LAIDLAW BRIDGETON SANITARY LANDFILL	PZ-206-55

SITE ADDRESS	CITY	STATE	ZIP CODE
ST. CHARLES ROCK RD.	BRIDGETON	MO.	63044

NAME	TELEPHONE
LAIDLAW WASTE SYSTEMS, INC	314-241-3710

ADDRESS	CITY	STATE	ZIP CODE
1221 N. BROADWAY	ST. LOUIS	MO	63102

INFORMATION SUPPLIED BY MONITORING WELL CONTRACTOR

LOCATION OF WELL SHOW LOCATION IN SECTION PLAT

COUNTY ST. LOUIS
ELEVATION 458.4
AREA NO.

SMALLEST ¼ LARGEST ¼

SEC. ____ TWN. 47 N,RNG. 5 E OR W

LAT. 38 ° 46 ' 00 " LONG. 90 ° 26 ' 40 "

SKETCH THE LOCATION TO THE WELL INCLUDING MILEAGE ON ALL ROADS TRAVELED FROM NEAREST TOWNS OR HIGHWAYS

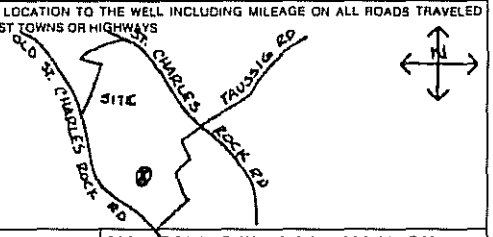

DESCRIBE LOCATION OF THE WELL SO WE WOULD BE ABLE TO VISIT IT

MONITORING WELL INSTALLATION CONTRACTOR'S NAME
LAYNE WESTERN CO., INC.

DRILLING CONTRACTOR'S NAME
LAYNE WESTERN CO., INC.

TYPE OF INSTALLATION
☒ ABOVE GROUND ☐ FLUSH MOUNT

STATIC WATER LEVEL
FEET FROM MEASURING POINT

DATE OF STATIC WATER LEVEL

ELEVATION OF MEASURING POINT
460.30

MEASURING POINT IS
☒ TOP OF RISER PIPE
☐ OTHER

DRILLING EQUIPMENT
☒ AIR ROTARY ☒ AUGER TYPE 6¼ HSA
☐ REVERSE ROTARY ☐ OTHER

CENTRALIZERS USED
☒ YES, AT 4 TOTAL
☒ STAINLESS STEEL
☐ OTHER
☐ NO

MULTIPLE CASED WELLS
SUBMIT ADDITIONAL AS BUILT DIAGRAM SHOWING WELL CONSTRUCTION DETAILS INCLUDING TYPE AND SIZE OF ALL CASING, HOLE DIAMETERS, AND GROUT USED.

DATE WELL CONSTRUCTION WAS COMPLETED
4-24-95

I HEREBY CERTIFY THAT THE MONITORING WELL HEREIN DESCRIBED WAS CONSTRUCTED IN ACCORDANCE WITH THE DEPARTMENT OF NATURAL RESOURCES REQUIREMENTS FOR THE CONSTRUCTION OF MONITORING WELLS.

SIGNATURE (MONITORING WELL CONTRACTOR) Richard P. Vogt

PERMIT NUMBER	DATE
001256 WM1	5-10-95

SIGNATURE (DRILLING CONTRACTOR) Richard P. Vogt

PERMIT NUMBER	DATE
001256 WM1	5-10-95

NOTE: Record the fraction of a foot in decimal, not in inches.

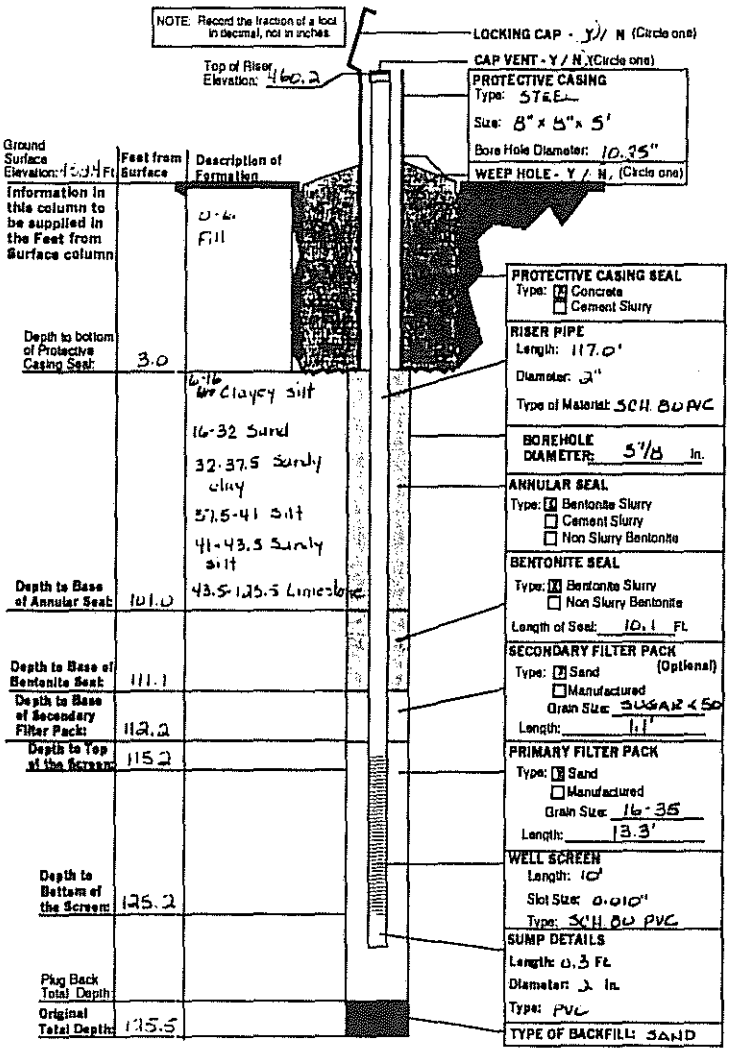

MO 780-1415 (2-94)

DISTRIBUTION: WHITE/DIVISION CANARY/MONITORING WELL CONTRACTOR PINK/OWNER

LAIDLAW
LAIDLAW WASTE SYSTEMS INC.

SOIL BOREHOLE LOG

SITE NAME AND LOCATION LAIDLAW/OU2 RI-FS/MO WEST LAKE LANDFILL OPERABLE UNIT 2	DRILLING METHOD: 4.25 inch I.D. Hollow Stem Auger	BORING NO. PZ-207-AS
	SAMPLING METHOD: SPLIT SPOON: 2.0 inch O.D./1.5 inch I.D. (SP) SHELBY TUBE: 3.0 inch O.D./2 13/16 inch I.D. (SH)	SHEET 1 OF 3
	WATER LEVEL / TIME / DATE / CASING DEPTH	DRILLING START TIME 12:35 DATE 4/9/95; FINISH TIME 17:42 DATE 4/9/95

DATUM NORTHING: 1069644.67 EASTING: 516037.64 ELEVATION 461.9

DRILL RIG CME 75 - TRUCK MOUNT

ANGLE VERTICAL BEARING NA

SAMPLE HAMMER 140 lbs.

SURFACE CONDITIONS

DEPTH IN FEET (ELEVATION)	BLOW/ 6 IN. ON SAMPLER	RECOVERY	SYMBOL	SAMPLER SYMBOL	SAMPLE NUMBER AND DESCRIPTION OF MATERIAL	SAMPLER TYPE	REMARKS
0–2	3 50/6"	0.0'/2.0' (0%)			(0.0-2.0 ft.) Concrete (459.9) 2.0	SP 1	
2–4	11 10 7 6	1.1'/2.0' (55%)			(2.0-4.0 ft.) Very stiff, mottled, moderate yellowish brown (10YR 5/4) to dark greenish gray (5GY 4/1), SILT, NR, damp, (ML), (LOESS) (457.9) 4.0	SP 2	
4–6	3 4 5 6	1.5'/2.0' (75%)			(4.0-5.8 ft.) Stiff, dark greenish gray (5GY 4/1), CLAYEY SILT, some fine Gravel, mottled, NR, damp, (CL-ML), (LOESS) (456.1) 5.8	SP 3	
6–12	16 4 1 2	0.1'/2.0' (5%)			(5.8-12.0 ft.) Waste	SP 4	
8–10	3 3 7 8	0.1'/2.0' (5%)			below 9.5 ft., waste becomes wet	SP 5	First water encountered @ 9.5 ft.
10–12	5 2 4 23	0.3'/2.0' (15%)			(449.9) 12.0	SP 6	
12–13	4 14 18 3	0.7'/2.0' (35%)			(12.0-12.7 ft.) Hard, dark greenish gray (5GY 4/1), CLAY, trace fine Gravel, NR, wet, (CL), (FILL) (449.2) 12.7	SP 7	
13–14					(12.7-14.0 ft.) Waste		
14	4 6 1 4	0.0'/2.0' (0%)			(14.0-16.0 ft.) No Recovery	SP 8	From 14.0-20.0 ft., no samples recovered, but drilling indicates waste

DRILLING CONTR LAYNE-WESTERN

LOGGED BY S. COSIO

DATE 6/1/95

CHK'D BY W. HERST

JOB NO.: 943-2848

FILENAME: PZ207AS

LAIDLAW WASTE SYSTEMS INC.

SOIL BOREHOLE LOG

SITE NAME AND LOCATION	DRILLING METHOD: 4.25 inch I.D. Hollow Stem Auger	BORING NO. PZ-207-AS
LAIDLAW/OU2 RI-FS/MO WEST LAKE LANDFILL OPERABLE UNIT 2	SAMPLING METHOD: SPLIT SPOON: 2.0 inch O.D./1.5 inch I.D. (SP) SHELBY TUBE: 3.0 inch O.D./2 13/16 inch I.D. (SH)	SHEET 2 OF 3
	WATER LEVEL / TIME / DATE / CASING DEPTH	DRILLING START: TIME 12:35, DATE 4/9/95 — FINISH: TIME 17:42, DATE 4/9/95
DATUM NORTHING: 1069644.67 EASTING: 516037.64 ELEVATION 461.9		
DRILL RIG CME 75 - TRUCK MOUNT	SURFACE CONDITIONS	
ANGLE VERTICAL BEARING NA		
SAMPLE HAMMER 140 lbs.		

DEPTH IN FEET (ELEVATION)	BLOW/ 6 IN. ON SAMPLER	RECOVERY	SYMBOL	SAMPLER SYMBOL	SAMPLE NUMBER AND DESCRIPTION OF MATERIAL	SAMPLER TYPE	REMARKS
16	3 1 5 7	0.0' 2.0' (0%)			(12.7-20.0 Ft.) Waste (16.0-18.0 Ft.) No Recovery	SP 8	
17						SP 9	
18	4 5 6 11	0.0' 2.0' (0%)			(18.0-20.0 Ft.) No Recovery	SP 10	
19							
20	6 5 5 6	1.0' 2.0' (50%)			(441.9) 20.0 (20.0-20.4 Ft.) Stiff, dark greenish gray (5GY 4/1), SILT, trace Fine Gravel, NR, wet, (ML), (FILL) (441.5) 20.4 (20.4-20.6 Ft.) Loose, dark greenish gray (5GY 4/1), Fine SAND, NR, wet, (SW), (FILL) (441.3) 20.6	SP 11	
21							
22	10 18 8 4	0.9' 2.0' (45%)			(20.6-22.0 Ft.) Waste (22.0-24.0 Ft.) No Recovery	SP 12	from 22.0-28.0 Ft., no samples recovered, but drilling indicates waste
23							
24	3 3 3 18	0.0' 2.0' (0%)			(24.0-26.0 Ft.) No Recovery	SP 13	
25							
26	30 31 14 5	0.0' 2.0' (0%)			(26.0-28.0 Ft.) No Recovery	SP 14	
27							
28	1 9 10 5	0.6' 2.0' (30%)			(433.9) 28.0 (28.0-32.0 Ft.) Firm to very stiff, greenish black (5G 4/1) to dusky blue-green (5BG 3/2), SILT, little Sand and Gravel, NR, wet, (ML), (FILL)	SP 15	
29							

DRILLING CONTR LAYNE-WESTERN

LOGGED BY S. CUSIO

DATE 6/1/95 CHK'D BY W. HERST

JOB NO.: 943-2848

FILENAME: PZ207AS

LAIDLAW WASTE SYSTEMS INC.

SOIL BOREHOLE LOG

SITE NAME AND LOCATION	DRILLING METHOD: 4.25 inch I.D. Hollow Stem Auger		BORING NO. PZ-207-AS
LAIDLAW/OU2 RI-FS/MO WEST LAKE LANDFILL OPERABLE UNIT 2	SAMPLING METHOD: SPLIT SPOON: 2.0 inch O.D./1.5 inch I.D. (SP) SHELBY TUBE: 3.0 inch O.D./2 13/16 inch I.D. (SH)		SHEET 3 OF 3
	WATER LEVEL		DRILLING START / FINISH
	TIME		TIME 12:35 / TIME 17:42
	DATE		DATE 4/9/95 / DATE 4/9/95
	CASING DEPTH		
NORTHING: 1069644.67 DATUM EASTING: 516037.64 ELEVATION 461.9			
DRILL RIG CME 75 - TRUCK MOUNT	SURFACE CONDITIONS		
ANGLE VERTICAL BEARING NA			
SAMPLE HAMMER 140 lbs.			

DRILLING CONTR LAYNE-WESTERN

DEPTH IN FEET (ELEVATION)	BLOW/6 IN. ON SAMPLER	RECOVERY	SYMBOL	SAMPLER SYMBOL	SAMPLE NUMBER AND DESCRIPTION OF MATERIAL	SAMPLER TYPE	REMARKS
31	4 1 4 4	0.1'/2.0' (5%)			(28.0-32.0 Ft.) Firm to very stiff, greenish black (5G 4/1) to dusky blue-green (5BG 3/2), SILT, little Sand and Gravel, NR, wet, (ML), (FILL)	SP 16	
					(429.9) 32.0		
32	3 10 15 20	1.1'/2.0' (55%)			(32.0-40.0 Ft.) Very loose to compact, dark greenish gray (5GY 4/1), fine SAND, NR, wet, (SW), (ALLUVIUM)	SP 17	
33							
34	10 8 18 15	1.3'/2.0' (65%)				SP 18	
35							
36	0 0 0 0	2.0'/2.0' (100%)				SP 19	
37							
38	1 4 5 7	0.5'/2.0' (25%)				SP 20	
39							
					(421.9) 40.0		
40					End of Soil Borehole Log at 40.0 Ft.		
41							
42							
43							
44							

LOGGED BY S. COSIO CHK'D BY W. HERST

DATE 6/1/95

JOB NO.: 943-2848

FILENAME: PZ207AS

Well No. PZ-207-AS

Boring No. X-Ref: PZ-207-AS

PIEZOMETER CONSTRUCTION SUMMARY

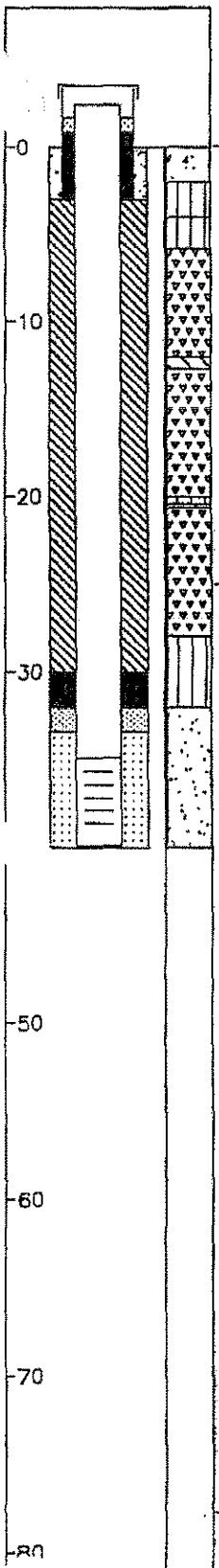

Not to Scale

Survey Coords: Northing: 1069645 ft. Easting: 516038 ft.

Elevation Ground Level 461.9 ft. NGVD

Top of PVC Casing 463.57 ft. NGVD

Drilling Summary:

Total Depth 40.0 ft.
Borehole Diameter 8 1/4 in.
Casing Stickup Height 1.69 ft.
Driller Layne-Western
St. Louis, MO

Rig CME 75
Bit(s) 6 1/4 in. ID Hollow Stem Auger Bit,

Drilling Fluid Auger-None

Protective Casing 8x8 in. Square Steel, by 5 ft. long

Construction Time log:

Task	Start Date	Start Time	Finish Date	Finish Time
Drilling				
CME 75	4/9/95	12:35	4/9/95	17:45
Schramm Rotary				
Geophys.Logging:				
Casing:	4/10/95	9:45	4/10/95	10:00
Filter Placement:	4/10/95	10:00	4/10/95	10:17
Cementing:				
Development				
Bentonite Grout	4/10/95	10:35	4/10/95	11:10
Bentonite Seal	4/10/95	10:32	4/10/95	10:35

Well Design & Specifications

Basis: Geologic Log X Geophysical Log

Casing string(s): C = Casing S = Screen

Depth			String(s)	Elevation		
+ 1.69	-	34.90	C1	463.57	-	428.98
34.90	-	39.70	S1	428.98	-	422.18
39.70	-	40.03	C2	422.18	-	421.85
	-				-	
	-				-	
	-				-	

Casing: C1 2 in. dia. Schedule 80 PVC, flush threaded with O-rings

C2 2 in. dia. threaded PVC end cap (4 in. long or 0.33 ft.)

Screen: S1 2 in. dia. Schedule 80 PVC, 0.010 in. machine cut slot, flush threaded with O-rings

Sand Pack: 16-35 mesh Silica Sand, 33.4-40.0 ft.

Filter Pack: Less than 50 mesh Silica Sand, 32.0-33.4 ft.

Grout Seal: Wyo-Ben Grout Well Bentonite Slurry, 3.0-20.0 ft.

Bentonite Seal: Extra high yield Wyo-Ben (100%) Slurry, 20.0-32.0 ft.

Concrete: 0.0-3.0 ft.

Well Development

Stabilization Test Data:

Time	pH	Spec. Cond.	Temp (°C)

Recovery Data:

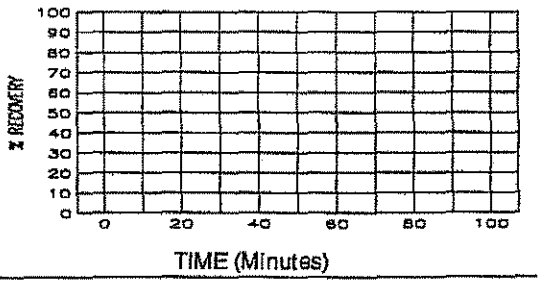

Comments:

Supervised by S. Cosio

Job Number 943-2848

Site LAIDLAW/OU2 RI-FS/MO

File Name PZ207AS

MISSOURI DEPARTMENT OF NATURAL RESOURCES
DIVISION OF GEOLOGY AND LAND SURVEY

MONITORING WELL CERTIFICATION RECORD

OFFICE USE ONLY	DATE RECEIVED
REF NO 122486	CHECK NO
ROUTE	TRANSMITTAL NO
STATE WELL NUMBER	CROSS REFERENCE NO
CHECKED BY	ENTERED Ph 1 Ph 2 Ph 3
APPROVED BY	DATE APPROVED

INFORMATION SUPPLIED BY OWNER

SITE NAME	WELL NUMBER
LAIDLAW BRIDGETON SANITARY LANDFILL	PZ-207-AS

SITE ADDRESS	CITY	STATE	ZIP CODE
St. CHARLES ROCK RD.	BRIDGETON	MO	63044

NAME	TELEPHONE
LAIDLAW WASTE SYSTEMS, INC.	314-241-3710

ADDRESS	CITY	STATE	ZIP CODE
1122 N BROADWAY	ST LOUIS	MO	63102

INFORMATION SUPPLIED BY MONITORING WELL CONTRACTOR

LOCATION OF WELL
SHOW LOCATION IN SECTION PLAT

COUNTY ST. LOUIS
ELEVATION 460.7
AREA NO.

SMALLEST ¼ LARGEST ¼

SEC. ____ TWN. 47 N.RNG. 5 E OR W

LAT. 38 ° 46 ' 06 " LONG. 90 ° 26 ' 38 "

SKETCH THE LOCATION TO THE WELL INCLUDING MILEAGE ON ALL ROADS TRAVELED FROM NEAREST TOWNS OR HIGHWAYS

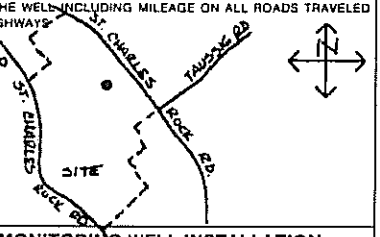

DESCRIBE LOCATION OF THE WELL SO WE WOULD BE ABLE TO VISIT IT

MONITORING WELL INSTALLATION CONTRACTOR'S NAME
LAYNE WESTERN CO, INC.

DRILLING CONTRACTOR'S NAME
LAYNE WESTERN CO, INC.

TYPE OF INSTALLATION
☒ ABOVE GROUND ☐ FLUSH MOUNT

STATIC WATER LEVEL
FEET FROM MEASURING POINT

DATE OF STATIC WATER LEVEL

ELEVATION OF MEASURING POINT
463.57

MEASURING POINT IS
☒ TOP OF RISER PIPE
☐ OTHER

DRILLING EQUIPMENT
☐ AIR ROTARY ☒ AUGER TYPE 4¼ H.S.A.
☐ REVERSE ROTARY ☐ OTHER

CENTRALIZERS USED
☒ YES, AT 1 THRU
☒ STAINLESS STEEL
☐ OTHER
☐ NO

MULTIPLE CASED WELLS
SUBMIT ADDITIONAL AS BUILT DIAGRAM SHOWING WELL CONSTRUCTION DETAILS INCLUDING TYPE AND SIZE OF ALL CASING, HOLE DIAMETERS, AND GROUT USED.

DATE WELL CONSTRUCTION WAS COMPLETED
4-10-95

I HEREBY CERTIFY THAT THE MONITORING WELL HEREIN DESCRIBED WAS CONSTRUCTED IN ACCORDANCE WITH THE DEPARTMENT OF NATURAL RESOURCES REQUIREMENTS FOR THE CONSTRUCTION OF MONITORING WELLS.

SIGNATURE (MONITORING WELL CONTRACTOR)

PERMIT NUMBER	DATE
001352 WMM	5-10-95

SIGNATURE (DRILLING CONTRACTOR)

PERMIT NUMBER	DATE
001358WMM	5-10-95

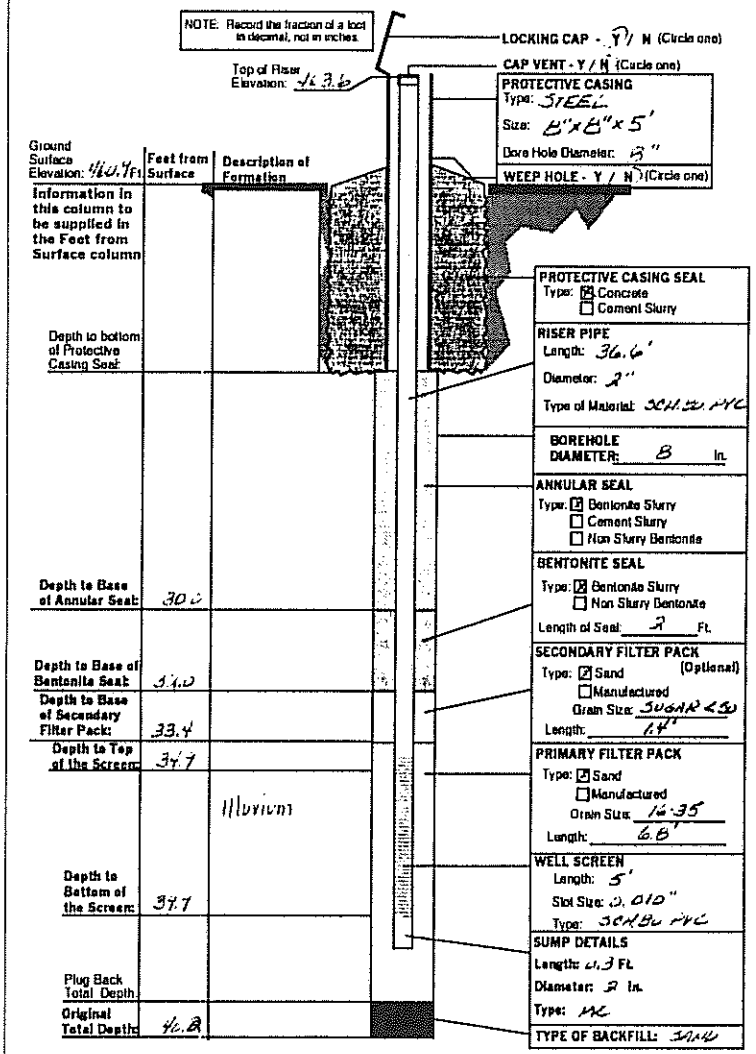

MO 780-1415 (2-94) DISTRIBUTION: WHITE/DIVISION CANARY MONITORING WELL CONTRACTOR PINK/OWNER

LAIDLAW WASTE SYSTEMS INC.

SOIL BOREHOLE LOG

SITE NAME AND LOCATION LAIDLAW/OU2 RI-FS/MO WEST LAKE LANDFILL OPERABLE UNIT 2	DRILLING METHOD: 6.25 inch I.D. Hollow Stem Auger SAMPLING METHOD: SPLIT SPOON: 2.0 inch O.D./1.5 inch I.D. (SP) SHELBY TUBE: 3.0 inch O.D./2 13/16 inch I.D. (SH)	BORING NO. PZ-208-SS SHEET 1 OF 2 DRILLING
NORTHING: 1069219.14 DATUM EASTING: 517169.45 ELEVATION 472.5	WATER LEVEL / TIME / DATE / CASING DEPTH	START: TIME 8:15, DATE 6/17/95 FINISH: TIME 9:45, DATE 6/17/95
DRILL RIG CME 75 - TRUCK MOUNT	SURFACE CONDITIONS Grass covered lawn	
ANGLE BEARING		
SAMPLE HAMMER		

DEPTH IN FEET (ELEVATION)	BLOW/ 6 IN. ON SAMPLER	RECOVERY	SYMBOL	SAMPLER SYMBOL	SAMPLE NUMBER AND DESCRIPTION OF MATERIAL	SAMPLER TYPE	REMARKS
1	2 2 3	1.1'/2.0' (55%)			(0.0-4.0 ft.) Firm, dark yellowish brown (10YR 4/2), SILT CLAY, trace organics consisting of fine roots, NR, damp, (CL), (TOPSOIL)	SP (1)	
2	2 3 3	1.7'/2.0' (85%)			@ 2.0 ft., color changes to moderate yellowish brown (10YR 5/4)	SP (2)	
3					(468.5) 4.0		
4	2 2 3	1.7'/2.0' (85%)			(4.0-7.5 ft.) Loose, moderate yellowish brown (10YR 5/4) to pale yellowish brown (10YR 6/2), CLAYEY SILT, NR, moist, (CL-ML), (LOESS)	SP (3)	
5	4 4						
6	2 3 4	0.9'/2.0' (45%)				SP (4)	
7	5				(465.0) 7.5		
8	3 4 4	1.5'/2.0' (75%)			(7.5-15.0 ft.) Loose, pale yellowish brown (10YR 6/2), SILT, trace iron oxide staining, occasional thin, damp, fine sand seams (<1 1/2 in. thick), (ML), (LOESS)	SP (5)	
9	4						
10	4 5 5	1.9'/2.0' (95%)				SP (6)	
11	5 3						
12	1	0.5'/2.0' (25%)			From 12.0-14.0 ft., little fine sand throughout silt	SP (7)	
13	8 8						
14	5 6 7 7	1.8'/2.0' (90%)				SP (8)	

DRILLING CONTR LAYNE-WESTERN

LOGGED BY J. MILLER CHK'D BY W. HERST

DATE 7/14/95

JOB NO.: 943-2848

FILENAME: PZ208SS

LAIDLAW WASTE SYSTEMS INC.

SOIL BOREHOLE LOG

SITE NAME AND LOCATION

LAIDLAW/OU2 RI-FS/MD
WEST LAKE LANDFILL
OPERABLE UNIT 2

NORTHING: 1069219.14
DATUM EASTING: 517169.45 ELEVATION 472.5

DRILLING METHOD: 6.25 inch I.D. Hollow Stem Auger

SAMPLING METHOD:
SPLIT SPOON: 2.0 inch O.D./1.5 inch I.D. (SP)
SHELBY TUBE: 3.0 inch O.D./2 13/16 inch I.D. (SH)

					DRILLING START	DRILLING FINISH
WATER LEVEL					TIME	TIME
TIME					8:15	9:45
DATE					DATE	DATE
CASING DEPTH					6/17/95	6/17/95

BORING NO. PZ-208-SS

SHEET 2 OF 2

DRILL RIG CME 75 - TRUCK MOUNT

SURFACE CONDITIONS Grass covered lawn

ANGLE BEARING

SAMPLE HAMMER

DRILLING CONTR LAYNE-WESTERN

LOGGED BY J. MILLER DATE 7/14/95

CHK'D BY W. HERST

JOB NO.: 943-2848

FILENAME: PZ208SS

DEPTH IN FEET (ELEVATION)	BLOW/6 IN. ON SAMPLER	RECOVERY	SYMBOL	SAMPLER SYMBOL	SAMPLE NUMBER AND DESCRIPTION OF MATERIAL	SAMPLER TYPE		REMARKS
16	7 50	0.5' 1.0' (50%)			(15.0-17.0 Ft.) Compact, pale yellowish brown (10YR 6/2) to moderate yellowish brown (10YR 6/2), fine SAND, trace Silt, trace iron oxide staining, NR, damp, (SP), (ALLUVIUM) @ 16.0 Ft., fine sand becomes wet	SP	8	
17					(455.5) 17.0	SP	9	
18					End of Soil Borehole Log at 17.0 Ft. See PZ-208-SS Record of Drillhole For rock descriptions			
19								
20								
21								
22								
23								
24								
25								
26								
27								
28								
29								

RECORD OF DRILLHOLE PZ-208-SS

Sheet 1 of 6

PROJECT: LAIDLAW/RI-FS
PROJECT NO: 943-2848
LOCATION: BRIDGETON, MO

BORING METHOD: NX Core & water
DRILLING DATE: 6/17/95
DRILL RIG: CME 75

DATUM: MSL
COORDINATES N: 1069219.14
AZIMUTH: 0

COLLAR ELEV: 472.5
E: 517189.45
INCLINATION: -90

J-Joint, F-Fault, S-Shear, B-Bedding, F-Foliation
PL-Planar, C-Curved, U-Undulating, ST-Stepped, I-Irregular
P-Polished, K-Slickensided, SM-Smooth, R-Rough, VR-V. Rough
Fe-FeOxide, CL-Clay Infil, CH-Chlorite, H-Healed, GRF-Gravel Filled

DEPTH SCALE (FEET)	DESCRIPTION	GRAPHIC LOG	ELEV / DEPTH (FT)	RUN NO	CORE RECOVERY	ROD	FRACTURES PER FOOT	DISCONTINUITY DATA: DIP wrt CORE AXIS	DISCONTINUITY DATA: TYPE AND SURFACE DESCRIPTION	GRAPHIC LOG	WEATHERING INDEX (SW FR, MW, HW, CW)	STRENGTH INDEX (R6, R5, R4, R3, R2, R1)	POINT LOAD INDEX (psi) (R1 30, R2 150, R3 300, R4 600, R5 1500, R6)	TEST ORIENTATION	NOTES WATER LEVELS INSTRUMENTATION
16	0.0-17.0 ft. See Soil Borehole Log PZ-202-SS 17.0-17.4 ft. No samples collected		455.10												
	17.4-24.3 ft. Slightly weathered, thinly bedded, light olive gray (5Y 6/1), fine crystalline, medium strong, LIMESTONE, (ST. LOUIS FORMATION) Some fossils		17.40	1	100			J,I,R (4)							6/17/95 @ 10:15 Begain Run 1
18								J,PL,SM							
			453.30 19.20					B,I,R (2) J,PL,SM,CL J,PL,SM							6/17/95 @ 10:30 End Run 1
20								J,PL,SM (3) J,I,SM J,I,SM,Fe							
								J,I,R (3)							
22								J,I,R J,I,SM (4) J,I,R (2)							
								J,I,SM,CL J,I,R (2)							
24	24.3-59.8 ft. Fresh, thinly bedded, light olive gray (5Y 6/1), f-m grained, medium strong, LIMESTONE, (ST. LOUIS FORMATION) Some fossiliferous zones			2	120			J,I,R,CL J,I,R,CL (4)							
								J,I,R J,I,R J,I,R,CL (4)							
26								J,I,R,CL J,I,R J,I,SM,CL (2)							
								J,I,R (3) J,I,R,CL (2)							
28								J,I,R,CL (2) J,I,R							
	Below 29.2 ft. no fossils present		443.30 29.20					J,I,R,CL J,P,SM,CL J,I,R J,I,R							6/17/95 @ 11:00 End Run 2
30								J,I,R,CL J,I,R							
				3	100			J,I,R,CL (2)							
								J,I,SM,CL (4)							
32								J,I,R,CL							

DEPTH SCALE: 1:2
DRILLING CONTRACTOR: LAYNE-WESTERN
DRILLER: D. MAHURIN

LOGGED: B. TILTON
CHECKED: R. BOOTH
DATE: 7/12/95

Golder Associates

RECORD OF DRILLHOLE PZ-208-SS

PROJECT: LAIDLAW/RI-FS
PROJECT NO: 943-2848
LOCATION: BRIDGETON, MO

BORING METHOD: NX Core & water
DRILLING DATE: 6/17/95
DRILL RIG: CME 75

DATUM: MSL
COORDINATES N: 1069219.14
AZIMUTH: 0

COLLAR ELEV: 472.5
E: 517168.45
INCLINATION: -90

J-Joint, F-Fault, S-Shear, B-Bedding, F-Foliation
PL-Planar, C-Curved, U-Undulating, ST-Stepped, I-Irregular
P-Polished, K-Slikensided, SM-Smooth, R-Rough, VR-V. Rough
Fe-FeOxide, CL-Clay Infill, CH-Chlorite, H-Healed, GRF-Gravel Filled

SCALE (FEET)	DESCRIPTION	ELEV / DEPTH (FT)	RUN NO.	CORE RECOVERY	ROD	FRACTURES PER FOOT	DISCONTINUITY DATA: DIP wrt CORE AXIS	DISCONTINUITY DATA: TYPE AND SURFACE DESCRIPTION	WEATHERING INDEX	STRENGTH INDEX	POINT LOAD INDEX (psi)	TEST ORIENTATION	NOTES WATER LEVELS INSTRUMENTATION
32	24.3-59.8 ft. Fresh, thinly bedded, light olive gray (5Y 6/1), f-m grained, medium strong, LIMESTONE, (ST. LOUIS FORMATION) Some fossiliferous zones Below 33.0 ft. Limestone becomes microcrystalline with intermittent zones that are very fine to fine crystalline						90	J,I,SM,CL					
							90	J,I,R					
							90	J,I,R,CL					
							80	J,I,R,CL					
34							90	J,I,R,CL (2)					
							90	J,I,R					
							90	J,I,R,CL					
							90	J,I,R,CL					
							80	J,I,R,CL					
							90	J,I,R					
36			3	100 %			90	J,PL,SM,CL (3)					
							90	J,I,R,CL (6)					
							90	J,U,SM,CL					
38							90	J,I,SM,CL (5)					
							90	J,PL,SM,CL (3)					
		433.30 / 39.20					90	J,I,R					6/17/95 @ 11:40 End Run 3
							90	J,I,SM					
40							90	J,C,SM					
							60	J,I,R,Fe					
	40.7-41.5 ft. Moderately weathered zone						90	J,I,R,Fe					
							90	J,PL,SM,CL					
42							90	J,PL,SM,CL					
	42.4-46.7 ft. Intermittent dark gray (N3) chert nodules (1/2 to 2 in. dia.)												
			4	100 %			90	J,PL,R,Fe					
44							90	J,I,SM,Fe					
							90	J,PL,SM					
46							90	J,PL,SM					
	Below 46.5 ft. stylolites common						90	J,PL,SM (2)					
							90	J,I,R,CL					
48													

DEPTH SCALE: 1:2
DRILLING CONTRACTOR: LAYNE-WESTERN
DRILLER: D. MAHURIN

LOGGED: B. TILTON
CHECKED: R. BOOTH
DATE: 7/12/95

Golder Associates

RECORD OF DRILLHOLE PZ-208-SS

PROJECT: LAIDLAW/RI-FS
PROJECT NO: 943-2848
LOCATION: BRIDGETON, MO

BORING METHOD: NX Core & water
DRILLING DATE: 6/17/95
DRILL RIG: CME 75

DATUM: MSL
COORDINATES N: 1089219.14
AZIMUTH: 0

COLLAR ELEV: 472.5
E: 517169.45
INCLINATION: -90

J-Joint, F-Fault, S-Shear, B-Bedding, F-Foliation
PL-Planar, C-Curved, U-Undulating, ST-Stepped, I-Irregular
P-Polished, K-Slickensided, SM-Smooth, R-Rough, VR-V. Rough
Fe-FeOxide, CL-Clay Infill, CH-Chlorite, H-Healed, GRF-Gravel Filled

DEPTH SCALE (FEET)	DESCRIPTION	GRAPHIC LOG	ELEV / DEPTH (FT)	RUN NO.	CORE RECOVERY	RQD	FRACTURES PER FOOT	DISCONTINUITY DATA: DIP w/r CORE AXIS	DISCONTINUITY DATA: TYPE AND SURFACE DESCRIPTION	GRAPHIC LOG	WEATHERING INDEX	STRENGTH INDEX	POINT LOAD INDEX (psi)	TEST ORIENTATION	NOTES WATER LEVELS INSTRUMENTATION
48	24.3-59.8 ft. Fresh, thinly bedded, light olive gray (5Y 6/1), f-m grained, medium strong, LIMESTONE, (ST. LOUIS FORMATION) Some fossiliferous zones		423.30	4	100 %				J,I,R,CL						6/17/95 @ 12:40 End Run 4
			49.20						J,I,SM						
50									B,PL,SM						
									B,PL,SM						
									J,I,R,CL						
52															
54				5	100 %										
									J,PL,SM,CL						
56															
									B,PL,SM						
58									J,C,SM,CL						
			413.30												
			59.20												
60	59.8-65.9 ft. Moderately weathered, thickly bedded, dark yellowish orange (10YR 6/6), fine grained, weak, ARGILLACEOUS LIME-STONE, (ST. LOUIS FORMATION) Heavy iron oxide staining								B,PL,SM,Fe						
				6	100 %										
62															
64															

DEPTH SCALE: 1:2
DRILLING CONTRACTOR: LAYNE-WESTERN
DRILLER: D. MAHURIN

LOGGED: B. TILTON
CHECKED: R. BOOTH
DATE: 7/12/95

Golder Associates

RECORD OF DRILLHOLE PZ-208-SS

PROJECT: LAIDLAW/RI-FS
PROJECT NO: 943-2848
LOCATION: BRIDGETON, MO

BORING METHOD: NX Core & water
DRILLING DATE: 6/17/95
DRILL RIG: CME 75

DATUM: MSL
COORDINATES N: 1069219.14
AZIMUTH: 0

COLLAR ELEV: 472.5
E: 517169.45
INCLINATION: -90

J-Joint, F-Fault, S-Shear, B-Bedding, F-Foliation
Pl-Planar, C-Curved, U-Undulating, ST-Stepped, I-Irregular
P-Polished, K-Slickensided, SM-Smooth, R-Rough, VR-V. Rough
Fe-FeOxide, CL-Clay Infill, CH-Chlorite, H-Healed, GRF-Gravel Filled

SCALE (FEET)	DESCRIPTION	GRAPHIC LOG	ELEV / DEPTH (FT)	RUN NO.	CORE RECOVERY	RQD	FRACTURES PER FOOT	DISCONTINUITY DATA: DIP wrt CORE AXIS	DISCONTINUITY DATA: TYPE AND SURFACE DESCRIPTION	GRAPHIC LOG	WEATHERING INDEX	STRENGTH INDEX	POINT LOAD INDEX (psi)	TEST ORIENTATION	NOTES WATER LEVELS INSTRUMENTATION
64	59.8-65.9 ft. Moderately weathered, thickly bedded, dark yellowish orange (10YR 6/6), fine grained, weak, ARGILLACEOUS LIMESTONE, (ST. LOUIS FORMATION) Heavy iron oxide staining							0	B,I,R,Fe						
	65.4-65.7 ft. Very porous zone, open vugs, (< 1 mm.), highly weathered							0	B,I,SM						
66	65.9-71.4 ft. Fresh, thinly bedded, light olive gray (5Y 6/1), micro-crystalline, medium strong, LIMESTONE, (ST. LOUIS FORMATION) Stylolitic			6	100 %										
68								0	J,I,SM						
	@ 68.8 ft. Very stiff, greenish gray (5G 6/1), glauconite clay seam (~1/2 in.)		403.50 69.00												
70								0	J,I,R,CL						
								0	J,U,SM,CL						
								0	J,PL,SM,CL						
	71.4-74.8 ft. Fresh, thinly bedded, light olive gray (5Y 6/1), micro-crystalline, medium strong, BIOTURBATED LIMESTONE, (ST. LOUIS FORMATION) Glauconite clay seams surrounding Limestone pieces, Limestone														
72															
74				7	100 %			0	B,I,R,CL						
								0	J,I,SM						
	74.8-76.8 ft. Slightly weathered, thinly bedded, light olive gray (5Y 6/1), very fine grained, medium strong, ARGILLACEOUS LIMESTONE, (ST. LOUIS FORMATION)							0	J,I,R,CL						
								0	J,PL,SM,CL						
76								0	J,I,R,CL						
	76.8-78.5 ft. Fresh, thinly bedded, light olive gray (5Y 6/1), micro-crystalline, medium strong, LIMESTONE, (ST. LOUIS FORMATION)							0	B,I,R,CL						
								0	J,I,SM,CL (2)						
78								0	J,PL,SM,CL						
	78.5-84.5 ft. Slightly weathered, medium bedded, pale yellowish brown (10YR 6/2), fine grained, weak, ARGILLACEOUS LIMESTONE, (ST. LOUIS FORMATION)							0	B,PL,SM						
			393.50 79.00												6/17/95 @ 15:45 End Run 7
				8	100 %										
80															
82															
84															

DEPTH SCALE: 1:2
DRILLING CONTRACTOR: LAYNE-WESTERN
DRILLER: D. MAHURIN

LOGGED: B. TILTON
CHECKED: R. BOOTH
DATE: 7/12/95

Golder Associates

RECORD OF DRILLHOLE PZ-208-SS

PROJECT: LAIDLAW/RI-FS
PROJECT NO: 943-2848
LOCATION: BRIDGETON, MO

BORING METHOD: NX Core & water
DRILLING DATE: 6/17/95
DRILL RIG: CME 75

DATUM: MSL
COORDINATES N: 1069219.14
AZIMUTH: 0

COLLAR ELEV: 472.5
E: 517169.45
INCLINATION: -90

J-Joint, F-Fault, S-Shear, B-Bedding, F-Foliation, PL-Planar, C-Curved, U-Undulating, ST-Stepped, I-Irregular, P-Polished, K-Slickensided, SM-Smooth, R-Rough, VR-V, Rough, Fe-FeOxide, CL-Clay Infill, CH-Chlorite, H-Healed, GRF-Gravel Filled

DEPTH SCALE (FEET)	ROCK TYPE DESCRIPTION	GRAPHIC LOG	ELEV / DEPTH (FT)	RUN NO.	CORE RECOVERY	RQD 80 60 40 20	FRACTURES PER FOOT 2 4 6 8 10	DISCONTINUITY DATA: DIP wrt CORE AXIS 0 30 60 90	TYPE AND SURFACE DESCRIPTION	GRAPHIC LOG	WEATHERING INDEX SW FR MW HW CW	STRENGTH INDEX R6 R5 R4 R3 R2 R1	POINT LOAD INDEX (psi) R1 30 R2 150 R3 300 R4 600 R5 1500 R6	TEST ORIENTATION	NOTES WATER LEVELS INSTRUMENTATION
80	78.5-84.5 ft. Slightly weathered, medium bedded, pale yellowish brown (10YR 6/2), fine grained, weak, ARGILLACEOUS LIMESTONE, (ST. LOUIS FORMATION)														
	81.5-83.0 ft. Low porosity zone, open vugs (<1 mm. dia.)														
82									B,PL,SM,CL						
	82.5-83.2 ft. Moderately weathered zone								J,PL,SM,CL						
									J,I,R,CL						
84				8	100 %										
	84.8-85.8 ft. Fresh, medium bedded, light olive gray (5Y 6/1), finely crystalline, medium strong, LIMESTONE, (ST. LOUIS FORMATION)														
86	85.8-92.8 ft. Slightly weathered, medium bedded, pale yellowish brown (10YR 6/2), very finely grained, weak, ARGILLACEOUS LIMESTONE, (ST. LOUIS FORMATION)														
	86.0-88.0 ft. Low porosity zone, intermittent zones with open vugs (<1 mm. - 2 m. dia.) with iron oxide staining														
88	@ 88.0 ft. Firm, clay seam (~1/2 in.)								B,I,SM,CL						
			383.50 / 89.00												6/17/95 @ 16:50 End Run 8
90															
92				9	100 %				B,PL,SM,CL						
	92.8-99.0 ft. Fresh, medium bedded, light olive gray (5Y 6/1), very fine grained, medium strong, LIMESTONE, (ST. LOUIS FORMATION)														
94	Slightly argillaceous, stylolitic														
	94.1-94.8 ft. Argillaceous Limestone layer														
96															

DEPTH SCALE: 1:2
DRILLING CONTRACTOR: LAYNE-WESTERN
DRILLER: D. MAHURIN

LOGGED: B. TILTON
CHECKED: R. BOOTH
DATE: 7/12/95

Golder Associates

RECORD OF DRILLHOLE PZ-208-SS

PROJECT: LAIDLAW/RI-FS
PROJECT NO: 843-2848
LOCATION: BRIDGETON, MO

BORING METHOD: NX Core & water
DRILLING DATE: 6/17/95
DRILL RIG: CME 75

DATUM: MSL
COORDINATES N: 1068218.14
AZIMUTH: 0

COLLAR ELEV: 472.5
E: 517169.45
INCLINATION: -90

ROCK TYPE

J-Joint, F-Fault, S-Shear, B-Bedding, F-Foliation
PL-Planar, C-Curved, U-Undulating, ST-Stepped, I-Irregular
P-Polished, K-Slickensided, SM-Smooth, R-Rough, VR-V. Rough
Fe-FeOxide, CL-Clay Infill, CH-Chlorite, H-Healed, GRF-Gravel Filled

Depth SCALE (FEET)	DESCRIPTION	GRAPHIC LOG	ELEV / DEPTH (FT)	RUN NO.	CORE RECOVERY	RQD	FRACTURES PER FOOT	DISCONTINUITY DATA: DIP wrt CORE AXIS	DISCONTINUITY DATA: TYPE AND SURFACE DESCRIPTION	GRAPHIC LOG	WEATHERING INDEX (SW FR, MW, HW, CW)	STRENGTH INDEX (R5 R6, R4, R3, R2, R1)	POINT LOAD INDEX (psi) (R1 30, R2 150, R3 300, R4 600, R5 1500, R6)	TEST ORIENTATION	NOTES WATER LEVELS INSTRUMENTATION
96	92.8-99.0 ft. Fresh, medium bedded, light olive gray (5Y 6/1), very fine grained, medium strong, LIMESTONE, (ST. LOUIS FORMATION) Slightly argillaceous, stylolitic			9	100 %				B,PL,SM,CL						
98	96.0-99.0 ft. Limestone becomes coarsely crystalline		373.50												6/17/95 @ 17:40 Coring completed
	End of Record of Drillhole at 99.0 ft.		99.00												
100															
102															
104															
106															
108															
110															
112															

DEPTH SCALE: 1:2
DRILLING CONTRACTOR: LAYNE-WESTERN
DRILLER: D. MAHURIN

LOGGED: B. TILTON
CHECKED: R. BOOTH
DATE: 7/12/95

Golder Associates

Well No. PZ-208-SS

Boring No. X-Ref: PZ-208-SS

PIEZOMETER CONSTRUCTION SUMMARY

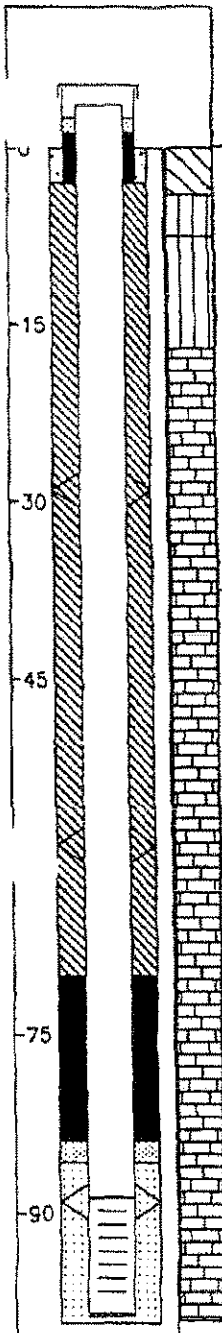

Not to Scale

Survey Coords: Northing: 1069219 ft. Easting: 517169 ft.

Elevation Ground Level 472.5 ft. NGVD

Top of PVC Casing 474.25 ft. NGVD

Drilling Summary:

Total Depth 99.2 ft.

Borehole Diameter 10 1/4 in. (0.0-17.0 ft.) 5 7/8 in. (17.0-99.2 ft.)

Casing Stickup Height 1.72 ft.

Driller Layne-Western
St. Louis, MO

Rig CME 75, Schramm Portadrill T660H

Bit(s) 6 1/4 in. ID Hollow Stem Auger Bit, NX Core, 5 7/8 in. Button Bit for Reaming

Drilling Fluid Auger-None, NX Core Water, Air Rotary

Protective Casing 8x8 in. Square Steel, by 5 ft. long

Construction Time log:

Task	Start Date	Start Time	Finish Date	Finish Time
Drilling				
CME 75	6/17/95	8:15	6/17/95	17:35
Schramm Rotary	6/18/95	8:50	6/18/95	10:00
Geophys.Logging:				
Casing:	6/18/95	10:10	6/18/95	10:20
Filter Placement:	6/18/95	10:30	6/18/95	10:55
Cementing:				
Development				
Bentonite Grout	6/18/95	11:15	6/18/95	14:00
Bentonite Seal	6/18/95	11:05	6/18/95	11:15

Well Design & Specifications

Basis: Geologic Log X Geophysical Log

Casing string(s): C = Casing S = Screen

Depth			String(s)	Elevation		
+ 1.72	-	88.70	C1	474.25	-	383.83
88.70	-	98.50	S1	383.83	-	374.03
98.50	-	98.83	C2	374.03	-	373.70

Casing: C1 2 ft. dia. Schedule 80 PVC, flush threaded with O-rings

C2 2 ft. dia. threaded PVC end cap (4 in. long or 0.33 ft.)

Screen: S1 2 in. dia. Schedule 80 PVC, 0.010 in. machine cut slot, flush threaded with O-rings

Sand Pack: 16-35 mesh Silica Sand, 85.65-99.2 ft.

Filter Pack: Less than 50 mesh Silica Sand, 83.90-85.65 ft.

Grout Seal: Wyo-Ben Grout Well Bentonite Slurry, 3.0-70.0 ft.

Bentonite Seal: Extra high yield Wyo-Ben (100%) Slurry, 70.0-83.90 ft.

Concrete: 0.0-3.0 ft.

Well Development

Stabilization Test Data:

Time	pH	Spec. Cond.	Temp (°C)

Recovery Data:

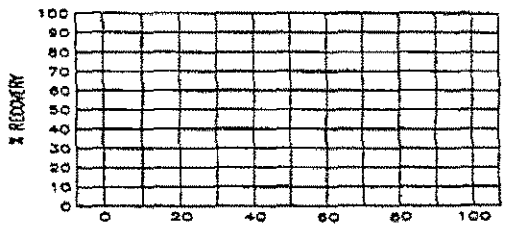

Comments:

Supervised by B. Tilton

Job Number 943-2848

Site LAIDLAW/OU2 RI-FS/MO

File Name PZ208SS

MISSOURI DEPARTMENT OF NATURAL RESOURCES
DIVISION OF GEOLOGY AND LAND SURVEY

MONITORING WELL CERTIFICATION RECORD

OFFICE USE ONLY	DATE RECEIVED
REF NO 122514	CHECK NO
ROUTE	TRANSMITTAL NO
STATE WELL NUMBER	CROSS REFERENCE NO
CHECKED BY	ENTERED Ph 1 Ph 2 Ph 3
APPROVED BY	DATE APPROVED

INFORMATION SUPPLIED BY OWNER

SITE NAME: Laidlaw Bridgeton Sanitary Landfill
WELL NUMBER: PZ-208-SS

SITE ADDRESS: St. Charles Rock Rd | CITY: Bridgeton | STATE: MO | ZIP CODE: 63044

NAME: Laidlaw Waste Systems, Inc. | TELEPHONE: 314-241-3710

ADDRESS: 135 N. Meramec | CITY: St. Louis | STATE: MO | ZIP CODE: 63102

INFORMATION SUPPLIED BY MONITORING WELL CONTRACTOR

LOCATION OF WELL
SHOW LOCATION IN SECTION PLAT

COUNTY: St. Louis
ELEVATION: 472.23
AREA NO:

SMALLEST ¼ ____ ¼ ____ ¼ ____ ¼ LARGEST ¼

SEC. ____ TWN. 47 N,RNG 5 (E) OR W

LAT. 38 ° 46 ' 12 " LONG. 90 ° 26 ' 22 "

SKETCH THE LOCATION TO THE WELL INCLUDING MILEAGE ON ALL ROADS TRAVELED FROM NEAREST TOWNS OR HIGHWAYS

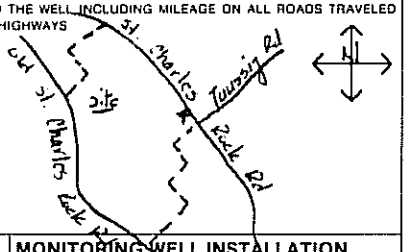

DESCRIBE LOCATION OF THE WELL SO WE WOULD BE ABLE TO VISIT IT

MONITORING WELL INSTALLATION CONTRACTOR'S NAME
Layne Western Co., Inc.

DRILLING CONTRACTOR'S NAME
Layne Western Co., Inc.

NOTE: Record the fraction of a foot in decimal, not in inches.

Top of Riser Elevation: 474.15
Ground Surface Elevation: 471.53 Ft

LOCKING CAP - (Y) / N (Circle one)
CAP VENT - Y / N (Circle one)
PROTECTIVE CASING Type: STEEL Size: 8"x5"x5' Bore Hole Diameter: 10¼"
WEEP HOLE - Y / N (Circle one)

Information in this column to be supplied in the Feet from Surface column	Feet from Surface	Description of Formation
	0	
	4.0	
Depth to bottom of Protective Casing Seal:	3.0	
	4-16	
	5.1+	
	16-47.1	Limestone
Depth to Base of Annular Seal:	10.0	
Depth to Base of Bentonite Seal:	33.7	
Depth to Base of Secondary Filter Pack:	35.7	
Depth to Top of the Screen:	38.7	
Depth to Bottom of the Screen:	48.7	
Plug Back Total Depth:		
Original Total Depth:	47.1	

PROTECTIVE CASING SEAL Type: (X) Concrete ( ) Cement Slurry
RISER PIPE Length: 42.5' Diameter: 2" Type of Material: SCH 80 PVC
BOREHOLE DIAMETER: 5 7/8 In.
ANNULAR SEAL Type: ( ) Bentonite Slurry (X) Cement Slurry ( ) Non Slurry Bentonite
BENTONITE SEAL Type: (X) Bentonite Slurry ( ) Non Slurry Bentonite Length of Seal: 13.7 FL
SECONDARY FILTER PACK (Optional) Type: (X) Sand ( ) Manufactured Grain Size: < 50 Length: 1.8'
PRIMARY FILTER PACK Type: (X) Sand ( ) Manufactured Grain Size: 16-35 Length: 13.5'
WELL SCREEN Length: 10 Slot Size: 0.010 Type: SCH 80 PVC
SUMP DETAILS Length: 0.3 FL Diameter: 2 In. Type: PVC
TYPE OF BACKFILL: Natural

TYPE OF INSTALLATION: (X) ABOVE GROUND ( ) FLUSH MOUNT

STATIC WATER LEVEL: FEET FROM MEASURING POINT

DATE OF STATIC WATER LEVEL:

ELEVATION OF MEASURING POINT: 474.15

MEASURING POINT IS: (X) TOP OF RISER PIPE ( ) OTHER

DRILLING EQUIPMENT: (X) AIR ROTARY (X) AUGER TYPE 6¼ HSA ( ) REVERSE ROTARY ( ) OTHER

CENTRALIZERS USED: (X) YES, AT 3 TOTAL (X) STAINLESS STEEL ( ) OTHER ( ) NO

MULTIPLE CASED WELLS

SUBMIT ADDITIONAL AS BUILT DIAGRAM SHOWING WELL CONSTRUCTION DETAILS INCLUDING TYPE AND SIZE OF ALL CASING, HOLE DIAMETERS, AND GROUT USED.

DATE WELL CONSTRUCTION WAS COMPLETED: 6-18-95

I HEREBY CERTIFY THAT THE MONITORING WELL HEREIN DESCRIBED WAS CONSTRUCTED IN ACCORDANCE WITH THE DEPARTMENT OF NATURAL RESOURCES REQUIREMENTS FOR THE CONSTRUCTION OF MONITORING WELLS.

SIGNATURE (MONITORING WELL CONTRACTOR): Michael J. Vogt

PERMIT NUMBER	DATE
OOI256KAI	7-07-95

SIGNATURE (DRILLING CONTRACTOR): Michael J. Vogt

PERMIT NUMBER	DATE
OOI256KAI	7-07-95

MO 780-1415 (2-94) DISTRIBUTION: WHITE-DIVISION CANARY-MONITORING WELL CONTRACTOR PINK-OWNER

HERST & ASSOCIATES, INC.®

Hole Number: PZ-209-SS

Rock Log

Local Site Coordinates: 1067071.07 N, 517108.12 E Ground Surface Elevation: 487.38

Project: Bridgeton Landfill Groundwater Assessment Well Installations

Project No.: 120131675

Site Location: Bridgeton, Missouri

Method of Drilling: 6 inch Dia. Air Rotary and Sonic

Rig Type: Versa-Drill Versa Sonic, 50K Sonicor Head

Drilling Date(s): October 15, 2013

J-Joint, F-Fault, S-Shear, B-Bedding, F-Foliation

PL-Planar, C-Curved, U-Undulating, ST-Stepped, I-Irregular

P-Polished, K-Slickensided, SM-Smooth, R-Rough, VR-Very Rough

Fe-Iron, CL-Clay, CaCO3-Calcite

FR-Fresh, SW-Slightly Weathered, MW-Moderately Weathered, HW- Highly Weathered, CW-Completely Weathered

R6- Extremely Strong, R5- Very Strong, R4- Strong, R3- Medium Strong, R2- Weak, R1-Very Weak, R0- Extremely Weak

Depth Scale (feet)	Rock Description	Graphic Log	Run No.	Core Recovery	RQD	Discontinuity Data: Fractures per Foot	Discontinuity Data: Type and Description	Weathering Index (FR SW MW HW CW)	Strength Index (R6 R5 R4 R3 R2 R1 R0)	Temperature Profile (°F)	Notes
0.0	**0.0 to 135.0 ft.** - Blind drilled. No sample collected.									Meter: Solinst Model 107 TLC	Blind-drilled from 0 - 135 ft; no samples collected. 0 - 60 ft drilled via air rotary. O_2 (%), methane (%LEL), and VOCs (ppm) monitored at borehole. 20.9% O_2, 0% LEL, 0 ppm.
5.0										59.1	
10.0										58.7	20.9% O_2, 0% LEL, 0 ppm.
15.0										58.7	
20.0										58.7	20.9% O_2, 0% LEL, 0 ppm.
25.0										58.5	
30.0										58.5	20.9% O_2, 0% LEL, 0 ppm.
35.0										58.5	
40.0										58.2	20.9% O_2, 0% LEL, 0 ppm.
45.0										58.0	Competent bedrock encountered.
50.0										57.9	

Drilling Contractor: Frontz Drilling, Inc.

Driller: Rob Hamilton

Helper: Rob Underwood

Certifying Geologist: Brian Fingers, Geotechnology, Inc.

Logged By: Andrew Wyatt, Herst & Associates, Inc.

LIMESTONE

HERST & ASSOCIATES, INC.®

Hole Number: PZ-209-SS

Rock Log

Local Site Coordinates: 1067071.07 N, 517108.12 E Ground Surface Elevation: 487.38

Project: Bridgeton Landfill Groundwater Assessment Well Installations

Project No.: 120131675

Site Location: Bridgeton, Missouri

Method of Drilling: 6 inch Dia. Air Rotary and Sonic

Rig Type: Versa-Drill Versa Sonic, 50K Sonicor Head

Drilling Date(s): October 15, 2013

J-Joint	PL-Planar	P-Polished	Fe-Iron	FR-Fresh	R6- Extremely Strong
F-Fault	C-Curved	K-Slickensided	CL-Clay	SW-Slightly Weathered	R5- Very Strong
S-Shear	U-Undulating	SM-Smooth	CaCO3-Calcite	MW-Moderately Weathered	R4- Strong
B-Bedding	ST-Stepped	R-Rough		HW- Highly Weathered	R3- Medium Strong
F-Foliation	I-Irregular	VR-Very Rough		CW-Completely Weathered	R2- Weak
					R1-Very Weak
					R0- Extremely Weak

Depth Scale (feet)	Rock Description	Graphic Log	Run No.	Core Recovery	RQD	Discontinuity Data: Fractures per Foot	Discontinuity Data: Type and Description	Weathering Index (FR SW MW HW CW)	Strength Index (R6 R5 R4 R3 R2 R1 R0)	Temperature Profile (°F)	Notes
50.0	**0.0 to 135.0 ft.** - Blind drilled. No sample collected.									57.9	Set temporary 12-in. D casing 5 ft into bedrock. Continued drilling through casing. 20.9% O_2, 0% LEL, 0 ppm.
55.0										57.6	
60.0										57.4	Switched to sonic drilling. 20.9% O_2, 0% LEL, 0 ppm..
65.0										57.4	
70.0										57.4	
75.0										57.1	
80.0										57.1	20.9% O_2, 0% LEL, 0 ppm.
85.0										57.1	
90.0										56.9	
95.0										56.9	
100.0										56.7	20.9% O_2, 0% LEL, 0 ppm.

Drilling Contractor: Frontz Drilling, Inc.

Driller: Rob Hamilton

Helper: Rob Underwood

Certifying Geologist: Brian Fingers, Geotechnology, Inc.

Logged By: Andrew Wyatt, Herst & Associates, Inc.

LIMESTONE

HERST & ASSOCIATES, INC.®

Hole Number: PZ-209-SS

Rock Log

Local Site Coordinates: 1067071.07 N, 517108.12 E Ground Surface Elevation: 487.38

Project: Bridgeton Landfill Groundwater Assessment Well Installations

Project No.: 120131675

Site Location: Bridgeton, Missouri

Method of Drilling: 6 inch Dia. Air Rotary and Sonic

Drilling Date(s): October 15, 2013

Rig Type: Versa-Drill Versa Sonic, 50K Sonicor Head

J-Joint, F-Fault, S-Shear, B-Bedding, F-Foliation
PL-Planar, C-Curved, U-Undulating, ST-Stepped, I-Irregular
P-Polished, K-Slickensided, SM-Smooth, R-Rough, VR-Very Rough
Fe-Iron, CL-Clay, CaCO3-Calcite
FR-Fresh, SW-Slightly Weathered, MW-Moderately Weathered, HW- Highly Weathered, CW-Completely Weathered
R6- Extremely Strong, R5- Very Strong, R4- Strong, R3- Medium Strong, R2- Weak, R1-Very Weak, R0- Extremely Weak

Depth Scale (feet)	Rock Description	Graphic Log	Run No.	Core Recovery	RQD	Discontinuity Data: Fractures per Foot	Discontinuity Data: Type and Description	Weathering Index (FR SW MW HW CW)	Strength Index (R6 R5 R4 R3 R2 R1 R0)	Temperature Profile (°F)	Notes
100.0	**0.0 to 135.0 ft.** - Blind drilled. No sample collected.									56.7	20.9% O_2, 0% LEL, 0 ppm.
105.0										56.5	
110.0										56.5	
115.0										56.2	
120.0										56.2	20.9% O_2, 0% LEL, 0 ppm.
125.0										56.2	
130.0										56.0	
135.0										56.0	

Change in scale see sheet 4 of 5

Drilling Contractor: Frontz Drilling, Inc.
Driller: Rob Hamilton
Helper: Rob Underwood
Certifying Geologist: Brian Fingers, Geotechnology, Inc.
Logged By: Andrew Wyatt, Herst & Associates, Inc.

LIMESTONE

HERST & ASSOCIATES, INC.®

Hole Number: PZ-209-SS

Rock Log

Local Site Coordinates: 1067071.07 N, 517108.12 E Ground Surface Elevation: 487.38

Project: Bridgeton Landfill Groundwater Assessment Well Installations

Project No.: 120131675

Site Location: Bridgeton, Missouri

Method of Drilling: 6 inch Dia. Air Rotary and Sonic

Rig Type: Versa-Drill Versa Sonic, 50K Sonicor Head

Drilling Date(s): October 15, 2013

J-Joint, F-Fault, S-Shear, B-Bedding, F-Foliation
PL-Planar, C-Curved, U-Undulating, ST-Stepped, I-Irregular
P-Polished, K-Slickensided, SM-Smooth, R-Rough, VR-Very Rough
Fe-Iron, CL-Clay, CaCO3-Calcite
FR-Fresh, SW-Slightly Weathered, MW-Moderately Weathered, HW- Highly Weathered, CW-Completely Weathered
R6- Extremely Strong, R5- Very Strong, R4- Strong, R3- Medium Strong, R2- Weak, R1-Very Weak, R0- Extremely Weak

Depth Scale (feet)	Rock Description	Graphic Log	Run No.	Core Recovery	RQD	Discontinuity Data: Fractures per Foot	Discontinuity Data: Type and Description	Weathering Index (FR SW MW HW CW)	Strength Index (R6 R5 R4 R3 R2 R1 R0)	Temperature Profile (°F)	Notes
135.0											
	135.0 to 136.0 ft. - LIMESTONE, yellowish gray (5Y 8/1) to light olive gray (5Y 6/1) with pale yellowish brown (10YR 6/2), very light gray, (N9) and medium dark gray (N4) mottling; light bluish gray (5B 7/1) banding. Microcrystalline; massive; competent. Requires multiple hammer blows to fracture, but easily scratched with knife. Reactive with with 10% HCl solution.		1 of 2	4.8/5.0	4.8/4.8	0		FR	R4	56.0	20.9% O_2, 0% LEL, 0 ppm.
136.0											
	136.0 to 137.0 ft. - LIMESTONE, as above, but yellowish gray (5Y 8/1), light olive gray (5Y 6/1), light gray (N7), and medium gray (N5).					0		FR	R4	56.0	
137.0											
	137.0 to 138.0 ft. - LIMESTONE, as above, but laminated beginning at 137.6 ft. Large number of mechanical breaks from 137.7 - 138.8 ft.					0		FR	R3 to R4	56.0	
138.0											
	138.0 to 139.0 ft. - LIMESTONE, as above, but massive beginning at 138.8 ft.					0		FR	R3 to R4	56.9	
139.0											
	139.0 to 140.0 ft. - LIMESTONE, as above, with greenish-gray (5G 8/1) mottling.					0		FR	R4	56.9	
140.0										55.7	20.9% O_2, 0% LEL, 0 ppm.
	140.0 to 141.0 ft. - LIMESTONE, light olive gray (5Y 6/1) and greenish gray (5GY 6/1) with yellowish gray (5Y 8/1) and olive gray (5Y 4/1) mottling. With faint grayish orange (10YR 7/4) staining. Microcrystalline; massive; competent. Requires multiple hammer blows to fracture, but easily scratched with knife. Reactive with with 10% HCl solution.		2 of 2	9.9/10.0	9.9/9.9	0		FR to SW	R4		
141.0											
	141.0 to 142.0 ft. - LIMESTONE, as above, but laminated from 141.7 - 142 ft.					0		FR to SW	R4		
142.0											
	142.0 to 143.0 ft. - LIMESTONE, as above, but microcrystalline to fine-grained. Large number of mechanical breaks from 142.4 - 142.6 ft.					0		FR to SW	R3		
143.0											
	143.0 to 144.0 ft. - LIMESTONE, as above, but dark gray (N3), light olive gray (5Y 6/1), and greenish gray (5GY 6/1)					0		FR to SW	R4		
144.0											
	144.0 to 145.0 ft. - LIMESTONE, as above, but medium gray (N5) and light olive gray (5Y 6/1). No staining.					0		FR	R4		
145.0										56.0	

Drilling Contractor: Frontz Drilling, Inc.
Driller: Rob Hamilton
Helper: Rob Underwood
Certifying Geologist: Brian Fingers, Geotechnology, Inc.
Logged By: Andrew Wyatt, Herst & Associates, Inc.

LIMESTONE

HERST & ASSOCIATES, INC.®

Hole Number: PZ-209-SS

Rock Log

Local Site Coordinates: 1067071.07 N, 517108.12 E Ground Surface Elevation: 487.38

Project: Bridgeton Landfill Groundwater Assessment Well Installations

Project No.: 120131675

Site Location: Bridgeton, Missouri

Method of Drilling: 6 inch Dia. Air Rotary and Sonic

Rig Type: Versa-Drill Versa Sonic, 50K Sonicor Head

Drilling Date(s): October 15, 2013

J-Joint	PL-Planar	P-Polished	Fe-Iron	FR-Fresh	R6- Extremely Strong
F-Fault	C-Curved	K-Slickensided	CL-Clay	SW-Slightly Weathered	R5- Very Strong
S-Shear	U-Undulating	SM-Smooth	CaCO3-Calcite	MW-Moderately Weathered	R4- Strong
B-Bedding	ST-Stepped	R-Rough		HW- Highly Weathered	R3- Medium Strong
F-Foliation	I-Irregular	VR-Very Rough		CW-Completely Weathered	R2- Weak
					R1-Very Weak
					R0- Extremely Weak

Depth Scale (feet)	Rock Description	Graphic Log	Run No.	Core Recovery	RQD	Discontinuity Data: Fractures per Foot	Discontinuity Data: Type and Description	Weathering Index (FR SW MW HW CW)	Strength Index (R6 R5 R4 R3 R2 R1 R0)	Temperature Profile (°F)	Notes
145.0										56.0	
	145.0 to 146.0 ft. - LIMESTONE, as above.					0		FR	R4		
146.0											
	146.0 to 147.0 ft. - LIMESTONE, as above, but microcrystalline.					0		FR	R4		
147.0											
	147.0 to 148.0 ft. - LIMESTONE, as above.					0		FR	R4		
148.0											
	148.0 to 149.0 ft. - LIMESTONE, as above.					0		FR	R4		
149.0											
	149.0 to 150.0 ft. - LIMESTONE, as above.					0		FR	R4		≤20.3% O_2, ≤6.3% LEL, ≤9.8 ppm. Readings fluctuating rapidly.
150.0										56.0	
											Boring Depth: 150 ft. bgs.
151.0											
152.0											
153.0											
154.0											
155.0											

Drilling Contractor: Frontz Drilling, Inc.

Driller: Rob Hamilton

Helper: Rob Underwood

Certifying Geologist: Brian Fingers, Geotechnology, Inc.

Logged By: Andrew Wyatt, Herst & Associates, Inc.

LIMESTONE

Well Coordinates:
N 1067071.541
E 517108.567

Drilling Contractor: Frontz Drilling
Lead Driller: Rob Hamilton
Drilling Dates: October 5, 2013

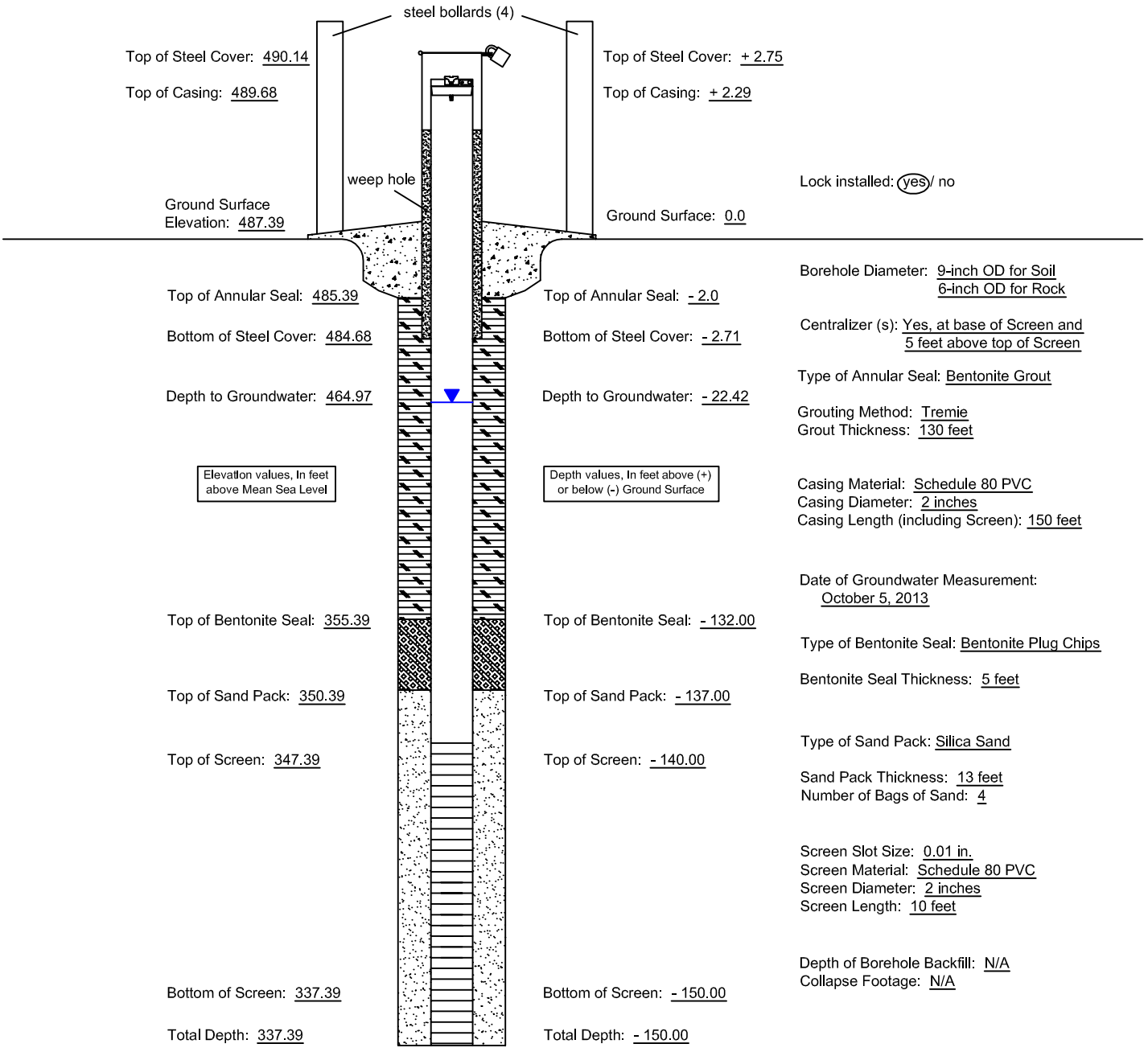

Top of Steel Cover: 490.14
Top of Casing: 489.68
Ground Surface Elevation: 487.39

Top of Steel Cover: + 2.75
Top of Casing: + 2.29
Ground Surface: 0.0

Lock installed: (yes) / no

Top of Annular Seal: 485.39
Bottom of Steel Cover: 484.68
Depth to Groundwater: 464.97

Top of Annular Seal: - 2.0
Bottom of Steel Cover: - 2.71
Depth to Groundwater: - 22.42

Elevation values, In feet above Mean Sea Level

Depth values, In feet above (+) or below (-) Ground Surface

Top of Bentonite Seal: 355.39
Top of Sand Pack: 350.39
Top of Screen: 347.39

Top of Bentonite Seal: - 132.00
Top of Sand Pack: - 137.00
Top of Screen: - 140.00

Bottom of Screen: 337.39
Total Depth: 337.39

Bottom of Screen: - 150.00
Total Depth: - 150.00

(Not to Scale)

Borehole Diameter: 9-inch OD for Soil
6-inch OD for Rock

Centralizer (s): Yes, at base of Screen and 5 feet above top of Screen

Type of Annular Seal: Bentonite Grout

Grouting Method: Tremie
Grout Thickness: 130 feet

Casing Material: Schedule 80 PVC
Casing Diameter: 2 inches
Casing Length (including Screen): 150 feet

Date of Groundwater Measurement:
October 5, 2013

Type of Bentonite Seal: Bentonite Plug Chips

Bentonite Seal Thickness: 5 feet

Type of Sand Pack: Silica Sand

Sand Pack Thickness: 13 feet
Number of Bags of Sand: 4

Screen Slot Size: 0.01 in.
Screen Material: Schedule 80 PVC
Screen Diameter: 2 inches
Screen Length: 10 feet

Depth of Borehole Backfill: N/A
Collapse Footage: N/A

4631 North St. Peters Parkway
St. Charles, Missouri 63304
Phone (636) 939-9111
Fax (636) 939-9757
HERST & ASSOCIATES, INC.®

Bridgeton Landfill
Bridgeton, Missouri

PZ-209-SS
As-Built Diagram

MISSOURI DEPARTMENT OF NATURAL RESOURCES
GEOLOGICAL SURVEY PROGRAM

MONITORING WELL CERTIFICATION RECORD

OFFICE USE ONLY	DATE RECEIVED
REFERENCE NO	
C R NO	CHECK NO
STATE WELL NUMBER	REVENUE NO
ENTERED Ph1 Ph2 Ph3	APPROVED BY / ROUTE

INFORMATION SUPPLIED BY PRIMARY CONTRACTOR OR DRILLING CONTRACTOR

NOTE: THIS FORM IS NOT TO BE USED FOR NESTED WELLS

OWNER NAME: Republic Services
CONTACT NAME: Bryan Sehie
VARIANCE GRANTED BY DNR NUMBER:
OWNER ADDRESS: 13570 Saint Charles Rock Rd.
CITY: Bridgeton
STATE: MO
ZIP CODE: 63044
SITE NAME: Bridgeton Sanitary Landfill
WELL NUMBER: PZ-209-55
COUNTY: Saint Louis
SITE ADDRESS: 13570 Saint Charles Rock Rd.
CITY: Bridgeton
STATIC WATER LEVEL: 29.75

SURFACE COMPLETION

TYPE: ☑ ABOVE GROUND ☐ FLUSH MOUNT
LENGTH AND DIAMETER OF SURFACE COMPLETION: LENGTH 2.5 FT. DIAMETER 5 IN.
DIAMETER AND DEPTH OF THE HOLE SURFACE COMPLETION WAS PLACED: DIAMETER 5 IN. LENGTH 2.5 FT.
SURFACE COMPLETION GROUT: ☑ CONCRETE ☐ OTHER

LOCATION OF WELL (D/M/S FORMAT ONLY)
LAT. 38 · 45 · 51.1 "
LONG. 90 · 26 · 24.4 "

SMALLEST ¼ LARGEST ¼ ¼
SECTION ____ TOWNSHIP 47 NORTH
RANGE 5 ☑ EAST ☐ WEST

MONITORING FOR: (CHECK ALL THAT APPLY)
☑ RADIONUCLIDES ☐ PETROLEUM PRODUCTS ONLY
☐ EXPLOSIVES ☑ METALS ☑ VOC
☑ SVOCS ☑ PESTICIDES/HERBICIDES

PROPOSED USE OF WELL
☐ GAS MIGRATION WELL ☑ OBSERVATION
☐ EXTRACTION WELL ☐ OPEN HOLE
☐ PIEZOMETERS ☐ INJECTION WELL
☐ DIRECT PUSH

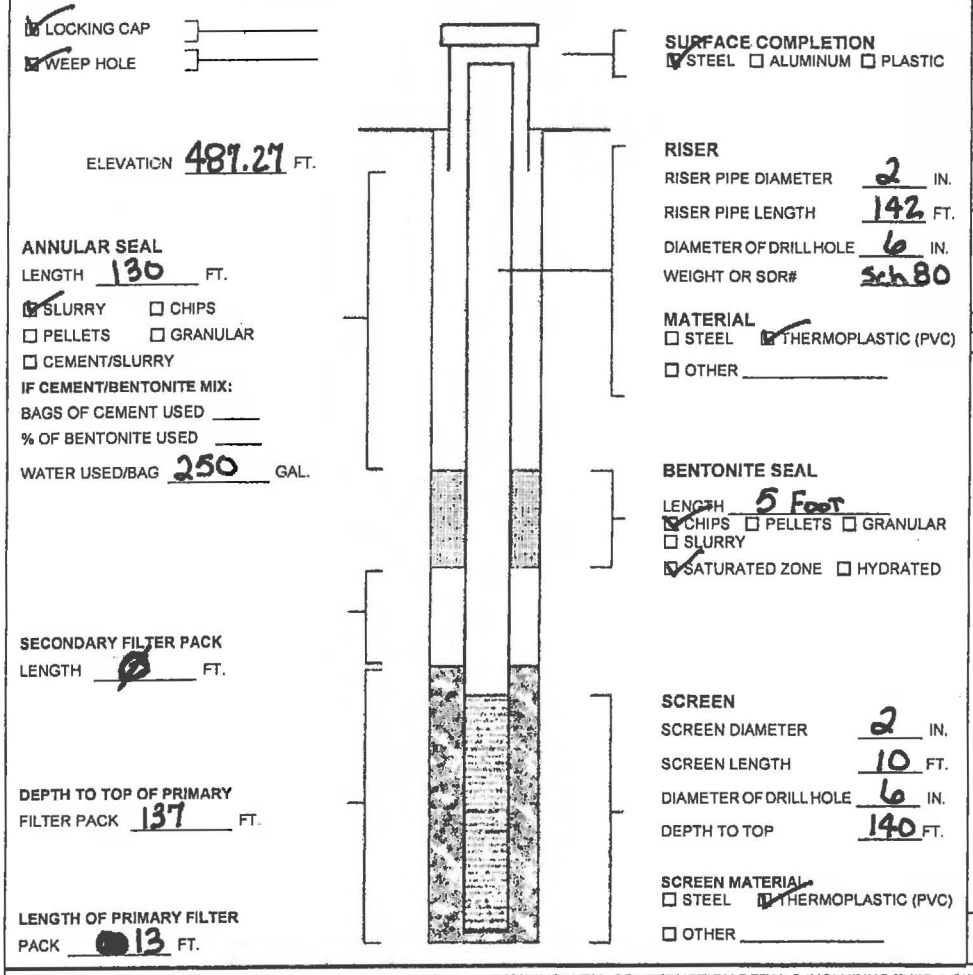

DEPTH TO	DEPTH FROM	FORMATION DESCRIPTION
0'	45'	Silty Clay
45'	150'	Limestone
TOTAL DEPTH:		150 Foot

FOR CASED WELLS, SUBMIT ADDITIONAL AS BUILT DIAGRAMS SHOWING WELL CONSTRUCTION DETAILS INCLUDING TYPE & SIZE OF ALL CASING, HOLE DIAMETER & GROUT USED.

SIGNATURE (PRIMARY CONTACTOR):
PERMIT NUMBER: 003839 M
DATE WELL DRILLING WAS COMPELTED: 10-5-13

I HEREBY CERTIFY THAT THE MONITORING WELL HEREIN DESCRIBED WAS CONSTRUCTED IN ACCORDANCE WITH MISSOURI DEPARTMENT OF NATURAL RESOURCES REQUIREMENTS FOR THE CONSTRUCTION OF MONITORING WELLS. ☐ PUMP INSTALLED

SIGNATURE (WELL DRILLER):
PERMIT NUMBER: 003456-M
SIGNATURE (OF APPRENTICE):
APPRENTICE PERMIT NUMBER:

MO 780-1415 (07-11)

DISTRIBUTION: WHITE/DIVISION CANARY/CONTACTOR PINK/OWNER
RETURN WHITE COPY WITH APPROPRIATE FEE TO: MISSOURI DEPARTMENT OF NATURAL RESOURCES, DIVISION OF GEOLOGY AND LAND SURVEY, WELLHEAD PROTECTION SECTION, PO BOX 250, ROLLA, MO 65402 573-368-2165

HERST & ASSOCIATES, INC.®

Hole Number: PZ-209-SD

Rock Log

Local Site Coordinates: 1067075.74 N, 517103.75 E Ground Surface Elevation: 487.24

Project: Bridgeton Landfill Groundwater Assessment Well Installations

Project No.: 120131675

Site Location: Bridgeton, Missouri

Method of Drilling: 6 inch Dia. Air Rotary and Sonic

Rig Type: Versa-Drill Versa Sonic, 50K Sonicor Head

Drilling Date(s): October 2-4, 2013

J-Joint, F-Fault, S-Shear, B-Bedding, F-Foliation

PL-Planar, C-Curved, U-Undulating, ST-Stepped, I-Irregular

P-Polished, K-Slickensided, SM-Smooth, R-Rough, VR-Very Rough

Fe-Iron, CL-Clay, CaCO3-Calcite

FR-Fresh, SW-Slightly Weathered, MW-Moderately Weathered, HW- Highly Weathered, CW-Completely Weathered

R6- Extremely Strong, R5- Very Strong, R4- Strong, R3- Medium Strong, R2- Weak, R1-Very Weak, R0- Extremely Weak

Depth Scale (feet)	Rock Description	Graphic Log	Run No.	Core Recovery	RQD	Discontinuity Data: Fractures per Foot	Discontinuity Data: Type and Description	Weathering Index (FR SW MW HW CW)	Strength Index (R6 R5 R4 R3 R2 R1 R0)	Temperature Profile (°F)	Notes
0.0	**0.0 to 235.0 ft.** - Blind drilled. No sample collected.									Meter: Solinst Model 107 TLC	Blind-drilled from 0 - 235 ft; no samples collected. 0 - 80 ft drilled via air rotary. O_2 (%), methane (%LEL), and VOCs (ppm) monitored at borehole. 20.6% O_2, 0% LEL, 0 ppm.
5.0										59.9	
10.0										59.6	20.6% O_2, 0% LEL, 0 ppm.
15.0										59.6	
20.0										59.6	20.6% O_2, 0% LEL, 0 ppm.
25.0										59.4	
30.0										59.4	20.6% O_2, 0% LEL, 0 ppm.
35.0										59.1	
40.0										59.1	20.6% O_2, 0% LEL, 0 ppm.
45.0										59.1	Competent bedrock encountered.
50.0										59.1	

Drilling Contractor: Frontz Drilling, Inc.

Driller: Rob Hamilton

Helpers: Rob Underwood, Ben Williams

Certifying Geologist: Brian Fingers, Geotechnology, Inc.

Logged By: Andrew Wyatt & Steve Jett, Herst & Associates, Inc.

LIMESTONE

HERST & ASSOCIATES, INC.®

Hole Number: PZ-209-SD

Rock Log

Local Site Coordinates: 1067075.74 N, 517103.75 E Ground Surface Elevation: 487.24

Project: Bridgeton Landfill Groundwater Assessment Well Installations

Project No.: 120131675

Site Location: Bridgeton, Missouri

Method of Drilling: 6 inch Dia. Air Rotary and Sonic

Rig Type: Versa-Drill Versa Sonic, 50K Sonicor Head

Drilling Date(s): October 2-4, 2013

J-Joint, F-Fault, S-Shear, B-Bedding, F-Foliation

PL-Planar, C-Curved, U-Undulating, ST-Stepped, I-Irregular

P-Polished, K-Slickensided, SM-Smooth, R-Rough, VR-Very Rough

Fe-Iron, CL-Clay, CaCO3-Calcite

FR-Fresh, SW-Slightly Weathered, MW-Moderately Weathered, HW- Highly Weathered, CW-Completely Weathered

R6- Extremely Strong, R5- Very Strong, R4- Strong, R3- Medium Strong, R2- Weak, R1-Very Weak, R0- Extremely Weak

Depth Scale (feet)	Rock Description	Graphic Log	Run No.	Core Recovery	RQD	Discontinuity Data: Fractures per Foot	Discontinuity Data: Type and Description	Weathering Index (FR SW MW HW CW)	Strength Index (R6 R5 R4 R3 R2 R1 R0)	Temperature Profile (°F)	Notes
50.0	**0.0 to 235.0 ft.** - Blind drilled. No sample collected.									59.1	Set temporary 8-in. D casing 5 ft into bedrock. Continued drilling through casing.
55.0										58.7	
60.0										58.7	20.9% O_2, 0% LEL, 0 ppm.
65.0										58.7	
70.0										58.7	20.9% O_2, 0% LEL, 0 ppm.
75.0										58.5	
80.0										58.5	Very difficult drilling from 80 to 100 feet, driller switched to Sonic rest of way. 20.9% O_2, 0% LEL, 0 ppm.
85.0										58.5	
90.0										58.5	
95.0										58.5	
100.0										58.5	20.9% O_2, 0% LEL, 0 ppm.

Drilling Contractor: Frontz Drilling, Inc.

Driller: Rob Hamilton

Helpers: Rob Underwood, Ben Williams

Certifying Geologist: Brian Fingers, Geotechnology, Inc.

Logged By: Andrew Wyatt & Steve Jett, Herst & Associates, Inc.

LIMESTONE

HERST & ASSOCIATES, INC.®

Hole Number: PZ-209-SD

Rock Log

Local Site Coordinates: 1067075.74 N, 517103.75 E Ground Surface Elevation: 487.24

Project: Bridgeton Landfill Groundwater Assessment Well Installations

Project No.: 120131675

Site Location: Bridgeton, Missouri

Method of Drilling: 6 inch Dia. Air Rotary and Sonic

Rig Type: Versa-Drill Versa Sonic, 50K Sonicor Head

Drilling Date(s): October 2-4, 2013

J-Joint	PL-Planar	P-Polished	Fe-Iron	FR-Fresh	R6- Extremely Strong
F-Fault	C-Curved	K-Slickensided	CL-Clay	SW-Slightly Weathered	R5- Very Strong
S-Shear	U-Undulating	SM-Smooth	CaCO3-Calcite	MW-Moderately Weathered	R4- Strong
B-Bedding	ST-Stepped	R-Rough		HW- Highly Weathered	R3- Medium Strong
F-Foliation	I-Irregular	VR-Very Rough		CW-Completely Weathered	R2- Weak
					R1-Very Weak
					R0- Extremely Weak

Depth Scale (feet)	Rock Description	Graphic Log	Run No.	Core Recovery	RQD	Discontinuity Data: Fractures per Foot	Discontinuity Data: Type and Description	Weathering Index (FR SW MW HW CW)	Strength Index (R6 R5 R4 R3 R2 R1 R0)	Temperature Profile (°F)	Notes
100.0	**0.0 to 235.0 ft.** - Blind drilled. No sample collected.									58.5	20.9% O_2, 0% LEL, 0 ppm.
105.0										58.5	
110.0										58.5	
115.0										58.5	
120.0										58.5	20.9% O_2, 0% LEL, 0 ppm..
125.0										58.5	
130.0										58.2	
135.0										58.2	
140.0										58.0	20.9% O_2, 0% LEL, 0 ppm.
145.0										58.0	
150.0										58.0	

Drilling Contractor: Frontz Drilling, Inc.
Driller: Rob Hamilton
Helpers: Rob Underwood, Ben Williams
Certifying Geologist: Brian Fingers, Geotechnology, Inc.
Logged By: Andrew Wyatt & Steve Jett, Herst & Associates, Inc.

LIMESTONE

HERST & ASSOCIATES, INC.®

Hole Number: PZ-209-SD

Rock Log

Local Site Coordinates: 1067075.74 N, 517103.75 E Ground Surface Elevation: 487.24

Project: Bridgeton Landfill Groundwater Assessment Well Installations

Project No.: 120131675

Site Location: Bridgeton, Missouri

Method of Drilling: 6 inch Dia. Air Rotary and Sonic

Rig Type: Versa-Drill Versa Sonic, 50K Sonicor Head

Drilling Date(s): October 2-4, 2013

J-Joint, F-Fault, S-Shear, B-Bedding, F-Foliation

PL-Planar, C-Curved, U-Undulating, ST-Stepped, I-Irregular

P-Polished, K-Slickensided, SM-Smooth, R-Rough, VR-Very Rough

Fe-Iron, CL-Clay, CaCO3-Calcite

FR-Fresh, SW-Slightly Weathered, MW-Moderately Weathered, HW- Highly Weathered, CW-Completely Weathered

R6- Extremely Strong, R5- Very Strong, R4- Strong, R3- Medium Strong, R2- Weak, R1-Very Weak, R0- Extremely Weak

Depth Scale (feet)	Rock Description	Graphic Log	Run No.	Core Recovery	RQD	Discontinuity Data: Fractures per Foot	Discontinuity Data: Type and Description	Weathering Index (FR SW MW HW CW)	Strength Index (R6 R5 R4 R3 R2 R1 R0)	Temperature Profile (°F)	Notes
150.0	**0.0 to 235.0 ft.** - Blind drilled. No sample collected.									58.0	
155.0										57.9	
160.0										57.9	20.9% O_2, 0% LEL, 0 ppm.
165.0										57.6	
170.0										57.6	
175.0										57.6	
180.0										57.6	20.9% O_2, 0% LEL, 0 ppm.
185.0										57.4	
190.0										57.4	
195.0										57.4	
200.0										57.4	20.9% O_2, 0% LEL, 0 ppm.

Drilling Contractor: Frontz Drilling, Inc.

Driller: Rob Hamilton

Helpers: Rob Underwood, Ben Williams

Certifying Geologist: Brian Fingers, Geotechnology, Inc.

Logged By: Andrew Wyatt & Steve Jett, Herst & Associates, Inc.

LIMESTONE

HERST & ASSOCIATES, INC.®

Hole Number: PZ-209-SD

Rock Log

Local Site Coordinates: 1067075.74 N, 517103.75 E Ground Surface Elevation: 487.24

Project: Bridgeton Landfill Groundwater Assessment Well Installations

Project No.: 120131675

Site Location: Bridgeton, Missouri

Method of Drilling: 6 inch Dia. Air Rotary and Sonic

Rig Type: Versa-Drill Versa Sonic, 50K Sonicor Head

Drilling Date(s): October 2-4, 2013

J-Joint	PL-Planar	P-Polished	Fe-Iron	FR-Fresh	R6- Extremely Strong
F-Fault	C-Curved	K-Slickensided	CL-Clay	SW-Slightly Weathered	R5- Very Strong
S-Shear	U-Undulating	SM-Smooth	CaCO3-Calcite	MW-Moderately Weathered	R4- Strong
B-Bedding	ST-Stepped	R-Rough		HW- Highly Weathered	R3- Medium Strong
F-Foliation	I-Irregular	VR-Very Rough		CW-Completely Weathered	R2- Weak
					R1-Very Weak
					R0- Extremely Weak

Depth Scale (feet)	Rock Description	Graphic Log	Run No.	Core Recovery	RQD	Discontinuity Data: Fractures per Foot	Discontinuity Data: Type and Description	Weathering Index (FR SW MW HW CW)	Strength Index (R6 R5 R4 R3 R2 R1 R0)	Temperature Profile (°F)	Notes
200.0	**0.0 to 235.0 ft.** - Blind drilled. No sample collected.									57.4	20.9% O_2, 0% LEL, 0 ppm.
205.0										57.4	
210.0										57.1	
215.0										56.9	
220.0										56.9	20.9% O_2, 0% LEL, 0 ppm.
225.0										56.7	
230.0										56.2	
235.0										56.2	20.9% O_2, 0% LEL, 0 ppm.

Change in scale see sheet 6 of 7

Drilling Contractor: Frontz Drilling, Inc.
Driller: Rob Hamilton
Helpers: Rob Underwood, Ben Williams
Certifying Geologist: Brian Fingers, Geotechnology, Inc.
Logged By: Andrew Wyatt & Steve Jett, Herst & Associates, Inc.

LIMESTONE

HERST & ASSOCIATES, INC.®

Hole Number: PZ-209-SD

Rock Log

Local Site Coordinates: 1067075.74 N, 517103.75 E Ground Surface Elevation: 487.24

Project: Bridgeton Landfill Groundwater Assessment Well Installations

Project No.: 120131675

Site Location: Bridgeton, Missouri

Method of Drilling: 6 inch Dia. Air Rotary and Sonic

Rig Type: Versa-Drill Versa Sonic, 50K Sonicor Head

Drilling Date(s): October 2-4, 2013

J-Joint, F-Fault, S-Shear, B-Bedding, F-Foliation
PL-Planar, C-Curved, U-Undulating, ST-Stepped, I-Irregular
P-Polished, K-Slickensided, SM-Smooth, R-Rough, VR-Very Rough
Fe-Iron, CL-Clay, CaCO3-Calcite
FR-Fresh, SW-Slightly Weathered, MW-Moderately Weathered, HW- Highly Weathered, CW-Completely Weathered
R6- Extremely Strong, R5- Very Strong, R4- Strong, R3- Medium Strong, R2- Weak, R1-Very Weak, R0- Extremely Weak

Depth Scale (feet)	Rock Description	Graphic Log	Run No.	Core Recovery	RQD	Discontinuity Data: Fractures per Foot	Discontinuity Data: Type and Description	Weathering Index (FR SW MW HW CW)	Strength Index (R6 R5 R4 R3 R2 R1 R0)	Temperature Profile (°F)	Notes
235.0										56.2	20.9% O_2, 0% LEL, 0 ppm.
	235.0 to 236.0 ft. - LIMESTONE, medium gray (N6). Medium-grained; massive; competent; fresh.		1 of 2	5.0/5.0	4.5/5.0	0		FR	R5		
236.0						0		FR	R5		
237.0						0		FR	R5		
238.0						1	85°, PL	FR	R5		
	238.0 to 239.0 ft. - LIMESTONE, as above, 238.3 to 238.4 ft but more fossilized. 238.4 to 240.0 ft, gray (N5). Medium-grained; thinly to intensely bedded; competent, fresh.										
239.0						0		FR	R5		
240.0										55.7	20.9% O_2, 0% LEL, 0 ppm.
	240.0 to 241.0 ft. - LIMESTONE, as above.		2 of 2	10.0/10.0	7.2/10.0	0		FR	R5		
241.0						0		FR	R5		
242.0						0		FR	R5		
243.0						0		FR	R5		
244.0						0		FR	R5		
245.0										55.6	

Drilling Contractor: Frontz Drilling, Inc.
Driller: Rob Hamilton
Helpers: Rob Underwood, Ben Williams
Certifying Geologist: Brian Fingers, Geotechnology, Inc.
Logged By: Andrew Wyatt & Steve Jett, Herst & Associates, Inc.

LIMESTONE

HERST & ASSOCIATES, INC.®

Hole Number: PZ-209-SD

Rock Log

Local Site Coordinates: 1067075.74 N, 517103.75 E Ground Surface Elevation: 487.24

Project: Bridgeton Landfill Groundwater Assessment Well Installations

Project No.: 120131675

Site Location: Bridgeton, Missouri

Method of Drilling: 6 inch Dia. Air Rotary and Sonic

Rig Type: Versa-Drill Versa Sonic, 50K Sonicor Head

Drilling Date(s): October 2-4, 2013

J-Joint, F-Fault, S-Shear, B-Bedding, F-Foliation
PL-Planar, C-Curved, U-Undulating, ST-Stepped, I-Irregular
P-Polished, K-Slickensided, SM-Smooth, R-Rough, VR-Very Rough
Fe-Iron, CL-Clay, CaCO3-Calcite
FR-Fresh, SW-Slightly Weathered, MW-Moderately Weathered, HW- Highly Weathered, CW-Completely Weathered
R6- Extremely Strong, R5- Very Strong, R4- Strong, R3- Medium Strong, R2- Weak, R1-Very Weak, R0- Extremely Weak

Depth Scale (feet)	Rock Description	Graphic Log	Run No.	Core Recovery	RQD	Discontinuity Data: Fractures per Foot	Discontinuity Data: Type and Description	Weathering Index (FR SW MW HW CW)	Strength Index (R6 R5 R4 R3 R2 R1 R0)	Temperature Profile (°F)	Notes
245.0										55.6	
246.0						0		FR	R5		
247.0						1	45°, PL	FR	R5		
248.0						0		FR	R5		
249.0	**248.0 to 249.0 ft.** - LIMESTONE, as above, but thinly bedded.					0		FR	R5		
250.0						0		FR	R5	55.4	20.9% O_2, 0% LEL, 0 ppm.
251.0											**Boring Depth: 250 ft. bgs.**
252.0											
253.0											
254.0											
255.0											

Drilling Contractor: Frontz Drilling, Inc.
Driller: Rob Hamilton
Helpers: Rob Underwood, Ben Williams
Certifying Geologist: Brian Fingers, Geotechnology, Inc.
Logged By: Andrew Wyatt & Steve Jett, Herst & Associates, Inc.

LIMESTONE

Well Coordinates:
N 1067075.739
E 517104.415

Drilling Contractor: Frontz Drilling
Lead Driller: Rob Hamilton
Drilling Dates: October 4, 2013

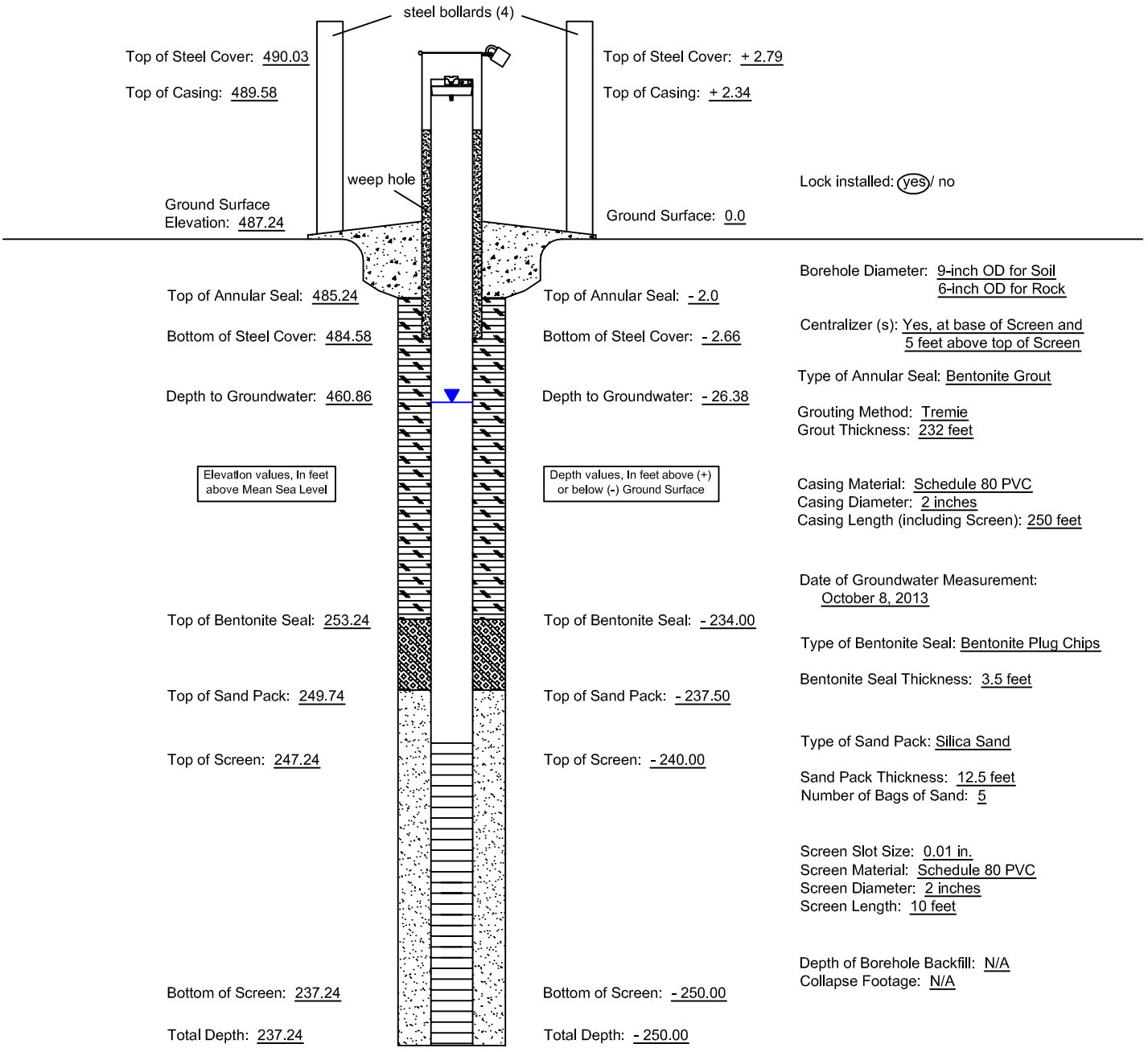

Elevation values, In feet above Mean Sea Level

Depth values, In feet above (+) or below (-) Ground Surface

(Not to Scale)

Lock installed: (yes) / no

Borehole Diameter: 9-inch OD for Soil
6-inch OD for Rock

Centralizer (s): Yes, at base of Screen and 5 feet above top of Screen

Type of Annular Seal: Bentonite Grout

Grouting Method: Tremie
Grout Thickness: 232 feet

Casing Material: Schedule 80 PVC
Casing Diameter: 2 inches
Casing Length (including Screen): 250 feet

Date of Groundwater Measurement: October 8, 2013

Type of Bentonite Seal: Bentonite Plug Chips

Bentonite Seal Thickness: 3.5 feet

Type of Sand Pack: Silica Sand

Sand Pack Thickness: 12.5 feet
Number of Bags of Sand: 5

Screen Slot Size: 0.01 in.
Screen Material: Schedule 80 PVC
Screen Diameter: 2 inches
Screen Length: 10 feet

Depth of Borehole Backfill: N/A
Collapse Footage: N/A

4631 North St. Peters Parkway
St. Charles, Missouri 63304
Phone (636) 939-9111
Fax (636) 939-9757
HERST & ASSOCIATES, INC.®

Bridgeton Landfill
Bridgeton, Missouri

PZ-209-SD
As-Built Diagram

MISSOURI DEPARTMENT OF NATURAL RESOURCES
GEOLOGICAL SURVEY PROGRAM
MONITORING WELL CERTIFICATION RECORD

OFFICE USE ONLY	DATE RECEIVED
REFERENCE NO	
C.R. NO	CHECK NO
STATE WELL NUMBER	REVENUE NO.
ENTERED Ph1 Ph2 Ph3	APPROVED BY / ROUTE

INFORMATION SUPPLIED BY PRIMARY CONTRACTOR OR DRILLING CONTRACTOR
NOTE: THIS FORM IS NOT TO BE USED FOR NESTED WELLS

OWNER NAME: Repulic Seruices
CONTACT NAME: Bryan Sehie
VARIANCE GRANTED BY DNR NUMBER:
OWNER ADDRESS: 13570 Saint Charles Rock Rd.
CITY: Bridgeton
STATE: MO
ZIP CODE: 63044
SITE NAME: Bridgeton Sanitary Landfill
WELL NUMBER: PZ-209-SD
COUNTY: Saint Louis
SITE ADDRESS: 13570 Saint Charles Rock Rd.
CITY: Bridgeton
STATIC WATER LEVEL: 27.09

SURFACE COMPLETION
TYPE: ☑ ABOVE GROUND ☐ FLUSH MOUNT
LENGTH AND DIAMETER OF SURFACE COMPLETION: LENGTH 2.5 FT. DIAMETER 5 IN.
DIAMETER AND DEPTH OF THE HOLE SURFACE COMPLETION WAS PLACED: DIAMETER 5 IN. LENGTH 2.5 FT.
SURFACE COMPLETION GROUT: ☑ CONCRETE ☐ OTHER

LOCATION OF WELL (D/M/S FORMAT ONLY)
LAT. 38 · 45 · 51.2 "
LONG. 90 · 26 · 24.4 "

SMALLEST ¼ LARGEST ¼ ¼
SECTION ____ TOWNSHIP 47 NORTH
RANGE 5 ☑ EAST ☐ WEST

MONITORING FOR: (CHECK ALL THAT APPLY)
☑ RADIONUCLIDES ☐ PETROLEUM PRODUCTS ONLY
☐ EXPLOSIVES ☑ METALS ☑ VOC
☑ SVOCS ☑ PESTICIDES/HERBICIDES

PROPOSED USE OF WELL
☐ GAS MIGRATION WELL ☑ OBSERVATION
☐ EXTRACTION WELL ☐ OPEN HOLE
☐ PIEZOMETERS ☐ INJECTION WELL
☐ DIRECT PUSH

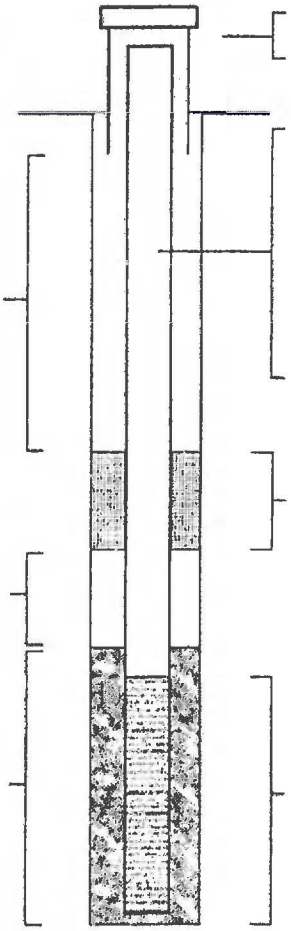

☑ LOCKING CAP
☑ WEEP HOLE
ELEVATION 487.27 FT.

ANNULAR SEAL
LENGTH 234 FT.
☑ SLURRY ☐ CHIPS ☐ PELLETS ☐ GRANULAR ☐ CEMENT/SLURRY
IF CEMENT/BENTONITE MIX:
BAGS OF CEMENT USED ____
% OF BENTONITE USED ____
WATER USED/BAG 440 GAL.

SECONDARY FILTER PACK
LENGTH 6 FT.

DEPTH TO TOP OF PRIMARY FILTER PACK 238 FT.

LENGTH OF PRIMARY FILTER PACK 12 FT.

SURFACE COMPLETION
☑ STEEL ☐ ALUMINUM ☐ PLASTIC

RISER
RISER PIPE DIAMETER 2 IN.
RISER PIPE LENGTH 242 FT.
DIAMETER OF DRILL HOLE 6 IN.
WEIGHT OR SDR# Sch 80

MATERIAL
☐ STEEL ☑ THERMOPLASTIC (PVC) ☐ OTHER

BENTONITE SEAL
LENGTH 2 Foot
☑ CHIPS ☐ PELLETS ☐ GRANULAR ☐ SLURRY
☑ SATURATED ZONE ☐ HYDRATED

SCREEN
SCREEN DIAMETER 2 IN.
SCREEN LENGTH 10 FT.
DIAMETER OF DRILL HOLE 6 IN.
DEPTH TO TOP 240 FT.

SCREEN MATERIAL
☐ STEEL ☑ THERMOPLASTIC (PVC) ☐ OTHER

PROPOSED USE OF WELL
☐ GAS MIGRATION WELL ☑ OBSERVATION
☐ EXTRACTION WELL ☐ OPEN HOLE
☐ PIEZOMETERS ☐ INJECTION WELL
☐ DIRECT PUSH

DEPTH TO	DEPTH FROM	FORMATION DESCRIPTION
0'	45'	Silty Clay
45'	250'	Limestone
TOTAL DEPTH:		250 Foot

FOR CASED WELLS, SUBMIT ADDITIONAL AS BUILT DIAGRAMS SHOWING WELL CONSTRUCTION DETAILS INCLUDING TYPE & SIZE OF ALL CASING, HOLE DIAMETER & GROUT USED.

SIGNATURE (PRIMARY CONTACTOR)
PERMIT NUMBER: 003839 M
DATE WELL DRILLING WAS COMPELTED: 10-4-13

I HEREBY CERTIFY THAT THE MONITORING WELL HEREIN DESCRIBED WAS CONSTRUCTED IN ACCORDANCE WITH MISSOURI DEPARTMENT OF NATURAL RESOURCES REQUIREMENTS FOR THE CONSTRUCTION OF MONITORING WELLS. ☐ PUMP INSTALLED

SIGNATURE (WELL DRILLER)
PERMIT NUMBER: 003456-M
SIGNATURE (OF APPRENTICE)
APPRENTICE PERMIT NUMBER

MO 780-1415 (07-11)
DISTRIBUTION: WHITE/DIVISION CANARY/CONTACTOR PINK/OWNER
RETURN WHITE COPY WITH APPROPRIATE FEE TO: MISSOURI DEPARTMENT OF NATURAL RESOURCES, DIVISION OF GEOLOGY AND LAND SURVEY, WELLHEAD PROTECTION SECTION, PO BOX 250, ROLLA, MO 65402 573-368-2165

HERST & ASSOCIATES, INC.®

Hole Number: PZ-210-SS

Rock Log

Local Site Coordinates: 1066828.73 N, 516777.04 E Ground Surface Elevation: 484.52

Project: Bridgeton Landfill Groundwater Assessment Well Installations

Project No.: 120131675

Site Location: Bridgeton, Missouri

Method of Drilling: 6 inch Dia. Air Rotary and Sonic

Rig Type: Versa-Drill Versa Sonic, 50K Sonicor Head

Drilling Date(s): October 16, 2013

J-Joint, F-Fault, S-Shear, B-Bedding, F-Foliation

PL-Planar, C-Curved, U-Undulating, ST-Stepped, I-Irregular

P-Polished, K-Slickensided, SM-Smooth, R-Rough, VR-Very Rough

Fe-Iron, CL-Clay, CaCO3-Calcite

FR-Fresh, SW-Slightly Weathered, MW-Moderately Weathered, HW- Highly Weathered, CW-Completely Weathered

R6- Extremely Strong, R5- Very Strong, R4- Strong, R3- Medium Strong, R2- Weak, R1-Very Weak, R0- Extremely Weak

Depth Scale (feet)	Rock Description	Graphic Log	Run No.	Core Recovery	RQD	Discontinuity Data: Fractures per Foot	Discontinuity Data: Type and Description	Weathering Index (FR SW MW HW CW)	Strength Index (R6 R5 R4 R3 R2 R1 R0)	Temperature Profile (°F)	Notes
0.0	**0.0 to 133.0 ft.** - Blind drilled. No sample collected.									Meter: Solinst Model 107 TLC	Blind-drilled from 0 - 133 ft; no samples collected. 0 - 50 ft drilled via air rotary. O_2 (%), methane (%LEL), and VOCs (ppm) monitored at borehole. 20.9% O_2, 0% LEL, 0 ppm.
5.0										58.2	
10.0										57.9	20.9% O_2, 0% LEL, 0 ppm. Very wet.
15.0										57.9	
20.0										57.9	20.9% O_2, 0% LEL, 0 ppm.
25.0										57.6	
30.0										57.6	20.9% O_2, 0% LEL, 0 ppm.
35.0										57.6	
40.0										57.6	20.9% O_2, 0% LEL, 0 ppm.
45.0										57.6	Competent bedrock encountered.
50.0										57.6	

Drilling Contractor: Frontz Drilling, Inc.

Driller: Rob Hamilton

Helpers: Rob Underwood, Ben Williams

Certifying Geologist: Brian Fingers, Geotechnology, Inc.

Logged By: Andrew Wyatt, Herst & Associates, Inc.

LIMESTONE

HERST & ASSOCIATES, INC.®

Hole Number: PZ-210-SS

Rock Log

Local Site Coordinates: 1066828.73 N, 516777.04 E Ground Surface Elevation: 484.52

Project: Bridgeton Landfill Groundwater Assessment Well Installations

Project No.: 120131675

Site Location: Bridgeton, Missouri

Method of Drilling: 6 inch Dia. Air Rotary and Sonic

Rig Type: Versa-Drill Versa Sonic, 50K Sonicor Head

Drilling Date(s): October 16, 2013

J-Joint	PL-Planar	P-Polished	Fe-Iron	FR-Fresh	R6- Extremely Strong
F-Fault	C-Curved	K-Slickensided	CL-Clay	SW-Slightly Weathered	R5- Very Strong
S-Shear	U-Undulating	SM-Smooth	CaCO3-Calcite	MW-Moderately Weathered	R4- Strong
B-Bedding	ST-Stepped	R-Rough		HW- Highly Weathered	R3- Medium Strong
F-Foliation	I-Irregular	VR-Very Rough		CW-Completely Weathered	R2- Weak
					R1-Very Weak
					R0- Extremely Weak

Depth Scale (feet)	Rock Description	Graphic Log	Run No.	Core Recovery	RQD	Discontinuity Data: Fractures per Foot	Discontinuity Data: Type and Description	Weathering Index (FR SW MW HW CW)	Strength Index (R6 R5 R4 R3 R2 R1 R0)	Temperature Profile (°F)	Notes
50.0	**0.0 to 133.0 ft.** - Blind drilled. No sample collected.									57.6	Set temporary 8-in. D casing 5 ft into bedrock. Switched to sonic drilling. Continued drilling through casing. 20.9% O_2, 0% LEL, 0 ppm.
55.0										57.6	
60.0										57.6	20.9% O_2, 0% LEL, 0 ppm..
65.0										57.6	
70.0										57.6	
75.0										57.6	
80.0										57.6	20.9% O_2, 0% LEL, 0 ppm.
85.0										57.6	
90.0										57.6	
95.0										57.6	
100.0										57.9	20.9% O_2, 0% LEL, 0 ppm.

Drilling Contractor: Frontz Drilling, Inc.
Driller: Rob Hamilton
Helpers: Rob Underwood, Ben Williams
Certifying Geologist: Brian Fingers, Geotechnology, Inc.
Logged By: Andrew Wyatt, Herst & Associates, Inc.

LIMESTONE

HERST & ASSOCIATES, INC.®

Hole Number: PZ-210-SS

Rock Log

Local Site Coordinates: 1066828.73 N, 516777.04 E Ground Surface Elevation: 484.52

Project: Bridgeton Landfill Groundwater Assessment Well Installations

Project No.: 120131675

Site Location: Bridgeton, Missouri

Method of Drilling: 6 inch Dia. Air Rotary and Sonic

Rig Type: Versa-Drill Versa Sonic, 50K Sonicor Head

Drilling Date(s): October 16, 2013

J-Joint	PL-Planar	P-Polished	Fe-Iron	FR-Fresh	R6- Extremely Strong
F-Fault	C-Curved	K-Slickensided	CL-Clay	SW-Slightly Weathered	R5- Very Strong
S-Shear	U-Undulating	SM-Smooth	CaCO3-Calcite	MW-Moderately Weathered	R4- Strong
B-Bedding	ST-Stepped	R-Rough		HW- Highly Weathered	R3- Medium Strong
F-Foliation	I-Irregular	VR-Very Rough		CW-Completely Weathered	R2- Weak
					R1-Very Weak
					R0- Extremely Weak

Depth Scale (feet)	Rock Description	Graphic Log	Run No.	Core Recovery	RQD	Discontinuity Data: Fractures per Foot	Discontinuity Data: Type and Description	Weathering Index (FR SW MW HW CW)	Strength Index (R6 R5 R4 R3 R2 R1 R0)	Temperature Profile (°F)	Notes
100.0	**0.0 to 133.0 ft.** - Blind drilled. No sample collected.									57.9	20.9% O_2, 0% LEL, 0 ppm.
105.0										57.9	
110.0										57.6	
115.0										57.4	
120.0										57.4	20.9% O_2, 0% LEL, 0 ppm.
125.0										57.4	
130.0										57.1	
133.0											

Change in scale see sheet 4 of 5

Drilling Contractor: Frontz Drilling, Inc.
Driller: Rob Hamilton
Helpers: Rob Underwood, Ben Williams
Certifying Geologist: Brian Fingers, Geotechnology, Inc.
Logged By: Andrew Wyatt, Herst & Associates, Inc.

LIMESTONE

HERST & ASSOCIATES, INC.®

Hole Number: PZ-210-SS

Rock Log

Local Site Coordinates: 1066828.73 N, 516777.04 E Ground Surface Elevation: 484.52

Project: Bridgeton Landfill Groundwater Assessment Well Installations

Project No.: 120131675

Site Location: Bridgeton, Missouri

Method of Drilling: 6 inch Dia. Air Rotary and Sonic

Rig Type: Versa-Drill Versa Sonic, 50K Sonicor Head

Drilling Date(s): October 16, 2013

J-Joint, F-Fault, S-Shear, B-Bedding, F-Foliation
PL-Planar, C-Curved, U-Undulating, ST-Stepped, I-Irregular
P-Polished, K-Slickensided, SM-Smooth, R-Rough, VR-Very Rough
Fe-Iron, CL-Clay, CaCO3-Calcite
FR-Fresh, SW-Slightly Weathered, MW-Moderately Weathered, HW- Highly Weathered, CW-Completely Weathered
R6- Extremely Strong, R5- Very Strong, R4- Strong, R3- Medium Strong, R2- Weak, R1-Very Weak, R0- Extremely Weak

Depth Scale (feet)	Rock Description	Graphic Log	Run No.	Core Recovery	RQD	Discontinuity Data: Fractures per Foot	Discontinuity Data: Type and Description	Weathering Index (FR SW MW HW CW)	Strength Index (R6 R5 R4 R3 R2 R1 R0)	Temperature Profile (°F)	Notes
133.0											
134.0	**133.0 to 134.0 ft.** - LIMESTONE, light olive gray (5Y 6/1) to olive gray (5Y 4/1). With very light gray (N9) and yellowish gray (5Y 8/1) mottling and spotting. Microcrystalline to fine-grained; massive to laminated; competent. Requires one to multiple hammer blows to fracture, but easily scratched with knife. Reactive with with 10% HCl solution.		1 of 2	5.0/5.0	4.3/5.0	0	[134.2] 90°, B, PL, R [134.3] 85°, B, PL, R [134.75] 90°, B, I, R [134.8] 85°, B, PL, R [134.85] 90°, B, PL, R	FR	R3 to R4	56.9	
135.0	**134.0 to 135.0 ft.** - LIMESTONE, as above, but with medium bluish gray (5B 5/1) spotting. Slightly weathered from 134.1 to 134.9 ft; surface discoloration on fractures, weaker along bedding planes, can easily be broken by hand in spots. Surface discoloration of dark yellowish brown (10YR 4/2), moderate yellowish brown (10YR 5/4) on fractures. Partial healing/filling of cavities at 134.2 ft. Medium bluish gray (5B 5/1) mineralization at 134.8 ft.					5		SW	R3 to R4		
136.0	**135.0 to 136.0 ft.** - LIMESTONE, as above, but yellowish gray (5Y 8/1) to light olive gray (5Y 6/1). With greenish gray (5G 6/1) mottling. Microcrystalline beginning at 135.6 ft. Flint-or chert-like. Very uniform in color. Dark greenish gray (5GY 4/1) dendritic mineralization at 135.9 ft.					0		FR	R3-R4		
137.0	**136.0 to 137.0 ft.** - LIMESTONE, as above. Moderately healed bedding plane joint at 136.6 ft.					0		FR	R3-R4		
138.0	**137.0 to 138.0 ft.** - LIMESTONE, as above. Medium dark-gray (N4) dendritic mineralization at 137.1-137.2 ft. Multiple moderatly healed bedding plane joints at 137.7 ft. Slightly weathered from 137.9-140 ft; surface discoloration on fractures. Surface discoloration of dark yellowish brown (10YR 4/2), brownish gray (5YR 4/1), medium bluish gray (5B 5/1) on fractures.					2	[137.9] 60°, B, PL, R [137.95] 80°, B, PL, R	FR to SW	R3-R4		
139.0	**138.0 to 139.0 ft.** - LIMESTONE, yellowish gray (5Y 8/1) and light gray (5Y 6/1). With very light gray (N8) and dark gray (N3) mottling. With dark yellowish brown (10YR 4/2) from 138-138.2 ft. Microcrystalline; massive to laminated; competent. Requires one to multiple hammer blows to fracture, but easily scratched with knife. Reactive with with 10% HCl solution.		2 of 2	9.7/10.0	9.1/9.7	0	[139.15] 90°, B, PL, R	FR	R3-R4		
140.0	**139.0 to 140.0 ft.** - LIMESTONE, as above, but microcrystalline to fine-grained. Slightly weathered from 139.1-139.7 ft; surface discoloration on fractures, weaker along bedding planes, can be broken by hand in spots. Surface discoloration of pale yellowish brown (10YR 6/2), brownish gray (5YR 4/1), and olive gray (5Y 4/1) on fractures. Vitreous, medium bluish gray (5B 5/1) mineralization at approx. 139.5 ft. Multiple mechanical breaks mixed with bedding plane joints, Core has little cross-sectional integrity; gravel-like. Difficult to discern individual joints.					2+	[139.65] 90°, B, PL, S Other fractures evident, but difficult to discern.	FR to SW	R3-R4	56.9	
141.0						0		FR	R4		
142.0	**140.0 to 141.0 ft.** - LIMESTONE, as above, but with little mottling. Microcrystalline, massive. **141.0 to 142.0 ft.** - LIMESTONE, as above.					0		FR	R4		
143.0	**142.0 to 143.0 ft.** - LIMESTONE, as above, 0.2 ft band of medium light gray (N6) at 142.5 ft. Laminated from 142.5 to 143 ft. With very light gray (N8) and medium dark gray (N4) mottling. Multiple mechanical breaks.					0		FR	R4 to R3		

Drilling Contractor: Frontz Drilling, Inc.
Driller: Rob Hamilton
Helpers: Rob Underwood, Ben Williams
Certifying Geologist: Brian Fingers, Geotechnology, Inc.
Logged By: Andrew Wyatt, Herst & Associates, Inc.

LIMESTONE

HERST & ASSOCIATES, INC.®

Hole Number: PZ-210-SS

Rock Log

Local Site Coordinates: 1066828.73 N, 516777.04 E Ground Surface Elevation: 484.52

Project: Bridgeton Landfill Groundwater Assessment Well Installations

Project No.: 120131675

Site Location: Bridgeton, Missouri

Method of Drilling: 6 inch Dia. Air Rotary and Sonic

Rig Type: Versa-Drill Versa Sonic, 50K Sonicor Head

Drilling Date(s): October 16, 2013

J-Joint, F-Fault, S-Shear, B-Bedding, F-Foliation
PL-Planar, C-Curved, U-Undulating, ST-Stepped, I-Irregular
P-Polished, K-Slickensided, SM-Smooth, R-Rough, VR-Very Rough
Fe-Iron, CL-Clay, CaCO3-Calcite
FR-Fresh, SW-Slightly Weathered, MW-Moderately Weathered, HW- Highly Weathered, CW-Completely Weathered
R6- Extremely Strong, R5- Very Strong, R4- Strong, R3- Medium Strong, R2- Weak, R1-Very Weak, R0- Extremely Weak

Depth Scale (feet)	Rock Description	Graphic Log	Run No.	Core Recovery	RQD	Discontinuity Data: Fractures per Foot	Discontinuity Data: Type and Description	Weathering Index (FR SW MW HW CW)	Strength Index (R6 R5 R4 R3 R2 R1 R0)	Temperature Profile (°F)	Notes
143.0											
	143.0 to 144.0 ft. - LIMESTONE, as above, but massive to laminated. Multiple mechanical breaks from 143.2 - 143.7 ft. Surface discoloration on bottom face of fracture at 143.7 ft. Medium dark gray (N4) and olive gray (5Y 4/1). (No discoloration on top face; possible mechanical destruction.)					1	[143.7] 85°, B, PL, S	FR to SW	R3 to R4		
144.0											
	144.0 to 145.0 ft. - LIMESTONE, as above, but massive; microcrystalline to fine-grained.					0		FR	R4		
145.0										56.7	
	145.0 to 146.0 ft. - LIMESTONE, as above, but yellowish gray (5Y 8/I), light olive gray (5Y 6/1), and olive gray (5Y 4/1). With greenish gray (5G 6/1) mottling at 145.5 ft. Massive to laminated. Can be broken by hand from 145.7 to 145.9 ft. Likely mechanical destruction and weakening. (No weathering evident.)					0		FR	R4 to R3		
146.0											
	146.0 to 147.0 ft. - LIMESTONE, as above, but yellowish gray (5Y 8/I) and light olive gray (5Y 6/1), massive, microcrystalline beginning 1t 146.4 ft. Slightly weathered at 146.1 ft: surface discoloration on fracture, weaker along bedding planes, can be broken by hand in spots. Vitreous, planar mineralization roughly parallel to core axis (90 to 80°) from 146.7 - 146.8 ft.					1	[146.1] 90°, B, PL, VR	FR to SW	R4 to R3		
147.0											
	147.0 to 148.0 ft. - LIMESTONE, as above.					0		FR	R4		
148.0										56.7	**Boring Depth: 148 ft. bgs.**
149.0											
150.0											
151.0											
152.0											
153.0											

Drilling Contractor: Frontz Drilling, Inc.
Driller: Rob Hamilton
Helpers: Rob Underwood, Ben Williams
Certifying Geologist: Brian Fingers, Geotechnology, Inc.
Logged By: Andrew Wyatt, Herst & Associates, Inc.

LIMESTONE

Well Coordinates:
N 1066828.381
E 516777.407

Drilling Contractor: Frontz Drilling
Lead Driller: Rob Hamilton
Drilling Dates: October 16-17, 2013

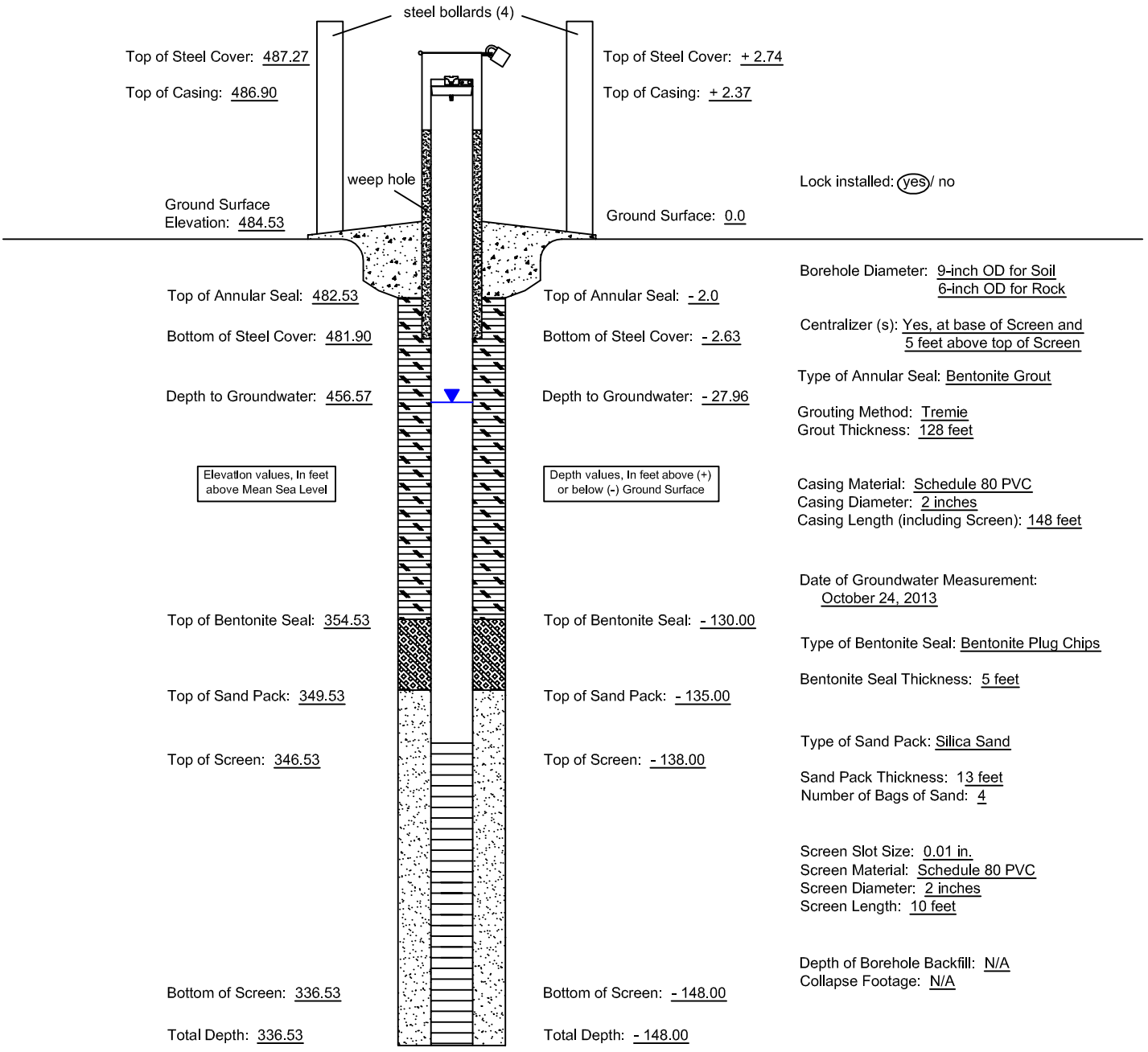

Top of Steel Cover: 487.27
Top of Casing: 486.90
Ground Surface Elevation: 484.53

Top of Steel Cover: + 2.74
Top of Casing: + 2.37
Ground Surface: 0.0

Lock installed: (yes) / no

Top of Annular Seal: 482.53
Bottom of Steel Cover: 481.90
Depth to Groundwater: 456.57

Top of Annular Seal: - 2.0
Bottom of Steel Cover: - 2.63
Depth to Groundwater: - 27.96

Elevation values, In feet above Mean Sea Level

Depth values, In feet above (+) or below (-) Ground Surface

Top of Bentonite Seal: 354.53
Top of Sand Pack: 349.53
Top of Screen: 346.53

Top of Bentonite Seal: - 130.00
Top of Sand Pack: - 135.00
Top of Screen: - 138.00

Bottom of Screen: 336.53
Total Depth: 336.53

Bottom of Screen: - 148.00
Total Depth: - 148.00

(Not to Scale)

Borehole Diameter: 9-inch OD for Soil
6-inch OD for Rock

Centralizer (s): Yes, at base of Screen and 5 feet above top of Screen

Type of Annular Seal: Bentonite Grout

Grouting Method: Tremie
Grout Thickness: 128 feet

Casing Material: Schedule 80 PVC
Casing Diameter: 2 inches
Casing Length (including Screen): 148 feet

Date of Groundwater Measurement: October 24, 2013

Type of Bentonite Seal: Bentonite Plug Chips

Bentonite Seal Thickness: 5 feet

Type of Sand Pack: Silica Sand

Sand Pack Thickness: 13 feet
Number of Bags of Sand: 4

Screen Slot Size: 0.01 in.
Screen Material: Schedule 80 PVC
Screen Diameter: 2 inches
Screen Length: 10 feet

Depth of Borehole Backfill: N/A
Collapse Footage: N/A

4631 North St. Peters Parkway
St. Charles, Missouri 63304
Phone (636) 939-9111
Fax (636) 939-9757
HERST & ASSOCIATES, INC.®

Bridgeton Landfill
Bridgeton, Missouri

PZ-210-SS
As-Built Diagram

MISSOURI DEPARTMENT OF NATURAL RESOURCES
GEOLOGICAL SURVEY PROGRAM
MONITORING WELL CERTIFICATION RECORD

OFFICE USE ONLY	DATE RECEIVED
REFERENCE NO	
C R NO	CHECK NO
STATE WELL NUMBER	REVENUE NO
ENTERED Ph1 Ph2 Ph3	APPROVED BY / ROUTE

INFORMATION SUPPLIED BY PRIMARY CONTRACTOR OR DRILLING CONTRACTOR
NOTE THIS FORM IS NOT TO BE USED FOR NESTED WELLS

OWNER NAME: Republic Services
CONTACT NAME: Bryan Schie
VARIANCE GRANTED BY DNR NUMBER:
OWNER ADDRESS: 13570 Saint Charles Rock Rd.
CITY: Bridgeton
STATE: MO
ZIP CODE: 63044
SITE NAME: Bridgeton Sanitary Landfill
WELL NUMBER: PZ-210-SS
COUNTY: Saint Louis
SITE ADDRESS: 13570 Saint Charles Rock Rd.
CITY: Bridgeton
STATIC WATER LEVEL: 30.33

SURFACE COMPLETION
TYPE: ☑ ABOVE GROUND ☐ FLUSH MOUNT
LENGTH AND DIAMETER OF SURFACE COMPLETION: LENGTH 2.5 FT. DIAMETER 5 IN.
DIAMETER AND DEPTH OF THE HOLE SURFACE COMPLETION WAS PLACED: DIAMETER 5 IN. LENGTH 2.5 FT.
SURFACE COMPLETION GROUT: ☑ CONCRETE ☐ OTHER

LOCATION OF WELL (D/M/S FORMAT ONLY)
LAT. 38 . 45 . 49.4"
LONG. 90 . 26 . 25.8"

SMALLEST ___¼ LARGEST ___¼ ___¼
SECTION ___ TOWNSHIP 47 NORTH
RANGE 5 ☑ EAST ☐ WEST

MONITORING FOR: (CHECK ALL THAT APPLY)
☑ RADIONUCLIDES ☑ [redacted]
☐ EXPLOSIVES ☑ METALS ☑ VOC
☑ SVOCS ☑ PESTICIDES/HERBICIDES

PROPOSED USE OF WELL
☐ GAS MIGRATION WELL ☑ OBSERVATION
☐ EXTRACTION WELL ☐ OPEN HOLE
☐ PIEZOMETERS ☐ INJECTION WELL
☐ DIRECT PUSH

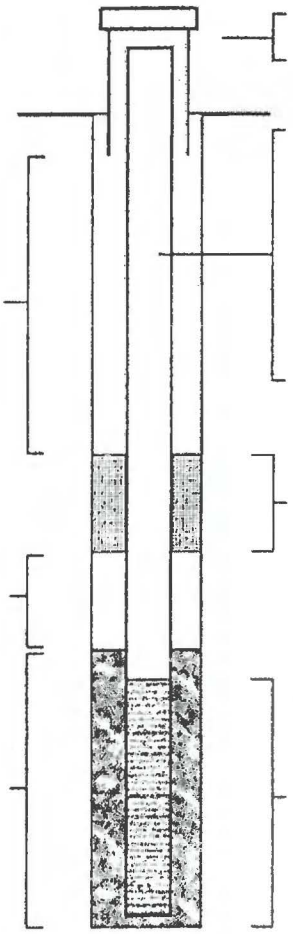

☑ LOCKING CAP
☑ WEEP HOLE
ELEVATION 481.29 FT.

ANNULAR SEAL
LENGTH 128 FT.
☑ SLURRY ☐ CHIPS ☐ PELLETS ☐ GRANULAR ☐ CEMENT/SLURRY
IF CEMENT/BENTONITE MIX:
BAGS OF CEMENT USED ___
% OF BENTONITE USED ___
WATER USED/BAG 340 GAL.

SECONDARY FILTER PACK
LENGTH 0 FT.

DEPTH TO TOP OF PRIMARY FILTER PACK 135 FT.

LENGTH OF PRIMARY FILTER PACK 13 FT.

SURFACE COMPLETION
☑ STEEL ☐ ALUMINUM ☐ PLASTIC

RISER
RISER PIPE DIAMETER 2 IN.
RISER PIPE LENGTH 140 FT.
DIAMETER OF DRILL HOLE 6 IN.
WEIGHT OR SDR# Sch80

MATERIAL
☐ STEEL ☑ THERMOPLASTIC (PVC) ☐ OTHER

BENTONITE SEAL
LENGTH 5 Foot
☑ CHIPS ☐ PELLETS ☐ GRANULAR ☐ SLURRY
☑ SATURATED ZONE ☐ HYDRATED

SCREEN
SCREEN DIAMETER 2 IN.
SCREEN LENGTH 10 FT.
DIAMETER OF DRILL HOLE 6 IN.
DEPTH TO TOP 138 FT.
SCREEN MATERIAL
☐ STEEL ☑ THERMOPLASTIC (PVC) ☐ OTHER

DEPTH TO	DEPTH FROM	FORMATION DESCRIPTION
0'	45'	Silty Clay
45'	148'	Limestone
TOTAL DEPTH:		148 Foot

FOR CASED WELLS, SUBMIT ADDITIONAL AS BUILT DIAGRAMS SHOWING WELL CONSTRUCTION DETAILS INCLUDING TYPE & SIZE OF ALL CASING, HOLE DIAMETER & GROUT USED.

SIGNATURE (PRIMARY CONTACTOR) | PERMIT NUMBER 003839M | DATE WELL DRILLING WAS COMPELTED 10-16-13

I HEREBY CERTIFY THAT THE MONITORING WELL HEREIN DESCRIBED WAS CONSTRUCTED IN ACCORDANCE WITH MISSOURI DEPARTMENT OF NATURAL RESOURCES REQUIREMENTS FOR THE CONSTRUCTION OF MONITORING WELLS. ☐ PUMP INSTALLED

SIGNATURE (WELL DRILLER) | PERMIT NUMBER 003456-M | SIGNATURE (OF APPRENTICE) | APPRENTICE PERMIT NUMBER

MO 780-1415 (07-11)
DISTRIBUTION: WHITE/DIVISION CANARY/CONTACTOR PINK/OWNER
RETURN WHITE COPY WITH APPROPRIATE FEE TO: MISSOURI DEPARTMENT OF NATURAL RESOURCES, DIVISION OF GEOLOGY AND LAND SURVEY, WELLHEAD PROTECTION SECTION, PO BOX 250, ROLLA, MO 65402 573-368-2165

HERST & ASSOCIATES, INC.®

Hole Number: PZ-210-SD

Rock Log

Local Site Coordinates: 1066824.04 N, 516772.85 E Ground Surface Elevation: 484.48

Project: Bridgeton Landfill Groundwater Assessment Well Installations

Project No.: 120131675

Site Location: Bridgeton, Missouri

Method of Drilling: 6 inch Dia. Air Rotary and Sonic

Rig Type: Versa-Drill Versa Sonic, 50K Sonicor Head

Drilling Date(s): October 15, 2013

J-Joint, F-Fault, S-Shear, B-Bedding, F-Foliation
PL-Planar, C-Curved, U-Undulating, ST-Stepped, I-Irregular
P-Polished, K-Slickensided, SM-Smooth, R-Rough, VR-Very Rough
Fe-Iron, CL-Clay, CaCO3-Calcite
FR-Fresh, SW-Slightly Weathered, MW-Moderately Weathered, HW- Highly Weathered, CW-Completely Weathered
R6- Extremely Strong, R5- Very Strong, R4- Strong, R3- Medium Strong, R2- Weak, R1-Very Weak, R0- Extremely Weak

Depth Scale (feet)	Rock Description	Graphic Log	Run No.	Core Recovery	RQD	Discontinuity Data: Fractures per Foot	Discontinuity Data: Type and Description	Weathering Index (FR SW MW HW CW)	Strength Index (R6 R5 R4 R3 R2 R1 R0)	Temperature Profile (°F)	Notes
0.0	**0.0 to 233.0 ft.** - Blind drilled. No sample collected.									Meter: Solinst Model 107 TLC	Blind-drilled from 0 - 233 ft; no samples collected. 0 - 50 ft drilled via air rotary. O_2 (%), methane (%LEL), and VOCs (ppm) monitored at borehole. 20.6% O_2, 0% LEL, 0 ppm.
5.0										58.2	
10.0										58.2	20.6% O_2, 0% LEL, 0 ppm.
15.0										58.2	
20.0										58.0	20.6% O_2, 0% LEL, 0 ppm.
25.0										58.0	
30.0										58.0	20.9% O_2, 0% LEL, 0 ppm.
35.0										58.0	
40.0										58.0	20.9% O_2, 0% LEL, 0 ppm.
45.0										58.0	Competent bedrock encountered.
50.0										58.0	

Drilling Contractor: Frontz Drilling, Inc.
Driller: Rob Hamilton
Helpers: Rob Underwood, Ben Williams
Certifying Geologist: Brian Fingers, Geotechnology, Inc.
Logged By: Andrew Wyatt, Herst & Associates, Inc.

LIMESTONE

HERST & ASSOCIATES, INC.®

Hole Number: PZ-210-SD

Rock Log

Local Site Coordinates: 1066824.04 N, 516772.85 E Ground Surface Elevation: 484.48

Project: Bridgeton Landfill Groundwater Assessment Well Installations

Project No.: 120131675

Site Location: Bridgeton, Missouri

Method of Drilling: 6 inch Dia. Air Rotary and Sonic

Rig Type: Versa-Drill Versa Sonic, 50K Sonicor Head

Drilling Date(s): October 15, 2013

J-Joint	PL-Planar	P-Polished	Fe-Iron	FR-Fresh	R6- Extremely Strong
F-Fault	C-Curved	K-Slickensided	CL-Clay	SW-Slightly Weathered	R5- Very Strong
S-Shear	U-Undulating	SM-Smooth	CaCO3-Calcite	MW-Moderately Weathered	R4- Strong
B-Bedding	ST-Stepped	R-Rough		HW- Highly Weathered	R3- Medium Strong
F-Foliation	I-Irregular	VR-Very Rough		CW-Completely Weathered	R2- Weak
					R1-Very Weak
					R0- Extremely Weak

Depth Scale (feet)	Rock Description	Graphic Log	Run No.	Core Recovery	RQD	Discontinuity Data: Fractures per Foot	Discontinuity Data: Type and Description	Weathering Index (FR SW MW HW CW)	Strength Index (R6 R5 R4 R3 R2 R1 R0)	Temperature Profile (°F)	Notes
50.0	**0.0 to 233.0 ft.** - Blind drilled. No sample collected.									58.0	Set temporary 8-in. D casing 5 ft into bedrock. Switched to sonic drilling. Continued drilling through casing.
55.0										58.0	20.9% O_2, 0% LEL, 0 ppm.
60.0										58.0	20.9% O_2, 0% LEL, 0 ppm..
65.0										58.0	
70.0										58.0	
75.0										58.0	
80.0										58.0	20.9% O_2, 0% LEL, 0 ppm.
85.0										58.0	
90.0										58.0	
95.0										58.0	
100.0										58.0	20.9% O_2, 0% LEL, 0 ppm.

Drilling Contractor: Frontz Drilling, Inc.
Driller: Rob Hamilton
Helpers: Rob Underwood, Ben Williams
Certifying Geologist: Brian Fingers, Geotechnology, Inc.
Logged By: Andrew Wyatt, Herst & Associates, Inc.

LIMESTONE

HERST & ASSOCIATES, INC.®

Hole Number: PZ-210-SD

Rock Log

Local Site Coordinates: 1066824.04 N, 516772.85 E Ground Surface Elevation: 484.48

Project: Bridgeton Landfill Groundwater Assessment Well Installations

Project No.: 120131675

Site Location: Bridgeton, Missouri

Method of Drilling: 6 inch Dia. Air Rotary and Sonic

Drilling Date(s): October 15, 2013

Rig Type: Versa-Drill Versa Sonic, 50K Sonicor Head

J-Joint, F-Fault, S-Shear, B-Bedding, F-Foliation
PL-Planar, C-Curved, U-Undulating, ST-Stepped, I-Irregular
P-Polished, K-Slickensided, SM-Smooth, R-Rough, VR-Very Rough
Fe-Iron, CL-Clay, CaCO3-Calcite
FR-Fresh, SW-Slightly Weathered, MW-Moderately Weathered, HW- Highly Weathered, CW-Completely Weathered
R6- Extremely Strong, R5- Very Strong, R4- Strong, R3- Medium Strong, R2- Weak, R1-Very Weak, R0- Extremely Weak

Depth Scale (feet)	Rock Description	Graphic Log	Run No.	Core Recovery	RQD	Discontinuity Data: Fractures per Foot	Discontinuity Data: Type and Description	Weathering Index (FR SW MW HW CW)	Strength Index (R6 R5 R4 R3 R2 R1 R0)	Temperature Profile (°F)	Notes
100.0	**0.0 to 233.0 ft.** - Blind drilled. No sample collected.									58.0	20.9% O_2, 0% LEL, 0 ppm.
105.0										58.0	
110.0										58.0	
115.0										58.0	
120.0										58.0	
125.0										58.0	
130.0										58.0	
135.0										58.0	
140.0										58.0	20.9% O_2, 0% LEL, 0 ppm.
145.0										58.0	
150.0										57.9	

Drilling Contractor: Frontz Drilling, Inc.
Driller: Rob Hamilton
Helpers: Rob Underwood, Ben Williams
Certifying Geologist: Brian Fingers, Geotechnology, Inc.
Logged By: Andrew Wyatt, Herst & Associates, Inc.

LIMESTONE

HERST & ASSOCIATES, INC.®

Hole Number: PZ-210-SD

Rock Log

Local Site Coordinates: 1066824.04 N, 516772.85 E Ground Surface Elevation: 484.48

Project: Bridgeton Landfill Groundwater Assessment Well Installations

Project No.: 120131675

Site Location: Bridgeton, Missouri

Method of Drilling: 6 inch Dia. Air Rotary and Sonic

Rig Type: Versa-Drill Versa Sonic, 50K Sonicor Head

Drilling Date(s): October 15, 2013

J-Joint, F-Fault, S-Shear, B-Bedding, F-Foliation

PL-Planar, C-Curved, U-Undulating, ST-Stepped, I-Irregular

P-Polished, K-Slickensided, SM-Smooth, R-Rough, VR-Very Rough

Fe-Iron, CL-Clay, CaCO3-Calcite

FR-Fresh, SW-Slightly Weathered, MW-Moderately Weathered, HW- Highly Weathered, CW-Completely Weathered

R6- Extremely Strong, R5- Very Strong, R4- Strong, R3- Medium Strong, R2- Weak, R1-Very Weak, R0- Extremely Weak

Depth Scale (feet)	Rock Description	Graphic Log	Run No.	Core Recovery	RQD	Discontinuity Data: Fractures per Foot	Discontinuity Data: Type and Description	Weathering Index (FR SW MW HW CW)	Strength Index (R6 R5 R4 R3 R2 R1 R0)	Temperature Profile (°F)	Notes
150.0	**0.0 to 233.0 ft.** - Blind drilled. No sample collected.									57.9	
155.0										57.9	
160.0										57.9	20.9% O_2, 0% LEL, 0 ppm.
165.0										57.9	
170.0										57.6	
175.0										57.6	
180.0										57.6	20.9% O_2, 0% LEL, 0 ppm.
185.0										57.6	
190.0										57.6	
195.0										57.6	
200.0										57.6	20.9% O_2, 0% LEL, 0 ppm.

Drilling Contractor: Frontz Drilling, Inc.

Driller: Rob Hamilton

Helpers: Rob Underwood, Ben Williams

Certifying Geologist: Brian Fingers, Geotechnology, Inc.

Logged By: Andrew Wyatt, Herst & Associates, Inc.

LIMESTONE

HERST & ASSOCIATES, INC.®

Hole Number: PZ-210-SD

Rock Log

Local Site Coordinates: 1066824.04 N, 516772.85 E Ground Surface Elevation: 484.48

Project: Bridgeton Landfill Groundwater Assessment Well Installations

Project No.: 120131675

Site Location: Bridgeton, Missouri

Method of Drilling: 6 inch Dia. Air Rotary and Sonic

Rig Type: Versa-Drill Versa Sonic, 50K Sonicor Head

Drilling Date(s): October 15, 2013

J-Joint	PL-Planar	P-Polished	Fe-Iron	FR-Fresh	R6- Extremely Strong
F-Fault	C-Curved	K-Slickensided	CL-Clay	SW-Slightly Weathered	R5- Very Strong
S-Shear	U-Undulating	SM-Smooth	CaCO3-Calcite	MW-Moderately Weathered	R4- Strong
B-Bedding	ST-Stepped	R-Rough		HW- Highly Weathered	R3- Medium Strong
F-Foliation	I-Irregular	VR-Very Rough		CW-Completely Weathered	R2- Weak
					R1-Very Weak
					R0- Extremely Weak

Depth Scale (feet)	Rock Description	Graphic Log	Run No.	Core Recovery	RQD	Discontinuity Data: Fractures per Foot	Discontinuity Data: Type and Description	Weathering Index (FR SW MW HW CW)	Strength Index (R6 R5 R4 R3 R2 R1 R0)	Temperature Profile (°F)	Notes
200.0	**0.0 to 233.0 ft.** - Blind drilled. No sample collected.									57.6	20.9% O_2, 0% LEL, 0 ppm.
205.0										57.6	
210.0										57.6	
215.0										57.6	
220.0										57.4	20.9% O_2, 0% LEL, 0 ppm.
225.0										57.4	
230.0										57.4	
233.0											20.9% O_2, 0% LEL, 0 ppm.

Change in scale see sheet 6 of 7

Drilling Contractor: Frontz Drilling, Inc.
Driller: Rob Hamilton
Helpers: Rob Underwood, Ben Williams
Certifying Geologist: Brian Fingers, Geotechnology, Inc.
Logged By: Andrew Wyatt, Herst & Associates, Inc.

LIMESTONE

HERST & ASSOCIATES, INC.®

Hole Number: PZ-210-SD

Rock Log

Local Site Coordinates: 1066824.04 N, 516772.85 E Ground Surface Elevation: 484.48

Project: Bridgeton Landfill Groundwater Assessment Well Installations

Project No.: 120131675

Site Location: Bridgeton, Missouri

Method of Drilling: 6 inch Dia. Air Rotary and Sonic

Rig Type: Versa-Drill Versa Sonic, 50K Sonicor Head

Drilling Date(s): October 15, 2013

J-Joint, F-Fault, S-Shear, B-Bedding, F-Foliation

PL-Planar, C-Curved, U-Undulating, ST-Stepped, I-Irregular

P-Polished, K-Slickensided, SM-Smooth, R-Rough, VR-Very Rough

Fe-Iron, CL-Clay, CaCO3-Calcite

FR-Fresh, SW-Slightly Weathered, MW-Moderately Weathered, HW- Highly Weathered, CW-Completely Weathered

R6- Extremely Strong, R5- Very Strong, R4- Strong, R3- Medium Strong, R2- Weak, R1-Very Weak, R0- Extremely Weak

Depth Scale (feet)	Rock Description	Graphic Log	Run No.	Core Recovery	RQD	Discontinuity Data: Fractures per Foot	Discontinuity Data: Type and Description	Weathering Index (FR SW MW HW CW)	Strength Index (R6 R5 R4 R3 R2 R1 R0)	Temperature Profile (°F)	Notes
233.0											
	233.0 to 234.0 ft. - LIMESTONE, light olive gray (5Y 6/1) and olive gray (5Y 4/1) with medium dark gray (N4) and yellowish gray (5Y 8/1) mottling. Microcrystalline to fine grained; massive to laminated; competent. Requires multiple hammer blows to fracture, but easily scratched with knife. Reactive with 10% HCl solution. Slightly weathered from 233.4 to 233.7 ft; moderate surface discoloration on fractures, weaker along bedding planes, can easily be broken by hand in spots. Moderate surface discoloration of dark yellowish brown (10YR 4/2) and olive gray (5Y 4/1) on fractures.		1 of 2	4.9/5.0	4.6/4.9	3	[233.4] 90°, B, PL, S [233.65] 85°, B, PL, R	FR to SW	R4		20.9% O_2, 0% LEL, 0 ppm.
234.0						0	[233.7] 85°, B, PL, S	FR	R4		
235.0	**234.0 to 235.0 ft.** - LIMESTONE, as above, but light olive gray (5Y 6/1). With pale yellowish brown (10YR 6/2), light gray (N7), and olive gray (5Y 4/1) mottling. Massive. Mineralization at 234.0 ft.									57.1	
	235.0 to 236.0 ft. - LIMESTONE, as above, but pale yellowish brown (10YR 6/2), light olive gray (5Y 4/1). Light gray (N7) mineralization within cavities at 235.5 ft.					0		FR	R4		
236.0											
	236.0 to 237.0 ft. - LIMESTONE, as above, but yellowish gray (5Y 8/1) to light olive gray (5Y 6/1). With light gray (N7) mottling. Slightly weathered at 236.1 ft; surface discoloration on bottom face of fracture, weaker along bedding planes, easily flakes away when scratched with fingernail. Surface discoloration of pale yellowish brown (10YR 6/2) and olive gray (5Y 4/1) on fracture. Massive with lamination around fracture at 236.1 ft.					1	[236.1] 85°, B, PL, R	FR to SW	R4		
237.0											
	237.0 to 238.0 ft. - LIMESTONE, as above, but yellowish gray (5Y 8/1) to light olive gray (5Y 6/1). Color is uniform; little mottling, spotting, or banding.					0		FR	R4		
238.0											20.9% O_2, 0% LEL, 0 ppm.
	238.0 to 239.0 ft. - LIMESTONE, yellowish gray (5Y 8/1), light olive gray (5Y 6/1) and olive gray (5Y 4/1). With moderate yellowish brown (10YR 5/4) and light gray (N8) mottling. Microcrystalline to fine-grained; massive; competent. Requires one or multiple hammer blows to fracture, but easily scratched with knife. Reactive with 10% HCl solution. Laminated from 238.9 ft; weaker (R1 to R2) along bedding planes, easily flakes away when scratched with fingernail.		2 of 2	10.0/10.0	10.0/10.0	0		FR	R4 to R3		
239.0											
	239.0 to 240.0 ft. - LIMESTONE, as above, but with pale yellowish brown (10YR 6/2) and light gray (N8) mottling. Massive to laminated. Slightly weathered at 239.85 ft; surface discoloration on fracture, weaker along bedding planes, can easily be broken by hand in spots. Surface discoloration of brownish gray (5YR 4/1) to olive gray (5Y 4/1) on fracture.					1	[239.85] 80°, B, PL, S	FR to SW	R3		
240.0										56.9	
	240.0 to 241.0 ft. - LIMESTONE, as above, but with light gray (N8) mottling. Slightly weathered from 240.2 to 240.3 ft; weaker along bedding planes, can easily be broken by hand in spots. Moderate surface discoloration of olive gray (5Y 4/1) along planes when broken by hand.					0		FR to SW	R3		
241.0											
	241.0 to 242.0 ft. - LIMESTONE, as above. Slightly weathered at 241.35 ft; weaker along bedding planes, olive gray (5Y 4/1) discoloration on mechanical break surfaces.					0		FR to SW	R3		
242.0											
	242.0 to 243.0 ft. - LIMESTONE, as above, but fine to medium-grained. Slightly weathered at 242-242.1 ft and 242.3 ft; weaker along bedding planes, olive gray (5Y 4/1) discoloration on mechanical break surfaces.					0		FR to SW	R3		
243.0											

Drilling Contractor: Frontz Drilling, Inc.

Driller: Rob Hamilton

Helpers: Rob Underwood, Ben Williams

Certifying Geologist: Brian Fingers, Geotechnology, Inc.

Logged By: Andrew Wyatt, Herst & Associates, Inc.

LIMESTONE

HERST & ASSOCIATES, INC.®

Hole Number: PZ-210-SD

Rock Log

Local Site Coordinates: 1066824.04 N, 516772.85 E Ground Surface Elevation: 484.48

Project: Bridgeton Landfill Groundwater Assessment Well Installations

Project No.: 120131675

Site Location: Bridgeton, Missouri

Method of Drilling: 6 inch Dia. Air Rotary and Sonic

Rig Type: Versa-Drill Versa Sonic, 50K Sonicor Head

Drilling Date(s): October 15, 2013

J-Joint, F-Fault, S-Shear, B-Bedding, F-Foliation

PL-Planar, C-Curved, U-Undulating, ST-Stepped, I-Irregular

P-Polished, K-Slickensided, SM-Smooth, R-Rough, VR-Very Rough

Fe-Iron, CL-Clay, CaCO3-Calcite

FR-Fresh, SW-Slightly Weathered, MW-Moderately Weathered, HW- Highly Weathered, CW-Completely Weathered

R6- Extremely Strong, R5- Very Strong, R4- Strong, R3- Medium Strong, R2- Weak, R1-Very Weak, R0- Extremely Weak

Depth Scale (feet)	Rock Description	Graphic Log	Run No.	Core Recovery	RQD	Discontinuity Data: Fractures per Foot	Discontinuity Data: Type and Description	Weathering Index (FR SW MW HW CW)	Strength Index (R6 R5 R4 R3 R2 R1 R0)	Temperature Profile (°F)	Notes
243.0											
	243.0 to 244.0 ft. - LIMESTONE, as above, but light olive gray (5Y 6/1). With pale yellowish brown (10YR 6/2), olive gray (5Y 4/1) mottling and white (N9), yellowish gray (5Y 8/1), medium bluish gray (5B 5/1) speckling.					0		FR	R3 to R4		
244.0											
	244.0 to 245.0 ft. - LIMESTONE, as above, but also with medium dark gray (N4) mottling.					0		FR	R3 to R4		
245.0										56.9	
	245.0 to 246.0 ft. - LIMESTONE, as above.					0		FR	R3 to R4		
246.0											
	246.0 to 247.0 ft. - LIMESTONE, as above.					0		FR	R3 to R4		
247.0											
	247.0 to 248.0 ft. - LIMESTONE, as above.					0		FR	R3 to R4		
248.0											20.9% O_2, 0% LEL, 0 ppm.
											Boring Depth: 248 ft. bgs.
151.0											
152.0											
153.0											
154.0											
155.0											

Drilling Contractor: Frontz Drilling, Inc.

Driller: Rob Hamilton

Helpers: Rob Underwood, Ben Williams

Certifying Geologist: Brian Fingers, Geotechnology, Inc.

Logged By: Andrew Wyatt, Herst & Associates, Inc.

LIMESTONE

Well Coordinates:
N 1066824.035
E 516773.117

Drilling Contractor: Frontz Drilling
Lead Driller: Rob Hamilton
Drilling Dates: October 15-16, 2013

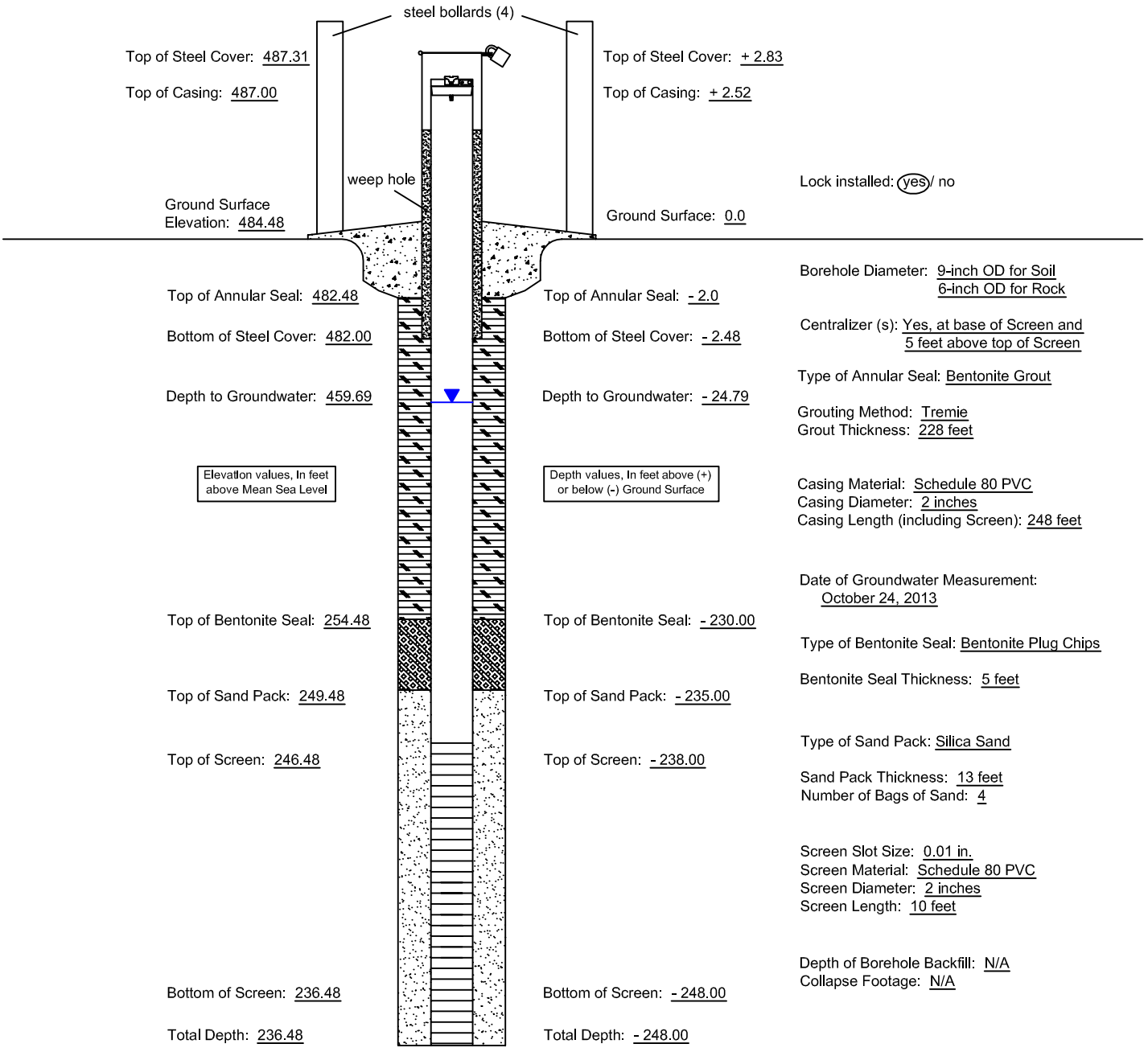

Top of Steel Cover: 487.31
Top of Casing: 487.00
Ground Surface Elevation: 484.48

Top of Steel Cover: + 2.83
Top of Casing: + 2.52
Ground Surface: 0.0

Lock installed: (yes) / no

Top of Annular Seal: 482.48
Bottom of Steel Cover: 482.00
Depth to Groundwater: 459.69

Top of Annular Seal: - 2.0
Bottom of Steel Cover: - 2.48
Depth to Groundwater: - 24.79

Elevation values, In feet above Mean Sea Level

Depth values, In feet above (+) or below (-) Ground Surface

Top of Bentonite Seal: 254.48
Top of Sand Pack: 249.48
Top of Screen: 246.48

Top of Bentonite Seal: - 230.00
Top of Sand Pack: - 235.00
Top of Screen: - 238.00

Bottom of Screen: 236.48
Total Depth: 236.48

Bottom of Screen: - 248.00
Total Depth: - 248.00

(Not to Scale)

Borehole Diameter: 9-inch OD for Soil
6-inch OD for Rock

Centralizer (s): Yes, at base of Screen and 5 feet above top of Screen

Type of Annular Seal: Bentonite Grout

Grouting Method: Tremie
Grout Thickness: 228 feet

Casing Material: Schedule 80 PVC
Casing Diameter: 2 inches
Casing Length (including Screen): 248 feet

Date of Groundwater Measurement:
October 24, 2013

Type of Bentonite Seal: Bentonite Plug Chips

Bentonite Seal Thickness: 5 feet

Type of Sand Pack: Silica Sand

Sand Pack Thickness: 13 feet
Number of Bags of Sand: 4

Screen Slot Size: 0.01 in.
Screen Material: Schedule 80 PVC
Screen Diameter: 2 inches
Screen Length: 10 feet

Depth of Borehole Backfill: N/A
Collapse Footage: N/A

4631 North St. Peters Parkway
St. Charles, Missouri 63304
Phone (636) 939-9111
Fax (636) 939-9757
HERST & ASSOCIATES, INC.®

Bridgeton Landfill
Bridgeton, Missouri

PZ-210-SD
As-Built Diagram

MISSOURI DEPARTMENT OF NATURAL RESOURCES
GEOLOGICAL SURVEY PROGRAM
MONITORING WELL CERTIFICATION RECORD

OFFICE USE ONLY	DATE RECEIVED
REFERENCE NO	
C R NO	CHECK NO
STATE WELL NUMBER	REVENUE NO
ENTERED Ph1 Ph2 Ph3	APPROVED BY / ROUTE

INFORMATION SUPPLIED BY PRIMARY CONTRACTOR OR DRILLING CONTRACTOR
NOTE: THIS FORM IS NOT TO BE USED FOR NESTED WELLS

OWNER NAME: Republic services
CONTACT NAME: Bryan Sehie
VARIANCE GRANTED BY DNR NUMBER:
OWNER ADDRESS: 13570 Saint Charles Rock Rd.
CITY: Bridgeton
STATE: MO
ZIP CODE: 63044
SITE NAME: Bridgeton Sanitary Landfill
WELL NUMBER: PZ-210-SD
COUNTY: Saint Louis
SITE ADDRESS: 13570 Saint Charles Rock Rd.
CITY: Bridgeton
STATIC WATER LEVEL: 27.31

SURFACE COMPLETION
TYPE: ☑ ABOVE GROUND ☐ FLUSH MOUNT
LENGTH AND DIAMETER OF SURFACE COMPLETION: LENGTH 2.5 FT. DIAMETER 5 IN.
DIAMETER AND DEPTH OF THE HOLE SURFACE COMPLETION WAS PLACED: DIAMETER 5 IN. LENGTH 2.5 FT.
SURFACE COMPLETION GROUT: ☑ CONCRETE ☐ OTHER

LOCATION OF WELL (D/M/S FORMAT ONLY)
LAT. 38 · 45 · 49.4 "
LONG. 90 · 26 · 21.8 "

SMALLEST ¼ LARGEST ¼ ¼
SECTION ____ TOWNSHIP 47 NORTH
RANGE 5 ☑ EAST ☐ WEST

MONITORING FOR: (CHECK ALL THAT APPLY)
☑ RADIONUCLIDES ☐ PETROLEUM PRODUCTS ONLY
☐ EXPLOSIVES ☑ METALS ☑ VOC
☑ SVOCS ☑ PESTICIDES/HERBICIDES

PROPOSED USE OF WELL
☐ GAS MIGRATION WELL ☑ OBSERVATION
☐ EXTRACTION WELL ☐ OPEN HOLE
☐ PIEZOMETERS ☐ INJECTION WELL
☐ DIRECT PUSH

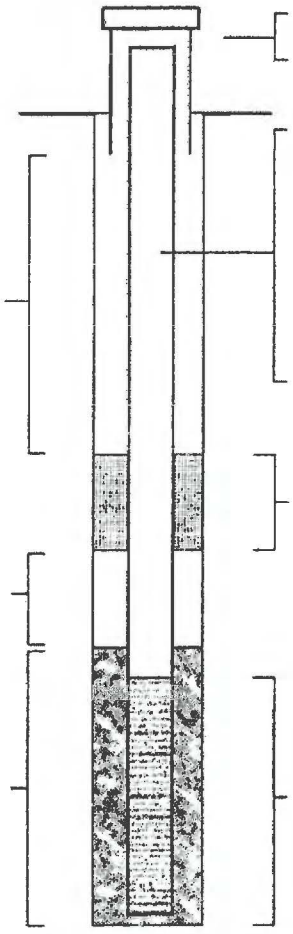

☑ LOCKING CAP
☑ WEEP HOLE
ELEVATION 481.29 FT.

ANNULAR SEAL
LENGTH 228 FT.
☑ SLURRY ☐ CHIPS
☐ PELLETS ☐ GRANULAR
☐ CEMENT/SLURRY
IF CEMENT/BENTONITE MIX:
BAGS OF CEMENT USED ____
% OF BENTONITE USED ____
WATER USED/BAG 360 GAL.

SECONDARY FILTER PACK
LENGTH 0 FT.

DEPTH TO TOP OF PRIMARY FILTER PACK 235 FT.

LENGTH OF PRIMARY FILTER PACK 13 FT.

SURFACE COMPLETION
☑ STEEL ☐ ALUMINUM ☐ PLASTIC

RISER
RISER PIPE DIAMETER 2 IN.
RISER PIPE LENGTH 240 FT.
DIAMETER OF DRILL HOLE 6 IN.
WEIGHT OR SDR# Sch80

MATERIAL
☐ STEEL ☑ THERMOPLASTIC (PVC)
☐ OTHER

BENTONITE SEAL
LENGTH 5 Foot
☑ CHIPS ☐ PELLETS ☐ GRANULAR
☐ SLURRY
☑ SATURATED ZONE ☐ HYDRATED

SCREEN
SCREEN DIAMETER 2 IN.
SCREEN LENGTH 10 FT.
DIAMETER OF DRILL HOLE 6 IN.
DEPTH TO TOP 238 FT.

SCREEN MATERIAL
☐ STEEL ☑ THERMOPLASTIC (PVC)
☐ OTHER

DEPTH TO	DEPTH FROM	FORMATION DESCRIPTION
0'	45'	Silty Clay
45'	248'	Limestone
TOTAL DEPTH:		248 Foot

FOR CASED WELLS, SUBMIT ADDITIONAL AS BUILT DIAGRAMS SHOWING WELL CONSTRUCTION DETAILS INCLUDING TYPE & SIZE OF ALL CASING, HOLE DIAMETER & GROUT USED.

SIGNATURE (PRIMARY CONTACTOR)
PERMIT NUMBER: 003839M
DATE WELL DRILLING WAS COMPELTED: 10-16-13

I HEREBY CERTIFY THAT THE MONITORING WELL HEREIN DESCRIBED WAS CONSTRUCTED IN ACCORDANCE WITH MISSOURI DEPARTMENT OF NATURAL RESOURCES REQUIREMENTS FOR THE CONSTRUCTION OF MONITORING WELLS. ☐ PUMP INSTALLED

SIGNATURE (WELL DRILLER)	PERMIT NUMBER	SIGNATURE (OF APPRENTICE)	APPRENTICE PERMIT NUMBER
	003456-M		

MO 780-1415 (07-11)
DISTRIBUTION: WHITE/DIVISION CANARY/CONTACTOR PINK/OWNER
RETURN WHITE COPY WITH APPROPRIATE FEE TO: MISSOURI DEPARTMENT OF NATURAL RESOURCES, DIVISION OF GEOLOGY AND LAND SURVEY, WELLHEAD PROTECTION SECTION, PO BOX 250, ROLLA, MO 65402 573-368-2165

HERST & ASSOCIATES, INC.®

Hole Number: PZ-211-SS

Rock Log

Local Site Coordinates: 1067061.27 N, 517021.26 E Ground Surface Elevation: 485.05

Project: Bridgeton Landfill Groundwater Assessment Well Installations

Project No.: 120131675

Site Location: Bridgeton, Missouri

Method of Drilling: 6 inch Dia. Air Rotary and Sonic

Rig Type: Versa-Drill Versa Sonic, 50K Sonicor Head

Drilling Date(s): October 7, 2013

J-Joint, F-Fault, S-Shear, B-Bedding, F-Foliation

PL-Planar, C-Curved, U-Undulating, ST-Stepped, I-Irregular

P-Polished, K-Slickensided, SM-Smooth, R-Rough, VR-Very Rough

Fe-Iron, CL-Clay, CaCO3-Calcite

FR-Fresh, SW-Slightly Weathered, MW-Moderately Weathered, HW- Highly Weathered, CW-Completely Weathered

R6- Extremely Strong, R5- Very Strong, R4- Strong, R3- Medium Strong, R2- Weak, R1-Very Weak, R0- Extremely Weak

Depth Scale (feet)	Rock Description	Graphic Log	Run No.	Core Recovery	RQD	Discontinuity Data: Fractures per Foot	Discontinuity Data: Type and Description	Weathering Index (FR SW MW HW CW)	Strength Index (R6 R5 R4 R3 R2 R1 R0)	Temperature Profile (°F)	Notes
0.0	**0.0 to 132.0 ft.** - Blind drilled. No sample collected.									Meter: Solinst Model 107 TLC	Blind-drilled from 0 - 132 ft; no samples collected. 0 - 50 ft drilled via air rotary. O_2 (%), methane (%LEL), and VOCs (ppm) monitored at borehole.
5.0										57.4	
10.0										57.4	20.9% O_2, 0% LEL, 0 ppm.
15.0										57.4	
20.0										57.4	20.9% O_2, 0% LEL, 0.8 ppm (peak).
25.0										57.4	
30.0										57.1	20.9% O_2, 0% LEL, 0 ppm.
35.0										57.1	
40.0										57.1	20.9% O_2, 0% LEL, 0 ppm.
45.0										57.1	
50.0										57.1	

Drilling Contractor: Frontz Drilling, Inc.

Driller: Rob Hamilton

Helpers: Rob Underwood, Ben Williams

Certifying Geologist: Brian Fingers, Geotechnology, Inc.

Logged By: Andrew Wyatt, Herst & Associates, Inc.

LIMESTONE

HERST & ASSOCIATES, INC.®

Hole Number: PZ-211-SS

Rock Log

Local Site Coordinates: 1067061.27 N, 517021.26 E Ground Surface Elevation: 485.05

Project: Bridgeton Landfill Groundwater Assessment Well Installations

Project No.: 120131675

Site Location: Bridgeton, Missouri

Method of Drilling: 6 inch Dia. Air Rotary and Sonic

Rig Type: Versa-Drill Versa Sonic, 50K Sonicor Head

Drilling Date(s): October 7, 2013

J-Joint	PL-Planar	P-Polished	Fe-Iron	FR-Fresh	R6- Extremely Strong
F-Fault	C-Curved	K-Slickensided	CL-Clay	SW-Slightly Weathered	R5- Very Strong
S-Shear	U-Undulating	SM-Smooth	CaCO3-Calcite	MW-Moderately Weathered	R4- Strong
B-Bedding	ST-Stepped	R-Rough		HW- Highly Weathered	R3- Medium Strong
F-Foliation	I-Irregular	VR-Very Rough		CW-Completely Weathered	R2- Weak
					R1-Very Weak
					R0- Extremely Weak

Depth Scale (feet)	Rock Description	Graphic Log	Run No.	Core Recovery	RQD	Discontinuity Data: Fractures per Foot	Discontinuity Data: Type and Description	Weathering Index (FR SW MW HW CW)	Strength Index (R6 R5 R4 R3 R2 R1 R0)	Temperature Profile (°F)	Notes
50.0	**0.0 to 132.0 ft.** - Blind drilled. No sample collected.									57.1	Set temporary 8-in. D casing 5 ft into bedrock. Switched to sonic drilling. Continued drilling through casing. 20.9% O_2, 0% LEL, 0 ppm.
55.0										57.1	
60.0										57.1	20.9% O_2, 0% LEL, 0 ppm..
65.0										57.1	
70.0										57.1	
75.0										57.1	
80.0										57.1	20.9% O_2, 0% LEL, 0 ppm.
85.0										57.1	
90.0										57.1	
95.0										56.9	
100.0										56.9	20.9% O_2, 0% LEL, 0 ppm.

Drilling Contractor: Frontz Drilling, Inc.
Driller: Rob Hamilton
Helpers: Rob Underwood, Ben Williams
Certifying Geologist: Brian Fingers, Geotechnology, Inc.
Logged By: Andrew Wyatt, Herst & Associates, Inc.

LIMESTONE

HERST & ASSOCIATES, INC.®

Hole Number: PZ-211-SS

Rock Log

Local Site Coordinates: 1067061.27 N, 517021.26 E Ground Surface Elevation: 485.05

Project: Bridgeton Landfill Groundwater Assessment Well Installations

Project No.: 120131675

Site Location: Bridgeton, Missouri

Method of Drilling: 6 inch Dia. Air Rotary and Sonic

Rig Type: Versa-Drill Versa Sonic, 50K Sonicor Head

Drilling Date(s): October 7, 2013

J-Joint	PL-Planar	P-Polished	Fe-Iron	FR-Fresh	R6- Extremely Strong
F-Fault	C-Curved	K-Slickensided	CL-Clay	SW-Slightly Weathered	R5- Very Strong
S-Shear	U-Undulating	SM-Smooth	CaCO3-Calcite	MW-Moderately Weathered	R4- Strong
B-Bedding	ST-Stepped	R-Rough		HW- Highly Weathered	R3- Medium Strong
F-Foliation	I-Irregular	VR-Very Rough		CW-Completely Weathered	R2- Weak
					R1-Very Weak
					R0- Extremely Weak

Depth Scale (feet)	Rock Description	Graphic Log	Run No.	Core Recovery	RQD	Discontinuity Data: Fractures per Foot	Discontinuity Data: Type and Description	Weathering Index (FR SW MW HW CW)	Strength Index (R6 R5 R4 R3 R2 R1 R0)	Temperature Profile (°F)	Notes
100.0	**0.0 to 132.0 ft.** - Blind drilled. No sample collected.									56.9	20.9% O_2, 0% LEL, 0 ppm.
105.0											
110.0										56.9	
115.0										56.9	
120.0										56.9	20.9% O_2, 0% LEL, 0 ppm.
125.0										56.7	
130.0										56.7	
132.0											20.9% O_2, 0% LEL, 0 ppm.

Change in scale see sheet 4 of 5

Drilling Contractor: Frontz Drilling, Inc.
Driller: Rob Hamilton
Helpers: Rob Underwood, Ben Williams
Certifying Geologist: Brian Fingers, Geotechnology, Inc.
Logged By: Andrew Wyatt, Herst & Associates, Inc.

LIMESTONE

HERST & ASSOCIATES, INC.®

Hole Number: PZ-211-SS

Rock Log

Local Site Coordinates: 1067061.27 N, 517021.26 E Ground Surface Elevation: 485.05

Project: Bridgeton Landfill Groundwater Assessment Well Installations

Project No.: 120131675

Site Location: Bridgeton, Missouri

Method of Drilling: 6 inch Dia. Air Rotary and Sonic

Rig Type: Versa-Drill Versa Sonic, 50K Sonicor Head

Drilling Date(s): October 7, 2013

J-Joint, F-Fault, S-Shear, B-Bedding, F-Foliation

PL-Planar, C-Curved, U-Undulating, ST-Stepped, I-Irregular

P-Polished, K-Slickensided, SM-Smooth, R-Rough, VR-Very Rough

Fe-Iron, CL-Clay, CaCO3-Calcite

FR-Fresh, SW-Slightly Weathered, MW-Moderately Weathered, HW- Highly Weathered, CW-Completely Weathered

R6- Extremely Strong, R5- Very Strong, R4- Strong, R3- Medium Strong, R2- Weak, R1-Very Weak, R0- Extremely Weak

Depth Scale (feet)	Rock Description	Graphic Log	Run No.	Core Recovery	RQD	Discontinuity Data: Fractures per Foot	Discontinuity Data: Type and Description	Weathering Index (FR SW MW HW CW)	Strength Index (R6 R5 R4 R3 R2 R1 R0)	Temperature Profile (°F)	Notes
132.0											
	132.0 to 133.0 ft. - LIMESTONE, yellowish gray (5Y 8/1) to light olive gray (5Y 6/1). With pale yellowish brown (10YR 6/2), dark yellowish brown (10YR 4/2), dark gray (N3), brownish gray (5YR 4/1), olive gray (5Y 4/1) mottling. Microcrystalline; massive to laminated; competent. Requires multiple hammer blows to fracture, but easily scratched with knife. Reactive with with 10% HCl solution.		1 of 2	4.9 / 5.0	4.9 / 4.9	0		FR	R4		20.9% O_2, 0% LEL, 0 ppm.
133.0											
	133.0 to 134.0 ft. - LIMESTONE, as above, but pale yellowish brown (10YR 6/2), yellowish gray (5Y 8/1), and light olive gray (5Y 6/1). Slightly weathered at 133.8 ft: surface discoloration on fracture, weaker along bedding planes, can easily be broken by hand in spots (R1 to R2). Surface discoloration of olive gray (5Y 4/1) and dark greenish gray (5GY 4/1) on fracture. Light gray(N7) to yellowish gray (5Y 8/1) filling of cavities near fracture; some mineralization.					1	[133.8] 70°, J or B, I, R	FR to SW	R3		
134.0											
	134.0 to 135.0 ft. - LIMESTONE, as above, but yellowish gray (5Y 8/1) to light olive gray (5Y 6/1). With some blotches of greenish gray (5G 6/1). Little mottling or spotting; more uniform in color than above. Massive.					0		FR	R4		
135.0										56.7	
	135.0 to 136.0 ft. - LIMESTONE, as above, but yellowish gray (5Y 8/1), light olive gray (5Y 6/1), and greenish gray (5G 6/1).					0		FR	R3 to R4		
136.0											
	136.0 to 137.0 ft. - LIMESTONE, as above, but with white (N9) spotting. Massive, with some lamination and very thin bedding from 136.6 - 136.8 ft. Moderately healed irregular bedding joints from 136.6 - 136.7 ft. Very light gray (N8), light olive gray (5Y 6/1), and olive gray (5Y 4/1) near joints.					0		FR	R4		
137.0											20.9% O_2, 0% LEL, 0 ppm.
	137.0 to 138.0 ft. - LIMESTONE, light olive gray (5Y 6/1). With pale yellowish brown (10YR 6/2), dark yelloish brown (10YR 4/2), white (N9), medium gray (N5), medium bluish gray (5B 5/1) mottling and spotting. Microcrystalline; massive; competent. Requires one hammer blow to fracture, but easily scratched with knife. Reactive with with 10% HCl solution. Some lamination at 137.8 ft.		2 of 2	9.1 / 10.0	9.1 / 9.1	0		FR	R3		
138.0											
	138.0 to 139.0 ft. - LIMESTONE, as above, but pale yellowish brown (10YR 6/2) and light olive gray (5Y 6/1). With dark yellowish brown (10YR 4/2), white (N9), olive gray (5Y 4/1) mottling. Microcrystalline to fine-grained. Slightly weathered from 138.4 - 138.9 ft: some lamination, weaker along bedding planes, can be broken by hand with difficulty (R2). With olive gray (5Y 4/1) in weathered interval.					0		FR to SW	R3		
139.0											
	139.0 to 140.0 ft. - LIMESTONE, as above, but light olive gray (5Y 6/1). With white (N9), light gray (N7), and olive gray (5Y 4/1) mottling and spots. Microcrystalline to fine-grained; massive to laminated. Possible moderate healing of bedding joints from 139.3 - 139.4 ft.					0		FR	R4		
140.0										56.7	
	140.0 to 141.0 ft. - LIMESTONE, as above, but very light gray (N8), yellowish gray (5Y 8/1), and light olive gray (5Y 6/1). With mottling of olive gray (5Y 4/1) and greenish gray (5G 6/1). Moderately healed irregular bedding joint at 140.3 ft.					0		FR	R4		
141.0											
	141.0 to 142.0 ft. - LIMESTONE, as above, but yellowish gray (5Y 8/1) to light olive gray (5Y 6/1). Little mottling; more uniform in color than above. Microcrystalline; massive.					0		FR	R4		
142.0											

Drilling Contractor: Frontz Drilling, Inc.

Driller: Rob Hamilton

Helpers: Rob Underwood, Ben Williams

Certifying Geologist: Brian Fingers, Geotechnology, Inc.

Logged By: Andrew Wyatt, Herst & Associates, Inc.

LIMESTONE

HERST & ASSOCIATES, INC.®

Hole Number: PZ-211-SS

Rock Log

Local Site Coordinates: 1067061.27 N, 517021.26 E Ground Surface Elevation: 485.05

Project: Bridgeton Landfill Groundwater Assessment Well Installations

Project No.: 120131675

Site Location: Bridgeton, Missouri

Method of Drilling: 6 inch Dia. Air Rotary and Sonic

Rig Type: Versa-Drill Versa Sonic, 50K Sonicor Head

Drilling Date(s): October 7, 2013

J-Joint, F-Fault, S-Shear, B-Bedding, F-Foliation
PL-Planar, C-Curved, U-Undulating, ST-Stepped, I-Irregular
P-Polished, K-Slickensided, SM-Smooth, R-Rough, VR-Very Rough
Fe-Iron, CL-Clay, CaCO3-Calcite
FR-Fresh, SW-Slightly Weathered, MW-Moderately Weathered, HW- Highly Weathered, CW-Completely Weathered
R6- Extremely Strong, R5- Very Strong, R4- Strong, R3- Medium Strong, R2- Weak, R1-Very Weak, R0- Extremely Weak

Depth Scale (feet)	Rock Description	Graphic Log	Run No.	Core Recovery	RQD	Discontinuity Data: Fractures per Foot	Discontinuity Data: Type and Description	Weathering Index (FR SW MW HW CW)	Strength Index (R6 R5 R4 R3 R2 R1 R0)	Temperature Profile (°F)	Notes
142.0											
	142.0 to 143.0 ft. - LIMESTONE, as above, but yellowish gray (5Y 8/1). Fine (< 1 mm) veins, pale green (10G 6/2) and medium bluish gray (5B 5/1).					0		FR	R4		
143.0											
	143.0 to 144.0 ft. - LIMESTONE, as above, but yellowish gray (5Y 8/1). Uniform in color.					0		FR	R4		
144.0											
	144.0 to 145.0 ft. - LIMESTONE, as above.					0		FR	R3		
145.0										56.7	
	145.0 to 146.0 ft. - LIMESTONE, as above, but yellowish gray (5Y 8/1) to light olive gray (5Y 6/1). With olive gray (5Y 4/1), pale yellowish brown (10YR 6/2), white (N9), and medium bluish gray (5B 5/1) spots.					0		FR	R3		
146.0											
	146.0 to 147.0 ft. - LIMESTONE, as above, but with some lamination from 146 - 146.1 ft.					0		FR	R3 to R4		
147.0										56.7	20.9% O_2, 0% LEL, 0 ppm.
											Boring Depth: 147 ft. bgs.
151.0											
152.0											
153.0											
154.0											
155.0											

Drilling Contractor: Frontz Drilling, Inc.
Driller: Rob Hamilton
Helpers: Rob Underwood, Ben Williams
Certifying Geologist: Brian Fingers, Geotechnology, Inc.
Logged By: Andrew Wyatt, Herst & Associates, Inc.

LIMESTONE

Well Coordinates:
N 1067060.785
E 517021.151

Drilling Contractor: Frontz Drilling
Lead Driller: Rob Hamilton
Drilling Dates: October 7-8, 2013

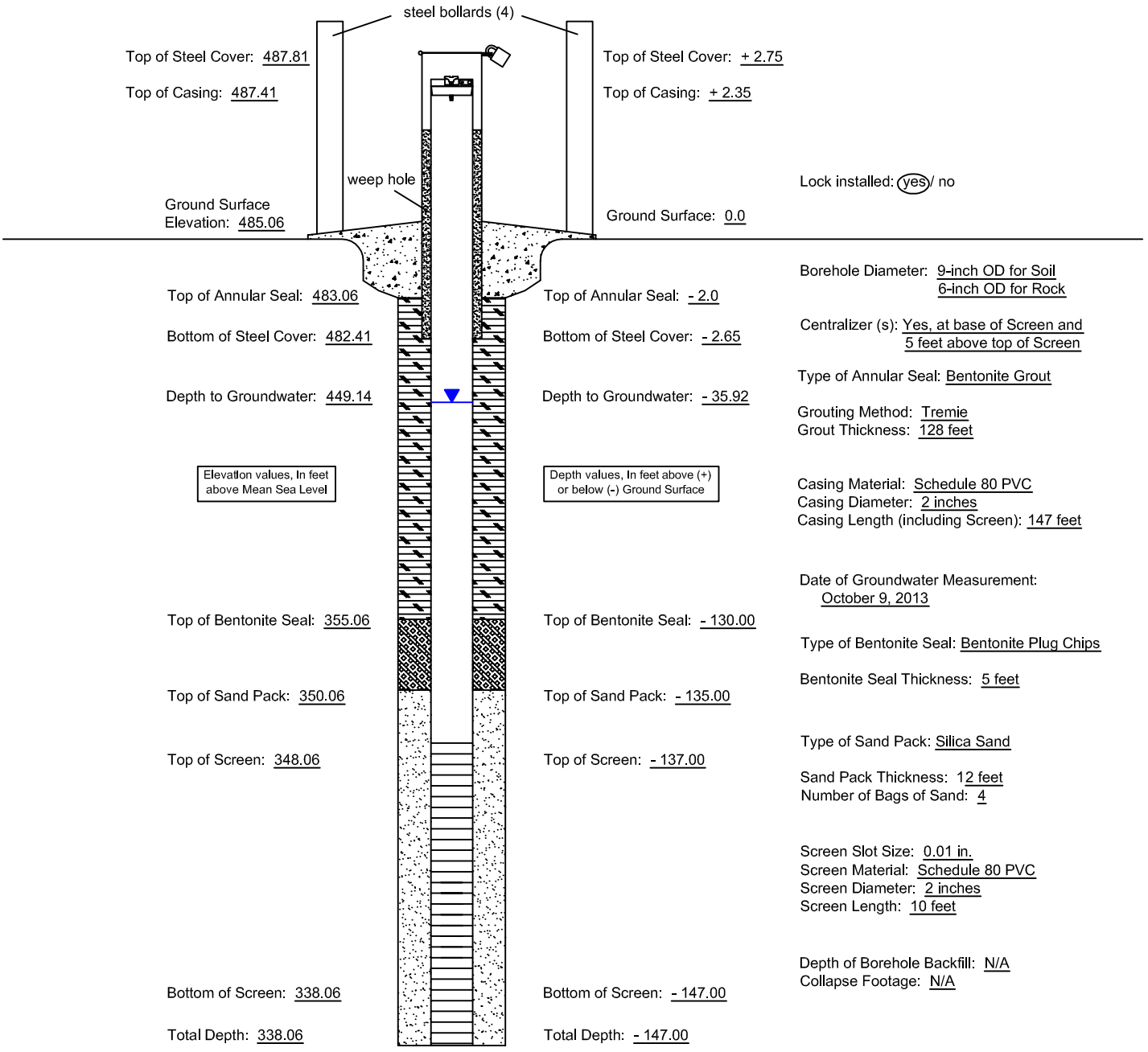

Top of Steel Cover: 487.81
Top of Casing: 487.41
Ground Surface Elevation: 485.06

Top of Steel Cover: + 2.75
Top of Casing: + 2.35
Ground Surface: 0.0

Lock installed: (yes) / no

Top of Annular Seal: 483.06
Bottom of Steel Cover: 482.41
Depth to Groundwater: 449.14

Top of Annular Seal: - 2.0
Bottom of Steel Cover: - 2.65
Depth to Groundwater: - 35.92

Elevation values, In feet above Mean Sea Level

Depth values, In feet above (+) or below (-) Ground Surface

Top of Bentonite Seal: 355.06
Top of Sand Pack: 350.06
Top of Screen: 348.06

Top of Bentonite Seal: - 130.00
Top of Sand Pack: - 135.00
Top of Screen: - 137.00

Bottom of Screen: 338.06
Total Depth: 338.06

Bottom of Screen: - 147.00
Total Depth: - 147.00

(Not to Scale)

Borehole Diameter: 9-inch OD for Soil
6-inch OD for Rock

Centralizer (s): Yes, at base of Screen and 5 feet above top of Screen

Type of Annular Seal: Bentonite Grout

Grouting Method: Tremie
Grout Thickness: 128 feet

Casing Material: Schedule 80 PVC
Casing Diameter: 2 inches
Casing Length (including Screen): 147 feet

Date of Groundwater Measurement:
October 9, 2013

Type of Bentonite Seal: Bentonite Plug Chips

Bentonite Seal Thickness: 5 feet

Type of Sand Pack: Silica Sand

Sand Pack Thickness: 12 feet
Number of Bags of Sand: 4

Screen Slot Size: 0.01 in.
Screen Material: Schedule 80 PVC
Screen Diameter: 2 inches
Screen Length: 10 feet

Depth of Borehole Backfill: N/A
Collapse Footage: N/A

4631 North St. Peters Parkway
St. Charles, Missouri 63304
Phone (636) 939-9111
Fax (636) 939-9757
HERST & ASSOCIATES, INC.®

Bridgeton Landfill
Bridgeton, Missouri

PZ-211-SS
As-Built Diagram

MISSOURI DEPARTMENT OF NATURAL RESOURCES
GEOLOGICAL SURVEY PROGRAM
MONITORING WELL CERTIFICATION RECORD

OFFICE USE ONLY	DATE RECEIVED
REFERENCE NO	
C.R. NO	CHECK NO
STATE WELL NUMBER	REVENUE NO
ENTERED Ph1 Ph2 Ph3	APPROVED BY / ROUTE

INFORMATION SUPPLIED BY PRIMARY CONTRACTOR OR DRILLING CONTRACTOR
NOTE: THIS FORM IS NOT TO BE USED FOR NESTED WELLS

OWNER NAME: Republic Services
CONTACT NAME: Bryan Sehie
VARIANCE GRANTED BY DNR NUMBER:
OWNER ADDRESS: 13570 Saint Charles Rock Rd.
CITY: Bridgeton
STATE: MO
ZIP CODE: 63044
SITE NAME: Bridgeton Sanitary Landfill
WELL NUMBER: PZ-211-55
COUNTY: Saint Louis
SITE ADDRESS: 13570 Saint Charles Rock Rd.
CITY: Bridgeton
STATIC WATER LEVEL: 23.95

SURFACE COMPLETION
TYPE: ☑ ABOVE GROUND ☐ FLUSH MOUNT
LENGTH AND DIAMETER OF SURFACE COMPLETION: LENGTH 2.5 FT. DIAMETER 5 IN.
DIAMETER AND DEPTH OF THE HOLE SURFACE COMPLETION WAS PLACED: DIAMETER 5 IN. LENGTH 2.5 FT.
SURFACE COMPLETION GROUT: ☑ CONCRETE ☐ OTHER

LOCATION OF WELL (D/M/S FORMAT ONLY)
LAT. 38 . 45 . 47.8 "
LONG. 90 . 26 . 34.6 .

SMALLEST ___ ¼ LARGEST ___ ¼ ___ ¼
SECTION ___ TOWNSHIP 47 NORTH
RANGE 5 ☑ EAST ☐ WEST

MONITORING FOR: (CHECK ALL THAT APPLY)
☑ RADIONUCLIDES ☐ PETROLEUM PRODUCTS ONLY
☐ EXPLOSIVES ☑ METALS ☑ VOC
☑ SVOCS ☑ PESTICIDES/HERBICIDES

PROPOSED USE OF WELL
☐ GAS MIGRATION WELL ☑ OBSERVATION
☐ EXTRACTION WELL ☐ OPEN HOLE
☐ PIEZOMETERS ☐ INJECTION WELL
☐ DIRECT PUSH

☑ LOCKING CAP
☑ WEEP HOLE

ELEVATION 485.21 FT.

ANNULAR SEAL
LENGTH 128 FT.
☑ SLURRY ☐ CHIPS
☐ PELLETS ☐ GRANULAR
☐ CEMENT/SLURRY
IF CEMENT/BENTONITE MIX:
BAGS OF CEMENT USED ___
% OF BENTONITE USED ___
WATER USED/BAG 360 GAL.

SECONDARY FILTER PACK
LENGTH 0 FT.

DEPTH TO TOP OF PRIMARY FILTER PACK 135 FT.

LENGTH OF PRIMARY FILTER PACK 12 FT.

SURFACE COMPLETION
☑ STEEL ☐ ALUMINUM ☐ PLASTIC

RISER
RISER PIPE DIAMETER 2 IN.
RISER PIPE LENGTH 139 FT.
DIAMETER OF DRILL HOLE 6 IN.
WEIGHT OR SDR# Sch80

MATERIAL
☐ STEEL ☑ THERMOPLASTIC (PVC)
☐ OTHER

BENTONITE SEAL
LENGTH 5 Foot
☑ CHIPS ☐ PELLETS ☐ GRANULAR
☐ SLURRY
☑ SATURATED ZONE ☐ HYDRATED

SCREEN
SCREEN DIAMETER 2 IN.
SCREEN LENGTH 10 FT.
DIAMETER OF DRILL HOLE 6 IN.
DEPTH TO TOP 137 FT.

SCREEN MATERIAL
☐ STEEL ☑ THERMOPLASTIC (PVC)
☐ OTHER

DEPTH TO	DEPTH FROM	FORMATION DESCRIPTION
0'	45'	Silty Clay
45'	147'	Limestone
TOTAL DEPTH:		147 Foot

FOR CASED WELLS, SUBMIT ADDITIONAL AS BUILT DIAGRAMS SHOWING WELL CONSTRUCTION DETAILS INCLUDING TYPE & SIZE OF ALL CASING, HOLE DIAMETER & GROUT USED.

SIGNATURE (PRIMARY CONTACTOR):
PERMIT NUMBER: 003839-M
DATE WELL DRILLING WAS COMPELTED: 10-8-13

I HEREBY CERTIFY THAT THE MONITORING WELL HEREIN DESCRIBED WAS CONSTRUCTED IN ACCORDANCE WITH MISSOURI DEPARTMENT OF NATURAL RESOURCES REQUIREMENTS FOR THE CONSTRUCTION OF MONITORING WELLS. ☐ PUMP INSTALLED

SIGNATURE (WELL DRILLER):
PERMIT NUMBER: 003456-M
SIGNATURE (OF APPRENTICE):
APPRENTICE PERMIT NUMBER:

MO 780-1415 (07-11)
DISTRIBUTION: WHITE/DIVISION CANARY/CONTACTOR PINK/OWNER
RETURN WHITE COPY WITH APPROPRIATE FEE TO: MISSOURI DEPARTMENT OF NATURAL RESOURCES, DIVISION OF GEOLOGY AND LAND SURVEY, WELLHEAD PROTECTION SECTION, PO BOX 250, ROLLA, MO 65402 573-368-2165

HERST & ASSOCIATES, INC.®

Hole Number: PZ-211-SD

Rock Log

Local Site Coordinates: 1067056.90 N, 517015.98 E Ground Surface Elevation: 484.82

Project: Bridgeton Landfill Groundwater Assessment Well Installations

Project No.: 120131675

Site Location: Bridgeton, Missouri

Method of Drilling: 6 inch Dia. Air Rotary and Sonic

Rig Type: Versa-Drill Versa Sonic, 50K Sonicor Head

Drilling Date(s): October 6, 2013

J-Joint, F-Fault, S-Shear, B-Bedding, F-Foliation

PL-Planar, C-Curved, U-Undulating, ST-Stepped, I-Irregular

P-Polished, K-Slickensided, SM-Smooth, R-Rough, VR-Very Rough

Fe-Iron, CL-Clay, CaCO3-Calcite

FR-Fresh, SW-Slightly Weathered, MW-Moderately Weathered, HW- Highly Weathered, CW-Completely Weathered

R6- Extremely Strong, R5- Very Strong, R4- Strong, R3- Medium Strong, R2- Weak, R1-Very Weak, R0- Extremely Weak

Depth Scale (feet)	Rock Description	Graphic Log	Run No.	Core Recovery	RQD	Discontinuity Data: Fractures per Foot	Discontinuity Data: Type and Description	Weathering Index (FR SW MW HW CW)	Strength Index (R6 R5 R4 R3 R2 R1 R0)	Temperature Profile (°F)	Notes
0.0	**0.0 to 232.0 ft.** - Blind drilled. No sample collected.									Meter: Solinst Model 107 TLC	Blind-drilled from 0 - 232 ft; no samples collected. 0 - 50 ft drilled via air rotary. O_2 (%), methane (%LEL), and VOCs (ppm) monitored at borehole.
5.0										57.9	
10.0										57.6	20.4% O_2, 40% LEL, 18.1 ppm.
15.0										57.6	
20.0										57.6	20.9% O_2, 0% LEL, 0 ppm.
25.0										57.6	
30.0										57.6	
35.0										57.6	
40.0										57.6	
45.0										57.4	Competent bedrock encountered.
50.0										57.4	

Drilling Contractor: Frontz Drilling, Inc.

Driller: Rob Hamilton

Helpers: Rob Underwood, Ben Williams

Certifying Geologist: Brian Fingers, Geotechnology, Inc.

Logged By: Steve Jett, Herst & Associates, Inc.

LIMESTONE

HERST & ASSOCIATES, INC.®

Hole Number: PZ-211-SD

Rock Log

Local Site Coordinates: 1067056.90 N, 517015.98 E Ground Surface Elevation: 484.82

Project: Bridgeton Landfill Groundwater Assessment Well Installations

Project No.: 120131675

Site Location: Bridgeton, Missouri

Method of Drilling: 6 inch Dia. Air Rotary and Sonic

Rig Type: Versa-Drill Versa Sonic, 50K Sonicor Head

Drilling Date(s): October 6, 2013

J-Joint	PL-Planar	P-Polished	Fe-Iron	FR-Fresh	R6- Extremely Strong
F-Fault	C-Curved	K-Slickensided	CL-Clay	SW-Slightly Weathered	R5- Very Strong
S-Shear	U-Undulating	SM-Smooth	CaCO3-Calcite	MW-Moderately Weathered	R4- Strong
B-Bedding	ST-Stepped	R-Rough		HW- Highly Weathered	R3- Medium Strong
F-Foliation	I-Irregular	VR-Very Rough		CW-Completely Weathered	R2- Weak
					R1-Very Weak
					R0- Extremely Weak

Depth Scale (feet)	Rock Description	Graphic Log	Run No.	Core Recovery	RQD	Discontinuity Data: Fractures per Foot	Discontinuity Data: Type and Description	Weathering Index (FR SW MW HW CW)	Strength Index (R6 R5 R4 R3 R2 R1 R0)	Temperature Profile (°F)	Notes
50.0	**0.0 to 232.0 ft.** - Blind drilled. No sample collected.									57.4	Set temporary 8-in. D casing 5 ft into bedrock. Continued drilling through casing.
55.0										57.4	
60.0										57.4	
65.0										57.4	
70.0										57.4	
75.0										57.4	
80.0										57.4	20.9% O_2, 0% LEL, 0 ppm.
85.0										57.4	
90.0										57.4	
95.0										57.4	
100.0										57.4	20.9% O_2, 0% LEL, 0 ppm.

Drilling Contractor: Frontz Drilling, Inc.
Driller: Rob Hamilton
Helpers: Rob Underwood, Ben Williams
Certifying Geologist: Brian Fingers, Geotechnology, Inc.
Logged By: Steve Jett, Herst & Associates, Inc.

LIMESTONE

HERST & ASSOCIATES, INC.®

Hole Number: PZ-211-SD

Rock Log

Local Site Coordinates: 1067056.90 N, 517015.98 E Ground Surface Elevation: 484.82

Project: Bridgeton Landfill Groundwater Assessment Well Installations

Project No.: 120131675

Site Location: Bridgeton, Missouri

Method of Drilling: 6 inch Dia. Air Rotary and Sonic

Rig Type: Versa-Drill Versa Sonic, 50K Sonicor Head

Drilling Date(s): October 6, 2013

J-Joint	PL-Planar	P-Polished	Fe-Iron	FR-Fresh	R6- Extremely Strong
F-Fault	C-Curved	K-Slickensided	CL-Clay	SW-Slightly Weathered	R5- Very Strong
S-Shear	U-Undulating	SM-Smooth	CaCO3-Calcite	MW-Moderately Weathered	R4- Strong
B-Bedding	ST-Stepped	R-Rough		HW- Highly Weathered	R3- Medium Strong
F-Foliation	I-Irregular	VR-Very Rough		CW-Completely Weathered	R2- Weak
					R1-Very Weak
					R0- Extremely Weak

Depth Scale (feet)	Rock Description	Graphic Log	Run No.	Core Recovery	RQD	Discontinuity Data: Fractures per Foot	Discontinuity Data: Type and Description	Weathering Index (FR SW MW HW CW)	Strength Index (R6 R5 R4 R3 R2 R1 R0)	Temperature Profile (°F)	Notes
100.0	**0.0 to 232.0 ft.** - Blind drilled. No sample collected.									57.4	20.9% O_2, 0% LEL, 0 ppm.
105.0										57.4	
110.0										57.4	
115.0										57.4	
120.0										57.4	20.9% O_2, 0% LEL, 0 ppm..
125.0										57.4	
130.0										57.4	
135.0										57.4	
140.0										57.4	20.9% O_2, 0% LEL, 0 ppm.
145.0										57.4	
150.0										57.4	

Drilling Contractor: Frontz Drilling, Inc.
Driller: Rob Hamilton
Helpers: Rob Underwood, Ben Williams
Certifying Geologist: Brian Fingers, Geotechnology, Inc.
Logged By: Steve Jett, Herst & Associates, Inc.

LIMESTONE

HERST & ASSOCIATES, INC.®

Hole Number: PZ-211-SD

Rock Log

Local Site Coordinates: 1067056.90 N, 517015.98 E Ground Surface Elevation: 484.82

Project: Bridgeton Landfill Groundwater Assessment Well Installations

Project No.: 120131675

Site Location: Bridgeton, Missouri

Method of Drilling: 6 inch Dia. Air Rotary and Sonic

Rig Type: Versa-Drill Versa Sonic, 50K Sonicor Head

Drilling Date(s): October 6, 2013

J-Joint, F-Fault, S-Shear, B-Bedding, F-Foliation

PL-Planar, C-Curved, U-Undulating, ST-Stepped, I-Irregular

P-Polished, K-Slickensided, SM-Smooth, R-Rough, VR-Very Rough

Fe-Iron, CL-Clay, CaCO3-Calcite

FR-Fresh, SW-Slightly Weathered, MW-Moderately Weathered, HW- Highly Weathered, CW-Completely Weathered

R6- Extremely Strong, R5- Very Strong, R4- Strong, R3- Medium Strong, R2- Weak, R1-Very Weak, R0- Extremely Weak

Depth Scale (feet)	Rock Description	Graphic Log	Run No.	Core Recovery	RQD	Discontinuity Data: Fractures per Foot	Discontinuity Data: Type and Description	Weathering Index (FR SW MW HW CW)	Strength Index (R6 R5 R4 R3 R2 R1 R0)	Temperature Profile (°F)	Notes
150.0	**0.0 to 232.0 ft.** - Blind drilled. No sample collected.									57.4	
155.0										57.1	
160.0										57.1	20.9% O_2, 0% LEL, 0 ppm.
165.0										57.1	
170.0										56.9	
175.0										56.7	
180.0										56.5	20.9% O_2, 0% LEL, 0 ppm.
185.0										56.5	
190.0										56.2	
195.0										56.2	
200.0										56.2	20.9% O_2, 0% LEL, 0 ppm.

Drilling Contractor: Frontz Drilling, Inc.

Driller: Rob Hamilton

Helpers: Rob Underwood, Ben Williams

Certifying Geologist: Brian Fingers, Geotechnology, Inc.

Logged By: Steve Jett, Herst & Associates, Inc.

LIMESTONE

HERST & ASSOCIATES, INC.®

Hole Number: PZ-211-SD

Rock Log

Local Site Coordinates: 1067056.90 N, 517015.98 E Ground Surface Elevation: 484.82

Project: Bridgeton Landfill Groundwater Assessment Well Installations

Project No.: 120131675

Site Location: Bridgeton, Missouri

Method of Drilling: 6 inch Dia. Air Rotary and Sonic

Rig Type: Versa-Drill Versa Sonic, 50K Sonicor Head

Drilling Date(s): October 6, 2013

J-Joint	PL-Planar	P-Polished	Fe-Iron	FR-Fresh	R6- Extremely Strong
F-Fault	C-Curved	K-Slickensided	CL-Clay	SW-Slightly Weathered	R5- Very Strong
S-Shear	U-Undulating	SM-Smooth	CaCO3-Calcite	MW-Moderately Weathered	R4- Strong
B-Bedding	ST-Stepped	R-Rough		HW- Highly Weathered	R3- Medium Strong
F-Foliation	I-Irregular	VR-Very Rough		CW-Completely Weathered	R2- Weak
					R1-Very Weak
					R0- Extremely Weak

Depth Scale (feet)	Rock Description	Graphic Log	Run No.	Core Recovery	RQD	Discontinuity Data: Fractures per Foot	Discontinuity Data: Type and Description	Weathering Index (FR SW MW HW CW)	Strength Index (R6 R5 R4 R3 R2 R1 R0)	Temperature Profile (°F)	Notes
200.0	**0.0 to 232.0 ft.** - Blind drilled. No sample collected.									56.2	20.9% O_2, 0% LEL, 0 ppm.
205.0										56.2	
210.0										56.2	
215.0										56.2	
220.0										56.2	20.9% O_2, 0% LEL, 0 ppm.
225.0										56.2	
230.0										56.0	
232.0											20.9% O_2, 0% LEL, 0 ppm. Weathered fracture.

Change in scale see sheet 6 of 7

Drilling Contractor: Frontz Drilling, Inc.
Driller: Rob Hamilton
Helpers: Rob Underwood, Ben Williams
Certifying Geologist: Brian Fingers, Geotechnology, Inc.
Logged By: Steve Jett, Herst & Associates, Inc.

LIMESTONE

HERST & ASSOCIATES, INC.®

Hole Number: PZ-211-SD

Rock Log

Local Site Coordinates: 1067056.90 N, 517015.98 E Ground Surface Elevation: 484.82

Project: Bridgeton Landfill Groundwater Assessment Well Installations

Project No.: 120131675

Site Location: Bridgeton, Missouri

Method of Drilling: 6 inch Dia. Air Rotary and Sonic

Rig Type: Versa-Drill Versa Sonic, 50K Sonicor Head

Drilling Date(s): October 6, 2013

J-Joint	PL-Planar	P-Polished	Fe-Iron	FR-Fresh	R6- Extremely Strong
F-Fault	C-Curved	K-Slickensided	CL-Clay	SW-Slightly Weathered	R5- Very Strong
S-Shear	U-Undulating	SM-Smooth	CaCO3-Calcite	MW-Moderately Weathered	R4- Strong
B-Bedding	ST-Stepped	R-Rough		HW- Highly Weathered	R3- Medium Strong
F-Foliation	I-Irregular	VR-Very Rough		CW-Completely Weathered	R2- Weak
					R1-Very Weak
					R0- Extremely Weak

Depth Scale (feet)	Rock Description	Graphic Log	Run No.	Core Recovery	RQD	Discontinuity Data: Fractures per Foot	Discontinuity Data: Type and Description	Weathering Index (FR SW MW HW CW)	Strength Index (R6 R5 R4 R3 R2 R1 R0)	Temperature Profile (°F)	Notes
232.0											
	232.0 to 233.0 ft. - LIMESTONE, medium gray (N6). Medium-grained; massive; competent; fresh.		1 of 2	4.8/5.0	3.2/5.0	1	85°, PL	FR	R5		20.9% O_2, 0% LEL, 0 ppm. Weathered fracture.
233.0						0		FR	R5		
234.0						2	90°, PL; 90°, PL	FR	R5		Weathered fracture with very dark gray deposits; slightly weathered fracture with small amounts of dark gray deposits.
235.0						0		FR	R5	55.6	
236.0						0		FR	R5		
237.0											
	240.0 to 241.0 ft. - LIMESTONE, as above.		2 of 2	9.6/10.0	6.8/10.0	5	90°, PL (all 5)	FR	R5		
238.0						4	90°, PL (all 4)	FR	R5		
239.0						3	80°, PL (all 3)	FR	R5		
240.0						2	90°, PL; 90°, PL	FR	R5	55.4	
241.0						1	90°, PL	FR	R5		
242.0											

Drilling Contractor: Frontz Drilling, Inc.
Driller: Rob Hamilton
Helpers: Rob Underwood, Ben Williams
Certifying Geologist: Brian Fingers, Geotechnology, Inc.
Logged By: Steve Jett, Herst & Associates, Inc.

LIMESTONE

HERST & ASSOCIATES, INC.®

Hole Number: PZ-211-SD

Rock Log

Local Site Coordinates: 1067056.90 N, 517015.98 E Ground Surface Elevation: 484.82

Project: Bridgeton Landfill Groundwater Assessment Well Installations

Project No.: 120131675

Site Location: Bridgeton, Missouri

Method of Drilling: 6 inch Dia. Air Rotary and Sonic

Rig Type: Versa-Drill Versa Sonic, 50K Sonicor Head

Drilling Date(s): October 6, 2013

J-Joint, F-Fault, S-Shear, B-Bedding, F-Foliation

PL-Planar, C-Curved, U-Undulating, ST-Stepped, I-Irregular

P-Polished, K-Slickensided, SM-Smooth, R-Rough, VR-Very Rough

Fe-Iron, CL-Clay, CaCO3-Calcite

FR-Fresh, SW-Slightly Weathered, MW-Moderately Weathered, HW- Highly Weathered, CW-Completely Weathered

R6- Extremely Strong, R5- Very Strong, R4- Strong, R3- Medium Strong, R2- Weak, R1-Very Weak, R0- Extremely Weak

Depth Scale (feet)	Rock Description	Graphic Log	Run No.	Core Recovery	RQD	Discontinuity Data: Fractures per Foot	Discontinuity Data: Type and Description	Weathering Index (FR SW MW HW CW)	Strength Index (R6 R5 R4 R3 R2 R1 R0)	Temperature Profile (°F)	Notes
242.0											
243.0						2	90°, PL; 90°, PL	FR	R5		
244.0						1	90°, PL	FR	R5		
245.0	**244.0 to 245.0 ft.** - LIMESTONE, medium gray (N6) with light brownish gray (5YR 6/1). Medium-grained; massive; competent; fresh.					0		FR	R5	55.6	
246.0	**245.0 to 246.0 ft.** - LIMESTONE, 245.2 to 246 ft. light brownish gray (5YR 6/1) with mixture of dark gray (N4). Medium to coarse-grained; massive; competent; fresh.					2	90°, PL; 90°, PL	FR	R5		
247.0	**246.0 to 247.0 ft.** - LIMESTONE, dark gray (N4). Coarse-grained; massive; competent; fresh.					3	80°, PL; 90°, PL; 75°, PL	FR	R5	55.6	20.9% O_2, 0% LEL, 0 ppm.
248.0											**Boring Depth: 247 ft. bgs.**
249.0											
250.0											
251.0											
252.0											

Drilling Contractor: Frontz Drilling, Inc.

Driller: Rob Hamilton

Helpers: Rob Underwood, Ben Williams

Certifying Geologist: Brian Fingers, Geotechnology, Inc.

Logged By: Steve Jett, Herst & Associates, Inc.

LIMESTONE

Well Coordinates:
N 1067056.698
E 517016.608

Drilling Contractor: Frontz Drilling
Lead Driller: Rob Hamilton
Drilling Dates: October 6-7, 2013

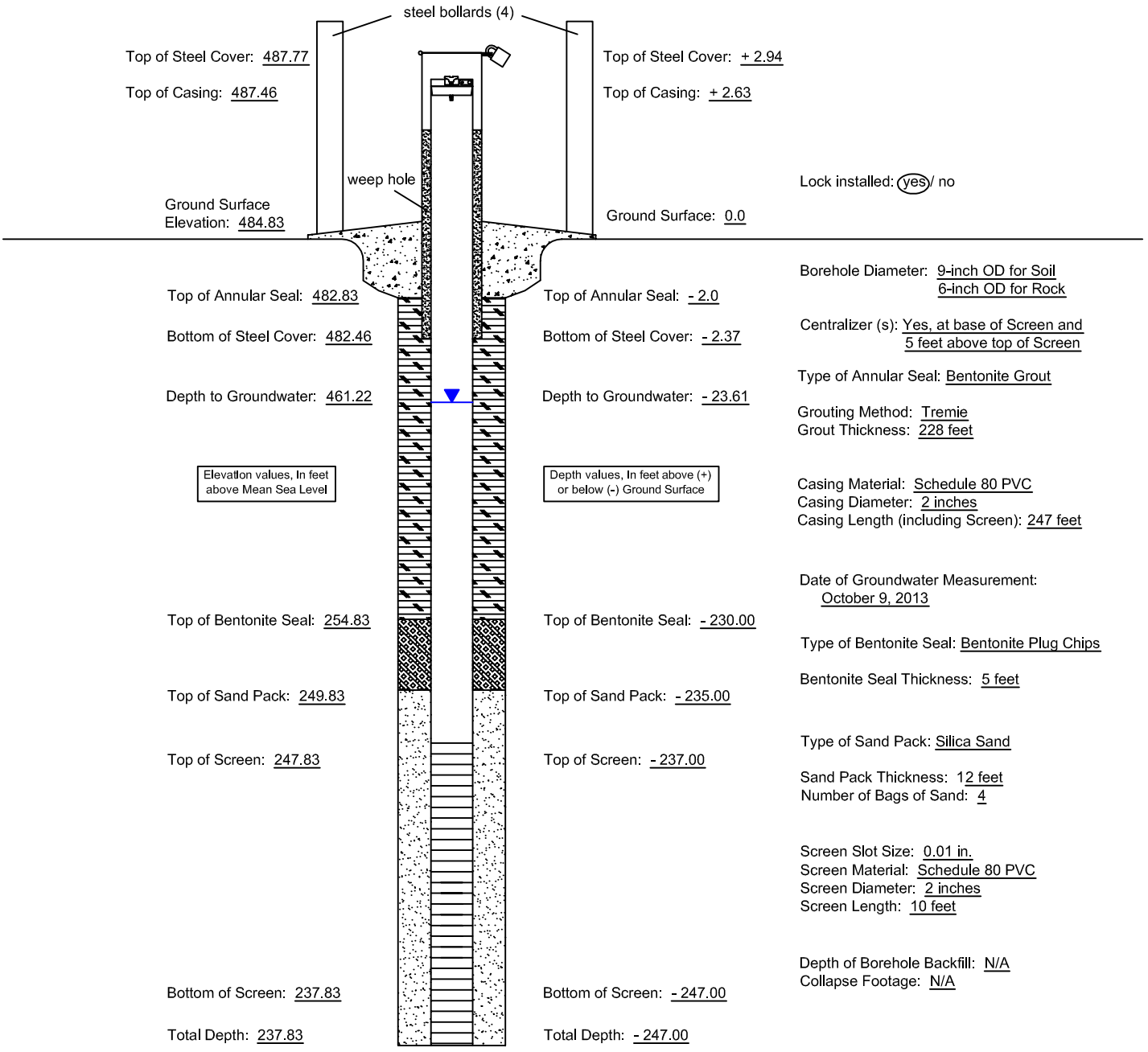

Top of Steel Cover: 487.77
Top of Casing: 487.46
Ground Surface Elevation: 484.83

Top of Steel Cover: + 2.94
Top of Casing: + 2.63
Ground Surface: 0.0

Lock installed: (yes) / no

Top of Annular Seal: 482.83
Bottom of Steel Cover: 482.46
Depth to Groundwater: 461.22

Top of Annular Seal: - 2.0
Bottom of Steel Cover: - 2.37
Depth to Groundwater: - 23.61

Elevation values, In feet above Mean Sea Level

Depth values, In feet above (+) or below (-) Ground Surface

Borehole Diameter: 9-inch OD for Soil
6-inch OD for Rock

Centralizer (s): Yes, at base of Screen and 5 feet above top of Screen

Type of Annular Seal: Bentonite Grout

Grouting Method: Tremie
Grout Thickness: 228 feet

Casing Material: Schedule 80 PVC
Casing Diameter: 2 inches
Casing Length (including Screen): 247 feet

Date of Groundwater Measurement: October 9, 2013

Top of Bentonite Seal: 254.83
Top of Sand Pack: 249.83
Top of Screen: 247.83

Top of Bentonite Seal: - 230.00
Top of Sand Pack: - 235.00
Top of Screen: - 237.00

Type of Bentonite Seal: Bentonite Plug Chips

Bentonite Seal Thickness: 5 feet

Type of Sand Pack: Silica Sand

Sand Pack Thickness: 12 feet
Number of Bags of Sand: 4

Screen Slot Size: 0.01 in.
Screen Material: Schedule 80 PVC
Screen Diameter: 2 inches
Screen Length: 10 feet

Bottom of Screen: 237.83
Total Depth: 237.83

Bottom of Screen: - 247.00
Total Depth: - 247.00

Depth of Borehole Backfill: N/A
Collapse Footage: N/A

(Not to Scale)

4631 North St. Peters Parkway
St. Charles, Missouri 63304
Phone (636) 939-9111
Fax (636) 939-9757
HERST & ASSOCIATES, INC.®

Bridgeton Landfill
Bridgeton, Missouri

PZ-211-SD
As-Built Diagram

MISSOURI DEPARTMENT OF NATURAL RESOURCES
GEOLOGICAL SURVEY PROGRAM
MONITORING WELL CERTIFICATION RECORD

OFFICE USE ONLY	DATE RECEIVED
REFERENCE NO	
C.R. NO	CHECK NO
STATE WELL NUMBER	REVENUE NO
ENTERED Ph1 Ph2 Ph3	APPROVED BY / ROUTE

INFORMATION SUPPLIED BY PRIMARY CONTRACTOR OR DRILLING CONTRACTOR
NOTE THIS FORM IS NOT TO BE USED FOR NESTED WELLS

OWNER NAME: Republic Services
CONTACT NAME: Bryan Sehie
VARIANCE GRANTED BY DNR NUMBER:
OWNER ADDRESS: 13570 Saint Charles Rock Rd.
CITY: Bridgeton
STATE: MO
ZIP CODE: 63044
SITE NAME: Bridgeton Sanitary Landfill
WELL NUMBER: PZ-211-SD
COUNTY: Saint Louis
SITE ADDRESS: 13570 Saint Charles Rock Rd.
CITY: Bridgeton
STATIC WATER LEVEL: 26.24

SURFACE COMPLETION
TYPE: ☑ ABOVE GROUND ☐ FLUSH MOUNT
LENGTH AND DIAMETER OF SURFACE COMPLETION: LENGTH 2.5 FT. DIAMETER 5 IN.
DIAMETER AND DEPTH OF THE HOLE SURFACE COMPLETION WAS PLACED: DIAMETER 5 IN. LENGTH 2.5 FT.
SURFACE COMPLETION GROUT: ☑ CONCRETE ☐ OTHER

LOCATION OF WELL (D/M/S FORMAT ONLY)
LAT. 38 · 45 · 47.8
LONG. 90 · 26 · 30.6

SMALLEST ¼ LARGEST ¼ ¼
SECTION ____ TOWNSHIP 47 NORTH
RANGE 5 ☑ EAST ☐ WEST

MONITORING FOR: (CHECK ALL THAT APPLY)
☑ RADIONUCLIDES ☐ PETROLEUM PRODUCTS ONLY
☐ EXPLOSIVES ☑ METALS ☑ VOC
☑ SVOCS ☑ PESTICIDES/HERBICIDES

PROPOSED USE OF WELL
☐ GAS MIGRATION WELL ☑ OBSERVATION
☐ EXTRACTION WELL ☐ OPEN HOLE
☐ PIEZOMETERS ☐ INJECTION WELL
☐ DIRECT PUSH

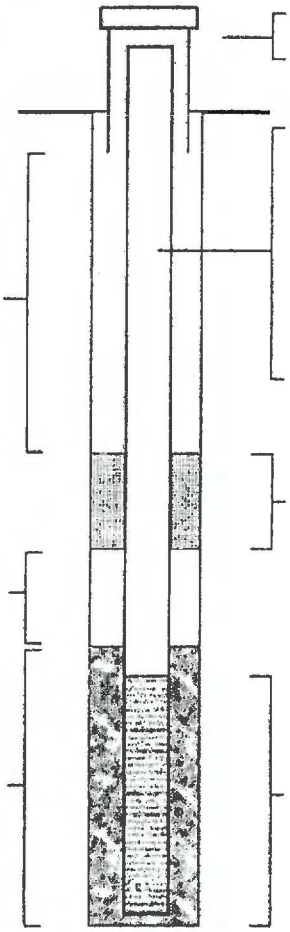

☑ LOCKING CAP
☑ WEEP HOLE
ELEVATION 485.21 FT.

ANNULAR SEAL
LENGTH 228 FT.
☑ SLURRY ☐ CHIPS
☐ PELLETS ☐ GRANULAR
☐ CEMENT/SLURRY
IF CEMENT/BENTONITE MIX:
BAGS OF CEMENT USED ____
% OF BENTONITE USED ____
WATER USED/BAG 440 GAL.

SECONDARY FILTER PACK
LENGTH 0 FT.

DEPTH TO TOP OF PRIMARY FILTER PACK 235 FT.

LENGTH OF PRIMARY FILTER PACK 12 FT.

SURFACE COMPLETION
☑ STEEL ☐ ALUMINUM ☐ PLASTIC

RISER
RISER PIPE DIAMETER 2 IN.
RISER PIPE LENGTH 239 FT.
DIAMETER OF DRILL HOLE 6 IN.
WEIGHT OR SDR# Sch 80

MATERIAL
☐ STEEL ☑ THERMOPLASTIC (PVC)
☐ OTHER

BENTONITE SEAL
LENGTH 5 Foot
☑ CHIPS ☐ PELLETS ☐ GRANULAR
☐ SLURRY
☑ SATURATED ZONE ☐ HYDRATED

SCREEN
SCREEN DIAMETER 2 IN.
SCREEN LENGTH 10 FT.
DIAMETER OF DRILL HOLE 6 IN.
DEPTH TO TOP 237 FT.

SCREEN MATERIAL
☐ STEEL ☑ THERMOPLASTIC (PVC)
☐ OTHER

DEPTH TO	DEPTH FROM	FORMATION DESCRIPTION
0'	45'	Silty Clay
45'	247'	Limestone
TOTAL DEPTH:		247 Foot

FOR CASED WELLS, SUBMIT ADDITIONAL AS BUILT DIAGRAMS SHOWING WELL CONSTRUCTION DETAILS INCLUDING TYPE & SIZE OF ALL CASING, HOLE DIAMETER & GROUT USED.

SIGNATURE (PRIMARY CONTACTOR): [signature]
PERMIT NUMBER: 003859M
DATE WELL DRILLING WAS COMPELTED: 10-7-13

I HEREBY CERTIFY THAT THE MONITORING WELL HEREIN DESCRIBED WAS CONSTRUCTED IN ACCORDANCE WITH MISSOURI DEPARTMENT OF NATURAL RESOURCES REQUIREMENTS FOR THE CONSTRUCTION OF MONITORING WELLS. ☐ PUMP INSTALLED

SIGNATURE (WELL DRILLER): [signature]
PERMIT NUMBER: 003456-M
SIGNATURE (OF APPRENTICE):
APPRENTICE PERMIT NUMBER:

MO 780-1415 (07-11)
DISTRIBUTION: WHITE/DIVISION CANARY/CONTACTOR PINK/OWNER
RETURN WHITE COPY WITH APPROPRIATE FEE TO: MISSOURI DEPARTMENT OF NATURAL RESOURCES, DIVISION OF GEOLOGY AND LAND SURVEY, WELLHEAD PROTECTION SECTION, PO BOX 250, ROLLA, MO 65402 573-368-2165

HERST & ASSOCIATES, INC.®

Hole Number: PZ-212-SS

Rock Log

Local Site Coordinates: 1067490.67 N, 517977.49 E Ground Surface Elevation: 480.15

Project: Bridgeton Landfill Groundwater Assessment Well Installations

Project No.: 120131675

Site Location: Bridgeton, Missouri

Method of Drilling: 6 inch Dia. Air Rotary and Sonic

Rig Type: Versa-Drill Versa Sonic, 50K Sonicor Head

Drilling Date(s): October 18, 2013

J-Joint, F-Fault, S-Shear, B-Bedding, F-Foliation
PL-Planar, C-Curved, U-Undulating, ST-Stepped, I-Irregular
P-Polished, K-Slickensided, SM-Smooth, R-Rough, VR-Very Rough
Fe-Iron, CL-Clay, CaCO3-Calcite
FR-Fresh, SW-Slightly Weathered, MW-Moderately Weathered, HW- Highly Weathered, CW-Completely Weathered
R6- Extremely Strong, R5- Very Strong, R4- Strong, R3- Medium Strong, R2- Weak, R1-Very Weak, R0- Extremely Weak

Depth Scale (feet)	Rock Description	Graphic Log	Run No.	Core Recovery	RQD	Discontinuity Data: Fractures per Foot	Discontinuity Data: Type and Description	Weathering Index (FR SW MW HW CW)	Strength Index (R6 R5 R4 R3 R2 R1 R0)	Temperature Profile (°F)	Notes
0.0	**0.0 to 150.0 ft.** - Blind drilled. No sample collected.									Meter: Solinst Model 107 TLC	Blind-drilled enitire boring; no samples collected. Set 10 feet of 12-inch diameter steel temporary casing, then set 35 feet of 8-inch diameter steel temporary casing. Switched from air rotary to sonic and back as needed. O_2 (%), methane (%LEL), and VOCs (ppm) monitored at borehole.
10.0	Cuttings tan/brown silty clay.										20.3% O_2, 0% LEL, 0 ppm. Very wet cuttings at 10 feet below ground surface.
20.0	Cuttings gray/tan sand, silit, clay.										20.3% O_2, 0% LEL, 0 ppm. Wet cuttings 20 - 30 feet.
30.0	Cuttings contain larage limestone/sandstone cobbles and wood fragments										20.3% O_2, 0% LEL, 0 ppm.
35.0											Appear to hit rock at 34 feet.
40.0											20.3% O_2, 0% LEL, 0 ppm.
50.0											

Drilling Contractor: Frontz Drilling, Inc.
Driller: Rob Hamilton
Helper: Rob Underwood
Certifying Geologist: Brian Fingers, Geotechnology, Inc.
Logged By: Steve Jett, Herst & Associates, Inc.

LIMESTONE

HERST & ASSOCIATES, INC.®

Hole Number: PZ-212-SS

Rock Log

Local Site Coordinates: 1067490.67 N, 517977.49 E Ground Surface Elevation: 480.15

Project: Bridgeton Landfill Groundwater Assessment Well Installations

Project No.: 120131675

Site Location: Bridgeton, Missouri

Method of Drilling: 6 inch Dia. Air Rotary and Sonic

Rig Type: Versa-Drill Versa Sonic, 50K Sonicor Head

Drilling Date(s): October 18, 2013

J-Joint	PL-Planar	P-Polished	Fe-Iron	FR-Fresh	R6- Extremely Strong
F-Fault	C-Curved	K-Slickensided	CL-Clay	SW-Slightly Weathered	R5- Very Strong
S-Shear	U-Undulating	SM-Smooth	CaCO3-Calcite	MW-Moderately Weathered	R4- Strong
B-Bedding	ST-Stepped	R-Rough		HW- Highly Weathered	R3- Medium Strong
F-Foliation	I-Irregular	VR-Very Rough		CW-Completely Weathered	R2- Weak
					R1-Very Weak
					R0- Extremely Weak

Depth Scale (feet)	Rock Description	Graphic Log	Run No.	Core Recovery	RQD	Discontinuity Data: Fractures per Foot	Discontinuity Data: Type and Description	Weathering Index (FR SW MW HW CW)	Strength Index (R6 R5 R4 R3 R2 R1 R0)	Temperature Profile (°F)	Notes
50.0	**0.0 to 150.0 ft.** - Blind drilled. No sample collected.										
55.0											
60.0											20.9% O_2, 0% LEL, 0 ppm.
65.0											
70.0											
75.0											
80.0	Cuttings change from light gray limestone chips to brown sands and gravels.										
85.0											
90.0	Cuttings indicate back into Limestone.										Difficult to keep hole open since gravel appears to keep intruding the hole.
95.0											
100.0											20.9% O_2, 0% LEL, 0 ppm.

Drilling Contractor: Frontz Drilling, Inc.

Driller: Rob Hamilton

Helper: Rob Underwood

Certifying Geologist: Brian Fingers, Geotechnology, Inc.

Logged By: Steve Jett, Herst & Associates, Inc.

LIMESTONE

HERST & ASSOCIATES, INC.®

Hole Number: PZ-212-SS

Rock Log

Local Site Coordinates: 1067490.67 N, 517977.49 E Ground Surface Elevation: 480.15

Project: Bridgeton Landfill Groundwater Assessment Well Installations

Project No.: 120131675

Site Location: Bridgeton, Missouri

Method of Drilling: 6 inch Dia. Air Rotary and Sonic

Rig Type: Versa-Drill Versa Sonic, 50K Sonicor Head

Drilling Date(s): October 18, 2013

J-Joint	PL-Planar	P-Polished	Fe-Iron	FR-Fresh	R6- Extremely Strong
F-Fault	C-Curved	K-Slickensided	CL-Clay	SW-Slightly Weathered	R5- Very Strong
S-Shear	U-Undulating	SM-Smooth	CaCO3-Calcite	MW-Moderately Weathered	R4- Strong
B-Bedding	ST-Stepped	R-Rough		HW- Highly Weathered	R3- Medium Strong
F-Foliation	I-Irregular	VR-Very Rough		CW-Completely Weathered	R2- Weak
					R1-Very Weak
					R0- Extremely Weak

Depth Scale (feet)	Rock Description	Graphic Log	Run No.	Core Recovery	RQD	Discontinuity Data: Fractures per Foot	Discontinuity Data: Type and Description	Weathering Index (FR SW MW HW CW)	Strength Index (R6 R5 R4 R3 R2 R1 R0)	Temperature Profile (°F)	Notes
100.0	**0.0 to 150.0 ft.** - Blind drilled. No sample collected.										20.9% O_2, 0% LEL, 0 ppm.
105.0											
110.0											
115.0											Decided to use this borehole for PZ-212-SS and not core, since can't keep hole open to allow coring devices.
120.0											20.9% O_2, 0% LEL, 0 ppm.
125.0											
130.0											
135.0											
140.0											20.9% O_2, 0% LEL, 0 ppm.
145.0											
150.0											

Drilling Contractor: Frontz Drilling, Inc.

Driller: Rob Hamilton

Helper: Rob Underwood

Certifying Geologist: Brian Fingers, Geotechnology, Inc.

Logged By: Steve Jett, Herst & Associates, Inc.

LIMESTONE

Well Coordinates:
N 1067490.987
E 517976.455

Drilling Contractor: Frontz Drilling
Lead Driller: Rob Hamilton
Drilling Dates: October 18, 2013

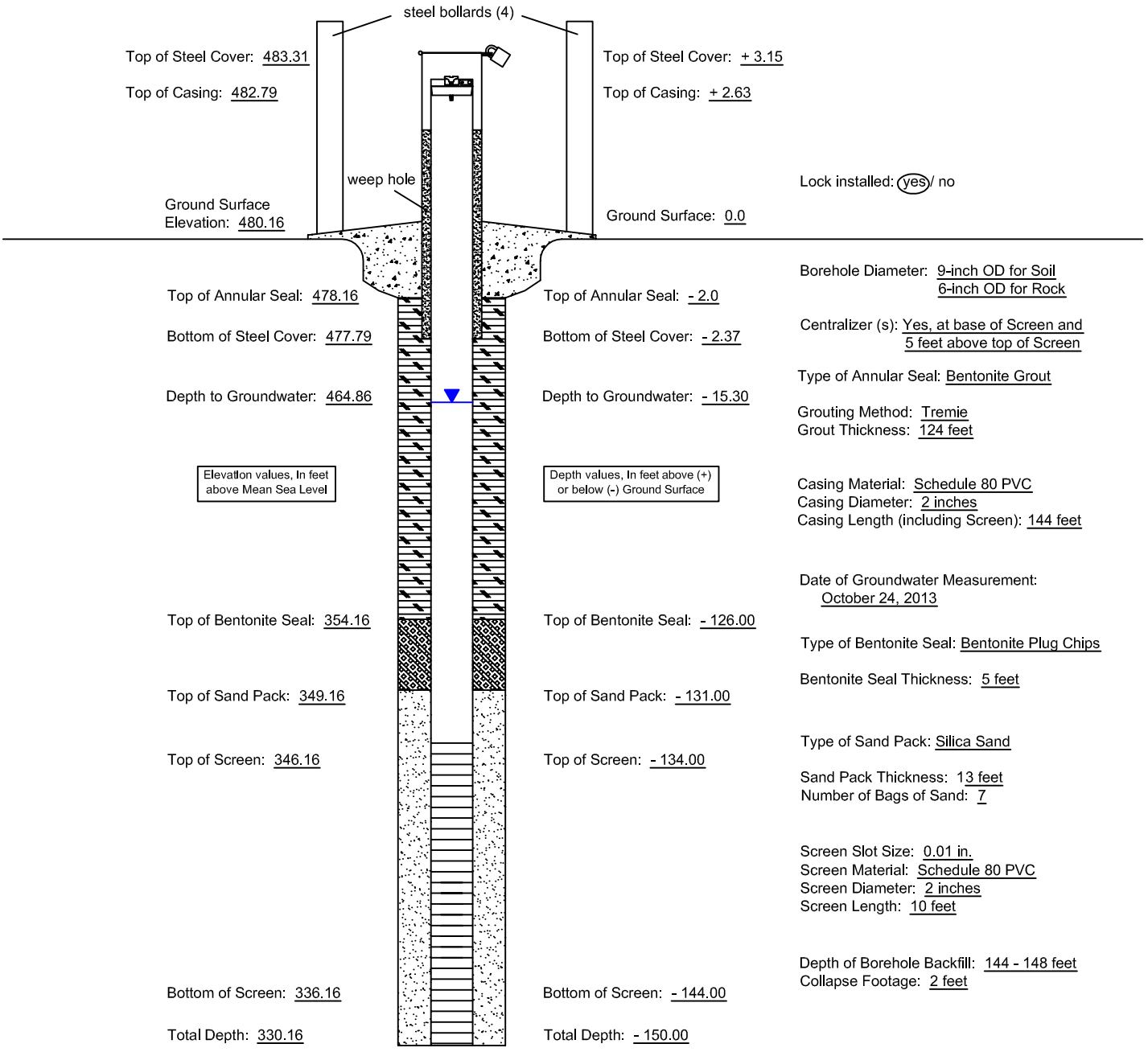

Top of Steel Cover: 483.31
Top of Casing: 482.79
Ground Surface Elevation: 480.16

Top of Steel Cover: + 3.15
Top of Casing: + 2.63
Ground Surface: 0.0

Lock installed: (yes) / no

Top of Annular Seal: 478.16
Bottom of Steel Cover: 477.79
Depth to Groundwater: 464.86

Top of Annular Seal: - 2.0
Bottom of Steel Cover: - 2.37
Depth to Groundwater: - 15.30

Elevation values, In feet above Mean Sea Level

Depth values, In feet above (+) or below (-) Ground Surface

Top of Bentonite Seal: 354.16
Top of Sand Pack: 349.16
Top of Screen: 346.16

Top of Bentonite Seal: - 126.00
Top of Sand Pack: - 131.00
Top of Screen: - 134.00

Bottom of Screen: 336.16
Total Depth: 330.16

Bottom of Screen: - 144.00
Total Depth: - 150.00

(Not to Scale)

Borehole Diameter: 9-inch OD for Soil
6-inch OD for Rock

Centralizer (s): Yes, at base of Screen and 5 feet above top of Screen

Type of Annular Seal: Bentonite Grout

Grouting Method: Tremie
Grout Thickness: 124 feet

Casing Material: Schedule 80 PVC
Casing Diameter: 2 inches
Casing Length (including Screen): 144 feet

Date of Groundwater Measurement:
October 24, 2013

Type of Bentonite Seal: Bentonite Plug Chips

Bentonite Seal Thickness: 5 feet

Type of Sand Pack: Silica Sand

Sand Pack Thickness: 13 feet
Number of Bags of Sand: 7

Screen Slot Size: 0.01 in.
Screen Material: Schedule 80 PVC
Screen Diameter: 2 inches
Screen Length: 10 feet

Depth of Borehole Backfill: 144 - 148 feet
Collapse Footage: 2 feet

4631 North St. Peters Parkway
St. Charles, Missouri 63304
Phone (636) 939-9111
Fax (636) 939-9757
HERST & ASSOCIATES, INC.®

Bridgeton Landfill
Bridgeton, Missouri

PZ-212-SS
As-Built Diagram

PZ-212-SS

MISSOURI DEPARTMENT OF NATURAL RESOURCES
GEOLOGICAL SURVEY PROGRAM
MONITORING WELL CERTIFICATION RECORD

OFFICE USE ONLY	DATE RECEIVED
REFERENCE NO	
C.R. NO	CHECK NO
STATE WELL NUMBER	REVENUE NO
ENTERED Ph1 Ph2 Ph3	APPROVED BY / ROUTE

INFORMATION SUPPLIED BY PRIMARY CONTRACTOR OR DRILLING CONTRACTOR
NOTE: THIS FORM IS NOT TO BE USED FOR NESTED WELLS

OWNER NAME: Republic Services
CONTACT NAME: Bryan Sehie
VARIANCE GRANTED BY DNR NUMBER:
OWNER ADDRESS: 13570 Saint Charles Rock Rd.
CITY: Bridgeton
STATE: MO
ZIP CODE: 63044
SITE NAME: Bridgeton Sanitary Landfill
WELL NUMBER: PZ-212-SS
COUNTY: Saint Louis
SITE ADDRESS: 13570 Saint Charles Rock Rd.
CITY: Bridgeton
STATIC WATER LEVEL: 19.11

SURFACE COMPLETION
TYPE: ☑ ABOVE GROUND ☐ FLUSH MOUNT
LENGTH AND DIAMETER OF SURFACE COMPLETION: LENGTH 2.5 FT. DIAMETER 5 IN.
DIAMETER AND DEPTH OF THE HOLE SURFACE COMPLETION WAS PLACED: DIAMETER 5 IN. LENGTH 2.5 FT.
SURFACE COMPLETION GROUT: ☑ CONCRETE ☐ OTHER

LOCATION OF WELL (D/M/S FORMAT ONLY)
LAT. 38 · 45 · 55.2"
LONG. 90 · 26 · 13"

SMALLEST ¼ LARGEST ¼ ¼
SECTION ____ TOWNSHIP 47 NORTH
RANGE 5 ☑ EAST ☐ WEST

MONITORING FOR: (CHECK ALL THAT APPLY)
☑ RADIONUCLIDES ☐ PETROLEUM PRODUCTS ONLY
☐ EXPLOSIVES ☑ METALS ☑ VOC
☑ CVOCs ☑ PESTICIDES/HERBICIDES

PROPOSED USE OF WELL
☐ GAS MIGRATION WELL ☑ OBSERVATION
☐ EXTRACTION WELL ☐ OPEN HOLE
☐ PIEZOMETERS ☐ INJECTION WELL
☐ DIRECT PUSH

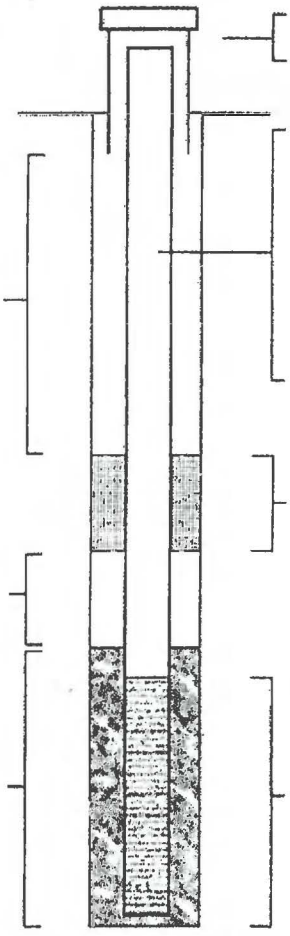

☑ LOCKING CAP
☑ WEEP HOLE
ELEVATION 484.18 FT.

ANNULAR SEAL
LENGTH 124 FT.
☑ SLURRY ☐ CHIPS
☐ PELLETS ☐ GRANULAR
☐ CEMENT/SLURRY
IF CEMENT/BENTONITE MIX:
BAGS OF CEMENT USED ____
% OF BENTONITE USED ____
WATER USED/BAG 380 GAL.

SECONDARY FILTER PACK
LENGTH ____ FT.

DEPTH TO TOP OF PRIMARY FILTER PACK 131 FT.

LENGTH OF PRIMARY FILTER PACK 13 FT.

SURFACE COMPLETION
☑ STEEL ☐ ALUMINUM ☐ PLASTIC

RISER
RISER PIPE DIAMETER 2 IN.
RISER PIPE LENGTH 136 FT.
DIAMETER OF DRILL HOLE 6 IN.
WEIGHT OR SDR# Sch 80

MATERIAL
☐ STEEL ☑ THERMOPLASTIC (PVC)
☐ OTHER

BENTONITE SEAL
LENGTH 5 Foot
☑ CHIPS ☐ PELLETS ☐ GRANULAR
☐ SLURRY
☑ SATURATED ZONE ☐ HYDRATED

SCREEN
SCREEN DIAMETER 2 IN.
SCREEN LENGTH 10 FT.
DIAMETER OF DRILL HOLE 6 IN.
DEPTH TO TOP 134 FT.

SCREEN MATERIAL
☐ STEEL ☑ THERMOPLASTIC (PVC)
☐ OTHER

DEPTH TO	DEPTH FROM	FORMATION DESCRIPTION
0'	34'	Silty clay
34'	80'	Limestone
80'	85'	Sandstone Gravel
85'	144	Limestone
TOTAL DEPTH:		144 Foot

FOR CASED WELLS, SUBMIT ADDITIONAL AS BUILT DIAGRAMS SHOWING WELL CONSTRUCTION DETAILS INCLUDING TYPE & SIZE OF ALL CASING, HOLE DIAMETER & GROUT USED.

SIGNATURE (PRIMARY CONTACTOR) | PERMIT NUMBER 003839M | DATE WELL DRILLING WAS COMPELTED 10-18-13

I HEREBY CERTIFY THAT THE MONITORING WELL HEREIN DESCRIBED WAS CONSTRUCTED IN ACCORDANCE WITH MISSOURI DEPARTMENT OF NATURAL RESOURCES REQUIREMENTS FOR THE CONSTRUCTION OF MONITORING WELLS. ☐ PUMP INSTALLED

SIGNATURE (WELL DRILLER) | PERMIT NUMBER 003456-M | SIGNATURE (OF APPRENTICE) | APPRENTICE PERMIT NUMBER

MO 780-1415 (07-11)
DISTRIBUTION: WHITE/DIVISION CANARY/CONTACTOR PINK/OWNER
RETURN WHITE COPY WITH APPROPRIATE FEE TO: MISSOURI DEPARTMENT OF NATURAL RESOURCES, DIVISION OF GEOLOGY AND LAND SURVEY, WELLHEAD PROTECTION SECTION, PO BOX 250, ROLLA, MO 65402 573-368-2165

HERST & ASSOCIATES, INC.®

Hole Number: PZ-212-SD

Rock Log

Local Site Coordinates: 1067494.79 N, 517980.49 E Ground Surface Elevation: 480.48

Project: Bridgeton Landfill Groundwater Assessment Well Installations

Project No.: 120131675

Site Location: Bridgeton, Missouri

Method of Drilling: 6 inch Dia. Air Rotary and Sonic

Rig Type: Versa-Drill Versa Sonic, 50K Sonicor Head

Drilling Date(s): October 19, 2013

J-Joint, F-Fault, S-Shear, B-Bedding, F-Foliation
PL-Planar, C-Curved, U-Undulating, ST-Stepped, I-Irregular
P-Polished, K-Slickensided, SM-Smooth, R-Rough, VR-Very Rough
Fe-Iron, CL-Clay, CaCO3-Calcite
FR-Fresh, SW-Slightly Weathered, MW-Moderately Weathered, HW- Highly Weathered, CW-Completely Weathered
R6- Extremely Strong, R5- Very Strong, R4- Strong, R3- Medium Strong, R2- Weak, R1-Very Weak, R0- Extremely Weak

Depth Scale (feet)	Rock Description	Graphic Log	Run No.	Core Recovery	RQD	Discontinuity Data: Fractures per Foot	Discontinuity Data: Type and Description	Weathering Index (FR SW MW HW CW)	Strength Index (R6 R5 R4 R3 R2 R1 R0)	Temperature Profile (°F)	Notes
0.0	**0.0 to 129.0 ft.** - Blind drilled. No sample collected.									Meter: Solinst Model 107 TLC	Blind-drilled from 0 - 129 ft; no samples collected. Switched from air rotary to sonic and back as needed. O_2 (%), methane (%LEL), and VOCs (ppm) monitored at borehole.
5.0										60.2	
10.0										60.2	20.9% O_2, 0% LEL, 0 ppm.
15.0										60.2	
20.0										60.2	20.9% O_2, 0% LEL, 0 ppm.
25.0										60.2	
30.0										60.2	20.9% O_2, 0% LEL, 0 ppm.
35.0										60.2	20.9% O_2, 0% LEL, 0 ppm.
40.0										60.2	
45.0										60.2	
50.0										60.5	20.4% O_2, 0% LEL, 0 ppm.

Drilling Contractor: Frontz Drilling, Inc.
Driller: Rob Hamilton
Helper: Rob Underwood
Certifying Geologist: Brian Fingers, Geotechnology, Inc.
Logged By: Andrew Wyatt & Steve Jett Herst & Associates, Inc.

LIMESTONE

HERST & ASSOCIATES, INC.®

Hole Number: PZ-212-SD

Rock Log

Local Site Coordinates: 1067494.79 N, 517980.49 E Ground Surface Elevation: 480.48

Project: Bridgeton Landfill Groundwater Assessment Well Installations

Project No.: 120131675

Site Location: Bridgeton, Missouri

Method of Drilling: 6 inch Dia. Air Rotary and Sonic

Rig Type: Versa-Drill Versa Sonic, 50K Sonicor Head

Drilling Date(s): October 19, 2013

J-Joint, F-Fault, S-Shear, B-Bedding, F-Foliation
PL-Planar, C-Curved, U-Undulating, ST-Stepped, I-Irregular
P-Polished, K-Slickensided, SM-Smooth, R-Rough, VR-Very Rough
Fe-Iron, CL-Clay, CaCO3-Calcite
FR-Fresh, SW-Slightly Weathered, MW-Moderately Weathered, HW- Highly Weathered, CW-Completely Weathered
R6- Extremely Strong, R5- Very Strong, R4- Strong, R3- Medium Strong, R2- Weak, R1-Very Weak, R0- Extremely Weak

Depth Scale (feet)	Rock Description	Graphic Log	Run No.	Core Recovery	RQD	Discontinuity Data: Fractures per Foot	Discontinuity Data: Type and Description	Weathering Index (FR SW MW HW CW)	Strength Index (R6 R5 R4 R3 R2 R1 R0)	Temperature Profile (°F)	Notes
50.0	**0.0 to 129.0 ft.** - Blind drilled. No sample collected.									60.5	20.4% O_2, 0% LEL, 0 ppm.
55.0										60.5	
60.0										60.5	20.9% O_2, 0% LEL, 0 ppm.
65.0										60.5	
70.0										60.5	20.9% O_2, 0% LEL, 0 ppm.
75.0										60.5	
80.0										60.5	Set temporary 8-in. D casing to 80 ft. Continued drilling through casing. 20.9% O_2, 0% LEL, 0 ppm.
85.0										60.5	
90.0										60.5	
95.0										60.7	
100.0										60.7	20.9% O_2, 0% LEL, 0 ppm.

Drilling Contractor: Frontz Drilling, Inc.
Driller: Rob Hamilton
Helper: Rob Underwood
Certifying Geologist: Brian Fingers, Geotechnology, Inc.
Logged By: Andrew Wyatt & Steve Jett Herst & Associates, Inc.

LIMESTONE

HERST & ASSOCIATES, INC.®

Hole Number: PZ-212-SD

Rock Log

Local Site Coordinates: 1067494.79 N, 517980.49 E Ground Surface Elevation: 480.48

Project: Bridgeton Landfill Groundwater Assessment Well Installations

Project No.: 120131675

Site Location: Bridgeton, Missouri

Method of Drilling: 6 inch Dia. Air Rotary and Sonic

Rig Type: Versa-Drill Versa Sonic, 50K Sonicor Head

Drilling Date(s): October 19, 2013

J-Joint	PL-Planar	P-Polished	Fe-Iron	FR-Fresh	R6- Extremely Strong
F-Fault	C-Curved	K-Slickensided	CL-Clay	SW-Slightly Weathered	R5- Very Strong
S-Shear	U-Undulating	SM-Smooth	CaCO3-Calcite	MW-Moderately Weathered	R4- Strong
B-Bedding	ST-Stepped	R-Rough		HW- Highly Weathered	R3- Medium Strong
F-Foliation	I-Irregular	VR-Very Rough		CW-Completely Weathered	R2- Weak
					R1-Very Weak
					R0- Extremely Weak

Depth Scale (feet)	Rock Description	Graphic Log	Run No.	Core Recovery	RQD	Discontinuity Data: Fractures per Foot	Discontinuity Data: Type and Description	Weathering Index (FR SW MW HW CW)	Strength Index (R6 R5 R4 R3 R2 R1 R0)	Temperature Profile (°F)	Notes
100.0	**0.0 to 129.0 ft.** - Blind drilled. No sample collected.									60.7	20.9% O_2, 0% LEL, 0 ppm.
105.0										60.7	
110.0										60.7	
115.0										60.7	
120.0										60.7	21.2% O_2, 0% LEL, 0 ppm.
125.0										60.7	
129.0											20.9% O_2, 0% LEL, 0 ppm.

Change in scale see sheet 4 of 5

Drilling Contractor: Frontz Drilling, Inc.
Driller: Rob Hamilton
Helper: Rob Underwood
Certifying Geologist: Brian Fingers, Geotechnology, Inc.
Logged By: Andrew Wyatt & Steve Jett Herst & Associates, Inc.

LIMESTONE

HERST & ASSOCIATES, INC.®

Hole Number: PZ-212-SD

Rock Log

Local Site Coordinates: 1067494.79 N, 517980.49 E Ground Surface Elevation: 480.48

Project: Bridgeton Landfill Groundwater Assessment Well Installations

Project No.: 120131675

Site Location: Bridgeton, Missouri

Method of Drilling: 6 inch Dia. Air Rotary and Sonic

Rig Type: Versa-Drill Versa Sonic, 50K Sonicor Head

Drilling Date(s): October 19, 2013

J-Joint, F-Fault, S-Shear, B-Bedding, F-Foliation
PL-Planar, C-Curved, U-Undulating, ST-Stepped, I-Irregular
P-Polished, K-Slickensided, SM-Smooth, R-Rough, VR-Very Rough
Fe-Iron, CL-Clay, CaCO3-Calcite
FR-Fresh, SW-Slightly Weathered, MW-Moderately Weathered, HW- Highly Weathered, CW-Completely Weathered
R6- Extremely Strong, R5- Very Strong, R4- Strong, R3- Medium Strong, R2- Weak, R1-Very Weak, R0- Extremely Weak

Depth Scale (feet)	Rock Description	Graphic Log	Run No.	Core Recovery	RQD	Discontinuity Data: Fractures per Foot	Discontinuity Data: Type and Description	Weathering Index (FR SW MW HW CW)	Strength Index (R6 R5 R4 R3 R2 R1 R0)	Temperature Profile (°F)	Notes
129.0											
	129.0 to 130.0 ft. - LIMESTONE, light olive gray (5Y 6/1). With white (N9), greenish gray (5GY 6/1), and olive gray (5GY 4/1) spotting. Microcrystalline to fine-grained; massive; competent. Requires multiple hammer blows to fracture, but easily scratched with knife. Reactive with with 10% HCl solution.		1 of 4	4.7/5.0	4.7/4.7	0		F	R4	60.7	20.9% O_2, 0% LEL, 0 ppm.
130.0											
	130.0 to 131.0 ft. - LIMESTONE, as above, but with some lamination.					0		F	R3		
131.0											
	131.0 to 132.0 ft. - LIMESTONE, as above, but massive. With addition of very light gray (N8) spotting.					0		F	R4		
132.0											
	132.0 to 133.0 ft. - LIMESTONE, as above, but with addition of grenish gray (5G 6/1) spotting.					0		F	R4 to R5		
133.0											
	133.0 to 134.0 ft. - LIMESTONE, as above, but with faint grayish orange (10YR 7/4) staining at 133.5 ft. Some lamination from 133.5 - 133.7 ft. Possible moderately healed planar bedding joints. Olive gray (5Y 4/1) at healed joints.					0		F	R4 to R5		
134.0											20.9% O_2, 0% LEL, 0 ppm.
	134.0 to 135.0 ft. - LIMESTONE, light olive gray (5Y 6/1). With pale yellowish brown (10YR 6/2), white (N9), medium dark gray (N4), and olive gray (5Y 4/1) spotting. Microcrystalline; massive to laminated; competent. Easily broken by hand, easily scratched with knife. Reactive with 10% HCl solution. Slightly weathered: faint moderate yellowish brown (10YR 5/4) staining; weak along bedding planes, crumbly, can be flaked away with fingernail.		2 of 4	10.0/10.0	10.0/10.0	0		F to SW	R2 to R3	60.7	
135.0											
	135.0 to 136.0 ft. - LIMESTONE, as above, but greater lamination and more significant weathering. Surface discoloration of pale yellowish brown (10YR 6/2) and olive gray (5Y 4/1) on fracture.					1	[135.25] 90°, B, U, VR	SW	R2		
136.0											
	136.0 to 137.0 ft. - LIMESTONE, as above, but with white (N9), very light gray (N8), and olive black (5Y 2/1) spotting.					0		F to SW	R2		
137.0											
	137.0 to 138.0 ft. - LIMESTONE, as above, but with addition of pale yellowish brown (10YR 6/2), dark yellowish brown (10YR 4/2), and greenish gray (5G 6/1) spotting.					0		F	R2 to R3		
138.0	**138.0 to 139.0 ft.** - LIMESTONE, as above, but yellowish gray (5Y 8/1), light olive gray (5Y 6/1), and olive gray (5Y 4/1). With pale yellowish brown (10YR 6/2), grayish green (10G 4/2), white (N9), and greenish gray (5GY 6/1) spotting. Microcrystalline to fine-grained. Slightly weathered: weak along bedding planes, crumbly, can be flaked away with fingernail. However, less lamination than above.					0		F to SW	R2		
139.0											

Drilling Contractor: Frontz Drilling, Inc.
Driller: Rob Hamilton
Helper: Rob Underwood
Certifying Geologist: Brian Fingers, Geotechnology, Inc.
Logged By: Andrew Wyatt & Steve Jett Herst & Associates, Inc.

LIMESTONE

HERST & ASSOCIATES, INC.®

Hole Number: PZ-212-SD

Rock Log

Local Site Coordinates: 1067494.79 N, 517980.49 E Ground Surface Elevation: 480.48

Project: Bridgeton Landfill Groundwater Assessment Well Installations

Project No.: 120131675

Site Location: Bridgeton, Missouri

Method of Drilling: 6 inch Dia. Air Rotary and Sonic

Rig Type: Versa-Drill Versa Sonic, 50K Sonicor Head

Drilling Date(s): October 19, 2013

J-Joint	PL-Planar	P-Polished	Fe-Iron	FR-Fresh	R6- Extremely Strong
F-Fault	C-Curved	K-Slickensided	CL-Clay	SW-Slightly Weathered	R5- Very Strong
S-Shear	U-Undulating	SM-Smooth	CaCO3-Calcite	MW-Moderately Weathered	R4- Strong
B-Bedding	ST-Stepped	R-Rough		HW- Highly Weathered	R3- Medium Strong
F-Foliation	I-Irregular	VR-Very Rough		CW-Completely Weathered	R2- Weak
					R1-Very Weak
					R0- Extremely Weak

Depth Scale (feet)	Rock Description	Graphic Log	Run No.	Core Recovery	RQD	Discontinuity Data: Fractures per Foot	Discontinuity Data: Type and Description	Weathering Index (FR SW MW HW CW)	Strength Index (R6 R5 R4 R3 R2 R1 R0)	Temperature Profile (°F)	Notes
139.0											
	139.0 to 140.0 ft. - LIMESTONE, as above, but microcrystalline. Surface discoloration of olive gray (5Y 4/1) on fracture.					1	[139.3] 85°, B P, R	F to SW	R2 to R3		
140.0	**140.0 to 141.0 ft.** - LIMESTONE, as above, but pale yellowish brown (10YR 6/2) and light olive gray (5Y 6/1). With dark yellowish brown (10YR 4/2) and white (N9) spotting.					0		F to SW	R2 to R3		
141.0	**141.0 to 142.0 ft.** - LIMESTONE, as above, but light olive gray (5Y 6/1). With addition of medium gray (N5) and greenish gray (5GY 6/1) mottling. More lamination than above. Very weak along bedding planes, can easily be pulled apart by hand at bedding joints. Surface discoloration of olive gray (5Y 4/1) to dark greenish gray (5GY 4/1) on fracture. Fracture somewhat conchoidal in appearance.					1	[141.7] 85°, B, I, S	F to SW	R2	60.7	
142.0	**142.0 to 143.0 ft.** - LIMESTONE, as above, but with pale yellowish brown (10YR 6/2) and white (N9) spotting; rarely, grayish black (N2) flecks.					0		F to SW	R2		
143.0	**143.0 to 144.0 ft.** - LIMESTONE, as above, but yellowish gray (5Y 8/1) and light olive gray (5Y 6/1). With greenish gray (5GY 6/1) mottling. Faint grayish orange (10YR 7/4) staining from 143.6 - 143.7 ft. Moderately healed planar bedding joint at 143.65 ft. More massive and stronger (R4) after 143.7 ft.					0		F to SW	R2 to R3		
144.0											20.9% O_2, 0% LEL, 0 ppm.

Change in scale see sheet 6 of 7

Boring Depth: 244 ft. bgs.

Drilling Contractor: Frontz Drilling, Inc.
Driller: Rob Hamilton
Helper: Rob Underwood
Certifying Geologist: Brian Fingers, Geotechnology, Inc.
Logged By: Andrew Wyatt & Steve Jett Herst & Associates, Inc.

LIMESTONE

HERST & ASSOCIATES, INC.®

Hole Number: PZ-212-SD

Rock Log

Local Site Coordinates: 1067494.79 N, 517980.49 E Ground Surface Elevation: 480.48

Project: Bridgeton Landfill Groundwater Assessment Well Installations

Project No.: 120131675

Site Location: Bridgeton, Missouri

Method of Drilling: 6 inch Dia. Air Rotary and Sonic

Rig Type: Versa-Drill Versa Sonic, 50K Sonicor Head

Drilling Date(s): October 19, 2013

J-Joint	PL-Planar	P-Polished	Fe-Iron	FR-Fresh	R6- Extremely Strong
F-Fault	C-Curved	K-Slickensided	CL-Clay	SW-Slightly Weathered	R5- Very Strong
S-Shear	U-Undulating	SM-Smooth	CaCO3-Calcite	MW-Moderately Weathered	R4- Strong
B-Bedding	ST-Stepped	R-Rough		HW- Highly Weathered	R3- Medium Strong
F-Foliation	I-Irregular	VR-Very Rough		CW-Completely Weathered	R2- Weak
					R1-Very Weak
					R0- Extremely Weak

Depth Scale (feet)	Rock Description	Graphic Log	Run No.	Core Recovery	RQD	Discontinuity Data: Fractures per Foot	Discontinuity Data: Type and Description	Weathering Index (FR SW MW HW CW)	Strength Index (R6 R5 R4 R3 R2 R1 R0)	Temperature Profile (°F)	Notes
144.0	**144.0 to 229.0 ft.** - Blind drilled. No sample collected.									Meter: Solinst Model 107 TLC	
145.0										60.7	Blind-drilled from 144 - 229 ft; no samples collected; Borehole reamed to 6-inch diameter before setting well. 20.9% O_2, 0% LEL, 0 ppm.
150.0										60.7	
155.0										60.7	
160.0										60.7	
165.0										60.7	
170.0										60.7	
175.0										60.7	
180.0										60.7	
185.0										60.7	
190.0										60.5	20.9% O_2, 0% LEL, 0 ppm.

Drilling Contractor: Frontz Drilling, Inc.

Driller: Rob Hamilton

Helper: Rob Underwood

Certifying Geologist: Brian Fingers, Geotechnology, Inc.

Logged By: Andrew Wyatt & Steve Jett Herst & Associates, Inc.

LIMESTONE

HERST & ASSOCIATES, INC.®

Hole Number: PZ-212-SD

Rock Log

Local Site Coordinates: 1067494.79 N, 517980.49 E Ground Surface Elevation: 480.48

Project: Bridgeton Landfill Groundwater Assessment Well Installations

Project No.: 120131675

Site Location: Bridgeton, Missouri

Method of Drilling: 6 inch Dia. Air Rotary and Sonic

Rig Type: Versa-Drill Versa Sonic, 50K Sonicor Head

Drilling Date(s): October 19, 2013

J-Joint	PL-Planar	P-Polished	Fe-Iron	FR-Fresh	R6- Extremely Strong
F-Fault	C-Curved	K-Slickensided	CL-Clay	SW-Slightly Weathered	R5- Very Strong
S-Shear	U-Undulating	SM-Smooth	CaCO3-Calcite	MW-Moderately Weathered	R4- Strong
B-Bedding	ST-Stepped	R-Rough		HW- Highly Weathered	R3- Medium Strong
F-Foliation	I-Irregular	VR-Very Rough		CW-Completely Weathered	R2- Weak
					R1-Very Weak
					R0- Extremely Weak

Depth Scale (feet)	Rock Description	Graphic Log	Run No.	Core Recovery	RQD	Discontinuity Data: Fractures per Foot	Discontinuity Data: Type and Description	Weathering Index (FR SW MW HW CW)	Strength Index (R6 R5 R4 R3 R2 R1 R0)	Temperature Profile (°F)	Notes
190.0	**0.0 to 129.0 ft.** - Blind drilled. No sample collected.									60.5	20.9% O_2, 0% LEL, 0 ppm.
195.0										60.5	
200.0										60.5	20.9% O_2, 0% LEL, 0 ppm.
205.0										60.5	
210.0										60.2	
215.0										60.2	
220.0										60.2	20.9% O_2, 0% LEL, 0 ppm.
225.0										60.1	
229.0											20.9% O_2, 0% LEL, 0 ppm.

Change in scale see sheet 8 of 9

Drilling Contractor: Frontz Drilling, Inc.
Driller: Rob Hamilton
Helper: Rob Underwood
Certifying Geologist: Brian Fingers, Geotechnology, Inc.
Logged By: Andrew Wyatt & Steve Jett Herst & Associates, Inc.

LIMESTONE

HERST & ASSOCIATES, INC.®

Hole Number: PZ-212-SD

Rock Log

Local Site Coordinates: 1067494.79 N, 517980.49 E Ground Surface Elevation: 480.48

Project: Bridgeton Landfill Groundwater Assessment Well Installations

Project No.: 120131675

Site Location: Bridgeton, Missouri

Method of Drilling: 6 inch Dia. Air Rotary and Sonic

Rig Type: Versa-Drill Versa Sonic, 50K Sonicor Head

Drilling Date(s): October 19, 2013

J-Joint, F-Fault, S-Shear, B-Bedding, F-Foliation
PL-Planar, C-Curved, U-Undulating, ST-Stepped, I-Irregular
P-Polished, K-Slickensided, SM-Smooth, R-Rough, VR-Very Rough
Fe-Iron, CL-Clay, CaCO3-Calcite
FR-Fresh, SW-Slightly Weathered, MW-Moderately Weathered, HW- Highly Weathered, CW-Completely Weathered
R6- Extremely Strong, R5- Very Strong, R4- Strong, R3- Medium Strong, R2- Weak, R1-Very Weak, R0- Extremely Weak

Depth Scale (feet)	Rock Description	Graphic Log	Run No.	Core Recovery	RQD	Discontinuity Data: Fractures per Foot	Discontinuity Data: Type and Description	Weathering Index (FR SW MW HW CW)	Strength Index (R6 R5 R4 R3 R2 R1 R0)	Temperature Profile (°F)	Notes
229.0											
	229.0 to 230.0 ft. - LIMESTONE, medium gray (N6). Medium-grainied, massive; strong		3 of 4	5.0/5.0	3.4/5.0	1	90°, U	F	R5	60.1	20.9% O_2, 0% LEL, 0 ppm.
230.0											
						3	90°, U; 90°, U; 90°, I	F	R5		
231.0											
						2	90°, I; 90°, I	F	R5		
232.0											
						3	90°, I; 45°, I; 45°, I	F	R5		
233.0											
	233.0 to 234.0 ft. - LIMESTONE, as above, but Crystalline (233-234 ft).					1	90°, PL	F	R5		Extremely fractured, majority are 90 degrees and undulating; 1 vertical fracture at 240.1 feet, which is 0.4 ft long.
234.0											
	234.0 to 235.0 ft. - LIMESTONE, gray (N7). Medium-grained and crystalline; massive; strong (where not fractured); laminated to thinly bedded.		4 of 4	10.0/10.0	1.1/10.0	7	90°, U	F	R5	60.1	
235.0											
						10	90°, U	F	R5		
236.0											
						9	90°, U	F	R5		
237.0											
						10	90°, U	F	R5		
238.0											
						10	90°, U	F	R5		
239.0											

Drilling Contractor: Frontz Drilling, Inc.
Driller: Rob Hamilton
Helper: Rob Underwood
Certifying Geologist: Brian Fingers, Geotechnology, Inc.
Logged By: Andrew Wyatt & Steve Jett Herst & Associates, Inc.

LIMESTONE

HERST & ASSOCIATES, INC.®

Hole Number: PZ-212-SD

Rock Log

Local Site Coordinates: 1067494.79 N, 517980.49 E Ground Surface Elevation: 480.48

Project: Bridgeton Landfill Groundwater Assessment Well Installations

Project No.: 120131675

Site Location: Bridgeton, Missouri

Method of Drilling: 6 inch Dia. Air Rotary and Sonic

Rig Type: Versa-Drill Versa Sonic, 50K Sonicor Head

Drilling Date(s): October 19, 2013

J-Joint	PL-Planar	P-Polished	Fe-Iron	FR-Fresh	R6- Extremely Strong
F-Fault	C-Curved	K-Slickensided	CL-Clay	SW-Slightly Weathered	R5- Very Strong
S-Shear	U-Undulating	SM-Smooth	CaCO3-Calcite	MW-Moderately Weathered	R4- Strong
B-Bedding	ST-Stepped	R-Rough		HW- Highly Weathered	R3- Medium Strong
F-Foliation	I-Irregular	VR-Very Rough		CW-Completely Weathered	R2- Weak
					R1-Very Weak
					R0- Extremely Weak

Depth Scale (feet)	Rock Description	Graphic Log	Run No.	Core Recovery	RQD	Discontinuity Data: Fractures per Foot	Discontinuity Data: Type and Description	Weathering Index (FR SW MW HW CW)	Strength Index (R6 R5 R4 R3 R2 R1 R0)	Temperature Profile (°F)	Notes
239.0											
240.0						7	90°, U	F	R5	59.9	
	240.0 to 241.0 ft. - LIMESTONE, tan-gray (5Y 7/2). Aphantitic to fine-grained; massive; strong; dark gray (N5) layers 241.3-241.6 ft and 242.4-243.3 ft).					6	90°, U	F	R5		
241.0											
						3	90°, U	F	R5		
242.0											
						7	90°, U	F	R5		
243.0											
	244.0 ft. - LIMESTONE, aphantitic to fine-grained; massive; strong; dark gray (N5) layers 241.3-241.6 ft and 242.4-243.3 ft).					7	90°, U	F	R5	59.9	Temperature readings in open borehole with no water.
244.0											

Boring Depth: 244 ft. bgs.

Drilling Contractor: Frontz Drilling, Inc.
Driller: Rob Hamilton
Helper: Rob Underwood
Certifying Geologist: Brian Fingers, Geotechnology, Inc.
Logged By: Andrew Wyatt & Steve Jett Herst & Associates, Inc.

LIMESTONE

Well Coordinates:
N 1067495.693
E 517980.384

Drilling Contractor: Frontz Drilling
Lead Driller: Rob Hamilton
Drilling Dates: October 19 - 21, 2013

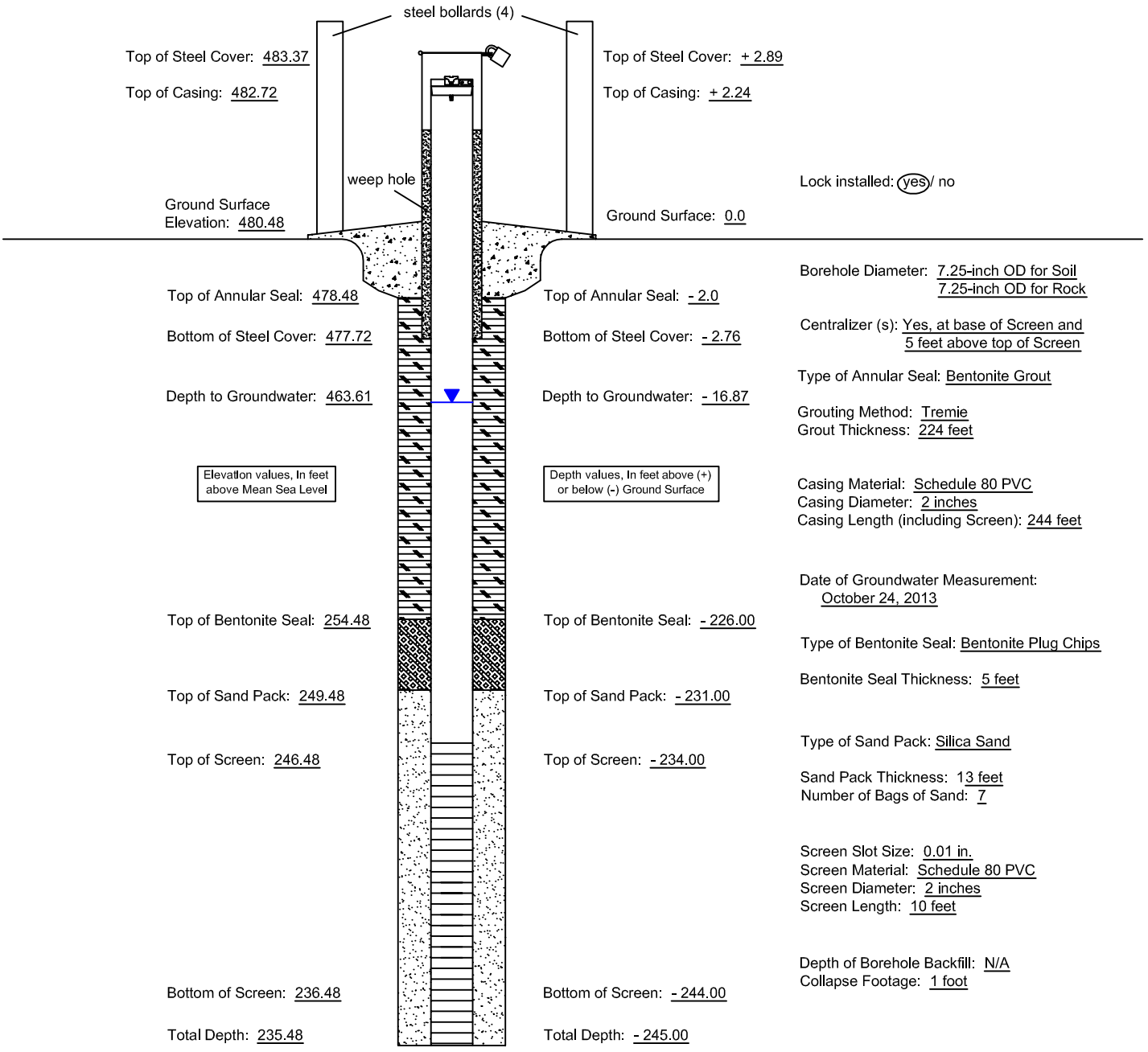

Top of Steel Cover: 483.37
Top of Casing: 482.72
Ground Surface Elevation: 480.48

Top of Steel Cover: + 2.89
Top of Casing: + 2.24
Ground Surface: 0.0

Lock installed: (yes) / no

Top of Annular Seal: 478.48
Bottom of Steel Cover: 477.72
Depth to Groundwater: 463.61

Top of Annular Seal: - 2.0
Bottom of Steel Cover: - 2.76
Depth to Groundwater: - 16.87

Elevation values, In feet above Mean Sea Level

Depth values, In feet above (+) or below (-) Ground Surface

Top of Bentonite Seal: 254.48
Top of Sand Pack: 249.48
Top of Screen: 246.48

Top of Bentonite Seal: - 226.00
Top of Sand Pack: - 231.00
Top of Screen: - 234.00

Bottom of Screen: 236.48
Total Depth: 235.48

Bottom of Screen: - 244.00
Total Depth: - 245.00

(Not to Scale)

Borehole Diameter: 7.25-inch OD for Soil
7.25-inch OD for Rock

Centralizer (s): Yes, at base of Screen and 5 feet above top of Screen

Type of Annular Seal: Bentonite Grout

Grouting Method: Tremie
Grout Thickness: 224 feet

Casing Material: Schedule 80 PVC
Casing Diameter: 2 inches
Casing Length (including Screen): 244 feet

Date of Groundwater Measurement: October 24, 2013

Type of Bentonite Seal: Bentonite Plug Chips

Bentonite Seal Thickness: 5 feet

Type of Sand Pack: Silica Sand

Sand Pack Thickness: 13 feet
Number of Bags of Sand: 7

Screen Slot Size: 0.01 in.
Screen Material: Schedule 80 PVC
Screen Diameter: 2 inches
Screen Length: 10 feet

Depth of Borehole Backfill: N/A
Collapse Footage: 1 foot

4631 North St. Peters Parkway
St. Charles, Missouri 63304
Phone (636) 939-9111
Fax (636) 939-9757
HERST & ASSOCIATES, INC.®

Bridgeton Landfill
Bridgeton, Missouri

PZ-212-SD
As-Built Diagram

MISSOURI DEPARTMENT OF NATURAL RESOURCES
GEOLOGICAL SURVEY PROGRAM
MONITORING WELL CERTIFICATION RECORD

OFFICE USE ONLY	DATE RECEIVED	
REFERENCE NO		
C.R. NO	CHECK NO	
STATE WELL NUMBER	REVENUE NO	
ENTERED Ph1 Ph2 Ph3	APPROVED BY	ROUTE

INFORMATION SUPPLIED BY PRIMARY CONTRACTOR OR DRILLING CONTRACTOR
NOTE: THIS FORM IS NOT TO BE USED FOR NESTED WELLS

OWNER NAME: Republic Services
CONTACT NAME: Bryan Sehie
VARIANCE GRANTED BY DNR NUMBER:
OWNER ADDRESS: 13570 Saint Charles Rock Rd.
CITY: Bridgeton
STATE: MO
ZIP CODE: 63044
SITE NAME: Bridgeton Sanitary Landfill
WELL NUMBER: PZ-212-SD
COUNTY: Saint Louis
SITE ADDRESS: 13570 Saint Charles Rock Rd.
CITY: Bridgeton
STATIC WATER LEVEL: 17.93

SURFACE COMPLETION
TYPE: [x] ABOVE GROUND [ ] FLUSH MOUNT
LENGTH AND DIAMETER OF SURFACE COMPLETION: LENGTH 2.5 FT. DIAMETER 5 IN.
DIAMETER AND DEPTH OF THE HOLE SURFACE COMPLETION WAS PLACED: DIAMETER 5 IN. LENGTH 2.5 FT.
SURFACE COMPLETION GROUT: [x] CONCRETE [ ] OTHER

LOCATION OF WELL (D/M/S FORMAT ONLY)
LAT. 38 . 45 . 55.2"
LONG. 90 . 26 . 19.1"

SMALLEST ¼ LARGEST ¼
SECTION ____ TOWNSHIP 47 NORTH
RANGE 5 [x] EAST [ ] WEST

MONITORING FOR: (CHECK ALL THAT APPLY)
[x] RADIONUCLIDES [ ] PETROLEUM PRODUCTS ONLY
[ ] EXPLOSIVES [x] METALS [x] VOC
[x] SVOCS [x] PESTICIDES/HERBICIDES

PROPOSED USE OF WELL
[ ] GAS MIGRATION WELL [x] OBSERVATION
[ ] EXTRACTION WELL [ ] OPEN HOLE
[ ] PIEZOMETERS [ ] INJECTION WELL
[ ] DIRECT PUSH

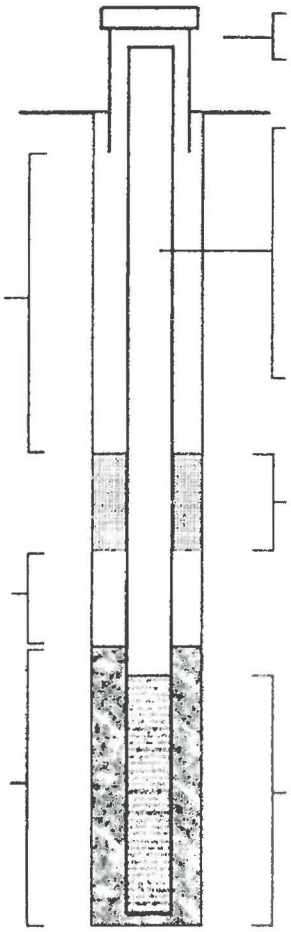

[x] LOCKING CAP
[x] WEEP HOLE
ELEVATION 484.18 FT

ANNULAR SEAL
LENGTH 224 FT.
[x] SLURRY [ ] CHIPS
[ ] PELLETS [ ] GRANULAR
[ ] CEMENT/SLURRY
IF CEMENT/BENTONITE MIX:
BAGS OF CEMENT USED ____
% OF BENTONITE USED ____
WATER USED/BAG 780 GAL.

SECONDARY FILTER PACK
LENGTH 0 FT.

DEPTH TO TOP OF PRIMARY FILTER PACK 231 FT.

LENGTH OF PRIMARY FILTER PACK 13 FT.

SURFACE COMPLETION
[x] STEEL [ ] ALUMINUM [ ] PLASTIC

RISER
RISER PIPE DIAMETER 2 IN.
RISER PIPE LENGTH 236 FT.
DIAMETER OF DRILL HOLE 6 IN.
WEIGHT OR SDR# Sch 80

MATERIAL
[ ] STEEL [x] THERMOPLASTIC (PVC)
[ ] OTHER

BENTONITE SEAL
LENGTH 5 Foot
[x] CHIPS [ ] PELLETS [ ] GRANULAR
[ ] SLURRY
[x] SATURATED ZONE [ ] HYDRATED

SCREEN
SCREEN DIAMETER 2 IN.
SCREEN LENGTH 10 FT.
DIAMETER OF DRILL HOLE 6 IN.
DEPTH TO TOP 234 FT.

SCREEN MATERIAL
[ ] STEEL [x] THERMOPLASTIC (PVC)
[ ] OTHER

DEPTH TO	DEPTH FROM	FORMATION DESCRIPTION
0'	34'	Silty clay
34'	129'	Limestone
129'	244'	Limestone
TOTAL DEPTH:		244 Foot

FOR CASED WELLS, SUBMIT ADDITIONAL AS BUILT DIAGRAMS SHOWING WELL CONSTRUCTION DETAILS INCLUDING TYPE & SIZE OF ALL CASING, HOLE DIAMETER & GROUT USED.

SIGNATURE (PRIMARY CONTACTOR)	PERMIT NUMBER	DATE WELL DRILLING WAS COMPELTED
	003839 M	10-21-13

I HEREBY CERTIFY THAT THE MONITORING WELL HEREIN DESCRIBED WAS CONSTRUCTED IN ACCORDANCE WITH MISSOURI DEPARTMENT OF NATURAL RESOURCES REQUIREMENTS FOR THE CONSTRUCTION OF MONITORING WELLS. [ ] PUMP INSTALLED

SIGNATURE (WELL DRILLER)	PERMIT NUMBER	SIGNATURE (OF APPRENTICE)	APPRENTICE PERMIT NUMBER
	003456-M		

MO 780-1445 (07-11)
DISTRIBUTION: WHITE/DIVISION CANARY/CONTACTOR PINK/OWNER
RETURN WHITE COPY WITH APPROPRIATE FEE TO: MISSOURI DEPARTMENT OF NATURAL RESOURCES, DIVISION OF GEOLOGY AND LAND SURVEY, WELLHEAD PROTECTION SECTION, PO BOX 250, ROLLA, MO 65402 573-368-2165

LAIDLAW WASTE SYSTEMS INC.

SOIL BOREHOLE LOG

SITE NAME AND LOCATION	DRILLING METHOD:	BORING NO.
LAIDLAW/OU2 RI-FS/MO WEST LAKE LANDFILL OPERABLE UNIT 2	4.25 inch I.D./8.25 inch O.D. Hollow Stem Auger	PZ-300-AS
	SAMPLING METHOD:	SHEET 1 OF 2
	SPLIT SPOON: 2.0 inch O.D./1.5 inch I.D. (SP)	DRILLING
	SHELBY TUBE: 3.0 inch O.D./2 13/16 inch I.D. (SH)	START / FINISH

					START	FINISH
WATER LEVEL	11.7 FT.				TIME	TIME
TIME	9:40				8:00	12:00
DATE	9/23/95				DATE	DATE
CASING DEPTH	33.4 FT.				9/22/95	9/22/95

DATUM NORTHING: 1065198.44 EASTING: 513867.83 ELEVATION 448.5

DRILL RIG CME 750

ANGLE 90° BEARING NA

SAMPLE HAMMER

SURFACE CONDITIONS

DEPTH IN FEET (ELEVATION)	BLOW/ 6 IN. ON SAMPLER	RECOVERY	SYMBOL	SAMPLER SYMBOL	SAMPLE NUMBER AND DESCRIPTION OF MATERIAL	SAMPLER TYPE		REMARKS
1	3 5 4 5	1.8'/2.0' (90%)			(0.0-1.5 ft.) Loose, moderate yellowish brown (5YR 5/4), SILT, little to some Clay, NR, damp, (ML), (LOESS)	SP 1		
2	5 6 5 4	1.8'/2.0' (90%)			(1.5-5.0 ft.) Compact, yellowish gray to dusky yellow (5Y 7/2 to 5Y 6/4), SILT, trace Clay, NR, (ML)	SP 2		
3								
4	2 3 2 2	1.6'/2.0' (80%)				SP 3		
5					(5.0-8.5 ft.) Loose, dark yellowish brown (10YR 4/2), CLAYEY SILT, NR, damp, (ML), (LOESS)			
6	1 2 1 2	1.8'/2.0' (90%)				SP 4		
7								
8	2 3 4 5	1.9'/2.0' (95%)			(440.0) 8.5 (8.5-16.5 ft.) Loose, olive gray (5Y 4/1), SILT and CLAY, NR, damp, (CL-ML), (LOESS)	SP 5		
9								
10	1 1 2 3	1.4'/2.0' (70%)				SP 6		
11					@ 11.5 Ft., moist			
12	2 2 2 4	2.0'/2.0' (100%)				SP 7		
13					@ 13.2 Ft., wet			
14	1 2 2 3	2.0'/2.0' (100%)			@ 14.4 Ft., moist	SP 8		

DRILLING CONTR LAYNE-WESTERN

LOGGED BY B. HARRINGTON

DATE 10/9/95 CHK'D BY B. TILTON

JOB NO.: 943-2848

FILENAME: PZ300AS

LAIDLAW WASTE SYSTEMS INC.

SOIL BOREHOLE LOG

SITE NAME AND LOCATION

LAIDLAW/OU2 RI-FS/MO
WEST LAKE LANDFILL
OPERABLE UNIT 2

NORTHING: 1065198.44
DATUM EASTING: 513867.83 ELEVATION 448.5

DRILLING METHOD: 4.25 inch I.D./8.25 inch O.D. Hollow Stem Auger

SAMPLING METHOD:
SPLIT SPOON: 2.0 inch O.D./1.5 inch I.D. (SP)
SHELBY TUBE: 3.0 inch O.D./2 13/16 inch I.D. (SH)

WATER LEVEL	11.7 FT.			
TIME	9:40			
DATE	9/23/95			
CASING DEPTH	33.4 FT.			

BORING NO. PZ-300-AS

SHEET 2 OF 2

DRILLING

START	FINISH
TIME 8:00	TIME 12:00
DATE 9/22/95	DATE 9/22/95

DRILL RIG CME 750

ANGLE 90° BEARING NA

SAMPLE HAMMER

SURFACE CONDITIONS

DEPTH IN FEET (ELEVATION)	BLOW/6 IN. ON SAMPLER	RECOVERY	SYMBOL	SAMPLER SYMBOL	SAMPLE NUMBER AND DESCRIPTION OF MATERIAL	SAMPLER TYPE		REMARKS
16	1 1	2.0' 2.0' (100%)			(8.5-16.5 ft.) Loose, olive gray (5Y 4/1), SILT and CLAY, NR, damp, (CL-ML), (LOESS)	SP 8		
					(432.0) 16.5			
17	1 1				(16.5-20.0 ft.) Very loose, olive gray (5Y 4/1), SILT, trace Clay, NR, wet, (ML), (LOESS)	SP 9		
18	1 2	1.8' 2.0' (90%)				SP 10		
19								
20					(428.5) 20.0			
					End of Soil Borehole Log at 20.0 ft.			
21								
22								
23								
24								
25								
26								
27								
28								
29								

DRILLING CONTR LAYNE-WESTERN

LOGGED BY B. HARRINGTON

DATE 10/9/95 CHK'D BY B. TILTON

JOB NO.: 943-2848

FILENAME: PZ300AS

Well No. PZ-300-AS

Boring No. X-Ref: PZ-300-AS

PIEZOMETER CONSTRUCTION SUMMARY

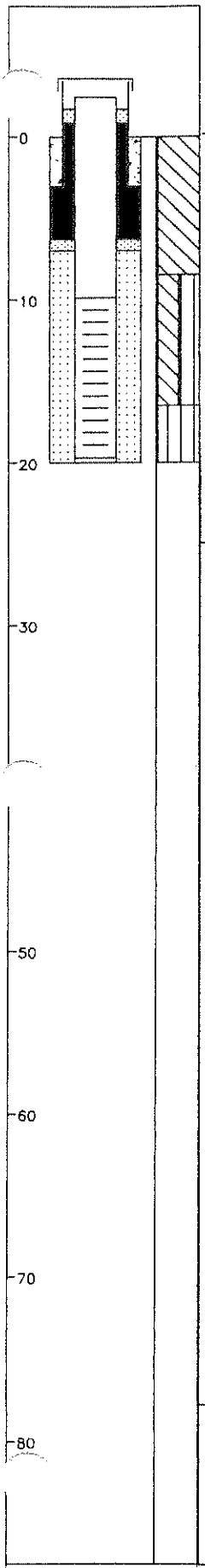

Not to Scale

Survey Coords: Northing: 1065198 ft. Easting: 513868 ft.

Elevation Ground Level 448.5 ft. NGVD

Top of PVC Casing 450.66 ft. NGVD

Drilling Summary:

Total Depth 20.0 ft.

Borehole Diameter 8 1/4" (0.0-20.0')

Casing Stickup Height 2.16 ft.

Driller Layne-Western
St. Louis, MO

Rig CME 750

Bit(s) 4 1/4" ID Hollow Stem Auger Bit

Drilling Fluid None

Protective Casing 8x8" Square Steel, by 5' long

Construction Time log:

Task	Start Date	Start Time	Finish Date	Finish Time
Drilling				
CME 750	9/26/95	16:15	9/26/95	17:00
Geophys.Logging:				
Casing:				
2" I.D. PVC	9/26/95	17:00	9/26/95	17:05
Filter Placement:	9/26/95	17:05	9/26/95	17:15
Cementing:				
Development				
Bentonite Grout				
Bentonite Seal	9/26/95	17:15	9/26/95	17:25

Well Design & Specifications

Basis: Geologic Log X Geophysical Log

Casing string(s): C = Casing S = Screen

Depth			String(s)	Elevation		
+ 2.16	-	9.90	C1	450.66	-	438.60
9.90	-	19.70	S1	438.60	-	428.80
19.70	-	20.00	C2	428.80	-	428.50
	-				-	
	-				-	
	-				-	

Casing: C1 2" dia. Schedule 80 PVC, flush threaded with O-rings

C2 2" dia. threaded PVC end cap (4" long or 0.33')

Screen: S1 2" dia. Schedule 80 PVC, 0.010" machine cut slot, flush threaded with O-rings

Sand Pack: 16-35 mesh Silica Sand 7.0-20.0'

Filter Pack: 100 mesh Silica Sand 6.3-7.0'

Grout Seal:

Bentonite Seal: Extra high yield Wyo-Ben (100%) Slurry 3.0-6.3'

Concrete: 0.0-3.0'

Well Development

Stabilization Test Data:

Time	pH	Spec. Cond.	Temp (°C)

Recovery Data:

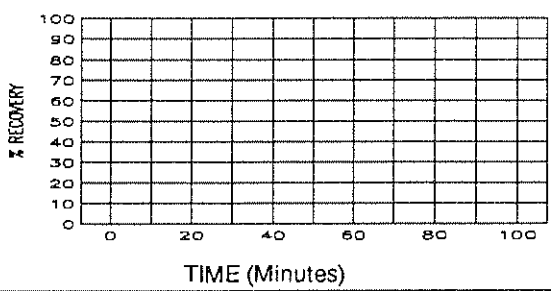

Comments:

Supervised by B. Harrington

Job Number 943-2848

Site LAIDLAW/OU2 RI-FS/MO

File Name PZ300AS

MISSOURI DEPARTMENT OF NATURAL RESOURCES
DIVISION OF GEOLOGY AND LAND SURVEY

MONITORING WELL CERTIFICATION RECORD

OFFICE USE ONLY	DATE RECEIVED
REF. NO. 145095	
C.R. NO.	CHECK NO.
STATE WELL NUMBER	TRANSMITTAL NO.
CHECKED BY	ROUTE
APPROVED BY	ENTERED Ph 1 Ph 2 Ph 3

INFORMATION SUPPLIED BY MONITORING WELL CONTRACTOR

SITE/FACILITY NAME: LAIDLAW BRIDGETON SANITARY LANDFILL
WELL NUMBER: PZ-300AS
SITE ADDRESS: ST. CHARLES ROCK ROAD
CITY: BRIDGETON
STATE: Mo
ZIP CODE: 63044
OWNER NAME: LAIDLAW WASTE SYSTEMS, INC.
TELEPHONE: 314-241-3740
OWNER ADDRESS: 1838 N. BROADWAY
CITY: ST. LOUIS
STATE: Mo
ZIP CODE: 63102

VARIANCE ISSUED: ☐ YES ☒ NO
DATE ISSUED:
VARIANCE NUMBER: V

DESCRIBE LOCATION OF THE WELL SO WE WOULD BE ABLE TO VISIT IT
1100' S.W. OF BANK OF LEACHATE RETENSION POND, SOUTH OF OLD ST. CHARLES ROCK RD.

LOCATION OF WELL
SHOW LOCATION IN SECTION PLAT
COUNTY: ST. LOUIS
SURFACE ELEVATION: 448.5
SMALLEST ¼ ____ ¼ ____ ¼ LARGEST ¼ ____ ¼
SEC. ____ TWN. 47 N,RNG. 5 (E OR W)
LAT. 38 ° 45 ' 32 " LONG. 90 ° 27 ' 05 "

MONITORING WELL INSTALLATION CONTRACTOR'S NAME: LAYNE WESTERN CO., INC. — PERMIT NUMBER: 001258 WPM
DRILLING CONTRACTOR'S NAME: LAYNE WESTERN CO., INC. — PERMIT NUMBER: 001258 WPM

WELL CONSTRUCTION INFORMATION

TYPE OF WELL: ☐ MONITORING WELL ☒ PIEZOMETER ☐ OTHER
TYPE OF POTENTIAL SITE: ☐ HAZARDOUS MATERIAL ☒ LANOFILL ☐ OTHER ☐ L.U.S.T.
MONITORING FOR: (CHECK ALL THAT APPLY) ☒ V.O.C. ☐ METALS ☐ PETROLEUM PRODUCT ☐ OTHER ONLY

PROTECTIVE CASING DETAILS (IF USED):
LENGTH: 5' FT.
DIAMETER OF CASING: 8"x8" IN.
WEIGHT OR SDR #: 0188"
DIAMETER AND DEPTH OF DRILL HOLE: 8¼ IN. 20 FT.
JOINTS: ☐ THREADED ☐ MECHANICAL ☐ WELDED ☐ OTHER
MATERIAL: ☐ THERMO PLASTIC ☒ STEEL ☐ FLUORO POLYMER TYPE
LOCKING CAP? ☒ YES ☐ NO

CAP VENTED: ☒ YES ☐ NO
WEEP HOLE? ☒ YES ☐ NO
CASING GROUT DETAILS: MATERIAL: ☐ CEMENT ☒ CONCRETE ☐ OTHER
DEPTH FROM THE SURFACE TO THE BOTTOM OF THE CASING GROUT SEAL: 2.5 FT.
TYPE OF SURFACE COMPLETION: ☒ ABOVE GROUND ☐ FLUSH MOUNT
DESCRIBE HOW THE FLUSH MOUNT WAS CONSTRUCTED

CENTRALIZER USED ON RISER: ☒ NO ☐ YES LOCATED AT
MATERIAL: ☐ STAINLESS STEEL ☐ OTHER

RISER PIPE DETAILS:
LENGTH: 12 FT.
DIAMETER OF RISER PIPE: 2 IN.
WEIGHT OR SDR #: SCH.40
DIAMETER OF DRILL HOLE: 8¼ IN.
JOINTS: ☒ THREADED ☐ MECHANICAL ☐ WELDED ☐ OTHER
MATERIAL: ☒ THERMO PLASTIC ☐ STEEL ☐ FLUORO POLYMER ☐ OTHER

ANNULAR SEAL: ☐ CEMENT SLURRY ☐ BENTONITE SLURRY ☒ NON SLURRY BENTONITE TYPE: MED. CHIPS ☐ CEMENT/BENTONITE SLURRY BAGS OF CEMENT USED % BENTONITE USED WATER USED/BAG GAL.
BENTONITE SEAL: MATERIAL: BENTONITE ☐ SLURRY ☒ CHIPS ☐ GRANULAR ☐ PELLETS
LENGTH OF SEAL: 3.8
BENTONITE SEAL INSTALLED IN: ☒ UNSATURATED ZONE ☐ SATURATED ZONE

	TYPE	GRAIN SIZE	LENGTH OF FILTER PACK	METHOD OF INSTALLATION	Information in this column to be supplied in the Feet from Surface column	FEET FROM SURFACE	FORMATION DESCRIPTION
PRIMARY FILTER PACK	☒ SAND ☐ MANUFACTURED ☐ NATURAL	16/35	13 FT.	POURED THRU H.S.A.			
SECONDARY FILTER PACK	☒ SAND ☐ MANUFACTURED ☐ NONE	100	0.7 FT.	POURED THRU H.S.A.	Depth to Bottom of Protective Casing Seal:	2.5	0-20 silty clay
WELL SCREEN	LENGTH OF SCREEN: 10 FT.	DIAMETER: 2 IN.	SLOT SIZE: 0.010	WEIGHT OR SDR #: SCH.40	MATERIAL: ☒ PLASTIC ☐ STEEL ☐ FLUORO POLYMER	Depth to Base of Annular Seal:	6.3	
SUMP DETAILS	LENGTH OF SUMP	DIAMETER OF SUMP	MATERIAL: ☐ PVC ☐ STEEL ☐ FLUORO POLYMER ☐ OTHER			Depth to Base of Bentonite Seal:	6.3	
BACK FILL	WAS THE WELL BACK FILLED? ☐ YES ☒ NO	MATERIAL USED	LENGTH OF BACK FILLED BORE HOLE			Depth to Top of Primary Filter Pack:	7.0	
						Depth to Top of the Screen:	10	
						Depth to Bottom of the Screen:	20	
						Total Depth:	20	

STATIC WATER LEVEL FEET FROM MEASURING POINT
DATE OF STATIC WATER LEVEL
MEASURING POINT FOR STATIC WATER LEVEL IS: ☒ TOP OF RISER PIPE ☐ OTHER
ELEVATION OF MEASURING POINT: 450.66
MULTIPLE CASED WELLS: SUBMIT ADDITIONAL AS BUILT DIAGRAM SHOWING WELL CONSTRUCTION DETAILS INCLUDING TYPE AND SIZE OF ALL CASING, HOLE DIAMETERS, AND GROUT USED.
DRILLING EQUIPMENT: ☐ AIR ROTARY ☒ AUGER TYPE 4¼ H.S.A. ☐ REVERSE ROTARY ☐ OTHER
DATE WELL DRILLING WAS COMPLETED: 9-26-95

I HEREBY CERTIFY THAT THE MONITORING WELL HEREIN DESCRIBED WAS CONSTRUCTED IN ACCORDANCE WITH THE DEPARTMENT OF NATURAL RESOURCES REQUIREMENTS FOR THE CONSTRUCTION OF MONITORING WELLS.

SIGNATURE PRIMARY CONTRACTOR/PERMIT #	DATE	SIGNATURE DRILLER/PERMIT #	DATE
[signature]	11-14-95	[signature]	11-14-95

MO 780-1415 (7-95)

DISTRIBUTION: WHITE/DIVISION CANARY/MONITORING WELL CONTRACTOR PINK/OWNER
MAIL WHITE COPY TO: DEPARTMENT OF NATURAL RESOURCES, P.O. BOX 250, ROLLA, MO 65402
ENCLOSE $35 PER MONITORING WELL FOR THE CERTIFICATION FEE WITHIN 60 DAYS AFTER WELL COMPLETION

RECYCLED PAPER

SOIL BOREHOLE LOG

LAIDLAW WASTE SYSTEMS INC.

SITE NAME AND LOCATION

LAIDLAW/OU2 RI-FS/MO
WEST LAKE LANDFILL
OPERABLE UNIT 2

NORTHING: 1065213.84
DATUM EASTING: 513828.06 ELEVATION 448.1

DRILLING METHOD:
4.25 inch I.D. Hollow Stem Auger
3.625 inch Mud Rotary

SAMPLING METHOD:
SPLIT SPOON: 2.0 inch O.D./1.5 inch I.D. (SP)
SHELBY TUBE: 3.0 inch O.D./2 13/16 inch I.D. (SH)

					DRILLING START	DRILLING FINISH
WATER LEVEL						
TIME					13:00	16:00
DATE					9/24/95	9/24/95
CASING DEPTH						

BORING NO. PZ-300-AD

SHEET 1 OF 1

DRILL RIG CME 750

ANGLE 90° BEARING NA

SAMPLE HAMMER

SURFACE CONDITIONS

DEPTH IN FEET (ELEVATION)	BLOW/6 IN. ON SAMPLER	RECOVERY	SYMBOL	SAMPLER SYMBOL	SAMPLE NUMBER AND DESCRIPTION OF MATERIAL	SAMPLER TYPE	REMARKS
31	0 0 0 2	2.0' / 2.0' (100%)			(0.0-30.0 ft.) No samples collected, see Soil Borehole Log PZ-300-SS for descriptions (30.0-39.7 ft.) Very loose, olive gray (5Y 4/1), SILT, trace fine Sand, NR, wet, (ML), (LOESS)	SP ①	
32	0 1 3 4	1.6' / 2.0' (80%)				SP ②	
33							
34	0 0 1 2	1.9' / 2.0' (95%)				SP ③	
35							
36	0 0 0 2	2.0' / 2.0' (100%)				SP ④	
37							
38	0 0 0 2	2.0' / 2.0' (100%)				SP ⑤	
39					(408.4) 39.7		
40	1 2 3 3	1.5' / 2.0' (75%)			(39.7-42.2 ft.) Loose, olive gray (5Y 4/1), f-m SAND, NR, wet, (SP), (ALLUVIUM)	SP ⑥	
41							
42	2 50	0.7' / 2.0' (35%)			(405.9) 42.2 (42.2-42.8 ft.) Loose, light olive gray (5Y 5/2), well graded SAND, NR, wet, (SW), (ALLUVIUM)	SP ⑦	
43					(42.8-43.0 ft.) Very dense, very light gray (N5), highly weathered LIMESTONE bedrock, SR, wet, (WEATHERED BEDROCK) (405.3) 42.8 End of Soil Borehole Log at 42.8 ft.		
44							

DRILLING CONTR LAYNE-WESTERN

LOGGED BY B. HARRINGTON

DATE 10/9/95 CHK'D BY B. TILTON

JOB NO.: 943-2848

FILENAME: PZ300AD

Well No. PZ-300-AD

Boring No. X-Ref: PZ-300-AD

PIEZOMETER CONSTRUCTION SUMMARY

Survey Coords: Northing: 1065214 ft.
Easting: 513828 ft.

Elevation Ground Level 448.1 ft. NGVD
Top of PVC Casing 449.62 ft. NGVD

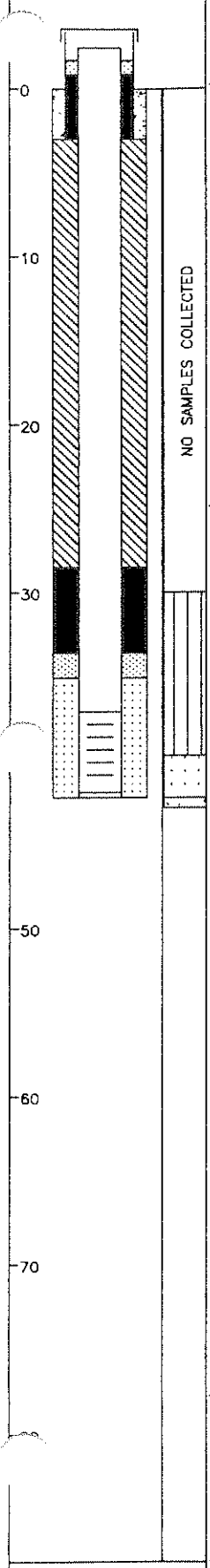

Not to Scale

Drilling Summary:

Total Depth 42.2 ft.
Borehole Diameter 8 1/4" (0.0-42.2')
Casing Stickup Height 1.52 ft.
Driller Layne-Western
St. Louis, MO

Rig CME 750
Bit(s) 4 1/4" ID Hollow Stem Auger Bit

Drilling Fluid None

Protective Casing 8x8" Square Steel, by 5' long

Construction Time log:

Task	Start Date	Start Time	Finish Date	Finish Time
Drilling				
CME 750	9/24/95	13:00	9/24/95	16:00
Geophys.Logging:				
Casing:				
2" I.D. PVC	9/24/95	17:05	9/24/95	17:10
Filter Placement:	9/24/95	17:10	9/24/95	18:15
Cementing:				
Development				
Bentonite Grout	9/24/95	18:20	9/24/95	18:45
Bentonite Seal	9/24/95	18:15	9/24/95	18:20

Well Design & Specifications

Basis: Geologic Log X Geophysical Log

Casing string(s): C = Casing S = Screen

Depth			String(s)	Elevation		
+ 1.52	-	37.10	C1	449.62	-	411.00
37.10	-	41.90	S1	411.00	-	406.20
41.90	-	42.20	C2	406.20	-	405.90
	-				-	
	-				-	
	-				-	

Casing: C1 2" dia. Schedule 80 PVC, flush threaded with O-rings
C2 2" dia. threaded PVC end cap (4" long or 0.33')

Screen: S1 2" dia. Schedule 80 PVC, 0.010" machine cut slot, flush threaded with O-rings

Sand Pack: 16-35 mesh Silica Sand 35.1-42.2'

Filter Pack: 100 mesh Silica Sand 33.6-35.1'

Grout Seal: Wyo-Ben Grout Well Bentonite Slurry 3.0-28.5'

Bentonite Seal: Extra high yield Wyo-Ben (100%) Slurry 28.5-33.6'

Concrete: 0.0-3.0'

Well Development

Stabilization Test Data:

Time	pH	Spec. Cond.	Temp (°C)

Recovery Data:

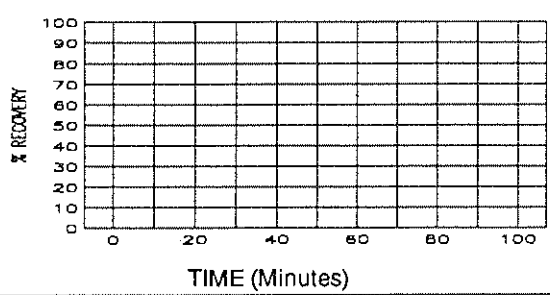

Comments:

Supervised by B. Harrington
Job Number 943-2848

Site LAIDLAW/OU2 RI-FS/MO
File Name PZ300AD

MISSOURI DEPARTMENT OF NATURAL RESOURCES
DIVISION OF GEOLOGY AND LAND SURVEY

MONITORING WELL CERTIFICATION RECORD

OFFICE USE ONLY	DATE RECEIVED
REF. NO. 145096	
C.R. NO.	CHECK NO.
STATE WELL NUMBER	TRANSMITTAL NO.
CHECKED BY	ROUTE
APPROVED BY	ENTERED Ph 1 Ph 2 Ph 3

INFORMATION SUPPLIED BY MONITORING WELL CONTRACTOR

SITE/FACILITY NAME: LAIDLAW BRIDGETON SANITARY LANDFILL
WELL NUMBER: PZ-300AD

SITE ADDRESS: ST. CHARLES ROCK RD. | CITY: BRIDGETON | STATE: Mo | ZIP CODE: 63044

OWNER NAME: LAIDLAW WASTE SYSTEMS, INC. | TELEPHONE: 314-241-3740

OWNER ADDRESS: 1838 N. BROADWAY | CITY: ST. LOUIS | STATE: Mo | ZIP CODE: 63102

VARIANCE ISSUED: ☐ YES ☒ NO | DATE ISSUED: | VARIANCE NUMBER: V

DESCRIBE LOCATION OF THE WELL SO WE WOULD BE ABLE TO VISIT IT:
1120' SOUTHWEST OF BANK OF LEACHATE RETENSION POND, SOUTH OF OLD ST. CHARLES ROCK RD.

LOCATION OF WELL — SHOW LOCATION IN SECTION PLAT
COUNTY: ST. LOUIS
SURFACE ELEVATION: 448.1
SMALLEST ¼ ____ ¼ ____ ¼ ____ ¼ LARGEST ¼
SEC. ____ TWN. 47 N,RNG. 5 (E) OR W
LAT. 38 ° 45 ' 32 " LONG. 90 ° 27 ' 06 "

MONITORING WELL INSTALLATION CONTRACTOR'S NAME: LAYNE WESTERN Co, INC. | PERMIT NUMBER: 001258 WPM

DRILLING CONTRACTOR'S NAME: LAYNE WESTERN Co., INC. | PERMIT NUMBER: 001258 WPM

WELL CONSTRUCTION INFORMATION

TYPE OF WELL: ☐ MONITORING WELL ☒ PIEZOMETER ☐ OTHER ____
TYPE OF POTENTIAL SITE: ☐ HAZARDOUS MATERIAL ☒ LANDFILL ☐ OTHER ____ ☐ L.U.S.T.
MONITORING FOR: (CHECK ALL THAT APPLY) ☒ V.O.C. ☐ METALS ☐ PETROLEUM PRODUCT ☐ OTHER ____ ONLY

PROTECTIVE CASING DETAILS (IF USED): LENGTH 5 FT. | DIAMETER OF CASING 8x8 IN. | WEIGHT OR SDR # 0.188" | DIAMETER AND DEPTH OF DRILL HOLE 8¼ IN. 42.2 FT. | JOINTS ☐ THREADED ☐ MECHANICAL ☐ WELDED ☐ OTHER ____ | MATERIAL ☐ THERMO PLASTIC ☒ STEEL ☐ FLUORO POLYMER TYPE ____ | LOCKING CAP? ☒ YES ☐ NO

CAP VENTED ☒ YES ☐ NO | WEEP HOLE? ☒ YES ☐ NO
CASING GROUT DETAILS: MATERIAL ☐ CEMENT ☒ CONCRETE ☐ OTHER ____ | DEPTH FROM THE SURFACE TO THE BOTTOM OF THE CASING GROUT SEAL 3.0 FT.
TYPE OF SURFACE COMPLETION: ☒ ABOVE GROUND ☐ FLUSH MOUNT
DESCRIBE HOW THE FLUSH MOUNT WAS CONSTRUCTED: -

CENTRALIZER USED ON RISER: ☒ NO ☐ YES LOCATED AT ____ | MATERIAL ☐ STAINLESS STEEL ☐ OTHER ____

RISER PIPE DETAILS: LENGTH 38.7 FT. | DIAMETER OF RISER PIPE 2 IN. | WEIGHT OR SDR # SCH 80 | DIAMETER OF DRILL HOLE 8¼ IN. | JOINTS ☒ THREADED ☐ MECHANICAL ☐ WELDED ☐ OTHER ____ | MATERIAL ☒ THERMO PLASTIC ☐ STEEL ☐ FLUORO POLYMER ☐ OTHER ____

ANNULAR SEAL: ☐ CEMENT SLURRY ☒ BENTONITE SLURRY ☐ NON SLURRY BENTONITE ☐ CEMENT/BENTONITE SLURRY TYPE: ____ BAGS OF CEMENT USED ____ % BENTONITE USED ____ WATER USED/BAG ____ GAL.
BENTONITE SEAL: MATERIAL BENTONITE ☒ SLURRY ☐ CHIPS. ☐ GRANULAR ☐ PELLETS | LENGTH OF SEAL 5.1 | BENTONITE SEAL INSTALLED IN ☐ UNSATURATED ZONE ☒ SATURATED ZONE

	TYPE	GRAIN SIZE	LENGTH OF FILTER PACK	METHOD OF INSTALLATION	Information in this column to be supplied in the Feet from Surface column	FEET FROM SURFACE	FORMATION DESCRIPTION
PRIMARY FILTER PACK	☒ SAND ☐ MANUFACTURED ☐ NATURAL	16-35	7.1 FT.	H.S.A. POUR			
SECONDARY FILTER PACK	☒ SAND ☐ MANUFACTURED ☐ NONE	100	1.5 FT.	H.S.A. POUR	Depth to bottom of Protective Casing Seal:	3.0	0-30 Not sampled
WELL SCREEN	LENGTH OF SCREEN 5 FT.	DIAMETER 2 IN.	SLOT SIZE 10	WEIGHT OR SDR # SCH 80	MATERIAL ☒ PLASTIC ☐ STEEL ☐ FLUORO POLYMER	Depth to Base of Annular Seal:	28.5	
SUMP DETAILS	LENGTH OF SUMP	DIAMETER OF SUMP	MATERIAL ☐ PVC ☐ STEEL ☐ FLUORO POLYMER ☐ OTHER ____		Depth to Base of Bentonite Seal:	33.6	30-38 Silt
BACK FILL	WAS THE WELL BACK FILLED? ☐ YES ☒ NO	MATERIAL USED	LENGTH OF BACK FILLED BORE HOLE		Depth to Top of Primary Filter Pack:	35.1	
					Depth to Top of the Screen:	37.2	
							38-42.2 Silty Sand
					Depth to Bottom of the Screen:	42.2	
					Total Depth:	42.2	

STATIC WATER LEVEL FEET FROM MEASURING POINT: -
DATE OF STATIC WATER LEVEL: -
MEASURING POINT FOR STATIC WATER LEVEL IS: ☒ TOP OF RISER PIPE ☐ OTHER ____
ELEVATION OF MEASURING POINT: 449.62
MULTIPLE CASED WELLS: SUBMIT ADDITIONAL AS BUILT DIAGRAM SHOWING WELL CONSTRUCTION DETAILS INCLUDING TYPE AND SIZE OF ALL CASING, HOLE DIAMETERS, AND GROUT USED.
DRILLING EQUIPMENT: ☐ AIR ROTARY ☒ AUGER TYPE 4¼ H.S.A. ☐ REVERSE ROTARY ☐ OTHER ____
DATE WELL DRILLING WAS COMPLETED: 9-24-95

I HEREBY CERTIFY THAT THE MONITORING WELL HEREIN DESCRIBED WAS CONSTRUCTED IN ACCORDANCE WITH THE DEPARTMENT OF NATURAL RESOURCES REQUIREMENTS FOR THE CONSTRUCTION OF MONITORING WELLS.

SIGNATURE PRIMARY CONTRACTOR/PERMIT #	DATE	SIGNATURE DRILLER/PERMIT #	DATE
[signature]	10-14-95	[signature]	11-14-95

MO 780-1415 (7-95)

DISTRIBUTION: WHITE/DIVISION CANARY/MONITORING WELL CONTRACTOR PINK/OWNER
MAIL WHITE COPY TO: DEPARTMENT OF NATURAL RESOURCES, P.O. BOX 250, ROLLA, MO 65402
ENCLOSE $35 PER MONITORING WELL FOR THE CERTIFICATION FEE WITHIN 60 DAYS AFTER WELL COMPLETION

RECYCLED PAPER

SOIL BOREHOLE LOG

LAIDLAW WASTE SYSTEMS INC.

SITE NAME AND LOCATION

LAIDLAW/OU2 RI-FS/MO
WEST LAKE LANDFILL
OPERABLE UNIT 2

DATUM NORTHING: 1065204.75 EASTING: 513849.81 ELEVATION 448.4

DRILLING METHOD:					BORING NO.	
4.25 inch I.D./8.25 inch O.D. Hollow Stem Auger					PZ-300-SS	
					SHEET	
SAMPLING METHOD:					1 OF 3	
SPLIT SPOON: 2.0 inch O.D./1.5 inch I.D. (SP)					DRILLING	
SHELBY TUBE: 3.0 inch O.D./2 13/16 inch I.D. (SH)					START	FINISH
WATER LEVEL					TIME	TIME
TIME					16:30	10:30
DATE					DATE	DATE
CASING DEPTH					9/22/95	9/23/95

DRILL RIG CME 750 | SURFACE CONDITIONS

ANGLE 90° BEARING NA

SAMPLE HAMMER

DEPTH IN FEET (ELEVATION)	BLOW/6 IN. ON SAMPLER	RECOVERY	SYMBOL	SAMPLER SYMBOL	SAMPLE NUMBER AND DESCRIPTION OF MATERIAL	SAMPLER TYPE	REMARKS
1	4 4 5 4	1.8'/2.0' (90%)			(0.0-2.2 ft.) Loose, moderate yellowish brown (10YR 5/4), SILT, trace Clay, NR, dry, (ML), (LOESS)	SP (1)	
2							
3	3 4 7 7	1.9'/2.0' (95%)			(2.2-4.9 ft.) Compact, dusky yellow (5Y 6/4), SILT, NR, dry, (ML), (LOESS)	SP (2)	
4							
5	3 3 4 4	1.5'/2.0' (75%)			(4.9-8.1 ft.) Loose, olive gray (5Y 4/1), SILT, little Clay, NR, dry, (ML), (LOESS)	SP (3)	
6							
7	2 2 3 3	1.8'/2.0' (90%)				SP (4)	
8	1 2 3 4	2.0'/2.0' (100%)			(440.3) 8.1 (8.1-10.0 ft.) Loose, olive gray (5Y 3/2), plastic SILT, NR, damp, (MH), (LOESS) (438.4) 10.0	SP (5)	
10	1 1 1 2	1.6'/2.0' (80%)			(10.0-16.0 ft.) Very loose, moderate olive brown to light olive gray (5Y 4/4 to 5Y 5/2), SILT, NR, moist, trace iron staining, (ML), (LOESS) @ 11.4 ft., wet	SP (6)	
12	1 1 1 1	0.9'/2.0' (45%)				SP (7)	
13					@ 13.0 ft., moist		
14	1 1 2 2	2.0'/2.0' (100%)				SP (8)	

DRILLING CONTR LAYNE-WESTERN

LOGGED BY B. HARRINGTON

DATE 10/9/95 CHK'D BY B. TILTON

JOB NO.: 943-2848

FILENAME: PZ300SS

SOIL BOREHOLE LOG

LAIDLAW WASTE SYSTEMS INC.

SITE NAME AND LOCATION	LAIDLAW/OU2 RI-FS/MO WEST LAKE LANDFILL OPERABLE UNIT 2
DRILLING METHOD:	4.25 inch I.D./8.25 inch O.D. Hollow Stem Auger
SAMPLING METHOD:	SPLIT SPOON: 2.0 inch O.D./1.5 inch I.D. (SP) SHELBY TUBE: 3.0 inch O.D./2 13/16 inch I.D. (SH)
BORING NO.	PZ-300-SS
SHEET	2 OF 3
DRILLING START / FINISH	TIME 16:30 / 10:30 DATE 9/22/95 / 9/23/95
WATER LEVEL / TIME / DATE / CASING DEPTH	
DATUM	NORTHING: 1065204.75 EASTING: 513849.81
ELEVATION	448.4
DRILL RIG	CME 750
ANGLE	90°
BEARING	NA
SAMPLE HAMMER	
SURFACE CONDITIONS	

DEPTH IN FEET (ELEVATION)	BLOW/6 IN. ON SAMPLER	RECOVERY	SYMBOL	SAMPLER SYMBOL	SAMPLE NUMBER AND DESCRIPTION OF MATERIAL	SAMPLER TYPE	REMARKS
16	1 2 1 2	1.9'/2.0' (95%)			(10.0-16.0 ft.) Very loose, moderate olive brown to light olive gray (5Y 4/4 to 5Y 5/2), SILT, NR, moist, trace iron staining, (ML), (LOESS)	SP (8)	
17					(16.0-21.5 ft.) Very loose, moderate olive brown (5Y 4/4), SILT, trace fine Sand, NR, wet, (ML), (LOESS)	SP (9)	
18	0 1 2 2	1.9'/2.0' (95%)				SP (10)	
19							
20	0 2 1 2	2.0'/2.0' (100%)				SP (11)	9/22/95 @ 17:30 Stopped drilling at 20.0 ft. 9/23/95 @ 7:30 Resumed drilling
21							
22	1 1 2 2	1.7'/2.0' (85%)			(21.5-35.4 ft.) Very loose, olive gray (5Y 4/1), SILT, trace Clay and fine Sand, NR, wet, (ML), (LOESS)	SP (12)	
23							
24	0 0 2 1	2.0'/2.0' (100%)				SP (13)	
25							
26	0 0 0 1	2.0'/2.0' (100%)				SP (14)	
27							
28	0 0 1 2	2.0'/2.0' (100%)				SP (15)	
29							

DRILLING CONTR LAYNE-WESTERN

LOGGED BY B. HARRINGTON

DATE 10/9/95 CHK'D BY B. TILTON

JOB NO.: 943-2848

FILENAME: PZ300SS

SOIL BOREHOLE LOG

LAIDLAW WASTE SYSTEMS INC.

SITE NAME AND LOCATION	LAIDLAW/OU2 RI-FS/MO WEST LAKE LANDFILL OPERABLE UNIT 2
DRILLING METHOD:	4.25 inch I.D./8.25 inch O.D. Hollow Stem Auger
SAMPLING METHOD:	SPLIT SPOON: 2.0 inch O.D./1.5 inch I.D. (SP) SHELBY TUBE: 3.0 inch O.D./2 13/16 inch I.D. (SH)
BORING NO.	PZ-300-SS
SHEET	3 OF 3
DRILLING	START / FINISH
WATER LEVEL	
TIME	START: 16:30 / FINISH: 10:30
DATE	START: 9/22/95 / FINISH: 9/23/95
CASING DEPTH	
DATUM	NORTHING: 1065204.75 EASTING: 513849.81
ELEVATION	448.4
DRILL RIG	CME 750
ANGLE	90°
BEARING	NA
SAMPLE HAMMER	
SURFACE CONDITIONS	

DEPTH IN FEET (ELEVATION)	BLOW/ 6 IN. ON SAMPLER	RECOVERY	SYMBOL	SAMPLER SYMBOL	SAMPLE NUMBER AND DESCRIPTION OF MATERIAL	SAMPLER TYPE	REMARKS
31	1 2 1 4	2.0'/2.0' (100%)			(21.5-35.4 ft.) Very loose, olive gray (5Y 4/1), SILT, trace Clay and Fine Sand, NR, wet, (ML), (LOESS)	SP (16)	
32	0 0 0 1	1.6'/2.0' (80%)				SP (17)	
33							
34	0 2 2 4	1.5'/2.0' (75%)				SP (18)	
35					(413.0) 35.4		
36	1 1 3 5	0.6'/2.0' (30%)			(35.4-35.9 ft.) Loose, olive gray (5Y 4/1), Fine SILTY SAND, NR, wet, (SM), (ALLUVIUM) (412.5) 35.9 (35.9-39.9 ft.) Loose, dark greenish gray (5GY 4/1), well graded SAND, some fine Gravel, NR, wet, (SW), (ALLUVIUM)	SP (19)	36.0-38.0 ft. 5 ft. heave in augers, switch to mud rotary at 38.0 ft.
37							
38	4 3 6 10	1.2'/2.0' (60%)				SP (20)	
39							
40	16 50	0.6'/0.7' (86%)			(408.5) 39.9 (39.9-42.0 ft.) Very dense, light olive gray (5Y 6/1), highly weathered LIMESTONE bedrock, little Sand and Gravel, SR, wet, (GP), (WEATHERED BEDROCK)	SP (21)	
41							
42					(406.4) 42.0 End of Soil Borehole Log at 42.0 ft. See PZ-300-SS Record of Drillhole for rock descriptions.		
43							
44							

DRILLING CONTR LAYNE-WESTERN

LOGGED BY B. HARRINGTON

DATE 10/9/95 CHK'D BY B. TILTON

JOB NO.: 943-2848

FILENAME: PZ300SS

RECORD OF DRILLHOLE PZ-300-SS

Sheet 1 of 4

PROJECT: LAIDLAW/RI-FS
PROJECT NO: 943-2848
LOCATION: BRIDTETON, MO

BORING METHOD: NX Core & Water
DRILLING DATE: 9/23/95-9/24/95
DRILL RIG: CME 750

DATUM: MSL
COORDINATES N: 1065204.8
AZIMUTH:

COLLAR ELEV: 448.4
E: 513849.8
INCLINATION: -90

ROCK TYPE
J-Joint, F-Fault, S-Shear, B-Bedding, F-Foliation
PL-Planar, C-Curved, U-Undulating, ST-Stepped, I-Irregular
P-Polished, K-Slikensided, SM-Smooth, R-Rough, VR-V. Rough
Fe-FeOxide, CL-Clay Infill

SCALE (FEET)	DESCRIPTION	GRAPHIC LOG	ELEV / DEPTH (FT)	RUN NO.	CORE RECOVERY	RQD	FRACTURES PER FOOT	DISCONTINUITY DATA: DIP wrt CORE AXIS	DISCONTINUITY DATA: TYPE AND SURFACE DESCRIPTION	GRAPHIC LOG	WEATHERING INDEX (SW, FR, MW, HW, CW)	STRENGTH INDEX (R6, R5, R4, R3, R2, R1)	POINT LOAD INDEX (psi) (R1 30, R2 150, R3 300, R4 600, R5 1500, R6)	TEST ORIENTATION	NOTES WATER LEVELS INSTRUMENTATION
32	0.0-41.0 ft. See Soil Borehole Log PZ-300-SS														
34															
36															
38															
40															
			407.40												
	41.0-42.0 ft. LIMESTONE GRAVEL		41.00 406.90						Core Loss						
			406.90 41.50												
42	42.0-47.1 ft. Fresh, very thinly to thinly bedded, light olive gray (5Y 6/1), very fine grained, medium strong, LIMESTONE, (ST. LOUIS FORMATION) Occasional stylolites								J,I,R						
									B,PL,R(2)						
									J,I,R						
44									J,PL,R(2)						
									J,C,SM						
				1	94%				J,PL,SM						
									B,PL,SM						
46															
	47.1-67.8 ft. Fresh, very thinly bedded, pale yellowish brown (10YR 6/2), microcrystalline, medium strong LIMESTONE, (ST. LOUIS FORMATION) Stylolites								B,I,SM						
48															

DEPTH SCALE: 1:2
DRILLING CONTRACTOR: LAYNE-WESTERN
DRILLER: D. MAHURIN

LOGGED: B. HARRINGTON
CHECKED: B. TILTON
DATE: 10/9/95

Golder Associates

RECORD OF DRILLHOLE PZ-300-SS

PROJECT: LAIDLAW/RI-FS
PROJECT NO: 943-2648
LOCATION: BRIDTETON, MO

BORING METHOD: NX Core & Water
DRILLING DATE: 9/23/95-9/24/95
DRILL RIG: CME 750

DATUM: MSL
COORDINATES N: 1065204.8
AZIMUTH:

COLLAR ELEV: 448.4
E: 513849.8
INCLINATION: -90

ROCK TYPE: J-Joint, F-Fault, S-Shear, B-Bedding, F-Foliation; PL-Planar, C-Curved, U-Undulating, ST-Stepped, I-Irregular; P-Polished, K-Slickensided, SM-Smooth, R-Rough, VR-V. Rough; Fe-FeOxide, CL-Clay Infill

SCALE (FEET)	DESCRIPTION	GRAPHIC LOG	ELEV / DEPTH (FT)	RUN NO.	CORE RECOVERY	RQD	FRACTURES PER FOOT	DISCONTINUITY DATA: DIP wrt CORE AXIS	DISCONTINUITY DATA: TYPE AND SURFACE DESCRIPTION	GRAPHIC LOG	WEATHERING INDEX (SW, FR, MW, HW, CW)	STRENGTH INDEX (R6, R5, R4, R3, R2, R1)	POINT LOAD INDEX (psi) (R1 30, R2 150, R3 300, R4 600, R5 1500, R6)	TEST ORIENTATION	NOTES WATER LEVELS INSTRUMENTATION
48	47.1-67.8 ft. Fresh, very thinly bedded, pale yellowish brown (10YR 6/2), microcrystalline, medium strong, LIMESTONE, (ST. LOUIS FORMATION)			1	94%				B,PL,SM F,I,R J,I,R(2) J,I,R						
			398.90 49.50												9/23/95 @ 14:25 End Run 1
50	50.-50.5 ft. Vuggy								B,PL,SM J,I,R B,PL,SM J,PL,R B,PL,SM(2)						
52									B,PL,R B,C,R J,I,R						
54	54.5 ft. 0.1 ft. seam of CHERT			2	97%				B,PL,SM J,PL,R B,I,R B,PL,SM						
56									B,PL,SM,CL						
58	58.2-59.2 ft. Layer of greenish gray (5G 6/1), ARGILLACEOUS LIMESTONE								B,PL,SM						
			388.90 59.50												9/23/95 @ 15:50 End Run 2
60									J,I,R B,I,R						
62	61.2-62.6 ft. Layer of light olive gray (5Y 5/2), weak, ARGILLACEOUS DOLOMITIC LIMESTONE			3	100 %				B,PL,SM J,I,R B,PL,SM						
64															

DEPTH SCALE: 1:2
DRILLING CONTRACTOR: LAYNE-WESTERN
DRILLER: D. MAHURIN

LOGGED: B. HARRINGTON
CHECKED: B. TILTON
DATE: 10/9/95

Golder Associates

RECORD OF DRILLHOLE PZ-300-SS

Sheet 3 of 4

PROJECT: LAIDLAW/RI-FS
PROJECT NO: 943-2848
LOCATION: BRIDETON, MO

BORING METHOD: NX Core & Water
DRILLING DATE: 9/23/95-9/24/95
DRILL RIG: CME 750

DATUM: MSL
COORDINATES N: 1065204.8
AZIMUTH:

COLLAR ELEV: 448.4
E: 513849.8
INCLINATION: -90

ROCK TYPE

J-Joint, F-Fault, S-Shear, B-Bedding, F-Foliation
PL-Planar, C-Curved, U-Undulating, ST-Stepped, I-Irregular
P-Polished, K-Slickensided, SM-Smooth, R-Rough, VR-V. Rough
Fe-FeOxide, CL-Clay Infill

SCALE (FEET)	DESCRIPTION	GRAPHIC LOG	ELEV / DEPTH (FT)	RUN NO.	CORE RECOVERY	RQD	FRACTURES PER FOOT	DISCONTINUITY DATA: DIP wrt CORE AXIS	DISCONTINUITY DATA: TYPE AND SURFACE DESCRIPTION	GRAPHIC LOG	WEATHERING INDEX	STRENGTH INDEX	POINT LOAD INDEX (psi)	TEST ORIENTATION	NOTES WATER LEVELS INSTRUMENTATION
64	47.1-67.8 ft. Fresh, very thinly bedded, pale yellowish brown (10YR 6/2), microcrystalline, medium strong LIMESTONE, (ST. LOUIS FORMATION) Stylolites								B,PL,SM						
									B,PL,SM						
66				3	100 %										
68	67.8-73.0 ft. Fresh, medium bedded, pale olive (10Y 4/2), very finely crystalline, weak, ARGILLACEOUS LIMESTONE, (ST. LOUIS FORMATION) Vugs to 69.0 ft.		378.90 / 69.50												9/23/95 @ 16:50 End Run 4
70															
72									J,I,R						
74	73.0-77.5 ft. Fresh, very thinly bedded, grayish olive, (10Y 4/2), finely crystalline, medium strong, ARGILLACEOUS LIMESTONE, (ST. LOUIS FORMATION) Stylolites			4	100 %				B,PL,SM						
									B,U,SM						
76									B,PL,SM						
78	77.5-80.7 ft. Fresh, medium bedded, light olive gray (5Y 6/1), microcrystalline, medium strong, ARGILLACEOUS LIMESTONE, (ST. LOUIS FORMATION) Vugs to 78.5 ft., occasional stylolites		368.90 / 79.50	5	99%										9/23/95 @ 17:55 End Run 4
80															

DEPTH SCALE: 1:2
DRILLING CONTRACTOR: LAYNE-WESTERN
DRILLER: D. MAHURIN

LOGGED: B. HARRINGTON
CHECKED: B. TILTON
DATE: 10/9/95

Golder Associates

RECORD OF DRILLHOLE PZ-300-SS

PROJECT: LAIDLAW/RI-FS
PROJECT NO: 943-2648
LOCATION: BRIDTETON, MO

BORING METHOD: NX Core & Water
DRILLING DATE: 9/23/95-9/24/95
DRILL RIG: CME 750

DATUM: MSL
COORDINATES N: 1065204.8
AZIMUTH:

COLLAR ELEV: 448.4
E: 513849.8
INCLINATION: -90

J-Joint, F-Fault, S-Shear, B-Bedding, F-Foliation
PL-Planar, C-Curved, U-Undulating, ST-Stepped, I-Irregular
P-Polished, K-Silkensided, SM-Smooth, R-Rough, VR-V. Rough
Fe-FeOxide, CL-Clay Infill

SCALE (FEET)	DESCRIPTION	GRAPHIC LOG	ELEV / DEPTH (FT)	RUN NO.	CORE RECOVERY	RQD	FRACTURES PER FOOT	DISCONTINUITY DATA: DIP w/r CORE AXIS	DISCONTINUITY DATA: TYPE AND SURFACE DESCRIPTION	GRAPHIC LOG	WEATHERING INDEX	STRENGTH INDEX	POINT LOAD INDEX (psi)	TEST ORIENTATION	NOTES WATER LEVELS INSTRUMENTATION
80	80.7-88.2 ft. Fresh, thinly bedded, light olive gray (5Y 6/1), microcrystalline, medium strong, LIMESTONE, (ST. LOUIS FORMATION) Frequent stylolites							90	B,PL,SM,CL						
								60	J,I,R						
82								90	B,PL,SM						
								60	F,PL,SM						
								30	F,PL,SM(2)						
								90	J,PL,SM						
								90	J,I,R						
84	84.5-84.7 ft. Chert nodules							90	J,I,R						
				5	99%			30	J,I,R						
	85.0-86.0 ft. Greenish gray (5G 6/1), clay in fractures							90	B,I,R,CL(2)						
								60	J,I,R						
								90	J,I,R						
86															
								90	B,PL,SM						
88	88.2-92.5 ft. Fresh, thinly bedded, light olive gray (5Y 5/2), very finely crystalline, medium strong, ARGILLACEOUS LIMESTONE, (ST. LOUIS FORMATION)		358.90												
			89.50												9/23/95 @ 17:50 End Run 5 9/24/95 @ 8:00 Begin Run 6
90								30	J,I,SM,calcite						
								90	J,I,SM						
92				6	100 %			90	J,PL,SM						
	92.5-95.0 ft. Fresh, very thinly bedded, light olive gray (5Y 5/2), microcrystalline, medium strong, LIMESTONE, (ST. LOUIS FORMATION)							90	J,PL,SM						
								90	B,C,SM						
94			353.40												9/24/95 @ 9:50 End Run 6
	End of Record of Drillhole at 95.0 ft.		95.00												
96															

DEPTH SCALE: 1:2
DRILLING CONTRACTOR: LAYNE-WESTERN
DRILLER: D. MAHURIN

LOGGED: B. HARRINGTON
CHECKED: B. TILTON
DATE: 10/9/95

Golder Associates

Well No. PZ-300-SS

Boring No. X-Ref: PZ-300-SS

PIEZOMETER CONSTRUCTION SUMMARY

Survey Coords: Northing: 1065205 ft.
Easting: 513850 ft.

Elevation Ground Level 448.4 ft. NGVD
Top of PVC Casing 449.60 ft. NGVD

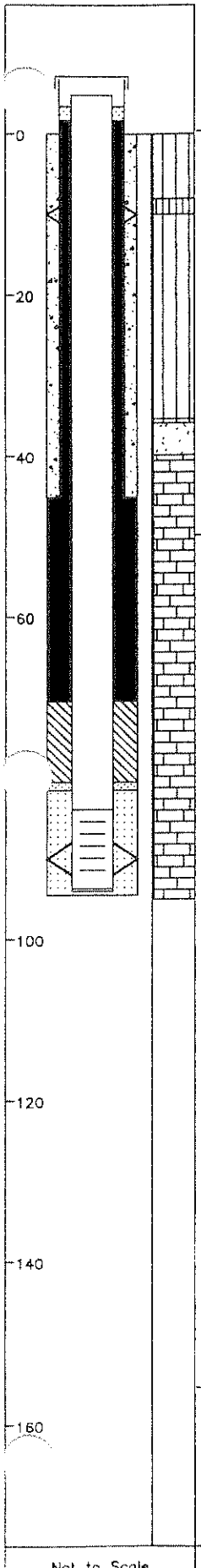

Not to Scale

Drilling Summary:

Total Depth	94.5 ft.
Borehole Diameter	9 7/8" (0.0–46.0') 5 7/8" (46.0–93.0')
Casing Stickup Height	1.20 ft.
Driller	Layne-Western
	St. Louis, MO
Rig	CME 750 Schramm Rotadrill T660H
Bit(s)	4 1/4" ID Hollow Stem Auger Bit,
	NX Core, 5 7/8" Button Bit for Reaming
Drilling Fluid	NX Core Water, Air and Bentonite
	Mud Rotary
Protective Casing	8x8" Square Steel, by 5' long

Construction Time log:

Task	Start Date	Start Time	Finish Date	Finish Time
Drilling				
CME 75 (Auger)	9/22/95	16:30	9/23/95	10:30
Schramm Rotary	9/25/95	10:30	9/25/95	13:00
CME 75 (Core)	9/23/95	13:05	9/23/95	9:15
Geophys.Logging:				
Casing:				
2" I.D. PVC	9/26/95	10:45	9/26/95	10:55
8" I.D. Steel	9/25/95	13:00	9/25/95	16:00
Filter Placement:	9/26/95	10:50	9/26/95	11:00
Cementing:				
Development				
Bentonite Grout	9/26/95	11:30	9/26/95	12:35
Bentonite Seal	9/26/95	11:00	9/26/95	11:30

Well Design & Specifications

Basis: Geologic Log X Geophysical Log

Casing string(s): C = Casing S = Screen

Depth			String(s)	Elevation		
+ 1.20	-	83.88	C1	449.60	-	364.52
83.88	-	93.70	S1	364.52	-	354.70
93.70	-	94.00	C2	354.70	-	354.40
+ 0.80	-	46.00	C3	447.60	-	402.40
	-				-	
	-				-	

Casing: C1 2" dia. Schedule 80 PVC, flush threaded with O-rings

C2 2" dia. threaded PVC end cap (4" long or 0.33') (C3-see comments)

Screen: S1 2" dia. Schedule 80 PVC, 0.010" machine cut slot, flush threaded with O-rings

Sand Pack: 16-35 mesh Silica Sand 81.5-94.5'

Filter Pack: 100 mesh Silica Sand 80.5-81.5'

Grout Seal: Wyo-Ben Grout Well Bentonite Slurry 70.5-81.5'

Bentonite Seal: Extra high yield Wyo-Ben (100%) Slurry 3.0-70.5'

Concrete: 0.0-3.0'

Well Development

Stabilization Test Data:

Time	pH	Spec. Cond.	Temp (°C)

Recovery Data:

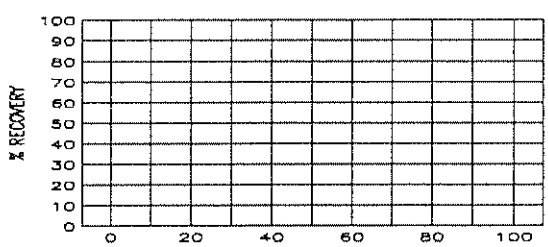

Comments:

Surface Casing C3: 6 1/8 in. ID / 6 5/8 in. OD Steel Casing

Neat cement grout used to seal annulus between 6 7/8 in. OD steel casing and 9 7/8 in. diameter

Supervised by B. Tilton
Job Number 943-2848

Site LAIDLAW/OU2 RI-FS/MO
File Name PZ300SS

MISSOURI DEPARTMENT OF NATURAL RESOURCES
DIVISION OF GEOLOGY AND LAND SURVEY

MONITORING WELL CERTIFICATION RECORD

OFFICE USE ONLY	DATE RECEIVED
REF. NO. 145097	
C.R. NO.	CHECK NO.
STATE WELL NUMBER	TRANSMITTAL NO.
CHECKED BY	ROUTE
APPROVED BY	ENTERED Ph 1 Ph 2 Ph 3

INFORMATION SUPPLIED BY MONITORING WELL CONTRACTOR

SITE/FACILITY NAME: LAIDLAW BRIDGETON SANITARY LANDFILL
WELL NUMBER: PZ-3005S

SITE ADDRESS: ST. CHARLES ROCK RD. | CITY: BRIDGETON | STATE: Mo | ZIP CODE: 63044

OWNER NAME: LAIDLAW WASTE SYSTEMS, INC. | TELEPHONE: 314-241-3710

OWNER ADDRESS: 1838 N. BROADWAY | CITY: ST. LOUIS | STATE: Mo | ZIP CODE: 63102

VARIANCE ISSUED ☐ YES ☒ NO | DATE ISSUED | VARIANCE NUMBER: V

DESCRIBE LOCATION OF THE WELL SO WE WOULD BE ABLE TO VISIT IT
1110' SOUTHWEST OF BANK OF LEACHATE RETENSION POND, SOUTH OF OLD ST. CHARLES ROCK RD.

LOCATION OF WELL SHOW LOCATION IN SECTION PLAT
COUNTY: ST. LOUIS
SURFACE ELEVATION: 448.4
SMALLEST ¼ ____ ¼ ____ ¼ ____ ¼ LARGEST ¼
SEC. ____ TWN. 47 N,RNG. 5 E OR W
LAT. 38 ° 45 ' 32 " LONG. 90 ° 27 ' 05 "

MONITORING WELL INSTALLATION CONTRACTOR'S NAME: LAYNE WESTERN Co., INC. | PERMIT NUMBER: 001258 WPM
DRILLING CONTRACTOR'S NAME: LAYNE WESTERN Co., INC. | PERMIT NUMBER: 001258 WPM

WELL CONSTRUCTION INFORMATION

TYPE OF WELL: ☐ MONITORING WELL ☒ PIEZOMETER ☐ OTHER ____
TYPE OF POTENTIAL SITE: ☐ HAZARDOUS MATERIAL ☒ LANDFILL ☐ OTHER ____ ☐ L.U.S.T.
MONITORING FOR: (CHECK ALL THAT APPLY) ☒ V.O.C. ☐ METALS ☐ PETROLEUM PRODUCT ☐ OTHER ____ ONLY

PROTECTIVE CASING DETAILS (IF USED): LENGTH 5 FT. | DIAMETER OF CASING 8x8 IN. | WEIGHT OR SDR # 0.188" | DIAMETER AND DEPTH OF DRILL HOLE 8¼ IN. 46 FT. | JOINTS ☐ THREADED ☐ MECHANICAL ☐ WELDED ☐ OTHER ____ | MATERIAL ☐ THERMO PLASTIC ☒ STEEL ☐ FLUORO POLYMER TYPE ____ | LOCKING CAP? ☒ YES ☐ NO

CAP VENTED ☒ YES ☐ NO | WEEP HOLE? ☒ YES ☐ NO

CASING GROUT DETAILS: MATERIAL ☐ CEMENT ☒ CONCRETE ☐ OTHER ____ | DEPTH FROM THE SURFACE TO THE BOTTOM OF THE CASING GROUT SEAL 3.0 FT.

TYPE OF SURFACE COMPLETION: ☒ ABOVE GROUND ☐ FLUSH MOUNT

DESCRIBE HOW THE FLUSH MOUNT WAS CONSTRUCTED

CENTRALIZER USED ON RISER ☐ NO ☒ YES LOCATED AT 10', 50', 90' | MATERIAL ☒ STAINLESS STEEL ☐ OTHER ____

RISER PIPE DETAILS: LENGTH 84.9 FT. | DIAMETER OF RISER PIPE 2 IN. | WEIGHT OR SDR # SCH 80 | DIAMETER OF DRILL HOLE 6⅞ IN. | JOINTS ☒ THREADED ☐ MECHANICAL ☐ WELDED ☐ OTHER ____ | MATERIAL ☒ THERMO PLASTIC ☐ STEEL ☐ FLUORO POLYMER ☐ OTHER ____

ANNULAR SEAL: ☐ CEMENT SLURRY ☒ BENTONITE SLURRY ☐ NON SLURRY BENTONITE TYPE: ____ ☐ CEMENT/BENTONITE SLURRY BAGS OF CEMENT USED ____ % BENTONITE USED ____ WATER USED/BAG ____ GAL.

BENTONITE SEAL: MATERIAL BENTONITE ☒ SLURRY ☐ CHIPS ☐ GRANULAR ☐ PELLETS | LENGTH OF SEAL 11' | BENTONITE SEAL INSTALLED IN ☐ UNSATURATED ZONE ☒ SATURATED ZONE

PRIMARY FILTER PACK: TYPE ☒ SAND ☐ MANUFACTURED ☐ NATURAL | GRAIN SIZE 16-35 | LENGTH OF FILTER PACK 13 FT. | METHOD OF INSTALLATION TREMIE

SECONDARY FILTER PACK: TYPE ☒ SAND ☐ MANUFACTURED ☐ NONE | GRAIN SIZE 100 | LENGTH OF FILTER PACK 1.0 FT. | METHOD OF INSTALLATION TREMIE

WELL SCREEN: LENGTH OF SCREEN 10 FT. | DIAMETER 2 IN. | SLOT SIZE 10 | WEIGHT OR SDR # SCH80 | MATERIAL ☒ PLASTIC ☐ STEEL ☐ FLUORO POLYMER

SUMP DETAILS: LENGTH OF SUMP ____ | DIAMETER OF SUMP ____ | MATERIAL ☐ PVC ☐ STEEL ☐ FLUORO POLYMER ☐ OTHER ____

BACK FILL: WAS THE WELL BACK FILLED? ☒ YES ☐ NO | MATERIAL USED 16-35 SAND | LENGTH OF BACK FILLED BORE HOLE 08'

Information in this column to be supplied in the Feet from Surface column	FEET FROM SURFACE	FORMATION DESCRIPTION
Depth to bottom of Protective Casing Seal:	3.0	0-35.5 Silt
Depth to Base of Annular Seal:	70.5	35.5-39.5 Sand
Depth to Base of Bentonite Seal:	80.5	39.5-94.5 Limestone
Depth to Top of Primary Filter Pack:	81.5	
Depth to Top of the Screen:	83.7	
Depth to Bottom of the Screen:	93.7	
Total Depth:	94.5	
DATE WELL DRILLING WAS COMPLETED	9-26-95	

STATIC WATER LEVEL ____ FEET FROM MEASURING POINT
DATE OF STATIC WATER LEVEL
MEASURING POINT FOR STATIC WATER LEVEL IS ☒ TOP OF RISER PIPE ☐ OTHER ____
ELEVATION OF MEASURING POINT 449.60

MULTIPLE CASED WELLS: SUBMIT ADDITIONAL AS BUILT DIAGRAM SHOWING WELL CONSTRUCTION DETAILS INCLUDING TYPE AND SIZE OF ALL CASING, HOLE DIAMETERS, AND GROUT USED.

DRILLING EQUIPMENT: ☒ AIR ROTARY ☒ AUGER TYPE 4¼ H.S.A. ☐ REVERSE ROTARY ☐ OTHER ____

I HEREBY CERTIFY THAT THE MONITORING WELL HEREIN DESCRIBED WAS CONSTRUCTED IN ACCORDANCE WITH THE DEPARTMENT OF NATURAL RESOURCES REQUIREMENTS FOR THE CONSTRUCTION OF MONITORING WELLS.

SIGNATURE PRIMARY CONTRACTOR/PERMIT #	DATE	SIGNATURE DRILLER/PERMIT #	DATE
Tobin J. Maher Jr.	11-14-95	Tobin J. Maher Jr.	11-14-95

MO 780-1415 (7-95)

DISTRIBUTION: WHITE/DIVISION CANARY/MONITORING WELL CONTRACTOR PINK/OWNER
MAIL WHITE COPY TO: DEPARTMENT OF NATURAL RESOURCES, P.O. BOX 250, ROLLA, MO 65402
ENCLOSE $35 PER MONITORING WELL FOR THE CERTIFICATION FEE WITHIN 60 DAYS AFTER WELL COMPLETION

RECYCLED PAPER

LAIDLAW WASTE SYSTEMS INC.

SOIL BOREHOLE LOG

SITE NAME AND LOCATION	DRILLING METHOD:	BORING NO.
LAIDLAW/OU2 RI-FS/MO WEST LAKE LANDFILL OPERABLE UNIT 2	4.25 inch I.D./8.25 inch O.D. Hollow Stem Auger	PZ-301-SS
	SAMPLING METHOD:	SHEET 1 OF 2
	SPLIT SPOON: 2.0 inch O.D./1.5 inch I.D. (SP)	DRILLING
	SHELBY TUBE: 3.0 inch O.D./2 13/16 inch I.D. (SH)	START / FINISH

WATER LEVEL					START TIME	FINISH TIME
TIME					11:30	14:15
DATE					DATE	DATE
CASING DEPTH					9/19/95	9/19/95

DATUM NORTHING: 1064801.68 EASTING: 515516.99 ELEVATION 513.1

DRILL RIG CME 750

SURFACE CONDITIONS

ANGLE 90° BEARING NA

SAMPLE HAMMER

DEPTH IN FEET (ELEVATION)	BLOW/ 6 IN. ON SAMPLER	RECOVERY	SYMBOL	SAMPLER SYMBOL	SAMPLE NUMBER AND DESCRIPTION OF MATERIAL	SAMPLER TYPE		REMARKS
1	2 2 4 5	1.6'/2.0' (80%)			(0.0-6.0 ft.) Loose, moderate yellowish brown (10YR 5/4), SILT, trace iron staining, NR, damp, (ML), (LOESS)	SP 1		
2 3	2 3 4 5	1.8'/2.0' (90%)				SP 2		
4 5	1 2 3 4	2.0'/2.0' (100%)			From 4.0-6.8 ft., SILT becomes moist	SP 3		
6 7	1 1 2 2	2.0'/2.0' (100%)			(6.0-9.6 ft.) Very loose, pale to moderate yellowish brown (10YR 6/2 to 10YR 5/4), SILT, little Fe staining, NR, intermittent wet zones beginning at 6.8 ft., (ML), (LOESS)	SP 4		
8 9	1 3 3 11	2.0'/2.0' (100%)			(503.5) 9.6	SP 5		
10 11	3 36 50	1.0'/2.0' (50%)			(9.6-18.0 ft.) Very dense, dark yellowish orange (10YR 6/6), SILTSTONE, thickly laminated, NR, damp, (CHELTENHAM FORMATION)	SP 6		
12 13	30 50	0.8'/2.0' (40%)				SP 7		
14	50	0.5'/2.0' (25%)				SP 8		

DRILLING CONTR LAYNE-WESTERN

LOGGED BY B. HARRINGTON

DATE 10/9/95 CHK'D BY B. TILTON

JOB NO.: 943-2848

FILENAME: PZ301SS

LAIDLAW WASTE SYSTEMS INC.

SOIL BOREHOLE LOG

SITE NAME AND LOCATION

LAIDLAW/OU2 RI-FS/MD
WEST LAKE LANDFILL
OPERABLE UNIT 2

NORTHING: 1064801.68
DATUM EASTING: 515516.99 ELEVATION 513.1

DRILLING METHOD: 4.25 inch I.D./8.25 inch O.D. Hollow Stem Auger

SAMPLING METHOD:
SPLIT SPOON: 2.0 inch O.D./1.5 inch I.D. (SP)
SHELBY TUBE: 3.0 inch O.D./2 13/16 inch I.D. (SH)

					DRILLING START	DRILLING FINISH
WATER LEVEL					TIME	TIME
TIME					11:30	14:15
DATE					DATE	DATE
CASING DEPTH					9/19/95	9/19/95

BORING NO. PZ-301-SS

SHEET 2 OF 2

DRILL RIG CME 750

ANGLE 90° BEARING NA

SAMPLE HAMMER

SURFACE CONDITIONS

DEPTH IN FEET (ELEVATION)	BLOW/ 6 IN. ON SAMPLER	RECOVERY	SYMBOL	SAMPLER SYMBOL	SAMPLE NUMBER AND DESCRIPTION OF MATERIAL	SAMPLER TYPE		REMARKS
16	50	0.5'/2.0' (25%)			(9.6-18.0 ft.) Very dense, dark yellowish orange (10YR 6/6), SILTSTONE, thickly laminated, NR, damp, (CHELTENHAM FORMATION)	SP		
17					(16.0-18.0 ft.) Advanced augers to 18.0 ft. to prepare for core drilling, no samples collected	(8)		
18					(495.1) 18.0			
19					End of Soil Borehole Log at 18.0 ft. See PZ-301-SS Record of Drillhole for rock descriptions.			
20								
21								
22								
23								
24								
25								
26								
27								
28								
29								

DRILLING CONTR LAYNE-WESTERN

LOGGED BY B. HARRINGTON

DATE 10/9/95 CHK'D BY B. TILTON

JOB NO.: 943-2848

FILENAME: PZ301SS

RECORD OF DRILLHOLE PZ-301-SS

Sheet 1 of 10

PROJECT: LAIDLAW/RI-FS
PROJECT NO: 943-2648
LOCATION: BRIDGETON, MO

BORING METHOD: NX Core & Water
DRILLING DATE: 9/19/95-9/21/95
DRILL RIG: CME 750

DATUM: MSL
COORDINATES N 1064801.7
AZIMUTH:

COLLAR ELEV: 513.1
E: 515517.0
INCLINATION: -90

ROCK TYPE

J-Joint, F-Fault, S-Shear, B-Bedding, F-Foliation
PL-Planar, C-Curved, U-Undulating, ST-Stepped, I-Irregular
P-Polished, K-Slikensided, SM-Smooth, R-Rough, VR-V. Rough
Fe-FeOxide, CL-Clay Infill

SCALE (FEET)	DESCRIPTION	GRAPHIC LOG	ELEV / DEPTH (FT)	RUN NO	CORE RECOVERY	RQD	FRACTURES PER FOOT	DISCONTINUITY DATA: DIP wrt CORE AXIS	DISCONTINUITY DATA: TYPE AND SURFACE DESCRIPTION	DISCONTINUITY DATA: GRAPHIC LOG	WEATHERING INDEX (SW FR, MW, HW, CW)	STRENGTH INDEX (R5 R6, R4, R3, R2, R1)	POINT LOAD INDEX (psi) (R1 30, R2 150, R3 300, R4 600, R5 1500, R6)	TEST ORIENTATION	NOTES WATER LEVELS INSTRUMENTATION
16	0.0-16.0 ft. See Soil Borehole Log PZ-301-SS 16.0-19.1 ft. No samples collected														
18	494.00		494.00												
	19.1-26.0 ft. 19.10 Moderately weathered, very thinly bedded to thinly laminated, dark yellowish orange (10YR 6/6), very fine grained, extremely weak, SILTSTONE, (CHELTENHAM FORMATION)		19.10						B,I,SM B,P,SM						
20									J,I,R						
22									J,I,R B,I,R J,I,R,intact J,I,R J,I,SM B,I,SM						
24	23.6 ft. Dark yellowish orange (10YR 6/6), soft clay seam			1	93%				B,I,SM,CL B,I,SM B,P,SM(5)						
26									J,I,R,CL,Fe J,PL,SM						
28	26.3-28.5 ft. Moderately weathered, very thinly bedded, olive gray (5Y 4/1) to medium dark gray (N4), very fine grained, extremely weak, SILTY CLAYSTONE, (CHELTENHAM FORMATION)		484.60						J,I,R(2) J,I,R J,I,SM B,PL,SM(3) J,PL,SM J,PL,SM(2)						9/14/95 @ 17:00 End Run 1
	28.5-36.0 ft. Highly weathered, thinly bedded, medium gray (N5), very fine grained, extremely weak, SILTY CLAYSTONE, (CHELTENHAM FORMATION)		28.50 484.00 29.10						Core Loss B,PL,SM,Fe J,C,R,Fe J,I,R B,I,R B,I,R,Fe J,I,R						9/20/95 @ 8:15 Begin Run 2
30				2	97%				B,I,R,Fe						
32															

DEPTH SCALE: 1:2
DRILLING CONTRACTOR: LAYNE-WESTERN
DRILLER: D.MAHURIN

LOGGED: B.HARRINGTON
CHECKED: B.TILTON
DATE: 10/9/95

Golder Associates

RECORD OF DRILLHOLE PZ-301-SS

PROJECT: LAIDLAW/RI-FS
PROJECT NO: 943-2848
LOCATION: BRIDGETON, MO

BORING METHOD: NX Core & Water
DRILLING DATE: 9/19/95-9/21/95
DRILL RIG: CME 750

DATUM: MSL
COORDINATES N 1084801.7
AZIMUTH:

COLLAR ELEV: 513.1
E: 515517.0
INCLINATION: -90

ROCK TYPE
J-Joint, F-Fault, S-Shear, B-Bedding, F-Foliation
PL-Planar, C-Curved, U-Undulating, ST-Stepped, I-Irregular
P-Polished, K-Slikensided, SM-Smooth, R-Rough, VR-V. Rough
Fe-FeOxide, CL-Clay Infill

SCALE (FEET)	DESCRIPTION	GRAPHIC LOG	ELEV / DEPTH (FT)	RUN NO.	CORE RECOVERY	RQD	FRACTURES PER FOOT	DISCONTINUITY DATA: DIP wrt CORE AXIS	DISCONTINUITY DATA: TYPE AND SURFACE DESCRIPTION	DISCONTINUITY DATA: GRAPHIC LOG	WEATHERING INDEX (SW FR, MW, HW, CW)	STRENGTH INDEX (R5 R6, R4, R3, R2, R1)	POINT LOAD INDEX (psi) (R1 30, R2 150, R3 300, R4 600, R5 1500, R6)	TEST ORIENTATION	NOTES WATER LEVELS INSTRUMENTATION
32	28.5-36.0 ft. Highly weathered, thinly bedded, medium gray (N5), very fine grained, extremely weak, SILTY CLAYSTONE, (CHELTENHAM FORMATION)														
34				2	97%										
36	477.10														
	36.0-37.7 ft. Slightly weathered, medium bedded, grayish black (N2) to black (N1), very fine grained, very weak, LIGNITE COAL, (CHELTENHAM FORMATION)		36.00												
	475.40														
38	37.7-53.0 ft. Highly weathered, medium bedded, light gray (N7) to light brownish gray (5YR 6/1), very fine grained, extremely weak, CLAYSTONE, (CHELTENHAM FORMATION)		37.70												9/20/95 @ 9:30 End Run 2
			474.30												
			38.80 474.00						Core Loss						
			39.10												39.0-60.0 ft. Numerous drilling induced fractures due to extremely weak rock
40															
42				3	61%										
44															
			468.10												
			45.00												
46									Core Loss						
48															

DEPTH SCALE: 1:2
DRILLING CONTRACTOR: LAYNE-WESTERN
DRILLER: D.MAHURIN

LOGGED: B.HARRINGTON
CHECKED: B.TILTON
DATE: 10/9/95

Golder Associates

RECORD OF DRILLHOLE PZ-301-SS

Sheet 3 of 10

PROJECT: LAIDLAW/RI-FS
PROJECT NO: 943-2848
LOCATION: BRIDGETON, MO

BORING METHOD: NX Core & Water
DRILLING DATE: 9/19/95-9/21/95
DRILL RIG: CME 750

DATUM: MSL
COORDINATES N: 1064801.7
AZIMUTH:

COLLAR ELEV: 513.1
E: 515517.0
INCLINATION: -90

J-Joint, F-Fault, S-Shear, B-Bedding, F-Foliation
PL-Planar, C-Curved, U-Undulating, ST-Stepped, I-Irregular
P-Polished, K-Slickensided, SM-Smooth, R-Rough, VR-V. Rough
Fe-FeOxide, CL-Clay Infill

SCALE (FEET)	DESCRIPTION	GRAPHIC LOG	ELEV / DEPTH (FT)	RUN NO.	CORE RECOVERY	RQD (80 60 40 20)	FRACTURES PER FOOT (2 4 6 8 10)	DISCONTINUITY DATA: DIP wrt CORE AXIS (0 30 60 90)	TYPE AND SURFACE DESCRIPTION	GRAPHIC LOG	WEATHERING INDEX (SW FR MW HW CW)	STRENGTH INDEX (R6 R5 R4 R3 R2 R1)	POINT LOAD INDEX (psi) (R1 30, R2 150, R3 300, R4 600, R5 1500, R6)	TEST ORIENTATION	NOTES WATER LEVELS INSTRUMENTATION
48	37.7-53.0 ft. Highly weathered, medium bedded, light gray (N7) to light brownish gray (5YR 6/1), very fine grained, extremely weak, CLAYSTONE, (CHELTENHAM FORMATION)								Core Loss						9/20/95 @ 11:00 End Run 3
50			461.70												
			51.40												
52															
	53.0-60.4 ft. Moderately weathered, thinly bedded, olive gray (5Y 4/1) to dark gray (N3), very fine grained, very weak, SILTY CLAYSTONE, (CHELTENHAM FORMATION)			4	66%										
54			457.90												
			55.20												
56									Core Loss						
			455.90												
			57.20												
58															
60	60.0 ft. CLAYSTONE becomes sandy		452.70						J,I,R						
	60.4-62.5 ft. Fresh, thickly laminated, light olive gray (5Y 6/1), fine to medium grained, strong, LIMESTONE, (CHELTENHAM FORMATION)		60.40	5	79%				J,I,R						
									J,C,SM						
									J,I,R						
									J,I,R(2)						
62									J,I,R						
			450.60						J,I,R						
	62.5-71.5 ft. Moderately weathered, thinly bedded, greenish gray (5G 6/1), very fine grained, very weak, CLAYSTONE, (CHELTENHAM FORMATION) Some gravel sized Chert and Limestone		62.50						J,I,R(2)						
64															

DEPTH SCALE: 1:2
DRILLING CONTRACTOR: LAYNE-WESTERN
DRILLER: D.MAHURIN

LOGGED: B.HARRINGTON
CHECKED: B.TILTON
DATE: 10/9/95

Golder Associates

RECORD OF DRILLHOLE PZ-301-SS

PROJECT: LAIDLAW/RI-FS
PROJECT NO: 943-2848
LOCATION: BRIDGETON, MO

BORING METHOD: NX Core & Water
DRILLING DATE: 9/19/95-9/21/95
DRILL RIG: CME 750

DATUM: MSL
COORDINATES N: 1064801.7
AZIMUTH:

COLLAR ELEV: 513.1
E: 515517.0
INCLINATION: -90

J-Joint, F-Fault, S-Shear, B-Bedding, F-Foliation
PL-Planar, C-Curved, U-Undulating, ST-Stepped, I-Irregular
P-Polished, K-Slikensided, SM-Smooth, R-Rough, VR-V. Rough
Fe-FeOxide, CL-Clay Infill

SCALE (FEET)	DESCRIPTION	GRAPHIC LOG	ELEV / DEPTH (FT)	RUN NO.	CORE RECOVERY	RQD	FRACTURES PER FOOT	DISCONTINUITY DATA: DIP w/r CORE AXIS	DISCONTINUITY DATA: TYPE AND SURFACE DESCRIPTION	GRAPHIC LOG	WEATHERING INDEX	STRENGTH INDEX	POINT LOAD INDEX (psi)	TEST ORIENTATION	NOTES WATER LEVELS INSTRUMENTATION
64	62.5-71.5 ft. Moderately weathered, thinly bedded, greenish gray (5G 6/1), very fine grained, very weak, CLAYSTONE, (CHELTENHAM FORMATION) Some gravel sized Chert and Limestone		448.30 / 64.80	5	79%				J,I,R						9/20/95 @ 13:00 End Run 5
66									J,I,R(2)						
									B,I,R						
									J,I,R						
68				6	96%										
70									J,I,R						9/20/95 @ 14:00 End Run 6
			441.90 / 71.20 / 441.60						Core Loss						
	71.5-88.0 ft. Fresh, thinly bedded, light gray (N7), very finely crystalline, strong, LIMESTONE, (ST. LOUIS FORMATION)		71.50						J,I,R						
72									J,I,R						
									J,I,R						
									J,I,R(4)						
									J,I,R(4)						
74									J,I,R						
									J,PL,SM(2)						
									B,PL,SM(3)						
				7	100 %				J,C,SM						
76									J,I,R						
									B,PL,SM						
									B,PL,R						
78									B,C,R						
									B,PL,SM						9/20/95 @ 15:45 End Run 8
80															

DEPTH SCALE: 1:2
DRILLING CONTRACTOR: LAYNE-WESTERN
DRILLER: D.MAHURIN

LOGGED: B.HARRINGTON
CHECKED: B.TILTON
DATE: 10/9/95

Golder Associates

RECORD OF DRILLHOLE PZ-301-SS

PROJECT: LAIDLAW/RI-FS
PROJECT NO: 943-2848
LOCATION: BRIDGETON, MO

BORING METHOD: NX Core & Water
DRILLING DATE: 9/19/95-9/21/95
DRILL RIG: CME 750

DATUM: MSL
COORDINATES N: 1064801.7
AZIMUTH:

COLLAR ELEV: 513.1
E: 515517.0
INCLINATION: -90

J-Joint, F-Fault, S-Shear, B-Bedding, F-Foliation
PL-Planar, C-Curved, U-Undulating, ST-Stepped, I-Irregular
P-Polished, K-Slickensided, SM-Smooth, R-Rough, VR-V. Rough
Fe-FeOxide, CL-Clay Infill

SCALE (ft)	DESCRIPTION	GRAPHIC LOG	ELEV / DEPTH (FT)	RUN NO.	CORE RECOVERY	RQD	FRACTURES PER FOOT	DISCONTINUITY DATA: DIP wrt CORE AXIS	DISCONTINUITY DATA: TYPE AND SURFACE DESCRIPTION	GRAPHIC LOG	WEATHERING INDEX	STRENGTH INDEX	POINT LOAD INDEX (psi)	TEST ORIENTATION	NOTES WATER LEVELS INSTRUMENTATION
80	71.5-88.0 ft. Fresh, thinly bedded, light gray (N7), very finely crystalline, strong, LIMESTONE, (ST. LOUIS FORMATION)		432.90 / 80.20	7	100%				B,PL,SM(2)						
									J,U,SM						
									B,PL,SM(2)						
									B,C,SM,CL						
82									B,I,SM						
									B,I,R(2)						
				8	95%										
84									B,PL,SM(2)						
									B,I,R(2)						
									J,PL,SM,CL						
86									B,PL,R(3)						
			425.70 / 87.40												
			425.10						Core Loss						
88	88.0-88.5 ft. Moderately weathered layer of CHERT		88.00 / 424.60						J,I,R,CL						
			88.50						B,I,R						
	88.5-104.9 ft. Fresh, thinly bedded, light brownish gray (5YR 6/1), microcrystalline, strong, LIMESTONE, (ST. LOUIS FORMATION)								J,I,R,CL						
									J,I,R,CL						
									B,PL,SM,CL						
				8	95%				J,I,R						
90			422.90 / 90.20												9/20/95 @ 15:45 End Run 9
									B,PL,SM						
									B,I,SM						
92									J,C,R						
				9	99%				B,PL,SM(2)						
									B,C,R						
94															
96															

DEPTH SCALE: 1:2
DRILLING CONTRACTOR: LAYNE-WESTERN
DRILLER: D.MAHURIN

LOGGED: B.HARRINGTON
CHECKED: B.TILTON
DATE: 10/9/95

Golder Associates

RECORD OF DRILLHOLE PZ-301-SS

PROJECT: LAIDLAW/RI-FS
PROJECT NO: 943-2848
LOCATION: BRIDGETON, MO

BORING METHOD: NX Core & Water
DRILLING DATE: 9/19/95-9/21/95
DRILL RIG: CME 750

DATUM: MSL
COORDINATES N: 1084801.7
AZIMUTH:

COLLAR ELEV: 513.1
E: 515517.0
INCLINATION: -90

J-Joint, F-Fault, S-Shear, B-Bedding, F-Foliation
PL-Planar, C-Curved, U-Undulating, ST-Stepped, I-Irregular
P-Polished, K-Slikensided, SM-Smooth, R-Rough, VR-V. Rough
Fe-FeOxide, CL-Clay Infill

DEPTH SCALE (FEET)	DESCRIPTION	GRAPHIC LOG	ELEV / DEPTH (FT)	RUN NO.	CORE RECOVERY	RQD	FRACTURES PER FOOT	DISCONTINUITY DATA: DIP wrt CORE AXIS	DISCONTINUITY DATA: TYPE AND SURFACE DESCRIPTION	GRAPHIC LOG	WEATHERING INDEX (SW FR, MW, HW, CW)	STRENGTH INDEX (R6, R5, R4, R3, R2, R1)	POINT LOAD INDEX (psi) (R1 30, R2 150, R3 300, R4 600, R5 1500, R6)	TEST ORIENTATION	NOTES WATER LEVELS INSTRUMENTATION
96	88.5-104.9 ft. Fresh, thinly bedded, light brownish gray (5YR 6/1), microcrystalline, strong, LIMESTONE, (ST. LOUIS FORMATION)							0	B,I,SM						
								30	B,I,SM						
								60	B,I,SM						
98				9	99%			90							
100			412.90												9/20/95 @ 15:00 End Run 9
			100.20						B,C,R						
									J,I,R,CL						
102									B,PL,SM(3)						
									B,PL,SM						
104									B,I,SM						
	104.9-119.3 ft. Fresh, thinly bedded, olive gray (5Y 3/2), micro-crystalline, strong, ARGILLACEOUS DOLOMITIC LIMESTONE, (ST. LOUIS FORMATION) Frequent vugs, fossiliferous 106.6 ft. Seam of grayish blue green (5BG 5/2) clay (<1/2")			10	100 %				B,PL,SM,CL						
106															
108															
110	109.8 ft. Color change to yellowish gray, less argillaceous and less vuggy		402.90												9/20/95 @ 18:00 End Run 10 9/21/95 @ 7:15 Begin Run 11
			110.20	11	100 %										
112															

DEPTH SCALE: 1:2
DRILLING CONTRACTOR: LAYNE-WESTERN
DRILLER: D.MAHURIN

LOGGED: B.HARRINGTON
CHECKED: B.TILTON
DATE: 10/9/95

Golder Associates

RECORD OF DRILLHOLE PZ-301-SS

PROJECT: LAIDLAW/RI-FS
PROJECT NO: 943-2848
LOCATION: BRIDGETON, MO

BORING METHOD: NX Core & Water
DRILLING DATE: 9/19/95-9/21/95
DRILL RIG: CME 750

DATUM: MSL
COORDINATES N: 1064801.7
AZIMUTH:

COLLAR ELEV: 513.1
E: 515517.0
INCLINATION: -90

J-Joint, F-Fault, S-Shear, B-Bedding, F-Foliation
PL-Planar, C-Curved, U-Undulating, ST-Stepped, I-Irregular
P-Polished, K-Slickensided, SM-Smooth, R-Rough, VR-V. Rough
Fe-FeOxide, CL-Clay Infill

SCALE (FEET)	DESCRIPTION	GRAPHIC LOG	ELEV / DEPTH (FT)	RUN NO	CORE RECOVERY	RQD (80 60 40 20)	FRACTURES PER FOOT (2 4 6 8 10)	DISCONTINUITY DATA: DIP wrt CORE AXIS (0 30 60 90)	DISCONTINUITY DATA: TYPE AND SURFACE DESCRIPTION	GRAPHIC LOG	WEATHERING INDEX (SW FR MW HW CW)	STRENGTH INDEX (R6 R5 R4 R3 R2 R1)	POINT LOAD INDEX (psi) (R1 30, R2 150, R3 300, R4 600, R5 1500, R6)	TEST ORIENTATION	NOTES WATER LEVELS INSTRUMENTATION
112	104.9-119.3 ft. Fresh, thinly bedded, olive gray (5Y 3/2), micro-crystalline, strong, ARGILLACEOUS DOLOMITIC LIMESTONE, (ST. LOUIS FORMATION) Frequent vugs, fossiliferous														
114	114.0 ft. Vugs no longer present														
116				11	100 %										
118									B,PL,SM						
120	119.3-137.3 ft. Fresh, medium to thinly bedded, light olive gray (5Y 5/2), very finely crystalline, medium strong, LIMESTONE, (ST. LOUIS FORMATION)		392.90 / 120.20												9/21/95 @ 8:10 End Run 11
122									B,PL,SM						
									B,PL,SM,CL						
124	124.6 ft. Calcite crystals in formation			12	101 %										
126	127.0 ft. Intermittent stylolites								B,PL,SM						
128	128.0-129.5 ft. Iron pyrite crystals														

DEPTH SCALE: 1:2
DRILLING CONTRACTOR: LAYNE-WESTERN
DRILLER: D.MAHURIN

LOGGED: B.HARRINGTON
CHECKED: B.TILTON
DATE: 10/9/95

Golder Associates

RECORD OF DRILLHOLE PZ-301-SS

PROJECT: LAIDLAW/RI-FS
PROJECT NO: 943-2848
LOCATION: BRIDGETON, MO

BORING METHOD: NX Core & Water
DRILLING DATE: 9/19/95-9/21/95
DRILL RIG: CME 750

DATUM: MSL
COORDINATES N: 1064801.7
AZIMUTH:

COLLAR ELEV: 513.1
E: 515517.0
INCLINATION: -90

J-Joint, F-Fault, S-Shear, B-Bedding, F-Foliation
PL-Planar, C-Curved, U-Undulating, ST-Stepped, I-Irregular
P-Polished, K-Slikensided, SM-Smooth, R-Rough, VR-V. Rough
Fe-FeOxide, CL-Clay Infill

DEPTH SCALE (FEET)	DESCRIPTION	ELEV / DEPTH (FT)	RUN NO.	CORE RECOVERY	RQD	FRACTURES PER FOOT	DISCONTINUITY DATA: DIP vert CORE AXIS	DISCONTINUITY DATA: TYPE AND SURFACE DESCRIPTION	WEATHERING INDEX	STRENGTH INDEX	POINT LOAD INDEX (psi)	TEST ORIENTATION	NOTES WATER LEVELS INSTRUMENTATION
128	119.3-137.3 ft. Fresh, medium to thinly bedded, light olive gray (5Y 5/2), very finely crystalline, medium strong, LIMESTONE, (ST. LOUIS FORMATION)		12	101 %	80 60 40 20	2 4 6 8 10	0 30 60 90	B,PL,SM	SW FR MW HW CW	R5 R6 R4 R3 R2 R1	R1 30 R2 150 R3 300 R4 600 R5 1500 R6		
								J,C,SM					
130	130.0 ft. Frequent stylolites							B,PL,SM,CL					9/21/95 @ 9:20 End Run 12
		382.90											
		130.20						B,PL,SM					
								B,C,SM					
132								B,PL,SM					
134													
			13	100 %				B,PL,R					
136													
	137.3-138.0 ft. Fresh, medium bedded, grayish blue green (5BG 5/2), very finely crystalline, medium strong, ARGILLACEOUS LIMESTONE, (ST. LOUIS FORMATION)							B,PL,SM,CL					
138	138.0-160.3 ft. Fresh, thinly bedded, light olive gray (5Y 5/2), micro-crystalline, medium strong, ARGILLACEOUS DOLOMITIC LIMESTONE, (ST. LOUIS FORMATION)												
140		372.90											9/21/95 @ 10:35 End Run 13
		140.20						J,PL,SM					
142			14	100 %				J,PL,SM					
								B,PL,R					
								J,I,R					
								B,PL,SM					
144													

DEPTH SCALE: 1:2
DRILLING CONTRACTOR: LAYNE-WESTERN
DRILLER: D.MAHURIN

LOGGED: B.HARRINGTON
CHECKED: B.TILTON
DATE: 10/9/95

Golder Associates

RECORD OF DRILLHOLE PZ-301-SS

PROJECT: LAIDLAW/RI-FS
PROJECT NO: 943-2848
LOCATION: BRIDGETON, MO

BORING METHOD: NX Core & Water
DRILLING DATE: 9/19/95-9/21/95
DRILL RIG: CME 750

DATUM: MSL
COORDINATES N: 1064801.7
AZIMUTH:

COLLAR ELEV: 513.1
E: 515517.0
INCLINATION: -90

ROCK TYPE

J-Joint, F-Fault, S-Shear, B-Bedding, F-Foliation
PL-Planar, C-Curved, U-Undulating, ST-Stepped, I-Irregular
P-Polished, K-Slickensided, SM-Smooth, R-Rough, VR-V. Rough
Fe-FeOxide, CL-Clay Infill

SCALE (FEET)	DESCRIPTION	GRAPHIC LOG	ELEV / DEPTH (FT)	RUN NO.	CORE RECOVERY	RQD	FRACTURES PER FOOT	DISCONTINUITY DATA: DIP wrt CORE AXIS	DISCONTINUITY DATA: TYPE AND SURFACE DESCRIPTION	GRAPHIC LOG	WEATHERING INDEX (SW, FR, MW, HW, CW)	STRENGTH INDEX (R6, R5, R4, R3, R2, R1)	POINT LOAD INDEX (psi) (R1 30, R2 150, R3 300, R4 600, R5 1500, R6)	TEST ORIENTATION	NOTES WATER LEVELS INSTRUMENTATION
144	138.0-160.3 ft. Fresh, thinly bedded, light olive gray (5Y 5/2), micro-crystalline, medium strong, ARGILLACEOUS DOLOMITIC LIMESTONE, (ST. LOUIS FORMATION)					80 60 40 20	2 4 6 8 10	0 30 60 90	B,C,SM						
146				14	100 %										
148															
150			362.80												9/21/95 @ 11:30 End Run 14
			150.30						J,I,SM						
152															
154									B,PL,R						
156	156.5-159.0 ft. Alternating beds of light olive gray and grayish blue green			15	100 %				B,PL,SM						
158															
160									B,C,SM,CL J,I,R,CL						

DEPTH SCALE: 1:2
DRILLING CONTRACTOR: LAYNE-WESTERN
DRILLER: D.MAHURIN

LOGGED: B.HARRINGTON
CHECKED: B.TILTON
DATE: 10/9/95

Golder Associates

RECORD OF DRILLHOLE PZ-301-SS

PROJECT: LAIDLAW/RI-FS
PROJECT NO: 943-2848
LOCATION: BRIDGETON, MO

BORING METHOD: NX Core & Water
DRILLING DATE: 9/19/95-9/21/95
DRILL RIG: CME 750

DATUM: MSL
COORDINATES N: 1064801.7
AZIMUTH:

COLLAR ELEV: 513.1
E: 515517.0
INCLINATION: -90

J-Joint, F-Fault, S-Shear, B-Bedding, F-Foliation
PL-Planar, C-Curved, U-Undulating, ST-Stepped, I-Irregular
P-Polished, K-Slikensided, SM-Smooth, R-Rough, VR-V. Rough
Fe-FeOxide, CL-Clay Infill

SCALE (FEET)	DESCRIPTION	GRAPHIC LOG	ELEV / DEPTH (FT)	RUN NO.	CORE RECOVERY	RQD (80 60 40 20)	FRACTURES PER FOOT (2 4 6 8 10)	DISCONTINUITY DATA: DIP wrt CORE AXIS (0 30 60 90)	DISCONTINUITY DATA: TYPE AND SURFACE DESCRIPTION	DISCONTINUITY DATA: GRAPHIC LOG	WEATHERING INDEX (SW FR MW HW CW)	STRENGTH INDEX (R6 R5 R4 R3 R2 R1)	POINT LOAD INDEX (psi) (R1 30 R2 150 R3 300 R4 600 R5 1500 R6)	TEST ORIENTATION	NOTES WATER LEVELS INSTRUMENTATION
160			352.80	15	100 %										9/21/95 @ 12:35 End Run 15
	352.80		352.80												
	End of Record of Drillhole at 160.3 ft. 160.30		160.30												
162															
164															
166															
168															
170															
172															
174															
176															

DEPTH SCALE: 1:2
DRILLING CONTRACTOR: LAYNE-WESTERN
DRILLER: D.MAHURIN

LOGGED: B.HARRINGTON
CHECKED: B.TILTON
DATE: 10/9/95

Golder Associates

Well No. PZ-301-SS

Boring No. X-Ref: PZ-301-SS

PIEZOMETER CONSTRUCTION SUMMARY

Survey Coords: Northing: 1064802 ft.
Easting: 515517 ft.

Elevation Ground Level 513.1 ft. NGVD
Top of PVC Casing 514.71 ft. NGVD

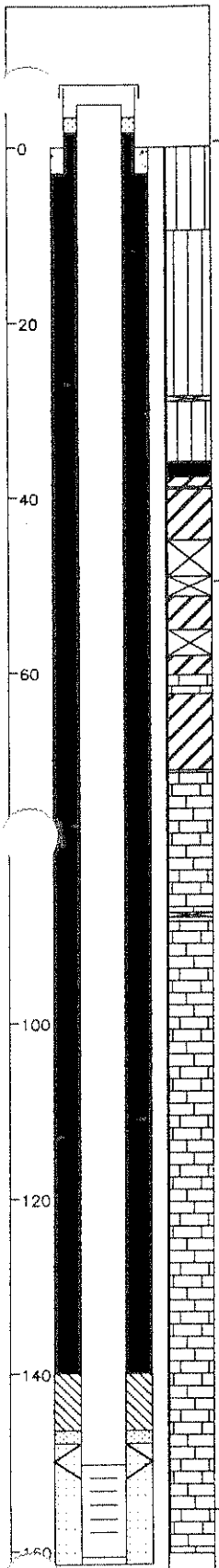

Not to Scale

Drilling Summary:

Total Depth 161.5 ft.
Borehole Diameter 8 1/4" (0.0-19.0') 5 7/8" (19.0-161.5')
Casing Stickup Height 1.61 ft.
Driller Layne-Western
St. Louis, MO

Rig CME 75, Schramm Portadrill T660H
Bit(s) 4 1/4" ID Hollow Stem Auger Bit,
NX Core, 5 7/8" Button Bit for Reaming
Drilling Fluid NX Core Water, Air Rotary

Protective Casing 8x8" Square Steel, by 5' long

Well Design & Specifications

Basis: Geologic Log X Geophysical Log
Casing string(s): C = Casing S = Screen

Depth			String(s)	Elevation		
+ 1.61	-	150.90	C1	514.71	-	362.20
150.90	-	160.70	S1	362.20	-	352.40
160.70	-	161.00	C2	352.40	-	352.10
	-				-	
	-				-	
	-				-	

Casing: C1 2" dia. Schedule 80 PVC, flush threaded with O-rings
C2 2" dia. threaded PVC end cap (4" long or 0.33')
Screen: S1 2" dia. Schedule 80 PVC, 0.010" machine cut slot, flush threaded with O-rings

Sand Pack: 16-35 mesh Silica Sand 148.0-161.5'

Filter Pack: Less than 50 mesh Silica Sand 146.5-148.0'

Grout Seal: Wyo-Ben Grout Well Bentonite Slurry 140.0-146.5'

Bentonite Seal: Extra high yield Wyo-Ben (100%) Slurry 3.0-140.0'

Concrete: 0.0-3.0'

Construction Time log:

Task	Start Date	Start Time	Finish Date	Finish Time
Drilling				
CME 75 (Auger)	9/19/95	11:30	9/19/95	14:15
Schramm Rotary	9/22/95	9:15	9/23/95	11:30
CME 75 (Core)	9/19/95	16:00	9/21/95	12:35
Geophys.Logging:				
Casing:				
2" I.D. PVC	9/23/95	12:00	9/23/95	12:15
Filter Placement:	9/23/95	12:15	9/23/95	13:00
Cementing:				
Development				
Bentonite Grout	9/23/95	13:15	9/23/95	13:45
Bentonite Seal	9/23/95	13:45	9/23/95	15:30

Well Development

Stabilization Test Data:

Time	pH	Spec. Cond.	Temp (°C)

Recovery Data:

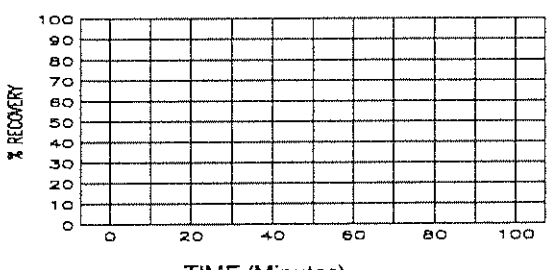

Comments:

Supervised by B. Tilton
Job Number 943-2848

Site LAIDLAW/OU2 RI-FS/MO
File Name PZ301SS

MISSOURI DEPARTMENT OF NATURAL RESOURCES
DIVISION OF GEOLOGY AND LAND SURVEY

MONITORING WELL CERTIFICATION RECORD

OFFICE USE ONLY	DATE RECEIVED
REF. NO. 145098	
C.R. NO.	CHECK NO.
STATE WELL NUMBER	TRANSMITTAL NO.
CHECKED BY	ROUTE
APPROVED BY	ENTERED Ph 1 Ph 2 Ph 3

INFORMATION SUPPLIED BY MONITORING WELL CONTRACTOR

SITE/FACILITY NAME: LAIDLAW BRIDGETON SANITARY LANDFILL
WELL NUMBER: PZ-30155

SITE ADDRESS: ST. CHARLES ROCK RD. | CITY: BRIDGETON | STATE: MO | ZIP CODE: 63044

OWNER NAME: LAIDLAW WASTE SYSTEMS, INC. | TELEPHONE: 314-241-3710

OWNER ADDRESS: 1138 N. BROADWAY | CITY: ST. LOUIS | STATE: MO | ZIP CODE: 63102

VARIANCE ISSUED: ☐ YES ☒ NO | DATE ISSUED: | VARIANCE NUMBER: V

DESCRIBE LOCATION OF THE WELL SO WE WOULD BE ABLE TO VISIT IT:
1750' SOUTH OF SOUTH ENTRANCE TO LANDFILL, SOUTH OF OLD ST. CHARLES ROCK RD.

LOCATION OF WELL
SHOW LOCATION IN SECTION PLAT
COUNTY: ST. LOUIS
SURFACE ELEVATION: 513.1
SMALLEST ¼ ____ ¼ ____ ¼ ____ ¼ LARGEST ¼
SEC. ____ TWN. 47 N,RNG. 5 (E OR W)
LAT. 38 ° 45 ' 28 " LONG. 90 ° 26 ' 44 "

MONITORING WELL INSTALLATION CONTRACTOR'S NAME: LAYNE WESTERN CO, INC. | PERMIT NUMBER: 001258 WPM

DRILLING CONTRACTOR'S NAME: LAYNE WESTERN CO., INC. | PERMIT NUMBER: 001258 WPM

WELL CONSTRUCTION INFORMATION

TYPE OF WELL: ☐ MONITORING WELL ☒ PIEZOMETER ☐ OTHER ____
TYPE OF POTENTIAL SITE: ☐ HAZARDOUS MATERIAL ☒ LANDFILL ☐ OTHER ____ ☐ L.U.S.T.
MONITORING FOR: (CHECK ALL THAT APPLY) ☒ V.O.C. ☐ METALS ☐ PETROLEUM PRODUCT ☐ OTHER ____ ONLY

PROTECTIVE CASING DETAILS (IF USED): LENGTH 5 FT. | DIAMETER OF CASING 8x8 IN. | WEIGHT OR SDR # 0.188" | DIAMETER AND DEPTH OF DRILL HOLE 8.25 IN. 19 FT. | JOINTS ☐ THREADED ☐ MECHANICAL ☐ WELDED ☐ OTHER ____ | MATERIAL ☐ THERMO PLASTIC ☒ STEEL ☐ FLUORO POLYMER TYPE ____ | LOCKING CAP? ☒ YES ☐ NO

CASING GROUT DETAILS: CAP VENTED ☒ YES ☐ NO | WEEP HOLE? ☒ YES ☐ NO | MATERIAL ☐ CEMENT ☒ CONCRETE ☐ OTHER ____ | DEPTH FROM THE SURFACE TO THE BOTTOM OF THE CASING GROUT SEAL 3.0 FT. | TYPE OF SURFACE COMPLETION ☒ ABOVE GROUND ☐ FLUSH MOUNT | DESCRIBE HOW THE FLUSH MOUNT WAS CONSTRUCTED

CENTRALIZER USED ON RISER: ☐ NO ☒ YES LOCATED AT 30', 70', 110', 150' | MATERIAL ☒ STAINLESS STEEL ☐ OTHER ____

RISER PIPE DETAILS: LENGTH 152.8 FT. | DIAMETER OF RISER PIPE 2 IN. | WEIGHT OR SDR # SCH. 80 | DIAMETER OF DRILL HOLE 5 7/8 IN. | JOINTS ☒ THREADED ☐ MECHANICAL ☐ WELDED ☐ OTHER ____ | MATERIAL ☒ THERMO PLASTIC ☐ STEEL ☐ FLUORO POLYMER ☐ OTHER ____

ANNULAR SEAL: ☐ CEMENT SLURRY ☒ BENTONITE SLURRY ☐ NON SLURRY BENTONITE TYPE: ____ ☐ CEMENT/BENTONITE SLURRY BAGS OF CEMENT USED ____ % BENTONITE USED ____ WATER USED/BAG ____ GAL.

BENTONITE SEAL: MATERIAL BENTONITE ☒ SLURRY ☐ CHIPS ☐ GRANULAR ☐ PELLETS | LENGTH OF SEAL 6.5' | BENTONITE SEAL INSTALLED IN ☐ UNSATURATED ZONE ☒ SATURATED ZONE

PRIMARY FILTER PACK: TYPE ☒ SAND ☐ MANUFACTURED ☐ NATURAL | GRAIN SIZE 16-35 | LENGTH OF FILTER PACK 13.5 FT. | METHOD OF INSTALLATION TREMIE

SECONDARY FILTER PACK: TYPE ☒ SAND ☐ MANUFACTURED ☐ NONE | GRAIN SIZE 16-35 | LENGTH OF FILTER PACK 1.5 FT. | METHOD OF INSTALLATION TREMIE

WELL SCREEN: LENGTH OF SCREEN 10 FT. | DIAMETER 2 IN. | SLOT SIZE 10 | WEIGHT OR SDR # SCH 80 | MATERIAL ☒ PLASTIC ☐ STEEL ☐ FLUORO POLYMER

SUMP DETAILS: LENGTH OF SUMP | DIAMETER OF SUMP | MATERIAL ☐ PVC ☐ STEEL ☐ FLUORO POLYMER ☐ OTHER ____

BACK FILL: WAS THE WELL BACK FILLED? ☒ YES ☐ NO | MATERIAL USED 16-35 SAND | LENGTH OF BACK FILLED BORE HOLE 0.5'

Information in this column to be supplied in the Feet from Surface column	FEET FROM SURFACE	FORMATION DESCRIPTION
		0-10 silt
Depth to bottom of Protective Casing Seal:	3.0	
		10-28.5 Siltstone
Depth to Base of Annular Seal:	140.0	28.5-59.5 Claystone
		59.5-62 Limestone
		62-70.5 Claystone
Depth to Base of Bentonite Seal:	146.5	70.5-161.5 Limestone
Depth to Top of Primary Filter Pack:	148.0	
Depth to Top of the Screen:	151.0	
Depth to Bottom of the Screen:	161.0	
Total Depth:	161.5'	
DATE WELL DRILLING WAS COMPLETED		

STATIC WATER LEVEL FEET FROM MEASURING POINT:
DATE OF STATIC WATER LEVEL:
MEASURING POINT FOR STATIC WATER LEVEL IS: ☒ TOP OF RISER PIPE ☐ OTHER ____
ELEVATION OF MEASURING POINT: 514.71

MULTIPLE CASED WELLS
SUBMIT ADDITIONAL AS BUILT DIAGRAM SHOWING WELL CONSTRUCTION DETAILS INCLUDING TYPE AND SIZE OF ALL CASING, HOLE DIAMETERS, AND GROUT USED.

DRILLING EQUIPMENT: ☒ AIR ROTARY ☒ AUGER TYPE 4.25 H.S.A. ☐ REVERSE ROTARY ☐ OTHER ____

I HEREBY CERTIFY THAT THE MONITORING WELL HEREIN DESCRIBED WAS CONSTRUCTED IN ACCORDANCE WITH THE DEPARTMENT OF NATURAL RESOURCES REQUIREMENTS FOR THE CONSTRUCTION OF MONITORING WELLS.

SIGNATURE PRIMARY CONTRACTOR/PERMIT #: Tomas H. Mahurin II. | DATE: 11-15-95
SIGNATURE DRILLER/PERMIT #: Tomas H. Mahurin II. | DATE: 11-15-95

MO 780-1415 (7-95)

DISTRIBUTION: WHITE/DIVISION CANARY/MONITORING WELL CONTRACTOR PINK/OWNER
MAIL WHITE COPY TO: DEPARTMENT OF NATURAL RESOURCES, P.O. BOX 250, ROLLA, MO 65402
ENCLOSE $35 PER MONITORING WELL FOR THE CERTIFICATION FEE WITHIN 60 DAYS AFTER WELL COMPLETION

RECYCLED PAPER

LAIDLAW WASTE SYSTEMS INC.

SOIL BOREHOLE LOG

SITE NAME AND LOCATION	LAIDLAW/OU2 RI-FS/MO WEST LAKE LANDFILL OPERABLE UNIT 2
DRILLING METHOD:	4.25 inch I.D./8.25 inch O.D. Hollow Stem Auger 3.625 inch Mud Rotary
SAMPLING METHOD:	CALIFORNIA SAMPLER: 2.0" I.D. (CA) SPLIT SPOON: 2.0 inch O.D./1.5 inch I.D. (SP) SHELBY TUBE: 3.0 inch O.D./2 13/16 inch I.D. (SH)
BORING NO.	PZ-302-AI
SHEET	1 OF 2
DRILLING	START: TIME 8:15, DATE 9/26/95 — FINISH: TIME 11:30, DATE 9/26/95
WATER LEVEL / TIME / DATE / CASING DEPTH	
NORTHING: 1067210.24 DATUM EASTING: 514720.49	ELEVATION 450.0
DRILL RIG	CME 750
ANGLE	90° BEARING NA
SAMPLE HAMMER	
SURFACE CONDITIONS	

DEPTH IN FEET (ELEVATION)	BLOW/ 6 IN. ON SAMPLER	RECOVERY	SYMBOL	SAMPLER SYMBOL	SAMPLE NUMBER AND DESCRIPTION OF MATERIAL	SAMPLER TYPE	REMARKS
16–21					(0.0-22.0 ft.) No samples collected, see Soil Borehole Log PZ-302-AS for descriptions		
(428.0) 22.0							
22	4 2 7 6	0.1' 2.0' (5%)			(22.0-25.4 ft.) Loose, pale yellowish brown (10YR 6/2), f-m SAND with trace iron staining, NR, wet, (SP), (ALLUVIUM)	SP 1	
23–24							
24	3 2 3 10	1.2' 2.0' (60%)				SP 2	
25							0.0 ppm PID
26	10 7 9 14	1.6' 2.0' (80%)			(25.4-26.1 ft.) Compact, olive gray (5Y 4/1), f-m SAND, trace Silt, iron staining, NR, wet, (SP), (ALLUVIUM) (26.1-37.4 ft.) Compact to dense, light olive gray (5Y 4/1), f-m SAND, NR, wet, (SP), (ALLUVIUM)	SP 3	
27–28							
28	8 8 12 10	1.6' 2.0' (80%)				SP 4	
29							

DRILLING CONTR LAYNE-WESTERN

LOGGED BY B. HARRINGTON

DATE 10/9/95 CHK'D BY B. TILTON

JOB NO.: 943-2848

FILENAME: PZ302AI

LAIDLAW WASTE SYSTEMS INC.

SOIL BOREHOLE LOG

SITE NAME AND LOCATION

LAIDLAW/OU2 RI-FS/MO
WEST LAKE LANDFILL
OPERABLE UNIT 2

NORTHING: 1067210.24
DATUM EASTING: 514720.49 ELEVATION 450.0

DRILLING METHOD:
4.25 inch I.D./8.25 inch O.D. Hollow Stem Auger
3.625 inch Mud Rotary
SAMPLING METHOD: CALIFORNIA SAMPLER: 2.0" I.D. (CA)
SPLIT SPOON: 2.0 inch O.D./1.5 inch I.D. (SP)
SHELBY TUBE: 3.0 inch O.D./2 13/16 inch I.D. (SH)

					START	FINISH
WATER LEVEL					TIME	TIME
TIME					8:15	10:30
DATE					DATE	DATE
CASING DEPTH					9/26/95	9/26/95

BORING NO. PZ-302-AI

SHEET 2 OF 2

DRILLING CONTR LAYNE-WESTERN

DRILL RIG CME 750

SURFACE CONDITIONS

ANGLE 90° BEARING NA

SAMPLE HAMMER

LOGGED BY B. HARRINGTON

DATE 10/9/95

CHK'D BY B. TILTON

JOB NO.: 943-2848

FILENAME: PZ302AI

DEPTH IN FEET (ELEVATION)	BLOW/6 IN. ON SAMPLER	RECOVERY	SYMBOL	SAMPLER SYMBOL	SAMPLE NUMBER AND DESCRIPTION OF MATERIAL	SAMPLER TYPE	REMARKS
31	8 9 10 13	1.4'/2.0' (70%)			(26.1-37.4 Ft.) Compact to dense, light olive gray (5Y 4/1), f-m SAND, NR, wet, (SP), (ALLUVIUM)	SP (5)	
32	11 9	1.6'/2.0' (80%)					
33	10 14					SP (6)	
34	16 18	1.1'/2.0' (55%)					
35	20 24					CA (7)	
36	7 7	1.2'/2.0' (60%)					
37	10 14				(412.6) 37.4	SP (8)	
38	6 11	1.3'/2.0' (65%)			(37.4-42.0 Ft.) Compact, olive gray (5Y 4/1), well graded SAND, NR, wet, (SW), (ALLUVIUM)		
39	11 12					SP (9)	
40	10 14	1.3'/2.0' (65%)					
41	14 12					SP (10)	
42					(408.0) 42.0 End of Soil Borehole Log at 42.0 ft.		0.0 ppm PID
43							
44							

Well No. PZ-302-AI

Boring No. X-Ref: PZ-302-AI

PIEZOMETER CONSTRUCTION SUMMARY

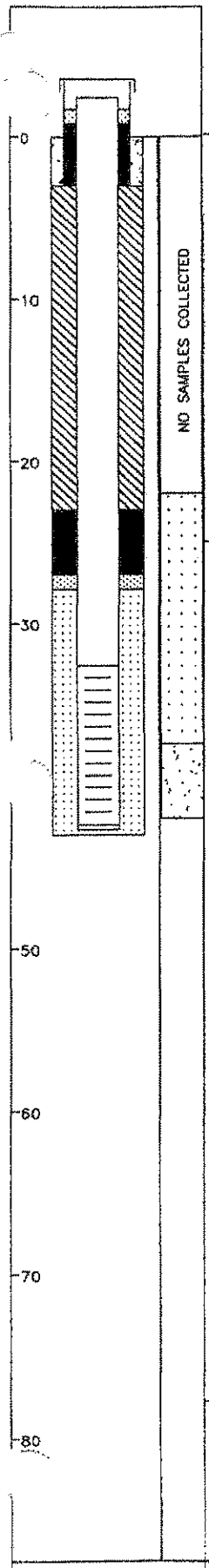

Not to Scale

Survey Coords: Northing: 1067210 ft. Easting: 514720 ft.

Elevation Ground Level 450.0 ft. NGVD

Top of PVC Casing 451.15 ft. NGVD

Drilling Summary:

Total Depth 43.0 ft.

Borehole Diameter 8 1/4" (0.0-43.0')

Casing Stickup Height 1.15 ft.

Driller Layne-Western, St. Louis, MO

Rig CME 750

Bit(s) 4 1/4" ID Hollow Stem Auger Bit, 3 5/8" Tricone Bit

Drilling Fluid Bentonite Drilling Mud (20.0-42.0')

Protective Casing 8x8" Square Steel, by 5' long

Well Design & Specifications

Basis: Geologic Log X Geophysical Log

Casing string(s): C = Casing S = Screen

Depth			String(s)	Elevation		
+ 1.15	-	32.60	C1	451.15	-	417.40
32.60	-	42.40	S1	417.40	-	407.60
42.40	-	42.70	C2	407.60	-	407.30
	-				-	
	-				-	
	-				-	

Casing: C1 2" dia. Schedule 80 PVC, flush threaded with O-rings

C2 2" dia. threaded PVC end cap (4" long or 0.33')

Screen: S1 2" dia. Schedule 80 PVC, 0.010" machine cut slot, flush threaded with O-rings

Sand Pack: 16-35 mesh Silica Sand 27.9-43.0'

Filter Pack: 100 mesh Silica Sand 27.0-27.9'

Grout Seal: Wyo-Ben Grout Well Bentonite Slurry 3.0-23.0'

Bentonite Seal: Extra high yield Wyo-Ben (100%) Slurry 23.0-27.0'

Concrete: 0.0-3.0'

Construction Time log:

Task	Start Date	Start Time	Finish Date	Finish Time
Drilling				
CME 750	9/26/95	8:15	9/26/95	11:30
Geophys.Logging:				
Casing:				
2" I.D. PVC	9/26/95	12:50	9/26/95	12:55
Filter Placement:	9/26/95	13:05	9/26/95	13:40
Cementing:				
Development				
Bentonite Grout	9/26/95	14:00	9/26/95	14:15
Bentonite Seal	9/26/95	13:40	9/26/95	13:50

Well Development

Stabilization Test Data:

Time	pH	Spec. Cond.	Temp (°C)

Recovery Data:

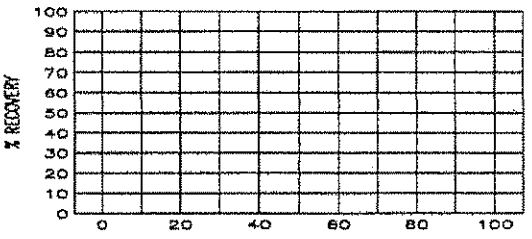

Comments:

Supervised by B. Harrington

Job Number 943-2848

Site LAIDLAW/OU2 RI-FS/MO

File Name PZ302AI

MISSOURI DEPARTMENT OF NATURAL RESOURCES
DIVISION OF GEOLOGY AND LAND SURVEY

MONITORING WELL CERTIFICATION RECORD

OFFICE USE ONLY	DATE RECEIVED
REF. NO. 145100	
C.R. NO.	CHECK NO.
STATE WELL NUMBER	TRANSMITTAL NO.
CHECKED BY	ROUTE
APPROVED BY	ENTERED Ph 1 Ph 2 Ph 3

INFORMATION SUPPLIED BY MONITORING WELL CONTRACTOR

SITE/FACILITY NAME: LAIDLAW BRIDGETON SANITARY LANDFILL
WELL NUMBER: PZ-302AI
SITE ADDRESS: ST. CHARLES ROCK RD. | CITY: BRIDGETON | STATE: Mo | ZIP CODE: 63044
OWNER NAME: LAIDLAW WASTE SYSTEMS, INC. | TELEPHONE: 314-241-3710
OWNER ADDRESS: 1838 N. BROADWAY | CITY: ST. LOUIS | STATE: Mo | ZIP CODE: 63102

VARIANCE ISSUED: ☐ YES ☒ NO | DATE ISSUED | VARIANCE NUMBER: V

DESCRIBE LOCATION OF THE WELL SO WE WOULD BE ABLE TO VISIT IT:
15' INSIDE FENCE LINE, 720' NORTHWEST OF SOUTH ENTRANCE OFF OLD ST. CHARLES ROCK RD.

LOCATION OF WELL — SHOW LOCATION IN SECTION PLAT
COUNTY: ST. LOUIS
SURFACE ELEVATION: 450.5
SMALLEST ¼ ____ ¼ ____ ¼ ____ ¼ LARGEST ¼
SEC. ____ TWN. 47 N,RNG. 5 (E) OR W
LAT. 38 · 45 · 52 · LONG. 90 · 26 · 54 ·

MONITORING WELL INSTALLATION CONTRACTOR'S NAME: LAYNE WESTERN Co, INC. | PERMIT NUMBER: 001258 WPM
DRILLING CONTRACTOR'S NAME: LAYNE WESTERN Co, INC. | PERMIT NUMBER: 001258 WPM

WELL CONSTRUCTION INFORMATION

TYPE OF WELL: ☐ MONITORING WELL ☒ PIEZOMETER ☐ OTHER ____
TYPE OF POTENTIAL SITE: ☐ HAZARDOUS MATERIAL ☒ LANDFILL ☐ OTHER ____ ☐ L.U.S.T.
MONITORING FOR: (CHECK ALL THAT APPLY) ☒ V.O.C. ☐ METALS ☐ PETROLEUM PRODUCT ONLY ☐ OTHER ____

PROTECTIVE CASING DETAILS (IF USED): LENGTH 5 FT. | DIAMETER OF CASING 8 x 8 IN. | WEIGHT OR SDR # 0.188" | DIAMETER AND DEPTH OF DRILL HOLE 8¼ IN. 43 FT. | JOINTS ☐ THREADED ☐ MECHANICAL ☐ WELDED ☐ OTHER ____ | MATERIAL ☐ THERMO PLASTIC ☒ STEEL ☐ FLUORO POLYMER TYPE ____ | LOCKING CAP? ☒ YES ☐ NO

CASING GROUT DETAILS: CAP VENTED ☒ YES ☐ NO | WEEP HOLE? ☒ YES ☐ NO | MATERIAL ☐ CEMENT ☒ CONCRETE ☐ OTHER ____ | DEPTH FROM THE SURFACE TO THE BOTTOM OF THE CASING GROUT SEAL 3.0 FT. | TYPE OF SURFACE COMPLETION ☒ ABOVE GROUND ☐ FLUSH MOUNT | DESCRIBE HOW THE FLUSH MOUNT WAS CONSTRUCTED

CENTRALIZER USED ON RISER: ☒ NO ☐ YES LOCATED AT ____ | MATERIAL ☐ STAINLESS STEEL ☐ OTHER ____

RISER PIPE DETAILS: LENGTH 34.2 FT. | DIAMETER OF RISER PIPE 2 IN. | WEIGHT OR SDR # SCH 80 | DIAMETER OF DRILL HOLE 8¼ IN. | JOINTS ☒ THREADED ☐ MECHANICAL ☐ WELDED ☐ OTHER ____ | MATERIAL ☒ THERMO PLASTIC ☐ STEEL ☐ FLUORO POLYMER ☐ OTHER ____

ANNULAR SEAL: ☐ CEMENT SLURRY ☒ BENTONITE SLURRY ☐ NON SLURRY BENTONITE TYPE: ____ ☐ CEMENT/BENTONITE SLURRY BAGS OF CEMENT USED ____ % BENTONITE USED ____ WATER USED/BAG ____ GAL.

BENTONITE SEAL: MATERIAL BENTONITE ☒ SLURRY ☐ CHIPS ☐ GRANULAR ☐ PELLETS | LENGTH OF SEAL 4.0 | BENTONITE SEAL INSTALLED IN ☐ UNSATURATED ZONE ☒ SATURATED ZONE

	TYPE	GRAIN SIZE	LENGTH OF FILTER PACK	METHOD OF INSTALLATION	Information in this column to be supplied in the Feet from Surface column	FEET FROM SURFACE	FORMATION DESCRIPTION
PRIMARY FILTER PACK	☒ SAND ☐ MANUFACTURED ☐ NATURAL	16-35	15.1 FT.	HSA POUR			
SECONDARY FILTER PACK	☒ SAND ☐ MANUFACTURED ☐ NONE	100	0.9 FT.	HSA POUR	Depth to bottom of Protective Casing Seal:	3.0	0-15 Silty clay
WELL SCREEN	LENGTH OF SCREEN 10 FT. / DIAMETER 2 IN. / SLOT SIZE 10 / WEIGHT OR SDR # SCH 80 / MATERIAL ☒ PLASTIC ☐ STEEL ☐ FLUORO POLYMER				Depth to Base of Annular Seal:	23.0	15-43 Silty sand
SUMP DETAILS	LENGTH OF SUMP	DIAMETER OF SUMP	MATERIAL ☐ PVC ☐ STEEL ☐ FLUORO POLYMER ☐ OTHER		Depth to Base of Bentonite Seal:	27.0	
BACK FILL	WAS THE WELL BACK FILLED? ☐ YES ☒ NO	MATERIAL USED	LENGTH OF BACK FILLED BORE HOLE		Depth to Top of Primary Filter Pack:	27.4	
					Depth to Top of the Screen:	33.0	
					Depth to Bottom of the Screen:	43.0	
					Total Depth:	43.0	

STATIC WATER LEVEL FEET FROM MEASURING POINT: ____
DATE OF STATIC WATER LEVEL: ____
MULTIPLE CASED WELLS: SUBMIT ADDITIONAL AS BUILT DIAGRAM SHOWING WELL CONSTRUCTION DETAILS INCLUDING TYPE AND SIZE OF ALL CASING, HOLE DIAMETERS, AND GROUT USED.
MEASURING POINT FOR STATIC WATER LEVEL IS: ☒ TOP OF RISER PIPE ☐ OTHER ____
ELEVATION OF MEASURING POINT: 451.15
DRILLING EQUIPMENT: ☐ AIR ROTARY ☒ AUGER TYPE 4¼ H.S.A. ☐ REVERSE ROTARY ☐ OTHER ____
DATE WELL DRILLING WAS COMPLETED: 9-26-95

I HEREBY CERTIFY THAT THE MONITORING WELL HEREIN DESCRIBED WAS CONSTRUCTED IN ACCORDANCE WITH THE DEPARTMENT OF NATURAL RESOURCES REQUIREMENTS FOR THE CONSTRUCTION OF MONITORING WELLS.

SIGNATURE PRIMARY CONTRACTOR/PERMIT #	DATE	SIGNATURE DRILLER/PERMIT #	DATE
Timothy J. Maher Jr.	11-15-95	Timothy J. Maher Jr.	11-15-95

MO 780-1415 (7-95)

DISTRIBUTION: WHITE/DIVISION CANARY/MONITORING WELL CONTRACTOR PINK/OWNER
MAIL WHITE COPY TO: DEPARTMENT OF NATURAL RESOURCES, P.O. BOX 250, ROLLA, MO 65402
ENCLOSE $35 PER MONITORING WELL FOR THE CERTIFICATION FEE WITHIN 60 DAYS AFTER WELL COMPLETION

RECYCLED PAPER

LAIDLAW WASTE SYSTEMS INC.

SOIL BOREHOLE LOG

SITE NAME AND LOCATION

LAIDLAW/OU2 RI-FS/MO
WEST LAKE LANDFILL
OPERABLE UNIT 2

NORTHING: 1067197.73
DATUM EASTING: 514737.29 ELEVATION 449.5

DRILLING METHOD:
4.25 inch I.D./8.25 inch O.D. Hollow Stem Auger

SAMPLING METHOD: CALIFORNIA SAMPLER: 2.0" I.D. (CA)
SPLIT SPOON: 2.0 inch O.D./1.5 inch I.D. (SP)
SHELBY TUBE: 3.0 inch O.D./2 13/16 inch I.D. (SH)

WATER LEVEL	18 FT.				
TIME	14:00				
DATE	9/25/95				
CASING DEPTH	20 FT.				

BORING NO. PZ-302-AS

SHEET 1 OF 2

DRILLING START	DRILLING FINISH
TIME 11:45	TIME 14:35
DATE 9/25/95	DATE 9/25/95

DRILL RIG CME 750

ANGLE 90° BEARING NA

SAMPLE HAMMER

SURFACE CONDITIONS

DRILLING CONTR LAYNE-WESTERN

LOGGED BY B. HARRINGTON

DATE 10/9/95 CHK'D BY B. TILTON

JOB NO.: 943-2848

FILENAME: PZ302AS

DEPTH IN FEET (ELEVATION)	BLOW/ 6 IN. ON SAMPLER	RECOVERY	SYMBOL	SAMPLER SYMBOL	SAMPLE NUMBER AND DESCRIPTION OF MATERIAL	SAMPLER TYPE	REMARKS
1	5 7 5 5	1.6' / 2.0' (80%)			(0.0-1.5 Ft.) Compact, dark yellowish orange (5YR 6/6), CLAYEY SILT, Fine Gravel sized pebbles, (FILL)	SP (1)	
2					(1.5-15.0 Ft.) Loose, olive gray (5Y 4/1), SILT, NR, dry to wet, some inter-mixed fill to 2.5 Ft., (SM), (LOESS)		
3	4 5 5 6	1.5' / 2.0' (75%)				SP (2)	
4		1.7' / 2.0' (85%)			@ 3.5 Ft., damp		0.0 ppm PID
5						ST (3)	
6	1 1 1 2	1.9' / 2.0' (95%)			@ 6.7 Ft., moist	SP (4)	
7							
8	0 0 0 1	1.9' / 2.0' (95%)				SP (5)	
9							
10	1 2 2 2	1.4' / 2.0' (70%)				SP (6)	0.0 ppm PID
11					From 11.5-11.7 Ft., wet From 11.7-13.1 Ft., moist		
12	1 2 1 4	2.0' / 2.0' (100%)				SP (7)	
13					From 13.1-13.6 Ft., wet From 13.6-15.0 Ft., moist		
14	4 5 6 3	1.2' / 2.0' (60%)				SP (8)	

LAIDLAW WASTE SYSTEMS INC.

SOIL BOREHOLE LOG

SITE NAME AND LOCATION

LAIDLAW/OU2 RI-FS/MO
WEST LAKE LANDFILL
OPERABLE UNIT 2

NORTHING: 1067197.73
DATUM EASTING: 514737.29 ELEVATION 449.5

DRILLING METHOD: 4.25 inch I.D./8.25 inch O.D. Hollow Stem Auger

SAMPLING METHOD: CALIFORNIA SAMPLER: 2.0" I.D. (CA)
SPLIT SPOON: 2.0 inch O.D./1.5 inch I.D. (SP)
SHELBY TUBE: 3.0 inch O.D./2 13/16 inch I.D. (SH)

WATER LEVEL	18 FT.			
TIME	1400			
DATE	9/25/95			
CASING DEPTH	20 FT.			

BORING NO. PZ-302-AS

SHEET 2 OF 2

DRILLING: START TIME 1145, DATE 9/25/95; FINISH TIME 1435, DATE 9/25/95

DRILL RIG CME 750

ANGLE 90° BEARING NA

SAMPLE HAMMER

SURFACE CONDITIONS

DEPTH IN FEET (ELEVATION)	BLOW/6 IN. ON SAMPLER	RECOVERY	SYMBOL	SAMPLER SYMBOL	SAMPLE NUMBER AND DESCRIPTION OF MATERIAL	SAMPLER TYPE	REMARKS
16	1 9 8 6	1.5' 2.0' (75%)			(15.0-21.9 ft.) Loose, olive gray (5Y 4/1), medium SAND, NR, wet, (SP),(ALLUVIUM)	SP (8)	
17						CA (9)	
18	1 3 5 9	2.0' 2.0' (100%)				SP (10)	0.0 ppm PID
19					From 19.2-21.0 ft, trace to little Silt in Sand		
20	3 5 5 4	1.6' 2.0' (80%)			(21.9-24.0 ft.) Loose, dark yellowish brown (10YR 6/2), f-m SAND, little iron staining, NR, wet, (ALLUVIUM)	SP (11)	
21							
22	0 0 1 2	2.0' 2.0' (100%)				SP (12)	0.0 ppm PID
23					(-24.0) 24.0		
24					End of Soil Borehole Log at 24.0 ft.		
25							
26							
27							
28							
29							

DRILLING CONTR LAYNE-WESTERN

LOGGED BY B. HARRINGTON CHK'D BY B. TILTON

DATE 10/9/95

JOB NO.: 943-2848

FILENAME: PZ302AS

Well No. PZ-302-AS

Boring No. X-Ref: PZ-302-AS

PIEZOMETER CONSTRUCTION SUMMARY

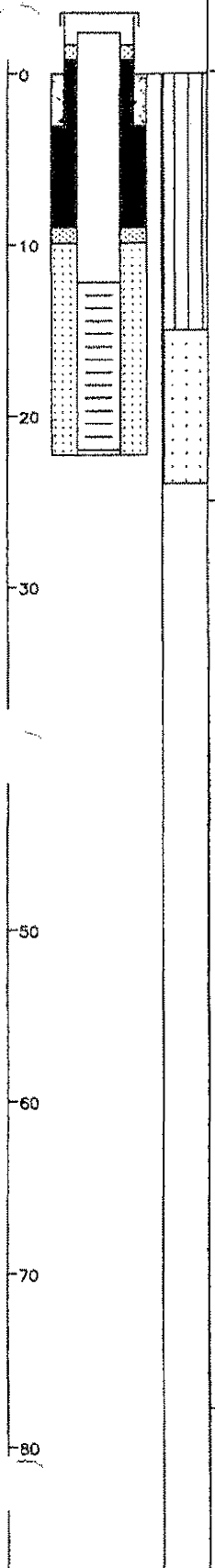

Not to Scale

Survey Coords: Northing: 1067198 ft.
Easting: 514737 ft.

Elevation Ground Level 449.5 ft. NGVD
Top of PVC Casing 451.42 ft. NGVD

Drilling Summary:

Total Depth 22.3 ft.
Borehole Diameter 8 1/4" (0.0-22.3')
Casing Stickup Height 1.92 ft.
Driller Layne-Western
St. Louis, MO

Rig CME 750
Bit(s) 4 1/4" ID Hollow Stem Auger Bit

Drilling Fluid None

Protective Casing 8x8" Square Steel, by 5' long

Construction Time log:

Task	Start Date	Start Time	Finish Date	Finish Time
Drilling				
CME 750	9/25/95	11:45	9/25/95	14:35
Geophys.Logging:				
Casing:				
2" I.D. PVC	9/25/95	14:55	9/25/95	15:00
Filter Placement:	9/25/95	15:00	9/25/95	15:40
Cementing:				
Development				
Bentonite Grout Bentonite Seal	9/25/95	15:40	9/25/95	15:60

Well Design & Specifications

Basis: Geologic Log X Geophysical Log

Casing string(s): C = Casing S = Screen

Depth			String(s)	Elevation		
+ 1.92	-	12.20	C1	451.42	-	437.30
12.20	-	22.00	S1	437.30	-	427.50
22.00	-	22.30	C2	427.50	-	427.20
	-				-	
	-				-	
	-				-	

Casing: C1 2" dia. Schedule 80 PVC, flush threaded with O-rings
C2 2" dia. threaded PVC end cap (4" long or 0.33')

Screen: S1 2" dia. Schedule 80 PVC, 0.010" machine cut slot, flush threaded with O-rings

Sand Pack: 16-35 mesh Silica Sand 9.9-22.3'

Filter Pack: 100 mesh Silica Sand 9.0-9.9'

Grout Seal:

Bentonite Seal: Extra high yield Wyo-Ben (100%) Slurry 3.0-9.0'

Concrete: 0.0-3.0'

Well Development

Stabilization Test Data:

Time	pH	Spec. Cond.	Temp (°C)

Recovery Data:

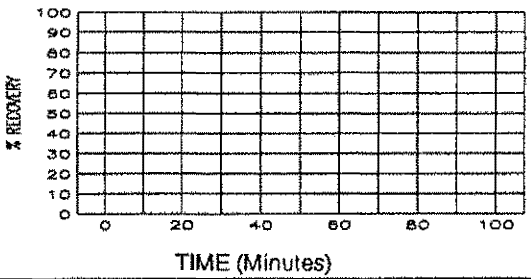

Comments:

Supervised by B. Harrington
Job Number 943-2848

Site LAIDLAW/OU2 RI-FS/MO
File Name PZ302AS

MISSOURI DEPARTMENT OF NATURAL RESOURCES
DIVISION OF GEOLOGY AND LAND SURVEY

MONITORING WELL CERTIFICATION RECORD

OFFICE USE ONLY	DATE RECEIVED
REF. NO. 145099	
C.R. NO.	CHECK NO.
STATE WELL NUMBER	TRANSMITTAL NO.
CHECKED BY	ROUTE
APPROVED BY	ENTERED Ph 1 Ph 2 Ph 3

INFORMATION SUPPLIED BY MONITORING WELL CONTRACTOR

SITE/FACILITY NAME: LAIDLAW BRIDGETON SANITARY LANDFILL
WELL NUMBER: PZ-302AS
SITE ADDRESS: ST. CHARLES ROCK RD.
CITY: BRIDGETON
STATE: Mo
ZIP CODE: 63044
OWNER NAME: LAIDLAW WASTE SYSTEMS, INC.
TELEPHONE: 314-241-3710
OWNER ADDRESS: 1838 N. BROADWAY
CITY: ST. LOUIS
STATE: Mo
ZIP CODE: 63102

VARIANCE ISSUED: ☐ YES ☒ NO
DATE ISSUED:
VARIANCE NUMBER: V

DESCRIBE LOCATION OF THE WELL SO WE WOULD BE ABLE TO VISIT IT
20' INSIDE FENCE LINE, 700' NORTHWEST OF SOUTH ENTRANCE OFF OLD ST CHARLES ROCK RD.

LOCATION OF WELL
SHOW LOCATION IN SECTION PLAT
COUNTY: ST. LOUIS
SURFACE ELEVATION: 449.2
SMALLEST ¼ ____ ¼ ____ ¼ ____ LARGEST ¼ ____
SEC. ____ TWN. 47 N,RNG. 5 (E) OR W
LAT. 38 ° 45 ' 52 " LONG. 90 ° 26 ' 54 "

MONITORING WELL INSTALLATION CONTRACTOR'S NAME: LAYNE WESTERN Co, INC.
PERMIT NUMBER: 001258 WPM
DRILLING CONTRACTOR'S NAME: LAYNE WESTERN Co., INC.
PERMIT NUMBER: 001258 WPM

WELL CONSTRUCTION INFORMATION

TYPE OF WELL: ☐ MONITORING WELL ☒ PIEZOMETER ☐ OTHER
TYPE OF POTENTIAL SITE: ☐ HAZARDOUS MATERIAL ☒ LANDFILL ☐ OTHER ☐ L.U.S.T.
MONITORING FOR: (CHECK ALL THAT APPLY) ☒ V.O.C. ☐ METALS ☐ PETROLEUM PRODUCT ☐ OTHER ONLY

PROTECTIVE CASING DETAILS (IF USED): LENGTH 5 FT. | DIAMETER OF CASING 8x8 IN. | WEIGHT OR SDR # 0.188" | DIAMETER AND DEPTH OF DRILL HOLE 8¼ IN. 22.3 FT. | JOINTS ☐ THREADED ☐ MECHANICAL ☐ WELDED ☐ OTHER | MATERIAL ☐ THERMO PLASTIC ☒ STEEL ☐ FLUORO POLYMER TYPE | LOCKING CAP? ☒ YES ☐ NO

CAP VENTED ☒ YES ☐ NO
WEEP HOLE? ☒ YES ☐ NO
CASING GROUT DETAILS: MATERIAL ☐ CEMENT ☒ CONCRETE ☐ OTHER
DEPTH FROM THE SURFACE TO THE BOTTOM OF THE CASING GROUT SEAL: 3.0 FT.
TYPE OF SURFACE COMPLETION: ☒ ABOVE GROUND ☐ FLUSH MOUNT
DESCRIBE HOW THE FLUSH MOUNT WAS CONSTRUCTED

CENTRALIZER USED ON RISER: ☒ NO ☐ YES LOCATED AT
MATERIAL: ☐ STAINLESS STEEL ☐ OTHER

RISER PIPE DETAILS: LENGTH 14.2 FT. | DIAMETER OF RISER PIPE 2 IN. | WEIGHT OR SDR # SCH 80 | DIAMETER OF DRILL HOLE 8¼ IN. | JOINTS ☒ THREADED ☐ MECHANICAL ☐ WELDED ☐ OTHER | MATERIAL ☒ THERMO PLASTIC ☐ STEEL ☐ FLUORO POLYMER ☐ OTHER

ANNULAR SEAL: ☐ CEMENT SLURRY ☒ BENTONITE SLURRY ☐ NON SLURRY BENTONITE ☐ CEMENT/BENTONITE SLURRY
TYPE: ____ BAGS OF CEMENT USED ____ % BENTONITE USED ____ WATER USED/BAG ____ GAL.
BENTONITE SEAL: MATERIAL BENTONITE ☒ SLURRY ☐ CHIPS ☐ GRANULAR ☐ PELLETS | LENGTH OF SEAL 6.0 | BENTONITE SEAL INSTALLED IN ☐ UNSATURATED ZONE ☒ SATURATED ZONE

	TYPE	GRAIN SIZE	LENGTH OF FILTER PACK	METHOD OF INSTALLATION	Information in this column to be supplied in the Feet from Surface column	FEET FROM SURFACE	FORMATION DESCRIPTION
PRIMARY FILTER PACK	☒ SAND ☐ MANUFACTURED ☐ NATURAL	16-35	12.4 FT.	H.S.A. POUR			
SECONDARY FILTER PACK	☒ SAND ☐ MANUFACTURED ☐ NONE	100	0.9 FT.	H.S.A. POUR	Depth to bottom of Protective Casing Seal:	3.0	0-15 Silty clay
WELL SCREEN	LENGTH OF SCREEN 10 FT.	DIAMETER 2 IN.	SLOT SIZE 10	WEIGHT OR SDR # SCH 80 / MATERIAL ☒ PLASTIC ☐ STEEL ☐ FLUORO POLYMER	Depth to Base of Annular Seal:	9.0	
SUMP DETAILS	LENGTH OF SUMP	DIAMETER OF SUMP	MATERIAL ☐ PVC ☐ STEEL ☐ FLUORO POLYMER ☐ OTHER		Depth to Base of Bentonite Seal:	9.0	
BACK FILL	WAS THE WELL BACK FILLED? ☐ YES ☒ NO	MATERIAL USED	LENGTH OF BACK FILLED BORE HOLE		Depth to Top of Primary Filter Pack:	9.9	
					Depth to Top of the Screen:	12.3	
					Depth to Bottom of the Screen:	22.3	15-22.3 Silty sand
					Total Depth:	22.3	

STATIC WATER LEVEL FEET FROM MEASURING POINT
DATE OF STATIC WATER LEVEL
MEASURING POINT FOR STATIC WATER LEVEL IS: ☒ TOP OF RISER PIPE ☐ OTHER
ELEVATION OF MEASURING POINT: 451.42
MULTIPLE CASED WELLS: SUBMIT ADDITIONAL AS BUILT DIAGRAM SHOWING WELL CONSTRUCTION DETAILS INCLUDING TYPE AND SIZE OF ALL CASING, HOLE DIAMETERS, AND GROUT USED.
DRILLING EQUIPMENT: ☐ AIR ROTARY ☒ AUGER TYPE 4¼ H.S.A. ☐ REVERSE ROTARY ☐ OTHER
DATE WELL DRILLING WAS COMPLETED: 9-25-95

I HEREBY CERTIFY THAT THE MONITORING WELL HEREIN DESCRIBED WAS CONSTRUCTED IN ACCORDANCE WITH THE DEPARTMENT OF NATURAL RESOURCES REQUIREMENTS FOR THE CONSTRUCTION OF MONITORING WELLS.

SIGNATURE PRIMARY CONTRACTOR/PERMIT #	DATE	SIGNATURE DRILLER/PERMIT #	DATE
Loman D. Mahurin M.	11-15-95	Loman D. Mahurin M.	11-15-95

MO 780-1415 (7-95)

DISTRIBUTION: WHITE/DIVISION CANARY/MONITORING WELL CONTRACTOR PINK/OWNER
MAIL WHITE COPY TO: DEPARTMENT OF NATURAL RESOURCES, P.O. BOX 250, ROLLA, MO 65402
ENCLOSE $35 PER MONITORING WELL FOR THE CERTIFICATION FEE WITHIN 60 DAYS AFTER WELL COMPLETION

RECYCLED PAPER

LAIDLAW WASTE SYSTEMS INC.

SOIL BOREHOLE LOG

SITE NAME AND LOCATION: LAIDLAW/OU2 RI-FS/MO WEST LAKE LANDFILL OPERABLE UNIT 2	DRILLING METHOD: 4.25 inch I.D./8.25 inch O.D. Hollow Stem Auger	BORING NO. PZ-303-AS
		SHEET 1 OF 2
	SAMPLING METHOD: SPLIT SPOON: 2.0 inch O.D./1.5 inch I.D. (SP); SHELBY TUBE: 3.0 inch O.D./2 13/16 inch I.D. (SH)	DRILLING START TIME 16:45 / FINISH TIME 8:45
	WATER LEVEL / TIME / DATE / CASING DEPTH	DATE 10/4/95 / DATE 10/5/95
DATUM NORTHING: 1067763.32 EASTING: 514425.53 ELEVATION 450.8		
DRILL RIG CME 750	SURFACE CONDITIONS	
ANGLE 90° BEARING NA		
SAMPLE HAMMER		

DEPTH IN FEET (ELEVATION)	BLOW/ 6 IN. ON SAMPLER	RECOVERY	SYMBOL	SAMPLER SYMBOL	SAMPLE NUMBER AND DESCRIPTION OF MATERIAL	SAMPLER TYPE	REMARKS
1	3, 5, 7, 9	1.9'/2.0' (95%)			(0.0-3.1 ft.) Compact, moderate yellowish brown (10YR 5/4), SILT, NR, dry, (ML), (FILL)	SP 1	
2					(3.1-4.6 ft.) Compact, olive gray (5Y 4/1), SANDY SILT, NR, dry, (ML), (LOESS)		
3	7, 7, 6, 8	1.8'/2.0' (90%)				SP 2	
4	2, 3, 5, 5	1.8'/2.0' (90%)			(446.2) 4.6	SP 3	
5					(4.6-7.4 ft.) Loose, olive gray (5Y 4/1), Fine SAND, trace Silt, NR, damp, (SP), (ALLUVIUM)		0.0 ppm PID
6	1, 3, 2, 3	1.9'/2.0' (95%)				SP 4	
7					(7.4-12.2 ft.) Loose, olive black, fine SAND, NR, moist, (SP), (ALLUVIUM)		
8	1, 1, 6, 6	1.7'/2.0' (85%)				SP 5	Faint petroleum odor @ 7.4 ft.
9							
10	2, 2, 2, 2	1.2'/2.0' (60%)				SP 6	0.1 ppm PID
11							
12	3, 6, 7, 8	1.8'/2.0' (90%)			(12.2-26.0 ft.) Compact to dense, medium dark gray (N4), f-m SAND, NR, damp, (SP), (ALLUVIUM)	SP 7	Strong petroleum odor
13							
14	6, 5, 9, 10	1.8'/2.0' (90%)				SP 8	0.9 ppm PID

DRILLING CONTR LAYNE-WESTERN

LOGGED BY B. HARRINGTON CHK'D BY B. TILTON

DATE 10/9/95

JOB NO.: 943-2848

FILENAME: PZ303AS

LAIDLAW WASTE SYSTEMS INC.

SOIL BOREHOLE LOG

SITE NAME AND LOCATION LAIDLAW/OU2 RI-FS/MO WEST LAKE LANDFILL OPERABLE UNIT 2	DRILLING METHOD: 4.25 inch I.D./8.25 inch O.D. Hollow Stem Auger	BORING NO. PZ-303-AS
	SAMPLING METHOD: SPLIT SPOON: 2.0 inch O.D./1.5 inch I.D. (SP) SHELBY TUBE: 3.0 inch O.D./2 13/16 inch I.D. (SH)	SHEET 2 OF 2
	WATER LEVEL / TIME / DATE / CASING DEPTH	DRILLING START TIME 16:45 DATE 10/4/95; FINISH TIME 8:45 DATE 10/5/95
DATUM NORTHING: 1067763.32 EASTING: 514425.53 ELEVATION 450.8		
DRILL RIG CME 750	SURFACE CONDITIONS	
ANGLE 90° BEARING NA		
SAMPLE HAMMER		

DEPTH IN FEET (ELEVATION)	BLOW/ 6 IN. ON SAMPLER	RECOVERY	SYMBOL	SAMPLER SYMBOL	SAMPLE NUMBER AND DESCRIPTION OF MATERIAL	SAMPLER TYPE	REMARKS
					(12.2-26.0 ft.) Compact to dense, medium dark gray (N4), f-m SAND, NR, damp to wet, (SP), (ALLUVIUM)	SP 8	
16	5 3 4 12	1.8'/2.0' (90%)			from 15.3-15.6 ft., seam of olive black sandy SILT @ 17.0 ft., wet	SP 9	
17					from 17.5-17.8 ft., seam of olive black SILT		
18	6 17 28 49	1.8'/2.0' (90%)				SP 10	
19							
20	11 19 13 10	2.0'/2.0' (100%)				SP 11	6.6 ppm PID
21							
22	3 5 10 11	1.9'/2.0' (95%)				SP 12	Petroleum sheen in Split Spoon
23							
24	3 16 26 39	2.0'/2.0' (100%)				SP 13	3.7 ppm PID
25							
26					(424.8) 26.0 End of Soil Borehole Log at 26.0 ft.		
27							
28							
29							

DRILLING CONTR LAYNE-WESTERN

LOGGED BY B. HARRINGTON CHK'D BY B. TILTON

DATE 10/9/95

JOB NO.: 943-2848

FILENAME: PZ303AS

Well No. PZ-303-AS

Boring No. X-Ref: PZ-303-AS

PIEZOMETER CONSTRUCTION SUMMARY

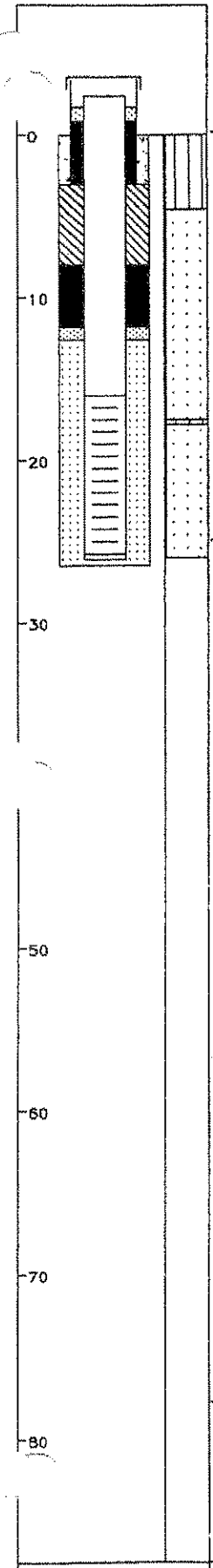

Not to Scale

Survey Coords: Northing: 1067763 ft. Easting: 514426 ft.

Elevation Ground Level 450.8 ft. NGVD

Top of PVC Casing 453.18 ft. NGVD

Drilling Summary:

Total Depth 26.5 ft.

Borehole Diameter 8 1/4" (0.0-26.5')

Casing Stickup Height 2.38 ft.

Driller Layne-Western, St. Louis, MO

Rig CME 750

Bit(s) 4 1/4" ID Hollow Stem Auger Bit

Drilling Fluid None

Protective Casing 8x8" Square Steel, by 5' long

Construction Time log:

Task	Start Date	Start Time	Finish Date	Finish Time
Drilling CME 750	10/4/95	16:45	10/5/95	8:45
Geophys.Logging:				
Casing: 2" I.D. PVC	10/5/95	9:00	10/5/95	9:05
Filter Placement:	10/5/95	9:05	10/5/95	9:55
Cementing:				
Development				
Bentonite Grout	10/5/95	10:15	10/5/95	10:20
Bentonite Seal	10/5/95	9:55	10/5/95	10:05

Well Design & Specifications

Basis: Geologic Log X Geophysical Log

Casing string(s): C = Casing S = Screen

Depth			String(s)	Elevation		
+ 2.38	-	16.00	C1	453.18	-	434.80
16.00	-	25.80	S1	434.80	-	425.00
25.80	-	26.10	C2	425.00	-	424.70

Casing: C1 2" dia. Schedule 80 PVC, flush threaded with O-rings

C2 2" dia. threaded PVC end cap (4" long or 0.33')

Screen: S1 2" dia. Schedule 80 PVC, 0.010" machine cut slot, flush threaded with O-rings

Sand Pack: 16-35 mesh Silica Sand 12.6-26.5'

Filter Pack: Less than 50 mesh Silica Sand 11.8-12.6'

Grout Seal: Wyo-Ben Grout Well Bentonite Slurry 3.0-8.0'

Bentonite Seal: Extra high yield Wyo-Ben (100%) Slurry 8.0-11.8'

Concrete: 0.0-3.0'

Well Development

Stabilization Test Data:

Time	pH	Spec. Cond.	Temp (°C)

Recovery Data:

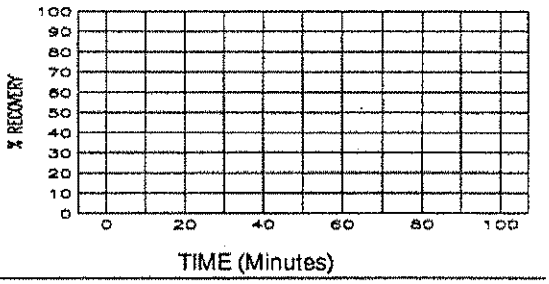

Comments:

Supervised by B. Harrington

Job Number 943-2848

Site LAIDLAW/OU2 RI-FS/MO

File Name PZ303AS

MISSOURI DEPARTMENT OF NATURAL RESOURCES
DIVISION OF GEOLOGY AND LAND SURVEY

MONITORING WELL CERTIFICATION RECORD

OFFICE USE ONLY	DATE RECEIVED
REF. NO. 145101	
C.R. NO.	CHECK NO.
STATE WELL NUMBER	TRANSMITTAL NO.
CHECKED BY	ROUTE
APPROVED BY	ENTERED Ph 1 Ph 2 Ph 3

INFORMATION SUPPLIED BY MONITORING WELL CONTRACTOR

SITE/FACILITY NAME: LAIDLAW #BRIDGETON SANITARY LANDFILL
WELL NUMBER: PZ-303AS
SITE ADDRESS: ST. CHARLES ROCK RD
CITY: BRIDGETON
STATE: Mo
ZIP CODE: 63044
OWNER NAME: LAIDLAW WASTE SYSTEMS, INC.
TELEPHONE: 314-241-3710
OWNER ADDRESS: 1839 N. BROADWAY
CITY: ST. LOUIS
STATE: Mo
ZIP CODE: 63102

VARIANCE ISSUED: ☐ YES ☒ NO
DATE ISSUED:
VARIANCE NUMBER: V

DESCRIBE LOCATION OF THE WELL SO WE WOULD BE ABLE TO VISIT IT
AT FENCE LINE, 360' NORTH OF SOUTHWEST FENCE CORNER

LOCATION OF WELL
SHOW LOCATION IN SECTION PLAT
COUNTY:
SURFACE ELEVATION: 450.8
SMALLEST ¼ LARGEST ¼
SEC. TWN. 47 N,RNG. 5 E,OR W
LAT. 38 ° 45 ' 58 " LONG. 90 ° 26 ' 58 "

MONITORING WELL INSTALLATION CONTRACTOR'S NAME: LAYNE WESTERN CO, INC. PERMIT NUMBER: 001258 WPM
DRILLING CONTRACTOR'S NAME: LAYNE WESTERN CO., INC. PERMIT NUMBER: 001258 WPM

WELL CONSTRUCTION INFORMATION

TYPE OF WELL: ☐ MONITORING WELL ☒ PIEZOMETER ☐ OTHER
TYPE OF POTENTIAL SITE: ☐ HAZARDOUS MATERIAL ☒ LANDFILL ☐ OTHER ☐ L.U.S.T.
MONITORING FOR: (CHECK ALL THAT APPLY) ☒ V.O.C. ☐ METALS ☐ PETROLEUM PRODUCT ☐ OTHER ONLY

PROTECTIVE CASING DETAILS (IF USED): LENGTH 5.0 FT. | DIAMETER OF CASING 8x8 IN. | WEIGHT OR SDR # 0.188" | DIAMETER AND DEPTH OF DRILL HOLE 8¼ IN. 26.5 FT. | JOINTS ☐ THREADED ☐ MECHANICAL ☐ WELDED ☐ OTHER | MATERIAL ☐ THERMO PLASTIC ☒ STEEL ☐ FLUORO POLYMER TYPE | LOCKING CAP? ☒ YES ☐ NO

CAP VENTED ☒ YES ☐ NO
WEEP HOLE? ☒ YES ☐ NO
CASING GROUT DETAILS: MATERIAL ☐ CEMENT ☒ CONCRETE ☐ OTHER
DEPTH FROM THE SURFACE TO THE BOTTOM OF THE CASING GROUT SEAL: 3.0 FT.
TYPE OF SURFACE COMPLETION: ☒ ABOVE GROUND ☐ FLUSH MOUNT
DESCRIBE HOW THE FLUSH MOUNT WAS CONSTRUCTED

CENTRALIZER USED ON RISER: ☒ NO ☐ YES LOCATED AT
MATERIAL: ☐ STAINLESS STEEL ☐ OTHER

RISER PIPE DETAILS: LENGTH 18.9 FT. | DIAMETER OF RISER PIPE 2 IN. | WEIGHT OR SDR # SCH80 | DIAMETER OF DRILL HOLE 8¼ IN. | JOINTS ☒ THREADED ☐ MECHANICAL ☐ WELDED ☐ OTHER | MATERIAL ☒ THERMO PLASTIC ☐ STEEL ☐ FLUORO POLYMER ☐ OTHER

ANNULAR SEAL: ☐ CEMENT SLURRY ☒ BENTONITE SLURRY ☐ NON SLURRY BENTONITE ☐ CEMENT/BENTONITE SLURRY
TYPE: BAGS OF CEMENT USED % BENTONITE USED WATER USED/BAG GAL.
BENTONITE SEAL: MATERIAL BENTONITE ☒ SLURRY ☐ CHIPS ☐ GRANULAR ☐ PELLETS | LENGTH OF SEAL 3.8 | BENTONITE SEAL INSTALLED IN ☐ UNSATURATED ZONE ☒ SATURATED ZONE

	TYPE	GRAIN SIZE	LENGTH OF FILTER PACK	METHOD OF INSTALLATION
PRIMARY FILTER PACK	☒ SAND ☐ MANUFACTURED ☐ NATURAL	16-35	13.9 FT.	H.S.A. POUR
SECONDARY FILTER PACK	☒ SAND ☐ MANUFACTURED ☐ NONE	< 50	0.8 FT.	H.S.A. POUR

	LENGTH OF SCREEN	DIAMETER	SLOT SIZE	WEIGHT OR SDR #	MATERIAL
WELL SCREEN	10 FT.	2 IN.	10	SCH 80	☒ PLASTIC ☐ STEEL ☐ FLUORO POLYMER

SUMP DETAILS: LENGTH OF SUMP | DIAMETER OF SUMP | MATERIAL ☐ PVC ☐ STEEL ☐ FLUORO POLYMER ☐ OTHER

BACK FILL: WAS THE WELL BACK FILLED? ☐ YES ☒ NO | MATERIAL USED | LENGTH OF BACK FILLED BORE HOLE

Information in this column to be supplied in the Feet from Surface column	FEET FROM SURFACE	FORMATION DESCRIPTION
		0-4.5 Silty clay
Depth to bottom of Protective Casing Seal:	3.0	
		4.5-26.5 Silty sand
Depth to Base of Annular Seal:	8.0	
Depth to Base of Bentonite Seal:	11.8	
Depth to Top of Primary Filter Pack:	12.6	
Depth to Top of the Screen:	16.5	
Depth to Bottom of the Screen:	26.5	
Total Depth:	26.5	
DATE WELL DRILLING WAS COMPLETED	10-05-95	

STATIC WATER LEVEL FEET FROM MEASURING POINT
DATE OF STATIC WATER LEVEL
MEASURING POINT FOR STATIC WATER LEVEL IS: ☒ TOP OF RISER PIPE ☐ OTHER
ELEVATION OF MEASURING POINT: 453.18
MULTIPLE CASED WELLS: SUBMIT ADDITIONAL AS BUILT DIAGRAM SHOWING WELL CONSTRUCTION DETAILS INCLUDING TYPE AND SIZE OF ALL CASING, HOLE DIAMETERS, AND GROUT USED.
DRILLING EQUIPMENT: ☐ AIR ROTARY ☒ AUGER TYPE 4¼ H.S.A. ☐ REVERSE ROTARY ☐ OTHER

I HEREBY CERTIFY THAT THE MONITORING WELL HEREIN DESCRIBED WAS CONSTRUCTED IN ACCORDANCE WITH THE DEPARTMENT OF NATURAL RESOURCES REQUIREMENTS FOR THE CONSTRUCTION OF MONITORING WELLS.

SIGNATURE PRIMARY CONTRACTOR/PERMIT #: Tomas J. Mahurin M. DATE: 11-15-95
SIGNATURE DRILLER/PERMIT #: Tomas J. Mahurin M. DATE: 11-15-95

MO 780-1415 (7-95)
DISTRIBUTION: WHITE/DIVISION CANARY/MONITORING WELL CONTRACTOR PINK/OWNER
MAIL WHITE COPY TO: DEPARTMENT OF NATURAL RESOURCES, P.O. BOX 250, ROLLA, MO 65402
ENCLOSE $35 PER MONITORING WELL FOR THE CERTIFICATION FEE WITHIN 60 DAYS AFTER WELL COMPLETION
RECYCLED PAPER

LAIDLAW WASTE SYSTEMS INC.

SOIL BOREHOLE LOG

SITE NAME AND LOCATION

LAIDLAW/OU2 RI-FS/MO
WEST LAKE LANDFILL
OPERABLE UNIT 2

NORTHING: 1068125.91
DATUM EASTING: 514434.70 ELEVATION 451.6

DRILLING METHOD:
4.25 inch I.D./8.25 inch O.D. Hollow Stem Auger
3.625 inch Mud Rotary

SAMPLING METHOD:
SPLIT SPOON: 2.0 inch O.D./1.5 inch I.D. (SP)
SHELBY TUBE: 3.0 inch O.D./2 13/16 inch I.D. (SH)

WATER LEVEL	18.5 FT.			
TIME	16:00			
DATE	10/2/95			
CASING DEPTH	40.0 FT.			

BORING NO. PZ-304-AI

SHEET 1 OF 3

DRILLING START	DRILLING FINISH
TIME 8:00	TIME 14:15
DATE 10/2/95	DATE 10/2/95

DRILL RIG CME 750

ANGLE 90° BEARING NA

SAMPLE HAMMER

SURFACE CONDITIONS

DEPTH IN FEET (ELEVATION)	BLOW/ 6 IN. ON SAMPLER	RECOVERY	SYMBOL	SAMPLER SYMBOL	SAMPLE NUMBER AND DESCRIPTION OF MATERIAL	SAMPLER TYPE		REMARKS
16					(0.0-28.0 Ft.) No samples collected, see Soil Borehole Log PZ-304-AS for descriptions			
17								
18								
19								
20								
21								
22								
23								
24								
25								
26								
27								
28 (423.6)	12 15 14 12	1.6' 2.0' (80%)			(28.0-39.3 Ft.) Compact, light olive gray (5Y 5/2), well graded, SAND, NR, wet, (SW), (ALLUVIUM)	SP (1)		0.0 ppm PID
29								

DRILLING CONTR LAYNE-WESTERN

LOGGED BY B. HARRINGTON

DATE 10/9/95 CHK'D BY B. TILTON

JOB NO.: 943-2848

FILENAME: PZ304AI

LAIDLAW WASTE SYSTEMS INC.

SOIL BOREHOLE LOG

SITE NAME AND LOCATION

LAIDLAW/OU2 RI-FS/MO
WEST LAKE LANDFILL
OPERABLE UNIT 2

NORTHING: 1068125.91
DATUM EASTING: 514434.70 ELEVATION 451.6

DRILLING METHOD:					BORING NO.	
4.25 inch I.D./8.25 inch O.D. Hollow Stem Auger					PZ-304-AI	
3.625 inch Mud Rotary					SHEET 2 OF 3	
SAMPLING METHOD:					DRILLING	
SPLIT SPOON: 2.0 inch O.D./1.5 inch I.D. (SP)					START	FINISH
SHELBY TUBE: 3.0 inch O.D./2 13/16 inch I.D. (SH)					TIME 8:00	TIME 14:15
WATER LEVEL	18.5 FT.					
TIME	16:00				DATE 10/2/95	DATE 10/2/95
DATE	10/2/95					
CASING DEPTH	40.0 FT.					

DRILL RIG CME 750 SURFACE CONDITIONS

ANGLE 90° BEARING NA

SAMPLE HAMMER

DEPTH IN FEET (ELEVATION)	BLOW/ 6 IN. ON SAMPLER	RECOVERY	SYMBOL	SAMPLER SYMBOL	SAMPLE NUMBER AND DESCRIPTION OF MATERIAL	SAMPLER TYPE		REMARKS
31	8 11 12 13	1.0' 2.0' (50%)			(28.0-39.3 ft.) Compact, light olive gray (5Y 5/2), well graded, SAND, NR, wet, (SW), (ALLUVIUM)	SP	2	
32	8 15 15 12	1.1' 2.0' (55%)				SP	3	
33								
34	5 8 4 3	1.2' 2.0' (60%)				SP	4	0.0 ppm PID
35								
36	1.1 6 6 7 8	2.0' 2.0' (100%)			from 35.6-35.8 ft, Lignite coal partical	SP	5	
37								
38	9 9 17 16	1.3' 2.0' (65%)			(412.3) 39.3	SP	6	
39					(39.3-46.0 ft.) Compact to dense, olive gray (5Y 4/1), f-m SAND, NR, wet, (SP), (ALLUVIUM)			
40	10 18 28 27	1.8' 2.0' (90%)				SP	7	0.0 ppm PID
41								
42	7 11 12 14	1.4' 2.0' (70%)				SP	8	
43					from 43.0-43.5 ft, seam of compact, olive gray (5Y 4/1), well graded SAND			
44	15 17 10 14	0.7' 2.0' (35%)				SP	9	

DRILLING CONTR LAYNE-WESTERN

LOGGED BY B. HARRINGTON CHK'D BY B. TILTON

DATE 10/9/95

JOB NO.: 943-2848

FILENAME: PZ304AI

LAIDLAW WASTE SYSTEMS INC.

SOIL BOREHOLE LOG

SITE NAME AND LOCATION

LAIDLAW/OU2 RI-FS/MO
WEST LAKE LANDFILL
OPERABLE UNIT 2

NORTHING: 1068125.91
DATUM EASTING: 514434.70 ELEVATION 451.6

DRILLING METHOD:
4.25 inch I.D./8.25 inch O.D. Hollow Stem Auger
3.625 inch Mud Rotary

SAMPLING METHOD:
SPLIT SPOON: 2.0 inch O.D./1.5 inch I.D. (SP)
SHELBY TUBE: 3.0 inch O.D./2 13/16 inch I.D. (SHO

					DRILLING START	DRILLING FINISH
WATER LEVEL	18.5 FT.				TIME	TIME
TIME	16:00				8:00	14:15
DATE	10/2/95				DATE	DATE
CASING DEPTH	40.0 FT.				10/2/95	10/2/95

BORING NO. PZ-304-AI

SHEET 3 OF 3

DRILL RIG CME 750

ANGLE 90° BEARING NA

SAMPLE HAMMER

SURFACE CONDITIONS

DEPTH IN FEET (ELEVATION)	BLOW / 6 IN. ON SAMPLER	RECOVERY	SYMBOL	SAMPLER SYMBOL	SAMPLE NUMBER AND DESCRIPTION OF MATERIAL	SAMPLER TYPE	REMARKS
46					(39.3-46.0 ft.) Compact to dense, olive gray (5Y 4/1), f-m SAND, NR, wet, (SP), (ALLUVIUM) (405.6) 46.0	SP 9	0.0 ppm PID
47	3 3 6 6	1.2' / 2.0' (60%)			(46.0-48.4 ft.) Loose, olive gray (5Y 4/1), well graded SAND, some fine Gravel, NR, wet, (SW), (ALLUVIUM)	SP 10	
48	9 12 17 15	1.3' / 2.0' (65%)			(403.2) 48.4		
49					(48.4-50.0 ft.) Compact, olive gray (5Y 4/1), f-m SAND, trace coarse Sand and fine Gravel, NR, wet, (SP), (ALLUVIUM)	SP 11	
50					(401.6) 50.0		0.0 ppm PID
51					End of Soil Borehole Log at 50.0 ft.		
52							
53							
54							
55							
56							
57							
58							
59							

DRILLING CONTR LAYNE-WESTERN

LOGGED BY B. HARRINGTON

CHK'D BY B. TILTON

DATE 10/9/95

JOB NO.: 943-2848

FILENAME: PZ304AI

Well No. PZ-304-AI

Boring No. X-Ref: PZ-304-AI

PIEZOMETER CONSTRUCTION SUMMARY

Survey Coords: Northing: 1068126 ft. Easting: 514435 ft.

Elevation Ground Level 451.6 ft. NGVD

Top of PVC Casing 454.02 ft. NGVD

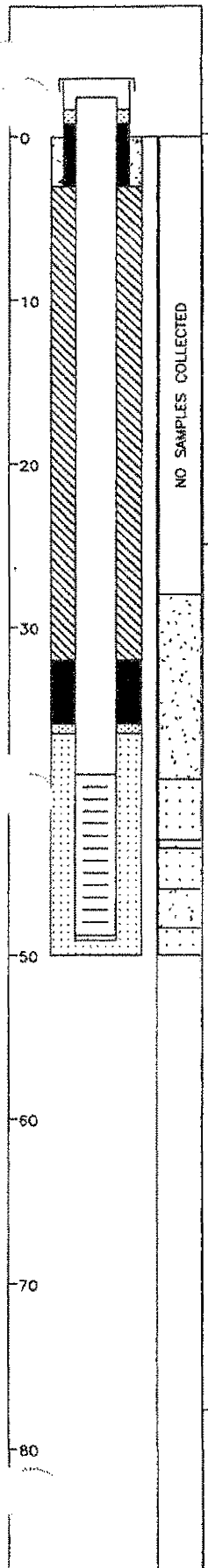

Drilling Summary:

Total Depth 50.0 ft.
Borehole Diameter 8 1/4" (0.0-50.0')
Casing Stickup Height 2.42 ft.
Driller Layne-Western
St. Louis, MO

Rig CME 75, Schramm Portadrill T660H
Bit(s) 4 1/4" ID Hollow Stem Auger Bit
3/8" Tricone Bit
Drilling Fluid Bentonite Drilling Mud (23.0-50.0')

Protective Casing 8x8" Square Steel, by 5' long

Construction Time log:

Task	Start Date	Start Time	Finish Date	Finish Time
Drilling				
CME 750	10/2/95	8:00	10/2/95	14:15
Geophys. Logging:				
Casing:				
2" I.D. PVC	10/2/95	14:20	10/2/95	14:25
Filter Placement:	10/2/95	14:25	10/2/95	15:10
Cementing:				
Development				
Bentonite Grout	10/2/95	15:45	10/2/95	16:45
Bentonite Seal	10/2/95	15:15	10/2/95	15:20

Well Design & Specifications

Basis: Geologic Log X Geophysical Log

Casing string(s): C = Casing S = Screen

Depth			String(s)	Elevation		
+ 2.42	-	39.00	C1	454.02	-	412.60
39.00	-	48.80	S1	412.60	-	402.80
48.80	-	49.10	C2	402.80	-	402.50
	-				-	
	-				-	
	-				-	

Casing: C1 2" dia. Schedule 80 PVC, flush threaded with O-rings
C2 2" dia. threaded PVC end cap (4" long or 0.33')

Screen: S1 2" dia. Schedule 80 PVC, 0.010" machine cut slot, flush threaded with O-rings

Sand Pack: 16-35 mesh Silica Sand 36.5-50.0'

Filter Pack: 100 mesh Silica Sand 35.9-36.5'

Grout Seal: Wyo-Ben Grout Well Bentonite Slurry 3.0-32.0'

Bentonite Seal: Extra high yield Wyo-Ben (100%) Slurry 32.0-35.9'

Concrete: 0.0-3.0'

Well Development

Stabilization Test Data:

Time	pH	Spec. Cond.	Temp (°C)

Recovery Data:

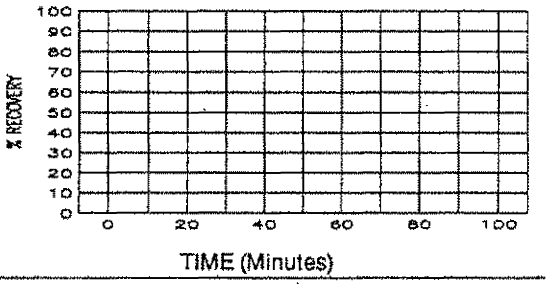

Comments:

Not to Scale

Supervised by B. Harrington
Job Number 943-2848

Site LAIDLAW/OU2 RI-FS/MO
File Name PZ304AI

MISSOURI DEPARTMENT OF NATURAL RESOURCES
DIVISION OF GEOLOGY AND LAND SURVEY

MONITORING WELL CERTIFICATION RECORD

OFFICE USE ONLY	DATE RECEIVED
REF. NO. 145103	
C.R. NO.	CHECK NO.
STATE WELL NUMBER	TRANSMITTAL NO.
CHECKED BY	ROUTE
APPROVED BY	ENTERED Ph 1 Ph 2 Ph 3

INFORMATION SUPPLIED BY MONITORING WELL CONTRACTOR

SITE/FACILITY NAME: LAIDLAW BRIDGETON SANITARY LANDFILL
WELL NUMBER: PZ-304AI
SITE ADDRESS: ST. CHARLES ROCK RD
CITY: BRIDGETON
STATE: Mo
ZIP CODE: 63044
OWNER NAME: LAIDLAW WASTE SYSTEMS, INC.
TELEPHONE: 314-241-3710
OWNER ADDRESS: 1538 N. BROADWAY
CITY: ST. LOUIS
STATE: Mo
ZIP CODE: 63102

VARIANCE ISSUED: ☐ YES ☒ NO
DATE ISSUED:
VARIANCE NUMBER: V

LOCATION OF WELL
SHOW LOCATION IN SECTION PLAT
COUNTY: ST. LOUIS
SURFACE ELEVATION: 451.6
SMALLEST ¼ ____ ¼ ____ ¼ ____ LARGEST ¼ ____ ¼
SEC. ____ TWN. 47 N,RNG. 5 (E OR W)
LAT. 38° 46' 01" LONG. 40° 26' 58"

DESCRIBE LOCATION OF THE WELL SO WE WOULD BE ABLE TO VISIT IT
AT WEST FENCE LINE, 720' NORTH OF SOUTHWEST FENCE CORNER.

MONITORING WELL INSTALLATION CONTRACTOR'S NAME: LAYNE WESTERN CO., INC. — PERMIT NUMBER: 001258 WPM
DRILLING CONTRACTOR'S NAME: LAYNE WESTERN CO., INC. — PERMIT NUMBER: 001258 WPM

WELL CONSTRUCTION INFORMATION

TYPE OF WELL: ☐ MONITORING WELL ☒ PIEZOMETER ☐ OTHER
TYPE OF POTENTIAL SITE: ☐ HAZARDOUS MATERIAL ☒ LANDFILL ☐ OTHER ☐ L.U.S.T.
MONITORING FOR: (CHECK ALL THAT APPLY) ☒ V.O.C. ☐ METALS ☐ PETROLEUM PRODUCT ☐ OTHER ____ ONLY

PROTECTIVE CASING DETAILS (IF USED): LENGTH 5 FT. | DIAMETER OF CASING 8x8 IN. | WEIGHT OR SDR # 0.188" | DIAMETER AND DEPTH OF DRILL HOLE 8¼ IN. 50 FT. | JOINTS ☐ THREADED ☐ MECHANICAL ☐ WELDED ☐ OTHER | MATERIAL ☐ THERMO PLASTIC ☒ STEEL ☐ FLUORO POLYMER TYPE | LOCKING CAP? ☒ YES ☐ NO

CAP VENTED ☒ YES ☐ NO
WEEP HOLE? ☒ YES ☐ NO
CASING GROUT DETAILS: MATERIAL ☐ CEMENT ☒ CONCRETE ☐ OTHER | DEPTH FROM THE SURFACE TO THE BOTTOM OF THE CASING GROUT SEAL 3.0 FT. | TYPE OF SURFACE COMPLETION ☒ ABOVE GROUND ☐ FLUSH MOUNT
DESCRIBE HOW THE FLUSH MOUNT WAS CONSTRUCTED

CENTRALIZER USED ON RISER ☒ NO ☐ YES LOCATED AT | MATERIAL ☐ STAINLESS STEEL ☐ OTHER

RISER PIPE DETAILS: LENGTH 42.4 FT. | DIAMETER OF RISER PIPE 2 IN. | WEIGHT OR SDR # SCH 80 | DIAMETER OF DRILL HOLE 8¼ IN. | JOINTS ☒ THREADED ☐ MECHANICAL ☐ WELDED ☐ OTHER | MATERIAL ☒ THERMO PLASTIC ☐ STEEL ☐ FLUORO POLYMER ☐ OTHER

ANNULAR SEAL: ☐ CEMENT SLURRY ☒ BENTONITE SLURRY ☐ NON SLURRY BENTONITE ☐ CEMENT/BENTONITE SLURRY TYPE: BAGS OF CEMENT USED % BENTONITE USED WATER USED/BAG GAL.
BENTONITE SEAL: MATERIAL BENTONITE ☒ SLURRY ☐ CHIPS ☐ GRANULAR ☐ PELLETS | LENGTH OF SEAL 3.9 | BENTONITE SEAL INSTALLED IN ☐ UNSATURATED ZONE ☒ SATURATED ZONE

	TYPE	GRAIN SIZE	LENGTH OF FILTER PACK	METHOD OF INSTALLATION	Information in this column to be supplied in the Feet from Surface column	FEET FROM SURFACE	FORMATION DESCRIPTION
PRIMARY FILTER PACK	☒ SAND ☐ MANUFACTURED ☐ NATURAL	16-35	13.5 FT.	H.S.A. POUR			
SECONDARY FILTER PACK	☒ SAND ☐ MANUFACTURED ☐ NONE	100	0.6 FT.	H.S.A. POUR	Depth to bottom of Protective Casing Seal:	3.0	0-15 Gray silty clay
WELL SCREEN	LENGTH OF SCREEN 10 FT.	DIAMETER 2 IN.	SLOT SIZE 10	WEIGHT OR SDR # SCH80	MATERIAL ☒ PLASTIC ☐ STEEL ☐ FLUORO POLYMER	Depth to Base of Annular Seal:	32.0	15-18 Silty sand 18-28 Sand & gravel
SUMP DETAILS	LENGTH OF SUMP	DIAMETER OF SUMP	MATERIAL ☐ PVC ☐ STEEL ☐ FLUORO POLYMER ☐ OTHER		Depth to Base of Bentonite Seal:	35.9	28-50 Sand
BACK FILL	WAS THE WELL BACK FILLED? ☐ YES ☒ NO	MATERIAL USED	LENGTH OF BACK FILLED BORE HOLE		Depth to Top of Primary Filter Pack:	36.5	
					Depth to Top of the Screen:	40.0	
					Depth to Bottom of the Screen:	50.0	
					Total Depth:	500	

STATIC WATER LEVEL FEET FROM MEASURING POINT
DATE OF STATIC WATER LEVEL
MEASURING POINT FOR STATIC WATER LEVEL IS ☒ TOP OF RISER PIPE ☐ OTHER
ELEVATION OF MEASURING POINT 454.02
MULTIPLE CASED WELLS: SUBMIT ADDITIONAL AS BUILT DIAGRAM SHOWING WELL CONSTRUCTION DETAILS INCLUDING TYPE AND SIZE OF ALL CASING, HOLE DIAMETERS, AND GROUT USED.
DRILLING EQUIPMENT ☐ AIR ROTARY ☒ AUGER TYPE 4¼ H.S.A. ☐ REVERSE ROTARY ☐ OTHER
DATE WELL DRILLING WAS COMPLETED 10-02-95

I HEREBY CERTIFY THAT THE MONITORING WELL HEREIN DESCRIBED WAS CONSTRUCTED IN ACCORDANCE WITH THE DEPARTMENT OF NATURAL RESOURCES REQUIREMENTS FOR THE CONSTRUCTION OF MONITORING WELLS.

SIGNATURE PRIMARY CONTRACTOR/PERMIT # Lorman D. Mahurin Jr. — DATE 11-15-95
SIGNATURE DRILLER/PERMIT # Lorman D. Mahurin Jr. — DATE 11-15-95

MO 780-1415 (7-95)
DISTRIBUTION: WHITE/DIVISION CANARY/MONITORING WELL CONTRACTOR PINK/OWNER
MAIL WHITE COPY TO: DEPARTMENT OF NATURAL RESOURCES, P.O. BOX 250, ROLLA, MO 65402
ENCLOSE $35 PER MONITORING WELL FOR THE CERTIFICATION FEE WITHIN 60 DAYS AFTER WELL COMPLETION
RECYCLED PAPER

SOIL BOREHOLE LOG

LAIDLAW WASTE SYSTEMS INC.

SITE NAME AND LOCATION	LAIDLAW/OU2 RI-FS/MO WEST LAKE LANDFILL OPERABLE UNIT 2
DRILLING METHOD:	4.25 inch I.D./8.25 inch O.D. Hollow Stem Auger
SAMPLING METHOD:	SPLIT SPOON: 2.0 inch O.D./1.5 inch I.D. (SP) SHELBY TUBE: 3.0 inch O.D./2 13/16 inch I.D. (SH)
BORING NO.	PZ-304-AS
SHEET	1 OF 2
DRILLING	START / FINISH
WATER LEVEL	
TIME	START: 10:10 / FINISH: 12:10
DATE	START: 9/27/95 / FINISH: 9/27/95
CASING DEPTH	
DATUM	NORTHING: 1068146.47 EASTING: 514434.57
ELEVATION	451.4
DRILL RIG	CME 750
SURFACE CONDITIONS	
ANGLE	90°
BEARING	NA
SAMPLE HAMMER	

DEPTH IN FEET (ELEVATION)	BLOW/6 IN. ON SAMPLER	RECOVERY	SYMBOL	SAMPLER SYMBOL	SAMPLE NUMBER AND DESCRIPTION OF MATERIAL	SAMPLER TYPE	REMARKS
1	4 4 4 7	1.8' 2.0' (90%)			(0.0-3.7 Ft.) Loose, moderate yellowish brown (10YR 5/4), SILT, NR, dry, (ML), (FILL)	SP 1	
					@ 0.6 Ft., damp		
2	6 8 7 8	1.5' 2.0' (75%)			(3.7-6.8 Ft.) Compact, olive gray (5Y 4/1), SILT, NR, damp, (ML), (LOESS)	SP 2	
3					@ 6.0 Ft., trace organic material		
4	3 4 5 6	1.7' 2.0' (85%)				SP 3	
5							
6	2 3 4 4	1.6' 2.0' (80%)			(6.8-10.4 Ft.) Loose, olive gray (5Y 4/1), Fine SANDY SILT, NR, damp, (ML), (LOESS)	SP 4	0.0 ppm PID
7							
8	2 1 2 2	1.2' 2.0' (60%)				SP 5	
9					@ 8.4 Ft., moist		
10	1 3 5 5	1.7' 2.0' (85%)			(10.4-13.0 Ft.) Loose, olive gray (5Y 4/1), SILT, NR, damp, (ML), (LOESS)	SP 6	
11							
12	1 2 4 11	1.6' 2.0' (80%)			(438.4) 13.0	SP 7	0.0 ppm PID
13					(13.0-14.2 Ft.) Loose, olive gray (5Y 4/1), SILTY Fine SAND, NR, moist, (SM), (ALLUVIUM)		
14	5 7 10 20	1.7' 2.0' (85%)			(437.2) 14.2 (14.2-27.1 Ft.) Compact to dense, light olive gray (5Y 6/1), Fine SAND, NR, damp, (SP), (ALLUVIUM)	SP 8	

DRILLING CONTR LAYNE-WESTERN

LOGGED BY B. HARRINGTON CHK'D BY B. TILTON

DATE 10/9/95

JOB NO.: 943-2848

FILENAME: PZ304AS

LAIDLAW WASTE SYSTEMS INC.

SOIL BOREHOLE LOG

SITE NAME AND LOCATION

LAIDLAW/OU2 RI-FS/MO
WEST LAKE LANDFILL
OPERABLE UNIT 2

NORTHING: 1068146.47
DATUM EASTING: 514434.57 ELEVATION 451.4

DRILLING METHOD:	4.25 inch I.D./8.25 inch O.D. Hollow Stem Auger
SAMPLING METHOD:	SPLIT SPOON: 2.0 inch O.D./1.5 inch I.D. (SP)
	SHELBY TUBE: 3.0 inch O.D./2 13/16 inch I.D. (SH)
BORING NO.	PZ-304-AS
SHEET	2 OF 2
DRILLING START	DATE 9/27/95 TIME 10:10
DRILLING FINISH	DATE 9/27/95 TIME 12:10
WATER LEVEL / TIME / DATE / CASING DEPTH	

DRILL RIG CME 750
ANGLE 90° BEARING NA
SAMPLE HAMMER
SURFACE CONDITIONS

DEPTH IN FEET (ELEVATION)	BLOW/6 IN. ON SAMPLER	RECOVERY	SYMBOL	SAMPLER SYMBOL	SAMPLE NUMBER AND DESCRIPTION OF MATERIAL	SAMPLER TYPE	REMARKS
16	9 15 17 11	1.4' 2.0' (70%)			(14.2-27.1 ft.) Compact to dense, light olive gray (5Y 6/1), fine SAND, NR, damp, (SP), (ALLUVIUM)	SP 8	
17						SP 9	
18	5 6 14 24	1.8' 2.0' (90%)			@ 17.7 ft, moist @ 18.0 ft, wet	SP 10	0.0 ppm PID Slight organic odor
19							
20	2 15 18 14	1.7' 2.0' (85%)				SP 11	
21							
22	3 5 8 14	0.7' 2.0' (35%)				SP 12	0.1 ppm PID
23							
24	3 5 14 15	1.6' 2.0' (80%)				SP 13	
25							
26	5 11 12 13	1.2' 2.0' (60%)				SP 14	0.0 ppm PID
27					(27.1-28.0 ft.) Compact, olive gray (5Y 4/1), f-m SAND, NR, wet, (SP), (ALLUVIUM) (423.4) 28.0		
28					End of Soil Borehole Log at 28.0 ft.		
29							

DRILLING CONTR LAYNE-WESTERN

LOGGED BY B. HARRINGTON CHK'D BY B. TILTON

DATE 10/9/95

JOB NO.: 943-2848

FILENAME: PZ304AS

Well No. PZ-304-AS

Boring No. X-Ref: PZ-304-AS

PIEZOMETER CONSTRUCTION SUMMARY

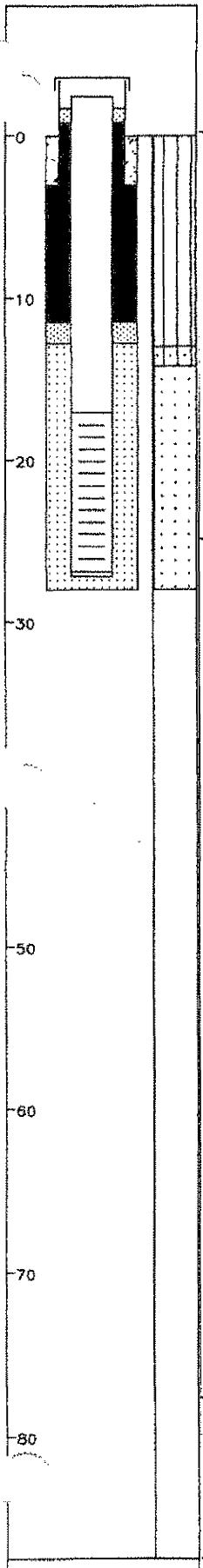

Not to Scale

Survey Coords: Northing: 1068146 ft. Easting: 514435 ft.

Elevation Ground Level 451.4 ft. NGVD

Top of PVC Casing 453.71 ft. NGVD

Drilling Summary:

Total Depth 28.0 ft.

Borehole Diameter 8 1/4" (0.0-28.0')

Casing Stickup Height 2.31 ft.

Driller Layne-Western, St. Louis, MO

Rig CME 750

Bit(s) 4 1/4" ID Hollow Stem Auger Bit

Drilling Fluid None

Protective Casing 8x8" Square Steel, by 5' long

Construction Time log:

Task	Start Date	Start Time	Finish Date	Finish Time
Drilling				
CME 750	9/27/95	10:10	9/27/95	12:10
Geophys.Logging:				
Casing:				
2" I.D. PVC	9/27/95	13:40	9/27/95	13:45
Filter Placement:	9/27/95	13:46	9/27/95	14:30
Cementing:				
Development				
Bentonite Grout				
Bentonite Seal	9/27/95	14:30	9/27/95	14:45

Well Design & Specifications

Basis: Geologic Log X Geophysical Log

Casing string(s): C = Casing S = Screen

Depth			String(s)	Elevation		
+ 2.31	-	17.10	C1	453.71	-	434.30
17.10	-	26.90	S1	434.30	-	424.50
26.90	-	27.20	C2	424.50	-	424.20
	-				-	
	-				-	
	-				-	

Casing: C1 2" dia. Schedule 80 PVC, flush threaded with O-rings

C2 2" dia. threaded PVC end cap (4" long or 0.33')

Screen: S1 2" dia. Schedule 80 PVC, 0.010" machine cut slot, flush threaded with O-rings

Sand Pack: 16-35 mesh Silica Sand 12.8-28.0'

Filter Pack: 100 mesh Silica Sand 11.5-12.8'

Grout Seal:

Bentonite Seal: Extra high yield Wyo-Ben (100%) Slurry 3.0-11.5'

Concrete: 0.0-3.0'

Well Development

Stabilization Test Data:

Time	pH	Spec. Cond.	Temp (°C)

Recovery Data:

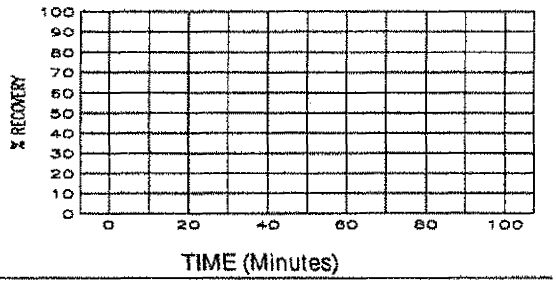

Comments:

Supervised by B. Harrington

Job Number 943-2848

Site LAIDLAW/OU2 RI-FS/MO

File Name PZ304AS

MISSOURI DEPARTMENT OF NATURAL RESOURCES
DIVISION OF GEOLOGY AND LAND SURVEY

MONITORING WELL CERTIFICATION RECORD

OFFICE USE ONLY	DATE RECEIVED
REF. NO. 145102	
C.R. NO.	CHECK NO.
STATE WELL NUMBER	TRANSMITTAL NO.
CHECKED BY	ROUTE
APPROVED BY	ENTERED Ph 1 Ph 2 Ph 3

INFORMATION SUPPLIED BY MONITORING WELL CONTRACTOR

SITE/FACILITY NAME: LAIDLAW BRIDGETON SANITARY LANDFILL
WELL NUMBER: PZ-304AS
SITE ADDRESS: ST. CHARLES ROCK RD
CITY: BRIDGETON
STATE: Mo
ZIP CODE: 63044
OWNER NAME: LAIDLAW WASTE SYSTEMS, INC.
TELEPHONE: 314-241-3710
OWNER ADDRESS: 1936 N. BROADWAY
CITY: ST. LOUIS
STATE: Mo
ZIP CODE: 63102

VARIANCE ISSUED: ☐ YES ☒ NO
DATE ISSUED:
VARIANCE NUMBER: V

DESCRIBE LOCATION OF THE WELL SO WE WOULD BE ABLE TO VISIT IT:
AT WEST FENCE LINE, 740' NORTH OF SOUTHWEST FENCE CORNER

LOCATION OF WELL
SHOW LOCATION IN SECTION PLAT
COUNTY: ST. LOUIS
SURFACE ELEVATION: 451.4
SMALLEST ¼ ____ ¼ ____ ¼ LARGEST ¼ ____ ¼
SEC. ____ TWN. 47 N,RNG. 5 E OR W
LAT. 38° 46' 01" LONG. 90° 26' 58"

MONITORING WELL INSTALLATION CONTRACTOR'S NAME: LAYNE WESTERN Co., INC.
PERMIT NUMBER: 001258 WPM
DRILLING CONTRACTOR'S NAME: LAYNE WESTERN Co., INC.
PERMIT NUMBER: 001258 WPM

WELL CONSTRUCTION INFORMATION

TYPE OF WELL: ☐ MONITORING WELL ☒ PIEZOMETER ☐ OTHER
TYPE OF POTENTIAL SITE: ☐ HAZARDOUS MATERIAL ☒ LANDFILL ☐ OTHER ☐ L.U.S.T.
MONITORING FOR: (CHECK ALL THAT APPLY) ☒ V.O.C. ☐ METALS ☐ PETROLEUM PRODUCT ☐ OTHER ONLY

PROTECTIVE CASING DETAILS (IF USED):
- LENGTH: 5 FT.
- DIAMETER OF CASING: 8x5 IN.
- WEIGHT OR SDR #: 0.188"
- DIAMETER AND DEPTH OF DRILL HOLE: 8¼ IN. 28 FT.
- JOINTS: ☐ THREADED ☐ MECHANICAL ☐ WELDED ☐ OTHER
- MATERIAL: ☐ THERMO PLASTIC ☒ STEEL ☐ FLUORO POLYMER TYPE
- LOCKING CAP? ☒ YES ☐ NO

CAP VENTED ☒ YES ☐ NO
WEEP HOLE? ☒ YES ☐ NO
CASING GROUT DETAILS: MATERIAL ☐ CEMENT ☒ CONCRETE ☐ OTHER
DEPTH FROM THE SURFACE TO THE BOTTOM OF THE CASING GROUT SEAL: 3.0 FT.
TYPE OF SURFACE COMPLETION: ☒ ABOVE GROUND ☐ FLUSH MOUNT
DESCRIBE HOW THE FLUSH MOUNT WAS CONSTRUCTED:

CENTRALIZER USED ON RISER: ☒ NO ☐ YES LOCATED AT
MATERIAL: ☐ STAINLESS STEEL ☐ OTHER

RISER PIPE DETAILS:
- LENGTH: 20.3 FT.
- DIAMETER OF RISER PIPE: 2 IN.
- WEIGHT OR SDR #: SCH 80
- DIAMETER OF DRILL HOLE: 8¼ IN.
- JOINTS: ☒ THREADED ☐ MECHANICAL ☐ WELDED ☐ OTHER
- MATERIAL: ☒ THERMO PLASTIC ☐ STEEL ☐ FLUORO POLYMER ☐ OTHER

ANNULAR SEAL: ☐ CEMENT SLURRY ☒ BENTONITE SLURRY ☐ NON SLURRY BENTONITE ☐ CEMENT/BENTONITE SLURRY
TYPE: ____ BAGS OF CEMENT USED ____ % BENTONITE USED ____ WATER USED/BAG ____ GAL.

BENTONITE SEAL: MATERIAL: BENTONITE ☒ SLURRY ☒ CHIPS ☐ GRANULAR ☐ PELLETS
LENGTH OF SEAL: 8.5
BENTONITE SEAL INSTALLED IN: ☒ UNSATURATED ZONE ☐ SATURATED ZONE

	TYPE	GRAIN SIZE	LENGTH OF FILTER PACK	METHOD OF INSTALLATION	Information in this column to be supplied in the Feet from Surface column	FEET FROM SURFACE	FORMATION DESCRIPTION
PRIMARY FILTER PACK	☒ SAND ☐ MANUFACTURED ☐ NATURAL	16-35	15.2 FT.	H.S.A. POUR			
SECONDARY FILTER PACK	☒ SAND ☐ MANUFACTURED ☐ NONE	100	1.3 FT.	H.S.A. POUR	Depth to bottom of Protective Casing Seal:	3.0	0-13 Silt
WELL SCREEN	LENGTH OF SCREEN: 10 FT.	DIAMETER: 2 IN.	SLOT SIZE: 10	WEIGHT OR SDR #: SCH80 MATERIAL ☒ PLASTIC ☐ STEEL ☐ FLUORO POLYMER	Depth to Base of Annular Seal:	11.5	
SUMP DETAILS	LENGTH OF SUMP	DIAMETER OF SUMP	MATERIAL ☐ PVC ☐ STEEL ☐ FLUORO POLYMER ☐ OTHER		Depth to Base of Bentonite Seal:	11.5	
BACK FILL	WAS THE WELL BACK FILLED? ☐ YES ☒ NO	MATERIAL USED	LENGTH OF BACK FILLED BORE HOLE		Depth to Top of Primary Filter Pack:	12.8	
					Depth to Top of the Screen:	18.0	13-28 Sand
					Depth to Bottom of the Screen:	28.0	
					Total Depth:	28.0	

STATIC WATER LEVEL: FEET FROM MEASURING POINT
DATE OF STATIC WATER LEVEL
MEASURING POINT FOR STATIC WATER LEVEL IS: ☒ TOP OF RISER PIPE ☐ OTHER
ELEVATION OF MEASURING POINT: 453.71
MULTIPLE CASED WELLS: SUBMIT ADDITIONAL AS BUILT DIAGRAM SHOWING WELL CONSTRUCTION DETAILS INCLUDING TYPE AND SIZE OF ALL CASING, HOLE DIAMETERS, AND GROUT USED.
DRILLING EQUIPMENT: ☐ AIR ROTARY ☒ AUGER TYPE 4¼ H.S.A. ☐ REVERSE ROTARY ☐ OTHER
DATE WELL DRILLING WAS COMPLETED: 9-27-95

I HEREBY CERTIFY THAT THE MONITORING WELL HEREIN DESCRIBED WAS CONSTRUCTED IN ACCORDANCE WITH THE DEPARTMENT OF NATURAL RESOURCES REQUIREMENTS FOR THE CONSTRUCTION OF MONITORING WELLS.

SIGNATURE PRIMARY CONTRACTOR/PERMIT #	DATE	SIGNATURE DRILLER/PERMIT #	DATE
Loman H. Mahurin II.	11-15-95	Loman H. Mahurin II.	11-15-95

MO 780-1415 (7-95)

DISTRIBUTION: WHITE/DIVISION CANARY/MONITORING WELL CONTRACTOR PINK/OWNER
MAIL WHITE COPY TO: DEPARTMENT OF NATURAL RESOURCES, P.O. BOX 250, ROLLA, MO 65402
ENCLOSE $35 PER MONITORING WELL FOR THE CERTIFICATION FEE WITHIN 60 DAYS AFTER WELL COMPLETION

RECYCLED PAPER

LAIDLAW WASTE SYSTEMS INC.

SOIL BOREHOLE LOG

SITE NAME AND LOCATION	LAIDLAW/OU2 RI-FS/MO WEST LAKE LANDFILL OPERABLE UNIT 2
DRILLING METHOD:	4.25 inch x 8.25 inch Hollow Stem Auger to 38.5 ft; 3.625 inch Mud Rotary 42.0-63.0 ft; 4.25 inch x 8.25 inch Hollow Stem Auger 38.5-64.0 ft.
SAMPLING METHOD:	CALIFORNIA BARREL (CB)
	SPLIT SPOON: 2.0 inch O.D./1.5 inch I.D. (SP)
	SHELBY TUBE: 3.0 inch O.D./2 13/16 inch I.D. (SH)
BORING NO.	PZ-305-AI
SHEET	1 OF 3
DRILLING	START: TIME 11:00, DATE 10/18/95 — FINISH: TIME 8:30, DATE 10/19/95
WATER LEVEL	22.85 FT
TIME	8:05
DATE	10/19/95
CASING DEPTH	40.0 FT.
DATUM	NORTHING: 1068064.93 EASTING: 515633.57
ELEVATION	457.6
DRILL RIG	CME 750
ANGLE	90°
BEARING	NA
SAMPLE HAMMER	
SURFACE CONDITIONS	Gravel road base.

DEPTH IN FEET (ELEVATION)	BLOW/6 IN. ON SAMPLER	RECOVERY	SYMBOL	SAMPLER SYMBOL	SAMPLE NUMBER AND DESCRIPTION OF MATERIAL	SAMPLER TYPE	REMARKS
31					(0.0-36.0 Ft.) No samples collected, see Soil Borehole Log LR-104 for descriptions		
32							
33							
34							
35							
36					(421.6) 36.0		
	6 8 21 50	1.4' 2.0' (70%)			(36.0-54.5 Ft.) Compact to dense, dark gray (N3), fine SAND, trace to little Silt, NR, wet, (SP), (ALLUVIUM)	SP (1)	
37							
					From 37.5-42.0 ft., becomes very dense		
38	12 41 50	1.1' 2.0' (55%)				SP (2)	
39							
40	21 43 53 45	2.0' 2.0' (100%)				SP (3)	
41							
42	4 5 6 9	1.2' 2.0' (60%)			From 42.0-45.0 ft., becomes compact, with occasional thin (1/2 in.) layers of medium gray (N4), SANDY CLAY, (CL)	SP (4)	@ 42.0 ft., switched over to mud rotary
43							
44	5 9 20 30	1.4' 2.0' (70%)				SP (5)	

DRILLING CONTR LAYNE-WESTERN

LOGGED BY M. SANDFORT

DATE 10/23/95 CHK'D BY B. TILTON

JOB NO.: 943-2848

FILENAME: PZ305AI

LAIDLAW WASTE SYSTEMS INC.

SOIL BOREHOLE LOG

SITE NAME AND LOCATION

LAIDLAW/OU2 RI-FS/MO
WEST LAKE LANDFILL
OPERABLE UNIT 2

NORTHING: 1068064.93
DATUM EASTING: 515633.57 ELEVATION 457.6

DRILLING METHOD: 4.25 inch x 8.25 inch Hollow Stem Auger to 38.5 Ft; 3.625 inch Mud Rotary 42.0-63.0 Ft; 4.25 inch x 8.25 inch Hollow Stem Auger 38.5-64.0 Ft.

SAMPLING METHOD: CALIFORNIA BARREL (CB)

SPLIT SPOON: 2.0 inch O.D./1.5 inch I.D. (SP)

SHELBY TUBE: 3.0 inch O.D./2 13/16 inch I.D. (SH)

WATER LEVEL	22.85 FT			
TIME	8:05			
DATE	10/19/95			
CASING DEPTH	40.0 FT.			

BORING NO. PZ-305-AI

SHEET 2 OF 3

DRILLING

START	FINISH
TIME 11:00	TIME 8:30
DATE 10/18/95	DATE 10/19/95

DRILL RIG CME 750

ANGLE 90° BEARING NA

SAMPLE HAMMER

SURFACE CONDITIONS Gravel road base.

DEPTH IN FEET (ELEVATION)	BLOW/ 6 IN. ON SAMPLER	RECOVERY	SYMBOL	SAMPLER SYMBOL	SAMPLE NUMBER AND DESCRIPTION OF MATERIAL	SAMPLER TYPE	REMARKS
46	19 26 24 30	1.3' 2.0' (65%)			(36.0-54.5 Ft.) Compact to dense, dark gray (N3), fine SAND, trace to little Silt, NR, wet, (SP), (ALLUVIUM)	SP (5)	
47						SP (6)	
48	16 28 34 33	1.7' 2.0' (85%)				SP (7)	
49							
50	22 23 16 15	1.7' 2.0' (85%)				SP (8)	
51							
52	10 12 50 22	1.0' 2.0' (50%)				SP (9)	
53							
54	10 13 20 23	1.4' 2.0' (70%)			(54.5-64.0 Ft.) Compact to dense, medium dark gray (N4), f-m SAND, trace Silt, NR, wet, (SP), (ALLUVIUM)	SP (10)	
55							
56	12 14 20 26	1.1' 2.0' (55%)				SP (11)	
57							
58	11 14 22 28	1.0' 2.0' (50%)				SP (12)	
59							

DRILLING CONTR LAYNE-WESTERN

LOGGED BY M. SANDFORT

DATE 10/23/95 CHK'D BY B. TILTON

JOB NO.: 943-2848

FILENAME: PZ305AI

LAIDLAW WASTE SYSTEMS INC.

SOIL BOREHOLE LOG

SITE NAME AND LOCATION	DRILLING METHOD: 4.25 inch x 8.25 inch Hollow Stem Auger to 38.5 ft; 3.625 inch Mud Rotary 42.0-63.0 ft; 4.25 inch x 8.25 inch Hollow Stem Auger 38.5-64.0 ft.		BORING NO. PZ-305-AI
	SAMPLING METHOD: CALIFORNIA BARREL (CB)		SHEET 3 OF 3
	SPLIT SPOON: 2.0 inch O.D./1.5 inch I.D. (SP)		DRILLING
	SHELBY TUBE: 3.0 inch O.D./2 13/16 inch I.D. (SH)		START / FINISH
LAIDLAW/OU2 RI-FS/MO WEST LAKE LANDFILL OPERABLE UNIT 2	WATER LEVEL: 22.85 FT		TIME: 11:00 / 8:30
	TIME: 8:05		
	DATE: 10/19/95		DATE: 10/18/95 / 10/19/95
NORTHING: 1068064.93 DATUM EASTING: 515633.57 ELEVATION 457.6	CASING DEPTH: 40.0 FT.		
DRILL RIG CME 750	SURFACE CONDITIONS Gravel road base.		
ANGLE 90° BEARING NA			
SAMPLE HAMMER			

DRILLING CONTR LAYNE-WESTERN

DEPTH IN FEET (ELEVATION)	BLOW/6 IN. ON SAMPLER	RECOVERY	SYMBOL	SAMPLER SYMBOL	SAMPLE NUMBER AND DESCRIPTION OF MATERIAL	SAMPLER TYPE	REMARKS
61	14 13 14 19	1.0'/2.0' (50%)			(54.5-64.0 Ft.) Compact to dense, medium dark gray (N4), f-m SAND, trace Silt, NR, wet, (SP), (ALLUVIUM)	SP (13)	
62	14 14 15 17	1.1'/2.0' (55%)				SP (14)	
63							
64					(393.6) 64.0 End of Soil Borehole Log at 64.0 Ft.		
65							
66							
67							
68							
69							
70							
71							
72							
73							
74							

LOGGED BY M. SANDFORT DATE 10/23/95 CHK'D BY B. TILTON

JOB NO.: 943-2848

FILENAME: PZ305AI

Well No. PZ-305-AI

Boring No. X-Ref: PZ-305-AI

PIEZOMETER CONSTRUCTION SUMMARY

Survey Coords: Northing: 1068065 ft.
Easting: 515634 ft.

Elevation Ground Level 457.6 ft. NGVD
Top of PVC Casing 459.28 ft. NGVD

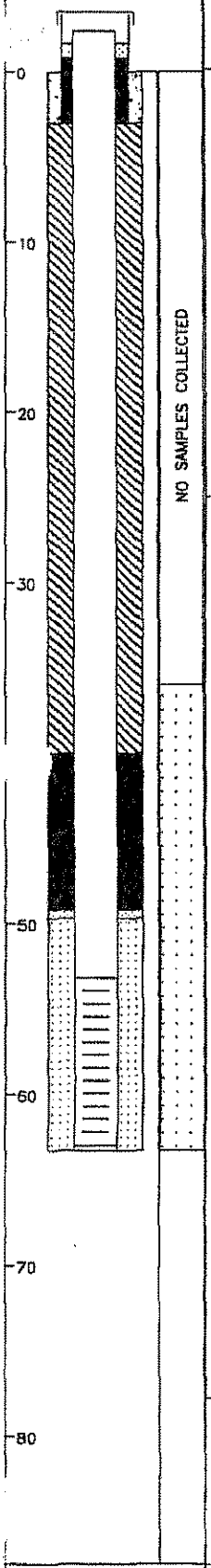

Not to Scale

Drilling Summary:

Total Depth 64.0 ft.
Borehole Diameter 8 1/4" (0.0-64.0')
Casing Stickup Height 1.68 ft.
Driller Layne-Western
St. Louis, MO

Rig CME 750
Bit(s) 4 1/4" ID Hollow Stem Auger Bit
3/8" Tricone Bit
Drilling Fluid Bentonite Mud below 28.0'

Protective Casing 8x8" Square Steel, by 5' long

Well Design & Specifications

Basis: Geologic Log X Geophysical Log

Casing string(s): C = Casing S = Screen

Depth			String(s)	Elevation		
+ 1.68	-	53.20	C1	459.28	-	404.40
53.20	-	63.00	S1	404.40	-	394.60
63.00	-	63.30	C2	394.60	-	394.30
	-				-	
	-				-	
	-				-	

Casing: C1 2" dia. Schedule 80 PVC, flush threaded with O-rings
C2 2" dia. threaded PVC end cap (4" long or 0.33')

Screen: S1 2" dia. Schedule 80 PVC, 0.010" machine cut slot, flush threaded with O-rings

Sand Pack: 16-35 mesh Silica Sand 49.7-63.3'

Filter Pack: 100 mesh Silica Sand 49.2-49.7'

Grout Seal: Wyo-Ben Grout Well Bentonite Slurry 3.0-40.0'

Bentonite Seal: Extra high yield Wyo-Ben (100%) Slurry 40.0-49.2'

Concrete: 0.0-3.0'

Construction Time log:

Task	Start Date	Start Time	Finish Date	Finish Time
Drilling				
CME 750	10/18/95	11:00	10/19/95	6:30
Geophys.Logging:				
Casing:				
2" I.D. PVC	10/19/95	10:22	10/19/95	10:30
Filter Placement:	10/19/95	10:39	10/19/95	10:24
Cementing:				
Development				
Bentonite Grout	10/19/95	10:32	10/19/95	11:15
Bentonite Seal	10/19/95	10:24	10/19/95	10:32

Well Development

Stabilization Test Data:

Time	pH	Spec. Cond.	Temp (°C)

Recovery Data:

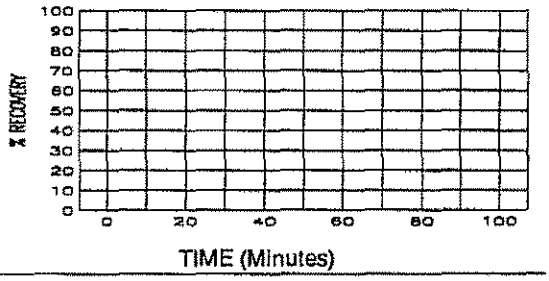

Comments:

Supervised by M. Sandfort
Job Number 943-2848

Site LAIDLAW/OU2 RI-FS/MO
File Name PZ305AI

MISSOURI DEPARTMENT OF NATURAL RESOURCES
DIVISION OF GEOLOGY AND LAND SURVEY

MONITORING WELL CERTIFICATION RECORD

OFFICE USE ONLY	DATE RECEIVED
REF. NO. 145104	
C.R. NO.	CHECK NO.
STATE WELL NUMBER	TRANSMITTAL NO.
CHECKED BY	ROUTE
APPROVED BY	ENTERED Ph 1 Ph 2 Ph 3

INFORMATION SUPPLIED BY MONITORING WELL CONTRACTOR

SITE/FACILITY NAME: LAIDLAW BRIDGETON SANITARY LANDFILL
WELL NUMBER: PZ-305AI
SITE ADDRESS: ST. CHARLES ROCK RD. CITY: BRIDGETON STATE: Mo ZIP CODE: 63044
OWNER NAME: LAIDLAW WASTE SYSTEMS, INC. TELEPHONE: 314-241-3710
OWNER ADDRESS: 1838 N. BROADWAY CITY: ST. LOUIS STATE: Mo ZIP CODE: 63102

VARIANCE ISSUED: ☐ YES ☒ NO — DATE ISSUED — VARIANCE NUMBER: V

LOCATION OF WELL — SHOW LOCATION IN SECTION PLAT — COUNTY: ST. LOUIS — SURFACE ELEVATION: 457.6
SMALLEST ¼ ____ ¼ ____ ¼ ____ ¼ LARGEST ¼
SEC. ____ TWN. 47 N,RNG. 5 E OR W
LAT. 38 ° 46 ' 01 " LONG. 90 ° 26 ' 44 "

DESCRIBE LOCATION OF THE WELL SO WE WOULD BE ABLE TO VISIT IT
SOUTH OF OVERHEAD CONVEYOR, 90' SOUTHEAST OF ROADWAY, 150' WEST OF SMALL BUILDING.

MONITORING WELL INSTALLATION CONTRACTOR'S NAME: LAYNE WESTERN CO., INC. PERMIT NUMBER: 001258 WIPM
DRILLING CONTRACTOR'S NAME: LAYNE WESTERN CO., INC. PERMIT NUMBER: 001258 WIPM

WELL CONSTRUCTION INFORMATION

TYPE OF WELL: ☐ MONITORING WELL ☒ PIEZOMETER ☐ OTHER ____
TYPE OF POTENTIAL SITE: ☐ HAZARDOUS MATERIAL ☒ LANDFILL ☐ OTHER ☐ L.U.S.T. ____
MONITORING FOR: (CHECK ALL THAT APPLY) ☒ V.O.C. ☐ METALS ☐ PETROLEUM PRODUCT ☐ OTHER ____ ONLY

PROTECTIVE CASING DETAILS (IF USED): LENGTH 5 FT. — DIAMETER OF CASING 8X8 IN. — WEIGHT OR SDR # 0.188" — DIAMETER AND DEPTH OF DRILL HOLE 8¼ IN. FT. — JOINTS ☐ MECHANICAL ☐ WELDED ☐ THREADED ☐ OTHER ____ — MATERIAL ☒ STEEL ☐ THERMO PLASTIC ☐ FLUORO POLYMER TYPE ____ — LOCKING CAP? ☒ YES ☐ NO

CASING GROUT DETAILS: CAP VENTED ☒ YES ☐ NO — WEEP HOLE? ☒ YES ☐ NO — MATERIAL ☐ CEMENT ☒ CONCRETE ☐ OTHER ____ — DEPTH FROM THE SURFACE TO THE BOTTOM OF THE CASING GROUT SEAL 3.0 FT.
TYPE OF SURFACE COMPLETION: ☒ ABOVE GROUND ☐ FLUSH MOUNT
DESCRIBE HOW THE FLUSH MOUNT WAS CONSTRUCTED

CENTRALIZER USED ON RISER: ☒ NO ☐ YES LOCATED AT ____ — MATERIAL ☐ STAINLESS STEEL ☐ OTHER ____

RISER PIPE DETAILS: LENGTH 56.7 FT. — DIAMETER OF RISER PIPE 2 IN. — WEIGHT OR SDR # SCH80 — DIAMETER OF DRILL HOLE 8¼ IN. — JOINTS ☒ THREADED ☐ MECHANICAL ☐ WELDED ☐ OTHER ____ — MATERIAL ☒ THERMO PLASTIC ☐ STEEL ☐ FLUORO POLYMER ☐ OTHER ____

ANNULAR SEAL: ☐ CEMENT SLURRY ☒ BENTONITE SLURRY ☐ NON SLURRY BENTONITE TYPE: ____ ☐ CEMENT/BENTONITE SLURRY BAGS OF CEMENT USED ____ % BENTONITE USED ____ WATER USED/BAG ____ GAL.
BENTONITE SEAL: MATERIAL BENTONITE ☒ SLURRY ☐ CHIPS ☐ GRANULAR ☐ PELLETS — LENGTH OF SEAL 9.2 — BENTONITE SEAL INSTALLED IN ☐ UNSATURATED ZONE ☒ SATURATED ZONE

	TYPE	GRAIN SIZE	LENGTH OF FILTER PACK	METHOD OF INSTALLATION	Information in this column to be supplied in the Feet from Surface column	FEET FROM SURFACE	FORMATION DESCRIPTION
PRIMARY FILTER PACK	☒ SAND ☐ MANUFACTURED ☐ NATURAL	16-35	14.3 FT.	TREMIE			
SECONDARY FILTER PACK	☒ SAND ☐ MANUFACTURED ☐ NONE	100	0.5 FT.	TREMIE	Depth to bottom of Protective Casing Seal:	3.0	0-2 Gravel 2-10 Silty clay
WELL SCREEN	LENGTH OF SCREEN 10 FT. — DIAMETER 2 IN. — SLOT SIZE 10 — WEIGHT OR SDR # SCH80 — MATERIAL ☒ PLASTIC ☐ STEEL ☐ FLUORO POLYMER				Depth to Base of Annular Seal:	40.0	10-18 Silt 18-25 Silty clay
SUMP DETAILS	LENGTH OF SUMP	DIAMETER OF SUMP	MATERIAL ☐ PVC ☐ STEEL ☐ FLUORO POLYMER ☐ OTHER		Depth to Base of Bentonite Seal:	49.2	25-64 Sand
BACK FILL	WAS THE WELL BACK FILLED? ☐ YES ☒ NO	MATERIAL USED	LENGTH OF BACK FILLED BORE HOLE		Depth to Top of Primary Filter Pack:	49.7	
					Depth to Top of the Screen:	54.0	
					Depth to Bottom of the Screen:	64.0	
					Total Depth:	64.0	

STATIC WATER LEVEL — FEET FROM MEASURING POINT — DATE OF STATIC WATER LEVEL
MEASURING POINT FOR STATIC WATER LEVEL IS: ☒ TOP OF RISER PIPE ☐ OTHER ____
ELEVATION OF MEASURING POINT 459.28
MULTIPLE CASED WELLS — SUBMIT ADDITIONAL AS BUILT DIAGRAM SHOWING WELL CONSTRUCTION DETAILS INCLUDING TYPE AND SIZE OF ALL CASING, HOLE DIAMETERS, AND GROUT USED.
DRILLING EQUIPMENT: ☐ AIR ROTARY ☒ AUGER TYPE 4¼ H.S.A. ☐ REVERSE ROTARY ☐ OTHER ____
DATE WELL DRILLING WAS COMPLETED 10-19-95

I HEREBY CERTIFY THAT THE MONITORING WELL HEREIN DESCRIBED WAS CONSTRUCTED IN ACCORDANCE WITH THE DEPARTMENT OF NATURAL RESOURCES REQUIREMENTS FOR THE CONSTRUCTION OF MONITORING WELLS.

SIGNATURE PRIMARY CONTRACTOR/PERMIT #: Lyman Y. Mahwinney — DATE: 11-15-95
SIGNATURE DRILLER/PERMIT #: Lyman Y. Mahwinney — DATE: 11-15-95

MO 780-1415 (7-95)
DISTRIBUTION: WHITE/DIVISION CANARY/MONITORING WELL CONTRACTOR PINK/OWNER
MAIL WHITE COPY TO: DEPARTMENT OF NATURAL RESOURCES, P.O. BOX 250, ROLLA, MO 65402
ENCLOSE $35 PER MONITORING WELL FOR THE CERTIFICATION FEE WITHIN 60 DAYS AFTER WELL COMPLETION
RECYCLED PAPER

Soil Boring Log

McLaren Hart

Boring No.	Project No./Name	Page:
WL-204	07.0803035.003.002	1 of 1

Start/Finish Date	**Site Name and Location**
8/1/95	West Lake Landfill; Bridgeton, Missouri
Drilling Contractor	**Boring Location:** Area 2
Hart Environmental Drilling	**Ground Surface Elevation:** 443.3
Driller	**Northing:** 1069685.83
Max Tinnin	**Easting:** 514205.01

Drilling Equipment	**McLaren/Hart Geologist/Office**
CME-55 Drill Rig, Hollow Stem Augers	Tim Biggs / St. Louis

Bit Size/Type	Sample Method	T.D. Borehole	Well Installed?
4 1/4" ID; 8 1/4" Hole	5' Continuous Sampler	25'	S-1

Remarks:

Depth (ft)	Sample ID #	Geiger Reading (mR/hr)	Description
5	WL-204 5'	Background (0.03-0.05)	0.0-25.0' Native Alluvium: olive brown clayey silt grading to dark brown, fine-grained sand; moist to wet.
10	WL-204 10'	Background (0.03-0.05)	@ 8' wet
15	WL-204 15'	Background (0.03-0.05)	
20	WL-204 20'	Background (0.03-0.05)	
25	WL-204 25'	Background (0.03-0.05)	Boring terminated @ 25.0'

Notes:

Radiological samples collected at 5 and 25 feet below ground surface.

Non-radiological samples not collected during boring activities.

Perched water not encountered during boring activities.

Groundwater encountered at 8 feet below ground surface.

McLaren Hart
ENVIRONMENTAL ENGINEERING CORPORATION

MONITORING WELL DETAILS

PROJECT NO. 070803035
WELL NO. S-1

PROJECT NAME WEST LAKE LANDFILL
WELL LOCATION BRIDGETON, MISSOURI DATE 8/2/95 BY HART ENVIRONMENTAL DRILLING

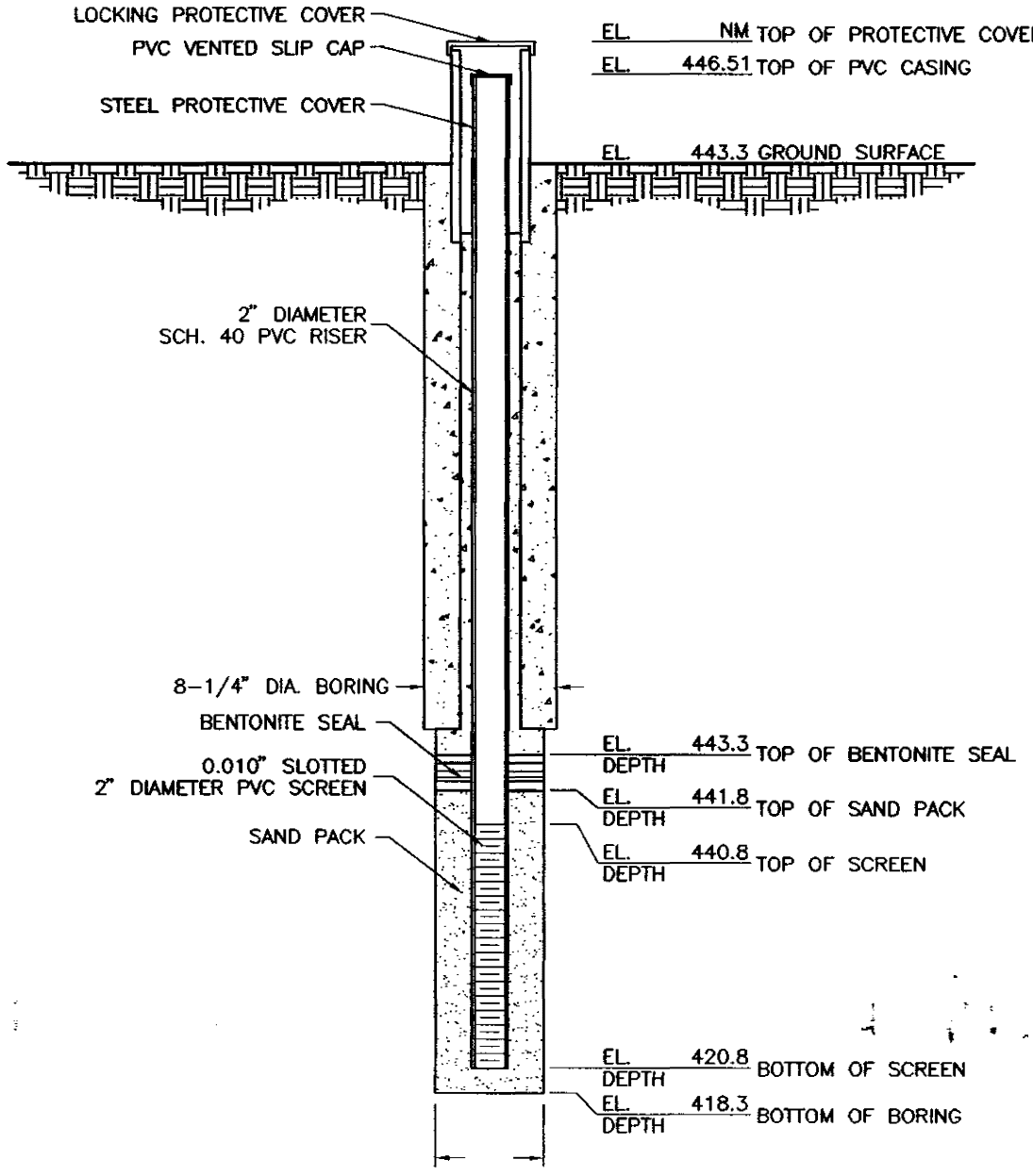

NOTES:
1. REFER TO SOIL BORING WL-204 FOR SOIL DESCRIPTION.
2. DETAIL NOT TO SCALE.
3. NM = NOT MEASURED

(W1.DWG)

MISSOURI DEPARTMENT OF NATURAL RESOURCES
GEOLOGICAL SURVEY PROGRAM

MONITORING WELL PLUGGING REGISTRATION RECORD

OFFICE USE ONLY	DATE RECEIVED	
REF NO. 514516		
C.R. NO.	CHECK NO.	TRANSMITTAL NO.
STATE WELL NUMBER	APPROVED BY	DATE APPROVED
ENTERED Ph1 Ph2 Ph3	ROUTE	

INFORMATION SUPPLIED BY WELL OR PUMP INSTALLATION CONTRACTOR

OWNER NAME	TELEPHONE NUMBER	VARIANCE NUMBER (IF APPLICABLE)
ENGINEERING MGMT.SUPPORT INC. EMSI. PAUL ROSASCO		6023

OWNER ADDRESS	CITY	STATE	ZIP CODE
7220 W. JEFFERSON AVE. SUITE 406	LAKEWOOD	CO	80235

ADDRESS OF WELL SITE	CITY	STATE	ZIP CODE	REFERENCE NUMBER OF ORIGINAL WELL (IF KNOWN)
13570 ST. CHARLES ROCK ROAD	BRIDGETON	MO	63044	N/A

SITE NAME	WELL NUMBER	DATE
WEST LAKE LANDFILL	S - 1	

LOCATION OF WELL	DRILL AREA	
LAT. 38 ° 46 ' 16.5 "	AREA 1	SMALLEST ¼ LARGEST ¼ ¼
LONG. 90 ° 27 ' 2.0 "	COUNTY ST. LOUIS	Sec. Township North Range ☐ East ☐ West

PLUGGING INFORMATION

ORIGINAL DRILLER (IF KNOWN)	DATE ORIGINALLY DRILLED	STATIC WATER LEVEL	DRILLER NOTES
N/A	N/A		

☑ MONITORING WELL ☐ SOIL BORING(S) Boring Diameter: _____ IN.

DEPTH OF WELL	LENGTH OF RISER	QUANTITY	DEPTH	TYPE OF FILL MATERIAL
23 FT.	N/A FT. BGS			☐ Gravel ☐ Sand ☐ Other
SCREEN/RISER DIAMETER	WELL SCREEN AND RISER REMOVED?			AMOUNT OF FILL USED
2 IN.	☐ Yes ☑ No			_____ ☐ TONS ☐ CUBIC YARDS
PUMP AND SAMPLING EQUIPMENT REMOVED?	CASING REMOVED?			DEPTH TO TOP OF FILL
☐ Yes ☑ N/A ☐ No	☑ Yes ☐ N/A ☐ No	TOTAL _____ BORING(S)	TOTAL _____ FT.	_____ FT.

GROUT INSTALLATION METHOD	GROUT MATERIAL USED	HOW MANY GALLONS OF WATER MIXED PER BAG OF CEMENT OR BENTONITE?	TOTAL NUMBER OF BAGS OF GROUT USED
☐ Gravity ☑ Tremie ☐ Excavation	Neat Cement Bentonite ☐ Hi-Early ☑ Slurry ☐ Granular ☐ Pellets ☐ Type 1 ☐ Chips ☐ Other _____	5 ☐ Hydrated to Saturation	2
			POUNDS OF GROUT PER BAG: 50

DATE 1ST WELL PLUGGED	DATE LAST WELL PLUGGED	FINISHED SURFACE MATERIAL	SURFACE MATERIAL LENGTH
04/13/2016	04/15/2016	☑ Soil ☐ Concrete ☐ Asphalt ☐ Other	_____ FT. _____ IN.

REMARKS	REASON FOR ABANDONMENT
(REDI JOB# 162075-AB)	

I hereby certify that the monitoring well herein described was plugged in accordance with the Department of Natural Resources requirements for the plugging of wells.

SIGNATURE (PRIMARY CONTRACTOR)		SIGNATURE (CONTRACTOR)	PERMIT NUMBER	DATE
		Pat Seymour	4438 m	5/12/16
PERMIT NUMBER	DATE	SIGNATURE (APPRENTICE)	PERMIT NUMBER	DATE
336E - M	5/17/2016			

MO-780-2161 (1-12)

REMIT TO: MISSOURI DEPARTMENT OF NATURAL RESOURCES, DIVISION OF GEOLOGY AND LAND SURVEY
WELLHEAD PROTECTION SECTION, PO BOX 250, ROLLA, MO 65402 573-368-2165
ENCLOSE $50 FEE WITH REGISTRATION RECORD WITHIN 60 DAYS AFTER WELL PLUGGING OR WITHIN 180 DAYS AFTER THE PLUGGING OF TEMPORARY WELLS

Soil Boring Log

McLaren Hart

Boring No.	Project No./Name	Page:
S-5 WL-105C	07.0803035.003.002	1 of 1

Start/Finish Date	**Site Name and Location**
8/15/95	West Lake Landfill; Bridgeton, Missouri
Drilling Contractor	**Boring Location:** Area 1
Hart Environmental Drilling	**Ground Surface Elevation:** 465.7
Driller	**Northing:** 1069155.84
Max Tinnin	**Easting:** 515901.03

Drilling Equipment		**McLaren/Hart Geologist/Office**	
CME-55 Drill Rig, Hollow Stem Augers		Tim Biggs / St. Louis	
Bit Size/Type	**Sample Method**	**T.D. Borehole**	**Well Installed?**
4 1/4" ID; 8 1/4" Hole	5' Continuous Sampler	43'	S-5

Remarks:

Depth (ft)	Sample ID #	Geiger Reading (mR/hr)	Description
5	None Taken	0.7	0.0-30.0' Landfill Debris: trashy debris consisting of cloth, wood, rope, and plastic; soil consisting of brown and gray silt, and crushed rock; dry to moist.
10	None Taken	0.2	
15	None Taken	Background (0.02-0.04)	
20	None Taken	Background (0.02-0.04)	
25	None Taken	Background (0.02-0.04)	
30	None Taken	Background (0.02-0.04)	@ 30' wet
35	None Taken	Background (0.02-0.04)	30.0-43.0' Native Alluvium: dark gray clayey silt grading to fine to coarse-grained sand and gravel; wet.
40	None Taken	Background (0.02-0.04)	
45	None Taken	Background (0.02-0.04)	Boring terminated @ 43.0'

Notes:

Radiological samples not collected during boring activities; downhole logging indicated elevated gamma readings from 1.5-5.5'

Non-radiological samples not collected during boring activities.

Perched water not encountered during boring activities.

Groundwater encountered at 30 feet below ground surface.

McLaren Hart
ENVIRONMENTAL ENGINEERING CORPORATION

MONITORING WELL DETAILS

PROJECT NO. 070803035
WELL NO. S-5

PROJECT NAME WEST LAKE LANDFILL
WELL LOCATION BRIDGETON, MISSOURI DATE 8/15/95 BY HART ENVIRONMENTAL DRILLING

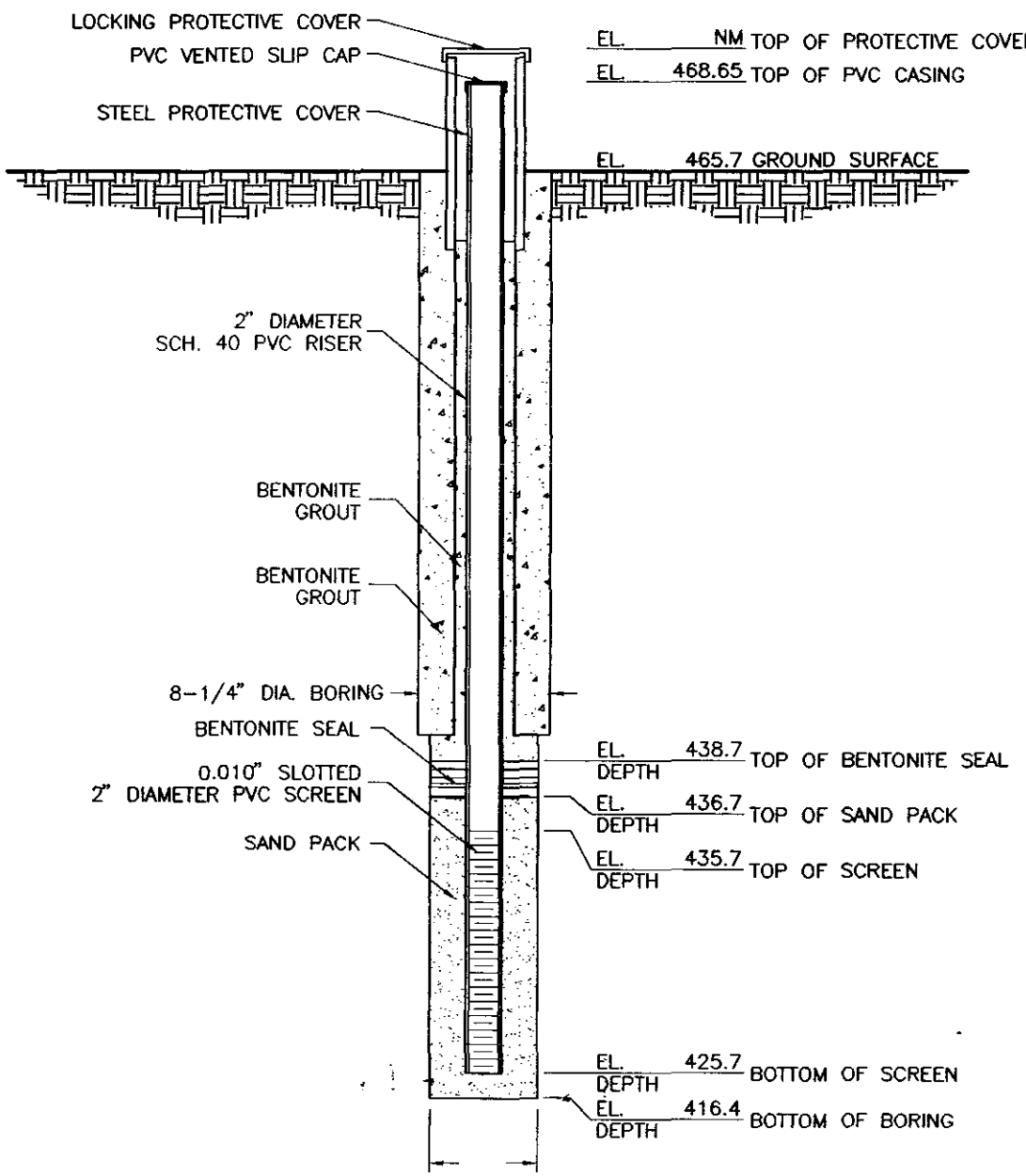

NOTES:

1. REFER TO SOIL BORING WL-105C FOR SOIL DESCRIPTION.
2. DETAIL NOT TO SCALE.
3. NM = NOT MEASURED

(W5.DWG)

Soil Boring Log

McLaren Hart

Boring No.	Project No./Name	Page:
S-8 WL-228	07.0803035.003.002	1 of 1

Start/Finish Date	Site Name and Location
9/15/95	West Lake Landfill; Bridgeton, Missouri

Drilling Contractor	Boring Location:	Area 2
Hart Environmental Drilling	Ground Surface Elevation:	441.6
Driller	Northing:	1071044.35
Max Tinnin	Easting:	514724.16

Drilling Equipment	McLaren/Hart Geologist/Office
CME-55 Drill Rig; Hollow Stem Augers	Tim Biggs / St. Louis

Bit Size/Type	Sample Method	T.D. Borehole	Well Installed?
4 1/4"ID; 8 1/4" Hole	5' Continuous Sampler	29.3'	S-8

Remarks:

Depth (ft)	Sample ID #	Geiger Reading (mR/hr)	Description
5	WL-228 5'	Background (0.01-0.04)	0.0-29.3' Native Alluvium: olive brown sandy silt and silty clay grading to dark gray medium to coarse-grained sand; dry to wet.
10	WL-228 10'	Background (0.01-0.04)	@ 10' wet
15	WL-228 15'	Background (0.01-0.04)	
20	WL-228 20'	Background (0.01-0.04)	
25	WL-228 25'	Background (0.01-0.04)	
30	None Taken	Background (0.01-0.04)	Boring terminated @ 29.3'

Notes:

Radiological samples collected at 5 and 15 feet below ground surface.
Non-radiological samples not collected during boring activities.
Perched water not encountered during boring activities.
Groundwater encountered at 10 feet below ground surface.

McLaren Hart
ENVIRONMENTAL ENGINEERING CORPORATION

MONITORING WELL DETAILS

PROJECT NO. 070803035
WELL NO. S-8

PROJECT NAME WEST LAKE LANDFILL
WELL LOCATION BRIDGETON, MISSOURI DATE 9/15/95 BY HART ENVIRONMENTAL DRILLING

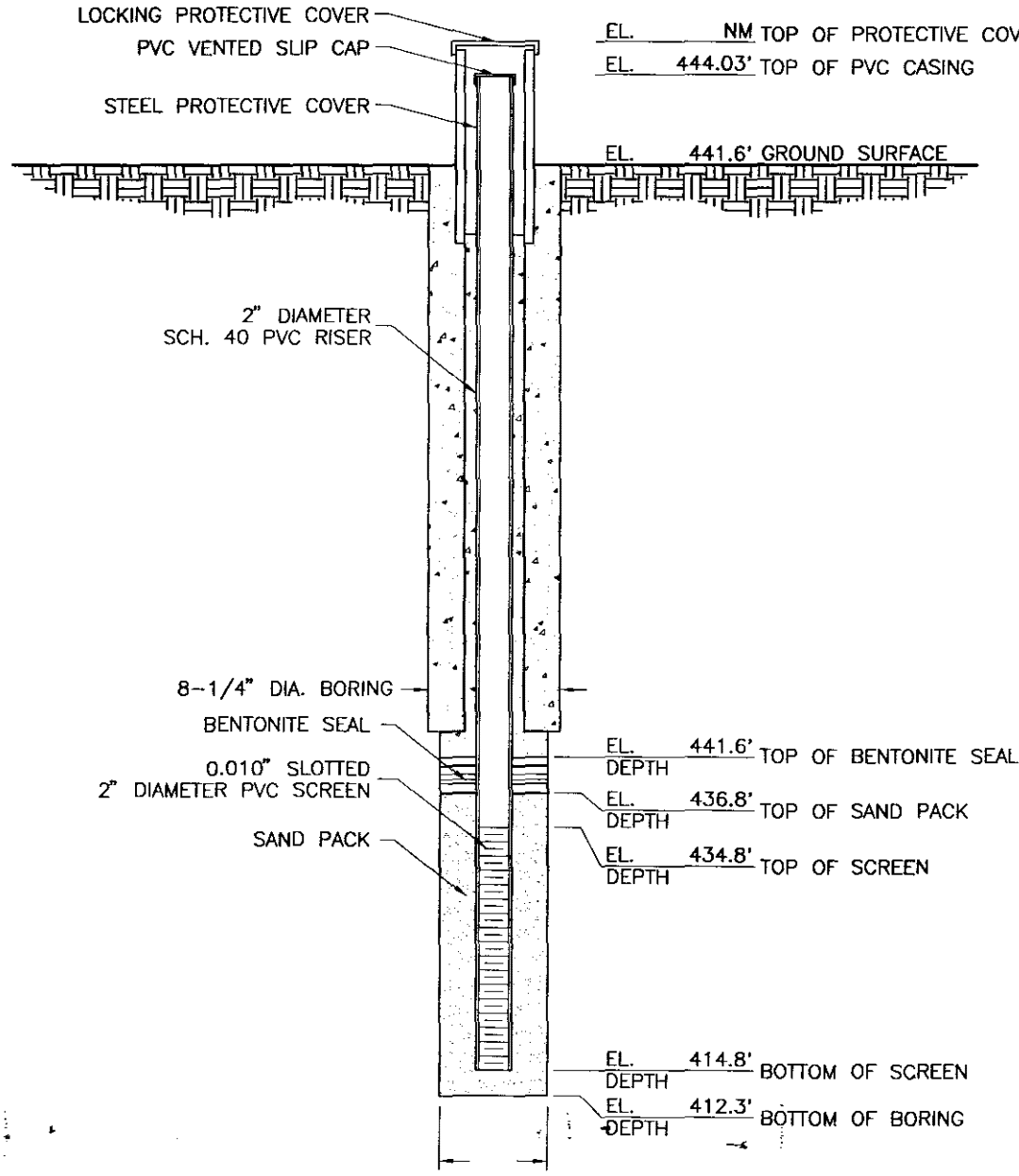

NOTES:

1. REFER TO SOIL BORING WL-228 FOR SOIL DESCRIPTION.
2. DETAIL NOT TO SCALE.
3. NM = NOT MEASURED.

(W8)

Soil Boring Log

McLaren Hart

Boring No.	Project No./Name	Page:
S-10 WL-216B (WL-232)	07.0803035.003.002	1 of 1

Start/Finish Date	**Site Name and Location**
8/30/95 / 9/19/95	West Lake Landfill; Bridgeton, Missouri
Drilling Contractor	**Boring Location:** Area 1
Hart Environmental Drilling	**Ground Surface Elevation:** 477.5
Drilling Service Company	**Northing:** 1069827.87
Driller	**Easting:** 514931.35
Max Timmin	**McLaren/Hart Geologist/Office**
Bruce Murphy	Tim Biggs / St. Louis

Drilling Equipment CME-55 Drill Rig, Hollow Stem Augers
LDH-30T Drill Rig, Large Diameter Auger

Bit Size/Type	Sample Method	T.D. Borehole	Well Installed?
4 1/4" ID; 8 1/4" Hole 24" OD Solid Auger	5' Continuous Sampler Grab from Auger	54.5'	S-10

Remarks:

Depth (ft)	Sample ID #	Geiger Reading (mR/hr)	Description
5	None Taken	Background (0.01-0.03)	0.0-22.0' Landfill Debris: soil consisting of grayish brown to olive brown silty clay to gray, very-fine grained sand, and crushed rock; no trashy debris encountered; dry to moist.
10	None Taken	Background (0.01-0.03)	
15	None Taken	Background (0.01-0.03)	
20	None Taken	Background (0.01-0.03)	
25	None Taken	None Taken	22.0-54.5' Native Alluvium: gray, silty, very fine-grained sand grading to coarse-grained sand; moist to wet.
30	None Taken	None Taken	
35	None Taken	None Taken	
40	None Taken	None Taken	@ 40' wet
45	None Taken	None Taken	
50	None Taken	None Taken	
55	None Taken	None Taken	Boring terminated @ 54.5'

Notes:

Radiological samples not collected during boring activities; downhole logging indicated elevated gamma readings from 3.0-5.0'.

Non-radiological samples not collected during boring activities.

Perched water not encountered during boring activities.

Groundwater encountered at 40 feet below ground surface.

McLaren Hart
ENVIRONMENTAL ENGINEERING CORPORATION

MONITORING WELL DETAILS

PROJECT NO. 070803035
WELL NO. S-10

PROJECT NAME WEST LAKE LANDFILL
WELL LOCATION BRIDGETON, MISSOURI DATE 9/19/95 BY HART ENVIRONMENTAL DRILLING

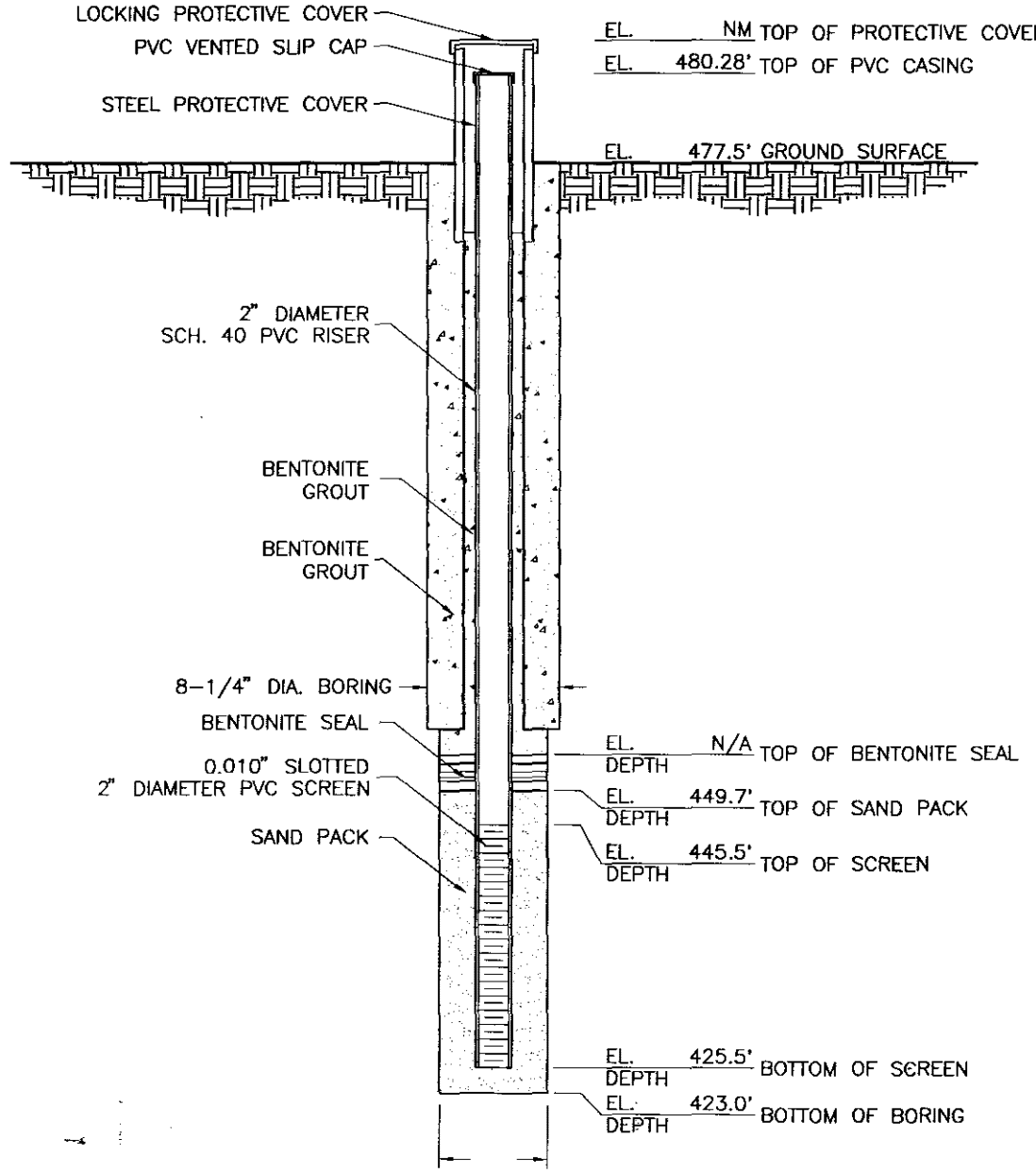

NOTES:

1. REFER TO SOIL BORING WL-216B FOR SOIL DESCRIPTION.
2. DETAIL NOT TO SCALE.
3. NM = NOT MEASURED.
4. N/A = NOT APPLICABLE; BENTONITE GROUT/CHIPS USED TO SEAL WELL UP TO SURFACE.

(W10)

SUBSURFACE EXPLORATION DATA

by

WABASH DRILLING COMPANY

110 Angelica St. • St. Louis, Mo. 63147 • 421-2460

Date of Drilling:
Started 6-23-78
Finished 6-23-78

Boring No. 37-A
Coordinates Sheet 1 of 2
Surf. Elev.
Gr. Water Elev. --

Client Westlake Quarry & Material Co.

Job Name Westlake Landfill Client's Job No.

Job Location St. Charles Rock Road City Bridgeton State Mo.

Casing O.D. I.D. Sampler O.D. 2" I.D. 1-3/8"

Casing Hammer lbs. fall Sampler Hammer 140 lbs. 30" fall

W. D. Co. Foreman Gary Johanning Client's Inspector

Depth Below Ground Surface	Blows On Casing	Sample Number	Blows On Sampler	Penetration Of Sampler (inches)	FIELD IDENTIFICATION OF SOIL (Include relative firmness, relative moisture, color, mention all soil constituents, etc.)	REMARKS
					Brown, sandy clay and trash	Used 6" H.S. auger
2'0"					Moist to wet, brown and gray, sandy clay	
7'0"					Limestone boulder 1'0" minus	
19'0"					Moist, brown, firm to medium stiff, sandy clay	
26'0"					Wet, brown, medium dense, fine, sand and clay layers	
29'0"					Gray, moist, stiff, plastic, clay with traces of rust stains	
35'0"					Wet, brown, medium dense, fine, sand with gravel	(Cont'd.)

DNR 0157

SUBSURFACE EXPLORATION DATA

by

WABASH DRILLING COMPANY

110 Angelica St. • St. Louis, Mo. 63147 • 421-2460

Date of Drilling:
Started 6-23-78
Finished 6-23-78

Boring No. 37-A
Coordinates Sheet 2 of
Surf. Elev.
Gr. Water Elev. --

Client Westlake Quarry & Material Co.

Job Name Westlake Landfill Client's Job No.

Job Location St. Charles Rock Road City Bridgeton State Mo.

Casing O.D. I.D. Sampler O.D. 2" I.D. 1-3/8"

Casing Hammer lbs. fall Sampler Hammer 140 lbs. 30" fall

W. D. Co. Foreman Gary Johannin; Client's Inspector

Depth Below Ground Surface	Blows On Casing	Sample Number	Blows On Sampler	Penetration of Sampler (inches)	FIELD IDENTIFICATION OF SOIL (Include relative firmness, relative moisture, color, mention all soil constituents, etc.)	REMARKS
					Wet, gray, fine, medium dense, sand with traces of gravel	Set bottom of well point @ 50'0" and back filled hole with ½" minus rock.
50'0"					Total depth of boring 50'0"	

Drilling Log

Project Name: WESTLAKE			Boring No.: S-80
Project No.: 84-075-4-002			Page: 1 of 2
Ground Elevation: 448.4	Location: Southwest of Site, Figure I-2		Total Footage: 22.0

Drilling Type	Hole Size	Overburden Footage	Bedrock Footage	No. of Samples	No. Core Boxes	Depth To Water	Date Measured
SOLID AUGERS	5"	22.0'	0	4	0	SEE REMARKS	-

Drilling Co.: WABASH DRILLING CO.		Driller (s): DORL THORNTON	
Drilling Rig: ACKER HP-5, TRUCK		Type of Penetration Test: STANDARD	
Date: 8-28-84	To: 8-29-84	Field Observer (s): GLEN ERNSTMANN	

Depth	Description	Class.	Blow Count	Recov.		Sample or Box No.	Remarks
1	DARK BROWN SANDY SILT AND ORGANIC MATTER, DAMP						5" SOLID AUGER 0' TO 20'.
2	LIGHT BROWN FINE SANDY SILT, LOW PLASTICITY, VERY LOOSE, DAMP						
3							
4							
5					5.0		
6			2/2/1	9" / 18"		SS-1	
					6.5		
7	GRAY-BROWN SILTY CLAY, MEDIUM PLASTICITY, MEDIUM STIFF TO SOFT, MOIST						
8							
9							
10					10.0		
11			1/3/2	18" / 18"		SS-2	
					11.5		
12							
13	GRAY-BROWN FINE SANDY SILT, SOME CLAY, VERY SOFT, SATURATED						

Drilling Log

Project Name: WESTLAKE							Boring No.: S-82
Project No.: 84-075-4-002							Page 1 of 2
Ground Elevation: 447.7	Location: NW Central Section of Site; Fig I-2						Total Footage: 26.5'
Drilling Type	Hole Size	Overburden Footage	Bedrock Footage	No. of Samples	No. Core Boxes	Depth To Water	Date Measured
SEE REMARKS	SEE REMARKS	26.5'	0	5	0	SEE REMARKS	-
Drilling Co.: WABASH DRILLING CO.						Driller (s): DORL THORNTON	
Drilling Rig.: ACKER MP-5, TRUCK						Type of Penetration Test: STANDARD	
Date: 8-24-84	To: 8-27-84					Field Observer (s): GLEN ERNSTMANN	

Depth	Description	Class.	Blow Count	Recov.	Sample or Box No.	Remarks
1	BROWN SANDY CLAY, SOME GRAVEL, MEDIUM PLASTICITY, STIFF TO VERY STIFF, DAMP TO MOIST (FILL)					5" SOLID AUGERS 0' TO 20'.
2						
3						
4						
5					5.0	
6			5/4/8	14" / 18"	SS-1	
7					6.5	
8						
9	BROWN FINE SANDY SILT, LOW TO NON-PLASTIC, STIFF, MOIST TO SATURATED					
10					10.0	SATURATED MATERIAL ENCOUNTERED @ 11' TO 13'. UNSATURATED 13' TO 17',
11			2/3/3	17" / 18"	SS-2	
12					11.5	
13	LIGHT BROWN FINE TO MEDIUM SAND, DAMP					

TECHNICAL SERVICES
GEOTECHNICAL DEPARTMENT

Drilling Log (continued)

Boring No. S-82
Project Name WESTLAKE
Page 2 of 2
Project No. 84-075-4002
Date 8-27-84

Depth	Description	Log or Class	Blow Count	Core Recov. & Loss		Box or Sample No.	Remarks
15	LIGHT BROWN FINE TO MEDIUM SAND, DAMP						
					15.0		
	BROWN SILTY CLAY, MEDIUM PLASTICITY, VERY STIFF, MOIST		3/7/13	16"/18"		SS-3	
16					16.5		
17							SATURATED MATERIAL BELOW APPROX. 17' TO 18'.
	BROWN-GRAY SILTY FINE TO MEDIUM SAND, MEDIUM DENSITY, SATURATED						
18							
19							CASING WAS DRIVEN TO 20' & HOLE WAS WASH-BORED FROM 20' TO 25'.
20					20.0		
			4/7/12	15"/18"		SS-4	
21							
					21.5		STOPPED 8-24-84
22							RESUMED 8-27-84
							NOTE: HOLE HAS COLLAPSED TO 13.3' BELOW G.S. OVER THE WEEKEND.
23	GRAY-BROWN COARSE SAND, SOME FINE TO MEDIUM SAND, MEDIUM DENSITY, SATURATED						
24							
	PRIMARILY QUARTZ, SOME CHERT FRAGMENTS AND MAFIC MINERALS						
25					25.0		A 2" dia. PVC piezometer was installed to 25.5'
			7/14/29	17"/18"		SS-5a	PVC is flush-jointed, threaded couplings.
26							
	GRAY, SILTY FINE TO MED. SAND, SATURATED					SS-5b	BOTTOM 10' IS .010" machine slotted screen.
					26.5		
27	TOTAL DEPTH 26.5'						BOTTOM 12.5' IS gravel packed with a 2' thick bentonite pellet seal above.
28							Anulus is grouted from seal to surface.
29							T.O.P. IS 3.0' above ground surface.
30							WATER LEVEL IS 18.2' BELOW T.O.P. IMMEDIATELY AFTER PIEZOMETER INSTALLATION 1:45 pm 8-27-84.

Burns & McDonnell
Engineers-Architects-Consultants

Drilling Log

Project Name: WESTLAKE						Boring No. S-84	
Project No.: 84-075-4-002						Page 1 of 3	
Ground Elevation: 452.9	Location: NE section of Site; Fig I-2					Total Footage: 31.5'	
Drilling Type	Hole Size	Overburden Footage	Bedrock Footage	No. of Samples	No. Core Boxes	Depth To Water	Date Measured
SEE REMARKS	5"	31.5	0	4	0	SEE REMARKS	—

Drilling Co.	WABASH DRILLING CO.	Driller (s)	DOAL THORNTON
Drilling Rig.	ACKER MP-5, TRUCK	Type of Penetration Test	STANDARD
Date	8-24-84 To 8-24-84	Field Observer (s)	GLEN ERNSTMANN

Depth	Description	Class.	Blow Count	Recov.	Sample or Box No.	Remarks
1	LIGHT BROWN SAND, SILT AND GRAVEL, DAMP TO DRY (FILL)					5" DIA. SOLID AUGERS 0' TO 30'.
2						
3						
4	GREENISH GRAY TO DARK GRAY SILTY FINE SAND, VERY LOOSE, DAMP (FILL)					
5					5.0	
6			2/2/2	18"/18"	SS-1	
7					6.5	
8				0		
9						
10						
11						FEW THIN SATURATED SANDY ZONES BELOW 12'.
12	GREENISH GRAY SILTY FINE SAND, ZONES OF DARK GRAY CLAYEY SILT, MOIST TO SATURATED (FILL)					
13		A-22				

TECHNICAL SERVICES
GEOTECHNICAL DEPARTMENT

Drilling Log (continued)

Boring No. S-84

Project Name WESTLAKE — Page 2 of 3

Project No. 84-075-4-002 — Date 8-24-84

Depth	Description	Log or Class	Blow Count	Core Recov. & Loss	Box or Sample No.	Remarks
15				15.0		
	GREENISH GRAY SILTY FINE SAND, ZONES OF DARK GRAY CLAYEY			24" / 24"	ST-2	Q_p = N.A.
16	SILT, MOIST TO SATURATED (FILL)					
17				17.0		
18						
19						
						ALL MATERIAL SATURATED BELOW APPROX. 20'.
20						
21						
22	— — — — — — —					
	GRAY-BROWN FINE TO MEDIUM SAND, TRACE SILT, MEDIUM					
23	DENSE					
24						
25				25.0		
			9/9/12	18" / 18"	SS-3	
26						
				26.5		
27						APPROX. 6 FT. OF SLOUGH IN HOLE WHEN SAMPLE SS-4 WAS FIRST ATTEMPTED.
28	— — — — — — —					
	GRAY MEDIUM TO COARSE SAND, MEDIUM DENSITY, SATURATED					CASING WAS DRIVEN TO 30' THEN SLOUGH WASH-BORED OUT W/ TRICONE BIT.
29						
				30.0		NO BENTONITE WAS USED.
30		A-23	5/6/9	12" / 18"	SS-4	

TECHNICAL SERVICES
GEOTECHNICAL DEPARTMENT

Drilling Log (continued)

Boring No. S-84

Project Name WESTLAKE — Page 3 of 3

Project No. 84-075-4-002 — Date 8-24-84

Depth	Description	Log or Class	Blow Count	Core Recov. & Loss	Box or Sample No.	Remarks
	(SEE ABOVE)			31.5	SS-4	
32	TOTAL DEPTH 31.5'					
33						A 2" d.a. PVC piezometer was installed to 30.9'.
34						PVC is flush-jointed, threaded couplings. Bottom 10' is .010" machine slotted screen.
35						
36						Gravel pack 31.5' to 20.0' with a 1.8' thick bentonite pellet seal above.
37						
38						Anulas is grouted from seal to ground surface.
39						T.O.P. is 4.0 above ground surface.
40						
						WATER LEVEL IMMEDIATELY AFTER PIEZOMETER INSTALLATION IS 23.7' BELOW T.O.P. 12:20pm 8-24-84.
						WATER LEVEL IS 23.91' BELOW T.O.P. 7:15am 8-27-84

A-24

WATER
MANAGEMENT
CONSULTANTS

5988 MID RIVERS MALL DRIVE
ST. CHARLES, MISSOURI 63304, USA

TELEPHONE (314) 939 4926
TELEFAX (314) 939 9631

Mr. Matt Kingsley
Bridgeton Landfill, LLC.
13570 St. Charles Rock Road
Bridgeton, Missouri 63044

April 21, 1998

Dear Mr. Kingsley:

Groundwater Monitoring Well Construction Information
Bridgeton Landfill, April 1998

Pursuant to our conversation, enclosed are the tabulated will construction details. This information has been compiled from existing reports submitted to Allied from Golder Associates and McLaren Hart.

Please let me know if you have any questions or comments regarding this information.

Sincerely,

WATER MANAGEMENT CONSULTANTS, INC.

John D Regan
Project Hydrogeologist

Ward Herst, CPHG, CEM
Operations Manager

Enclosures

W.M.C 1998

Well #	State ID	Northing	Easting	Top of Casing Elevation	Ground Surface Elevation	Bottom of Well Elevation	Top of Screen Elevation
PZ-100-KS	1209	1068842	517212	485.64	483.8	99.63	109.76
PZ-100-SD	1208	1068852	517195	485.82	484.4	239.42	249.55
PZ-100-SS	1207	1068868	517175	485.84	484.4	390.42	410.39
PZ-101-SS	1210	1068473	516623	476.68	474.9	335.28	345.41
PZ-102-SS	N/A	1068088	516888	483.85	482.1	391.22	402.35
PZ-102R-SS	1211	1068132	516859	485.62	484.5	394.54	404.67
PZ-103-SS	1212	1067660	516724	480.17	477.8	332.95	343.08
PZ-104-KS	1215	1066993	516821	484.04	482.3	74.82	84.95
PZ-104-SD	1214	1067013	516834	483.69	482.1	236.77	246.90
PZ-104-SS	1213	1067028	516847	483.63	481.6	336.93	347.06
PZ-105-SS	1216	1066421	516230	483.61	481.2	332.59	342.72
PZ-106-KS	1219	1066704	515432	464.26	461.8	87.87	98.02
PZ-106-SD	1218	1066715	515416	463.42	461.5	260.52	270.66
PZ-106-SS	1217	1066726	515400	462.70	461.0	295.52	305.65
PZ-107-SS	1220	1067163	515255	464.66	462.6	359.90	370.03
PZ-108-SS	1221	1067678	515973	456.20	454.1	310.44	320.58
PZ-109-SS	1222	1068012	516144	458.50	456.8	320.94	331.07
PZ-110-SS	1223	1068336	515920	458.91	456.8	345.54	355.94
PZ-111-KS	1225	1068621	515850	460.87	459.2	91.88	102.03
PZ-111-SD	1224	1068638	515835	461.55	459.2	249.72	259.82
PZ-112-AS	1226	1069002	515674	459.83	457.9	423.20	428.33
PZ-113-SS	1229	1069242	515777	461.77	460.0	301.26	311.39
PZ-113-AD	1228	1069233	515760	461.46	459.9	351.13	361.26
PZ-113-AS	1227	1069224	515748	461.42	459.9	420.89	431.02
PZ-114-AS	1230	1069419	516768	451.31	449.8	419.75	429.88
PZ-115-SS	1231	1069409	516755	452.30	450.6	365.80	375.93
PZ-116-SS	1232	1066410	515844	484.87	483.1	321.74	331.67
PZ-200-SS	N/A	1068496	516972	485.63	483.6	385.64	473.99
PZ-201-SS	N/A	1067820	516862	480.33	478.0	389.37	468.26
PZ-201A-SS	1233	1067832	516746	480.16	478.4	388.22	398.35
PZ-202-SS	1234	1067320	517102	481.17	479.0	389.58	438.81
PZ-203-SS	1235	1066662	516608	486.59	484.2	374.48	384.58
PZ-204-SS	N/A	1066427	515533	469.63	467.0	377.35	456.08
PZ-204A-SS	1236	1066430	515556	468.16	466.7	377.23	387.16
PZ-205-SS	1238	1067484	515478	461.78	459.5	360.83	370.96
PZ-205-AS	1237	1067464	515463	460.99	459.3	410.65	420.78
PZ-206-SS	1239	1068031	515809	460.20	458.4	333.38	343.38
PZ-207-AS	1240	1069645	516038	463.57	461.9	421.85	426.98
PZ-208-SS	1241	1069219	517169	474.25	472.5	373.70	383.83
PZ-1201-SS	1201	1067302	516904	482.42	480.4	332.78	342.71
PZ-302-AI	N/A	1067210	514720	451.15	450.0	407.30	417.40
PZ-302-AS	N/A	1067198	514737	451.42	449.5	427.20	437.30
PZ-303-AS	N/A	1067763	514426	453.18	450.8	424.70	434.80

WMC 1998

Well #	State ID	Northing	Easting	Top of Casing Elevation	Ground Surface Elevation	Bottom of Well Elevation	Top of Screen Elevation
PZ-304-AS	N/A	1068146	514435	453.71	451.4	424.20	434.30
PZ-304-AI	N/A	1068126	514435	454.02	451.6	402.50	412.60
PZ-305-AI	N/A	1068065	515634	459.28	457.6	394.30	404.40
LR-100	N/A	1067294	514894	469.12	467.2	442.40	447.50
LR-102	N/A	1068937	514788	513.52	512.0	452.00	457.10
LR-103	N/A	1068527	515217	461.28	460.1	421.40	431.50
LR-104	N/A	1068079	515623	459.73	458.0	419.50	429.60
LR-105	N/A	1067710	514525	486.79	484.2	447.90	458.00
MW-F-1-S	N/A	1068595	515890	No data	No data	No data	No data
MW-F-1-D	N/A	1068600	515805	No data	No data	No data	No data
MW-1204	1204	1066421	515823	485.63	483.3	259.80	269.80
S-1	N/A	1069686	514205	446.51	443.3	421.30	441.30
S-5	N/A	1069156	515901	468.65	465.7	425.70	435.70
S-8	N/A	1071044	514724	444.03	441.6	414.60	434.60
S-10	N/A	1069828	514931	480.28	477.5	425.50	445.50
S-51	N/A	1066140	514200	447.72	446.3	420.50	423.50
S-53	N/A	1066880	514500	449.00	444.8	421.10	424.10
S-61	N/A	1070160	514580	450.17	445.6	424.10	No data
S-75	N/A	1067270	514730	459.90	458.8	432.80	435.80
S-82	N/A	1069312	514273	450.70	447.7	422.20	432.20
S-84	N/A	1069685	516455	455.30	452.9	422.00	432.00
S-88	N/A	1068390	515270	462.20	460.0	418.50	430.00
I-2	N/A	1069698	514212	446.41	443.2	396.20	406.20
I-4	N/A	1069148	515890	468.57	466.0	390.00	400.00
I-7	N/A	1070743	514300	446.97	444.5	397.50	407.50
I-9	N/A	1069329	514269	450.99	448.5	395.50	405.50
I-11	N/A	1069819	514925	480.27	477.6	386.60	396.60
I-51	N/A	DAMAGED	UNUSABLE				
I-53	N/A	DAMAGED	UNUSABLE				
I-62	N/A	1070960	514675	446.08	444.1	400.10	410.10
I-65	N/A	1070940	515435	441.80	438.5	402.50	412.50
I-66	N/A	1070520	515935	441.80	437.7	400.80	410.80
I-67	N/A	1070090	516260	439.08	436.5	401.10	411.10
I-68	N/A	1069570	516690	448.32	440.9	409.70	419.70
I-73	N/A	1067680	515575	465.40	462.7	412.70	415.70
D-3	N/A	1069136	515872	470.32	467.2	361.20	371.20
D-6	N/A	1070194	514550	447.60	444.4	338.40	348.40
D-12	N/A	1069836	514936	479.91	477.4	333.40	343.40
D-13	N/A	1070486	515602	471.10	468.4	335.40	345.40
D-14	N/A	1068947	516523	487.77	484.5	425.50	430.50
D-81	N/A	1067338	514464	450.80	447.8	387.80	402.80
D-83	N/A	1070940	514660	447.70	444.4	347.40	367.40
D-85	N/A	1069680	516445	455.65	453.1	371.10	391.10
D-87	N/A	1069210	515400	462.55	460.0	349.00	369.00

WMC 1998

Well #	State ID	Northing	Easting	Top of Casing Elevation	Ground Surface Elevation	Bottom of Well Elevation	Top of Screen Elevation
D-93	N/A	1069318	514270	450.70	448.3	336.30	356.30
MW-101	N/A	No data	No data	447.66	445.36	420.36	430.36
MW-102	N/A	No data	No data	448.98	446.68	422.18	432.18
MW-103	N/A	No data	No data	441.16	438.46	422.76	432.76
MW-104	N/A	No data	No data	441.88	438.98	421.98	431.98
MW-107	N/A	No data	No data	449.25	No data	No data	No data
MW-F3	N/A	1070380	515880	No data	No data	No data	No data
MW-F2	N/A	1067685	514417	450.10	447.90	422.60	437.60

1997

Bridgeton

Well Summary - West Lake Landfill

Installation Date	Original Designation	Current Designation	Current Status	Coordinates		Ground Surface	Top of Casing	Depth	Screen Interval	Boring Log	Well Construction Info	Drilling Company	Consultant
				North	East								
10/83	N-1	I-50		5,200	3,840	449.0	453.48	40.6	418.4-408.4	No	No	?	Reitz & Jens
81	HL-3	S-51	Missing	6,140	4,200	446.3	447.72	25.8	423.5-420.5	No	No	?	Reitz & Jens
81	HL-2	S-52		6,470	4,200	444.7	447.08	25.2	422.5-419.5	No	No	?	Reitz & Jens
81	HL-1	S-53		6,880	4,500	444.8	449.00	23.7	424.1-421.1	No	No	?	Reitz & Jens
?	36	S-54	Abandoned 10/92	1,067,606	514,468	470.0	N/A	40.4	N/A	No	No	?	?
6/78	35	I-55	Abandoned 10/92	1,067,787	514,475	471.9	N/A	60.0	N/A	Yes	Yes	Wabash Drilling	None
6/78	34	I-56	Abandoned 10/92	1,068,057	514,487	475.1	N/A	61.1	N/A	Yes	Yes	Wabash Drilling	None
6/78	40	I-58	Abandoned 10/92	1,068,874	514,458	477.5	N/A	60.0	N/A	Yes	Yes	Wabash Drilling	None
10/83	N-2	I-59	Abandoned 10/92	1,069,332	514,289	444.9	N/A	43.5	N/A	No	No	?	Reitz & Jens
7/81	S-2	S-60		9,750	4,310	443.1	446.93	21.0	?-422.1	No	No	?	?
7/81	S-1	S-61		70,160	4,580	445.6	450.17	21.5	?-424.1	No	No	?	?
10/83	N-3	I-62		70,960	4,675	444.1	446.08	44.0	410.1-400.1	No	No	?	Reitz & Jens
10/83	N-4	I-65		70,940	5,435	438.5	441.80	36.0	412.5-402.5	No	No	?	Reitz & Jens
10/83	N-5	I-66		70,520	5,935	437.7	441.80	36.9	410.8-400.8	No	No	?	Reitz & Jens
10/83	N-6	I-67		70,090	6,260	436.5	439.08	35.4	411.1-401.1	No	No	?	Reitz & Jens
10/83	N-7	I-68		9,570	6,690	440.9	448.32	31.2	419.7-409.7	No	No	?	Reitz & Jens
6/78	39	I-72		7,890	5,345	462.7	465.4	50.0	415.7-412.7	Yes	Yes	Wabash Drilling	None
6/78	38	I-73		7,680	5,575	458.9	462.6	50.0	415.7-412.7	Yes	Yes	Wabash Drilling	None
?	37	S-75		7,270	4,730	458.8	459.9	26.0	435.8-432.8	No	No	?	?
6/78	37A	S-76	Abandoned 10/92	1,067,406	514,569	474.4	N/A	50.0	N/A	Yes	Yes	Wabash Drilling	None

Continued...

1997

Installation Date	Original Designation	Current Designation	Current Status	Coordinates		Ground Surface	Top of Casing	Depth	Screen Interval	Boring Log	Well Construction Info	Drilling Company	Consultant
				North	East								
6/78	41	41	Abandoned 10/92	1,069,287	514,377	?	N/A	?	N/A	Yes	Yes	Wabash Drilling	None
8/84	S-80	S-80		5,190	3,870	448.4	453.38	20.0	438.4-428.4	Yes	Yes	Wabash Drilling	Burns & McDonnell
8/84	D-81	D-81		1,067,338	514,464	447.8	450.91	60.0	402.8-387.8	Yes	Yes	Wabash Drilling	Burns & McDonnell
8/84	S-82	S-82		1,069,312	514,273	447.7	450.66	25.5	432.2-422.2	Yes	Yes	Wabash Drilling	Burns & McDonnell
8/84	D-83	D-83		70,940	4,660	444.4	447.62	97.0	367.4-347.4	Yes	Yes	Wabash Drilling	Burns & McDonnell
8/84	S-84	S-84		9,685	6,455	452.9	456.92	30.9	432.0-422.0	Yes	Yes	Wabash Drilling	Burns & McDonnell
8/84	D-85	D-85		9,680	6,445	453.1	457.15	82.0	391.1-371.1	Yes	Yes	Wabash Drilling	Burns & McDonnell
8/84	D-87	D-87		9,210	5,400	460.0	463.04	111	369.0-349.0	Yes	Yes	Wabash Drilling	Burns & McDonnell
8/84	S-88	S-88		8,390	5,270	460.0	462.73	40	430.0-420.0	Yes	Yes	Wabash Drilling	Burns & McDonnell
8/84	D-89	D-89		6,970	5,100	454.1	457.10	49	420.1-405.1	Yes	Yes	Wabash Drilling	Burns & McDonnell
8/85	D-90	D-90		6,160	4,300	446.0	450.60	47	409-399	Yes	Yes	Wabash Drilling	Burns & McDonnell
8/85	D-91	D-91	Missing	5,220	3,770	448.0	453.37	45	413-403	Yes	Yes	Wabash Drilling	Burns & McDonnell
4/85	D-92	D-92	Missing	9,760	5,090	475.5	475.37	143	352.5-332.5	Yes	Yes	Wabash Drilling	Burns & McDonnell
4/85	D-93	D-93		1,069,318	514,270	448.0	449.95	112	356-336	Yes	Yes	Wabash Drilling	Burns & McDonnell
4/85	D-94	D-94		70,645	5,820	438.5	442.68	106	352.5-332.5	Yes	Yes	Wabash Drilling	Burns & McDonnell
4/85	D-95	D-95	Missing	?	?	450.0	453.09	101	369-349	Yes	Yes	Wabash Drilling	Burns & McDonnell
3/85	4/3	1201		1,067,303	516,903	480.6	482.84	250	427.6-230.6	Yes	Yes	Drilling Service Co.	Burns & McDonnell
3/85	14/3	1202	Abandoned 3/91	1,067,343	516,875	480.5	N/A	250	N/A	Yes	Yes	Drilling Service Co.	Burns & McDonnell
7/85	17/4	1203	Abandoned 3/91	1,067,189	516,955	481.1	N/A	250	N/A	Yes	Yes	Drilling Service Co.	Burns & McDonnell
4/91	1204	1204		1,066,421	515,823	483.3	485.63	223.5	269.8-259.8	Yes	Yes	Mathes & Associates	Foth & Van Dyke
4/91	1205	1205		1,067,387	515,621	384.5	386.77	123	271.5-261.5	Yes	Yes	Mathes & Associates	Foth & Van Dyke
3/91	1206	1206		1,067,396	515,624	386.2	388.48	73	323.2-313.2	Yes	Yes	Mathes & Associates	Foth & Van Dyke

1992

Installation Date	Original Designation	Current Designation	Current Status	Coordinates		Ground Surface	Top of Casing	Depth	Screen Interval	Boring Log	Well Construction Info	Drilling Company	Consultant
				North	East								
8/90	MW-F1S	MW-F1S		8,595	5,890	?	?	32.5	10	Yes	Yes	Brotcke Engineering	Foth & Van Dyke
8/90	MW-F1D	MW-F1D		8,600	5,805	?	?	79.1	5	Yes	Yes	Brotcke Engineering	Foth & Van Dyke
8/90	MW-F2	MW-F2		1,067,685	514,417	447.9	450.10	25.3	437.6-422.6	Yes	Yes	Brotcke Engineering	Foth & Van Dyke
8/90	MW-F3	MW-F3		70,380	5,880	?	?	42.8	10	Yes	Yes	Brotcke Engineering	Foth & Van Dyke

? denotes unknown
N/A denotes not applicable

1967

LEACHATE COLLECTION SUMPS

Aquaterra Drilling Log

HOLE NO. LCS-1A | SHEET 1 OF 4 SHEETS

PROJECT NAME: LCS-1A	DRILLING SUBCONTRACTOR: Layne Western
PROJECT NUMBER:	NAME OF DRILLER(S): Craig
LOCATION: Bridgeton, Missouri	MANUFACTURER'S DESIGNATION OF DRILL: T685W Rotodrill
HOLE LOCATION: near LCS-1	SIZES AND TYPES OF DRILLING AND SAMPLING EQUIPMENT: 14-inch augers; 12¼-inch drill bit
SURFACE ELEVATION:	
OVERBURDEN THICKNESS: –	DRILLING START DATE: 9/10/04 — DRILLING END DATE: 9/16/04
DEPTH DRILLED INTO ROCK: –	DEPTH GROUNDWATER ENCOUNTERED: Leachate approx. 160-feet
TOTAL DEPTH OF HOLE: 272.5 ft	DEPTH TO WATER AND ELAPSED TIME AFTER DRILLING COMPLETED: –

GEOTECHNICAL SAMPLES (TOTAL)	DISTURBED	UNDISTURBED	TOTAL NUMBER OF CORE BOXES
–	–	–	–

SAMPLES FOR CHEMICAL ANALYSIS (TOTAL)	(SPECIFY)	(SPECIFY)	(SPECIFY)	(SPECIFY)	(SPECIFY)	TOTAL CORE RECOVERY
–	–	–	–	–	–	–

DISPOSITION OF HOLE	BACKFILLED	MONITORING WELL	OTHER (SPEICFY)	SIGNATURE OF INSPECTOR
	–	–	–	Nathan Hegg

DEPTH	DESCRIPTION OF MATERIALS	FIELD SCREENING RESULTS	GEOTECH SAMPLE RESULTS	ANALYTICAL SAMPLE NO.	TIME	REMARKS
0	Soil Cover				900	9/10/04
	Trash					
10					1100	
	Trash					
20					1300	End of drilling on 9/10/04 @ depth of 20-ft
	Trash				1100	Resume drilling on 9/13/04
30						
40						
	Trash					
50					1315	
60						

AQUATERRA ENVIRONMENTAL SOLUTIONS, INC.

PROJECT NAME: Bridgeton Landfill, LLC

HOLE NO.: LCS-1A

Aquaterra Drilling Log

HOLE NO. LCS-1A | SHEET 2 OF SHEETS 4

PROJECT NAME: LCS-1A

INSPECTOR: Nathan Higgerson

DEPTH	DESCRIPTION OF MATERIALS	FIELD SCREENING RESULTS	GEOTECH SAMPLE RESULTS	ANALYTICAL SAMPLE NO.	TIME	REMARKS
60	Trash					9/13/04
					1530	
70						
80	Trash				1630	Stopped drilling at approximate depth of 85ft
					EOH	Resume drilling on 9/14/04
90	Trash					
100						
110						
	Trash				1200	
120						
130						
140	Trash				1330	
150						

AQUATERRA ENVIRONMENTAL SOLUTIONS, INC.

PROJECT NAME: Bridgeton Landfill, LLC

HOLE NO.: LCS-1A

Aquaterra Drilling Log

HOLE NO. LCS-1A | SHEET 4 OF 4 SHEETS

PROJECT NAME: LCS-1A

INSPECTOR: Nathan Higgerson

DEPTH	DESCRIPTION OF MATERIALS	FIELD SCREENING RESULTS	GEOTECH SAMPLE RESULTS	ANALYTICAL SAMPLE NO.	TIME	REMARKS
250	Trash					
260						
270	Trash — — —	—	—	—	1300 1200	Drilling stopped on 9/15/04 at depth of 270 ft Resume drilling on 9/16/04
	End of boring at 272.5 ft				1300	Drilling stopped at a final depth of 272.5 ft Shale chips were found in the cuttings
280					1300	
290						
300						

AQUATERRA ENVIRONMENTAL SOLUTIONS, INC.

PROJECT NAME

HOLE NO. LCS-1A

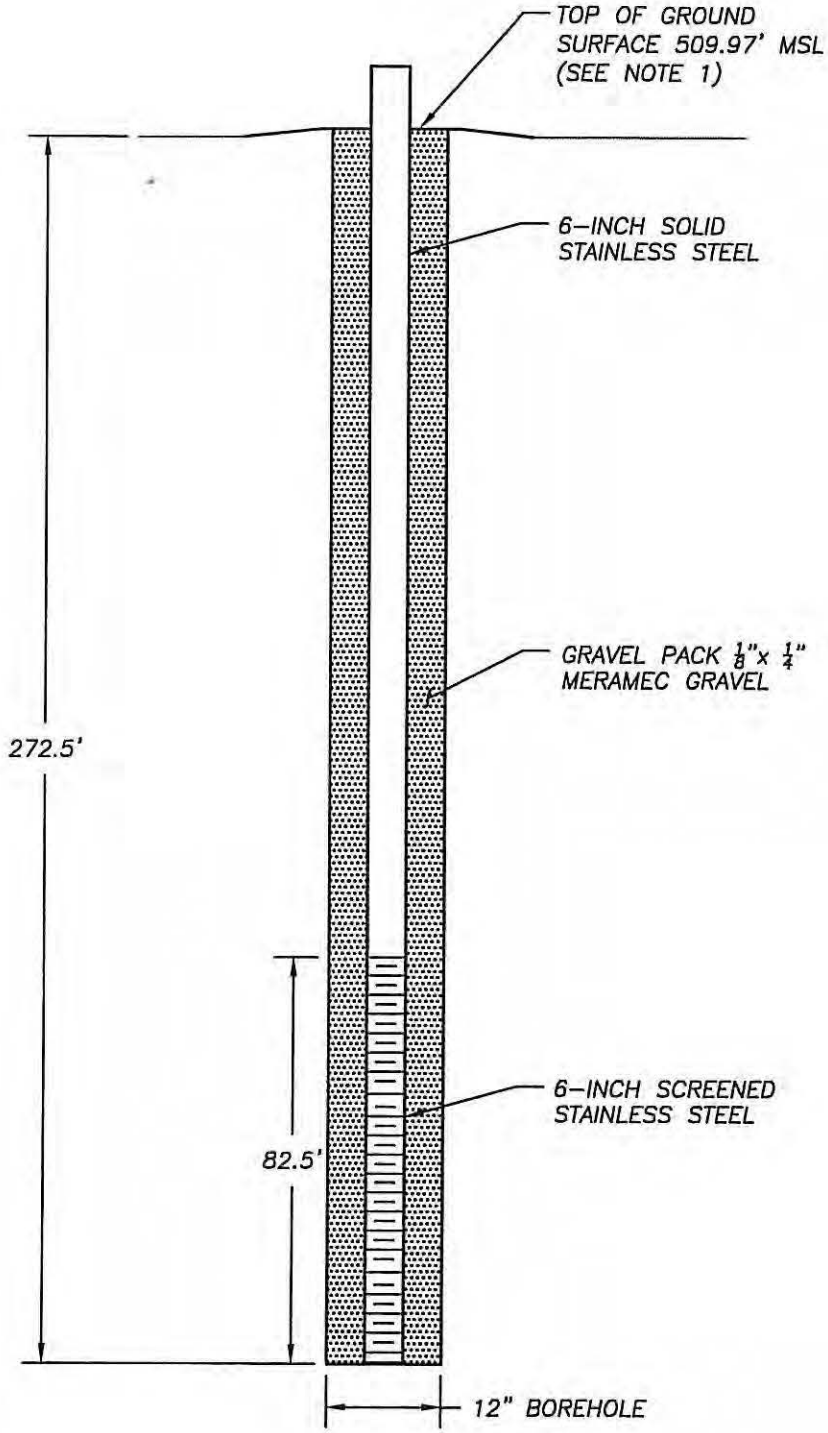

NOTES:

1. SURVEY DATA BASED ON SEPTEMBER 30, 2004 TOPOGRAPHICAL SURVEY DATA BY SHERBUT–CARSON & ASSOCIATES, P.C.
2. THE WELL PIPE IS SCREENED FROM THE BOTTOM TO ELEVATION 319.97.

AQUATERRA
ENVIRONMENTAL SOLUTIONS, INC.
6980 West 153rd Street
Overland Park, Kansas 66223

DETAIL
LEACHATE COLLECTION SUMP 1A
BRIDGETON LANDFILL, LLC
BRIDGETON, MISSOURI

Project Mgr. MSB	Drawn By NLH	Designed By NLH	Project No. 1429.10
NOT TO SCALE	Date 11/15/04	File Name LCS–1A DETAIL.dwg	Figure No. 1

Aquaterra Drilling Log

HOLE NO. 1B | SHEET 1 OF SHEETS

PROJECT NAME: LCS 1B CQA	DRILLING SUBCONTRACTOR: Layne western
PROJECT NUMBER: 1566.10	NAME OF DRILLER(S): Craig
LOCATION: Bridgeton Landfill	MANUFACTURER'S DESIGNATION OF DRILL:
HOLE LOCATION: 100' NE LCS 1A	SIZES AND TYPES OF DRILLING AND SAMPLING EQUIPMENT: 20" Auger - 20 feet; Air Rotary 20" to competion 279'
SURFACE ELEVATION:	
OVERBURDEN THICKNESS: —	DRILLING START DATE: 3/25/05 — DRILLING END DATE: 3/31/05
DEPTH DRILLED INTO ROCK: —	DEPTH ~~GROUNDWATER~~ Leachate ENCOUNTERED: 107 ft
TOTAL DEPTH OF HOLE: 279 ft	DEPTH TO WATER AND ELAPSED TIME AFTER DRILLING COMPLETED:

GEOTECHNICAL SAMPLES (TOTAL)	DISTURBED	UNDISTURBED	TOTAL NUMBER OF CORE BOXES
—	—	—	—

SAMPLES FOR CHEMICAL ANALYSIS (TOTAL)	(SPECIFY)	(SPECIFY)	(SPECIFY)	(SPECIFY)	(SPECIFY)	TOTAL CORE RECOVERY
—	—	—	—	—	—	—

DISPOSITION OF HOLE	BACKFILLED	MONITORING WELL	OTHER (SPEICFY)	SIGNATURE OF INSPECTOR
—	—	—	—	

DEPTH	DESCRIPTION OF MATERIALS	FIELD SCREENING RESULTS	GEOTECH SAMPLE RESULTS	ANALYTICAL SAMPLE NO.	TIME	REMARKS
2'	Soil 2				3/24/05 900	Soil 1 to 1.5 feet
					3/25/05 1200	1st Soil to waste
	Waste 31'					
					3/25 1420	
	waste 50'					
					3/28 1145	
	82' waste					
					3/29 1330	No Leachate encountered on Initial drilling. Hole Backfilled overnight to a Depth of 107'
	107' waste ▽					

AQUATERRA ENVIRONMENTAL SOLUTIONS, INC.

PROJECT NAME: LCS 1B CQA | HOLE NO.: LCS 1B

Aquaterra Drilling Log

HOLE NO. LCS 1B | SHEET OF SHEETS

PROJECT NAME: LCS 1B CQA | INSPECTOR: Jerry Sordan

DEPTH	DESCRIPTION OF MATERIALS	FIELD SCREENING RESULTS	GEOTECH SAMPLE RESULTS	ANALYTICAL SAMPLE NO.	TIME	REMARKS
	132' waste				1700 3/28	Final Depth for the day.
	157' waste				3/29/ 1010	
	182' waste				3/29 1220	
	207' waste				3/29 1430	
	232- waste				3/30 920	
	257 Waste (Hard)				3/31 1155	Drilled Last 25 feet very slow Drilling through a Solid substance and only progressed a few inches an hour.
	279' Shale chips				3/31	

AQUATERRA ENVIRONMENTAL SOLUTIONS, INC.

PROJECT NAME: LCS 1B CQA | HOLE NO.: LCS 1B

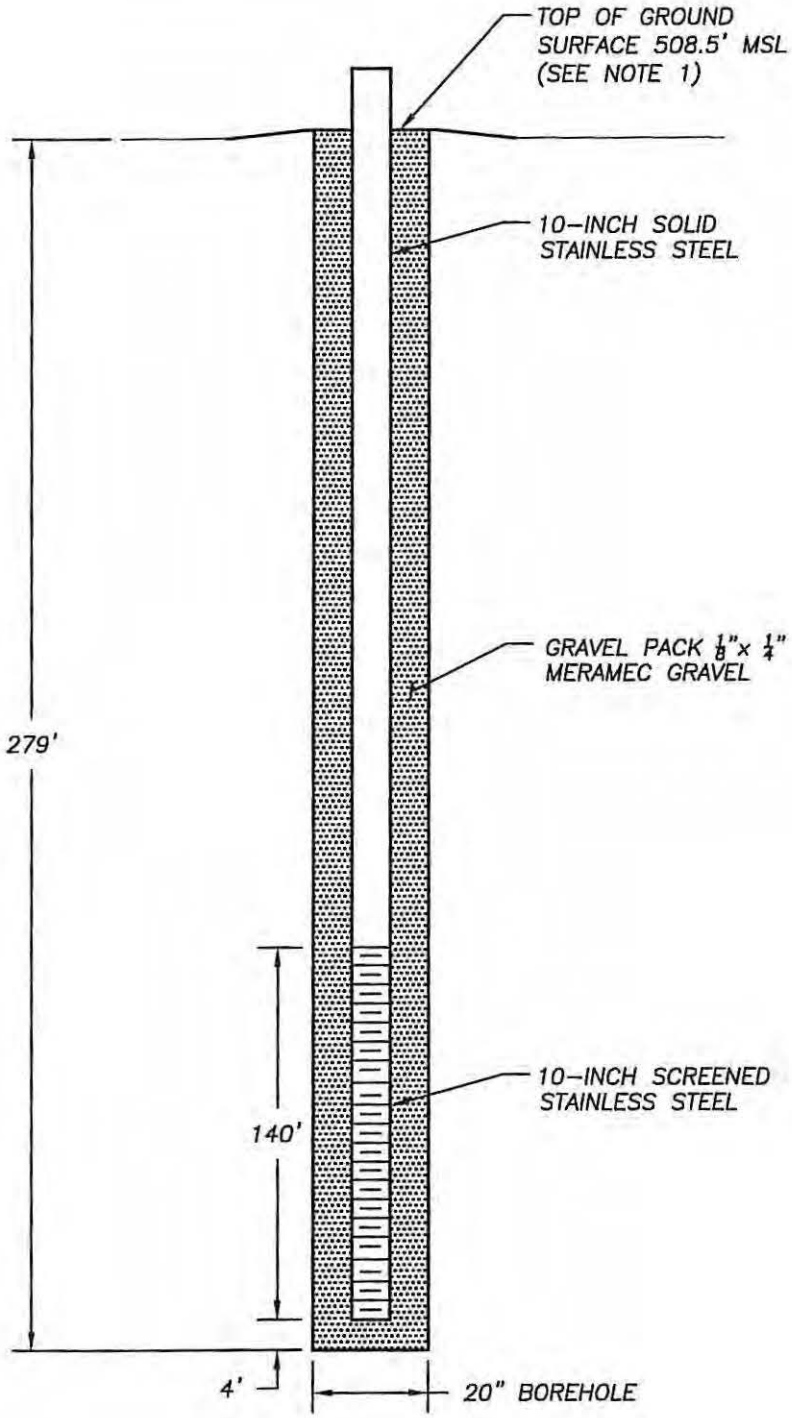

NOTES:

1. SURVEY DATA BASED ON APRIL 19, 2005 TOPOGRAPHICAL SURVEY DATA BY SHERBUT-CARSON & ASSOCIATES, P.C.
2. THE WELL PIPE IS SCREENED FROM THE BOTTOM TO ELEVATION 373.5.

AQUATERRA
ENVIRONMENTAL SOLUTIONS, INC.
141 Market Place Drive
Fairview Heights, Illinois 62208

DETAIL
LEACHATE COLLECTION SUMP 1B
BRIDGETON LANDFILL, LLC
BRIDGETON, MISSOURI

Project Mgr. MSB	Drawn By AJF	Designed By NLH	Project No. 1566.10
NOT TO SCALE	Date 4/20/05	File Name LCS-1B DETAIL.dwg	Figure No. 1

Aquaterra Drilling Log

HOLE NO. LCS-1C | SHEET 1 OF 4 SHEETS

PROJECT NAME: LCS-1C DRILLING CQA	DRILLING SUBCONTRACTOR: LAYNE
PROJECT NUMBER: 2016.10	NAME OF DRILLER(S): RUSTY BOWLES
LOCATION: BRIDGETON, MISSOURI	MANUFACTURER'S DESIGNATION OF DRILL: SCHRAMM T685W ROTADRILL
HOLE LOCATION: 25' NORTH OF LCS-1B	SIZES AND TYPES OF DRILLING AND SAMPLING EQUIPMENT: 18¾" DRILL BIT W/STABILIZER; DRILLER/HELPER - CHARLES HALBERT; 1 RIG TENDER TRUCK - MODEL RTB-2100; 1 JOHN DEERE 310D BACKHOE
SURFACE ELEVATION: 508 ±	
OVERBURDEN THICKNESS: 4'	DRILLING START DATE: 10-18-06; DRILLING END DATE: 11/1/06
DEPTH DRILLED INTO ROCK: —	DEPTH GROUNDWATER ENCOUNTERED: 175'
TOTAL DEPTH OF HOLE: 274'	DEPTH TO WATER AND ELAPSED TIME AFTER DRILLING COMPLETED: —

GEOTECHNICAL SAMPLES (TOTAL)	DISTURBED	UNDISTURBED	TOTAL NUMBER OF CORE BOXES
—	—	—	—

SAMPLES FOR CHEMICAL ANALYSIS (TOTAL)	(SPECIFY)	(SPECIFY)	(SPECIFY)	(SPECIFY)	(SPECIFY)	TOTAL CORE RECOVERY
—	—	—	—	—	—	—

DISPOSITION OF HOLE	BACKFILLED	MONITORING WELL	OTHER (SPEICFY)	SIGNATURE OF INSPECTOR
SOLID	GRAVEL	—	LEACHATE	TERRY L. MUELLER MORGAN HUFF

DEPTH	DESCRIPTION OF MATERIALS	FIELD SCREENING RESULTS	GEOTECH SAMPLE RESULTS	ANALYTICAL SAMPLE NO.	TIME	REMARKS
0	0+00				1300	
	CL					
	0+04				1305 10-18-06	
10	WASTE					
	0+18				1500 10-18-06 1100 10-19-06	
20	WASTE		GRAVEL; 10" SOLID CASING (STAINLESS); GRAVEL			
40	0+45				1530 10-19-06 0700 10-20-06	
50	WASTE					
60						

AQUATERRA ENVIRONMENTAL SOLUTIONS, INC.	PROJECT NAME: LCS-1C DRILLING CQA	HOLE NO.: LCS-1C

Aquaterra Drilling Log

HOLE NO. LCS-1C | SHEET 2 OF SHEETS 4

PROJECT NAME: LCS-1C Drilling CQA

INSPECTOR: Terry L. Mueller

DEPTH	DESCRIPTION OF MATERIALS	FIELD SCREENING RESULTS	GEOTECH SAMPLE RESULTS	ANALYTICAL SAMPLE NO.	TIME	REMARKS
60						
70	WASTE					
	0+75				1200 10-20-06 0700 10-23-06	
80						
90						
100	WASTE			GRAVEL 10" SOLID CASING (STEEL, NEW) GRAVEL		
110						
120						
	1+25				1530 10-13-06 0700 10-24-06	
130						
140	WASTE					
150						

Aquaterra Drilling Log

HOLE NO. LCS-1C | SHEET 3 OF SHEETS 4

PROJECT NAME: LCS-1C Drilling CQA

INSPECTOR: Terry L. Mueller

DEPTH	DESCRIPTION OF MATERIALS	FIELD SCREENING RESULTS	GEOTECH SAMPLE RESULTS	ANALYTICAL SAMPLE NO.	TIME	REMARKS
150						
160			10" Solid Casing	1764		
170	WASTE					
	WATER ▽					
180						
190						
200	2400		Gravel		1530 10-24-06 0700 10-25-06	
210			10" Slotted Casing (Stainless)			
220	WASTE					
230	2431		Gravel		1530 10-25-06 0700 10/30/06	
	ROCK BOULDER					
240						

AQUATERRA ENVIRONMENTAL SOLUTIONS, INC.

PROJECT NAME: LCS-1C Drilling CQA

HOLE NO.: LCS-1C

Aquaterra Drilling Log

HOLE NO. LCS-1C | SHEET 4 OF SHEETS 4

PROJECT NAME: LCS-1C DRILLING CQA

INSPECTOR: TERRY L. MUELLER

DEPTH	DESCRIPTION OF MATERIALS	FIELD SCREENING RESULTS	GEOTECH SAMPLE RESULTS	ANALYTICAL SAMPLE NO.	TIME	REMARKS
24.5	ROCK BOULDERS				930 10-30-06	SLOW DRILLING
	2+45				1530 0700 10-30-06 10-31-06	
25						
	ROCK DEBRIS		GRAVEL / 10" SLOTTED CASING (STAINLESS) / GRAVEL			
26				2+64		
	2+68		ROCK DEBRIS		1530 0730 10-31-06 11-1-06	No Asbestos Containing Material Observed.
27	ROCK DEBRIS 2+74				1100 11-1-06	
28						
29						
30						

AQUATERRA ENVIRONMENTAL SOLUTIONS, INC.

PROJECT NAME: LCS-1C DRILLING CQA

HOLE NO.: LCS-1C

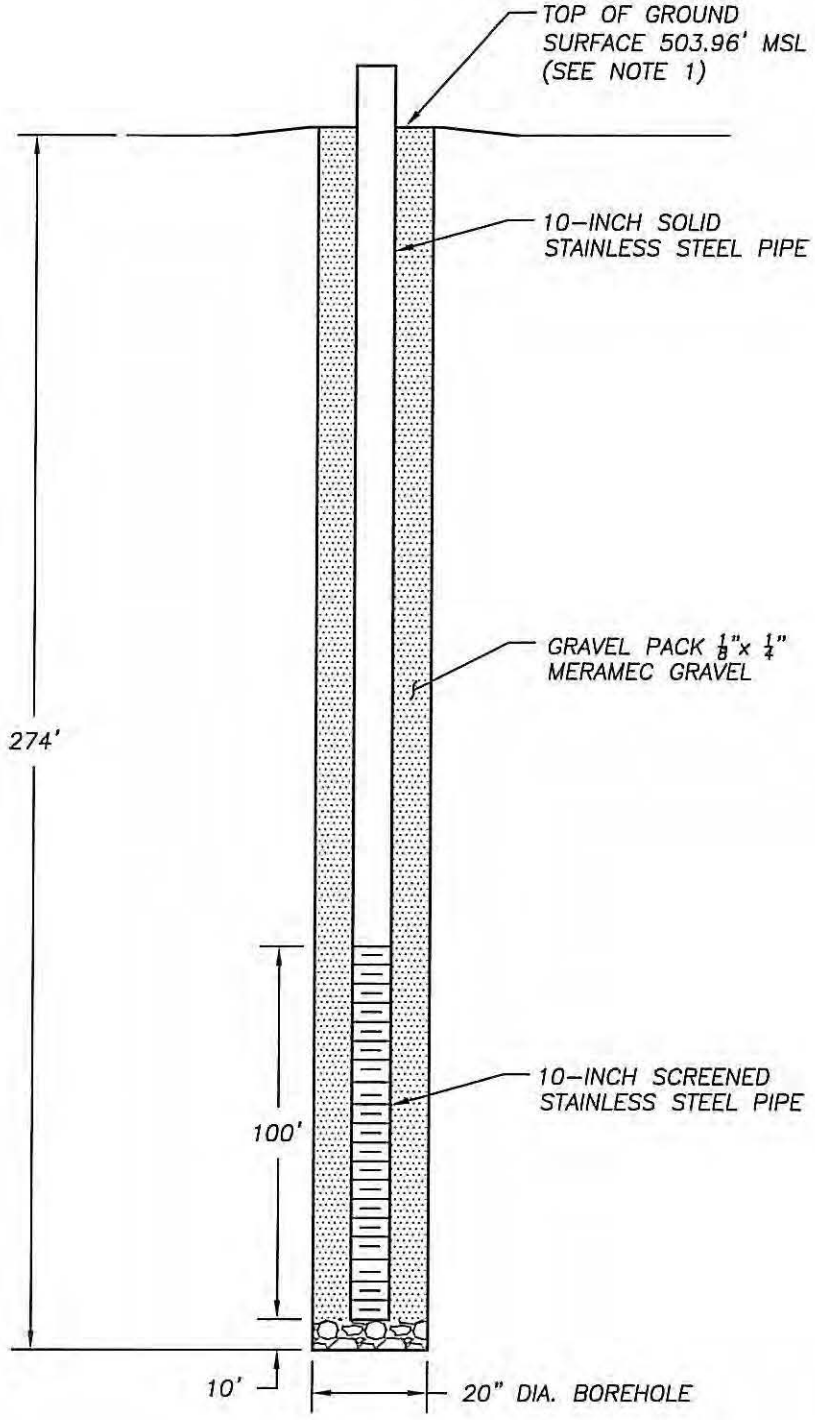

NOTES:

1. SURVEY DATA BASED ON OCTOBER 25, 2006 TOPOGRAPHICAL SURVEY DATA BY SHERBUT-CARSON & ASSOCIATES, P.C.

AQUATERRA
ENVIRONMENTAL SOLUTIONS, INC.
141 Market Place Drive
Fairview Heights, Illinois 62208

AS-BUILT DETAIL
LEACHATE COLLECTION SUMP 1C
BRIDGETON LANDFILL, LLC
BRIDGETON, MISSOURI

Project Mgr. MSB	Drawn By NLH	Designed By NLH	Project No. 2016.10
NOT TO SCALE	Date 1/8/07	File Name LCS-1C DETAIL.dwg	Figure No. 1

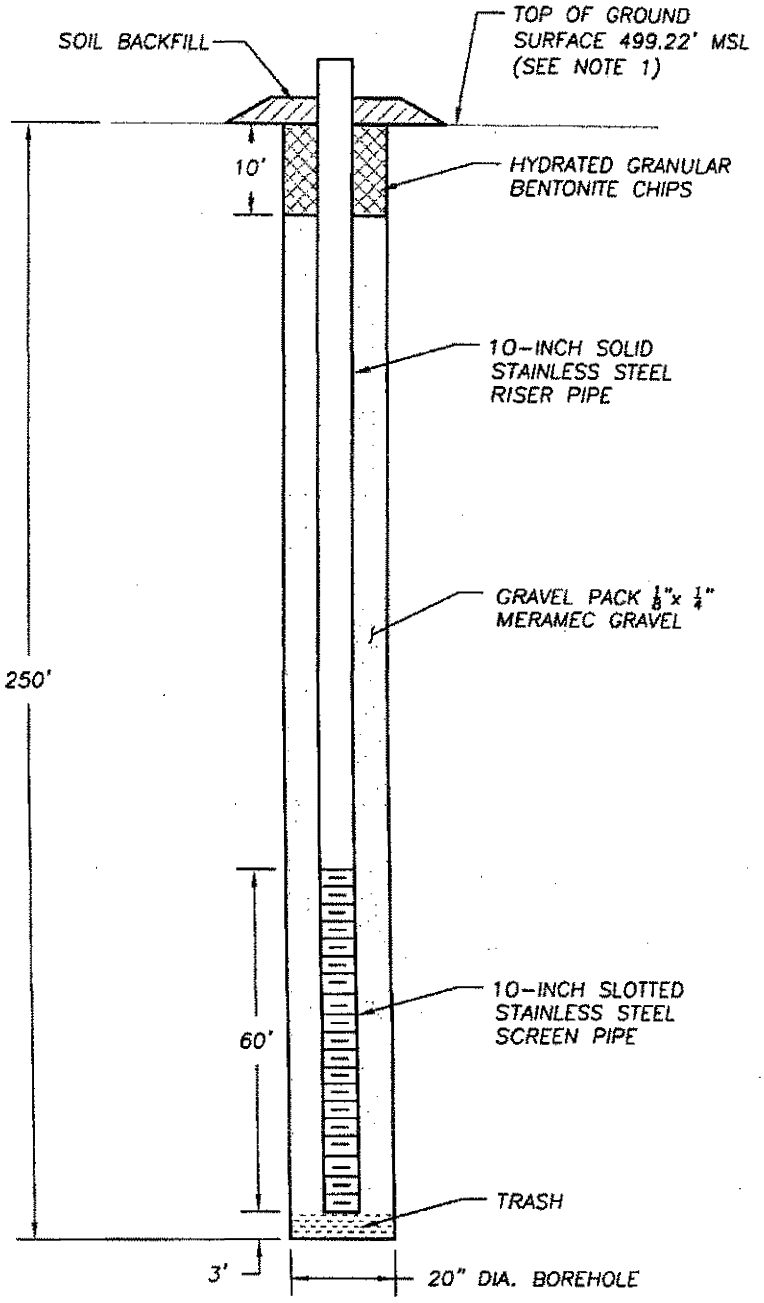

NOTES:

1. SURVEY DATA BASED ON 9/30/09 TOPOGRAPHICAL SURVEY DATA BY SHERBUT-CARSON & ASSOCIATES, P.C.
2. THE WELL PIPE IS SCREENED FROM THE BOTTOM TO ELEVATION 246.22' MSL.

AQUATERRA
ENVIRONMENTAL SOLUTIONS, INC.
13 Executive Drive, Suite 1
Fairview Heights, Illinois 62208

AS-BUILT DETAIL
LEACHATE COLLECTION SUMP 1D INSTALLATION CQA
BRIDGETON LANDFILL, LLC
BRIDGETON, MISSOURI

Project Mgr. TKJ	Drawn By RLH	Designed By RHH	Project No. 3582.10
NOT TO SCALE	Date 10/07/09	File Name 3582.10 LCS-1D Detail.dwg	Figure No. 1

Aquaterra Drilling Log

HOLE NO. LCS-2 | SHEET 1 OF 4 SHEETS

OJECT NAME: Bridgeton Landfill LLC Leachate Wells CoA	DRILLING SUBCONTRACTOR: Layne - Western
OJECT NUMBER: 02031010	NAME OF DRILLER(S): ~~Harold~~ Harold Waddell
CATION: Bridgeton, MO	MANUFACTURER'S DESIGNATION OF DRILL: INGERSOEL-RAND
LE LOCATION: LCS-2	SIZES AND TYPES OF DRILLING AND SAMPLING EQUIPMENT: Air Rotary Drill Rig; 6 inch
RFACE ELEVATION: —	
ERBURDEN THICKNESS: —	DRILLING START DATE: 10/1/03 — DRILLING END DATE: 10-3-03
PTH DRILLED INTO ROCK: —	DEPTH GROUNDWATER ENCOUNTERED: —
TAL DEPTH OF HOLE: 301 feet	DEPTH TO WATER AND ELAPSED TIME AFTER DRILLING COMPLETED: —

OTECHNICAL SAMPLES (TOTAL)	DISTURBED	UNDISTURBED	TOTAL NUMBER OF CORE BOXES
—	—	—	—

MPLES FOR CHEMICAL ANALYSIS OTAL)	(SPECIFY)	(SPECIFY)	(SPECIFY)	(SPECIFY)	(SPECIFY)	TOTAL CORE RECOVERY
—	—	—	—	—	—	—

SPOSITION OF HOLE	BACKFILLED	MONITORING WELL	OTHER (SPEICFY)	SIGNATURE OF INSPECTOR
—	—	—	—	

PTH	DESCRIPTION OF MATERIALS	FIELD SCREENING RESULTS	GEOTECH SAMPLE RESULTS	ANALYTICAL SAMPLE NO.	TIME	REMARKS
	18" of cover soil				1300	9-inch drill bit used
	Trash					
	Trash	CH_4 = 0.0 % O_2 = 20.9 %			1350	
	Trash				1430	
	Trash	CH_4: 0.0% O_2 = 20.4 %			1545	

Aquaterra Drilling Log

HOLE NO. LCS-2 | SHEET 2 OF SHEETS 4

PROJECT NAME: Bridgeton Landfill LLC - Leachate Wells CQA

INSPECTOR: Nathan Higgerson

DEPTH	DESCRIPTION OF MATERIALS	FIELD SCREENING RESULTS	GEOTECH SAMPLE RESULTS	ANALYTICAL SAMPLE NO.	TIME	REMARKS
60	Trash				1545	9-inch drill bit
70						
		$CH_4 = 0.0\%$			1640	
80	Trash	$O_2 = 20.5\%$				
90						
	Trash				1745	Layne Western is finished drilling for the day at 100 ft
100	Trash	$CH_4 = 0.0\%$			730	Resume drilling on 10/2/03 with a 7 7/8-inch drill bit
		$O_2 = 20.5$				
110						
120	Trash	$CH_4 = 0.0\%$			900	
		$O_2 = 20.7\%$				
130						
140						
		$CH_4 = 0.0\%$				
150	Trash	$O_2 = 20.4\%$			1130	

AQUATERRA ENVIRONMENTAL SOLUTIONS, INC.

PROJECT NAME

HOLE NO. LCS-2

Aquaterra Drilling Log

HOLE NO. LCS - 2 | SHEET 3 OF 4 SHEETS

PROJECT NAME: Bridgeton Landfill LLC - Leachate Wells CQA

INSPECTOR: Nathan Higgerson

DEPTH	DESCRIPTION OF MATERIALS	FIELD SCREENING RESULTS	GEOTECH SAMPLE RESULTS	ANALYTICAL SAMPLE NO.	TIME	REMARKS
150					1130	
160	Trash				1200	
170						
180	Trash				1245	
		CH_4 : 0.0%				
		O_2 : 20.6%				
190						
200						
210						
220	Trash	CH_4 = 0.0%			1415	
		O_2 = 20.5%				
230						
240	Trash				1500	

AQUATERRA ENVIRONMENTAL SOLUTIONS, INC.

PROJECT NAME

HOLE NO. LCS-2

Aquaterra Drilling Log

HOLE NO. LCS - 2 | SHEET 4 OF SHEETS 4

ECT NAME: depton Landfill LLC - Leachate Wells CQA

INSPECTOR: Nathan Higgerson

H	DESCRIPTION OF MATERIALS	FIELD SCREENING RESULTS	GEOTECH SAMPLE RESULTS	ANALYTICAL SAMPLE NO.	TIME	REMARKS
	Trash	CH_4=0.0% O_2=20.5%			1500	End of drilling on 8/4/03 at approximate depth of 240 ft
					~730	Resume drilling on 10/3/03
		CH_4=0.0% O_2=20.6%			844	6½ Bit Size
	TRASH				949	
		CH_4=0.0% O_2=20.2%				
	TRASH				10:15	
	TRASH	CH_4=0.0%			10:40	
	End of boring at 301 ft	O_2=20.5%				No asbestos containing materials encountered

PROJECT NAME

HOLE NO. LCS - 2

AQUATERRA ENVIRONMENTAL SOLUTIONS, INC.

Appendix D

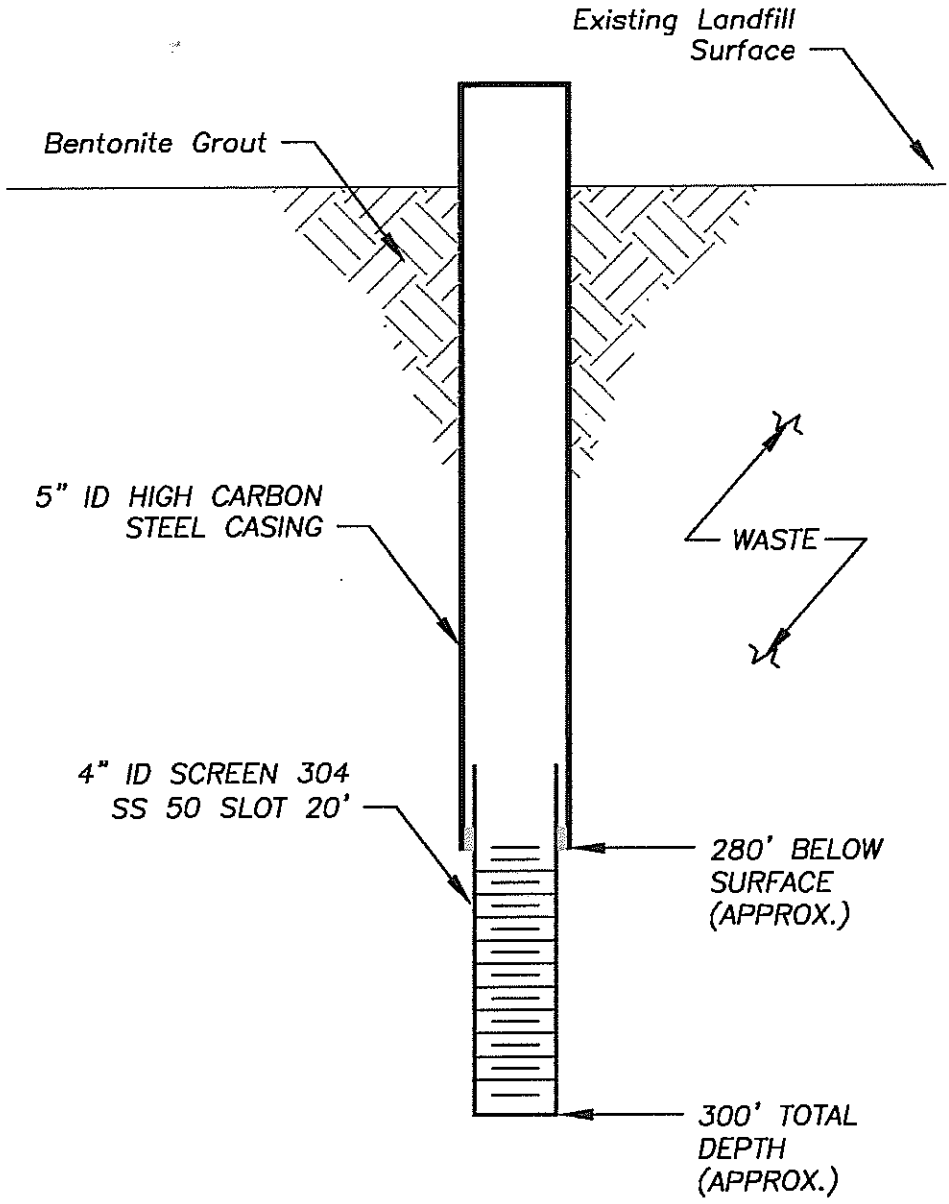

AQUATERRA
ENVIRONMENTAL SOLUTIONS, INC.
1400 South Lincoln Ave.
O'Fallon, Illinois 62269

DETAIL 1 – LEACHATE WELL DETAIL
LCS 2 AND 3
BRIDGETON LANDFILL LLC
BRIDGETON MISSOURI

Project Mgr. MSB	Drawn By JHS	Designed By	Project No. 02031010
Scale No Scale	Date 10/9/03	File Name 02031010_WELL DETAIL.dwg	Drawing No. 1

Aquaterra Drilling Log

HOLE NO. LCS-2B | SHEET 1 OF 2 SHEETS

PROJECT NAME: LCS-2B & 3B CQA of Installation	DRILLING SUBCONTRACTOR: Layne-Western
PROJECT NUMBER: 1470-10	NAME OF DRILLER(S): Tim Elders
LOCATION: Bridgeton Landfill, LLC	MANUFACTURER'S DESIGNATION OF DRILL: Renegade
HOLE LOCATION: LCS-2B	SIZES AND TYPES OF DRILLING AND SAMPLING EQUIPMENT: 14 3/4-inch borehole
SURFACE ELEVATION: —	
OVERBURDEN THICKNESS: —	DRILLING START DATE: 12/1/04 — DRILLING END DATE: 12/14/04
DEPTH DRILLED INTO ROCK: —	DEPTH GROUNDWATER ENCOUNTERED:
TOTAL DEPTH OF HOLE: 305 feet	DEPTH TO WATER AND ELAPSED TIME AFTER DRILLING COMPLETED: —

GEOTECHNICAL SAMPLES (TOTAL)	DISTURBED	UNDISTURBED	TOTAL NUMBER OF CORE BOXES
—	—	—	—

SAMPLES FOR CHEMICAL ANALYSIS (TOTAL)	(SPECIFY)	(SPECIFY)	(SPECIFY)	(SPECIFY)	(SPECIFY)	TOTAL CORE RECOVERY
—	—	—	—	—	—	—

DISPOSITION OF HOLE	BACKFILLED	MONITORING WELL	OTHER (SPEICFY)	SIGNATURE OF INSPECTOR
—	—	—	—	Nathan Hyp

DEPTH	DESCRIPTION OF MATERIALS	FIELD SCREENING RESULTS	GEOTECH SAMPLE RESULTS	ANALYTICAL SAMPLE NO.	TIME	REMARKS
	2-foot of soil				900	
	Trash					
20						End of drilling on 12/1/04 at approx. depth of 20 ft
						Resume drilling on 12/2/04
					1300	
	Trash				1400	
40						
					1630	End of drilling on 12/2/04 at approx. depth of 45 ft
						Resume drilling on 12/3/04
	Trash				1130	
60						
					1500	
80					1600	End of drilling on 12/3/04 at approx. depth of 80 ft
					830	Resume drilling on 12/6/04
	Trash					
100						
					1430	
120					1630	End of drilling on 12/6/04 at approx. depth of 120 ft

Aquaterra Drilling Log

HOLE NO. LCS-2B | SHEET 2 OF SHEETS 2

PROJECT NAME: LCS - 2B & 3B CQA

INSPECTOR: Nathan Higgerson

DEPTH	DESCRIPTION OF MATERIALS	FIELD SCREENING RESULTS	GEOTECH SAMPLE RESULTS	ANALYTICAL SAMPLE NO.	TIME	REMARKS
120					830	Resume drilling on 12/7/04
132	Trash					
140					1200	
					1600	End of drilling on 12/7/04 at an approx. depth of 158 ft
160					800	Resume drilling on 12/8/04
	Trash					
180						
					1600	End of drilling on 12/8/04 at an approx. depth of 185 ft
					800	Resume drilling on 12/9/04
200	Trash					
220						
					1600	End of drilling on 12/9/04 @ approx 230'
					800	Resume drilling on 12/10/04
240	Trash					
260						
280					1600	End 12/10/04 @ 285'
						Resume drilling on 12/14/04
300	End of borehole at an approx. depth of 305 feet	shale chips				End of drilling on 12/14/04

AQUATERRA ENVIRONMENTAL SOLUTIONS, INC.

PROJECT NAME: LCS - 2B & 3B CQA

HOLE NO.: LCS - 2B

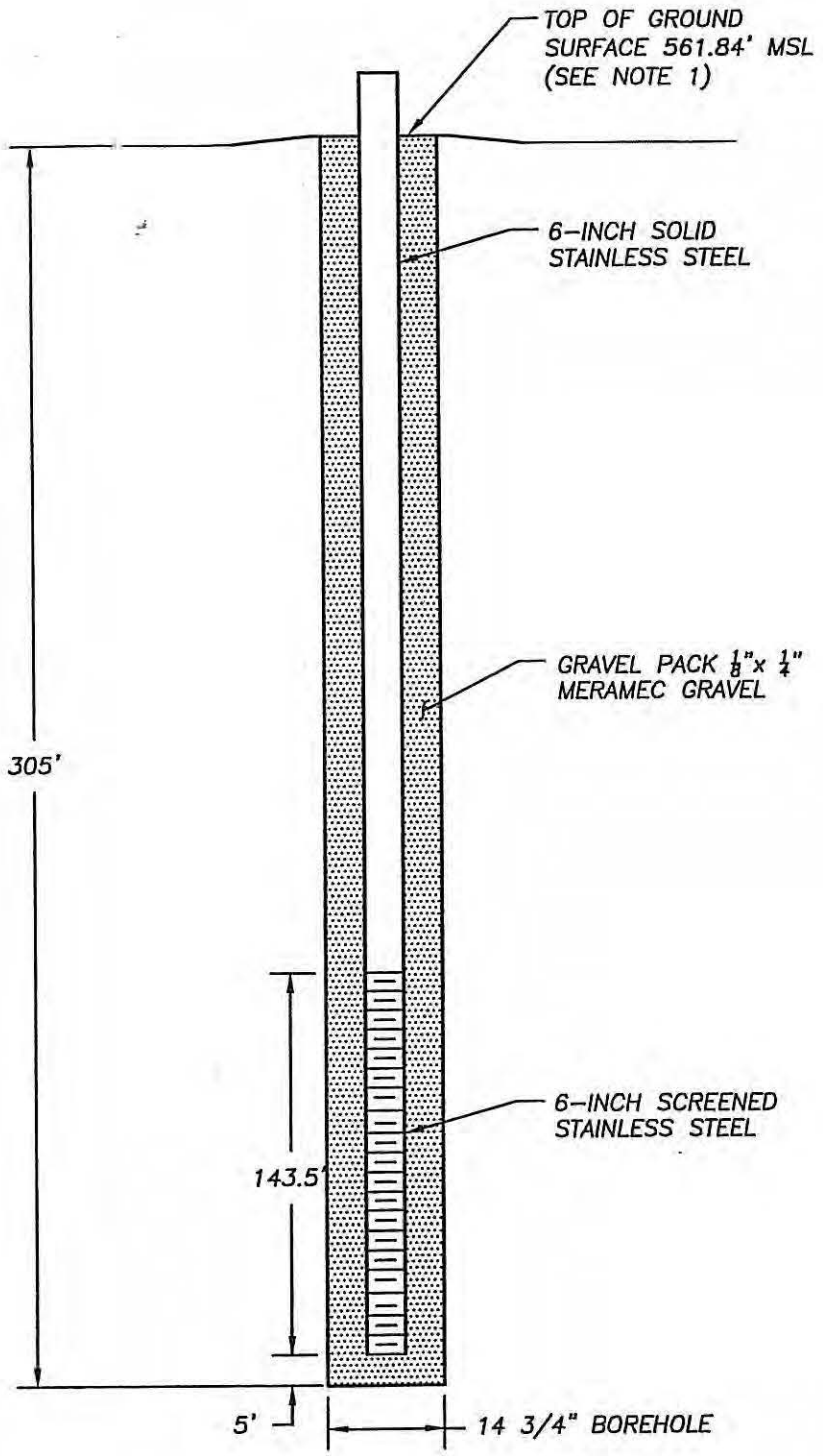

NOTES:

1. SURVEY DATA BASED ON JANUARY 17, 2005 TOPOGRAPHICAL SURVEY DATA BY SHERBUT-CARSON & ASSOCIATES, P.C.
2. THE WELL PIPE IS SCREENED FROM THE BOTTOM TO ELEVATION 405.34.

AQUATERRA
ENVIRONMENTAL SOLUTIONS, INC.
141 Market Place Drive, Suite 204
Fairview Heights, Illinois 62208

DETAIL
LEACHATE COLLECTION SUMP 2B
BRIDGETON LANDFILL, LLC
BRIDGETON, MISSOURI

Project Mgr. MSB	Drawn By NLH	Designed By NLH	Project No. 1470.10
NOT TO SCALE	Date 1/27/05	File Name LCS-2BDETAIL.dwg	Figure No. 1

Aquaterra Drilling Log

HOLE NO. LCS-2C | SHEET 1 OF 2 SHEETS

PROJECT NAME: Leachate Collection Sump CQA	DRILLING SUBCONTRACTOR: Layne - Western
PROJECT NUMBER: 1653.10	NAME OF DRILLER(S): Craig Scooby
LOCATION: Bridgeton Landfill	MANUFACTURER'S DESIGNATION OF DRILL: T685W Rotadrill
HOLE LOCATION: LCS - 2C	SIZES AND TYPES OF DRILLING AND SAMPLING EQUIPMENT: 24 inch auger; 20 inch rotary
SURFACE ELEVATION: —	20 inch
OVERBURDEN THICKNESS: —	DRILLING START DATE: 11/7/05
DRILLING END DATE: 11/18/05	
DEPTH DRILLED INTO ROCK: —	DEPTH GROUNDWATER ENCOUNTERED: —
TOTAL DEPTH OF HOLE: 260ft	DEPTH TO WATER AND ELAPSED TIME AFTER DRILLING COMPLETED: —

GEOTECHNICAL SAMPLES (TOTAL)	DISTURBED	UNDISTURBED	TOTAL NUMBER OF CORE BOXES
—	—	—	—

SAMPLES FOR CHEMICAL ANALYSIS (TOTAL)	(SPECIFY)	(SPECIFY)	(SPECIFY)	(SPECIFY)	(SPECIFY)	TOTAL CORE RECOVERY
—	—	—	—	—	—	—

DISPOSITION OF HOLE	BACKFILLED	MONITORING WELL	OTHER (SPEICFY)	SIGNATURE OF INSPECTOR
—	—	—	—	Nathan Hogg

DEPTH	DESCRIPTION OF MATERIALS	FIELD SCREENING RESULTS	GEOTECH SAMPLE RESULTS	ANALYTICAL SAMPLE NO.	TIME	REMARKS
10	~~LCS-2C~~ (N44)					Drilling begins 11/7/05
	Trash					
						Drilling stopped on 11/7/05
					800	Drilling resumes on 11/8/05
0	Trash					
50						
60						
					1530	Drilling stopped 11/8/05
					800	Drilling resumes 11/9/05
	Trash					
100						
110						

AQUATERRA ENVIRONMENTAL SOLUTIONS, INC.

PROJECT NAME	HOLE NO.
LCS Drilling CQA	LCS-2C

Aquaterra Drilling Log

HOLE NO. LCS-2C | SHEET OF SHEETS 2

PROJECT NAME: LCS Drilling CQA | INSPECTOR: Nathan Higgerson

DEPTH	DESCRIPTION OF MATERIALS	FIELD SCREENING RESULTS	GEOTECH SAMPLE RESULTS	ANALYTICAL SAMPLE NO.	TIME	REMARKS
120					1530	Drilling stopped 11/9/05
					1400	Drilling resumes 11/10/05
130	Trash / Rock Debris				1570	Drilling stopped 11/10/05
					1200	Drilling resumes 11/16/05
140	Trash					
150						
					1600	Drilling stopped 11/16/05
160					800	Drilling resumes 11/17/05
	Trash					
170						
180						
190						
200						
					1200	Drilling stopped 11/17/05
					800	Drilling resumes 11/18/05
210	Trash					
220						
230						
240						
250						
	gravel/bedrock				1400	Drilling stopped 11/18/05
	End of boring at 260 ft					at approximate depth of 260 ft. No asbestos containing materials observed.
270						
280						
290						

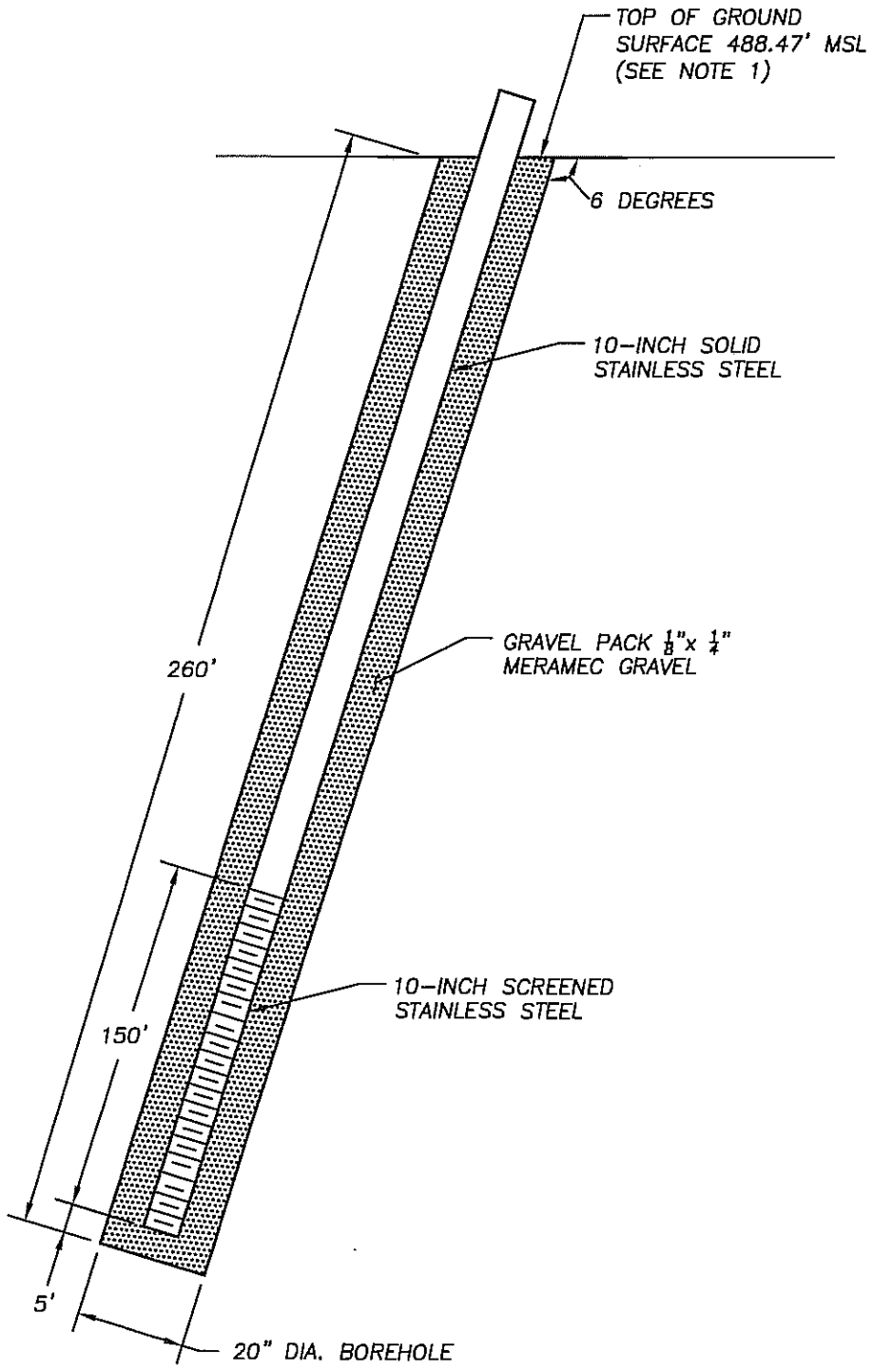

NOTES:

1. SURVEY DATA BASED ON NOVEMBER 24, 2005 TOPOGRAPHICAL SURVEY DATA BY SHERBUT-CARSON & ASSOCIATES, P.C.

AQUATERRA
ENVIRONMENTAL SOLUTIONS, INC.
141 Market Place Drive
Fairview Heights, Illinois 62208

AS-BUILT DETAIL
LEACHATE COLLECTION SUMP 2C
BRIDGETON LANDFILL, LLC
BRIDGETON, MISSOURI

Project Mgr. MSB	Drawn By WS	Designed By NLH	Project No. 1653.10
NOT TO SCALE	Date 11/21/05	File Name LCS-2C DETAIL.dwg	Figure No. 1

K:\Allied Waste\Bridgeton\1653.10 - LCS-2C & LCS-3C CQA\LCS-2C DETAIL.dwg December 7, 2005 3:58:43 pm (Nat)

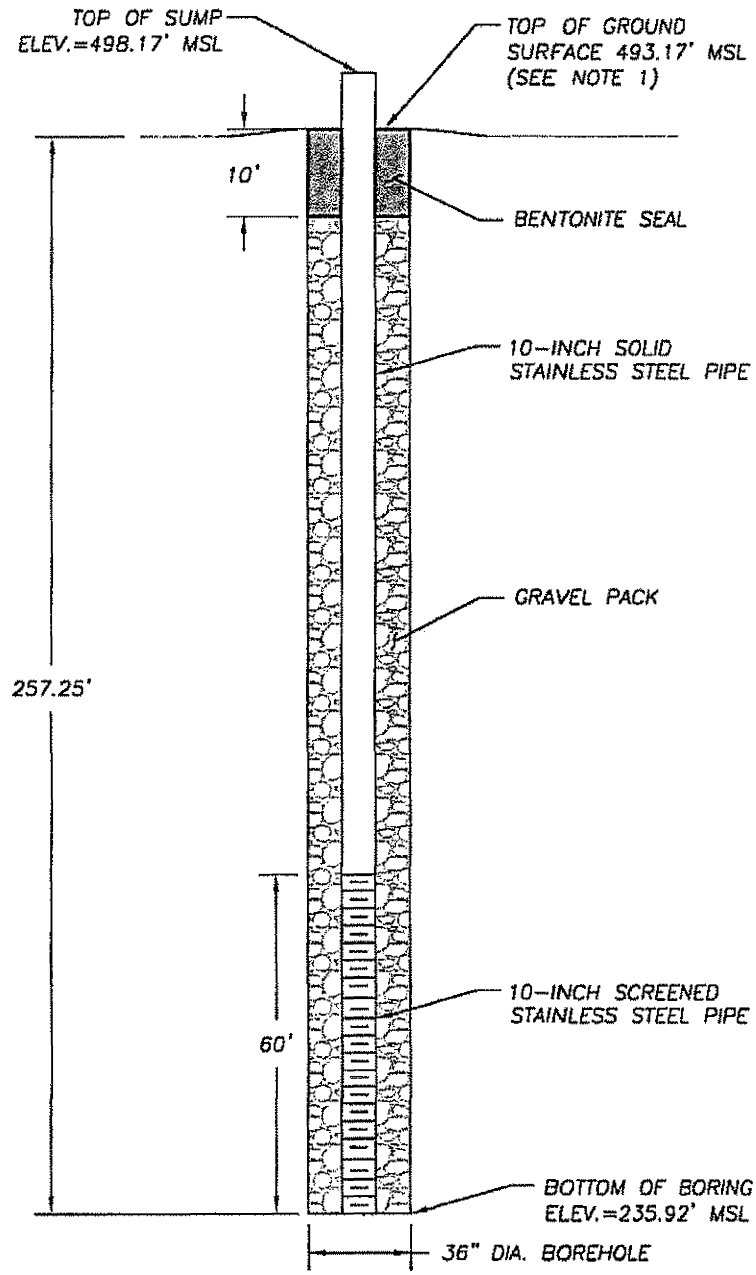

NOTES:

1. SURVEY DATA BASED ON BASED ON A SITE SURVEY PERFORMED ON DECEMBER 22, 2008 BY SHERBUT-CARSON & ASSOCIATES, P.C.

AQUATERRA
ENVIRONMENTAL SOLUTIONS, INC.
141 Market Place Drive
Fairview Heights, Illinois 62208

AS-BUILT DETAIL
LCS-2D INSTALLATION CQA REPORT
BRIDGETON LANDFILL, LLC
BRIDGETON, MISSOURI

Project Mgr. TKJ	Drawn By RLH	Designed By RLH	Project No. 3131.10
NOT TO SCALE	Date 12/19/08	File Name LCS-1C DETAIL.dwg	Figure No. 1

Aquaterra Drilling Log

HOLE NO. LCS-3 | SHEET 1 OF 4 SHEETS

ST NAME: idgeton Landfill LLC - Leachate Wells CQA	DRILLING SUBCONTRACTOR: Layne- Western
ST NUMBER: 02031010	NAME OF DRILLER(S): Herold Waddell
ION: Bridgeton, MO	MANUFACTURER'S DESIGNATION OF DRILL: Ingersoel - Rand
OCATION: LCS-3	SIZES AND TYPES OF DRILLING AND SAMPLING EQUIPMENT: Air Rotary Drill Rig; 6 inch
CE ELEVATION: —	
BURDEN THICKNESS: —	DRILLING START DATE: 10-4-03 / DRILLING END DATE: 10/6/03
DRILLED INTO ROCK: —	DEPTH GROUNDWATER ENCOUNTERED: —
L DEPTH OF HOLE: 300 feet	DEPTH TO WATER AND ELAPSED TIME AFTER DRILLING COMPLETED: —

ECHNICAL SAMPLES (TOTAL)	DISTURBED	UNDISTURBED	TOTAL NUMBER OF CORE BOXES
—	—	—	—

LES FOR CHEMICAL ANALYSIS AL)	(SPECIFY)	(SPECIFY)	(SPECIFY)	(SPECIFY)	(SPECIFY)	TOTAL CORE RECOVERY
—	—	—	—	—	—	—

OSITION OF HOLE	BACKFILLED	MONITORING WELL	OTHER (SPEICFY)	SIGNATURE OF INSPECTOR
—	—	—	—	Nathan T. Ryan

TH	DESCRIPTION OF MATERIALS	FIELD SCREENING RESULTS	GEOTECH SAMPLE RESULTS	ANALYTICAL SAMPLE NO.	TIME	REMARKS
					1130	
	Trash					
0						
40						
50	Trash				1200	
60						

AQUATERRA ENVIRONMENTAL SOLUTIONS, INC.

PROJECT NAME: Bridgeton Landfill LLC - Leachate Wells CQA

HOLE NO.: LCS-3

Aquaterra Drilling Log

HOLE NO. LCS-3 | SHEET 2 OF 4 SHEETS

PROJECT NAME: Bridgeton Landfill LLC - Leachate Wells CQA

INSPECTOR: Nathan Higgerson

DEPTH	DESCRIPTION OF MATERIALS	FIELD SCREENING RESULTS	GEOTECH SAMPLE RESULTS	ANALYTICAL SAMPLE NO.	TIME	REMARKS
60						
70	Trash				1215	
80						
90						
100						
110						
120	TRASH				13:40	7 7/8 drill Head
130						
140						
150						

AQUATERRA
ENVIRONMENTAL SOLUTIONS, INC.

PROJECT NAME

HOLE NO. LCS-3

Aquaterra Drilling Log

HOLE NO. LCS-3 | SHEET 3 OF 4 SHEETS

PROJECT NAME: Bridgeton Landfill LLC - Leachate Wells CQIA

INSPECTOR: Nathan Higgerson

DEPTH	DESCRIPTION OF MATERIALS	FIELD SCREENING RESULTS	GEOTECH SAMPLE RESULTS	ANALYTICAL SAMPLE NO.	TIME	REMARKS
50						
					1600	
60	TRASH					
					1623	Blockage in the WATER system inside the drill pipe — — Finished for the day
	TRASH					
70						WORK Resumed on 10/5/03
80	TRASH				1100	
90						
100						
110						
120						
130						
140						
150						
160						
170						
180						
190						
200	TRASH				1215	
210						
220	TRASH				1243	
230						
240	TRASH				1320	

AQUATERRA ENVIRONMENTAL SOLUTIONS, INC.

PROJECT NAME

HOLE NO. LCS-3

Aquaterra Drilling Log

HOLE NO. LCS-3 | SHEET 4 OF 4 SHEETS

PROJECT NAME: idgefor Landfill LLC - Leachate Wells CQA

INSPECTOR: Nathan Haggerson

DEPTH	DESCRIPTION OF MATERIALS	FIELD SCREENING RESULTS	GEOTECH SAMPLE RESULTS	ANALYTICAL SAMPLE NO.	TIME	REMARKS
60					1600	done for the day NLH per conversation with the driller on 10/6/03
	Trash					
70					1600	done for the day
	Trash				730	resume drilling on 10/6/03
80						
90						
300	End of boring at 300'				945	No asbestos containing materials encountered
10						

AQUATERRA ENVIRONMENTAL SOLUTIONS, INC.

PROJECT NAME

HOLE NO. LCS-3

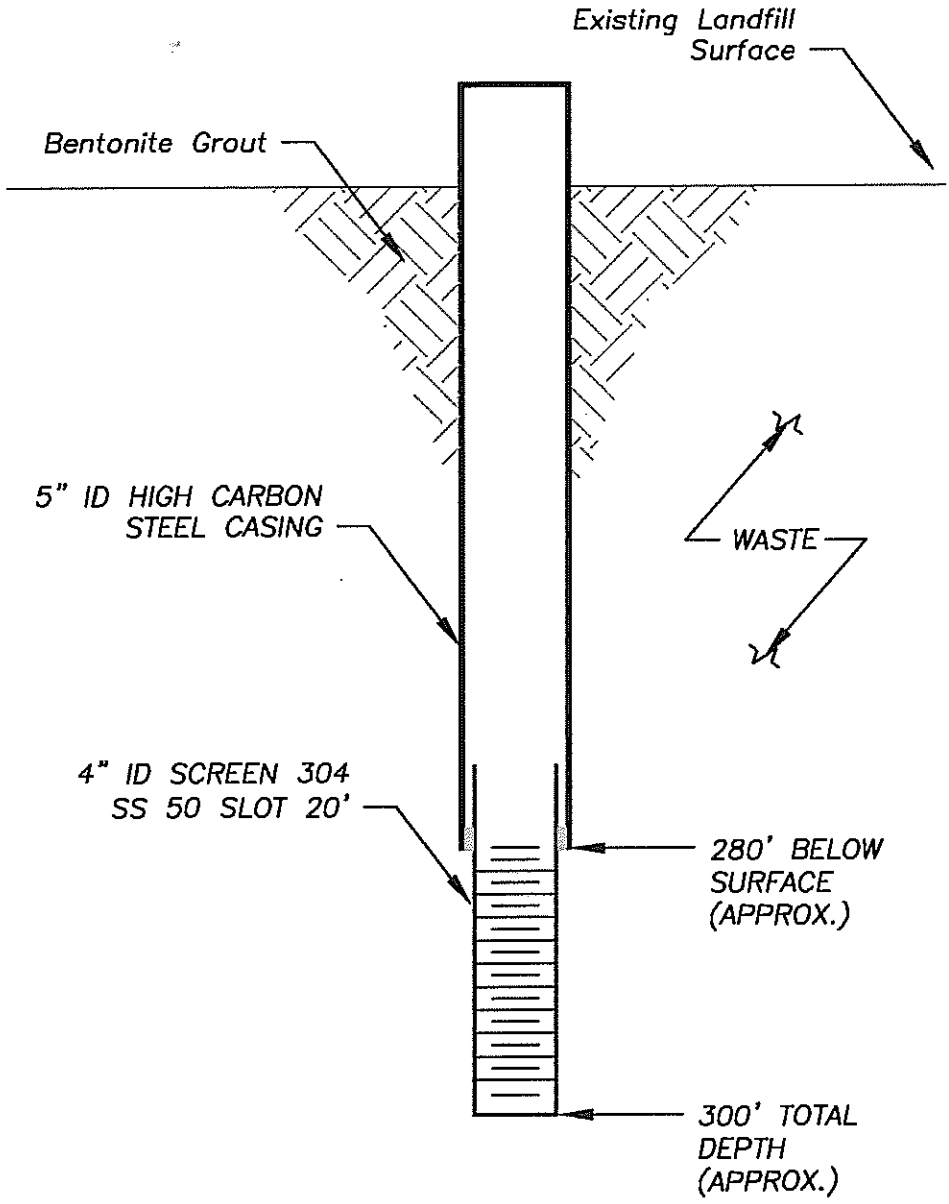

AQUATERRA
ENVIRONMENTAL SOLUTIONS, INC.
1400 South Lincoln Ave.
O'Fallon, Illinois 62269

DETAIL 1 – LEACHATE WELL DETAIL
LCS 2 AND 3
BRIDGETON LANDFILL LLC
BRIDGETON MISSOURI

Project Mgr. MSB	Drawn By JHS	Designed By	Project No. 02031010
Scale No Scale	Date 10/9/03	File Name 02031010_WELL DETAIL.dwg	Drawing No. 1

Aquaterra Drilling Log

HOLE NO. LCS-3B | SHEET 1 OF 2 SHEETS

PROJECT NAME: LCS-2B & 3B CQA of Installation	DRILLING SUBCONTRACTOR: Layne-Western
PROJECT NUMBER: 1470.10	NAME OF DRILLER(S): Tim Elders
LOCATION: Bridgeton Landfill, LLC	MANUFACTURER'S DESIGNATION OF DRILL: Renegade
HOLE LOCATION: LCS-3B	SIZES AND TYPES OF DRILLING AND SAMPLING EQUIPMENT: 14 3/4 ~~in~~ inch borehole
SURFACE ELEVATION: —	
OVERBURDEN THICKNESS: —	DRILLING START DATE: 12/17/04 — DRILLING END DATE: 12/30/04
DEPTH DRILLED INTO ROCK: —	DEPTH GROUNDWATER ENCOUNTERED: —
TOTAL DEPTH OF HOLE	DEPTH TO WATER AND ELAPSED TIME AFTER DRILLING COMPLETED: —

GEOTECHNICAL SAMPLES (TOTAL)	DISTURBED	UNDISTURBED	TOTAL NUMBER OF CORE BOXES
—	—	—	—

SAMPLES FOR CHEMICAL ANALYSIS (TOTAL)	(SPECIFY)	(SPECIFY)	(SPECIFY)	(SPECIFY)	(SPECIFY)	TOTAL CORE RECOVERY
—	—	—	—	—	—	—

DISPOSITION OF HOLE	BACKFILLED	MONITORING WELL	OTHER (SPEICFY)	SIGNATURE OF INSPECTOR
—	—	—	—	Nathan Hyp

DEPTH	DESCRIPTION OF MATERIALS	FIELD SCREENING RESULTS	GEOTECH SAMPLE RESULTS	ANALYTICAL SAMPLE NO.	TIME	REMARKS
	1 ft of clay				1200	Drilling begins 12/17/04
	Trash					
		Approx. 4 ft of clay				End of drilling 12/17/04 at approx. depth of 20 ft
20					1200	Resume drilling on 12/21/04
	Trash				1300	
40						End of drilling 12/21/04 at approx. depth of 45 ft
	Trash				0900	Resume drilling 12/27/04
60						
80						End of drilling 12/27/04 at approx. depth of 90 ft
					800	Resume drilling on 12/28/04
	Trash					
100					1130	
120						

AQUATERRA ENVIRONMENTAL SOLUTIONS, INC.

PROJECT NAME: LCS-2B & 3B CQA of Installation | HOLE NO.: LCS-3B

Aquaterra Drilling Log

HOLE NO. LCS-3B | SHEET 2 OF SHEETS 2

PROJECT NAME: LCS-2B & 3B CQA of Installation

INSPECTOR: Nathan Higgerson

DEPTH	DESCRIPTION OF MATERIALS	FIELD SCREENING RESULTS	GEOTECH SAMPLE RESULTS	ANALYTICAL SAMPLE NO.	TIME	REMARKS
120	Trash				1600	- hit something hard drilling slowed
140						
160	Trash				2330	- Drilling ~~for~~ around the clock to complete LCS-3B
180					- - - 0300	12/29/04 - NLH
200	Trash				0600	
220	Trash				1230	
240	TRASH				1630	
260					- - - - - - 1900	12/29/04 NLH
280					2000	
300	End of boring at an approx. depth of 305 feet				- - - - - - 0300	12/30/04 NLH End of drilling at 305 ft

AQUATERRA ENVIRONMENTAL SOLUTIONS, INC.

PROJECT NAME: LCS-2B & 3B CQA of Installation

HOLE NO.: LCS-3B

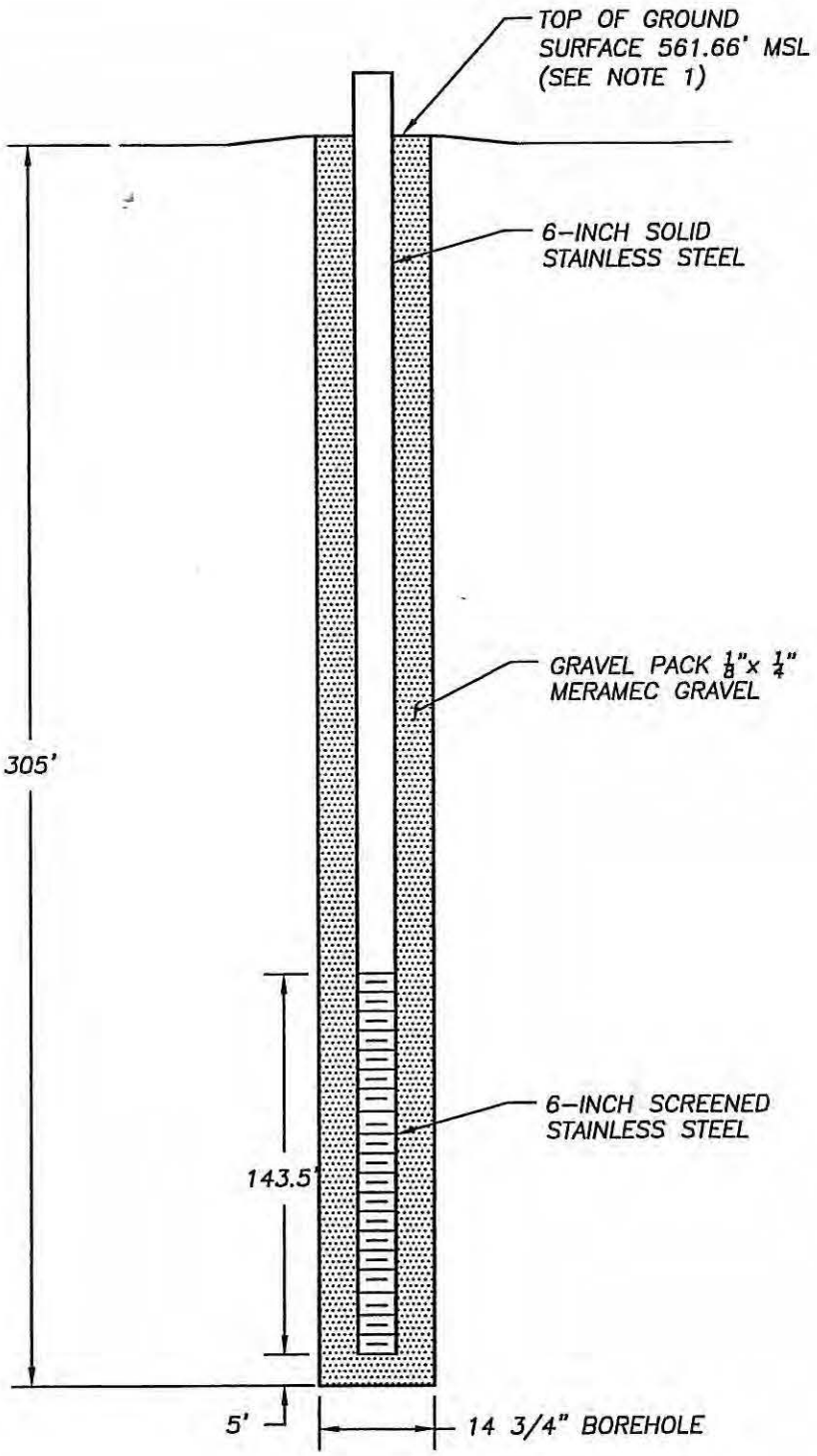

NOTES:

1. SURVEY DATA BASED ON JANUARY 17, 2005 TOPOGRAPHICAL SURVEY DATA BY SHERBUT-CARSON & ASSOCIATES, P.C.

2. THE WELL PIPE IS SCREENED FROM THE BOTTOM TO ELEVATION 405.16.

AQUATERRA
ENVIRONMENTAL SOLUTIONS, INC.
141 Market Place Drive, Suite 204
Fairview Heights, Illinois 62208

DETAIL
LEACHATE COLLECTION SUMP 3B
BRIDGETON LANDFILL, LLC
BRIDGETON, MISSOURI

Project Mgr. MSB	Drawn By NLH	Designed By NLH	Project No. 1470.10
NOT TO SCALE	Date 1/27/05	File Name: LCS-3BDETAIL.dwg	Figure No. 1

Aquaterra Drilling Log

HOLE NO. LCS-3C | SHEET 1 OF 2 SHEETS

PROJECT NAME: LCS Drilling CQA	DRILLING SUBCONTRACTOR: Layne - Western
PROJECT NUMBER: 1653.10	NAME OF DRILLER(S): Craig Scooby
LOCATION: Bridgeton Landfill	MANUFACTURER'S DESIGNATION OF DRILL: T685W Rotadrill
HOLE LOCATION: LCS-3C	SIZES AND TYPES OF DRILLING AND SAMPLING EQUIPMENT: 24 inch auger; 20 inch rotary; 20 inch
SURFACE ELEVATION: —	
OVERBURDEN THICKNESS: —	DRILLING START DATE: 10/21/05 — DRILLING END DATE: 11/3/05
DEPTH DRILLED INTO ROCK: —	DEPTH GROUNDWATER ENCOUNTERED: —
TOTAL DEPTH OF HOLE: 252 ft	DEPTH TO WATER AND ELAPSED TIME AFTER DRILLING COMPLETED: —

GEOTECHNICAL SAMPLES (TOTAL)	DISTURBED	UNDISTURBED	TOTAL NUMBER OF CORE BOXES
—	—	—	—

SAMPLES FOR CHEMICAL ANALYSIS (TOTAL)	(SPECIFY)	(SPECIFY)	(SPECIFY)	(SPECIFY)	(SPECIFY)	TOTAL CORE RECOVERY
—	—	—	—	—	—	—

DISPOSITION OF HOLE	BACKFILLED	MONITORING WELL	OTHER (SPECIFY)	SIGNATURE OF INSPECTOR
—	—	—	—	Nathan Hegg

DEPTH	DESCRIPTION OF MATERIALS	FIELD SCREENING RESULTS	GEOTECH SAMPLE RESULTS	ANALYTICAL SAMPLE NO.	TIME	REMARKS
10	Trash				800	Drilling begins 10/21/05
					1400	Drilling stopped 10/21/05
					1030	Drilling resumes 10/24/05
20	Trash					
					1430	Drilling stopped 10/24/05
					700	Drilling resumes 10/25/05
50	Trash				800	
60						
90					1100	
100						
110					1700	

AQUATERRA ENVIRONMENTAL SOLUTIONS, INC.

PROJECT NAME: LCS Drilling CQA | HOLE NO.: LCS-3C

Aquaterra Drilling Log

HOLE NO. LCS-3C | SHEET 2 OF 2 SHEETS

PROJECT NAME: LCS Drilling CQA | INSPECTOR: Nathan Higgerson

DEPTH	DESCRIPTION OF MATERIALS	FIELD SCREENING RESULTS	GEOTECH SAMPLE RESULTS	ANALYTICAL SAMPLE NO.	TIME	REMARKS
120						
130	Trash					
140						
150					1730	Drilling stopped 10/25/05
					1010	Drilling resumes 10/26/05
160	Trash					
170					1300	
180						
190					1730	Drilling stopped 10/26/05
					800	Drilling resumes 10/27/05
	Trash/gravel					
200					1400	Drilling stopped 10/27/05
					800	Drilling resumes 10/28/05
210	Trash (plastic)					
220					1400	Drilling stopped 10/28/05
					930	Drilling resumes 10/31/05
					1070	
230	Trash					
240						
					1500	Drilling stopped 11/1/05
	Rock				830	Drilling resumes 11/2/05
250	End of boring at 252 ft				1130	Drilling stopped on 11/2/05 at approximate depth of 252 ft with No asbestos containing materials observed.
260						
270						
280						
290						

AQUATERRA ENVIRONMENTAL SOLUTIONS, INC.

PROJECT NAME: LCS Drilling CQA | HOLE NO.: LCS-3C

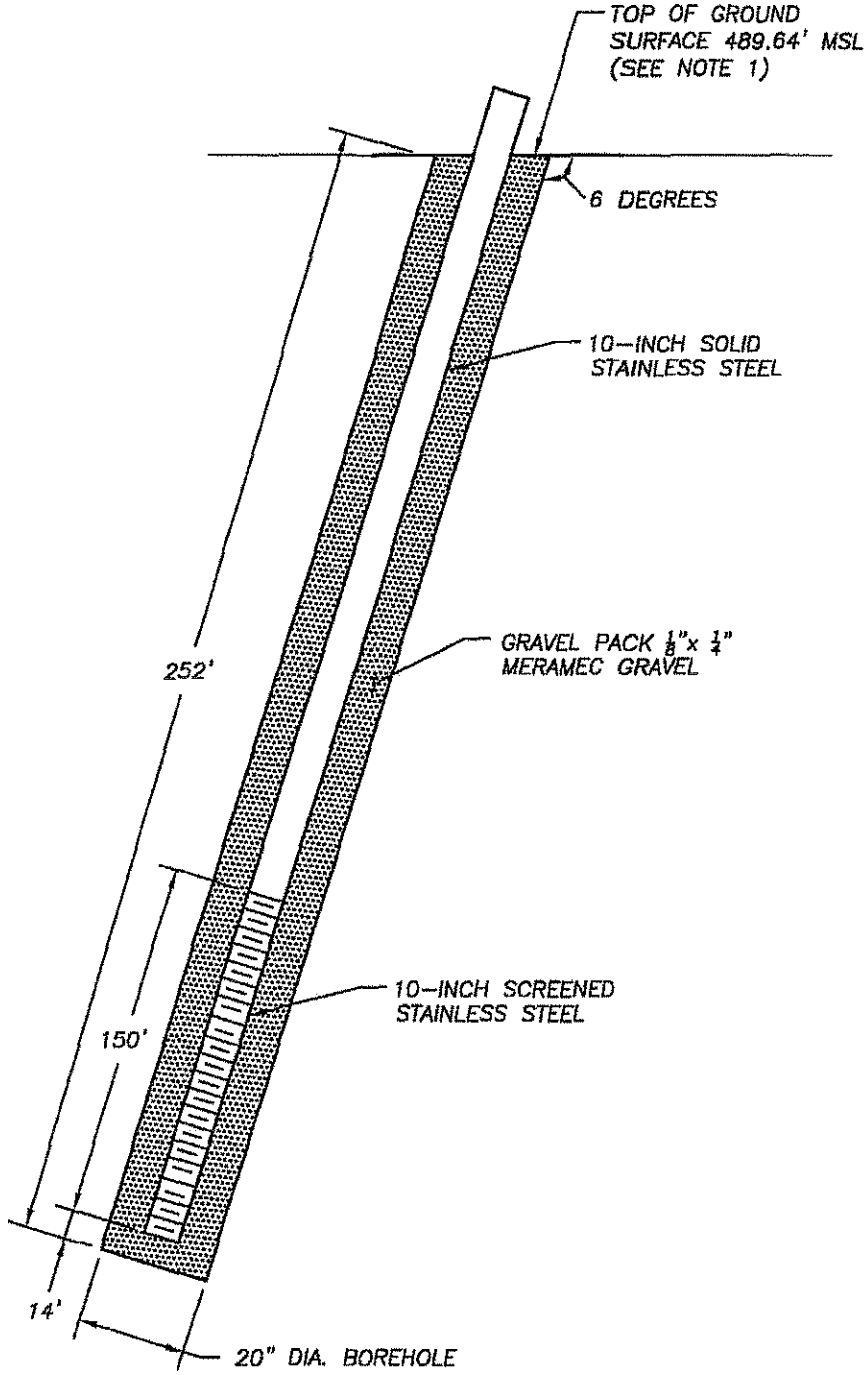

NOTES:

1. SURVEY DATA BASED ON NOVEMBER 24, 2005 TOPOGRAPHICAL SURVEY DATA BY SHERBUT-CARSON & ASSOCIATES, P.C.

AQUATERRA
ENVIRONMENTAL SOLUTIONS, INC.
141 Market Place Drive
Fairview Heights, Illinois 62208

AS-BUILT DETAIL
LEACHATE COLLECTION SUMP 3C
BRIDGETON LANDFILL, LLC
BRIDGETON, MISSOURI

Project Mgr. MSB	Drawn By WS	Designed By NLH	Project No. 1653.10
NOT TO SCALE	Date 11/21/05	File Name LCS-3C DETAIL.dwg	Figure No. 1

Aquaterra Drilling Log

HOLE NO. LCS-4A | SHEET 1 OF 4 SHEETS

PROJECT NAME: LCS-4A Installation	DRILLING SUBCONTRACTOR: Boart Longyear
PROJECT NUMBER: 1292.10	NAME OF DRILLER(S): Mark Biermaier
LOCATION: Bridgeton, MO	MANUFACTURER'S DESIGNATION OF DRILL: Foremost DR24
HOLE LOCATION: West edge of south hill crown	SIZES AND TYPES OF DRILLING AND SAMPLING EQUIPMENT: 20 inches
SURFACE ELEVATION: 547.77	
OVERBURDEN THICKNESS: —	DRILLING START DATE: 3/16/04 — DRILLING END DATE: 3/27/04
DEPTH DRILLED INTO ROCK: —	DEPTH GROUNDWATER ENCOUNTERED: —
TOTAL DEPTH OF HOLE: 302 ft	DEPTH TO WATER AND ELAPSED TIME AFTER DRILLING COMPLETED: —

GEOTECHNICAL SAMPLES (TOTAL)	DISTURBED	UNDISTURBED	TOTAL NUMBER OF CORE BOXES
—	—	—	—

SAMPLES FOR CHEMICAL ANALYSIS (TOTAL)	(SPECIFY)	(SPECIFY)	(SPECIFY)	(SPECIFY)	(SPECIFY)	TOTAL CORE RECOVERY
—	—	—	—	—	—	—

DISPOSITION OF HOLE	BACKFILLED	MONITORING WELL	OTHER (SPEICFY)	SIGNATURE OF INSPECTOR
—	-	-	—	Nathan Higgason

DEPTH	DESCRIPTION OF MATERIALS	FIELD SCREENING RESULTS	GEOTECH SAMPLE RESULTS	ANALYTICAL SAMPLE NO.	TIME	REMARKS
0	Soil Cover (2ft approx.)				1045	Stop for problems with hole shifting (2 hrs)
10	Trash					
					1615	
20	Trash	CH_4 0 ppm H_2S 0 ppm %LEL 0	—	—	1830 1600	Drilling stopped for the day at 21ft Resume drilling 3/17/04
30					1900	Drilling stopped for 3/17/04 at depth of 35'
					1000	Resume drilling 3/24/04
40						
50	Trash					
60					1430	

AQUATERRA ENVIRONMENTAL SOLUTIONS, INC.

PROJECT NAME: LCS-4A Installation | HOLE NO.: LCS-4A

Aquaterra Drilling Log

PROJECT NAME: LCS-4 Installation | INSPECTOR: Nathan Higgerson

DEPTH	DESCRIPTION OF MATERIALS	FIELD SCREENING RESULTS	GEOTECH SAMPLE RESULTS	ANALYTICAL SAMPLE NO.	TIME	REMARKS
60	Trash	CH_4 0.2 H_2S 0% %LEL 0%			1430	Drilling on 3/24/04 (continued)
					1800	stopped for the day at approximately 60 ft
70					730	Resume drilling on 3/25/04
					1700	stopped for the day at approx 80 ft
80	TRASH	CH_4 350 ppm H_2S 0% LEL 0%				3/27 NO DRILLING ON 3/26
					1830	STOPPED @ 90!
90	TRASH	CH_4 0% H_2S 0% LEL 0%			0730	3/28 RAIN TODAY
					1500	STOPPED @ 100'
100	TRASH	CH_4 0% H_2S 0% LEL 0%			0700	3/29 - [illegible] - UNKNOWN OBJECT SLOWED PROGRESS FOR 3 HOURS
110						
120					1400	STOPPED @ 120'
					0700	[illegible] 3/30
	TRASH	CH_4 0% H_2S 0% LEL 0%				
130						
					1900	STOPPED @ 138'
140	TRASH				700	3/31 HAD REFUSAL FOR MOST OF DAY
						NO GAIN
	SEE NEXT PAGE				1940	
150	TRASH					

AQUATERRA ENVIRONMENTAL SOLUTIONS, INC.

PROJECT NAME: LCS-4A Installation | HOLE NO.: LCS-4A

Aquaterra Drilling Log

HOLE NO. LCS-4A | SHEET 3 OF 4

PROJECT NAME: LCS-4 INSTALLATION | INSPECTOR: DAVID PETERSON

DEPTH	DESCRIPTION OF MATERIALS	FIELD SCREENING RESULTS	GEOTECH SAMPLE RESULTS	ANALYTICAL SAMPLE NO.	TIME	REMARKS
40	TRASH	CH_4 - 0% H_2S - 0% LEL - 0%			0700	BIT NEEDED REPAIR 4/01
148					1400	STOPPED @ 148'
50	TRASH	CH_4 - 0% H_2S - 0% LEL - 0%			700	4/06
60	TRASH	CH_4 - 0% H_2S - 0% LEL - 0%			1450 0700	STOPPED @ 160' 4/07
80	TRASH	CH_4 - 0% H_2S - 0% LEL - 0%			2000 0700	STOPPED @ 180' 4/08
	Trash				1930 800	205' TOTAL DEPTH Resume drilling 4/9/04
223					1430	RESUME DRILLING 4/13 STOPPED @ 230'

AQUATERRA ENVIRONMENTAL SOLUTIONS, INC.

PROJECT NAME: LCS-4A Installation | HOLE NO.: LCS-4A

Aquaterra Drilling Log

HOLE NO. LCS-4A | SHEET 4 OF SHEETS 4

PROJECT NAME: LCS-4 INSTALLATION | INSPECTOR: NATHAN HIGGERSON

DEPTH	DESCRIPTION OF MATERIALS	FIELD SCREENING RESULTS	GEOTECH SAMPLE RESULTS	ANALYTICAL SAMPLE NO.	TIME	REMARKS
230	Trash	CH_4 - 0% H_2S - 0% LEL - 0%				Resume drilling on 4/16
240						drilling stopped at approximately 245'
	Trash					Resume drilling on 4/17
250						
260		CH_4 - 0% H_2S - 0% LEL - 0%			1330 1200	Drilling stopped at approximate depth of 265' Resume drilling on 4/18
270	Trash					
280		CH_4 - 0% H_2S - 0% LEL - 0%			1445	Resume drilling on 4/19
						drilling stopped @ 285' Resume drilling on 4/27
290	Trash					
300						Drilling stopped at approximate final depth of 302 ft
	EOB @ approximately 302 ft					

AQUATERRA ENVIRONMENTAL SOLUTIONS, INC.

PROJECT NAME: LCS-4A INSTALLATION | HOLE NO.: LCS-4A

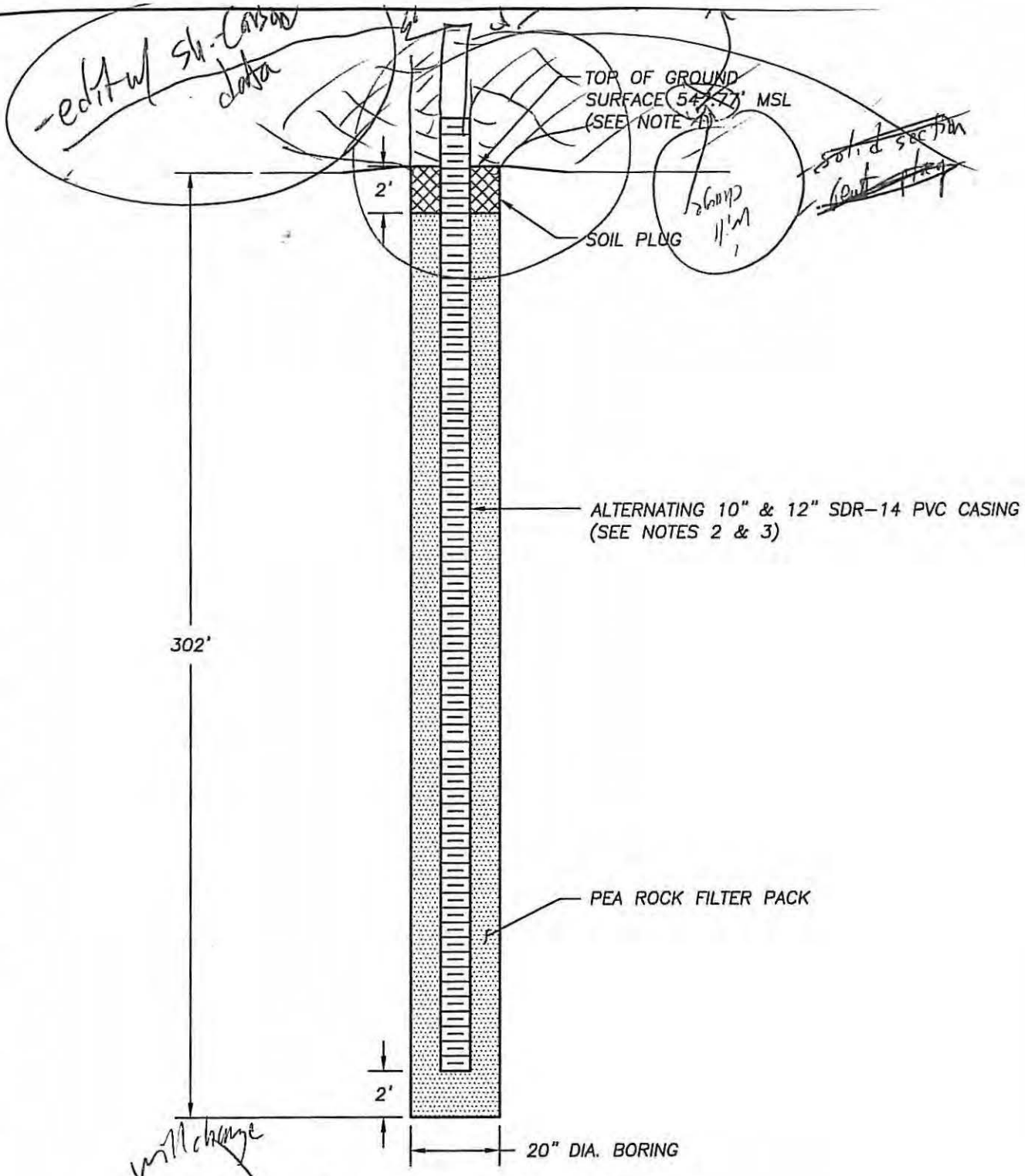

NOTES:

1. SURVEY DATA BASED ON APRIL 27, 2004 TOPOGRAPHICAL SURVEY DATA BY SHERBUT-CARSON & ASSOCIATES, P.C.
2. PVC CASING IS SCREENED ALONG ITS ENTIRE LENGTH WITH 0.125" x 2" SLOTS SPACED 1" APART.
3. CENTRALIZERS ARE INSTALLED APPROXIMATELY EVERY 40'.

AQUATERRA
ENVIRONMENTAL SOLUTIONS, INC.
6980 West 153rd Street
Overland Park, Kansas 66223

DETAIL
LEACHATE COLLECTION SUMP 4A
BRIDGETON LANDFILL, LLC
BRIDGETON, MISSOURI

Project Mgr. MSB	Drawn By NLH	Designed By NLH	Project No. 1292.10
NOT TO SCALE	Date 6/2/04	File Name LCS-4A DETAIL N.dwg	Figure No. 1

Aquaterra Drilling Log

HOLE NO. LCS-4B | SHEET 1 OF 1 SHEETS

PROJECT NAME: LCS-4B CQA Installation
DRILLING SUBCONTRACTOR: Layne Western Company, Inc.
PROJECT NUMBER: 3737.10
NAME OF DRILLER(S): Rusty Bowls, Dave Jones
LOCATION: Bridgeton, Missouri
MANUFACTURER'S DESIGNATION OF DRILL: Air Rotary Drill Rig (Rota Drill-T685W)
HOLE LOCATION: Western Edge-South Hill
SIZES AND TYPES OF DRILLING AND SAMPLING EQUIPMENT: 20" bit; Backhoe-Case 580 Super L, Tender Trailer-Layne Western, Support Vehicle-
SURFACE ELEVATION:
OVERBURDEN THICKNESS:
DRILLING START DATE: December 10, 2009
DRILLING END DATE:
DEPTH DRILLED INTO ROCK: N/A
DEPTH GROUNDWATER ENCOUNTERED:
TOTAL DEPTH OF HOLE:
DEPTH TO WATER AND ELAPSED TIME AFTER DRILLING COMPLETED:

GEOTECHNICAL SAMPLES (TOTAL)	DISTURBED	UNDISTURBED	TOTAL NUMBER OF CORE BOXES
N/A	N/A	N/A	

SAMPLES FOR CHEMICAL ANALYSIS (TOTAL)	(SPECIFY)	(SPECIFY)	(SPECIFY)	(SPECIFY)	(SPECIFY)	TOTAL CORE RECOVERY
N/A	N/A	N/A	N/A	N/A	N/A	N/A

DISPOSITION OF HOLE	BACKFILLED	MONITORING WELL	OTHER (SPECIFY)	SIGNATURE OF INSPECTOR
Leachate Collection Sump	N/A	N/A	N/A	

DEPTH	DESCRIPTION OF MATERIALS	FIELD SCREENING RESULTS	GEOTECH SAMPLE RESULTS	ANALYTICAL SAMPLE NO.	TIME	REMARKS
0	Soil Cover				7:30 AM	Layne Western installed 18 ft. Casing.
10	Trash	N/A	N/A	N/A		No Asbestos Observed
					12-10-09	
20	Trash				7:30 AM	Stopped at 9:30 a.m. installed 20' steel stabilizer, resumed drilling.
30		N/A	N/A	N/A		
					3:30 pm 12-11-09	
40	Trash				7:30 AM	No Asbestos Observed
50					3:30PM 12-14-09	
					12-15-09	NO Asbestos Observed
60						

AQUATERRA
ENVIRONMENTAL SOLUTIONS, INC.
Kansas City-Jefferson City-Omaha-St. Louis

PROJECT NAME: LCS-4B CQA Installation
HOLE NO.: LCS-4B

Aquaterra Drilling Log

HOLE NO. LCS4B | SHEET OF SHEETS

PROJECT NAME: LCS-4B CQA | INSPECTOR: RANDY Homburg

DEPTH	DESCRIPTION OF MATERIALS	FIELD SCREENING RESULTS	GEOTECH SAMPLE RESULTS	ANALYTICAL SAMPLE NO.	TIME	REMARKS
60	Trash				0730	NO Asbestos Observed
					0830	
					12/16/09	
					0730	
70	Trash					NO Asbestos Observed
80						
					1500	
					12/17/09	
90					0730	
100	Trash					No Asbestos Observed
110						
120					1500	

AQUATERRA ENVIRONMENTAL SOLUTIONS, INC.

PROJECT NAME: LCS-4B CQA Installation | HOLE NO.: LCS-4B

Aquaterra Drilling Log

HOLE NO. LCS-4B | SHEET OF SHEETS

PROJECT NAME: LCS-4B CQA Installation | INSPECTOR: RANDY Homburg / Robert th Hill

DEPTH	DESCRIPTION OF MATERIALS	FIELD SCREENING RESULTS	GEOTECH SAMPLE RESULTS	ANALYTICAL SAMPLE NO.	TIME	REMARKS
120					12/21/09 (0700 AM)	No Asbestos Observed
130	Trash					Lost 10 feet due to trash collasping into hole over the weekend).
140					(1600 PM) 12/22/09 (0700 AM)	No Asbestos Observed
150	Trash				(1500 PM) 12/30/09 (0730 AM)	No work done on 12/23/09 due to rain Mob on 12/28/09. 12/28/09 Water and soap added to hole to get drill bit out to replace. No vertical depth gained.
160	Trash					12/29/09 Layne fished out detached drill bit assembly. Trash collasped back into hole. Back to 157' bgs.
170						
180						

AQUATERRA ENVIRONMENTAL SOLUTIONS, INC.

PROJECT NAME: LCS-4B CQA Installation | HOLE NO. LCS-4B

Aquaterra Drilling Log

HOLE NO. LCS-4B | SHEET OF SHEETS

PROJECT NAME: LCS-4B CQA Installation | INSPECTOR: Robert Hill II

DEPTH	DESCRIPTION OF MATERIALS	FIELD SCREENING RESULTS	GEOTECH SAMPLE RESULTS	ANALYTICAL SAMPLE NO.	TIME	REMARKS
180					12/30/09	
						No Asbestos Observed
190	Trash					
200						
					(1530 pm)	(207' TD)
					12/31/09	
210					(0730 am)	
						No Asbestos Observed
220	Trash					
230					(1:30 pm)	(232' TD)
					(01/04/09 9:30 AM	
	Trash					
240					0	

AQUATERRA ENVIRONMENTAL SOLUTIONS, INC.

PROJECT NAME: LCS-4B CQA Installation | HOLE NO.: LCS-4B

Aquaterra Drilling Log

HOLE NO. LCS-4B | SHEET OF SHEETS

PROJECT NAME: LCS-4B CQA Installation | INSPECTOR: Robert H. Hill II

DEPTH	DESCRIPTION OF MATERIALS	FIELD SCREENING RESULTS	GEOTECH SAMPLE RESULTS	ANALYTICAL SAMPLE NO.	TIME	REMARKS
240						No Asbestos Observed
250						
	Trash					Drill Rig Delay due to frigid temperatures. Started drilling shortly after 9:00 am.
260						
270					(3:30 pm) (01/05/10) (01/11/10)	No progress. Compressor/ battery problems. Rig started then stopped again due to bad starter. (No depth gained)
280	Trash					
290						
	Trash				(01/12/10)	TD = 297'
300						

AQUATERRA ENVIRONMENTAL SOLUTIONS, INC. | PROJECT NAME: LCS-4B CQA Installation | HOLE NO.: LCS-4B

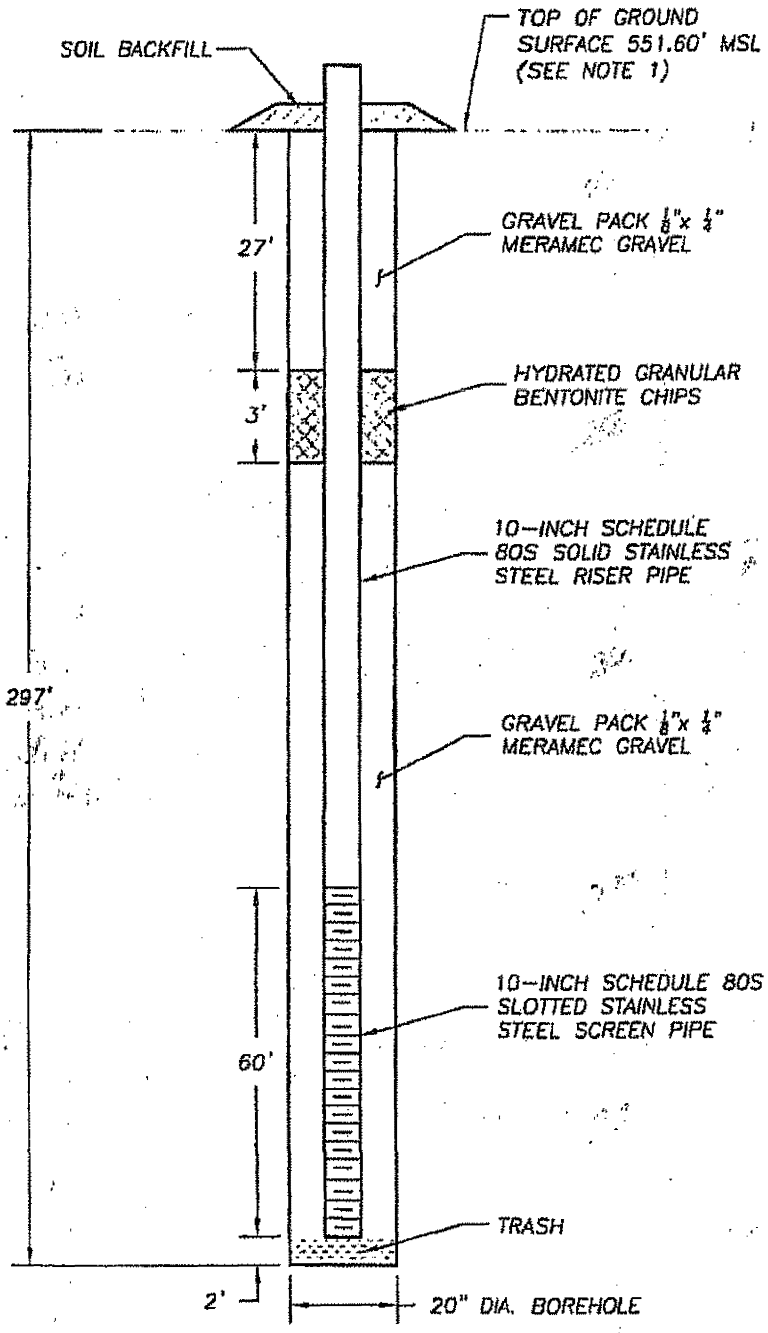

NOTES:

1. SURVEY DATA BASED ON 2/10/10 TOPOGRAPHICAL SURVEY DATA BY SHERBUT-CARSON-CLAXTON, LLC.
2. THE WELL PIPE IS SCREENED FROM THE BOTTOM OF WELL TO ELEVATION 316.60' MSL.

AQUATERRA
ENVIRONMENTAL SOLUTIONS, INC.
13 Executive Drive, Suite 1
Fairview Heights, Illinois 62208

AS-BUILT DETAIL
LEACHATE COLLECTION SUMP 4B INSTALLATION CQA
BRIDGETON LANDFILL, LLC
BRIDGETON, MISSOURI

Project Mgr. RHH	Drawn By RLH	Designed By TKJ	Project No. 3737.10
NOT TO SCALE	Date 01/22/10	File Name 3737.10 LCS-4B Detail.dwg	Figure No. 1

Aquaterra Drilling Log

HOLE NO. LCS-5A | SHEET 1 OF 2 SHEETS

PROJECT NAME: Leachate Collection Sump Drilling CQA	DRILLING SUBCONTRACTOR: Layne Western
PROJECT NUMBER: 1688.10	NAME OF DRILLER(S): Craig Scoby
LOCATION: Bridgeton Landfill, LLC	MANUFACTURER'S DESIGNATION OF DRILL: T685W Rotadrill
HOLE LOCATION: GEW-85A	SIZES AND TYPES OF DRILLING AND SAMPLING EQUIPMENT: 24 inch auger; 20 inch rotary
SURFACE ELEVATION: -	20 inch
OVERBURDEN THICKNESS: —	DRILLING START DATE: 9/28/05 — DRILLING END DATE: 10/7/05
DEPTH DRILLED INTO ROCK: —	DEPTH GROUNDWATER ENCOUNTERED: —
TOTAL DEPTH OF HOLE: 295 ft	DEPTH TO WATER AND ELAPSED TIME AFTER DRILLING COMPLETED: —

GEOTECHNICAL SAMPLES (TOTAL)	DISTURBED	UNDISTURBED	TOTAL NUMBER OF CORE BOXES
—	—	—	—

SAMPLES FOR CHEMICAL ANALYSIS (TOTAL)	(SPECIFY)	(SPECIFY)	(SPECIFY)	(SPECIFY)	(SPECIFY)	TOTAL CORE RECOVERY
—	—	—	—	—	—	—

DISPOSITION OF HOLE	BACKFILLED	MONITORING WELL	OTHER (SPEICFY)	SIGNATURE OF INSPECTOR
—	—	—	—	Nathan Hoffman

DEPTH	DESCRIPTION OF MATERIALS	FIELD SCREENING RESULTS	GEOTECH SAMPLE RESULTS	ANALYTICAL SAMPLE NO.	TIME	REMARKS
0	± 3.5 ft of soil				800	Drilling began on 9/28/05
10	trash					
20	Pipe installed				1000	
30					1400	Drilling stopped 9/28/05
40						Drilling started 9/29/05
50	trash				1400	
60						
70						Drilling stopped 9/29/05
80	Trash				1000	Layne resum drilling 9/30/05
90						
100					1300	Drilling stopped in study at 100ft
110	Trash					Resum drilling on 10/3/05
120						

AQUATERRA ENVIRONMENTAL SOLUTIONS, INC.

PROJECT NAME: LCS Drilling CQA | HOLE NO.: LCS-5A

Aquaterra Drilling Log

HOLE NO. LCS-5A | SHEET 2 OF 2 SHEETS

PROJECT NAME: LCS Drilling CQA | INSPECTOR: Nathan Higgerson

DEPTH	DESCRIPTION OF MATERIALS	FIELD SCREENING RESULTS	GEOTECH SAMPLE RESULTS	ANALYTICAL SAMPLE NO.	TIME	REMARKS
120						
130	Trash				930	
140						
150					1230	
160						
170	Trash				1430	
180						
190						
200					1715	Drilling stopped for M/T at approximately 200 ft
210						Drilling resumed on 10/4/05
220	Trash					
230						
240	Trash					
250						Drilling stopped for M/T @ 250 ft
						Drilling resumes 10/5/05
260						
270	trash/sludge					
						Drilling stopped for M/T @ 277 ft
280					800	Drilling resumed 10/7/05
290	trash					
						Drilling stopped on 10/7/05 at approximately 295 ft.
300	End of boring at 295 ft					No visible contaminating materials observed

AQUATERRA ENVIRONMENTAL SOLUTIONS, INC.

PROJECT NAME: LCS Drilling CQA | HOLE NO.: LCS-5A

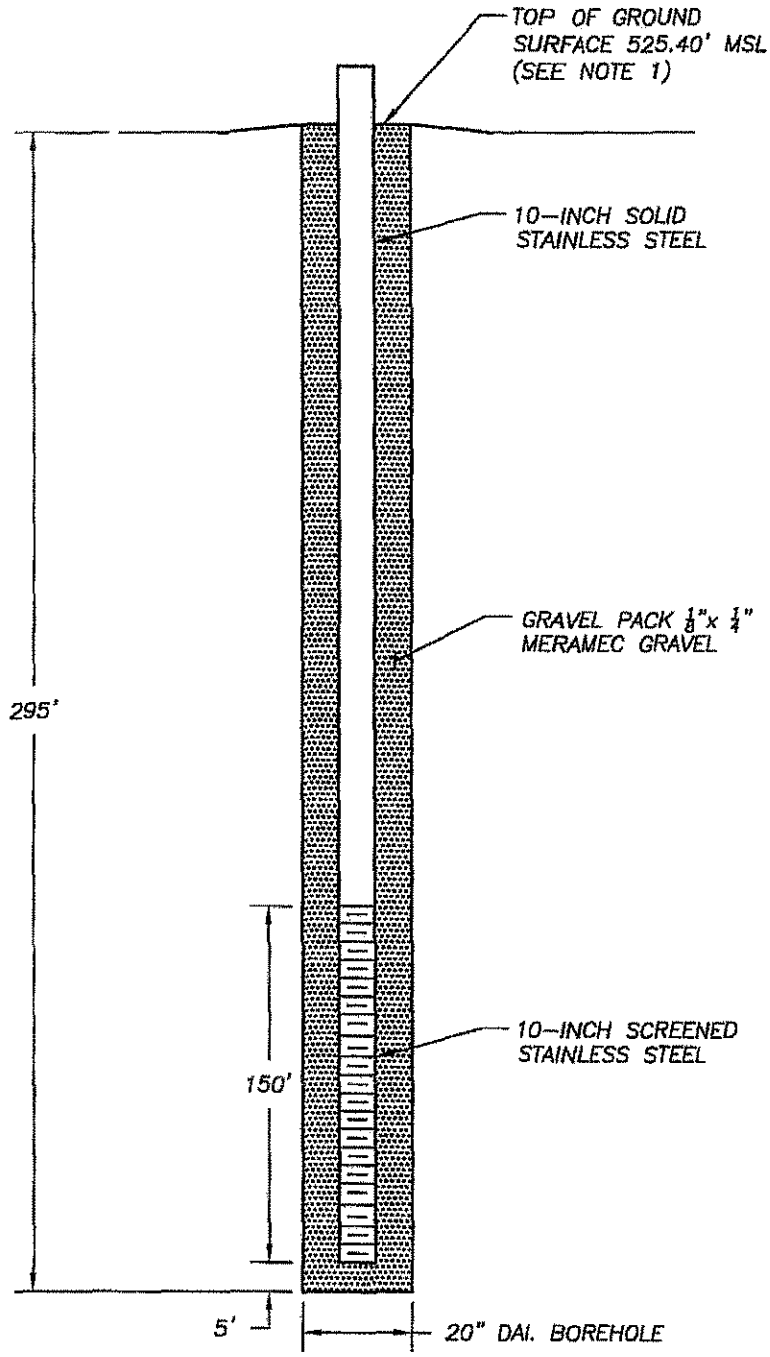

NOTES:

1. SURVEY DATA BASED ON NOVEMBER 24, 2005 TOPOGRAPHICAL SURVEY DATA BY SHERBUT-CARSON & ASSOCIATES, P.C.

AQUATERRA
ENVIRONMENTAL SOLUTIONS, INC.
141 Market Place Drive
Fairview Heights, Illinois 62208

AS-BUILT DETAIL
LEACHATE COLLECTION SUMP 5A
BRIDGETON LANDFILL, LLC
BRIDGETON, MISSOURI

Project Mgr. MSB	Drawn By WS	Designed By NLH	Project No. 1688.10
NOT TO SCALE	Date 11/21/05	File Name LCS-5A DETAIL.dwg	Figure No. 1

Aquaterra Drilling Log

HOLE NO. LCS-6A | SHEET 1 OF 1 SHEETS

PROJECT NAME: Leachate Collection Sump Drilling CQA
PROJECT NUMBER: 1688.10
LOCATION: Bridgeton Landfill, LLC
HOLE LOCATION: GEW-6A
SURFACE ELEVATION:
OVERBURDEN THICKNESS: —
DEPTH DRILLED INTO ROCK: —
TOTAL DEPTH OF HOLE: 85 ft

DRILLING SUBCONTRACTOR: Layne Western
NAME OF DRILLER(S): Craig Scoohy
MANUFACTURER'S DESIGNATION OF DRILL: T685W Rotadrill
SIZES AND TYPES OF DRILLING AND SAMPLING EQUIPMENT: 28 inch auger; 20 inch rotary; 28 inch
DRILLING START DATE: 9/21/05
DRILLING END DATE: 9/23/05
DEPTH GROUNDWATER ENCOUNTERED: —
DEPTH TO WATER AND ELAPSED TIME AFTER DRILLING COMPLETED: —

GEOTECHNICAL SAMPLES (TOTAL)	DISTURBED	UNDISTURBED	TOTAL NUMBER OF CORE BOXES
—	—	—	—

SAMPLES FOR CHEMICAL ANALYSIS (TOTAL)	(SPECIFY)	(SPECIFY)	(SPECIFY)	(SPECIFY)	(SPECIFY)	TOTAL CORE RECOVERY
—	—	—	—	—	—	—

DISPOSITION OF HOLE	BACKFILLED	MONITORING WELL	OTHER (SPEICFY)	SIGNATURE OF INSPECTOR
—	—	—	—	

DEPTH	DESCRIPTION OF MATERIALS	FIELD SCREENING RESULTS	GEOTECH SAMPLE RESULTS	ANALYTICAL SAMPLE NO.	TIME	REMARKS
0	3.5 ft of soil					Drilling begins on 9/21/05 and stopped at 9.5 ft. Drilling resumes on 9/22/05
10	Trash					
20					1130	Drilling stopped at 20 ft to set the BOP stack
	Trash				810	Drilling resumes on 9/23/05
30					930	
40						
50	Trash				1230	
60						
70						
80	Trash some rock cuttings (limestone/shale)				1430	Drilling stopped on 9/23/05 at bedrock at 85 ft approximately
90	End of boring at 85 ft					No asbestos containing materials were observed
100						
110						
120						

AQUATERRA ENVIRONMENTAL SOLUTIONS, INC.

PROJECT NAME: LCS Drilling CQA
HOLE NO.: LCS-6A

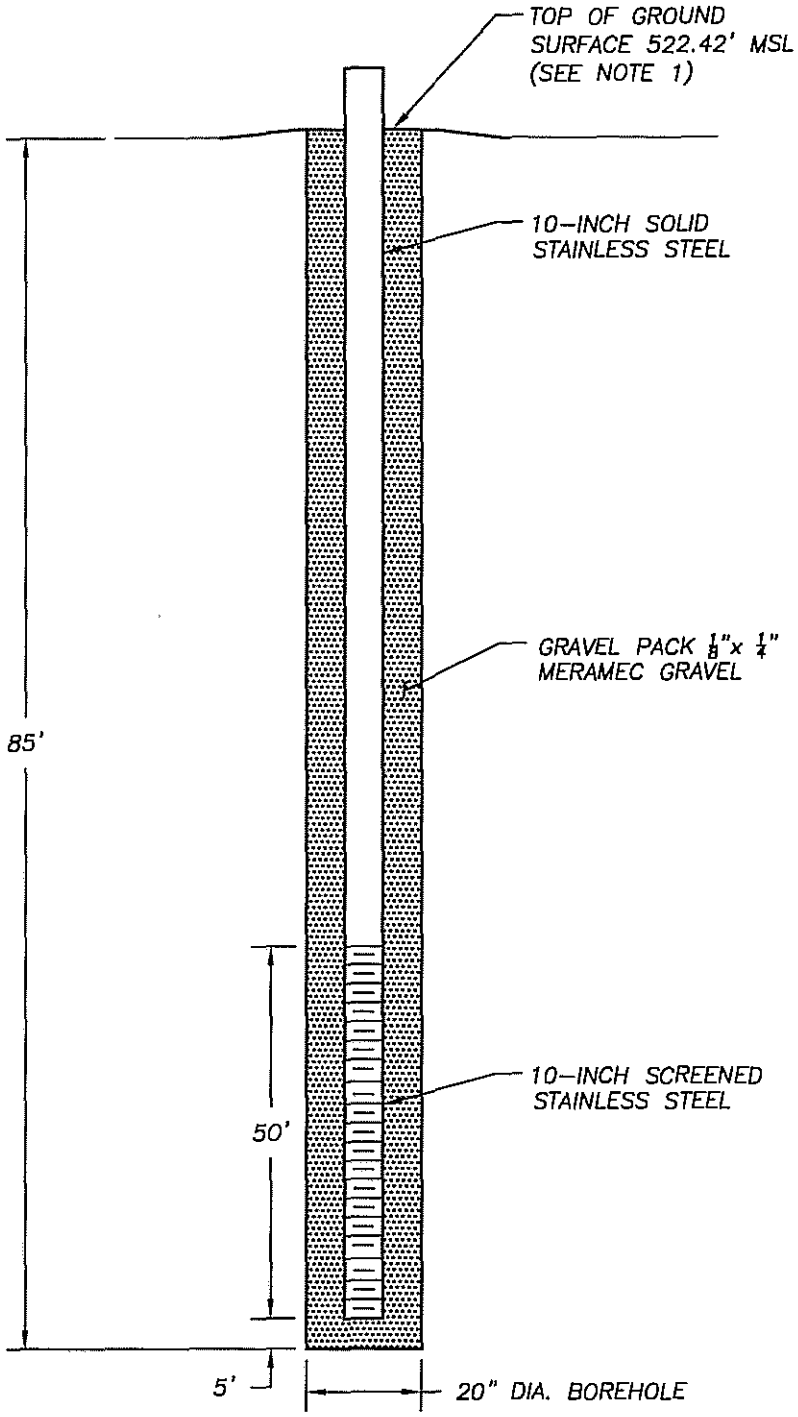

NOTES:

1. SURVEY DATA BASED ON NOVEMBER 24, 2005 TOPOGRAPHICAL SURVEY DATA BY SHERBUT-CARSON & ASSOCIATES, P.C.

AQUATERRA
ENVIRONMENTAL SOLUTIONS, INC.
141 Market Place Drive
Fairview Heights, Illinois 62208

AS-BUILT DETAIL
LEACHATE COLLECTION SUMP 6A
BRIDGETON LANDFILL, LLC
BRIDGETON, MISSOURI

Project Mgr. MSB	Drawn By WS	Designed By NLH	Project No. 1688.10
NOT TO SCALE	Date 11/21/05	File Name LCS-6A DETAIL.dwg	Figure No. 1

K:\Allied Waste\Bridgeton\1688.10 - LCS-5A and 6A CQA\LCS-6A DETAIL.dwg December 7, 2005 3:59:33 pm (fed)

WELL COMPLETION RECORD

PROJECT Bridgeton Landfill LOCATION Bridgeton Mo

WELL NUMBER LCS 6 Piezometer DATE INSTALLED 12-9-09

REPRESENTATIVE _____ DRILLER Rusty

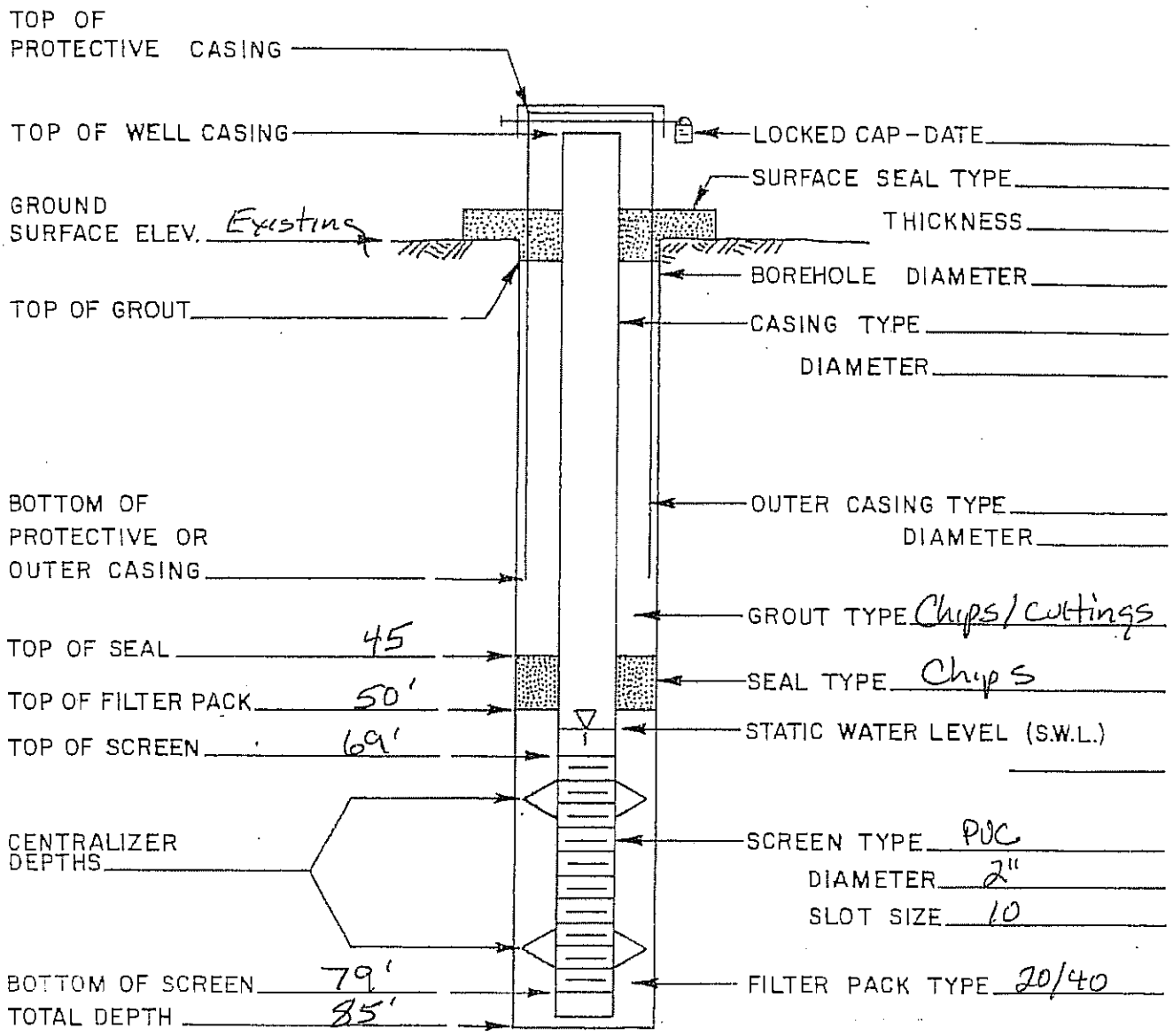

COMMENTS 2" Piezometer for water levels @ LCS-6a location

REPRESENTATIVE SIGNATURE _____ DATE _____

Layne

Bridgeton LF Location of LCS 6A Completed on December 18, 2009

Points 1000-1001 Are the existing ground and top of casing of old LCS 6A for check
Points 2000-2001 Are the new LCS 6A (There was a newly drilled hole and a 2" PVC that was tagged fo

	NORTH	EAST	EX. ELEV	DECRIPTION
1000	1068722	516493.4	517.461	LCS 6A at Ground
1001	1068723	516493.3	522.254	LCS 6A at Top of Casing
2000	1068698	516506.5	518.629	LCS 6A at Top of Casing
2001	1068698	516506.6	515.985	LCS 6A at Top of Ground

from Sherbut - Carson Surveyors

Aquaterra Drilling Log

HOLE NO. | SHEET 1 OF SHEETS

PROJECT NAME LCS-6B	DRILLING SUBCONTRACTOR Layne Western Company, Inc.
PROJECT NUMBER 4352.10	NAME OF DRILLER(S) Rusty Bowls, Dave Jones, Terry Jones
LOCATION Bridgeton, Missouri	MANUFACTURER'S DESIGNATION OF DRILL Atlas-Copco T3W Rotary Drill
HOLE LOCATION 30 feet north of LCS-6A on east side of landfill	SIZES AND TYPES OF DRILLING AND SAMPLING EQUIPMENT 20" bit; John Deere 310D Rubber tired backhoe; Layne Western Peterbuilt Tender Truck
SURFACE ELEVATION 515.022	
OVERBURDEN THICKNESS N/A	DRILLING START DATE 10/25/10 — DRILLING END DATE 11/3/10
DEPTH DRILLED INTO ROCK N/A	DEPTH GROUNDWATER ENCOUNTERED N/A
TOTAL DEPTH OF HOLE 87 feet	DEPTH TO WATER AND ELAPSED TIME AFTER DRILLING COMPLETED

GEOTECHNICAL SAMPLES (TOTAL)	DISTURBED	UNDISTURBED	TOTAL NUMBER OF CORE BOXES
N/A	N/A	N/A	N/A

SAMPLES FOR CHEMICAL ANALYSIS (TOTAL) N/A	(SPECIFY)	(SPECIFY)	(SPECIFY)	(SPECIFY)	(SPECIFY)	TOTAL CORE RECOVERY
	N/A	N/A	N/A	N/A	N/A	N/A

DISPOSITION OF HOLE	BACKFILLED	MONITORING WELL	OTHER (SPEICFY)	SIGNATURE OF INSPECTOR
Leachate Collection Sump	N/A	N/A	N/A	

DEPTH	DESCRIPTION OF MATERIALS	FIELD SCREENING RESULTS	GEOTECH SAMPLE RESULTS	ANALYTICAL SAMPLE NO.	TIME	REMARKS
	Soil Cover 3 ft				10/25/2010 7:00 AM	
	Waste					No asbestos observed
20 ft					3:30 PM 10/25/2010	
	Waste				7:00 AM	Off site at 1:50 pm due to wind No asbestos observed
29 ft					1:50 PM 10/26/2010	
	Waste				7:30 AM	
45 ft					3:30 PM 10/27/2010	
	Waste				7:00 AM	Stopped drilling due to leaking rubber gasket. No asbestos observed
52 ft					10:10am 10/28/2010	
	Saturated Waste				7:00 AM	Resumed drilling on 11/1/2010

AQUATERRA
ENVIRONMENTAL SOLUTIONS, INC.

PROJECT NAME LCS-6B CQA Installation

HOLE NO. LCS-6B

Aquaterra Drilling Log

HOLE NO. LCS-6B | SHEET OF SHEETS

ECT NAME LCS-6B CQA | INSPECTOR

DEPTH	DESCRIPTION OF MATERIALS	FIELD SCREENING RESULTS	GEOTECH SAMPLE RESULTS	ANALYTICAL SAMPLE NO.	TIME	REMARKS
	Waste				1:10pm 11/1/2010	No asbestos observed
	87 ft					

AQUATERRA
ENVIRONMENTAL SOLUTIONS, INC.

PROJECT NAME LCS-6B CQA Installation

HOLE NO. LCS6-B

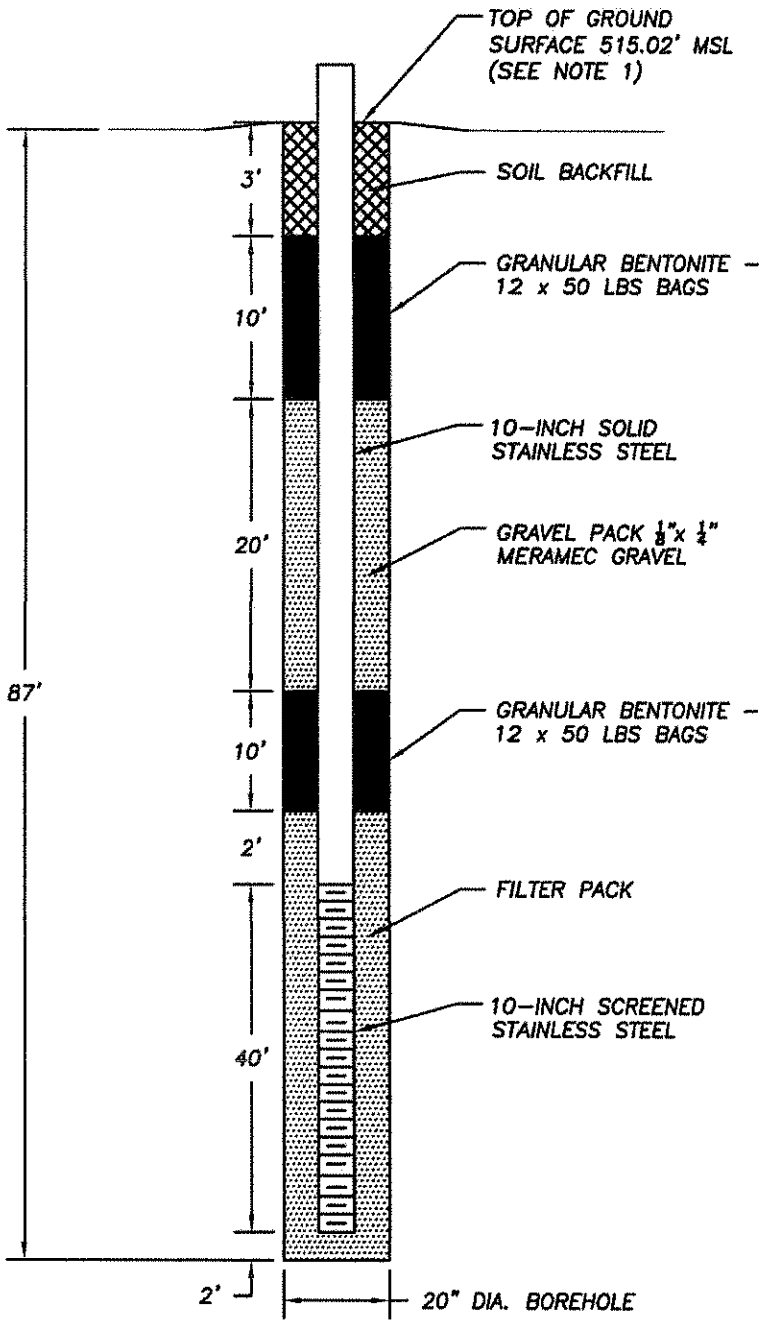

NOTES:

1. SURVEY DATA BASED ON JANUARY 5, 2011 SURVEY DATA PROVIDED BY SHERBUT–CARSON & ASSOCIATES, P.C.

AQUATERRA
ENVIRONMENTAL SOLUTIONS, INC.
141 Market Place Drive
Fairview Heights, Illinois 62208

AS–BUILT DETAIL
LEACHATE COLLECTION SUMP 6B
BRIDGETON LANDFILL, LLC
BRIDGETON, MISSOURI

Project Mgr. CR	Drawn By RLH	Designed By RHH	Project No. 1688.10
NOT TO SCALE	Date 01/04/10	File Name LCS–6B DETAIL.dwg	Figure No. 1

TEMPERATURE MONITORING PROBES

AQUATERRA

Environmental Solutions, Inc.
7311 W. 130th St, Overland Park, KS 66213

LOG OF BORING NO.: **TMP-1**

138 Feet

CLIENT:	Bridgeton Landfill, LLC
PROJECT NAME:	Temperature Monitoring Probe
PROJECT NUMBER:	5582.1
PROJECT LOCATION:	Bridgeton, Missouri
BORING LOCATION:	North Slope
AES PROJECT NO:	5582.1
AES GEOLOGIST:	ROBERT H. HILL II
START DATE:	11/07/12
FINISH DATE:	11/07/12
START TIME:	06:50 a.m.
FINISH TIME:	10:00 a.m.

DRILLING CONTRACTOR:	Frontz Drilling
DRILLER:	Kris Lauer
DRILLING RIG:	Versa-Sonic Drill Rig
DRILLING METHOD:	Sonic Rotary
SAMPLING METHOD:	N/A
BORING DIAMETER:	4 in.
WELL DIAMETER:	3 7/8 inch
WELL COMPLETION:	N/A
SURFACE ELEVATION:	469.00
TOC ELEVATION:	N/A
WATER LEVEL:	N/A
WATER ELEVATION:	N/A
DATE:	11/07/2012

WELL CONSTRUCTION DETAILS

MATERIAL:	Steel
DIAMETER:	4 In.
WELL TOTAL DEPTH:	138 ft. BGS
SCREEN LENGTH:	N/A
RISER LENGTH:	N/A
TOP OF SCREEN:	N/A
BOTTOM OF SCREEN:	N/A
SCREEN SLOT:	N/A
TOP OF FILTER PACK:	N/A
TOP OF SEAL:	N/A
TYPE OF SEAL:	Cement Bentonite Grout
TYPE OF FILTER PACK:	N/A

SAMPLE TYPE	SAMPLE DEPTH	Temp °F	PID (PPM)	RECOVERY (FT)	DEPTH IN FEET	USCS CLASS	C I	SOIL DESCRIPTION AND DRILLING CONDITIONS	NOTES AND WELL CONSTRUCTION
					1			Soil Cover	(40 Sch. CPVC Conduit)
					2				
					3				
					4				
					5				
					6				
					7				
					8				
					9				
					10				
		N/A			11			Municipal Solid Waste	Cement Bentonite Grout
		N/A			12				
		N/A			13				
		N/A			14				
		N/A			15				
		N/A			16				
		N/A			17				
		N/A			18				
		N/A			19				
		N/A			20				

LEGEND:

SS - Split Spoon
CS - 5 foot CME Sampler
ST - Shelby Tube
PID - Photoionization Detector
PP - Pocket Penetrometer
HSA - Hollow Stem Augers
HA - Hand Auger
WB - Wash Bore
RB - Rock Bit
NX - Rock Core

THE STRATIFICATION LINES REPRESENT APPROXIMATE BOUNDARY LINES BETWEEN SOIL AND ROCK TYPES: ACTUAL TRANSITIONS MAY BE GRADUAL.

AQUATERRA **Environmental Solutions, Inc.** 7311 W. 130th St, Overland Park, KS 66213	LOG OF BORING NO.: **TMP-1**	SHEET NUMBER 2 of 6
CLIENT: Bridgeton Landfill, LLC	GEOLOGIST: Robert H. Hill II	
PROJECT NAME: Temperature Monitoring Probe	DATE: 11/07/2012	
	PROJECT NUMBER: 5582.10	

SAMPLER TYPE	SAMPLE DEPTH	Temp °F	PID (PPM)	RECOVERY (FT)	DEPTH IN FEET	USCS CLASS	C I	SOIL DESCRIPTION AND DRILLING CONDITIONS	NOTES:
		N/A			21				Thermocouple Probe
		N/A			22				
		N/A			23				
		N/A			24				
		N/A			25				
		N/A			26				
		N/A			27				
		N/A			28				
		N/A			29				
		N/A			30				
		N/A			31				
		N/A			32				
		N/A			33			Municipal Solid Waste	
		N/A			34				Cement Bentonite Grout
		N/A			35				
		N/A			36				(Abrasive Sheath)
		N/A			37				
		N/A			38				Thermocouple Probe
		N/A			39				
		N/A			40				
		N/A			41				
		N/A			42				
		N/A			43				
		N/A			44				
		N/A			45				

LEGEND:

SS - Split Spoon
CS - 5 foot CME Sampler
ST - Shelby Tube

PID - Photoionization Detector
PP - Pocket Penetrometer
HSA - Hollow Stem Augers

HA - Hand Auger
WB - Wash Bore
RB - Rock Bit
NX - Rock Core

THE STRATIFICATION LINES REPRESENT APPROXIMATE BOUNDARY LINES BETWEEN SOIL AND ROCK TYPES: ACTUAL TRANSITIONS MAY BE GRADUAL.

AQUATERRA **Environmental Solutions, Inc.** 7311 W. 130th St, Overland Park, KS 66213	LOG OF BORING NO.: **TMP-1**	SHEET NUMBER 3 of 6
CLIENT: Bridgeton Landfill, LLC	GEOLOGIST: Robert H. Hill II	
PROJECT NAME: Temperature Monitoring Probe	DATE: 11/07/2012	
	PROJECT NUMBER: 5582.10	

SAMPLER TYPE	SAMPLE DEPTH	Temp °F	PID (PPM)	RECOVERY (FT)	DEPTH IN FEET	USCS CLASS	C I	SOIL DESCRIPTION AND DRILLING CONDITIONS	NOTES:
		N/A			46			Municipal Solid Waste	(Abrasive Sheath) Thermocouple Probe
		N/A			47				
		N/A			48				
		N/A			49				
		N/A			50				
		N/A			51				
		N/A			52				
		N/A			53				
		N/A			54				
		N/A			55				
		N/A			56				
		N/A			57				
		N/A			58				
		N/A			59				
		N/A			60				
		N/A			61				
		N/A			62				
		N/A			63				
		N/A			64				
		N/A			65				
		N/A			66				
		N/A			67				
		N/A			68				
		N/A			69				
		N/A			70				

LEGEND:

SS - Split Spoon
CS - 5 foot CME Sampler
ST - Shelby Tube
PID - Photoionization Detector
PP - Pocket Penetrometer
HSA - Hollow Stem Augers
HA - Hand Auger
WB - Wash Bore
RB - Rock Bit
NX - Rock Core

THE STRATIFICATION LINES REPRESENT APPROXIMATE BOUNDARY LINES BETWEEN SOIL AND ROCK TYPES: ACTUAL TRANSITIONS MAY BE GRADUAL.

AQUATERRA **Environmental Solutions, Inc.** 7311 W. 130th St, Overland Park, KS 66213	LOG OF BORING NO.: **TMP-1**	SHEET NUMBER 4 of 6
CLIENT: Bridgeton Landfill, LLC	GEOLOGIST: Robert H. Hill II	
PROJECT NAME: Temperature Monitoring Probe	DATE: 11/07/2012	
	PROJECT NUMBER: N/A	

SAMPLER TYPE	SAMPLE DEPTH	Temp °F	PID (PPM)	RECOVERY (FT)	DEPTH IN FEET	USCS CLASS	C I	SOIL DESCRIPTION AND DRILLING CONDITIONS	NOTES:
		N/A			71				
		N/A			72				
		N/A			73				
		N/A			74				
		N/A			75				
		N/A			76				
		N/A			77				
		N/A			78				Thermocouple Probe
		N/A			79				
		N/A			80				
		N/A			81				
		N/A			82				
		N/A			83			Municipal Solid Waste	(Abrasive Sheath)
		N/A			84				
		N/A			85				
		N/A			86				
		N/A			87				
		N/A			88				
		N/A			89				
		N/A			90				
		N/A			91				
		N/A			92				
		N/A			93				
		N/A			94				
		N/A			95				

LEGEND:

SS - Split Spoon
CS - 5 foot CME Sampler
ST - Shelby Tube

PID - Photoionization Detector
PP - Pocket Penetrometer
HSA - Hollow Stem Augers

HA - Hand Auger
WB - Wash Bore
RB - Rock Bit
NX - Rock Core

THE STRATIFICATION LINES REPRESENT APPROXIMATE BOUNDARY LINES BETWEEN SOIL AND ROCK TYPES; ACTUAL TRANSITIONS MAY BE GRADUAL.

AQUATERRA **Environmental Solutions, Inc.** 7311 W. 130th St, Overland Park, KS 66213	LOG OF BORING NO.: **TMP-1**	SHEET NUMBER 5 of 6
CLIENT: Bridgeton Landfill, LLC	GEOLOGIST: Robert H. Hill II	
PROJECT NAME: Temperature Monitoring Probe	DATE: 11/07/2012	
	PROJECT NUMBER: N/A	

SAMPLER TYPE	SAMPLE DEPTH	Temp °F	PID (PPM)	RECOVERY (FT)	DEPTH IN FEET	USCS CLASS	C I	SOIL DESCRIPTION AND DRILLING CONDITIONS	NOTES:
		N/A			96				
		N/A			97				
		N/A			98				Thermocouple Probe
		N/A			99				
		N/A			100				
		N/A			101				
		N/A			102				
		N/A			103				
		N/A			104				
		N/A			105				
		N/A			106				
		N/A			107				
		N/A			108			Municipal Solid Waste	(Abrasive Sheath)
		N/A			109				
		N/A			110				
		N/A			111				
		N/A			112				
		N/A			113				
		N/A			114				
		N/A			115				
		N/A			116				
		N/A			117				
		N/A			118				Thermocouple Probe
		N/A			119				
		N/A			120				

LEGEND:

SS - Split Spoon
CS - 5 foot CME Sampler
ST - Shelby Tube

PID - Photoionization Detector
PP - Pocket Penetrometer
HSA - Hollow Stem Augers

HA - Hand Auger
WB - Wash Bore
RB - Rock Bit
NX - Rock Core

THE STRATIFICATION LINES REPRESENT APPROXIMATE BOUNDARY LINES BETWEEN SOIL AND ROCK TYPES: ACTUAL TRANSITIONS MAY BE GRADUAL.

AQUATERRA

Environmental Solutions, Inc.

7311 W. 130th St, Overland Park, KS 66213

LOG OF BORING NO.: **TMP-1**

SHEET NUMBER 6 of 6

CLIENT: Bridgeton Landfill, LLC

GEOLOGIST: Robert H. Hill II

PROJECT NAME: Temperature Monitoring Probe

DATE: 11/07/2012

PROJECT NUMBER: N/A

SAMPLER TYPE	SAMPLE DEPTH	Temp °F	PID (PPM)	RECOVERY (FT)	DEPTH IN FEET	USCS CLASS	C I	SOIL DESCRIPTION AND DRILLING CONDITIONS	NOTES:
		N/A			121				
		N/A			122				
		N/A			123				
		N/A			124				
		N/A			125				
		N/A			126				
		N/A			127				
		N/A			128				
		N/A			129			Municipal Solid Waste	(Abrasive Sheath)
		N/A			130				
		N/A			131				
		N/A			132				
		N/A			133				
		N/A			134				
		N/A			135				
		N/A			136				
		N/A			137				
		N/A			138				Thermocouple Probe
					139				(Quarry Bottom)
					140				
					141				
					142				
					143				
					144				
					145				

LEGEND:

SS - Split Spoon
CS - 5 foot CME Sampler
ST - Shelby Tube

PID - Photoionization Detector
PP - Pocket Penetrometer
HSA - Hollow Stem Augers

HA - Hand Auger
WB - Wash Bore
RB - Rock Bit
NX - Rock Core

THE STRATIFICATION LINES REPRESENT APPROXIMATE BOUNDARY LINES BETWEEN SOIL AND ROCK TYPES: ACTUAL TRANSITIONS MAY BE GRADUAL.

AQUATERRA

Environmental Solutions, Inc.
7311 W. 130th St, Overland Park, KS 66213

LOG OF BORING NO.: **TMP-2**

SHEET NUMBER 1 of 9

200 Feet

CLIENT:	Bridgeton Landfill, LLC
PROJECT NAME:	Temperature Monitoring Probe
PROJECT NUMBER:	5582.1
PROJECT LOCATION:	Bridgeton, Missouri
BORING LOCATION:	North Slope
AES PROJECT NO:	5582.1
AES GEOLOGIST:	ROBERT H. HILL II
START DATE:	11/07/12
FINISH DATE:	11/09/12
START TIME:	13:40 a.m.
FINISH TIME:	15:00 p.m.

DRILLING CONTRACTOR:	Frontz Drilling
DRILLER:	Kris Lauer
DRILLING RIG:	Versa-Sonic Drill Rig
DRILLING METHOD:	Sonic Rotary
SAMPLING METHOD:	N/A
BORING DIAMETER:	4 in.
WELL DIAMETER:	3 7/8 inch
WELL COMPLETION:	N/A
SURFACE ELEVATION:	491.50
TOC ELEVATION:	N/A
WATER LEVEL:	N/A
WATER ELEVATION:	N/A
DATE:	11/07/2012

WELL CONSTRUCTION DETAILS

MATERIAL:	Steel
DIAMETER:	4 In.
WELL TOTAL DEPTH:	200 ft. BGS
SCREEN LENGTH:	N/A
RISER LENGTH:	N/A
TOP OF SCREEN:	N/A
BOTTOM OF SCREEN:	N/A
SCREEN SLOT:	N/A
TOP OF FILTER PACK:	N/A
TOP OF SEAL:	N/A
TYPE OF SEAL:	Cement Bentonite Grout
TYPE OF FILTER PACK:	N/A

SAMPLE TYPE	SAMPLE DEPTH	Temp °F	PID (PPM)	RECOVERY (FT)	DEPTH IN FEET	USCS CLASS	C I	SOIL DESCRIPTION AND DRILLING CONDITIONS	NOTES AND WELL CONSTRUCTION
					1			Soil Cover	(40 Sch. CPVC Conduit)
					2				
					3				
					4				
					5				
					6				
					7				
					8				
		N/A			9			Municipal Solid Waste	Cement Bentonite Grout
		N/A			10				
		N/A			11				
		N/A			12				
		N/A			13				
		N/A			14				
		N/A			15				
		N/A			16				
		N/A			17				
		N/A			18				
		N/A			19				
		N/A			20				

LEGEND:

SS - Split Spoon
CS - 5 foot CME Sampler
ST - Shelby Tube
PID - Photoionization Detector
PP - Pocket Penetrometer
HSA - Hollow Stem Augers
HA - Hand Auger
WB - Wash Bore
RB - Rock Bit
NX - Rock Core

THE STRATIFICATION LINES REPRESENT APPROXIMATE BOUNDARY LINES BETWEEN SOIL AND ROCK TYPES: ACTUAL TRANSITIONS MAY BE GRADUAL.

AQUATERRA

Environmental Solutions, Inc.

7311 W. 130th St, Overland Park, KS 66213

LOG OF BORING NO.: **TMP-2**

SHEET NUMBER 2 of 9

GEOLOGIST: Robert H. Hill II

CLIENT: Bridgeton Landfill, LLC

DATE: 11/07/2012

PROJECT NAME: Temperature Monitoring Probe

PROJECT NUMBER: 5582.10

SAMPLER TYPE	SAMPLE DEPTH	Temp °F	PID (PPM)	RECOVERY (FT)	DEPTH IN FEET	USCS CLASS	C I	SOIL DESCRIPTION AND DRILLING CONDITIONS	NOTES:
		N/A			21				Thermocouple Probe
		N/A			22				
		N/A			23				
		N/A			24				
		N/A			25				
		N/A			26				
		N/A			27				
		N/A			28				
		N/A			29				
		N/A			30				
		N/A			31				
		N/A			32				
		N/A			33			Municipal Solid Waste	(Abrasive Sheath) Cement Bentonite Grout
		N/A			34				
		N/A			35				
		N/A			36				
		N/A			37				
		N/A			38				
		N/A			39				
		N/A			40				Thermocouple Probe
		N/A			41				
		N/A			42				
		N/A			43				
		N/A			44				
		N/A			45				

LEGEND:

SS - Split Spoon
CS - 5 foot CME Sampler
ST - Shelby Tube

PID - Photoionization Detector
PP - Pocket Penetrometer
HSA - Hollow Stem Augers

HA - Hand Auger
WB - Wash Bore
RB - Rock Bit
NX - Rock Core

THE STRATIFICATION LINES REPRESENT APPROXIMATE BOUNDARY LINES BETWEEN SOIL AND ROCK TYPES: ACTUAL TRANSITIONS MAY BE GRADUAL.

AQUATERRA
Environmental Solutions, Inc.
7311 W. 130th St, Overland Park, KS 66213

LOG OF BORING NO.: **TMP-2** SHEET NUMBER 3 of 9

GEOLOGIST: Robert H. Hill II

CLIENT: Bridgeton Landfill, LLC

DATE: 11/09/2012

PROJECT NAME: Temperature Monitoring Probe

PROJECT NUMBER: 5582.10

SAMPLER TYPE	SAMPLE DEPTH	Temp °F	PID (PPM)	RECOVERY (FT)	DEPTH IN FEET	USCS CLASS	C I	SOIL DESCRIPTION AND DRILLING CONDITIONS	NOTES:
		N/A			46			Municipal Solid Waste	(Abrasive Sheath) Cement Bentonite Grout
		N/A			47				
		N/A			48				
		N/A			49				
		N/A			50				
		N/A			51				
		N/A			52				
		N/A			53				
		N/A			54				
		N/A			55				
		N/A			56				
		N/A			57				
		N/A			58				
		N/A			59				
		N/A			60				Thermocouple Probe
		N/A			61				
		N/A			62				
		N/A			63				
		N/A			64				
		N/A			65				
		N/A			66				
		N/A			67				
		N/A			68				
		N/A			69				
		N/A			70				

LEGEND:

SS - Split Spoon
CS - 5 foot CME Sampler
ST - Shelby Tube
PID - Photoionization Detector
PP - Pocket Penetrometer
HSA - Hollow Stem Augers
HA - Hand Auger
WB - Wash Bore
RB - Rock Bit
NX - Rock Core

THE STRATIFICATION LINES REPRESENT APPROXIMATE BOUNDARY LINES BETWEEN SOIL AND ROCK TYPES: ACTUAL TRANSITIONS MAY BE GRADUAL.

AQUATERRA **Environmental Solutions, Inc.** 7311 W. 130th St, Overland Park, KS 66213	LOG OF BORING NO.: **TMP-2**	SHEET NUMBER 4 of 9
CLIENT: Bridgeton Landfill, LLC	GEOLOGIST: Robert H. Hill II	
PROJECT NAME: Temperature Monitoring Probe	DATE: 11/09/2012	
	PROJECT NUMBER: N/A	

SAMPLER TYPE	SAMPLE DEPTH	Temp °F	PID (PPM)	RECOVERY (FT)	DEPTH IN FEET	USCS CLASS	C I	SOIL DESCRIPTION AND DRILLING CONDITIONS	NOTES:
		N/A			71			Municipal Solid Waste	Thermocouple Probe (Abrasive Sheath) Cement Bentonite Grout
		N/A			72				
		N/A			73				
		N/A			74				
		N/A			75				
		N/A			76				
		N/A			77				
		N/A			78				
		N/A			79				
		N/A			80				
		N/A			81				
		N/A			82				
		N/A			83				
		N/A			84				
		N/A			85				
		N/A			86				
		N/A			87				
		N/A			88				
		N/A			89				
		N/A			90				
		N/A			91				
		N/A			92				
		N/A			93				
		N/A			94				
		N/A			95				

LEGEND:

SS - Split Spoon
CS - 5 foot CME Sampler
ST - Shelby Tube
PID - Photoionization Detector
PP - Pocket Penetrometer
HSA - Hollow Stem Augers
HA - Hand Auger
WB - Wash Bore
RB - Rock Bit
NX - Rock Core

THE STRATIFICATION LINES REPRESENT APPROXIMATE BOUNDARY LINES BETWEEN SOIL AND ROCK TYPES: ACTUAL TRANSITIONS MAY BE GRADUAL.

AQUATERRA

Environmental Solutions, Inc.

7311 W. 130th St, Overland Park, KS 66213

LOG OF BORING NO.: **TMP-2**

SHEET NUMBER 5 of 9

GEOLOGIST: Robert H. Hill II

CLIENT: Bridgeton Landfill, LLC

DATE: 11/09/2012

PROJECT NAME: Temperature Monitoring Probe

PROJECT NUMBER: N/A

SAMPLER TYPE	SAMPLE DEPTH	Temp °F	PID (PPM)	RECOVERY (FT)	DEPTH IN FEET	USCS CLASS	C I	SOIL DESCRIPTION AND DRILLING CONDITIONS	NOTES:
		N/A			96				
		N/A			97				
		N/A			98				
		N/A			99				
		N/A			100				Thermocouple Probe
		N/A			101				
		N/A			102				
		N/A			103				
		N/A			104				
		N/A			105				
		N/A			106				
		N/A			107				
		N/A			108			Municipal Solid Waste	(Abrasive Sheath) Cement Bentonite Grout
		N/A			109				
		N/A			110				
		N/A			111				
		N/A			112				
		N/A			113				
		N/A			114				
		N/A			115				
		N/A			116				
		N/A			117				
		N/A			118				
		N/A			119				
		N/A			120				Thermocouple Probe

LEGEND:

SS - Split Spoon
CS - 5 foot CME Sampler
ST - Shelby Tube

PID - Photoionization Detector
PP - Pocket Penetrometer
HSA - Hollow Stem Augers

HA - Hand Auger
WB - Wash Bore
RB - Rock Bit
NX - Rock Core

THE STRATIFICATION LINES REPRESENT APPROXIMATE BOUNDARY LINES BETWEEN SOIL AND ROCK TYPES: ACTUAL TRANSITIONS MAY BE GRADUAL.

AQUATERRA **Environmental Solutions, Inc.** 7311 W. 130th St, Overland Park, KS 66213	LOG OF BORING NO.: **TMP-2**	SHEET NUMBER 6 of 9
	GEOLOGIST: Robert H. Hill II	
CLIENT: Bridgeton Landfill, LLC	DATE: 11/09/2012	
PROJECT NAME: Temperature Monitoring Probe	PROJECT NUMBER: N/A	

SAMPLER TYPE	SAMPLE DEPTH	Temp °F	PID (PPM)	RECOVERY (FT)	DEPTH IN FEET	USCS CLASS	C I	SOIL DESCRIPTION AND DRILLING CONDITIONS	NOTES:
		N/A			121			Municipal Solid Waste	(Abrasive Sheath) Cement Bentonite Grout
		N/A			122				
		N/A			123				
		N/A			124				
		N/A			125				
		N/A			126				
		N/A			127				
		N/A			128				
		N/A			129				
		N/A			130				
		N/A			131				
		N/A			132				
		N/A			133				
		N/A			134				
		N/A			135				
		N/A			136				
		N/A			137				
		N/A			138				
		N/A			139				
		N/A			140				Thermocouple Probe
		N/A			141				
		N/A			142				
		N/A			143				
		N/A			144				
		N/A			145				

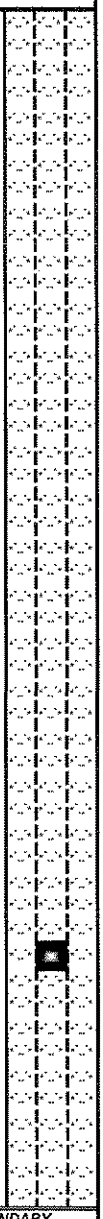

LEGEND:

SS - Split Spoon
CS - 5 foot CME Sampler
ST - Shelby Tube

PID - Photoionization Detector
PP - Pocket Penetrometer
HSA - Hollow Stem Augers

HA - Hand Auger
WB - Wash Bore
RB - Rock Bit
NX - Rock Core

THE STRATIFICATION LINES REPRESENT APPROXIMATE BOUNDARY LINES BETWEEN SOIL AND ROCK TYPES: ACTUAL TRANSITIONS MAY BE GRADUAL.

AQUATERRA

Environmental Solutions, Inc.

7311 W. 130th St, Overland Park, KS 66213

LOG OF BORING NO.: **TMP-2**

SHEET NUMBER 7 of 9

GEOLOGIST: Robert H. Hill II

CLIENT: Bridgeton Landfill, LLC

DATE: 11/09/2012

PROJECT NAME: Temperature Monitoring Probe

PROJECT NUMBER: N/A

SAMPLER TYPE	SAMPLE DEPTH	Temp °F	PID (PPM)	RECOVERY (FT)	DEPTH IN FEET	USCS CLASS	C I	SOIL DESCRIPTION AND DRILLING CONDITIONS	NOTES:
		N/A			146				
		N/A			147				
		N/A			148				
		N/A			149				
		N/A			150				
		N/A			151				
		N/A			152				
		N/A			153				
		N/A			154				
		N/A			155				
		N/A			156				
		N/A			157				
		N/A			158			**Municipal Solid Waste**	**(Abrasive Sheath) Cement Bentonite Grout**
		N/A			159				
		N/A			160				**Thermocouple Probe**
		N/A			161				
		N/A			162				
		N/A			163				
		N/A			164				
		N/A			165				
		N/A			166				
		N/A			167				
		N/A			168				
		N/A			169				
		N/A			170				

LEGEND:

SS - Split Spoon
CS - 5 foot CME Sampler
ST - Shelby Tube
PID - Photoionization Detector
PP - Pocket Penetrometer
HSA - Hollow Stem Augers
HA - Hand Auger
WB - Wash Bore
RB - Rock Bit
NX - Rock Core

THE STRATIFICATION LINES REPRESENT APPROXIMATE BOUNDARY LINES BETWEEN SOIL AND ROCK TYPES: ACTUAL TRANSITIONS MAY BE GRADUAL.

AQUATERRA

Environmental Solutions, Inc.

7311 W. 130th St, Overland Park, KS 66213

LOG OF BORING NO.: **TMP-2** SHEET NUMBER 8 of 9

GEOLOGIST: Robert H. Hill II

CLIENT: Bridgeton Landfill, LLC

DATE: 11/09/2012

PROJECT NAME: Temperature Monitoring Probe

PROJECT NUMBER: N/A

SAMPLER TYPE	SAMPLE DEPTH	Temp °F	PID (PPM)	RECOVERY (FT)	DEPTH IN FEET	USCS CLASS	C I	SOIL DESCRIPTION AND DRILLING CONDITIONS	NOTES:
		N/A			171			Municipal Solid Waste	Thermocouple Probe (Abrasive Sheath) Cement Bentonite Grout
		N/A			172				
		N/A			173				
		N/A			174				
		N/A			175				
		N/A			176				
		N/A			177				
		N/A			178				
		N/A			179				
		N/A			180				
		N/A			181				
		N/A			182				
		N/A			183				
		N/A			184				
		N/A			185				
		N/A			186				
		N/A			187				
		N/A			188				
		N/A			189				
		N/A			190				
		N/A			191				
		N/A			192				
		N/A			193				
		N/A			194				
		N/A			195				

LEGEND:

SS - Split Spoon
CS - 5 foot CME Sampler
ST - Shelby Tube
PID - Photoionization Detector
PP - Pocket Penetrometer
HSA - Hollow Stem Augers
HA - Hand Auger
WB - Wash Bore
RB - Rock Bit
NX - Rock Core

THE STRATIFICATION LINES REPRESENT APPROXIMATE BOUNDARY LINES BETWEEN SOIL AND ROCK TYPES: ACTUAL TRANSITIONS MAY BE GRADUAL.

AQUATERRA

Environmental Solutions, Inc.

7311 W. 130th St, Overland Park, KS 66213

LOG OF BORING NO.: **TMP-2**

SHEET NUMBER 9 of 9

GEOLOGIST: Robert H. Hill II

CLIENT: Bridgeton Landfill, LLC

DATE: 11/09/2012

PROJECT NAME: Temperature Monitoring Probe

PROJECT NUMBER: N/A

SAMPLER TYPE	SAMPLE DEPTH	Temp °F	PID (PPM)	RECOVERY (FT)	DEPTH IN FEET	USCS CLASS	C I	SOIL DESCRIPTION AND DRILLING CONDITIONS	NOTES:
		N/A			196			Municipal Solid Waste	(Abrasive Sheath) Cement Bentonite Grout
		N/A			197				
		N/A			198				
		N/A			199				
		N/A			200				Thermocouple Probe
									(Quarry Bottom)

LEGEND:

SS - Split Spoon
CS - 5 foot CME Sampler
ST - Shelby Tube
PID - Photoionization Detector
PP - Pocket Penetrometer
HSA - Hollow Stem Augers
HA - Hand Auger
WB - Wash Bore
RB - Rock Bit
NX - Rock Core

THE STRATIFICATION LINES REPRESENT APPROXIMATE BOUNDARY LINES BETWEEN SOIL AND ROCK TYPES: ACTUAL TRANSITIONS MAY BE GRADUAL.

AQUATERRA

Environmental Solutions, Inc.
7311 W. 130th St, Overland Park, KS 66213

LOG OF BORING NO.: **TMP-3**

250 Feet

CLIENT:	Bridgeton Landfill, LLC
PROJECT NAME:	Temperature Monitoring Probe
PROJECT NUMBER:	5582.1
PROJECT LOCATION:	Bridgeton, Missouri
BORING LOCATION:	North Slope
AES PROJECT NO:	5582.1
AES GEOLOGIST:	ROBERT H. HILL II
START DATE:	11/15/12
FINISH DATE:	11/15/12
START TIME:	07:00 a.m.
FINISH TIME:	17:00 p.m.

DRILLING CONTRACTOR:	Frontz Drilling
DRILLER:	Kris Lauer
DRILLING RIG:	Versa-Sonic Drill Rig
DRILLING METHOD:	Sonic Rotary
SAMPLING METHOD:	N/A
BORING DIAMETER:	4 in.
WELL DIAMETER:	3 7/8 inch
WELL COMPLETION:	N/A
SURFACE ELEVATION:	499.11
TOC ELEVATION:	N/A
WATER LEVEL:	N/A
WATER ELEVATION:	N/A
DATE:	11/15/2012

WELL CONSTRUCTION DETAILS

MATERIAL:	Steel
DIAMETER:	4 In.
WELL TOTAL DEPTH:	250 ft. BGS
SCREEN LENGTH:	N/A
RISER LENGTH:	N/A
TOP OF SCREEN:	N/A
BOTTOM OF SCREEN:	N/A
SCREEN SLOT:	N/A
TOP OF FILTER PACK:	N/A
TOP OF SEAL:	N/A
TYPE OF SEAL:	Cement Bentonite Grout
TYPE OF FILTER PACK:	N/A

SAMPLE TYPE	SAMPLE DEPTH	Temp °F	PID (PPM)	RECOVERY (FT)	DEPTH IN FEET	USCS CLASS	C I	SOIL DESCRIPTION AND DRILLING CONDITIONS	NOTES AND WELL CONSTRUCTION
					1			Soil Cover	
					2				
					3				
					4				
					5				
		N/A			6				
		N/A			7				(40 Sch. CPVC Conduit)
		N/A			8				
		N/A			9				
		N/A			10				
		N/A			11				Cement Bentonite Grout
		N/A			12				
		N/A			13			Municipal Solid Waste	
		N/A			14				
		N/A			15				
		N/A			16				
		N/A			17				
		N/A			18				
		N/A			19				
		N/A			20				

LEGEND:

SS - Split Spoon
CS - 5 foot CME Sampler
ST - Shelby Tube
PID - Photoionization Detector
PP - Pocket Penetrometer
HSA - Hollow Stem Augers
HA - Hand Auger
WB - Wash Bore
RB - Rock Bit
NX - Rock Core

THE STRATIFICATION LINES REPRESENT APPROXIMATE BOUNDARY LINES BETWEEN SOIL AND ROCK TYPES: ACTUAL TRANSITIONS MAY BE GRADUAL.

AQUATERRA
Environmental Solutions, Inc.
7311 W. 130th St, Overland Park, KS 66213

LOG OF BORING NO.: **TMP-3** SHEET NUMBER 2 of 11

GEOLOGIST: Robert H. Hill II

CLIENT: Bridgeton Landfill, LLC

DATE: 11/15/2012

PROJECT NAME: Temperature Monitoring Probe

PROJECT NUMBER: 5582.10

SAMPLER TYPE	SAMPLE DEPTH	Temp °F	PID (PPM)	RECOVERY (FT)	DEPTH IN FEET	USCS CLASS	C I	SOIL DESCRIPTION AND DRILLING CONDITIONS	NOTES:
		N/A			21			Municipal Solid Waste	Thermocouple Probe
		N/A			22				
		N/A			23				
		N/A			24				
		N/A			25				
		N/A			26				
		N/A			27				
		N/A			28				
		N/A			29				
		N/A			30				(Abrasive Sheath) Cement Bentonite Grout
		N/A			31				
		N/A			32				
		N/A			33				
		N/A			34				
		N/A			35				
		N/A			36				
		N/A			37				
		N/A			38				
		N/A			39				
		N/A			40				
		N/A			41				
		N/A			42				
		N/A			43				
		N/A			44				
		N/A			45				

LEGEND:

SS - Split Spoon
CS - 5 foot CME Sampler
ST - Shelby Tube
PID - Photoionization Detector
PP - Pocket Penetrometer
HSA - Hollow Stem Augers
HA - Hand Auger
WB - Wash Bore
RB - Rock Bit
NX - Rock Core

THE STRATIFICATION LINES REPRESENT APPROXIMATE BOUNDARY LINES BETWEEN SOIL AND ROCK TYPES: ACTUAL TRANSITIONS MAY BE GRADUAL.

AQUATERRA
Environmental Solutions, Inc.
7311 W. 130th St, Overland Park, KS 66213

LOG OF BORING NO.: **TMP-3** SHEET NUMBER 3 of 11

GEOLOGIST: Robert H. Hill II
CLIENT: Bridgeton Landfill, LLC
DATE: 11/15/2012
PROJECT NAME: Temperature Monitoring Probe
PROJECT NUMBER: 5582.10

SAMPLER TYPE	SAMPLE DEPTH	Temp °F	PID (PPM)	RECOVERY (FT)	DEPTH IN FEET	USCS CLASS	C I	SOIL DESCRIPTION AND DRILLING CONDITIONS	NOTES:
		N/A			46			Municipal Solid Waste	Thermocouple Probe
		N/A			47				
		N/A			48				
		N/A			49				
		N/A			50				
		N/A			51				
		N/A			52				
		N/A			53				
		N/A			54				
		N/A			55				
		N/A			56				(Abrasive Sheath) Cement Bentonite Grout
		N/A			57				
		N/A			58				
		N/A			59				
		N/A			60				
		N/A			61				
		N/A			62				
		N/A			63				
		N/A			64				
		N/A			65				
		N/A			66				
		N/A			67				
		N/A			68				
		N/A			69				
		N/A			70				Thermocouple Probe

LEGEND:
SS - Split Spoon
CS - 5 foot CME Sampler
ST - Shelby Tube
PID - Photoionization Detector
PP - Pocket Penetrometer
HSA - Hollow Stem Augers
HA - Hand Auger
WB - Wash Bore
RB - Rock Bit
NX - Rock Core

THE STRATIFICATION LINES REPRESENT APPROXIMATE BOUNDARY LINES BETWEEN SOIL AND ROCK TYPES: ACTUAL TRANSITIONS MAY BE GRADUAL.

AQUATERRA

Environmental Solutions, Inc.

7311 W. 130th St, Overland Park, KS 66213

LOG OF BORING NO.: **TMP-3**

GEOLOGIST: Robert H. Hill II

CLIENT: Bridgeton Landfill, LLC

DATE: 11/15/2012

PROJECT NAME: Temperature Monitoring Probe

PROJECT NUMBER: N/A

SAMPLER TYPE	SAMPLE DEPTH	Temp °F	PID (PPM)	RECOVERY (FT)	DEPTH IN FEET	USCS CLASS	C I	SOIL DESCRIPTION AND DRILLING CONDITIONS	NOTES:
		N/A			71			Municipal Solid Waste	(Abrasive Sheath) Cement Bentonite Grout
		N/A			72				
		N/A			73				
		N/A			74				
		N/A			75				
		N/A			76				
		N/A			77				
		N/A			78				
		N/A			79				
		N/A			80				
		N/A			81				
		N/A			82				
		N/A			83				
		N/A			84				
		N/A			85				
		N/A			86				
		N/A			87				
		N/A			88				
		N/A			89				
		N/A			90				Thermocouple Probe
		N/A			91				
		N/A			92				
		N/A			93				
		N/A			94				
		N/A			95				

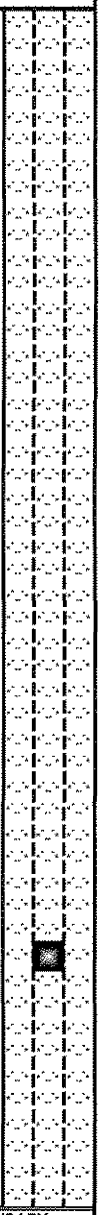

LEGEND:

SS - Split Spoon
CS - 5 foot CME Sampler
ST - Shelby Tube
PID - Photoionization Detector
PP - Pocket Penetrometer
HSA - Hollow Stem Augers
HA - Hand Auger
WB - Wash Bore
RB - Rock Bit
NX - Rock Core

THE STRATIFICATION LINES REPRESENT APPROXIMATE BOUNDARY LINES BETWEEN SOIL AND ROCK TYPES: ACTUAL TRANSITIONS MAY BE GRADUAL.

AQUATERRA

Environmental Solutions, Inc.

7311 W. 130th St, Overland Park, KS 66213

LOG OF BORING NO.: **TMP-3**

SHEET NUMBER 5 of 11

GEOLOGIST: Robert H. Hill II

CLIENT: Bridgeton Landfill, LLC

DATE: 11/15/2012

PROJECT NAME: Temperature Monitoring Probe

PROJECT NUMBER: N/A

SAMPLER TYPE	SAMPLE DEPTH	Temp °F	PID (PPM)	RECOVERY (FT)	DEPTH IN FEET	USCS CLASS	C I	SOIL DESCRIPTION AND DRILLING CONDITIONS	NOTES:
		N/A			96			Municipal Solid Waste	(Abrasive Sheath) Cement Bentonite Grout
		N/A			97				
		N/A			98				
		N/A			99				
		N/A			100				
		N/A			101				
		N/A			102				
		N/A			103				
		N/A			104				
		N/A			105				
		N/A			106				
		N/A			107				
		N/A			108				
		N/A			109				
		N/A			110				Thermocouple Probe
		N/A			111				
		N/A			112				
		N/A			113				
		N/A			114				
		N/A			115				
		N/A			116				
		N/A			117				
		N/A			118				
		N/A			119				
		N/A			120				

LEGEND:

SS - Split Spoon
CS - 5 foot CME Sampler
ST - Shelby Tube
PID - Photoionization Detector
PP - Pocket Penetrometer
HSA - Hollow Stem Augers
HA - Hand Auger
WB - Wash Bore
RB - Rock Bit
NX - Rock Core

THE STRATIFICATION LINES REPRESENT APPROXIMATE BOUNDARY LINES BETWEEN SOIL AND ROCK TYPES: ACTUAL TRANSITIONS MAY BE GRADUAL.

AQUATERRA **Environmental Solutions, Inc.** 7311 W. 130th St, Overland Park, KS 66213	LOG OF BORING NO.: **TMP-3**	SHEET NUMBER 6 of 11
	GEOLOGIST: Robert H. Hill II	
CLIENT: Bridgeton Landfill, LLC	DATE: 11/15/2012	
PROJECT NAME: Temperature Monitoring Probe	PROJECT NUMBER: N/A	

SAMPLER TYPE	SAMPLE DEPTH	Temp °F	PID (PPM)	RECOVERY (FT)	DEPTH IN FEET	USCS CLASS	C I	SOIL DESCRIPTION AND DRILLING CONDITIONS	NOTES:
		N/A			121			Municipal Solid Waste	(Abrasive Sheath) Cement Bentonite Grout Thermocouple Probe
		N/A			122				
		N/A			123				
		N/A			124				
		N/A			125				
		N/A			126				
		N/A			127				
		N/A			128				
		N/A			129				
		N/A			130				
		N/A			131				
		N/A			132				
		N/A			133				
		N/A			134				
		N/A			135				
		N/A			136				
		N/A			137				
		N/A			138				
		N/A			139				
		N/A			140				
		N/A			141				
		N/A			142				
		N/A			143				
		N/A			144				
		N/A			145				

LEGEND:

SS - Split Spoon
CS - 5 foot CME Sampler
ST - Shelby Tube
PID - Photoionization Detector
PP - Pocket Penetrometer
HSA - Hollow Stem Augers
HA - Hand Auger
WB - Wash Bore
RB - Rock Bit
NX - Rock Core

THE STRATIFICATION LINES REPRESENT APPROXIMATE BOUNDARY LINES BETWEEN SOIL AND ROCK TYPES: ACTUAL TRANSITIONS MAY BE GRADUAL.

AQUATERRA

Environmental Solutions, Inc.

7311 W. 130th St, Overland Park, KS 66213

LOG OF BORING NO.: **TMP-3**

SHEET NUMBER 7 of 11

GEOLOGIST: Robert H. Hill II

CLIENT: Bridgeton Landfill, LLC

DATE: 11/15/2012

PROJECT NAME: Temperature Monitoring Probe

PROJECT NUMBER: N/A

SAMPLER TYPE	SAMPLE DEPTH	Temp °F	PID (PPM)	RECOVERY (FT)	DEPTH IN FEET	USCS CLASS	C I	SOIL DESCRIPTION AND DRILLING CONDITIONS	NOTES:
		N/A			146			Municipal Solid Waste	Thermocouple Probe
		N/A			147				
		N/A			148				
		N/A			149				
		N/A			150				
		N/A			151				
		N/A			152				
		N/A			153				
		N/A			154				
		N/A			155				
		N/A			156				
		N/A			157				
		N/A			158				(Abrasive Sheath) Cement Bentonite Grout
		N/A			159				
		N/A			160				
		N/A			161				
		N/A			162				
		N/A			163				
		N/A			164				
		N/A			165				
		N/A			166				
		N/A			167				
		N/A			168				
		N/A			169				
		N/A			170				Thermocouple Probe

LEGEND:

SS - Split Spoon
CS - 5 foot CME Sampler
ST - Shelby Tube

PID - Photoionization Detector
PP - Pocket Penetrometer
HSA - Hollow Stem Augers

HA - Hand Auger
WB - Wash Bore
RB - Rock Bit
NX - Rock Core

THE STRATIFICATION LINES REPRESENT APPROXIMATE BOUNDARY LINES BETWEEN SOIL AND ROCK TYPES: ACTUAL TRANSITIONS MAY BE GRADUAL.

AQUATERRA

Environmental Solutions, Inc.

7311 W. 130th St, Overland Park, KS 66213

LOG OF BORING NO.: **TMP-3**

SHEET NUMBER 8 of 11

GEOLOGIST: Robert H. Hill II

CLIENT: Bridgeton Landfill, LLC

DATE: 11/15/2012

PROJECT NAME: Temperature Monitoring Probe

PROJECT NUMBER: N/A

SAMPLER TYPE	SAMPLE DEPTH	Temp °F	PID (PPM)	RECOVERY (FT)	DEPTH IN FEET	USCS CLASS	C I	SOIL DESCRIPTION AND DRILLING CONDITIONS	NOTES:
		N/A			171			Municipal Solid Waste	(Abrasive Sheath) Cement Bentonite Grout
		N/A			172				
		N/A			173				
		N/A			174				
		N/A			175				
		N/A			176				
		N/A			177				
		N/A			178				
		N/A			179				
		N/A			180				
		N/A			181				
		N/A			182				
		N/A			183				
		N/A			184				
		N/A			185				
		N/A			186				
		N/A			187				
		N/A			188				
		N/A			189				
		N/A			190				Thermocouple Probe
		N/A			191				
		N/A			192				
		N/A			193				
		N/A			194				
		N/A			195				

LEGEND:

SS - Split Spoon
CS - 5 foot CME Sampler
ST - Shelby Tube
PID - Photoionization Detector
PP - Pocket Penetrometer
HSA - Hollow Stem Augers
HA - Hand Auger
WB - Wash Bore
RB - Rock Bit
NX - Rock Core

THE STRATIFICATION LINES REPRESENT APPROXIMATE BOUNDARY LINES BETWEEN SOIL AND ROCK TYPES: ACTUAL TRANSITIONS MAY BE GRADUAL.

AQUATERRA

Environmental Solutions, Inc.

7311 W. 130th St, Overland Park, KS 66213

LOG OF BORING NO.: **TMP-3**

SHEET NUMBER 9 of 11

GEOLOGIST: Robert H. Hill II

CLIENT: Bridgeton Landfill, LLC

DATE: 11/15/2012

PROJECT NAME: Temperature Monitoring Probe

PROJECT NUMBER: N/A

SAMPLER TYPE	SAMPLE DEPTH	Temp °F	PID (PPM)	RECOVERY (FT)	DEPTH IN FEET	USCS CLASS	C I	SOIL DESCRIPTION AND DRILLING CONDITIONS	NOTES:
		N/A			196			Municipal Solid Waste	(Abrasive Sheath) Cement Bentonite Grout
		N/A			197				
		N/A			198				
		N/A			199				
		N/A			200				
		N/A			201				
		N/A			202				
		N/A			203				
		N/A			204				
		N/A			205				
		N/A			206				
		N/A			207				
		N/A			208				
		N/A			209				
		N/A			210				Thermocouple Probe
		N/A			211				
		N/A			212				
		N/A			213				
		N/A			214				
		N/A			215				
		N/A			216				
		N/A			217				
		N/A			218				
		N/A			219				
		N/A			220				

LEGEND:

SS - Split Spoon
CS - 5 foot CME Sampler
ST - Shelby Tube
PID - Photoionization Detector
PP - Pocket Penetrometer
HSA - Hollow Stem Augers
HA - Hand Auger
WB - Wash Bore
RB - Rock Bit
NX - Rock Core

THE STRATIFICATION LINES REPRESENT APPROXIMATE BOUNDARY LINES BETWEEN SOIL AND ROCK TYPES: ACTUAL TRANSITIONS MAY BE GRADUAL.

AQUATERRA

Environmental Solutions, Inc.

7311 W. 130th St, Overland Park, KS 66213

LOG OF BORING NO.: **TMP-3**

SHEET NUMBER 10 of 11

GEOLOGIST: Robert H. Hill II

CLIENT: Bridgeton Landfill, LLC

DATE: 11/15/2012

PROJECT NAME: Temperature Monitoring Probe

PROJECT NUMBER: N/A

SAMPLER TYPE	SAMPLE DEPTH	Temp °F	PID (PPM)	RECOVERY (FT)	DEPTH IN FEET	USCS CLASS	C I	SOIL DESCRIPTION AND DRILLING CONDITIONS	NOTES:
		N/A			221				
		N/A			222				
		N/A			223				
		N/A			224				
		N/A			225				
		N/A			226				
		N/A			227				
		N/A			228				
		N/A			229				
		N/A			230				Thermocouple Probe
		N/A			231				
		N/A			232				
		N/A			233			Municipal Solid Waste	(Abrasive Sheath) Cement Bentonite Grout
		N/A			234				
		N/A			235				
		N/A			236				
		N/A			237				
		N/A			238				
		N/A			239				
		N/A			240				
		N/A			241				
		N/A			242				
		N/A			243				
		N/A			244				
		N/A			245				

LEGEND:

SS - Split Spoon
CS - 5 foot CME Sampler
ST - Shelby Tube
PID - Photoionization Detector
PP - Pocket Penetrometer
HSA - Hollow Stem Augers
HA - Hand Auger
WB - Wash Bore
RB - Rock Bit
NX - Rock Core

THE STRATIFICATION LINES REPRESENT APPROXIMATE BOUNDARY LINES BETWEEN SOIL AND ROCK TYPES: ACTUAL TRANSITIONS MAY BE GRADUAL.

AQUATERRA

Environmental Solutions, Inc.

7311 W. 130th St, Overland Park, KS 66213

LOG OF BORING NO.: **TMP-3**

SHEET NUMBER 11 of 11

GEOLOGIST: Robert H. Hill II

CLIENT: Bridgeton Landfill, LLC

DATE: 11/15/2012

PROJECT NAME: Temperature Monitoring Probe

PROJECT NUMBER: N/A

SAMPLER TYPE	SAMPLE DEPTH	Temp °F	PID (PPM)	RECOVERY (FT)	DEPTH IN FEET	USCS CLASS	C I	SOIL DESCRIPTION AND DRILLING CONDITIONS	NOTES:
		N/A			246			Municipal Solid Waste	(Abrasive Sheath) Cement Bentonite Grout
		N/A			247				
		N/A			248				
		N/A			249				
		N/A			250				Thermocouple Probe (Quarry Bottom)

LEGEND:

SS - Split Spoon
CS - 5 foot CME Sampler
ST - Shelby Tube
PID - Photoionization Detector
PP - Pocket Penetrometer
HSA - Hollow Stem Augers
HA - Hand Auger
WB - Wash Bore
RB - Rock Bit
NX - Rock Core

THE STRATIFICATION LINES REPRESENT APPROXIMATE BOUNDARY LINES BETWEEN SOIL AND ROCK TYPES: ACTUAL TRANSITIONS MAY BE GRADUAL.

AQUATERRA

Environmental Solutions, Inc.
7311 W. 130th St, Overland Park, KS 66213

LOG OF BORING NO.: **TMP-4**

49 Feet

CLIENT:	Bridgeton Landfill, LLC
PROJECT NAME:	Temperature Monitoring Probe
PROJECT NUMBER:	5582.1
PROJECT LOCATION:	Bridgeton, Missouri
BORING LOCATION:	Center of Landfill between north and south cells.
AES PROJECT NO:	5582.1
AES GEOLOGIST:	ROBERT R. HILL II
START DATE:	10/31/12
FINISH DATE:	10/31/12
START TIME:	0700 a.m.
FINISH TIME:	17:00 p.m.

DRILLING CONTRACTOR:	Frontz Drilling
DRILLER:	Kris Lauer
DRILLING RIG:	Versa-Sonic Drill Rig
DRILLING METHOD:	Sonic Rotary
SAMPLING METHOD:	N/A
BORING DIAMETER:	6 in.
WELL DIAMETER:	51/2 In.
WELL COMPLETION:	N/A
SURFACE ELEVATION:	501.50
TOC ELEVATION:	N/A
WATER LEVEL:	N/A
WATER ELEVATION:	N/A
DATE:	10/31/2012

WELL CONSTRUCTION DETAILS

MATERIAL:	Steel
DIAMETER:	6 In.
WELL TOTAL DEPTH:	49 ft. BGS
SCREEN LENGTH:	N/A
RISER LENGTH:	N/A
TOP OF SCREEN:	N/A
BOTTOM OF SCREEN:	N/A
SCREEN SLOT:	N/A
TOP OF FILTER PACK:	N/A
TOP OF SEAL:	N/A
TYPE OF SEAL:	Mixed Grout
TYPE OF FILTER PACK:	N/A

SAMPLE TYPE	SAMPLE DEPTH	Temp °F	PID (PPM)	RECOVERY (FT)	DEPTH IN FEET	USCS CLASS	C I	SOIL DESCRIPTION AND DRILLING CONDITIONS	NOTES AND WELL CONSTRUCTION
					1			**Soil Cover**	
					2				
					3				
					4				
					5				
					6				
					7				**(40 Sch. CPVC Conduit)**
					8				
		78			9				
		78			10				
		79			11				**Cement Bentonite Grout**
		79			12				
		80			13				
		81			14			**Dry Waste** Pliable Plastic, Wood, Metal,and Paper Materials No Visual Asbestos	
		82			15				
		82			16				
		83			17				
		84			18				
		84			19				
		84			20				

LEGEND:

SS - Split Spoon
CS - 5 foot CME Sampler
ST - Shelby Tube
PID - Photoionization Detector
PP - Pocket Penetrometer
HSA - Hollow Stem Augers
HA - Hand Auger
WB - Wash Bore
RB - Rock Bit
NX - Rock Core

THE STRATIFICATION LINES REPRESENT APPROXIMATE BOUNDARY LINES BETWEEN SOIL AND ROCK TYPES: ACTUAL TRANSITIONS MAY BE GRADUAL.

AQUATERRA **Environmental Solutions, Inc.** 7311 W. 130th St, Overland Park, KS 66213	LOG OF BORING NO.: **TMP-4**	SHEET NUMBER 2 of 3
	GEOLOGIST: Robert H. Hill II	
CLIENT: Bridgeton Landfill, LLC	DATE: 10/31/2012	
PROJECT NAME: Temperature Monitoring Probe	PROJECT NUMBER: 5582.10	

SAMPLER TYPE	SAMPLE DEPTH	Temp °F	PID (PPM)	RECOVERY (FT)	DEPTH IN FEET	USCS CLASS	C I	SOIL DESCRIPTION AND DRILLING CONDITIONS	NOTES:
		85			21			**Dry Waste** Pliable Plastic, Wood, Metal, and Paper Materials No Visual asbestos	**Thermocouple Probe** **(Abrasive Sheath)** **Cement Bentonite Grout**
		85			22				
		85			23				
		86			24				
		86			25				
		86			26				
		86			27				
		87			28				
		86			29				
		87			30				
		87			31				
		87			32				
		87			33				
		88			34				
		88			35				
		89			36				
		89			37				
		89			38				
		87			39				
		88			40				
		87			41				
		88			42				
		88			43				
		89			44				
		89			45				

LEGEND:

SS - Split Spoon
CS - 5 foot CME Sampler
ST - Shelby Tube
PID - Photoionization Detector
PP - Pocket Penetrometer
HSA - Hollow Stem Augers
HA - Hand Auger
WB - Wash Bore
RB - Rock Bit
NX - Rock Core

THE STRATIFICATION LINES REPRESENT APPROXIMATE BOUNDARY LINES BETWEEN SOIL AND ROCK TYPES: ACTUAL TRANSITIONS MAY BE GRADUAL.

AQUATERRA **Environmental Solutions, Inc.** 7311 W. 130th St, Overland Park, KS 66213	LOG OF BORING NO.: **TMP-4**	SHEET NUMBER 3 of 3
	GEOLOGIST: Robert H. Hill II	
CLIENT: Bridgeton Landfill, LLC	DATE: 10/27/2012	
PROJECT NAME: Temperature Monitoring Probe	PROJECT NUMBER: 5582.10	

SAMPLER TYPE	SAMPLE DEPTH	Temp °F	PID (PPM)	RECOVERY (FT)	DEPTH IN FEET	USCS CLASS	C I	SOIL DESCRIPTION AND DRILLING CONDITIONS	NOTES:
		89			46			**Dry Waste** Pliable Plastic, Wood, Metal, and Paper Materials No Visual Asbestos	**(Abrasive Sheath)** **Cement Bentonite Grout**
		90			47				
		90			48				
		90			49				**Thermocouple Probe**
								Total Boring Depth	

LEGEND:

SS - Split Spoon
CS - 5 foot CME Sampler
ST - Shelby Tube
PID - Photoionization Detector
PP - Pocket Penetrometer
HSA - Hollow Stem Augers
HA - Hand Auger
WB - Wash Bore
RB - Rock Bit
NX - Rock Core

THE STRATIFICATION LINES REPRESENT APPROXIMATE BOUNDARY LINES BETWEEN SOIL AND ROCK TYPES: ACTUAL TRANSITIONS MAY BE GRADUAL.

AQUATERRA

Environmental Solutions, Inc.
7311 W. 130th St, Overland Park, KS 66213

CLIENT:	Bridgeton Landfill, LLC
PROJECT NAME:	Temperature Monitoring Probe
PROJECT NUMBER:	5582.1
PROJECT LOCATION:	Bridgeton, Missouri
BORING LOCATION:	North Slope
AES PROJECT NO:	5582.1
AES GEOLOGIST:	ROBERT H. HILL II
START DATE:	10/16/12
FINISH DATE:	10/18/12
START TIME:	09:30 a.m.
FINISH TIME:	10:00 a.m.

LOG OF BORING NO.: **TMP-6**

SHEET NUMBER 1 of 9

215 Feet

DRILLING CONTRACTOR:	Frontz Drilling
DRILLER:	Kris Lauer
DRILLING RIG:	Versa-Sonic Drill Rig
DRILLING METHOD:	Sonic Rotary
SAMPLING METHOD:	N/A
BORING DIAMETER:	6 in.
WELL DIAMETER:	5 3/4 inch
WELL COMPLETION:	N/A
SURFACE ELEVATION:	487.40
TOC ELEVATION:	N/A
WATER LEVEL:	N/A
WATER ELEVATION:	N/A
DATE:	10/16/2012

WELL CONSTRUCTION DETAILS

MATERIAL:	Steel
DIAMETER:	6 in.
WELL TOTAL DEPTH:	215 ft. BGS
SCREEN LENGTH:	N/A
RISER LENGTH:	N/A
TOP OF SCREEN:	N/A
BOTTOM OF SCREEN:	N/A
SCREEN SLOT:	N/A
TOP OF FILTER PACK:	N/A
TOP OF SEAL:	N/A
TYPE OF SEAL:	Cement Bentonite Grout
TYPE OF FILTER PACK:	N/A

SAMPLE TYPE	SAMPLE DEPTH	Temp °F	PID (PPM)	RECOVERY (FT)	DEPTH IN FEET	USCS CLASS	C I	SOIL DESCRIPTION AND DRILLING CONDITIONS	NOTES AND WELL CONSTRUCTION
		N/A			1–5			**Soil Cover**	**(40 Sch. CPVC Conduit)**
		83			10–15			**Municipal Solid Waste** Slightly Moist - No Visible Asbestos	**Cement Bentonite Grout** **(Drilling Mud Added)**

LEGEND:

SS - Split Spoon
CS - 5 foot CME Sampler
ST - Shelby Tube
PID - Photoionization Detector
PP - Pocket Penetrometer
HSA - Hollow Stem Augers
HA - Hand Auger
WB - Wash Bore
RB - Rock Bit
NX - Rock Core

THE STRATIFICATION LINES REPRESENT APPROXIMATE BOUNDARY LINES BETWEEN SOIL AND ROCK TYPES: ACTUAL TRANSITIONS MAY BE GRADUAL.

AQUATERRA
Environmental Solutions, Inc.
7311 W. 130th St, Overland Park, KS 66213

LOG OF BORING NO.: **TMP-6** SHEET NUMBER 2 of 9

GEOLOGIST: Robert H. Hill II
CLIENT: Bridgeton Landfill, LLC
DATE: 10/16/2012
PROJECT NAME: Temperature Monitoring Probe
PROJECT NUMBER: 5582.10

SAMPLER TYPE	SAMPLE DEPTH	Temp °F	PID (PPM)	RECOVERY (FT)	DEPTH IN FEET	USCS CLASS	C I	SOIL DESCRIPTION AND DRILLING CONDITIONS	NOTES:
		108			21–30			**Municipal Solid Waste** Slightly Moist - No Visible Asbestos	(Abrasive Sheath) **Cement Bentonite Grout** **Thermocouple Probe**
		102			31–40				
		100			41–45				

LEGEND:
SS - Split Spoon
CS - 5 foot CME Sampler
ST - Shelby Tube
PID - Photoionization Detector
PP - Pocket Penetrometer
HSA - Hollow Stem Augers
HA - Hand Auger
WB - Wash Bore
RB - Rock Bit
NX - Rock Core

THE STRATIFICATION LINES REPRESENT APPROXIMATE BOUNDARY LINES BETWEEN SOIL AND ROCK TYPES: ACTUAL TRANSITIONS MAY BE GRADUAL.

AQUATERRA **Environmental Solutions, Inc.** 7311 W. 130th St, Overland Park, KS 66213	LOG OF BORING NO.: **TMP-6**	SHEET NUMBER 3 of 9
CLIENT: Bridgeton Landfill, LLC	GEOLOGIST: Robert H. Hill II	
PROJECT NAME: Temperature Monitoring Probe	DATE: 10/16/2012	
	PROJECT NUMBER: 5582.10	

SAMPLER TYPE	SAMPLE DEPTH	Temp °F	PID (PPM)	RECOVERY (FT)	DEPTH IN FEET	USCS CLASS	C I	SOIL DESCRIPTION AND DRILLING CONDITIONS	NOTES:
		100			46 47 48 49 50				Brown Silty Clay @ 47' to 48' bgs.
		120			51 52 53 54 55 56 57 58 59 60			**Municipal Solid Waste** Slightly Moist - No Visible Asbestos	**Thermocouple Probe** **(Abrasive Sheath)** **Cement Bentonite Grout**
		130			61 62 63 64 65 66 67 68 69 70				

LEGEND:

SS - Split Spoon
CS - 5 foot CME Sampler
ST - Shelby Tube
PID - Photoionization Detector
PP - Pocket Penetrometer
HSA - Hollow Stem Augers
HA - Hand Auger
WB - Wash Bore
RB - Rock Bit
NX - Rock Core

THE STRATIFICATION LINES REPRESENT APPROXIMATE BOUNDARY LINES BETWEEN SOIL AND ROCK TYPES: ACTUAL TRANSITIONS MAY BE GRADUAL.

AQUATERRA

Environmental Solutions, Inc.

7311 W. 130th St, Overland Park, KS 66213

LOG OF BORING NO.: **TMP-6**

SHEET NUMBER 4 of 9

GEOLOGIST: Robert H. Hill II

CLIENT: Bridgeton Landfill, LLC

DATE: 10/17/2012

PROJECT NAME: Temperature Monitoring Probe

PROJECT NUMBER: 5582.10

SAMPLER TYPE	SAMPLE DEPTH	Temp °F	PID (PPM)	RECOVERY (FT)	DEPTH IN FEET	USCS CLASS	C I	SOIL DESCRIPTION AND DRILLING CONDITIONS	NOTES:
		100			71 72 73 74 75 76 77 78 79 80				Thermocouple Probe
		112			81 82 83 84 85 86 87 88 89 90			**Municipal Solid Waste** Slightly Moist - No Visible Asbestos	**(Abrasive Sheath)** **Cement Bentonite Grout**
		131			91 92 93 94 95				**Thermocouple Probe**

LEGEND:

SS - Split Spoon
CS - 5 foot CME Sampler
ST - Shelby Tube
PID - Photoionization Detector
PP - Pocket Penetrometer
HSA - Hollow Stem Augers
HA - Hand Auger
WB - Wash Bore
RB - Rock Bit
NX - Rock Core

THE STRATIFICATION LINES REPRESENT APPROXIMATE BOUNDARY LINES BETWEEN SOIL AND ROCK TYPES: ACTUAL TRANSITIONS MAY BE GRADUAL.

AQUATERRA **Environmental Solutions, inc.** 7311 W. 130th St, Overland Park, KS 66213	LOG OF BORING NO.: **TMP-6**	SHEET NUMBER 5 of 9
CLIENT: Bridgeton Landfill, LLC	GEOLOGIST: Robert H. Hill II	
PROJECT NAME: Temperature Monitoring Probe	DATE: 10/17/2012	
	PROJECT NUMBER: 5582.10	

SAMPLER TYPE	SAMPLE DEPTH	Temp °F	PID (PPM)	RECOVERY (FT)	DEPTH IN FEET	USCS CLASS	C I	SOIL DESCRIPTION AND DRILLING CONDITIONS	NOTES:
		131			96 97 98 99 100				
		120			101 102 103 104 105 106 107 108 109 110			**Municipal Solid Waste** Slightly Moist - No Visible Asbestos	**(Abrasive Sheath)** **Cement Bentonite Grout** Red Silty Clay @ 110' to 112' bgs.
		148			111 112 113 114 115 116 117 118 119 120				**Thermocouple Probe**

LEGEND:

SS - Split Spoon
CS - 5 foot CME Sampler
ST - Shelby Tube
PID - Photoionization Detector
PP - Pocket Penetrometer
HSA - Hollow Stem Augers
HA - Hand Auger
WB - Wash Bore
RB - Rock Bit
NX - Rock Core

THE STRATIFICATION LINES REPRESENT APPROXIMATE BOUNDARY LINES BETWEEN SOIL AND ROCK TYPES: ACTUAL TRANSITIONS MAY BE GRADUAL.

AQUATERRA

Environmental Solutions, Inc.

7311 W. 130th St, Overland Park, KS 66213

LOG OF BORING NO.: **TMP-6** SHEET NUMBER 6 of 9

GEOLOGIST: Robert H. Hill II

CLIENT: Bridgeton Landfill, LLC

DATE: 10/16/2012

PROJECT NAME: Temperature Monitoring Probe

PROJECT NUMBER: 5582.10

SAMPLER TYPE	SAMPLE DEPTH	Temp °F	PID (PPM)	RECOVERY (FT)	DEPTH IN FEET	USCS CLASS	C I	SOIL DESCRIPTION AND DRILLING CONDITIONS	NOTES:
		129			121			**Municipal Solid Waste** **Slightly Moist - No Visible Asbestos**	**(Abrasive Sheath)** **Cement Bentonite Grout** Brown Silty Clay @ 130' to 134' bgs
		128			135				**Thermocouple Probe**
					141			**Municipal Solid Waste** Moist - No Visible Asbestos	

LEGEND:

SS - Split Spoon
CS - 5 foot CME Sampler
ST - Shelby Tube
PID - Photoionization Detector
PP - Pocket Penetrometer
HSA - Hollow Stem Augers
HA - Hand Auger
WB - Wash Bore
RB - Rock Bit
NX - Rock Core

THE STRATIFICATION LINES REPRESENT APPROXIMATE BOUNDARY LINES BETWEEN SOIL AND ROCK TYPES: ACTUAL TRANSITIONS MAY BE GRADUAL.

AQUATERRA

Environmental Solutions, Inc.

7311 W. 130th St, Overland Park, KS 66213

LOG OF BORING NO.: **TMP-6**

GEOLOGIST: Robert H. Hill II

CLIENT: Bridgeton Landfill, LLC

DATE: 10/18/2012

PROJECT NAME: Temperature Monitoring Probe

PROJECT NUMBER: 5582.10

SAMPLER TYPE	SAMPLE DEPTH	Temp °F	PID (PPM)	RECOVERY (FT)	DEPTH IN FEET	USCS CLASS	C I	SOIL DESCRIPTION AND DRILLING CONDITIONS	NOTES:
		129			146–150				
		119			151–160			**Municipal Solid Waste** Moist - No Visible Asbestos	**Thermocouple Probe** **(Abrasive Sheath)** **Cement Bentonite Grout**
		109			161–170				

LEGEND:

SS - Split Spoon
CS - 5 foot CME Sampler
ST - Shelby Tube
PID - Photoionization Detector
PP - Pocket Penetrometer
HSA - Hollow Stem Augers
HA - Hand Auger
WB - Wash Bore
RB - Rock Bit
NX - Rock Core

THE STRATIFICATION LINES REPRESENT APPROXIMATE BOUNDARY LINES BETWEEN SOIL AND ROCK TYPES: ACTUAL TRANSITIONS MAY BE GRADUAL.

AQUATERRA	LOG OF BORING NO.: **TMP-6**	SHEET NUMBER 8 of 9
Environmental Solutions, Inc.		
7311 W. 130th St, Overland Park, KS 66213	GEOLOGIST: Robert H. Hill II	
CLIENT: Bridgeton Landfill, LLC	DATE: 10/18/2012	
PROJECT NAME: Temperature Monitoring Probe	PROJECT NUMBER: 5582.10	

SAMPLER TYPE	SAMPLE DEPTH	Temp °F	PID (PPM)	RECOVERY (FT)	DEPTH IN FEET	USCS CLASS	C I	SOIL DESCRIPTION AND DRILLING CONDITIONS	NOTES:
		100			171–195			**Municipal Solid Waste** Moist - No Visible Asbestos	**Thermocouple Probe** **(Abrasive Sheath)** **Cement Bentonite Grout** **Thermocouple Probe**
		95							
		89							

LEGEND:

SS - Split Spoon
CS - 5 foot CME Sampler
ST - Shelby Tube
PID - Photoionization Detector
PP - Pocket Penetrometer
HSA - Hollow Stem Augers
HA - Hand Auger
WB - Wash Bore
RB - Rock Bit
NX - Rock Core

THE STRATIFICATION LINES REPRESENT APPROXIMATE BOUNDARY LINES BETWEEN SOIL AND ROCK TYPES: ACTUAL TRANSITIONS MAY BE GRADUAL.

AQUATERRA

Environmental Solutions, inc.

7311 W. 130th St, Overland Park, KS 66213

LOG OF BORING NO.: **TMP-6** SHEET NUMBER 9 of 9

GEOLOGIST: Robert H. Hill II

CLIENT: Bridgeton Landfill, LLC

DATE: 10/18/2012

PROJECT NAME: Temperature Monitoring Probe

PROJECT NUMBER: 5582.10

SAMPLER TYPE	SAMPLE DEPTH	Temp °F	PID (PPM)	RECOVERY (FT)	DEPTH IN FEET	USCS CLASS	C I	SOIL DESCRIPTION AND DRILLING CONDITIONS	NOTES:
		89			196 197 198 199 200			**Municipal Solid Waste** Moist - No Visible Asbestos	**(Abrasive Sheath)** **Cement Bentonite Grout**
		99			201 202 203 204 205 206 207 208 209 210				
		89			211 212 213 214 215				**Thermocouple Probe** **(Quarry Bottom)**

LEGEND:

SS - Split Spoon
CS - 5 foot CME Sampler
ST - Shelby Tube

PID - Photoionization Detector
PP - Pocket Penetrometer
HSA - Hollow Stem Augers

HA - Hand Auger
WB - Wash Bore
RB - Rock Bit
NX - Rock Core

THE STRATIFICATION LINES REPRESENT APPROXIMATE BOUNDARY LINES BETWEEN SOIL AND ROCK TYPES: ACTUAL TRANSITIONS MAY BE GRADUAL.

AQUATERRA

Environmental Solutions, Inc.
7311 W. 130th St, Overland Park, KS 66213

LOG OF BORING NO.: **TMP-7R**

SHEET NUMBER 1 of 10

225 Feet

CLIENT:	Bridgeton Landfill, LLC
PROJECT NAME:	Temperature Monitoring Probe
PROJECT NUMBER:	5582.1
PROJECT LOCATION:	Bridgeton, Missouri
BORING LOCATION:	Ten Feet NE of TMP-7
AES PROJECT NO:	5582.1
AES GEOLOGIST:	ROBERT H. HILL II
START DATE:	11/16/12
FINISH DATE:	11/16/12
START TIME:	07:00 a.m.
FINISH TIME:	17:00 p.m.

DRILLING CONTRACTOR:	Frontz Drilling
DRILLER:	Kris Lauer
DRILLING RIG:	Versa-Sonic Drill Rig
DRILLING METHOD:	Sonic Rotary
SAMPLING METHOD:	N/A
BORING DIAMETER:	4 in.
WELL DIAMETER:	3 7/8 inch
WELL COMPLETION:	N/A
SURFACE ELEVATION:	503.00
TOC ELEVATION:	N/A
WATER LEVEL:	N/A
WATER ELEVATION:	N/A
DATE:	11/16/2012

WELL CONSTRUCTION DETAILS

MATERIAL:	Steel
DIAMETER:	4 In.
WELL TOTAL DEPTH:	225 ft. BGS
SCREEN LENGTH:	N/A
RISER LENGTH:	N/A
TOP OF SCREEN:	N/A
BOTTOM OF SCREEN:	N/A
SCREEN SLOT:	N/A
TOP OF FILTER PACK:	N/A
TOP OF SEAL:	N/A
TYPE OF SEAL:	Cement Bentonite Grout
TYPE OF FILTER PACK:	N/A

SAMPLE TYPE	SAMPLE DEPTH	Temp °F	PID (PPM)	RECOVERY (FT)	DEPTH IN FEET	USCS CLASS	C I	SOIL DESCRIPTION AND DRILLING CONDITIONS	NOTES AND WELL CONSTRUCTION
					1			Soil Cover	(40 Sch. CPVC Conduit)
					2				
					3				
					4				
					5				
					6				
					7				
					8				
		N/A			9			Municipal Solid Waste	
		N/A			10				
		N/A			11				Cement Bentonite Grout
		N/A			12				
		N/A			13				
		N/A			14				
		N/A			15				
		N/A			16				
		N/A			17				
		N/A			18				
		N/A			19				
		N/A			20				

LEGEND:

SS - Split Spoon
CS - 5 foot CME Sampler
ST - Shelby Tube
PID - Photoionization Detector
PP - Pocket Penetrometer
HSA - Hollow Stem Augers
HA - Hand Auger
WB - Wash Bore
RB - Rock Bit
NX - Rock Core

THE STRATIFICATION LINES REPRESENT APPROXIMATE BOUNDARY LINES BETWEEN SOIL AND ROCK TYPES: ACTUAL TRANSITIONS MAY BE GRADUAL.

AQUATERRA **Environmental Solutions, Inc.** 7311 W. 130th St, Overland Park, KS 66213	LOG OF BORING NO.: **TMP-7R**	SHEET NUMBER 2 of 10
CLIENT: Bridgeton Landfill, LLC	GEOLOGIST: Robert H. Hill II	
PROJECT NAME: Temperature Monitoring Probe	DATE: 11/16/2012	
	PROJECT NUMBER: 5582.10	

SAMPLER TYPE	SAMPLE DEPTH	Temp °F	PID (PPM)	RECOVERY (FT)	DEPTH IN FEET	USCS CLASS	C I	SOIL DESCRIPTION AND DRILLING CONDITIONS	NOTES:
		N/A			21				
		N/A			22				
		N/A			23				
		N/A			24				
		N/A			25				Thermocouple Probe
		N/A			26				
		N/A			27				
		N/A			28				
		N/A			29				
		N/A			30				
		N/A			31				
		N/A			32				
		N/A			33			Municipal Solid Waste	(Abrasive Sheath) Cement Bentonite Grout
		N/A			34				
		N/A			35				
		N/A			36				
		N/A			37				
		N/A			38				
		N/A			39				
		N/A			40				
		N/A			41				
		N/A			42				
		N/A			43				
		N/A			44				
		N/A			45				Thermocouple Probe

LEGEND:

SS - Split Spoon
CS - 5 foot CME Sampler
ST - Shelby Tube
PID - Photoionization Detector
PP - Pocket Penetrometer
HSA - Hollow Stem Augers
HA - Hand Auger
WB - Wash Bore
RB - Rock Bit
NX - Rock Core

THE STRATIFICATION LINES REPRESENT APPROXIMATE BOUNDARY LINES BETWEEN SOIL AND ROCK TYPES: ACTUAL TRANSITIONS MAY BE GRADUAL.

AQUATERRA
Environmental Solutions, Inc.
7311 W. 130th St, Overland Park, KS 66213

LOG OF BORING NO.: **TMP-7R** SHEET NUMBER 3 of 10

GEOLOGIST: Robert H. Hill II
CLIENT: Bridgeton Landfill, LLC
DATE: 11/16/2012
PROJECT NAME: Temperature Monitoring Probe
PROJECT NUMBER: 5582.10

SAMPLER TYPE	SAMPLE DEPTH	Temp °F	PID (PPM)	RECOVERY (FT)	DEPTH IN FEET	USCS CLASS	C I	SOIL DESCRIPTION AND DRILLING CONDITIONS	NOTES:
		N/A			46			Municipal Solid Waste	(Abrasive Sheath) Cement Bentonite Grout
		N/A			47				
		N/A			48				
		N/A			49				
		N/A			50				
		N/A			51				
		N/A			52				
		N/A			53				
		N/A			54				
		N/A			55				
		N/A			56				
		N/A			57				
		N/A			58				
		N/A			59				
		N/A			60				
		N/A			61				
		N/A			62				
		N/A			63				
		N/A			64				
		N/A			65				Thermocouple Probe
		N/A			66				
		N/A			67				
		N/A			68				
		N/A			69				
		N/A			70				

LEGEND:
SS - Split Spoon
CS - 5 foot CME Sampler
ST - Shelby Tube
PID - Photoionization Detector
PP - Pocket Penetrometer
HSA - Hollow Stem Augers
HA - Hand Auger
WB - Wash Bore
RB - Rock Bit
NX - Rock Core

THE STRATIFICATION LINES REPRESENT APPROXIMATE BOUNDARY LINES BETWEEN SOIL AND ROCK TYPES: ACTUAL TRANSITIONS MAY BE GRADUAL.

AQUATERRA

Environmental Solutions, Inc.

7311 W. 130th St, Overland Park, KS 66213

LOG OF BORING NO.: **TMP-7R**

SHEET NUMBER 4 of 10

GEOLOGIST: Robert H. Hill II

CLIENT: Bridgeton Landfill, LLC

DATE: 11/16/2012

PROJECT NAME: Temperature Monitoring Probe

PROJECT NUMBER: N/A

SAMPLER TYPE	SAMPLE DEPTH	Temp °F	PID (PPM)	RECOVERY (FT)	DEPTH IN FEET	USCS CLASS	C I	SOIL DESCRIPTION AND DRILLING CONDITIONS	NOTES:
		N/A			71			Municipal Solid Waste	(Abrasive Sheath) Cement Bentonite Grout
		N/A			72				
		N/A			73				
		N/A			74				
		N/A			75				
		N/A			76				
		N/A			77				
		N/A			78				
		N/A			79				
		N/A			80				
		N/A			81				
		N/A			82				
		N/A			83				
		N/A			84				
		N/A			85				Thermocouple Probe
		N/A			86				
		N/A			87				
		N/A			88				
		N/A			89				
		N/A			90				
		N/A			91				
		N/A			92				
		N/A			93				
		N/A			94				
		N/A			95				

LEGEND:

SS - Split Spoon
CS - 5 foot CME Sampler
ST - Shelby Tube

PID - Photoionization Detector
PP - Pocket Penetrometer
HSA - Hollow Stem Augers

HA - Hand Auger
WB - Wash Bore
RB - Rock Bit
NX - Rock Core

THE STRATIFICATION LINES REPRESENT APPROXIMATE BOUNDARY LINES BETWEEN SOIL AND ROCK TYPES: ACTUAL TRANSITIONS MAY BE GRADUAL.

AQUATERRA

Environmental Solutions, Inc.

7311 W. 130th St, Overland Park, KS 66213

LOG OF BORING NO.: **TMP-7R** SHEET NUMBER 5 of 10

GEOLOGIST: Robert H. Hill II

CLIENT: Bridgeton Landfill, LLC

DATE: 11/16/2012

PROJECT NAME: Temperature Monitoring Probe

PROJECT NUMBER: N/A

SAMPLER TYPE	SAMPLE DEPTH	Temp °F	PID (PPM)	RECOVERY (FT)	DEPTH IN FEET	USCS CLASS	C i	SOIL DESCRIPTION AND DRILLING CONDITIONS	NOTES:
		N/A			96			Municipal Solid Waste	Thermocouple Probe (Abrasive Sheath) Cement Bentonite Grout
		N/A			97				
		N/A			98				
		N/A			99				
		N/A			100				
		N/A			101				
		N/A			102				
		N/A			103				
		N/A			104				
		N/A			105				
		N/A			106				
		N/A			107				
		N/A			108				
		N/A			109				
		N/A			110				
		N/A			111				
		N/A			112				
		N/A			113				
		N/A			114				
		N/A			115				
		N/A			116				
		N/A			117				
		N/A			118				
		N/A			119				
		N/A			120				

LEGEND:

SS - Split Spoon
CS - 5 foot CME Sampler
ST - Shelby Tube
PID - Photoionization Detector
PP - Pocket Penetrometer
HSA - Hollow Stem Augers
HA - Hand Auger
WB - Wash Bore
RB - Rock Bit
NX - Rock Core

THE STRATIFICATION LINES REPRESENT APPROXIMATE BOUNDARY LINES BETWEEN SOIL AND ROCK TYPES: ACTUAL TRANSITIONS MAY BE GRADUAL.

AQUATERRA
Environmental Solutions, Inc.
7311 W. 130th St, Overland Park, KS 66213

LOG OF BORING NO.: **TMP-7R** SHEET NUMBER 6 of 10

GEOLOGIST: Robert H. Hill II
CLIENT: Bridgeton Landfill, LLC
DATE: 11/16/2012
PROJECT NAME: Temperature Monitoring Probe
PROJECT NUMBER: N/A

SAMPLER TYPE	SAMPLE DEPTH	Temp °F	PID (PPM)	RECOVERY (FT)	DEPTH IN FEET	USCS CLASS	C I	SOIL DESCRIPTION AND DRILLING CONDITIONS	NOTES:
		N/A			121			Municipal Solid Waste	Thermocouple Probe
		N/A			122				
		N/A			123				
		N/A			124				
		N/A			125				
		N/A			126				
		N/A			127				
		N/A			128				
		N/A			129				(Abrasive Sheath) Cement Bentonite Grout
		N/A			130				
		N/A			131				
		N/A			132				
		N/A			133				
		N/A			134				
		N/A			135				
		N/A			136				
		N/A			137				
		N/A			138				
		N/A			139				
		N/A			140				
		N/A			141				
		N/A			142				
		N/A			143				
		N/A			144				
		N/A			145				Thermocouple Probe

LEGEND:
SS - Split Spoon
CS - 5 foot CME Sampler
ST - Shelby Tube
PID - Photoionization Detector
PP - Pocket Penetrometer
HSA - Hollow Stem Augers
HA - Hand Auger
WB - Wash Bore
RB - Rock Bit
NX - Rock Core

THE STRATIFICATION LINES REPRESENT APPROXIMATE BOUNDARY LINES BETWEEN SOIL AND ROCK TYPES: ACTUAL TRANSITIONS MAY BE GRADUAL.

AQUATERRA

Environmental Solutions, Inc.

7311 W. 130th St, Overland Park, KS 66213

LOG OF BORING NO.: **TMP-7R**

GEOLOGIST: Robert H. Hill II

CLIENT: Bridgeton Landfill, LLC

DATE: 11/16/2012

PROJECT NAME: Temperature Monitoring Probe

PROJECT NUMBER: N/A

SAMPLER TYPE	SAMPLE DEPTH	Temp °F	PID (PPM)	RECOVERY (FT)	DEPTH IN FEET	USCS CLASS	C I	SOIL DESCRIPTION AND DRILLING CONDITIONS	NOTES:
		N/A			146			Municipal Solid Waste	(Abrasive Sheath) Cement Bentonite Grout
		N/A			147				
		N/A			148				
		N/A			149				
		N/A			150				
		N/A			151				
		N/A			152				
		N/A			153				
		N/A			154				
		N/A			155				
		N/A			156				
		N/A			157				
		N/A			158				
		N/A			159				
		N/A			160				
		N/A			161				
		N/A			162				
		N/A			163				
		N/A			164				
		N/A			165				Thermocouple Probe
		N/A			166				
		N/A			167				
		N/A			168				
		N/A			169				
		N/A			170				

LEGEND:

SS - Split Spoon
CS - 5 foot CME Sampler
ST - Shelby Tube
PID - Photoionization Detector
PP - Pocket Penetrometer
HSA - Hollow Stem Augers
HA - Hand Auger
WB - Wash Bore
RB - Rock Bit
NX - Rock Core

THE STRATIFICATION LINES REPRESENT APPROXIMATE BOUNDARY LINES BETWEEN SOIL AND ROCK TYPES: ACTUAL TRANSITIONS MAY BE GRADUAL.

AQUATERRA

Environmental Solutions, Inc.

7311 W. 130th St, Overland Park, KS 66213

LOG OF BORING NO.: **TMP-7R** SHEET NUMBER 8 of 10

GEOLOGIST: Robert H. Hill II

CLIENT: Bridgeton Landfill, LLC

DATE: 11/16/2012

PROJECT NAME: Temperature Monitoring Probe

PROJECT NUMBER: N/A

SAMPLER TYPE	SAMPLE DEPTH	Temp °F	PID (PPM)	RECOVERY (FT)	DEPTH IN FEET	USCS CLASS	C I	SOIL DESCRIPTION AND DRILLING CONDITIONS	NOTES:
		N/A			171			Municipal Solid Waste	(Abrasive Sheath) Cement Bentonite Grout
		N/A			172				
		N/A			173				
		N/A			174				
		N/A			175				
		N/A			176				
		N/A			177				
		N/A			178				
		N/A			179				
		N/A			180				
		N/A			181				
		N/A			182				
		N/A			183				Thermocouple Probe
		N/A			184				
		N/A			185				
		N/A			186				
		N/A			187				
		N/A			188				
		N/A			189				
		N/A			190				
		N/A			191				
		N/A			192				
		N/A			193				
		N/A			194				
		N/A			195				

LEGEND:

SS - Split Spoon
CS - 5 foot CME Sampler
ST - Shelby Tube

PID - Photoionization Detector
PP - Pocket Penetrometer
HSA - Hollow Stem Augers

HA - Hand Auger
WB - Wash Bore
RB - Rock Bit
NX - Rock Core

THE STRATIFICATION LINES REPRESENT APPROXIMATE BOUNDARY LINES BETWEEN SOIL AND ROCK TYPES: ACTUAL TRANSITIONS MAY BE GRADUAL.

AQUATERRA

Environmental Solutions, Inc.

7311 W. 130th St, Overland Park, KS 66213

LOG OF BORING NO.: **TMP-7R**

GEOLOGIST: Robert H. Hill II

CLIENT: Bridgeton Landfill, LLC

DATE: 11/16/2012

PROJECT NAME: Temperature Monitoring Probe

PROJECT NUMBER: N/A

SAMPLER TYPE	SAMPLE DEPTH	Temp °F	PID (PPM)	RECOVERY (FT)	DEPTH IN FEET	USCS CLASS	C I	SOIL DESCRIPTION AND DRILLING CONDITIONS	NOTES:
		N/A			196			Municipal Solid Waste	Thermocouple Probe (Abrasive Sheath) Cement Bentonite Grout
		N/A			197				
		N/A			198				
		N/A			199				
		N/A			200				
		N/A			201				
		N/A			202				
		N/A			203				
		N/A			204				
		N/A			205				
		N/A			206				
		N/A			207				
		N/A			208				
		N/A			209				
		N/A			210				
		N/A			211				
		N/A			212				
		N/A			213				
		N/A			214				
		N/A			215				
		N/A			216				
		N/A			217				
		N/A			218				
		N/A			219				
		N/A			220				

LEGEND:

SS - Split Spoon
CS - 5 foot CME Sampler
ST - Shelby Tube
PID - Photoionization Detector
PP - Pocket Penetrometer
HSA - Hollow Stem Augers
HA - Hand Auger
WB - Wash Bore
RB - Rock Bit
NX - Rock Core

THE STRATIFICATION LINES REPRESENT APPROXIMATE BOUNDARY LINES BETWEEN SOIL AND ROCK TYPES: ACTUAL TRANSITIONS MAY BE GRADUAL.

AQUATERRA

Environmental Solutions, inc.

7311 W. 130th St, Overland Park, KS 66213

LOG OF BORING NO.: **TMP-7R** SHEET NUMBER 10 of 10

GEOLOGIST: Robert H. Hill II

CLIENT: Bridgeton Landfill, LLC

DATE: 11/16/2012

PROJECT NAME: Temperature Monitoring Probe

PROJECT NUMBER: N/A

SAMPLER TYPE	SAMPLE DEPTH	Temp °F	PID (PPM)	RECOVERY (FT)	DEPTH IN FEET	USCS CLASS	C I	SOIL DESCRIPTION AND DRILLING CONDITIONS	NOTES:
		N/A			221			Municipal Solid Waste	(Abrasive Sheath) Cement Bentonite Grout
		N/A			222				
		N/A			223				
		N/A			224				
		N/A			225				Thermocouple Probe
		N/A			226				(Refusal Near Quarry Bottom) Total Depth of Boring @ 225 Feet
		N/A			226				
		N/A			228				
		N/A			229				
		N/A			230				
		N/A			231				
		N/A			232				(Approximate Quarry Bottom)

LEGEND:

SS - Split Spoon
CS - 5 foot CME Sampler
ST - Shelby Tube

PID - Photoionization Detector
PP - Pocket Penetrometer
HSA - Hollow Stem Augers

HA - Hand Auger
WB - Wash Bore
RB - Rock Bit
NX - Rock Core

THE STRATIFICATION LINES REPRESENT APPROXIMATE BOUNDARY LINES BETWEEN SOIL AND ROCK TYPES: ACTUAL TRANSITIONS MAY BE GRADUAL.

AQUATERRA

Environmental Solutions, Inc.
7311 W. 130th St, Overland Park, KS 66213

CLIENT:	Bridgeton Landfill, LLC
PROJECT NAME:	Temperature Monitoring Probe
PROJECT NUMBER:	5582.1
PROJECT LOCATION:	Bridgeton, Missouri
BORING LOCATION:	North Slope
AES PROJECT NO:	5582.1
AES GEOLOGIST:	ROBERT H. HILL II
START DATE:	10/18/12
FINISH DATE:	10/19/12
START TIME:	12:13 p.m.
FINISH TIME:	15:22 p.m.

LOG OF BORING NO.: **TMP-9**

SHEET NUMBER 1 of 5

100 Feet

DRILLING CONTRACTOR:	Frontz Drilling
DRILLER:	Kris Lauer
DRILLING RIG:	Versa-Sonic Drill Rig
DRILLING METHOD:	Sonic Rotary
SAMPLING METHOD:	N/A
BORING DIAMETER:	6 in.
WELL DIAMETER:	5 3/4 inch
WELL COMPLETION:	N/A
SURFACE ELEVATION:	486.00
TOC ELEVATION:	N/A
WATER LEVEL:	N/A
WATER ELEVATION:	N/A
DATE:	10/18/2012

WELL CONSTRUCTION DETAILS

MATERIAL:	Steel
DIAMETER:	6 In.
WELL TOTAL DEPTH:	100 ft. BGS
SCREEN LENGTH:	N/A
RISER LENGTH:	N/A
TOP OF SCREEN:	N/A
BOTTOM OF SCREEN:	N/A
SCREEN SLOT:	N/A
TOP OF FILTER PACK:	N/A
TOP OF SEAL:	N/A
TYPE OF SEAL:	Cement Bentonite Grout
TYPE OF FILTER PACK:	N/A

SAMPLE TYPE	SAMPLE DEPTH	Temp °F	PID (PPM)	RECOVERY (FT)	DEPTH IN FEET	USCS CLASS	C I	SOIL DESCRIPTION AND DRILLING CONDITIONS	NOTES AND WELL CONSTRUCTION
					1			**Soil Cover**	
					2				
					3				
					4				
					5				
					6				
					7				**(40 Sch. CPVC Conduit)**
					8				
					9				
					10				
					11				**Cement Bentonite Grout**
					12				
					13			**Municipal Solid Waste** Dry - No Visible Asbestos	
					14				
		129			15				
					16				
					17				
					18				
					19				
					20				**Thermocouple Probe**

LEGEND:

SS - Split Spoon
CS - 5 foot CME Sampler
ST - Shelby Tube
PID - Photoionization Detector
PP - Pocket Penetrometer
HSA - Hollow Stem Augers
HA - Hand Auger
WB - Wash Bore
RB - Rock Bit
NX - Rock Core

THE STRATIFICATION LINES REPRESENT APPROXIMATE BOUNDARY LINES BETWEEN SOIL AND ROCK TYPES: ACTUAL TRANSITIONS MAY BE GRADUAL.

AQUATERRA **Environmental Solutions, Inc.** 7311 W. 130th St, Overland Park, KS 66213	LOG OF BORING NO.: **TMP-9**	SHEET NUMBER 2 of 5
CLIENT: Bridgeton Landfill, LLC	GEOLOGIST: Robert H. Hill II	
PROJECT NAME: Temperature Monitoring Probe	DATE: 10/19/2012	
	PROJECT NUMBER: 5582.10	

SAMPLER TYPE	SAMPLE DEPTH	Temp °F	PID (PPM)	RECOVERY (FT)	DEPTH IN FEET	USCS CLASS	C I	SOIL DESCRIPTION AND DRILLING CONDITIONS	NOTES:
		131			21–45			**Municipal Solid Waste** Slightly Moist - No Visible Asbestos	**(Abrasive Sheath)** **Cement Bentonite Grout** **Thermocouple Probe**
		138							
		147							

LEGEND:

SS - Split Spoon
CS - 5 foot CME Sampler
ST - Shelby Tube
PID - Photoionization Detector
PP - Pocket Penetrometer
HSA - Hollow Stem Augers
HA - Hand Auger
WB - Wash Bore
RB - Rock Bit
NX - Rock Core

THE STRATIFICATION LINES REPRESENT APPROXIMATE BOUNDARY LINES BETWEEN SOIL AND ROCK TYPES: ACTUAL TRANSITIONS MAY BE GRADUAL.

AQUATERRA
Environmental Solutions, Inc.
7311 W. 130th St, Overland Park, KS 66213

LOG OF BORING NO.: **TMP-9** SHEET NUMBER 3 of 5

GEOLOGIST: Robert H. Hill II
CLIENT: Bridgeton Landfill, LLC
DATE: 10/19/2012
PROJECT NAME: Temperature Monitoring Probe
PROJECT NUMBER: 5582.10

SAMPLER TYPE	SAMPLE DEPTH	Temp °F	PID (PPM)	RECOVERY (FT)	DEPTH IN FEET	USCS CLASS	C I	SOIL DESCRIPTION AND DRILLING CONDITIONS	NOTES:
		147			46 47 48 49 50				
		148			51 52 53 54 55 56 57 58 59 60			**Municipal Solid Waste** Slightly Moist - No Visible Asbestos	**(Abrasive Sheath)** **Cement Bentonite Grout** **Thermocouple Probe**
		141			61 62 63 64 65 66 67 68 69 70				

LEGEND:
SS - Split Spoon
CS - 5 foot CME Sampler
ST - Shelby Tube
PID - Photoionization Detector
PP - Pocket Penetrometer
HSA - Hollow Stem Augers
HA - Hand Auger
WB - Wash Bore
RB - Rock Bit
NX - Rock Core

THE STRATIFICATION LINES REPRESENT APPROXIMATE BOUNDARY LINES BETWEEN SOIL AND ROCK TYPES: ACTUAL TRANSITIONS MAY BE GRADUAL.

AQUATERRA

Environmental Solutions, Inc.

7311 W. 130th St, Overland Park, KS 66213

LOG OF BORING NO.: **TMP-9**

SHEET NUMBER 4 of 5

GEOLOGIST: Robert H. Hill II

CLIENT: Bridgeton Landfill, LLC

DATE: 10/19/2012

PROJECT NAME: Temperature Monitoring Probe

PROJECT NUMBER: 5582.10

SAMPLER TYPE	SAMPLE DEPTH	Temp °F	PID (PPM)	RECOVERY (FT)	DEPTH IN FEET	USCS CLASS	C I	SOIL DESCRIPTION AND DRILLING CONDITIONS	NOTES:
		142			71 72 73 74 75 76 77 78 79 80			**Municipal Solid Waste** Slightly Moist - No Visible Asbestos	**Thermocouple Probe** **(Abrasive Sheath)** **Cement Bentonite Grout**
		149			81 82 83 84 85 86 87 88 89 90				
		160			91 92 93 94 95			**Municipal Solid Waste** Moist - No Visible Asbestos	

LEGEND:

SS - Split Spoon
CS - 5 foot CME Sampler
ST - Shelby Tube
PID - Photoionization Detector
PP - Pocket Penetrometer
HSA - Hollow Stem Augers
HA - Hand Auger
WB - Wash Bore
RB - Rock Bit
NX - Rock Core

THE STRATIFICATION LINES REPRESENT APPROXIMATE BOUNDARY LINES BETWEEN SOIL AND ROCK TYPES: ACTUAL TRANSITIONS MAY BE GRADUAL.

AQUATERRA

Environmental Solutions, Inc.

7311 W. 130th St, Overland Park, KS 66213

LOG OF BORING NO.: **TMP-9**

SHEET NUMBER 5 of 5

GEOLOGIST: Robert H. Hill II

CLIENT: Bridgeton Landfill, LLC

DATE: 10/19/2012

PROJECT NAME: Temperature Monitoring Probe

PROJECT NUMBER: 5582.10

SAMPLER TYPE	SAMPLE DEPTH	Temp °F	PID (PPM)	RECOVERY (FT)	DEPTH IN FEET	USCS CLASS	C I	SOIL DESCRIPTION AND DRILLING CONDITIONS	NOTES:
		160			96 97 98 99 100			**Municipal Solid Waste** Moist - No Visible Asbestos	**(Abrasive Sheath)** **Cement Bentonite Grout**

LEGEND:

SS - Split Spoon
CS - 5 foot CME Sampler
ST - Shelby Tube

PID - Photoionization Detector
PP - Pocket Penetrometer
HSA - Hollow Stem Augers

HA - Hand Auger
WB - Wash Bore
RB - Rock Bit
NX - Rock Core

THE STRATIFICATION LINES REPRESENT APPROXIMATE BOUNDARY LINES BETWEEN SOIL AND ROCK TYPES: ACTUAL TRANSITIONS MAY BE GRADUAL.

APPENDIX E

HISTORICAL LOCAL CROSS-SECTIONS

DRAFT

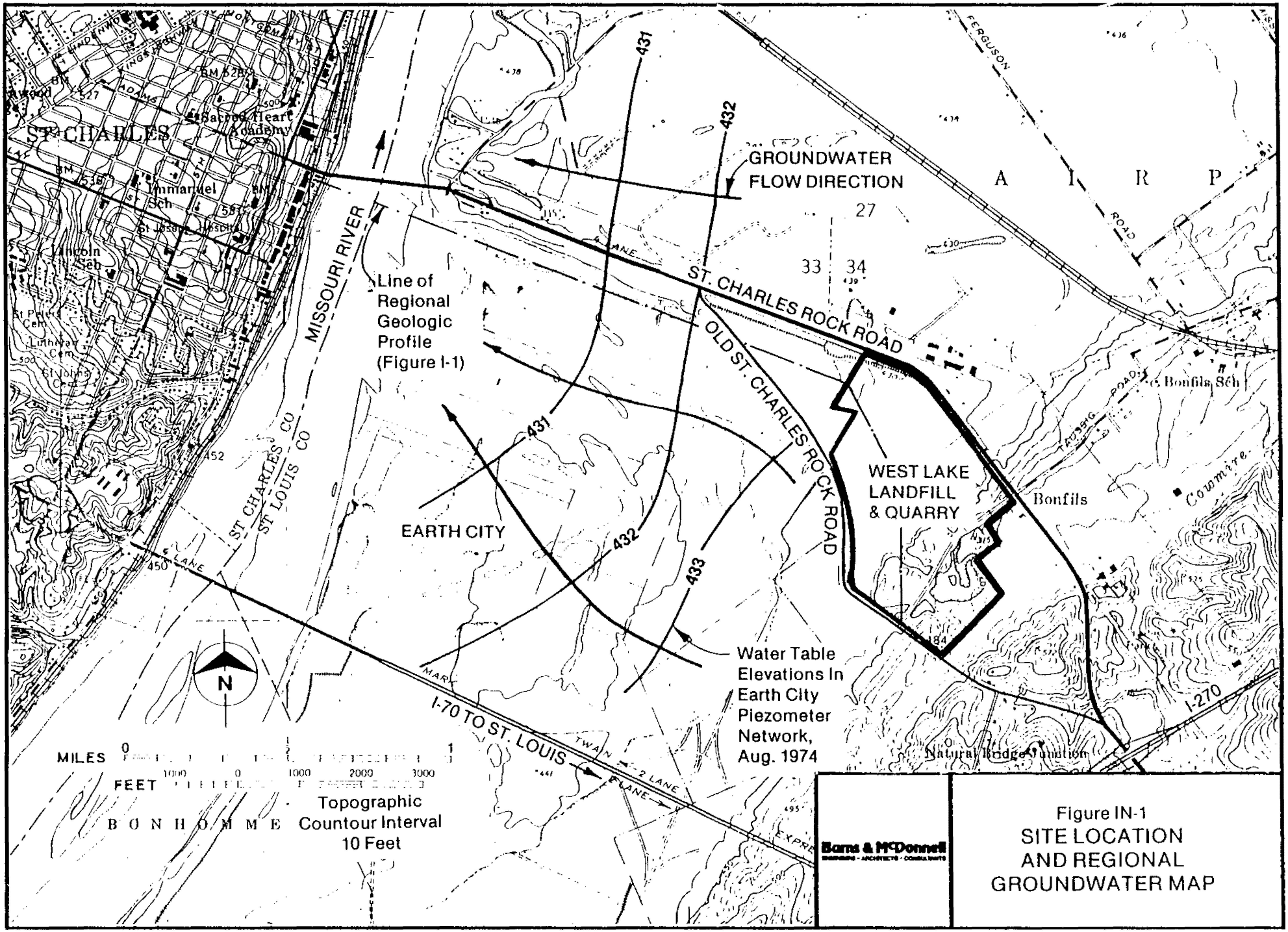

Figure IN-1
SITE LOCATION AND REGIONAL GROUNDWATER MAP

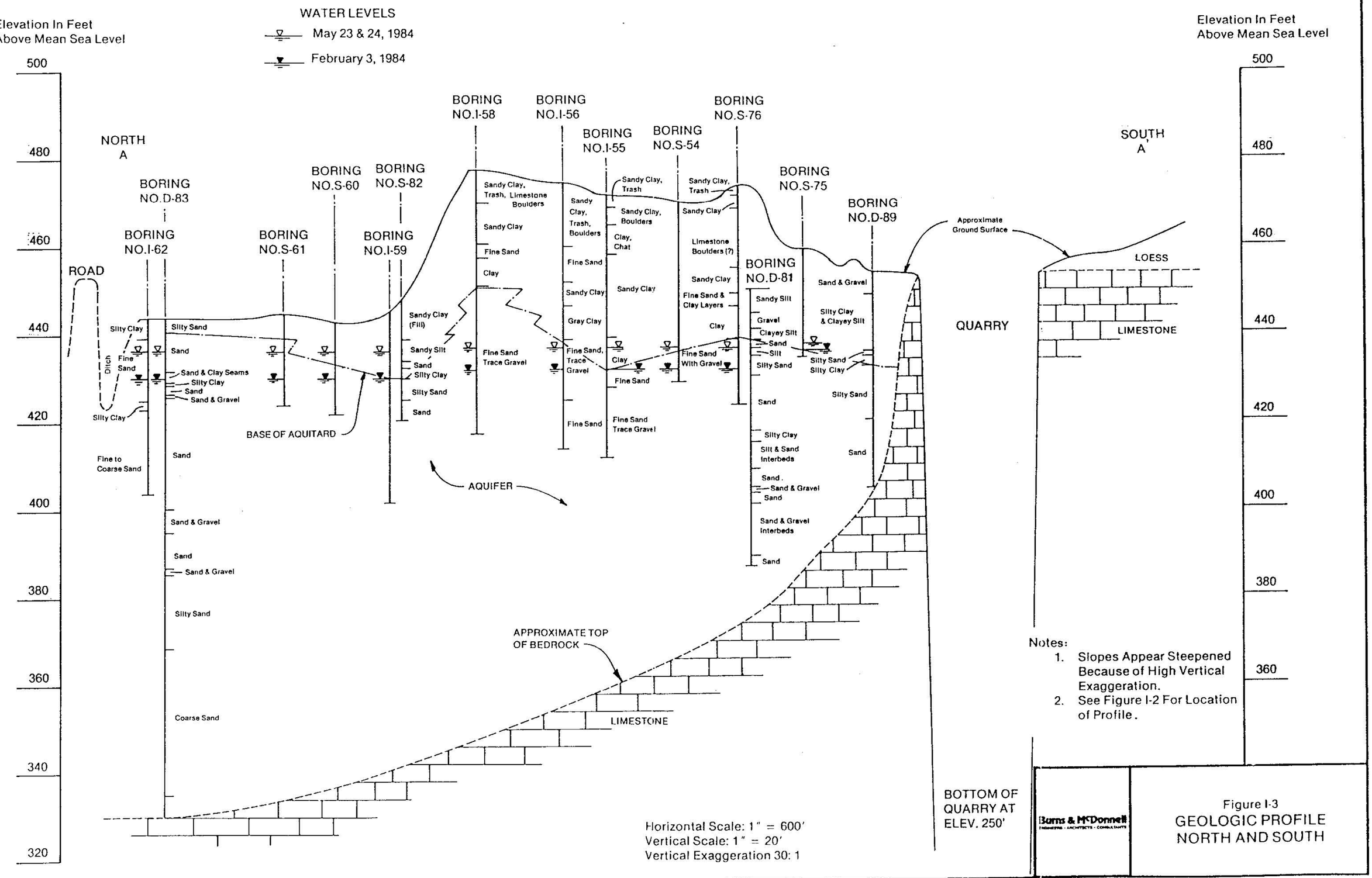

Notes:

1. Slopes Appear Steepened Because of High Vertical Exaggeration.
2. See Figure I-2 For Location of Profile.

Burns & McDonnell
ENGINEERS · ARCHITECTS · CONSULTANTS

Figure I-3
GEOLOGIC PROFILE
NORTH AND SOUTH

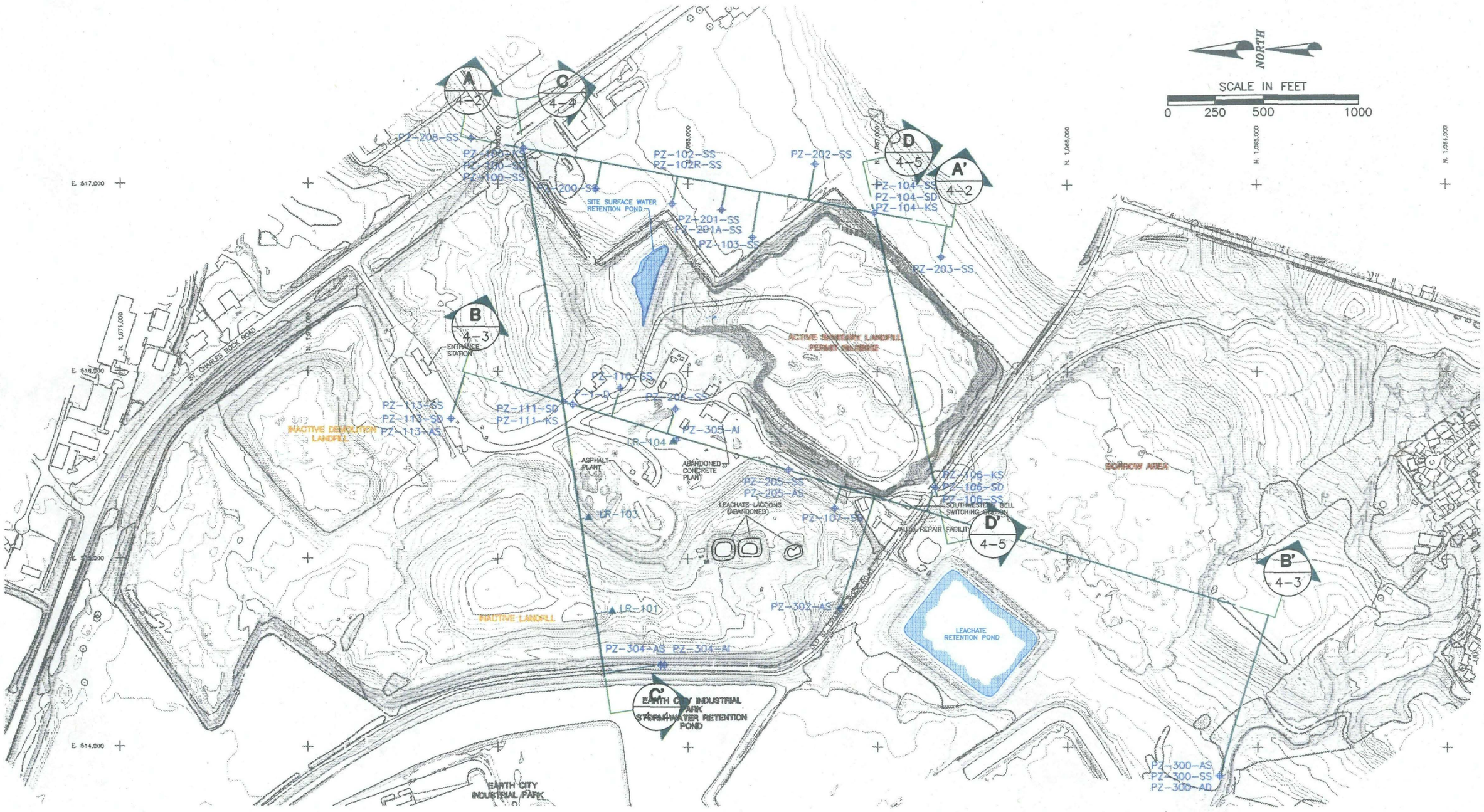

LEGEND

B 4-3 — SECTION DESIGNATOR
GEOLOGIC CROSS SECTION FIGURE NUMBER

NOTE:
TOPOGRAPHY PROVIDED BY SURDEX. JANUARY 1995

Golder Associates — Denver, Colorado

CLIENT/PROJECT: LAIDLAW — LAIDLAW WASTE SYSTEMS INC. — WEST LAKE LANDFILL

TITLE: GEOLOGIC CROSS SECTION LOCATION MAP

DRAWN	TMC	DATE	AUGUST 1996	JOB NO.	943-2848
CHECKED	BGT	SCALE	AS SHOWN	DWG. NO./REV. NO.	B089
REVIEWED	WEH	FILE NO.	2848B089	FIGURE NO.	4-1

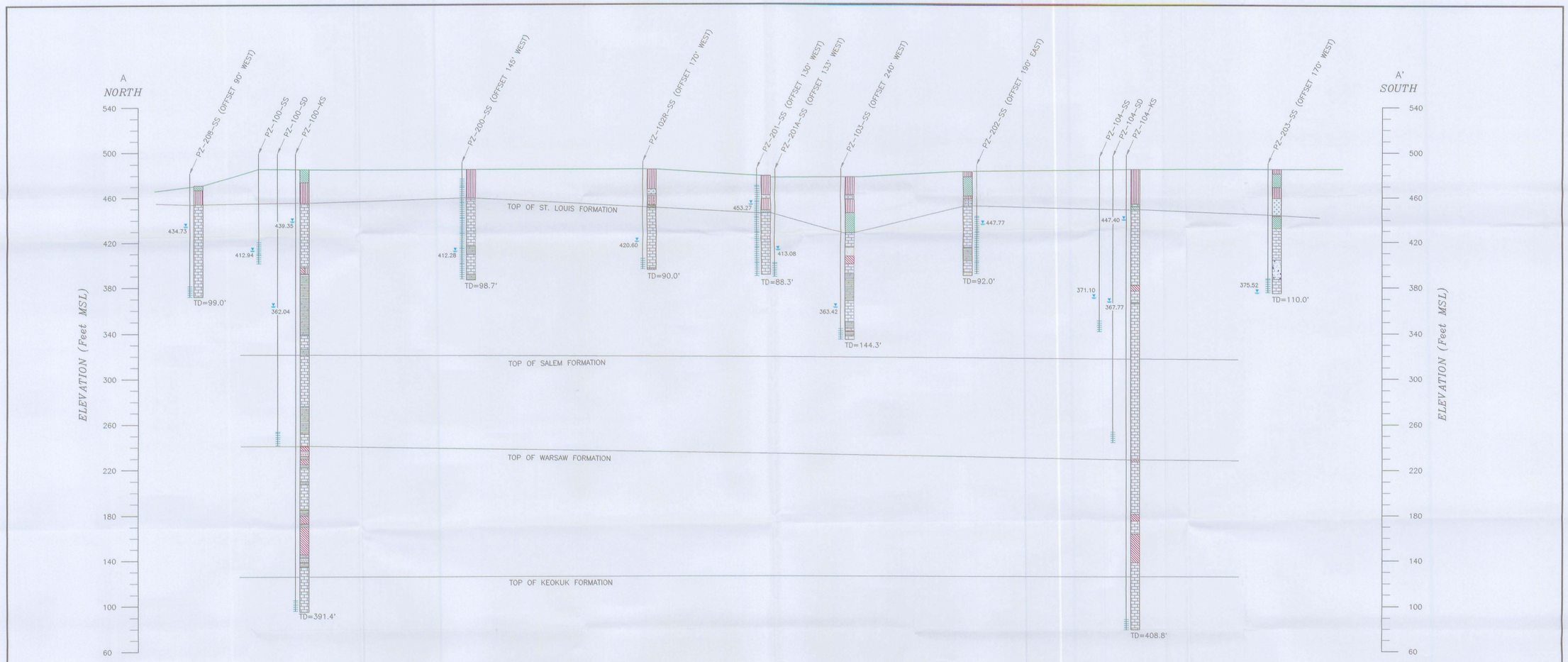

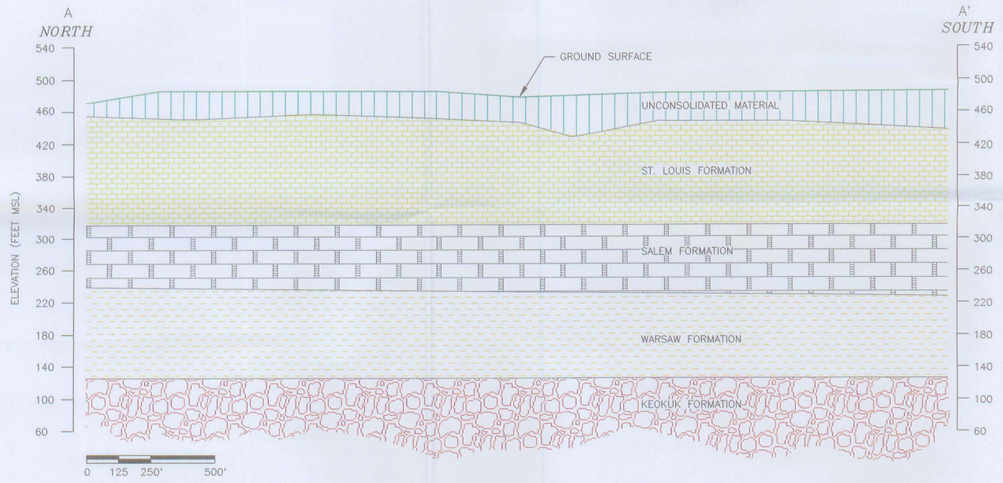

EXPLANATION

PIEZOMETER DESIGNATION — PZ-100-KS

439.35 — WATER LEVEL (ELEV. FEET MSL) DATA COLLECTED ON JULY 12, 1996 EXCEPT WHERE OTHERWISE NOTED

PVC RISER PIPE

WELL SCREEN INTERVAL

TOTAL DEPTH OF BOREHOLE (FEET BELOW GROUND SURFACE) — TD=391.4'

BEDROCK
- NOT SAMPLED
- LIMESTONE
- DOLOMITE
- SANDSTONE
- SILTSTONE
- CLAYSTONE
- COLLAPSE ZONE (INFILL CONSISTING OF LIMESTONE BOULDERS IN SILTSTONE AND/OR SANDSTONE MATRIX)

SOIL
- LOW PLASTICITY CLAY (CL)
- HIGH PLASTICITY CLAY (CH)
- SILT (ML)
- CLAYEY SAND (SC)
- SILTY SAND (SM)
- WELL GRADED SAND (SW)
- POORLY GRADED SAND (SP)
- POORLY GRADED GRAVEL (GP)
- SOLID WASTE

0 50' 100' 200'
HORIZONTAL SCALE: 1"=100'
VERTICAL SCALE: 1"=40' (2.5 x EXAGGERATION)

NOTES:

1. GEOLOGIC CROSS SECTIONS PRESENT GENERALIZED SOIL AND BEDROCK STRATIGRAPHY BETWEEN BOREHOLE LOCATIONS. THE STRATIGRAPHY BETWEEN BOREHOLES HAS BEEN INFERRED FROM GEOLOGIC EVIDENCE AND SO MAY VARY FROM THAT SHOWN. REFER TO THE BOREHOLE LOGS FOR DETAILED STRATIGRAPHY AT EACH BOREHOLE LOCATION.

2. TOPOGRAPHY PROVIDED BY SURDEX, JANUARY 1995

REV.	DATE	DESCRIPTION	DR. BY	APP. BY
0	9/14/95	ISSUED TO MDNR	JMJ	CER

CLIENT/PROJECT: LAIDLAW WASTE SYSTEMS INC. — WEST LAKE LANDFILL

TITLE: GEOLOGIC CROSS SECTION A-A'

Denver, Colorado — Golder Associates

DRAWN	TMC	DATE	AUGUST 1996
CHECKED	MJK	SCALE	AS SHOWN
REVIEWED	CER	JOB NO.	943-2848
APPROVED	WEH	DWG. NO.	D098
FILE NO.	2848D098	FIGURE	4-2

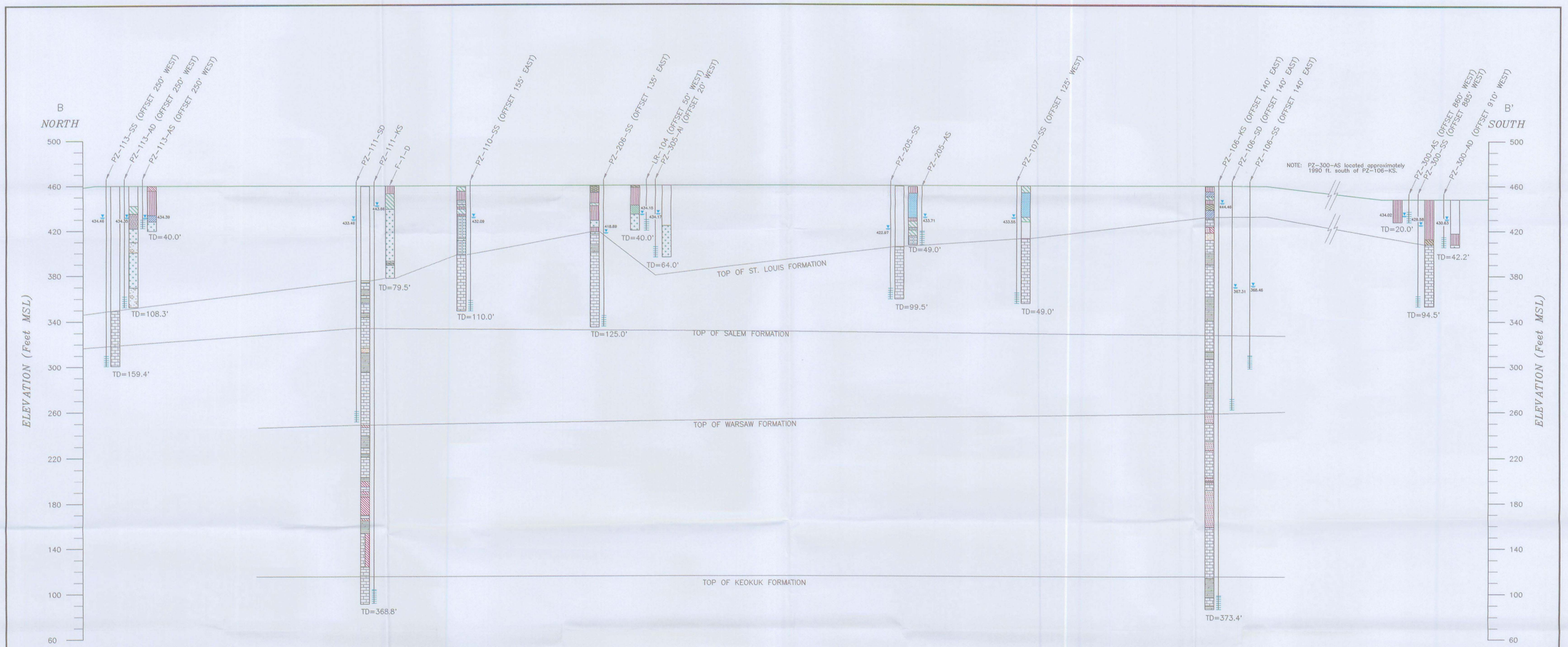

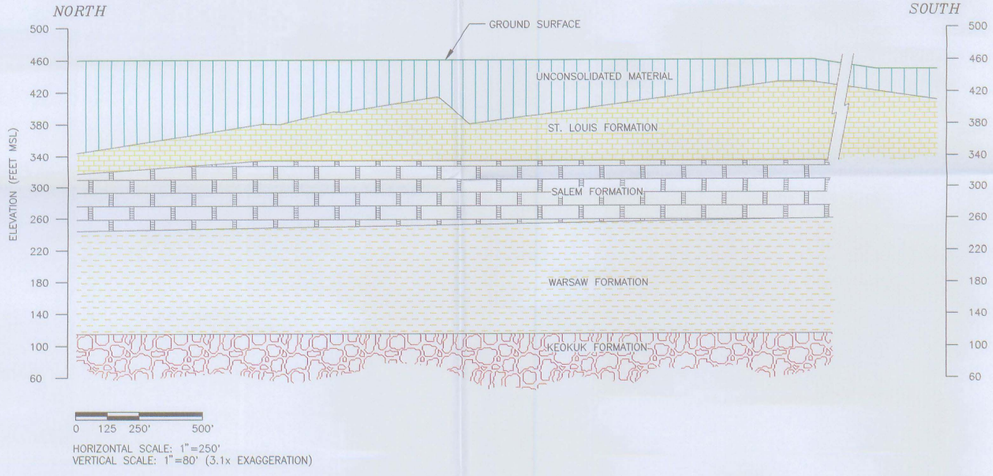

EXPLANATION

PIEZOMETER DESIGNATION — PZ-111-KS

443.66 — WATER LEVEL (ELEV. FEET MSL) DATA COLLECTED ON JULY 12, 1996 EXCEPT WHERE OTHERWISE NOTED

PVC RISER PIPE

TOTAL DEPTH OF BOREHOLE (FEET BELOW GROUND SURFACE) — WELL SCREEN INTERVAL TD=368.8'

BEDROCK
- NOT SAMPLED
- LIMESTONE
- DOLOMITE
- SANDSTONE
- SILTSTONE
- CLAYSTONE
- COLLAPSE ZONE (INFILL CONSISTING OF LIMESTONE BOULDERS IN SILTSTONE AND/OR SANDSTONE MATRIX)

SOIL
- LOW PLASTICITY CLAY (CL)
- HIGH PLASTICITY CLAY (CH)
- SILT (ML)
- CLAYEY SAND (SC)
- SILTY SAND (SM)
- WELL GRADED SAND (SW)
- POORLY GRADED SAND (SP)
- CLAYEY GRAVEL (GC)
- POORLY GRADED GRAVEL (GP)
- SOLID WASTE

0 50' 100' 200'
HORIZONTAL SCALE: 1"=100'
VERTICAL SCALE: 1"=40' (2.5x EXAGGERATION)

NOTES:

1. GEOLOGIC CROSS SECTIONS PRESENT GENERALIZED SOIL AND BEDROCK STRATIGRAPHY BETWEEN BOREHOLE LOCATIONS. THE STRATIGRAPHY BETWEEN BOREHOLES HAS BEEN INFERRED FROM GEOLOGIC EVIDENCE AND SO MAY VARY FROM THAT SHOWN. REFER TO THE BOREHOLE LOGS FOR DETAILED STRATIGRAPHY AT EACH BOREHOLE LOCATION.
2. TOPOGRAPHY PROVIDED BY SURDEX, JANUARY 1995
3. WATER LEVELS FOR PZ-300-AS, PZ-300-SS, AND PZ-300-AD WERE COLLECTED ON APRIL 3, 1996. THIS WELL CLUSTER WAS DECOMISSIONED IN APRIL 1996.

REV.	DATE	DESCRIPTION	DR. BY	APP. BY
0	9/14/95	ISSUED TO MDNR	JMJ	CER

CLIENT/PROJECT: LAIDLAW WASTE SYSTEMS INC. — WEST LAKE LANDFILL

TITLE: GEOLOGIC CROSS SECTION B-B'

Golder Associates — Denver, Colorado

DRAWN	TMC	DATE	AUGUST 1996
CHECKED	MJK	SCALE	AS SHOWN
REVIEWED	CER	JOB NO.	943-2848
APPROVED	WEH	DWG. NO.	D095
FILE NO.	2848D095	FIGURE	4-3

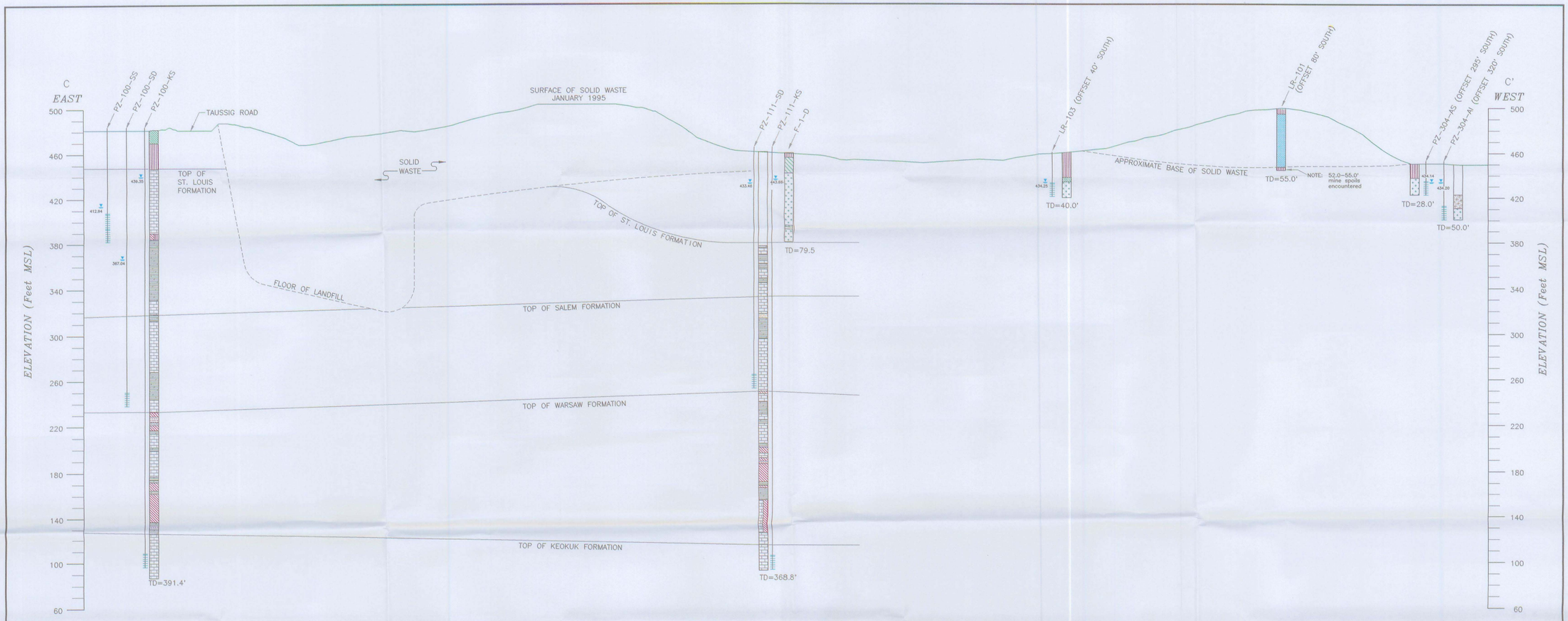

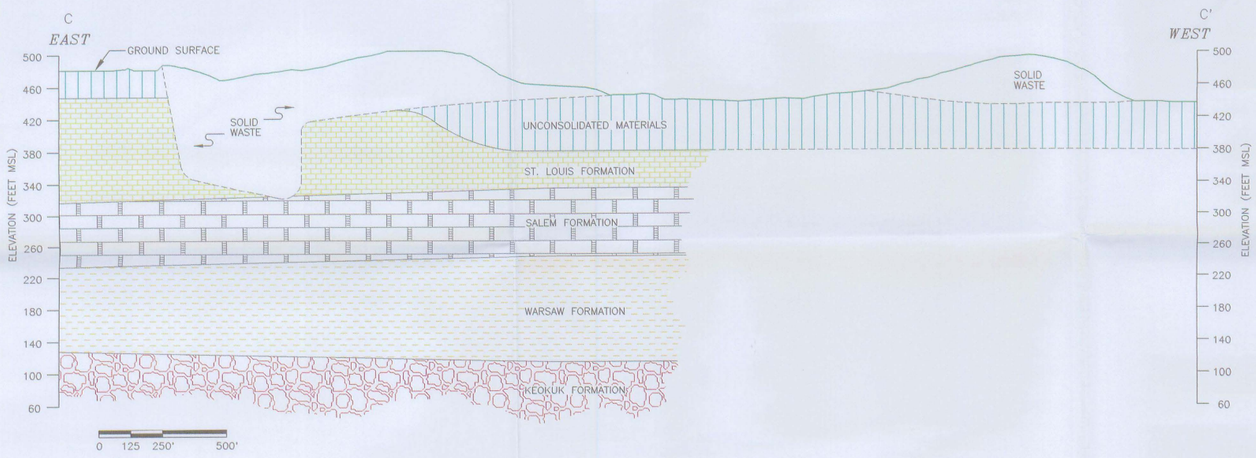

EXPLANATION

PIEZOMETER DESIGNATION — PZ-100-KS

489.35 — WATER LEVEL (ELEV. FEET MSL) DATA COLLECTED ON JULY 12, 1996 EXCEPT WHERE OTHERWISE NOTED

PVC RISER PIPE

WELL SCREEN INTERVAL

TOTAL DEPTH OF BOREHOLE (FEET BELOW GROUND SURFACE) — TD=391.4'

BEDROCK
- NOT SAMPLED
- LIMESTONE
- DOLOMITE
- SANDSTONE
- SILTSTONE
- CLAYSTONE
- COLLAPSE ZONE (INFILL CONSISTING OF LIMESTONE BOULDERS IN SILTSTONE AND/OR SANDSTONE MATRIX)

SOIL
- LOW PLASTICITY CLAY (CL)
- HIGH PLASTICITY CLAY (CH)
- SILT (ML)
- CLAYEY SAND (SC)
- SILTY SAND (SM)
- WELL GRADED SAND (SW)
- POORLY GRADED SAND (SP)
- POORLY GRADED GRAVEL (GP)
- SOLID WASTE

NOTES:

1. GEOLOGIC CROSS SECTIONS PRESENT GENERALIZED SOIL AND BEDROCK STRATIGRAPHY BETWEEN BOREHOLE LOCATIONS. THE STRATIGRAPHY BETWEEN BOREHOLES HAS BEEN INFERRED FROM GEOLOGIC EVIDENCE AND SO MAY VARY FROM THAT SHOWN. REFER TO THE BOREHOLE LOGS FOR DETAILED STRATIGRAPHY AT EACH BOREHOLE LOCATION.
2. ESTIMATED BASE OF LANDFILL OBTAINED FROM MIDWEST ENVIRONMENTAL CONSULTANTS, SEPTEMBER 1994 PERMIT CONSOLIDATION DRAWINGS.
3. TOPOGRAPHY PROVIDED BY SURDEX, JANUARY 1995

0 50' 100' 200'
HORIZONTAL SCALE: 1"=100'
VERTICAL SCALE: 1"=40' (2.5 x EXAGGERATION)

REV.	DATE	DESCRIPTION	DR. BY	APP. BY
0	9/14/95	ISSUED TO MDNR	JMJ	CER

CLIENT/PROJECT: LAIDLAW WASTE SYSTEMS INC. — WEST LAKE LANDFILL

TITLE: GEOLOGIC CROSS SECTION C-C'

Golder Associates — Denver, Colorado

DRAWN	TMC	DATE	AUGUST 1996
CHECKED	MJK	SCALE	AS SHOWN
REVIEWED	CER	JOB NO.	943-2848
APPROVED	WEH	DWG. NO.	D096
FILE NO.	28480096	FIGURE	4-4

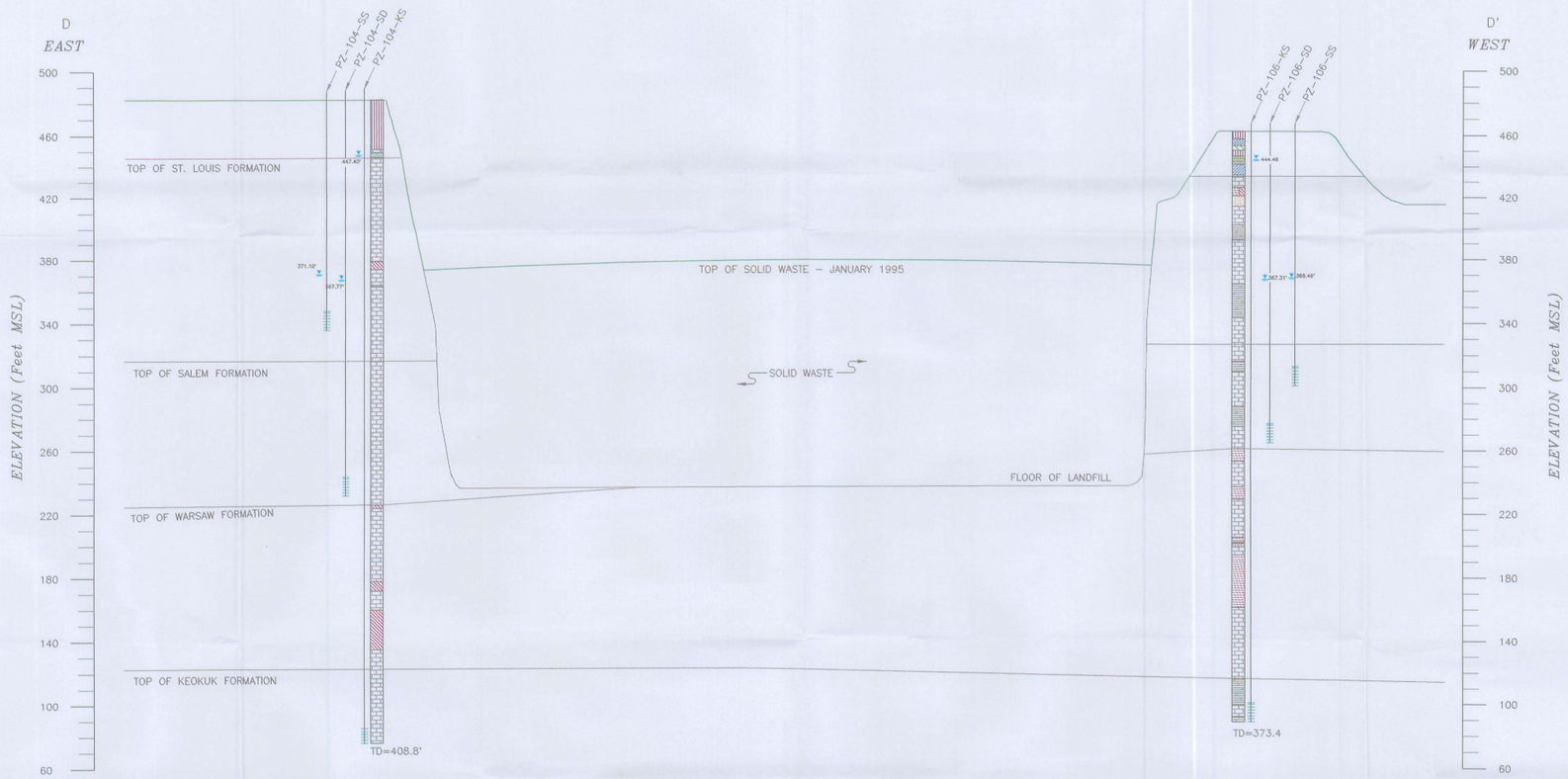

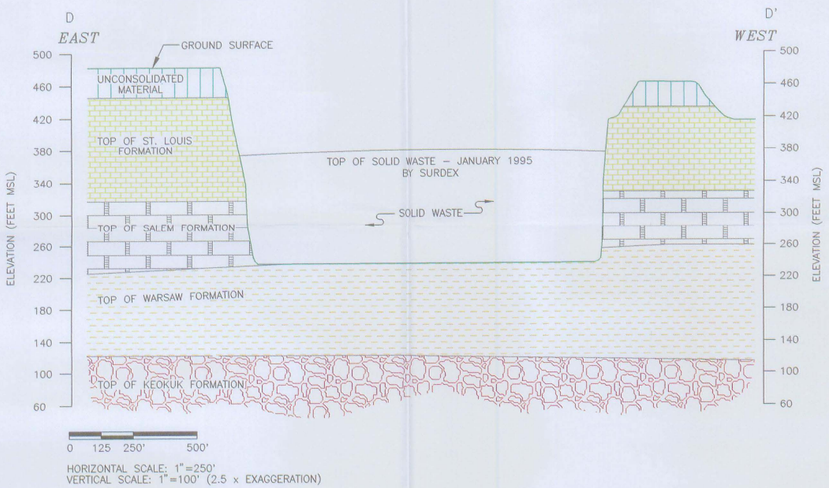

EXPLANATION

PIEZOMETER DESIGNATION — PZ-104-KS

447.40 — WATER LEVEL (ELEV. FEET MSL) DATA COLLECTED ON JULY 12, 1996 EXCEPT WHERE OTHERWISE NOTED

PVC RISER PIPE

WELL SCREEN INTERVAL

TOTAL DEPTH OF BOREHOLE (FEET BELOW GROUND SURFACE) — TD=408.8'

BEDROCK
- NOT SAMPLED
- LIMESTONE
- DOLOMITE
- SANDSTONE
- SILTSTONE
- CLAYSTONE
- COLLAPSE ZONE (INFILL CONSISTING OF LIMESTONE BOULDERS IN SILTSTONE AND/OR SANDSTONE MATRIX)

SOIL
- LOW PLASTICITY CLAY (CL)
- HIGH PLASTICITY CLAY (CH)
- SILT (ML)
- CLAYEY SAND (SC)
- SILTY SAND (SM)
- WELL GRADED SAND (SW)
- POORLY GRADED SAND (SP)
- POORLY GRADED GRAVEL (GP)
- SOLID WASTE

NOTES:
1. GEOLOGIC CROSS SECTIONS PRESENT GENERALIZED SOIL AND BEDROCK STRATIGRAPHY BETWEEN BOREHOLE LOCATIONS. THE STRATIGRAPHY BETWEEN BOREHOLES HAS BEEN INFERRED FROM GEOLOGIC EVIDENCE AND SO MAY VARY FROM THAT SHOWN. REFER TO THE BOREHOLE LOGS FOR DETAILED STRATIGRAPHY AT EACH BOREHOLE LOCATION.
2. ESTIMATED BASE OF LANDFILL OBTAINED FROM MIDWEST ENVIRONMENTAL CONSULTANTS, SEPTEMBER 1994 PERMIT CONSOLIDATION DRAWINGS.
3. TOPOGRAPHY PROVIDED BY SURDEX, JANUARY 1995

0 50' 100' 200'
HORIZONTAL SCALE: 1"=100'
VERTICAL SCALE: 1"=40' (2.5 x EXAGGERATION)

REV.	DATE	DESCRIPTION	DR. BY	APP. BY
0	9/14/95	ISSUED TO MDNR	JMJ	CER

CLIENT/PROJECT: LAIDLAW WASTE SYSTEMS INC. — WEST LAKE LANDFILL

TITLE: GEOLOGIC CROSS SECTION D-D'

Golder Associates — Denver, Colorado

DRAWN	TMC	DATE	AUGUST 1996
CHECKED	MJK	SCALE	AS SHOWN
REVIEWED	CER	JOB NO.	943-2848
APPROVED	WEH	DWG. NO.	D097
FILE NO.	2848D097	FIGURE	4-5

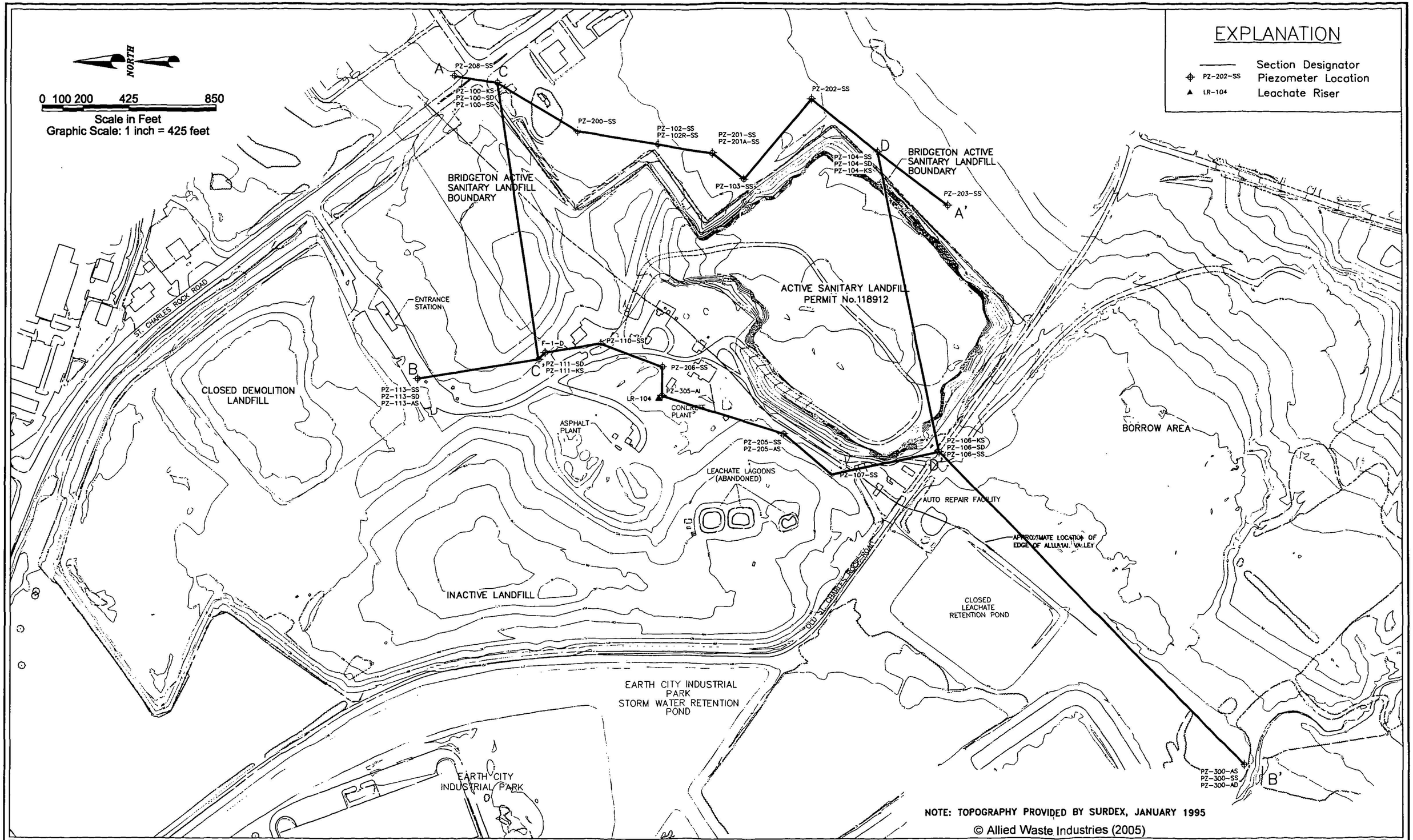

© Allied Waste Industries (2005)

4630 South Highway 94
North Outer Road
St. Charles, Missouri 63304
Phone (636) 939-9111
Fax (636) 939-9757
HERST & ASSOCIATES, INC.®

West Lake Landfill OU-2
Bridgeton, Missouri

Figure 3-3
Geologic Cross Section Location Map

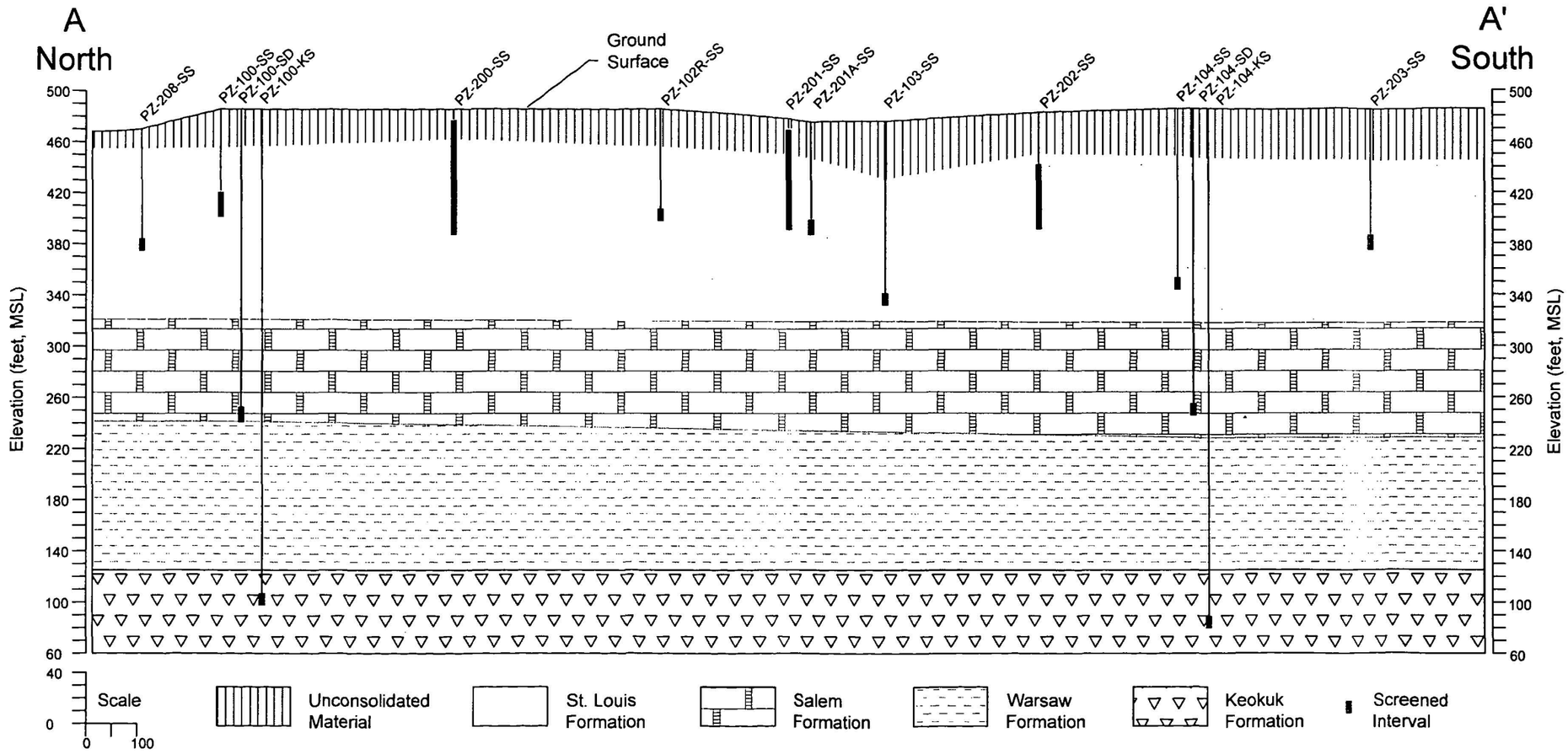

© Allied Waste Industries (2005)

4630 South Highway 94
North Outer Road
St. Charles, Missouri 63304
Phone (636) 939-9111
Fax (636) 939-9757
HERST & ASSOCIATES, INC.®

West Lake Landfill OU-2
Bridgeton, Missouri

Figure 3-4
Geologic Cross Section A-A'

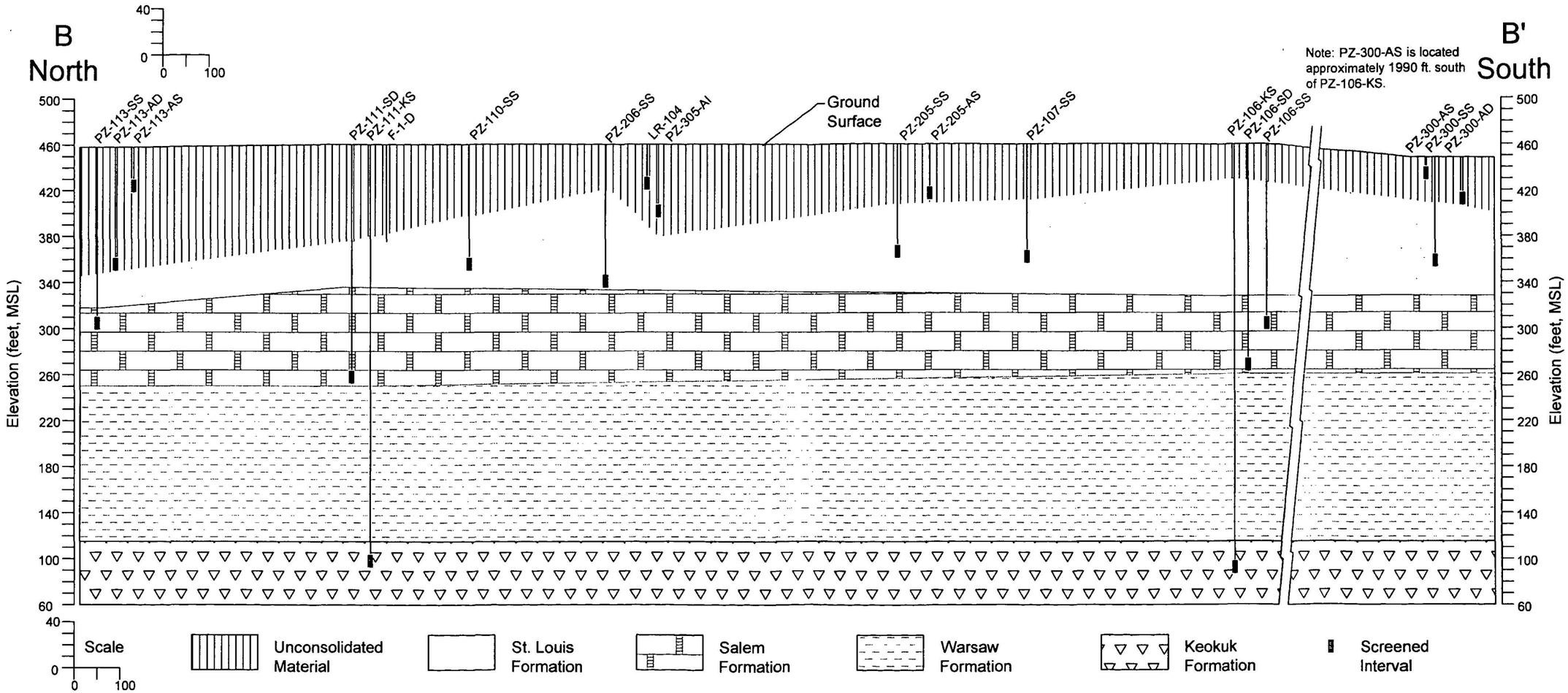

© Allied Waste Industries (2005)

4630 South Highway 94
North Outer Road
St. Charles, Missouri 63304
Phone (636) 939-9111
Fax (636) 939-9757
HERST & ASSOCIATES, INC.®

West Lake Landfill OU-2
Bridgeton, Missouri

Figure 3-5
Geologic Cross Section B-B'

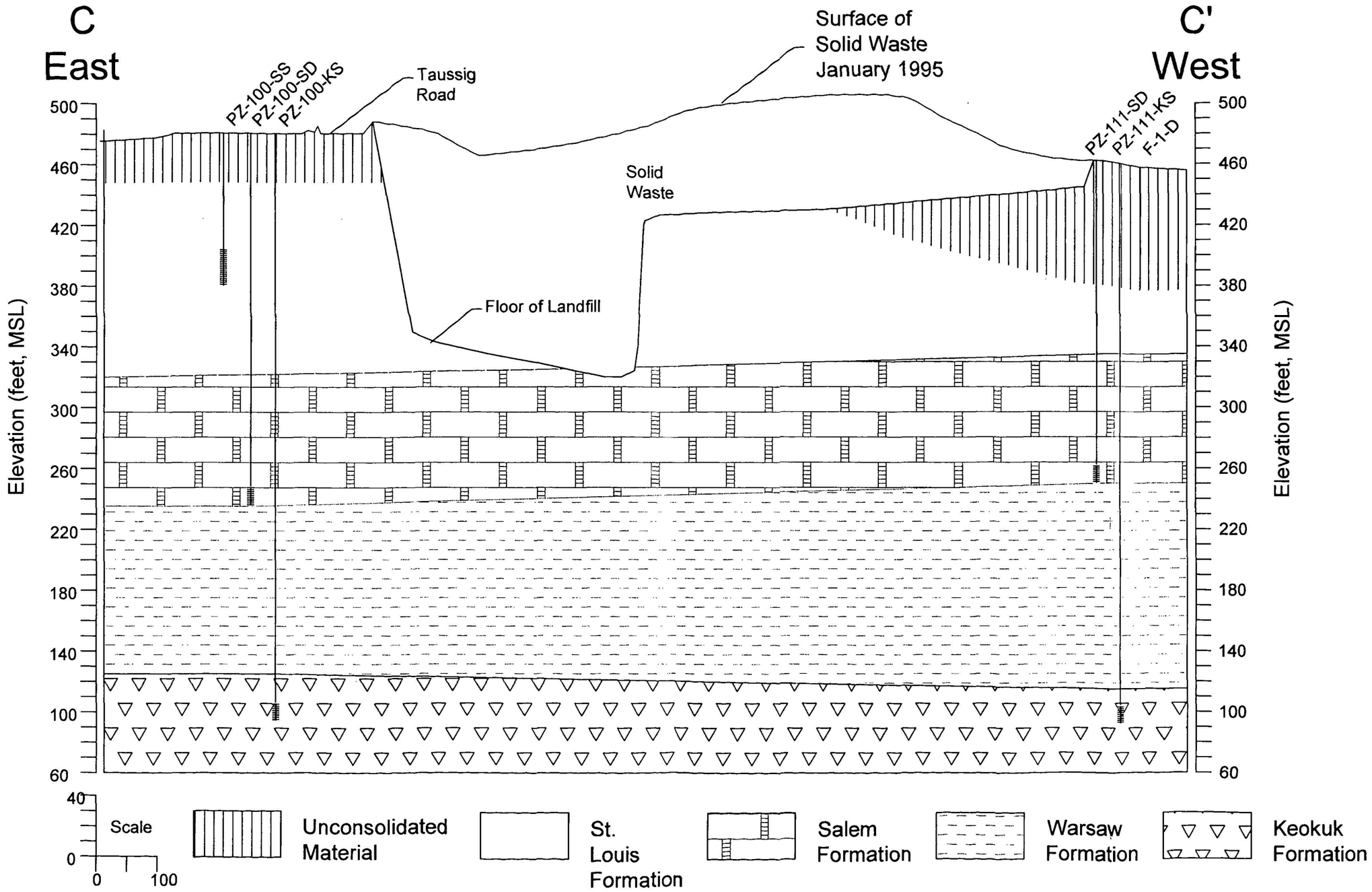

© Allied Waste Industries (2005)

4630 South Highway 94
North Outer Road
St. Charles, Missouri 63304
Phone (636) 939-9111
Fax (636) 939-9757
HERST & ASSOCIATES, INC.®

West Lake Landfill OU-2
Bridgeton, Missouri

Figure 3-6
Geologic Cross Section C-C'

D

East

D'

West

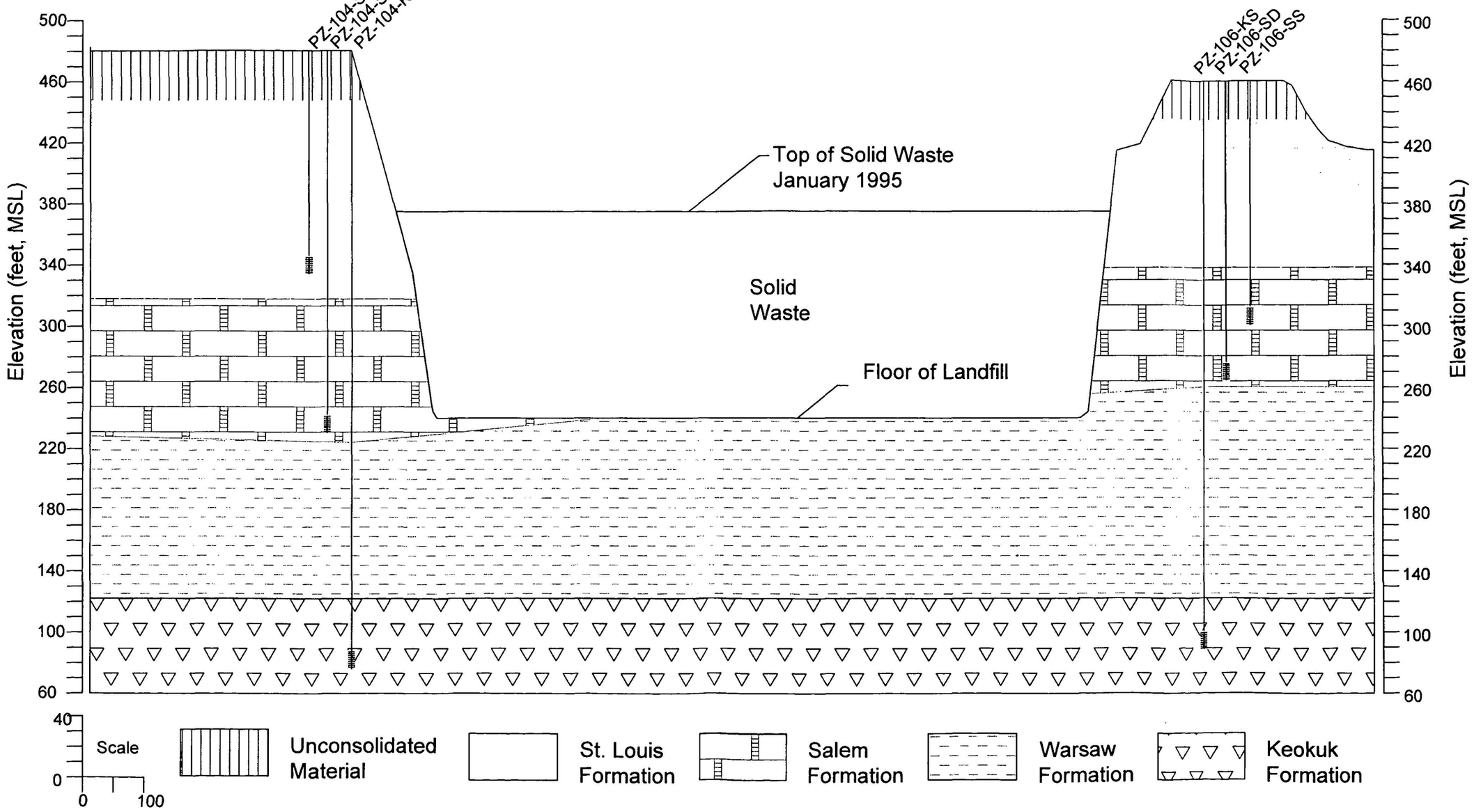

© Allied Waste Industries (2005)

4630 South Highway 94
North Outer Road
St. Charles, Missouri 63304
Phone (636) 939-9111
Fax (636) 939-9757

HERST & ASSOCIATES, INC.®

West Lake Landfill OU-2
Bridgeton, Missouri

Figure 3-7
Geologic Cross Section D-D'

NORTHWEST

A

Area 2

BEND IN SECTION

North Quarry Portion of the Bridgeton Landfill

Area 1

SOUTHEAST

A'

Note: Projected Distance to the Cross Section (Typical)

D-83 (55 ft from Northeast) Property Boundary

I-62 (70 ft from Northeast)

WL-222 (58 ft from Southwest)

PVC-34 (78 ft from Southwest)

WL-223 (14 ft from Southwest)

PVC-20 (41 ft from Northeast)

PVC-6 (80 ft from Southwest)

WL-238 (77 ft from Northeast)

PVC-19 (27 ft from Northeast)

WL-226

PVC-12 (115 ft from Northeast)

PVC-9 (20 ft from Southwest)

WL-241 (87 ft from Southwest)

WL-240 (56 ft from Northeast)

WL-214 (78 ft from Southwest)

Closed Demolition Landfill

PZ-207-AS (76 ft from Northeast)

Site Access Road

WL-106A (103 ft from Southwest)

WL-117 24' Depth (7 ft from Southwest)

PVC-36 21' Depth (40 ft from Southwest)

PVC-24 (60 ft from Northeast)

WL-108 (69 ft from Northeast)

PVC-37 (104 ft from Northeast)

WL-119 (70 ft from Southwest)

(58 ft from Northeast) WL-109D

D-14 (75 ft from Northeast)

LCS-6B (83 ft from Southwest)

PZ-101-SS (118 ft from Southwest)

PZ-200-SS (181 ft from Northeast)

PZ-102R-SS (121 ft from Southwest)

PZ-102-SS (122 ft from Southwest)

Solid Waste

Clay

Fill

Loess ?

Loess

Alluvium

Alluvium

St. Louis Fm

St. Louis Fm

430.37

430.18

430.40

452.92 Not Used

459.30

460.14

459.13

436.77

ELEVATION ABOVE MEAN SEA LEVEL (feet)

450

400

350

300

460

455

450

445

440

435

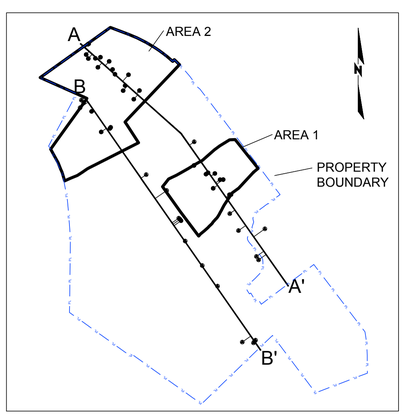

Cross Section Index

GEOLOGIC LEGEND

- Solid Waste
- Clay
- Loess
- Alluvium
- St Louis Fm Limestone
- Salem Fm Limestone
- Warsaw Fm
- Keokuk Fm Limestone
- Well Screen Interval

LEGEND

- September 2013 Alluvial Groundwater Elevation Taken at Well
- September 2013 St Louis Fm Groundwater Elevation Taken at Well
- September 2013 Leachate Groundwater Elevation Taken at Well
- September 2013 Alluvial Groundwater Elevation at Cross Section Intersection
- September 2013 St Louis Fm Groundwater Elevation at Cross Section Intersection
- September 2013 Potentiometric Contours
- Inferred Hydraulic Gradient within the Bedrock Unit
- Max/Min Alluvial Groundwater Elevation at Cross Section Intersection (July 2012 Through September 2013)
- Max/Min St Louis FM Groundwater Elevation at Cross Section Intersection (July 2012 Through September 2013)

Notes: These cross-sections were developed to display groundwater conditions beneath the site.
Please see the cross-sections in Appendix M for detailed portrayals of the RIM occurrences in Areas 1 and 2.
Ground surface from Aerial Topography provided by Cooper Aerial Surveys Co. and is dated December 2, 2016

0 75 150

HORIZONTAL SCALE IN FEET
VERTICAL EXAGGERATION 5X

Figure 5-13

Cross Section A-A'

West Lake Landfill OU-1 RI Addendum

EMSI Engineering Management Support, Inc.

M:\clients\EMSI\westlake\2017\RI-Addendum-edits\Section-5\Fig-5-13_5-14-Xsections.dwg 1/22/18

NORTHWEST B — SOUTHEAST B'

Area 2 Limits

Inactive Sanitary Landfill

Transfer Station

Asphalt Plant

South Quarry Portion of the Bridgeton Landfill

Note: Projected Distance to the Cross Section (Typical)

BUFFER ZONE

D6 (52 ft from Southwest)
WL-202 (161 ft from Southwest)
S-61 (54 ft from Southwest)
MW-102 (129 ft from Southwest)
WL-211 (32 ft from Southwest)
WL-210 (62 ft from Southwest)
D-12 (64 ft from Northeast)
S-10 (45 ft from Northeast)
I-11 (35 ft from Northeast)
D-87 (82 ft from Northeast)
PZ-112-AS (184 ft from Northeast)
PZ-111-SD (106 ft from Northeast)
PZ-111-KS (110 ft from Northeast)
MW-F1D (112 ft from Northeast)
PZ-110-SS
PZ-109-SS
LCS-1D (14 ft from Northeast)
LCS-3C (138 ft from Southwest)
PZ-104-SS (19 ft from Northeast)
PZ-104-SD (22 ft from Southwest)
PL — Property Boundary

Solid Waste
Fill
Loess
Alluvium
St. Louis Fm
Salem Fm
Warsaw Fm
Keokuk Fm

ELEVATION ABOVE MEAN SEA LEVEL (feet)

450 400 350 300 250 200 150 100

430.12 439.99 429.97 430.12 430.42 430.18 429.73 430.06 430.50 430.75 463.89 431.35 461.52 456.45 463.90

430 440 450 460 NM

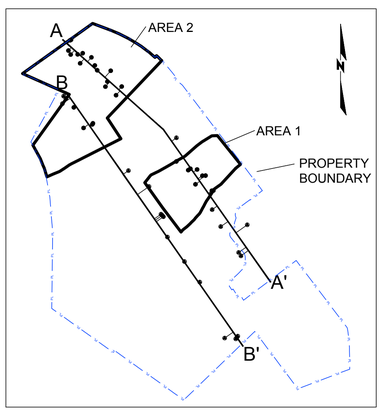

Cross Section Index

GEOLOGIC LEGEND

Solid Waste
Fill
Loess
Alluvium
St Louis Fm Limestone
Salem Fm Limestone
Warsaw Fm
Keokuk Fm Limestone

LEGEND

Well Screen Interval
September 2013 Alluvial Groundwater Elevation Taken at Well
September 2013 St Louis Fm Groundwater Elevation Taken at Well
September 2013 Alluvial Groundwater Elevation at Cross Section Intersection
September 2013 St Louis Fm Groundwater Elevation at Cross Section Intersection
September 2013 Potentiometric Contours
Inferred Hydraulic Gradient within the Bedrock Unit
Inferred Groundwater Flow Direction within the Alluvium
Max/Min Alluvial Groundwater Elevation at Cross Section Intersection (July 2012 Through September 2013)
Max/Min St Louis FM Groundwater Elevation at Cross Section Intersection (July 2012 Through September 2013)

Notes: These cross-sections were developed to display groundwater conditions beneath the site.
Please see the cross-sections in Appendix M for detailed portrayals of the RIM occurrences in Areas 1 and 2.
Ground surface from Aerial Topography provided by Cooper Aerial Surveys Co. and is dated December 2, 2016

0 75 150
HORIZONTAL SCALE IN FEET
VERTICAL EXAGGERATION 5X

Figure 5-14

Cross Section B-B'

West Lake Landfill OU-1 RI Addendum

EMSI Engineering Management Support, Inc.

M:\clients\EMSI\westlake\2017\RI-Addendum-edits\Section-5\Fig-5-13_5-14-Xsections.dwg 1/22/18

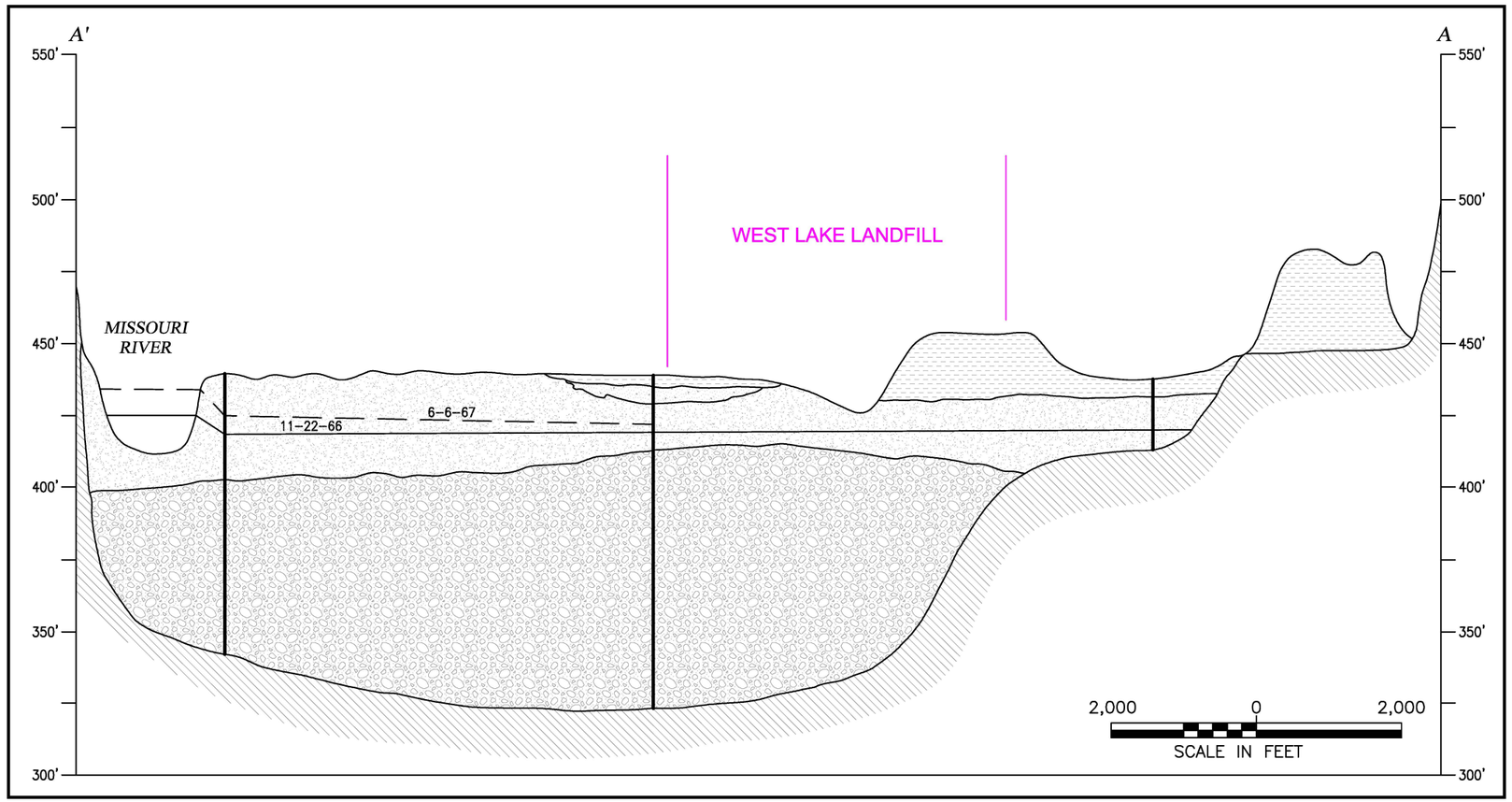

GEOLOGIC LEGEND

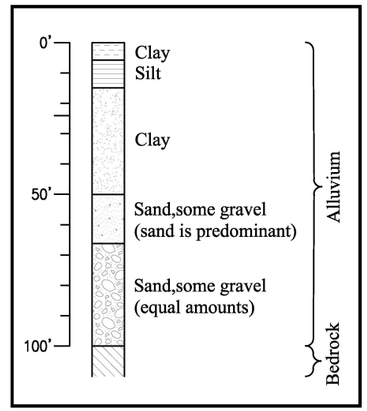

Source: Section A-A', USGS Reconnaissance of the Ground-Water Resources of the Missouri River Alluvium Between St Charles and Jefferson City, Missouri (Emmett and Jeffrey 1968)

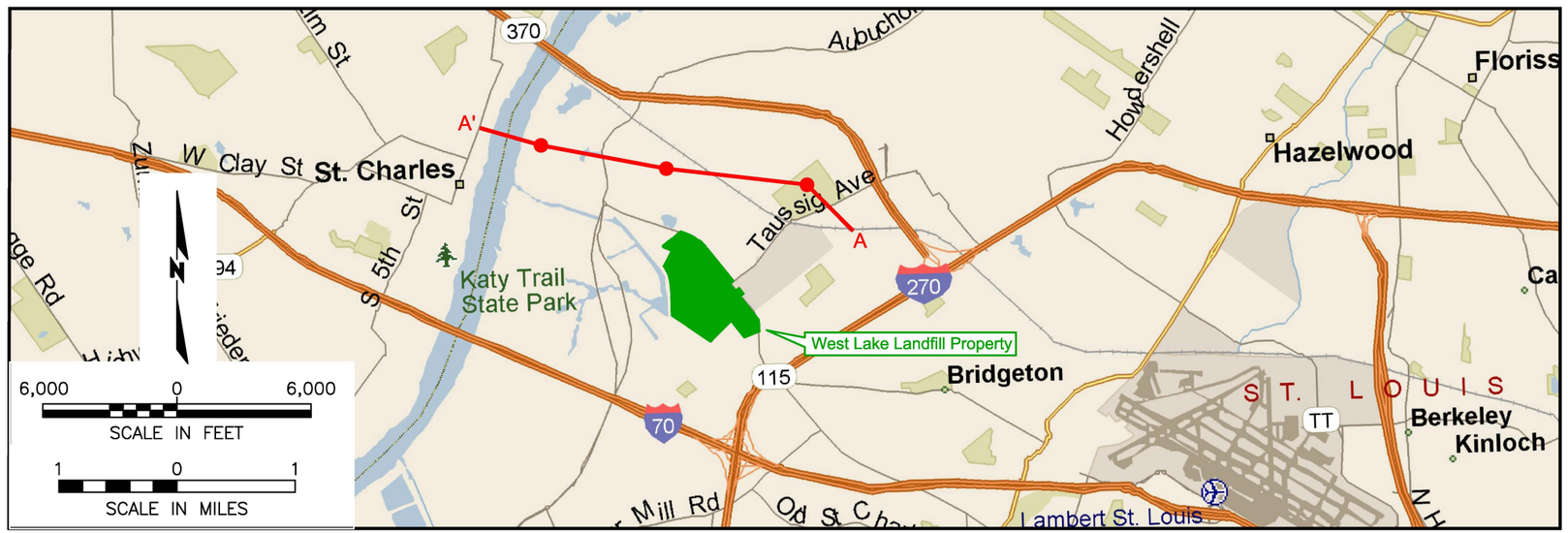

CROSS SECTION INDEX

Figure 5-15

Alluvial Geology in the Vicinity of the West Lake Landfill Superfund Site

West Lake Landfill OU-1 RI Addendum

EMSI Engineering Management Support, Inc.

M:\clients\EMSI\westlake\2017RI-Addendum-edits\Section-5\FIG-5-15_5-16-Alluv-Bed-Sec.dwg 1/22/18

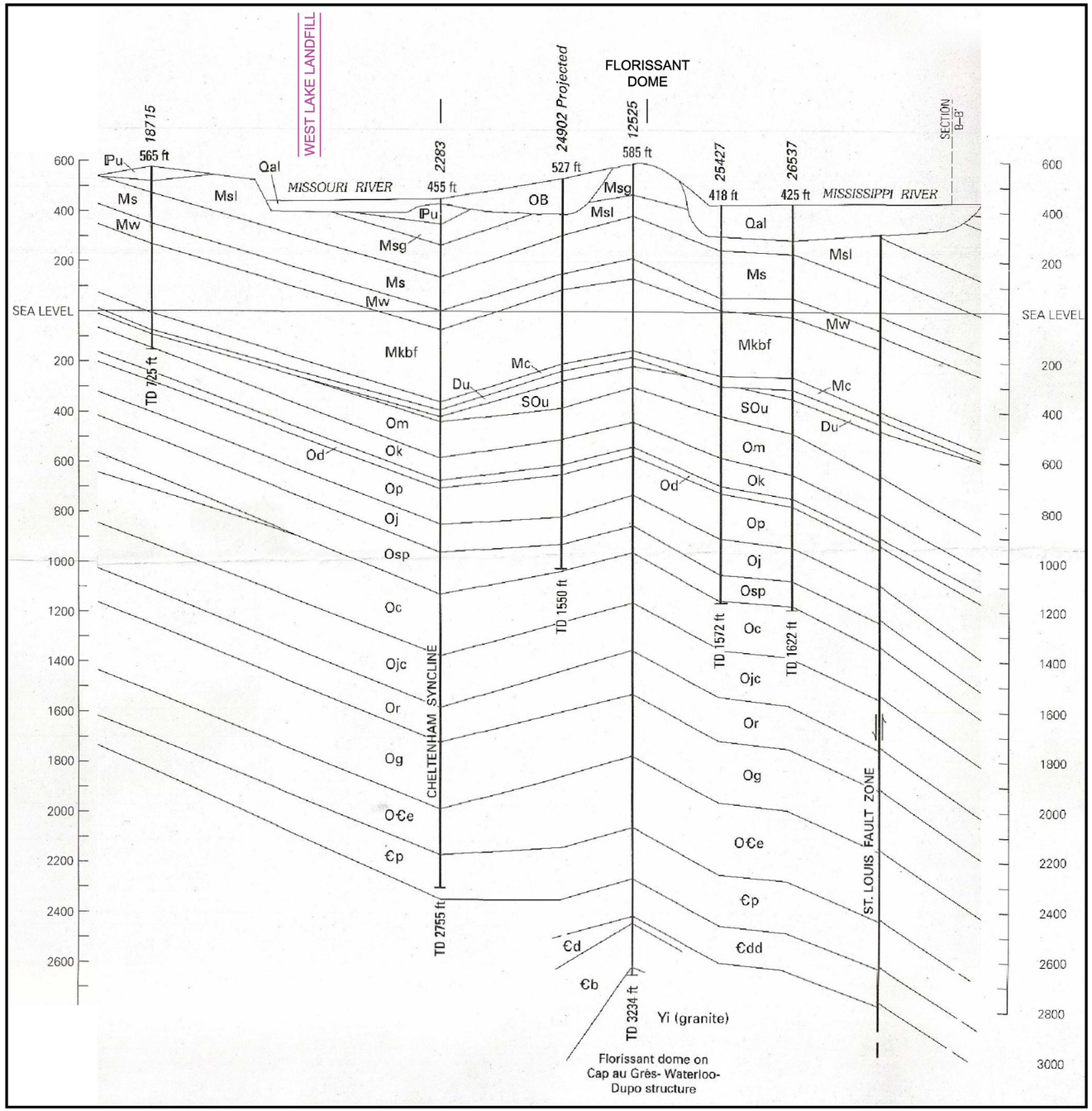

Part of Section A-A', USGS Bedrock Geologic Map of the St. Louis 30' x 60' Quadrangle (Harrison 1997)

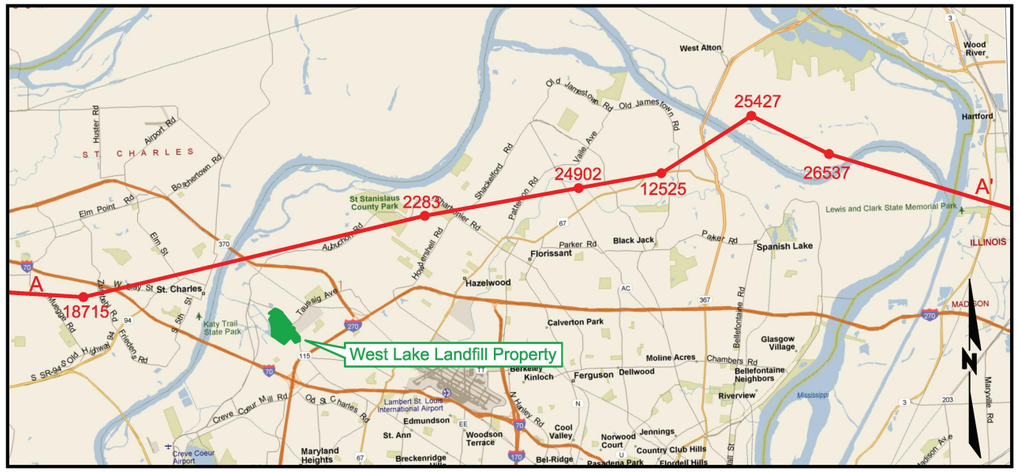

CROSS SECTION INDEX

GEOLOGIC LEGEND

Qal	Alluvium
ℙu	Pennsylvanian rocks - undivided
Msg	Ste. Genevieve Fm
Msl	St. Louis Limestone
Ms	Salem Fm
Mw	Warsaw Fm
Mkbf	Keokuk and Burlington Limestone and Fern Glen FM
Mc	Chouteau Limestone
Du	Upper and Moddle Devonian rocks - undivided
SOu	Middle Silurian to Upper Ordovician rocks - undivided
Om	Maquoketa Shale
Ok	Kimmswick Limestone
Od	Decorah Group - undivided
Op	Plattin Group - undivided
Oj	Joachim Dolimite
Osp	St. Peter Sandstone
Oc	Cotter Dolimite
Ojc	Jefferson City Dolimite
Or	Roubidoux Fm
Og	Gasconade Dolimite
O€e	Eminence Fm
€p	Potosi Fm
€dd	Derby and Doe Run Fms
€d	Davis Fm
€b	Bonneterre Fm
Yi	Igneous crystilline basement

24,000 0 24,000

SCALE IN FEET

5 0 5

SCALE IN MILES

Figure 5-16

Bedrock Geology in the Vicinity of the West Lake Landfill Superfund Site

West Lake Landfill OU-1 RI Addendum

EMSI Engineering Management Support, Inc.

M:\clients\EMSI\westlake\2017\RI-Addendum-edits\Section-5\FIG-5-15_5-16-Alluv-Bed-Sec.dwg 1/22/18

APPENDIX F

BEDROCK SURFACE ELEVATIONS

DRAFT

NORTH

0 100 200 425 850

Scale in Feet
Graphic Scale: 1 inch = 425 feet

EXPLANATION

PZ-100-SD 367.82 Top of Keokuk Formation (feet, msl) Piezometer Location

Line of Equal Elevation (feet, msl)

PZ-100-KS 126.20

126

124

122

120

118

116

PZ-104-KS 124.02

BRIDGETON ACTIVE SANITARY LANDFILL BOUNDARY

BRIDGETON ACTIVE SANITARY LANDFILL BOUNDARY

ACTIVE SANITARY LANDFILL PERMIT No. 118912

ST. CHARLES ROCK ROAD

ENTRANCE STATION

PZ-111-KS 115.48

CLOSED DEMOLITION LANDFILL

CONCRETE PLANT

ASPHALT PLANT

BORROW AREA

PZ-106-KS 115.37

LEACHATE LAGOONS (ABANDONED)

AUTO REPAIR FACILITY

APPROXIMATE LOCATION OF EDGE OF ALLUVIAL VALLEY

INACTIVE LANDFILL

OLD ST. CHARLES ROCK ROAD

CLOSED LEACHATE RETENTION POND

EARTH CITY INDUSTRIAL PARK STORM WATER RETENTION POND

EARTH CITY INDUSTRIAL PARK

NOTE: TOPOGRAPHY PROVIDED BY SURDEX, JANUARY 1995

© Allied Waste Industries (2005)

HERST & ASSOCIATES, INC.®
4630 South Highway 94
North Outer Road
St. Charles, Missouri 63304
Phone (636) 939-9111
Fax (636) 939-9757

West Lake Landfill OU-2
Bridgeton, Missouri

Figure 3-8
Structural Contour Map
Keokuk Formation Surface

NORTH

0 100 200 425 850

Scale in Feet
Graphic Scale: 1 inch = 425 feet

EXPLANATION

PZ-100-SD 367.82 Top of Warsaw Formation (feet, msl) Piezometer Location

Line of Equal Elevation (feet, msl)

PZ-100-KS 238.2

PZ-104-KS 226.0

PZ-111-SD 248.4

PZ-106-KS 260.6

240

230

230

240

250

250

260

BRIDGETON ACTIVE SANITARY LANDFILL BOUNDARY

BRIDGETON ACTIVE SANITARY LANDFILL BOUNDARY

ACTIVE SANITARY LANDFILL PERMIT No.118912

ENTRANCE STATION

ST. CHARLES ROCK ROAD

CLOSED DEMOLITION LANDFILL

CONCRETE PLANT

ASPHALT PLANT

LEACHATE LAGOONS (ABANDONED)

BORROW AREA

AUTO REPAIR FACILITY

APPROXIMATE LOCATION OF EDGE OF ALLUVIAL VALLEY

INACTIVE LANDFILL

OLD ST. CHARLES ROCK ROAD

CLOSED LEACHATE RETENTION POND

EARTH CITY INDUSTRIAL PARK STORM WATER RETENTION POND

EARTH CITY INDUSTRIAL PARK

NOTE: TOPOGRAPHY PROVIDED BY SURDEX, JANUARY 1995

© Allied Waste Industries (2005)

4630 South Highway 94
North Outer Road
St. Charles, Missouri 63304
Phone (636) 939-9111
Fax (636) 939-9757

HERST & ASSOCIATES, INC.®

West Lake Landfill OU-2
Bridgeton, Missouri

Figure 3-9
Structural Contour Map
Warsaw Formation Surface

NORTH

0 100 200 425 850

Scale in Feet
Graphic Scale: 1 inch = 425 feet

EXPLANATION

PZ-100-SD 367.82 Top of Salem Formation (feet, msl) Piezometer Location

Line of Equal Elevation (feet, msl)

PZ-100-SD 318.3

PZ-104-SD 320.0

BRIDGETON ACTIVE SANITARY LANDFILL BOUNDARY

320

330

340

ACTIVE SANITARY LANDFILL PERMIT No.118912

PZ-109-SS 333.6

PZ-108-SS 339.3

PZ-116-SS 347.6

ENTRANCE STATION

ST. CHARLES ROCK ROAD

PZ-111-SD 332.2

PZ-113-SS 317.7

CLOSED DEMOLITION LANDFILL

CONCRETE PLANT

ASPHALT PLANT

BORROW AREA

PZ-106-SD 328.0

LEACHATE LAGOONS (ABANDONED)

AUTO REPAIR FACILITY

APPROXIMATE LOCATION OF EDGE OF ALLUVIAL VALLEY

INACTIVE LANDFILL

OLD ST. CHARLES ROCK ROAD

CLOSED LEACHATE RETENTION POND

EARTH CITY INDUSTRIAL PARK STORM WATER RETENTION POND

EARTH CITY INDUSTRIAL PARK

NOTE: TOPOGRAPHY PROVIDED BY SURDEX, JANUARY 1995

© Allied Waste Industries (2005)

4630 South Highway 94
North Outer Road
St. Charles, Missouri 63304
Phone (636) 939-9111
Fax (636) 939-9757

HERST & ASSOCIATES, INC.®

West Lake Landfill OU-2
Bridgeton, Missouri

Figure 3-10
Structural Contour Map
Salem Formation Surface

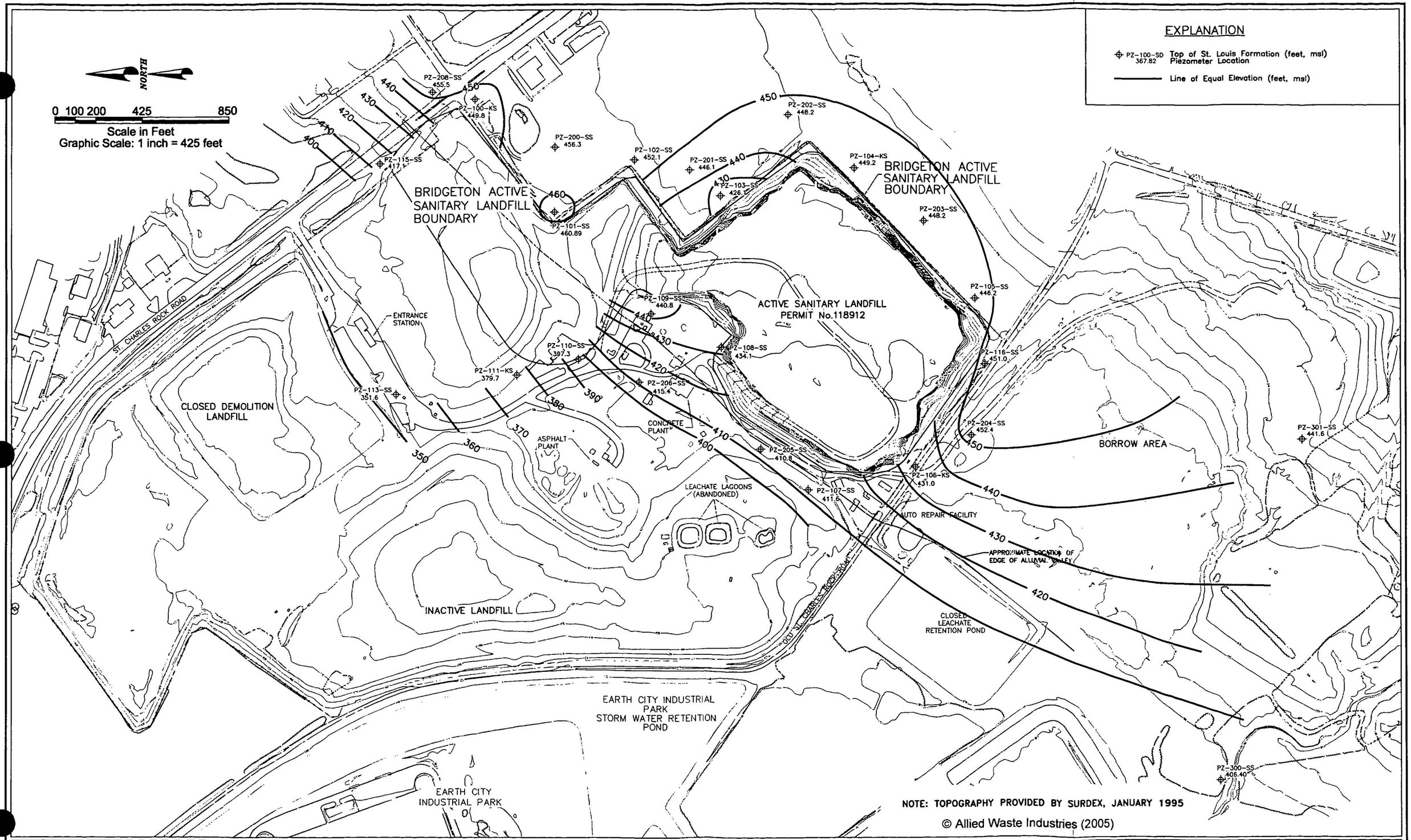

NOTE: TOPOGRAPHY PROVIDED BY SURDEX, JANUARY 1995

© Allied Waste Industries (2005)

4630 South Highway 94
North Outer Road
St. Charles, Missouri 63304
Phone (636) 939-9111
Fax (636) 939-9757
HERST & ASSOCIATES, INC.®

West Lake Landfill OU-2
Bridgeton, Missouri

Figure 3-11
Structural Contour Map
St. Louis Formation Surface

APPENDIX G

SOUTH QUARRY PIT MAPS

DRAFT

1 pg.

DATE: October 20, 1989

OCT 2 3 1989

TO: File

FROM: Rod Bloese RTB

RE: Laidlaw Waste Systems, Inc.
Bridgeton Landfill

On October 9, 1989, Rod Bloese and Randy Anderson (Laidlaw), obtained water level readings from groundwater monitoring wells I-73 and I-72, measured the discharges from the flows into the quarry and located the seeps (vertically and horizontally).

The depths to groundwater from the top of casing at I-73 and I-72 were 33.44 and 35.31 feet, respectively. Based upon top of casing elevations provided in the Burns and McDonnell report (1986), the groundwater elevations for I-73 and I-72 were 432.0 and 430.1 feet, respectively. The locations of these wells are indicated on the attached site map.

The locations and amounts of 6 seeps were determined. The approximate elevations and approximate flows from the seeps are summarized below.

Seep Designation	Approximate Elevation (Ft)	Approximate Flow (Gallons/Hour)
Shallow	445	100
#1	400	240
#2	330	500
#3	320	60
#4	320	<30
#5	290	180

Seep #'s 2, 3 and 4 are from the same strata (a fractured limestone zone above a massive limestone zone). The seeps are located on the attached map.

The flow from Seep #2 had a leachate odor.

Based upon the field observations and measurements described in this memo, the shallow seep appears to be water from the process water ponds and/or the water line to the asphalt plant. Seeps #'s 1 through 5 would appear to be groundwater with Seep #2 containing some leachate from the landfill located west of the quarry wall.

I recommend that the seeps be sampled and analyzed for leachate indicator parameters.

cc: Mike Whitlock
Miles Stotts

LAI 0098

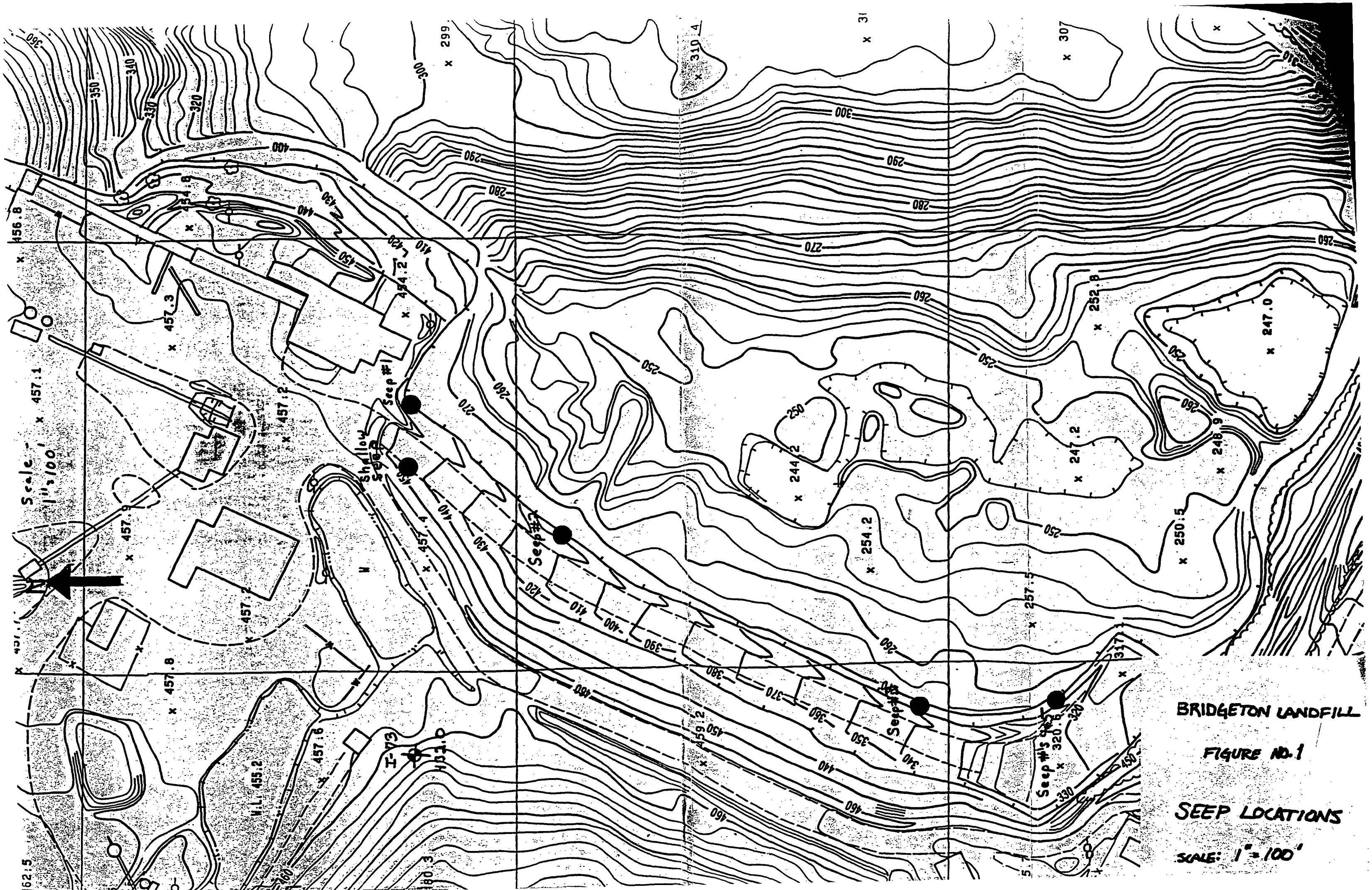
Seep #1
Shallow Seep
Seep #2
Seep #3
I-73
W.L. 455.2
BRIDGETON LANDFILL
FIGURE NO. 1
SEEP LOCATIONS
SCALE: 1" = 100'

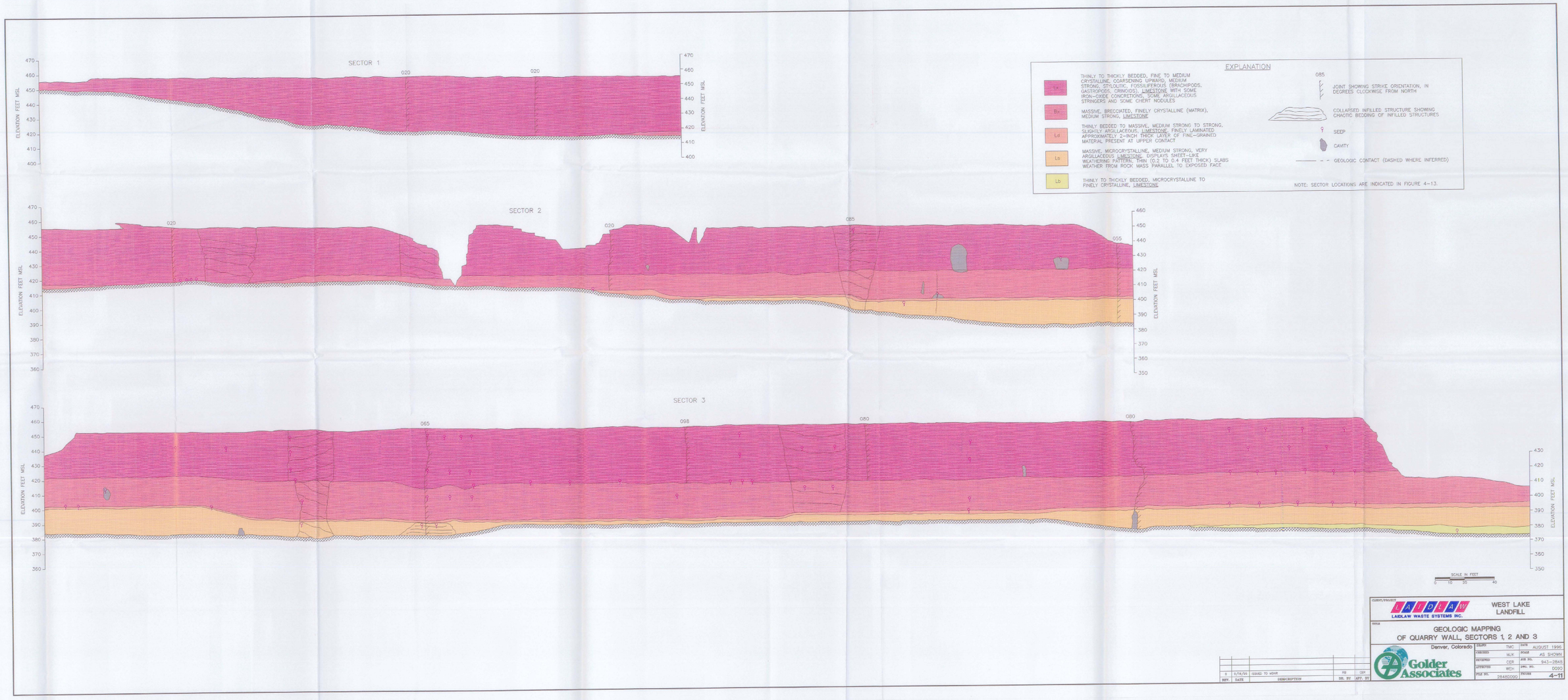

REV.	DATE	DESCRIPTION	DR. BY	APP. BY
0	9/18/95	ISSUED TO WDNR	RB	CLR

CLIENT/PROJECT: LAIDLAW WASTE SYSTEMS INC.

WEST LAKE LANDFILL

TITLE: GEOLOGIC MAPPING OF QUARRY WALL, SECTORS 1, 2 AND 3

Denver, Colorado

Golder Associates

DRAWN	TMC	DATE	AUGUST 1996
CHECKED	MJK	SCALE	AS SHOWN
REVIEWED	CER	JOB NO.	943-2848
APPROVED	WEH	DWG. NO.	0090
FILE NO.	2848D090	FIGURE	4-11

C:\ACAD\943-2848\2848D090 Tue Jul 23 10:34:22 1996 Plotted From Machine JobInJ

Last Update: 03:45p 16-Sep-95

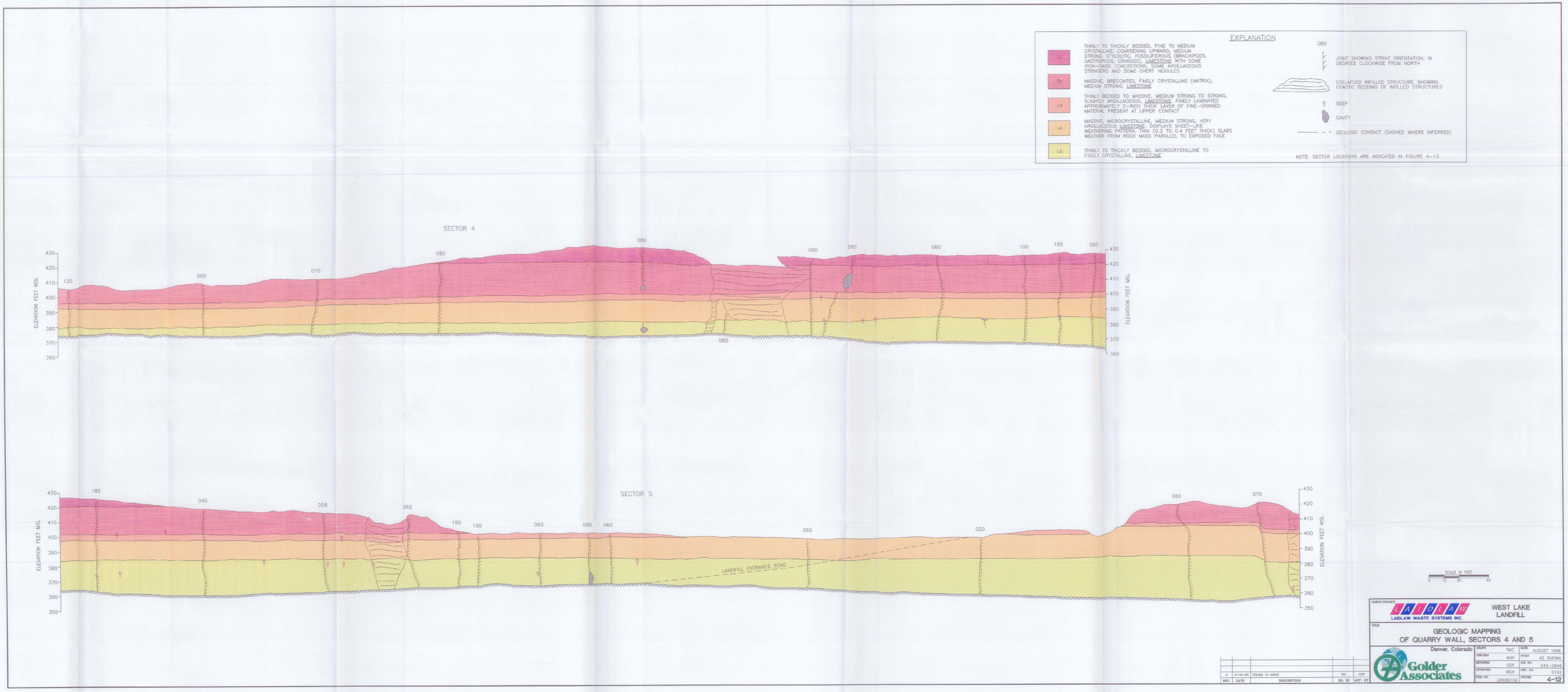
EXPLANATION
Ex THINLY TO THICKLY BEDDED, FINE TO MEDIUM CRYSTALLINE, COARSENING UPWARD, MEDIUM STRONG, STYLOLITIC, FOSSILIFEROUS (BRACHIPODS, GASTROPODS, CRINOIDS), LIMESTONE WITH SOME IRON-OXIDE CONCRETIONS, SOME ARGILLACEOUS STRINGERS AND SOME CHERT NODULES
Bx MASSIVE, BRECCIATED, FINELY CRYSTALLINE (MATRIX), MEDIUM STRONG, LIMESTONE
Ld THINLY BEDDED TO MASSIVE, MEDIUM STRONG TO STRONG, SLIGHTLY ARGILLACEOUS, LIMESTONE. FINELY LAMINATED APPROXIMATELY 2-INCH THICK LAYER OF FINE-GRAINED MATERIAL PRESENT AT UPPER CONTACT
Ls MASSIVE, MICROCRYSTALLINE, MEDIUM STRONG, VERY ARGILLACEOUS LIMESTONE. DISPLAYS SHEET-LIKE WEATHERING PATTERN, THIN (0.2 TO 0.4 FEET THICK) SLABS WEATHER FROM ROCK MASS PARALLEL TO EXPOSED FACE
Lb THINLY TO THICKLY BEDDED, MICROCRYSTALLINE TO FINELY CRYSTALLINE, LIMESTONE
080 JOINT SHOWING STRIKE ORIENTATION, IN DEGREES CLOCKWISE FROM NORTH
COLLAPSED INFILLED STRUCTURE SHOWING CHAOTIC BEDDING OF INFILLED STRUCTURES
SEEP
CAVITY
GEOLOGIC CONTACT (DASHED WHERE INFERRED)
NOTE: SECTOR LOCATIONS ARE INDICATED IN FIGURE 4-13.
SECTOR 4
ELEVATION FEET MSL
SECTOR 5
LANDFILL ENTRANCE ROAD
SCALE IN FEET
0 10 20 40
CLIENT/PROJECT
LAIDLAW WASTE SYSTEMS INC.
WEST LAKE LANDFILL
TITLE
GEOLOGIC MAPPING OF QUARRY WALL, SECTORS 4 AND 5
Denver, Colorado
Golder Associates
DRAWN TMC
DATE AUGUST 1996
CHECKED MJK
SCALE AS SHOWN
REVIEWED CER
JOB NO. 943-2848
APPROVED WEH
DWG. NO. D102
FILE NO. 2848D102
FIGURE 4-12
REV. DATE DESCRIPTION DR. BY APP. BY
0 9-18-95 ISSUED TO MDNR RS CER

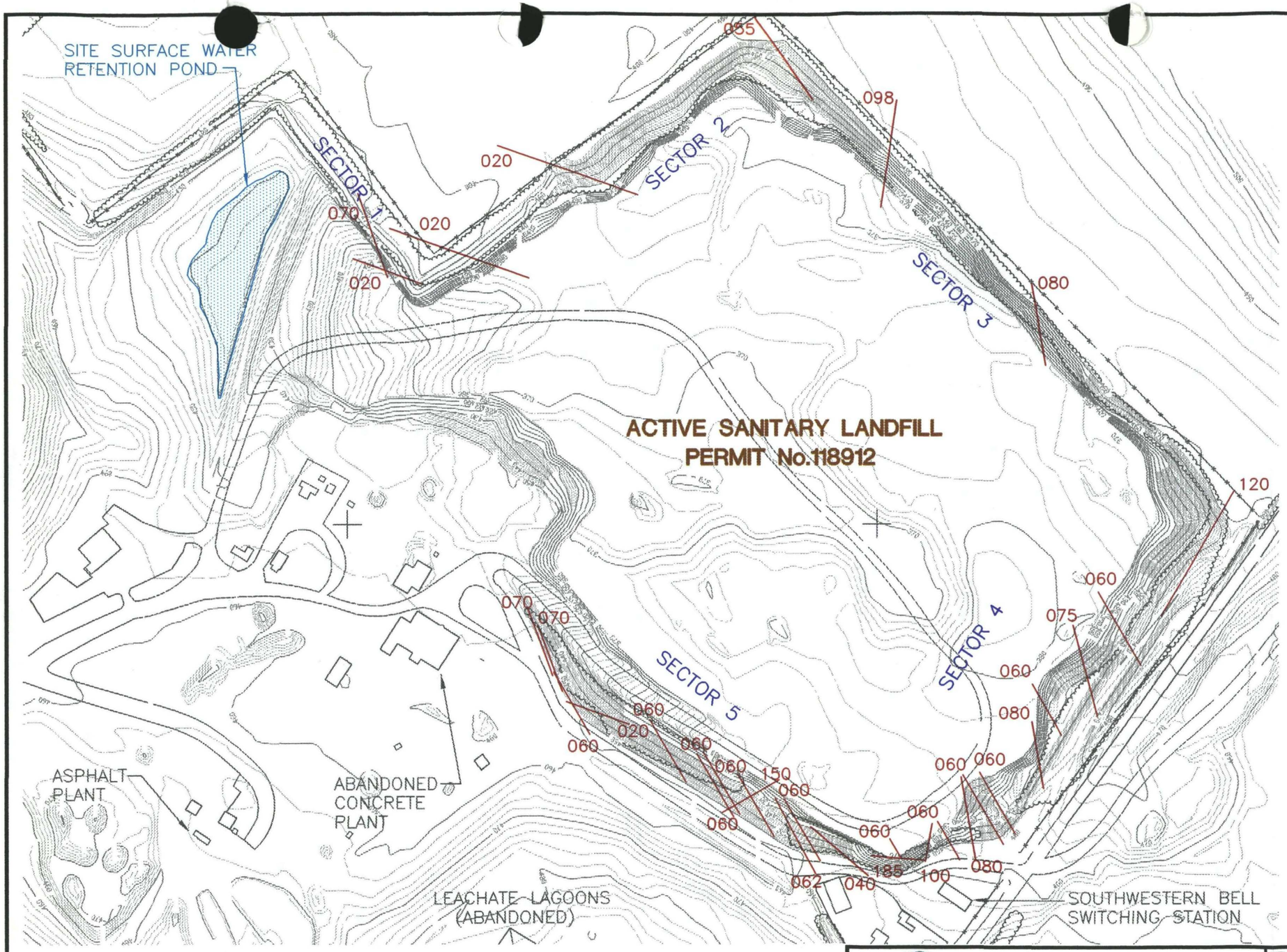

LEGEND

010 JOINT ORENTATION, IN DEGREES CLOCKWISE FROM NORTH

NOTE: TOPOGRAPHY PROVIDED BY SURDEX, JANUARY 1995

NORTH

SCALE IN FEET

0 100 200 400

Golder Associates Denver, Colorado

CLIENT/PROJECT

LAIDLAW WASTE SYSTEMS INC.

WEST LAKE LANDFILL

TITLE

MAPPED SECTORS AND ORIENTATIONS OF GEOLOGIC STRUCTURES

DRAWN	TMC	DATE	AUGUST 1996	JOB NO.	943-2848
CHECKED	MJK	SCALE	AS SHOWN	DWG. NO./REV. NO.	B091
REVIEWED	WEH	FILE NO.	2848B091	FIGURE NO.	4-13

APPENDIX H

ISOPACH MAPS

DRAFT

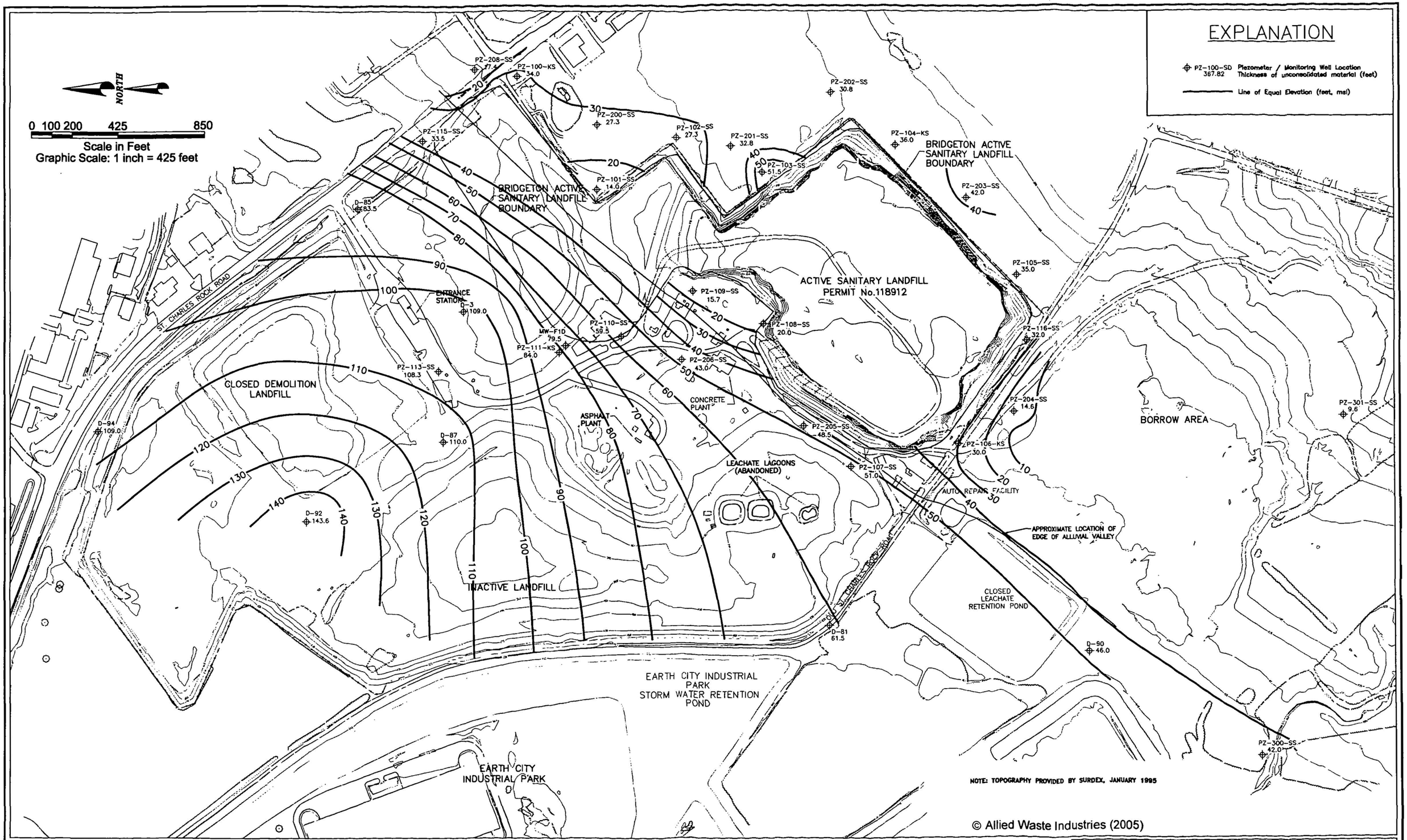

© Allied Waste Industries (2005)

4630 South Highway 94
North Outer Road
St. Charles, Missouri 63304
Phone (636) 939-9111
Fax (636) 939-9757
HERST & ASSOCIATES, INC.®

West Lake Landfill OU-2
Bridgeton, Missouri

Figure 3-12
Isopach Map of
Unconsolidated Materials

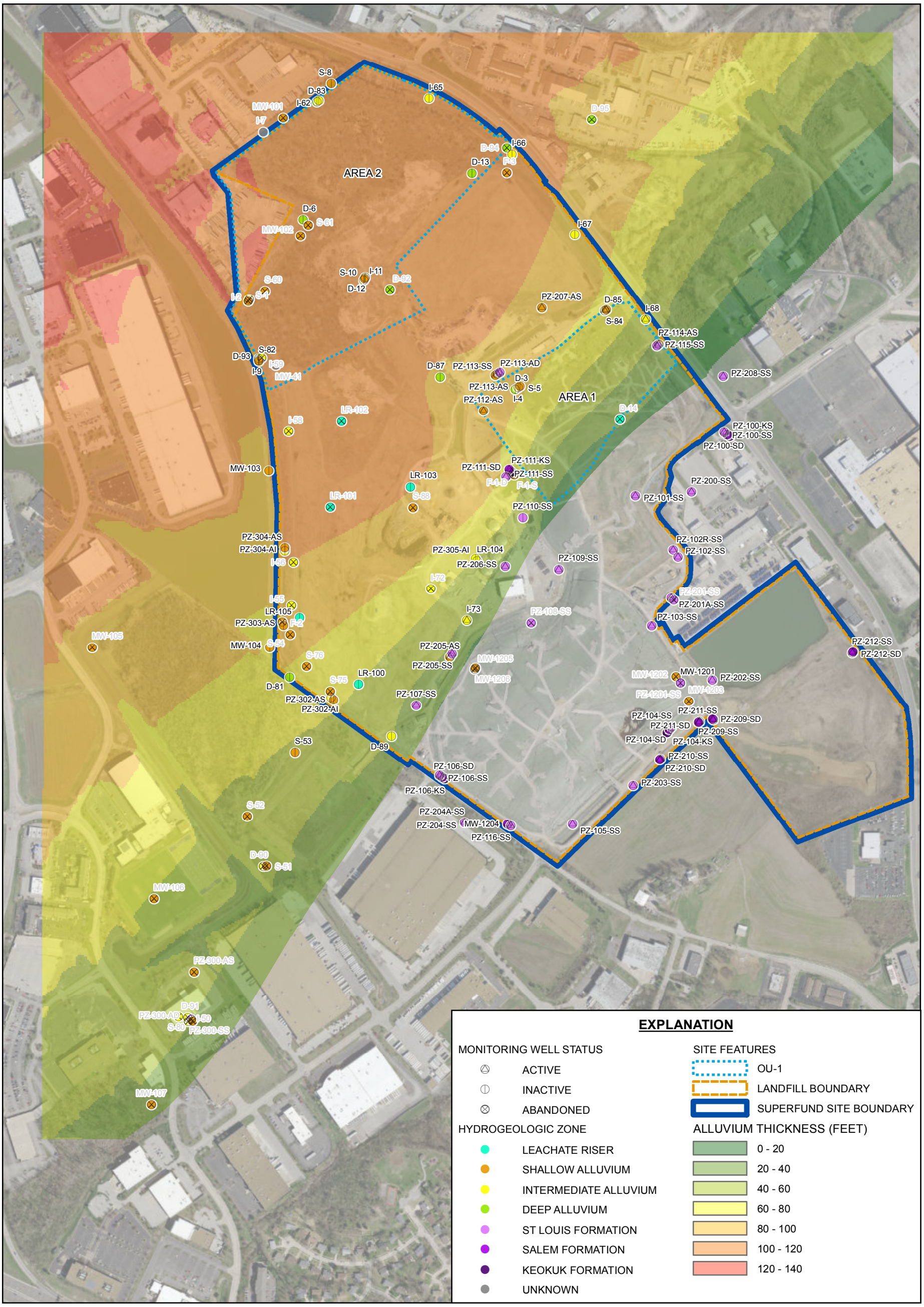

N

0 600'

Trihydro CORPORATION
1252 Commerce Drive
Laramie, WY 82070
www.trihydro.com
(P) 307.745.7474 (F) 307.745.7729

DRAFT

APPENDIX H

ALLUVIUM ISOPACH MAP

WEST LAKE LANDFILL OU-3
REMEDIAL INVESTIGATION / FEASIBILITY STUDY
WORK PLAN

Drawn By: MGS	Checked By: AMR	Scale: 1 " = 600 '	Date: 10/30/19	File: APP-H_Isopach_APP-H.mxd

M:\WTOZ\WESTLAKELANDFILL\GIS\MAPPING\20191011_RIFS_WP\APP-H_ISOPACH_APP-H.MXD