125 Maiden Lane, 5th Floor
New York, New York 10038
tel: 212-785-9123
fax: 212-785-6114

August 24, 2010

United States Army Corps of Engineers
Kansas City District
601 East 12th Street, Room 463
Kansas City, Missouri 64106-2896

ATTN:	CENWK-PM-ES/Buckrucker
CONTRACT:	W912DQ-08-D-0018
PROJECT:	Lower Passaic River Restoration Project Remedial Investigation/Feasibility Study Oversight Lower Passaic River Study Area, New Jersey
SUBJECT:	Quality Assurance Project Plan, Final Addendum #5, Revision 1 Fish Tissue Analysis

Dear Ms. Buckrucker:

CDM Federal Programs Corporation (CDM) is pleased to submit this revised electronic copy of the Quality Assurance Project Plan, Final Addendum #5, Revision 1 for the Study Fish Tissue Analysis conducted as part of the Oversight of Remedial Investigation/Feasibility Study in support of the Lower Passaic River Restoration Project in the Lower Passaic River Study Area, New Jersey. This document is based on the CPG's Addendum No. 4 to the *Lower Passaic River Restoration Project Quality Assurance Project Plan: Fish and Decapod Crustacean Tissue Collection for Chemical Analysis and Fish Community Survey* (Windward 2009), also referred to as the Fish/Decapod Quality Assurance Project Plan (QAPP).

If you have any comments concerning this submittal, please contact me at (212) 377-4056.

Very truly yours,
CDM FEDERAL PROGRAMS CORPORATION

Frank Tsang, P.E.
Task Order Manager

Attachment

cc: S. Vaughn, EPA
J. Mosher, P.E., CDM (Letter Only)
G. Molnar, CDM
Project File
Bill Sy, EPA
S. Budney, CHMM, CDM
J. Oxford, CHMM, CDM

623557

CDM

US Army Corps of Engineers
Kansas City District

Quality Assurance Project Plan
Final Addendum #5, Revision 1
Fish Tissue Analysis

Remedial Investigation/Feasibility Study Oversight
Lower Passaic River Restoration Project
Lower Passaic River Study Area, New Jersey

USACE Contract No. W912DQ-08-D-0018
Task Order No. 014

August 2010

LOWER PASSAIC RIVER RESTORATION PROJECT
OPERABLE UNIT (OU) 2

Remedial Investigation/Feasibility Study Oversight

Quality Assurance Project Plan

Final Addendum #5

Fish Tissue Analysis

Lower Passaic River Study Area, New Jersey

USACE CONTRACT No. W912DQ-08-D-0018

TASK ORDER No. 014

August 24, 2010

Prepared for:
U.S. Army Corps of Engineers
Kansas City District

Prepared by:
CDM
Raritan Plaza 1, 6th Floor
Raritan Center
Edison, New Jersey 08818

TABLE OF CONTENTS

Acronym List

Section 1 – Introduction
1.1 Summary of Fish Tissue Analysis

Section 2 – Uniform Federal Policy for Quality Assurance Project Plans (UFP-QAPP)
QAPP Worksheet #1. Title and Approval Page 1
QAPP Worksheet #2. QAPP Identifying Information 2
QAPP Worksheet #3. Distribution List 3
QAPP Worksheet #10. Problem Definition 4
QAPP Worksheet #11. Project Quality Objectives/Systematic Planning Process Statements 6
QAPP Worksheet #12. Measurement Performance Criteria Table 9
QAPP Worksheet #14. Summary of Project Tasks 20
QAPP Worksheet #15. Reference Limits and Evaluation Table 22
QAPP Worksheet #16. Project Schedule Timeline Table 34
QAPP Worksheet #18. Sampling Locations and Methods/SOP Requirements Table 35
QAPP Worksheet #19. Analytical SOP Requirements Table 36
QAPP Worksheet #20. Field Quality Control Sample Summary Table 38
QAPP Worksheet #23. Analytical SOP References Table 39
QAPP Worksheet #24. Analytical Instrument Calibration Table 41
QAPP Worksheet #28. QC Samples Table 44
QAPP Worksheet #30. Analytical Services Table 55
QAPP Worksheet #36. Validation (Steps IIa and IIb) Summary Table 56
QAPP Worksheet #37. Usability Assessment 57
References 59

List of Appendices

Appendix H – Data Quality Levels from Worksheet No. 15 Excerpted from CPG's Final Fish/Decapod QAPP dated August 6, 2009
Appendix K – Laboratory Standard Operating Procedures

Note: Appendix I and J are included in QAPP Addendum No. 6

CDM Field Oversight Form in Appendix B of the Physical Water Column Monitoring/Generic Final QAPP dated March 9, 2010 will be used.

Note: Worksheets not included herein are included in the Physical Water Column Monitoring/Generic Final QAPP dated March 9, 2010.

Acronyms

%	percent
%D	percent difference
%R	percent recovery
µg/g	microgram per gram
µg/L	microgram per liter
A	analytical
AAS	atomic absorption spectrometry
ABS	absolute difference
AES	atomic emission spectrophotometry
ANSETS	Analytical Services Tracking System
ASC	analytical services coordinator
ASTM	American Society of Testing and Materials
BS	Bachelor of Science
CA	corrective action
CAS	Chemical Abstract Service
CCV	continuing calibration verification
CD	compact disk
CDM	Camp, Dresser & McKee
CERCLA	Comprehensive Environmental Response, Compensation, and Liability Act
CHMM	Certified Hazardous Materials Manager
CIH	certified industrial hygienist
CLP	Contract Laboratory Program
COC	chain of custody
CPG	Cooperating Parties Group
CRM	certified reference material
CRQL	contract required quantitation limits
CVAFS	cold vapor atomic fluorescence spectrometry
DESA	Division of Environmental Science and Assessment
DL	detection limit
DoD	Department of Defense
DQA	data quality assessment
DQI	data quality indicators
DQL	data quality level
DQO	data quality objectives
DV	data validation
EDD	electronic data deliverable
EPA	United States Environmental Protection Agency

EQL	estimated quantitation limit
ESAT	EPA data validation contractor
FAR	Federal Acquisition Regulations
FASTAC	Field and Analytical Services Teaming Advisory Committee
FID	flame ionization detector
FS	feasibility study
FSP	field sampling plan
FTL	field task leader
GC/MS	gas chromatograph / mass spectroscopy
H&S	health and safety
H&SM	health and safety site manager
HASP	Health and Safety Plan
HDPE	high density polyethylene
HPLC	High Pressure Liquid Chromatography
HQ	headquarters
HRGC/HRMS	High Resolution Gas Chromatography / High Resolution Mass Spectrometry
HRGC/LRMS	High Resolution Gas Chromatography / Low Resolution Mass Spectrometry
ICAL	initial calibration
ICP	inductively coupled plasma
ICP-AES	Inductively Coupled Plasma – Atomic Emission Spectrometry
ICP-MS	Inductively Coupled Plasma – Mass Spectrometry
ID	identification
IPR	initial precision and recovery
IR	infra-red
KC	Kansas City
LAN	local area network
LC	lethal concentration
LCS	laboratory control samples
LCSD	laboratory control sample duplicates
LPR	Lower Passaic River
Ltd.	limited
MDL	method detection limit
mg/kg	milligram per kilogram
mg/L	milligram per liter
MPI	Malcolm Pirnie Inc.
MS	matrix spike
MS/ MSD	matrix spikes /matrix spike duplicate
NA	not available or not applicable

ng/g	nanogram per gram
ng/kg	nanogram per kilogram
NJ	New Jersey
NJDEP	New Jersey Department of Environmental Protection
NJDOT	New Jersey Department of Transportation
NOAA	National Oceanic Atmospheric Administration
NY	New York
^{o}C	degrees Celsius
OPR	ongoing precision and recovery
OU	operable unit
oz	ounce
PAH	polycyclic aromatic hydrocarbon
PAL	project action limit
PCB	polychlorinated biphenyl
PCDD/PCDF	polychlorodibenzodioxin /polychlorodibenzofurans
pg/g	picogram per gram
PPE	Personal Protection Equipment
ppt	parts per thousand (salinity unit)
PQL	project quantitation limit
PQLG	project quantitation limit goal
PQO	project quality objective
PREmis	Passaic River Estuary Management Information System
PRP	potentially responsible party
PT	Performance Test
QA	quality assurance
QAC	quality assurance coordinator
QAPP	quality assurance project plan
QC	quality control
QCS	quality control sample
QL	quantitation limit
QP	quality procedure
RA	remedial action
RAS	routine analytical services
RI/FS	Remedial Investigation / Feasibility Study
RPD	relative percent difference
RPM	remedial project manager
RSCC	Regional Sample Control Coordinator
RSD	relative standard deviation

S&A	sampling and analytical
SA	self assessment
SDG	Sample Delivery Group
SM	Standard Method
SOP	standard operating procedure
SOW	scope of work
SVOC	semivolatile organic compound
TAL	target analyte list
TBD	to be determined
TCL	target compound list
TOM	task order manager
TSOP	Technical Standard Operating Procedure
USACE	United States Army Corps of Engineers
USEPA	United States Environmental Protection Agency
USFWS	United States Fish and Wildlife Service
WS	worksheet

Dioxin and Furans:

HpCDD	hepta-chlorodibenzo-*p*-dioxin
HpCDF	hepta-chlorodibenzofuran
HxCDD	hexa-chlorodibenzo-*p*-dioxin
HxCDF	hexa-chlorodibenzofuran
OCDD	octa-chlorodibenzo-*p*-dioxin
OCDF	octa-chlorodibenzofuran
PeCDD	penta-chlorodibenzo-*p*-dioxin
PeCDF	penta-chlorodibenzo-furan
TCDD	tetrachloro-dibenzo-*p*-dioxin
TCDF	tetrachloro-dibenzo-furan

Introduction

CDM Federal Programs Corporation (CDM) will accept split fish tissue samples from the Cooperating Parties Group (CPG) upon completion of fish sampling in the Lower Passaic River Study Area (LPRSA).

This Quality Assurance Project Plan (QAPP) Final Addendum (No. 5) and the *Lower Passaic River RI/FS Oversight Final QAPP, Physical Water Column Monitoring and Generic Information for Upcoming Tasks*, dated March 2010 (hereafter referred to as the Final QAPP) is the governing documents for execution of this analytical investigation. CDM will use the various plans prepared by the CPG contractors to verify proper execution of the fish tissue sample handling, preservation and shipment. CDM's Final QAPP Addendum No. 2 (June 8, 2010) describes oversight procedures during the fish tissue sampling of Late Spring/Early Summer 2010, conducted as part of the RI/FS.

The March 2010 Final QAPP indicated that future oversight tasks assigned to CDM would be appended with selected worksheets. The following worksheets are included in this addendum to reflect only the fish tissue analytical procedures and requirements of the CPG's QAPPs written by Windward, *Fish and Decapod Crustacean Tissue Collection for Chemical Analysis and Fish Community Survey* dated August 6, 2009 and *Fish/Decapod QAPP Addendum No. 4* dated June 21, 2010 for the Late Spring/Early Summer 2010 Fish Tissue Collection:

- Worksheet No. 1 contains the title and approval pages for the addendum
- Worksheet No. 2 contains the QAPP identifying information
- Worksheet No. 3 provides the distribution list
- Worksheet No. 10 describes the specific problem definition
- Worksheet No. 11 provides the project quality objectives
- Worksheet No. 14 provides a summary of project tasks
- Worksheet No. 16 provides the schedule and timeline
- Worksheet No. 18 provides the proposed survey locations
- Worksheet No. 37 provides the usability assessment (field summary report)

Worksheets 12, 15, 19, 20, 23, 24, 28, 30, and 36 are also included in this addendum to address the sampling and analytical requirements of this event. The CPG's QAPPs provide procedures for fish tissue sampling.

1.1 Summary of Fish Tissue Samples Acceptance

CDM's oversight program is designed to provide technical review, verify the accuracy of the CPG's tissue sample results and evaluate the CPG-implemented QAPPs for tissue sampling and analysis.

The CPG is collecting small range forage fish tissue samples and other fish tissue samples to fill data gaps from previous fish sampling activities. CDM will accept split samples of fish tissue homogenate from CPG's laboratory, Alpha Analytical. Split samples will be analyzed for select contaminants as requested by EPA and USACE and include:

- polychlorinated biphenyl (PCB) congeners
- polychlorodibenzodioxin/furan (PCDD/PCDF) congeners
- polycyclic aromatic hydrocarbon (PAH) compounds
- chlorinated pesticides
- semivolatile organic compounds (SVOC)
- metals (including mercury and methylmercury), and inorganic arsenic (arsenic speciation)
- percent lipids and percent moisture

This oversight QAPP details the planning and execution processes for accepting, preparing and shipping samples for analysis.

QAPP Worksheet #1
Title and Approval Page

Document Title: **LPR Restoration Project Quality Assurance Project Plan (QAPP) Final Addendum No. 5, Acceptance of Split Fish Tissue Samples**

Lead Organization: United States Army Corps of Engineers (USACE) – Northwestern Division

Preparer's Name and Organizational Affiliation: Jeniffer Oxford, CDM

Preparer's Address, Telephone Number, and E-mail Address: 125 Maiden Lane, New York, NY 10038; 212-377-4536; oxfordjm@cdm.com

Preparation Date (Day/Month/Year): August 24, 2010

Investigative Organization's Task Order Manager/Date: Sharon Buckley for / 8-24-10
Signature

Frank Tsang/CDM

Investigative Organization's Project QA Manager/Date: 8/24/10 Tony Kolle for
Signature

Doug Updike/CDM

Lead Organization's Project Manager/Date: _____
Signature

Elizabeth Buckrucker/USACE – KC District

EPA Remedial Project Manager /Date: _____
Signature

Stephanie Vaughn

EPA Quality Assurance Officer /Date: _____
Signature

William Sy

Document Control Numbering System: Not Applicable (N/A)

QAPP Worksheet #2
QAPP Identifying Information

Site Name/Project Name: Lower Passaic River (LPR) Restoration Project	**Title**: QAPP Final Addendum No. 5, Fish Tissue Samples Analysis
Site Location: LPR study area, New Jersey	**Revision Number:** 1
Site Number/Code: NJD 980528996	**Revision Date:** NA
Operable Unit (OU): OU2	**Contractor Name:** CDM
Contractor Number: W912DQ-08-D-0018	
Contract Title: Unrestricted Indefinite Delivery/Indefinite Quantity, Multiple Award Contract, for Achitect-Engineer (AE) Environmental Services for EPA Region 2 and the Corps of Engineers Northwestern Division.	
Task Order Number: 14	

1. Regulatory program: Comprehensive Environmental Response, Compensation, and Liability Act (CERCLA) (Superfund)
2. Approval entity: United States Army Corps of Engineers (USACE)
3. The QAPP is (select one): Generic √ **Project Specific**
4. Dates of negotiation: NA
5. Dates and titles of QAPP documents written for previous and current site work, if applicable:

Title	Approval Date
See Final QAPP for a full list of previous QAPP prepared for site work	
Lower Passaic River RI/FS Oversight Final QAPP, Physical Water Column Monitoring and Generic Information for Upcoming Tasks (PWCM/Generic QAPP) (referred to herein as Final QAPP)	March 2010
LPR RI/FS Oversight QAPP, Final Addendum #1: *Avian Community Survey*	August 6, 2010
LPR RI/FS Oversight QAPP, Final Addendum #2: *Fish Community Survey*	June 8, 2010
LPR RI/FS Oversight QAPP, Final Addendum #3: *Benthic Invertebrate Community Survey*	June 8, 2010
LPR RI/FS Oversight QAPP, Addendum #4: *Surface Sediment Sampling Co-located with the Small Forage Fish Tissue Samples during the Summer 2010 Benthic Community Survey oversight*	July 12, 2010
LPR RI/FS Oversight QAPP, Addendum #6: *Habitat Identification Survey*	August 9, 2010

6. Organizational partners (stakeholders) and connection with lead organization: EPA, USACE, New Jersey Department of Environmental Protection (NJDEP), New Jersey Department of Transportation (NJDOT), National Oceanic Atmospheric Administration (NOAA), United States Fish and Wildlife Service (USFWS)

7. Data users: EPA, USACE, Partner Agencies, CDM, Louis Berger Group, Inc., HydroQual, Inc., and stakeholders.

8. If any required QAPP elements and required information are not applicable to the project, then circle the omitted QAPP elements and required information on the attached table. Provide an explanation for their exclusions below: the Final Generic QAPP provides all the required worksheets. *This addendum addresses only the Acceptance and Analysis of Fish Tissue Samples, therefore only worksheets pertinent to this task and information not previously provided are included.*

QAPP Worksheet #3
Distribution List

QAPP Recipients	Title	Organization	Telephone Number	Fax Number	E-mail Address
Stephanie Vaughn	Remedial Project Manager (RPM)	EPA	(212) 637-4427	(212) 637-4393	Vaughn.stephanie@epamail.epa.gov
Elizabeth Buckrucker	Project Manager (PM)	USACE	(816) 389-3581		elizabeth.a.buckrucker@usace.army.mil
William Sy	QA Officer	EPA	(732) 632-4766	(732) 321-6622	Sy.william@epa.gov
Janine MacGregor	Partner Agency	NJDEP	(609) 633-0784		Janine.macgregor@dep.state.nj.us
Elkins Green	Partner Agency	NJDOT	(609) 530-8075		elkins.green@dot.state.nj.us
Tim Kubiak	Partner Agency	USFWS	(609) 646-9310		tim_kubiak@fws.gov
Reyhan Mehran	Partner Agency	NOAA	(212) 637-3257		Reyhan.mehran@noaa.gov
Jeanne Litwin	Project Manager	CDM	(212) 377-4524	(212) 785-6114	litwinJ@cdm.com
Frank Tsang	Task Order Manager	CDM	(212) 377-4056	(212) 785-6114	Tsangc@cdm.com
Sharon Budney	Deputy Task Order Manager	CDM	(732) 590-4662	(732) 225-7851	budneysl@cdm.com
Jeniffer Oxford or other assigned QAC	Regional QA Coordinator (RQAC)/ Project QA Officer	CDM	(212) 377-4536	(212) 785-6114	oxfordjm@cdm.com
George Molnar	Field Task Leader	CDM	(732) 590-4633	(732) 225-7851	molnargc@cdm.com
Scott Kirchner	Analytical Services Coordinator	CDM	(732) 590-4677	(732) 225-7851	kirchnersf@cdm.com
James Fitzpatrick	Sediment Transport Modeler	HydroQual	(201) 529-5151	(201) 529-5728	jfitzpatrick@hydroqual.com
Candice Navaroli	Laboratory Manager	Axys Analytical Services Ltd.	(250) 655-5800 or (888) 373-0881	TBD	cnavaroli@axys.com
Nisreen Saikaly	Laboratory Project Manager	CDM Subcontract Laboratory-Shealy	(800) 673-9375 ext 106	(803) 791-9111	NSaikaly@Shealylab.com

QAPP Worksheet #10
Problem Definition

The problem to be addressed by the project: The CPG needs to complete the ecological risk assessment and human health risk assessment. Insufficient tissue residue chemical concentrations in the Lower Passaic River Study Area are available to complete these assessments. CDM oversight and analysis will provide verification of CPG compliance with their approved project plans and accuracy of the derived data.

Fish tissue analysis: Oversight will include acceptance of split fish tissue homogenate from CPG's laboratory, Alpha Analytical. This includes:

- Review of CPG-selected sampling locations, review of species "catches" and CPG-selected species for residue analysis.
- Review of individual species selected by CPG field crew for compositing (as needed, oversight staff will communicate with EPA on selected sampling locations, species, and selected compositing schemes).
- Coordination with the CPG-designated laboratory to collect government split samples of fish tissue (refer to Worksheet 11 for details on split samples and refer to Worksheet 19 for minimum mass requirements).

The environmental questions being asked:

- Do the CPG data adequately describe the site conditions and is it representative for project decisions?
- Are the CPG and CDM data complete and accurate?
- Are the data sets comparable?
- Are the CPG versus CDM data relative percent difference (RPD)'s within the measurement performance criteria?

Secondary data: See Worksheet 13 of the CPG Benthic QAPP (Windward 2009)

The possible classes of contaminants and the affected matrices:

Split fish tissue samples will be collected for the following chemical analyses:

- PCB congeners
- PCDD/PCDF congeners
- chlorinated pesticides
- PAHs, and TCL SVOCs
- metals including inorganic total mercury and inorganic arsenic (arsenic speciation)
- methylmercury
- percent lipids and percent moisture

QAPP Worksheet #10
Problem Definition

Split samples will not be accepted for the following analytes which will be analyzed by the CPG contractors: alkylated PAHs, and butyltins.

The rationale for inclusion of chemical and non-chemical analyses:

The split samples will be used to support the goals of the oversight program. The analyses selected to be split were determined to be more critical for oversight evaluation; the analyses that will not be split are ancillary parameters and not major risk drivers. The field observations and split sample data will enable CDM to perform technical review and evaluation on the CDG field program, analytical data and reports and to assess any potential bias in the CPG dataset.

Project decision conditions ("If..., then..." statements):

- If sample results are not comparable with the CPGs, then CDM will note deviations in the Data Reports submitted to USACE and EPA. The CDM Task Order Manager, USACE PM and EPA RPM will be informed if there are deviations.
- If the CPG team needs to reprioritize analytical parameters, change compositing procedures, or if there are any changes to the planned analytical program, CDM will communicate this change to the USACE and document it in the Data Reports.

CDM will present the data findings in a Data Report and submit it to the USACE and EPA who will then determine if any additional actions are required.

QAPP Worksheet #11
Project Quality Objectives /Systematic Planning Process Statements

Who Will Use the Data? USACE, EPA and other partner agencies, CDM, and stakeholders (as necessary).

What Will the Data be Used For?

The CPG will use the fish tissue data to support the ecological and human health risk assessments (ERA and HHRA, respectively) and in conjunction with sediment chemical concentrations, develop biota-sediment accumulation factors. Oversight activities will monitor the CPG-implemented biota sampling and analytical program to verify that elements of the approved RI/FS QAPPs are fulfilled. The CDM field crew will also review the CPG-selected sampling locations and compositing procedures. CDM's split sample results will be compared to the data obtained by the CPG to determine if a bias exists in the data produced by the CPG and if the data is complete and accurate and compliant with the approved QAPPs.

A comparison of the split sample data and the CPG parent sample data will only be completed for parameters that were analyzed and detected by both the CPG program and the oversight program. Data comparison will not be conducted on concentrations that are considered non-detect by either the CPG validators or oversight validators. (Note that if a consistent bias in detections is observed in either the split samples or CPG samples, an evaluation of detection limits will be completed.) The data comparison will be presented in a table showing the relative percent difference for values that are 5 times the quantitation limits. As appropriate, alternative data comparisons will be provided. For each location, a mean and variance of the sample concentrations may also be calculated. These statistics will be compared to the CPG samples. For analytical groups that contain multiple parameters (e.g., congeners), the data comparison will be completed on select parameters per chemical class.

Because of the overlap of the SVOC and PAH chemical classes, some analytes will be reported twice in the split sample program. For the data comparison, PAH results reported by Axys Analytical Services using the HRGC/LRMS method will take precedence over the PAH data generated by DESA/ EPA CLP or CDM Subcontract laboratory during the SVOC analysis.

CDM's QC data will be used to determine CDM's split samples data quality and comparability with the CPG's data and whether sample results are acceptable based on the established project data quality objectives (DQOs). QC sample results will be compared to the measurement performance criteria (MPC) of the data quality indicators (DQIs).

To further achieve these objectives, CDM field personnel will observe and monitor the CPG's contractors implementation of the RI/FS QAPPs and note any deviations. Deviations will be brought to the attention of the CPG's contractor, and reported to the CDM task order manager who will communicate this information to the USACE PM and EPA RPM. These will be documented in ongoing and in the Final Reports and include a discussion of the impact of the deviation(s) on the data quality. The CPG contractor's activities will be documented in the field logbook and oversight forms. A copy of the oversight form is provided in Appendix B of CDM's Final QAPP.

What Type of Data is Needed?

CDM may observe and document the fish tissue compositing activities conducted by the CPG's contractor to facilitate verification of the chemical data suitability for the risk assessments. Split samples will be collected at locations for which sufficient fish tissue mass is available, by mutual agreement of CDM and the CPG contractor or as directed by the CDM Deputy TOM or the USACE/EPA project managers. Chemical data, PCB congeners, PCDD/PCDF congeners, organochlorine pesticides, PAHs, SVOCs, metals including inorganic total mercury, methylmercury, inorganic arsenic, lipids and percent moisture will be determined from the split samples accepted from the CPG. Low limits are required for mercury and methylmercury as shown on QAPP worksheet No. 15.

QAPP Worksheet #11
Project Quality Objectives /Systematic Planning Process Statements

How much data are needed?

CDM will accept split samples at approximately 10 percent of the sampling locations. Worksheets Nos. 11 and 18 of the CPG's Benthic QAPP Addendum No. 4 and Figure 1 (Appendix G of CDM's QAPP Appendix No. 2) show the planned locations for sampling.

Split samples will be collected from approximately 10 percent of the samples to determine if a bias exists in the data produced by the CPG. Oversight activities are listed in Worksheet 10. The split sample program includes fish tissue split samples from the CPG laboratory. Field duplicates will be analyzed if sufficient sample mass is available.

How "good" do the data need to be in order to support the environmental decision?

Definitive level data is required to produce the data quality required for risk assessments, full validation of the data and to enable comparison with the CPG generated data set. Fixed based laboratories with EPA or certifications and qualification will be used to generate the analytical data. CDM's oversight staff will document whether the fish tissue compositing is in compliance with the CPG's Fish Tissue Collection QAPPs. The representativeness of the data is dependent on the sampling design.

The laboratory reporting limits (contract required quantitation limits (CRQLs) for CLP data), need to be below or equal to the CPG's project required quantitation limits goals or the CPG's achievable laboratory quantitation limits. CDM will notify EPA's RSCC or the subcontract laboratory and request lower reporting limits to achieve the project data quality objectives for sensitivity.

Validation of data will be performed by DESA/ EPA; however samples analyzed by a subcontract laboratory will be validated by CDM.

In addition, to ensure that measurement performance criteria for usability (criteria for measures of precision, accuracy, representativeness, comparability, completeness, and sensitivity) are met, all CDM data will be subject to a data usability assessment. The inputs will be the EPA generated validation reports and subcontract laboratory QC summaries. Measurement performance criteria for the assessment are presented in Worksheets #12, 28, 35 and 36. The results will be presented in a CDM data report.

The data usability assessment will evaluate whether appropriate field procedures were followed and whether data met the approved QAPP and project DQOs and are usable for the stated project needs.

Where, when, and how should the data be collected?

When - Fish tissue samples will be accepted from the CPG's contractor. The CPG laboratory will ship the split fish tissue samples to CDM's laboratories after the late spring/early summer 2010 fish tissue collection event and after the samples have been processed and composited for analysis. This will be performed according to the CPG's schedule. The exact sample processing dates are to be determined.

Where - The fish tissue processing will be performed at the CPG's laboratory, Alpha Analytical. Samples will be split where sufficient fish tissue mass was generated for both sample sets.

How – Fish tissue processing procedures are described in the CPG's Fish/Decapod QAPP (Windward 2009) (various worksheets and Attachment O) and CPG's Fish/Decapod QAPP Addendum No. 4 and its Attachment L.

QAPP Worksheet #11
Project Quality Objectives /Systematic Planning Process Statements

Who will collect and generate the data?

CDM oversight staff recorded field observations and will accept split samples and prepare them for shipment. The analytical laboratories outlined in this QAPP will generate the data.

How will the data be reported?

- Fish tissue composite samples accepted will be recorded as described in CDM's Final QAPP using field logbooks in accordance with TSOP 4-1 provided in Appendix C of the CDM Final QAPP.
- Results will be reported in text format and will include a discussion of the data quality, deviations from the QAPP, and oversight data comparability with the CPGs data. This review will be used to evaluate the accuracy of the CPG data.
- To ensure comparability of the data sets, CDM will obtain lipid results generated by the CPG's analytical laboratory using the Bligh Dyer method and use them to generate lipid corrected dioxin and PCB Congener data in the event that the lipid results generated by CDM's subcontract laboratory differ from the CPG's data. If necessary, both sets of data will be reported, results calculated with CDM lipid results and those calculated with the CPG lipid results.
- Sample results generated by the DESA or EPA CLP laboratory will be e-mailed to CDM for use in the data assessment and evaluation
- Sample results generated by CDM's subcontract laboratory will be e-mailed to CDM for review and validation.
- Data reporting is further covered in the CDM Final QAPP.

How will the data be archived?

- Hard copies of data will be kept in the Edison office until archived in the project file; if requested, survey data will be uploaded to a PREmis or equivalent database.

The CDM March 2010 Final QAPP contains other archival information.

QAPP Worksheet #12
Measurement Performance Criteria Table

Matrix	Tissue
Analytical Group	PCB Congeners
Concentration Level	Low

Sampling Procedure	Analytical Method/ SOP	Data Quality Indicators (DQIs)	Measurement Performance Criteria[1] (MPC)	QC Sample and/or Activity Used to Assess Measurement Performance	QC Sample Assesses Error for Sampling (S), Analytical (A) or Both (S&A)
CPG Group's SOP, and QAPP CDM will accept splits	EPA Method 1668B Cape Fear SOP CF-OA-E-003, Revision 1	Precision	RPD ≤ 40% if concentration ≥5 CRQL	Split samples and field duplicates	S & A
		Precision	±20% of mean if concentration >10DL	Laboratory duplicate	A
		Accuracy/Bias	70 -130 %recovery	Certified Reference Material; Calibration Verification Sample	A
		Accuracy/Bias Precision	60-140 %recovery RSD ≤ 40%	Initial Precision and Recovery	A
		Accuracy/Bias	Per laboratory SOP Warning 70-130%R; Accept 50-150 %recovery	LCS or Ongoing Precision and Recovery	A
		Accuracy/ Representativeness	4±2 degrees Celsius 10 degrees Celsius (DV)	Temperature Blank checks Data validation (DV)	S
		Comparability	Comparable units, and methods	Assessed during Data Quality assessment (DQA)	S & A
		Completeness	≥ 90% collection and analysis	Assessed during DQA	S & A
		Sensitivity/ accuracy	≤ QLs (WS#15)	Field rinsate/ Method blanks assessed during DV and DQA	S & A

Note:
1. The assigned laboratory must perform and meet all the quality assurance requirements specified in the method.

QAPP Worksheet #12
Measurement Performance Criteria Table

Matrix	Tissue
Analytical Group	PCDD/PCDF Congeners
Concentration Level	Low

Sampling Procedure	Analytical Method/ SOP	Data Quality Indicators (DQIs)	Measurement Performance Criteria[1] (MPC)	QC Sample and/or Activity Used to Assess Measurement Performance	QC Sample Assesses Error for Sampling (S), Analytical (A) or Both (S&A)
CPG Group's SOP, and QAPP CDM will accept split	USEPA Method 1613B – Axys Analytical Services SOP MSU-018 Method is proprietary; a summary is provided in Appendix K	Precision	RPD ≤ 40% if concentration ≥5 CRQL	Split samples and field duplicates	S & A
		Precision	±20% of mean if concentration >10DL	Laboratory duplicate	A
		Accuracy/Bias Precision	70-130 %recovery (or per laboratory SOP) RPD ≤ 20% if >10 QL	LCS; MS/MSD MS/MSD	S & A
		Accuracy/ Representativeness	4±2 degrees Celsius 10 degrees Celsius (DV)	Temperature Blank checks Data validation (DV)	S
		Precision	15-50% RSD or per laboratory SOP Table 1	Initial precision and recovery	A
		Accuracy/Bias	Various % recovery per laboratory SOP Table 1		
		Accuracy/Bias	15-50% RSD or per laboratory SOP Table 1	Ongoing precision and recovery	A
		Accuracy/Bias	17-130% recovery	Surrogate standards	A
		Comparability	Comparable units, and methods	Evaluated during DQA	S & A
		Completeness	≥ 90% collection and analysis	Evaluated during DQA	S & A
		Sensitivity/ accuracy	≤ QLs (WS#15)	Field rinsate/ Method blanks assessed during DV and DQA	S & A

Note:
1. The assigned laboratory must perform and meet all the quality assurance requirements specified in the method.

QAPP Worksheet #12
Measurement Performance Criteria Table

Matrix	Tissue
Analytical Group	Chlorinated Pesticides
Concentration Level	Low

Sampling Procedure	Analytical Method/ SOP	Data Quality Indicators (DQIs)	Measurement Performance Criteria[1] (MPC)	QC Sample and/or Activity Used to Assess Measurement Performance	QC Sample Assesses Error for Sampling (S), Analytical (A) or Both (S&A)
CPG Group's SOP, and QAPP CDM will accept split	EPA Method 1613B Modified Axys Lab SOP MLA-028 R05 Method is proprietary; a summary is provided in Appendix K	Precision	RPD ≤ 40% if concentration ≥5 QL	Split samples and field duplicates	S & A
		Precision	±20% of mean if concentration >10DL	Laboratory duplicate	A
		Accuracy/Bias	Per laboratory or method SOP ±20%	Certified Reference Material Calibration Verification	A
		Accuracy/Bias	50-130% recoveries per SOP MLA-028 (Tables 4 and 5)	On-going Precision and Recovery /Matrix Spike	A
		Accuracy/ Representativeness	4±2 degrees Celsius 10 degrees Celsius (DV)	Temperature Blank checks Data validation (DV)	S
		Accuracy/Bias	30-150% recovery (See Table 4 for individual limits)	Surrogate	A
		Comparability	Comparable units, and methods	Evaluated during DQA	S & A
		Completeness	≥ 90% Collection and ≥ 90% Valid data	Evaluated during DQA	S & A
		Sensitivity/ accuracy	≤ QLs (WS#15 and Table 4 of SOP)	Field rinsate/ Method blanks assessed during DV and DQA	S & A

Note:
1. The laboratory must perform and meet all the quality assurance requirements specified in MLA-028 including: performance of initial and ongoing studies, calibration verification, addition of internal standards, analyses of blanks and determination of detection limits.

QAPP Worksheet #12
Measurement Performance Criteria Table

Matrix	Tissue
Analytical Group	PAHs
Concentration Level	Low

Sampling Procedure	Analytical Method/ SOP	Data Quality Indicators (DQIs)	Measurement Performance Criteria[1] (MPC)	QC Sample and/or Activity Used to Assess Measurement Performance	QC Sample Assesses Error for Sampling (S), Analytical (A) or Both (S&A)
CPG Group's SOP, and QAPP CDM will accept split	Axys SOP MLA-021 based on GC/MS Isotope dilution Method is proprietary; a summary is provided in Appendix K	Precision	RPD ≤ 40% if concentration ≥5 CRQL	Split samples and field duplicates	S & A
		Precision	±20% of mean if concentration >10DL	Laboratory duplicate or MS/MSD	A
		Accuracy/Bias	50-200 %recovery (Table 2 of laboratory SOP for individual limits)	Matrix Spike	S & A
		Accuracy/Bias	15-130% recovery (See Table 2 for individual limits)	Perdeuterated Surrogate*	A
		Accuracy/ Representativeness	4±2 degrees Celsius 10 degrees Celsius (DV)	Temperature Blank checks Data validation (DV)	S
		Comparability	Comparable units, and methods	Evaluated during DQA	S & A
		Completeness	≥ 90% Collection and ≥ 90% Valid data	Evaluated during DQA	S & A
		Sensitivity/ accuracy	≤ QLs (WS#15) and Table 4 of laboratory SOP)	Field rinsate/ Method blanks assessed during DV and DQA	S & A

Note:
1. The laboratory must perform and meet all the quality assurance requirements specified in MLA-021.
*Surrogates are pure analytes added to every blank, sample, matrix spike, matrix spike duplicate, and standard in known amounts before extraction or other processing; used to evaluate analytical efficiency by measuring recovery.

QAPP Worksheet #12
Measurement Performance Criteria Table

Matrix	Tissue
Analytical Group	SVOC
Concentration Level	Low

Sampling Procedure	Analytical Method/ SOP	Data Quality Indicators (DQIs)	Measurement Performance Criteria[1] (MPC)	QC Sample and/or Activity Used to Assess Measurement Performance	QC Sample Assesses Error for Sampling (S), Analytical (A) or Both (S&A)
CPG Group's SOP, and QAPP CDM will accept split	SW-846 Method 8270C Microbac SOP 625-8270, Revision 10	Precision	RPD ≤ 40% if concentration ≥5 CRQL	Split samples and field duplicates	S & A
		Precision	Per laboratory SOP; DESA %RPD <30% (see note 2)	LCS/LCSD; MS/MSD	A
		Accuracy/Bias	Per CLP SOW or per laboratory SOP (compound specific)	LCS; MS/MSD	A
		Accuracy	Per CLP SOW or per laboratory SOP; DESA recoveries 30-120% for base neutrals and 20-120% for acids	Surrogate	A
		Accuracy/ Representativeness	4±2 degrees Celsius 10 degrees Celsius (DV)	Temperature Blank checks Data validation (DV)	S & A
		Comparability	Comparable units, and methods	Evaluated during DQA	S & A
		Completeness	≥ 90% Collection and ≥ 90% Valid data	Evaluated during DQA	S & A
		Sensitivity/ accuracy	≤ QLs (WS#15)	Field rinsate/ Method blanks assessed during DV and DQA	S & A

Note:

1. The assigned laboratory must perform and meet all the quality assurance requirements specified in their method SOP.

QAPP Worksheet #12
Measurement Performance Criteria Table

Matrix	Tissue
Analytical Group	Metals (no Mercury)
Concentration Level	Low

Sampling Procedure	Analytical Method/ SOP	Data Quality Indicators (DQIs)	Measurement Performance Criteria[1] (MPC)	QC Sample and/or Activity Used to Assess Measurement Performance	QC Sample Assesses Error for Sampling (S), Analytical (A) or Both (S&A)
CPG Group's SOP, and QAPP CDM will accept split	SW-846 Method 6010B and 6020 ICP-AES and ICP-MS Microbac SOPs 2007-6010, Revision 7 2008-6020, Revision 1	Precision	RPD ≤ 40% if concentration ≥5 CRQL	Split samples and field duplicates	S & A
		Precision	RPD ≤ 35% if concentration ≥5 CRQL – DESA limit: 25% RPD	Laboratory duplicate	A
		Accuracy/Bias	90-110 %recovery 75-125 %recovery	LCS; MS/MSD	A
		Accuracy/ Representativeness	4±2 degrees Celsius 10 degrees Celsius (DV)	Temperature Blank checks Data validation (DV)	S & A
		Comparability	Comparable units, and methods	Evaluated during DQA	S & A
		Completeness	≥ 90% Collection and ≥ 90% Valid data	Evaluated during DQA	S & A
		Sensitivity/ accuracy	≤ CRQLs (WS#15)	Field rinsate/ Method blanks assessed during DV and DQA	S & A

Note:
1. The assigned laboratory must perform and meet all the quality assurance requirements specified in their method SOP.

QAPP Worksheet #12
Measurement Performance Criteria Table

Matrix	Tissue
Analytical Group	Methyl mercury
Concentration Level	Low

Sampling Procedure	Analytical Method/ SOP	Data Quality Indicators (DQIs)	Measurement Performance Criteria[1] (MPC)	QC Sample and/or Activity Used to Assess Measurement Performance	QC Sample Assesses Error for Sampling (S), Analytical (A) or Both (S&A)
CPG Group's SOP, and QAPP CDM will accept split	EPA Method – 1630 Microbac SOP Methyl Mercury Draft, Revision 0	Precision	RPD ≤ 40% if concentration ≥5 CRQL	Split samples and field duplicates	S & A
		Accuracy	RPD ≤ 35% for values ≥5 MDL. No more than 35% of RSDs >35%	Laboratory duplicate	A
		Accuracy/Bias	65-135 %recovery	MS/MSD	A
		Precision	RPD ≤ 35%	MS/MSD	A
		Accuracy	67-133%R of certified value	Ongoing Precision and Recovery (Standard Reference Material)	
		Accuracy/ Representativeness	4±2 degrees Celsius 10 degrees Celsius (DV)	Temperature Blank checks Data validation (DV)	S & A
		Comparability	Comparable units, and methods	Evaluated during DQA	S & A
		Completeness	≥ 90% Collection and ≥ 90% Valid data	Evaluated during DQA	S & A
		Sensitivity/ accuracy	≤ QLs (WS#15) ≤ 5 MDLs	Field rinsate/ Method blanks assessed during DV and DQA	S & A

Note:
1. The assigned laboratory must perform and meet all the quality assurance requirements specified in their method SOP.

QAPP Worksheet #12
Measurement Performance Criteria Table

Matrix	Tissue
Analytical Group	Total mercury
Concentration Level	Trace (ng/g)

Sampling Procedure	Analytical Method/ SOP	Data Quality Indicators (DQIs)	Measurement Performance Criteria[1] (MPC)	QC Sample and/or Activity Used to Assess Measurement Performance	QC Sample Assesses Error for Sampling (S), Analytical (A) or Both (S&A)
CPG Group's SOP, and QAPP CDM will accept split	EPA Method – 1631 Microbac SOP Hg-1631, Revision 2	Precision	RPD ≤ 40% if concentration ≥5 CRQL	Split samples and field duplicates	S & A
		Accuracy	RPD ≤ 25% for values ≥10 MDL. No more than 35% of RSDs >25%	Laboratory duplicate	A
		Accuracy/Bias	70-130 %recovery	MS/MSD	A
		Precision	Laboratory SOP or RPD ≤ 30-35%; RSDs <20%	MS/MSD; Initial Precision and Recovery	A
		Accuracy	Laboratory SOP or 70-130%R; 75-125%R	Ongoing Precision and Recovery; Standard Reference Material	
		Accuracy/ Representativeness	4±2 degrees Celsius 10 degrees Celsius (DV)	Temperature Blank checks DV	S & A
		Comparability	Comparable units, and methods	Evaluated during DQA	S & A
		Completeness	≥ 90% Collection and ≥ 90% Valid data	Evaluated during DQA	S & A
		Sensitivity/ accuracy	≤ QLs (WS#15) ≤ 5MDLs	Field rinsate/ Method blanks assessed during DV and DQA	S & A

Note:

1. The assigned laboratory must perform and meet all the quality assurance requirements specified in their method SOP.

QAPP Worksheet #12
Measurement Performance Criteria Table

Matrix	Tissue
Analytical Group	Inorganic arsenic (arsenic speciation)
Concentration Level	Low

Sampling Procedure	Analytical Method/ SOP	Data Quality Indicators (DQIs)	Measurement Performance Criteria[1] (MPC)	QC Sample and/or Activity Used to Assess Measurement Performance	QC Sample Assesses Error for Sampling (S), Analytical (A) or Both (S&A)
CPG Group's SOP, and QAPP CDM will accept split	EPA 1632 CAS SOP MET-1632, Revision 0	Precision	RPD ≤ 40% if concentration ≥5 CRQL	Split samples and field duplicates	S & A
		Precision	RPD ≤ 20% if concentration ≥5 CRQL	Laboratory duplicate or MS/MSD	A
		Accuracy	Initial calibration <10%R Verification 75-125%R	Calibration Verification	A
		Precision	<42%standard deviation	Initial Precision and Recovery	A
		Accuracy/Bias	59-143%R	Initial Precision and Recovery	A
		Accuracy/Bias	55-146 %R or Per laboratory SOP	LCS or Ongoing Precision and Recovery and MS/MSD	A
		Accuracy	75-125% recovery or per laboratory SOP	MS/MSD	A
		Accuracy/ Representativeness	4±2 degrees Celsius 10 degrees Celsius (DV)	Temperature Blank checks Data validation (DV)	S & A
		Comparability	Comparable units, and methods	Evaluated during DQA	S & A
		Completeness	≥ 90%	Evaluated during DQA	S & A
		Sensitivity/ accuracy	≤ QLs (WS#15)	Field rinsate/ Method blanks assessed during DV and DQA	S & A

Note:

1. The assigned laboratory must perform and meet all the quality assurance requirements specified in their method SOP.

QAPP Worksheet #12
Measurement Performance Criteria Table

Matrix	Tissue
Analytical Group	Percent lipid
Concentration Level	Unknown

Sampling Procedure	Analytical Method/ SOP	Data Quality Indicators (DQIs)	Measurement Performance Criteria[1] (MPC)	QC Sample and/or Activity Used to Assess Measurement Performance	QC Sample Assesses Error for Sampling (S), Analytical (A) or Both (S&A)
CPG Group's SOP, and QAPP CDM will accept split	SM2540B Modified (see Appendix K) CPG will be using the Bligh Dyer extraction procedure and providing this information to CDM	Precision	RPD ≤ 40% if concentration ≥5 CRQL	Split samples and field duplicates	S & A
		Accuracy/Bias	75-125 %R Per laboratory SOP	Certified Reference Material	A
		Precision	RPD ≤ 20%	MS/MSD	A
		Accuracy/ Representativeness	<10 degrees Celsius (DV)	Temperature Blank checks or equivalent	S & A
		Comparability	Comparable units, and methods	Evaluated during DQA	S & A
		Completeness	≥ 90%	Evaluated during DQA	S & A
		Accuracy	Per laboratory SOP	Balance calibration	A

Note:
1. The assigned laboratory must perform and meet all the quality assurance requirements specified in their method SOP.

QAPP Worksheet #12
Measurement Performance Criteria Table

Matrix	Tissue
Analytical Group	Moisture
Concentration Level	Low

Sampling Procedure	Analytical Method/ SOP	Data Quality Indicators (DQIs)	Measurement Performance Criteria[1] (MPC)	QC Sample and/or Activity Used to Assess Measurement Performance	QC Sample Assesses Error for Sampling (S), Analytical (A) or Both (S&A)
CPG Group's SOP, and QAPP CDM will accept split	SM 2540G Modified	Precision	≤ 20% RPD	Laboratory duplicate	A

Note:
1. The assigned laboratory must perform and meet all the quality assurance requirements specified in their method SOP.

QAPP Worksheet #14
Summary of Project Tasks

Sampling Tasks:

As part of the LPR Restoration Project, the CPG is implementing an estuarine dynamic and sediment transport, and biological field sampling program to support the RI/FS. On behalf of the USACE and EPA, The oversight program is designed to provide technical review and evaluation of CPG-implemented field sampling plans. QAPP Addendum # 2, Fish Community Survey, Worksheet 10 discusses the oversight activities for the sampling activity; and Worksheet 11 provides details on the data to be collected. CDM observed and documented the sampling conducted during the surveys. CDM will accept split fish tissue samples as volume requirements allow.

Analysis Tasks:

Split samples will be collected from fish tissue composites to be generated by the CPG's subcontract laboratory, Alpha Analytical. Oversight forms (Appendix B of the CDM Final QAPP) documenting observations of the fish tissue processing will be completed by CDM's oversight staff.

Analyses on tissue samples will include PCB congeners, PCDF congeners, pesticides, PAH compounds, SVOC compounds, metals (mercury, methylmercury, and inorganic arsenic), percent lipids, and percent moisture.

Quality Control Tasks: CDM will observe CPG's processing and handling of the fish tissue samples. CDM will accept splits and one field rinsate blank of the blender used to homogenize the samples. The CDM Deputy Task Order Manager or designee will review the logs to ensure that the required information has been documented.

Secondary Data: Since this is an oversight project, no secondary data is being used directly by CDM. Data generated by the CPG - field program will be used as shown on worksheet 11 of the CPG's QAPP Addendum No. 4: Fish/Decapod QAPP.

Data Management Tasks:

Analytical data generated by the various laboratories will be managed according to the procedures described in the CDM Final QAPP.

Documentation and Records: Records of accepted fish tissue samples will be documented in accordance with TSOP 4-1 provided in Appendix C of the CDM Final QAPP. The Fish Tissue Analysis results will be documented in the following:

1. Data Validation reports
2. COCs, ANSETS, and Trip Report
3. Oversight summary report
4. Data Quality and Usability Summary Report

QAPP Worksheet #14
Summary of Project Tasks

Assessment/Audit Tasks: See CDM Final QAPP for assessment tasks (CDM 2009)

Data Review Tasks: The CPG's Data Summary Repot will be reviewed by CDM. A data quality evaluation will be performed based on the CPG's compliance with the approved QAPP. A comparison of CDM's and the CPG's fish tissue sample results will be included in the data quality evaluation and submitted to the USACE.

QAPP Worksheet #15
Reference Limits and Evaluation Table

Matrix: Tissue
Analytical Group: PCB Congeners by EPA 1668B
Concentration Level: Low (pg/g or ng/kg)

Analyte	CAS Number	Project Action Limit[1]	Project Quantitation Limit Goal[2]	Analytical Method[3]			Achievable Laboratory Limits (Method 1668A)	
				MDLs (Estimated with interfer-ences)	1668A Method QLs	CBC01.2 Method QLs	MDLs	QLs[4, 5]
All individual Congeners PCB-1 through PCB-209	Note 3	TBD	1,580 ng/kg Equal to the CPG's laboratory achievable QLs for each congener	See Method	10 – 100 ng/kg; 1 ng/kg for PCB-2 Note 3	10 – 100 ng/kg; 1 ng/kg for PCB-2 Note 3	NA	0.1 to 0.2 pg/g = 0.1 to 0.2 ng/kg
PCB-81, PCB-105, PCB-114, PCB-118, PCB-123, PCB-169 PCB-189	Note 3	TBD	80.9 ng/kg	18 11 12 19 15 16 18	50 ng/kg 20 ng/kg 50 ng/kg 50 ng/kg 50 ng/kg 50 ng/kg 50 ng/kg	50 ng/kg 20 ng/kg 50 ng/kg 50 ng/kg 50 ng/kg 50 ng/kg 50 ng/kg	NA	0.1 ng/kg
PCB-126	Note 3	TBD	0.243 ng/kg	14	50 ng/kg	50 ng/kg	NA	0.1 ng/kg

Notes:

1. Project-specific action limits have not been developed. The CPG used preliminary screening levels to derive Data Quality Levels (DQLs) for the fish analysis.
2. The project quantitation limit goals (PQLGs) are the Data Quality Levels for the individual PCB Congeners listed in the CPG RI/FS QAPP, *Final Fish and Decapod Crustacean Tissue Collection for Chemical Analysis and Fish Community Survey*, August 2009. (Attachment I of this QAPP).
3. See CLP SOW CBC1.0 Fact sheet or Method 1688A Table 2 for a list of PCB Congener QLs and CAS numbers.
4. Achievable QLs shown are based on typical Axys Analytical Services detection limits expected to range from 0.1 to 2.0 pg/g, with some exceptions, in particular for the co-eluting PCB congeners. The assigned laboratory will report the PCB congeners to sample specific detection limits, which will be different from that shown in this worksheet.
5. The laboratory QLs are TBD and will need to be low enough to support split sample comparison. Actual QLs may be higher and are dependent on matrix effects.

QAPP Worksheet #15
Reference Limits and Evaluation Table

Matrix: Tissue
Analytical Group: PCDD/PCDF by EPA 1613B
Concentration Level: Low (ng/kg = nanogram per kilogram)

Analyte	CAS Number	Project Action Limit[1]	Project Quantitation Limit Goals[2] (ng/kg)	EPA 1613B Analytical Method[3]		Method 1613B Achievable Laboratory Limits	
				MDLs (ng/kg) [3]	Method CRQLs[3] (ng/kg)	MDLs (ng/kg) [4]	QLs (ng/kg) [4]
2378-TCDD	1746-01-6	TBD	0.00243	NA	1.0	0.043	0.05
12378-PeCDD	40321-76-4	TBD	0.0243	NA	5.0	0.13	0.10
123678-HxCDD	57653-85-7	TBD	0.243	NA	5.0	0.20	0.10
123478-HxCDD	39227-28-6	TBD	0.243	NA	5.0	0.124	0.10
123789-HxCDD	19408-74-3	TBD	0.243	NA	5.0	0.089	0.10
1234678-HpCDD	35822-46-9	TBD	2.43	NA	5.0	0.112	0.10
OCDD	3268-87-9	TBD	80.9	NA	10	0.337	0.5
2378-TCDF	51207-31-9	TBD	0.243	NA	1.0	0.027	0.05
12378-PeCDF	57117-41-6	TBD	0.809	NA	5.0	0.096	0.10
23478-PeCDF	57117-31-4	TBD	0.0809	NA	5.0	0.102	0.10
123678-HxCDF	57117-44-9	TBD	0.243	NA	5.0	0.075	0.10
123789-HxCDF	72918-21-9	TBD	0.243	NA	5.0	0.86	0.10
123478-HxCDF	70648-26-9	TBD	0.243	NA	5.0	0.093	0.10
234678-HxCDF	60851-34-5	TBD	0.0243	NA	5.0	0.077	0.10
1234678-HpCDF	67562-39-4	TBD	2.43	NA	5.0	0.128	0.10
1234789-HpCDF	55673-89-7	TBD	2.43	NA	5.0	0.107	0.10
OCDF	39001-02-0	TBD	80.9	NA	10	0.099	0.50

Notes:

1. Project-specific action limits have not been developed. The CPG used preliminary screening levels to derive Data Quality Levels (DQLs) for the fish analysis.
2. The project quantitation limit goals (PQLGs) are the DQLs for the individual PCDD/PCDF based on the CPG goals which are derived from the lower of EPA Region 3 fish tissue screening levels, May 2008; ecological wildlife thresholds back-calculated from dietary TRVs; or ecological fish or decapod thresholds based on tissue-residue TRVs (Windward 2009). These limits are taken from the CPG RI/FS QAPP, *Final Fish and Decapod Crustacean Tissue Collection for Chemical Analysis and Fish Community Survey*, August 2009. The split sample data should be low enough for data comparison. Differences in laboratory detection limits will be considered when comparing the data.
3. Specific MDLs for solids are not given in USEPA Method 1613B, but the QLs listed are the minimum levels published in Table 2 of USEPA Method 1613B and CLP method DLM0.2, Exhibit C, Section 1. The actual detection limits are usually dependent on the level of interference rather than instrument limitations.
4. The MDLs listed are the statistically-derived MDLs. The QLs listed are obtained from Axys Analytical Services. Actual QLs may be higher and are dependent on the sample matrix effects.

QAPP Worksheet #15
Reference Limits and Evaluation Table

Matrix: Tissue
Analytical Group: Chlorinated Pesticides by EPA 1613B Modified
Concentration Level: Low (ng/g) (µg/kg)

Analyte	CAS Number	Project Action Limit[1]	Project Quantitation Limit Goal[2]	SOM01.2 Analytical Method		Achievable Laboratory Limits[3]	
				MDLs	Method CRQLs	MDLs	QLs
2,4'-DDD	53-19-0	TBD	13.1	NA	Not on CLP list	0.016	0.02
2,4'-DDE	3424-82-6	TBD	9.28	NA	Not on CLP list	0.007	0.02
2,4'-DDT	789-02-6	TBD	9.28	NA	Not on CLP list	0.013	0.02
4,4,DDD	72-54-8	TBD	13.1	NA	3.3	0.018	0.02
4,4,DDE	72-55-9	TBD	9.28	NA	3.3	0.008	0.02
4,4,DDT	50-29-3	TBD	9.28	NA	3.3	0.013	0.02
Aldrin	309-00-2	TBD	0.186	NA	1.7	0.017	0.02
alpha-BHC	319-84-6	TBD	0.501	NA	1.7	0.022	0.02
beta-BHC	319-85-7	TBD	1.75	NA	1.7	0.010	0.02
cis-Chlordane (alpha Chlordane)	5103-71-9	TBD	9.01	NA	1.7	0.017	0.02
cis-Nonachlor	5103-73-1	TBD	9.01	NA	Not on CLP list	0.023	0.02
delta-BHC	319-86-8	TBD	0.501	NA	1.7	0.012	0.02
Dieldrin	60-57-1	TBD	0.197	NA	3.3	0.018	0.05
Endosulfan I	959-98-8	TBD	31	NA	3.3	0.035	0.05
Endosulfan II	33213-65-9	TBD	31	NA	3.3	0.050	0.05
Endosulfan sulfate	1031-07-8	TBD	31	NA	3.3	0.015	0.05
Endrin	72-20-8	TBD	10	NA	3.3	0.009	0.05
Endrin Aldehyde	7421-93-4	TBD	10	NA	3.3	0.017	0.05
Endrin ketone	53494-70-5	TBD	10	NA	3.3	0.017	0.05
gamma-BHC (Lindane)	58--89-9	TBD	2.87	NA	1.7	0.139	0.02
Hexachorobenzene	118-74-1	TBD	1.97	NA	On SVOC list	0.008	0.02
Heptachlor	76-44-8	TBD	0.701	NA	1.7	0.013	0.02
Heptachlor Epoxide	1024-57-3	TBD	0.347	NA	1.7	0.009	0.05
Methoxychlor	72-43-5	TBD	50	NA	17	0.010	0.10
Toxaphene	8001-35-2	TBD	Not on list of analytes	NA	170	0.030	NA
Oxychlordane	27304-13-8	TBD	9.01	NA	Not on CLP list	0.011	0.02
Trans-Chlordane (gamma Chlordane)	5103-74-2	TBD	9.01	NA	1.7	0.012	0.02
Trans-Nonachlor	3734-49-4	TBD	9.01	NA	NS		0.02

Notes: 1. At this time, project-specific action limits have not been developed. The CPG used preliminary screening levels to derive Data Quality Levels (DQLs).
2. The PQLGs listed are DQLs taken from the CPG RI/FS QAPP, *Final Fish and Decapod Crustacean Tissue Collection for Chemical Analysis and Fish Community Survey*, August 2009 derived as preliminary screening levels. The split sample data should be low enough for data comparison. Differences in laboratory detection limits will be considered when comparing the data.
3. MDLs listed are the statistically-derived MDLs. The QLs listed are from Axys Analytical Services. Results will be reported in dry weight. Actual QLs may be higher and are dependent on the sample moisture content and matrix effects.

QAPP Worksheet #15
Reference Limits and Evaluation Table

Matrix: Tissue
Analytical Group: PAH by Axys Laboratory SOP: MLA-021 R09
Concentration Level: Low (µg/kg)

Analyte	CAS Number	Project Action Limit[1]	Project Quantitation Limit Goal[2]	Analytical Method[3]			Achievable Laboratory Limits[3]	
				MDLs	SOM01.2 QL	8270 QL	MDLs	QLs
1-Methylnaphthalene	90-12-0	TBD	110	NA	Not Listed	Not Listed	NA	1.0
1-Methylphenanthrene	832-69-9	TBD	40600	NA	Not Listed	Not Listed	0.28	1.0
2,3,5-Trimethylnaphthalene	2245-38-7	TBD	NA	NA	Not Listed	Not Listed	0.6	1.0
2,6-Dimethylnaphthalene	581-42-0	TBD	NA	NA	Not Listed	Not Listed	0.25	1.0
2-Methylnaphthalene	91-57-6	TBD	541	NA	170	660	0.29	1.0
Acenaphthene	83-32-9	TBD	240	NA	170	660	0.16	0.5
Acenaphthylene	208-96-8	TBD	240	NA	170	660	0.2	0.5
Anthracene	120-12-7	TBD	240	NA	170	660	0.41	0.5
Benzo[a]anthracene	56-55-3	TBD	4332	NA	170	660	0.18	0.5
Benzo[a]pyrene	50-32-8	TBD	0.432	NA	170	660	0.14	0.5
Benzo[b]fluoranthene	205-99-2	TBD	4.32	NA	170	660	0.61	?
Benzo[e]pyrene	192-97-2	TBD	240	NA	Not Listed	Not Listed	0.17	0.5
Benzo[g,h,i]perylene	191-24-2	TBD	240	NA	170	660	0.21	1.0
Benzo[j]fluoranthene [4]	205-82-3	TBD	Not Listed	NA	Not Listed	Not Listed	0.1	0.5
Benzo[k]fluoranthene	207-08-9	TBD	43.2	NA	170	660	0.1	0.5
Chrysene	218-01-9	TBD	432	NA	170	660	0.2	0.5
Dibenzo[a,h]anthracene	53-70-3	TBD	0.432	NA	170	660	0.23	1.0
Dibenzothiophene	135-65-0	TBD	NA	NA	Not Listed	Not Listed	0.23	1.0
Fluoranthene	206-44-0	TBD	240	NA	170	660	0.17	0.5
Fluorene	86-73-7	TBD	240	NA	170	660	0.17	0.5
Indeno[1,2,3-c,d]-pyrene	193-39-5	TBD	4.32	NA	170	660	0.17	1.0
Naphthalene	91-20-3	TBD	240	NA	170	660	1.55	0.5
Perylene	198-55-0	TBD	240	NA	Not Listed	Not listed	0.18	1.0
Phenanthrene	85-01-8	TBD	240	NA	170	660	0.13	0.5
Pyrene	129-00-0	TBD	240	NA	170	660	0.18	0.5

Notes:

1. At this time, project-specific action levels have not been developed. The CPG used preliminary screening levels to derive Data Quality Levels (DQLs).

2. The PQLGs shown are the DQLs taken from the CPG RI/FS QAPP, *Final Fish and Decapod Crustacean Tissue Collection for Chemical Analysis and Fish Community Survey*, August 2009. The split sample data should be low enough for data comparison. Differences in laboratory detection limits will be considered when comparing the data.. Actual QLs will differ since the laboratory reports to sample specific detection limits.

3. Achievable MDLs listed are the statistically-derived MDLs. The QLs listed are based on Axys Analytical Services typical sample specific detection limits. Actual QLs may be higher and are dependent on the sample matrix effects. MDLs and QLs are limits that an individual laboratory can achieve when performing the analytical method.

4. This analyte was not included on the PAH list in the CPG RI/FS QAPP *Final Fish and Decapod Crustacean Tissue Collection for Chemical Analysis and Fish Community Survey*, August 2009.

QAPP Worksheet #15
Reference Limits and Evaluation Table

Matrix: Tissue
Analytical Group: SVOCs by SW-846, 8270C
Concentration Level: Low (mg/kg)

Analyte	CAS Number	Project Action Limit[1]	Project Quantitation Limit Goal[2]	Analytical Method			Achievable Laboratory Limits	
				MDLs	8270C CRQLs[3]	SOM01.2 CRQLs[3]	MDLs	QLs[3]
1,1'-Biphenyl	92-52-4	TBD	6.76	NA	NA	0.17	0.017	0.067
2,2'-Oxybis (1-Chloropropane)	108-60-1	TBD	NA	NA	0.66	0.17	0.017	0.067
2,4,5-Trichlorophenol	95-95-4	TBD	13.5	NA	0.66	0.17	0.036	0.170
2,4,6-Trichlorophenol	88-06-2	TBD	0.135	NA	0.66	0.17	0.044	0.170
2,4-Dichlorophenol	120-83-2	TBD	0.406	NA	0.66	0.17	0.041	0.70
2,4-Dimethylphenol	105-67-9	TBD	2.70	NA	0.66	0.17	0.041	0.170
2,4-Dinitrophenol	51-28-5	TBD	0.270	NA	3.3	0.33	0.360	0.670
2,4-Dinitrotoluene	121-14-2	TBD	0.270	NA	0.66	0.17	0.015	0.067
2,6-Dinitrotoluene	606-20-2	TBD	0.135	NA	0.66	0.17	0.015	0.067
2-Chloronaphthalene	91-58-7	TBD	10.8	NA	0.66	0.17	0.015	0.067
2-Chlorophenol	95-57-8	TBD	0.676	NA	0.66	0.17	0.028	0.170
2-Methylnaphthalene[4]	91-57-6	TBD	0.541	NA	0.66	0.17	0.015	0.067
2-Methylphenol	95-48-7	TBD	6.76	NA	0.66	0.17	0.036	0.067
2-Nitroaniline	88-74-4	TBD	0.0406	NA	3.3	0.33	0.024	0.170
2-Nitrophenol	88-75-5	TBD	40.6	NA	0.66	0.17	0.035	0.170
3,3'-Dichlorobenzidine	91-94-1	TBD	0.00701	NA	1.3	0.17	0.058	0.170
3-Nitroaniline	99-09-2	TBD	0.0406	NA	3.3	0.33	0.013	0.170
4,6-Dinitro-2-methylphenol	534-52-1	TBD	0.0135	NA	3.3	0.17	0.035	0.670
4-Bromophenyl-phenylether	101-55-3	TBD	NA	NA	0.66	0.17	0.022	0.067
4-Chloro-3-methylphenol	59-50-7	TBD	NA	NA	1.3	0.17	0.040	0.170
4-Chloroaniline	106-47-8	TBD	0.0584	NA	1.3	0.17	0.014	0.170
4-Chlorophenyl-phenyl ether	7005-72-3	TBD	NA	NA	0.66	0.17	0.022	0.067
4-Methylphenol	106-44-5	TBD	0.676	NA	0.66	0.17	0.045	0.067
4-Nitroaniline	100-01-6	TBD	0.0150	NA	NA	0.33	0.021	0.170
4-Nitrophenol	100-02-7	TBD	40.6	NA	3.3	0.33	0.043	0.330
Acenaphthene[4]	83-32-9	TBD	0.24	NA	0.66	0.17	0.018	0.033
Acenaphthylene[4]	208-96-8	TBD	0.24	NA	0.66	0.17	0.014	0.033
Acetophenone	98-86-2	TBD	13.5	NA	NA	0.17	0.016	0.170
Anthracene[4]	120-12-7	TBD	0.24	NA	0.66	0.17	0.014	0.170
Atrazine	1912-24-9	TBD	0.0137	NA	NA	0.17	0.021	0.170
Benzaldehyde	100-52-7	TBD	13.5	NA	NA	0.17	0.097	0.170
Benzo(a)anthracene[4]	56-55-3	TBD	0.00432	NA	0.66	0.17	0.020	0.033
Benzo(a)pyrene[4]	50-32-8	TBD	0.000432	NA	0.66	0.17	0.014	0.033

QAPP Worksheet #15
Reference Limits and Evaluation Table

Matrix: Tissue
Analytical Group: SVOCs by SW-846, 8270C
Concentration Level: Low (mg/kg)

Analyte	CAS Number	Project Action Limit[1]	Project Quantitation Limit Goal[2]	Analytical Method			Achievable Laboratory Limits	
				MDLs	8270C CRQLs[3]	SOM01.2 CRQLs[3]	MDLs	QLs[3]
Benzo(b)fluoranthene[4]	205-99-2	TBD	0.00432	NA	0.66	0.17	0.018	0.033
Benzo(g,h,i)perylene[4]	191-24-2	TBD	0.24	NA	0.66	0.17	0.016	0.033
Benzo(k)fluoranthene[4]	207-08-9	TBD	0.0432	NA	0.66	0.17	0.017	0.033
bis-(2-Chloroethoxy)methane	111-91-1	TBD	0.406	NA	0.66	0.17	0.017	0.067
bis-(2-Chloroethyl)ether	111-44-4	TBD	0.00287	NA	0.66	0.17	0.016	0.067
bis(2-Ethylhexyl)phthalate	117-81-7	TBD	0.225	NA	0.66	0.17	0.017	0.067
Butylbenzylphthalate	85-68-7	TBD	1.24	NA	0.66	0.17	0.017	0.067
Caprolactam	105-60-2	TBD	67.6	NA	NA	0.17	0.027	0.067
Carbazole	86-74-8	TBD	NA	NA	NA	0.17	0.014	0.067
Chrysene[4]	218-01-9	TBD	0.24	NA	0.66	0.17	0.015	0.033
Dibenzo(a,h)-anthracene[4]	53-70-3	TBD	0.000432	NA	0.66	0.17	0.016	0.033
Dibenzofuran	132-64-9	TBD	NA	NA	0.66	0.17	0.016	0.067
Diethylphthalate	84-66-2	TBD	1.24	NA	0.66	0.17	0.015	0.067
Dimethylphthalate	131-11-3	TBD	NA	NA	0.66	0.17	0.016	0.067
Di-n-butylphthalate	84-74-2	TBD	0.5	NA	NA	0.17	0.021	0.067
Di-n-octylphthalate	117-84-0	TBD	1.24	NA	0.66	0.17	0.015	0.067
Fluoranthene[4]	206-44-0	TBD	0.24	NA	0.66	0.17	0.015	0.033
Fluorene[d]	86-73-7	TBD	0.24	NA	0.66	0.17	0.016	0.033
Hexachlorobenzene [5]	118-74-1	TBD	0.00197	NA	0.66	0.17	0.019	0.067
Hexachlorobutadiene	87-68-3	TBD	0.0404	NA	0.66	0.17	0.016	0.033
Hexachloroethane	67-72-1	TBD	0.135	NA	0.66	0.17	0.022	0.170
Hexachlorocyclopentadiene	77-47-4	TBD	0.811	NA	0.66	0.17	0.031	0.670
Indeno(1,2,3-cd)-pyrene [4]	193-39-5	TBD	0.00432	NA	0.66	0.17	0.012	0.033
Isophorone	78-59-1	TBD	3.32	NA	0.66	0.17	0.029	0.067
Naphthalene[4]	91-20-3	TBD	0.24	NA	0.66	0.17	0.013	0.033
Nitrobenzene	98-95-3	TBD	0.0676	NA	0.66	0.17	0.015	0.067
n-Nitroso-di-n-propylamine	621-64-7	TBD	0.000451	NA	0.66	0.17	0.021	0.067
n-Nitrosodiphenylamine	86-30-6	TBD	0.644	NA	0.66	0.17	0.022	0.170
Pentachlorophenol	87-86-5	TBD	0.0263	NA	3.3	0.33	0.043	0.330
Phenanthrene	85-01-8	TBD	0.24	NA	0.66	0.17	0.013	0.033
Phenol	108-95-2	TBD	40.6	NA	0.66	0.17	0.025	0.067
Pyrene[4]	129-00-0	TBD	0.24	NA	0.66	0.17	0.015	0.033

Notes:

1. At this time, project-specific action levels have not been developed. The CPG used preliminary screening levels to derive Data Quality Levels (DQLs) for the fish analysis.
2. The PQLGs are the DQLs taken from the CPG RI/FS QAPP, Final *Fish and Decapod Crustacean Tissue Collection for Chemical Analysis and Fish Community Survey*, August 2009. The split sample data should be low enough for data comparison. Differences in laboratory detection limits will be considered when comparing the data.
3. Achievable MDLs and QLs are limits that an individual laboratory can achieve when performing the analytical method. Actual MDLs and QLs will vary based on sample-specific factors. The Achievable QLs listed are based on detection limits achieved by Accutest Laboratories.
4. Analyte may also be reported from the PAH analysis and will take precedence over SW846 Method 8270C data.
5. Hexachlorobenzene will also be reported from the Pesticide HRGC/HRMS method; results from the HRGC/HRMS will take precedence over SW846 Method 8270C results.

QAPP Worksheet #15
Reference Limits and Evaluation Table

Matrix: Tissue
Analytical Group: Metals by SW-846, 6010B/6020
Concentration Level: Low (mg/kg)

Analyte	CAS Number	Project Action Limit[1]	Project Quantitation Limit Goal[2]	ILM05.4 Analytical Method[3]		Achievable Laboratory Limits[4]		
				MDLs[3]	CRQLs	MDLs	QLs[5, 4]	Analytical Technique
Aluminum	7429-90-5	TBD	135	NA	20	3.15	20.0	ICP-AES
Antimony [6]	7440-36-0	TBD	**0.0541**	NA	6	0.4	2.0	ICP-MS
Arsenic [5,6]	7440-38-2	TBD	**0.0021**	NA	1	**0.25**	**0.5**	ICP-MS
Barium	7440-39-3	TBD	27.0	NA	20	0.08	20.0	ICP-MS
Beryllium	7440-41-7	TBD	0.270	NA	0.5	0.02	0.5	ICP-MS
Cadmium [6]	7440-43-9	TBD	**0.135**	NA	0.5	**0.03**	**0.4**	ICP-MS
Calcium	7440-70-2	TBD	NA	NA	500	7.48	500	ICP-AES
Chromium	7440-47-3	TBD	0.406	NA	1	**0.09**	**1.0**	ICP-MS
Cobalt [6]	7440-48-4	TBD	**0.0406**	NA	5	**0.03**	**5**	ICP-MS
Copper	7440-50-8	TBD	5.41	NA	2.5	0.16	2.5	ICP-MS
Iron	7439-89-6	TBD	94.6	NA	10	0.58	10.0	ICP-AES
Lead[6]	7439-92-1	TBD	**1.5**	NA	1	0.17	2	ICP-MS
Magnesium	7439-95-4	TBD	NA	NA	500	4.81	500	ICP-AES
Manganese	7439-96-5	TBD	18.9	NA	1.5	0.06	1.5	ICP-MS
Nickel [6]	7440-02-0	TBD	**2.70**	NA	4	0.06	4.0	ICP-MS
Potassium	7440-09-7	TBD	NA	NA	500	8.56	1000	ICP-AES
Selenium[6]	7782-49-2	TBD	**0.34**	NA	3.5	**0.37**	**2.0**	ICP-MS
Silver [6]	7440-22-4	TBD	**0.676**	NA	1	**0.11**	**1.0**	ICP-MS
Sodium	7440-23-5	TBD	NA	NA	500	3.47	1000	ICP-AES
Thallium[6]	7440-28-0	TBD	**0.00876**	NA	2.5	**0.196**	**0.50**	ICP-MS
Titanium [6]	7440-32-6	TBD	NA	NA	2 (MA1486.0)	0.06	1.0	ICP-AES
Vanadium[6]	7440-62-2	TBD	**0.946**	NA	5	**0.09**	**5.0**	ICP-AES
Zinc	7440-66-6	TBD	12.7	NA	6	0.33	2.0	ICP-MS

Notes: 1. At this time, project-specific action levels have not been developed by EPA. The CPG used preliminary screening levels to derive Data Quality Levels (DQLs).
2. The PQLGs listed are the DQLs taken from the CPG RI/FS QAPP, *Final Fish and Decapod Crustacean Tissue Collection for Chemical Analysis and Fish Community Survey*, August 2009. The split sample data should be low enough for data comparison. Differences in laboratory detection limits will be considered in comparing the data.
3. The EPA CLP does not perform tissue analysis, so the laboratory will likely be subcontracted. The achievable QLs are for Accutest Laboratories by ICP-AES and/or ICP-MS. The assigned laboratory limits will differ and are dependent on the sample matrix effects. If positive detections are made by ICP-AES, the laboratory may not employ ICP-MS. Method MDLs are not specified.
4. The laboratory QLs are above the CPG target DQLs, but the laboratory will report the metals data to the MDLs. Differences in laboratory method sensitivity must be considered when evaluating the split sample results.
5. Inorganic arsenic will also be determined by an alternative, more sensitive method.
6. If analysis is routed via EPA CLP, titanium will be requested as an addition to the TCL for ILM05.4 via modified analysis and lower limits for the other highlighted metals requested to meet the PQLGs.

QAPP Worksheet #15
Reference Limits and Evaluation Table

Matrix: Tissue
Analytical Group: Inorganic arsenic by EPA 1632
Concentration Level: Trace (µg/g or mg/kg)

Analyte	CAS Number	Project Action Limit [1]	Data Quality Level [1]	Project Quantitation Limit Goals [2]	Analytical Method[3, 5]		Achievable Laboratory Limits[4]	
					MDLs	Method QLs	MDLs	QLs[4, 5]
Inorganic Arsenic	7440-38-2	TBD	0.00210	0.0021	3 ng/L or approximately equivalent to 0.003 mg/L	10 ng/L or approximately equivalent to 0.01 mg/L	0.0123 (Battelle Marine Sciences Laboratories)	0.05 (Battelle Marine Sciences Laboratories)
							0.003 / 0.005 (Brooks Rand)	0.01 (Brooks Rand)

Notes:

1. At this time, project-specific action levels have not been developed. The CPG used preliminary screening levels to derive Data Quality Levels (DQLs).
2. The PQLG listed is the DQL as listed in the CPG's RI/FS QAPP, *Final Fish and Decapod Crustacean Tissue Collection for Chemical Analysis and Fish Community Survey*, August 2009. The split sample data should be low enough for data comparison. Differences in laboratory detection limits will be considered when comparing the data.
3. Analytical Method Limits are not specified for tissue analysis of inorganic arsenic. The numbers shown are for aqueous media.
4. The achievable QLs listed will differ dependent on the laboratory assigned to perform the analyses.
5. Actual QLs may be higher and are dependent on the sample matrix effects

QAPP Worksheet #15
Reference Limits and Evaluation Table

Matrix: Tissue
Analytical Group: Mercury by EPA 1631
Concentration Level: Trace (µg/g or mg/kg)

Analyte	CAS Number	Project Action Limit[1]	Data Quality Level[1]	Project Quantitation Limit Goals[2]	Analytical Method[3]		Achievable Laboratory Limits	
					MDLs	Method CRQLs	MDLs	QLs[4, 5]
Mercury	7439-97-6	TBD	0.0086	0.0086	0.00024 to 0.00048 (Appendix to 1631B; EPA-821-R-01-013)	0.001	0.3 (Battelle Marine Sciences Laboratories)	1 (Battelle Marine Sciences Laboratories)
							0.00004 (Brooks Rand)	0.0001 (Brooks Rand)

Notes:

1. At this time, project-specific action levels have not been developed. The CPG used preliminary screening levels to derive Data Quality Levels (DQLs).
2. The PQLGs listed are the DQLs taken from the CPG RI/FS QAPP, *Final Fish and Decapod Crustacean Tissue Collection for Chemical Analysis and Fish Community Survey*, August 2009. The split sample data should be low enough for data comparison. Differences in laboratory detection limits will be considered when comparing the data.
3. Method MDLs are suggested values.
4. The achievable QLs listed will differ dependent on the laboratory assigned to perform the analyses.
5. Actual QLs may be higher and are dependent on the sample matrix effects.

QAPP Worksheet #15
Reference Limits and Evaluation Table

Matrix: Tissue
Analytical Group: Methyl mercury by EPA 1630
Concentration Level: Trace (mg/kg)

Analyte	CAS Number	Project Action Limit[1]	Data Quality Level[1]	Project Quantitation Limit Goals[2]	EPA 1630 Analytical Method[3]		Achievable Laboratory Limits	
					MDLs	Method CRQLs	MDLs	QLs[4, 5]
Methyl mercury	22967-92-6	TBD	0.0086 mg/kg	0.0086 mg/kg	0.02 ng/L or approximately equivalent to 0.00002 mg/L	0.06 ng/L or approximately equivalent to 0.00006 mg/L	0.001 (Battelle Marine Sciences Laboratories)	0.005 (Battelle Marine Sciences Laboratories)
							0.001 mg/kg (Brooks Rand)	0.003 mg/kg (Brooks Rand)

Notes:

1. At this time, project-specific action levels have not been developed. The CPG used preliminary screening levels to derive Data Quality Levels (DQLs).
2. The PQLGs listed are the DQLs listed in the CPG's RI/FS QAPP, *Final Fish and Decapod Crustacean Tissue Collection for Chemical Analysis and Fish Community Survey*, August 2009. The split sample data should be low enough for data comparison. Differences in laboratory detection limits will be considered when comparing the data.
3. Analytical Method Limits are not specified for tissue analysis of inorganic arsenic. The numbers shown are for aqueous media.
4. The achievable QLs listed will differ dependent on the laboratory assigned to perform the analyses.
5. Actual QLs may be higher and are dependent on the sample matrix effects.

QAPP Worksheet #15
Reference Limits and Evaluation Table

Matrix: Tissue
Analytical Group: Percent Lipids extracted using laboratory organic SOPs and analyzed by SM240B or equivalent and Percent Moisture by SM2540G Modified
Concentration Level: Trace (%)

Analyte	CAS Number[1]	Project Action Limit[2]	Project Quantitation Limit Goal[3,4]	Analytical Method[4]		Achievable Laboratory Limits[5]	
				MDLs	Method CRQLs	MDLs	QLs
Lipids	NA	Not Available	Not Available	Not Available	Not Available	Not Available	Not Available
Percent Moisture	7732-18-5	Not Applicable	Not Applicable	Not Available	Not Available	Not Available	Not Available

Notes:

1. Lipids are defined as a group of organic compounds, including the fats, oils, waxes, sterols, and triglycerides,that are insoluble in water but soluble in nonpolar organic solvents, are oily to the touch, and together with carbohydrates and proteins constitute the principal structural material of living cells. They can also be defined as fatty acids and their derivatives, and substances related biosynthetically or functionally to these compounds. As such lipids constitute a broad range of many compounds so no one CAS number is applicable.
2. At this time, project-specific screening levels or action levels have not been developed. The CPG's QAPP does not list any limits for these parameters.
3. The split sample data will provide absolute number for comparing the data; quantitation limits don't apply.
4. The lipid results will be compared to those generated by the CPG's contract laboratory using the Bligh Dyer extraction method.
5. The lipid and moisture analysis are gravimetric test for which MDL determinations are often not performed to generate detection limits.

QAPP Worksheet #16
Project Schedule Timeline Table

Activities	Organization	Anticipated Date(s) of Initiation	Anticipated Date of Completion	Deliverable	Deliverable Due Date
Prepare and submit: Oversight QAPP Addendum for Fish Tissue Analysis to EPA and USACE	CDM	June 4, 2010	July 6, 2010	UFP-QAPP addendum	July 6, 2010
Prepare and submit: Revised oversight QAPP Addendum for Fish Tissue Analysis	CDM	As soon as comments are received	August 24, 2010	UFP-QAPP addendum	August 24, 2010
Acceptance of splits and sample handling activities	CDM	Mid July 2010 - TBD	10 days after commencement date	Summary report of chemical data	To be determined
Laboratory Analysis	CDM subcontract laboratory(ies)	August 2010	To be determined; data collection will be dependent on the CPG schedule	Data Package	To be determined; will be dependent on the CPG schedule For standard analyses, 21 days after the last sample is received; however, specialized analyses may take additional time
Validation and verification of sample data	CDM	September 2010	September 2010	Validated data report	To be determined; will be dependent on CPG schedule
Oversight /Data Evaluation	CDM	To be determined	To be determined	Oversight data Comparison and Summary Report/ Data Quality Summary Report	To be determined
Review Fish Tissue Chemical Analysis Data Report	CDM	90 days after each sampling event	1 month after receipt of report	Comments on Fish Tissue Chemical Analysis Data Report	1 month after receipt of report

QAPP Worksheet #18
Sampling Locations and Methods/SOP Requirements Table

Survey Location ID	Depth	Analytical Group	Concentration Level	Estimated Number of Samples (identify field duplicates)	Sampling SOP Reference	Rationale for Sampling Location
Refer to QAPP prepared by Windward Environmental (Windward) for the CPG	Fish tissue split samples	Analytical group for split samples includes: PCB congeners, PCDD/PCDF congeners, pesticides, PAH and SVOC, metals (including mercury, methylmercury, and inorganic arsenic), and percent lipid	Low	Approximately 10 percent of CPG samples will be split.	Attachments J and L of CPG's QAPP, Fish and Decapod Crustacean Tissue Collection for Chemistry Analysis and Fish Community Survey (Decapod QAPP Addendum #4) (Windward 2010) (also see footnotes)	Split samples will be accepted judgmentally by the on-site oversight staff in consultation with the TOM, deputy TOM and USACE/EPA Selection may be restricted by the species collected during sampling and the amount of tissue mass available.
See CPG's QAPP Worksheet #18 for the sampling locations and sampling rationale. In order to obtain sufficient mass for analysis of all the required chemical parameters, CDM may split tissue mass across different samples to complete each analytical suite.						

Notes:
Refer to the QAPP prepared by Windward for the CPG (Worksheets # 10, 11 and 18 and Figure 1) titled, Fish/*Decapod QAPP Addendum No. 4: Fish/Decapod Tissue Chemistry Analysis and Fish Community Survey* (June 21, 2010) for sampling information.

QAPP Worksheet #19 – Fish Tissue Analysis
Analytical SOP Requirements Table

Matrix[1]	Analytical Group	Concen -tration Level	Analytical and Preparation Method/SOP Reference[2]	Sample Volume	Containers (number, size, and type)	Preservation Requirements (chemical, temperature, light)[3]	Maximum Holding Time (preparation/ analysis)
AXYS Laboratory							
Tissue	Pesticides	Low	EPA 1613B Modified for HRGC/ HRMS (Axys SOP MLA-028, Rev. 5)	Minimum = 60 g (combine mass for pesticide, PCB, PCDD/ PCDF, and PAH) Lipids extracted with organics – no additional mass required	1- 4 oz amber glass jar (ship one jar for pesticide, PCB, PCDD/PCDF, and PAH)	Freeze sample: 0^0C to -20 ^{0}C	14 days to extraction, 40 days to analysis For this study samples can be stored 299 days if frozen; 40 days to extraction.
	PCDD/PCDF Congeners	Low	EPA 1613B for HRGC/ HRMS (Axys SOP MLA-017)			Freeze sample: 0^0C to -20 ^{0}C	1 year for solid multiphase samples - If stored at less than -10^0C. 1 year for sample extracts – if stored at less than -10^0C.
	Percent Lipids	TBD	Axys SOP SLA-020, Rev. 2/ SM 2540B equivalent				
	PAH	Low	EPA Method 8270 Modified or equivalent (Axys SOP MLA-021, Rev. 9)			Freeze sample: 0^0C to -20 ^{0}C	14 days to extraction, 40 days to analysis For this study samples can be stored 199 days if frozen; 40 days to extraction.
	Percent Moisture	TBD	Axys SOP SLA-015, Rev. 6 / SM2540G Modified	Minimum mass = 10 gram	2- 2 oz glass jar		Solid multiphase samples - 1 year If stored at less than -10^0 C
Cape Fear and Microbac Laboratory							
Tissue	PCB Congeners	Low	CF-OA-E-003, Rev.1 based on EPA 1668B for HRGC/ HRMS (Cape Fear SOP)	Minimum mass = 60 g Lipids extracted with organics – no additional mass required	1- 4 oz amber glass jar	Freeze sample: 0^0C to -20 ^{0}C	1 year for solid multiphase samples - If stored at less than -10^0C. 1 year for sample extracts – if stored at less than -10^0C
	Percent Lipids	TBD	SOP CF-OA-E-001, Rev. 2.1/ SM 2540B equivalent				
	TCL SVOC	Low	Microbac SOP 625-8270, Rev. 10/ SW-846 Method 8270C equivalent	Minimum mass = 10 g	1- 8 oz glass jar (ship one jar for SVOC, and metals)	Freeze sample: 0^0C to -20 ^{0}C	14 days to extraction; 40 days to analysis at 4 ^{C}C

QAPP Worksheet #19 – Fish Tissue Analysis
Analytical SOP Requirements Table

Matrix[1]	Analytical Group	Concen -tration Level	Analytical and Preparation Method/SOP Reference[2]	Sample Volume	Containers (number, size, and type)	Preservation Requirements (chemical, temperature, light)[3]	Maximum Holding Time (preparation/ analysis)
Tissue	Metals (ICP-AES and MS)	Low	Microbac SOP 2007-6010, SW-846 Method 6010B equivalent Microbac SOP 2008-6020 / SW-846 Method 6020 equivalent	Minimum mass = 10 g	Contained in SVOC bottle	Freeze sample: 0^0C to -20 ^{0}C	6 months
Tissue	Total and methyl mercury	Low	Microbac SOP Hg-1631 Rev. 2/ EPA 1631 equivalent and SOP Methyl Mercury Draft, Rev. 0	Minimum mass = 10 g	1- 4 oz pre-tared polyethylene bottle	Cool to 4 ^{C}C ± 2 ^{C}C and freeze as soon as possible [maintain in the dark]	1 year [if aliquoted, weighed and frozen at <-15 ^{C}C]
Tissue	Inorganic arsenic	Low	CAS SOP MET-1632, Rev. 0, EPA 1632 equivalent	Minimum mass = 10 g	1- 4 oz pre-tared polyethylene bottle filled 2/3 full	Freeze sample: 0^0C to -20 ^{0}C	28 days. If stored at < -10^{0}C solid multiphase samples can be stored for up to 180 days or 1 year

Notes:

1: Tissue matrix refers to split tissue sample analyzed for chemical concentration.

2: The CDM analytical subcontract laboratory SOPs for these analyses are shown in Appendix K. The Axys laboratory SOPs are proprietary but SOP summaries are included in this QAPP in Appendix K.

3. The actual jar size may vary depending on the need of the assigned laboratory. The sampler should confirm sample volumes with the laboratory prior to mobilizing to the field.

QAPP Worksheet #20
Field Quality Control Sample Summary Table

Matrix	Analytical Group	Concen-tration Level	Analytical and Preparation SOP Reference	No. of Split Sampling Locations	No. of Field Duplicate Pairs	No. of Extra Volume Laboratory QC (e.g., MS/MSD) Samples	No. of Equipment Rinsate Blanks	No. of Trip. Blanks	No of PE Samples	Total No. of Samples
Tissue	PCB congeners	Low	EPA Method 1668B for HRGC/HRMS /Cape Fear SOP CG-OA-E-003	Sample locations and number of samples to be determined (TBD)	1 per 20 or less (total of 1)	0	1	0	0	10% Splits, exact numbers TBD
Tissue	PCDD/PCDF congeners	Low	EPA Method 1613B – Axys SOP MLA-017	TBD	1 per 20 or less (total of 1)	0	1	0	0	TBD
Tissue	Chlorinated Pesticides	Low	EPA Method 1613B Modified by HRGC/ HRMS: Axys SOP MLA-028	TBD	1 per 20 or less (total of 1)	1 per 20 or less (total of 1 sample)	1	0	0	TBD
Tissue	PAHs	Low	Axys SOP MLA-021	TBD	1 per 20 or less (total of 1)	1 per 20 or less (total of 1 sample)	0	0	0	TBD
Tissue	TCL SVOCs	Low	Microbac SOP for SW-846 Method 8270C	TBD	1 per 20 or less (total of 1)	1 per 20 or less (total of 1 sample)	1	0	0	TBD
Tissue	TAL metals	Low	Microbac SOP for SW-846 Method 6010B/ and 6020	TBD	1 per 20 or less (total of 1)	1 per 20 or less (total of 1 sample)	1	0	0	TBD
Tissue	Mercury and methylmercury	Low	Microbac SOP for EPA Method 1630/ and 1631	TBD	1 per 20 or less (total of 1)	1 per 20 or less (total of 1 sample)	1	0	0	TBD
Tissue	Percent Lipid/ Percent moisture	Low	AXYS Modified SM2540B/ SM2540G	TBD	1 per 20 or less (total of 1)	1 per 20 or less (total of 1 sample)	1	0	0	TBD

Notes:

1. The FASTAC decision process is required for obtaining laboratory services but tissue sample analysis is not available via EPA. Chlorinated pesticides, dioxin/furans, PAH, and moisture will be analyzed by Axys laboratory. The Axys subcontract laboratory will be used due to the difficulty of analyzing the sample matrix for the selected analyses in order to ensure accurate results, to reduce uncertainties in the measurements and to obtain data comparable with data from previous and future surveys. Another subcontract laboratory is being procured to perform the remaining tissue analysis. CDM subcontracted one of its master services agreement laboratories, Shealy, to obtain analytical services for the remaining analyses.
2. The exact number of samples to be split will be determined after the catch success has been evaluated from the CPG fish tissue collection of small forage fish and other fish sampling during the late spring/early summer 2010 effort.

QAPP Worksheet #23
Analytical SOP References Table

Reference Number	Title, Revision Date, and/or Number	Definitive or Screening Data	Analytical Group	Instrument	Organization Performing Analysis	Modified for Project Work?
CG-OA-E-003	*Analysis of PCBs by High Resolution Gas Chromatography/High Resolution Mass Spectrometry (GCHR/HRMS). Based on EPA Method 1668B,* 5/2006.	Definitive	PCB Congeners	HRGC/HRMS	Cape Fear (Lower tier to Shealy) Shealy Environmental Services, Inc. 106 Vantage Point Drive West Columbia, SC 29173	No
EPA 1613B for HRGC/HRMS Axys SOP: MSU-018/ MLA-017	*Analysis of Polychlorinated Dioxins and Furans by EPA Method 1613B*. June 2005.	Definitive	PCDD/PCDF Congeners	HRGC/HRMS	Axys Analytical Services Laboratory 2045 Mills Road West Sidney, British Columbia, Canada Contact: Candice Navaroli Phone:1-888-373-0881	No
EPA 1613B Modified/ Axys SOP: MLA-028, R05	*Analysis of Organochlorine Pesticides by HRGC/HRMS in [Water, Solids, Biosolids and Tissue].* September 2009.	Definitive	Chlorinated Pesticides	HRGC/HRMS	Axys Analytical Services	Analyte list per WS#15
Axys SOP: MLA-021	*Analysis of Polycyclic Aromatic Hydrocarbons (PAH) and Alkylated PAH by method MLA-021*. February 2009.	Definitive	PAH	HRGC/HRMS	Axys Analytical Services	No
SM2540G Modified Axys SOP: MSA-015, R06	*Moisture Determination. July 9, 2010. Based on -[Total, Fixed, and Volatile Solids in Soil and Semisolid Samples. Standard Methods for Examination of Water and Wastewater*. 19th Edition 1995.]	Definitive	Moisture	Furnace, Balance, Oven	Axys Analytical Services	Yes
SM2540B Modified Axys SOP: SLA-020, R02	*Gravimetric Lipid Determination by Weight of Extract*- AXYS *Sample Processing including Lipid Extraction and Determination*-Cape Fear	Definitive	Lipid	Balance	Axys Analytical Services and Cape Fear	No
SW-846, 8270 Microbac SOP: 625-8270, Rev 10	*SOP for Semi-Volatile Organic Compounds by GC-MS*. May 2009	Definitive	TCL SVOC	GC/MS	Microbac Laboratories, (Lower tier to Shealy) 250 West 84th Drive Merrillville, IN 46410	No

QAPP Worksheet #23
Analytical SOP References Table

Reference Number	Title, Revision Date, and/or Number	Definitive or Screening Data	Analytical Group	Instrument	Organization Performing Analysis	Modified for Project Work?
EPA 6010 Microbac SOP: 2007-6010, Rev 7	*SOP for Metals Using Inductively Coupled Plasma - Emisssion Spectroscopy-ICP-AES*. Rev 7. October 20, 2009	Definitive	Metals	ICP-AES	Microbac Laboratories, Merrillville, Indiana	No
EPA 6020 Microbac SOP: 2008-6020, Rev 1	*SOP for Metals by Inductively Coupled Plasma - Mass Spectroscopy-ICP-MS*. Rev 1. August 29, 2009.	Definitive	Metals	ICP-AES ICP-MS	Microbac Laboratories, Merrillville, Indiana	No
EPA 1632 CAS SOP: MET-1632, Rev. 0	*Determination of Arsenic Species by Hydride Generation Cryogenic Trapping GC Atomic Absorption Spectrophotometry.* Rev .0. July 30, 2010.	Definitive	Inorganic arsenic	ICP-MS	Columbia Analytical Services (Lower tier to Shealy) 1317 South 13th Avenue Kelso, Washington 98626	No
EPA 1631 Microbac SOP: Hg-1631, Rev. 2	*Total Mercury Using Atomic Fluorescence Spectroscopy*. Rev. 2. August 28, 2009	Definitive	Total mercury	CVAFS	Microbac Laboratories, Merrillville, Indiana	No
EPA 1630 Microbac SOP: Methyl Mercury Draft, Rev. 0	*Methylmercury Using Distillation, Aqueous Ethylation, Purge and Trap, and Cold Vapor Atomic Fluorescence*. July 27, 2010.	Definitive	Methyl mercury	CVAFS	Microbac Laboratories, Merrillville, Indiana	No

Notes:

As necessary, the assigned laboratories will perform additional clean-up of split samples (via gel permeation chromatography) prior to analysis of organic compounds.

QAPP Worksheet #24
Analytical Instrument Calibration Table

Instrument	Calibration Procedure	Frequency of Calibration	Acceptance Criteria	Corrective Action (CA)	Person Responsible for CA	SOP Reference[1]
HRGC/ HRMS and HRGC/LRMS	Initial Calibration and calibration verification check: Per laboratory SOP	After set up, prior to run and after instrument changes or failures of checks.	% RSD and % recovery per laboratory SOPs.	Check, correct; re-calibrate and rerun all samples analyzed after last valid calibration check	Laboratory analyst / QA officer - TBD	Axys SOP for PAH analysis: MLA-021 PCB Congeners by 1668B - CF-OA-E-003 Axys SOP for Chlorinated pesticides by EPA 1613B Mod: MLA-028 Axys SOP for PCDD/ PCDF by EPA 1613B: MSU-020
	Calibration checks: CCVs per laboratory SOP	Daily: Beginning of run and after every 10 samples and at end of analytical run	% recovery per laboratory SOP	Check, correct; re-calibrate and rerun all samples analyzed after last valid cal check	Laboratory analyst / QA officer - TBD	
GC/MS SW-846 8270C	Initial calibration: 5 points standards	Upon award of the contract, whenever the laboratory takes corrective action which may change or affect the initial calibration criteria (e.g., ion source cleaning or repair, column replacement, etc.), or if the continuing calibration acceptance criteria have not been met.	relative response factor (RRF) ≥ minimum acceptable RRF listed in Table 5 of procedure; All target compounds, initial relative standard deviation (RSD) ≤ 10% or 20% and correlation coefficient (r)> 0.995. %RSD ≤ value in Table 5 of SOM01.2 or other laboratory SOP as applicable.	Inspect system for problems (e.g., clean ion source, change the column, service the purge and trap device), correct problem, re-calibrate.	Laboratory GC/MS Technician	Microbac SOP: 625-8270, Revision 10
GC/MS	Continuing calibration (CCV)	Once every 12 hours or as per laboratory SOPs	%D ≤15% or <30% or as per laboratory SOPs	Inspect system; correct problem; recalibrate the instrument, reanalyze affected samples and standards.	Laboratory GC/MS Technician	

QAPP Worksheet #24
Analytical Instrument Calibration Table

Instrument	Calibration Procedure	Frequency of Calibration	Acceptance Criteria	Corrective Action (CA)	Person Responsible for CA	SOP Reference[1]
GC/MS	Calibration Standards Verification	Each lot of standards	As per laboratory established control limits	Inspect system; correct problem; re-run standard and affected samples	Laboratory GC/MS Technician	Microbac SOP: 625-8270, Revision 10
GC/MS	Tuning	Daily: every 12 hours	Response factors and RRF as method specified	Inspect system; correct problem; re-run standard and affected samples	Laboratory GC/MS Technician	
CVAFS	Per method and laboratory SOP	Calibration	Per method/ laboratory SOP. ICAL ≤15%RSD.	Inspect the system, correct problem, re-calibrate, and re-analyze samples.	Assigned laboratory personnel	EPA 1630/1631 Subcontract Microbac SOPs: Methyl Mercury Draft, Revision 0 and Hg-1631, Revision 2
		ICV: Check daily when instrument is in use	85-115% R for Total mercury; 80-120%R for methyl mercury			
		CCV: Beginning and after every 10 samples	77-123% R for total mercury; 67-133%R for methyl mercury			
ICP-AES and ICP-MS	See ILM05.4; as per instrument manufacturer's recommended procedures	Initial calibration: daily or once every 24 hours and each time the instrument is set up.	ICP-AES: As per instrument manufacturer's recommended procedures, with at least 2 standards.	Inspect the system, correct problem, re-calibrate, and re-analyze samples.	TBD Laboratory or Subcontractor ICP-AES / ICP-MS Technician/ analyst / QA officer	SW-846, 6010B/6020 Microbac SOPs 2007-6010, Revision 7 2008-6020, Revision 1
	Initial calibration	Daily; after tuning and optimizing instrument	r >0.995; minimum of 3 standards and a blank	Repeat analysis; re-prepare calibration standards and reanalyze		
	ICV	Before sample analysis	90-110% recovery; source of standard separate from calibration standards	Re-calibrate instrument; prepare fresh ICV standards; do not analyze samples until problem is corrected		

QAPP Worksheet #24
Analytical Instrument Calibration Table

Instrument	Calibration Procedure	Frequency of Calibration	Acceptance Criteria	Corrective Action (CA)	Person Responsible for CA	SOP Reference[1]
ICP-AES and ICP-MS	Reporting Limit Standard	After initial calibration verification standard	80-120% recovery or concentration ≤ 30% difference (from true value)	Re-analyze failed standard	Laboratory ICP-AES / ICP-MS Technician/ analyst / QA officer	See above
	CCV	Every 10 samples and at end of analytical sequence	90-110% recovery; source of standard separate from calibration standards	Re-check; re-calibrate and rerun all samples analyzed after last valid CCV		
ICP-MS	Continuing calibration	Beginning and end of run; 10% frequency or every 2 hours during an analysis run	As per instrument manufacturer's recommended procedures, with at least 2 standards. A minimum of three replicate integrations are required for data acquisition.			

Notes:

1. General GC/MS calibration requirements are presented. Instruments used for analyses follow the calibration frequencies outlined in the method SOPs (Appendix K). Laboratory specific calibration information is maintained by the laboratories; method specific calibration information is detailed in the methods.

QAPP Worksheet #28
QC Samples Table for Fish Tissue Analysis

Matrix	Tissue
Analytical Group	PCB Congeners
Concentration Level	Low (mg/L)
Sampling SOP(s)	See worksheet #21
Analytical Method/SOP Reference	EPA 1668A or CBC01.2
Sampler's Name	TBD
Field Sampling Organization	CDM
Analytical Organization	EPA Headquarters Laboratory
No. of Sample Locations	See worksheets #18 & 20

QC Sample:	Frequency/Number	Method/SOP QC Acceptance Limits	Corrective Action	Person(s) Responsible for Corrective Action	Data Quality Indicator (DQI)	Measurement Performance Criteria
Method Blank	1 per 20 samples	< QL	If sample is non-detect or if lowest sample result is >10 times the blank-no action; otherwise redigest and reanalyze	Laboratory Analyst	Accuracy/Sensitivity	No analyte > QL
Laboratory Duplicate	1 per 20 samples	≤ 20% RPD; ±QL for samples <10x QL	Flag outliers	Laboratory Analyst	Precision	RPD ≤ 20%
Certified Reference Material or Quality Control Sample	Periodically at least quarterly	70-130%R;	Check standards; recalibrate if required	Laboratory Analyst	Accuracy	70-130%R;
Calibration Verification Sample	Beginning of each 12-hour shift	70-130%R;	Adjust and/or recalibrate	Laboratory Analyst	Accuracy/bias	70-130%R;
Initial Precision and Recovery	Prior to sample analysis	Per laboratory SOP	Investigate and correct	Laboratory Analyst	Accuracy	60-140%R ≤ 40% RSD
Ongoing Precision and Recovery	1 per batch of 20 samples	Per laboratory SOP	Identify source of problem, recalibrate if needed/ make other adjustments and reanalyze	Laboratory Analyst	Accuracy	Warning 70-130%R; Accept 50-150%R
Sample splits and field duplicates	1 per 20 samples	None	Data assessor to inform PM if MPC is exceeded; address in data quality assessment	CDM ASC	Precision	≤ 40% RPD (for results ≥ 5QL)
Temperature Blank	1 per cooler	≤ 6 degrees Celsius	Note outlier in laboratory narrative. Inform CDM of failure and need for additional coolant; check packing procedure	Laboratory Analyst	Accuracy/bias	≤ 10 degrees Celsius for data validation

QAPP Worksheet #28
QC Samples Table for Fish Tissue Sampling

Matrix	Tissue
Analytical Group	PCDD/PCDF Congeners
Concentration Level	Low (mg/L)
Sampling SOP(s)	See worksheet #21
Analytical Method/SOP Reference	EPA 1613B/ MLA-017
Sampler's Name	TBD
Field Sampling Organization	CDM
Analytical Organization	Axys Analytical Services Ltd.
No. of Sample Locations	See worksheet #18 & 20

QC Sample:	Frequency/Number	Method/SOP QC Acceptance Limits	Corrective Action	Person(s) Responsible for Corrective Action	Data Quality Indicator (DQI)	Measurement Performance Criteria
Method Blank	1 per 20 samples	Per laboratory SOP	If sample is non-detect or if lowest sample result is >10 times the blank-no action; otherwise redigest and reanalyze	Laboratory Analyst	Accuracy/Sensitivity	No analyte > QL
Laboratory Duplicate	1 per 20 samples	Per laboratory SOP	Investigate and correct; Flag outliers	Laboratory Analyst	Precision	± 20% of mean if sample concentration >10x DL
Initial Precision and Recovery	Prior to sample analysis	Per laboratory SOP	Investigate and correct	Laboratory Analyst	Accuracy	Per method/laboratory SOP
Ongoing Precision and Recovery	1 per batch of 20 samples	Per laboratory SOP	Identify source of problem, make other adjustments; redigest if needed and reanalyze	Laboratory Analyst	Accuracy	Individual laboratory established limits per SOP
Sample splits and field duplicates	1 per 20 samples	None	Data assessor to inform PM if MPC is exceeded; address in data quality assessment	CDM ASC	Precision	≤ 40% RPD (for results ≥ 5QL)
Temperature Blank	1 per cooler	≤ 6 degrees Celsius	Note outlier in laboratory narrative. Inform CDM of failure and need for additional coolant; check packing procedure	Laboratory Analyst	Accuracy/bias	≤ 10 degrees Celsius for data validation

QAPP Worksheet #28
QC Samples Table for Fish Tissue Sampling

Matrix	Tissue
Analytical Group	Chlorinated Pesticides
Concentration Level	Low
Sampling SOP(s)	See worksheet #21 – split of CPG samples
Analytical Method/SOP Reference	EPA 1613B Modified/ MLA-028
Sampler's Name	TBD
Field Sampling Organization	CDM
Analytical Organization	Axys Analytical Services Ltd.
No. of Sample Locations	See worksheet #18 & 20

QC Sample:	Frequency/Number	Method/SOP QC Acceptance Limits	Corrective Action	Person(s) Responsible for Corrective Action	Data Quality Indicator (DQI)	Measurement Performance Criteria
Method Blank	per extract batch	Per laboratory SOP	Investigate and correct per laboratory SOP	Laboratory Analyst	Accuracy/Sensitivity	No analyte > QL
Laboratory Duplicate	1 per 20 samples	Per laboratory SOP	Investigate and correct; Flag outliers	Laboratory Analyst	Precision	± 20% of mean if sample concentration >10x DL
Initial Calibration	Prior to sample analysis	Per laboratory SOP	Investigate and correct	Laboratory Analyst	Accuracy	Per laboratory SOP
Calibration Verification; Certified Reference Material	Beginning of each 12-hour shift; Periodically at least quarterly	Per laboratory SOP	Check standards; recalibrate if required	Laboratory Analyst	Accuracy	Tables 4 and 5 of laboratory SOP
Ongoing Precision and Recovery/ MS	1 per batch of 20 samples prior to sample analysis	50-130% Recovery per Table 4 and 5 of laboratory SOP	Identify source of problem, make other adjustments as per laboratory SOP	Laboratory Analyst	Accuracy	See method limits; for individual compound limits see Tables 4 and 5 of laboratory SOP
Sample splits and field duplicates	1 per 20 samples	None	Data assessor to inform PM if MPC is exceeded; address in data quality assessment	CDM ASC	Precision	≤ 40% RPD (for results ≥ 5QL)
Temperature Blank	1 per cooler	≤ 6 degrees Celsius	Note outlier in laboratory narrative. Inform CDM of failure and need for additional coolant; check packing procedure	Laboratory Analyst	Accuracy/bias	≤ 10 degrees Celsius for data validation

QAPP Worksheet #28
QC Samples Table for Fish Tissue Sampling

Matrix	Tissue
Analytical Group	PAH
Concentration Level	Low
Sampling SOP(s)	See worksheet #21 – split of CPG samples
Analytical Method/SOP Reference	Laboratory SOP, MLA-021
Sampler's Name	TBD
Field Sampling Organization	CDM
Analytical Organization	Axys Analytical Services Ltd.
No. of Sample Locations	See worksheet #18 & 20

QC Sample:	Frequency/Number	Method/SOP QC Acceptance Limits	Corrective Action	Person(s) Responsible for Corrective Action	Data Quality Indicator (DQI)	Measurement Performance Criteria
Method Blank	per extract batch	Per laboratory SOP	Investigate and correct per laboratory SOP	Laboratory Analyst	Accuracy/Sensitivity	No analyte > QL
Laboratory Duplicate (MS/MSD)	1 per 20 samples	Per laboratory SOP	Investigate and correct; reanalyze affected samples. Flag outliers	Laboratory Analyst	Precision	± 20% of mean if sample concentration >10x DL
Matrix Spike	1 per 20 samples or with each group of field samples	Per laboratory SOP	Investigate and correct. Document in data summary	Laboratory Analyst	Accuracy/Precision	50-200% Recovery per laboratory SOP
Perdeuterated Surrogate	Every field and QC sample, standards, blanks	Per laboratory SOP	Identify source of problem, make other adjustments and reanalyze	Laboratory Analyst	Accuracy	50-130% Recovery - See Laboratory SOP Table 2
Sample splits and field duplicates	1 per 20 samples	None	Data assessor to inform PM if MPC is exceeded; address in data quality assessment	CDM ASC	Precision	≤ 40% RPD (for results ≥ 5*QL)
Temperature Blank	1 per cooler	≤ 6 degrees Celsius	Note outlier in laboratory narrative. Inform CDM of failure and need for additional coolant; check packing procedure	Laboratory Analyst	Accuracy/bias	≤ 10 degrees Celsius for data validation

QAPP Worksheet #28
QC Samples Table for Fish Tissue Sampling

Matrix	Tissue
Analytical Group	TCL SVOC
Concentration Level	Low
Sampling SOP(s)	See worksheet #21 – split of CPG samples
Analytical Method/SOP Reference	8270C
Sampler's Name	TBD
Field Sampling Organization	CDM
Analytical Organization	Microbac Laboratory
No. of Sample Locations	See worksheet #18 & 20

QC Sample:	Frequency/ Number	Method/SOP QC Acceptance Limits	Corrective Action	Person(s) Responsible for Corrective Action	Data Quality Indicator (DQI)	Measurement Performance Criteria
Method Blank	per extract batch	Per method/laboratory SOP	Investigate and correct per laboratory SOP	Laboratory Analyst	Accuracy/ Sensitivity	No analyte > QL
Temperature Blank	1 per cooler	≤ 6 degrees Celsius	Note outlier in laboratory narrative. Inform CDM of failure and need for additional coolant; check packing procedure	Laboratory Analyst	Accuracy/bias	≤ 10 degrees Celsius for data validation
Sample splits and field duplicates	1 per 20 samples	None	Data assessor to inform PM if MPC is exceeded; address in data quality assessment	CDM ASC	Precision	≤ 40% RPD (for results ≥ 5QL)
MS/MSD	1 per 20 samples or with each group of field samples	Per method/laboratory SOP Note: not required for Region 2 CLP analysis	Investigate and correct; reanalyze affected samples. Flag outliers Document in case narrative	Laboratory Analyst	Precision	Individual limits listed as per laboratory established limits
MS/MSD and LCS				Laboratory Analyst	Accuracy	Individual limits listed as per laboratory established limits

Additional QC samples are shown on the next page.

QAPP Worksheet #28
QC Samples Table for Fish Tissue Sampling

Matrix	Tissue
Analytical Group	TCL SVOC
Concentration Level	Low
Sampling SOP(s)	See worksheet #21 – split of CPG samples
Analytical Method/SOP Reference	8270C
Sampler's Name	TBD
Field Sampling Organization	CDM
Analytical Organization	Microbac Laboratory
No. of Sample Locations	See worksheet #18 & 20

QC Sample:	Frequency/ Number	Method/SOP QC Acceptance Limits		Corrective Action	Person(s) Responsible for Corrective Action	Data Quality Indicator (DQI)	Measurement Performance Criteria
DMC/Surrogates	Every field and QC sample, standards, blanks	Per method/laboratory SOP: in the absence of laboratory generated limits the following are suggested.		Identify source of problem, make adjustments and reanalyze as required	Laboratory Analyst	Accuracy	Recovery - See Laboratory SOP limits
		Phenol-d5	17-103 %R	Check calculations and instruments, reanalyze affected samples; up to 4 DMCs may fail to meet recovery limits (Section 11.3.4, Page D48/SVOC of SOM01.2)			
		Bis(2-chloroethyl)ether-d8	12-98 %R				
		2-Chlorophenol-d4	13-101 %R				
		4-Methylphenol-d8	8-100 %R				
		Nitrobenzene-d5	16-103 %R				
		2-Nitrophenol-d4	16-104 %R				
		2,4-Dichlorophenol-d3	23-104 %R				
		4-Chloroaniline-d4	1-145 %R				
		Dimethylphthalate-d6	43-111 %R				
		Acenaphthylene-d8	20-97 %R				
		4-Nitrophenol-d4	16-166 %R				
		Fluorene-d10	40-108 %R				
		4,6-Dinitro-2-methylphenol-d2	1-121 %R				
		Anthracene-d10	22-98 %R				
		Pyrene-d10	51-120 %R				
		Benzo(a)pyrene-d12	43-111 %R				
Internal Standards	all samples	50-200% of area, ± 30 second retention time shift		Check calculations and instruments, reanalyze affected samples	DESA or CLP Laboratory GC/MS Technician	Accuracy	50-200% of area, ± 30 second retention time shift

QAPP Worksheet #28
QC Samples Table for Fish Tissue Sampling

Matrix	Tissue
Analytical Group	Metals (no mercury)
Concentration Level	Low
Sampling SOP(s)	See worksheet #21 – split of CPG samples
Analytical Method/SOP Reference	SW-846 6010B/6020 or ILM05.4
Sampler's Name	TBD
Field Sampling Organization	CDM
Analytical Organization	Microbac Laboratory
No. of Sample Locations	See worksheet #18 & 20

QC Sample:	Frequency/Number	Method/SOP QC Acceptance Limits	Corrective Action	Person(s) Responsible for Corrective Action	Data Quality Indicator (DQI)	Measurement Performance Criteria
Sample splits and field duplicates	1 per 20 samples	None	Data assessor to inform PM if MPC is exceeded; address in data quality assessment	CDM ASC	Precision	≤ 40% RPD (for results ≥ 5QL)
Temperature Blank	1 per cooler	≤ 6 degrees Celsius	Note in laboratory narrative. CDM will use more coolant; check packing procedure	Laboratory Analyst	Accuracy/bias	≤ 10 degrees Celsius for data validation
Preparation Blank	1 per 20 samples	No constituent > CRQL	Suspend analysis until source rectified; re-digest and reanalyze affected samples	Laboratory Analyst	Accuracy/Sensitivity	No result > CRQL
Laboratory duplicate	1 per 20 samples or each group	± 20% RPD**	Investigate and correct; Flag outliers; Note in case narrative	Laboratory Analyst	Precision	≤ 35% RPD if result >5CRQL
Spike	1 per 20 samples	75-125%R*	Flag outliers	Laboratory Analyst	Accuracy	75-125%R*
Post-Digestion Spike	after any analyte (except Ag) fails spike %R	75-125%R	Flag outliers	Laboratory Analyst	Accuracy	75-125%R
Interference Check Sample [ICP Analysis Only]	beginning, end and periodically during run (twice each 8 hr)	± 2 *CRQL of true value or ± 20% of true value, whichever is greater	Check calculations and instruments, reanalyze affected samples	Laboratory Analyst	Sensitivity	± 2 * CRQL of true value or ± 20% of true value, whichever is greater
Laboratory Control Sample	1 per 20 samples	Control limits established by EPA*	Suspend analysis rectify source; re-digest and reanalyze affected samples	Laboratory Analyst	Accuracy	90-110%R

QAPP Worksheet #28
QC Samples Table for Fish Tissue Sampling

Matrix	Tissue
Analytical Group	Methyl Mercury
Concentration Level	Low
Sampling SOP(s)	See worksheet #21 – split of CPG samples
Analytical Method/SOP Reference	EPA 1630
Sampler's Name	TBD
Field Sampling Organization	CDM
Analytical Organization	Microbac Laboratory
No. of Sample Locations	See worksheet #18 & 20

QC Sample:	Frequency/Number	Method/SOP QC Acceptance Limits	Corrective Action	Person(s) Responsible for Corrective Action	Data Quality Indicator (DQI)	Measurement Performance Criteria
Sample splits and field duplicates	1 per 20 samples	None	Data assessor to inform PM if MPC is exceeded; address in data quality assessment	CDM ASC	Precision	≤ 40% RPD (for results ≥ 5QL)
Temperature Blank	1 per cooler	≤ 6 degrees Celsius or frozen as applicable	Note in laboratory narrative. CDM will use more coolant; check packing procedure	Laboratory Analyst	Accuracy/bias	≤ 10 degrees Celsius or per WS 19 and 37 for data validation
Preparation Blank	3 per 20 samples or batch	No constituent > QL Per laboratory SOP	Suspend analysis until source rectified; re-distill and reanalyze affected samples if results are <10 times the blank	Laboratory Analyst	Accuracy/Sensitivity	No result > 5*MDL
Laboratory duplicate	1 per 20 samples	≤ 35% RPD or ± 2 x PQL if sample < 5PQL or per laboratory SOP	Investigate and correct; Flag outliers; Note in case narrative. Multiple failures require re-distillation and reanalysis.	Laboratory Analyst	Precision	≤ 35% RPD if result >5QL
Certified Reference Material or Initial/ Ongoing Precision and Recovery Samples (IPR/OPR)	1 per 20 samples or with each group of field samples	Per laboratory SOP	Check calculations and instruments, reanalyze affected samples	Laboratory Analyst	Accuracy	69-131%R – IPR 67-133%R - OPR or per lab SOP
MS/MSD	1 per 20 samples or with each group of field samples	Per laboratory SOP	Investigate matrix effects and note in data narrative.	Laboratory Analyst	Accuracy	65-135%R
				Laboratory Analyst	Precision	RPD ≤35%

QAPP Worksheet #28
QC Samples Table for Fish Tissue Sampling

Matrix	Tissue
Analytical Group	Total Mercury
Concentration Level	Low
Sampling SOP(s)	See worksheet #21 – split of CPG samples
Analytical Method/SOP Reference	EPA 1631
Sampler's Name /Organization	TBD /CDM
Analytical Organization	Microbac Laboratory
No. of Sample Locations	See worksheet #18 & 20

QC Sample:	Frequency/Number	Method/SOP QC Acceptance Limits	Corrective Action	Person(s) Responsible for Corrective Action	Data Quality Indicator (DQI)	Measurement Performance Criteria
Sample splits and field duplicates	1 per 20 samples	None	Data assessor to inform PM if MPC is exceeded; address in data quality assessment	CDM ASC	Precision	≤ 40% RPD (for results ≥ 5QL)
Temperature Blank	1 per cooler	≤ 6 degrees Celsius or frozen as applicable	Note in laboratory narrative. CDM will use more coolant; check packing procedure	Laboratory Analyst	Accuracy/bias	≤ 10 degrees Celsius or per WS 19 and 37 for data validation
Preparation Blank	3 per 20 samples or batch	Per laboratory SOP	Reanalyze. Suspend analysis until source rectified; re-distill and reanalyze affected samples if results are <10 times the blank	Laboratory Analyst	Accuracy/Sensitivity	No result > 5MDL
Laboratory duplicate	1 per 20 samples	Per laboratory SOP	Investigate and correct; Flag outliers; Note in case narrative. Multiple failures require re-distillation and reanalysis.	Laboratory Analyst	Precision	≤ 35% RPD if result >5CRQL
Certified Reference Material or Ongoing Precision and Recovery Samples	1 per 20 samples or with each group of field samples	Per laboratory SOP	Check calculations and instruments, reanalyze affected samples. Report in case narrative.	Laboratory Analyst	Accuracy	70-130%R for OPR <20 RSD for IPR 75-125%R for CRM/IPR
MS/MSD	1 per 20 samples or with each group of field samples	Per laboratory SOP	Investigate matrix effects and note in data narrative.	Laboratory Analyst	Accuracy	70-130%R
				Laboratory Analyst	Precision	RPD ≤35% (30 per method)

QAPP Worksheet #28
QC Samples Table for Fish Tissue Sampling

Matrix	Tissue
Analytical Group	Inorganic Arsenic (arsenic speciation)
Concentration Level	Low
Sampling SOP(s)	See worksheet #21 – split of CPG samples
Analytical Method/SOP Reference	EPA 1631
Sampler's Name /Organization	TBD /CDM
Analytical Organization	Columbia Analytical Services
No. of Sample Locations	See worksheet #18 & 20

QC Sample:	Frequency/Number	Method/SOP QC Acceptance Limits	Corrective Action	Person(s) Responsible for Corrective Action	Data Quality Indicator (DQI)	Measurement Performance Criteria
Sample splits and field duplicates	1 per 20 samples	None	Data assessor to inform PM if MPC is exceeded; address in data quality assessment	CDM ASC	Precision	≤ 40% RPD (for results ≥ 5QL)
Temperature Blank	1 per cooler	≤ 6 degrees Celsius or frozen as applicable	Note in laboratory narrative. CDM will use more coolant; check packing procedure	Laboratory Analyst	Accuracy/bias	≤ 10 degrees Celsius or per WS 19 and 37 for data validation
Preparation Blank	3 per 20 samples or batch	Per laboratory SOP	Reanalyze. Suspend analysis until source rectified; re-distill and reanalyze affected samples if results are <10 times the blank	Laboratory Analyst	Accuracy/Sensitivity	No result > 5MDL
Laboratory duplicate	1 per 20 samples	Per laboratory SOP	Investigate and correct; Flag outliers; Note in case narrative. Multiple failures require re-distillation and reanalysis.	Laboratory Analyst	Precision	≤ 35% RPD if result >5CRQL
Certified Reference Material / Initial and Ongoing Precision and Recovery Samples (IPR/OPR)	1 per 20 samples or with each group of field samples	Per laboratory SOP	Check calculations and instruments, reanalyze affected samples. Report in case narrative.	Laboratory Analyst	Accuracy	59-143%R – IPR 55146%R for OPR or per lab SOP
MS/MSD	1 per 20 samples or with each group of field samples	Per laboratory SOP	Investigate matrix effects and note in data narrative.	Laboratory Analyst	Accuracy	55-146%R
				Laboratory Analyst	Precision	RPD ≤35% (20 per method)

QAPP Worksheet #28
QC Samples Table for Fish Tissue Samples

Matrix	Tissue
Analytical Group	Moisture/lipid
Concentration Level	Low
Sampling SOP(s)	See worksheet #21 – split of CPG samples
Analytical Method/SOP Reference	SM2540G/B
Sampler's Name	TBD
Field Sampling Organization	CDM
Analytical Organization	Axys Analytical Services Ltd. /Cape Fear (lipid extracted with organic analysis. Extract is aliquoted and analyzed by above method)
No. of Sample Locations	See worksheet #18 & 20

QC Sample:	Frequency/Number	Method/SOP QC Acceptance Limits	Corrective Action	Person(s) Responsible for Corrective Action	Data Quality Indicator (DQI)	Measurement Performance Criteria
Laboratory duplicate	1 per 20 samples or with each group of field samples	≤ 20% RPD	Investigate and correct; reanalyze affected samples. Flag outliers Document in case narrative	Laboratory Analyst	Precision	≤ 20% RPD

Worksheet #30
Analytical Services Table

Matrix	Analytical Group	Concentration Level	Sample Location/ ID Numbers	Analytical SOP	Validated Data Package Turnaround Time Laboratory/Data Validation	Laboratory/ Organization (Name, Address, Contact person and Telephone Number) [1]	Backup Laboratory/Organization (Name and Address, Contact person and Telephone Number
Tissue	PCB Congeners	Low	TBD	EPA Method 1668B	65 days (35 days /30 days)[2]	Cape Fear (lower tier to Shealy)	EPA Headquarters laboratory
Tissue	PCDD/PCDF	Low		EPA Method 1613B – Axys SOP MLA-017	65 days (35 days /30 days)[2]	Axys Analytical Services Ltd.	Cape Fear
Tissue	Chlorinated Pesticides	Low		EPA Method 1613B modified for HRGG/HRMS (Axys SOP MLA-028)	65 days (35 days for laboratory analysis/ 30 days for data validation)[2]	Axys Analytical Services Ltd.	None
Tissue	PAH	Low		Axys SOP MLA-021	65 days (35 days /30 days)[2]	Axys Analytical Services Ltd.	None
Tissue	Percent Moisture	Medium		SM2540G/ Axys SOP EGN007-07	see above	Axys Analytical Services Ltd.	None
Tissue	Lipid	Low		SM2540B Modified	51 days (21 days / 30 days)	Axys Analytical Services Ltd.	None
Tissue	TCL SVOC	Low		SOM01.2 or SW846 Method 8270C	51 days (21 days / 30 days)	Microbac (lower tier to Shealy)	None
Tissue	Metals	Low		SW846 Method 6010B/6020	51 days (21 days / 30 days)	Microbac (lower tier to Shealy)	None
Tissue	Total Mercury /Methyl mercury	Low		EPA Method 1630/1631	51 days (21 days / 30 days)	Microbac (lower tier to Shealy)	None
Tissue	Inorganic Arsenic	Low		EPA Method 1632	51 days (21 days / 30 days)	Columbia Analytical Services (lower tier to Shealy)	None

Notes:
1. Subcontract laboratories will communicate with the ASC on split sample status and potential analytical difficulties (if any arise).
2. With the approval of the ASC and Deputy TOM, the turn-around-time for the laboratory data package deliverable can be adjusted to account for re-analysis or additional quality control as necessary.

QAPP Worksheet #36
Validation (Steps IIa and IIb) Summary Table

Step IIa/IIb	Matrix	Analytical Group	Concentration Level	Validation Criteria[1, 3]	Data Validator (title and organizational affiliation)
IIa /IIb	Tissue	Chlorinated Pesticides –EPA 1613B Modified	Low-trace	Region 2 - National Functional Guidelines*	CDM
IIa /IIb		PCB Congeners –EPA 1668B	Low	Region 2 - Data Validation Guidelines SOP HW-46, rev 0 or National Functional Guidelines*	EPA Region 2
IIa /IIb		PCDD/PCDF Congeners – EPA 1613B	Low	EPA SOP HW-19 or 25, Validating PCDD/PCDF by HRGC/HRMS, Revision 1 or National Functional Guidelines*	CDM ASC, Scott Kirchner or designee
IIa /IIb		PAH – Axys Laboratory SOP	Low-trace	National Functional Guidelines*	CDM ASC, Scott Kirchner or designee
IIa /IIb		TCL SVOCs - 8270C	Low	Region 2 – Data Validation Guidelines SOP HW-35, rev 1 or National Functional Guidelines*	DESA or ESAT
IIa /IIb		Metals - 6010B/6020	Low/Medium	Region 2 - Data Validation Guidelines SOP HW-2, rev 13 or National Functional Guidelines* either will be modified by QAPP worksheets 12,15,,19 and 24	DESA or ESAT
IIa /IIb		Methyl Mercury - EPA 1630	Trace		CDM ASC, Scott Kirchner or designee
IIa /IIb		Total Mercury - EPA 1631	Trace		CDM ASC, Scott Kirchner or designee
		Inorganic Arsenic - EPA 1632	Trace		CDM ASC, Scott Kirchner or designee

Notes:

1. Results will be validated if analyzed by a subcontract laboratory by the process of data verification and assessment utilizing the laboratory QC summaries.
2. All validation procedures will utilize the measurement performance criteria in the QAPP and any additional method requirements.
3. Moisture and percent lipids will not require validation.

QAPP Worksheet #37
Usability Assessment

An Oversight Summary Report and Data Quality Summary Report will be prepared by CDM personnel. Frank Tsang, Task Order Manager, will be responsible for its content and for assigning this task to CDM personnel. The data comparability review and usability assessment will be conducted on validated data. The effectiveness of control actions will be evaluated during the laboratory review of the data, data validation and data evaluation and data quality assessment process. Data information will be documented in the laboratory narrative, data validation report and in the Data Comparability Report. The report will include an overall assessment of the CPG's analytical data using the results of the split sampling and field oversight including the field oversight observations of deficiencies and compliance; and an assessment of the split sampling data quality. The following items will be assessed for CDM split samples and conclusions drawn based on their results:

Precision – Results of laboratory duplicates will be assessed during data validation and data will be qualified according to the data validation procedures cited on Worksheet #36. Split samples will be compared by matrix using the relative percent difference (RPD) for each pair of results reported above quantitation limits (QL) or for organic and inorganic analyses respectively. RPD acceptance criteria of less than or equal those listed in this QAPP will be used to access sampling precision. Absolute difference will be used when one or both results are at or below the QL. An absolute difference of less than five times the QL will be the acceptance criteria. A discussion summarizing the results of laboratory precision and any limitations on the use of the data will be described in the report.

Accuracy/Bias Contamination – Results for all laboratory blanks will be assessed as part of the data validation. During the validation process, the validator will qualify the data following the procedures described on Worksheet #36. A discussion summarizing the results of laboratory accuracy and bias based on contamination will be presented and any limitations on the use of the data will be described in the report.

Representativeness –The representativeness of the survey data will be evaluated based on the ability to implement the fish tissue sampling as written in the QAPP. A determination will be made based on the observations completed during the surveys, whether the data results accurately represent the fish tissue concentrations in the study area, and whether the results are comparable with those made in previous events.

Comparability –The results of this oversight will be used in conjunction with the CPG's data to support the investigation results. The data will be handled, analyzed and reported in a manner that is comparable to the CPG's data set. The RPD between CDM's and the CPG's data will be calculated.

Completeness – A completeness check will be performed on the split sample data generated by the laboratories. Completeness will be determined based on whether all CPG planned (or modified) sampling locations were sampled at the pre-determined frequencies and the obtained data set compared to the project completeness goal of 90 percent. A discussion summarizing the results of project completeness and any limitations on the use of the data will be described in the report.

For sampling, completeness will be calculated as the number of samples collected and analyzed divided by the number of samples planned for collection. For each analyte, completeness will also be calculated as the number of data points that meet measurement performance criteria divided by the total number of data points for that analyte. A discussion summarizing the results of project completeness and any limitations on the use of the data will be described in the report.

The results will be presented in text of the Data Comparability Report. Data gaps will be evaluated if requested by USACE/EPA. The report will discuss the completeness of the planned and collected data and the affect on the data objective of evaluating the accuracy of the CPG's data.

Sensitivity – Data results will be compared to project action limits provided on Worksheet #15. A discussion summarizing any conclusions about sensitivity of the analyses will be presented, and any limitations on the use of the data will be described in the report.

Reconciliation – The PQLGs presented in Worksheet #12 will be examined to determine if the objectives were met. This examination will include a combined overall assessment of the results of each analysis pertinent to an objective. Each analysis will first be evaluated separately in terms of major impacts observed from data validation, data quality indicators and measurement performance criteria assessments. Based on the results of these assessments, the quality of the data will be determined. Based on the quality determined, the usability of the data for each analysis will be determined. Based on the combined usability of the data from all analyses for an objective, it will be determined if the PQLG was met and whether project goals were achieved. As part of the reconciliation of each objective, conclusions will be drawn and any limitations on the usability of any of the data will be described.

The following equations will be used:

1. To calculate split sample precision: $RPD = 100 * 2 |X1 - X2| / (X1 + X2)$

   where X1 and X2 are the reported concentrations for each duplicate or replicate

2. To calculate split data completeness:

% Completeness = V/n * 100 - where V= number of measurements judged valid; n = total number of measurements made and

% Completeness = C/x * 100 - where C= number of samples collected; x = total number of measurements planned

The investigation results will be presented in table and figures and in the text of the Data Comparability Report. Data gaps will be evaluated if requested by USACE/EPA. The report will discuss the completeness of the planned and collected data and the affect on the data objective of evaluating the accuracy of the CPG's data.

References:

CDM Federal Programs Corporation (CDM). 2010. Final Quality Assurance Project Plan Addendum No. 2. *Late Spring/Early Summer 2010 Fish Community Survey. June 8.*

_____. 2010. Quality Assurance Project Plan Addendum No. 4. *Collection of Surface Sediment Samples co-located with Small Forage Fish Tissue Samples during the Summer 2010 Benthic Invertebrate Community Survey. June 24.*

Malcolm Pirnie and Battelle Duxbury Operations. 2009. Oversight Quality Assurance Project Plan. Biological Sampling, Community Surveys, and Toxicity and Bioaccumulation Testing. August.

Windward Environmental LLC. 2009. Lower Passaic River Restoration Project Lower Passaic River Study Area RI/FS. Quality Assurance Project Plan. Fish and Decapod. Crustacean Tissue Collection for Chemical Analysis and Fish Community Survey. Final. August 6.

_____. 2010. Lower Passaic River Restoration Project. Lower Passaic River Study Area RI/FS. Late Spring/Early Summer 2010 Fish Community Survey Addendum 3 to the QAPP. Fish and Decapod Crustacean Tissue Collection for Chemical Analysis and Fish Community Survey. Final. June 22.

_____. 2010. Lower Passaic River Restoration Project. Lower Passaic River Study Area RI/FS. Late Spring/Early Summer 2010 Fish Tissue Collection Addendum 4 to the QAPP. Fish and Decapod Crustacean Tissue Collection for Chemical Analysis and Fish Community Survey. Final. June 21.

Appendix H

Data Quality Levels from Worksheet No. 15

Excerpted from CPG's Final Fish/Decapod QAPP

(*Fish and Decapod Crustacean Tissue Collection for Chemical Analysis and Fish Community Survey, Final)*

dated August 6, 2009

QAPP Worksheet No. 15. Data Quality Levels and Analytical Methods Evaluation

Matrix: Tissue

Analytical Group, Method, and Laboratory: PCBs – Congeners, USEPA1668A, Analytical Perspectives, Wilmington, NC

SOP from Worksheet 23: T2

Concentration Level: Low

Analyte	CAS Number	DQL (mg/kg ww)[a]	Project Quantitation Limit Goal (mg/kg ww)	Analytical Method[b]		Achievable Laboratory Limits[c]	
				MDL (mg/kg ww)	Method QL (mg/kg ww)	MDL (mg/kg ww)	QL (mg/kg ww)
PCBs by Congener							
PCB 1	2051-60-7	0.00158[d]	0.00158	8.0E-06	2.0E-05	1.59E-6	4.20E-6
PCB 2	2051-61-8	0.00158[d]	0.00158	4.0E-07	1.0E-06	1.56E-6	4.05E-6
PCB 3	2051-62-9	0.00158[d]	0.00158	9.0E-06	2.0E-05	1.56E-6	4.05E-6
PCB 4	13029-08-8	0.00158[d]	0.00158	1.7E-05	5.0E-05	2.85E-6	7.21E-6
PCB 5	16605-91-7	0.00158[d]	0.00158	1.E-06	5.E-06	3.02E-6	7.95E-6
PCB 6	25569-80-6	0.00158[d]	0.00158	1.E-06	5.E-06	3.12E-6	8.20E-6
PCB 7	33284-50-3	0.00158[d]	0.00158	2.E-06	5.E-06	2.97E-6	7.82E-6
PCB 8	34883-43-7	0.00158[d]	0.00158	1.2E-05	5.0E-05	3.10E-6	8.16E-6
PCB 9	34883-39-1	0.00158[d]	0.00158	2.E-06	5.E-06	3.09E-6	8.14E-6
PCB 10	33146-45-1	0.00158[d]	0.00158	2.E-06	5.E-06	2.88E-6	7.63E-6
PCB 11	2050-67-1	0.00158[d]	0.00158	1.0E-05	2.0E-05	3.16E-6	8.36E-6
PCB 12	2974-92-7	0.00158[d]	0.00158	3.E-06	1.0E-05	3.19E-6	8.43E-6
PCB 13	2974-90-5	0.00158[d]	0.00158	3.E-06	1.0E-05	3.19E-6	8.43E-6
PCB 14	34883-41-5	0.00158[d]	0.00158	3.E-06	1.0E-05	2.97E-6	7.82E-6
PCB 15	2050-68-2	0.00158[d]	0.00158	1.8E-05	5.0E-05	3.11E-6	8.16E-6
PCB 16	38444-78-9	0.00158[d]	0.00158	4.E-06	1.0E-05	1.48E-6	3.68E-6
PCB 17	37680-66-3	0.00158[d]	0.00158	9.E-06	2.0E-05	1.49E-6	3.81E-6
PCB 18	37680-65-2	0.00158[d]	0.00158	1.7E-05	5.0E-05	1.49E-6	3.82E-6
PCB 19	38444-73-4	0.00158[d]	0.00158	4.E-06	1.0E-05	1.48E-6	3.73E-6
PCB 20	38444-84-7	0.00158[d]	0.00158	1.9E-05	5.0E-05	2.08E-6	5.39E-6
PCB 21	55702-46-0	0.00158[d]	0.00158	5.E-06	2.0E-05	2.10E-6	5.49E-6

QAPP Worksheet No. 15. Data Quality Levels and Analytical Methods Evaluation (cont.)

Analyte	CAS Number	DQL (mg/kg ww)[a]	Project Quantitation Limit Goal (mg/kg ww)	Analytical Method[b]		Achievable Laboratory Limits[c]	
				MDL (mg/kg ww)	Method QL (mg/kg ww)	MDL (mg/kg ww)	QL (mg/kg ww)
PCB 22	38444-85-8	0.00158[d]	0.00158	9.E-06	2.0E-05	2.08E-6	5.37E-6
PCB 23	55720-44-0	0.00158[d]	0.00158	5.E-06	2.0E-05	2.08E-6	5.40E-6
PCB 24	55702-45-9	0.00158[d]	0.00158	5.E-06	2.0E-05	1.51E-6	3.95E-6
PCB 25	55712-37-3	0.00158[d]	0.00158	5.E-06	2.0E-05	2.09E-6	5.45E-6
PCB 26	38444-81-4	0.00158[d]	0.00158	8.E-06	2.0E-05	2.09E-6	5.44E-6
PCB 27	38444-76-7	0.00158[d]	0.00158	6.E-06	2.0E-05	1.50E-6	3.89E-6
PCB 28	7012-37-5	0.00158[d]	0.00158	1.9E-05	5.0E-05	2.08E-6	5.39E-6
PCB 29	15862-07-4	0.00158[d]	0.00158	8.E-06	2.0E-05	2.09E-6	5.44E-6
PCB 30	35693-92-6	0.00158[d]	0.00158	1.7E-05	5.0E-05	1.49E-6	3.82E-6
PCB 31	16606-02-3	0.00158[d]	0.00158	1.5E-05	5.0E-05	2.10E-6	5.51E-6
PCB 32	38444-77-8	0.00158[d]	0.00158	8.E-06	2.0E-05	1.52E-6	3.98E-6
PCB 33	38444-86-9	0.00158[d]	0.00158	5.E-06	2.0E-05	2.10E-6	5.49E-6
PCB 34	37680-68-5	0.00158[d]	0.00158	7.E-06	2.0E-05	2.08E-6	5.36E-6
PCB 35	37680-69-6	0.00158[d]	0.00158	8.E-06	2.0E-05	2.07E-6	5.31E-6
PCB 36	38444-87-0	0.00158[d]	0.00158	8.E-06	2.0E-05	2.09E-6	5.43E-6
PCB 37	38444-90-5	0.00158[d]	0.00158	1.3E-05	5.0E-05	2.07E-6	5.29E-6
PCB 38	53555-66-1	0.00158[d]	0.00158	8.E-06	2.0E-05	2.09E-6	5.42E-6
PCB 39	38444-88-1	0.00158[d]	0.00158	9.E-06	2.0E-05	2.09E-6	5.42E-6
PCB 40	38444-93-8	0.00158[d]	0.00158	1.2E-05	5.0E-05	0.64E-6	1.53E-6
PCB 41	52663-59-9	0.00158[d]	0.00158	1.2E-05	5.0E-05	0.65E-6	1.54E-6
PCB 42	36559-22-5	0.00158[d]	0.00158	6.E-06	2.0E-05	0.65E-6	1.55E-6
PCB 43	70362-46-8	0.00158[d]	0.00158	9.E-06	2.0E-05	0.68E-6	1.60E-6
PCB 44	41464-39-5	0.00158[d]	0.00158	1.9E-05	5.0E-05	0.64E-6	1.54E-6
PCB 45	70362-45-7	0.00158[d]	0.00158	5.E-06	2.0E-05	0.62E-6	1.50E-6
PCB 46	41464-47-5	0.00158[d]	0.00158	1.0E-05	2.0E-05	0.63E-6	1.50E-6
PCB 47	2437-79-8	0.00158[d]	0.00158	1.9E-05	5.0E-05	0.64E-6	1.54E-6
PCB 48	70362-47-9	0.00158[d]	0.00158	8.E-06	2.0E-05	0.63E-6	1.54E-6

QAPP Worksheet No. 15. Data Quality Levels and Analytical Methods Evaluation (cont.)

Analyte	CAS Number	DQL (mg/kg ww)[a]	Project Quantitation Limit Goal (mg/kg ww)	Analytical Method[b]		Achievable Laboratory Limits[c]	
				MDL (mg/kg ww)	Method QL (mg/kg ww)	MDL (mg/kg ww)	QL (mg/kg ww)
PCB 49	41464-40-8	0.00158[d]	0.00158	1.1E-05	5.0E-05	0.63E-6	1.55E-6
PCB 50	62796-65-0	0.00158[d]	0.00158	6.E-06	2.0E-05	0.61E-6	1.49E-6
PCB 51	68194-04-7	0.00158[d]	0.00158	5.E-06	2.0E-05	0.61E-6	1.48E-6
PCB 52	35693-99-3	0.00158[d]	0.00158	1.9E-05	5.0E-05	0.64E-6	1.54E-6
PCB 53	41464-41-9	0.00158[d]	0.00158	6.E-06	2.0E-05	0.61E-6	1.49E-6
PCB 54	15968-05-5	0.00158[d]	0.00158	1.2E-05	5.0E-05	0.48E-6	1.17E-6
PCB 55	74338-24-2	0.00158[d]	0.00158	1.2E-05	5.0E-05	1.11E-6	2.7E-6
PCB 56	41464-43-1	0.00158[d]	0.00158	1.0E-05	2.0E-05	1.11E-6	2.73E-6
PCB 57	70424-67-8	0.00158[d]	0.00158	1.2E-05	5.0E-05	1.11E-6	2.77E-6
PCB 58	41464-49-7	0.00158[d]	0.00158	1.3E-05	5.0E-05	1.11E-6	2.71E-6
PCB 59	74472-33-6	0.00158[d]	0.00158	6.E-06	2.0E-05	0.63E-6	1.58E-6
PCB 60	33025-41-1	0.00158[d]	0.00158	1.3E-05	5.0E-05	1.11E-6	2.77E-6
PCB 61	33284-53-6	0.00158[d]	0.00158	1.7E-05	5.0E-05	1.11E-6	2.75E-6
PCB 62	54230-22-7	0.00158[d]	0.00158	6.E-06	2.0E-05	0.63E-6	1.58E-6
PCB 63	74472-34-7	0.00158[d]	0.00158	1.4E-05	5.0E-05	1.12E-6	2.82E-6
PCB 64	52663-58-8	0.00158[d]	0.00158	7.E-06	2.0E-05	0.63E-6	1.61E-6
PCB 65	33284-54-7	0.00158[d]	0.00158	1.9E-05	5.0E-05	0.64E-6	1.54E-6
PCB 66	32598-10-0	0.00158[d]	0.00158	1.6E-05	5.0E-05	1.11E-6	2.73E-6
PCB 67	73575-53-8	0.00158[d]	0.00158	1.5E-05	5.0E-05	1.11E-6	2.76E-6
PCB 68	73575-52-7	0.00158[d]	0.00158	1.5E-05	5.0E-05	1.11E-6	2.76E-6
PCB 69	60233-24-1	0.00158[d]	0.00158	1.1E-05	5.0E-05	0.63E-6	1.55E-6
PCB 70	32598-11-1	0.00158[d]	0.00158	1.7E-05	5.0E-05	1.11E-6	2.75E-6
PCB 71	41464-46-4	0.00158[d]	0.00158	1.2E-05	5.0E-05	0.64E-6	1.53E-6
PCB 72	41464-42-0	0.00158[d]	0.00158	1.6E-05	5.0E-05	1.11E-6	2.75E-6
PCB 73	74338-23-1	0.00158[d]	0.00158	1.6E-05	5.0E-05	0.63E-6	1.56E-6
PCB 74	32690-93-0	0.00158[d]	0.00158	1.7E-05	5.0E-05	1.11E-6	2.75E-6
PCB 75	32598-12-2	0.00158[d]	0.00158	6.E-06	2.0E-05	0.63E-6	1.58E-6

QAPP Worksheet No. 15. Data Quality Levels and Analytical Methods Evaluation (cont.)

Analyte	CAS Number	DQL (mg/kg ww)[a]	Project Quantitation Limit Goal (mg/kg ww)	Analytical Method[b]		Achievable Laboratory Limits[c]	
				MDL (mg/kg ww)	Method QL (mg/kg ww)	MDL (mg/kg ww)	QL (mg/kg ww)
PCB 76	70362-48-0	0.00158[d]	0.00158	1.7E-05	5.0E-05	1.11E-6	2.75E-6
PCB 77	32598-13-3	0.00024[e]	0.00024	1.7E-05	5.0E-05	1.11E-6	2.68E-6
PCB 78	70362-49-1	0.00158[d]	0.00158	1.7E-05	5.0E-05	1.12E-6	2.72E-6
PCB 79	41464-48-6	0.00158[d]	0.00158	1.7E-05	5.0E-05	1.11E-6	2.77E-6
PCB 80	33284-52-5	0.00158[d]	0.00158	1.8E-05	5.0E-05	1.11E-6	2.76E-6
PCB 81	70362-50-4	0.0000809[e]	0.0000809	1.8E-05	5.0E-05	1.11E-6	2.7E-6
PCB 82	52663-62-4	0.00158[d]	0.00158	1.3E-05	5.0E-05	0.8E-6	1.87E-6
PCB 83	60145-20-2	0.00158[d]	0.00158	2.2E-05	5.0E-05	0.77E-6	1.81E-6
PCB 84	52663-60-2	0.00158[d]	0.00158	1.2E-05	5.0E-05	0.77E-6	1.82E-6
PCB 85	65510-45-4	0.00158[d]	0.00158	1.0E-05	2.0E-05	0.75E-6	1.8E-6
PCB 86	55312-69-1	0.00158[d]	0.00158	1.5E-05	5.0E-05	0.75E-6	1.81E-6
PCB 87	38380-02-8	0.00158[d]	0.00158	1.5E-05	5.0E-05	0.75E-6	1.81E-6
PCB 88	55215-17-3	0.00158[d]	0.00158	1.2E-05	5.0E-05	0.77E-6	1.81E-6
PCB 89	73575-57-2	0.00158[d]	0.00158	1.9E-05	5.0E-05	0.77E-6	1.82E-6
PCB 90	68194-07-0	0.00158[d]	0.00158	2.4E-05	1.0E-04	0.75E-6	1.8E-6
PCB 91	68194-05-8	0.00158[d]	0.00158	1.2E-05	5.0E-05	0.75E-6	1.83E-6
PCB 92	52663-61-3	0.00158[d]	0.00158	1.2E-05	5.0E-05	0.78E-6	1.83E-6
PCB 93	73575-56-1	0.00158[d]	0.00158	2.2E-05	5.0E-05	0.76E-6	1.80E-6
PCB 94	73575-55-0	0.00158[d]	0.00158	1.2E-05	5.0E-05	0.77E-6	1.81E-6
PCB 95	38379-99-6	0.00158[d]	0.00158	2.2E-05	5.0E-05	0.75E-6	1.81E-6
PCB 96	73575-54-9	0.00158[d]	0.00158	2.1E-05	5.0E-05	0.42E-6	1.01E-6
PCB 97	41464-51-1	0.00158[d]	0.00158	1.5E-05	5.0E-05	0.75E-6	1.81E-6
PCB 98	60233-25-2	0.00158[d]	0.00158	2.2E-05	5.0E-05	0.78E-6	1.84E-6
PCB 99	38380-01-7	0.00158[d]	0.00158	2.2E-05	5.0E-05	0.75E-6	1.80E-6
PCB 100	39485-83-1	0.00158[d]	0.00158	2.2E-05	5.0E-05	0.76E-6	1.80E-6
PCB 101	37680-73-2	0.00158[d]	0.00158	2.4E-05	1.0E-04	0.75E-6	1.80E-6
PCB 102	68194-06-9	0.00158[d]	0.00158	2.2E-05	5.0E-05	0.75E-6	1.81E-6

QAPP Worksheet No. 15. Data Quality Levels and Analytical Methods Evaluation (cont.)

Analyte	CAS Number	DQL (mg/kg ww)[a]	Project Quantitation Limit Goal (mg/kg ww)	Analytical Method[b]		Achievable Laboratory Limits[c]	
				MDL (mg/kg ww)	Method QL (mg/kg ww)	MDL (mg/kg ww)	QL (mg/kg ww)
PCB 103	60145-21-3	0.00158[d]	0.00158	2.3E-05	5.0E-05	0.75E-6	1.82E-6
PCB 104	56558-16-8	0.00158[d]	0.00158	2.3E-05	5.0E-05	0.42E-6	1.01E-6
PCB 105	32598-14-4	0.000809[e]	0.000809	1.1E-05	2.0E-06	0.73E-6	1.76E-6
PCB 106	70424-69-0	0.00158[d]	0.00158	1.4E-05	5.0E-05	0.75E-6	1.81E-6
PCB 107	70424-68-9	0.00158[d]	0.00158	2.7E-05	1.0E-04	0.75E-6	1.81E-6
PCB 108	70362-41-3	0.00158[d]	0.00158	1.5E-05	5.0E-05	0.75E-6	1.81E-6
PCB 109	74472-35-8	0.00158[d]	0.00158	1.0E-05	2.0E-05	0.75E-6	1.86E-6
PCB 110	38380-03-9	0.00158[d]	0.00158	2.4E-05	1.0E-04	0.75E-6	1.81E-6
PCB 111	39635-32-0	0.00158[d]	0.00158	2.4E-05	1.0E-04	0.75E-6	1.83E-6
PCB 112	74472-36-9	0.00158[d]	0.00158	2.5E-05	1.0E-04	0.75E-6	1.80E-6
PCB 113	68194-10-5	0.00158[d]	0.00158	2.4E-05	1.0E-04	0.75E-6	1.80E-6
PCB 114	74472-37-0	0.000809[e]	0.000809	1.2E-05	5.0E-05	0.72E-6	1.71E-6
PCB 115	74472-38-1	0.00158[d]	0.00158	2.4E-05	1.0E-04	0.76E-6	1.87E-6
PCB 116	18259-05-7	0.00158[d]	0.00158	1.0E-05	2.0E-05	0.75E-6	1.80E-6
PCB 117	68194-11-6	0.00158[d]	0.00158	1.0E-05	2.0E-05	0.76E-6	1.85E-6
PCB 118	31508-00-6	0.000809[e]	0.000809	1.9E-05	5.0E-05	0.69E-6	1.65E-6
PCB 119	56558-17-9	0.00158[d]	0.00158	1.5E-05	5.0E-05	0.75E-6	1.81E-6
PCB 120	68194-12-7	0.00158[d]	0.00158	1.5E-05	5.0E-05	0.75E-6	1.81E-6
PCB 121	56558-18-0	0.00158[d]	0.00158	2.1E-05	5.0E-05	0.75E-6	1.84E-6
PCB 122	76842-07-4	0.00158[d]	0.00158	1.2E-05	5.0E-05	0.72E-6	1.72E-6
PCB 123	65510-44-3	0.000809[e]	0.000809	1.5E-05	5.0E-05	0.74E-6	1.79E-6
PCB 124	70424-70-3	0.00158[d]	0.00158	2.7E-05	1.0E-04	0.75E-6	1.81E-6
PCB 125	74472-39-2	0.00158[d]	0.00158	1.5E-05	5.0E-05	0.75E-6	1.81E-6
PCB 126	57465-28-8	2.43E-07[e]	2.43E-07	1.4E-05	5.0E-05	1.43E-6	3.66E-6
PCB 127	39635-33-1	0.00158[d]	0.00158	2.8E-05	1.0E-04	0.73E-6	1.78E-6
PCB 128	38380-07-3	0.00158[d]	0.00158	1.2E-05	5.0E-05	1.26E-6	3.26E-6
PCB 129	55215-18-4	0.00158[d]	0.00158	2.1E-05	5.0E-05	0.45E-6	1.12E-6

QAPP Worksheet No. 15. Data Quality Levels and Analytical Methods Evaluation (cont.)

Analyte	CAS Number	DQL (mg/kg ww)[a]	Project Quantitation Limit Goal (mg/kg ww)	Analytical Method[b]		Achievable Laboratory Limits[c]	
				MDL (mg/kg ww)	Method QL (mg/kg ww)	MDL (mg/kg ww)	QL (mg/kg ww)
PCB 130	52663-66-8	0.00158[d]	0.00158	1.4E-05	5.0E-05	0.49E-6	1.19E-6
PCB 131	61798-70-7	0.00158[d]	0.00158	1.2E-05	5.0E-05	0.45E-6	1.12E-6
PCB 132	38380-05-1	0.00158[d]	0.00158	1.2E-05	5.0E-05	0.45E-6	1.12E-6
PCB 133	35694-04-3	0.00158[d]	0.00158	1.7E-05	5.0E-05	0.45E-6	1.12E-6
PCB 134	52704-70-8	0.00158[d]	0.00158	1.3E-05	5.0E-05	0.5E-6	1.22E-6
PCB 135	52744-13-5	0.00158[d]	0.00158	1.1E-05	5.0E-05	0.45E-6	1.11E-6
PCB 136	38411-22-2	0.00158[d]	0.00158	9.E-06	2.0E-05	0.37E-6	0.90E-6
PCB 137	35694-06-5	0.00158[d]	0.00158	3.0E-05	1.0E-04	0.45E-6	1.11E-6
PCB 138	35065-28-2	0.00158[d]	0.00158	2.1E-05	5.0E-05	0.45E-6	1.12E-6
PCB 139	56030-56-9	0.00158[d]	0.00158	2.0E-05	5.0E-05	0.45E-6	1.11E-6
PCB 140	59291-64-4	0.00158[d]	0.00158	2.0E-05	5.0E-05	0.45E-6	1.11E-6
PCB 141	52712-04-6	0.00158[d]	0.00158	9.E-06	2.0E-05	0.45E-6	1.12E-6
PCB 142	41411-61-4	0.00158[d]	0.00158	3.1E-05	1.0E-04	0.47E-6	1.16E-6
PCB 143	68194-15-0	0.00158[d]	0.00158	1.3E-05	5.0E-05	0.46E-6	1.12E-6
PCB 144	68194-14-9	0.00158[d]	0.00158	1.7E-05	5.0E-05	0.46E-6	1.13E-6
PCB 145	74472-40-5	0.00158[d]	0.00158	3.2E-05	1.0E-04	0.35E-6	0.86E-6
PCB 146	51908-16-8	0.00158[d]	0.00158	1.8E-05	5.0E-05	0.45E-6	1.12E-6
PCB 147	68194-13-8	0.00158[d]	0.00158	1.8E-05	5.0E-05	0.45E-6	1.11E-6
PCB 148	74472-41-6	0.00158[d]	0.00158	3.2E-05	1.0E-04	0.45E-6	1.11E-6
PCB 149	38380-04-0	0.00158[d]	0.00158	1.8E-05	5.0E-05	0.45E-6	1.11E-6
PCB 150	68194-08-1	0.00158[d]	0.00158	3.3E-05	1.0E-04	0.35E-6	0.87E-6
PCB 151	52663-63-5	0.00158[d]	0.00158	1.1E-05	5.0E-05	0.45E-6	1.11E-6
PCB 152	68194-09-2	0.00158[d]	0.00158	2.4E-05	1.0E-04	0.35E-6	0.86E-6
PCB 153	35065-27-1	0.00158[d]	0.00158	1.3E-05	5.0E-05	0.44E-6	1.10E-6
PCB 154	60145-22-4	0.00158[d]	0.00158	1.1E-05	5.0E-05	0.44E-6	1.10E-6
PCB 155	33979-03-2	0.00158[d]	0.00158	3.4E-05	1.0E-04	0.35E-6	0.87E-6
PCB 156	38380-08-4	0.000809[e]	0.000809	1.3E-05	5.0E-05	1.74E-6	4.50E-6

QAPP Worksheet No. 15. Data Quality Levels and Analytical Methods Evaluation (cont.)

Analyte	CAS Number	DQL (mg/kg ww)[a]	Project Quantitation Limit Goal (mg/kg ww)	Analytical Method[b]		Achievable Laboratory Limits[c]	
				MDL (mg/kg ww)	Method QL (mg/kg ww)	MDL (mg/kg ww)	QL (mg/kg ww)
PCB 157	69782-90-7	0.000809[e]	0.000809	1.3E-05	5.0E-05	1.74E-6	4.50E-6
PCB 158	74472-42-7	0.00158	0.00158	1.1E-05	2.0E-05	0.44E-6	1.11E-6
PCB 159	39635-35-3	0.00158[d]	0.00158	3.5E-05	1.0E-04	1.27E-6	3.29E-6
PCB 160	41411-62-5	0.00158[d]	0.00158	2.1E-05	5.0E-05	0.45E-6	1.11E-6
PCB 161	74472-43-8	0.00158[d]	0.00158	3.5E-05	1.0E-04	0.44E-6	1.10E-6
PCB 162	39635-34-2	0.00158[d]	0.00158	3.5E-05	1.0E-04	1.27E-6	3.33E-6
PCB 163	74472-44-9	0.00158[d]	0.00158	2.1E-05	5.0E-05	0.45E-6	1.12E-6
PCB 164	74472-45-0	0.00158[d]	0.00158	1.4E-05	5.0E-05	0.44E-6	1.11E-6
PCB 165	74472-46-1	0.00158[d]	0.00158	3.6E-05	1.0E-04	0.45E-6	1.11E-6
PCB 166	41411-63-6	0.00158[d]	0.00158	1.2E-05	5.0E-05	1.26E-6	3.26E-6
PCB 167	52663-72-6	0.000809[e]	0.000809	1.1E-05	5.0E-05	1.27E-6	3.29E-6
PCB 168	59291-65-5	0.00158[d]	0.00158	1.3E-05	5.0E-05	0.44E-6	1.10E-6
PCB 169	32774-16-6	8.09E-07[e]	8.09E-07	1.6E-05	5.0E-05	1.82E-6	4.80E-6
PCB 170	35065-30-6	0.00158[d]	0.00158	1.6E-05	5.0E-05	1.28E-6	3.18E-6
PCB 171	52663-71-5	0.00158[d]	0.00158	3.7E-05	1.0E-04	1.1E-6	2.69E-6
PCB 172	52663-74-8	0.00158[d]	0.00158	3.8E-05	1.0E-04	1.1E-6	2.67E-6
PCB 173	68194-16-1	0.00158[d]	0.00158	3.7E-05	1.0E-04	1.1E-6	2.69E-6
PCB 174	38411-25-5	0.00158[d]	0.00158	1.9E-05	5.0E-05	1.1E-6	2.69E-6
PCB 175	40186-70-7	0.00158[d]	0.00158	3.8E-05	1.0E-04	1.1E-6	2.70E-6
PCB 176	52663-65-7	0.00158[d]	0.00158	3.9E-05	1.0E-04	0.37E-6	0.90E-6
PCB 177	52663-70-4	0.00158[d]	0.00158	1.4E-05	5.0E-05	1.10E-6	2.67E-6
PCB 178	52663-67-9	0.00158[d]	0.00158	2.2E-05	5.0E-05	0.48E-6	1.20E-6
PCB 179	52663-64-6	0.00158[d]	0.00158	2.3E-05	5.0E-05	0.43E-6	1.04E-6
PCB 180	35065-29-3	0.00158[d]	0.00153	1.4E-05	5.0E-05	1.11E-6	2.76E-6
PCB 181	74472-47-2	0.00158[d]	0.00158	4.0E-05	1.0E-04	1.11E-6	2.75E-6
PCB 182	60145-23-5	0.00158[d]	0.00158	4.0E-05	1.0E-04	1.11E-6	2.74E-6
PCB 183	52663-69-1	0.00158[d]	0.00158	4.0E-05	1.0E-04	1.12E-6	2.81E-6

QAPP Worksheet No. 15. Data Quality Levels and Analytical Methods Evaluation (cont.)

Analyte	CAS Number	DQL (mg/kg ww)[a]	Project Quantitation Limit Goal (mg/kg ww)	Analytical Method[b]		Achievable Laboratory Limits[c]	
				MDL (mg/kg ww)	Method QL (mg/kg ww)	MDL (mg/kg ww)	QL (mg/kg ww)
PCB 184	74472-48-3	0.00158[d]	0.00158	4.0E-05	1.0E-04	0.42E-6	1.04E-6
PCB 185	52712-05-7	0.00158[d]	0.00158	4.0E-05	1.0E-04	1.11E-6	2.78E-6
PCB 186	74472-49-4	0.00158[d]	0.00158	4.1E-05	1.0E-04	0.45E-6	1.11E-6
PCB 187	52663-68-0	0.00158[d]	0.00158	1.9E-05	5.0E-05	1.11E-6	2.73E-6
PCB 188	74487-85-7	0.00158[d]	0.00158	2.3E-05	5.0E-05	0.39E-6	0.95E-6
PCB 189	39635-31-9	0.000809[e]	0.000809	1.8E-05	5.0E-05	0.75E-6	1.75E-6
PCB 190	41411-64-7	0.00158[d]	0.00158	2.3E-05	5.0E-05	1.29E-6	3.27E-6
PCB 191	74472-50-7	0.00158[d]	0.00158	4.2E-05	1.0E-04	1.10E-6	2.73E-6
PCB 192	74472-51-8	0.00158[d]	0.00158	4.2E-05	1.0E-04	1.10E-6	2.69E-6
PCB 193	69782-91-8	0.00158[d]	0.00158	1.4E-05	5.0E-05	1.11E-6	2.76E-6
PCB 194	35694-08-7	0.00158[d]	0.00158	1.7E-05	5.0E-05	0.73E-6	1.69E-6
PCB 195	52663-78-2	0.00158[d]	0.00158	4.3E-05	1.0E-04	0.73E-6	1.70E-6
PCB 196	42740-50-1	0.00158[d]	0.00158	4.3E-05	1.0E-04	0.36E-6	0.83E-6
PCB 197	33091-17-7	0.00158[d]	0.00158	2.5E-05	1.0E-04	0.36E-6	0.87E-6
PCB 198	68194-17-2	0.00158[d]	0.00158	2.0E-05	1.0E-04	0.37E-6	0.83E-6
PCB 199	52663-75-9	0.00158[d]	0.00158	2.0E-05	1.0E-04	0.37E-6	0.83E-6
PCB 200	52663-73-7	0.00158[d]	0.00158	2.5E-05	1.0E-04	0.36E-6	0.84E-6
PCB 201	40186-71-8	0.00158[d]	0.00158	4.4E-05	1.0E-04	0.36E-6	0.85E-6
PCB 202	2136-99-4	0.00158[d]	0.00158	4.4E-05	1.0E-04	0.35E-6	0.84E-6
PCB 203	52663-76-0	0.00158[d]	0.00158	4.4E-05	1.0E-04	0.36E-6	0.83E-6
PCB 204	74472-52-9	0.00158[d]	0.00158	4.5E-05	1.0E-04	0.36E-6	0.84E-6
PCB 205	74472-53-0	0.00158[d]	0.00158	4.5E-05	1.0E-04	0.69E-6	1.62E-6
PCB 206	40186-72-9	0.00158[d]	0.00158	4.5E-05	1.0E-04	1.55E-6	3.49E-6
PCB 207	52663-79-3	0.00158[d]	0.00158	4.5E-05	1.0E-04	1.19E-6	2.77E-6
PCB 208	52663-77-1	0.00158[d]	0.00158	4.6E-05	1.0E-04	1.19E-6	2.73E-6
PCB 209	2051-24-3	0.00158[d]	0.00158	1.5E-05	5.0E-05	0.48E-6	1.13E-6

[a] DQLs based on the lower of 1) USEPA Region 3 fish tissue screening levels, May 2008 (USEPA 2008a), 2) ecological wildlife thresholds back-calculated from dietary TRVs, or 3) ecological fish or crab decapod thresholds based on tissue-residue TRVs. See Attachment S for

QAPP Worksheet No. 15. Data Quality Levels and Analytical Methods Evaluation (cont.)

Analyte	CAS Number	DQL (mg/kg ww)[a]	Project Quantitation Limit Goal (mg/kg ww)	Analytical Method[b]		Achievable Laboratory Limits[c]	
				MDL (mg/kg ww)	Method QL (mg/kg ww)	MDL (mg/kg ww)	QL (mg/kg ww)

human health consumption-based or ecological-based (for benthos, fish, and wildlife) thresholds (and methods) used to derive DQLs. The Region 3 Fish Tissue Screening Levels were derived using a fish consumption rate of 54 g per day and are based on a target risk level of 1E-06 for potential carcinogens; the Fish Tissue Screening Levels for non-carcinogenic compounds have been divided by 10 (hazard quotient of 0.1) to account for potential additive effects. DQLs (including human health and ecological thresholds presented in Attachment S) are very conservative, generic analytical goals used solely for the purpose of evaluating laboratory analytical methods and achievable laboratory limits; these are not project-specific screening levels or preliminary remediation goals. These values will be developed in subsequent phases of the project.

[b] Analytical MDLs and QLs are those documented in validated methods

[c] Achievable MDLs and QLs are limits that an individual laboratory can achieve when performing a specific analytical method. Actual MDLs and QLs will vary based on sample-specific factors. For PCBs, the MDL and QL are based on extraction of 10 grams per sample. The laboratory detection limit will be based on the sample specific EDL. Actual EDLs will vary based on sample-specific factors, including sample mass.

[d] Based on risk for total PCBs (high risk)

[e] Identified as one of the 12 PCDD-like PCB congeners in the WHO 2005 scheme Van den Berg et al. (2006).

CAS – Chemical Abstract Service
DQL – data quality level
EDL – estimated detection limit
MDL – method detection limit
NA – not available
PCB – polychlorinated biphenyl
PCDD – polychlorinated dibenzo-*p*-dioxin
RBC – risk-based concentration
QL – quantitation limit
TEQ – toxic equivalent (as calculated following Van den Berg, et al. (2006))
TRV – toxicity reference value
USEPA – US Environmental Protection Agency
WHO – World Health Organization
ww – wet weight

QAPP Worksheet No. 15. Data Quality Levels and Analytical Methods Evaluation (cont.)

Matrix: Tissue

Analytical Group, Method, and Laboratory: PCBs - Aroclors, USEPA SW-846 8082, Alpha Analytical, Mansfield, MA

SOP from Worksheet 23: T8

Concentration Level: Low

Analyte	CAS Number	DQL (mg/kg ww)[a]	Project Quantitation Limit Goal (mg/kg ww)	Analytical Method[b]		Achievable Laboratory Limits[c]	
				MDL (mg/kg ww)	Method QL (mg/kg ww)	MDL (mg/kg)	QL (mg/kg)
Aroclor 1016	12674-11-2	NA	0.004	NA	NA	0.001	0.004
Aroclor 1221	11104-28-2	NA	0.004	NA	NA	0.002	0.004
Aroclor 1232	11141-16-5	NA	0.004	NA	NA	0.002	0.004
Aroclor 1242	53469-21-9	NA	0.004	NA	NA	0.001	0.004
Aroclor 1248	12672-29-6	NA	0.004	NA	NA	0.001	0.004
Aroclor 1254	11097-69-1	NA	0.004	NA	NA	0.001	0.004
Aroclor 1260	11096-82-5	NA	0.004	NA	NA	0.002	0.004
Aroclor 1262	37324-23-5	NA	0.004	NA	NA	0.002	0.004
Aroclor 1268	11100-14-4	NA	0.004	NA	NA	0.002	0.004

[a] DQLs based on the lower of: 1) USEPA Region 3 fish tissue screening levels, May 2008 (USEPA 2008a), 2) ecological wildlife thresholds back-calculated from dietary TRVs, or 3) ecological fish or crab decapod thresholds based on tissue-residue TRVs (if available). If no toxicity thresholds were available, the DQL was determined to be not available. See Attachment S for human health consumption-based or ecological-based (for benthos, fish, and wildlife) thresholds (and methods) used to derive DQLs. The Region 3 Fish Tissue Screening Levels were derived using a fish consumption rate of 54 g per day and are based on a target risk level of 1E-06 for potential carcinogens; the Fish Tissue Screening Levels for non-carcinogenic compounds have been divided by 10 (hazard quotient of 0.1) to account for potential additive effects. DQLs (including human health and ecological thresholds presented in Attachment S) are very conservative, generic analytical goals used solely for the purpose of evaluating laboratory analytical methods and achievable laboratory limits; these are not project-specific screening levels or preliminary remediation goals. These values will be developed in subsequent phases of the project. If no toxicity thresholds were available, the DQL and/or project quantitation limit goal was determined to be not available(NA).

[b] Analytical MDLs and QLs are those documented in validated methods. When the method did not publish a value for either the MDL or QL, the value was determined to be not available (NA).

[c] Achievable MDLs and QLs are limits that an individual laboratory can achieve when performing a specific analytical method. Actual MDLs and QLs will vary based on sample-specific factors. Tissue MDLs and QLs are based on sediment MDLs and QLs. The laboratory conducts MDL studies with spikes that go through the extraction and analytical process; therefore, dry weight or wet weight units do not apply.

CAS – Chemical Abstract Service
DQL – data quality level
NA – not available
QL – quantitation limit
USEPA – US Environmental Protection Agency
ww – wet weight

QAPP Worksheet No. 15. Data Quality Levels and Analytical Methods Evaluation (cont.)

Analyte	CAS Number	DQL (mg/kg ww)[a]	Project Quantitation Limit Goal (mg/kg ww)	Analytical Method[b]		Achievable Laboratory Limits[c]	
				MDL (mg/kg ww)	Method QL (mg/kg ww)	MDL (mg/kg)	QL (mg/kg)

MDL – method detection limit TRV – toxicity reference value

QAPP Worksheet No. 15. Data Quality Levels and Analytical Methods Evaluation (cont.)

Matrix: Tissue

Analytical Group, Method, and Laboratory: PCDDs/PCDFs, USEPA 1613B, Analytical Perspectives, Wilmington, NC

SOP from Worksheet 23: T3

Concentration Level: Low

Analyte	CAS Number	DQL (mg/kg ww)[a]	Project Quantitation Limit Goal (mg/kg ww)	Analytical Method[b]		Achievable Laboratory Limits (29 ± 5 g Sample)		Achievable Laboratory Limits (10 g Sample)[c]	
				MDL (mg/kg ww)	Method QL (mg/kg ww)	MDL (mg/kg ww)	QL (mg/kg ww)	MDL (mg/kg ww)	QL (mg/kg ww)
1,2,3,4,6,7,8-HpCDD	35822-46-9	2.43E-06[d]	2.43E-06	NA	5.00E-06	7.E-08	1.9E-07	2.10E-07	5.70E-07
1,2,3,4,6,7,8-HpCDF	67562-39-4	2.43E-06[d]	2.43E-06	NA	5.00E-06	2.9E-08	7.0E-08	8.70E-08	2.10E-07
1,2,3,4,7,8-HxCDD	39227-28-6	2.43E-07[d]	2.43E-07	NA	5.00E-06	9.1E-08	2.2E-07	**2.73E-07**	**6.60E-07**
1,2,3,4,7,8-HxCDF	70648-26-9	2.43E-07[d]	2.43E-07	NA	5.00E-06	2.6E-08	6.3E-08	7.80E-08	1.89E-07
1,2,3,4,7,8,9-HpCDF	55673-89-7	2.43E-06[d]	2.43E-06	NA	5.00E-06	4.2E-08	1.0E-07	1.26E-07	3.00E-07
1,2,3,6,7,8-HxCDD	57653-85-7	2.43E-07[d]	2.43E-07	NA	5.00E-06	9.1E-08	2.2E-07	**2.73E-07**	**6.60E-07**
1,2,3,6,7,8-HxCDF	57117-44-9	2.43E-07[d]	2.43E-07	NA	5.00E-06	2.5E-08	6.0E-08	7.50E-08	1.80E-07
1,2,3,7,8,9-HxCDD	19408-74-3	2.43E-07[d]	2.43E-07	NA	5.00E-06	9.4E-08	2.3E-07	**2.82E-07**	**6.90E-07**
1,2,3,7,8,9-HxCDF	72918-21-9	2.43E-07[d]	2.43E-07	NA	5.00E-06	3.2E-08	7.7E-08	9.60E-08	2.31E-07
1,2,3,7,8-PeCDD	40321-76-4	2.43E-08[d]	2.43E-08	NA	5.00E-06	**7.3E-08**	**1.77E-07**	**2.19E-07**	**5.31E-07**
1,2,3,7,8-PeCDF	57117-41-6	8.09E-07[d]	8.09E-07	NA	5.00E-06	6.6E-08	1.63E-07	1.98E-07	4.89E-07
2,3,4,6,7,8-HxCDF	60851-34-5	2.43E-07[d]	2.43E-07	NA	5.00E-06	2.7E-08	6.7E-08	8.10E-08	2.01E-07
2,3,4,7,8-PeCDF	57117-31-4	8.09E-08[d]	8.09E-08	NA	5.00E-06	5.9E-08	**1.47E-07**	**1.77E-07**	**4.41E-07**
2,3,7,8-TCDD	1746-01-6	2.43E-08[d]	2.43E-08	NA	1.00E-06	**3.3E-08**	**7.0E-08**	**9.90E-08**	**2.10E-07**
2,3,7,8-TCDF	51207-31-9	2.43E-07[d]	2.43E-07	NA	1.00E-06	4.0E-08	9.8E-08	1.20E-07	**2.94E-07**
OCDD	3268-87-9	8.09E-05[d]	8.09E-05	NA	1.00E-05	1.2E-07	3.2E-07	3.60E-07	9.60E-07
OCDF	39001-02-0	8.09E-05[d]	8.09E-05	NA	1.00E-05	1.2E-07	3.0E-07	3.60E-07	9.00E-07

[a] DQLs are based on the lower of: 1) USEPA Region 3 fish tissue screening levels, May 2008 (USEPA 2008a), 2) ecological wildlife thresholds back-calculated from dietary TRVs, or 3) ecological fish or decapod thresholds based on tissue-residue TRVs. See Attachment S for human

QAPP Worksheet No. 15. Data Quality Levels and Analytical Methods Evaluation (cont.)

Analyte	CAS Number	DQL (mg/kg ww)[a]	Project Quantitation Limit Goal (mg/kg ww)	Analytical Method[b]		Achievable Laboratory Limits (29 ± 5 g Sample)		Achievable Laboratory Limits (10 g Sample)[c]	
				MDL (mg/kg ww)	Method QL (mg/kg ww)	MDL (mg/kg ww)	QL (mg/kg ww)	MDL (mg/kg ww)	QL (mg/kg ww)

health consumption-based or ecological-based (for benthos, fish, and wildlife) thresholds (and methods) used to derive DQLs. The Region 3 Fish Tissue Screening Levels were derived using a fish consumption rate of 54 g per day and are based on a target risk level of 1E-06 for potential carcinogens; the Fish Tissue Screening Levels for non-carcinogenic compounds have been divided by 10 (hazard quotient of 0.1) to account for potential additive effects. DQLs (including human health and ecological thresholds presented in Attachment S) are very conservative, generic analytical goals used solely for the purpose of evaluating laboratory analytical methods and achievable laboratory limits; these are not project-specific screening levels or preliminary remediation goals. These values will be developed in subsequent phases of the project

[b] Analytical MDLs and QLs are those documented in validated methods. When the method did not publish a value for either the MDL or QL, the value was determined to be not available (NA).

[c] Achievable MDLs and QLs are limits that an individual laboratory can achieve when performing a specific analytical method. Actual MDLs and QLs will vary based on sample-specific factors. For PCDDs/PCDFs, the MDL and QL are based on extraction of 29 ± 5 g and 10 grams/sample, respectively. The laboratory detection limit will be based on the sample specific EDL. Actual EDLs will vary based on sample-specific factors, including sample mass.

[d] DQLs for individual PCDDs and PCDFs calculated by dividing the 2,3,7,8-TCDD DQL by its respective mammal toxic equivalence factor (Van den Berg et al. 2006).

CAS – Chemical Abstract Service
DQL – data quality level
EDL – estimated detection limit
HpCDD – heptachlorodibenzo-*p*-dioxin
HpCDF – heptachlorodibenzofuran
HxCDD – hexachlorodibenzo-*p*-dioxin
HxCDF – hexachlorodibenzofuran
MDL – method detection limit
NA – not available
OCDD – octachlorodibenzo-*p*-dioxin
OCDF – octachlorodibenzofuran
PCDD – polychlorinated dibenzo-*p*-dioxin
PCDF – polychlorinated dibenzofuran
PeCDD – pentachlorodibenzo-*p*-dioxin
PeCDF – pentachlorodibenzofuran
QL – quantitation limit
RBC – risk-based concentration
TCDD – tetrachlorodibenzo-*p*-dioxin
TCDF – tetrachlorodibenzofuran
TRV – toxicity reference value
USEPA – US Environmental Protection Agency
ww – wet weight

Bold indicates chemicals for which the achievable laboratory limits exceed the project quantitation limit goal.

QAPP Worksheet No. 15. Data Quality Levels and Analytical Methods Evaluation (cont.)

Matrix: Tissue

Analytical Group, Method, and Laboratory: PAHs, CARB 429 Mod., Maxxam Analytics, Mississauga, ON

SOP from Worksheet 23: T4

Concentration Level: Low

Analyte	CAS Number	DQL (mg/kg ww)[a]	Project Quantitation Limit Goal (mg/kg ww)	Analytical Method[b]		Achievable Laboratory Limits[c]	
				MDL (mg/kg ww)	Method QL (mg/kg ww)	MDL (mg/kg ww)	QL (mg/kg ww)
2-Methylnaphthalene	91-57-6	0.541	0.541	NA	NA	0.0001216	0.001
Acenaphthene	83-32-9	0.24	0.24	NA	NA	0.0001186	0.001
Acenaphthylene	208-96-8	0.24[d]	0.24	NA	NA	0.0001331	0.001
Anthracene	120-12-7	0.24	0.24	NA	NA	0.0000792	0.001
Fluorene	86-73-7	0.24	0.24	NA	NA	0.0003043	0.001
Naphthalene	91-20-3	0.24	0.24	NA	NA	0.0001165	0.001
Phenanthrene	85-01-8	0.24[e]	0.24	NA	NA	0.0001246	0.001
Benzo[a]anthracene	56-55-3	0.00432	0.00432	NA	NA	0.0001307	0.001
Benzo[a]pyrene	50-32-8	0.000432	0.000432	NA	NA	0.0002381	**0.001**
Benzo[b]fluoranthene	205-99-2	0.00432	0.00432	NA	NA	0.0002573	0.001
Benzo[e]pyrene	192-97-2	0.24[f]	0.24	NA	NA	0.0000994	0.001
Benzo[g,h,i]perylene	191-24-2	0.24[f]	0.24	NA	NA	0.0001359	0.001
Benzo[k]fluoranthene	207-08-9[g]	0.0432	0.0432	NA	NA	0.0001935	0.001
Chrysene	218-01-9	0.432	0.432	NA	NA	0.0002475	0.001
Dibenzo[a,h]anthracene	53-70-3	0.000432	0.000432	NA	NA	0.0001729	**0.001**
Fluoranthene	206-44-0	0.24	0.24	NA	NA	0.0003043	0.001
Indeno-[1,2,3c,d]pyrene	193-39-5	0.00432	0.00432	NA	NA	0.0002026	0.001
Perylene	198-55-0	0.24[f]	0.24	NA	NA	0.0001281	0.001
Pyrene	129-00-0	0.24	0.24	NA	NA	0.0002738	0.001
1-Methylnaphthalene	90-12-0	0.11	0.11	NA	NA	0.0001152	0.001
1-Methylphenanthrene	832-69-9	40.60	40.60	NA	NA	0.0000721	0.001
2,3,5-Trimethylnaphthalene	2245-38-7	NA	NA	NA	NA	0.0001275	0.001
2,6-Dimethylnaphthalene	581-42-0	NA	NA	NA	NA	0.0001006	0.001

QAPP Worksheet No. 15. Data Quality Levels and Analytical Methods Evaluation (cont.)

Analyte	CAS Number	DQL (mg/kg ww)[a]	Project Quantitation Limit Goal (mg/kg ww)	Analytical Method[b]		Achievable Laboratory Limits[c]	
				MDL (mg/kg ww)	Method QL (mg/kg ww)	MDL (mg/kg ww)	QL (mg/kg ww)
Dibenzothiophene	132-65-0	NA	NA	NA	NA	0.0001031	0.001

[a] DQLs based on the lower of: 1) USEPA Region 3 fish tissue screening levels, May 2008 (USEPA 2008a), 2) ecological wildlife thresholds back-calculated from dietary TRVs, or 3) ecological fish or decapod thresholds based on tissue-residue TRVs (if available). See Attachment S for human health consumption-based or ecological-based (for benthos, fish, and wildlife) thresholds (and methods) used to derive DQLs. The Region 3 Fish Tissue Screening Levels were derived using a fish consumption rate of 54 g per day and are based on a target risk level of 1E-06 for potential carcinogens; the Fish Tissue Screening Levels for non-carcinogenic compounds have been divided by 10 (hazard quotient of 0.1) to account for potential additive effects. DQLs (including human health and ecological thresholds presented in Attachment S) are very conservative, generic analytical goals used solely for the purpose of evaluating laboratory analytical methods and achievable laboratory limits; these are not project-specific screening levels or preliminary remediation goals. These values will be developed in subsequent phases of the project. If no toxicity thresholds were available, the DQL and/or project quantitation limit goal was determined to be not available(NA).

[b] Analytical MDLs and QLs are those documented in validated methods. When the method did not publish a value for either the MDL or QL, the value was determined to be not available (NA).

[c] Achievable MDLs and QLs are limits that an individual laboratory can achieve when performing a specific analytical method. Actual MDLs and QLs will vary based on sample-specific factors. Tissue RL and MDL is based on sediment RL and MDL.

[d] The DQL for this analyte was based on the acenaphthene DQL.

[e] The DQL for this analyte was based on the anthracene DQL.

[f] The DQL for this analyte was based on the pyrene DQL.

[g] Benzo[k]fluoranthene will be reported by the laboratory with a “C” qualifier, indicating that it co-elutes with benzo[j]fluoranthene.

CARB – California Air Resources Board
CAS – Chemical Abstract Service
DQL – data quality level
HRGC/HRMS – high-resolution gas chromatography/high-resolution mass spectrometry
MDL – method detection limit
NA – not available
RBC – risk-based concentration
QL – quantitation limit
TRV – toxicity reference value
ww – wet weight

Bold indicates chemicals for which the achievable laboratory limits exceed the project quantitation limit goal.

QAPP Worksheet No. 15. Data Quality Levels and Analytical Methods Evaluation (cont.)

Matrix: Tissue

Analytical Group, Method, and Laboratory: Alkylated PAHs, USEPA SW-846 8270D, Alpha Analytical, Mansfield, MA

SOP from Worksheet 23: T25, T27

Concentration Level: Low

Analyte	CAS Number	DQL (mg/kg ww)[a]	Project Quantitation Limit Goal (mg/kg ww)	Analytical Method[b]		Achievable Laboratory Limits[c]	
				MDL (mg/kg ww)	Method QL (mg/kg ww)	MDL (mg/kg)	QL (mg/kg)
C2-Alkylnaphthalenes	NA	0.24	0.24	NA	NA	0.00009	0.001
C3-Alkylnaphthalenes	NA	0.24	0.24	NA	NA	0.00009	0.001
C1-Benzanthracene/chrysenes	NA	0.00432	0.00432	NA	NA	0.00016	**0.001**
C1-Dibenzothiophenes	NA	NA	NA	NA	NA	0.00016	0.001
C1-Fluorenes	NA	0.24	0.24	NA	NA	0.00008	0.001
C1-Phenanthrene/anthracenes	NA	0.24	0.24	NA	NA	0.00012	0.001
C1-Pyrene/fluoranthenes	NA	0.24	0.24	NA	NA	0.00017	0.001
C2-Benzanthracene/chrysenes	NA	0.00432	0.00432	NA	NA	0.00016	0.001
C2-Dibenzothiophenes	NA	NA	NA	NA	NA	0.00006	0.001
C2-Fluorenes	NA	0.24	0.24	NA	NA	0.00008	0.001
C2-Naphthalenes	NA	0.24	0.24	NA	NA	0.00016	0.001
C2-Phenanthrene/anthracenes	NA	0.24	0.24	NA	NA	0.00016	0.001
C3-Benzanthracene/chrysenes	NA	0.00432	0.00432	NA	NA	0.00016	0.001
C3-Dibenzothiophenes	NA	NA	NA	NA	NA	0.00016	0.001
C3-Fluorenes	NA	0.24	0.24	NA	NA	0.00008	0.001
C3-Naphthalenes	NA	0.24	0.24	NA	NA	0.00016	0.001
C3-Phenanthrene/anthracenes	NA	0.24	0.24	NA	NA	0.00012	0.001
C4-Benzanthracene/chrysenes	NA	0.00432	0.00432	NA	NA	0.00016	0.001
C4-Dibenzothiophenes	NA	NA	NA	NA	NA	0.00016	0.001
C4-Naphthalenes	NA	0.24	0.24	NA	NA	0.00016	0.001
C4-Phenanthrenes/anthracenes	NA	0.24	0.24	NA	NA	0.00016	0.001

[a] DQLs based on the lower of: 1) USEPA Region 3 fish tissue screening levels, May 2008 (USEPA 2008a), 2) ecological wildlife thresholds back-calculated from dietary TRVs, or 3) ecological fish or decapod thresholds based on tissue-residue TRVs (if available). See Attachment

QAPP Worksheet No. 15. Data Quality Levels and Analytical Methods Evaluation (cont.)

Analyte	CAS Number	DQL (mg/kg ww)[a]	Project Quantitation Limit Goal (mg/kg ww)	Analytical Method[b]		Achievable Laboratory Limits[c]	
				MDL (mg/kg ww)	Method QL (mg/kg ww)	MDL (mg/kg)	QL (mg/kg)

S for human health consumption-based or ecological-based (for benthos, fish, and wildlife) thresholds (and methods) used to derive DQLs. The Region 3 Fish Tissue Screening Levels were derived using a fish consumption rate of 54 g per day and are based on a target risk level of 1E-06 for potential carcinogens; the Fish Tissue Screening Levels for non-carcinogenic compounds have been divided by 10 (hazard quotient of 0.1) to account for potential additive effects. DQLs (including human health and ecological thresholds presented in Attachment S) are very conservative, generic analytical goals used solely for the purpose of evaluating laboratory analytical methods and achievable laboratory limits; these are not project-specific screening levels or preliminary remediation goals. These values will be developed in subsequent phases of the project. If no toxicity thresholds were available, the DQL and/or project quantitation limit goal was determined to be not available (NA). DQLs for alkylated PAHs were based on the parent PAHs presented in Worksheet 15. When two compounds were present, the more conservative parent DQL was used.

[b] Analytical MDLs and QLs are those documented in validated methods. When the method did not publish a value for either the MDL or QL, the value was determined to be not available (NA).

[c] Achievable MDLs and QLs are limits that an individual laboratory can achieve when performing a specific analytical method. Actual MDLs and QLs will vary based on sample-specific factors. The MDL and QLs are the MDLs and QLs for the parent compound. Tissue MDLs and QLs are based on sediment MDLs and QLs. The laboratory conducts MDL studies with spikes that go through the extraction and analytical process; therefore, dry weight or wet weight units do not apply.

[d] A DQL or project quantitation limit goal could not be established because no toxicity thresholds were available.

AET – apparent effects threshold
CAS – Chemical Abstract Service
DQL – data quality level
ERL – effects range – low
HRGC/HRMS – high-resolution gas chromatography/high-resolution mass spectrometry
MDL – method detection limit
NA – not available
NJDEP – New Jersey Department of Environmental Protection
NOAEL – no-observed-adverse-effect level
PRG – preliminary remediation goal
RBC – risk-based concentration
QL – quantitation limit
SW – solid waste
TEL – threshold effects level
TRV – toxicity reference value
USEPA – US Environmental Protection Agency
ww – wet weight

QAPP Worksheet No. 15. Data Quality Levels and Analytical Methods Evaluation (cont.)

Matrix: Tissue

Analytical Group, Method, and Laboratory: Organochlorine pesticides, USEPA 1699 Mod. (NYSDEC HRMS-2), Maxxam Analytics, Mississauga, ON

SOP from Worksheet 23: T5, T6, T7

Concentration Level: Low

Analyte	CAS Number	DQL (mg/kg ww)[a]	Project Quantitation Limit Goal (mg/kg ww)	Analytical Method[b]		Achievable Laboratory Limits[c]	
				MDL (mg/kg ww)	Method QL (mg/kg ww)	MDL (mg/kg ww)	QL (mg/kg ww)
2,4'-DDD	53-19-0	0.0131[d]	0.0131	NA	NA	0.0000604	0.0001
2,4'-DDE	3424-82-6	0.00928[d]	0.00928	NA	NA	0.0000376	0.0001
2,4'-DDT	789-02-6	0.00928[d]	0.00928	NA	NA	0.0000113	0.0001
4,4'-DDD	72-54-8	0.0131	0.0131	NA	NA	0.0000197	0.0001
4,4'-DDE	72-55-9	0.00928	0.00928	NA	NA	0.0000200	0.0001
4,4'-DDT	50-29-3	0.00928	0.00928	NA	NA	0.0000156	0.0001
Aldrin	309-00-2	0.000186	0.000186	NA	NA	0.0000151	0.0001
alpha-BHC	319-84-6	0.000501	0.000501	NA	NA	0.0000152	0.0001
beta-BHC	319-85-7	0.00175	0.00175	NA	NA	0.0000177	0.0001
cis-Chlordane	5103-71-9	0.00901[e]	0.00901	NA	NA	0.0000525	0.0001
cis-Nonachlor	5103-73-1	0.00901[e]	0.00901	NA	NA	0.0000655	0.0001
delta-BHC	319-86-8	0.000501[f]	0.000501	NA	NA	0.0000221	0.0001
Dieldrin	60-57-1	0.000197	0.000197	NA	NA	0.0000338	0.0001
Endosulfan I	959-98-8	0.031[g]	0.031	NA	NA	0.0000939	0.0001
Endosufan II	33213-65-9	0.031[g]	0.031	NA	NA	0.0000661	0.0002
Endosulfan sulfate	1031-07-8	0.031[g]	0.031	NA	NA	0.0000170	0.0001
Endrin	72-20-8	0.010	0.010	NA	NA	0.0000307	0.0001
Endrin aldehyde	7421-93-4	0.010[h]	0.010	NA	NA	0.0000531	0.0001
Endrin ketone	53494-70-5	0.010[h]	0.010	NA	NA	0.0000296	0.0001
gamma-BHC (Lindane)	58-89-9	0.00287	0.00287	NA	NA	0.0000123	0.0001
Hexachlorobenzene	118-74-1	0.00197	0.00197	NA	NA	0.0000049	0.0001
Heptachlor	76-44-8	0.000701	0.000701	NA	NA	0.0000124	0.0001

QAPP Worksheet No. 15. Data Quality Levels and Analytical Methods Evaluation (cont.)

Analyte	CAS Number	DQL (mg/kg ww)[a]	Project Quantitation Limit Goal (mg/kg ww)	Analytical Method[b]		Achievable Laboratory Limits[c]	
				MDL (mg/kg ww)	Method QL (mg/kg ww)	MDL (mg/kg ww)	QL (mg/kg ww)
Heptachlor epoxide	1024-57-3	0.000347	0.000347	NA	NA	0.0000267	0.0001
Methoxychlor	72-43-5	0.05	0.05	NA	NA	0.0005619	0.0001
Oxychlordane	27304-13-8	0.00901[e]	0.00901	NA	NA	0.0000190	0.0001
trans-Chlordane	5103-74-2	0.00901[e]	0.00901	NA	NA	0.0000283	0.0001
trans-Nonachlor	3734-49-4	0.00901[e]	0.00901	NA	NA	0.0000409	0.0001

[a] DQLs based on the lower of: 1) USEPA Region 3 fish tissue screening levels, May 2008 (USEPA 2008a), 2) ecological wildlife thresholds back-calculated from dietary TRVs, or 3) ecological fish or decapod thresholds based on tissue-residue TRVs. See Attachment S for human health consumption-based or ecological-based (for benthos, fish, and wildlife) thresholds (and methods) used to derive DQLs. The Region 3 Fish Tissue Screening Levels were derived using a fish consumption rate of 54 g per day and are based on a target risk level of 1E-06 for potential carcinogens; the Fish Tissue Screening Levels for non-carcinogenic compounds have been divided by 10 (hazard quotient of 0.1) to account for potential additive effects. DQLs (including human health and ecological thresholds presented in Attachment S) are very conservative, generic analytical goals used solely for the purpose of evaluating laboratory analytical methods and achievable laboratory limits; these are not project-specific screening levels or preliminary remediation goals. These values will be developed in subsequent phases of the project.

[b] Analytical MDLs and QLs are those documented in validated methods. When the method did not publish a value for either the MDL or QL, the value was determined to be not available (NA).

[c] Achievable MDLs and QLs are limits that an individual laboratory can achieve when performing a specific analytical method. Actual MDLs and QLs will vary based on sample-specific factors.

[d] The DQL for this analyte was based on the 4,4'-DDD, 4,4'-DDE or 4,4'-DDT DQL.

[e] The DQL for this analyte was based on the chlordane DQL.

[f] The DQL for this analyte was based on the alpha-BHC DQL.

[g] The DQL for this analyte was based on the endosulfan DQL.

[h] The DQL for this analyte was based on the endrin DQL.

BHC – benzene hexachloride
CAS – Chemical Abstract Service
DQL – data quality level
HRMS – high resolution mass spectrometry
MDL – method detection limit
NYSDEC – New York State Department of Environmental Conservation
RBC – risk-based concentration
QL – quantitation limit
TRV – toxicity reference value
USEPA – US Environmental Protection Agency
ww – wet weight

Bold indicates chemicals for which the achievable laboratory limits exceed the project quantitation limit goal.

QAPP Worksheet No. 15. Data Quality Levels and Analytical Methods Evaluation (cont.)

Matrix: Tissue

Analytical Group, Method, and Laboratory: Metals (ICP/MS), USEPA SW-846 6020, Columbia Analytical Services, Kelso, WA

SOP from Worksheet 23: T9, T10

Concentration Level: Low

Analyte	CAS Number	DQL (mg/kg ww)[a]	Project Quantitation Limit Goal (mg/kg ww)	Analytical Method[b]		Achievable Laboratory Limits[c]	
				MDL (mg/kg ww)	Method QL (mg/kg ww)	MDL (mg/kg ww)	QL (mg/kg ww)
Aluminum	7429-90-5	135	135	NA	NA	0.2	2
Antimony	7440-36-0	0.0541	0.0541	NA	NA	0.02	0.05
Arsenic (total)	7440-38-2	0.0021[d]	0.00210	NA	NA	**0.08**	**0.5**
Barium	7440-39-3	27.0	27.0	NA	NA	0.03	0.05
Beryllium	7440-41-7	0.270	0.270	NA	NA	0.007	0.02
Cadmium	7440-43-9	0.135	0.135	NA	NA	0.02	0.02
Cobalt	7440-48-4	0.0406	0.0406	NA	NA	0.003	0.02
Copper	7440-50-8	5.41	5.41	NA	NA	0.08	0.1
Lead	7439-92-1	1.5	1.5	NA	NA	0.008	0.02
Manganese	7439-96-5	18.9	18.9	NA	NA	0.006	0.05
Nickel	7440-02-0	2.70	2.70	NA	NA	0.04	0.2
Silver	7440-22-4	0.676	0.676	NA	NA	0.008	0.02
Thallium	7440-28-0	0.00876	0.00876	NA	NA	0.005	0.02
Titanium	7440-32-6	NA	NA	NA	NA	0.7	2
Zinc	7440-66-6	12.7	12.7	NA	NA	0.09	0.5

[a] DQLs based on the lower of: 1) USEPA Region 3 fish tissue screening levels, May 2008 (USEPA 2008a), 2) ecological wildlife thresholds back-calculated from dietary TRVs, or 3) ecological fish or decapod thresholds based on tissue-residue TRVs (if available). See Attachment S for human health consumption-based or ecological-based (for benthos, fish, and wildlife) thresholds (and methods) used to derive DQLs. The Region 3 Fish Tissue Screening Levels were derived using a fish consumption rate of 54 g per day and are based on a target risk level of 1E-06 for potential carcinogens; the Fish Tissue Screening Levels for non-carcinogenic compounds have been divided by 10 (hazard quotient of 0.1) to account for potential additive effects. DQLs (including human health and ecological thresholds presented in Attachment S) are very conservative, generic analytical goals used solely for the purpose of evaluating laboratory analytical methods and achievable laboratory limits; these are not project-specific screening levels or preliminary remediation goals. These values will be developed in subsequent phases of the project. If no toxicity thresholds were available, the DQL and/or project quantitation limit goal was determined to be not available(NA).

[b] Analytical MDLs and QLs are those documented in validated methods. When the method did not publish a value for either the MDL or QL, the value was determined to be not available (NA).

QAPP Worksheet No. 15. Data Quality Levels and Analytical Methods Evaluation (cont.)

Analyte	CAS Number	DQL (mg/kg ww)[a]	Project Quantitation Limit Goal (mg/kg ww)	Analytical Method[b]		Achievable Laboratory Limits[c]	
				MDL (mg/kg ww)	Method QL (mg/kg ww)	MDL (mg/kg ww)	QL (mg/kg ww)

[c] Achievable MDLs and QLs are limits that an individual laboratory can achieve when performing a specific analytical method. Actual MDLs and QLs will vary based on sample-specific factors.
[d] The DQL for this analyte is based on the inorganic arsenic DQL.

CAS – Chemical Abstract Service
DQL – data quality level
ICP/MS – inductively coupled plasma/mass spectrometry
MDL – method detection limit
NA – not available
RBC – risk-based concentration
QL – quantitation limit
SW – solid waste
TRV – toxicity reference value
USEPA – US Environmental Protection Agency
ww – wet weight

Bold indicates chemicals for which the achievable laboratory limits exceed the project quantitation limit goal.

QAPP Worksheet No. 15. Data Quality Levels and Analytical Methods Evaluation (cont.)

Matrix: Tissue

Analytical Group, Method, and Laboratory: Metals (ICP), USEPA SW-846 6010B, Columbia Analytical Services, Kelso, WA

SOP from Worksheet 23: T9, T11

Concentration Level: Low

Analyte	CAS Number	DQL (mg/kg ww)[a]	Project Quantitation Limit Goal (mg/kg ww)	Analytical Method[b]		Achievable Laboratory Limits[c]	
				MDL (mg/kg ww)	Method QL (mg/kg ww)	MDL (mg/kg ww)	QL (mg/kg ww)
Calcium	7440-70-2	NA[d]	NA	NA	NA	3	10
Chromium	7440-47-3	0.406[e]	0.406	NA	NA	0.07	0.2
Iron	7439-89-6	94.6	94.6	NA	NA	0.7	2
Magnesium	7439-95-4	NA[d]	NA	NA	NA	0.9	2
Potassium	7440-09-7	NA[d]	NA	NA	NA	10	30
Sodium	7440-23-5	NA[d]	NA	NA	NA	5	20
Vanadium	7440-62-2	0.946	0.946	NA	NA	0.09	0.3

[a] DQLs based on the lower of: 1) USEPA Region 3 fish tissue screening levels, May 2008 (USEPA 2008a), 2) ecological wildlife thresholds back-calculated from dietary TRVs, or 3) ecological fish or decapod thresholds based on tissue-residue TRVs (if available). See Attachment S for human health consumption-based or ecological-based (for benthos, fish, and wildlife) thresholds (and methods) used to derive DQLs. The Region 3 Fish Tissue Screening Levels were derived using a fish consumption rate of 54 g per day and are based on a target risk level of 1E-06 for potential carcinogens; the Fish Tissue Screening Levels for non-carcinogenic compounds have been divided by 10 (hazard quotient of 0.1) to account for potential additive effects. DQLs (including human health and ecological thresholds presented in Attachment S) are very conservative, generic analytical goals used solely for the purpose of evaluating laboratory analytical methods and achievable laboratory limits; these are not project-specific screening levels or preliminary remediation goals. These values will be developed in subsequent phases of the project. If no toxicity thresholds were available, the DQL and/or project quantitation limit goal was determined to be not available(NA).

[b] Analytical MDLs and QLs are those documented in validated methods. When the method did not publish a value for either the MDL or QL, the value was determined to be not available (NA).

[c] Achievable MDLs and QLs are limits that an individual laboratory can achieve when performing a specific analytical method. Actual MDLs and QLs will vary based on sample-specific factors.

[d] Essential nutrient.

[e] Value for chromium VI.

CAS – Chemical Abstract Service
DQL – data quality level
ICP – inductively coupled plasma
MDL – method detection limit
NA – not available
RBC – risk-based concentration
QL – quantitation limit
SW – solid waste
TRV – toxicity reference value
USEPA – US Environmental Protection Agency
ww – wet weight

QAPP Worksheet No. 15. Data Quality Levels and Analytical Methods Evaluation (cont.)

Matrix: Tissue

Analytical Group, Method, and Laboratory: Metals (selenium), USEPA SW-846 7742, Columbia Analytical Services, Kelso, WA

SOP from Worksheet 23: T9, T12

Concentration Level: Low

Analyte	CAS Number	DQL (mg/kg ww)[a]	Project Quantitation Limit Goal (mg/kg ww)	Analytical Method[b]		Achievable Laboratory Limits[c]	
				MDL (mg/kg ww)	Method QL (mg/kg ww)	MDL (mg/kg ww)	QL (mg/kg ww)
Selenium	7782-49-2	0.34	0.34	NA	NA	0.02	0.1

[a] DQLs based on the lower of: 1) USEPA Region 3 fish tissue screening levels, May 2008 (USEPA 2008a), 2) ecological wildlife thresholds back-calculated from dietary TRVs, or 3) ecological fish or decapod thresholds based on tissue-residue TRVs. See Attachment S for human health consumption-based or ecological-based (for benthos, fish, and wildlife) thresholds (and methods) used to derive DQLs. The Region 3 Fish Tissue Screening Levels were derived using a fish consumption rate of 54 g per day and are based on a target risk level of 1E-06 for potential carcinogens; the Fish Tissue Screening Levels for non-carcinogenic compounds have been divided by 10 (hazard quotient of 0.1) to account for potential additive effects. DQLs (including human health and ecological thresholds presented in Attachment S) are very conservative, generic analytical goals used solely for the purpose of evaluating laboratory analytical methods and achievable laboratory limits; these are not project-specific screening levels or preliminary remediation goals. These values will be developed in subsequent phases of the project.

[b] Analytical MDLs and QLs are those documented in validated methods. When the method did not publish a value for either the MDL or QL, the value was determined to be not available (NA).

[c] Achievable MDLs and QLs are limits that an individual laboratory can achieve when performing a specific analytical method. Actual MDLs and QLs will vary based on sample-specific factors.

CAS – Chemical Abstract Service
DQL – data quality level
MDL – method detection limit
NA – not available
RBC – risk-based concentration
QL – quantitation limit
SW – solid waste
TRV – toxicity reference value
USEPA – US Environmental Protection Agency
ww – wet weight

QAPP Worksheet No. 15. Data Quality Levels and Analytical Methods Evaluation (cont.)

Matrix: Tissue

Analytical Group, Method, and Laboratory: Inorganic arsenic, USEPA 1632, Brooks Rand Labs, LLC, Seattle, WA

SOP from Worksheet 23: T13

Concentration Level: Low

Analyte	CAS Number	DQL (mg/kg ww)[a]	Project Quantitation Limit Goal (mg/kg ww)	Analytical Method[b]		Achievable Laboratory Limits[c]	
				MDL (mg/kg ww)	Method QL (mg/kg ww)	MDL (mg/kg ww)	QL (mg/kg ww)
Arsenic (inorganic)	7440-38-2	0.00210	0.00210	NA	NA	**0.005**	**0.010**

[a] DQLs based on the lower of: 1) USEPA Region 3 fish tissue screening levels, May 2008 (USEPA 2008a), 2) ecological wildlife thresholds back-calculated from dietary TRVs, or 3) ecological fish or decapod thresholds based on tissue-residue TRVs. See Attachment S for human health consumption-based or ecological-based (for benthos, fish, and wildlife) thresholds (and methods) used to derive DQLs. The Region 3 Fish Tissue Screening Levels were derived using a fish consumption rate of 54 g per day and are based on a target risk level of 1E-06 for potential carcinogens; the Fish Tissue Screening Levels for non-carcinogenic compounds have been divided by 10 (hazard quotient of 0.1) to account for potential additive effects. DQLs (including human health and ecological thresholds presented in Attachment S) are very conservative, generic analytical goals used solely for the purpose of evaluating laboratory analytical methods and achievable laboratory limits; these are not project-specific screening levels or preliminary remediation goals. These values will be developed in subsequent phases of the project.

[b] Analytical MDLs and QLs are those documented in validated methods. When the method did not publish a value for either the MDL or QL, the value was determined to be not available (NA).

[c] Achievable MDLs and QLs are limits that an individual laboratory can achieve when performing a specific analytical method. Actual MDLs and QLs will vary based on sample-specific factors.

CAS – Chemical Abstract Service
DQL – data quality level
MDL – method detection limit
NA – not available
QL – quantitation limit
TRV – toxicity reference value
USEPA – US Environmental Protection Agency
ww – wet weight

Bold indicates chemicals for which the achievable laboratory limits exceed the project quantitation limit goal.

QAPP Worksheet No. 15. Data Quality Levels and Analytical Methods Evaluation (cont.)

Matrix: Tissue

Analytical Group, Method, and Laboratory: Total mercury, USEPA 1631, Brooks Rand Labs, LLC, Seattle, WA

SOP from Worksheet 23: T14, T15

Concentration Level: Low

Analyte	CAS Number	DQL (mg/kg ww)[a]	Project Quantitation Limit Goal (mg/kg ww)	Analytical Method[b]		Achievable Laboratory Limits[c]	
				MDL (mg/kg ww)	Method QL (mg/kg ww)	MDL (mg/kg ww)	QL (mg/kg ww)
Mercury	7439-97-6	0.0086	0.0086	NA	NA	0.00004	0.0001

[a] DQLs based on the lower of: 1) USEPA Region 3 fish tissue screening levels, May 2008 (USEPA 2008a), 2) ecological wildlife thresholds back-calculated from dietary TRVs, or 3) ecological fish or decapod thresholds based on tissue-residue TRVs. See Attachment S for human health consumption-based or ecological-based (for benthos, fish, and wildlife) thresholds (and methods) used to derive DQLs. The Region 3 Fish Tissue Screening Levels were derived using a fish consumption rate of 54 g per day and are based on a target risk level of 1E-06 for potential carcinogens; the Fish Tissue Screening Levels for non-carcinogenic compounds have been divided by 10 (hazard quotient of 0.1) to account for potential additive effects. DQLs (including human health and ecological thresholds presented in Attachment S) are very conservative, generic analytical goals used solely for the purpose of evaluating laboratory analytical methods and achievable laboratory limits; these are not project-specific screening levels or preliminary remediation goals. These values will be developed in subsequent phases of the project.

[b] Analytical MDLs and QLs are those documented in validated methods. When the method did not publish a value for either the MDL or QL, the value was determined to be not available (NA).

[c] Achievable MDLs and QLs are limits that an individual laboratory can achieve when performing a specific analytical method. Actual MDLs and QLs will vary based on sample-specific factors.

CAS – Chemical Abstract Service
DQL – data quality level
MDL – method detection limit
NA – not available
QL – quantitation limit
TRV – toxicity reference value
USEPA – US Environmental Protection Agency
ww – wet weight

QAPP Worksheet No. 15. Data Quality Levels and Analytical Methods Evaluation (cont.)

Matrix: Tissue

Analytical Group, Method, and Laboratory: Methylmercury, USEPA 1630, Brooks Rand Labs, LLC, Seattle, WA

SOP from Worksheet 23: T16

Concentration Level: Low

Analyte	CAS Number	DQL (mg/kg ww)[a]	Project Quantitation Limit Goal (mg/kg ww)	Analytical Method[b]		Achievable Laboratory Limits[c]	
				MDL (mg/kg ww)	Method QL (mg/kg ww)	MDL (mg/kg ww)	QL (mg/kg ww)
Methylmercury	22967-92-6	0.0086	0.0086	NA	NA	0.001	0.003

[a] DQLs based on the lower of: 1) USEPA Region 3 fish tissue screening levels, May 2008 (USEPA 2008a), 2) ecological wildlife thresholds back-calculated from dietary TRVs, or 3) ecological fish or decapod thresholds based on tissue-residue TRVs. See Attachment S for human health consumption-based or ecological-based (for benthos, fish, and wildlife) thresholds (and methods) used to derive DQLs. The Region 3 Fish Tissue Screening Levels were derived using a fish consumption rate of 54 g per day and are based on a target risk level of 1E-06 for potential carcinogens; the Fish Tissue Screening Levels for non-carcinogenic compounds have been divided by 10 (hazard quotient of 0.1) to account for potential additive effects. DQLs (including human health and ecological thresholds presented in Attachment S) are very conservative, generic analytical goals used solely for the purpose of evaluating laboratory analytical methods and achievable laboratory limits; these are not project-specific screening levels or preliminary remediation goals. These values will be developed in subsequent phases of the project.

[b] Analytical MDLs and QLs are those documented in validated methods. When the method did not publish a value for either the MDL or QL, the value was determined to be not available (NA).

[c] Achievable MDLs and QLs are limits that an individual laboratory can achieve when performing a specific analytical method. Actual MDLs and QLs will vary based on sample-specific factors.

CAS – Chemical Abstract Service
DQL – data quality level
MDL – method detection limit
NA – not available
QL – quantitation limit
TRV – toxicity reference value
USEPA – US Environmental Protection Agency
ww – wet weight

QAPP Worksheet No. 15. Data Quality Levels and Analytical Methods Evaluation (cont.)

Matrix: Tissue
Analytical Group, Method, and Laboratory: SVOCs, USEPA 8270C; Alpha Analytical, Mansfield, MA
SOP from Worksheet 23: T17, T18, T19, T20
Concentration Level: Low

Analyte	CAS Number	DQL (mg/kg ww)[a]	Project Quantitation Limit Goal (mg/kg ww)	Analytical Method[b]		Achievable Laboratory Limit[c]	
				MDL (mg/kg ww)	Method QL (mg/kg ww)	MDL (mg/kg)	QL (mg/kg)
1,1'-Biphenyl	92-52-4	6.76	6.76	NA	NA	0.2	0.4
2,2'-Oxybis (1-Chloropropane)	108-60-1	NA	NA	NA	0.660	0.2	0.4
2,4,5-Trichlorophenol	95-95-4	13.5	13.5	NA	0.66	0.2	0.4
2,4,6-Trichlorophenol	88-06-2	0.135	0.135	NA	0.660	**0.2**	**0.4**
2,4-Dichlorophenol	120-83-2	0.406	0.406	NA	0.660	0.4	**0.8**
2,4-Dimethylphenol	105-67-9	2.70	2.70	NA	0.660	0.2	0.4
2,4-Dinitrophenol	51-28-5	0.270	0.270	NA	3.3	**0.8**	**1.6**
2,4-Dinitrotoluene	121-14-2	0.270	0.270	NA	0.660	0.2	**0.4**
2,6-Dinitrotoluene	606-20-2	0.135	0.135	NA	0.660	**0.2**	**0.4**
2-Chloronaphthalene	91-58-7	10.8	10.8	NA	0.660	0.2	0.4
2-Chlorophenol	95-57-8	0.676	0.676	NA	0.660	0.2	0.4
2-Methylnaphthalene[d]	91-57-6	0.541	0.541	NA	0.66	0.2	0.4
2-Methylphenol	95-48-7	6.76	6.76	NA	0.660	0.2	0.4
2-Nitroaniline	88-74-4	0.0406	0.0406	NA	3.30	**0.2**	**0.4**
2-Nitrophenol	88-75-5	40.6[e]	40.6	NA	0.66	0.2	0.4
3,3'-Dichlorobenzidine	91-94-1	0.00701	0.00701	NA	1.30	**0.2**	**0.4**
3-Nitroaniline	99-09-2	0.0406	0.0406	NA	3.3	**0.2**	**0.4**
4,6-Dinitro-2-methylphenol	534-52-1	0.0135	0.0135	NA	3.30	**0.2**	**0.4**
4-Bromophenyl-phenylether	101-55-3	NA	NA	NA	0.66	0.2	0.4
4-Chloro-3-methylphenol	59-50-7	NA	NA	NA	1.3	0.2	0.4
4-Chloroaniline	106-47-8	0.0584	0.0584	NA	1.3	**0.2**	**0.4**
4-Chlorophenyl-phenyl ether	7005-72-3	NA	NA	NA	0.66	0.2	0.4

QAPP Worksheet No. 15. Data Quality Levels and Analytical Methods Evaluation (cont.)

Analyte	CAS Number	DQL (mg/kg ww)[a]	Project Quantitation Limit Goal (mg/kg ww)	Analytical Method[b]		Achievable Laboratory Limit[c]	
				MDL (mg/kg ww)	Method QL (mg/kg ww)	MDL (mg/kg)	QL (mg/kg)
4-Methylphenol	106-44-5	0.676	0.676	NA	0.66	0.2	0.4
4-Nitroaniline	100-01-6	0.0150	0.0150	NA	NA	**0.2**	**0.4**
4-Nitrophenol	100-02-7	40.6	40.6	NA	3.3	0.2	0.4
Acenaphthene[d]	83-32-9	0.24	0.24	NA	0.660	0.2	**0.4**
Acenaphthylene[d]	208-96-8	0.24	0.24	NA	0.660	0.2	**0.4**
Acetophenone	98-86-2	13.5	13.5	NA	NA	0.2	0.4
Anthracene[gd]	120-12-7	0.24	0.24	NA	0.660	0.2	**0.4**
Atrazine	1912-24-9	0.0137	0.0137	NA	NA	**0.2**	**0.4**
Benzaldehyde	100-52-7	13.5	13.5	NA	NA	0.2	0.4
Benzo(a)anthracene[d]	56-55-3	0.00432	0.00432	NA	0.660	**0.2**	**0.4**
Benzo(a)pyrene[d]	50-32-8	0.000432	0.000432	NA	0.660	**0.2**	**0.4**
Benzo(b)fluoranthene[d]	205-99-2	0.00432	0.00432	NA	0.660	**0.2**	**0.4**
Benzo(g,h,i)perylene[d]	191-24-2	0.24	0.24	NA	0.660	0.2	**0.4**
Benzo(k)fluoranthene[d]	207-08-9	0.0432	0.0432	NA	0.660	**0.2**	**0.4**
bis-(2-Chloroethoxy)methane	111-91-1	0.406	0.406	NA	0.660	0.2	0.4
bis-(2-Chloroethyl)ether	111-44-4	0.00287	0.00287	NA	0.660	**0.2**	**0.4**
bis(2-Ethylhexyl)phthalate	117-81-7	0.225	0.225	NA	0.660	0.2	**0.4**
Butylbenzylphthalate	85-68-7	1.24	1.24	NA	0.660	0.2	0.4
Caprolactam	105-60-2	67.6	67.6	NA	NA	0.2	0.4
Carbazole	86-74-8	NA	NA	NA	NA	0.2	0.4
Chrysene[d]	218-01-9	0.24	0.24	NA	0.660	0.2	**0.4**
Dibenzo(a,h)-anthracene[d]	53-70-3	0.000432	0.000432	NA	0.660	**0.2**	**0.4**
Dibenzofuran	132-64-9	NA	NA	NA	0.660	0.2	0.4
Diethylphthalate	84-66-2	1.24	1.24	NA	0.660	0.2	0.4
Dimethylphthalate	131-11-3	NA	NA	NA	0.660	0.2	0.4
Di-n-butylphthalate	84-74-2	0.5	0.5	NA	NA	0.2	0.4
Di-n-octylphthalate	117-84-0	1.24[f]	1.24	NA	0.660	0.2	0.4

QAPP Worksheet No. 15. Data Quality Levels and Analytical Methods Evaluation (cont.)

Analyte	CAS Number	DQL (mg/kg ww)[a]	Project Quantitation Limit Goal (mg/kg ww)	Analytical Method[b]		Achievable Laboratory Limit[c]	
				MDL (mg/kg ww)	Method QL (mg/kg ww)	MDL (mg/kg)	QL (mg/kg)
Fluoranthene[d]	206-44-0	0.24	0.24	NA	0.660	0.2	**0.4**
Fluorene[d]	86-73-7	0.24	0.24	NA	0.660	0.2	**0.4**
Hexachlorobenzene[g]	118-74-1	0.00197	0.00197	NA	0.660	**0.2**	**0.4**
Hexachlorobutadiene	87-68-3	0.0404	0.0404	NA	0.660	**0.2**	**0.4**
Hexachloroethane	67-72-1	0.135	0.135	NA	0.660	**0.2**	**0.4**
Hexchlorocyclopentadiene	77-47-4	0.811	0.811	NA	0.660	0.2	0.4
Indeno(1,2,3-cd)-pyrene[d]	193-39-5	0.00432	0.00432	NA	0.660	**0.2**	**0.4**
Isophorone	78-59-1	3.32	3.32	NA	0.660	0.2	0.4
Naphthalene[d]	91-20-3	0.24	0.24	NA	0.660	0.2	**0.4**
Nitrobenzene	98-95-3	0.0676	0.0676	NA	0.660	**0.2**	**0.4**
n-Nitroso-di-n-propylamine	621-64-7	0.000451	0.000451	NA	0.660	**0.2**	**0.4**
n-Nitrosodiphenylamine	86-30-6	0.644	0.644	NA	0.660	0.2	0.4
Pentachlorophenol	87-86-5	0.0263	0.0263	NA	3.30	**0.2**	**0.4**
Phenanthrene[d]	85-01-8	0.24	0.24	NA	0.660	0.2	**0.4**
Phenol	108-95-2	40.6	40.6	NA	0.660	0.2	0.4
Pyrene[d]	129-00-0	0.24	0.24	NA	0.660	0.2	**0.4**

[a] DQLs are based on the lower of: 1) USEPA Region 3 fish tissue screening levels, May 2008 (USEPA 2008a), 2) ecological wildlife thresholds back-calculated from dietary TRVs, or 3) ecological fish or decapod thresholds based on tissue-residue TRVs (if available.). See Attachment S for human health consumption-based or ecological-based (for benthos, fish, and wildlife) thresholds (and methods) used to derive DQLs. The Region 3 Fish Tissue Screening Levels were derived using a fish consumption rate of 54 g per day and are based on a target risk level of 1E-06 for potential carcinogens; the Fish Tissue Screening Levels for non-carcinogenic compounds have been divided by 10 (hazard quotient of 0.1) to account for potential additive effects. DQLs (including human health and ecological thresholds presented in Attachment S) are very conservative, generic analytical goals used solely for the purpose of evaluating laboratory analytical methods and achievable laboratory limits; these are not project-specific screening levels or preliminary remediation goals. These values will be developed in subsequent phases of the project. If no toxicity thresholds were available, the DQL and/or project quantitation limit goal was determined to be not available (NA).

[b] Analytical MDLs and QLs are those documented in validated methods. When the method did not publish a value for either the MDL or QL, the value was determined to be not available (NA).

QAPP Worksheet No. 15. Data Quality Levels and Analytical Methods Evaluation (cont.)

[c] Achievable MDLs and QLs are limits that an individual laboratory can achieve when performing a specific analytical method. Actual MDLs and QLs will vary based on sample-specific factors.The laboratory conducts MDL studies with spikes that go through the extraction and analytical process; therefore, dry weight or wet weight units do not apply.

[d] Analyte will also be reported from PAH HRGC/HRMS method, the results of the PAH HRGC/HRMS will take precedence over these results. The analytes 1-methylnaphthalene,1-methylphenanthrene, 2,3,5-trimethylnaphthalene, 2,6-dimethylnaphthalene, benzo(e)pyrene, dibenzothiophene, and perylene, originally listed under this method, will be reported by the PAH HRGC/HRMS method only.

[e] The DQL for this analyte is based on the phenol DQL.

[f] The DQL for this analyte is based on the di-n-butyl phthalate DQL.

[g] Analyte will also be reported from the organochlorine pesticide HRGC/HRMS method, the results from the HRGC/HRMS will take precedence over these results.

CAS – Chemical Abstract Service
DQL – data quality level
HRGC – high-resolution gas chromatography
HRMS – high-resolution mass spectrometry
MDL – method detection limit
NA – not available
QL – quantitation limit
SVOC – semivolatile organic compound
TRV – toxicity reference value
USEPA – US Environmental Protection Agency
ww – wet weight

Bold indicates chemicals for which the achievable laboratory limits exceed the project quantitation limit goal.

QAPP Worksheet No. 15. Data Quality Levels and Analytical Methods Evaluation (cont.)

Matrix: Tissue

Analytical Group, Method, and Laboratory: Butyltins, Krone, et al. (1989), Columbia Analytical Services, Kelso, WA

SOP from Worksheet 23: T21, T22

Concentration Level: Low

Analyte	CAS Number	DQL (mg/kg ww)[a]	Project Quantitation Limit Goal (mg/kg ww)	Analytical Method[b]		Achievable Laboratory Limit[c]	
				MDL (mg/kg ww)	Method QL (mg/kg ww)	MDL (mg/kg ww)	QL (mg/kg ww)
Dibutyl tin	14488-53-0	0.0406[d]	0.0406	NA	NA	0.000091	0.001
Monobuyltin	78763-54-9	0.0406[d]	0.0406	NA	NA	0.00020	0.001
Tetrabutyltin	1461-25-2	0.0406[d]	0.0406	NA	NA	0.00018	0.001
Tributyltin	36643-28-4	0.0406	0.0406	NA	NA	0.00033	0.001

[a] DQLs based on the lower of: 1) USEPA Region 3 fish tissue screening levels, May 2008 (USEPA 2008a), 2) ecological wildlife thresholds back-calculated from dietary TRVs, or 3) ecological fish or decapod thresholds based on tissue-residue TRVs (if available.). See Attachment S for human health consumption-based or ecological-based (for benthos, fish, and wildlife) thresholds (and methods) used to derive DQLs. The Region 3 Fish Tissue Screening Levels were derived using a fish consumption rate of 54 g per day and are based on a target risk level of 1E-06 for potential carcinogens; the Fish Tissue Screening Levels for non-carcinogenic compounds have been divided by 10 (hazard quotient of 0.1) to account for potential additive effects. DQLs (including human health and ecological thresholds presented in Attachment S) are very conservative, generic analytical goals used solely for the purpose of evaluating laboratory analytical methods and achievable laboratory limits; these are not project-specific screening levels or preliminary remediation goals. These values will be developed in subsequent phases of the project. If no toxicity thresholds were available, the DQL and/or project quantitation limit goal was determined to be not available(NA).

[b] Analytical MDLs and QLs are those documented in validated methods. When the method did not publish a value for either the MDL or QL, the value was determined to be not available (NA).

[c] Achievable MDLs and QLs are limits that an individual laboratory can achieve when performing a specific analytical method. Actual MDLs and QLs will vary based on sample-specific factors.

[d] The DQL for this analyte was based on the tributyltin DQL.

CAS – Chemical Abstract Service
DQL – data quality level
MDL – method detection limit
NA – not available
RBC – risk-based concentration
QL – quantitation limit
TRV – toxicity reference value
USEPA – US Environmental Protection Agency
ww – wet weight

QAPP Worksheet No. 15. Data Quality Levels and Analytical Methods Evaluation (cont.)

Matrix: Tissue

Analytical Group, Method, and Laboratory: Percent moisture, SM2540G Mod., Alpha Analytical, Mansfield, MA

SOP from Worksheet 23: T24

Concentration Level: NA

Analyte	CAS Number	DQL (%)	Project Quantitation Limit Goal (%)	Analytical Method		Achievable Laboratory Limit	
				MDL (%)	Method QL (%)	MDL (%)	QL (%)
Percent moisture	NA	NA	NA	NA	NA	NA	NA

CAS – Chemical Abstract Service
DQL – data quality level
MDL – method detection limit
NA – not available
QL – quantitation limit
TRV – toxicity reference value
SM – standard method
USEPA – US Environmental Protection Agency

QAPP Worksheet No. 15. Data Quality Levels and Analytical Methods Evaluation (cont.)

Matrix: Tissue

Analytical Group, Method, and Laboratory: Lipids, Bligh-Dyer, Columbia Analytical Services, Kelso, WA

SOP from Worksheet 23: T23

Concentration Level: NA

Analyte	CAS Number	DQL (%)	Project Quantitation Limit Goal (%)	Analytical Method		Achievable Laboratory Limit	
				MDL(%)	Method QL (%)	MDL (%)	QL (%)
Lipids	NA	NA	NA	NA	NA	NA	NA

CAS – Chemical Abstract Service
DQL – data quality level
MDL – method detection limit
NA – not available
QL – quantitation limit
SM – standard methods
TRV – toxicity reference value
USEPA – US Environmental Protection Agency

Appendix K

Laboratory SOPs

PCB Congeners + Lipids	Cape Fear
PCDD/PCDF + Lipids	AXYS
Chlorinated Pesticides	AXYS
Percent Moisture	AXYS
PAH	AXYS
TCL SVOC	Microbac
Metals	Microbac
Total Mercury /Methyl mercury	Microbac
Inorganic Arsenic	Columbia Analytical Services

Appendix K
Laboratory SOPs

Cape Fear SOP
CF-OA-E-003, Revision 1

PCB Congeners by HRGC/HRMS

VERIFY THE VALIDITY OF THIS SOP EACH DAY IN USE

STANDARD OPERATING PROCEDURE

FOR

THE ANALYSIS OF POLYCHLORINATED BIPHENYLS (PCBs)

BY

HIGH-RESOLUTION GAS CHROMATOGRAPHY/HIGH-RESOLUTION MASS SPECTROMETRY (HRGC/HRMS)

(CF-OA-E-003 REVISION 1)

APPLICABLE TO METHOD:
EPA Method 1668B

PROPRIETARY INFORMATION

This document contains proprietary information that is the exclusive property of Cape Fear Analytical, LLC (CFA). No contents of this document may be reproduced or otherwise used for the benefit of others except by express written permission of CFA.

CFA

CFA

CFA's Document Control Officer certifies this document to be a true copy of the fully executed original.

CFA's Document Control Officer certifies this document to be a true copy of the fully executed original.

W. M. Larkins

W. M. Larkins

TABLE OF CONTENTS

1.0 STANDARD OPERATING PROCEDURE FOR THE ANALYSIS OF POLYCHLORINATED BIPHENYLS (PCB) BY HIGH-RESOLUTION GAS CHROMATOGRAPHY/HIGH-RESOLUTION MASS SPECTROMETRY (HRGC/HRMS) 3
2.0 METHOD OBJECTIVE, PURPOSE, CODE AND SUMMARY 3
3.0 APPLICABLE MATRICES 3
4.0 METHOD SCOPE, APPLICABILITY AND DETECTION LIMIT 3
5.0 METHOD VARIATIONS 3
6.0 DEFINITIONS 4
7.0 INTERFERENCES/LIMITATIONS 5
8.0 SAFETY PRECAUTIONS AND WARNINGS 5
9.0 APPARATUS, EQUIPMENT AND INSTRUMENTATION 6
10.0 REAGENTS AND STANDARDS 7
11.0 SAMPLE HANDLING AND PRESERVATION 8
12.0 SAMPLE PREPARATION 8
13.0 QUALITY CONTROL SAMPLES AND REQUIREMENTS 9
14.0 INSTRUMENT CALIBRATION, STANDARDIZATION AND PERFORMANCE 10
15.0 PROCEDURE FOR ANALYSIS AND INSTRUMENT OPERATION 13
16.0 EQUIPMENT AND INSTRUMENT MAINTENANCE 15
17.0 DATA RECORDING, CALCULATION AND REDUCTION METHODS 15
18.0 POLLUTION/CONTAMINATION 16
19.0 DATA REVIEW, APPROVAL AND TRANSMITTAL 17
20.0 CORRECTIVE ACTION FOR OUT-OF-CONTROL OR UNACCEPTABLE DATA 17
21.0 CONTINGENCIES FOR HANDLING THESE SITUATIONS 17
22.0 RECORDS MANAGEMENT 18
23.0 LABORATORY WASTE HANDLING AND DISPOSAL 18
24.0 REFERENCES 18
25.0 HISTORY 18
TABLE 1: METHOD ANALYTES AND PQLS 19
TABLE 3: THEORETICAL ION RATIOS AND CONTROL LIMITS 22
TABLE 4: INITIAL CALIBRATION CONCENTRATIONS 23
TABLE 5: LCS LIMITS 25
TABLE 6: SAMPLE AND LMB RECOVERY LIMITS 26
TABLE 7: CONTINUING CALIBRATION LIMITS 27

1.0 STANDARD OPERATING PROCEDURE FOR THE ANALYSIS OF POLYCHLORINATED BIPHENYLS (PCB) BY HIGH-RESOLUTION GAS CHROMATOGRAPHY/HIGH-RESOLUTION MASS SPECTROMETRY (HRGC/HRMS)

2.0 METHOD OBJECTIVE, PURPOSE, CODE AND SUMMARY

This standard operating procedure (SOP) covers the analytical determination of PCBs according to EPA Method 1668B.

3.0 APPLICABLE MATRICES

Applicable matrices include groundwater, wastewater, surface water, leachate, soil, sediment, sludge, oil, and tissue.

4.0 METHOD SCOPE, APPLICABILITY AND DETECTION LIMIT

4.1 Method 1668B may be used to quantify PCBs that are soluble in methylene chloride and/or toluene. The compounds are separated using a gas chromatograph (GC) and detected using a high-resolution double focusing mass spectrometer (HRMS). Appendix 1 lists the analytes currently analyzed using these methods and their practical quantitation limits.

4.2 The practical quantitation limit (PQL) is the lowest level in the calibration curve. The PQL is the lowest level at which compounds may be accurately quantitated and is compound dependent. The calibration curve typically ranges from 0.5 ng/mL to 2000 ng/mL. These ranges reflect instrument readings, which are in ng/mL (ppb). It should be noted that the calibration range may vary between calibrations and instruments.

4.3 Method detection limit studies (MDLs) are performed and/or verified on an annual basis. MDLs are done for aqueous, solid, and tissue matrices. For more information regarding MDLs, refer to The Determination of Method Detection Limits, CF-LB-E-001.

4.4 Qualified analysts must demonstrate proficiency initially and annually thereafter with an IDOC, CDOC or PT study. Acceptability criteria may be found in the analytical method.

4.4.1 To establish the ability to generate acceptable accuracy and precision, the analyst should perform an "analyst validation study" or Initial Demonstration of Capability. Four LCS standards are extracted and analyzed. Calculate the average recovery and the standard deviation of the recovery for each analyte of interest using the four results. Then compare the average and the standard deviation with the corresponding criteria found in Table 6 of method 1668B. If the average and the standard deviation for all analytes of interest meet the acceptance criteria, then the analyst may begin work on actual samples. If the validation study fails for one or more of the compounds, then the study must be repeated for those compounds which failed.

5.0 METHOD VARIATIONS

5.1 Sample extracts are stored at room temperature to avoid analyte loss. Many of the target analytes in these methods form a strong cohesive bond with solids such as glass in cold temperatures; this type of analyte loss is not addressed in the method. (This is a variance from the following method recommendations: <-10°C per 1668B; -10° to -20° C per DoD QSM.)

5.2 The analytical method does not address the reporting of EDL and EMPC. These values are reported only when requested by the client.

6.0 DEFINITIONS

6.1 Accuracy: The degree of agreement between an observed value and an accepted reference value.

6.2 AlphaLIMS: The Laboratory Information Management System used at CFA, LLC.

6.3 Blank: An aliquot of reagent water or other blank matrix that is treated exactly as a sample including exposure to all glassware, equipment, solvents, reagents, and standard additions that are used with other samples. The LMB (Lab Method Blank) is used to determine if method analytes or other interferences are present in the laboratory environment, the reagents, or the apparatus. Contamination may be derived during sampling, transportation, storage or analysis. The blank may be used to establish a background value.

6.4 Calibration Standard (CAL): An aliquot of a primary standard solution or stock standard solution. The CAL solutions are used to calibrate the instrument response with respect to analyte concentration.

6.5 Calibration Verification Standard (CVS, CCAL): A solution of target analytes with a concentration near the mid-point of the calibration range. It should be obtained from a second source vendor and is used to verify the initial calibration on a basis described in the determinative method.

6.6 Cleanup Standards: Isotopes added prior to cleanup that are used to measure the efficiency of the fractionation step alone. Method 1668B uses three compounds as the Cleanup Standard.

6.7 Duplicate Analysis: The analysis or measurement of the variable of interest performed identically on two field subsamples of the same sample. The results from duplicate analyses are used to evaluate analytical or measurement precision of sample, preservation, or storage internal to the laboratory.

6.8 Estimated Detection Limit (EDL): A calculation of the concentration of a given analyte required to produce a signal with a peak height of at least 2.5 times the background signal level. The EDL is calculated for each congener that is not identified.

6.9 Estimated Maximum Possible Concentration (EMPC): A calculation for a peak characterized by a response with a signal-to-noise ratio of at least 2.5 for both the quantitation ions, and meeting all identification criteria except ion ratio. EMPC is a worst-case estimate of the concentration.

6.10 Extraction Standards: Isotopes added prior to extraction that serve as internal standards for many PCB congeners. In addition, to measure the overall extraction and fractionation efficiencies. Method 1668B names them Labeled Compounds.

6.11 Injection Standards: Isotopes added prior to injection to determine the recoveries of the Extraction and Cleanup Standards. Method 1668B calls them Internal Standards.

6.12 Internal Standard (ISTD): A known amount of standard added to a test portion of a sample as a reference for evaluating the retention time and concentration of dependent analytes and controlling the precision and bias of the applied analytical method.

6.13 Laboratory Control Standard/Duplicate (LCS/LCSD): Aliquots of reagent water or other blank matrix to which known quantities of the method analytes are added in the laboratory. The LCS/LCSD are analyzed exactly like a sample, and the purpose is to determine whether the methodology is in control, and whether the laboratory is capable of making accurate and precise measurements.

6.14 Laboratory Duplicate (DUP): Aliquots of a sample taken from the same container and processed in the same manner under identical laboratory conditions. The aliquot is analyzed independently from the parent sample and the results are compared to measure precision and accuracy.

6.15 Matrix Spike and Matrix Spike Duplicate (MS and MSD): Two separate aliquots of an environmental sample to which known quantities of the method analytes are added in the laboratory. The MS and MSD are analyzed exactly like a sample, and their purpose is to determine whether the sample matrix contributes bias to the analytical results. The concentrations of the analytes in the sample matrix must be determined in a separate aliquot and the measured values in the MS/MSD adjusted. Percent recovery is calculated for both aliquots, and RPD is calculated between the two.

6.16 Method Detection Limit (MDL): The minimum concentration of an analyte that can be identified, measured and reported with 99% confidence that the analyte concentration is greater than zero.

6.17 Precision: The degree to which a set of observations or measurements of the same property, obtained under similar conditions, conform to themselves, a data quality indicator. Precision is usually expressed as standard deviation, variance or range in either absolute or relative terms.

6.18 Quantitation Limits (also PQL, RL): The value at which an instrument can accurately measure an analyte at a specific concentration (i.e., a specific numeric concentration can be quantified). These points are established by the upper and lower limits of the linear calibration range.

7.0 INTERFERENCES/LIMITATIONS

7.1 Contaminants found in extraction glassware, solvents, and other sample processing hardware may jeopardize the integrity of this method.

7.2 Glassware must be scrupulously cleaned as soon as possible after extraction.

7.3 Contamination may also occur in the GC/MS system. High boiling materials tend to build up in the injection port and the front end of the column. The analyst should maintain a thorough working knowledge of keeping the injection port free of contamination, including changing out the septum, injection port liner, O-ring, ferrule, and gold seal.

7.4 Contamination by carryover can occur whenever high-level and low-level samples are sequentially analyzed. To reduce carryover, the sample syringe must be rinsed with solvent between samples. If carryover is suspected, potentially impacted samples should be re-analyzed after any needed maintenance, solvent replacement, and/or cleaning has been done.

8.0 SAFETY PRECAUTIONS AND WARNINGS

METHYLENE CHLORIDE IS A SUSPECTED CARCINOGEN AND A KNOWN SKIN IRRITANT.

PCBs HAVE BEEN TENTATIVELY CLASSIFIED AS KNOWN OR SUSPECTED MAMMALIAN CARCINOGENS.

CONTACT WITH OXIDIZERS MAY GENERATE EXPLOSIVE MIXTURES.

PREVENT SKIN AND EYE CONTACT BY USING SPECIFIED PERSONAL PROTECTIVE EQUIPMENT WHEN MAKING STOCK REAGENTS.

WORK UNDER A HOOD TO PREVENT INHALATION WHEN MAKING STOCK REAGENTS FROM SOLIDS.

8.1 Eye protection should be worn when handling samples, reagents, or standards. NOTE: Contact lenses pose a special problem; soft lenses may absorb irritants and all lenses concentrate them. DO NOT wear contact lenses in the laboratory.

8.2 Treat all chemicals and samples as potential health hazards and reduce exposure to these chemicals to the lowest level possible. CFA maintains a reference file of Material Safety Data Sheets (MSDS) for each chemical and standard. These documents and individual sample MSDS provided by clients are maintained in the laboratory.

8.3 Personal Protective Equipment (PPE)

8.3.1 Gloves and eye protection should be worn when handling reagents, solvents, standards and samples.

8.3.2 Analysts should prepare samples and standards under the hood.

8.4 All samples, chemicals, extracts, and extraction residues must be transferred, delivered, and disposed of safely according to all related SOPs.

8.5 Never leave gas cylinders unchained or untied.

8.6 In the event of an accident or medical emergency, call for help immediately. When time and safety permit, management should be notified of all accidents.

8.7 Fire escape routes are posted in the lab, and all personnel should be familiar with them. In addition, fire safety equipment such as fire extinguishers and fire blankets are located in the lab. Training is available on the proper operation of this equipment.

8.8 The analyst must use care when assembling and operating instrumentation. Check to see that the gas chromatograph equipment is properly assembled and hooked up to the proper gas cylinder and power, referencing the appropriate manual. Analytical equipment must only be operated by qualified personnel.

8.9 For further safety instructions, consult the Safety, Health and Chemical Hygiene Plan, CF-LB-N-001.

9.0 APPARATUS, EQUIPMENT AND INSTRUMENTATION

9.1 Equipment associated with this method includes:

9.1.1 Gas tight syringes

9.1.2 2 mL high recovery (conical) autosampler vials and storage racks

9.1.3 Teflon crimp tops

9.1.4 Crimper/De-crimper

9.1.5 GC Column (SPB-Octyl or equivalent; 30m, 0.25 mm, 0.25 um)

9.1.6 Quartz/Glass injection port liners

9.1.7 Injection port liner O-ring seals

9.1.8 Gold seals

9.1.9 Ferrules

9.1.10 Column cleaving tool

9.1.11 Septa (thermogreen)

9.1.12 0.5-10 uL adjustable air displacement pipette with disposable tips

9.2 Instrumentation

9.2.1 Waters Autospec Premier high resolution mass spectrometer

9.2.2 Agilent 7890 Gas Chromatograph

9.2.2.1 A suggested temperature program follows:

Temperature 1	150° C
Time 1	2.0 min.
Rate	5° C/min.
Temperature 2	180° C
Time 2	1.5°/min
Final Temperature	265° C
Run Time:	55 minutes (may vary due to column length or flow rate)
Solvent Delay:	6.0 min.
Splitless Valve Time:	2.0 min.
Flow:	1.0 mL/min.
Mass Range:	See descriptor definitions (Table 2)

NOTE: These instrument conditions and rates are guidelines which may change.

9.2.3 LEAP Technologies GC PAL Autosampler

9.2.3.1 Suggested parameters:

Sample volume – 1 µL

Air volume – 0.5 µL

Solvent push volume – 1 µL

Number of sample washes - 0

Solvent washes - 30

Sample viscosity wait – 1 second

Number of sample pumps - 0

Injection mode - Fast

10.0 REAGENTS AND STANDARDS

10.1 Reagents and standards

10.1.1 Nonane

10.1.2 Tridecane

10.1.3 Source Standards: Source Standards are purchased directly from vendors and may be diluted to make stock, intermediate, or working standards.

These may include extraction standard, matrix spiking standard, cleanup standard, injection standard, as well as others. Source standards expire per the vendor expiration date or after five years from the date opened, whichever is shorter. Please reference CF-LB-E-007 for further information regarding standards and their preparation.

10.1.4 Initial Calibration (ICAL) Standards: Certified calibration standards are purchased from commercial vendors at a minimum of five concentration levels. One of the calibration standards is at a concentration near, but above, the method detection limit; the others should correspond to the expected range of compounds found in samples. Calibration standards expire after a maximum of five years and should be monitored frequently for signs of degradation.

10.1.5 Calibration Verification Standards (CVS, CCAL, CS3): A certified CVS is purchased from a second source commercial vendor at a concentration that is near to the midpoint of the calibration curve.

10.1.6 Window Defining Mix and Column Performance Mix (WDM and CPM): A standard containing the first and last eluters for each homolog group, as well as the isomers used to demonstrate isomer specificity on the GC column in use. Usually contained in the daily 209 injection mix.

11.0 SAMPLE HANDLING AND PRESERVATION

11.1 Samples have a one year holding time from the date of collection, and a one year holding time from the date of extraction.

11.2 Sample extracts are delivered from the prep lab to the instrument lab and are stored in a darkened hood at room temperature. The extracts are usually grouped according to batches and are accompanied by the batch pull sheet and other pertinent paperwork.

11.3 Custody of samples is monitored using the AlphaLIMS sample tracking system. Each analyst should scan the samples planned to run into their custody prior to analysis.

11.4 All sample extracts should be treated with caution as potential health hazards. Refer to Section 8.0 on safety.

12.0 SAMPLE PREPARATION

12.1 Before extracts can be analyzed on the instrument, they must first be evaporated to 18 uL tridecane (added after cleanup steps) under nitrogen and then spiked with injection standard to set the final volume nominally at 20 µL. A determination must also be made as to whether the extract should be diluted. The decision to dilute a sample extract is based on a number of factors: sample screening, historical data about the sample or sample site, the appearance of the extract (color, viscosity, incidental odor, turbidity, etc.), or regulatory considerations. The experience of the analyst is invaluable in making this determination.

NOTE: Sample extracts may contain multiple layers or sediment. Samples that contain sediment are returned to cleanup. Multiple layers are treated on a case-by-case basis. If the extract can be homogenized, then a uniform sample is achieved. If the extract remains bi-phasic, the PM and client are contacted for further guidance.

12.2 If a sample is to be analyzed without dilution ('neat'), 2 nanograms of injection standard solution is added to the extract using a pipette (2 µL of a 1.0 ng/µL = 100

pg/µL extract concentration). A cap is then placed on the vial and secured by crimping before vortexing the sample to ensure complete mixing and vial wall washing.

12.3 If samples require dilution, the dilution is made using tridecane or appropriate solvent. If not previously added, 2 nanograms of JS is added to the autosampler vial. Dilution prep may involve the addition of supplemental extraction standard (ES) and is documented in the injection prep logbook.

12.4 Once samples are prepped, they are ready to be injected onto the instrument. An autosampler is used to inject standards and sample extracts on the instrument.

12.5 The need for dilution may also be determined after analysis is performed, and may still be performed as above. Under normal circumstances, a sample would be diluted if any chromatographic peaks saturate the detector.

13.0 QUALITY CONTROL SAMPLES AND REQUIREMENTS

Typically a blank (LMB), laboratory control sample (LCS) and laboratory control sample duplicate (LCSD) are extracted and analyzed with each prep batch. Other client requirements may include a matrix spike (MS) and matrix spike duplicate (MSD) or sample duplicate (DUP).

13.1 Blanks

13.1.1 A blank is extracted with each batch of 20 or fewer samples to demonstrate that interferences from glassware, reagents and the analytical system are under control. Blanks are carried through all stages of sample preparation and analysis. An acceptable blank must be below the minimum levels listed in Table 2 of the method for all analytes.

13.1.2 The percent recovery of each labeled standard (extraction and cleanup) is calculated as shown in Sec. 19.1.3. Recoveries must be within the limits in Table 5.

13.2 Laboratory Control Samples and Matrix Spikes

13.2.1 The spiking standard for LCS/LCSDs and MS/MSDs contains all analytes listed in Table 4. For each LCS, LCSD, MS and MSD, the concentration of each analyte and its percent recovery are calculated as shown in Sec.19.1.1 and 19.1.3. Recovered concentrations should be within the limits in Table 5.

13.2.2 If recovery is not within these limits, the data may need to be re-checked for errors, or the samples and QC may need to be re-analyzed. In addition, the instrumentation may need to be checked for performance problems. If the LCS fails to meet acceptance criteria due to low recovery, the associated samples may have to be re-extracted and re-analyzed when possible. If one or more recoveries are high in the LCS and these analytes are not detected in the samples, the event should be documented and data may be reported. If the MS and MSD both fail due to matrix interference and/or dilution, data may be reported provided the associated LCS passes acceptance criteria.

NOTE: Many clients have contract specific criteria that must be considered when evaluating recovery of the Quality Control samples.

13.2.3 The percent recovery of each labeled standard (extraction and cleanup) is calculated as shown in Sec. 19.1.3. Recoveries must be within the limits in Table 5.

13.3 Samples

13.3.1 The percent recovery of each labeled standard (extraction and cleanup) is calculated as shown in Sec. 19.1.3. Recoveries must be within the limits in Table 5.

13.3.2 Calculated EDLs should be below the PQLs in Table 1. Any reported EDLs above the PQLs should be noted in the case narrative.

14.0 INSTRUMENT CALIBRATION, STANDARDIZATION AND PERFORMANCE

14.1 Mass spectrometer performance

14.1.1 The mass spectrometer is operated in electron ionization mode. A static resolving power of at least 10,000 (10 percent valley definition) must be demonstrated at appropriate masses before any analysis is performed. Static resolving power checks must be performed at the beginning and at the end of each 12-hr period of operation. Corrective action must be implemented whenever the resolving power does not meet the requirement.

14.1.1.1 Chromatography time for PCBs exceeds the long term mass stability of the mass spectrometer. Because the instrument is operated in the high-resolution mode, mass drifts of a few ppm (e.g., 5 ppm in mass) can have serious adverse effects on instrument performance. Therefore, a mass drift correction is mandatory. A lock-mass ion from the reference compound PFK is used for tuning the mass spectrometer. The selection of the lock-mass ion is dependent on the masses of the ions monitored within each descriptor. Lock mass ions may be found in the descriptor table, Table 2. The level of the reference compound (PFK) metered into the ion chamber during HRGC/HRMS analyses should be adjusted so that the amplitude of the most intense selected lock-mass ion signal (regardless of the descriptor number) does not exceed 10 percent of the full scale deflection for a given set of detector parameters. Under these conditions, sensitivity changes that might occur during the analysis can be more effectively monitored. NOTE: Excessive PFK (or any other reference substance) may cause noise problems and contamination of the ion source resulting in an increase in downtime for source cleaning.

14.1.2 Documentation of the instrument resolving power must be accomplished by recording the peak profile of the high-mass reference signal (m/z 380.9760) obtained during the above peak matching experiment by using the low mass PFK ion at m/z 304.9824 as a reference. The minimum resolving power of 10,000 must be demonstrated on the high-mass ion while it is transmitted at a lower accelerating voltage than the low-mass reference ion, which is transmitted at full sensitivity. The format of the peak profile representation must allow manual determination of the resolution, i.e., the horizontal axis must be a calibrated mass scale (amu or ppm per division). The result of the peak width measurement (performed at 5 percent of the maximum, which corresponds to the 10 percent valley definition) must appear on the hard copy

and cannot exceed 100 ppm at m/z 380.9760 (or 0.038 amu at that particular mass).

14.2 System Performance

System performance criteria are presented below. The laboratory may use the recommended GC column described in Sec. 9.1.5. The laboratory must document that all applicable system performance criteria were met before sample analysis begins. Sec. 9.2.2.1 provides recommended GC conditions that may be used to satisfy the required criteria. A GC column performance check is required at the beginning of each 12-hr period during which samples are analyzed. A continuing calibration must be performed at the beginning of the sequence.

14.2.1 Daily 209 injection mix

14.2.1.1 Inject 1 µL of the daily 209 injection mix solution (Sec. 10.1.6) and acquire selected ion monitoring (SIM) data within a total cycle time of $\leq$ 1.5 second. The chromatographic separation between congeners 34-TrCB and 23-TrCB, and between congeners 187-HxCB and 182-HxCB, must be resolved with a valley of $\leq$ 40 percent, where:

Valley percent = (x/y) × 100

x = the height of the valley

y = the peak height of the shorter of the two peaks

Congeners 156-HxCB and 157-HxCB must also co-elute within 2 seconds.

14.2.1.2 The daily 209 injection mix contains all 209 PCB congeners, and may thus be used to identify the first and last PCB eluters in each congener group, and in each analytical descriptor. Their retention times are used to determine the seven homologue retention time windows that are used for qualitative (Sec. 15.4.1.1) and quantitative purposes.

14.3 Initial Calibration

14.3.1 Prior to running a multi-level calibration, take precautions to ensure that the instrument meets system performance criteria. The analyst must document that all system performance criteria are met before analyzing an initial calibration.

14.3.2 Initial calibration is required before any samples are analyzed for PCBs and must meet the acceptance criteria in this section. Initial calibration is also required if any routine calibration does not meet the required criteria listed in Sec. 15.3, and at a minimum, annually.

14.3.3 At a minimum, all five high-resolution concentration calibration solutions listed in Table 4 must be used for the initial calibration.

14.3.4 Tune the instrument with PFK to meet the above-specified system performance criteria.

14.3.5 Inject the daily 209 injection mix solution and acquire SIM mass spectral data. The laboratory must not perform any further analysis until it is demonstrated and documented that the criteria listed in Sec. 14.2.1 are met.

14.3.6 By using the same conditions (GC and MS) that produced acceptable results with the 209 injection mix solution, analyze each of the five concentration calibration solutions. Each injection must meet the following ion ratio and signal-to-noise (S/N) requirements:

14.3.6.1 The ratio of integrated ion current for the ions appearing in Table 2 (homologous series quantitation ions) must be within the indicated control limits (set for each homologous series) in Table 3. These ion ratio requirements must be within the specified control limits simultaneously in one run. It is the analyst's responsibility to take corrective action if the ion abundance ratios are outside the limits.

14.3.6.2 For each selected ion current profile (SICP) and for each GC signal corresponding to the elution of a target analyte and of its labeled standards, the S/N ratio must be better than or equal to 10. Manual measurement of S/N is required for any GC peak that has an apparent S/N of less than 15:1. The result of the measurement must appear on the SICP above the GC peak in question. NOTE: An interference with PFK m/z 223.9872 may preclude meeting this requirement for DiCB congeners at the CS0.2 and CS1 calibration levels. If this interference occurs, 10:1 S/N must be met at the CS2 level.

14.3.7 Calculate the relative response factors (RF) for unlabeled target analytes relative to their appropriate internal standards. Also calculate the RFs for the ESs and CSs relative to the appropriate injection standards according to the following formula:

$$RF = \frac{A_x C_{is}}{A_{is} C_x}$$

Where:

Ax = Sum of the Areas of the two characteristic ions for the compound being measured.

Ais = Sum of the Areas of the two characteristic ions for the specific internal standard.

Cis = Concentration of the specific internal standard.

Cx = Concentration of the compound being measured.

The RF is a dimensionless quantity; the units used to express Cis and Cx must be the same.

14.3.8 Because more than five calibration levels may be analyzed, the analyst may choose to deactivate one or more levels globally. If a level is not used, it will be deactivated in the method for all analytes in that calibration mixture. In some cases the upper level(s) of the calibration may be deactivated in order to meet method criteria for single compounds. This practice results in a narrower calibration range. Hits detected above the highest calibration level are re-analyzed at a dilution which brings the analytes into the calibration range. The low standard representing the PQL is not dropped. Please note

that this practice does not represent "cherry picking," which is acknowledged as an unacceptable laboratory practice.

14.3.9 The average RF must be calculated for each compound as follows:

$$RF_{avg} = \frac{\sum_{i=1}^{n} X}{n}$$

Where:

N = number of calibration levels
X_i; i=1 to n, are the compounds RF values for each calibration point

14.3.10 Criteria for acceptable initial calibration

The criteria listed below for acceptable calibration must be met before sample analyses are performed.

14.3.10.1 The percent relative standard deviations for the mean response factors from the unlabeled standards must not exceed ±20 percent.

$$\%RSD = \frac{SD}{\bar{x}} \times 100$$

Where:

RSD = relative standard deviation
$\bar{x}$ = mean of 5 or more initial RFs for a compound
SD = standard deviation of average RFs for a compound

$$SD = \sqrt[2]{\frac{\sum_{i=1}^{n}(X - A)}{n-1}}$$

where:

n = number of calibration levels
X_i; i=1 to n, are the compounds RF values for each calibration point
A = average of the RFs from above

14.3.10.2 The percent relative standard deviations for the mean response factors from the labeled standards must not exceed ±30 percent.

15.0 PROCEDURE FOR ANALYSIS AND INSTRUMENT OPERATION

15.1 Resolution check

15.1.1 At the beginning and end of each 12-hour window, mass resolution must be tuned and/or verified. A static resolving power of at least 10,000 must be demonstrated at appropriate masses before analysis is performed.

15.1.2 Using a PFK molecular leak, tune the instrument to the minimum required resolving power of 10,000 at m/z 330.9792 (for day to day operations, the instrument may be tuned to approximately 11,000). Verify that the exact mass of m/z 380.9760 is within 5 ppm of the required value. Due to the

wide mass ranges required for PCB analysis, resolution may drop to 8000 at either end of the descriptor, but should be >10,000 at the midpoint.

15.2 Daily 209 injection mix

Inject 1 uL of the daily 209 mix. Verify that all column performance and window defining criteria in Section 14.2.1 have been met.

15.3 Continuing Calibration

15.3.1 The initial calibration curve for each compound of interest must be verified once every 12 hours. Inject 1 uL of the CS3 standard.

Calculate the percent difference using:

$$\% \text{ Difference} = \frac{\left|\overline{RF}_i - RF_c\right|}{\overline{RF}_i} \times 100$$

Where:

$\overline{RF}_i$ = average response factor from initial calibration

RF_C = response factor from current CS3

15.3.1.1 If the percent difference for each native analyte is ≤ 30%, and for each labeled analyte is ≤ 50%, the calibration is assumed to be valid. If the criteria are not met, corrective action should be taken. If no source of the problem can be determined after corrective action has been taken, a new initial calibration may need to be generated.

15.3.1.2 All ion ratios must be within the limits in Table 3.

15.4 Sample Analysis

15.4.1 Data Interpretation

15.4.1.1 Qualitative Analysis

For a peak to be identified as a PCB, it must meet all of the criteria listed below.

15.4.1.1.1 The signals for the two m/z's being monitored must be present and maximize within the same two scans.

15.4.1.1.2 The signal-to-noise ratio between the two m/z's must be ≥ 2.5 for each PCB detected in a sample extract, and ≥10 for all PCBs in the calibration and verification standards.

15.4.1.1.3 Ion ratios must be within the limits in Table 3.

15.4.1.1.4 The relative retention time of the peak for a PCB must be within the RRT limits specified in Table 2 of the method.

15.4.1.1.5 Congener overlap, interfering substances, or the loss of chlorine from a higher chlorinated congener may make it difficult to meet all identification criteria. In these cases, an experienced spectrometrist must determine the presence or absence of the congener.

15.4.1.2 Calibration Limit Exceedance

15.4.1.2.1 If a compound in a sample exceeds the upper calibration limit, all subsequent samples must be checked for carryover contamination.

15.4.1.2.2 When a subsequent sample is non-detect for the compound in question, the sequence is again considered acceptable for reporting.

15.4.1.2.3 All affected samples between the exceeding sample and the non-detect sample must be re-analyzed.

16.0 EQUIPMENT AND INSTRUMENT MAINTENANCE

16.1 Preventive maintenance on a HRGC/HRMS system involves the following basic areas:

16.1.1 Vacuum pumps for the inlets, source, and analyzer need a change of oil about every year or when system performance indicates it is needed.

16.1.2 The GC injection port is cleaned as needed, approximately once a week. It is recommended that the septum and injection port liner be replaced at the time of cleaning. Additionally, the gold plated seal should be cleaned or replaced.

16.1.3 Ion source maintenance is usage dependent. The type and quantity of samples that have been injected determine the frequency of ion source cleaning and filament replacement.

16.1.4 Autosampler maintenance is primarily that of cleanliness. Most autosamplers need their moving parts to be clean and lightly lubricated. The most frequent corrective maintenance is that of changing the syringe, usually about once per month.

16.1.5 Instrument maintenance logs are kept with each instrument and serve as a record of all the maintenance that has been done on the instrument.

16.2 Non-Routine Maintenance Procedures (Special, Operational or Failure Mode Maintenance)

16.2.1 Service is provided to the instrument via the analyst, the in-house instrument service engineer, or a technical support specialist from the manufacturer. When instrument failure occurs, different parts of the instrument are isolated to determine the root cause. For example, the injection port may be capped off if a leak is suspected to prove the leak is/is not coming from that source. Instrument maintenance logbooks are kept for each instrument detailing the type of maintenance performed on the instrument and when it was performed. Preventive maintenance visits are scheduled annually for the mass spectrometers.

16.2.2 Analytical GC columns are clipped or replaced when the existing column shows signs of excessive degradation or the inability to properly resolve chromatographic peaks. Excessive peak tailing, poor responses, and baseline disturbances may also indicate that the column needs to be replaced.

17.0 DATA RECORDING, CALCULATION AND REDUCTION METHODS

17.1 Data are evaluated qualitatively and quantitatively using a software program such as Waters MassLynx, or equivalent data system.

17.2 Data are reviewed, and a hard copy is generated. If manual integrations are made, a hard copy of the manual integration is printed and initialed by the analyst and included with the raw data.

17.3 Additional supporting documentation, such as totals pages generated by the software may be included with the data.

17.4 Quantitative Analysis

17.4.1 The concentration (ng/L for aqueous, ng/g for solids) of each identified compound in the sample is calculated as follows:

$$[PCB] = \frac{\left(A_{unk}^{ion1} + A_{unk}^{ion2}\right)}{\left(A_{ES}^{ion1} + A_{ES}^{ion2}\right)} \times \frac{Q_{ES}}{W_{unk} \times D \times \overline{RF}}$$

Where:

A_{unk} and A_{ES} = the integrated area for each ion monitored.
Q_{ES} = the amount of extraction standard added to the sample in nanograms
W_{unk} = the initial sample aliquot size, in liters for waters and in grams for solids.
D = (% moisture in sample)/100, or 1 for waters
$\overline{RF}$ = Average RF from the ICAL for the compound

17.4.2 The concentration of each extraction and cleanup standard is calculated as follows:

$$[ES_{ng}] = \frac{\left(A_{ES}^{ion1} + A_{ES}^{ion2}\right)}{\left(A_{JS}^{ion1} + A_{JS}^{ion2}\right)} \times \frac{Q_{JS}}{\overline{RF}}$$

Where:

A_{ES} and A_{JS} = the integrated area for each ion monitored.
Q_{JS} = the amount of injection standard added to the sample in nanograms
$\overline{RF}$ = Average RF from the ICAL for the compound

The cleanup standard concentration is calculated as above, substituting the area of the individual cleanup standard ions for the extraction standard ions.

17.4.3 Percent recovery is calculated as follows:

$$\%R = \frac{R_{ng}}{S_{ng}} \times 100$$

Where:

R_{ng} = the amount of standard recovered in nanograms.
S_{ng} = the amount of standard spiked in nanograms.

18.0 POLLUTION/CONTAMINATION

18.1 Work area should be maintained free of dust and dirt accumulations.

18.2 Fume hoods are utilized to remove fumes and reduce the risk of airborne contaminants to ensure personnel safety. Hoods are monitored in accordance with CF-FC-E-003 for Fume Hood Face Velocity Performance Checks.

18.3 The laboratory area is restricted to authorized personnel.

19.0 DATA REVIEW, APPROVAL AND TRANSMITTAL

19.1 A review process is used to insure the quality of the data. Raw data are reviewed first by the analyst, then by a second (peer) analyst or a data validator. When the analyst is satisfied that the data have been correctly processed and uploaded to the LIMS, a data report is generated from AlphaLIMS. The AlphaLIMS report along with the raw data and supporting documentation, such as a run log and case narrative, are submitted for review to the data validator or another experienced analyst. The reviewer goes through the raw data as if he/she was working it up for the first time and verifies that they are correct. In addition, he/she must make sure that the data have been correctly entered into AlphaLIMS. AlphaLIMS reports may be self-reviewed. If errors are discovered in either the raw data or the AlphaLIMS report, then the two analysts should discuss the differences and how best to resolve them. In some cases, the peer review process may uncover errors that lead to a sample being re-extracted or re-run. In cases such as these, a nonconformance report (NCR) should be completed and submitted to the Quality department. It is recommended that a copy of the NCR be given to the prep analyst if it involves a re-extraction and that a copy be kept with the original data.

19.2 Once the data review has been completed by the reviewer, the batch is returned to the analyst for corrections (if applicable) and the status is updated from REVW to DONE in AlphaLIMS.

19.3 Data may be transmitted automatically to AlphaLIMS. This automatic "upload" procedure may be activated prior to data review or after data review is complete. In either case, the data recorded in AlphaLIMS are checked by the analyst for accuracy and completeness.

20.0 CORRECTIVE ACTION FOR OUT-OF-CONTROL OR UNACCEPTABLE DATA

Corrective action for out-of-control data may require instrument maintenance, re-analysis, re-extraction, or a more complex set of actions. When troubleshooting measures fail to bring an analytical process or data into control, a nonconformance report and/or corrective action should be initiated in accordance with CF-QS-E-004 for the Documentation of Nonconformance Reporting and Dispositioning and Control of Nonconforming Items, and CF-QS-E-002 for Conducting Corrective Action.

21.0 CONTINGENCIES FOR HANDLING THESE SITUATIONS

Troubleshooting is used to determine the appropriate action to take when an initial or continuing calibration, blank and/or laboratory control sample fails to meet the acceptance criteria defined for the method. Troubleshooting may involve one or more of the following actions:

21.1 If analytes in a multi-point calibration fail to meet specified criteria, additional standards for the failing compounds may need to be reanalyzed. If they still do not meet specifications, instrument maintenance or new standards may be required before work is continued.

21.2 If a continuing calibration fails to meet specified criteria, instrument tuning or inlet maintenance may be required. If these attempts fail, a new initial calibration must be analyzed.

21.3 If a method blank fails to meet defined criteria, the source of contamination should be found and eliminated before proceeding with analysis.

21.4 If a LCS fails to meet specified criteria, the process should be reviewed to identify potential areas for failure. Any problem areas should be corrected before re-extraction or re-analysis is performed.

21.5 If a sample fails to meet recovery or detection limit criteria, the data should be reviewed to determine whether matrix interferences are present, and if further cleanup or a smaller volume extraction might improve recoveries.

22.0 RECORDS MANAGEMENT

22.1 Run logs are generated for each instrument each day that the instrument is run. These run logs serve as records of what is run on the instrument, including samples, QC, calibrations, tunes, etc. Additional information is provided in the run log, including the analyst's initials, run date and time, and file name.

22.2 Raw data are stored in the lab in filing cabinets and/or boxes as long as there is space available. When space runs out, the data are boxed and sent to storage.

22.3 All records generated as a result of this procedure are maintained as quality documents in accordance with CF-QS-E-008 for Quality Records Management and Disposition.

23.0 LABORATORY WASTE HANDLING AND DISPOSAL

Sample extracts that have been run are temporarily stored in case they have to be reanalyzed. Once space is no longer available to keep them in the lab, they are moved to Waste Disposal where they are handled and disposed in accordance with the Laboratory Waste Management Plan, CF-LB-G-001.

24.0 REFERENCES

Method 1668B, “Chlorinated Biphenyl Congeners in Water, Soil, Sediment, Biosolids, and Tissue by HRGC/HRMS,” Rev. B, Nov. 2008. USEPA, Office of Water, Office of Science and Technology, Engineering and Analysis Division, 1200 Pennsylvania Avenue NW, Washington, DC 20460.

25.0 HISTORY

Revision 1: Section 15.4.1.2 added.

TABLE 1: METHOD ANALYTES AND PQLs

PCB Congener (Congener#)	CAS#*	Structure	Practical Quantitation Limits	
			Solid/Tissue (pg/g)	Aqueous (pg/L)
81-TeCB	70362-50-4	3,4,4',5	1	10
77-TeCB	32598-13-3	3,3',4,4'	1	10
114-PeCB	74472-37-0	2,3,4,4',5	1	10
105-PeCB	32598-14-4	2,3,3',4,4'	1	10
118-PeCB	31508-00-6	2,3',4,4',5	1	10
123-PeCB	65510-44-3	2,3',4,4',5'	1	10
126-PeCB	57465-28-8	3,3',4,4',5	1	10
156,157-HxCB	38380-08-4 69782-90-7	2,3,3',4,4',5 2,3,3',4,4',5'	2	20
167-HxCB	52663-72-6	2,3',4,4',5,5'	1	10
169-HxCB	32774-16-6	3,3',4,4',5,5'	1	10
189-HpCB	39635-31-9	2,3,3',4,4',5,5'	1	10

* Chemical Abstract Services number

TABLE 2: MASS DESCRIPTORS

F1	Description*	Mass	Ion
1	13C-MoCB 1	200.0795	M
2	13C-MoCB 2	202.0766	M+2
3	13C-DiCB 1	234.0406	M
4	13C-DiCB 2	236.0376	M+2
5	MoCB 1	188.0393	M
6	MoCB 2	190.0363	M+2
7	DiCB 1	222.0003	M
8	DiCB 2	223.9974	M+2
9	Lock Mass	218.9856	PFK
F2	**Description**	**Mass**	**Ion**
1	13C-DiCB 1	234.0406	M
2	13C-DiCB 2	236.0376	M+2
3	13C-TrCB 1	268.0016	M
4	13C-TrCB 2	269.9986	M+2
5	13C-TeCB 1	301.9626	M
6	13C-TeCB 2	303.9597	M+2
7	DiCB 1	222.0003	M
8	DiCB 2	223.9974	M+2
9	TrCB 1	255.9613	M
10	TrCB 2	257.9584	M+2
11	TeCB 1	289.9224	M
12	TeCB 2	291.9194	M+2
-	DiCB 35 IC	255.9613	M
13	DiCB 35 ICQ	220.9924	M-35Cl
-	TrCB 35 IC	289.9224	M
14	TrCB 35 ICQ	254.9535	M-35Cl
15	Lock Mass	230.9856	PFK
F3	**Description**	**Mass**	**Ion**
1	13C-TrCB 1	268.0016	M
2	13C-TrCB 2	269.9986	M+2
3	13C-TeCB 1	301.9626	M
4	13C-TeCB 2	303.9597	M+2
5	13C-PeCB 1	337.9207	M+2
6	13C-PeCB 2	339.9178	M+4
7	TrCB 1	255.9613	M
8	TrCB 2	257.9584	M+2
9	TeCB 1	289.9224	M
10	TeCB 2	291.9194	M+2
11	PeCB 1	325.8804	M+2
12	PeCB 2	327.8775	M+4
-	TrCB 35 IC	289.9224	M
13	TrCB 35 ICQ	254.9535	M-35Cl
-	TeCB 35 IC	325.8804	M+2
14	TeCB 35 ICQ	288.9145	M-35Cl
-	TrCB 70 IC	325.8804	M+2
15	TrCB 70 ICQ	253.9457	M-35Cl2
16	Lock Mass	330.9792	PFK
F4	**Description**	**Mass**	**Ion**
1	13C-TeCB 1	301.9626	M
2	13C-TeCB 2	303.9597	M+2
3	13C-PeCB 1	337.9207	M+2
4	13C-PeCB 2	339.9178	M+4
5	13C-HxCB 1	371.8817	M+2
6	13C-HxCB 2	373.8788	M+4
7	TeCB 1	289.9224	M
8	TeCB 2	291.9194	M+2
9	PeCB 1	325.8804	M+2
10	PeCB 2	327.8775	M+4
11	HxCB 1	359.8415	M+2
12	HxCB 2	361.8385	M+4
-	TeCB 35 IC	325.8804	M
13	TeCB 35 ICQ	288.9145	M-35Cl
-	PeCB 35 IC	359.8415	M+2
14	PeCB 35 ICQ	322.8756	M-35Cl
-	TeCB 70 IC	359.8415	M+2
15	TeCB 70 ICQ	287.9067	M-35Cl2
16	Lock Mass	330.9792	PFK
F5	**Description**	**Mass**	**Ion**
1	13C-PeCB 1	337.9207	M+2
2	13C-PeCB 2	339.9178	M+4
3	13C-HxCB 1	371.8817	M+2
4	13C-HxCB 2	373.8788	M+4
5	13C-HpCB 1	405.8428	M+2
6	13C-HpCB 2	407.8398	M+4
7	PeCB 1	325.8804	M+2
8	PeCB 2	327.8775	M+4
9	HxCB 1	359.8415	M+2
10	HxCB 2	361.8385	M+4
11	HpCB 1	393.8025	M+2
12	HpCB 2	395.7995	M+4
-	PeCB 35 IC	359.8415	M+2
13	PeCB 35 ICQ	322.8756	M-1
-	HxCB 35 IC	393.8025	M+2
14	HxCB 35 ICQ	356.8366	M-35Cl
-	PeCB 70 IC	393.8025	M+2

15	PeCB 70 ICQ	321.8677	M-35Cl2
16	Lock Mass	330.9792	PFK
F6	**Description**	**Mass**	**Ion**
1	13C-HxCB 1	371.8817	M+2
2	13C-HxCB 2	373.8788	M+4
3	13C-HpCB 1	405.8428	M+2
4	13C-HpCB 2	407.8398	M+4
5	13C-OcCB 1	439.8038	M+2
6	13C-OcCB 2	441.8008	M+4
7	HxCB 1	359.8415	M+2
8	HxCB 2	361.8385	M+4
9	HpCB 1	393.8025	M+2
10	HpCB 2	395.7995	M+4
11	OcCB 1	427.7635	M+2
12	OcCB 2	429.7606	M+4
-	HxCB 35 IC	393.8025	M+2
13	HxCB 35 ICQ	356.8366	M-35Cl
-	HpCB 35 IC	427.7635	M+2
14	HpCB 35 ICQ	390.7976	M-35Cl
-	HxCB 70 IC	427.7635	M+2
15	HxCB 70 ICQ	355.8288	M-35Cl2
16	Lock Mass	380.9760	PFK
F7	**Description**	**Mass**	**Ion**
1	13C-HpCB 1	405.8428	M+2
2	13C-HpCB 2	407.8398	M+4
3	13C-OcCB 1	439.8038	M+2
4	13C-OcCB 2	441.8008	M+4
5	13C-NoCB 1	473.7648	M+2
6	13C-NoCB 2	475.7619	M+4
7	13C-DeCB 1	509.7229	M+4
8	13C-DeCB 2	511.7199	M+6
9	HpCB 1	393.8025	M+2
10	HpCB 2	395.7995	M+4
11	OcCB 1	427.7635	M+2
12	OcCB 2	429.7606	M+4
13	NoCB 1	461.7246	M+2
14	NoCB 2	463.7216	M+4
15	DeCB 1	497.6826	M+4
16	DeCB 2	499.6797	M+6
17	Lock Mass	430.9728	PFK

* IC – Interference Check ion
ICQ – Interference Check Quantitation ion

TABLE 3: THEORETICAL ION RATIOS AND CONTROL LIMITS

Homolog Group	M/Z Forming Ratio	Theoretical Ratio	Lower Limit	Upper Limit
Mono	M/M+2	3.13	2.66	3.60
Di	M/M+2	1.56	1.33	1.79
Tri	M/M+2	1.04	0.88	1.20
Tetra	M/M+2	0.77	0.65	0.89
Penta	M+2/M+4	1.55	1.32	1.78
Hexa	M+2/M+4	1.24	1.05	1.43
Hepta	M+2/M+4	1.05	0.89	1.21
Octa	M+2/M+4	0.89	0.76	1.02
Nona	M+2/M+4	0.77	0.65	0.89
Deca	M+4/M+6	1.16	0.99	1.33

TABLE 4: INITIAL CALIBRATION CONCENTRATIONS

Congener (#)	CS0.2	CS1	CS2	CS3	CS4	CS5
Native Analytes						
2-MoCB (1)	0.2	1	5	50	400	2000
4-MoCB (3)	0.2	1	5	50	400	2000
2,2'-DiCB (4)	0.2	1	5	50	400	2000
4,4'-DiCB (15)	0.2	1	5	50	400	2000
2,2',6'-TrCB (19)	0.2	1	5	50	400	2000
3,4,4'-TrCB (37)	0.2	1	5	50	400	2000
2,2',6,6'-TeCB (54)	0.2	1	5	50	400	2000
3,3',4,4'-TeCB (77)	0.2	1	5	50	400	2000
3,4,4',5-TeCB (81)	0.2	1	5	50	400	2000
2,2',4,6,6'-PeCB (104)	0.2	1	5	50	400	2000
2,3,3',4,4'-PeCB (105)	0.2	1	5	50	400	2000
2,3,4,4',5-PeCB (114)	0.2	1	5	50	400	2000
2,3',4,4',5-PeCB (118)	0.2	1	5	50	400	2000
2',3,4,4',5-PeCB (123)	0.2	1	5	50	400	2000
3,3',4,4',5-PeCB (126)	0.2	1	5	50	400	2000
2,2',4,4',6,6'-HxCB (155)	0.2	1	5	50	400	2000
2,3,3',4,4',5-HxCB (156)	0.2	1	5	50	400	2000
2,3,3',4,4',5'-HxCB (157)	0.2	1	5	50	400	2000
2,3',4,4',5,5'-HxCB (167)	0.2	1	5	50	400	2000
3,3',4,4',5,5'-HxCB (169)	0.2	1	5	50	400	2000
2,2',3,4',5,6,6'-HpCB (188)	0.2	1	5	50	400	2000
2,3,3',4,4',5,5'-HpCB (189)	0.2	1	5	50	400	2000
2,2',3,3',5,5',6,6'-OcCB (202)	0.2	1	5	50	400	2000
2,3,3',4,4',5,5',6-OcCB (205)	0.2	1	5	50	400	2000
2,2',3,3',4,4',5,5',6-NoCB (206)	0.2	1	5	50	400	2000
2,2',3,3',4',5,5',6,6'-NoCB (208)	0.2	1	5	50	400	2000
DeCB (209)	0.2	1	5	50	400	2000
Extraction Standards						
13C12-2-MoCB (1L)	100	100	100	100	100	100
13C12-4-MoCB (3L)	100	100	100	100	100	100
13C12-2,2'-DiCB (4L)	100	100	100	100	100	100
13C12-4,4'-DiCB (15L)	100	100	100	100	100	100
13C12-2,2',6'-TrCB (19L)	100	100	100	100	100	100
13C12-3,4,4'-TrCB (37L)	100	100	100	100	100	100
13C12-2,2',6,6'-TeCB (54L)	100	100	100	100	100	100
13C12-3,3',4,4'-TeCB (77L)	100	100	100	100	100	100
13C12-3,4,4',5-TeCB (81L)	100	100	100	100	100	100
13C12-2,2',4,6,6'-PeCB (104L)	100	100	100	100	100	100
13C12-2,3,3',4,4'-PeCB (105L)	100	100	100	100	100	100
13C12-2,3,4,4',5-PeCB (114L)	100	100	100	100	100	100
13C12-2,3',4,4',5-PeCB (118L)	100	100	100	100	100	100
13C12-2',3,4,4',5-PeCB (123L)	100	100	100	100	100	100
13C12-3,3',4,4',5-PeCB (126L)	100	100	100	100	100	100
13C12-2,2',4,4',6,6'-HxCB (155L)	100	100	100	100	100	100
13C12-2,3,3',4,4',5-HxCB (156L)	100	100	100	100	100	100
13C12-2,3,3',4,4',5'-HxCB (157L)	100	100	100	100	100	100
13C12-2,3',4,4',5,5'-HxCB (167L)	100	100	100	100	100	100
13C12-3,3',4,4',5,5'-HxCB (169L)	100	100	100	100	100	100
13C12-2,2',3,4',5,6,6'-HpCB (188L)	100	100	100	100	100	100
13C12-2,3,3',4,4',5,5'-HpCB (189L)	100	100	100	100	100	100
13C12-2,2',3,3',5,5',6,6'-OcCB (202L)	100	100	100	100	100	100

(CONTD)

13C12-2,3,3',4,4',5,5',6-OcCB (205L)	100	100	100	100	100	100
13C12-2,2',3,3',4,4',5,5',6-NoCB (206L)	100	100	100	100	100	100
13C12-2,2',3,3',4',5,5',6,6'-NoCB (208L)	100	100	100	100	100	100
13C12-DeCB (209L)	100	100	100	100	100	100
Cleanup Standards						
13C12-2,4,4'-TrCB (28L)	100	100	100	100	100	100
13C12-2,3,3',5,5'-PeCB (111L)	100	100	100	100	100	100
13C12-2,2',3,3',5,5',6-HpCB (178L)	100	100	100	100	100	100
Injection Standards						
13C12-2,5-DiCB (9L)	100	100	100	100	100	100
13C12-2,2',5,5'-TeCB (52L)	100	100	100	100	100	100
13C12-2,2',4',5,5'-PeCB (101L)	100	100	100	100	100	100
13C12-2,2',3',4,4',5'-HxCB (138L)	100	100	100	100	100	100
13C12-2,2',3,3',4,4',5,5'-OcCB (194L)	100	100	100	100	100	100

TABLE 5: LCS LIMITS

Native Analytes	Lower %	Upper %
3,3',4,4'-TeCB (77)	71	116
3,4,4',5-TeCB (81)	70	116
2,3,3',4,4'-PeCB (105)	73	117
2,3,4,4',5-PeCB (114)	74	113
2,3',4,4',5-PeCB (118)	81	112
2',3,4,4',5-PeCB (123)	74	109
3,3',4,4',5-PeCB (126)	74	113
2,3,3',4,4',5-HxCB (156)	78	117
2,3,3',4,4',5'-HxCB (157)	78	117
2,3',4,4',5,5'-HxCB (167)	79	107
3,3',4,4',5,5'-HxCB (169)	73	108
2,3,3',4,4',5,5'-HpCB (189)	77	114
Extraction Standards		
13C12-3,3',4,4'-TeCB (77L)	43	105
13C12-3,4,4',5-TeCB (81L)	44	102
13C12-2,3,3',4,4'-PeCB (105L)	52	116
13C12-2,3,4,4',5-PeCB (114L)	39	117
13C12-2,3',4,4',5-PeCB (118L)	51	117
13C12-2',3,4,4',5-PeCB (123L)	52	118
13C12-3,3',4,4',5-PeCB (126L)	54	113
13C12-2,3,3',4,4',5-HxCB (156L)	46	115
13C12-2,3,3',4,4',5'-HxCB (157L)	46	115
13C12-2,3',4,4',5,5'-HxCB (167L)	63	115
13C12-3,3',4,4',5,5'-HxCB (169L)	51	117
13C12-2,3,3',4,4',5,5'-HpCB (189L)	55	112
Cleanup Standards		
13C12-2,4,4'-TrCB (28L)	18	131
13C12-2,3,3',5,5'-PeCB (111L)	64	113
13C12-2,2',3,3',5,5',6-HpCB (178L)	62	133

TABLE 6: SAMPLE AND LMB RECOVERY LIMITS

Extraction Standards	Lower %	Upper %
13C12-3,3',4,4'-TeCB (77L)	31	109
13C12-3,4,4',5-TeCB (81L)	14	127
13C12-2,3,3',4,4'-PeCB (105L)	50	111
13C12-2,3,4,4',5-PeCB (114L)	41	121
13C12-2,3',4,4',5-PeCB (118L)	49	111
13C12-2',3,4,4',5-PeCB (123L)	49	116
13C12-3,3',4,4',5-PeCB (126L)	50	106
13C12-2,3,3',4,4',5-HxCB (156L)	40	120
13C12-2,3,3',4,4',5'-HxCB (157L)	40	120
13C12-2,3',4,4',5,5'-HxCB (167L)	45	118
13C12-3,3',4,4',5,5'-HxCB (169L)	37	117
13C12-2,3,3',4,4',5,5'-HpCB (189L)	47	116
Cleanup Standards		
13C12-2,4,4'-TrCB (28L)	14	131
13C12-2,3,3',5,5'-PeCB (111L)	57	112
13C12-2,2',3,3',5,5',6-HpCB (178L)	57	125

TABLE 7: CONTINUING CALIBRATION LIMITS

Native Analytes	Lower %	Upper %
3,3',4,4'-TeCB (77)	70	130
3,4,4',5-TeCB (81)	70	130
2,3,3',4,4'-PeCB (105)	70	130
2,3,4,4',5-PeCB (114)	70	130
2,3',4,4',5-PeCB (118)	70	130
2',3,4,4',5-PeCB (123)	70	130
3,3',4,4',5-PeCB (126)	70	130
2,3,3',4,4',5-HxCB (156)	70	130
2,3,3',4,4',5'-HxCB (157)	70	130
2,3',4,4',5,5'-HxCB (167)	70	130
3,3',4,4',5,5'-HxCB (169)	70	130
2,3,3',4,4',5,5'-HpCB (189)	70	130
Extraction Standards		
13C12-3,3',4,4'-TeCB (77L)	50	150
13C12-3,4,4',5-TeCB (81L)	50	150
13C12-2,3,3',4,4'-PeCB (105L)	50	150
13C12-2,3,4,4',5-PeCB (114L)	50	150
13C12-2,3',4,4',5-PeCB (118L)	50	150
13C12-2',3,4,4',5-PeCB (123L)	50	150
13C12-3,3',4,4',5-PeCB (126L)	50	150
13C12-2,3,3',4,4',5-HxCB (156L)	50	150
13C12-2,3,3',4,4',5'-HxCB (157L)	50	150
13C12-2,3',4,4',5,5'-HxCB (167L)	50	150
13C12-3,3',4,4',5,5'-HxCB (169L)	50	150
13C12-2,3,3',4,4',5,5'-HpCB (189L)	50	150
Cleanup Standards		
13C12-2,4,4'-TrCB (28L)	60	130
13C12-2,3,3',5,5'-PeCB (111L)	60	130
13C12-2,2',3,3',5,5',6-HpCB (178L)	60	130

Appendix K
Laboratory SOPs

Cape Fear SOP
CF-OA-E-001, Revision 2-1

Sample Processing including
Lipid Extraction and determination

VERIFY THE VALIDITY OF THIS SOP EACH DAY IN USE

STANDARD OPERATING PROCEDURE

FOR

DIOXIN/FURAN/PCB CONGENER SAMPLE PROCESSING

(CF-OA-E-001 REVISION 2)

APPLICABLE TO METHODS:
EPA SW-846 Method 8290A, EPA Method 1613B and EPA Method 1668B

PROPRIETARY INFORMATION

This document contains proprietary information that is the exclusive property of Cape Fear Analytical, LLC (CFA). No contents of this document may be reproduced or otherwise used for the benefit of others except by express written permission of CFA.

CFA

CFA's Document Control Officer certifies this document to be a true copy of the fully executed original.

W. M. Larkins

TABLE OF CONTENTS

1.0 STANDARD OPERATING PROCEDURE FOR DIOXIN/FURAN/PCB CONGENER SAMPLE PROCESSING 3
2.0 METHOD OBJECTIVE, PURPOSE, CODES AND SUMMARY 3
3.0 APPLICABLE MATRICES 3
4.0 METHOD SCOPE, APPLICABILITY AND DETECTION LIMITS 3
5.0 METHOD VARIATIONS 3
6.0 DEFINITIONS 3
7.0 INTERFERENCES/LIMITATIONS 4
8.0 SAFETY PRECAUTIONS AND WARNINGS 4
9.0 APPARATUS, EQUIPMENT AND INSTRUMENTATION 5
10.0 REAGENTS AND STANDARDS 6
11.0 SAMPLE HANDLING AND PRESERVATION 7
12.0 SAMPLE PREPARATION 7
13.0 QUALITY CONTROL SAMPLES AND REQUIREMENTS 15
14.0 INSTRUMENT CALIBRATION, STANDARDIZATION AND PERFORMANCE 16
15.0 PROCEDURE FOR ANALYSIS AND INSTRUMENT OPERATION 16
16.0 EQUIPMENT AND INSTRUMENT MAINTENANCE 16
17.0 DATA RECORDING, CALCULATION AND REDUCTION METHODS 16
18.0 POLLUTION/CONTAMINATION 16
19.0 DATA REVIEW, APPROVAL AND TRANSMITTAL 16
20.0 CORRECTIVE ACTION FOR OUT-OF-CONTROL OR UNACCEPTABLE DATA 16
21.0 CONTINGENCIES FOR HANDLING THESE SITUATIONS 17
22.0 RECORDS MANAGEMENT 17
23.0 LABORATORY WASTE HANDLING AND DISPOSAL 17
24.0 REFERENCES 17
25.0 HISTORY 18
APPENDIX 1: SPIKE PROFILES 18

1.0 STANDARD OPERATING PROCEDURE FOR DIOXIN/FURAN/PCB CONGENER SAMPLE PROCESSING

2.0 METHOD OBJECTIVE, PURPOSE, CODES, AND SUMMARY

2.1 This standard operating procedure provides the necessary instructions for the preparation, extraction and cleanup of environmental samples for analysis by high-resolution GC/MS methods listed below, for the determination of polychlorinated dibenzo-dioxins/furans(PCDDs/PCDFs) and polychlorinated biphenyls (PCBs).

2.2 Solid and tissue samples are homogenized as needed and extracted by soxhlet/Dean-Stark (SDS). Aqueous samples are extracted by continuous liquid-liquid extraction (CLLE). Sample extracts are fractionated and prepared for analysis using a variety of cleanup procedures, including silica gel and florisil column chromatography.

2.3 Analytical methods

- 2.3.1 EPA SW-846 Method 8290A
- 2.3.2 EPA Method 1613B
- 2.3.3 EPA Method 1668B

2.4 Extraction techniques

- 2.4.1 Method 3520C (CLLE)
- 2.4.2 Method 3540C (SDS)

2.5 Cleanup techniques

- 2.5.1 Method 3620C (Florisil)
- 2.5.2 Method 3630C (Silica)

3.0 APPLICABLE MATRICES

This SOP is applicable to solid (soil, sediment, sludge), aqueous (groundwater, surface water, leachate, drinking water) and tissue matrices.

4.0 METHOD SCOPE, APPLICABILITY, AND DETECTION LIMIT

4.1 Calibration ranges and PQLs may be found in the appropriate analytical SOPs.

4.2 Analysts must demonstrate proficiency prior to work under this SOP. Demonstrated proficiency may be in the form of an IDOC or PT study. Records are maintained in the Quality Department.

5.0 METHOD VARIATIONS

5.1 Aqueous samples containing >1% solids are filtered prior to extraction. The aqueous portion is extracted by CLLE, and the filter and solids are extracted by SDS. The fractions are re-combined prior to cleanup.

5.2 Aqueous samples are adjusted to a pH of </= 7 using 50:50 sulfuric acid. Samples with an initial pH >10 are re-checked after acidifying to ensure a pH of </= 7.

6.0 DEFINITIONS

6.1 AlphaLIMS: The Laboratory Information Management System used at CFA, LLC.

6.2 Blank: An aliquot of reagent water or other blank matrix that is treated exactly as a sample including exposure to all glassware, equipment, solvents, reagents, and standard additions that are used with other samples. The LMB (Lab Method Blank) is used to determine if method analytes or other interferences are present in the

laboratory environment, the reagents, or the apparatus. Contamination may be derived during sampling, transportation, storage or analysis. The blank may be used to establish a background value.

6.3 Cleanup Standards: Isotopes added prior to cleanup that are used to measure the efficiency of the fractionation step alone. Method 1613B uses one compound (37Cl4-2378-TCDD) as the Cleanup Standard. Method 1668B uses three compounds as cleanup standards. Method 8290A does not address the use of cleanup standards; CFA chooses to use five labeled compounds for in-house monitoring of fractionation efficiency when performing this method.

6.4 Extraction Standards: Isotopes added prior to extraction that serve as internal standards. In addition, to measure the overall extraction and fractionation efficiencies.

6.5 Laboratory Control Standard/Duplicate (LCS/LCSD): Aliquots of reagent water or other blank matrix to which known quantities of the method analytes are added in the laboratory. The LCS/LCSD are analyzed exactly like a sample, and their purpose is to determine whether the methodology is in control, and whether the laboratory is capable of making accurate and precise measurements.

6.6 Laboratory Duplicate (DUP): Aliquots of a sample taken from the same container and processed in the same manner under identical laboratory conditions. The duplicate aliquot is analyzed independently from the parent sample and the results are compared to measure precision and accuracy.

6.7 Matrix Spike and Matrix Spike Duplicate (MS and MSD): Two separate aliquots of an environmental sample to which known quantities of the method analytes are added in the laboratory. The MS and MSD are analyzed exactly like a sample, and their purpose is to determine whether the sample matrix contributes bias to the analytical results. The concentrations of the analytes in the sample matrix must be determined in a separate aliquot and the measured values in the MS/MSD adjusted. Percent recovery is calculated for both aliquots, and RPD is calculated between the two.

7.0 INTERFERENCES/LIMITATIONS

7.1 Contaminants found in extraction glassware, solvents, and other sample processing hardware may jeopardize the integrity of this method.

7.2 Glassware must be scrupulously cleaned as soon as possible after extraction.

7.3 Reagents and solvents should be purified and tested before use, or alternatively, they should be purchased pre-cleaned by the manufacturer.

7.4 PCB extracts must not be allowed to concentrate to dryness due to the potential for loss of low molecular weight chlorinated biphenyls.

8.0 SAFETY PRECAUTIONS AND WARNINGS

WARNING

METHYLENE CHLORIDE IS A SUSPECTED CARCINOGEN AND A KNOWN SKIN IRRITANT.

NO OCCUPATIONAL EXPOSURE LIMIT FOR DIOXIN HAS BEEN ESTABLISHED. IT IS A KNOWN AND PROBABLE HUMAN CARCINOGEN.

PCBs HAVE BEEN TENTATIVELY CLASSIFIED AS KNOWN OR SUSPECTED HUMAN OR MAMMALIAN CARCINOGENS.

CONTACT WITH OXIDIZERS MAY GENERATE EXPLOSIVE MIXTURES.

PREVENT SKIN AND EYE CONTACT BY USING SPECIFIED PERSONAL PROTECTIVE EQUIPMENT WHEN MAKING STOCK REAGENTS.

WORK UNDER A HOOD TO PREVENT INHALATION WHEN MAKING STOCK REAGENTS FROM SOLIDS.

8.1 Eye protection should be worn when handling samples, reagents, or standards. NOTE: Contact lenses pose a special problem; soft lenses may absorb irritants and all lenses concentrate them. DO NOT wear contact lenses in the laboratory.

8.2 Treat all chemicals and samples as potential health hazards and reduce exposure to these chemicals to the lowest level possible. CFA maintains a reference file of Material Safety Data Sheets (MSDS). These documents and individual sample MSDS provided by clients are maintained in the laboratory.

8.3 Personal Protective Equipment (PPE)

8.3.1 Gloves and eye protection should be worn when handling reagents, solvents, standards and samples.

8.3.2 Analysts should prepare samples and standards under the hood.

8.4 All samples, chemicals, extracts, and extraction residues must be transferred, delivered, and disposed of safely according to all related SOPs.

8.5 Never leave gas cylinders unchained or untied.

8.6 In the event of an accident or medical emergency, call for help immediately. When time and safety permit, management should be notified of all accidents.

8.7 Fire escape routes are posted in the lab, and all personnel should be familiar with them. In addition, fire safety equipment such as fire extinguishers and fire blankets are located in the lab. Training is available on the proper operation of this equipment.

8.8 For further safety instructions, consult the Safety, Health and Chemical Hygiene Plan, CF-LB-N-001.

9.0 APPARATUS, EQUIPMENT AND INSTRUMENTATION

9.1 Equipment associated with this SOP includes:

- Soxhlet/Continuous Liquid-Liquid Extraction Rack
- Soxhlet/Dean-Stark (SDS) glassware apparatus
- Continuous Liquid-Liquid (CLLE) glassware apparatus
- Balances
- Fume hoods
- Turbovap
- Dry weight oven
- Buchner funnels
- Vacuum pump
- 2 L vacuum flask

9.2 Materials and supplies:

- Boiling chips
- Cellulose thimbles
- Spatulas
- Aluminum dry weight pans
- pH strips
- 5 ¾" disposable pipets and rubber pipet bulps
- Filter paper
- Nitrogen
- 60 mL vials with PTFE caps
- 60 mL vial racks
- 25 mL drying columns
- 10 mL drying columns
- Glass wool
- 10-100 µL air displacement pipet and disposable tips
- 100-1000 µL air displacement pipet and disposable tips
- 1000 mL graduated cylinder

10.0 REAGENTS AND STANDARDS

10.1 Reagents, chemicals, and standards:

- Methylene chloride
- Toluene
- Hexane
- Carbon—Carbopack C or equivalent
- Celite
- Tridecane: Plug a 25 mL drying column with glass wool; add 1 g sodium sulfate; add 2 g carbon-coated celite. Percolate the tridecane from the supplier's bottle through the carbon column. Collect into a clean and properly labeled container; document preparation in the Supply Prep logbook.
- Nonane
- Deionized water
- Sodium sulfate
- Concentrated sulfuric acid
- 1 N Sodium hydroxide
- High purity potassium hydroxide
- Neutral silica
- Acid-coated silica: 44.0 g concentrated sulfuric acid to 100 g neutral silica. Add 1 to 2 mL acid to the silica and shake vigorously; continue until all acid has been

added. Document preparation in the Supply Prep logbook; affix appropriate label to jar.

- NaOH-coated silica: 30.0 g 1 N NaOH to 100 g neutral silica. Add 1 to 2 mL base to the silica and shake vigorously; continue until all base has been added. Document preparation in the Supply Prep logbook; affix appropriate label to jar.
- KOH-coated silica: Dissolve 56 g high purity KOH in 300 mL methanol. Add 100 grams neutral silica; stir on hot plate at 60° to 70°C for 1 to 2 hours. Decant liquid and rinse with two 100 mL aliquots methanol. Rinse once with 100 mL methylene chloride. Spread potassium silicate on foil and dry for 1 to 2 hours in a fume hood. Activate at 200 °C for 18 hours. Stir in 37 g neutral silica (This is a deviation from the methods, intended to reduce the strength of the KOH-coated silica to prevent recovery losses in the samples). Document preparation in the Supply Prep logbook; affix appropriate label to jar.
- Florisil
- Source Standards: Source Standards are purchased directly from vendors and may be diluted to make stock, intermediate, or working standards. These include extraction standard, matrix spiking standard, cleanup standard, injection standard. Source standards expire per the vendor expiration date or after five years from the date opened, whichever is shorter. Please reference CF-LB-E-007 for further information regarding standards and their preparation.

11.0 SAMPLE HANDLING AND PRESERVATION

11.1 For method 8290A, samples must be extracted within 30 days of collection. For methods 1613B and 1668B, samples must be extracted within 1 year of collection. Sample extracts have a 45-day holding time from the date of extraction by method 8290A and a 365 day holding time from the date of extraction by 1613B and 1668B. Note that per method 8290A, tissue extracts must be completely analyzed by 45 days from collection.

11.2 Samples should be collected in amber glass containers with PTFE-lined caps.

11.3 Aqueous samples should be checked in the field for the presence of residual chlorine, and if present, preserved with 80 mg sodium thiosulfate. If sample labels do not indicate whether they have been checked/preserved, the samples should be checked at the time of receipt, and preserved if necessary.

11.4 Samples should be maintained at 0 $\leq$ 6 °C after collection until such time as they may be disposed by the laboratory.

11.5 Custody of samples is monitored using the AlphaLIMS sample tracking system. Each analyst should scan the samples planned to extract into their custody.

11.6 All samples and sample extracts should be treated with caution as potential health hazards. Refer to Section 8.0 on safety.

12.0 SAMPLE PREPARATION

12.1 Sample preparation and conditioning

12.1.1 Homogenization of tissue

- Vegetation samples can require special procedures to prevent cross contamination from other matrices. Some vegetation can be difficult to

reduce in particle size and homogenize. Vegetation sample processing is handled on a case-by-case basis with project management to client communication.

12.1.2 Homogenization of tissue

- Tissue samples should be received and maintained at -10 to -20°C. If a sample is received as a whole specimen (fish, rodent, etc.), a project manager should verify with the client which portion of the specimen is to be analyzed.
- If specific portions must be dissected from the whole specimen, the remaining tissue can be refrozen. When the entire sample, usually fish, requires analysis, reduce the sample down to manageable means using a butcher knife.

NOTE: Great care must be exercised when reducing a frozen fish with a knife. Cut-resistant gloves must be worn to protect the hands as well as to hold the fish in place.

- When analyzing specific portions, such as a fillet, dissect the required portion under stringent safety guidelines to prevent injury as well as to ensure the integrity of the sample.
- Once reduced in size or dissected to the appropriate portion, process the tissue through a meat grinder, if required, and collect into an amber glass jar.
- To ensure a homogeneous mixture, grind the sample two more times.
- Record any observations on the bench sheet.

12.1.3 Compositing and aliquotting

Specific procedures for compositing and aliquotting may be found in the following SOPs: CF-LB-E-031 and CF-LB-E-032.

12.1.4 Percent solids determination

Specific procedures for determination of percent solids (moisture content) may be found in SOP CF-OA-E-020.

12.1.5 Percent lipids determination

- Extract the sample by soxhlet using methylene chloride. Do not add tridecane.
- Concentrate the extract to approximately 20 mL and transfer to a tared 60 mL vial.
- Concentrate the extract to dryness in a Turbovap.
- Allow to cool; take an initial weight using an analytical balance.
- Store the extract vial in a dessicator for 12 hours and re-weigh. Continue to perform re-weighs every hour until constant weight is achieved (<1% change).
- Calculate percent lipids as follows:

$$\%L = \frac{R}{W} \times 100$$

Where:
R = weight of dry residue in grams

W = initial weight of sample in grams

12.1.6 Sub-Sampling

Sample matrices and mechanisms of contamination are infinitely variable and require judgments to be made. If the client provides no instructions, it is advisable that experienced analysts decide which sub-sampling techniques are employed. For solid samples, mixing is the preferred process. For liquid samples without obvious layers, the entire container is used and rinsed. Documentation of these two forms of sub-sampling is not required due to the frequency of their use.

All other selected sub-sampling techniques should be documented. If the sample integrity or composition does not match that anticipated by the laboratory, the client must be contacted to confirm or clarify any sub-sampling instructions. An example of a time when client direction is required can be demonstrated with the receipt of a coring sleeve. If upon opening the container, the analyst notices obvious heterogeneous composition of the sample, (clay in one end of the sleeve, and sand at the other end), appropriate instructions from the client must be obtained prior to beginning analysis.

Anytime the analytical result will obviously be biased, it must be documented, and the client should be notified prior to beginning any sub-sampling technique. An example of a time when this occurs is when interferences or target contamination require the use of a reduced extraction volume for a liquid sample preventing a container rinse.

12.2 Sample Extraction

12.2.1 Soxhlet/Dean-Stark (SDS) Extraction

12.2.1.1 Pre-extraction

- Fill 500 mL round-bottom flask with 350 mL extraction solvent (methylene chloride for all tissues and PCB solids; toluene for dioxin/furan solids).
- Add one scoop of boiling chips to the round-bottom and attach soxhlet and Dean-Stark glassware. If pre-extracting for PCB samples, also include the thimble. If samples to be extracted are not extremely wet (i.e. >30% moisture), the Dean-Stark may not be needed.
- Clamp the apparatus securely to the extraction rack and attach the condenser.
- Pull out emergency stops to energize heater controllers.
- Set the heating mantle controller to ‘65’ for toluene or ‘50’ for methylene chloride, turn power switch to ‘on’, and allow to reflux for 3 to 4 hours.
- Turn power switch to ‘off’ and allow apparatus to cool.
- Hit emergency stops to turn off controllers.
- Disassemble condenser and SDS and dump solvent into appropriate waste container.
- Glassware is now prepared for extraction.

12.2.1.2 Extraction of Solid Samples

- Refill the round-bottom flask with 350 mL extraction solvent.

- Add one scoop fresh boiling chips.
- For dioxin/furan extractions, add 500 uL tridecane as a keeper solvent. Do NOT add tridecane for PCB extractions.
- Reassemble the glassware apparatus, clamp securely to the extraction rack.
- Weigh a 10 g dry weight equivalent soil aliquot into a cellulose thimble.
- Add 10 to 15 g sodium sulfate to the thimble and mix thoroughly.
- Place the thimble into the appropriately labeled soxhlet.
- Add the appropriate type and amount of extraction standard (spike) to the thimble (see Appendix 1).
- Attach a Dean-Stark adaptor (if needed) and attach the condenser.
- Allow the sample 1 – 2 hours for equilibration
- Pull out emergency stops.
- Set the heating mantle controller to '65' for toluene or '50' for methylene chloride, turn power switch to 'on', wrap the round-bottom flask with aluminum foil and allow to reflux for 18 to 24 hours.
- At the end of the extraction period, open the stopcock on the soxhlet and allow the solvent to drain to waste.
- When the solvent level reaches 30 to 40 mL, turn off the heating mantle controller and allow the apparatus to cool.
- Hit emergency stops.
- Remove the condenser, Dean-Stark and soxhlet from the round-bottom flask, and place the cellulose thimble into the appropriate waste can.
- Quantitatively transfer the extract from the round-bottom flask to an appropriately labeled 60 mL vial.
- Concentrate the extract under nitrogen in a Turbovap. Dioxin/furan extracts should be concentrated to 500 µL (tridecane) and exchanged with hexane. PCB extracts should be concentrated to approximately 2 to 3 mL to avoid analyte loss. DO NOT TAKE PCB EXTRACTS TO DRYNESS.
- Add the appropriate type and amount of cleanup standard to the extract (see Appendix 1).
- The extract is now ready for cleanup.

12.2.2 Aqueous Extraction

12.2.2.1 Continuous Liquid-Liquid Pre-extraction

- Verify water level in circulation tank.
- Turn the two-way valves to 'extract' and turn on the pump switch to 'extract'. Verify water is flowing.
- Turn on the water heater to 160 °F.

- Add 1 to 2 boiling chips to the concentrator, fill the drying adapter halfway with sodium sulfate, and assemble the glassware apparatus.
- Securely attach the apparatus to the CLLE extraction rack. Attach the water hoses to the concentrator.
- Add 200 mL methylene chloride to the extractor body. Then add 1 L deionized water, being careful not to allow any water into the sidearm.
- Attach the condenser to the apparatus.
- Verify chiller temperature and flow.
- Open the water valves to allow hot water to flow through the concentrator.
- Open the sidearm stopcock to allow methylene chloride to flow over to the drying adapter.
- Allow pre-extraction to run for 3 to 4 hours.
- Close stopcock and allow methylene chloride to concentrate to 15-20 mL.
- Turn off heater, close water valves, turn two-way valves to ‘drain’, and turn pump switch to ‘drain’.
- Once the water has drained, turn the pump switch to ‘off’.
- Remove the concentrator and drying adapter and pour remaining methylene chloride into the appropriate waste container, leaving the boiling chips inside.
- Rinse twice more with methylene chloride and dump to waste.
- Re-attach the drying adapter.
- Remove the extractor body and dump the deionized water and methylene chloride in the appropriate waste container.
- Re-attach the entire apparatus to the extraction rack.
- Glassware is now ready for sample extraction.

12.2.2.2 High- solids (>1%) Procedure

- Remove water sample from the cooler and allow to come to room temperature.
- Pipet 1-2 mL of sample onto a pH strip and record pH on bench sheet.
- Spike the sample with the appropriate type and amount of extraction standard (see Appendix 1)
- Allow sample to equilibrate for 1 – 2 hours
- Place sample on balance and tare.
- Attach large Buchner funnel to 2L vacuum flask.
- Attach vacuum pump hose to vacuum flask.
- Place sheet of glass fiber filter paper inside funnel and rinse with toluene.
- Pull off toluene with vacuum and discard.

- Pour sample into funnel and apply vacuum.
- Reweigh the sample bottle on the tared scale and record the resulting sample volume on the bench sheet.
- Rinse the sample bottle with 50 mL deionized water and add to funnel.
- Continue to pull vacuum until all water has been pulled through the filter.
- Turn off vacuum pump.
- Remove filter paper and place in soxhlet extractor. Extract using procedure in Section 12.2.1.
- Pour water into extractor body and extract using procedure in Section 12.2.2.3. NOTE: SAMPLE HAS ALREADY BEEN SPIKED. DO NOT RESPIKE.

12.2.2.3 Low-solids (<1%) Extraction by Continuous Liquid-Liquid (CLLE)

- Fill extractor body with 250 mL methylene chloride.
- Remove water sample from the cooler and allow to come to room temperature.
- Pipet 1 to 2 mL of sample onto a pH strip and record pH on bench sheet.
- Place sample on balance and tare.
- Shake to thoroughly homogenize the sample, and pour into the appropriately labeled extractor body, being sure the sample does not get into the sidearm.
- Reweigh the sample bottle on the tared scale and record the resulting sample volume on the bench sheet.
- Rinse the sample bottle with 50 mL methylene chloride and pour into the extractor body.
- Spike the sample with the appropriate type and amount of extraction standard (see Appendix 1).
- Allow the sample to equilibrate for 1 – 2 hours.
- Add 2 mL 50:50 sulfuric acid to the extractor body. If initial pH was >10, re-check pH; if still > 7, continue adding acid to achieve a pH </= 7.
- Attach the condenser.
- Turn the two-way valves to ‘extract’ and turn on the pump switch to ‘extract’.
- Turn on the water heater.
- Open the water valves.
- Open the stopcock.
- Allow the sample to extract for 18 to 24 hours.
- Close the stopcock and allow the extract to concentrate down to the nipple of the concentrator. If samples are for PCB analysis, only concentrate to 5 to 10 mL to avoid analyte loss.

- Turn heater off, close water valves, switch two-way valves to 'drain' and turn pump to 'drain'.
- When water has drained, turn pump to 'off'.
- Remove concentrator and drying adapter.
- Pour contents of extractor body into the appropriate waste container.
- Remove drying adapter from concentrator and dump sodium sulfate into appropriate waste container.
- Quantitatively transfer the extract to an appropriately labeled 60 mL vial.
- Add the appropriate type and amount of cleanup standard to the vial. For dioxin/furan extracts, add 100 µL tridecane to the vial.
- Concentrate the extracts down to the 100 µL tridecane in the Turbovap at 45 °C. For PCB extracts, only concentrate down to 2 to 3 mL.
- Remove the vial and cap.
- Extract is now ready for cleanup.

12.2.3 Cleanup Procedures

12.2.3.1 Acid/Base Silica Column (for dioxin/furan samples)

- Insert a glass wool plug into a 25 mL drying column and pack the column from bottom to top as follows: 1 g neutral silica gel, 4 g basic silica gel, 1 g neutral silica gel, 8 g acidic silica gel, 2 g neutral silica gel, 4 g sodium sulfate.
- Rinse the column with 50 mL hexane and catch in a waste container.
- Position a 60 mL vial under the column.
- Quantitatively transfer the extract onto the column.
- Elute the sample with 50 mL hexane.
- Remove the 60 mL vial and cap; position a new 60 mL vial under the column.
- Elute with an additional 50 mL hexane.
- Concentrate the two vials to approximately 5 ml in the Turbovap at 45 °C and combine into one vial.
- If the extract requires additional cleanup, concentrate to approximately 1 to 2 mL and proceed to another cleanup step.
- If the extract is ready for analysis, concentrate to dryness and add 0.5 mL methylene chloride.
- Quantitatively transfer the extract to a labeled GC vial and deliver to the GC/MS analyst.

12.2.3.2 Acid/Base Silica Column (for PCB samples)

- Insert a glass wool plug into a 25 mL drying column and pack the column from bottom to top as follows: 1 g neutral silica gel, 4 g basic silica gel, 1 g neutral silica gel, 8 g acidic silica gel, 2 g neutral silica gel, 4 g sodium sulfate.
- Rinse the column with 50 mL hexane and catch in a waste container.
- Position a 60 mL vial under the column.
- Quantitatively transfer the extract onto the column.
- Elute the sample with 25 mL hexane.
- If the extract requires additional cleanup, concentrate to approximately 1 to 2 mL in the Turbovap at 45 °C and proceed to another cleanup step.
- If the extract is ready for analysis, concentrate to 0.5 mL. DO NOT let PCB extracts go to dryness.
- Quantitatively transfer the extract to a labeled GC vial containing 18 µL nonane and deliver to the GC/MS analyst.

12.2.3.3 Florisil Column (for dioxin/furan samples)

- Insert a glass wool plug into a 10 mL disposable pipet, pack with 1.5 g florisil, and top with 1 g sodium sulfate.
- Rinse the column with 10 mL methylene chloride, 10 mL 2% methylene chloride/hexane, and 10 mL hexane, and discard to waste.
- Quantitatively transfer the extract to the column with hexane.
- Rinse the column with 10 mL hexane.
- Elute with 20 mL 2% methylene chloride/hexane and discard to waste.
- Position a 60 mL vial under the column and elute the sample with 35 mL methylene chloride.
- Concentrate the extract in the Turbovap at 45 °C to approximately 0.5 mL.
- Quantitatively transfer the extract to a labeled GC vial and deliver to the GC/MS analyst.

12.2.3.4 Anthropogenic Isolation Column (for all tissue samples)

- Insert a glass wool plug into a 25 mL drying column and pack the column as follows: 2 g neutral silica gel, 2 g potassium silicate, 2 g sodium sulfate, 10 g acid silica gel, 2 g sodium sulfate.
- Elute the column with 100 mL hexane and collect to a waste container.
- Quantitatively transfer the extract to the column.
- Elute with 200 mL hexane and collect into an appropriate sample container.
- If the sample requires further cleanup, concentrate the extract to approximately 1 to 2 mL hexane in the Turbovap at 45 °C and proceed with another cleanup.

- If no further cleanup is required, concentrate the extract to dryness (for dioxin/furan samples) and add 0.5 mL methylene chloride. For PCB samples, concentrate only to approximately 0.5 mL. DO NOT take PCB samples to dryness.
- Quantitatively transfer the extract to a labeled GC vial and deliver to the GC/MS analyst.

12.2.3.5 Acid/Base Back-Extraction (for PCB samples)

- Partition the extract against 50 mL potassium hydroxide solution.
- Shake for 2 minutes, venting periodically.
- Remove and discard the aqueous layer.
- Repeat until no color is visible in the aqueous layer, to a maximum of four washings.
- Partition the extract against 50 mL sodium chloride solution.
- Discard the aqueous layer.
- Partition the extract against 50 mL sulfuric acid.
- Discard the aqueous layer.
- Repeat until no color is visible in the aqueous layer, to a maximum of four washings.
- Partition the extract against 50 mL sodium chloride solution.
- Discard the aqueous layer.
- Transfer the extract to a drying column containing 7-10 grams sodium sulfate.
- Concentrate the extract to 1 to 2 mL hexane in the Turbovap at 45°C and proceed with additional cleanup steps.

13.0 QUALITY CONTROL SAMPLES AND REQUIREMENTS

13.1 Method Blank (MB)

A method blank is extracted with each extraction batch of 20 samples or less. The method blank should be a reagent-free matrix similar to that of the batch, such as deionized water, glass beads or purified corn oil. The method blank is spiked in the same manner as the samples. The method blank is subjected to the same extraction and cleanup procedures as the samples, and is used as a measure of laboratory contamination. Method blank acceptance criteria may be found in the appropriate analytical SOP.

13.2 Laboratory Control Sample/Laboratory Control Sample Duplicate (LCS/LCSD)

A laboratory control sample is extracted with each extraction batch of 20 samples or less. The LCS should be a reagent-free matrix (as listed above), and is subjected to the same extraction and cleanup procedures. The LCS is spiked with native analytes in addition to the extraction standards added to all samples. The LCS is subjected to the same extraction and cleanup procedures as the samples, and is used as a measure of system performance. A LCSD may also be performed as required by the analytical method. LCS/LCSD acceptance criteria may be found in the appropriate analytical SOP.

13.3 Matrix Spike/Matrix Spike Duplicate (MS/MSD)

A MS/MSD pair may be performed as required by the analytical method, or as requested by a specific client. A matrix spike is a second aliquot of sample which is spiked with native analytes prior to extraction, and is used as another measure of system performance. MS/MSD acceptance criteria (if available) may be found in the appropriate analytical SOP.

14.0 INSTRUMENT CALIBRATION, STANDARDIZATION AND PERFORMANCE

Samples are analyzed using a Waters Autospec Premier high-resolution GC/MS system. Instrument calibration, standardization and performance information may be found in the appropriate analytical SOP.

15.0 PROCEDURE FOR ANALYSIS AND INSTRUMENT OPERATION

Procedures for analysis and instrument operation may be found in the appropriate analytical SOP.

16.0 EQUIPMENT AND INSTRUMENT MAINTENANCE

16.1 Chiller water levels should be checked monthly.

16.2 Chromalox heater water level should be checked each day of use.

16.3 Balance

Procedures for balance calibration and maintenance may be found in SOP CF-LB-E-002 for Balances.

16.4 Fume Hood

Fume hood monitoring and maintenance may be found in SOP CF-FC-E-003.

16.5 Dry weight oven temperature should be verified each day of use.

17.0 DATA RECORDING, CALCULATION AND REDUCTION METHODS

17.1 Data such as sample weights/volumes, dry weights, pH, spike amounts and lot numbers are input to the LIMS.

17.2 Calculations such as percent moisture and percent lipids are calculated in the LIMS.

18.0 POLLUTION/CONTAMINATION

18.1 Work areas should be maintained free of dust and dirt accumulations.

18.2 Whenever possible, work should be performed in a fume hood to reduce the spread of solvent fumes and airborne contaminants.

18.3 Glassware should be washed and prepared in a designated area.

19.0 DATA REVIEW, APPROVAL AND TRANSMITTAL

Bench data are input manually to AlphaLIMS. The data recorded in AlphaLIMS are checked by the analyst for accuracy and completeness.

20.0 CORRECTIVE ACTION FOR OUT-OF-CONTROL OR UNACCEPTABLE DATA

Corrective action for out-of-control data may require instrument maintenance, re-extraction, the use of a new spike mix, or a more complex set of actions. When troubleshooting measures (Section 21) fail to bring an analytical process or data into control, a nonconformance report (NCR) and/or corrective action should be initiated in accordance with CF-QS-E-004 for the Documentation of Nonconformance Reporting and Dispositioning and Control of Nonconforming Items, and CF-QS-E-002 for Conducting Corrective Action.

21.0 CONTINGENCIES FOR HANDLING THESE SITUATIONS

Troubleshooting is used to determine the appropriate action to take when a sample or QC fails to meet defined acceptance criteria. Troubleshooting may involve one or more of the following actions:

21.1 When a method blank fails the defined criteria, the analyst must find and eliminate the source of contamination before proceeding with the analysis. This may involve the further testing of reagents, solvents, equipment or glassware. If the contamination is believed to be from a highly contaminated sample in the batch, the sample may be removed from the batch and the remaining batch re-processed.

21.2 If an extraction standard recovery fails the specified criteria, the sample must be evaluated as to why the failure may have occurred. If matrix interferences are apparent, the extract may need further cleanup steps, or the sample may need to be re-extracted at a reduced weight/volume.

21.3 If any native analyte recoveries in the LCS are outside specified limits, the process should be examined. Corrective action may include repeating the extraction or analysis, utilizing a new spike mix, or more complex actions.

21.4 If normal equipment and software operating procedures do not resolve trouble-shooting efforts, the manuals for software, hardware and other equipment discussed in this SOP are available for consultation and resolution. On-line support may be available from software and instrument manufacturers, as well. Any revisions, repairs or corrective actions required must be documented in accordance with the laboratory's Quality System as described in CF-QS-B-001.

22.0 RECORDS MANAGEMENT

22.1 Bench data logbooks are stored in the lab in storage boxes as long as there is space available. When space runs out, the boxes are sent to off-site storage.

22.2 Records generated as a result of this procedure are maintained as quality documents in accordance with CF-QS-E-008 for Quality Records Management and Disposition.

23.0 METHOD VARIATIONS

EPA Method 3520C, Continuous Liquid-Liquid Extraction and EPA Method 3540C, Soxhlet Extraction include the use and control of laboratory equipment not in use at Cape Fear Analytical, LLC. The laboratory SOP correctly reflects the equipment used to perform the preparatory methods of reference.

24.0 LABORATORY WASTE HANDLING AND DISPOSAL

Laboratory waste is disposed in accordance with the Laboratory Waste Management Plan, CF-LB-G-001.

25.0 REFERENCES

25.1 Test Methods for Evaluating Solid Waste: Laboratory Manual Physical/ Chemical Methods, Volume 1B, SW-846, 3rd Edition, Feb. 2007. Method 8290A, "Polychlorinated Dibenzodioxins (PCDDs) and Polychlorinated Dibenzofurans (PCDFs) by High Resolution Gas Chromatography/ High Resolution Mass Spectrometry (HRGC/HRMS)," Rev. 1, Feb. 2007. USEPA, Office of Solid Waste and Emergency Response, Washington, DC 20460.

25.2 Method 1613, "Tetra- through Octa-Chlorinated Dioxins and Furans by Isotope Dilution HRGC/HRMS," Rev. B, Oct. 1994. USEPA, Office of Water, Engineering and Analysis Division, 401 M Street SW, Washington, DC 20460.

25.3 Method 1668B, "Chlorinated Biphenyl Congeners in Water, Soil, Sediment, Biosolids, and Tissue by HRGC/HRMS", November 2008. USEPA, Office of Water, Office of Science and Technology, Engineering and Analysis Division, 1200 Pennsylvania Avenue NW, Washington, DC 20460.

26.0 HISTORY

Revision 0: New document.
Revision 1: Updated solid reference matrix in Section 13. Added Appendix 1, Spike Profiles. Added vegetation sample processing comments in section 12.1.1.
Revision 2: Clarified pH requirements, revised extraction time to match reference method, re-ordered some bulleted steps to match actual practices, changed to nonane as PCB solvent, added method variation section, added discussion of software and equipment troubleshooting support.

Appendix 1: Spike Profiles

1613	Volume (µL)	[Conc] (ng/µL)	Amt. (ng)	Final Vol. (µL)	[Inst] (pg/µL)	[Sx] (pg/g)
1613ES	40	0.05	2	20	100	200
1613MX (LCS)	40	0.005	0.2		10	20
1613CS	20	0.01	0.2		10	20
8290JS*	20	0.1	2		100	200

8290	Volume (µL)	[Conc] (ng/µL)	Amt. (ng)	Final Vol. (µL)	[Inst] (pg/µL)	[Sx] (pg/g)
8290ES	40	0.05	2	20	100	200
1613MX* (LCS)	40	0.005	0.2		10	20
8290CS	20	0.01	0.2		10	20
8290JS	20	0.1	2		100	200

1668	Volume (µL)	[Conc] (ng/µL)	Amt. (ng)	Final Vol. (µL)	[Inst] (pg/µL)	[Sx] (pg/g)
1668ES	40	0.05	2	20	100	200
1668MX (LCS)	40	0.0125	0.5		25	50
1668CS	40	0.05	2		100	200
1668JS	2	1	2		100	200

* Standard is interchangeable between methods 8290 and 1613

Complete compound lists for each standard may be found in the standards logbook.

Appendix K

Laboratory SOPs

AXYS SOP

MSU-018, Revision 5

(MLA-017 Summary)

Dioxin and Furans (PCDD/PCDF)

By EPA 1613B

ANALYSIS OF POLYCHLORINATED DIOXINS AND FURANS BY EPA METHOD 1613B

Samples are spiked with a suite of isotopically labelled surrogate standards prior to analysis, solvent extracted, and cleaned up through a series of chromatographic columns that may include gel permeation, silica, Florisil, carbon/Celite, and alumina columns. The extract is concentrated and spiked with an isotopically labelled recovery (internal) standard. Analysis is performed using a high-resolution mass spectrometer coupled to a high-resolution gas chromatograph equipped with a DB-5 capillary chromatography column (60 m, 0.25 mm i.d., 0.1 µm film thickness). A second column, DB-225 (30 m, 0.25 mm i.d., 0.15 µm film thickness), is used for confirmation of 2,3,7,8-TCDF identification. All procedures are carried out according to protocols as described in EPA Method 1613B, with the significant modifications summarized below. The data are evaluated against QC criteria presented in Tables 1 and 2.

Method Modifications:

Section 2.1.2

Non-aqueous liquid from multiphase sample is combined with the solid phase and extracted by Dean Stark soxhlet.

Section 7.2.1

Anhydrous sodium sulphate (Na_2SO_4) is purchased in powder form (not granular) and is baked overnight prior to use. There is no solvent rinse with dichloromethane.

Section 7.10

The concentration of the labelled compound spiking solution is 100 ng/mL (except for OCDD which is 200 ng/mL) and the sample spiking volume is 20 µL. The resulting concentrations in the final extracts are as specified in the method.

Section 7.11

The concentration of the clean-up standard spiking solution is 10 ng/mL and the sample spiking volume is 20 µL. The resulting concentration in the final extracts are as specified in the method.

Sections 7.13, 14.0, 15.0

An additional lower level calibration solution, 0.2 times the concentration of CS1, is prepared and included in the initial calibration series. Initial calibration is based on a six-point series.

Section 7.14

The concentration of the PAR spiking solutions is 0.2/1.0/2.0 ng/mL for tetra/penta, hexa, hepta, hexa/octas respectively and the spiking volume is 1 mL. The resulting final concentration in the extracts are as specified in the method.

Section 9.3.3, Table 7

Acceptance criteria for the percent recovery of surrogate standards in samples have been revised. Criteria that are higher than 130% have been lowered to 130%, as presented in Table 1.

CONFIDENTIAL

Section 11.5

Aqueous samples containing >1% visible solids are prepared and extracted using the same procedure as samples containing ≤1% visible solids. This involves extracting the solids by soxhlet and the filtrate by separatory funnel extraction and combining the extract from the two phases.

Section 12.0

Samples with sufficiently low moisture content may be mixed with Na_2SO_4 and extracted using regular soxhlet apparatus in 80:20 toluene:acetone.

Section 12.4

The equilibration time for the sodium sulphate drying step is that required to produce a dry, free flowing powder (minimum thirty minutes). This may be less than the 12-hour minimum specified in EPA 1613B.

Section 12.5.1

Samples are spiked with cleanup standard right after extraction and before reduction; not spiked into the separatory funnels containing the extracts prior to the acid/base wash.

Section 12.6.1.1

Rotary evaporator baths are maintained at 35ºC. Mimic proofs are collected instead of collecting proofs each day and archiving.

Section 13.0

Extracts may be cleaned up on silica, alumina and carbon chromatographic columns using a Fluid Management System (FMS) automated cleanup system.

Section 13.7

Gravimetric lipid analysis is carried out on two subsamples of the extract.

Sections 14.0, 15.0, 16.0, Table 8, Table 9

M/Z channels 354/356 and 366/368 are used to confirm and quantify the native and surrogate penta-substituted dioxins, respectively; this change from the method's specification is made in the instrument method in order to avoid a persistent interference in the 356/358 and 368/370 M/Z channels. The theoretical ratio for the P5CDD M/M+2 ions is 0.61; therefore, the acceptance range is 0.52 - 0.70.

Section 15.3.5, Table 6

Acceptance criteria for calibration verification concentrations have been modified, as presented in Table 1, so that ranges do not exceed 70-130% of the test concentration.

Section 15.5.3 Table 6

Acceptance specifications for OPR concentrations have been modified, as presented in Table 1, so that ranges do not exceed 70-130%.

Section 17.0

$Conc_i$ - the concentrations of target analytes, and the labelled compound concentrations and recoveries, are calculated using the equations below. These procedures are equivalent to those described in the method but are more direct.

CONFIDENTIAL

$$Conc_i = \frac{A_i}{A_{si}} \times \frac{M_{si}}{RRF_{i,si}} \times \frac{1}{M_x}$$

where A_i = summed areas of the primary and secondary m/z's for the analyte peak of interest (compound *i*)

A_{si} = summed areas of the primary and secondary m/z's for the labelled surrogate peak used to quantify *i*)

M_x = mass of sample taken for analysis

M_{si} = mass of labelled surrogate (compound *si*) added to sample as calculated by the concentration of standard spiked (pg/mL) multiplied by the volume spiked (mL)

$RRF_{i,si}$ = mean relative response factor of *i* to *si* from the five-point calibration range and defined individually as:

$$\frac{A_i}{A_{si}} \times \frac{M_{si}}{M_i}$$

Calculation of Surrogate Standard Concentrations and Percent Recoveries:

Concentrations of surrogate standards are calculated using the following equation:

$$Conc_{si} = \frac{A_{si}}{A_{rs}} \times \frac{M_{rs}}{RRF_{si,rs}}$$

and, the percent recoveries of the surrogate standards are calculated using the following equation:

$$\%\text{Recovery} = \frac{A_{si}}{A_{rs}} \times \frac{M_{rs}}{RRF_{si,rs}} \times \frac{1}{M_{si}} \times 100$$

where A_{rs} and A_{si} are the summed peak areas (from the primary and secondary m/z channels) of recovery standard and labelled surrogate added to the sample;
M_{rs} and M_{si} are the masses of recovery standard and labelled surrogate added to the sample, and;
$RRF_{si,rs}$ is the mean relative response factor of the labelled surrogate to the recovery standard as determined by the five-point calibration range and defined individually as:

.

$$\frac{A_{si}}{A_{rs}} \times \frac{M_{rs}}{M_{si}}$$

Section 17.5

Extracts may be diluted with solvent and re-analyzed by GC/MS isotope-dilution to bring the instrumental response to within the linear range of the instrument. For very high-level samples where a smaller sample aliquot may not be representative, extracts may be diluted and re-spiked with labelled quantification standards and re-analyzed by GC/MS to bring the instrumental response analytes within range. Final results may be recovery corrected using the mean recovery of labelled quantification standards.

CONFIDENTIAL

Table 1. QC Acceptance Criteria for PCDD/F in CAL/VER, IPR, OPR and Test Samples[1]

	Test Conc ng/mL	IPR[2]		OPR[3] (%)	I-CAL %	CAL/VER[4] (%)	Labelled Cmpd %Rec. in Sample	
		RSD (%)	X(%)				Warning Limit	Control Limit
Native Compound								
2,3,7,8-TCDD	10	28	83-129	70-130	20	78-129	-	-
2,3,7,8-TCDF	10	20	87-137	75-130	20	84-120	-	-
1,2,3,7,8-PeCDD	50	15	76-132	70-130	20	78-130	-	-
1,2,3,7,8-PeCDF	50	15	86-124	80-130	20	82-120	-	-
2,3,4,7,8-PeCDF	50	17	72-150	70-130	20	82-122	-	-
1,2,3,4,7,8-HxCDD	50	19	78-152	70-130	20	78-128	-	-
1,2,3,6,7,8-HxCDD	50	15	84-124	76-130	20	78-128	-	-
1,2,3,7,8,9-HXCDD	50	22	74-142	70-130	35	82-122	-	-
1,2,3,4,7,8-HxCDF	50	17	82-108	72-130	20	90-112	-	-
1,2,3,6,7,8-HxCDF	50	13	92-120	84-130	20	88-114	-	-
1,2,3,7,8,9-HxCDF	50	13	84-122	78-130	20	90-112	-	-
2,3,4,6,7,8-HxCDF	50	15	74-158	70-130	20	88-114	-	-
1,2,3,4,6,7,8-HpCDD	50	15	76-130	70-130	20	86-116	-	-
1,2,3,4,6,7,8-HpCDF	50	13	90-112	82-122	20	90-110	-	-
1,2,3,4,7,8,9-HpCDF	50	16	86-126	78-130	20	86-116	-	-
OCDD	100	19	86-126	78-130	20	79-126	-	-
OCDF	100	27	74-146	70-130	35	70-130	-	-
Surrogate Standards								
$^{13}C_{12}$-2,3,7,8-TCDD	100	37	28-134	25-130	35	82-121	40-120	25-130
$^{13}C_{12}$-2,3,7,8-TCDF	100	35	31-113	25-130	35	71-130	40-120	24-130
$^{13}C_{12}$-1,2,3,7,8-PeCDD	100	39	27-184	25-150	35	70-130	40-120	25-130
$^{13}C_{12}$-1,2,3,7,8-PeCDF	100	34	27-156	25-130	35	76-130	40-120	24-130
$^{13}C_{12}$-2,3,4,7,8-PeCDF	100	38	16-279	25-130	35	77-130	40-120	21-130
$^{13}C_{12}$-1,2,3,4,7,8-HxCDD	100	41	29-147	25-130	35	85-117	40-120	32-130
$^{13}C_{12}$-1,2,3,6,7,8-HxCDD	100	38	34-122	25-130	35	85-118	40-120	28-130
$^{13}C_{12}$-1,2,3,4,7,8-HxCDF	100	43	27-152	25-130	35	76-130	40-120	26-130
$^{13}C_{12}$-1,2,3,6,7,8-HxCDF	100	35	30-122	25-130	35	70-130	40-120	26-123
$^{13}C_{12}$-1,2,3,7,8,9-HxCDF	100	40	24-157	25-130	35	74-130	40-120	29-130
$^{13}C_{12}$-2,3,4,6,7,8-HxCDF	100	37	29-136	25-130	35	73-130	40-120	28-130
$^{13}C_{12}$-1,2,3,4,6,7,8-HpCDD	100	35	34-129	25-130	35	72-130	40-120	23-130
$^{13}C_{12}$-1,2,3,4,6,7,8-HpCDF	100	41	32-110	25-130	35	78-129	40-120	28-130
$^{13}C_{12}$-1,2,3,4,7,8,9-HpCDF	100	40	28-141	25-130	35	77-129	40-120	26-130
$^{13}C_{12}$-OCDD	200	48	20-138	25-130	35	70-130	25-120	17-130
Cleanup Standard								
$^{37}Cl_4$-2,3,7,8-TCDD	10	36	39-154	31-130	35	79-127	40-120	35-130

[1] QC acceptance criteria for IPR, OPR, and samples based on a 20 µL extract final volume
[2] IPR: Initial Precision and Recovery demonstration
[3] OPR: Ongoing Precision and Recovery test run with every batch of samples.
[4] CAL VER: Calibration Verification test run at least every 12 hours

Table 2. QC Specifications for QC Samples, Instrumental Analysis, and Analyte Quantification

QC Parameter	Specification
Analysis Duplicate	Must agree to within ±20% of the mean (applicable to concentrations >10 times the DL)[1]
Procedural Blank	**Blood:** TCDD/F <0.2 pg/sample, PeCDD/F <0.5 pg/sample, HxCDD/F and HpCDD/F <1.0 pg/ sample, OCDD/F<5 pg/sample **Other Matrices:** TCDD/F <0.5 pg/sample, PeCDD/F, HxCDD/F, HpCDD/F <1.0 pg/sample, OCDD/F <5 pg/sample Higher levels acceptable where all sample concentrations a >10X the blank
Detection Limit	SDL Requirements **Blood:** Tetra-penta-CDD/F 0.2 pg/sample Hexa-octa-CDD/F 0.5 pg/sample **Other Matrices**: 1 pg/sample
Instrument Carryover: **Toluene Blank** **Samples**	A. 1st toluene blank following CAL-VER must have <0.6 pg TCDD and <19 pg OCDD B. 2nd toluene blank following CAL-VER must have <0.2 pg TCDD and <3 pg OCDD <10% contribution from preceding sample (based on observed instrument carryover rate)
Analyte/Surrogate Ratios	Response must be within the calibrated range of the instrument. Coders may use data from more than one chromatogram to get the responses in the calibrated range.
Ion Ratios	Must be within ±15% of theoretical
Sensitivity	S:N≥10:1 for all compounds for 0.1 pg/µL (CS-0.2), plus For bloods: S:N≥3:1 for 0.025 pg/µL 2,3,7,8-T4CDD

[1] Duplicate criterion is a guideline; final assessment depends upon sample characteristics, overall batch QC and on-going lab performance.

CONFIDENTIAL

Appendix K

Laboratory SOPs

AXYS SOP

SLA-020, Revision 2

Gravimetric Lipid Determination by Weight of Extract

This document is the property of AXYS Analytical Services Ltd and contains proprietary and confidential information.
It may not be reproduced or distributed without the written permission of the owner. Copyright 14-Apr-2004.
AXYS Analytical Services Ltd, PO Box 2219, Sidney, BC, Canada, V8L 3S8. Tel. (250) 655-5800 FAX (250) 655-5811

AXYS Analytical Services Ltd.
Standard Operating Procedure

Purpose:

To determine the lipid content (expressed as a percent of sample weight) of a tissue sample.

Scope:

When required by contract, a lipid determination on a tissue sample is performed on a tissue sample extract, prior to any chromatographic clean-up procedures. A Chemist working in the Extraction Lab performs the analysis. The percent lipid determination for a tissue sample is carried out in duplicate on the same extract. The Project Chemist selects the analysis in which the lipid determination is carried out if more than one analysis is being performed. The data are entered into a spreadsheet that calculates the results. The data are saved in the LIMS (Laboratory Information Management System).

Equipment and Materials:

Top loading balance – accurate to 2 decimal places
Analytical Balance – accurate to 4 decimal places
Drying oven (Fisher Isotemp Oven 200 Series, Lab-Line Heet-Cab No.3515) maintained at 105℃.
Solvents- high purity, distilled in glass, either HPLC grade or pesticide residue grade. Each lot number of solvent must be checked for impurities by performing a solvent proof prior to use
Rotary Evaporator - equipped with a water bath or
Kuderna Danish Concentration Apparatus - equipped with a water bath
Pasteur pipettes
Glass petri dishes

Glassware Cleaning

All glassware must be organically clean. Glassware must be washed and baked using standard operating procedures (SLA-001). If baked glassware is not available, glassware must be washed and solvent rinsed following standard operating procedures (SLA-018).

Procedure:

Record all weights on the sample worksheet.

This document is the property of AXYS Analytical Services Ltd and contains proprietary and confidential information.
It may not be reproduced or distributed without the written permission of the owner. Copyright 14-Apr-2004.
AXYS Analytical Services Ltd, PO Box 2219, Sidney, BC, Canada, V8L 3S8. Tel. (250) 655-5800 FAX (250) 655-5811

1. Prior to beginning the sample extraction, weigh each *labelled* round-bottom or Kuderna-Danish flask (including anti-bumping granules) that will be used to collect the sample extract on a top loading balance. Record each weight to two decimal places.

2. When the extraction procedure is complete, concentrate the extract to 10-20 mL using rotary evaporation or Kuderna-Danish concentration techniques.

3. Allow the flask to achieve room temperature. Ensure the outside of the flask is dry. Place the flask on a top loading balance.

4. Add sufficient solvent* to bring the weight of the extract to 30 g. Record the weight of the extract (W_{te}) to two decimal places.

   * Add hexane to extracts that are in hexane or in 1:1 hexane:dichloromethane.
   Add dichloromethane to extracts in 100% dichloromethane.

5. Label and accurately weigh two prebaked glass petri dishes on the analytical balance. Record the weight of each dish to four decimal places.

6. Place a petri dish on the top loading balance and tare to zero. Transfer a 2 g subsample of extract to the petri dish using a glass Pasteur pipette and bulb. Record the weight (W_{le}) of the extract to two decimal places.

7. Repeat Step 6 with the second petri dish and subsample. The extract has been subsampled twice, one subsample in each petri dish.

8. Place the petri dishes with extracts in a fumehood at room temperature until the solvent is evaporated, approximately 15 minutes.

9. Place the petri dishes in the drying oven at 105℃ for 30 minutes.

10. Remove the petri dishes from the oven and allow to cool.

11. Weigh the petri dishes on the analytical balance. Record the weight of the dish with lipid to four decimal places.

Calculation of Results

Calculation of lipid content is completed by entering the recorded weights into an Excel spreadsheet (Figure 1). The results for all samples in the batch are saved, printed and attached to the Batch List.

This document is the property of AXYS Analytical Services Ltd and contains proprietary and confidential information.
It may not be reproduced or distributed without the written permission of the owner. Copyright 14-Apr-2004.
AXYS Analytical Services Ltd, PO Box 2219, Sidney, BC, Canada, V8L 3S8. Tel. (250) 655-5800 FAX (250) 655-5811

1. Open the file named G:\LIMS\Lipid-Grav.xlt" on the AXYS local network.

2. Click on "Get Samples".

3. Enter your LIMS username and password and the workgroup (WG) number.

5. For each sample, fill in the weighing data in the spreadsheet fields displayed in the Workup Sheet Information window and click on "OK".

6. The spreadsheet calculates the above values using the formulas below. These can be used to double-check the calculated values if necessary. The spreadsheet displays the data entered and results for:

   - Extract weight;
   - Dry lipid;
   - Percent lipid for each aliquot and average percent lipid;
   - Duplicate test results;
   - Recovery correction factor;

   <u>To calculate lipid weight:</u>

   $$W_l = (\text{weight of dish and lipid}) - (\text{weight of dish})$$

   <u>To calculate the percent lipid:</u>

   $$\%lipid = \frac{W_l}{W_s} \times \frac{W_{te}}{W_{le}} \times 100$$

   where W_l = weight of lipid (above);
   W_s = weight of sample taken for analysis;
   W_{te} = weight of total extract (Step 4); and
   W_{le} = weight of extract for lipid analysis (Step 6).

   Average the percent lipid from the two analyses.

This document is the property of AXYS Analytical Services Ltd and contains proprietary and confidential information.
It may not be reproduced or distributed without the written permission of the owner. Copyright 14-Apr-2004.
AXYS Analytical Services Ltd, PO Box 2219, Sidney, BC, Canada, V8L 3S8. Tel. (250) 655-5800 FAX (250) 655-5811

To calculate the lipid factor:

$$Factor = \frac{W_{te}}{W_{te} - W_{le}}$$

Where: W_{te} = weight of extract
W_{le} = weight of both lipid extracts

To calculate Relative Percent Difference (RPD)

$$RPD = \frac{|\text{Result 1} - \text{Result 2}|}{(\text{Result 1} + \text{Result 2})/2} \times 100$$

7. Review the data for duplicate lipid determinations. Any discrepancies in entered data (i.e., {Dry Lipid + Tare} < Tare) are flagged with a colour code on the spreadsheet. Duplicate test results with a RPD greater than 20% are also flagged. Report RPD differences larger than 20% to the Lab Manager and halt the extraction procedures until a course of action has been determined.

8. If the raw data has been entered correctly, click on “Save Samples”. The results are saved under the workgroup number in the computer’s C:\ drive, the network G:\ drive and the LIMS database. A copy of the spreadsheet is printed at the default printer.

9. Record the percent lipid and lipid correction factor for the sample on its workup sheet. All raw data required for the percent lipid calculation must be recorded on the workup sheet. This allows the calculations to be reproduced if necessary. Attach the printed copy of the lipid spreadsheet to the Batch List.

Approval:

Ron McLeod, Laboratory Manager	Date
Coreen Hamilton, Technical Director	Date
Dale Hoover, Quality Manager	Date

This document is the property of AXYS Analytical Services Ltd and contains proprietary and confidential information.
It may not be reproduced or distributed without the written permission of the owner. Copyright 14-Apr-2004.
AXYS Analytical Services Ltd, PO Box 2219, Sidney, BC, Canada, V8L 3S8. Tel. (250) 655-5800 FAX (250) 655-5811

Figure 1. Gravimetric Lipid Determination Calculation Sheet

LIPIDS (gravimetric) Data
Work Group:
Analyst:

To begin: Get Samples

enter the data screen by screen.

To finish: Save Samples.

colours indicate: less than tare | limits failed | less than dry

Sample #	Extraction Date	Wet Samp Weight	Flask	Flask + Extract	Extract	Aliquot 1 Weight	Tare 1	Dry Lipid +Tare 1	Dry Lipid 1	% Lipid 1	Aliquot 2 Weight	Tare 2	Dry Lipid +Tare 2	Dry Lipid 2	% Lipid 2	Average % Lipids	Duplicate Test	Recovery Correction

Appendix K

Laboratory SOPs

AXYS SOP

Method Summary, Rev. 2

For MLA-028, Revision 5

Chlorinated Pesticides

By HRGC/HRMS

METHOD SUMMARY

ANALYSIS OF
ORGANOCHLORINE PESTICIDES BY HRGC/HRMS BY METHOD MLA-028

CONFIDENTIAL

This method is for determination of the organochlorine pesticides in water, solids (soil, sediment, sludge), tissue (including blood and milk), aqueous samples, XAD-2 water sampling columns, air samples and solvent extracts by HRGC/HRMS instrumentation.

*List of Analytes (*Chlorinated Pesticides)

E1 Pesticides by HRGC/MS	E2 Pesticides by HRGC/MS
Hexachlorobenzene (HCB)	Heptachlor epoxide
alpha-HCH	alpha-Endosulphan
beta-HCH	delta-HCH[1]
gamma-HCH	Dieldrin
delta-HCH[1]	Endrin
Heptachlor	Methoxychlor
Aldrin	Endosulphan sulphate
Oxychlordane	Endrin ketone
trans-Chlordane	beta-Endosulphan
Cis-Chlordane	Endrin aldehyde
o,p'-DDE	
p,p'-DDE	
trans-Nonachlor	
Cis-Nonachlor	
o,p'-DDD	
p,p'-DDD	
o,p'-DDT	
p,p'-DDT	
Mirex	
Hexachlorobutadiene (Cl_6-Butadiene upon request)	
Octachlorostyrene (upon request)	
Toxaphene (upon request -organochlorine scan or separate ECNI GC/MS analysis)	

[1] delta-HCH can be found in both E1 and E2 Fractions

1. Extraction and Cleanup Procedures

Samples are spiked with a suite of isotopically labelled surrogate standards before extraction. Water is extracted by shaking with dichloromethane. Solids and tissue are dried with sodium sulphate and Soxhlet extracted with dichloromethane. XAD-2 resin is Soxhlet extracted with dichloromethane. Filters are extracted with toluene in a Dean-Stark extractor. Milk and blood are extracted into hexane. Gel permeation chromatography is performed on some sample extracts. The extracts are cleaned up and separated into two fractions, E1 and E2, using Florisil. Each fraction is spiked with isotopically labelled recovery (internal) standard(s) and analysed for a suite of organochlorine pesticides by high-resolution gas chromatography/high resolution mass spectrometry (HRGC/HRMS).

2. HRGC/HRMS Analysis

Instrumental analysis of the E1 and E2 fractions is performed on a high-resolution gas chromatograph (HRGC) equipped with a J&W DB-5 chromatography column (60 m, 0.25 mm i.d., 0.10 µm film thickness) coupled to a high-resolution mass spectrometer (HRMS). The HRMS is operated at a static (8000) mass resolution (10% valley) in the electron ionization (EI) mode using multiple ion detection (MID).

Initial calibration is performed using a multi-point calibration series of solutions that encompass the working concentration range. Calibration is verified at least once every twelve hours by analysis of a mid-level calibration solution.

3. Quantification Procedures

Target concentrations are determined with respect to labelled surrogate standards as shown in Tables 1 and 2. Mean relative response factors (RRF) determined from the initial calibration runs are used to convert raw peak areas in sample chromatograms to final concentrations as follows:

$$\text{Concentration of target} = \left(\frac{\text{area of Target}}{\text{area of Surrogate}}\right) \times \left(\frac{\text{weight of Surrogate}}{\text{weight of Sample}}\right) \times \left(\frac{1}{\text{RRF}}\right)$$

$$\text{where} \quad \text{RRF} = \left(\frac{\text{area of Target}}{\text{area of Surrogate}}\right) \times \left(\frac{\text{concentration of Surrogate}}{\text{concentration of Target}}\right)$$

Final concentrations are recovery corrected by the method of quantification.

Sample specific detection limits (SDLs) reported with the analytical results are determined from the analysis data by converting the minimum detectable signal to a concentration following the same procedures used to convert target peak responses to concentrations. The estimated minimum detectable area is determined as three times the height of the noise in the m/z channel of interest, converted to an area using the area height ratio of the corresponding labelled surrogate peak.

Recoveries of surrogates are determined similarly against the recovery (internal) standard and are used as general indicators of overall analytical quality.

Table 1: Surrogates Used and RRF Determination for Total Toxaphene by GC/MS

Compound Name	Surrogate	RRF Determined From
Toxaphene Peaks T1, T2, T3, T4,T5, T6, T7	^{13}C-PCB 138	Toxaphene Peaks T1, T2, T3, T4,T5, T6, T7
Surrogate Standard		
^{13}C-PCB 180	^{13}C-PCB 138	Toxaphene Peaks T1, T2, T3, T4,T5, T6, T7
Recovery Standard		
^{13}C-PCB 138		

Table 2:. Surrogates Used, and RRF Determination for E1 Pesticides by HR GC/MS

(No entry in the "RRF Used" field designates an RRF derived from that same compound.)

Analyte Name	Quantification and Retention Time Reference	RRF Determination
1,3-Cl_2-BZ	$^{13}C_6$-1,4-Cl_2-BZ	
1,4-Cl_2-BZ	$^{13}C_6$-1,4-Cl_2-BZ	
1,2-Cl_2-BZ	$^{13}C_6$-1,4-Cl_2-BZ	
1,3,5-Cl_3-BZ	$^{13}C_6$-1,2,3-Cl_3-BZ	
1,2,4-Cl_3-BZ	$^{13}C_6$-1,2,3-Cl_3-BZ	
1,2,3-Cl_3-BZ	$^{13}C_6$-1,2,3-Cl_3-BZ	
1,2,4,5/3,5-Cl_4-BZ	$^{13}C_6$-1,2,3,4-Cl_4-BZ	
1,2,3,4-Cl_4-BZ	$^{13}C_6$-1,2,3,4-Cl_4-BZ	
Cl_5-BZ	$^{13}C_6$-Cl_5-BZ	
HCB	$^{13}C_6$-HCB	
TCMX	$^{13}C_6$-HCB	
Cl_6-Butadiene	$^{13}C_6$-1,2,3-Cl_3-BZ	1,2,3-Cl_3-BZ
alpha-HCH	$^{13}C_6$-gamma-HCH	
beta-HCH	$^{13}C_6$-beta-HCH	
gamma-HCH	$^{13}C_6$-gamma-HCH	
delta-HCH[2]	$^{13}C_6$-delta-HCH	
Heptachlor	$^{13}C_{10}$-Heptachlor	
Aldrin	$^{13}C_{12}$-Aldrin	
Octachlorostyrene	$^{13}C_{10}$-trans-Chlordane	
Oxychlordane	$^{13}C_{10}$-Oxychlordane	
trans-Chlordane	$^{13}C_{10}$-trans-Chlordane	
cis-Chlordane	$^{13}C_{10}$-trans-Chlordane	
o,p-DDE	$^{13}C_{12}$-o,p-DDE	
p,p-DDE	$^{13}C_{12}$-p,p-DDE	
trans-Nonachlor	$^{13}C_{10}$-trans-Nonachlor	
cis-Nonachlor	$^{13}C_{10}$-cis-Nonachlor	

[2] delta-HCH normally will elute primarily in the E2 fraction and can be quantified solely from this fraction. Recoveries of ^{13}C-delta-HCH may be reported as the sum of the E1 and E2 recoveries if significant concentrations of ^{13}C-delta-HCH are observed in the E1 fraction.

o,p-DDD	$^{13}C_{12}$-p,p-DDD	
p,p-DDD	$^{13}C_{12}$-p,p-DDD	
o,p-DDT	$^{13}C_{12}$-o,p-DDT	
p,p-DDT	$^{13}C_{12}$-p,p-DDT	
Mirex	$^{13}C_{10}$-Mirex	

Cont'd

Analyte Name	Quantification and Retention Time Reference	RRF Determination
$^{13}C_6$-1,4-Cl_2-BZ	$^{13}C_{12}$-PCB-52	
$^{13}C_6$-1,2,3-Cl_3-BZ	$^{13}C_{12}$-PCB-52	
$^{13}C_6$-1,2,3,4-Cl_4-BZ	$^{13}C_{12}$-PCB-52	
$^{13}C_6$-Cl_5-BZ	$^{13}C_{12}$-PCB-52	
$^{13}C_6$-HCB	$^{13}C_{12}$-PCB-52	
$^{13}C_6$-beta-HCH	$^{13}C_{12}$-PCB-52	
$^{13}C_6$-gamma-HCH	$^{13}C_{12}$-PCB-52	
$^{13}C_6$-delta-HCH	$^{13}C_{12}$-PCB-52	
$^{13}C_{10}$-Heptachlor	$^{13}C_{12}$-PCB-52	
$^{13}C_{10}$-Aldrin	$^{13}C_{12}$-PCB-52	
$^{13}C_{10}$-Oxychlordane	$^{13}C_{12}$-PCB-52	
$^{13}C_{10}$-trans-Chlordane	$^{13}C_{12}$-PCB-138	
$^{13}C_{10}$-trans-Nonachlor	$^{13}C_{12}$-PCB-138	
$^{13}C_{10}$-cis-Nonachlor	$^{13}C_{12}$-PCB-138	
$^{13}C_{12}$-o,p-DDE	$^{13}C_{12}$-PCB-138	
$^{13}C_{12}$-p,p-DDE	$^{13}C_{12}$-PCB-138	
$^{13}C_{12}$-p,p-DDD	$^{13}C_{12}$-PCB-138	
$^{13}C_{12}$-o,p-DDT	$^{13}C_{12}$-PCB-138	
$^{13}C_{12}$-p,p-DDT	$^{13}C_{12}$-PCB-138	
$^{13}C_{10}$-Mirex	$^{13}C_{12}$-PCB-138	
Recovery Standards		
$^{13}C_{12}$-PCB-52		
$^{13}C_{12}$-PCB-138		
Lock Masses		
Lock Mass		
Lock Mass		
Lock Mass		
Lock Mass		

CONFIDENTIAL

Table 3:. Surrogates Used and RRF Determination for E2 Pesticides by GC/MS

(No entry in the "RRF Used" field designates an RRF derived from that same compound.)

Analyte Name	Quantification and Retention Time Reference	RRF Determination
delta-HCH	$^{13}C_6$-delta-HCH	
Heptachlor epoxide	$^{13}C_9$-Heptachlor-Epoxide	
alpha-Endosulphan	$^{13}C_9$-alpha-endosulphan	
Dieldrin	$^{13}C_{12}$-Dieldrin	
Endrin	$^{13}C_{12}$-Endrin	
beta-Endosulphan	$^{13}C_9$-beta-Endosulphan	
Endosulphan sulphate	$^{13}C_9$-beta-Endosulphan	
Endrin aldehyde	$^{13}C_{12}$-Endrin aldehyde	
Endrin ketone	$^{13}C_{12}$-Endrin	
Methoxychlor	$^{13}C_{12}$-Methoxychlor	
Labelled Surrogates		
$^{13}C_6$-delta-HCH	$^{13}C_{12}$-PCB-153	
$^{13}C_9$-Heptachlor-Epoxide	$^{13}C_{12}$-PCB-153	
$^{13}C_9$-alpha-endosulphan	$^{13}C_{12}$-PCB-153	
$^{13}C_{12}$-Dieldrin	$^{13}C_{12}$-PCB-153	
$^{13}C_{12}$-Endrin	$^{13}C_{12}$-PCB-153	
$^{13}C_9$-beta-Endosulphan	$^{13}C_{12}$-PCB-153	
$^{13}C_{12}$-Endrin aldehyde	$^{13}C_{12}$-PCB-153	
$^{13}C_{12}$-Methoxychlor	$^{13}C_{12}$-PCB-153	
Recovery Standard		
$^{13}C_{12}$-PCB-153		
Lock Masses		
Lock Mass		
Lock Mass		
Lock Mass		
13C_{12}-Endrin ketone	breakdown check	

CONFIDENTIAL

4. QUALITY ACCEPTANCE CRITERIA

Samples are analyzed in batches consisting of a maximum of twenty samples, one procedural blank and one spiked matrix (OPR) sample. Sample duplicates or matrix spike/matrix spike duplicate (MS/MSD) pairs may be analyzed on an individual contract basis. The batch is carried through the complete analytical process as a unit. For sample data to be reportable, the batch QC data must meet the established acceptance criteria presented on the analysis reports.

All aspects of the method are described in detail in AXYS' document MLA-028 "Analytical Procedures for Organochlorine Pesticides by Isotope Dilution HRGC/HRMS".

Table 4: QC Criteria for E1 Chlorinated Pesticides

Analyte	Typical Sample Specific Detection LImits					Procedural Blank Level	Acceptable Matrix Spike
	Solid	Aqueous	Tissue	Pulp	XAD Column		
	ng/g	ng/L	ng/g	ng/g	ng	ng	% Recovery
Dichlorobenzenes	0.1	1.0	0.1	0.05	1.0	<1.0	60-130
Trichlorobenzenes	0.1	1.0	0.1	0.05	1.0	<1.0	60-130
Tetrachlorobenzenes	0.1	1.0	0.1	0.05	1.0	<0.5	60-130
Pentachlorobenzene	0.01	0.1	0.01	0.05	0.1	<0.1	70-130
Hexachlorobenzene	0.01	0.1	0.01	0.05	0.1	<0.1	70-130
alpha-HCH	0.02	0.2	0.02	0.01	0.2	<0.2	70-130
beta-HCH	0.02	0.2	0.02	0.01	0.2	<0.2	70-130
gamma-HCH	0.02	0.2	0.02	0.01	0.2	<0.2	70-130
delta-HCH	0.02	0.2	0.02	0.01	0.2	<0.2	70-130
Heptachlor	0.02	0.2	0.02	0.01	0.2	<0.2	70-130
Aldrin	0.02	0.2	0.02	0.01	0.2	<0.2	70-130
Oxychlordane	0.02	0.2	0.02	0.01	0.2	<0.2	70-130
trans-Chlordane	0.02	0.2	0.02	0.01	0.2	<0.1	70-130
cis-Chlordane	0.02	0.2	0.02	0.01	0.2	<0.1	70-130
o,p'-DDE	0.02	0.2	0.02	0.01	0.2	<0.1	70-130
p,p'-DDE	0.02	0.2	0.02	0.01	0.2	<0.1	70-130
trans-Nonachlor	0.02	0.2	0.02	0.01	0.2	<0.1	70-130
cis-Nonachlor	0.02	0.2	0.02	0.01	0.2	<0.1	70-130
o,p'-DDD	0.02	0.2	0.02	0.01	0.2	<0.1	70-130
p,p'-DDD	0.02	0.2	0.02	0.01	0.2	<0.1	70-130
o,p'-DDT	0.02	0.2	0.02	0.01	0.2	<0.1	70-130
p,p'-DDT	0.02	0.2	0.02	0.01	0.2	<0.1	70-130
Mirex	0.02	0.2	0.02	0.01	0.2	<0.1	70-130
Technical Toxaphene	0.2-2.0	2.0-20	0.2-2.	NA	2.0-20	<20	50-150
Toxaphene Parlors	0.05	0.5	0.05	NA	0.5	<0.5	60-150
Typical Sample Size:	10 g	1 L	10 g	20 g	1 Column		
Typical Final Vol, µL *	200	200	200	200	200		

*Extract volumes may range from 20 µL to 200 µL. To avoid excessive loss of volatile compounds, where recovery of volatile compounds is critical, extract volumes lower than 100 µL are not recommended.

CONFIDENTIAL

SURROGATE STANDARD RECOVERIES:	% RECOVERY RANGES ALL MATRICES
$^{13}C_6$-Chlorobenzene	10-130
$^{13}C_6$-1,4-dichlorobenzene	15-130
$^{13}C_6$-1,2,3-trichlorobenzene	20-130
$^{13}C_6$-1,2,3,4-tetrachlorobenzene	20-130
$^{13}C_6$-Pentachlorobenzene	20-150
$^{13}C_6$-Hexachlorobenzene	20-150
$^{13}C_6$-beta-HCH	30-150
$^{13}C_6$-delta-HCH[3]	30-150
$^{13}C_6$-gamma-HCH	30-150
$^{13}C_{10}$-Heptachlor	30-150
$^{13}C_{12}$-Aldrin	30-150
$^{13}C_{10}$-Oxychlordane	30-200
$^{13}C_{10}$-trans-Chlordane	30-200
$^{13}C_{12}$-o,p'-DDE	40-150
$^{13}C_{12}$-p,p'-DDE	40-150
$^{13}C_{10}$-trans-Nonachlor	30-150
$^{13}C_{10}$-cis-Nonachlor	30-150
$^{13}C_{12}$-p,p'-DDD	40-150
$^{13}C_{12}$-o,p'-DDT	40-150
$^{13}C_{12}$-p,p'-DDT	40-150
$^{13}C_{10}$-Mirex	30-150

QC Parameter	Specification
Analysis Duplicate	Must agree to within ±20% of the mean (applicable to concentrations >10 times the DL).
Procedural Blank	See Table 4 or <10% of analyte value <0.1 ng for toxaphene.
Instrument Sensitivity	S/N ≥3:1 for 2-4 pg injected for all target analytes (See Table 4). S/N ≥2:1 for 1.6 ng of technical toxaphene.
Instrument Linearity	Linearity is demonstrated by a 5-point calibration over the working concentration range with a relative standard deviation of the RRFs ≤20% for targets with a labelled analog present, ≤35% for targets with no labelled analog present and all labelled compounds.
Bracketing Cal Ver	RRFs from calibration standards must agree to ±25% over a 12-hour period.
Continuing Cal Ver	Concentrations of native compounds must be within ±20% of expected values for targets with a labelled analog present, ±35% for targets with no labelled analog present. Concentrations of labelled must be within ±35% of expected values.
Chromatogram Quality **Max Peak Width:** **Resolution:**	1. Separation between p,p'-DDD and o,p-DDT □20% of valley height. 2. p,p-DDT breakdown must be ≤15%.
Analyte/Surrogate Ratios	Response must be within the calibrated range of the instrument. Coders may use data from more than one chromatogram to get the responses in the calibrated range.
Retention Times	RRT windows are calculated from daily calibration verification run data using RRT references and fixed RT window brackets in seconds are specified in tables 9 and 10.
Ion Ratios	Ion ratios must fall within ±20% (±30% for 13C10-Oxychlordane) of the theoretical values for positive identification of all E1 targets in the calibration standards.

[3] delta-HCH normally will elute primarily in the E2 fraction and can be quantified solely from this fraction. Recoveries of ^{13}C-delta-HCH may be reported as the sum of the E1 and E2 recoveries if significant concentrations of ^{13}C-delta-HCH are observed in the E1 fraction.

Table 5: QC Criteria for E2 Chlorinated Pesticides

Analyte:	Typical Sample Specific Detection Limits					Procedural Blank Level ng	Acceptable Matrix Spike % Recovery[1]
	Solid	Aqueous	Tissue	Pulp	XAD column		
	ng/g	ng/L	ng/g	ng/g	ng		
Delta-HCH	0.05	0.5	0.05	0.05	0.5	<0.5	60-130
Heptachlor epoxide	0.05	0.5	0.05	0.05	0.5	<0.5	60-130
alpha-Endosulphan	0.05	0.5	0.05	0.05	0.5	<0.5	70-130
Dieldrin	0.05	0.5	0.05	0.05	0.5	<0.5	60-130
Endrin	0.05	0.5	0.05	0.05	0.5	<0.5	60-130
Endosulphan sulphate	0.05	0.5	0.05	0.05	0.5	<0.5	70-130
Endrin ketone	0.05	0.5	0.05	0.05	0.5	<0.5	60-130
beta-Endosulphan	0.05	0.5	0.05	0.05	0.5	<0.5	70-130
Endrin aldehyde	0.05	0.5	0.05	0.05	0.5	<0.5	50-130
Methoxychlor	0.1	1	0.1	0.1	1.0	<1	60-130
Typical Sample Size:	10 g	1 L	10 g	20 g	1 column		
Typical Final Vol, µL*	200	200	200	200	200		

* Extract volumes may range from 20 µL to 200 µL. To avoid excessive loss of volatile compounds, where recovery of volatile compounds is critical, extract volumes lower than 100 µL are not recommended.

[1] Recoveries quoted are guidelines only and vary according to matrix. Consult detailed method performance data available with method documentation for specific criteria.

SURROGATE STANDARD RECOVERIES:	% RECOVERY RANGES ALL MATRICES
$^{13}C_6$-delta-HCH	30-150
$^{13}C_{12}$-Dieldrin	30-150
$^{13}C_{12}$-Endrin	30-150
$^{13}C_{12}$-Endrin aldehyde	30-150
$^{13}C_{10}$-Heptachlor epoxide	30-150
$^{13}C_{12}$-Methoxychlor	30-150
$^{13}C_9$-alpha-Endosulphan	30-150
$^{13}C_9$-beta-Endosulphan	30-150

CONFIDENTIAL

QC Parameter	Specification
Analysis Duplicate	Must agree to within ±20% of the mean (applicable to concentrations >10 times the DL).
Procedural Blank	See Table 5 or <10% of analyte value.
Instrument Sensitivity	S/N ratio ≤3:1 for 4 pg of all analytes.
Instrument Linearity	Linearity is demonstrated by a 5-point calibration over the working concentration range with a relative standard deviation of the RRFs ≤20% for targets with a labelled analog present, ≤35% for targets with no labelled analog present and all labelled compounds.
Bracketing Cal Ver	RRFs from calibration standards must agree to ±25% over a 12-hour period.
Continuing Cal Ver	Concentrations of native compounds must be within ±20% of expected values for targets with a labelled analog present, ±35% for targets with no labelled analog present. Concentrations of labelled must be within ±35% of expected values.
Chromatogram Quality (GC Resolution)	13C-labelled endrin breakdown must be ≤20%.
Analyte /Surrogate Ratios	Response ratio must be within the calibrated range of the instrument. Coders may use data from more than one chromatogram to get the responses in the calibrated range.
Retention Times	RRT windows are calculated from daily calibration verification run data using RRT references and fixed RT window brackets in seconds are specified in tables 9 and 10.
Ion Ratios	Ion ratios must fall within ±20% of the theoretical values for positive identification of all E2 targets and surrogates (with the exception of labelled methoxychlor which is ±50%) in the calibration standards (Levels C-F) and samples, and within ±50% for calibration standard Level B.

CONFIDENTIAL

Appendix K
Laboratory SOPs

AXYS SOP
Method Summary, Rev. 2
For MLA-021, Revision 9

Polycyclic Aromatic Hydrocarbons (PAH)
and Alkylated PAHs

METHOD SUMMARY

ANALYSIS OF POLYCYCLIC AROMATIC HYDROCARBONS (PAH) and ALKYLATED PAHs BY METHOD MLA-021

This method summary describes the determination of concentrations of PAHs, and alkylated PAHs in solid (sediment, soil, ash), tissue (including blood), aqueous, XAD-2 column (resin and filters), air, and oil samples and in solvent extracts by MLA-021. This method can also be used to analyze alkanes and hopanes.

List of Analytes

Analyte List of Standard PAH Parents and Select Alkylated PAHs determined by linearity method

Parent	
Naphthalene	Benzo(b)fluoranthene
Acenaphthylene	Benzo(j/k)fluoranthenes
Acenaphthene	Benzofluoranthenes
Fluorene	Benzo(e)pyrene
Phenanthrene	Benzo(a)pyrene
Anthracene	Perylene
Fluoranthene	Dibenzo(ah)anthracene
Pyrene	Indeno(1,2,3-cd)pyrene
Benz(a)anthracene	Benzo(ghi)perylene
Chrysene	
Alkylated PAHs	
2-Methylnaphthalene	1-Methylphenanthrene
2,6-Dimethylnaphthalene	Dibenzothiophene
2,3,5-Trimethylnaphthalene	

Analyte List of Alkylated PAHs determined by linearity method

1-Methylnaphthalene	C1-Phenanthrenes/Anthracenes
C1-Naphthalenes	1,7-Dimethylphenanthrene
1,2-Dimethylnaphthalene	1,8-Dimethylphenanthrene
C2-Naphthalenes	2,6-Dimethylphenanthrene
2,3,6-Trimethylnaphthalene	3,6-Dimethylphenanthrene
C3-Naphthalenes	C2-Phenanthrenes/Anthracenes
1,4,6,7-Tetramethylnaphthalene	1,2,6-Trimethylphenanthrene
C4-Naphthalenes	C3-Phenanthrenes/Anthracenes
2-Methylphenanthrene	Retene
3-Methylphenanthrene	C4-Phenanthrenes/Anthracenes
9/4-Methylphenanthrenes	Biphenyl
2-Methylanthracene	

CONFIDENTIAL

Analyte List Extended alkylated PAHs determined by bracketing method

C1-Biphenyls	C1-Fluoranthenes/Pyrenes
C2-Biphenyls	C2-Fluoranthenes/Pyrenes
C1-Acenaphthenes	C3-Fluoranthenes/Pyrenes
2-Methylfluorene	C4-Fluoranthenes/Pyrenes
C1-Fluorenes	1-Methylchrysene
1,7-Dimethylfluorene	5/6-Methylchrysenes
C2-Fluorenes	C1-Benz(a)anthracenes/Chrysenes
C3-Fluorenes	5,9-Dimethylchrysene
2/3-Methyldibenzothiophenes	C2-Benz(a)anthracenes/Chrysenes
C1-Dibenzothiophene	C3-Benz(a)anthracenes/Chrysenes
2,4-Dimethyldibenzothiophene	C4-Benz(a)anthracenes/Chrysenes
C2-Dibenzothiophene	7-Methylbenzo(a)pyrene
C3-Dibenzothiophene	C1-Benzofluoranthenes/Benzopyrenes
C4-Dibenzothiophene	C2-Benzofluoranthenes/Benzopyrenes
3-Methylfluoranthene/Benzo(a)fluorene	

1. EXTRACTION PROCEDURES

Aqueous sample extraction

Up to 1 L clear, aqueous sample is spiked with a suite of perdeuterated surrogate standards and extracted by shaking with dichloromethane. The extract is dried over anhydrous sodium sulphate.

Samples with visible particulates are spiked with a suite of perdeuterated surrogate standards and filtered prior to extraction. The filtrate is extracted separately as above and the filter with the particles is Soxhlet extracted as solids (see below). The two extracts are combined.

Soxhlet extraction of solids (sediment, soil, ash and tissue)

Sediments are thawed and homogenized and the moisture is determined. Up 10 g of the sample is dried by mixing with anhydrous sodium sulphate. The sample is spiked with a suite of perdeuterated surrogate standards (table 1) and extracted with dichloromethane (sediment and soil) or toluene (ash) by Soxhlet extraction.

Fly ash is digested with dilute hydrochloric acid and filtered. The filtrate is extracted by shaking with dichloromethane. The filter with the particles is spiked with surrogate standards and Soxhlet extracted with toluene. The two extracts are combined.

Base digest extraction of tissue, soil and sediment

10-30 g of homogenized, wet sample is mixed with 100 mL methanol and spiked with a suite of perdeuterated surrogate standards. Potassium hydroxide solution is added and the mixture is boiled under reflux for 1 hour. Ultra pure water is added and the boiling is continued for 1½ hour. The liquid phase is extracted by shaking with pentane. The pentane extract is washed with ultra pure water and dried over anhydrous sodium sulphate.

XAD-2 columns and filters

XAD-2 resin and associated filters are spiked with surrogate standards and separately extracted by Soxhlet extraction or Dean-Stark Soxhlet extraction.

PUF and filters

CONFIDENTIAL

Polyurethane foam (PUF) samplers and associated filters are spiked with surrogate standards and extracted together by Soxhlet extraction with dichloromethane.

Oil

The oil sample is dissolved in pentane and spiked with a suite of perdeuterated surrogate standards. The solution is backwashed by shaking with water and dried over anhydrous sodium sulphate.

Blood samples

The blood sample is spiked with a suite of perdeuterated surrogate standards and extracted by shaking with a mixture of ethanol, hexane and saturated ammonium sulphate solution. The hexane extract is backwashed by shaking with water and dried over anhydrous sodium sulphate.

2. CLEAN-UP CHROMATOGRAPHY

A solid extract is treated with activated copper to remove sulphur. Sample extracts are loaded onto a silica gel column and eluted into two fractions with pentane followed by dichloromethane. The pentane fraction contains the alkanes (if required) and the dichloromethane fraction contains the PAHs. Each fraction is concentrated to a small volume and recovery (internal) standards are added.

Sample extracts for PAH analysis containing lipids may benefit from being cleaned up by gel permeation (Biobead) before silica column cleanup. If necessary, extracts may also be cleaned up by alumina column chromatography to remove interferences.

3. INSTRUMENTAL ANALYSIS

HRGC/LRMS analysis is conducted on a low-resolution mass spectrometer (MS) equipped with a high-resolution gas chromatograph. A splitless/split injection sequence is used on a Restek Rt_x-5 chromatography column (30 m, 0.25 mm i.d., 0.25 µm film thickness) coupled directly to the MS source. The MS is operated at a unit mass resolution in the electron impact (EI) ionization mode using multiple ion detection (MID) acquiring at least one characteristic ion for each target analyte and surrogate standard.

CONFIDENTIAL

4. ANALYTE QUANTIFICATION

Concentrations of target PAHs are calculated using the isotope dilution method of quantification. Compounds are quantified by comparing the area of the quantification ion to that of the corresponding deuterium-labelled standard and correcting for response factors. Response factors are determined daily using authentic PAHs. Calculations are carried out using HP EnviroQuant and Prolab MS-Extended for targeting and quantification.

$$\text{Concentration of Target} = \left(\frac{\text{area of Target}}{\text{area of Surr Std}}\right) \times \left(\frac{\text{weight of Surr Std (ng)}}{\text{RRF}}\right) \times \left(\frac{1}{\text{weight of sample (g or L)}}\right)$$

(ng/g or ng/L)

where $\text{RRF} = \left(\frac{\text{area of Target}}{\text{area of Surr Std}}\right) \times \left(\frac{\text{concentration of Surr Std}}{\text{concentration of Target}}\right)$

and the Surr Std is either the surrogate or the internal standard

Table 1: Surrogates Used and RRF Determination for PAH

TARGET ANALYTES	SURROGATE	RRF DETERMINED FROM
Naphthalene	d_8-Naphthalene	Naphthalene
Acenaphthylene	d_8-Acenaphthylene	Acenaphthylene
Acenaphthene	d_8-Acenaphthylene	Acenaphthene
Fluorene	d_{10}-Phenanthrene	Fluorene
Phenanthrene	d_{10}-Phenanthrene	Phenanthrene
Anthracene	d_{10}-Phenanthrene	Anthracene
Fluoranthene	d_{10}-Fluoranthene	Fluoranthene
Pyrene	d_{10}-Fluoranthene	Pyrene
Benz[a]anthracene	d_{12}-Benz[a]anthracene	Benz[a]anthracene
Chrysene[1]	d_{12}-Chrysene	Chrysene
Benzo[b]fluoranthene	d_{12}-Benzo[b]fluoranthene	Benzo[b]fluoranthene
Benzo[j,k]fluoranthenes	d_{12}-Benzo[k]fluoranthene	Benzo[k]fluoranthene
Benzo[e]pyrene	d_{12}-Benzo[a]pyrene	Benzo[e]pyrene
Benzo[a]pyrene	d_{12}-Benzo[a]pyrene	Benzo[a]pyrene
Perylene	d_{12}-Perylene	Perylene
Dibenzo[ah]anthracene[2]	d_{14}-Dibenzo[ah]anthracene	Dibenz[ah]anthracene
Indeno[1,2,3-cd]pyrene	d_{12}-Indeno[1,2,3,cd]pyrene	Indeno[1,2,3-cd]pyrene
Benzo[ghi]perylene	d_{12}-Benzo[ghi]perylene	Benzo[ghi]perylene
Biphenyl[3]	d_{10}- Biphenyl	Biphenyl
Dibenzothiophene[3]	d_{10}-Phenanthrene	Dibenzothiophene
1-Methylnaphthalene[3]	d_{10}-2-Methylnaphthalene	1-Methylnaphthalene
2-Methylnaphthalene[3]	d_{10}-2-Methylnaphthalene	2-Methylnaphthalene
C1-Naphthalenes[3]	d_{10}-2-Methylnaphthalene	1- & 2-Methylnaphthalene
2,6-Dimethylnaphthalene[3]	d_{12}-2,6 Dimethylnaphthalene	2,6-Dimethylnaphthalene
1,2-Dimethylnaphthalene	d_{12}-2,6 Dimethylnaphthalene	1,2-Dimethylnaphthalene
C2-Naphthalenes[3]	d_{12}-2,6 Dimethylnaphthalene	2,6- & 1,2-Dimethylnaphthalene
2,3,5-Trimethylnaphthalene[3]	d_{12}-2,6 Dimethylnaphthalene	2,3,5- Trimethylnaphthalene
2,3,6-Trimethylnaphthalene	d_{12}-2,6 Dimethylnaphthalene	2,3,6- Trimethylnaphthalene

[1] Coelutes with Triphenylene
[2] Coelutes with Dibenz[ac]anthracene
[3] These compounds are in addition to the regular suite of analytes, and are analyzed by client request only.
[4] Secondary ion confirmation procedures do not apply
[5] RRT ranges apply to alkylated PAH Totals

TARGET ANALYTES	SURROGATE	RRF DETERMINED FROM
C3-Naphthalenes[3]	d_{12}-2,6 Dimethylnaphthalene	2,3,5- & 2,3,6-Trimethylnaphthalene
1,4,6,7-Tetramethylnaphthalene	d_{12}-2,6 Dimethylnaphthalene	1,4,6,7-Tetramethylnaphthalene
C4-Naphthalene	d_{12}-2,6 Dimethylnaphthalene	1,4,6,7-Tetramethylnaphthalene
2-Methylanthracene	d_{10}-Phenanthrene	2-Methylanthracene
3-Methylphenanthrene	d_{10}-Phenanthrene	1- & 2-Methylphenanthrene & 2-Methylanthracene
2-Methylphenanthrene	d_{10}-Phenanthrene	2-Methylphenanthrene
9/4-Methylphenanthrenes	d_{10}-Phenanthrene	1- & 2-Methylphenanthrene & 2-Methylanthracene
1-Methylphenanthrene[3]	d_{10}-Phenanthrene	1-Methylphenanthrene
C1-Phenanthrenes/Anthracenes[3]	d_{10}-Phenanthrene	1- & 2-Methylphenanthrene & 2-Methylanthracene
3,6-Dimethylphenanthrene[3]	d_{10}-Fluoranthrene	3,6-Dimethylphenanthrene
2,6-Dimethylphenanthrene	d_{10}-Fluoranthrene	3,6- & 1,7-Dimethyl-phenanthrenes
1,7-Dimethylphenanthrene	d_{10}-Fluoranthrene	1,7-Dimethylphenanthrene
1,8-Dimethylphenanthrene	d_{10}-Fluoranthrene	3,6- & 1,7-Dimethyl-phenanthrenes
C2-Phenanthrenes/Anthracenes[3]	d_{10}-Fluoranthrene	3,6- & 1,7-Dimethyl-phenanthrenes
1,2,6-Trimethylphenanthrene	d_{10}-Fluoranthrene	1,2,6-Trimethylphenanthrene
C3-Phenanthrenes/Anthracenes	d_{10}-Fluoranthrene	1,2,6-Trimethylphenanthrene
Retene[3]	d_{10}-Fluoranthene	Retene
C4-Phenanthrenes/Anthracenes	d_{10}-Fluoranthrene	Retene
C1-Biphenyls	d_{10}- Biphenyl	Biphenyl
C2-Biphenyls	d_{10}- Biphenyl	Biphenyl
C1-Acenaphthenes	d_{8}-Acenaphthylene	Acenaphthene
2-Methylfluorene	d_{8}-Acenaphthylene	2-Methylfluorene
C1-Fluorenes	d_{8}-Acenaphthylene	2-Methylfluorene
1,7-Dimethylfluorene	d_{8}-Acenaphthylene	1,7-Dimethylfluorene
C2-Fluorenes	d_{8}-Acenaphthylene	1,7-Dimethylfluorene
C3-Fluorenes	d_{8}-Acenaphthylene	1,7-Dimethylfluorene
2/3-Methyldibenzothiophenes	d_{10}-Phenanthrene	2/3-Methyldibenzothiophenes
C1-Dibenzothiophenes	d_{10}-Phenanthrene	2/3-Methyldibenzothiophenes
2,4-Dimethyldibenzothiophene	d_{10}-Phenanthrene	2,4-Dimethyldibenzothiophene
C2-Dibenzothiophenes	d_{10}-Phenanthrene	2,4-Dimethyldibenzothiophene
C3-Dibenzothiophenes	d_{10}-Phenanthrene	2,4-Dimethyldibenzothiophene
C4-Dibenzothiophenes	d_{10}-Phenanthrene	2,4-Dimethyldibenzothiophene
3-Methylfluoranthene/Benzo(a)fluorene	d_{10}-Fluoranthrene	3-Methylfluoranthene
C1-Fluoranthenes/Pyrenes	d_{10}-Fluoranthrene	3-Methylfluoranthene
C2-Fluoranthenes/Pyrenes	d_{10}-Fluoranthrene	3-Methylfluoranthene
C3-Fluoranthenes/Pyrenes	d_{10}-Fluoranthrene	3-Methylfluoranthene
C4-Fluoranthenes/Pyrenes	d_{10}-Fluoranthrene	3-Methylfluoranthene
5/6-Methylchrysenes	d_{12}-Chrysene	6-Methylchrysene
1-Methylchrysene	d_{12}-Chrysene	1-Methylchrysene
C1-Benz(a)anthracenes/Chrysenes	d_{12}-Chrysene	1- & 6-Methylchrysenes
5,9-Dimethylchrysene	d_{12}-Chrysene	5,9-Dimethylchrysene
C2-Benz(a)anthracenes/Chrysenes	d_{12}-Chrysene	5,9-Dimethylchrysene
C3-Benz(a)anthracenes/Chrysenes	d_{12}-Chrysene	5,9-Dimethylchrysene
C4-Benz(a)anthracenes/Chrysenes	d_{12}-Chrysene	5,9-Dimethylchrysene
7-Methylbenzo(a)pyrene	d_{12}-Benzo[a]pyrene	7-Methylbenzo(a)pyrene
C1-Benzofluoranthenes/Benzo-pyrenes	d_{12}-Benzo[a]pyrene	7-Methylbenzo(a)pyrene

UNCONTROLLED

TARGET ANALYTES	SURROGATE	RRF DETERMINED FROM
C2-Benzofluoranthenes/Benzo-pyrenes	d_{12}-Benzo[a]pyrene	7-Methylbenzo(a)pyrene
LABELLED SURROGATE STANDARDS	**RECOVERY CALCULATED AGAINST**	
d_8-Naphthalene	d_{10}-Acenaphthene	
d_{10}-2-Methylnaphthalene	d_{10}-Acenaphthene	
d_{10}-Biphenyl	d_{10}-Acenaphthene	
d_{12}-2,6-Dimethylnaphthalene	d_{10}-Acenaphthene	
d_8-Acenaphthylene	d_{10}-Acenaphthene	
d_{10}-Phenanthrene	d_{10}-Pyrene	
d_{10}-Fluoranthene	d_{10}-Pyrene	
d_{12}-Benz[a]anthracene	d_{10}-Pyrene	
d_{12}-Chrysene	d_{10}-Pyrene	
d_{12}-Benzo[b]fluoranthene	d_{12}-Benzo[e]pyrene	
d_{12}-Benzo[k]fluoranthene	d_{12}-Benzo[e]pyrene	
d_{12}-Benzo[a]pyrene	d_{12}-Benzo[e]pyrene	
d_{12}-Perylene	d_{12}-Benzo[e]pyrene	
d_{12}-Indeno[1,2,3,cd]pyrene	d_{12}-Benzo[e]pyrene	
d_{14}-Dibenzo[ah]anthracene	d_{12}-Benzo[e]pyrene	
d_{12}-Benzo[ghi]perylene	d_{12}-Benzo[e]pyrene	
LABELLED RECOVERY STANDARDS		
d_{10}-Acenaphthene		
d_{10}-Pyrene		
d_{12}-Benzo[e]pyrene		

CONFIDENTIAL

5. QUALITY ACCEPTANCE CRITERIA

Table 2: QC Acceptance Criteria

	Typical Sample Specific* Detection Limits							Procedural Blank Level (ng)	Acceptable Matrix Spike % Recovery
MATRIX	Solid	Aqueous	Tissue	XAD Column	PUF	Filter	Oil		
Analyte:	ng/g	ng/L	ng/g	ng	ng	ng	ng/g		
Naphthalene	0.5	5	0.1	5	5	5	50	<10	70-130
Acenaphthylene	0.5	5	0.1	5	5	5	50	<5	70-140
Acenaphthene	0.5	5	0.1	5	5	5	50	<5	70-130
Fluorene	0.5	5	0.1	5	5	5	50	<5	60-140
Phenanthrene	0.5	5	0.1	5	5	5	50	<10	70-130
Anthracene	0.5	5	0.1	5	5	5	50	<5	70-130
Fluoranthene	0.5	5	0.1	5	5	5	50	<5	70-130
Pyrene	0.5	5	0.1	5	5	5	50	<5	70-130
Benz(a)anthracene	0.5	5	0.1	5	5	5	50	<5	70-130
Chrysene	0.5	5	0.1	5	5	5	50	<5	70-130
Benzo(b)fluoranthene	0.5	5	0.1	5	5	5	50	<5	70-130
Benzo(j/k)fluoranthenes	0.5	5	0.1	5	5	5	50	<5	70-130
Benzo(e)pyrene	0.5	5	0.1	5	5	5	50	<5	70-130
Benzo(a)pyrene	0.5	5	0.1	5	5	5	50	<5	70-130
Perylene	1.0	10	0.2	10	10	10	100	<5	70-130
Dibenzo(ah)anthracene	1.0	10	0.2	10	10	10	100	<5	70-130
Indeno(1,2,3-cd)pyrene	1.0	10	0.2	10	10	10	100	<5	70-130
Benzo(ghi)perylene	1.0	10	0.2	10	10	10	100	<5	70-130
Biphenyl	1.0	10	0.2	10	10	10	100	<5	70-130
Dibenzothiophene	1.0	10	0.2	10	10	10	100	<5	60-140
1-Methylnaphthalene	1.0	10	0.2	10	10	10	100	<5	70-130
2-Methylnaphthalene	1.0	10	0.2	10	10	10	100	<5	70-130
2,6-Dimethylnaphthalene	1.0	10	0.2	10	10	10	100	<10	70-130
1,2-Dimethylnaphthalene	1.0	10	0.2	10	10	10	100	<10	60-140
2,3,5-Trimethylnaphthalene	1.0	10	0.2	10	10	10	100	<10	50-150
2,3,6-Trimethylnaphthalene	1.0	10	0.2	10	10	10	100	<10	50-150
1,4,6,7-Tetramethyl-naphthalene	1.0	10	0.2	10	10	10	100	<10	50-200
2-Methylanthracene	1.0	10	0.2	10	10	10	100	<5	50-150
3-Methylphenanthrene	1.0	10	0.2	10	10	10	100	<10	N.A.
2-Methylphenanthrene	1.0	10	0.2	10	10	10	100	<10	50-150
9/4-Methylphenanthrenes	1.0	10	0.2	10	10	10	100	<10	N.A.
1-Methylphenanthrene	1.0	10	0.2	10	10	10	100	<10	50-150
3,6-Dimethylphenanthrene	1.0	10	0.2	10	10	10	100	<10	50-150
2,6-Dimethylphenanthrene	1.0	10	0.2	10	10	10	100	<10	N.A.
1,7-Dimethyl-phenanthrenes	1.0	10	0.2	10	10	10	100	<10	50-150
1,8-Dimethylphenanthrene	1.0	10	0.2	10	10	10	100	<10	N.A.
1,2,6-Trimethyl-phenanthrene	1.0	10	0.2	10	10	10	100	<10	50-150
Retene	1.0	10	0.2	10	10	10	100	<5	50-150
2-Methylfluorene	1.0	10	0.2	10	10	10	100	<5	50-150
1,7-Dimethylfluorene	1.0	10	0.2	10	10	10	100	<5	50-150

UNCONTROLLED

2/3-Methyldibenzo-thiophenes	1.0	10	0.2	10	10	10	100	<10	50-150
2,4-Dimethyl-dibenzothiophene	1.0	10	0.2	10	10	10	100	<5	50-150
3-Methylfluoranthene/ Benzo(a)fluorene	1.0	10	0.2	10	10	10	100	<5	50-150
5/6-Methylchrysenes	1.0	10	0.2	10	10	10	100	<5	50-150
1-Methylchrysene	1.0	10	0.2	10	10	10	100	<5	50-150
5,9-Dimethylchrysene	1.0	10	0.2	10	10	10	100	<5	50-150
7-Methylbenzo(a)pyrene	1.0	10	0.2	10	10	10	100	<5	50-150
Typical Sample Size	10 g	1 L	10 g	1 col	1 PUF	1 filter	0.1 g		
Typical Final Volume (µL)	500	100	100	500	500	500	500		

* Detection limits quoted are those routinely achieved. Lower detection limits can be achieved if required.
NOTE: QC Acceptance criteria do not apply to alkylated PAH total values (e.g. C1-phenanthenes/anthracenes). These should be flagged as TIC (Tentatively Identified Compounds).

SURROGATE STANDARD RECOVERIES:	**% RECOVERY RANGES ALL MATRICES**
d_8-naphthalene	15 – 130
d_8-acenaphthylene	20 – 130
d_{10}-phenanthrene	30 – 130
d_{10}-fluoranthene	30 – 130
d_{12}-benz[a]anthracene	30 – 130
d_{12}-chrysene	30 – 130
d_{12}-benzo[b]fluoranthene	30 – 130
d_{12}-benzo[k]fluoranthene	30 – 130
d_{12}-benzo[a]pyrene	30 – 130
d_{12}-perylene	30 – 130
d_{14}-dibenz[ah]anthracene	30 – 130
d_{12}-indeno[1,2,3-cd]pyrene	30 – 130
d_{12}-benzo[ghi]perylene	30 – 130
d_{10}-2-methylnaphthalene	20 – 130
d_{12}-2,6-dimethylnaphthalene	20 – 130
d_{10}-biphenyl	15 – 130

CONFIDENTIAL

Parameter	Acceptance Specification
Procedural Blank	Refer to Table 2 above, or 5 times lower than analogous analyte value detected in the samples.
Analysis Duplicate	Duplicates must fall within ±20% of the mean (applicable to concentrations >10 times the DL) These are guidelines – departures based on professional judgement allowed.
Instrument Sensitivity	S/N 3:1 for 10 pg of acenaphthene, dibenzo(a,h)anthracene.
Instrument Resolution	*AXYS Method*: For calibration gas PFTBA (FC43) unit mass resolution at m/e 69/70 and 219/220, Unit mass resolution is demonstrated by the presence of a resolved peak at m/z 70 and m/e 220. *EPA Regulatory Method*: In accordance with the specification of the EPA Method.
Instrument Linearity	Linearity is demonstrated by a 5-point calibration over the working concentration range with a relative standard deviation of the RRFs ≤20% for targets with a labelled analog present and all labelled compounds, ≤35% for targets with no labelled analog present.
Bracketing Cal	RRFs for the opening and closing calibrations over a 12 hour period must agree to within +/- 20% of the mean (ie <40 RPD between RRFs and for the opening and closing calibrations).
Continuing Cal Ver	Opening Cal Ver: Concentrations of native compounds and labelled surrogates must be within ±25% of expected values for all targets. Closing Cal Ver: Concentrations of native compounds must be within ±25% of expected values. Concentrations of labelled surrogates must be within ±25% of expected values, with any two (2) values allowed to be within ±40%
GC Resolution	Benzo[b] & [k]fluoranthene valley height must be ≤75% for equal concentrations. Phenanthrene/anthracene valley height must be ≤30% for equal concentrations.
Chromatogram Quality	Maximum peak width must be ≤15 seconds for dibenzo[ghi]perylene peak at 10% peak height.
Retention Time Window (RRT)	RRT are ± 3 seconds of the predicted retention time determined from the calibration standard and adjusted relative to the peak retention time reference (i.e. labelled surrogate). A second requirement is that an authentic elute after its labelled analog.
Ion Abundance Ratios	CAL VER: Ion ratios for dibenz[ah]anthracene, indeno[1,2,3-cd]pyrene and benzo[ghi]perylene must be within ±35% of the mid-point of the I-CAL All other native analytes and labelled surrogates must be ±20% of the mid-point of the I-CAL Samples: Ion ratios for dibenz[ah]anthracene, indeno[1,2,3-cd]pyrene and benzo[ghi]perylene must be within ±35% of the 12 hour CAL (CAL VER or Bracketing) calibration standard. All other native analytes and labelled surrogates must be ±20% of the 12 hour CAL (CAL VER or Bracketing) calibration standard.

CONFIDENTIAL

Appendix K
Laboratory SOPs

AXYS SOP
SLA-015, Revision 6

Moisture Determination

This document is the Intellectual Property of AXYS Analytical Services Ltd. and contains Proprietary and Confidential Business Information. It may not be reproduced or distributed without written permission of the owner. © AXYS Analytical Services Ltd, 2010.
AXYS Analytical Services Ltd, 2045 Mills Road W., Sidney, BC, Canada, V8L 5X2. Tel. (250) 655-5800, fax (250) 655-5811.

Procedure:

Refer to SOP SLA-023 for instructions on using the balance. Refer to SOP SLA-022 for instructions on using the drying oven.

I. % MOISTURE AS PART OF AN ANALYSIS

1. Refer to SOPs SLA-079 *Agriculture Hazard Protocols for Soils* and SLA-082 *Handling of Human Biohazardous Samples* for handling procedures for agricultural and biohazardous samples.

2. Refer to the Batch List for instructions regarding moisture determination. If “micro-moisture” procedures are indicated, follow instructions in Section III. Consult the Lab Supervisor or Project Manager if upon examination of the sample, it is determined there is insufficient sample for a routine moisture determination.

3. Using a lab marker pen, label an aluminum weigh boat with the AXYS sample ID. Weigh the aluminum weigh boat and record the weight on the analysis worksheet. Record weights to two decimal places.

4. Using a solvent-rinsed spatula, transfer a 1-5 g ***** (dependent on the moisture content and the amount of available sample) subsample from a well-stirred, homogenized sample into a tared weigh boat. Refer to SOP SLA-085 for details of subsampling procedures. Accurately weigh the sample and record the weight on the sample worksheet. Carry this step out in duplicate for solid samples. Place all the weigh boats onto a disposable aluminum tray and cover with aluminum foil. Label with the workgroup ID and date on the foil.

   ***** If samples are >50% water, as determined by the Sample Preparation group, and there is sufficient sample, use a 5 g subsample.

5. Dry the subsample in the drying oven at 105°C±5°C in oven for 16 - 24 hours. Record the date and time that the sample went into the oven on the analysis worksheet.

6. Remove the subsample from the oven and record the date and time on the analysis worksheet. Allow the sample to cool to room temperature.

7. Weigh the dried subsample and aluminum weigh boat. Record the weight on the analysis worksheet.

This document is the Intellectual Property of AXYS Analytical Services Ltd. and contains Proprietary and Confidential Business Information. It may not be reproduced or distributed without written permission of the owner. © AXYS Analytical Services Ltd, 2010.
AXYS Analytical Services Ltd, 2045 Mills Road W., Sidney, BC, Canada, V8L 5X2. Tel. (250) 655-5800, fax (250) 655-5811.

8. Enter the percent moisture data into LIMS as described in Step 9 below. Do not dispose of the weigh boat with dried material until the calculations have completed and either all of the samples have passed (the RPD between the two determinations must be ≤20%) or the Lab Supervisor or Project Manager has been informed of any failures. Refer to SLA-079 *Agriculture Hazard Protocols for Soils*, SLA-082 *Handling of Human Biohazardous Samples* and SAD-014 *Sample Disposal* for the disposal of agricultural and biohazardous samples.

9. To enter the data, log into LIMS → Sample Management → Workstat → Moist/TSS/Lipid. Enter the WG, select moistures and press OK. For each sample enter the extraction date, sample size, tare weight, tare + wet weight and tare + dry weight. The spreadsheet calculates the sample dry weight, the percent moisture, percent solids and relative percent difference (RPD) between duplicates (where applicable). Once all data is entered, press Save. To print a copy of the spreadsheet, press Print and an Excel spreadsheet will open. When asked to save press Cancel. Print this sheet and then close the spreadsheet without saving. The mass data summary screen can now be closed. Attach the printed results to the Batch List. The data entries are checked by a Lab Chemist.

10. Where applicable, for sediments and soils, compare the percent moisture with the percent moisture calculated by the Sample Preparation group. The relative percent difference (RPD) between the mean percent moisture determined in the extraction lab and the mean percent moisture determined by the Sample Preparation group should be ≤20%. Report instances of poor replication to the Lab Supervisor who will assess the need for corrective action. Do not continue with the analysis until the Lab Supervisor has reviewed the data and determines a course of action.

11. The calculations carried out by the spreadsheet are as follows:

Percent Moisture

Wet wt of sample = (wt of wet sample and weigh boat) – (wt of weigh boat)

Dry wt of sample = (wt of dry sample and weigh boat) – (wt of weigh boat)

% moisture = [1-(dry wt of sample/wet wt of sample)] x 100

Sample Dry Weight

Sample Dry Wt = Wt. of Wet Sample for extraction x (dry wt of sample/wet wt of sample)

This document is the Intellectual Property of AXYS Analytical Services Ltd. and contains Proprietary and Confidential Business Information. It may not be reproduced or distributed without written permission of the owner. © AXYS Analytical Services Ltd, 2010.
AXYS Analytical Services Ltd, 2045 Mills Road W., Sidney, BC, Canada, V8L 5X2. Tel. (250) 655-5800, fax (250) 655-5811.

Relative Percent Difference (RPD)

$$\text{RPD} = \frac{|\text{Result 1} - \text{Result 2}|}{(\text{Result 1} + \text{Result 2}) / 2} \times 100$$

II. INDEPENDENT % MOISTURE DETERMINATION, PRIOR TO ANALYSIS

A Chemist from the Sample Preparation group carries out moisture determinations as independent analyses. The results are used to determine the size of the subsample used for analysis, where a specified dry weight is required.

1. Carry out the moisture analysis as described above, recording all weights and analysis information on the worksheet FWO-108. Do not carry out the analysis in duplicate. Enter the percent moisture as described in Section I, point 9. Verify the entry of the data into the spreadsheet and make any necessary corrections. Document the verification on the bottom of the worksheet. Attach the printout of the calculated moistures to the worksheet.

III. LIMITED SAMPLE – MICRO-MOISTURE PROCEDURES

These procedures are to be used when the amount of sample is limited. Typically, the Batch List indicates if 'micro-moisture" procedures are to be carried out. Carry out the moisture analysis as described in Section I with the following modifications:

1. Use a balance capable of weighing to 3 decimal places and record all weights to 3 decimal places.
2. Weigh out subsamples that are between 300 – 500 mg.

IV. QUALITY ASSURANCE/QUALITY CONTROL

1. The analyst must ensure that the balance has been calibrated as described in SOP SLA-023 and that the oven temperature is correct within an acceptable range (see Step #4).

V. RECORD KEEPING

1. Analysis worksheets with percent moisture data are filed with the client's data or submitted to the client in a data package.
2. Worksheets FWO-108 are kept on file by the Sample Preparation group.

This document is the Intellectual Property of AXYS Analytical Services Ltd. and contains Proprietary and Confidential Business Information. It may not be reproduced or distributed without written permission of the owner. © AXYS Analytical Services Ltd, 2010.
AXYS Analytical Services Ltd, 2045 Mills Road W., Sidney, BC, Canada, V8L 5X2. Tel. (250) 655-5800, fax (250) 655-5811.

References

FWO-108	Percent Moisture
SLA-022	Use of Drying Ovens and Muffle Furnace
SLA-023	Use of Balances
SLA-079	Agriculture Hazard Protocols for Soils
SLA-082	Handling of Human Biohazardous Samples
SLA-085	Subsampling Procedures for Solids and Tissues

Approval:

John Cosgrove, President and Senior Technical Director — Date: 09-JUL-2010

Shea Hewage, Director of Operations — Date: 09 JUL 2010

Dale Hoover, QA Manager — Date: 09 JUL 2010

STANDARD OPERATING PROCEDURE FOR SEMI-VOLATILE ORGANIC COMPOUNDS (SVOA) BY GC-MS

Revision Authors: Nancy Tavitas, Brian Mills

Uncontrolled Copy

This SOP is effective upon signed approval by the following:

Nancy L. Tavitas	5/15/09
Organics Manager	Date
Jeffrey M. Lorenz	5/16/2009
QA/QC Manager	Date

DISCLAIMER: This SOP has been developed for use at the Microbac Laboratories, Merrillville, Indiana facility. It is intended for use by trained analysts. As written, this SOP may not be specifically applicable to the activities of other organizations.

Last Review Date:
No Changes Needed
Approved By:

1.0 TABLE OF CONTENTS

1.0 Table of Contents 2
2.0 Scope and Application 3
3.0 Summary 3
4.0 Definitions 4
5.0 Interferences 4
6.0 Safety 4
7.0 Equipment and Supplies 4
8.0 Reagents and Standards 5
9.0 Sample Collection, Preservation, and Holding Times 9
10.0 Quality Control 9
11.0 Calibration and Standardization 14
12.0 Procedure 18
13.0 Calculations and Data Handling 19
14.0 Method Performance 21
15.0 Pollution Prevention 21
16.0 Waste Management 21
17.0 References 21
18.0 Tables, Forms, Checklists, and Other Attachments 21

Uncontrolled Copy

2.0 SCOPE AND APPLICATION

2.1 This is a GC/MS procedure for the determination of semi-volatile organic compounds. This procedure is applicable to the analysis of extracts from aqueous, non-aqueous liquid, and solid matrix samples. The applicable analytes, detection limits and routine reporting limits (PQL) are listed at the Limits tab of the applicable test codes in LIMS.

3.0 SUMMARY

3.1 Methods 8270C and 625 can be used to quantitate most neutral, acidic, and basic organic compounds that are soluble in Methylene chloride and are capable of being eluted, without derivitization, as sharp peaks from a gas chromatographic fused silica capillary column. Some of these compounds are: polynuclear aromatic hydrocarbons, chlorinated hydrocarbons and pesticides, phthalate esters, nitrosamines, ethers, anilines, aromatic nitro compounds, and phenols.

3.2 Semi-volatile organic compounds are extracted from the sample matrix using Methylene chloride. After concentration, the extract is injected into the GC/MS system and analyzed following the applicable criteria of SW-846 Method 8000C/8270C or EPA Method 625. Certain liquid sample matrices (e.g. oil) are miscible in Methylene chloride and do not require the preliminary extraction but, rather, are diluted with the solvent and analyzed.

3.3 This procedure is based on the reference methods listed in section 17 of this document. This procedure contains the following listed deviations. These deviations are considered insignificant deviations from the reference methods.

3.3.1 EPA Method 625 requires the use of a packed GC column while our procedure uses a capillary column. This is considered insignificant as our procedure meets the acceptance criteria for an alternate column as defined in sections 13.1 and 8.2 of Method 625.

3.3.2 EPA Method 625 requires the separate and individual analysis of the base/neutral fraction and the acid fraction while our procedure uses a single analysis on the gas chromatograph. This is considered insignificant as our procedure meets the acceptance criteria for alternate chromatographic conditions as defined in sections 13.1 and 8.2 of Method 625.

3.3.3 EPA Method 625 requires the spiking of all target analytes into the control samples while our procedure allows the rotating of spike analytes over a two-year basis. This rotating approach is consistent with the NELAC standards and is considered to provide sufficient data for evaluation and validation.

Uncontrolled Copy

3.3.4 EPA Method 625 requires surrogate spike concentrations be at 100 ug/ml each. SW-846 Method 8270C suggests surrogate spike concentrations be at 100 ug/ml for the Base/Neutral compounds and 200 ug/ml for the Acid compounds. We spike at a level of 100 ug/ml for both Base/Neutral compounds and Acid compounds.

4.0 DEFINITIONS

4.1 A list of definitions is in the Quality Assurance Plan. In addition to the terms defined in the QAP.

5.0 INTERFERENCES

5.1 Interferences are minimized through the use of ion counts and internal standards.

5.2 Contamination by carryover can occur when a low-level sample is analyzed after a high level sample. Solvent blanks should be analyzed in the instances to check for carryover effects.

6.0 SAFETY

6.1 Consult the current revision of the Chemical Hygiene Plan. Requirements for the use of personal protective equipment (e.g. safety glasses, lab coats, gloves) as well as other area-specific safety requirements (e.g. gas cylinders) and MSDS sheets are addressed in the CHP.

7.0 EQUIPMENT AND SUPPLIES

The following is a list of materials needed to perform the steps of this procedure as written. See the reference method(s) for equipment and supply specifications.

7.1 All volumetric glassware used shall be ASTM Class A. Glass microliter syringes are considered Class A provided they provided they come with a certificate attesting to the accuracy of the syringe. Syringes without vendor certification are considered Class B glassware. Class B glassware must be verified for accuracy on an annual basis and labeled with an appropriate correction.

7.2 GC/MS System consisting of the following:

7.2.1 HP 5890 Series II Gas Chromatograph; HP 5972 Mass Spectrometer; HP7673 ALS

7.2.2 HP 7890A Gas Chromatograph; HP5975C Mass Spectrometer; HP7683B ALS

7.2.3 Chromatographic column: Phenomenex ZB5-MS or equivalent; dimension specs length 30m, ID 0.32mm, film thickness 0.50 um or length 30m, ID 0.25mm, film thickness 0.25 um

7.2.4 Guard Column: Phenomenex: 10-m x 0.32-mm (inner diameter)

Uncontrolled Copy

7.2.5 Guard Column: Phenomenex: 10-m x 0.25-mm (inner diameter)

7.3 Computer with MS Chemstation software, monitor, and printer

7.4 Syringes: various sizes including 10-ul, 500-ul, and 1000-ul

7.5 Autosampler vials: 2-ml size with screw tops as well as 2-ml size with crimp tops

7.6 Crimper tool

7.7 400-ul glass inserts

8.0 REAGENTS AND STANDARDS

8.1 All reagents used must be analytical reagent (AR) grade or higher. All standards must be traceable to NIST, when available. Certificates of traceability must be obtained from the manufacturer. All reagents and standards must be documented in the appropriate preparation logbook. Refer to the requirements in the Labeling of Standards, Reagents, Digestates and Extracts SOP.

8.2 Reagents

All reagents are stored in the organics prep lab unless otherwise noted.

8.2.1 Methylene chloride, pesticide quality or greater

8.2.2 Methanol, pesticide quality or greater

8.3 Standards

All standards are stored in the Organics standard refrigerator unless otherwise instructed by the manufacturer's recommendation. Expiration of prepared standards must be performed in accordance with the Labeling of Standards, Reagents, Digestates and Extracts SOP.

8.3.1 Stock Tune Solution, 1000 ug/ml DFTPP, Benzidine, Pentachlorophenol, and 4,4'-DDT in Methylene chloride: Accustandard Cat #M-625-TS-20X or equivalent.

8.3.2 Working Tune Solution, 50 ug/ml each: In a 10-ml volumetric flask, dilute to the mark 500-ul of the Stock Tune Solution with Methylene chloride. Store the dilution in a screw-top vial.

8.3.3 Stock Internal Standard (I.S.), 4000 ug/ml each in Methylene chloride. Equivalent products from other vendors may be used. Transfer to 1.0-ml micro-reaction vessel with mini-inert valve and store in Cooler #2 in SVOA lab.

VENDOR	CAT #	COMPOUNDS
Accustandard	Z-014J-PAK SVOA	1,4-dichlorobenzene-d4; naphthalene-d8; acenaphthalene-d10; phenanthrene-d10; chrysene-d12; perylene-d14

Uncontrolled Copy

8.3.4 Working Internal Standard (for low-level SIM water analyses only): PAH-MS-SIM-W: 400-ug/ml each: In a 1.0-ml volumetric flask, dilute to the mark 100-ul of Stock Internal Standard with Methylene chloride. Transfer to a 1.0-ml micro-reaction vessel, with mini-inert valve and store in Cooler #2 in SVOA lab.

8.3.5 Stock Acid Surrogate Standard, 10000 ug/ml each in methanol. Equivalent products from other vendors may be used.

VENDOR	CAT #	COMPOUNDS
Supelco	4-7261	2-fluorophenol; phenol-d5; 2,4,6-tribromophenol

8.3.6 Stock Base/Neutral Surrogate Standard, 5000 ug/ml each in methanol. Equivalent products from other vendors may be used.

VENDOR	CAT #	COMPOUNDS
Supelco	4-7263	Nitrobenzene-d5; 2-fluorobiphenyl; terphenyl-d14

8.3.7 SVOA Stock Calibration Standards, 2000 ug/ml each in Methylene chloride. Equivalent products from other vendors may be used.

MIX #	VENDOR	CAT #	COMPOUNDS
SVOA 1	Accustandard	M-8270-01	See Table in Section 18.0
SVOA 2	Accustandard	M-8270-02	
SVOA 3	Accustandard	M-8270-03	
SVOA 4A	Accustandard	M-8270-04A	
SVOA 4B	Accustandard	M-8270-04B	
SVOA 5	Accustandard	M-8270-05	
SVOA6	Accustandard	M-8270-06	
Carbazole	Supelco / Protocol	4-8076 /S-730	
Pyridine	Supelco / Restek	4-8305-U/30409	

8.3.8 PNA Stock Calibration Standards:

Mix	Vendor	Cat#	Compounds	Conc. (ug/ml)
TCL Polynuclear Aromatic Hydrocarbons	Supelco	48905-U	See Table in Section 18.0	2000
EPA 8270 B/N Surrogate Spike Mix	Supelco	4-7263		5000

8.3.9 IWS Stock Standards: Neat samples: Equivalent products from other vendors may be used.

VENDOR	CAT #	COMPOUNDS
Supelco	44-2669	Decane
Supelco	44-2697	Octadecane

8.3.10 IWS Intermediate Standard: 2000-ug/ml each: In a 10-ml volumetric flask, dilute 0.020-ug of each stock standard to volume with Methylene chloride.

Uncontrolled Copy

8.3.11 SVOA Intermediate Calibration Standards, 200-ug/ml each: In a 5-ml volumetric flask, add the following stock or intermediate standards and dilute to volume with Methylene chloride:

Standard	Volume (ul)
Stock Acid Surrogate Standard	100
Stock Base/Neutral Surrogate Standard	200
Stock SVOA Calibration Standards (9 different standards)	500 each

8.3.12 PNA Intermediate Calibration Standards: 50-ug/ml: In a 10-ml volumetric flask, dilute 250-ul of TCL Polynuclear Aromatic Hydrocarbons standard and 100-ul of EPA 8270 B/N Surrogate Spike Standards with Methylene Chloride.

8.3.13 Working Calibration Standards: In separate and appropriate sized volumetric flasks, prepare the following dilutions with Methylene chloride. Transfer the dilutions into separate 1-ml screw top vials for storage.

Linearity Standard	Intermediate IWS Standard (ul)	Stock Internal Standard (ul)	SVOA Intermediate Calibration Standard (ul)	PNA Intermediate Calibration Standards (ul)	Dilute to (ml)	Final Conc. (ug/ml)
1*	0	10	0	20	1	1
2*	0	10	0	100	1	5
3	5	10	50	0	1	10
4	10	10	100	0	1	20
5**	25	10	250	0	1	50
6**	40	10	400	0	1	80
7	50	10	500	0	1	100
8	60	10	600	0	1	120
9	80	10	800	0	1	160
* Linearity Standard #1 and #2 are used for PNAs						
** Linearity Standard #5 or #6 are typically used as the CCV for SVOA analysis						

8.3.14 SVOA ICV Stock Standards: 1000-ug/ml each in Methylene chloride. Equivalent products from other vendors may be used. When purchased from the same vendor as the calibration standards, the verification standards must be from a different lot number.

VENDOR	CAT #	COMPOUNDS
Accustandard	S-9076	Custom SVOA mix
Supelco	5-06J08	CLP SVOA Cal Mix (Same stock acid and BN surrogates and stock ISTD)

8.3.15 SVOA Working ICV, 50-ug/ml: In a 1.0-ml volumetric flask, dilute 50-ul of Custom SVOA mix and 50-ul of CLP SVOA Calibration Mix. Add 10-ul of B/N Surrogate and 5-ul of Acid Surrogate, and 10-ul of Stock Internal Standard. Dilute to the mark with Methylene chloride. The final concentration of each analyte and surrogate is 50-ug/ml. The concentration of ISTD is 40-ug/ml.

Uncontrolled Copy

8.3.16 PNA-SIM Soils Working Calibration Standards: In a 1.0-ml volumetric flask prepare the following standards by diluting the stated compounds to the mark with Methylene chloride. For each standard, the final concentration of the Internal Standard is 40-ug/ml.

Linearity Standard	PNA Intermediate Calibration Standard (ul)	Stock Internal Standard (ul)	Final Concentration (ug/ml)
1	10	10	0.5
2	20	10	1.0
3	50	10	2.5
4	100	10	5.0
5	200	10	10.0
6	500	10	25.0
7	1000	10	50.0

8.3.17 PNA-SIM Soils ICV Stock standard:

VENDOR	CAT #	COMPOUNDS	Conc.(ug/ml)
Accustandard	Z-014G-R	PAH mix	2000
Supelco	4-7263	EPA 8270 B/N Surrogate Spike Mix	5000

8.3.18 8.3.18 PNA-SIM Soil Working ICV: In a 1.0-ml volumetric flask, dilute 5-ul of PAH Mix, 2-ul of Stock B/N Surrogate Standard and 10-ul of Stock Internal Standard to the mark with Methylene Chloride. The final concentration of each analyte and surrogate is 10-ug/ml. The concentration of the ISTD is 40-ug/ml.

8.3.19 PNA-SIM Low Level Waters Working Calibration Standards: In a 5.0-ml volumetric flask prepare the following standards by diluting the stated compounds to the mark with Methylene chloride. For each standard, the final concentration of the Stock Internal Standard is 4-ug/ml.

Linearity Standard	PNA Intermediate Calibration Standard (ul)	Stock Internal Standard (ul)	Final Concentration (ug/ml)
1	2	5	0.02
2	10	5	0.1
3	50	5	0.5
4	100	5	1.0
5	500	5	5.0
6	1000	5	10.0
7	2000	5	20.0

8.3.20 PNA-SIM Low Level Waters ICV Standards:

VENDOR	CAT #	COMPOUNDS	Conc.(ug/ml)
Accustandard	Z-014G-R-Pak	PAH mix	2000
Supelco	4-7263	EPA 8270 B/N Surrogate Spike Mix	5000

Uncontrolled Copy

8.3.21 PNA-SIM Low Level Waters Working ICV, 10-ug/ml: In a 1.0-ml volumetric flask, dilute 5-ul of PAH mix, 2-ul of B/N Surrogate and 10-ul of the Working Internal Standard and dilute to the mark with Methylene chloride. The final concentration of each analyte and surrogate is 10-ug/ml. The concentration of the ISTD is 4-ug/ml.

8.3.22 SVOA (Non-SIM) Analysis LCS/MS/MSD: When prepared as detailed in the preparation SOPs, the final concentration is 100 ug/L(3333 ug/Kg) for all spiked analytes.

8.3.23 PNA-SIM Soils Analysis LCS/MS/MSD: When prepared as detailed in the preparation SOPs, the final concentration is 333 ug/Kg for all spiked analytes.

8.3.24 PNA-SIM Low Level Waters Analysis LCS/MS/MSD: When prepared as detailed in the preparation SOPs, the final concentration is 10 ug/L for all spiked analytes.

9.0 SAMPLE COLLECTION, PRESERVATION, AND HOLDING TIMES

9.1 The client or other trained personnel collect samples. Samples received at the laboratory are considered representative unless otherwise noted.

9.2 Extracts are stored at <10°C in the Organics sample freezer located in the GC/SVOA lab.

9.3 Analysis must be performed within 40 days of extraction.

10.0 QUALITY CONTROL

10.1 An *Initial Demonstration of Capability* study must be performed prior to the initial analysis for each analyst and whenever substantial change has occurred in the procedure or instrument. Refer to the Capability and Detection Limit Studies SOP for details.

10.2 A *Method Detection Limit* study must be performed for each new procedure, annually thereafter, and whenever a change in instrument occurs. Refer to the Capability and Detection Limit Studies SOP for details.

10.3 A *DFTPP Tune Check* must be performed at the beginning of each 12-hour sequence. A 1-ul (50-ng) injection (for the 5975 Mass Spectrophotometer the injection is 0.5-ul) of the working tune solution (which contains DFTPP) must meet the following ion abundance criteria. If the criteria are not met, reanalyze. An acceptable tune must be obtained before samples can be analyzed

Uncontrolled Copy

DFTPP (DECAFLUOROTRIPHENYLPHOSPHINE)
KEY IONS and ION ABUNDANCE CRITERIA
METHODS 625 / 8270C

Mass	Ion Abundance Criteria
51	30 – 60% of mass 198
68	< 2% of mass 69
70	< 2% of mass 69
127	40 – 60% of mass 198
197	< 1% of mass 198
198	Base peak, 100% relative abundance
199	5 – 9% of mass 198
275	10 – 30% of mass 198
365	> 1% of mass 198
441	Present but less than mass 443
442	> 40% of mass 198
443	17 – 23% of mass 442

10.4 The *Tailing Factors* must be evaluated at the beginning of each 12-hour sequence. A 1-ul injection (for the 5975 Mass Spectrophotometer the injection is 0.5-ul) of the working tune solution (which contains Benzidine and Pentachlorophenol) must yield a tailing factor less than 3.0 for Benzidine and less than 5.0 for Pentachlorophenol. The tailing factors are calculated (according to Figure 13 in Method 625) by the instrument software and documented on the instrument printout. If tailing criteria is not met in the DFTPP injection, the tailing is evaluated in the CCV. If this meets criteria, analysis may proceed. If all samples analyzed against the tune are for a select list, only the applicable analyte type: Pentachlorophenol or Benzidine, needs to meet he tailing criteria. For example if all targets are B/N, then only Benzidine needs to meet the tailing criteria.

10.5 Internal Standards (I.S) must be added to all standards, QC samples and environmental samples.

10.5.1 Acceptance criteria for CCV standards are RT ± 30 seconds from that in the midpoint level standard of the most recent initial calibration (ICAL) and area counts within the range of -50 to +100% of those in the same (concentration level) linearity standard. These criteria are evaluated by the data system and printed on the Continuing Calibration Report. Failures in the CCV are automatically flagged on this report.

10.5.1.1 If the acceptance criteria are not met for the CCV, perform instrument maintenance then reanalyze the CCV or perform a new initial calibration.

10.5.2 There are no absolute acceptance criteria requirements for samples. The RT and Area for samples should be compared to that of the CCV for that day and assessed against the criteria for the CCV (i.e. RT ± 30 seconds and area counts within the range of -50 to +100%). These data are used as guidance in evaluating the response for samples.

Uncontrolled Copy

10.5.2.1 If the acceptance criteria are not met for a sample, evaluate the chromatogram for obvious matrix effects/interferences. If interferences are evident, the sample should be diluted and reanalyzed. If the internal standard response for the sample is below 25% the analyst should consult with the Unit Supervisor and use discretion on whether to report, dilute and reanalyze, or re-extract and analyze the sample. This discretion is dependent on the experience of the analyst and their Supervisor and factors such as a consistent response for the I.S. should be considered. If reanalysis yields poor internal standard response, or if reanalysis is performed beyond the hold time, both sets of data should be reported to the client and a Case Narrative written.

10.5.2.2 For samples having a known matrix effect (e.g. extracts from MGP sites) it is allowable to forego reanalysis due to “failing” I.S. response. These data, however, must be reported to the client with a Case Narrative informing them of the suspect data.

10.6 *Surrogate* (SURR) compounds must be added to all quality control samples, blanks, and samples.

10.6.1 Acceptance criteria are listed in the appropriate test code in LIMS. One acid and one Base/Neutral surrogate may be outside of the acceptance criteria.

10.6.2 Surrogate standards that fail to meet the acceptance criteria are automatically flagged in LIMS with an “S” qualifier.

10.6.3 The reporting of data associated with failing surrogate standards must be documented with a CAR form.

10.6.4 If the acceptance criteria are not met, reprepare, reanalyze, or re-extract and analyze the sample as appropriate. If insufficient sample is available for re-extraction, report the original result with a Case Narrative to the client. If reanalysis fails to meet the acceptance criteria the original results should be reported with a Case Narrative to the client. If reanalysis does meet the acceptance criteria but the re-extraction was performed beyond the maximum hold time both sets of results should be reported to the client with an appropriate Case Narrative.

10.7 An *Initial Calibration Verification* (ICV) standard must be analyzed immediately after the initial linearity (ICAL). This is the analysis of a second source standard.

10.7.1 Acceptance criteria, based on statistical limits, are listed in the appropriate test code in LIMS. If the acceptance criteria are not met, evaluate the recoveries against the nominal window of ±30 %R. If this criterion is met the analysis of the ICV is acceptable. If the acceptance criteria are not met, reanalyze. If reanalysis fails to meet the acceptance criteria, stop analysis and recalibrate or report data with an appropriate qualifier.

10.7.2 ICV standards that fail to meet the acceptance criteria are automatically flagged in LIMS with an “S” qualifier.

Uncontrolled Copy

10.7.3 The reporting of data associated with a failed ICV must be documented with a CAR form. If the failure is considered to have a significant affect on the data, client notification is required using the Case Narrative of the report.

10.7.4 Samples associated with an ICV that fails with a positive bias can be reported without narration if the sample concentration is below the reporting limit.

10.8 A *Continuing Calibration Verification* (CCV) standard is a calibration source standard and must be analyzed at the beginning of each analytical sequence following an acceptable instrument tune. The 12-hour analytical sequence begins with the injection of DFTPP, continues through the analysis of the CCV, QC samples and samples.

10.8.1 Acceptance criteria for Method 8270C are RF for SPCCs $\geq$ 0.050 and RF for CCCs $\leq$ 20% difference or drift from the initial calibration. (SPCCs and CCCs are listed in the table in Section 10.8.3 below). Acceptance criteria for Method 625 are responses $\leq$20% difference or drift from the initial calibration for any 625 target analyte. Any target analyte not listed in Method 625 must have $\leq$ 30% difference or drift from the initial calibration. An "Evaluate Continuing Calibration Report" is generated to evaluate this criteria. If any target analytes are quantitated employing a least squares regression method as opposed to using the average of response factor, this report must be generated using both relative response factor and calculated concentration. If acceptable criteria are not met, reanalyze. If reanalysis fails to meet the acceptance criteria, recalibrate.

10.8.2 The reporting of data associated with a failed CCV must be documented with a CAR form. If the failure is considered to have a significant affect on the data, client notification is required using the Case Narrative of the report.

10.8.3 Samples associated with a CCV that fails with a positive bias can be reported without narration if the sample concentration is below the reporting limit.

SPCCs	
N-nitroso-di-n-propylamine	2,4-dinitrophenol
Hexachlorocyclopentadiene	4-nitrophenol

CCCs	
B/N Fraction	*Acid Fraction*
Acenaphthene	4-Chloro-3-methylphenol
1,4-dichlorobenzene	2,4-dichlorophenol
Hexachlorobutadiene	2-nitrophenol
Diphenylamine	Phenol
Di-n-octyl phthalate	Pentachlorophenol
Fluoranthene	2,4,6-Trichlorophenol
Benzo(a)pyrene	

Uncontrolled Copy

10.9 A *Method Blank* must be prepared and analyzed with each batch of maximum 20 samples and at a minimum of one per day.

10.9.1 The acceptance criteria are < PQL. If the acceptance criteria are not met, reanalyze. If reanalysis fails to meet the acceptance criteria, re-extract and analyze the associated samples (alternatively, report data with an appropriate qualifier). Samples for compliance with our Wisconsin DNR certification must be evaluated down to the current MDL and corrective action taken if the blank exceeds the routine PQL.

10.9.2 MBLKs that fail to meet the acceptance criteria cause the sample results to be automatically flagged in LIMS with a “B” qualifier. MBLKs that are below the reporting limit but above the MDL are flagged in LIMS with a “b” qualifier. “b” flagged data is considered as meeting the acceptance criteria.

10.9.3 The reporting of data associated with a failed control sample must be documented with a CAR form. If the failure is considered to have a significant affect on the data, client notification is required using the Case Narrative of the report.

10.9.4 Samples associated with a MBLK that fails with positive bias can be reported without narration if the sample concentration is < PQL or greater than 10 times the blank contamination.

10.9.5 A *Laboratory Control Sample* must be prepared and analyzed with each batch of maximum 20 samples and at a minimum of one per day.

10.9.6 Acceptance criteria are listed in the appropriate test code in LIMS. If the acceptance criteria are not met, reanalyze. If reanalysis fails to meet the acceptance criteria, re-extract and analyze the associated samples (alternatively, report data with an appropriate qualifier).

10.9.7 If insufficient sample is available for reanalysis the original result should be reported with a Case Narrative notifying the client of the quality control failure. If the hold time has expired and an acceptable re-analysis performed, both sets of data should be reported and the appropriate result flagged with an “H” qualifier as defined in the LIMS.

10.9.8 LCSs that fail to meet the acceptance criteria are automatically flagged in LIMS with an “S” qualifier.

10.9.9 The reporting of data associated with a failed LCS must be documented with a CAR form. If the failure is considered to have a significant affect on the data, client notification is required using the Case Narrative of the report.

10.9.10 Samples associated with a LCS that fails with positive bias can be reported without narration if the sample concentration is below the reporting limit.

Uncontrolled Copy

10.9.11 When prepared for samples being analyzed by Method 8270C, the spiked analytes consist of the compounds listed in section 5.5.1 of Method 3500B. When prepared for samples being analyzed by Method 625, the spike analytes consist of the compounds listed in section 5.5.1 of Method 3500B plus an additional 10-12 compounds listed in Table 6 of Method 625. These additional compounds are changed at approximate 6-month intervals so that all of the Table 6 compounds can be evaluated over a two-year period.

10.10 A *Matrix Spike and Matrix Spike Duplicate* sample must be prepared and analyzed with each batch of maximum 20 samples per matrix and at a minimum of one per day.

10.10.1 Acceptance criteria are listed in the appropriate test code in LIMS. (Note: the accuracy criteria have been met provided at least either the MS or MSD meet the %R criteria.) If the accuracy criteria are not met in the MS or MSD, and the LCS is in control, assume matrix interference and report the results with an appropriate Case Narrative. If the precision criteria are not met, report the results with an appropriate Case Narrative.

10.10.2 MS/MSD's that fail to meet the accuracy criteria are automatically flagged in LIMS with an "S" qualifier. MSD's that fail to meet the precision criteria are automatically flagged in LIMS with an "R" qualifier.

10.10.3 The reporting of data associated with a failed MS/MSD must be documented with a CAR form. If the failure is considered to have a significant affect on the data, client notification is required using the Case Narrative of the report.

10.10.4 Samples associated with a MS/MSD that fails the accuracy criteria with positive bias can be reported without narration if the sample concentration is below the reporting limit.

10.10.5 If the concentration measured in the sample is greater than 4-times the concentration of the spike, the spike amount used is insufficient and the MS/MSD not applicable.

10.10.6 The list of spiked compounds is the same as that for the LCS.

11.0 CALIBRATION AND STANDARDIZATION

Calibration data is documented and retained using the printouts from the instrument software and the ICAL Review Checklist. Analytical data must be maintained in accordance with the document control requirements in the Quality Assurance Plan as well as the Document Control SOP.

11.1 An instrument maintenance logbook is maintained for each instrument.

11.1.1 The maintenance on SVOA instruments is divided into 2 categories:

Uncontrolled Copy

11.1.1.1 Scheduled: This maintenance is typically done on a daily basis according to analyst discretion. It includes replacing injection liner, cutting inlet end of guard column, checking and replacing the inlet gold seal and checking and replacing the injection septum. This scheduled maintenance is recorded on the Routine Scheduled Maintenance log in the Instrument Maintenance Log Book.

11.1.1.2 Non-scheduled: all other maintenance not described as scheduled. These procedures are recorded in the Instrument Maintenance Logbook.

11.2 A new Initial Calibration (linearity; ICAL) is required as listed below.

- CCV failure that is uncorrectable through appropriate instrument maintenance (see section 10 for additional guidance)
- New column
- Replacement of the electron multiplier, entrance lens, draw-out lens, ion source chamber, or injection port

11.3 Normal instrument conditions are as follows, but vary by instrument:

<u>Zone Temperatures</u>

Inlet:	On	Setpoint: 250°C
Detector:	On	Setpoint: 280°C

<u>DFTPP.m</u>

Injection size:	1-ul		
Initial Temp:	150°C		
Initial Time:	0.75-minute		
Rate A:	25°C / minute	Rate B:	12°C / minute
Final Temp:	320°C	Final Temp:	250°C
Final Time:	1.25-minutes	Final Time:	0.0-minutes
Run Time:	8.8-minutes		

<u>8270-Aq.m</u>

Injection size:	1-ul		
Initial Temp:	40°C		
Initial Time:	0.5-minute		
Rate A:	22°C / minute	Rate B:	35°C / minute
Final Temp:	220°C	Final Temp:	325°C
Final Time:	0-minutes	Final Time:	3-minutes
Run Time:	16-minutes		

11.4 Set up a sequence in the Sample Table Log under *Sequence* of the main menu. Enter the sequence as it is to be run, including the applicable analysis method. A calibration sequence must start with a DFTPP tune followed by the calibration standards then an ICV standard.

Uncontrolled Copy

11.5 Click on *Position and Run*.

11.6 Generate the corresponding Quantitation Reports, DFTPP "Tune" Report and Response Factor Report.

11.6.1 The software calculates RF values for each standard as well as the average RF of all analytes.

11.6.2 On the DFTPP Report, evaluate the Pass/Fail column. An acceptable tune will Pass each of the criteria. Calibration can not continue with a failed tune. Details of Tune evaluation include:

- Initial evaluation should use the auto-evaluate feature of the software. This feature evaluates the apex of the peak as well as the scans immediately on either side of the apex and automatically background corrects using a single scan no more than 20 scans prior to the beginning of the peak.
- If the auto-evaluation fails, select a different single spectrum or the average of several spectra. If these approaches fail, add additional spectra and re-evaluate. Guidance for these options is in the Environmental Data Analysis User's Guide for the Enviroquant software.
- Background correction must use a single scan acquired no more than 20 scans prior to the beginning of the DFTPP peak. No part of the DFTPP peak can be subtracted.
- Appropriate corrective action (e.g. instrument maintenance, new standard, re-calibration, etc) must be performed if an instrument continues to fail the tune criteria.
- The Quantitation Report for Pentachlorophenol and Benzidine must show the Tailing factor for each (see Section 10.4).

11.6.3 On the Response Factor Report, circle the %RSD values of each CCC and place a check mark next to the average RF of each SPCC.

11.7 The acceptance criteria for an acceptable ICAL are as follows:

11.7.1 For Methods 8270C, 8000C and Low-level SIM-PNAs

Criteria:

- Minimum of 5 levels
- Average RF for the SPCCs must be $\geq$ 0.050
- %RSD for the CCCs must be < 30%.
- The concentration of the low standard must be at, or below the PQL for each target analyte.

Where these criteria are met and the %RSD of all individual compounds is ≤ 15%, the calibration is considered linear and the average RF is used for concentration calculation.

11.7.1.1 If the %RSD >15% for any analyte, the following options may be used:

Uncontrolled Copy

- Narrow the calibration range by replacing one or more of the calibration standards with standards that cover a narrower range.
- The concentration of the low standard must be at or below the PQL for every target analyte.
- Employ the least squares regression equation. The origin (0.0) may not be included as an extra calibration point, but Method 8000C allows the forcing of the regression curve through zero.
- Linear (first order)-requires a minimum of 5 calibration standard levels.
- Non-Linear (second order) quadratic- requires a minimum of 6 calibration standard levels.
- Non-Linear (third order) polynomial-requires a minimum of 7 calibration standard levels.

Note: Method 8000C allows for the evaluation of linearity using either the correlation coefficient (r) or the coefficient of determination (r2). Regardless of the statistical model used by the software (i.e. r or r2), the acceptance criteria are greater than or equal to 0.99.

11.7.1.2 All ICAL standards need to be analyzed within the same tune.

11.7.2 For Method 625

- Minimum of 3 levels
- average RF for each compound must have %RSD < 35%

Where these criteria are met, the calibration is considered linear and the average RF is used for concentration calculations.

11.7.2.1 If the %RSD is >35% for any analyte, the same criteria as for Method 8270C (Section 11.7.1.1) above applies.

11.7.2.2 All ICAL standards need to be analyzed within the same tune.

11.8 If the linearity requirements are not met, take appropriate corrective actions and recalibrate. If the acceptance criteria are met, rename the method “SVOAmmdd”, (or similar) where mmdd designates the month and date of the new linearity.

11.8.1 Dropping levels from the calibration curve is allowable under the following conditions.

- Individual analytes may be eliminated from the low or high points.
- If the low-level standard for a particular analyte is removed from the curve, the PQL must be adjusted accordingly for that analyte.
- If a high-level standard is removed from the curve for a particular analyte, the UQL must be adjusted accordingly for that analyte.
- The required minimum number of calibrated levels remains (5 levels for 8270C, 3 levels for 625).

11.8.2 Points may not be dropped solely to meet the acceptance criteria. There must be justifiable reasons for excluding a given standard.

Uncontrolled Copy

11.8.3 If a mid-level standard is unusable, that level must re-prepared and analyzed so to provide a continuous series of calibration standards.

11.9 Analyze an ICV standard. The acceptance criteria must be met before continuing with sample analysis. Analysis of environmental samples cannot proceed without the generation of an acceptable linearity and an acceptable initial verification (See section 10.7).

12.0 PROCEDURE

Analytical data is documented and retained using the printouts from the instrument software. Analytical data must be maintained in accordance with the document control requirements in the Quality Assurance Plan as well as the Document Control SOP.

12.1 Perform the required preventive maintenance. Documentation is maintained in the PM Logbook for each instrument.

12.2 The ICAL must be verified each “analytical sequence” prior to sample analysis by analyzing a calibration standard (CCV) at/near the mid-point of the curve (typically 50- or 80-ug/ml. For SIM_W use 5- or 10-ug/ml). See the Quality Control section for the acceptance criteria. The 12-hour analytical sequence begins with the injection of DFTPP, continues through the analysis of the CCV, environmental samples and QC samples.

12.3 Set up a sequence in the Sample Table Log under *Sequence* of the main menu. Enter the sequence as it is to be run, including the applicable analysis method.

12.3.1 To prepare sample extracts for analysis:

12.3.1.1 For all analyses except low-level PNA Waters (PAH-MS-SIM_W) withdraw 200-ul of the extract with a syringe and place it into a 1.0-ml autosampler vial containing a glass insert. Add 2.0-ul of the stock internal standard. The concentration of the internal standards will be 40 ug/ml each. NOTE: All extracts, including dilutions, must be spiked with the internal standards at a concentration of 40 ug/ml.

12.3.1.2 For all analyses of low-level PNA Waters (PAH-MS-SIM_W) withdraw 200-ul of the extract with a syringe and place it into a 1.0-ml autosampler vial containing a glass insert. Add 2.0-ul of the PAH-MS-SIM_W stock internal standard. The concentration of the internal standards will be 4.0 ug/ml each. NOTE: All extracts, including dilutions, must be spiked with the internal standards at 4- ug/ml.

12.4 Click on *Position and Run*.

12.5 After each sample has run, evaluate the chromatogram and quantitate against the current initial linearity (ICAL).

Uncontrolled Copy

12.6 Generate the corresponding Quantitation Reports, DFTPP "Tune" Report and Evaluate Continuing Calibration Report.

12.6.1 On the DFTPP Report, evaluate the Pass/Fail column. An acceptable tune will Pass each of the criteria. Analysis can not continue with a failed tune.

12.6.2 The Quantitation Report for Pentachlorophenol and Benzidine must show the Tailing factor for each. If tailing criteria is not met in the DFTPP injection, the tailing is evaluated in the CCV. If this meets criteria, analysis may proceed. (See section 10.4.)

12.6.3 On the Evaluate Continuing Calibration Report, circle the %Dev values of each CCC as well as the Area of each internal standard, and place a check mark next to the CCRF of each SPCC.

12.7 Analysis of environmental samples cannot proceed without an acceptable CCV.

12.8 If the concentration of any target compound in a sample exceeds the initial calibration range, a new aliquot of that extract must be diluted and analyzed unless the client will accept "E" values. This is determined by the project manager.

13.0 CALCULATIONS AND DATA HANDLING

Analytical data must be maintained in accordance with the document control requirements in the Quality Assurance Plan as well as the Document Control SOP.

Uncontrolled Copy

13.1 The HP software will print out all target analytes detected at a concentration at or above the MDL. The analyst must verify every target detected by evaluating the retention time and fit against the applicable CCV standard. These evaluations are accomplished by evaluating the characteristic ions through QEDIT as well as comparing the reference spectra. The Qvalue should be considered, however, the individual spectra must be evaluated in order to confidently identify a given analyte.

13.1.1 The data system software evaluates the retention time of each peak as well as a comparison of the characteristic ions to identify the compounds present. The characteristic ions of the reference spectrum are the three ions of greatest intensity (or any ions having a relative intensity greater than 30% if less than three ions are present). The following criteria are used for qualitative identification. An analyte may be confirmed as a proper identification only if these criteria are met.

- The characteristic ions of a compound must have a relative retention time of ± 0.06 minutes of the standard (RT ± 30 sec for Method 625).
- The relative intensities of the characteristic ions are within 20% of those ions in the reference spectrum (30% for Method 8270C). Example: for an ion having an abundance of 50% in the reference spectrum, the corresponding abundance in a sample can range from 30% to 70% (Method 625) or 20% to 80% (Method 8270C) as appropriate.

- Structural isomers that produce very similar mass spectra should be identified as individual isomers if they have sufficiently different retention times, otherwise, the isomers having a resolution of < 25% are identified as isomeric pairs.

13.1.2 Minimum levels for each analyte are established in the software at a concentration equivalent to the current on-column MDL value.

13.1.3 Manual peak integrations must be documented on the Quantitation Report. See the Manual Integration of Chromatographic Peaks SOP for details.

13.2 Response factors (RF) are calculated as follows:

$$RF = (A_x)(C_{IS}) / (A_{IS})(C_x)$$

Where: A_x = Area of characteristic ion for compound being measured
A_{IS} = Area of characteristic ion for compound being measured
C_{IS} = Concentration of the specific internal standard
C_x = Concentration of the compound being measured

13.3 The software calculates the sample concentration as follows:

$$\text{Conc.} = \frac{(A_x)(I_s)(V_t)(DF)}{(A_{IS})(RF)(V_o)(V_i)}$$

Where: A_x = Area of characteristic ion for compound being measured
I_s = Amount of internal standard injected (ng)
V_t = Volume of total extract, taking into account dilution
A_{IS} = Area of characteristic ion for the internal standard
RF = Initial average response factor for compound being measured
V_o = Volume of water extracted (L), or mass of soil extracted (kg)
V_I = Volume of extract injected (ul)
DF = dilution factor

13.4 When the When the analyte curve fit is quadratic or quad forced and the analyte response is beyond the linear range for the ICAL. What would be considered an "E" value result may quantitate as a negative result. The report will print out as "Below Cal". Care must be taken to ensure that this analyte is not missed and reported as a non-detect. Consultation with supervisor or QA director is advised.

13.5 After review, enter final results into the LIMS system. Results flagged by the LIMS with an "E" qualifier are above the linear range of the instrument. There is less certainty in these data and, if sufficient extract and holding time are available, should be reanalyzed at an appropriate dilution. Details on the procedure for entering analytical data are in the Data Entry SOP.

13.6 The LIMS calculates the dry-weight concentration for solid samples as follows:

$$\text{Conc. Dry} = \frac{\text{(wet weight conc.)}}{(100 - \%\ \text{Moisture})}$$

Uncontrolled Copy

14.0 METHOD PERFORMANCE

14.1 Initial Demonstration of Capability study data, Method Detection Limit study data and Performance Testing study data are maintained and available from the QA office.

15.0 POLLUTION PREVENTION

15.1 The quantity of chemicals purchased should be based on expected usage during their shelf life and the disposal cost of unused material.

15.2 Prepare the minimum amount of reagent and standard necessary.

16.0 WASTE MANAGEMENT

16.1 Refer to the Sample Disposal SOP for guidance on the disposal of any resulting residue, digestate, distillate, extract or standard.

17.0 REFERENCES

17.1 USEPA Method 625

17.2 SW-846 Method 8270C

17.3 SW-846 Method 8000C

17.4 Preparation of Aqueous Samples Using Liquid-Liquid Extraction by SW-846 Method 3510C SOP, current revision.

17.5 Preparation of Aqueous Samples Using Continuous Liquid-Liquid Extraction by SW-846 Method 3520C SOP, current revision.

17.6 Preparation of Non-Aqueous Samples Using Sonication by SW-846 Method 3550B SOP, current revision.

17.7 Environmental Data Analysis User's Guide, HP G1032C Enviroquant Target Compound Software, 1992

17.8 Microbac Laboratories Quality Assurance Plan, current revision, all sections

18.0 TABLES, FORMS, CHECKLISTS, AND OTHER ATTACHMENTS

Table of ICAL & Verification Standard compounds (2 pages)
ICAL Review Checklist (1 page)
SVOA Scheduled Maintenance Log (1 page)
SVOA Non-scheduled Maintenance Log (1 page)
SOP Revision Notification Form listing the changes in this revision (1 page)

Uncontrolled Copy

SVOA Calibration Standard Compounds	
M-8270-01	Aniline; Benzyl alcohol; Bis(2-Chloroethyl)ether; 1,2-Dichlorobenzene; Bis(2-Chloroisopropyl)ether; 2-Chlorophenol; 1,3-Dichlorobenzene 1,4-Dichlorobenzene; Hexachloroethane; 2-Methylphenol; 4-Methylphenol; N-Nitrosodimethyamine; N-Nitrosodi-n-propylamine Phenol
M-8270-02	Acetophenone; Benzoic acid; Bis(2-Chloroethoxy)methane; 4-Chloroaniline; 4-Chloro-3-methylphenol; 2,4-Dichlorophenol; 2,6-Dichlorophenol; 2,4-Dimethylphenol; Hexachlorobutadiene; Isophorone; Naphthalene; Nitrobenzene; 2-Nitrophenol; 1,2,4-Trichlorobenzene ; 2-Methylnaphthalene
M-8270-03	Acenaphthene; Acenaphthylene; 2-Chloronaphthalene; 4-Chlorophenyl phenyl ether; Dibenzofuran; Diethyl phthalate; 2,4-Dinitrophenol; 2,4-Dinitrotoluene; 2,6-Dinitrotoluene; Fluorene; Hexachlorocyclopentadiene; 2-Nitroaniline; 3-Nitroaniline; 4-Nitroaniline; 4-Nitrophenol; 2,4,5-Trichlorophenol; 2,4,6-Trichlorophenol; Dimethylphthalate
M-8270-04A	Anthracene; 4-Bromophenyl phenyl ether; Di-n-butyl phthalate 4,6-Dinitro-2-methylphenol ; Fluoranthene; Hexachlorobenzene; Pentachlorophenol; Phenanthrene
M-8270-04B	1,2-Diphenylhydrazine; N-Nitrosodiphenylamine
M-8270-05	Benzidine; Benzo(a)anthracene; Bis(2-Ethylhexyl) phthalate; Butyl benzyl phthalate; Chrysene; 3,3'-Dichlorobenzidine; Pyrene
M-8270-06	Benzo(b)fluoranthene; Benzo(k)fluoranthene ; Benzo(g,h,i)perylene Benzo(a)pyrene; Dibenz(a,h)anthracene; Di-n-octyl phthalate; Indeno(1,2,3-cd)pyrene
4-8076	Carbazole
4-8305-U	Pyridine

PNA Calibration Standard Compounds			
Vendor	**Cat. No.**	**Description**	**Compounds**
Supelco	48905-U	TCL Polynuclear Aromatic Hydrocarbon Mix	Acenaphthene; Acenaphthylene; Anthracene; Benzo(a)anthracene; Benzo(a)pyrene; Benzo(b)fluoranthene; Benzo(g,h,i)perylene; Benzo(k)fluoranthene; Chrysene; Dibenz(a,h)anthracene; Fluoranthene; Fluorene; Indeno(1,2,3-cd)pyrene; Naphthalene; Phenanthrene; Pyrene

SVOA ICV Standard Compounds			
Vendor	**Cat. No.**	**Description**	**Compounds**
Accustandard	S-9076	Custom SV Mix	Benzoic acid; Benzyl alcohol; 2,6-Dichlorophenol;, N-Nitrosodiphenylamine; Benzidine; 3,3'-Dichlorobenzidine; Acetophenone; Pyridine; Aniline
Supelco	506508	CLP Semivolatiles Calibration Mix	Acenaphthene; Acenaphthylene; Anthracene; Azobenzene; Benzo (A) Anthracene; Benzo (A) Pyrene; Benzo (B) Fluoroanthene; Benzo (G,H,I) Perylene; Benzo (K) Fluoranthene; Benzyl butyl Phthalate; Bis-(2-chloroethoxy)-methane; Bis-(2-Chloroethyl) ether; Bis-(2-Chloroisopropyl) ether; Bis-(2-ethylhexyl)-phthalate; Carbazole; Chrysene; Di-N-butyl phthalate; Di-N-octyl phthalate; Dibenz-(A,H)-Anthracene; Dibenzofuran; Diethyl Phthalate; Diemethyl Phthalate; Fluoroanthene; Fluorene; hexachlorobenzene; hexachlorobutadiene; Hexachlorocyclopentadiene; Hexachloroethane; Indeno (1,2,3-CD) Pyrene; Isophorone; N-Nitrosodi-N-Propylamine; N-Nitrosodimethylamine; Naphthalene; Nitrobenzene; Pentachlorophenol; Phenanthrene; Phenol; Pyrene; 1,2-Dichlorobenzene; 1,2,4-Trichlorobenzene; 1,3-Dichlorobenzene; 1,4-Dichlorobenzene; 2-Chloronapthalene; 2-Chlorophenol; 2-Methyl-4,6-dinitrophenol; 2-Methylnaphthalene; 2-Methylphenol; 2-Nitroaniline; 2-Nitrophenol; 2,4-Dichlorophenol; 2,4-Dimethylphenol; 2,4-Dinitrophenol; 2,4-Dinitrotoluene; 2,4,5-Trichlorophenol; 2,4,6-Trichlorophenol; 2,6-Dinitrotoluene; 3-Nitroaniline; 4-Bromophenylphenyl ether; 4-Chloro-3-Methylphenol; 4-Chloroaniline; 4-Chlorophenylphenylether; 4-Methylphenol; 4-Nitroanilline; 4-Nitrophenol

Uncontrolled Copy

PNA ICV Standard Compounds			
Vendor	**Cat. No.**	**Description**	**Compounds**
Accustandard	Z-014G-R	PAH Mix	Acenaphthene; Acenaphthylene; Anthracene; Benzo(a)anthracene; Benzo(a)pyrene; Benzo(b)fluoranthene; Benzo(g,h,i)perylene; Benzo(k)fluoranthene; Chrysene; Dibenz(a,h)anthracene; Fluoranthene; Fluorene; Indeno(1,2,3-cd)pyrene; Naphthalene; Phenanthrene; Pyrene; Carbazole

Uncontrolled Copy

Microbac Laboratories
ICAL Review Checklist – SVOA

Instrument ID: _____ Analyst:: _____

Linearity Date: _____ Quant. Method Name: _____

1st Level Technical Review

Review Element	Evaluation	Comments (use this space as needed)
SW-846 Method 8270C/8000C		
%RSD of CCCs <30 and circled?	[ ] Yes [ ] No [ ] NA	
Avg. RF of SPCCs meet method criteria and check-marked?	[ ] Yes [ ] No [ ] NA	
%RSD of all individual target components <15 ?	[ ] Yes [ ] No [ ] NA	
Minimum of 5 calibration levels for all components?	[ ] Yes [ ] No [ ] NA	
EPA Method 625		
%RSD of each compound <35 or when using Quadratic Regression or Linear Regression, $r^2 \geq 0.99$ for each compound?	[ ] Yes [ ] No [ ] NA	
Minimum of 3 calibration levels for all components?	[ ] Yes [ ] No [ ] NA	
Miscellaneous		
Method properly calibrated and saved? (including)		
• RTs correct?	[ ] Yes [ ] No [ ] NA	
• Concentrations correct?	[ ] Yes [ ] No [ ] NA	
• Reference spectra updated?	[ ] Yes [ ] No [ ] NA	
• ICV acceptance criteria met?	[ ] Yes [ ] No [ ] NA	

Initials: _____ Date: _____

2nd Level Technical Review

Above assessment accurate [ ] Yes [ ] No
Data accurate in LIMS [ ] Yes [ ] No
If "No", list unacceptable evaluation(s): _____

LIMS QA Validation performed [ ] Yes [ ] No

Initials: _____ Date: _____

SVOA CCCs	SVOA SPCCs
Acenaphthene, 1,4-Dichlorobenzene, Hexachlorobutadiene, Diphenylamine, Di-n-octyl phthalate, Fluoranthene, Benzo(a)pyrene, 4-Chloro-3-methylphenol, 2,4-Dichlorophenol, 2-Nitrophenol, Phenol, Pentachlorophenol, 2,4,6-Trichlorophenol	*Criteria ≥ 0.050* N-Nitrosodi-n-propylamine, Hexachlorocyclopentadiene, 2,4-Dinitrophenol, 4-Nitrophenol

Revision 3, 5/14/09

Uncontrolled Copy

Microbac Laboratories, Inc.
Routine/Scheduled Maintenance Log
Instrument ID: SVOA-4

Month & Year: _____

	Minimum Frequencies *											
	Daily		As Needed									
Date	Change Liner	Cut Column	Change Septa	Change Gold Seal								Comments
1												
2												
3												
4												
5												
6												
7												
8												
9												
10												
11												
12												
13												
14												
15												
16												
17												
18												
19												
20												
21												
22												
23												
24												
25												
26												
27												
28												
29												
30												
31												

* All other maintenance is documented using the Non-Scheduled Mainenance Log

rev: _a_04_2006 1 of 18

Uncontrolled Copy

Microbac Laboratories, Inc.
Non-Scheduled Maintenance Log
Instrument ID: SVOA-2

Date: _____ Problem: _____
Maintenance / Service Performed: _____

Result: _____

Analyst: _____

Date: _____ Problem: _____
Maintenance / Service Performed: _____

Result: _____

Analyst: _____

Date: _____ Problem: _____
Maintenance / Service Performed: _____

Result: _____

Analyst: _____

Uncontrolled Copy

rev: _a_09/15/05 1 of 15

Microbac

SOP Revision Notification / Annual Review Form

SOP Name **STANDARD OPERATING PROCEDURE FOR SEMI-VOLATILE ORGANIC COMPOUNDS (SVOA) BY GC-MS**

[X] *New Revision* Old Revision # 9 New Revision # 10

Summary of changes:

- Removed Originating Author from cover page.
- Section 10.8.1-updated CCV criteria to include "drift from initial calibration" when a least squares regression equation is used for an analyte.
- Section 11.7- Updated ICAL criteria to include least squares regression equations and removed the use of the grand mean average.
- Added verbiage to Sect 13.0 regarding care in reporting analytes the use Quadratic or Quadratic forced that are beyond the linear range for the ICAL
- Removed Method 8000B from Sec 17.0 (References)
- Replaced ICAL checklist with updated format in Section 18.0

By signing below, I certify that I have been *notified* about the approval of a *new revision* to the above mentioned SOP. I realize it is *my responsibility* to **read, understand and perform** the procedure as set forth in this new revision.

Initials & Date	Initials & Date	Initials & Date

[ ] *Annual Review* Current Revision # _____

By signing below, I certify that I have **re-read, understand** and **agree to perform** the current revision of the above mentioned SOP.

Initials & Date	Initials & Date	Initials & Date

Form revised 01/18/06

Uncontrolled Copy

Appendix K
Laboratory SOPs

Microbac SOP
625-8270, Revision 10

TCL Semi-Volatile Organic Compounds (SVOCs)
By GC-MS

STANDARD OPERATING PROCEDURE FOR SEMI-VOLATILE ORGANIC COMPOUNDS (SVOA) BY GC-MS

Revision Authors: Nancy Tavitas, Brian Mills

Uncontrolled Copy

This SOP is effective upon signed approval by the following:

Nancy L. Tavitas	5/15/09
Organics Manager	Date
Jeffrey M. Lorenz	5/16/2009
QA/QC Manager	Date

DISCLAIMER: This SOP has been developed for use at the Microbac Laboratories, Merrillville, Indiana facility. It is intended for use by trained analysts. As written, this SOP may not be specifically applicable to the activities of other organizations.

Last Review Date:
No Changes Needed
Approved By:

1.0 TABLE OF CONTENTS

1.0 Table of Contents 2
2.0 Scope and Application 3
3.0 Summary 3
4.0 Definitions 4
5.0 Interferences 4
6.0 Safety 4
7.0 Equipment and Supplies 4
8.0 Reagents and Standards 5
9.0 Sample Collection, Preservation, and Holding Times 9
10.0 Quality Control 9
11.0 Calibration and Standardization 14
12.0 Procedure 18
13.0 Calculations and Data Handling 19
14.0 Method Performance 21
15.0 Pollution Prevention 21
16.0 Waste Management 21
17.0 References 21
18.0 Tables, Forms, Checklists, and Other Attachments 21

Uncontrolled Copy

2.0 SCOPE AND APPLICATION

2.1 This is a GC/MS procedure for the determination of semi-volatile organic compounds. This procedure is applicable to the analysis of extracts from aqueous, non-aqueous liquid, and solid matrix samples. The applicable analytes, detection limits and routine reporting limits (PQL) are listed at the Limits tab of the applicable test codes in LIMS.

3.0 SUMMARY

3.1 Methods 8270C and 625 can be used to quantitate most neutral, acidic, and basic organic compounds that are soluble in Methylene chloride and are capable of being eluted, without derivitization, as sharp peaks from a gas chromatographic fused silica capillary column. Some of these compounds are: polynuclear aromatic hydrocarbons, chlorinated hydrocarbons and pesticides, phthalate esters, nitrosamines, ethers, anilines, aromatic nitro compounds, and phenols.

3.2 Semi-volatile organic compounds are extracted from the sample matrix using Methylene chloride. After concentration, the extract is injected into the GC/MS system and analyzed following the applicable criteria of SW-846 Method 8000C/8270C or EPA Method 625. Certain liquid sample matrices (e.g. oil) are miscible in Methylene chloride and do not require the preliminary extraction but, rather, are diluted with the solvent and analyzed.

3.3 This procedure is based on the reference methods listed in section 17 of this document. This procedure contains the following listed deviations. These deviations are considered insignificant deviations from the reference methods.

3.3.1 EPA Method 625 requires the use of a packed GC column while our procedure uses a capillary column. This is considered insignificant as our procedure meets the acceptance criteria for an alternate column as defined in sections 13.1 and 8.2 of Method 625.

3.3.2 EPA Method 625 requires the separate and individual analysis of the base/neutral fraction and the acid fraction while our procedure uses a single analysis on the gas chromatograph. This is considered insignificant as our procedure meets the acceptance criteria for alternate chromatographic conditions as defined in sections 13.1 and 8.2 of Method 625.

3.3.3 EPA Method 625 requires the spiking of all target analytes into the control samples while our procedure allows the rotating of spike analytes over a two-year basis. This rotating approach is consistent with the NELAC standards and is considered to provide sufficient data for evaluation and validation.

Uncontrolled Copy

3.3.4 EPA Method 625 requires surrogate spike concentrations be at 100 ug/ml each. SW-846 Method 8270C suggests surrogate spike concentrations be at 100 ug/ml for the Base/Neutral compounds and 200 ug/ml for the Acid compounds. We spike at a level of 100 ug/ml for both Base/Neutral compounds and Acid compounds.

4.0 DEFINITIONS

4.1 A list of definitions is in the Quality Assurance Plan. In addition to the terms defined in the QAP.

5.0 INTERFERENCES

5.1 Interferences are minimized through the use of ion counts and internal standards.

5.2 Contamination by carryover can occur when a low-level sample is analyzed after a high level sample. Solvent blanks should be analyzed in the instances to check for carryover effects.

6.0 SAFETY

6.1 Consult the current revision of the Chemical Hygiene Plan. Requirements for the use of personal protective equipment (e.g. safety glasses, lab coats, gloves) as well as other area-specific safety requirements (e.g. gas cylinders) and MSDS sheets are addressed in the CHP.

7.0 EQUIPMENT AND SUPPLIES

The following is a list of materials needed to perform the steps of this procedure as written. See the reference method(s) for equipment and supply specifications.

7.1 All volumetric glassware used shall be ASTM Class A. Glass microliter syringes are considered Class A provided they provided they come with a certificate attesting to the accuracy of the syringe. Syringes without vendor certification are considered Class B glassware. Class B glassware must be verified for accuracy on an annual basis and labeled with an appropriate correction.

7.2 GC/MS System consisting of the following:

7.2.1 HP 5890 Series II Gas Chromatograph; HP 5972 Mass Spectrometer; HP7673 ALS

7.2.2 HP 7890A Gas Chromatograph; HP5975C Mass Spectrometer; HP7683B ALS

7.2.3 Chromatographic column: Phenomenex ZB5-MS or equivalent; dimension specs length 30m, ID 0.32mm, film thickness 0.50 um or length 30m, ID 0.25mm, film thickness 0.25 um

7.2.4 Guard Column: Phenomenex: 10-m x 0.32-mm (inner diameter)

Uncontrolled Copy

7.2.5 Guard Column: Phenomenex: 10-m x 0.25-mm (inner diameter)

7.3 Computer with MS Chemstation software, monitor, and printer

7.4 Syringes: various sizes including 10-ul, 500-ul, and 1000-ul

7.5 Autosampler vials: 2-ml size with screw tops as well as 2-ml size with crimp tops

7.6 Crimper tool

7.7 400-ul glass inserts

8.0 REAGENTS AND STANDARDS

8.1 All reagents used must be analytical reagent (AR) grade or higher. All standards must be traceable to NIST, when available. Certificates of traceability must be obtained from the manufacturer. All reagents and standards must be documented in the appropriate preparation logbook. Refer to the requirements in the Labeling of Standards, Reagents, Digestates and Extracts SOP.

8.2 Reagents

All reagents are stored in the organics prep lab unless otherwise noted.

8.2.1 Methylene chloride, pesticide quality or greater

8.2.2 Methanol, pesticide quality or greater

8.3 Standards

All standards are stored in the Organics standard refrigerator unless otherwise instructed by the manufacturer's recommendation. Expiration of prepared standards must be performed in accordance with the Labeling of Standards, Reagents, Digestates and Extracts SOP.

8.3.1 Stock Tune Solution, 1000 ug/ml DFTPP, Benzidine, Pentachlorophenol, and 4,4'-DDT in Methylene chloride: Accustandard Cat #M-625-TS-20X or equivalent.

8.3.2 Working Tune Solution, 50 ug/ml each: In a 10-ml volumetric flask, dilute to the mark 500-ul of the Stock Tune Solution with Methylene chloride. Store the dilution in a screw-top vial.

8.3.3 Stock Internal Standard (I.S.), 4000 ug/ml each in Methylene chloride. Equivalent products from other vendors may be used. Transfer to 1.0-ml micro-reaction vessel with mini-inert valve and store in Cooler #2 in SVOA lab.

VENDOR	CAT #	COMPOUNDS
Accustandard	Z-014J-PAK SVOA	1,4-dichlorobenzene-d4; naphthalene-d8; acenaphthalene-d10; phenanthrene-d10; chrysene-d12; perylene-d14

Uncontrolled Copy

8.3.4 Working Internal Standard (for low-level SIM water analyses only): PAH-MS-SIM-W: 400-ug/ml each: In a 1.0-ml volumetric flask, dilute to the mark 100-ul of Stock Internal Standard with Methylene chloride. Transfer to a 1.0-ml micro-reaction vessel, with mini-inert valve and store in Cooler #2 in SVOA lab.

8.3.5 Stock Acid Surrogate Standard, 10000 ug/ml each in methanol. Equivalent products from other vendors may be used.

VENDOR	CAT #	COMPOUNDS
Supelco	4-7261	2-fluorophenol; phenol-d5; 2,4,6-tribromophenol

8.3.6 Stock Base/Neutral Surrogate Standard, 5000 ug/ml each in methanol. Equivalent products from other vendors may be used.

VENDOR	CAT #	COMPOUNDS
Supelco	4-7263	Nitrobenzene-d5; 2-fluorobiphenyl; terphenyl-d14

8.3.7 SVOA Stock Calibration Standards, 2000 ug/ml each in Methylene chloride. Equivalent products from other vendors may be used.

MIX #	VENDOR	CAT #	COMPOUNDS
SVOA 1	Accustandard	M-8270-01	See Table in Section 18.0
SVOA 2	Accustandard	M-8270-02	
SVOA 3	Accustandard	M-8270-03	
SVOA 4A	Accustandard	M-8270-04A	
SVOA 4B	Accustandard	M-8270-04B	
SVOA 5	Accustandard	M-8270-05	
SVOA6	Accustandard	M-8270-06	
Carbazole	Supelco / Protocol	4-8076 /S-730	
Pyridine	Supelco / Restek	4-8305-U/30409	

8.3.8 PNA Stock Calibration Standards:

Mix	Vendor	Cat#	Compounds	Conc. (ug/ml)
TCL Polynuclear Aromatic Hydrocarbons	Supelco	48905-U	See Table in Section 18.0	2000
EPA 8270 B/N Surrogate Spike Mix	Supelco	4-7263		5000

8.3.9 IWS Stock Standards: Neat samples: Equivalent products from other vendors may be used.

VENDOR	CAT #	COMPOUNDS
Supelco	44-2669	Decane
Supelco	44-2697	Octadecane

8.3.10 IWS Intermediate Standard: 2000-ug/ml each: In a 10-ml volumetric flask, dilute 0.020-ug of each stock standard to volume with Methylene chloride.

Uncontrolled Copy

8.3.11 SVOA Intermediate Calibration Standards, 200-ug/ml each: In a 5-ml volumetric flask, add the following stock or intermediate standards and dilute to volume with Methylene chloride:

Standard	Volume (ul)
Stock Acid Surrogate Standard	100
Stock Base/Neutral Surrogate Standard	200
Stock SVOA Calibration Standards (9 different standards)	500 each

8.3.12 PNA Intermediate Calibration Standards: 50-ug/ml: In a 10-ml volumetric flask, dilute 250-ul of TCL Polynuclear Aromatic Hydrocarbons standard and 100-ul of EPA 8270 B/N Surrogate Spike Standards with Methylene Chloride.

8.3.13 Working Calibration Standards: In separate and appropriate sized volumetric flasks, prepare the following dilutions with Methylene chloride. Transfer the dilutions into separate 1-ml screw top vials for storage.

Linearity Standard	Intermediate IWS Standard (ul)	Stock Internal Standard (ul)	SVOA Intermediate Calibration Standard (ul)	PNA Intermediate Calibration Standards (ul)	Dilute to (ml)	Final Conc. (ug/ml)
1*	0	10	0	20	1	1
2*	0	10	0	100	1	5
3	5	10	50	0	1	10
4	10	10	100	0	1	20
5**	25	10	250	0	1	50
6**	40	10	400	0	1	80
7	50	10	500	0	1	100
8	60	10	600	0	1	120
9	80	10	800	0	1	160
* Linearity Standard #1 and #2 are used for PNAs						
** Linearity Standard #5 or #6 are typically used as the CCV for SVOA analysis						

8.3.14 SVOA ICV Stock Standards: 1000-ug/ml each in Methylene chloride. Equivalent products from other vendors may be used. When purchased from the same vendor as the calibration standards, the verification standards must be from a different lot number.

VENDOR	CAT #	COMPOUNDS
Accustandard	S-9076	Custom SVOA mix
Supelco	5-06J08	CLP SVOA Cal Mix (Same stock acid and BN surrogates and stock ISTD)

8.3.15 SVOA Working ICV, 50-ug/ml: In a 1.0-ml volumetric flask, dilute 50-ul of Custom SVOA mix and 50-ul of CLP SVOA Calibration Mix. Add 10-ul of B/N Surrogate and 5-ul of Acid Surrogate, and 10-ul of Stock Internal Standard. Dilute to the mark with Methylene chloride. The final concentration of each analyte and surrogate is 50-ug/ml. The concentration of ISTD is 40-ug/ml.

Uncontrolled Copy

8.3.16 PNA-SIM Soils Working Calibration Standards: In a 1.0-ml volumetric flask prepare the following standards by diluting the stated compounds to the mark with Methylene chloride. For each standard, the final concentration of the Internal Standard is 40-ug/ml.

Linearity Standard	PNA Intermediate Calibration Standard (ul)	Stock Internal Standard (ul)	Final Concentration (ug/ml)
1	10	10	0.5
2	20	10	1.0
3	50	10	2.5
4	100	10	5.0
5	200	10	10.0
6	500	10	25.0
7	1000	10	50.0

8.3.17 PNA-SIM Soils ICV Stock standard:

VENDOR	CAT #	COMPOUNDS	Conc.(ug/ml)
Accustandard	Z-014G-R	PAH mix	2000
Supelco	4-7263	EPA 8270 B/N Surrogate Spike Mix	5000

8.3.18 8.3.18 PNA-SIM Soil Working ICV: In a 1.0-ml volumetric flask, dilute 5-ul of PAH Mix, 2-ul of Stock B/N Surrogate Standard and 10-ul of Stock Internal Standard to the mark with Methylene Chloride. The final concentration of each analyte and surrogate is 10-ug/ml. The concentration of the ISTD is 40-ug/ml.

8.3.19 PNA-SIM Low Level Waters Working Calibration Standards: In a 5.0-ml volumetric flask prepare the following standards by diluting the stated compounds to the mark with Methylene chloride. For each standard, the final concentration of the Stock Internal Standard is 4-ug/ml.

Linearity Standard	PNA Intermediate Calibration Standard (ul)	Stock Internal Standard (ul)	Final Concentration (ug/ml)
1	2	5	0.02
2	10	5	0.1
3	50	5	0.5
4	100	5	1.0
5	500	5	5.0
6	1000	5	10.0
7	2000	5	20.0

8.3.20 PNA-SIM Low Level Waters ICV Standards:

VENDOR	CAT #	COMPOUNDS	Conc.(ug/ml)
Accustandard	Z-014G-R-Pak	PAH mix	2000
Supelco	4-7263	EPA 8270 B/N Surrogate Spike Mix	5000

Uncontrolled Copy

8.3.21 PNA-SIM Low Level Waters Working ICV, 10-ug/ml: In a 1.0-ml volumetric flask, dilute 5-ul of PAH mix, 2-ul of B/N Surrogate and 10-ul of the Working Internal Standard and dilute to the mark with Methylene chloride. The final concentration of each analyte and surrogate is 10-ug/ml. The concentration of the ISTD is 4-ug/ml.

8.3.22 SVOA (Non-SIM) Analysis LCS/MS/MSD: When prepared as detailed in the preparation SOPs, the final concentration is 100 ug/L(3333 ug/Kg) for all spiked analytes.

8.3.23 PNA-SIM Soils Analysis LCS/MS/MSD: When prepared as detailed in the preparation SOPs, the final concentration is 333 ug/Kg for all spiked analytes.

8.3.24 PNA-SIM Low Level Waters Analysis LCS/MS/MSD: When prepared as detailed in the preparation SOPs, the final concentration is 10 ug/L for all spiked analytes.

9.0 SAMPLE COLLECTION, PRESERVATION, AND HOLDING TIMES

9.1 The client or other trained personnel collect samples. Samples received at the laboratory are considered representative unless otherwise noted.

9.2 Extracts are stored at <10°C in the Organics sample freezer located in the GC/SVOA lab.

9.3 Analysis must be performed within 40 days of extraction.

10.0 QUALITY CONTROL

10.1 An *Initial Demonstration of Capability* study must be performed prior to the initial analysis for each analyst and whenever substantial change has occurred in the procedure or instrument. Refer to the Capability and Detection Limit Studies SOP for details.

10.2 A *Method Detection Limit* study must be performed for each new procedure, annually thereafter, and whenever a change in instrument occurs. Refer to the Capability and Detection Limit Studies SOP for details.

10.3 A *DFTPP Tune Check* must be performed at the beginning of each 12-hour sequence. A 1-ul (50-ng) injection (for the 5975 Mass Spectrophotometer the injection is 0.5-ul) of the working tune solution (which contains DFTPP) must meet the following ion abundance criteria. If the criteria are not met, reanalyze. An acceptable tune must be obtained before samples can be analyzed

Uncontrolled Copy

DFTPP (DECAFLUOROTRIPHENYLPHOSPHINE)
KEY IONS and ION ABUNDANCE CRITERIA
METHODS 625 / 8270C

Mass	Ion Abundance Criteria
51	30 – 60% of mass 198
68	< 2% of mass 69
70	< 2% of mass 69
127	40 – 60% of mass 198
197	< 1% of mass 198
198	Base peak, 100% relative abundance
199	5 – 9% of mass 198
275	10 – 30% of mass 198
365	> 1% of mass 198
441	Present but less than mass 443
442	> 40% of mass 198
443	17 – 23% of mass 442

10.4 The *Tailing Factors* must be evaluated at the beginning of each 12-hour sequence. A 1-ul injection (for the 5975 Mass Spectrophotometer the injection is 0.5-ul) of the working tune solution (which contains Benzidine and Pentachlorophenol) must yield a tailing factor less than 3.0 for Benzidine and less than 5.0 for Pentachlorophenol. The tailing factors are calculated (according to Figure 13 in Method 625) by the instrument software and documented on the instrument printout. If tailing criteria is not met in the DFTPP injection, the tailing is evaluated in the CCV. If this meets criteria, analysis may proceed. If all samples analyzed against the tune are for a select list, only the applicable analyte type: Pentachlorophenol or Benzidine, needs to meet he tailing criteria. For example if all targets are B/N, then only Benzidine needs to meet the tailing criteria.

10.5 Internal Standards (I.S) must be added to all standards, QC samples and environmental samples.

10.5.1 Acceptance criteria for CCV standards are RT ± 30 seconds from that in the midpoint level standard of the most recent initial calibration (ICAL) and area counts within the range of -50 to +100% of those in the same (concentration level) linearity standard. These criteria are evaluated by the data system and printed on the Continuing Calibration Report. Failures in the CCV are automatically flagged on this report.

10.5.1.1 If the acceptance criteria are not met for the CCV, perform instrument maintenance then reanalyze the CCV or perform a new initial calibration.

10.5.2 There are no absolute acceptance criteria requirements for samples. The RT and Area for samples should be compared to that of the CCV for that day and assessed against the criteria for the CCV (i.e. RT ± 30 seconds and area counts within the range of -50 to +100%). These data are used as guidance in evaluating the response for samples.

Uncontrolled Copy

10.5.2.1 If the acceptance criteria are not met for a sample, evaluate the chromatogram for obvious matrix effects/interferences. If interferences are evident, the sample should be diluted and reanalyzed. If the internal standard response for the sample is below 25% the analyst should consult with the Unit Supervisor and use discretion on whether to report, dilute and reanalyze, or re-extract and analyze the sample. This discretion is dependent on the experience of the analyst and their Supervisor and factors such as a consistent response for the I.S. should be considered. If reanalysis yields poor internal standard response, or if reanalysis is performed beyond the hold time, both sets of data should be reported to the client and a Case Narrative written.

10.5.2.2 For samples having a known matrix effect (e.g. extracts from MGP sites) it is allowable to forego reanalysis due to “failing” I.S. response. These data, however, must be reported to the client with a Case Narrative informing them of the suspect data.

10.6 *Surrogate* (SURR) compounds must be added to all quality control samples, blanks, and samples.

10.6.1 Acceptance criteria are listed in the appropriate test code in LIMS. One acid and one Base/Neutral surrogate may be outside of the acceptance criteria.

10.6.2 Surrogate standards that fail to meet the acceptance criteria are automatically flagged in LIMS with an “S” qualifier.

10.6.3 The reporting of data associated with failing surrogate standards must be documented with a CAR form.

10.6.4 If the acceptance criteria are not met, reprepare, reanalyze, or re-extract and analyze the sample as appropriate. If insufficient sample is available for re-extraction, report the original result with a Case Narrative to the client. If reanalysis fails to meet the acceptance criteria the original results should be reported with a Case Narrative to the client. If reanalysis does meet the acceptance criteria but the re-extraction was performed beyond the maximum hold time both sets of results should be reported to the client with an appropriate Case Narrative.

10.7 An *Initial Calibration Verification* (ICV) standard must be analyzed immediately after the initial linearity (ICAL). This is the analysis of a second source standard.

10.7.1 Acceptance criteria, based on statistical limits, are listed in the appropriate test code in LIMS. If the acceptance criteria are not met, evaluate the recoveries against the nominal window of ±30 %R. If this criterion is met the analysis of the ICV is acceptable. If the acceptance criteria are not met, reanalyze. If reanalysis fails to meet the acceptance criteria, stop analysis and recalibrate or report data with an appropriate qualifier.

10.7.2 ICV standards that fail to meet the acceptance criteria are automatically flagged in LIMS with an “S” qualifier.

Uncontrolled Copy

10.7.3 The reporting of data associated with a failed ICV must be documented with a CAR form. If the failure is considered to have a significant affect on the data, client notification is required using the Case Narrative of the report.

10.7.4 Samples associated with an ICV that fails with a positive bias can be reported without narration if the sample concentration is below the reporting limit.

10.8 A *Continuing Calibration Verification* (CCV) standard is a calibration source standard and must be analyzed at the beginning of each analytical sequence following an acceptable instrument tune. The 12-hour analytical sequence begins with the injection of DFTPP, continues through the analysis of the CCV, QC samples and samples.

10.8.1 Acceptance criteria for Method 8270C are RF for SPCCs $\geq$ 0.050 and RF for CCCs $\leq$ 20% difference or drift from the initial calibration. (SPCCs and CCCs are listed in the table in Section 10.8.3 below). Acceptance criteria for Method 625 are responses $\leq$20% difference or drift from the initial calibration for any 625 target analyte. Any target analyte not listed in Method 625 must have $\leq$ 30% difference or drift from the initial calibration. An "Evaluate Continuing Calibration Report" is generated to evaluate this criteria. If any target analytes are quantitated employing a least squares regression method as opposed to using the average of response factor, this report must be generated using both relative response factor and calculated concentration. If acceptable criteria are not met, reanalyze. If reanalysis fails to meet the acceptance criteria, recalibrate.

10.8.2 The reporting of data associated with a failed CCV must be documented with a CAR form. If the failure is considered to have a significant affect on the data, client notification is required using the Case Narrative of the report.

10.8.3 Samples associated with a CCV that fails with a positive bias can be reported without narration if the sample concentration is below the reporting limit.

SPCCs	
N-nitroso-di-n-propylamine	2,4-dinitrophenol
Hexachlorocyclopentadiene	4-nitrophenol

CCCs	
B/N Fraction	*Acid Fraction*
Acenaphthene	4-Chloro-3-methylphenol
1,4-dichlorobenzene	2,4-dichlorophenol
Hexachlorobutadiene	2-nitrophenol
Diphenylamine	Phenol
Di-n-octyl phthalate	Pentachlorophenol
Fluoranthene	2,4,6-Trichlorophenol
Benzo(a)pyrene	

Uncontrolled Copy

10.9 A *Method Blank* must be prepared and analyzed with each batch of maximum 20 samples and at a minimum of one per day.

10.9.1 The acceptance criteria are < PQL. If the acceptance criteria are not met, reanalyze. If reanalysis fails to meet the acceptance criteria, re-extract and analyze the associated samples (alternatively, report data with an appropriate qualifier). Samples for compliance with our Wisconsin DNR certification must be evaluated down to the current MDL and corrective action taken if the blank exceeds the routine PQL.

10.9.2 MBLKs that fail to meet the acceptance criteria cause the sample results to be automatically flagged in LIMS with a “B” qualifier. MBLKs that are below the reporting limit but above the MDL are flagged in LIMS with a “b” qualifier. “b” flagged data is considered as meeting the acceptance criteria.

10.9.3 The reporting of data associated with a failed control sample must be documented with a CAR form. If the failure is considered to have a significant affect on the data, client notification is required using the Case Narrative of the report.

10.9.4 Samples associated with a MBLK that fails with positive bias can be reported without narration if the sample concentration is < PQL or greater than 10 times the blank contamination.

10.9.5 A *Laboratory Control Sample* must be prepared and analyzed with each batch of maximum 20 samples and at a minimum of one per day.

10.9.6 Acceptance criteria are listed in the appropriate test code in LIMS. If the acceptance criteria are not met, reanalyze. If reanalysis fails to meet the acceptance criteria, re-extract and analyze the associated samples (alternatively, report data with an appropriate qualifier).

10.9.7 If insufficient sample is available for reanalysis the original result should be reported with a Case Narrative notifying the client of the quality control failure. If the hold time has expired and an acceptable re-analysis performed, both sets of data should be reported and the appropriate result flagged with an “H” qualifier as defined in the LIMS.

10.9.8 LCSs that fail to meet the acceptance criteria are automatically flagged in LIMS with an “S” qualifier.

10.9.9 The reporting of data associated with a failed LCS must be documented with a CAR form. If the failure is considered to have a significant affect on the data, client notification is required using the Case Narrative of the report.

10.9.10 Samples associated with a LCS that fails with positive bias can be reported without narration if the sample concentration is below the reporting limit.

Uncontrolled Copy

10.9.11 When prepared for samples being analyzed by Method 8270C, the spiked analytes consist of the compounds listed in section 5.5.1 of Method 3500B. When prepared for samples being analyzed by Method 625, the spike analytes consist of the compounds listed in section 5.5.1 of Method 3500B plus an additional 10-12 compounds listed in Table 6 of Method 625. These additional compounds are changed at approximate 6-month intervals so that all of the Table 6 compounds can be evaluated over a two-year period.

10.10 A *Matrix Spike and Matrix Spike Duplicate* sample must be prepared and analyzed with each batch of maximum 20 samples per matrix and at a minimum of one per day.

10.10.1 Acceptance criteria are listed in the appropriate test code in LIMS. (Note: the accuracy criteria have been met provided at least either the MS or MSD meet the %R criteria.) If the accuracy criteria are not met in the MS or MSD, and the LCS is in control, assume matrix interference and report the results with an appropriate Case Narrative. If the precision criteria are not met, report the results with an appropriate Case Narrative.

10.10.2 MS/MSD's that fail to meet the accuracy criteria are automatically flagged in LIMS with an "S" qualifier. MSD's that fail to meet the precision criteria are automatically flagged in LIMS with an "R" qualifier.

10.10.3 The reporting of data associated with a failed MS/MSD must be documented with a CAR form. If the failure is considered to have a significant affect on the data, client notification is required using the Case Narrative of the report.

10.10.4 Samples associated with a MS/MSD that fails the accuracy criteria with positive bias can be reported without narration if the sample concentration is below the reporting limit.

10.10.5 If the concentration measured in the sample is greater than 4-times the concentration of the spike, the spike amount used is insufficient and the MS/MSD not applicable.

10.10.6 The list of spiked compounds is the same as that for the LCS.

11.0 CALIBRATION AND STANDARDIZATION

Calibration data is documented and retained using the printouts from the instrument software and the ICAL Review Checklist. Analytical data must be maintained in accordance with the document control requirements in the Quality Assurance Plan as well as the Document Control SOP.

11.1 An instrument maintenance logbook is maintained for each instrument.

11.1.1 The maintenance on SVOA instruments is divided into 2 categories:

Uncontrolled Copy

11.1.1.1 Scheduled: This maintenance is typically done on a daily basis according to analyst discretion. It includes replacing injection liner, cutting inlet end of guard column, checking and replacing the inlet gold seal and checking and replacing the injection septum. This scheduled maintenance is recorded on the Routine Scheduled Maintenance log in the Instrument Maintenance Log Book.

11.1.1.2 Non-scheduled: all other maintenance not described as scheduled. These procedures are recorded in the Instrument Maintenance Logbook.

11.2 A new Initial Calibration (linearity; ICAL) is required as listed below.

- CCV failure that is uncorrectable through appropriate instrument maintenance (see section 10 for additional guidance)
- New column
- Replacement of the electron multiplier, entrance lens, draw-out lens, ion source chamber, or injection port

11.3 Normal instrument conditions are as follows, but vary by instrument:

<u>Zone Temperatures</u>

Inlet:	On	Setpoint: 250°C
Detector:	On	Setpoint: 280°C

<u>DFTPP.m</u>

Injection size:	1-ul		
Initial Temp:	150°C		
Initial Time:	0.75-minute		
Rate A:	25°C / minute	Rate B:	12°C / minute
Final Temp:	320°C	Final Temp:	250°C
Final Time:	1.25-minutes	Final Time:	0.0-minutes
Run Time:	8.8-minutes		

<u>8270-Aq.m</u>

Injection size:	1-ul		
Initial Temp:	40°C		
Initial Time:	0.5-minute		
Rate A:	22°C / minute	Rate B:	35°C / minute
Final Temp:	220°C	Final Temp:	325°C
Final Time:	0-minutes	Final Time:	3-minutes
Run Time:	16-minutes		

11.4 Set up a sequence in the Sample Table Log under *Sequence* of the main menu. Enter the sequence as it is to be run, including the applicable analysis method. A calibration sequence must start with a DFTPP tune followed by the calibration standards then an ICV standard.

Uncontrolled Copy

11.5 Click on *Position and Run*.

11.6 Generate the corresponding Quantitation Reports, DFTPP "Tune" Report and Response Factor Report.

11.6.1 The software calculates RF values for each standard as well as the average RF of all analytes.

11.6.2 On the DFTPP Report, evaluate the Pass/Fail column. An acceptable tune will Pass each of the criteria. Calibration can not continue with a failed tune. Details of Tune evaluation include:

- Initial evaluation should use the auto-evaluate feature of the software. This feature evaluates the apex of the peak as well as the scans immediately on either side of the apex and automatically background corrects using a single scan no more than 20 scans prior to the beginning of the peak.
- If the auto-evaluation fails, select a different single spectrum or the average of several spectra. If these approaches fail, add additional spectra and re-evaluate. Guidance for these options is in the Environmental Data Analysis User's Guide for the Enviroquant software.
- Background correction must use a single scan acquired no more than 20 scans prior to the beginning of the DFTPP peak. No part of the DFTPP peak can be subtracted.
- Appropriate corrective action (e.g. instrument maintenance, new standard, re-calibration, etc) must be performed if an instrument continues to fail the tune criteria.
- The Quantitation Report for Pentachlorophenol and Benzidine must show the Tailing factor for each (see Section 10.4).

11.6.3 On the Response Factor Report, circle the %RSD values of each CCC and place a check mark next to the average RF of each SPCC.

11.7 The acceptance criteria for an acceptable ICAL are as follows:

11.7.1 For Methods 8270C, 8000C and Low-level SIM-PNAs

Criteria:

- Minimum of 5 levels
- Average RF for the SPCCs must be $\geq$ 0.050
- %RSD for the CCCs must be < 30%.
- The concentration of the low standard must be at, or below the PQL for each target analyte.

Where these criteria are met and the %RSD of all individual compounds is ≤ 15%, the calibration is considered linear and the average RF is used for concentration calculation.

11.7.1.1 If the %RSD >15% for any analyte, the following options may be used:

Uncontrolled Copy

- Narrow the calibration range by replacing one or more of the calibration standards with standards that cover a narrower range.
- The concentration of the low standard must be at or below the PQL for every target analyte.
- Employ the least squares regression equation. The origin (0.0) may not be included as an extra calibration point, but Method 8000C allows the forcing of the regression curve through zero.
- Linear (first order)-requires a minimum of 5 calibration standard levels.
- Non-Linear (second order) quadratic- requires a minimum of 6 calibration standard levels.
- Non-Linear (third order) polynomial-requires a minimum of 7 calibration standard levels.

Note: Method 8000C allows for the evaluation of linearity using either the correlation coefficient (r) or the coefficient of determination (r2). Regardless of the statistical model used by the software (i.e. r or r2), the acceptance criteria are greater than or equal to 0.99.

11.7.1.2 All ICAL standards need to be analyzed within the same tune.

11.7.2 For Method 625

- Minimum of 3 levels
- average RF for each compound must have %RSD < 35%

Where these criteria are met, the calibration is considered linear and the average RF is used for concentration calculations.

11.7.2.1 If the %RSD is >35% for any analyte, the same criteria as for Method 8270C (Section 11.7.1.1) above applies.

11.7.2.2 All ICAL standards need to be analyzed within the same tune.

11.8 If the linearity requirements are not met, take appropriate corrective actions and recalibrate. If the acceptance criteria are met, rename the method “SVOAmmdd”, (or similar) where mmdd designates the month and date of the new linearity.

11.8.1 Dropping levels from the calibration curve is allowable under the following conditions.

- Individual analytes may be eliminated from the low or high points.
- If the low-level standard for a particular analyte is removed from the curve, the PQL must be adjusted accordingly for that analyte.
- If a high-level standard is removed from the curve for a particular analyte, the UQL must be adjusted accordingly for that analyte.
- The required minimum number of calibrated levels remains (5 levels for 8270C, 3 levels for 625).

11.8.2 Points may not be dropped solely to meet the acceptance criteria. There must be justifiable reasons for excluding a given standard.

Uncontrolled Copy

11.8.3 If a mid-level standard is unusable, that level must re-prepared and analyzed so to provide a continuous series of calibration standards.

11.9 Analyze an ICV standard. The acceptance criteria must be met before continuing with sample analysis. Analysis of environmental samples cannot proceed without the generation of an acceptable linearity and an acceptable initial verification (See section 10.7).

12.0 PROCEDURE

Analytical data is documented and retained using the printouts from the instrument software. Analytical data must be maintained in accordance with the document control requirements in the Quality Assurance Plan as well as the Document Control SOP.

12.1 Perform the required preventive maintenance. Documentation is maintained in the PM Logbook for each instrument.

12.2 The ICAL must be verified each “analytical sequence” prior to sample analysis by analyzing a calibration standard (CCV) at/near the mid-point of the curve (typically 50- or 80-ug/ml. For SIM_W use 5- or 10-ug/ml). See the Quality Control section for the acceptance criteria. The 12-hour analytical sequence begins with the injection of DFTPP, continues through the analysis of the CCV, environmental samples and QC samples.

12.3 Set up a sequence in the Sample Table Log under *Sequence* of the main menu. Enter the sequence as it is to be run, including the applicable analysis method.

12.3.1 To prepare sample extracts for analysis:

12.3.1.1 For all analyses except low-level PNA Waters (PAH-MS-SIM_W) withdraw 200-ul of the extract with a syringe and place it into a 1.0-ml autosampler vial containing a glass insert. Add 2.0-ul of the stock internal standard. The concentration of the internal standards will be 40 ug/ml each. NOTE: All extracts, including dilutions, must be spiked with the internal standards at a concentration of 40 ug/ml.

12.3.1.2 For all analyses of low-level PNA Waters (PAH-MS-SIM_W) withdraw 200-ul of the extract with a syringe and place it into a 1.0-ml autosampler vial containing a glass insert. Add 2.0-ul of the PAH-MS-SIM_W stock internal standard. The concentration of the internal standards will be 4.0 ug/ml each. NOTE: All extracts, including dilutions, must be spiked with the internal standards at 4- ug/ml.

12.4 Click on *Position and Run*.

12.5 After each sample has run, evaluate the chromatogram and quantitate against the current initial linearity (ICAL).

Uncontrolled Copy

12.6 Generate the corresponding Quantitation Reports, DFTPP "Tune" Report and Evaluate Continuing Calibration Report.

12.6.1 On the DFTPP Report, evaluate the Pass/Fail column. An acceptable tune will Pass each of the criteria. Analysis can not continue with a failed tune.

12.6.2 The Quantitation Report for Pentachlorophenol and Benzidine must show the Tailing factor for each. If tailing criteria is not met in the DFTPP injection, the tailing is evaluated in the CCV. If this meets criteria, analysis may proceed. (See section 10.4.)

12.6.3 On the Evaluate Continuing Calibration Report, circle the %Dev values of each CCC as well as the Area of each internal standard, and place a check mark next to the CCRF of each SPCC.

12.7 Analysis of environmental samples cannot proceed without an acceptable CCV.

12.8 If the concentration of any target compound in a sample exceeds the initial calibration range, a new aliquot of that extract must be diluted and analyzed unless the client will accept "E" values. This is determined by the project manager.

Uncontrolled Copy

13.0 CALCULATIONS AND DATA HANDLING

Analytical data must be maintained in accordance with the document control requirements in the Quality Assurance Plan as well as the Document Control SOP.

13.1 The HP software will print out all target analytes detected at a concentration at or above the MDL. The analyst must verify every target detected by evaluating the retention time and fit against the applicable CCV standard. These evaluations are accomplished by evaluating the characteristic ions through QEDIT as well as comparing the reference spectra. The Qvalue should be considered, however, the individual spectra must be evaluated in order to confidently identify a given analyte.

13.1.1 The data system software evaluates the retention time of each peak as well as a comparison of the characteristic ions to identify the compounds present. The characteristic ions of the reference spectrum are the three ions of greatest intensity (or any ions having a relative intensity greater than 30% if less than three ions are present). The following criteria are used for qualitative identification. An analyte may be confirmed as a proper identification only if these criteria are met.

- The characteristic ions of a compound must have a relative retention time of ± 0.06 minutes of the standard (RT ± 30 sec for Method 625).
- The relative intensities of the characteristic ions are within 20% of those ions in the reference spectrum (30% for Method 8270C). Example: for an ion having an abundance of 50% in the reference spectrum, the corresponding abundance in a sample can range from 30% to 70% (Method 625) or 20% to 80% (Method 8270C) as appropriate.

- Structural isomers that produce very similar mass spectra should be identified as individual isomers if they have sufficiently different retention times, otherwise, the isomers having a resolution of < 25% are identified as isomeric pairs.

13.1.2 Minimum levels for each analyte are established in the software at a concentration equivalent to the current on-column MDL value.

13.1.3 Manual peak integrations must be documented on the Quantitation Report. See the Manual Integration of Chromatographic Peaks SOP for details.

13.2 Response factors (RF) are calculated as follows:

$$RF = (A_x)(C_{IS}) / (A_{IS})(C_x)$$

Where: A_x = Area of characteristic ion for compound being measured
A_{IS} = Area of characteristic ion for compound being measured
C_{IS} = Concentration of the specific internal standard
C_x = Concentration of the compound being measured

13.3 The software calculates the sample concentration as follows:

$$\text{Conc.} = \frac{(A_x)(I_s)(V_t)(DF)}{(A_{IS})(RF)(V_o)(V_i)}$$

Where: A_x = Area of characteristic ion for compound being measured
I_s = Amount of internal standard injected (ng)
V_t = Volume of total extract, taking into account dilution
A_{IS} = Area of characteristic ion for the internal standard
RF = Initial average response factor for compound being measured
V_o = Volume of water extracted (L), or mass of soil extracted (kg)
V_I = Volume of extract injected (ul)
DF = dilution factor

13.4 When the When the analyte curve fit is quadratic or quad forced and the analyte response is beyond the linear range for the ICAL. What would be considered an "E" value result may quantitate as a negative result. The report will print out as "Below Cal". Care must be taken to ensure that this analyte is not missed and reported as a non-detect. Consultation with supervisor or QA director is advised.

13.5 After review, enter final results into the LIMS system. Results flagged by the LIMS with an "E" qualifier are above the linear range of the instrument. There is less certainty in these data and, if sufficient extract and holding time are available, should be reanalyzed at an appropriate dilution. Details on the procedure for entering analytical data are in the Data Entry SOP.

13.6 The LIMS calculates the dry-weight concentration for solid samples as follows:

$$\text{Conc. Dry} = \frac{\text{(wet weight conc.)}}{(100 - \%\ \text{Moisture})}$$

Uncontrolled Copy

14.0 METHOD PERFORMANCE

14.1 Initial Demonstration of Capability study data, Method Detection Limit study data and Performance Testing study data are maintained and available from the QA office.

15.0 POLLUTION PREVENTION

15.1 The quantity of chemicals purchased should be based on expected usage during their shelf life and the disposal cost of unused material.

15.2 Prepare the minimum amount of reagent and standard necessary.

16.0 WASTE MANAGEMENT

16.1 Refer to the Sample Disposal SOP for guidance on the disposal of any resulting residue, digestate, distillate, extract or standard.

17.0 REFERENCES

17.1 USEPA Method 625

17.2 SW-846 Method 8270C

17.3 SW-846 Method 8000C

17.4 Preparation of Aqueous Samples Using Liquid-Liquid Extraction by SW-846 Method 3510C SOP, current revision.

17.5 Preparation of Aqueous Samples Using Continuous Liquid-Liquid Extraction by SW-846 Method 3520C SOP, current revision.

17.6 Preparation of Non-Aqueous Samples Using Sonication by SW-846 Method 3550B SOP, current revision.

17.7 Environmental Data Analysis User's Guide, HP G1032C Enviroquant Target Compound Software, 1992

17.8 Microbac Laboratories Quality Assurance Plan, current revision, all sections

18.0 TABLES, FORMS, CHECKLISTS, AND OTHER ATTACHMENTS

Table of ICAL & Verification Standard compounds (2 pages)
ICAL Review Checklist (1 page)
SVOA Scheduled Maintenance Log (1 page)
SVOA Non-scheduled Maintenance Log (1 page)
SOP Revision Notification Form listing the changes in this revision (1 page)

Uncontrolled Copy

SVOA Calibration Standard Compounds	
M-8270-01	Aniline; Benzyl alcohol; Bis(2-Chloroethyl)ether; 1,2-Dichlorobenzene; Bis(2-Chloroisopropyl)ether; 2-Chlorophenol; 1,3-Dichlorobenzene 1,4-Dichlorobenzene; Hexachloroethane; 2-Methylphenol; 4-Methylphenol; N-Nitrosodimethyamine; N-Nitrosodi-n-propylamine Phenol
M-8270-02	Acetophenone; Benzoic acid; Bis(2-Chloroethoxy)methane; 4-Chloroaniline; 4-Chloro-3-methylphenol; 2,4-Dichlorophenol; 2,6-Dichlorophenol; 2,4-Dimethylphenol; Hexachlorobutadiene; Isophorone; Naphthalene; Nitrobenzene; 2-Nitrophenol; 1,2,4-Trichlorobenzene ; 2-Methylnaphthalene
M-8270-03	Acenaphthene; Acenaphthylene; 2-Chloronaphthalene; 4-Chlorophenyl phenyl ether; Dibenzofuran; Diethyl phthalate; 2,4-Dinitrophenol; 2,4-Dinitrotoluene; 2,6-Dinitrotoluene; Fluorene; Hexachlorocyclopentadiene; 2-Nitroaniline; 3-Nitroaniline; 4-Nitroaniline; 4-Nitrophenol; 2,4,5-Trichlorophenol; 2,4,6-Trichlorophenol; Dimethylphthalate
M-8270-04A	Anthracene; 4-Bromophenyl phenyl ether; Di-n-butyl phthalate 4,6-Dinitro-2-methylphenol ; Fluoranthene; Hexachlorobenzene; Pentachlorophenol; Phenanthrene
M-8270-04B	1,2-Diphenylhydrazine; N-Nitrosodiphenylamine
M-8270-05	Benzidine; Benzo(a)anthracene; Bis(2-Ethylhexyl) phthalate; Butyl benzyl phthalate; Chrysene; 3,3'-Dichlorobenzidine; Pyrene
M-8270-06	Benzo(b)fluoranthene; Benzo(k)fluoranthene ; Benzo(g,h,i)perylene Benzo(a)pyrene; Dibenz(a,h)anthracene; Di-n-octyl phthalate; Indeno(1,2,3-cd)pyrene
4-8076	Carbazole
4-8305-U	Pyridine

PNA Calibration Standard Compounds			
Vendor	**Cat. No.**	**Description**	**Compounds**
Supelco	48905-U	TCL Polynuclear Aromatic Hydrocarbon Mix	Acenaphthene; Acenaphthylene; Anthracene; Benzo(a)anthracene; Benzo(a)pyrene; Benzo(b)fluoranthene; Benzo(g,h,i)perylene; Benzo(k)fluoranthene; Chrysene; Dibenz(a,h)anthracene; Fluoranthene; Fluorene; Indeno(1,2,3-cd)pyrene; Naphthalene; Phenanthrene; Pyrene

SVOA ICV Standard Compounds			
Vendor	**Cat. No.**	**Description**	**Compounds**
Accustandard	S-9076	Custom SV Mix	Benzoic acid; Benzyl alcohol; 2,6-Dichlorophenol;, N-Nitrosodiphenylamine; Benzidine; 3,3'-Dichlorobenzidine; Acetophenone; Pyridine; Aniline
Supelco	506508	CLP Semivolatiles Calibration Mix	Acenaphthene; Acenaphthylene; Anthracene; Azobenzene; Benzo (A) Anthracene; Benzo (A) Pyrene; Benzo (B) Fluoroanthene; Benzo (G,H,I) Perylene; Benzo (K) Fluoranthene; Benzyl butyl Phthalate; Bis-(2-chloroethoxy)-methane; Bis-(2-Chloroethyl) ether; Bis-(2-Chloroisopropyl) ether; Bis-(2-ethylhexyl)-phthalate; Carbazole; Chrysene; Di-N-butyl phthalate; Di-N-octyl phthalate; Dibenz-(A,H)-Anthracene; Dibenzofuran; Diethyl Phthalate; Diemethyl Phthalate; Fluoroanthene; Fluorene; hexachlorobenzene; hexachlorobutadiene; Hexachlorocyclopentadiene; Hexachloroethane; Indeno (1,2,3-CD) Pyrene; Isophorone; N-Nitrosodi-N-Propylamine; N-Nitrosodimethylamine; Naphthalene; Nitrobenzene; Pentachlorophenol; Phenanthrene; Phenol; Pyrene; 1,2-Dichlorobenzene; 1,2,4-Trichlorobenzene; 1,3-Dichlorobenzene; 1,4-Dichlorobenzene; 2-Chloronapthalene; 2-Chlorophenol; 2-Methyl-4,6-dinitrophenol; 2-Methylnaphthalene; 2-Methylphenol; 2-Nitroaniline; 2-Nitrophenol; 2,4-Dichlorophenol; 2,4-Dimethylphenol; 2,4-Dinitrophenol; 2,4-Dinitrotoluene; 2,4,5-Trichlorophenol; 2,4,6-Trichlorophenol; 2,6-Dinitrotoluene; 3-Nitroaniline; 4-Bromophenylphenyl ether; 4-Chloro-3-Methylphenol; 4-Chloroaniline; 4-Chlorophenylphenylether; 4-Methylphenol; 4-Nitroanilline; 4-Nitrophenol

Uncontrolled Copy

PNA ICV Standard Compounds			
Vendor	**Cat. No.**	**Description**	**Compounds**
Accustandard	Z-014G-R	PAH Mix	Acenaphthene; Acenaphthylene; Anthracene; Benzo(a)anthracene; Benzo(a)pyrene; Benzo(b)fluoranthene; Benzo(g,h,i)perylene; Benzo(k)fluoranthene; Chrysene; Dibenz(a,h)anthracene; Fluoranthene; Fluorene; Indeno(1,2,3-cd)pyrene; Naphthalene; Phenanthrene; Pyrene; Carbazole

Uncontrolled Copy

Microbac Laboratories
ICAL Review Checklist – SVOA

Instrument ID: _____ Analyst:: _____

Linearity Date: _____ Quant. Method Name: _____

1st Level Technical Review

Review Element	Evaluation	Comments (use this space as needed)
SW-846 Method 8270C/8000C		
%RSD of CCCs <30 and circled?	[ ] Yes [ ] No [ ] NA	
Avg. RF of SPCCs meet method criteria and check-marked?	[ ] Yes [ ] No [ ] NA	
%RSD of all individual target components <15 ?	[ ] Yes [ ] No [ ] NA	
Minimum of 5 calibration levels for all components?	[ ] Yes [ ] No [ ] NA	
EPA Method 625		
%RSD of each compound <35 or when using Quadratic Regression or Linear Regression, $r^2 \geq 0.99$ for each compound?	[ ] Yes [ ] No [ ] NA	
Minimum of 3 calibration levels for all components?	[ ] Yes [ ] No [ ] NA	
Miscellaneous		
Method properly calibrated and saved? (including)		
• RTs correct?	[ ] Yes [ ] No [ ] NA	
• Concentrations correct?	[ ] Yes [ ] No [ ] NA	
• Reference spectra updated?	[ ] Yes [ ] No [ ] NA	
• ICV acceptance criteria met?	[ ] Yes [ ] No [ ] NA	

Initials: _____ Date: _____

2nd Level Technical Review

Above assessment accurate [ ] Yes [ ] No
Data accurate in LIMS [ ] Yes [ ] No
If "No", list unacceptable evaluation(s): _____

LIMS QA Validation performed [ ] Yes [ ] No

Initials: _____ Date: _____

SVOA CCCs	SVOA SPCCs
Acenaphthene, 1,4-Dichlorobenzene, Hexachlorobutadiene, Diphenylamine, Di-n-octyl phthalate, Fluoranthene, Benzo(a)pyrene, 4-Chloro-3-methylphenol, 2,4-Dichlorophenol, 2-Nitrophenol, Phenol, Pentachlorophenol, 2,4,6-Trichlorophenol	*Criteria ≥ 0.050* N-Nitrosodi-n-propylamine, Hexachlorocyclopentadiene, 2,4-Dinitrophenol, 4-Nitrophenol

Revision 3, 5/14/09

Uncontrolled Copy

Microbac Laboratories, Inc.
Routine/Scheduled Maintenance Log
Instrument ID: SVOA-4

Month & Year: _____

	Minimum Frequencies *											
	Daily		As Needed									
Date	Change Liner	Cut Column	Change Septa	Change Gold Seal								Comments
1												
2												
3												
4												
5												
6												
7												
8												
9												
10												
11												
12												
13												
14												
15												
16												
17												
18												
19												
20												
21												
22												
23												
24												
25												
26												
27												
28												
29												
30												
31												

* All other maintenance is documented using the Non-Scheduled Mainenance Log

Uncontrolled Copy

rev: _a_04_2006 1 of 18

Microbac Laboratories, Inc.
Non-Scheduled Maintenance Log
Instrument ID: SVOA-2

Date: _____ Problem: _____
Maintenance / Service Performed: _____

Result: _____

Analyst: _____

Date: _____ Problem: _____
Maintenance / Service Performed: _____

Result: _____

Analyst: _____

Date: _____ Problem: _____
Maintenance / Service Performed: _____

Result: _____

Analyst: _____

rev: _a_09/15/05 1 of 15

Uncontrolled Copy

Microbac

SOP Revision Notification / Annual Review Form

SOP Name **STANDARD OPERATING PROCEDURE FOR SEMI-VOLATILE ORGANIC COMPOUNDS (SVOA) BY GC-MS**

[X] *New Revision* Old Revision # 9 New Revision # 10

Summary of changes:

- Removed Originating Author from cover page.
- Section 10.8.1-updated CCV criteria to include "drift from initial calibration" when a least squares regression equation is used for an analyte.
- Section 11.7- Updated ICAL criteria to include least squares regression equations and removed the use of the grand mean average.
- Added verbiage to Sect 13.0 regarding care in reporting analytes the use Quadratic or Quadratic forced that are beyond the linear range for the ICAL
- Removed Method 8000B from Sec 17.0 (References)
- Replaced ICAL checklist with updated format in Section 18.0

By signing below, I certify that I have been *notified* about the approval of a *new revision* to the above mentioned SOP. I realize it is *my responsibility* to **read, understand and perform** the procedure as set forth in this new revision.

Initials & Date	Initials & Date	Initials & Date

[ ] *Annual Review* Current Revision # _____

By signing below, I certify that I have **re-read, understand** and **agree to perform** the current revision of the above mentioned SOP.

Initials & Date	Initials & Date	Initials & Date

Form revised 01/18/06

Uncontrolled Copy

Appendix K
Laboratory SOPs

Microbac SOP
2007-6010, Revision 7

Metals Using
Inductively Coupled Plasma Emission Spectroscopy

STANDARD OPERATING PROCEDURE FOR METALS USING INDUCTIVELY COUPLED PLASMA EMISSION SPECTROSCOPY

Revision Author: Greg Meyers

Uncontrolled Copy

This SOP is effective upon signed approval by the following:

Troy M. Goehl	10/20/2009
Inorganics Manager	Date
	10/20/2009
QA/QC Manager	Date

DISCLAIMER: This SOP has been developed for use at the Microbac Laboratories, Merrillville, Indiana facility. It is intended for use by trained analysts. As written, this SOP may not be specifically applicable to the activities of other organizations.

Last Review Date:
No Changes Needed
Approved By:

1.0 TABLE OF CONTENTS

1.0 Table of Contents 2
2.0 Scope and Application 3
3.0 Summary 3
4.0 Definitions 4
5.0 Interferences 4
6.0 Safety 5
7.0 Equipment and Supplies 5
8.0 Reagents and Standards 6
9.0 Sample Collection, Preservation, and Holding Times 10
10.0 Quality Control 10
11.0 Calibration and Standardization 14
12.0 Procedure 15
13.0 Calculations and Data Handling 19
14.0 Method Performance 19
15.0 Pollution Prevention 19
16.0 Waste Management 19
17.0 References 19
18.0 Tables, Forms, Checklists, and Other Attachments 20

Uncontrolled Copy

2.0 SCOPE AND APPLICATION

2.1 This is an analytical SOP for the determination of various metal elements using Inductively Coupled Plasma – Atomic Emission Spectrometry. This procedure is applicable to the analysis of digestates from aqueous, non-aqueous liquid, drinking water, and solid matrix samples. The applicable elements and routine reporting limits (PQL) are listed at the Limits tab of the applicable test codes in LIMS.

3.0 SUMMARY

3.1 With the exception of some drinking water samples, samples must be digested using appropriate preparation methods. Digestion is not required when analyzing dissolved constituents provided the samples are filtered then preserved with acid. Digestion is not required when analyzing drinking water samples that have been determined to have a turbidity of <1 NTU.

3.2 An aerosol is created, through nebulization, and is transported to the plasma via a torch. The plasma places the elements in an atomic state which, when excited, emit a light or spectra, which is specific to that particular element. A grating separates the spectra and the intensities of the lines are measured by either photo multiplier tubes or in this case, a charged injection device. That is, the wavelength of light determines the element, and the intensity of the light omitted determines concentration.

3.3 Background light intensity must be measured adjacent to the analyte lines during analysis. The position selected for background measurement is dependent upon the complexity of the spectrum adjacent to the analytical line. The position used must be free of spectral interference and reflect the same change in background intensity as occurs at the analyte wavelength measured. Background correction is not necessary when the analyte wavelength is broad and therefore may be degraded as a result of background correction.

3.4 Although, ICP-AES is typically linear over multiple orders of magnitude, samples with concentrations greater than the high calibration standard for a given element should be diluted. Samples with concentrations greater than 90% of the linear dynamic range for a given element must be diluted. Digestates containing high Silver concentration should not be diluted, but rather re-digested using a smaller sample size.

3.5 This procedure is based on the reference methods listed in section 17 of this document. This procedure contains no significant deviations from the reference methods. This procedure uses the following approaches, which are different than those found in the reference methods.

3.5.1 Section 7.4 of EPA Method 200.7 revision 4.4 requires the use of ASTM Type I water. The water system used in this lab generates lab pure water that exceeds the requirements of Standard Methods Type I water, which has quality requirements between those of ASTM Type I and ASTM Type II. This is

Uncontrolled Copy

considered insignificant, as the lab pure water used meets the data quality objectives of our quality plan and the needs of our data users.

3.5.2 Section 9.3.1 of EPA Method 200.7 revision 4.4 states, “When LRB values constitute 10% or more of the analyte level determined for a sample or is 2.2 times the analyte MDL whichever is greater, fresh aliquots of the samples must be prepared and analyzed again for the affected analytes after the source of contamination has been corrected and acceptable LRB values have been obtained”. Most of the reporting limits (PQL) for this procedure are well above 2.2 times the MDL and meet the data quality objectives of the client. As such, evaluation of the Method Blank down to 2.2 times the MDL is unnecessary as MBLK concentrations below the PQL are typically insignificant with respect to a detected concentration in a sample. Section 10.9 of this SOP requires that blanks are less than the PQL.

3.5.3 Section 9.2.3 of EPA Method 200.7 revision 4.4 requires the periodic analysis of a second source control standard (QCS). Section 9.3.4 of EPA Method 200.7 revision 4.4 requires the daily analysis of a calibration source control standard (IPC). This procedure combines the requirements of both these sections in a “more restrictive” approach by requiring the analysis of a second source control standard (ICV/CCV) on a daily basis.

3.5.4 Section 9.3.5 of EPA Method 200.7 revision 4.4 requires the analysis of a spectral interference check (SIC) solution. This procedure uses the application of the ICSA and ICSAB solutions as required in Method 6010B to provide an adequate test of the correction factors.

3.5.5 Method 200.7 requires 4 ICV replicates. Method 6010B requires only 2 replicates. We only require 2 replicates due to the limitations of the instrument software.

Uncontrolled Copy

4.0 DEFINITIONS

4.1 A list of definitions is in the Quality Assurance Plan. In addition to the terms defined in the QAP.

5.0 INTERFERENCES

5.1 Spectral interferences are caused by overlap of spectral lines from another element, unresolved overlap of molecular band spectra, background contribution from continuous or recombination phenomena and stray light from the line emission of high concentration elements. Spectral overlap can be compensated for by computer correction of the raw data after monitoring and measuring the interfering element. Unresolved overlap requires selection of an alternate wavelength. Background contribution and stray light can usually be compensated for by a background correction adjacent to the analyte line. Potential spectral interferences for recommended wavelengths have been documented but may differ for each instrument. Therefore, spectral interferences must be measured for a particular instrument by aspirating 100 mg/L of the interfering element in order to measure the false analyte concentration that can arise. A correction

factor can then be calculated and stored in the computer for future corrections. For example, aspirating a 100 mg/L standard of Aluminum produces a false signal of 1.3 mg/L of Arsenic at the 193.696 line. Therefore, a correction factor can be used to compensate for this false signal.

5.2 Physical interferences are effects associated with the sample nebulization and transport processes. Samples containing high dissolved solids can cause inaccuracies. The addition of and correction for the Yttrium internal standard (ISTD) resolves this potential interference. The ISTD option automatically corrects the instrument values for the ISTD recovery. As this correction is automatic for each sample, there are no acceptance criteria for ISTD recovery. Dilution can also reduce these inaccuracies.

5.3 Chemical interferences include molecular compound formation, ionization effects and solute vaporization effects. These effects are not significant with the ICP. They can be minimized by careful selection of operating conditions, by matrix matching and by standard addition.

6.0 SAFETY

6.1 Consult the current revision of the Chemical Hygiene Plan. Requirements for the use of personal protective equipment (e.g. safety glasses, lab coats, gloves) as well as other area-specific safety requirements (e.g. gas cylinders) and MSDS sheets are addressed in the CHP.

7.0 EQUIPMENT AND SUPPLIES

The following is a list of materials needed to perform the steps of this procedure as written. See the reference method(s) for equipment and supply specifications.

7.1 All volumetric glassware used shall be ASTM Class A. Class B glassware must be verified for accuracy on an annual basis and labeled with an appropriate correction.

7.2 Inductively coupled argon plasma emission spectrometer including a computer controlled emission spectrometer with background correction and a radio frequency generator. The software steps in sections 11.0 and 12.0 are specific to the software used on the Iris Advantage ICP-AES instrument.

7.3 Liquid Argon

7.4 Class A volumetric flasks: 100-ml, 200-ml, 500-ml, 1L, and 2L

7.5 Adjustable and/or fixed volume micro-pipettes (various volumes).

7.6 Digestion vessels, 50-ml tubes, certified metals free: Environmental Express #SC475, or equivalent. Note: Used for Cal-5 and Cal-10)

Uncontrolled Copy

8.0 REAGENTS AND STANDARDS

8.1 All reagents used must be analytical reagent (AR) grade or higher. All standards must be traceable to NIST, when available. Certificates of traceability must be obtained from the manufacturer. All reagents and standards must be documented in the appropriate preparation logbook. Refer to the requirements in the Labeling of Standards, Reagents, Digestates and Extracts SOP.

8.2 Reagents

All reagents are stored in the metals instrument lab unless otherwise noted. Unless otherwise noted, prepared reagents are stored in appropriate glass or plastic containers, retained in the metals prep lab and prepared on an as needed basis.

8.2.1 Lab pure water (DI water): Analyte free water is prepared as described in the Quality Assurance Plan. DI water may be obtained from any of the designated taps throughout the lab.

8.2.2 Hydrochloric acid (36.5-38%),HCl conc.: Trace Metals grade (JT Baker, Baker Instra-Analyzed Reagent #9530-33 or equivalent)

8.2.3 Nitric acid (69-70%), HNO_3 conc.: Trace Metals grade (JT Baker, Baker Instra-Analyzed Reagent #9598-34 or equivalent)

8.2.4 Rinse water: In a 2.5L bottle, dilute 60-ml conc. HNO_3 and 120-ml conc. HCl to 2.5L with DI water. This is used as the continuous instrument rinse.

8.3 Standards

All standards are stored in the metals instrument lab unless otherwise noted. Unless otherwise noted, prepared reagents are stored in appropriate glass or plastic containers, retained in the metals instrument lab and prepared on an as needed basis.

8.3.1 Stock Gold Calibration Standard, 1000-µg/ml: ICP Au1000-100, or equiv.

8.3.2 Stock Lithium Calibration Standard, 1000-µg/ml: ICP Li1000-250, or equiv.

8.3.3 Stock Phosphorus Calibration Standard, 1000-µg/ml: CPI S4400-10000391, or equiv.

8.3.4 Stock Platinum Calibration Standard, 1000-µg/ml: ICP Pt1000-25, or equiv.

8.3.5 Stock Rhenium Calibration Standard, 1000-µg/ml: ICP Re1000-25, or equiv.

8.3.6 Stock Sulfur Calibration Standard, 1000-µg/ml: CPI S4400-1000544, or equiv.

8.3.7 Stock Tellurium Calibration Standard, 1000-µg/ml: ICP Te1000-25, or equiv.

8.3.8 Stock Titanium Calibration Standard, 1000-µg/ml: CPI S4400-1000623, or equiv.

Uncontrolled Copy

8.3.9 Stock Yttrium Internal Standard, 1000 ug/ml: Spex 8-39Y-X or equiv.

8.3.10 Working Internal Standard, 25 mg/l: In a 2-L volumetric flask, dilute 50-ml of the stock internal standard to the mark with 100-ml conc. HCl, 40-ml conc. HNO_3, and DI water.

8.3.11 Intermediate Calibration Standard: In a 100-ml volumetric flask, dilute the following standards and reagents to the mark with DI water: (1) 10-ml of Stock Gold Calibration Standard; (2) 10-ml of Stock Lithium Calibration Standard; (3) 10-ml of Stock Phosphorus Calibration Standard; (4) 10-ml of Stock Sulfur Calibration Standard; (5) 10-ml of Stock Titanium Calibration Standard; (6) 2-ml of nitric acid; (7) 5-ml of hydrochloric acid.

8.3.12 Stock Multi-element Calibration Standards:

Vendor	Catalog #	Elements	Conc., µg/ml
CPI	4400-130316	Sb, Mo, Si, Sn,	100
	4400-130317	K, Na	1000
		Al, As, Ba, B, Cd, Ca, Cr, Co, Cu, Fe, Pb, Mg, Ni, Tl, Se, V, Zn	100
		Mn, Ag, Sr	10
		Be	2.5

8.3.13 Working Calibration Standard “10”: In a 50-ml volumetric flask, dilute 5.0-ml of each stock multi-element calibration standard and 5.0-ml of the cal intermediate to the mark with 1.0-ml concentrated nitric acid, 2.5-ml concentrated hydrochloric acid, and DI water. This standard is used for instrument calibration.

Elements	Conc., µg/ml
Sb, Mo, Si, Sn,	10
K, Na	100
Al, As, Ba, B, Cd, Ca, Cr, Co, Cu, Fe, Pb, Mg, Ni, Tl, Se, V, Zn	10
Mn, Ag, Sr	1.0
Be	0.250
Li, P, S, Au, Ti	10

8.3.14 Working Calibration Standard “5”: In a 50-ml volumetric flask, dilute 2.5-ml of each stock multi-element calibration standard and 2.5-ml of the cal intermediate standards to the mark with 1.0-ml concentrated nitric acid, 2.5-ml concentrated hydrochloric acid, and DI water. This standard is used for instrument calibration.

Elements	Conc., µg/ml
Sb, Mo, Si, Sn,	5
K, Na	50
Al, As, Ba, B, Cd, Ca, Cr, Co, Cu, Fe, Pb, Mg, Ni, Tl, Se, V, Zn	5
Mn, Ag, Sr	0.500
Be	0.125
Li, P, S, Au, Ti	5

Uncontrolled Copy

8.3.15 Stock Verification Standards: Store these standards in the metals instrument lab.

Vendor	Catalog #	Elements	Conc., µg/ml
Elements	CS-MBI02 Solution B	Na	5000
		Ca, Mg, K	2500
		Ba	1000
		Pb, Li, P	500
		Ag	125
Elements	CS-MB102 Solution A	Be	25
		Cr, Sr	100
		Cu	125
		Cd, Co, Zn, Ni, V, Mn	250
		Sb,As, Se, Tl, B, Au, Fe, Si, Mo, S, Sn, Ti	500
		Al	1000

8.3.16 Working ICV Standard: In a 500-ml volumetric flask, dilute the following reagents and standards to the mark with DI water: (1) 1.0-ml of stock verification standard A; (2) 1.0-ml of Stock Verification Standard B; (3) 25-ml of concentrated HCl; (4) 10-ml of concentrated nitric acid. Store this standard in the metals instrument lab. This produces a second source verification standard with the following concentrations:

Elements	Conc., µg/ml
Na	10
Ca, Mg, K	5.0
Al, Ba	2.0
Fe, Sb, As, Pb, Se, Tl, B, Mo, Si, Sn, Ti, Au, Li, S, P	1.0
Co, Mn, V, Zn, Cd	0.5
Cu, Ag	0.25
Cr, Sr	0.20
Be	0.05

8.3.17 Working CCV Standard: In a 1L volumetric flask, dilute the following reagents and standards to the mark with DI water: (1) combine and dilute 10.0-ml of the stock verification standards to the mark with 50-ml conc. HCl, 20-ml conc. HNO_3, and DI water. Store this standard in the metals instrument lab. This produces a second source verification standard of:

Elements	Conc., µg/ml
Na	50
Ca, Mg, K	25
Al, Ba	10
Fe, Sb, As, Pb, Se, Tl, B, Mo, Si, Sn, Ti, Au, Li, S, P	5
Co, Mn, V, Zn, Cd	2.5
Cu, Ag	1.25
Cr, Sr	1
Be	.25

Uncontrolled Copy

8.3.18 Stock Interferents A Standard: Contains Al, Ca, and Mg at 5000 ug/ml, and Fe at 2000 ug/ml. Store this standard in the metals instrument lab.

8.3.19 Working Interference Check Standard (ICSA): In a 500-ml volumetric flask, dilute 50-ml of the stock Interferents A standard to the mark with 25-ml conc. HCl, 10-ml conc. HNO_3, and DI water. This prepares an interference check standard of 500 ug/ml Al, Ca, and Mg, and 200 ug/ml Fe. Store this standard in the metals instrument lab.

8.3.20 Working Interference Check Standard ICSAB: In a 500-ml flask, dilute 50-ml stock interferants A, 1-ml of Stock Verification Standard A, 1-ml of Stock Verification Standard B, 10-ml of nitric acid and 25-ml of hydrochloric acid to the mark with DI water. The concentrations are as follows:

Elements	Conc., µg/ml
Al, Ca, Mg	500
Fe	200
Cr, Sr	0.2
Cd, Mn, Ni, V, Zn	0.5
Be	0.05
Cu, Ag	0.25
Sb, As, B, Co, Pb, Li, Mo, P, Se, Si, Tl, Sn, Ti, Au, S	1
Ba	2
K	5
Na	10

8.3.21 LCS/MS: When prepared as detailed in the preparation SOPs, the final concentrations are those as listed in the Specs tab of the applicable test codes in LIMS. For solids samples, the vendor supplies the final concentration of the LCS.

8.4 Special Analyte Reagents

8.4.1 Working ICV+: In a 100-ml volumetric flask, dilute the following reagents and standards to the mark with DI water: 0.2-ml of Stock Verification A; 0.2-ml of Stock Verification B; 0.1-ml each of Stock Single Element Re, Pt, Te Standards, 2-ml nitric acid; 5-ml HCl. The final concentrations are as follows:

Elements	Conc., µg/ml
Na	10
Ca, Mg, K	5
Al, Ba	2
FE, Sb, As, Pb, Se, Tl, B, Mo, Si, Sn, Ti, Au, Li, S, P, Pt, Te, Re	1
Co, Mn, V, Zn, Cd	0.5
Cu, Ag	0.25
Cr, Sr	0.20
Be	0.05

Uncontrolled Copy

8.4.2 Working CCV+: In a 500-ml volumetric flask, dilute the following reagents and standards to the mark with DI water: 5-ml of Stock Verification A; 5-ml of Stock Verification B; 2.5-ml each of Stock Single Element Re, Pt, Te Standards, 10-ml nitric acid; 25-ml HCl. The final concentrations are as follows:

Elements	Conc., µg/ml
Na	50
Ca, Mg, K	25
Al, Ba	10
FE, Sb, As, Pb, Se, Tl, B, Mo, Si, Sn, Ti, Au, Li, S, P, Pt, Te, Re	5
Co, Mn, V, Zn, Cd	2.5
Cu, Ag	1.25
Cr, Sr	1
Be	0.25

8.4.3 ICSAB+: In a 50-ml volumetric flask, dilute the following reagents and standards to the mark with Working Interference Check Standard A: 0.1-ml each of Stock Single Element Re, Pt, Te Standards. This prepares an interference check standard of 500 ug/ml Al, Ca, and Mg, 200 ug/ml Fe, 2-µg/ml of Pt, Te, Re.

8.4.4 ICSAB with S at 2-ppm: In a 50-ml volumetric flask, dilute the following reagents and standards to the mark with Working Interference Check Standard AB: 0.05-ml of the Sulfur Stock Solution. This prepares an interference check standard of ….

Uncontrolled Copy

9.0 SAMPLE COLLECTION, PRESERVATION, AND HOLDING TIMES

9.1 The client or other trained personnel collect samples. Samples received at the laboratory are considered representative unless otherwise noted.

9.2 Water samples should be collected in a plastic container. Chemical preservation consists of HNO_3 to pH <2 for water samples only. Samples are stored on the shelves in the metals preparation lab. Prior to sample preparation, samples must be held for a minimum of 16-hours after preservation. Solid samples should be retained at 4°C until prepared and are stored in the cold storage units located in the sample receipt area. Digestates are stored in capped digestion tubes and kept in the prep lab.

9.3 Analysis must be performed within the maximum allowable hold time of 6-months from collection.

10.0 QUALITY CONTROL

10.1 An *Initial Demonstration of Capability* study must be performed prior to the initial analysis for each analyst and whenever substantial change has occurred in the procedure or instrument. Refer to the Capability and Detection Limit Studies SOP for details.

10.2 A *Method Detection Limit* study must be performed for each new procedure, annually thereafter, and whenever a change in instrument occurs. Refer to the Capability and Detection Limit Studies SOP for details.

10.3 A *Linear Dynamic Range* study must be performed on an annual basis. Analyze a series of standards in increasing concentration (e.g. 50 mg/l, 100 mg/l, 150 mg/l, etc.). The LDR is defined as the concentration at which the recovery varies by more than 10% from the true value. Refer to the Capability and Detection Limit Studies SOP for details. For elements that periodically approach the upper limit, the LDR study should be performed every 6-months.

10.4 A *Calibration Verification Standard* must be analyzed immediately after calibration, after every 10 samples, and after the last sample. The concentration of the ICV must be different than that of the CCV.

10.4.1 Recovery criteria are listed in the appropriate test code in LIMS. [NOTE: the limits are different for method 200.7 versus method 6010B; 200.7 is more stringent for ICV.

10.4.2 ICV and CCV standards that fail to meet the acceptance criteria are automatically flagged in LIMS with a “S” qualifier.

10.4.3 The reporting of data associated with a failed control sample must be documented with a CAR form. If the failure is considered to have a significant affect on the data, client notification is required using the Case Narrative of the report.

10.4.4 Samples associated with a verification that fails with positive bias can be reported without narration if the sample concentration is below the reporting limit.

10.5 A *Calibration Verification Blank* sample must be analyzed after each calibration verification standard.

10.5.1 The acceptance criteria are < PQL. If the acceptance criteria are not met, reanalyze. If reanalysis fails to meet the acceptance criteria, stop analysis and recalibrate or report data with an appropriate qualifier. Samples for compliance with our Wisconsin DNR certification must be evaluated down to the current MDL and corrective action taken if the blank exceeds the routine PQL.

10.5.2 ICB and CCB standards that fail to meet the acceptance criteria are automatically flagged in LIMS with a “S” qualifier. ICB/CCB standards that are below the reporting limit but above the MDL are flagged in LIMS with a “b” qualifier. Data flagged with a “b” is considered as meeting the acceptance criteria.

10.5.3 If the blank does not meet the acceptance criteria, all samples < PQL or greater than 10 times the blank contamination may be reported. All other environmental samples must be reanalyzed or reported with an appropriate

Uncontrolled Copy

qualifier in the Case Narrative of the report. The reporting of data associated with a failed control sample must be documented with a CAR form.

10.6 The *Interference Check Standards* (solutions A and AB+) must be analyzed at the beginning and end of each analytical run.

10.6.1 Acceptance criteria are listed in the appropriate test code in LIMS. If the acceptance criteria are not met, reanalyze. If reanalysis fails to meet the acceptance criteria, stop analysis and recalibrate or report data with an appropriate qualifier.

10.6.2 ICS standards that fail to meet the acceptance criteria are automatically flagged in LIMS with an “S” qualifier.

10.6.3 The reporting of data associated with a failed control sample must be documented with a CAR form. If the failure is considered to have a significant affect on the data, client notification is required using the Case Narrative of the report.

10.6.4 Samples associated with a verification that fails with positive bias can be reported without narration if the sample concentration is below the reporting limit.

10.7 A *Method Blank* must be prepared and analyzed with each batch of maximum 20 samples and at a minimum of one per day.

10.7.1 The acceptance criteria are < PQL. If the acceptance criteria are not met, reanalyze. If reanalysis fails to meet the acceptance criteria, stop analysis and reanalyze using a different calibration or report data with an appropriate qualifier. Samples for compliance with our Wisconsin DNR certification must be evaluated down to the current MDL and corrective action taken if the blank exceeds the routine PQL.

10.7.2 MBLKs that fail to meet the acceptance criteria cause the sample results to be automatically flagged in LIMS with a “B” qualifier. MBLKs that are below the reporting limit but above the MDL are flagged in LIMS with a “b” qualifier. Data flagged with a “b” is considered as meeting the acceptance criteria.

10.7.3 The reporting of data associated with a failed control sample must be documented with a CAR form. If the failure is considered to have a significant affect on the data, client notification is required using the Case Narrative of the report.

10.7.4 Samples associated with a MBLK that fails with positive bias can be reported without narration if the sample concentration is < PQL or greater than 10 times the blank contamination.

10.8 A *Laboratory Control Sample* must be prepared and analyzed with each batch of maximum 20 samples and at a minimum of one per day.

Uncontrolled Copy

10.8.1 Acceptance criteria are listed in the appropriate test code in LIMS. If the acceptance criteria are not met, reanalyze. If reanalysis fails to meet the acceptance criteria, stop analysis and reanalyze using a different calibration or report data with an appropriate qualifier.

10.8.2 LCSs that fail to meet the acceptance criteria are automatically flagged in LIMS with an “S” qualifier.

10.8.3 The reporting of data associated with a failed LCS must be documented with a CAR form. If the failure is considered to have a significant affect on the data, client notification is required using the Case Narrative of the report.

10.8.4 Samples associated with a LCS that fails with positive bias can be reported without narration if the sample concentration is below the reporting limit.

10.9 A *Matrix Spike and Matrix Spike Duplicate* sample must be prepared and analyzed with each batch of maximum 20 samples per matrix and at a minimum of one per day.

10.9.1 Acceptance criteria are listed in the appropriate test code in LIMS. (Note: the accuracy criteria have been met provided at least either the MS or MSD meet the %R criteria.) If the acceptance criteria are not met, refer to the MS/MSD Corrective Action Flowchart in the QAP.

10.9.2 MS/MSD’s that fail to meet the accuracy criteria are automatically flagged in LIMS with a “S” qualifier. MSD’s that fail to meet the precision criteria are automatically flagged in LIMS with an “R” qualifier.

10.9.3 The reporting of data associated with a failed MS/MSD must be documented with a CAR form. If the failure is considered to have a significant affect on the data, client notification is required using the Case Narrative of the report.

10.9.4 Samples associated with a MS/MSD that fails the accuracy criteria with positive bias can be reported without narration if the sample concentration is below the reporting limit.

10.9.5 If the concentration measured in the sample is greater than 4-times the concentration of the spike, the spike amount used is insufficient and the MS/MSD not applicable.

10.10 A *Post Digestion Spike* can be analyzed on any sample to evaluate the potential of matrix interference.

10.10.1 Acceptance criteria are listed in the appropriate test code in LIMS.

10.10.2 The LIMS will flag all failed PDS recoveries with an “S” qualifier.

10.10.3 Use the recovery data to help evaluate any bias as detailed in the MS/MSD Corrective Action Flowchart.

Uncontrolled Copy

10.11 A *Serial Dilution* can be analyzed on any sample to evaluate the potential of matrix interference.

10.11.1 Acceptance criteria for a 1:5 dilution are ≤ 10% difference between the original and the diluted sample concentration.

10.11.2 The LIMS will flag all failed SD recoveries with an "R" qualifier.

11.0 CALIBRATION AND STANDARDIZATION

Calibration data is documented and retained using the data file printouts from the instrument software. Analytical data must be maintained in accordance with the document control requirements in the Quality Assurance Plan as well as the Document Control SOP.

Uncontrolled Copy

11.1 Repipeters must be calibrated/verified in accordance with the Repipetter Calibration SOP.

11.2 Perform the required preventative maintenance as necessary. This includes a daily check of the autosampler components and injector tube, a weekly changing of the tubing, a semi-annual cleaning of the filters, and an as needed torch cleaning. Gas flow checks, and nebulizer cleanings are also conducted as needed. All preventative maintenance is documented in the Maintenance Log for the particular instrument used for analysis.

11.3 A new calibration is usually run at the start of every day. The calibration, QC samples and environmental samples are linked together through the autosampler/run table number, which is recorded on each page of the instrument data file. Instrument conditions and calibration levels are listed in sections 18 of this procedure.

11.4 Prepare the standards for the calibration curve as detailed in the Standards section of this SOP. The following calibration standards are used in the calibration curve: Cal Std 10, Cal Std 5, and a Cal Blank.

11.5 Fill the autosampler tray with the appropriate standards and samples. The tube positions for the calibration standards, ICV, ICB, ICSA, ICSAB, CCV, CCB, and samples are identified in the software and must be verified prior to starting the calibration sequence.

11.6 Following the steps in the Procedure section (12.0) of this SOP, calibrate the instrument. Analysis of environmental samples cannot proceed without the generation of an acceptable calibration.

11.7 Using a 1st Order Polynomial regression curve, evaluate the calibration data as follows:

- Correlation coefficient must be $r \geq 0.995$.

11.8 Unless you are running an unattended autosampler batch of samples, verify that the initial quality control (ICV, ICB, ICS) is acceptable before continuing with

sample analysis. Analysis of environmental samples cannot proceed without the generation of an acceptable calibration. A typical sequence follows the order of Calibration, ICV, ICB, ICSA, ICSAB, CCV, CCB, up to 10 batch/matrix QC samples and environmental samples, CCV, CCB, etc.

11.9 If the linearity requirements are not met, take appropriate corrective actions and recalibrate. If the acceptance criteria are met, continue with the analysis and evaluation of an ICV standard. The acceptance criteria must be met before continuing with sample analysis. Analysis of environmental samples cannot proceed without the generation of an acceptable linearity and an acceptable initial verification (see section 10 for details).

12.0 PROCEDURE

Analytical data is documented and retained using the data file printouts from the instrument software. Analytical data must be maintained in accordance with the document control requirements in the Quality Assurance Plan as well as the Document Control SOP.

12.1 Determination of Interelement Correction Factors

12.1.1 Inter-element Correction Factors (IECs) must be established to correct the measured intensities from background emission and stray light. Appropriate IECs will effectively and adequately correct the measured intensities from bias due to interfering element emissions.

12.1.2 Use the data from the LDR studies to identify wavelengths that are adversely affected (either negative or positive bias). A negative bias to the extent of 2.5-times the PQL or a positive bias of less than the PQL indicates the need for interelement correction.

12.1.3 Calculate the appropriate correction factor (see below). For IEC adjustments, the newly calculated IEC value should be added to the current IEC value to establish the new IEC. IEC's can be positive or negative.

12.1.3.1 IEC Calculation: Conc Analyte Needing Correction / Std Conc of Interfering Analyte (e.g. 500 mg/L Al interferes with Lead yielding a 0.030 mg/L Pb. The Pb IEC = 0.030/500 =0.00006)

12.1.4 Enter the calculated correction factor into Setup\Element Preferences\IECs\analyte\ section and toggle on the Use IEC option. Be sure to save this correction factor in the method before continuing or the change will not be made to the remaining samples.

12.2 Automated Calibration

12.2.1 Make certain that the hoods are turned on and the waste buckets are empty.

12.2.2 Restart the computer.

12.2.3 Open the Thermospec software and click the "plasma" icon.

Uncontrolled Copy

12.2.4 Click the Reset Controller button to perform a hard reset of the camera and the instrument then soft reset to reload the software.

12.2.5 Move the pump tubing so that the position used during the previous run is not re-used for the new run.

12.2.6 Verify that the pump tubing cassettes are locked and that there is rinse water in the rinse station.

12.2.7 Click the Ignite button and then click OK to ignite the torch.

12.2.8 After the torch is lit, check the flow of the rinse water, internal standard and sample lines. Adjust as necessary to obtain a smooth flow. (The pump is not a variable speed pump, so the flow needs to only be smooth).

12.2.9 Click Method (at the top of the screen) and open the appropriate method.

12.2.10 Allow the instrument a minimum of 1-hour to warm up before calibration.

12.3 **Re-profiling the Instrument**

12.3.1 Profile the instrument using the Auto Peak Adjust feature.

12.3.2 The instrument profile must be re-established if it is lost during sample analysis. Profile the instrument by performing the following steps.

12.3.3 Aspirate the working calibration standard “10”.

12.3.4 Click “Instrument” at the top of the screen then choose Auto Peak Adjust followed by Run. The instrument will search for the wavelengths listed in the method and verify their mapping.

12.3.5 When this search is finished, any wavelengths not found will be shown on the screen. Write these elements and wavelengths on a piece of paper.

12.3.6 Map any missing wavelengths by clicking “Instrument” at the top of the screen then choosing Research.

12.3.7 On the Research screen, choose Image followed by New and aspirate the working calibration standard “10”.

12.3.8 Change the sample flush time to 40-seconds and choose Run.

12.3.9 After the standard has been analyzed, a map will appear on the screen. Choose “Add Maps” on the toolbar at the top of the screen.

12.3.10 Select the element to correct. Squares will appear on the map you created showing the wavelengths for the element you have chosen. Find the particular wavelength you are looking for and observe where it is in relation to the peak

Uncontrolled Copy

that was found. Move the square position to that peak by pressing the Ctrl key and doing a left-click on the mouse. Repeat this step for all other missing wavelengths.

12.3.11 When all wavelengths have been correctly mapped, perform another Auto Peak Adjust. This Auto Peak Adjust and mapping process must be repeated until all wavelengths are automatically found.

12.3.12 Calibrate the instrument and analyze samples as described above.

12.3.13 Set up the autosampler tray as follows:

- Click the Sample Tray icon
- Click Samples then the Test Tube + icon
- Enter the sample number in the Sample Name field. In the field labeled Lab ID, enter in the sample type (e.g. MBLK, LCS, SAMP, MS). In the Cust Samp ID field, enter the test code for that sample. For samples that require dilution, enter the dilution factor in the Corr Factor field and place a note in the Comment field to identify the dilution factor. [The "200.7" series of test codes should be used for the instrument QC samples as the 200.7 series has more stringent acceptance criteria. NOTE: the information entered in these fields must be exactly as in the LIMS otherwise the automated data transfer will not work properly.]
- Click Done (or hit Enter) when finished entering the information for this sample and continue entering the information for the remainder of the run
- When all samples have been added to the autosampler tray, click Save
- Click Samples (at the top of the screen) and save the autosampler tray named in a format that identifies the date of that tray. (e.g. For the Advantage, ICP #2, name the file Ammdd-*, where the "A" signifies the Advantage instrument, mm is the month, dd is the date, and * is a number or letter indicating the sequential number of the run for that day. That is, a –1 or –A indicates the first tray of the day, -2 or –B indicates the second run of that day, etc.

12.3.14 Close the Samples box.

12.3.15 Click Run, and Automated analysis then choose the method and hit Run, and Run again.

12.4 Automated Analysis

12.4.1 Place samples on the autosampler tray and continue with analysis as initiated in the Automated Calibration steps above.

12.4.2 Samples having a concentration above that of the high calibration standard must be diluted with acidified DI water so to match the matrix of the standards. Dilutions may be prepared directly in autosampler tubes using appropriate pipettes.

Uncontrolled Copy

12.5 Manual Calibration and Analysis

12.5.1 Click the New button on the Automated Analysis screen.

12.5.2 Click the Autosampler + icon and, using the drop down menus, set the Protocol to Complete.

12.5.3 Choose the appropriate method and autosampler tray number for the autosampler run. Change the rinse time to 55-seconds then click OK.

12.5.4 Click Table (at the top of the screen) and save it with the same name as the autosampler tray.

12.5.5 Click Run (at the top of the screen), Setup, and then the diamond shaped icon next to “Samples”. This will show the autosampler locations of the standards and samples. Print this list.

12.5.6 Load the standards and samples into the appropriate locations on the autosampler.

12.5.7 Click OK then Run to begin the analysis.

12.5.8 Samples having a concentration above 90 percent of the linear dynamic range must be diluted with acidified DI water so to match the matrix of the standards. Dilutions may be prepared directly in autosampler tubes using appropriate pipettes.

12.5.9 When the run is complete, the data is saved in C:\TJA_CID\Export\results.txt. Rename the results file with an appropriate name to indicate the data of analysis (e.g. “ADV0710” for the analysis on 7/10/2008 if only I sequence was run) and copy it to the Instruments data server under P:\Instuments\Metals\ICP\current year folder. If multiple runs are being transferred add an A, B etc to the file name (e.g “ADV0710A” for the first run on 7/10/2008, and ADV0710B for the second run and so on.)

12.5.10 Enter the data into LIMS. Refer to the SOP Analytical Data Entry – Metals for details.

12.5.11 Instrument reports are generated into an electronic file and stored on the data server (P:\) for review and archiving. The individual .ps files generated by the instrument are automatically copied into a \ICP\Printouts drive on data server. Combine the individual .ps files into a single .pdf using Combine.bat then rename this combined file as the date of analysis including month, day and year. If running more than one calibration on the same day then add an A, B etc to the file name. (ie. 071708A for the first calibration run, 071708B for the second calibration run of the day) and move the renamed .pdf file into the \ICP directory of the data server.

Uncontrolled Copy

13.0 CALCULATIONS AND DATA HANDLING

13.1 The instrument software calculates the concentration of the aqueous sample or digestate using linear regression (y = mx+b). This data is imported into LIMS during the Data Entry steps.

13.2 LIMS calculates the final sample concentration as follows:

Concentration, ppm = (C) (DF) (Pfac)

Where: C = concentration from curve, mg/L
DF = dilution factor at instrument
Pfac = (Final Volume, ml) / (Sample Size, ml or g)

13.3 The LIMS calculates the dry-weight concentration for solid samples as follows:

$$\text{Conc. Dry} = \frac{\text{(wet weight conc.)}}{(100 - \%\text{Moisture})}$$

13.4 Results flagged by the LIMS with an "E" qualifier are above 90 percent of the linear range of the instrument. There is less certainty in these data and, if sufficient sample and holding time are available, should be reanalyzed at an appropriate dilution. Details on the procedure for entering analytical data are in the Analytical Data Entry - Metals SOP.

14.0 METHOD PERFORMANCE

14.1 Initial Demonstration of Capability study data, Method Detection Limit study data and Performance Testing study data are maintained and available from the QA office.

15.0 POLLUTION PREVENTION

15.1 The quantity of chemicals purchased should be based on expected usage during their shelf life and the disposal cost of unused material.

15.2 Prepare the minimum amount of reagent and standard necessary.

16.0 WASTE MANAGEMENT

16.1 Refer to the Sample Disposal SOP for guidance on the disposal of any resulting residue, digestate, distillate, extract or standard.

17.0 REFERENCES

17.1 USEPA Method 200.7, revision 4.4

17.2 SW-846 Method 6010B

Uncontrolled Copy

17.3 SOP Preparation of Aqueous Samples and Extracts for Total or Dissolved Metals Analysis By Inductively Coupled Plasma, current revision.

17.4 SOP Preparation of Non-Aqueous Samples Total Metals Analysis, current revision.

17.5 SOP Toxicity Characteristic Leaching Procedure for Metals and Semi-Volatile Organic Compounds Using SW-846 Method 1311, current revision.

17.6 Microbac Laboratories Quality Assurance Plan, current revision, all sections

18.0 TABLES, FORMS, CHECKLISTS, AND OTHER ATTACHMENTS

Method Specs Summary
SOP Revision Notification Form listing the changes in this revision

Uncontrolled Copy

Method Name: LOWNEB

Analysis Preferences

# Repeats	2	Sample Flush Time:	55.0
View Selection:	Auto View		

CID Max. Integration Times

Low Wavelength Range:	50.0
High Wavelength Range:	25.0

Override MTD Plasma Control: No

Plasma Conditions

Aux Gas:	Low	
RF Power:	1150	
Nebulizer Flow	0.53 LPM	
Nebulizer Pump	Flush Pump Rate:	110 rpm
	Analysis Pump Rate:	110 rpm
	Relaxation Time:	0.0 sec

Analyte Details

Element	Wavelength & Order Number	ISTD	IEC Element
Ag	328.068 {102}	Y 371.030 {90}	None
Al	394.401 {85}	Y 371.030 {90}	Ca
Al	396.152 {85}	Y 371.030 {90}	None
As	189.042 {177}	Y 224.306 {150}	Fe
B	208.959 {161}	Y 224.306 {150}	None
B	249.678 {135}	Y 224.306 {150}	None
Ba	233.527 {144}	Y 224.306 {150}	Fe
Be	234.861 {143}	Y 224.306 {150}	Fe
Ca	184.006 {182}	Y 224.306 {150}	None
Cd	214.438 {157}	Y 224.306 {150}	Al, Fe
Cd	226.502 {148}	Y 224.306 {150}	Fe
Co	228.616 {147}	Y 224.306 {150}	Ca
Cr	206.149 {163}	Y 224.306 {150}	Fe
Cu	224.700 {150}	Y 224.306 {150}	Fe
Cu	324.754 {103}	Y 224.306 {150}	Ca, Fe
Fe	240.488 {140}	Y 224.306 {150}	None
Fe	259.940 {129}	Y 224.306 {150}	None
K	766.490 {44}	Y 371.030 {90}	None
Mg	280.270 {119}	Y 224.306 {150}	None
Mg	285.213 {117}	Y 224.306 {150}	None
Mn	257.610 {131}	Y 224.306 {150}	Al, Fe
Mo	202.030 {166}	Y 224.306 {150}	Al
Na	588.995 {57}	Y 371.030 {90}	None
Ni	221.647 {152}	Y 224.306 {150}	None
Ni	231.604 {145}	Y 224.306 {150}	None
Pb	220.353 {152}	Y 224.306 {150}	Al
Sb	206.833 {162}	Y 224.306 {150}	None
Sb	217.581 {154}	Y 224.306 {150}	None
Se	196.090 {171}	Y 224.306 {150}	Al, Ca
Si	212.412 {158}	Y 224.306 {150}	None
Si	251.612 {134}	Y 224.306 {150}	None
Sn	189.989 {177}	Y 224.306 {150}	Fe
Sr	407.771 {82}	Y 371.030 {90}	Ca
Ti	334.941 {100}	Y 371.030 {90}	None
Tl	190.864 {175}	Y 224.306 {150}	None
Tl	190.864 {176}	Y 224.306 {150}	None
V	292.402 {115}	Y 371.030 {90}	Al, Fe, Mg
Zn	206.200 {162}	Y 224.306 {150}	Al
Zn	206.200 {163}	Y 224.306 {150}	Fe

Uncontrolled Copy

Microbac®

By signing below, I certify that I have been *notified* about the approval of a *new revision* to the above mentioned SOP. I realize it is *my responsibility* to **read, understand and perform** the procedure as set forth in this new revision.

Initials & Date	Initials & Date	Initials & Date

☐ *Annual Review* Current Revision # _____

By signing below, I certify that I have **re-read, understand** and **agree to perform** the current revision of the above mentioned SOP.

Initials & Date	Initials & Date	Initials & Date

Form revised 01/18/06

Uncontrolled Copy

Microbac

SOP Revision Notification / Annual Review Form

SOP Name METALS USING INDUCTIVELY COUPLED PLASMA EMISSION SPECTROSCOPY

X *New Revision* Old Revision # 6 New Revision # 7

Summary of changes:

- Removed all standards associated with the PQL calibration standard since it is no longer run.
- Updated HNO_3 and HCl brand and vendor information to reflect a new vendor.
- Changed vendor from "Inorganic Ventures" to "Elements" and put the appropriate catalog number in the Stock Verification Standards table in 8.3.6.
- Updated elements and concentrations to what is currently being used for the Stock Verification Standards in table 8.3.6.
- Removed Stock Single Elements Verification Standards and Intermediate ICV/CCV Solution since they are no longer used.
- Removed reference to ICV/CCV solution, Na standard and Ti standard in 8.3.7 and 8.3.8.
- Added Au, Li, S and P as elements in the tables in 8.3.7 and 8.3.8 along with their concentration
- Added Au, Li, S and P to table in 8.3.11 with a concentration of 1000ug/ml.
- Added Single Source Element Standard containing Au, Li, S and P, the volume of standard used and the final concentration to the table in 8.3.16.
- Sec. 10.4.1: Updated the reference to the replicates precision.
- Changed samples per batch in 10.9 under the MS/MSD from "10" to "20".
- Changed torch cleaning to "as needed" and changing of tubing to "weekly" in 11.1.
- Changed verbiage in 11.2 to specify that calibrations are run everyday.
- Removed "PQL level Cal Std" reference in 11.3.
- 12.1.2 changed to "less than the PQL "for positive bias.
- Added verbiage to 12.1.4 about saving the correction factor.
- Removed "printer" from 12.2.2.
- Added verbiage to 12.4.11 about naming the sequence file.
- Sec. 7.6: Added digestion vessels to the equipment list.
- Sec. 8.3.: (1) Removed Titanium from the CPI standard to reflect the current product. (2) Added the single-element standards of Li, P, S, Au, Ti; (3) Scaled-down the volumes of Working Calibration Standard "10" and "5"; (4) Removed Stock Analyte B Standard, Stock Single-element standards, Intermediate ICSAB Solution 1, Stock Single Element Tin Standard, Intermediate ICSAB Solution 2, and ICSAB+; (5) Added standards for Li, P, Au, Ti, S, Re, Te, Pt
- Added the deviation from procedure to section 3.5 explaining that we follow method 6010 instead of method 200.7 concerning the number of replicates for the ICV

Uncontrolled Copy

Microbac®

By signing below, I certify that I have been *notified* about the approval of a *new revision* to the above mentioned SOP. I realize it is *my responsibility* to **read, understand and perform** the procedure as set forth in this new revision.

Initials & Date	Initials & Date	Initials & Date

☐ *Annual Review* Current Revision # _____

By signing below, I certify that I have **re-read, understand** and **agree to perform** the current revision of the above mentioned SOP.

Initials & Date	Initials & Date	Initials & Date

Form revised 01/18/06

Uncontrolled Copy

Appendix K

Laboratory SOPs

Microbac SOP

2008-6020, Revision 1

Metals Using

Inductively Coupled Plasma - Mass Spectroscopy

STANDARD OPERATING PROCEDURE FOR METALS BY ICP-MS

Revision Author: Shon Ahrendt

This SOP is effective upon signed approval by the following:

Troy M. Goehl	8/25/2009
Inorganics Manager	Date
	8/27/09
QA/QC Manager	Date

Uncontrolled Copy

DISCLAIMER: This SOP has been developed for use at the Microbac Laboratories, Merrillville, Indiana facility. It is intended for use by trained analysts. As written, this SOP may not be specifically applicable to the activities of other organizations.

Last Review Date:
No Changes Needed
Approved By:

1.0 TABLE OF CONTENTS

1.0 Table of Contents 2
2.0 Scope and Application 3
3.0 Summary 3
4.0 Definitions 4
5.0 Interferences 4
6.0 Safety 5
7.0 Equipment and Supplies 5
8.0 Reagents and Standards 6
9.0 Sample Collection, Preservation, and Holding Times 13
10.0 Quality Control 13
11.0 Calibration and Standardization 13
12.0 Procedure 17
13.0 Calculations and Data Handling 21
14.0 Method Performance 21
15.0 Pollution Prevention 21
16.0 Waste Management 22
17.0 References 22
18.0 Tables, Forms, Checklists, and Other Attachments 22

Uncontrolled Copy

2.0 SCOPE AND APPLICATION

2.1 This is an Inductively Coupled Plasma – Mass Spectrometry (ICP-MS) procedure for the determination of various metal elements. This procedure is applicable to the analysis of digestates from aqueous, non-aqueous liquid, drinking water, and solid matrix samples. The applicable analytes, detection limits and routine reporting limits (PQL) are listed at the Limits tab of the applicable test codes in LIMS.

3.0 SUMMARY

3.1 With the exception of some drinking water samples, samples must be digested using appropriate preparation methods. Digestion is not required when analyzing dissolved constituents provided the samples are filtered then preserved with acid. Digestion is not required when analyzing drinking water samples that have been determined to have a turbidity of <1 NTU.

3.2 Sample is nebulized into a spray chamber where a stream of argon carries the aerosol through a quartz torch and injects it into a radiofrequency plasma where the sample is decomposed and desolvated. The ions produced are entrained in the plasma gas and by means of a water-cooled, differentially pumped interface, introduced into a high-vacuum chamber that houses a quadrupole mass spectrometer. The ions are sorted according to their mass-to-charge ratio and measured with a detector.

3.3 This procedure allows for the determination of Mercury. A requirement for Mercury determination using ICP-MS is that the digestion procedure must use mixed nitric and hydrochloric acids through all steps of the digestion as Mercury will be lost if the sample is digested when hydrochloric acid is not present.

3.4 This procedure is based on the reference methods listed in section 17 of this document. This procedure contains no significant deviations from the reference methods. This procedure uses the following approaches, which are different than those found in the reference methods.

3.4.1 Section 9.2.3 of EPA Method 200.8 revision 5.4 requires the periodic analysis of a second source control standard (QCS). Section 9.3.4 of EPA Method 200.8 revision 5.4 requires the daily analysis of a calibration source control standard (IPC). This procedure combines the requirements of both these sections in a “more restrictive” approach by requiring the analysis of a second source control standard (ICV/CCV) on a daily basis.

3.4.2 Section 9.3.1 of EPA Method 200.8 revision 5.4 states, “When LRB values constitute 10% or more of the analyte level determined for a sample or is 2.2 times the analyte MDL whichever is greater, fresh aliquots of the samples must be prepared and analyzed again for the affected analytes after the source of contamination has been corrected and acceptable LRB values have been obtained”. Most of the reporting limits (PQL) for this procedure are well above 2.2 times the MDL and meet the data quality objectives of the client. As such,

Uncontrolled Copy

evaluation of the Method Blank down to 2.2 times the MDL is unnecessary as MBLK concentrations below the PQL are typically insignificant with respect to a detected concentration in a sample. Section 10 of this SOP requires that blanks are less than the PQL.

3.4.3 Based on the recommendation of the instrument manufacturer, Gold is added to the nitric acid as well as certain standards in an attempt to stabilize the Mercury concentration in samples and standards.

3.4.4 All digestates are diluted at least or minimally 1:5 for the initial analysis. This prepares the proper acid matrix allowing for a single digestate to be analyzed by ICP or ICP-MS.

4.0 DEFINITIONS

4.1 A list of definitions is in the Quality Assurance Plan. In addition to the terms defined in the QAP.

5.0 INTERFERENCES

5.1 Isobaric interferences occur when an isotope of one element is at the same nominal mass as an isotope of another element (e.g., Mo^{98} and Ru^{98}). Corrections for isobaric interferences may be made by measuring the intensity due to the interfering element at another isotope and using its natural abundance ratios to correct for its presence at the analytical mass of interest. With the exceptions of Molybdenum-98 (Ruthenium) and Selenium-82 (Krypton), most elements measured with this procedure have a minimum of one isotope free of isobaric elemental interference.

5.1.1 Care should be taken that the isotope measured for correction purposes does not suffer from overlap with other isotopes that may be present in the sample.

5.2 Molecular interferences are caused by molecular species formed in the plasma with plasma or matrix ions (examples of common molecular interferences include ArCl, ClO, Nitrogen dimer, oxygen dimer, oxide species, double charged species, etc.). Predictions about the type of molecular interferences may be made using knowledge about the sample matrix. Molecular interferences can often be corrected for in the same manner as isobaric interferences, i.e., measuring the intensity present at another isotope and using isotope ratios to calculate the amount of the interfering species. For example, corrections for interferences of $Ar^{40}Cl^{35}$ on As at mass 75 may be made by measuring the intensity of ArCl present at mass 77 ($Ar^{40}Cl^{37}$) and converting to the apparent intensity of ArCl at mass 75 by using the isotopic ratio of Cl^{37} to Cl^{35}.

5.3 Abundance sensitivity is a property defining the degree to which the wings of a mass peak contribute to adjacent masses. The abundance sensitivity is affected by ion energy and quadrupole operating pressure. Wing overlap interferences may result when a small ion peak is being measured adjacent to a large one. The

Uncontrolled Copy

potential for these interferences should be recognized and the spectrometer resolution adjusted to minimize them.

5.4 Physical interferences are associated with the physical processes which govern the transport of sample into the plasma, sample conversion processes in the plasma, and the transmission of ions through the plasma mass spectrometer interface. These interferences may result in differences between instrument responses for the sample and the calibration standards. Physical interferences may occur in the transfer of solution to the nebulizer (e.g., viscosity effects), at the point of aerosol formation and transport to the plasma (e.g., surface tension), or during excitation and ionization processes within the plasma itself. High levels of dissolved solids in the sample may contribute deposits of material on the extraction and/or skimmer cones reducing the effective diameter of the orifices and therefore ion transmission. These interferences are effectively removed through filtration of the sample digestate, and by matrix-matching the samples to the standards. Failure to meet the recovery criteria for the internal standards is indicative of these interferences and requires serial dilution analysis of the sample.

5.5 Carryover contamination is negated through the application of adequate rinse times between samples.

5.6 Additionally, solid phase chelation may be used to eliminate isobaric interferences from both element and molecular sources. There is an on-line that has been demonstrated for environmental waters such as sea water, drinking water and acid decomposed samples. Acid decomposed samples refer to samples decomposed by methods similar to methods SW-846 3052, 3051, 3050 or 3015. Samples with percent levels of iron and aluminum should be avoided. The method also provides a method for pre-concentration to enhance detection limits simultaneously with elimination of isobaric interferences. The method relies on chelating resins such as imminodiacetate or other appropriate resins and selectively concentrates the elements of interest while eliminating interfering elements from the sample matrix. By eliminating the elements that are direct isobaric interferences or those that form isobaric interfering molecular masses, the mass region is simplified and these interferences can not occur. The method has been proven effective for the certification of standard reference materials and validated using SRMs. The method has the potential to be used on-line or off-line as an effective sample preparation method specifically designed to address interference problems.

Uncontrolled Copy

6.0 SAFETY

6.1 Consult the current revision of the Chemical Hygiene Plan. Requirements for the use of personal protective equipment (e.g. safety glasses, lab coats, gloves) as well as other area-specific safety requirements (e.g. gas cylinders) and MSDS sheets are addressed in the CHP.

7.0 EQUIPMENT AND SUPPLIES

The following is a list of materials needed to perform the steps of this procedure as written. See the reference method(s) for equipment and supply specifications.

7.1 All volumetric glassware/plasticware used shall be ASTM Class A. Class B glassware must be verified for accuracy on an annual basis and labeled with an appropriate correction.

7.2 PE Elan 9000 ICP-MS with a CETAC ASX-520 autosampler. The software steps in sections 11.0 and 12.0 are specific to the software used on the ELAN 9000 instrument.

7.3 Liquid Argon – 99.999% bulk liquid Argon, Krypton free

7.4 Polyscience recirculator model #3370

7.5 Adjustable and/or fixed volume micro-pipettes with tips to cover the range of 10 – 5000 µL

7.6 Digestion vessels, Environmental Express catalog #SC475 or equivalent; certified metals free. These vials come with a Certificate of Accuracy from the vendor. This Certificate must be retained in order to show the volume verification and allowing them to be used without additional verification.

7.7 Filters, Environmental Express FilterMate, catalog #SC0401, or equivalent

7.8 Autosampler tubes: CPI catalog #4092-320 or equivalent

7.9 Clean 1-L plastic containers

8.0 REAGENTS AND STANDARDS

8.1 All reagents used must be analytical reagent (AR) grade or higher. All standards must be traceable to NIST, when available. Certificates of traceability must be obtained from the manufacturer. All reagents and standards must be documented in the appropriate preparation logbook. Refer to the requirements in the Labeling of Standards, Reagents, Digestates and Extracts SOP.

8.2 Reagents

All reagents are stored in the metals prep lab unless otherwise noted. Unless otherwise noted, prepared reagents are stored in appropriate plastic containers, retained in the metals prep lab and prepared on an as needed basis.

8.2.1 Lab pure water (DI water): Analyte free water is prepared as described in the Quality Assurance Plan. DI water may be obtained from any of the designated taps throughout the lab.

8.2.2 Hydrochloric acid, conc. (12N HCl): Metals grade, JT Baker Instra-analyzed reagent #9530-33 or equivalent.

8.2.3 Nitric acid, conc. (18N HNO_3): Metals grade, JT Baker Instra-analyzed reagent #9598-34 or equivalent.

Uncontrolled Copy

8.2.4 Gold-stabilized Nitric acid, conc. (18N HNO_3) Add 0.75-ml of the 10,000 mg/L Stock Gold standard to each 2.5-L bottle of concentrated acid and label accordingly.

8.3 Standards

All standards are stored in the metals instrument lab unless otherwise noted.

8.3.1 **Stock Standards**

8.3.1.1 Stock Barium Tuning Standard, 1000-mg/L: Spex catalog # PLBA2-2T, or equivalent

8.3.1.2 Stock Beryllium Tuning Standard, 1000-mg/L: Elements catalog # Be1000-50

8.3.1.3 Stock Boron Calibration Standard, 1000-mg/L: CPI catalog # S4400-100074, or equivalent.

8.3.1.4 Stock Calcium Calibration Standard, 1000-mg/L: CPI catalog # S4400-100091, or equivalent

8.3.1.5 Stock Cerium Tuning Standard, 1000-mg/L: Elements Ce1000-50

8.3.1.6 Stock Cobalt Tuning Standard, Elements catalog # Co1000-50

8.3.1.7 Stock Germanium Internal Standard, 1000-mg/L: Elements catalog # Ge1000-50, or equivalent

8.3.1.8 Stock Gold Calibration Standard, 1000-mg/L: Elements catalog # Au1000-100, or equivalent

8.3.1.9 Stock Gold Standard, 10,000-mg/L: CPI catalog #S4400-10M212 or equivalent. The exclusive purpose of this standard is for it to be added to the concentrated Nitric acid.

8.3.1.10 Stock Indium Internal Standard, 1000-mg/L: Elements catalog # In1000-50, or equivalent

8.3.1.11 Stock Iron Calibration Standard, 1000-mg/L: CPI catalog # S4400-1000261, or equivalent

8.3.1.12 Stock Lead Tuning Standard, 1000-mg/L: CPI catalog # S4400-1000281

8.3.1.13 Stock Magnesium Calibration Standard, 1000-mg/L: CPI catalog # S4400-1000311, or equivalent. This may also be used as a tuning standard.

8.3.1.14 Stock Mercury Calibration Standard, 1000-mg/L: Spex catalog # PLHG4-24, or equivalent

Uncontrolled Copy

8.3.1.15 Stock Mineral Calibration Standards, 1000-mg/L each: Spex catalog #'s CLFE2-24, CLCA2-24, PLK2-24, PLMG2-24, and PLNA2-24, or equivalent. These standards contain Fe, Ca, K, Mg and Na, respectively.

8.3.1.16 Stock Multi-element Calibration Standard, 100-mg/L each: CPI catalog # 4400-080111BD01 Microbac. This standard contains the following elements - Al, As, Ba, Be, Ca, Cd, Co, Cr, Cu, Fe, K, Mg, Mn, Mo, Na, Ni, Pb, Sb, Se, Sn, Sr, Ti, Tl, V, Zn

8.3.1.17 Stock Palladium Calibration Standard, 1000-mg/L: Elements catalog # Pd1000-100, or equivalent

8.3.1.18 Stock Platinum Calibration Standard, 1000-mg/L: Elements catalog # Pt1000-50, or equivalent

8.3.1.19 Stock Potassium Calibration Standard, 1000-mg/L: Spex catalog # PLK2-24, or equivalent

8.3.1.20 Stock Rhodium Tuning Standard, 1000-mg/L: CPI catalog # S4400-1000442, or equivalent

8.3.1.21 Stock Scandium Internal Standard, 1000-mg/L:Elements catalog # Sc1000-50, or equivalent

8.3.1.22 Stock Sodium Calibration Standard, 1000-mg/L: Spex catalog # PLNA2-24, or equivalent

8.3.1.23 Stock Silver Calibration Standard, 1000-mg/L: Elements catalog # Ag1000-50 or equivalent.

8.3.1.24 Stock Terbium Internal Standard, 1000-mg/L: Elements catalog # Tb1000-50, or equivalent

8.3.1.25 Stock Uranium Tuning Standard, 1000-mg/L: Elements catalog # U1000-50, or equivalent

Uncontrolled Copy

8.3.2 **Intermediate Calibration Standards**

8.3.2.1 Boron and Silver Intermediate Calibration Standard, 2.0-mg/L each: In a 50-ml digestion tube, dilute 0.1-ml of Stock Silver Calibration Standard and 0.1-ml of the Stock Boron Calibration Standard to the mark with 1-ml Gold-stabilized HNO_3 and DI water.

8.3.2.2 Gold, Palladium, and Platinum Intermediate Calibration Standard, 2.0-mg/L each: In a 50-ml digestion tube, add 0.1-ml of each of the following three standards: Stock Gold Calibration Standard, Stock Palladium Calibration Standard, Stock Platinum Calibration Standard. Dilute to the mark with 0.75-ml of concentrated HNO_3, 0.5-ml of concentrated HCl, and DI water.

8.3.2.3 Mercury Intermediate Calibration Standard #1, 5.0-mg/L: In a 50-ml digestion tube, dilute 0.25-ml of the Stock Mercury Calibration Standard to the mark with 0.5-ml of the Gold-stabilized HNO_3, 0.5-ml of the concentrated HCl, and DI water.

8.3.2.4 Mercury Intermediate Calibration Standard #2, 0.5-mg/L: In a 50-ml digestion tube, dilute 5.0-ml of the Mercury Intermediate Calibration Standard #1 to the mark with 0.5-ml of the Gold-stabilized HNO_3, 0.5-ml of the concentrated HCl, and DI water.

8.3.2.5 Mineral Intermediate Calibration Standard, 100 mg/L each: In a 50-ml digestion tube, dilute 5.0-ml of the Calcium Stock Calibration Standard, 5.0-ml of the Iron Stock Calibration Standard, 5.0-ml of the Magnesium Stock Calibration Standard, 5.0-ml of the Potassium Stock Calibration Standard, and 5.0-ml of the Sodium Stock Calibration Standards to the mark with 1-ml of the Gold-stabilized HNO_3 and DI water.

8.3.2.6 Multi-element Intermediate Calibration Standard, 2.0-mg/L each: In a 50-ml digestion tube, dilute 1.0-ml of the Stock Multi-element Calibration Standard to the mark with 2.5-ml of the Gold-stabilized HNO_3 and DI water.

8.3.3 **Working Calibration Standards**:

8.3.3.1 **Working Calibration Standards for Boron, Mercury, Silver, and Metals from the Multi-element Standard**. Prepare the following dilutions in 50-ml digestion tubes. Dilute the stated volumes of Spike Standard, 0.75-ml of Gold-stabilized HNO3, and 0.5-ml concentrated HCl to 50-ml with DI water. The standards are prepared as needed and have been shown stable for up to 2-weeks.

Cal Std	Volume and Type of Spike Standard	Final Hg Conc. (µg/L)	Final Conc., Other Metals (µg/L)
CAL BLK	• None added	0	0
CAL STD 0.2	• 0.5ml CAL STD 2	0.04	0.2
CAL STD 1	• 0.025-ml Multi-element Int. Cal. Std • 0.025-ml Boron and Silver Int. Std • 0.020-ml Mercury Int. Cal. Std #2	0.2	1.0
CAL STD 2	• 0.50-ml Multi-element Int. Cal. Std • 0.5-ml Boron and Silver Int. Std • 0.20-ml Mercury Int. Cal. Std #2	2	20
CAL STD 3	• 2.5-ml Multi-element Int. Cal. Std • 2.5-ml Boron and Silver Int. Std • 0.5-ml Mercury Int. Cal. Std #2	5	100
CAL STD 4	• 2.5-ml Multi-element Int. Cal. Std	0	500
CAL STD 5	• 5.0-ml Mineral Int. Cal. Std	0	10,000

Uncontrolled Copy

8.3.3.2 **Working Calibration Standards for Gold, Palladium, and Platinum.** Prepare the following dilutions in 50-ml digestion tubes. Dilute the stated volumes of Gold, Palladium, and Platinum Intermediate Calibration Standard, 0.75-ml of concentrated HNO3, and 0.5-ml concentrated HCl to 50-ml with DI water. The standards are prepared as needed and have been shown stable for up to 2-weeks.

Cal Std	Volume of Standard (ml)	Final Conc. of Au, Pd, Pt (µg/L)
CAL BLK	0	0
CAL STD 1	0.025	1.0
CAL STD 2	0.50	20
CAL STD 3	2.5	100

8.3.4 **Stock Verification Standards**: All Stock Verification Standards must come from a different source than the equivalent Stock Calibration Standards.

8.3.4.1 Stock Boron Verification Standard, Elements catalog # B1000-50, or equivalent

8.3.4.2 Stock Gold Verification Standard, 1000-mg/L: CPI catalog # S4400-1000212, or equivalent

8.3.4.3 Stock Mercury Verification Standard, 1000-mg/L: CPI catalog #S4400-1000331 or equivalent

8.3.4.4 Stock Mineral Verification Standard, 200-mg/L each: Spex catalog #CL-ICS-3 or equivalent. This standard contains Fe, Ca, K, Mg and Na.

8.3.4.5 Stock Multi-element Verification Standard, 100-mg/L each: Perkin Elmer catalog # N9301721 or equivalent. This standard contains the following elements - Ag, Al, As, Ba, Be, Ca, Cd, Co, Cr, Cu, Fe, K, Mg, Mn, Mo, Na, Ni, Pb, Sb, Se, Sn, Sr, Ti, Tl, V, Zn.

8.3.4.6 Stock Palladium Verification Standard, 1000-mg/L: CPI catalog # P/N S4400-1000381, or equivalent

8.3.4.7 Stock Platinum Verification Standard, 1000-mg/L: CPI# P/N S4400-1000402, or equivalent

8.3.5 **Intermediate Verification Standards**

8.3.5.1 Gold, Palladium, and Platinum Intermediate Verification Standard, 1.0-mg/L each: In a 50-ml digestion tube, add 0.05-ml of each of the following three standards: Stock Palladium Verification Standard, Stock Platinum Verification Standard, and Stock Gold Verification Standard. Dilute to the mark with 0.75-ml of concentrated HNO_3, 0.5-ml of concentrated HCl, and DI water.

Uncontrolled Copy

8.3.5.2 Mercury Intermediate Verification Standard #1, 5.0 mg/L: In a 50-ml digestion tube, dilute 0.25-ml of the Stock Mercury Verification Standard to the mark with 0.5-ml of the Gold-stabilized concentrated HNO_3, 0.5-ml of the concentrated HCl, and DI water.

8.3.5.3 Mercury Intermediate Verification Standard #2, 0.5 mg/L: In a 50-ml digestion tube, dilute 2.5-ml of the Mercury Intermediate Verification Standard #1 to the mark with 0.5-ml of the gold-stabilized concentrated HNO_3, 0.5-ml of the concentrated HCl, and DI water.

8.3.5.4 Multi-element Intermediate Verification Standard, 1.0 mg/L: In a 50-ml digestion tube, dilute 0.5-ml of the Stock Multi-element Verification Standard an 0.05-ml of the Stock Boron Verification Standard to the mark with 2.5-ml of the Gold-stabilized HNO_3 and DI water.

8.3.6 **Working Verification Standards**

8.3.6.1 ICV for Boron, Mercury, Silver, and Metals from the Multi-element Standard: In a 50-ml digestion tube, dilute 1.25-ml of the Multi-element Intermediate Verification Standard, 0.25-ml of the Mercury Intermediate Verification Standard #2, and 0.5-ml of the Stock Mineral Verification Standard to the mark with 0.75-ml of the Gold-stabilized HNO_3, 0.5-ml of the concentrated HCl, and DI water. Final concentrations are 25-µg/L each except Hg which is at 1.25-µg/L and Fe, Ca, K, Mg and Na which are at 2025-µg/L each. Prepare as needed.

8.3.6.2 CCV for Boron, Mercury, Silver, and Metals from the Multi-element Standard: In a 50-ml digestion tube, dilute 2.5-ml of the Multi-element Intermediate Verification Standard, 0.5-ml of the Mercury Intermediate Verification Standard #2, and 1.0-ml of the Stock Mineral Verification Standard to the mark with 0.75-ml of the Gold-stabilized HNO_3, 0.5-ml of the concentrated HCl, and DI water. Final concentrations are 50-µg/L each except Hg which is at 2.5-µg/L and Fe, Ca, K, Mg and Na which are at 4050-µg/L each. Prepare as needed.

8.3.6.3 ICV for Gold, Palladium, and Platinum. In a 50-ml digestion tube, dilute 1.25-ml of the Gold, Palladium, and Platinum Intermediate Verification Standard to the mark with 0.75-ml of the concentrated HNO_3, 0.5-ml of the concentrated HCl, and DI water. Final concentrations are 25-µg/L for each metal.

8.3.6.4 CCV for Gold, Palladium, and Platinum: In a 50-ml digestion tube, dilute 2.5-ml of the Gold, Palladium, and Platinum Intermediate Verification Standard to the mark with 0.75-ml of the concentrated HNO_3, 0.5-ml of the concentrated HCl, and DI water. Final concentrations are 50-µg/L for each metal.

8.3.7 **Interference Standards**

8.3.7.1 Stock Interference Check Standard, ICSA: Environmental Express catalog #ICP-MS-ICSA or equivalent. This standard contains Al, Na, Ca, P, Fe, K, Mg and S at 500 mg/L each, C at 1000 mg/L, Cl at 3600 mg/L, and Mo and Ti at 10 mg/L each.

Uncontrolled Copy

8.3.7.2 Working ICSA Standard for Boron, Mercury, Silver, and Metals from the Multi-element Standard: In a 50-ml digestion tube, dilute 5.0-ml of the stock ICSA standard to the mark with 0.5-ml of the Gold-stabilized concentrated HNO_3, and DI water. This produces a standard containing Al, Na, Ca, P, Fe, K, Mg and S at 50 mg/L each, C at 100 mg/L, Cl at 360 mg/L, and Mo and Ti at 1.0 mg/L each.

8.3.7.3 Working ICSAB Standard for Boron, Mercury, Silver, and Metals from the Multi-element Standard: In a 50-ml digestion tube, dilute the following solutions to the mark with DI water: 5.0-ml of the stock ICSA; 2.5-ml of Multi-element Intermediate Verification Standard; 0.5-ml of Mercury Intermediate Verification Standard #2; and 0.75-ml of the Gold-stabilized concentrated HNO_3. This produces a standard containing the same analytes and concentrations found in the working ICSA standard as well as all other analytes in method at working CCV standard concentrations.

8.3.7.4 Working ICSA Standard for Gold, Palladium, and Platinum: In a 50-ml digestion tube, dilute the following solutions to the mark with DI water: 5.0-ml of the stock ICSA standard; 0.5-ml of the concentrated HNO_3; 0.01-ml of the 10000 mg/L Gold standard. This produces a standard containing Al, Na, Ca, P, Fe, K, Mg and S at 50-mg/L each, C at 100-mg/L, Cl at 360-mg/L, and Mo and Ti at 1.0-mg/L each.

8.3.7.5 Working ICSAB Standard for Gold, Palladium, and Platinum: In a 50-ml digestion tube, dilute the following solutions to the mark with DI water: 5.0-ml of the Stock ICSA, 2.5-ml of Gold, Palladium, and Platinum Intermediate Verification Standard; 0.75-ml of concentrated HNO_3. This produces a standard containing the same analytes and concentrations found in the working ICSA standard as well as Au, Pd, and Pt at 0.05-mg/L each.

8.3.8 Rinse Solution for Boron, Mercury, Silver, and Metals from the Multi-element Standard: Dilute 30-ml of the Gold-stabilized concentrated HNO_3, 20-ml concentrated HCl, and 0.1-ml of the 10,000-mg/L Gold standard to 2-L with DI water.

8.3.9 Rinse Solution for Gold, Palladium, and Platinum: Dilute 30-ml of the concentrated HNO_3, 20-ml concentrated HCl, and 0.1-ml of the 10,000-mg/L Gold standard to 2-L with DI water.

8.3.10 Working Internal Standard Solution: In a 1-L plastic container, dilute 0.06-ml of the Stock Indium Internal Standard, 0.06-ml of the Stock Terbium Internal Standard, 0.3-ml of the Stock Scandium Internal Standard, and 0.5-ml of the Stock Germanium Internal Standard to approximately 1-L with 15-ml of concentrated HNO_3, 10-ml concentrated HCl, and DI water.

8.3.11 Tuning Solution: Perkin Elmer catalog #PE8125040 contains Ba, Be, Ce, Co, In, Mg, Pb, Rh, and U at 10 ug/L each.

Uncontrolled Copy

8.3.12 ALTERNATE Tuning Solution: An alternative to using the purchased Perkin Elmer standard is to purchase individual stock standards at 1000 mg/L each of Ba, Be, Ce, Co, In, Mg, Pb, Rh, and U then perform the following dilutions in order to prepare a working tune solution.

8.3.12.1 ALTERNATE Intermediate Tuning Solution, 10 mg/L each: In a 50-ml digestion tube, dilute 0.5-ml of the stock Ba, Be, Ce, Co, In, Mg, Pb, Rh, and U standards to 50-ml with 1-ml of the gold-stabilized concentrated HNO_3 and DI water.

8.3.12.2 ALTERNATE Working Tuning Solution, 10-µg/L each: In a 1-L plastic container, dilute 1-ml of the ALTERNATE Intermediate Tuning Solution and 10-mL of Gold-stabilized concentrated HNO_3 to the mark with DI water.

9.0 SAMPLE COLLECTION, PRESERVATION, AND HOLDING TIMES

9.1 The client or other trained personnel collect samples. Samples received at the laboratory are considered representative unless otherwise noted.

9.2 Water samples should be collected in a plastic container. Chemical preservation consists of HNO_3 to pH <2 for water samples only. Samples are stored on the shelves in the metals preparation lab. Prior to sample preparation, samples must be held for a minimum of 16-hours after preservation. Solid samples should be retained at 0.1-6°C until prepared and are stored in the walk-in cooler located in the sample receipt area. Digestates are stored in capped digestion tubes and kept in the prep lab.

9.3 Analysis must be performed within the maximum allowable hold time of 6-months from collection with the exception of Mercury, which has a hold time of 28-days.

10.0 QUALITY CONTROL

10.1 An *Initial Demonstration of Capability* study must be performed prior to the initial analysis for each analyst and whenever substantial change has occurred in the procedure or instrument. Refer to the Capability and Detection Limit Studies SOP for details.

10.2 An *Instrument Detection Limit* study must be performed for each new procedure, every three months thereafter, and whenever a change in instrument occurs. Refer to the Capability and Detection Limit Studies SOP for details. IDL's are calculated using data from analyses on three non-consecutive days.

10.3 A *Method Detection Limit* study must be performed for each new procedure, annually thereafter, and whenever a change in instrument occurs. Refer to the Capability and Detection Limit Studies SOP for details.

10.4 *Pre-calibration Checks* must be performed daily prior to calibration. This encompasses an Instrument Tune (Mass Calibration Check and a Resolution Check) and a Daily Performance Check.

Uncontrolled Copy

10.4.1 A *Mass Calibration Check* is performed using the Tune Solution. Acceptance criteria are a mass cal value within ± 0.1amu from the "true" unit mass. If reanalysis fails to meet the acceptance criteria, stop analysis, perform appropriate instrument maintenance then repeat.

10.4.2 A *Resolution Check* is performed using the Tune Solution. Acceptance criteria are 0.65amu at 10% peak height, which is equivalent to 0.75amu at 5% peak height. If reanalysis fails to meet the acceptance criteria, stop analysis, perform appropriate instrument maintenance then repeat.

10.4.3 The *Daily Performance Check* is performed by analyzing the Tune Solution with a minimum of 5 replicate analyses. Acceptance criteria are <5% RSD between the replicate analyses. If the acceptance criteria are not met, reanalyze. If reanalysis fails to meet the acceptance criteria, stop analysis, perform appropriate instrument maintenance then repeat.

10.5 *Internal Standards* (ISTD) are added to all standards, QC samples and environmental samples. Acceptance criteria vary by method as well as by sample type. Recovery is calculated by the instrument software and printed on the QC Calculated Values report for each sample.

10.5.1 Acceptance criteria for Method 200.8 are 60-125 %R, relative to the calibration standard, for all standards and samples.

10.5.2 Acceptance criteria for Method "6020A are >30 %R, relative to the calibration standard, for all samples analyzed."

10.5.3 If the acceptance criteria are not met, reanalyze the under a new calibration. If reanalysis fails reanalyze at a 1:2 dilution. If the diluted reanalysis fails prepare and analyze larger dilutions until the acceptance criteria are met.

10.6 A *Calibration Verification Standard* must be analyzed immediately after calibration, after every 10 samples, and after the last sample. The concentration of the ICV must be different than that of the CCV.

10.6.1 Recovery criteria are listed in the appropriate test code in LIMS. If the acceptance criteria are not met, reanalyze. If reanalysis fails to meet the acceptance criteria, stop analysis and recalibrate or report data with an appropriate qualifier.

10.6.2 ICV and CCV standards that fail to meet the acceptance criteria are automatically flagged in LIMS with an "S" qualifier.

10.6.3 The reporting of data associated with a failed control sample must be documented with a CAR form. If the failure is considered to have a significant affect on the data, client notification is required using the Case Narrative of the report.

Uncontrolled Copy

10.6.4 Samples associated with a verification that fails with positive bias can be reported without narration if the sample concentration is below the reporting limit.

10.7 A *Calibration Verification Blank* sample must be analyzed after each calibration verification standard.

10.7.1 The acceptance criteria are < PQL. If the acceptance criteria are not met, reanalyze. If reanalysis fails to meet the acceptance criteria, stop analysis and recalibrate or report data with an appropriate qualifier. Samples for compliance with our Wisconsin DNR certification must be evaluated down to the current MDL and corrective action taken if the blank exceeds the routine PQL.

10.7.2 ICB and CCB standards that fail to meet the acceptance criteria are automatically flagged in LIMS with an “S” qualifier. ICB/CCB standards that are below the reporting limit but above the MDL are flagged in LIMS with a “b” qualifier. Data flagged with a “b” is considered as meeting the acceptance criteria.

10.7.3 If the blank does not meet the acceptance criteria, all samples < PQL or greater than 10-times the blank contamination may be reported. All other environmental samples must be reanalyzed or reported with an appropriate qualifier in the Case Narrative of the report. The reporting of data associated with a failed control sample must be documented with a CAR form.

10.7.4 An Instrument Check Standard (CAL STD 0.2 see 8.3.3.1) must be analyzed prior to the analysis of samples in each analytical run.

10.8 The *Interference Check Standards* (solutions A and AB) must be analyzed prior to the analysis of samples in each analytical run as well as every consecutive 12-hours of operation for Method 6020.

10.8.1 Acceptance criteria are the nominal limits listed in the appropriate test code in LIMS. If the acceptance criteria are not met, reanalyze. If reanalysis fails to meet the acceptance criteria, stop analysis and recalibrate or report data with an appropriate qualifier.

10.8.2 The reporting of data associated with a failed control sample must be documented with a CAR form. If the failure is considered to have a significant affect on the data, client notification is required using the Case Narrative of the report.

10.8.3 Samples associated with a verification that fails with positive bias can be reported without narration if the sample concentration is below the reporting limit.

10.9 A *Method Blank* must be prepared and analyzed with each batch of maximum 20 samples and at a minimum of one per day.

10.9.1 The acceptance criteria are < PQL. If the acceptance criteria are not met, reanalyze. If reanalysis fails to meet the acceptance criteria, stop analysis and reanalyze using a different calibration or report data with an appropriate

Uncontrolled Copy

qualifier. Samples for compliance with our Wisconsin DNR certification must be evaluated down to the current MDL and corrective action taken if the blank exceeds the routine PQL.

10.9.2 MBLKs that fail to meet the acceptance criteria cause the sample results to be automatically flagged in LIMS with a “B” qualifier. MBLKs that are below the reporting limit but above the MDL are flagged in LIMS with a “b” qualifier. “b” flagged data is considered as meeting the acceptance criteria.

10.9.3 The reporting of data associated with a failed control sample must be documented with a CAR form. If the failure is considered to have a significant affect on the data, client notification is required using the Case Narrative of the report.

10.9.4 Samples associated with a MBLK that fails with positive bias can be reported without narration if the sample concentration is < PQL or greater than 10 times the blank contamination.

10.10 A *Laboratory Control Sample* must be prepared and analyzed with each batch of maximum 20 samples and at a minimum of one per day.

10.10.1 Acceptance criteria are listed in the appropriate test code in LIMS. If the acceptance criteria are not met, reanalyze. If reanalysis fails to meet the acceptance criteria, stop analysis and reanalyze using a different calibration or report data with an appropriate qualifier.

10.10.2 LCSs that fail to meet the acceptance criteria are automatically flagged in LIMS with an “S” qualifier.

10.10.3 The reporting of data associated with a failed LCS must be documented with a CAR form. If the failure is considered to have a significant affect on the data, client notification is required using the Case Narrative of the report.

10.10.4 Samples associated with a LCS that fails with positive bias can be reported without narration if the sample concentration is below the reporting limit.

10.11 A *Matrix Spike and Matrix Spike Duplicate* sample must be prepared and analyzed with each batch of maximum 20 samples per matrix and at a minimum of one per day.

10.11.1 Acceptance criteria are listed in the appropriate test code in LIMS. (Note: the accuracy criteria have been met provided at least either the MS or MSD meet the %R criteria.) If the acceptance criteria are not met, refer to the MS/MSD Corrective Action Flowchart in the QAP.

10.11.2 MS/MSD’s that fail to meet the accuracy criteria are automatically flagged in LIMS with an “S” qualifier. MSD’s that fail to meet the precision criteria are automatically flagged in LIMS with an “R” qualifier.

Uncontrolled Copy

10.11.3 The reporting of data associated with a failed MS/MSD must be documented with a CAR form. If the failure is considered to have a significant affect on the data, client notification is required using the Case Narrative of the report.

10.11.4 Samples associated with a MS/MSD that fails the accuracy criteria with positive bias can be reported without narration if the sample concentration is below the reporting limit.

10.11.5 If the concentration measured in the sample is greater than 4-times the concentration of the spike, the spike amount used is insufficient and the MS/MSD not applicable.

10.12 A *Post Digestion Spike* can be analyzed on any sample to evaluate the potential of matrix interference.

10.12.1 Acceptance criteria are listed in the appropriate test code in LIMS.

10.12.2 The LIMS will flag all failed PDS recoveries with an “S” qualifier.

10.12.3 Use the recovery data to help evaluate any bias as detailed in the MS/MSD Corrective Action Flowchart.

10.13 A *Serial Dilution* can be analyzed on any sample to evaluate the potential of matrix interference (as indicated by failing ISTD recovery or failing MS/MSD/PDS recovery).

10.13.1 Acceptance criteria for a 1:5 dilution are ≤ 10% difference between the original and the diluted sample concentration.

10.13.2 The LIMS will flag all failed SD recoveries with a “R” qualifier.

Uncontrolled Copy

11.0 CALIBRATION AND STANDARDIZATION

Calibration data is documented and retained using the printouts from the instrument software. Analytical data must be maintained in accordance with the document control requirements in the Quality Assurance Plan as well as the Document Control SOP.

11.1 Repipetters must be calibrated/verified in accordance with the Repipetter Calibration SOP.

11.2 A new calibration must be performed for each analytical batch. Prepare the standards for the calibration curve as detailed in the Standards section of this SOP.

11.3 Perform the required preventative maintenance as necessary (indicated on Preventive Maintenance log). All preventative maintenance is documented in the Maintenance Log for the particular instrument used for analysis.

11.4 Turn on the exhaust hoods, vacuum pumps, recirculator, and empty the waste bucket. Set up the pump tubing for the sample, internal standard, and drain lines. Initiate the plasma and allow a minimum of 30-minutes for warm-up. During the warm-up time, the mass calibration and resolution checks may be performed.

11.5 **TUNING and MASS CALIBRATION**

11.5.1 Place the sample and internal standard lines into the Tuning Solution.

11.5.2 In the instrument software, open EPA200.8 Tuning workspace and click on the Tune toolbar. Clicking the Tune Mass Spec button will allow the instrument to automatically tune and mass calibrate.

11.5.3 Review the data.

11.5.3.1 For those masses having a resolution above 0.65amu, appropriately change DAC values to adjust the spectrometer resolution to produce a peak width of ≤ 0.65amu at 10% of the peak height. (This is equivalent to 0.75amu @ 5% peak height meeting the requirements of both methods 200.8 and 6020.)

11.5.3.2 Appropriately adjust the mass calibration values for those masses not within 0.1amu of the unit mass. If adjustments were made, re-tune the instrument to verify appropriate and adequate operating conditions have been attained.

11.6 **DAILY PERFORMANCE CHECK**

11.6.1 With the sample and internal standard lines in the Tuning Solution, open the Daily Performance workspace and click on Analyze Sample in the sample window. When complete, the instrument will generate a Daily Performance Report.

11.6.2 Review the data and verify that the Net Intens. RSD results are <5% for all analytes (except “Bkgd”).

11.6.3 Review the daily performance measurements or results against the instrument manufacturer recommended criteria below (Sensitivity, Background, %Double-charged, and %Oxide checks). If any adjustments are made due to failing the guidance criteria, repeat the daily performance test to verify appropriate and adequate operating conditions have been attained.

Sensitivity Checks

- Mg >20,000 cps for 10ppb
- Rh >150,000 cps for 10ppb
- Pb >50,000 cps for 10ppb
- If the sensitivity checks fail the cones may need cleaning or an AutoLens calibration may need to be performed.

Uncontrolled Copy

Background Checks

- <30 cps at mass 220 for used skimmer cones. Brand new cones can give elevated counts at mass 220.
- If the background check fails the detector voltage settings are too high.

%Double-charged Checks

- $Ba^{+2}/Ba \leq 3\%$
- Failing double-charge checks are correctable by decreasing the nebulizer flow.

%Oxides Checks

- CeO/Ce $\leq$ 3%
- Failing oxide checks are correctable by decreasing the nebulizer flow.

11.7 INTERNAL STANDARD MIXING CHECK

11.7.1 With the internal standard line in the Internal Standard solution and the sample line in a bottle of DI water, open the Internal Standard Mixing workspace and click on Analyze Sample in the sample window. When complete, the instrument will generate an Internal Standard Test Report.

11.7.2 Review the data and verify that the Int. RSD results are <3% for all internal standards [per Perkin-Elmer]. If the RSD criteria are not met, adjust the pump tube flow and repeat. Repeated adjustments are indicative of the need to replace the pump tubing.

11.8 DUAL DETECTOR CALIBRATION

11.8.1 Dual Detector Calibration is required only after changing detector voltages or installing a new detector.

11.8.2 With the internal standard line and the sample line in the Dual Detector Cross-Calibration Solution (see section 6.13 of the Perkin-Elmer method for 200.8 Using the ELAN 6000/6100/9000 ICP-MS), open the Dual Detector workspace and click on Optimization on the toolbar; go to the Dual Detector Calibration tab and clear the old calibration; choose Get Analytes then click Optimize. When complete, save the optimization file.

11.9 DAILY INSTRUMENT CALIBRATION

11.9.1 Open the 200.8 or 6020 workspace as appropriate.

11.9.2 Fill the autosampler tray with the appropriate standards and samples. The tube positions for the standards and samples are specified on the autosampler page of the analytical method. NOTE: all digestates must be diluted 1:5 for analysis on the mass spec (dilution provides the appropriate acid matrix).

11.9.3 Edit the sample window for batch analysis to update with the sample information.

- In the Batch ID column, enter the test code for the applicable sample

Uncontrolled Copy

- In the Sample ID column, enter the LIMS sample ID or QC sample name in the order they are to be analyzed. Sample dilutions are also indicated in this field by adding a comma then the dilution factor (e.g. ME0607027-01A,5 indicates a 1:5 dilution of sample 7027-01A).
- In the Measurement Action column, choose to run Blank, Standards, and Samples for the first sample to be analyzed but choose only Run Samples for the other samples to be analyzed
- In the Method column, enter the method file to be used (e.g. EPA 200.8 Microbac or EPA 6020 Microbac)

11.9.4 Save the sample file with an appropriate name to indicate the date of analysis (e.g. "ICPMS-071008" for the analysis on 7/10/2008).

11.9.5 Select the samples to be analyzed by highlighting the row number with the mouse then select Analyze Batch. To avoid carryover and other potential contamination, aspirate the rinse blank approximately 5-10 minutes prior to beginning the batch analysis.

11.9.6 Following the instrument calibration, evaluate the calibration data using the instrument generated Calibration Report. Using a 1st Order Polynomial regression curve, the correlation coefficient must be $r \geq 0.995$. Based on the recommendation of the instrument manufacturer, the linear regression curve uses the "Linear thru zero" calibration option. Analysis of environmental samples cannot proceed without the generation of an acceptable calibration.

11.9.7 If the linearity requirements are not met, take appropriate corrective actions and recalibrate. If the acceptance criteria are met, continue with the analysis and evaluation of an ICV standard. The acceptance criteria must be met before continuing with sample analysis. Analysis of environmental samples cannot proceed without the generation of an acceptable linearity and an acceptable initial verification (see section 10 for details).

11.9.7 Unless you are running an unattended autosampler batch of samples, verify that the initial quality control (ICV, ICB, ICS, etc) is acceptable before continuing with sample analysis.

Uncontrolled Copy

12.0 PROCEDURE

Analytical data is documented and retained using the printouts from the instrument software. Analytical data must be maintained in accordance with the document control requirements in the Quality Assurance Plan as well as the Document Control SOP.

12.1 Continue with the analysis of samples as initiated in the Calibration section.

12.2 Samples having a concentration above that of the high calibration standard (method 6020) must be diluted for reanalysis. Dilutions may be prepared directly in autosampler tubes using appropriate pipettes.

12.3 When the run is complete, the data is saved in C:\Elandata\Report Output\results.txt. Rename the results file with an appropriate name to indicate the

data of analysis (e.g. “ICPMS-071006” for the analysis on 7/10/2006) and copy it to the Instruments data server at I:\Metals\ICPMS.

12.4 Use the Combine and Save Report formatter to create a combined .pdf file of the various report files from the run. The individual files are saved in C:\Temp\0. The formatter combines the files and saves the new file to the server at P:\Instruments\Metals\ICPMS. Name the results file with an appropriate name to indicate the data of analysis (e.g. “ICPMS-071006.pdf” for the analysis on 7/10/2006)

12.5 Enter the data into LIMS. Refer to the SOP Analytical Data Entry – Metals for details.

13.0 CALCULATIONS AND DATA HANDLING

13.1 The instrument software calculates the concentration of the aqueous sample or digestate using linear regression (y = mx+b). This data is imported into LIMS during the Data Entry steps.

13.2 LIMS calculates the final sample concentration as follows:

Concentration, mg/L = (C) (0.001) (DF) (Pfac)

Where: C = concentration from curve, ug/L
DF = dilution factor at instrument
Pfac = (Final Volume, ml) / (Sample Size, ml or g)

13.3 The LIMS calculates the dry-weight concentration for solid samples as follows:

$$\text{Conc. Dry} = \frac{\text{(wet weight conc.)}}{(100 - \%\text{Moisture})}$$

13.4 Results flagged by the LIMS with an “E” qualifier are above the acceptable linear range. There is less certainty in these data and, if sufficient sample and holding time are available, should be reanalyzed at an appropriate dilution. Details on the procedure for entering analytical data are in the Analytical Data Entry - Metals SOP.

14.0 METHOD PERFORMANCE

14.1 Initial Demonstration of Capability study data, Method Detection Limit study data and Performance Testing study data are maintained and available from the QA office.

15.0 POLLUTION PREVENTION

15.1 The quantity of chemicals purchased should be based on expected usage during their shelf life and the disposal cost of unused material.

Uncontrolled Copy

15.2 Prepare the minimum amount of reagent and standard necessary.

16.0 WASTE MANAGEMENT

16.1 Refer to the Sample Disposal SOP for guidance on the disposal of any resulting residue, digestate, distillate, extract or standard.

17.0 REFERENCES

17.1 USEPA Method 200.8, revision 5.4

17.2 SW-846 Method 6020A

17.3 SOP Preparation of Aqueous Samples and Extracts for Total or Dissolved Metals Analysis By Inductively Coupled Plasma, current revision.

17.4 SOP Preparation of Non-Aqueous Samples Total Metals Analysis, current revision.

17.5 SOP Toxicity Characteristic Leaching Procedure for Metals and Semi-Volatile Organic Compounds Using SW-846 Method 1311, current revision.

17.6 User's Manual EPA Method 200.8 Turnkey Method for the ELAN 6000, Perkin-Elmer Instruments, 2002 (see attached Table of Contents)

17.7 User's Manual EPA Method 6020 Turnkey Method for the ELAN 6000, Perkin-Elmer Instruments, 2002 (see attached Table of Contents)

17.8 Microbac Laboratories Quality Assurance Plan, current revision, all sections

18.0 TABLES, FORMS, CHECKLISTS, AND OTHER ATTACHMENTS

Copy of the Table of Contents from the Perkin Elmer 200.8 Turnkey method (1 page)
Copy of the Table of Contents from the Perkin Elmer 6020 Turnkey method (1 page)
Critical instrument method specifications (6 pages)
SOP Revision Notification form documenting the changes in this revision (1 page)

Uncontrolled Copy

EPA Method 200.8
Turnkey Method
For the ELAN® 6000/6100 ICP-MS

Table of Contents

Section I - Set Up

Application Diskette
Standard Operating Procedure (SOP) Diskette
Loading EPA Method 200.8 Files Into ELAN NT
Suggested Standards for EPA ICP-MS Methods
On-Line Addition of Internal Standards for ICP-MS
ELAN 6000 Method 200.8 Quick Start Guide
EPA Method 200.8 for the Analysis of Drinking Waters

Section II - Daily Use

Method 200 8 Using the ELAN 6000 ICP-MS, SOP
Method 200 8, Determination of Trace Elements in Waters and Wastes by Inductively Coupled Plasma - Mass Spectrometry

Section III - Reference

Preparing your Laboratory for the PerkinElmer Sciex ELAN 6000
ELAN 6000 Inductively Coupled Plasma Mass Spectrometer

Uncontrolled Copy

EPA Method 6020
Turnkey Method
For the ELAN® 6000/6100 ICP-MS

Table of Contents

Section I - Set Up

Application Diskette
Standard Operating Procedure (SOP) Diskette
Loading EPA Method 6020 Files Into ELAN NT
Suggested Standards for EPA ICP-MS Methods
On-Line Addition of Internal Standards for ICP-MS
ELAN 6000 Method 6020 Quick Start Guide
RCRA SW-846 Method 6020 for the ICP-MS Analysis of Soils and Sediments

Section II - Daily Use

Method 6020 Using the ELAN 6000 ICP-MS, SOP
Method 6020, Inductively Coupled Plasma Mass Spectrometry

Section III - Reference

Preparing your Laboratory for the PerkinElmer Sciex ELAN 6000
ELAN 6000 Inductively Coupled Plasma Mass Spectrometer

Uncontrolled Copy

Quantitative Method Report

File Name: epa 6020 microbac 08 LL.mth
File Path: C:\elandata\Method\epa 6020 microbac 08 LL.mth

Timing Parameters

Sweeps/Reading: 10
Readings/Replicate: 1
Number of Replicates: 3
Tuning File: c:\elandata\tuning\200.8 tuning.tun
Optimization File: c:\elandata\optimize\epa6020.dac
QC Enabled: Yes
Settling Time: Normal

	Analyte	Mass	Scan Mode	MCA Channels	Dwell Time	Integration Time
	Be	9.012	Peak Hopping	1	200.0 ms	2000 ms
	B	11.009	Peak Hopping	1	200.0 ms	2000 ms
	Al	26.982	Peak Hopping	1	100.0 ms	1000 ms
>	Sc	44.956	Peak Hopping	1	100.0 ms	1000 ms
	Ti	46.952	Peak Hopping	1	100.0 ms	1000 ms
	V	50.944	Peak Hopping	1	100.0 ms	1000 ms
	Cr	51.941	Peak Hopping	1	200.0 ms	2000 ms
	Mn	54.938	Peak Hopping	1	100.0 ms	1000 ms
	Co	58.933	Peak Hopping	1	100.0 ms	1000 ms
	Ni	59.933	Peak Hopping	1	200.0 ms	2000 ms
	Cu	62.930	Peak Hopping	1	100.0 ms	1000 ms
	Cu	64.928	Peak Hopping	1	200.0 ms	2000 ms
	Zn	65.926	Peak Hopping	1	200.0 ms	2000 ms
	Zn	66.927	Peak Hopping	1	200.0 ms	2000 ms
	Zn	67.925	Peak Hopping	1	200.0 ms	2000 ms
>	Ge	71.922	Peak Hopping	1	100.0 ms	1000 ms
	As	74.922	Peak Hopping	1	500.0 ms	5000 ms
	Se	81.917	Peak Hopping	1	200.0 ms	2000 ms
	Sr	87.906	Peak Hopping	1	100.0 ms	1000 ms
	Mo	94.906	Peak Hopping	1	200.0 ms	2000 ms
	Mo	97.906	Peak Hopping	1	200.0 ms	2000 ms
	Ag	106.905	Peak Hopping	1	100.0 ms	1000 ms
	Cd	110.904	Peak Hopping	1	200.0 ms	2000 ms
	Cd	113.904	Peak Hopping	1	100.0 ms	1000 ms
>	In	114.904	Peak Hopping	1	100.0 ms	1000 ms
	Sn	117.902	Peak Hopping	1	100.0 ms	1000 ms
	Sb	120.904	Peak Hopping	1	100.0 ms	1000 ms
	Sb	122.904	Peak Hopping	1	100.0 ms	1000 ms
	Ba	134.906	Peak Hopping	1	200.0 ms	2000 ms
	Ba	136.905	Peak Hopping	1	100.0 ms	1000 ms
>	Tb	158.925	Peak Hopping	1	100.0 ms	1000 ms

Report Date/Time: Wednesday, January 21, 2009 09:45:02
Page 1

Uncontrolled Copy

Hg	201.971	Peak Hopping	1	500.0 ms	5000 ms
Tl	204.975	Peak Hopping	1	100.0 ms	1000 ms
Pb	207.977	Peak Hopping	1	100.0 ms	1000 ms
Na	22.990	Peak Hopping	1	100.0 ms	1000 ms
Mg	23.985	Peak Hopping	1	100.0 ms	1000 ms
K	38.964	Peak Hopping	1	100.0 ms	1000 ms
Ca	42.959	Peak Hopping	1	100.0 ms	1000 ms
Fe	53.940	Peak Hopping	1	100.0 ms	1000 ms
Fe	56.935	Peak Hopping	1	200.0 ms	2000 ms
> Sc-1	44.956	Peak Hopping	1	100.0 ms	1000 ms
Kr	82.914	Peak Hopping	1	100.0 ms	1000 ms

Signal Processing

Detector Mode:	Dual
Measurement Units:	cps
AutoLens:	On
Spectral Peak Processing:	Maximum
Signal Profile Processing:	Maximum
Blank Subtraction:	Subtracted after internal standard
Baseline Readings:	0
Smoothing:	Yes, Factor 5

Equations

Analyte	Mass	Corrections
Al	26.982	-0.01*C 13
Sc	44.956	-0.01*Si 29
V	50.944	-3.127*(ClO 53-(0.113*Cr 52))
Cr	51.941	-0.03*C 13
Mn	54.938	-0.00005*Fe 54
Ni	59.933	-0.0025*Ca 43
Ge	71.922	-0.0001*Ca 43
As	74.922	-3.127*(ArCl 77-(0.815*Se 82))
Se	81.917	-1.008696*Kr83
Mo	94.906	- 0.109613 * Ru 101
Cd	110.904	-1.073*(MoO 108 - (0.712*Pd 106))
Cd	113.904	- 0.026826 * Sn 118
In	114.904	- 0.014032 * Sn 118
Sb	122.904	- 0.127189 * Te 125
Pb	207.977	+1*Pb 206 + 1*Pb 207
Fe	53.940	- 0.028226 * Cr 52
Sc-1	44.956	-0.01*Si 29

Calibration Information

Analyte	Mass	Curve Type	Sample Units	Std Units	Std 1	Std 2	Std 3	Std 4
Be	9.012	Linear Thru Zero	ug/L	ug/L	0.2	1	20	100
B	11.009	Linear Thru Zero	ug/L	ug/L		1	20	100

Uncontrolled Copy

Al	26.982	Linear Thru Zero	ug/L	ug/L		1	20	100
Sc	44.956	Linear Thru Zero	ug/L	ug/L				
Ti	46.952	Linear Thru Zero	ug/L	ug/L	0.2	1	20	100
V	50.944	Linear Thru Zero	ug/L	ug/L	0.2	1	20	100
Cr	51.941	Linear Thru Zero	ug/L	ug/L	0.2	1	20	100
Mn	54.938	Linear Thru Zero	ug/L	ug/L	0.2	1	20	100
Co	58.933	Linear Thru Zero	ug/L	ug/L	0.2	1	20	100
Ni	59.933	Linear Thru Zero	ug/L	ug/L	0.2	1	20	100
Cu	62.930	Linear Thru Zero	ug/L	ug/L	0.2	1	20	100
Cu	64.928	Linear Thru Zero	ug/L	ug/L	0.2	1	20	100
Zn	65.926	Linear Thru Zero	ug/L	ug/L	0.2	1	20	100
Zn	66.927	Linear Thru Zero	ug/L	ug/L	0.2	1	20	100
Zn	67.925	Linear Thru Zero	ug/L	ug/L	0.2	1	20	100
Ge	71.922	Linear Thru Zero	ug/L	ug/L				
As	74.922	Linear Thru Zero	ug/L	ug/L	0.2	1	20	100
Se	81.917	Linear Thru Zero	ug/L	ug/L	0.2	1	20	100
Sr	87.906	Linear Thru Zero	ug/L	ug/L	0.2	1	20	100
Mo	94.906	Linear Thru Zero	ug/L	ug/L	0.2	1	20	100
Mo	97.906	Linear Thru Zero	ug/L	ug/L	0.2	1	20	100
Ag	106.905	Linear Thru Zero	ug/L	ug/L	0.2	1	20	100
Cd	110.904	Linear Thru Zero	ug/L	ug/L	0.2	1	20	100
Cd	113.904	Linear Thru Zero	ug/L	ug/L	0.2	1	20	100
In	114.904	Linear Thru Zero	ug/L	ug/L				
Sn	117.902	Linear Thru Zero	ug/L	ug/L	0.2	1	20	100
Sb	120.904	Linear Thru Zero	ug/L	ug/L	0.2	1	20	100
Sb	122.904	Linear Thru Zero	ug/L	ug/L	0.2	1	20	100
Ba	134.906	Linear Thru Zero	ug/L	ug/L	0.2	1	20	100
Ba	136.905	Linear Thru Zero	ug/L	ug/L	0.2	1	20	100
Tb	158.925	Linear Thru Zero	ug/L	ug/L				
Hg	201.971	Linear Thru Zero	ug/L	ug/L	0.04	0.2	2	5
Tl	204.975	Linear Thru Zero	ug/L	ug/L	0.2	1	20	100
Pb	207.977	Linear Thru Zero	ug/L	ug/L	0.2	1	20	100
Na	22.990	Linear Thru Zero	ug/L	ug/L			20	100
Mg	23.985	Linear Thru Zero	ug/L	ug/L			20	100
K	38.964	Linear Thru Zero	ug/L	ug/L			20	100
Ca	42.959	Linear Thru Zero	ug/L	ug/L			20	100
Fe	53.940	Linear Thru Zero	ug/L	ug/L			20	100
Fe	56.935	Linear Thru Zero	ug/L	ug/L			20	100
Sc-1	44.956	Linear Thru Zero	ug/L	ug/L				
Kr	82.914	Linear Thru Zero	ug/L	ug/L				

Analyte	Mass	Std 5	Std 6	Std 7	Std 8	Std 9	Std 10	Std 11	Std 12
Be	9.012	500							
B	11.009								
Al	26.982	500							
Sc	44.956								
Ti	46.952	500							

Report Date/Time: Wednesday, January 21, 2009 09:45:02
Page 3

Uncontrolled Copy

V	50.944	500	
Cr	51.941	500	
Mn	54.938	500	
Co	58.933	500	
Ni	59.933	500	
Cu	62.930	500	
Cu	64.928	500	
Zn	65.926	500	
Zn	66.927	500	
Zn	67.925	500	
Ge	71.922		
As	74.922	500	
Se	81.917	500	
Sr	87.906	500	
Mo	94.906	500	
Mo	97.906	500	
Ag	106.905		
Cd	110.904	500	
Cd	113.904	500	
In	114.904		
Sn	117.902	500	
Sb	120.904	500	
Sb	122.904	500	
Ba	134.906	500	
Ba	136.905	500	
Tb	158.925		
Hg	201.971		
Tl	204.975	500	
Pb	207.977	500	
Na	22.990	500	1e+004
Mg	23.985	500	1e+004
K	38.964	500	1e+004
Ca	42.959	500	1e+004
Fe	53.940	500	1e+004
Fe	56.935	500	1e+004
Sc-1	44.956		
Kr	82.914		

	AS Pos	Sample Flush	Sample Flush	Read Delay	Read Delay	Wash	Wash
0	1	25 s	-48 rpm	30 s	-24 rpm	45 s	-48 rpm
.2	239	25 s	-48 rpm	30 s	-24 rpm	60 s	-48 rpm
1	2	25 s	-48 rpm	30 s	-24 rpm	60 s	-48 rpm
20	3	25 s	-48 rpm	30 s	-24 rpm	60 s	-48 rpm
100	4	25 s	-48 rpm	30 s	-24 rpm	60 s	-48 rpm
500	5	25 s	-48 rpm	30 s	-24 rpm	60 s	-48 rpm
10000	6	25 s	-48 rpm	30 s	-24 rpm	180 s	-48 rpm
Standard 7		25 s	-48 rpm	10 s	-24 rpm	45 s	-48 rpm

Report Date/Time: Wednesday, January 21, 2009 09:45:02
Page 4

Uncontrolled Copy

Standard 8	25 s	-48 rpm	10 s	-24 rpm	75 s	-48 rpm
Standard 9	25 s	-48 rpm	10 s	-24 rpm	75 s	-48 rpm
Standard 10	25 s	-48 rpm	10 s	-24 rpm	55 s	-48 rpm
Standard 11	25 s	-48 rpm	10 s	-24 rpm	55 s	-48 rpm
Standard 12	25 s	-48 rpm	10 s	-24 rpm	55 s	-48 rpm
Standard 13	25 s	-48 rpm	10 s	-24 rpm	55 s	-48 rpm
Standard 14	25 s	-48 rpm	10 s	-24 rpm	55 s	-48 rpm
Standard 15	25 s	-48 rpm	10 s	-24 rpm	55 s	-48 rpm
Standard 16	25 s	-48 rpm	10 s	-24 rpm	55 s	-48 rpm
Standard 17	25 s	-48 rpm	10 s	-24 rpm	55 s	-48 rpm
Standard 18	25 s	-48 rpm	10 s	-24 rpm	55 s	-48 rpm
Standard 19	25 s	-48 rpm	10 s	-24 rpm	55 s	-48 rpm
Standard 20	25 s	-48 rpm	10 s	-24 rpm	55 s	-48 rpm
Standard 21	25 s	-48 rpm	10 s	-24 rpm	55 s	-48 rpm
Standard 22	25 s	-48 rpm	10 s	-24 rpm	55 s	-48 rpm
Standard 23	25 s	-48 rpm	10 s	-24 rpm	55 s	-48 rpm
Standard 24	25 s	-48 rpm	10 s	-24 rpm	55 s	-48 rpm
Standard 25	25 s	-48 rpm	10 s	-24 rpm	55 s	-48 rpm
Standard 26	25 s	-48 rpm	10 s	-24 rpm	55 s	-48 rpm
Standard 27	25 s	-48 rpm	10 s	-24 rpm	55 s	-48 rpm
Standard 28	25 s	-48 rpm	10 s	-24 rpm	55 s	-48 rpm
Standard 29	25 s	-48 rpm	10 s	-24 rpm	55 s	-48 rpm
Standard 30	25 s	-48 rpm	10 s	-24 rpm	55 s	-48 rpm

Reporting Options

Report Template for Printing:	6020 qc report.rop
Send to Printer:	Yes
Report Template for File:	C:\elandata\ReportOptions\6020 qc report.rop
Send to File:	Yes
Report Filename:	c:\elandata\ReportOutput\results.txt
Create NetCDF File:	No
Send to Serial Port:	No
Port:	COM1

Sampling Devices

Peristaltic Pump Control:	Yes
Autosampler:	Cetac ASX-500
Autosampler Tray File:	c:\elandata\autosampler\ceasx500\as500b.try
Sampling Device Type:	(None)
Dil. Factor:	10
Dil. to Vol. (mL):	10
1st Dil. Pos.:	1
Probe Purge Pos.:	10

FIAS Program

Step	Read	Time	Pump 1	Pump 2	Valve	A/S Loc.	Sw 2	Sw 3	Sw 4

Report Date/Time: Wednesday, January 21, 2009 09:45:02
Page 5

Uncontrolled Copy

Repeat Statement

HGA Program

Description:
Sample Volume: uL
Injection Temperature: C
Injection Speed:
Read delay: s
Closure delay: s
Modifier #1:
Modifier #2:

Step	Cell Temp	Ramp	Hold	Int. Flow	Gas Norm.	Gas Alt.	To Vent	To ICP	Read

Pipet Seq.	Mod#1	Mod#2	Sample	Start Step	Wash	Rep. From	End S Wash	Rep. To	# Rep

Uncontrolled Copy

Microbac

SOP Revision Notification / Annual Review Form

SOP Name **METALS BY ICP-MS**

[X] *New Revision* Old Revision # 0 New Revision # 1

Summary of changes:

- Removed the method names from the title.
- Sec. 8.2: (1) Updated the vendor info for hydrochloric acid and nitric acid; (2) Removed Triton X-100 from reagents list.
- Sec. 8.3: (1) Added 0.05-ml of Boron to the Multi-element Intermediate Verification Standard; (2) Updated the sources for many standards; (3) Added many standards that were used in the procedure but not listed in this section; (4) Added prep information for the boron and silver standards and the gold, palladium, and platinum standards; (5) Sec. 8.3.3.1: Added CAL STD 0.2 and updated some preparation volumes and concentrations.
- Sec. 9.2: To reflect current lab practices, the hold temperature for solids was changed to 0.1 – 6.0°C and the location was changed to the walk-in cooler.
- Sec. 10.0: Removed the Linear Dynamic Range QC test.
- Sec. 11.5.3.1: Clarified the width of the peak height when masses having a resolution above 0.65amu
- Sec. 11.6.3: (1) Updated the metals and concentrations for background and sensitivity checks to reflect current lab practices; (2) Explained that there are different cps values depending on the newness of the skimmer cones.
- Sec. 11.9.6: The linear regression curve uses the "Linear thru zero" calibration option.
- Sec. 18: (1) Updated the critical instrument method specifications to reflect that the regression line is forced through the zero point; (2) Updated the correction factors for the analytical masses as per the method.

By signing below, I certify that I have been *notified* about the approval of a *new revision* to the above mentioned SOP. I realize it is *my responsibility* to **read, understand and perform** the procedure as set forth in this new revision.

Initials & Date	Initials & Date	Initials & Date

Annual Review Current Revision # _____

By signing below, I certify that I have **re-read, understand** and **agree to perform** the current revision of the above mentioned SOP.

Initials & Date	Initials & Date	Initials & Date

Form revised 01/18/06

Uncontrolled Copy

Appendix K
Laboratory SOPs

Microbac SOP
Hg-1631, Revision 2

Total Mercury Using
Automatic Fluorescence Spectroscopy

STANDARD OPERATING PROCEDURE FOR MERCURY USING AUTOMATIC FLUORESCENCE SPECTROSCOPY

Revision Author: Randon Lingenfelter

Uncontrolled Copy

This SOP is effective upon signed approval by the following:

Troy M. Goehl	8/7/2009
Inorganics Manager	Date
	8/28/2009
QA/QC Manager	Date

DISCLAIMER: This SOP has been developed for use at the Microbac Laboratories, Merrillville, Indiana facility. It is intended for use by trained analysts. As written, this SOP may not be specifically applicable to the activities of other organizations.

Last Review Date:
No Changes Needed
Approved By:

1.0 TABLE OF CONTENTS

1.0 Table of Contents 2
2.0 Scope and Application 3
3.0 Summary 3
4.0 Definitions 3
5.0 Interferences 3
6.0 Safety 4
7.0 Equipment and Supplies 4
8.0 Reagents and Standards 5
9.0 Sample Collection, Preservation, and Holding Times 7
10.0 Quality Control 8
11.0 Calibration and Standardization 10
12.0 Procedure 12
13.0 Calculations and Data Handling 14
14.0 Method Performance 14
15.0 Pollution Prevention 14
16.0 Waste Management 14
17.0 References 15
18.0 Tables, Forms, Checklists, and Other Attachments 15

Uncontrolled Copy

2.0 SCOPE AND APPLICATION

2.1 This is an atomic fluorescence spectroscopy procedure for the determination of Mercury. This procedure is applicable and restricted to the analysis of aqueous matrix samples. The applicable analytes, detection limits and routine reporting limits (PQL) are listed at the Limits tab of the applicable test codes in LIMS.

3.0 SUMMARY

3.1 The integrity of this procedure is maintained only through the application of proper sample collection, sample handling, storage and analysis using the "clean hands, dirty hands" technique.

3.2 In the container received, the entire sample is oxidized with Bromine monochloride (BrCl) at a ratio of 5-ml BrCl per 500-ml sample. The sample is allowed to oxidize all available Hg to Hg(II) for a minimum of 24-hours. 50-ml of oxidized sample is analyzed where it is sequentially reduced with Hydroxylamine monochloride ($NH_2OH \cdot HCl$) to destroy the free halogens, then with stannous chloride ($SnCl_2$) to convert Hg(II) to volatile Hg(0). The Hg(0) is separated from solution by purging and vapor/liquid separation.

3.3 This procedure is based on the reference methods listed in section 17 of this document. This procedure contains no significant deviations to the reference method.

4.0 DEFINITIONS

4.1 A list of definitions is in the Quality Assurance Plan.

5.0 INTERFERENCES

5.1 Preventing samples from becoming contaminated during the sampling and analysis process constitutes one of the greatest difficulties encountered in trace metals determinations. Therefore, it is imperative that extreme care be taken to avoid contamination when collecting and analyzing samples for trace metals.

5.2 Samples may become contaminated by numerous routes. Potential sources of contamination include sampling protocol, containers, sampling equipment, labware, reagents, and atmospheric inputs such as dirt and dust. Even human contact can be a source of contamination.

5.3 Contamination Control

5.3.1 Philosophy – The philosophy behind contamination control is to ensure that any object or substance that contacts the sample is free from any material that may contain mercury. Substances in a sample cannot be allowed to contaminate the laboratory work area or instrumentation used for trace Mercury measurements.

Uncontrolled Copy

5.3.2 Avoiding contamination – The best way to control contamination is to completely avoid exposure of the sample to contamination in the first place. Avoiding exposure means performing operations in an area known to be free from contamination. Two of the most important factors in avoiding/reducing sample contamination are (1) an awareness of potential sources of contamination and (2) strict attention to work being done.

5.3.3 Use a clean environment – The Mercury clean room has been designed to minimize (if not ultimately eliminate) Mercury contamination from outside sources. Incoming air is appropriately filtered and the airflow designed to pass clean air from the instrument lab into and through the preparation lab. Access is restricted to authorized and trained personnel only. Appropriate sample receipt protocols are used to ensure that only non-externally contaminated samples are brought into the lab. Sample receipt into the lab is by way of an isolated holding area to allow for proper cleaning of sample containers prior to handling inside the preparation lab.

5.3.4 Wear gloves – Analysts must wear clean, non-talc gloves during all operations involving handling of the samples, reagents and standards.

5.3.5 Contamination by carryover – Contamination may occur when a sample is processed immediately after a sample containing a relatively high concentration of Mercury. The Hg concentration at which the analytical system (purge, traps, and detector) will carry greater than 0.5 ng/L of Hg into a succeeding system blank must be determined (see the QA/QC section).

5.4 Interference

5.4.1 At the time of promulgation of the reference method, gold and iodide were known interferences. At a Mercury concentration of 2.5 ng/L and at increasing iodide concentrations ranging from 30 to 100 mg/L, test data have shown that Mercury recovery will be reduced from 100 to 0 percent. At iodide concentrations greater than 3 mg/L, the sample should be pre-reduced with $SnCl_2$ (to remove the brown color) and additional or more concentrated $SnCl_2$ should be added. To preclude loss of Hg, the additional $SnCl_2$ should be added in a closed vessel or analysis should proceed immediately. If samples containing iodide concentrations greater than 30 mg/L are analyzed, it may be necessary to clean the analytical system with 4N HCl after the analysis.

6.0 SAFETY

6.1 Consult the current revision of the Chemical Hygiene Plan. Requirements for the use of personal protective equipment (e.g. safety glasses, lab coats, gloves) as well as other area-specific safety requirements (e.g. gas cylinders) and MSDS sheets are addressed in the CHP.

7.0 EQUIPMENT AND SUPPLIES

The following is a list of materials needed to perform the steps of this procedure as written. See the reference method(s) for equipment and supply specifications.

Uncontrolled Copy

7.1 All volumetric glassware used shall be ASTM Class A. Class B glassware must be verified for accuracy on an annual basis and labeled with an appropriate correction.

7.2 All reagent and standard preparation must be performed in the mercury-free clean room.

7.3 PPE: latex gloves (Fisher #11-394-5C or equivalent); lab coat and safety glasses as specified in the Chemical Hygiene Plan

7.4 Tackymat: Fisher #06-520-5

7.5 Glassware: 100-ml and 1000-ml volumetric flasks

7.6 Pipettes: 10 – 100-ul and 100 – 1000-ul adjustable volume repipetters

7.7 Digestion/Autosampler tubes: SCP Science product, Fisher #S195-500 or equivalent

7.8 Instrument: CETAC M8000

7.9 SCP Digifilter Manifold #010-500-230

7.10 SCP 0.45-micron Digifilters #010-500-070

Uncontrolled Copy

8.0 REAGENTS AND STANDARDS

8.1 All reagents used must be analytical reagent (AR) grade or higher. All standards must be traceable to NIST, when available. Certificates of traceability must be obtained from the manufacturer. All reagents and standards must be documented in the appropriate preparation logbook. Refer to the requirements in the Labeling of Standards, Reagents, Digestates and Extracts SOP.

8.2 Reagents

All reagents are stored in the mercury-free clean room unless otherwise noted. Unless otherwise noted, prepared reagents are stored in appropriate containers, retained in the clean room and prepared on an as needed basis.

8.2.1 Lab pure water (DI water): Analyte free water is prepared as described in the Quality Assurance Plan. DI water is obtained from the designated tap in the clean-room.

8.2.2 Hydrochloric acid, concentrated: Fisher catalog #A508-212 or equivalent.

8.2.3 Nitric acid, concentrated: Fisher catalog #A509-212 or equivalent

8.2.4 Instrument rinse, 1%: In a 2L fluoropolymer bottle (supplier by CETAC) dilute 20-ml Bromine Monochloride solution to a final volume of 2L with lab pure water. Prepare this reagent on a daily basis.

8.2.5 Bromine Monochloride: In a clear glass jar, combine 1 packet of BrCl solution (Environmental Express #HP9010 or equivalent) and 90-ml concentrated HCl. Prepare fresh monthly.

8.2.6 Hydroxylamine Hydrochloride: In a 250-ml container, dissolve and dilute 75-g Hydroxylamine Hydrochloride (Fisher #H330-1 or equivalent) to the mark with lab pure water. Prepare fresh monthly.

8.2.7 Stannous Chloride: In a 1L container, dissolve and dilute 200g of Stannous Chloride crystals (Fisher #T142-500 or equivalent.) with 100-ml concentrated HCl and lab pure water. Prepare fresh weekly.

8.2.8 10% HCl rinse solution: In a Digitube, dilute 5-ml of conc. HCl to 50-ml with DI water.

8.2.9 10% HNO_3 rinse solution: In a Digitube, dilute 5-ml of conc. HNO_3 to 50-ml with DI water.

8.3 Standards

All standards are stored in the mercury-free clean room unless otherwise noted.

8.3.1 Stock Calibration standard, 1000 mg/l: SPEX catalog # PLHG4-2Y or equivalent.

8.3.2 Intermediate Calibration standard, 1 mg/l: In a 100-ml volumetric flask, dilute 0.1-ml of the stock calibration and 7-ml of 7% HCl to the mark with lab pure water. Prepare fresh monthly.

8.3.3 Working Calibration standard A, 1 ug/l: In a 100-ml volumetric flask, dilute 0.1-ml of the intermediate calibration standard and 7-ml of 7% HCl to the mark with lab pure water. Prepare fresh monthly.

8.3.4 Calibration curve: Prepare the following dilutions in individual 50-ml digestion tubes using 0.50-ml BrCl and lab pure water. The calibration curve standards should be prepared fresh with each calibration. The calibration (system) blanks are prepared by filling a 500-ml sample container with lab pure water, acidifying with 2.5-ml conc. HCl and oxidizing with 5.0-ml BrCl.

Vol. (ml)	Parent Std	Final Conc., ng/l
5.0	Working Cal Std A	100
2.5	Working Cal Std A	50
1.25	Working Cal Std A	25
0.25	Working Cal Std A	5.0
.025	Working Cal Std A	0.5
0	---	0

Uncontrolled Copy

8.3.5 Method Blank: In a 500-ml clean bottle add the same reagents as the prep batch and fill with DI water.

8.3.6 IPR / OPR: This is the same as the 5.0-ng/l standard used for instrument calibration.

8.3.7 MS/MSD, 5-ng/l: Add 0.25-ml of the working calibration standard A to 50-ml sample.

8.3.8 Stock Verification standard, 1000 mg/l: CPI catalog # S4400-1000331 or equivalent. This standard must be of a source different than that used for calibration.

8.3.9 QCS Intermediate standard, 1 mg/l: In a 100-ml volumetric flask, dilute 0.1-ml of the stock verification standard and 7-ml of 7% HCl to the mark with lab pure water. Prepare fresh monthly.

8.3.10 QCS Working Standard A, 1-ug/l: In a 50-ml volumetric flask, dilute 0.05-ml of the QCS intermediate standard and 3.5-ml of 7% HCl to the mark with lab pure water. Prepare fresh monthly.

8.3.11 QCS, 5.0 ng/l: In a 50-ml digestion tube, dilute 0.25-ml of the QCS working standard A to 50-ml with 0.5-ml BrCl and lab pure water. Prepare fresh with each calibration.

9.0 SAMPLE COLLECTION, PRESERVATION, AND HOLDING TIMES

9.1 The client or other trained personnel collect samples. Samples received at the laboratory are considered representative unless otherwise noted. Samples must be received inside of a double-bag system. The outer bag is considered a dirty bag and the inner bag a clean bag. Refer to the Sample Receipt and Login SOP for details. Samples not received in this manner will be rejected or the discrepancies noted and reported to the client.

9.2 Samples should be collected in a glass container. No thermal or chemical preservation is required during transit. Refer to the Sample Receipt and Login SOP for the criteria used at sample receipt to determine whether or not the sample integrity has been maintained. Samples are stored in the double-door staging area built into the mercury-free clean room. Samples that fail to meet the receipt criteria will be rejected or noted as such on the Cooler Inspection Report during the Login process.

9.3 Chemical preservation is applied as part of the preparation procedure. See the details in the Procedure section.

9.4 Provided that samples are received unpreserved then acidified and oxidized full volume (as described in the procedure section), the maximum allowable hold times are: acidification within 28-days and analysis within 90-days of collection.

Uncontrolled Copy

10.0 QUALITY CONTROL

10.1 An *Initial Precision & Recovery (IPR)* study must be performed prior to the initial implementation within the lab and whenever substantial change has occurred in the procedure or instrument. Analyze four consecutive 5 ng/l calibration standards. Submit the data to the QA department for evaluation. Refer to EPA Method 1631E section 9.2.2 for details.

10.2 A *Method Detection Limit (MDL)* study must be performed for each new analyst, annually thereafter, and whenever a significant change in procedure or instrument occurs. Analyze a minimum of seven (maximum of ten) standards prepared in the range of 0.1-1.0 ng/l. These standards must be taken through the entire analytical procedure. Submit the data to the QA department for evaluation. Refer to EPA Method 1631E section 9.2.1 for details.

10.3 A *Carryover Point* study must be performed prior to the initial implementation within the lab and whenever substantial change has occurred in the instrument. The carryover point is the Hg concentration at which the analytical system will carry greater than 0.5 ng/L of Hg into a succeeding system blank. This concentration may be determined by analyzing calibration solutions containing successively larger concentrations of Hg. When an environmental sample contains ½ or greater of this determined Hg concentration, a system blank must be analyzed to demonstrate no carryover at the blank criteria level. Preferably, if analysis of the high calibration standard does not result in the carryover of more than 0.5 ng/l into a succeeding blank, the carryover point is defined as some concentration above the linear range of the instrument and any environmental sample having a Mercury concentration greater than that level must be diluted and reanalyzed. Samples that are known or suspected to contain a high concentration of Mercury should initially be analyzed at an appropriate dilution or after samples containing low or non-detectable levels.

10.4 An *On-going Precision and Recovery (OPR) Standard* must be analyzed immediately after calibration, after every 12 consecutive hours of analysis, and after the sample. The concentration of the OPR is defined in the reference method as 5 ng/L.

10.4.1 Acceptance criteria are defined in the reference method and listed in the appropriate test code in LIMS. If the acceptance criteria are not met, reanalyze. If reanalysis fails to meet the acceptance criteria, stop analysis and recalibrate or report data with an appropriate qualifier.

10.4.2 OPR standards that fail to meet the acceptance criteria are automatically flagged in LIMS with a “S” qualifier.

10.4.3 The reporting of data associated with a failed OPR must be documented with a CAR form. If the failure is considered to have a significant affect on the data, client notification is required using the Case Narrative of the report.

Uncontrolled Copy

10.4.4 Samples associated with an OPR that fails with positive bias can be reported without narration if the sample concentration is below the reporting limit.

10.5 A *Quality Control Sample (QCS)* must be analyzed prior to the analysis of environmental samples at a frequency of 1 per run. The QCS is prepared from a standard source different than that used for the OPR.

10.5.1 Acceptance criteria are nominally set to be the same as the OPR and are listed in the appropriate test code in LIMS. If the acceptance criteria are not met, reanalyze. If reanalysis fails to meet the acceptance criteria, stop analysis and recalibrate or report data with an appropriate qualifier.

10.5.2 QCS' that fail to meet the acceptance criteria are automatically flagged in LIMS with a "S" qualifier.

10.5.3 The reporting of data associated with a failed QCS must be documented with a CAR form. If the failure is considered to have a significant affect on the data, client notification is required using the Case Narrative of the report.

10.5.4 Samples associated with an QCS that fails with positive bias can be reported without narration if the sample concentration is below the reporting limit.

10.6 A minimum of three *Method Blanks* must be prepared and analyzed with each batch of maximum 20 samples and at a minimum of one per day.

10.6.1 The acceptance criteria are < PQL. If the acceptance criteria are not met, reanalyze. If reanalysis fails to meet the acceptance criteria, stop analysis and recalibrate or report data with an appropriate qualifier.

10.6.2 MBLKs that fail to meet the acceptance criteria cause the sample results to be automatically flagged in LIMS with a "B" qualifier. MBLKs that are below the reporting limit but above the MDL are flagged in LIMS with a "b" qualifier. "b" flagged data is considered as meeting the acceptance criteria.

10.6.3 The reporting of data associated with a failed control sample must be documented with a CAR form. If the failure is considered to have a significant affect on the data, client notification is required using the Case Narrative of the report.

10.6.4 Samples associated with a MBLK that fails with positive bias can be reported without narration if the sample concentration is < PQL or greater than 10 times the blank contamination.

10.7 A *Matrix Spike and Matrix Spike Duplicate* sample must be prepared and analyzed with each batch of maximum 10 samples per matrix and at a minimum of one per day.

Uncontrolled Copy

10.7.1 Acceptance criteria are defined in the reference method and listed in the appropriate test code in LIMS. (Note: the accuracy criteria have been met provided at least either the MS or MSD meet the %R criteria.) If the acceptance criteria are not met, refer to the MS/MSD Corrective Action Flowchart in the QAP.

10.7.2 MS/MSD's that fail to meet the accuracy criteria are automatically flagged in LIMS with a "S" qualifier. MSD's that fail to meet the precision criteria are automatically flagged in LIMS with a "R" qualifier.

10.7.3 The reporting of data associated with a failed MS/MSD must be documented with a CAR form. If the failure is considered to have a significant affect on the data, client notification is required using the Case Narrative of the report.

10.7.4 Samples associated with a MS/MSD that fails the accuracy criteria with positive bias can be reported without narration if the sample concentration is below the reporting limit.

10.7.5 If the concentration measured in the sample is greater than 4-times the concentration of the spike, the spike amount used is insufficient and the MS/MSD not applicable.

11.0 CALIBRATION AND STANDARDIZATION

Calibration data is documented and retained using the printouts from the instrument software and the report generated using the "1631 Calibration and QC Evaluation" spreadsheet. Analytical data must be maintained in accordance with the document control requirements in the Quality Assurance Plan as well as the Document Control SOP.

11.1 Instrument calibration is required each day of analysis for each run.

11.2 Perform the required preventative maintenance as necessary. Refer to the maintenance log book for M8000.

11.3 Open the QuickTrace file. A box will appear asking if you want the detector block temperature to stabilize. Choose *Yes*. This can take anywhere from 20 minutes to several hours depending on how long the instrument was off. The remainder of the program will open when the detector temperature has stabilized.

11.4 Create a new data file for the day. This is done by choosing *File*, *New From*. A box will open. Click the *Browse* button next to the template worksheet box. A file directory will open up. Choose *QuickTrace* file and then open the *Worksheets* file. Choose the template you wish to use (typically, use that from the previous day). When the worksheet is open, enter the name for the new worksheet using the naming convention "1631" followed by the date (e.g. 1631 11-10-03).

11.5 Check the tubing on the peristaltic pump for wear and replace if needed. Place the tubing on the pump in the following order from bottom to top: drain (large white-white tubing), autosampler (yellow-yellow tubing), stannous (black-black tubing), and finally the hydroxylamine tubing (red-blue) should be on the top. Turn the

Uncontrolled Copy

pump on with the black switch on the front of the pump. Starting with the bottom clamp, apply tension with the locking arm. Check for good flow through the tube and proceed to the next clamp. Continue until all the clamps are locked into place and then recheck all of the flows.

11.6 Place the stannous and the hydroxylamine lines into the container of DI water next to the instrument.

11.7 The Gas Liquid Separator (GLS) must be wet to insure proper liquid gas separation. To do this, open the *instrument control panel* (this button has a screwdriver, hammer, and wrench on it). In the new window that opens up, click on the icon with 3 test tubes on it. This screen will have a gas control box on it. Set the gas flow to 40 and click set gas. Look inside the window at the GLS and make sure there are bubbles rising up. Pinch the drain line that goes into the peristaltic pump. This will cause the GLS to fill with water. Make sure that bubbles reach the top of the GLS to completely wet the center tube of the GLS. Repeat if proper wetting does not occur. An error message will appear on the computer screen and the peristaltic pump will stop. The error will say that a GLS overflow has occurred and to click yes to recover from it. Unpinch the drain tubing and click yes. This will allow all of the liquid to drain from the GLS. If the error shows up again repeat the steps listed to continue the draining of the GLS.

11.8 Remove the stannous and hydroxylamine lines from the DI water and place them into the appropriate containers. Let the instrument set for the couple minutes to stabilize with this new gas setting and close the instrument control box.

11.9 At this time the instrument needs to be profiled to make sure things are flowing and working properly. Open the *method editor* (icon looks like a book with a pencil on it). A new window will open. Click the button that has a green arrow pointing to a blue test tube. This will cause the instrument to zero. If necessary, the instrument will temperature stabilize as well. A new window will open up which shows a diagram of the autosampler. Place the 100 ng/L standard in a location and choose that location on the screen. The autosampler will move to that location and sample this standard. The graph on the computer screen will show the results of this standard. It will take approximately 6-minutes for the sample analysis to complete. When it is done look at the graph to make sure the instrument is reading the sample at the correct time. If this looks okay, look at the profile replicate RSD %. This percentage should be at less than 0.4. If this fails, repeat the peak profile. If it passes close, the method editor box.

11.10 To begin a calibration, open the *sequence editor* box (icon looks like a magic wand). On the sequence page, make sure the sample count is 0 and that the box next to “Begin with Calibration” is checked. Click on the *Auto QC* page and make sure all QC solutions are removed from the “QC Calibration Error Box”. This will let the instrument calibrate and then stop. Click the *Generate Sequence* box. Another box will appear asking if you want to save the changes you have made, click *Yes*.

11.10.1 The analyst has the option of entering the sample IDs. If performed, enter “0” for the number of samples in the run. Turn off OPR at the start and the end of the run.

Uncontrolled Copy

11.11 Make sure all of the calibration standards are loaded into the autosampler. Hit the green "*GO*" button to start the calibration. Calibration will take approximately 1-hour to complete. After the calibration is done, the peristaltic pump will go to standby and a box telling you this has occurred will appear on the screen. Click *Yes* to remove the box, and look at the results of the calibration. If the calibration passed, the computer will give you a calibration factor as well as a calibration %RSD. If it fails, you will get a failure message and the calibration must be repeated. Analysis of environmental samples cannot proceed without the generation of an acceptable calibration.

11.11.1 The calibration acceptance criteria are as follows. The instrument software as well as the "1631 Calibration and QC Evaluation" spreadsheet is programmed to calculate and evaluate the calibration criteria.

- 3 system blanks — <0.5 ng/l each
average <0.5 ng/l
standard deviation <0.1 ng/l
- Linearity — CF_m ≤15% RSD
75-125 %R for the PQL level standard

12.0 PROCEDURE

12.1 SAMPLE PREPARATION

Preparation data is documented and retained using the Mercury Prep Logsheet for EPA 1631E. Preparation data must be maintained in accordance with the document control requirements in the Quality Assurance Plan as well as the Document Control SOP.

12.1.1 Samples are received through a double-door staging area built into the mercury-free clean room. Put on a new pair of clean gloves and bring the samples from the staging area into the prep lab. Process samples into the lab one at a time.

12.1.2 Open the bag, remove the sample container and rinse the container with lab pure water from the faucet. Place the bag in the trash and the rinsed bottle on a paper towel underneath the hood. Verify the sample label information and the physical condition of the sample container. Notify the Supervisor or Project Manager of any label inaccuracies. Note any container inadequacies such as cracked lids, bottles, etc.

12.1.3 Open the sample container and add conc. HCl at a ratio of 5-ml per 1L sample (2.5-ml per 500-ml sample container). If the container is completely filled with sample volume, be certain to thoroughly shake the sample and pour off a small volume prior to adding the acid. Cap the sample and mix.

12.1.4 Open the acidified sample container and add BrCl reagent at a ratio of 5-ml per 500-ml sample. Cap the sample and mix. NOTE: Be certain to evaluate the batch size as samples are processed. All samples from a given run must be processed with the same reagents.

12.1.5 Allow the samples to oxidize for a minimum of 24-hours prior to analysis.

Uncontrolled Copy

12.2 SAMPLE ANALYSIS

Analytical data is documented and retained using the printouts from the instrument generated analytical report, run log, and the "1631 Calibration and QC Evaluation" spreadsheet. Analytical data must be maintained in accordance with the document control requirements in the Quality Assurance Plan as well as the Document Control SOP.

12.2.1 After the calibration has passed, create an autosampler table if it was not already created. To do this, click on the *sequence editor* box. On the sequence page, enter the number of samples that you will be analyzing and uncheck the "Begin with Calibration" box. On the "Auto QC" page, insert OPR standards at the beginning and end of analysis. Click the *generate sequence* button to make the table. The table will appear in a new window. In this window, type the sample ID for each sample that will be run from the sample prep log. After this is done, click the green "*GO*" button to start the run. If the OPR fails the run will stop; otherwise, the samples will run until completion. Make sure that there is plenty of rinse in the rinse bottle. Running out of rinse will cause the instrument to read erroneously low results and cause the QC samples to fail the applicable criteria.

12.2.2 When the run ends, print the run and the run log. Create a PDF file of the instrument run.

12.2.3 Remove the stannous and hydroxylamine lines and place them into the stannous line in 10% HNO_3 and the hydroxyl line in 10% HCl. Let this solution run through the instrument for 5-minutes to remove any salt buildup that may have occurred.

12.2.4 Place the lines into the bottle of DI water for 5-minutes to rinse the acid solution from the instrument.

12.2.5 Pull the lines from the DI rinse and place them in the empty bottle to let the liquid get removed from the lines.

12.2.6 Pull the rinse line from the bottle and place it in an empty 5000-ml bottle. Pump until all lines are dry.

12.2.7 Open the instrument controls and move the autosampler probe to the up position so that it is also pulling air through the lines.

12.2.8 Once all of the liquid has flushed out of the lines, put the instrument into standby by hitting the *standby button* (looks like a ¼ moon), and release the pump tubing to avoid excess stretching or manually turn off the pump and lamp.

Uncontrolled Copy

13.0 CALCULATIONS AND DATA HANDLING

13.1 The instrument software, using the following equation, calculates the sample concentration.

$$\text{Conc., ng/L} = [(\text{uabs}_{samp} - \text{avg uabs}_{blk}) / CF_m]\ [(PFac)\ (DF)]$$

Where: CF_m = mean CF from all calibration standards
$CF = (\text{uabs}_{std} - \text{avg uabs}_{blk}) / \text{conc}_{std,\ ng/l}$
PFac = preparation factor = V_f / V_i
DF = dilution factor

13.2 LIMS calculates the final sample concentration as follows:

Mercury, ng/L = (C) (DF) (Pfac)

Where: C = concentration from curve
DF = dilution factor (prior to adding sample to vial)
Pfac = (Final Volume, ml) / (Sample Size, ml)

13.3 After review, enter final results into the LIMS system. Results flagged by the LIMS with an "E" qualifier are above the linear range of the instrument. There is less certainty in these data and, if sufficient sample and holding time are available, should be reanalyzed at an appropriate dilution. Details on the procedure for entering analytical data are in the Analytical Data Entry – Metals SOP.

14.0 METHOD PERFORMANCE

14.1 Initial Demonstration of Capability study data, Method Detection Limit study data and Performance Testing study data are maintained and available from the QA office.

15.0 POLLUTION PREVENTION

15.1 The quantity of chemicals purchased should be based on expected usage during their shelf life and the disposal cost of unused material.

15.2 Prepare the minimum amount of reagent and standard necessary.

16.0 WASTE MANAGEMENT

16.1 Refer to the Sample Disposal SOP for guidance on the disposal of any resulting residue, digestate, distillate, extract or standard.

Uncontrolled Copy

17.0 REFERENCES

17.1 USEPA Method 1631E

17.2 CETAC QuickTrace Mercury Analyzer software manual, part #480114, version 1.0

17.3 Microbac Laboratories Quality Assurance Plan, current revision, all sections

18.0 TABLES, FORMS, CHECKLISTS, AND OTHER ATTACHMENTS

Copy of the Mercury Prep Logsheet for EPA 1631E (1 page)
Copy of the 1631 Calibration and QC Evaluation report (1 page)
Copy of the M8000 Maintenance Log (1 page)
SOP Revision Notification Form denoting changes made to this revision. (1 page)
Appendix to Method 1631 Total Mercury in Tissue, Sludge, Sediment, and Soil by Acid Digestion and BrCl Oxidation

Uncontrolled Copy

Microbac Laboratories - Chicagoland Division
MERCURY PREP LOG SHEET - EPA 1631E

Analyst: _____ Batch ID: _____

	STD / Reagent ID	Exp. Date	Conc.
HCl			---
BrCl			---
Spike Standard			

Date/Time Samples Available: _____

	Sample ID	Cont ID	Date/Time HCl & BrCl Added	MS**	MSD**	Comments
MBLK 1						
MBLK 2						
MBLK 3						
1						
2						
3						
4						
5						
6						
7						
8						
9						
10						
11						
12						
13						
14						
15						
16						
17						
18						
19						
20						

revision: b_12-03

* - HCl and BrCl added at a ratio of 5 mL each per 1L sample (1.25 mL/250 mL)
** - MS/MSD prepared in 50 mL volumes

Page 1 of 100

Uncontrolled Copy

Microbac Laboratories, Inc. – Chicagoland Division

1631 Calibration and QC Evaluation

Date Calibrated	8/2/2006	Analyst	TMG
Data File	1631 08-02-06	Reviewed	

Calibration Statistics			Calibration Blank Data			
STDEV CF	AVG CF	%RSD CF	AVG uABS	STDEV uABS	AVG Conc ng/L	STDEV ng/L
3.071	33.911	9.056	3.546	2.106	0.10	0.06
		PASS			**PASS**	**PASS**
	Limit =	**<15% RSD**		**Limits =**	<0.5 ng/L	< 0.1 ng/L

Standard	Conc, ng/L	uABS	CF	Conc	%Rec	
Blk-1	0	3.156		0.1		
Blk-2	0	5.820		0.2		
Blk-3	0	1.663		0.0		
STD-1	0.5	23.154	39.215	0.6	116	**PASS**
STD-2	5	160.167	31.324	4.6	92	
STD-3	25	834.285	33.230	24.5	98	
STD-4	50	1669.693	33.323	49.1	98	
STD-5	100	3250.091	32.465	95.7	96	
OPR-1	5		---	4.575	91.50	**PASS**
QCS	5	4	---	4.775	95.50	**PASS**
OPR-2	5	3	---	4.845	96.90	**PASS**

Uncontrolled Copy

Microbac Laboratories, Inc.
Routine/Scheduled Maintenance Log
Instrument ID: CVAF-2

Month & Year: _____

	Minimum Frequencies																
	Daily							Weekly		Monthly			As Needed				
Date	PMT voltage	Reagent flows	Clean External Gold Trap	Gas pressure	High std hf units	Waste	Check KMnO4 trap	Clean GLS	Check pump tubing	Clean fan filter	Check GLS tubing	Check autosamp. tubing	Change SnCl2 tubing	Change Hydroxyl tubing	Change rinse tubing	Change sample tubing	Comments
1																	
2																	
3																	
4																	
5																	
6																	
7																	
8																	
9																	
10																	
11																	
12																	
13																	
14																	
15																	
16																	
17																	
18																	
19																	
20																	
21																	
22																	
23																	
24																	
25																	
26																	
27																	
28																	
29																	
30																	
31																	

rev: _a_5/01/09

1 of 20

Uncontrolled Copy

Microbac

SOP Revision Notification / Annual Review Form

SOP Name MERCURY USING AUTOMATIC FLUORESCENCE SPECTROSCOPY

[X] *New Revision* Old Revision # 1 New Revision # 2

Summary of changes:

- Section 3.3: Removed the deviations from the reference method.
- Sec. 7.0: (1) Removed shoe covers from the supplies list; (2) Added Tackymat and new instruments to the supplies list.
- Sec 8.2: (1) Removed the specification that reagents must be stored in glass containers. (2) Reduced the preparation volume for Hydroxylamine Hydrochloride; (3) Removed the acid rinse solution; (4) Added 10% HCl Rinse and 10% HNO_3 rinse solutions.
- Sec 8.3: Updated the preparations of the Working Calibration Standard A, calibration standards, method blank, MS/MSD, QCS Working Standard A, and QCS to reflect current lab practices.
- Sec 12.2: Added instructions for using the stannous and hydroxyl lines.
- Sec. 18.0: Added the maintenance log for the M8000.

By signing below, I certify that I have been *notified* about the approval of a *new revision* to the above mentioned SOP. I realize it is *my responsibility* to **read, understand and perform** the procedure as set forth in this new revision.

Initials & Date	Initials & Date	Initials & Date

[ ] *Annual Review* Current Revision # _____

By signing below, I certify that I have **re-read, understand** and **agree to perform** the current revision of the above mentioned SOP.

Initials & Date	Initials & Date	Initials & Date

Form revised 01/18/06

Uncontrolled Copy

Appendix to Method 1631
Total Mercury in Tissue, Sludge, Sediment, and Soil
by Acid Digestion and BrCl Oxidation[1]

A1.0 Scope and Application

A1.1 This Appendix provides two sample preparation (digestion) procedures for oxidation of total mercury (Hg) in solid and semi-solid sample matrices. These procedures may be used in conjunction with EPA Method 1631B: *Mercury in Water by Oxidation, Purge and Trap, and Cold Vapor Atomic Fluorescence Spectrometry* for determination of mercury in tissue, sludge, sediment, soil, industrial samples, and certified reference materials.

A1.2 The digestion procedures in this Appendix, in conjunction with Method 1631B, allow determination of Hg at concentrations ranging from 1.0 to 5000 ng/g in solid and semi-solid matrices. Higher concentrations can be measured by selection of a smaller sample size and/or dilution of the digestate.

A1.3 The detection limit and minimum level of quantitation in this Method usually are dependent on the level of interferences rather than instrumental limitations. The method detection limit (MDL; 40 CFR 136, Appendix B) for Hg has been determined to be in the range of 0.24 to 0.48 ng/g when no interferences are present (see Appendix Tables A3 and A4). The minimum level of quantitation (ML) has been established as 1.0 ng/g. These levels assume a sample size of 0.5 g.

A1.4 Because Hg concentrations in solids are typically 10^3 - 10^7 times higher than those found in aqueous samples, the sensitivity provided by the dual amalgam trap system and fluorescence detector described in Method 1631B may be more sensitive than necessary, and a single trap and/or cold vapor atomic absorption spectroscopy (CVAAS) instrument may be adequate. These modifications are allowed under the equivalency provisions in EPA Method 1631B. See Method 1631B Section 9.1.2. However, the dual amalgam trap system and fluorescence detector provide greater sensitivity and specificity in the presence of interferences, and this system must be used to overcome interferences, if present, and to achieve the sensitivity required, if necessary.

A2.0 Summary

A2.1 Digestion I—This procedure is preferred for matrices containing organic materials, such as sludge and plant and animal tissues, because the organic matter is completely destroyed. In this procedure, a 0.2 - 1.5 g sample is digested with HNO_3/H_2SO_4. The digestate is diluted with BrCl solution to destroy the remaining organic material.

A2.2 Digestion II—This procedure is preferred for geological materials because of rapid and complete dissolution of cinnabar (HgS), which is otherwise more slowly attacked by the BrCl in Digestion I. In this procedure, a 0.5 - 1.5 g sample is digested with aqua regia (HCl/HNO_3) to solubilize inorganic materials.

A2.3 The Hg concentration in the digestate is determined using EPA Method 1631B.

---

[1] Based on a standard operating procedure provided by Frontier Geosciences, Inc.

A3.0 Definitions

See the Glossary at the end of Method 1631B for definitions of the terms used in this Appendix.

A4.0 Contamination and Interferences

A4.1 For the complete recovery of mercury by Method 1631B, all Hg in the sample must be converted to Hg(II). This is accomplished by free halogens present in the digestion step.

A4.2 In Digestion I, the addition of BrCl to the sample after it is fully solubilized HNO_3/H_2SO_4 is critical to convert methyl Hg to Hg(II). If the acid digestates are analyzed by Method 1631B without BrCl oxidation of tissues or geological media, a significant low bias may occur.

A4.3 In Digestion II, the reaction between concentrated HCl and HNO_3 in aqua regia generates nitrosyl chloride (NOCl) and free Cl_2, both of which are very strong oxidants for Hg-containing compounds including cinnabar (HgS) and precious metal amalgams that are not attacked by either acid alone. Aqua regia also converts all methyl Hg to Hg(II). The aqua regia procedure in Digestion II leaches but does not dissolve silicate minerals. Crustal elements such as Fe, Al, Cr, Ba, and Si may not be quantitatively recovered in some media using this procedure.

A4.4 Digestates from both Digestion I and II contain free halogens and extreme caution must be taken to avoid purging these free halogens onto the gold sand traps (see Section 4.4.2 in Method 1631B). Introduction of free halogens may be avoided by analyzing an aliquot of the sample digestate smaller than 5 mL (Appendix Section A12.3), and by pipetting aliquots of the digestate into bubbler water already containing $SnCl_2$. The use of hydroxylamine hydrochloride to remove free halogens (as prescribed in Method 1631B for aqueous samples) is not needed for solid sample digestates; there is a sufficient amount of $SnCl_2$ in the bubbler to reduce both Hg(II) and free halogens in digestate aliquots smaller than 5 mL.

A4.5 If iodized coal or other elemental carbon samples are to be analyzed, the final acid concentration in the diluted sample must be greater than 40% (v/v), and all carbon particles must be settled prior to analysis to avoid re-adsorption of Hg on the carbon and an ensuing low bias.

A5.0 Safety

Observe the safety precautions in Method 1631B.

A6.0 Apparatus and Materials

A6.1 Digestion vessel—50-mL borosilicate Erlenmeyer flask, calibrated to 40 ± 0.5 mL; or any other acid-cleaned, flat-bottomed, borosilicate glass container calibrated to 40 ± 0.5 mL.

A6.2 Pressure release digestion cap—Clear glass sphere or inverted fluoropolymer cone, approximately 1.5 - 2.0 cm in diameter, initially cleaned by heating overnight in hot concentrated nitric acid. The sphere or cone acts as a pressure release valve during gas evolution. A common clear glass marble may be used as the sphere, or the cone may be custom manufactured. Colored glass marbles contain high levels of trace metals and must not be used. The cap must completely cover the opening of the digestion vessel without falling in, yet not be so large as to risk falling off when slightly lifted by the gas pressure in the vessel.

A6.3 Electric hot plate—A temperature controlled electric hot-plate capable of maintaining a temperature of 100-110°C. A commonly available fluoropolymer-coated pancake griddle is excellent for this purpose. Do not use the griddle for heating flammable solvents.

A6.4 Dilution vessels—Volumetric flasks, glass, 25, 50.0, and 100.0 mL, cleaned per the procedures in Method 1631B.

A6.5 Digestate storage vessel—VOA vial, glass, 40-mL, with fluoropolymer-lined cap, cleaned per the procedures in Method 1631B, or purchase I-Chem level 300, trace metal clean, with fluoropolymer-lined cap, or equivalent.

A6.6 Balance—Analytical, capable of weighing 1.0 mg.

A7.0 Reagents and Standards

A7.1 Reference matrices

A7.1.1 Biota, including tissue and wet and dry municipal sludge—Chicken breast, skinless, boneless, purchased at a local supermarket, or other tissue demonstrated to be free of mercury at the MDL in Table A1.

A7.1.2 Soil, sediment, and other geological samples—Playground sand or other sand-like material demonstrated to be free from mercury at the MDL in Table A1.

A7.2 Nitric acid (concentrated)—Reagent grade, containing less than 5 pg/mL Hg. The HNO_3 must be pre-analyzed for Hg before use.

A7.3 Sulfuric acid (concentrated)—Reagent grade, containing less than 5 pg/mL Hg. The H_2SO_4 must be pre-analyzed for Hg before use.

A7.4 HNO_3/H_2SO_4 solution—In a fume hood, slowly add 300 mL of concentrated H_2SO_4 (Appendix Section A7.3) to 700 mL of concentrated HNO_3 (Appendix Section A7.2) in a fluoropolymer bottle.

Warning: This mixture gets hot and emits caustic fumes.

A7.5 Dilute BrCl solutions—Use the concentrated (0.2N) BrCl solution in Section 7.6 of Method 1631B to produce the following solutions:

A7.5.1 0.07 N bromine monochloride solution—Dilute 300 mL of 0.2N BrCl solution to 1000 mL with reagent water in a fluoropolymer bottle.

A7.5.2 0.02 N bromine monochloride solution—Dilute 100 mL of concentrated BrCl solution to 1000 mL with reagent water in a fluoropolymer bottle.

A8.0 Sample Collection, Preservation, and Storage

A8.1 Samples are collected into acid-cleaned glass, polyethylene, or fluoropolymer jars. For all except very low level and high water content samples, polyethylene bags are also acceptable. Dry solids

such as coal and ores may be collected and stored in heavy gauge paper pouches commonly used by geologists.

A8.2 Samples are collected using clean gloves. Equipment is rinsed between samples to avoid cross-contamination. In general, follow the sampling procedures in Method 1613B. The ultra-low level sampling procedures in EPA Method 1669 may not be necessary because Hg concentrations in solids are typically 10^3 - 10^7 times higher than those found in water samples.

A8.3 Sample shipment, storage, preservation, and holding times

A8.3.1 Dry samples—Samples such as ores, coal, paper, and wood may be shipped unrefrigerated and stored indefinitely in a cool, dry location known to have an atmosphere that is low in mercury.

A8.3.2 Biota samples—Samples containing biota, including wet and dry sludge, are shipped to the laboratory at 0-4 °C and may be processed and stored in one of the following two ways:

A8.3.2.1 Biota samples large enough to sub-sample are homogenized to a fine paste with a stainless steel mill, or finely chopped with stainless steel tools on an acid-cleaned, plastic cutting board. After homogenization, samples are stored frozen at < -15 °C in an acid-cleaned glass or fluoropolymer jar. The jar should be sized to be filled between 50 - 80% with sample. Samples may be stored frozen for a maximum of 1 year.

A8.3.2.2 If not analyzed upon receipt at the laboratory, biota samples may be lyophilized (freeze-dried) prior to homogenization and storage. Once lyophilized, biota samples may be stored unrefrigerated in a low-mercury atmosphere for a maximum of 1 year.

A8.3.3 Wet sediment samples—Wet sediment samples are chilled and shipped to the laboratory at 0-4 °C. Because freezing and thawing may adversely affect homogeneity by causing clumping and separation of the solids from the liquid, wet sediment samples must be aliquoted and weighed at the laboratory and prior to freezing if they are not analyzed upon receipt. Wet sediment samples may be held for 1 year if aliquoted, weighed, and frozen at < -15 °C. Sediment samples may be lyophilized and stored unrefrigerated for 1 year in a low-mercury atmosphere if only total Hg will be determined and no free elemental mercury (Hg^0) is expected to be in the samples.

A9.0 Quality Control

A9.1 The quality control (QC) measures in Section 9 of Method 1631B must be followed when analyzing samples using this Appendix. In addition, this Appendix requires method blanks. Descriptions of the modifications of the quality control measures in Method 1631B that are required for application to solid and semi-solid matrices are provided below.

A9.2 Initial demonstration of laboratory capability

A9.2.1 Method detection limit (see Section 9.2.1 of Method 1631B)—The laboratory must achieve an MDL that is less than or equal to the MDL listed in Table A1.

A9.2.2 Initial precision and recovery (IPR; see Section 9.2.2 of Method 1631B)—Analyze four aliquots of the appropriate reference matrix (see Appendix Section A7.1), each spiked with 4.0 ng of Hg. This amount will be 8 ng/g for a 0.5 g sample. Calculate the average percent recovery (X) and the RSD of percent recovery. Compare X and RSD with the corresponding IPR limits in Table A1. If X and RSD meet the acceptance criteria, system performance is acceptable and analysis of samples may begin. If, however, RSD exceeds the precision limit or X is outside the recovery range, performance of the analytical system is unacceptable. Correct the problem and repeat the test.

A9.3 Matrix spike/matrix spike duplicate (MS/MSD; see Section 9.3 of Method 1631B)

9.3.1 Spike and analyze 1 out of every 10 samples of the same matrix type, in duplicate, at a concentration 2 - 5 times the background concentration of Hg in the unspiked sample or at the concentration in the IPR (Appendix Section A9.2.2), whichever is greater. Calculate the percent recovery in each aliquot and the RPD between the aliquots. The individual recoveries and the RPD shall meet the MS/MSD recovery acceptance criteria in Table A1. If either recovery or the RPD does not meet the acceptance criteria, correct the problem and repeat the test according to the procedures in Sections 9.3.4 and/or 9.3.5 of Method 1631B.

A9.4 Blanks (see Section 9.4 of Method 1631B)

A9.4.1 Because of the high concentrations of mercury in solid samples, as compared to aqueous samples, field blanks (Section 9.4.3 of Method 1631B) and sampler check blanks (Section 9.4.4.2 of Method 1631B) are not required. However, it may be prudent to collect a sampler check blank the first time that a given set of sampling equipment is used and whenever it is suspected to be contaminated.

A9.4.2 Method blank—For each batch of 20 samples (Section 9.1.7 of Method 1631B), digest and analyze a method blank using the most appropriate reference matrix (Appendix Section A7.1). The laboratory may process a greater number of method blanks, if desired, and average the results. The method blank must include all sample processing steps; e.g., homogenization (Appendix Section A8.3.2.1). The concentration of mercury in the method blank, or the average of multiple method blanks, must meet the QC acceptance criteria in Table A1; otherwise, the source of contamination must be eliminated and the batch reanalyzed.

A9.5 Ongoing precision and recovery (OPR; see Section 9.5 of Method 1631B)—The OPR (laboratory control sample) for solid and semi-solid samples is test of the entire analytical system and includes all sample processing procedures; e.g., homogenization (Appendix Section A8.3.2.1) and digestion (Appendix Section A11.1 or A11.2).

A9.5.1 Analyze an aliquot of the appropriate reference matrix (see Appendix Section A7.1), spiked at the concentration in the IPR (Appendix Section A9.2.2). Calculate the percent recovery.

A9.5.2 Compare percent recovery with the OPR limit in Table A1. If percent recovery meets the acceptance criteria, system performance is acceptable and analysis of samples and blanks may continue. If, however, percent recovery is outside of the acceptance range, analytical system performance is unacceptable. Correct the problem and repeat the test according to Section 9.5.2 of Method 1631B.

A9.6 Quality Control Sample (QCS) - Many certified reference materials (CRMs) are available for total mercury in plants, animals, fish, sediments, soils, and sludge. Recovery and precision for at least one QCS per batch of samples must meet the performance specifications provided by the supplier.

A9.7 Replicate samples—Some samples, particularly sediments, may be heterogeneous. Replicates of these samples should be analyzed to characterize this heterogeneity. Replicate samples may also be required by a specific program to assess the precision of the sample collection, transportation, and storage techniques. The relative percent difference (RPD) between replicates should be less than 30%.

A10.0 Calibration and Standardization

A10.1 Calibrate the CVAFS instrument system using the procedures in Section 10 of Method 1631B. The concentration of the calibration solutions is as given in Section 10.1.1.2 of Method 1613B. The amount of Hg in these solutions will be 0.05, 0.5, 2.5, 5.0, and 10.0 ng.

A10.2 Calibration verification (VER)—Calibration of the CVAFS instrument system must be verified periodically using aqueous standards. In Method 1631B, the OPR is used for this verification because the standards are added to water (see Sections 10.2 and 9.5 of Method 1631B). In contrast, the OPR in this Appendix (Appendix Section A9.5) is used to demonstrate that the end-to-end analytical system remains in control. To avoid confusion, the periodic verification of calibration in this Appendix is referred to as "calibration verification" (VER). The VER is a spiked reagent water sample (an aqueous blank spike) and is used to determine that the CVAFS remains in control.

A10.2.1 Prior to and after the analysis of 10 samples, verify calibration of the CVAFS instrument system using the OPR test in Sections 9.5.1 and 9.5.2 of Method 1631B. Record results as calibration verification (VER).

A10.2.2 The requirements in Section 9.5.2 of Method 1631B must be met for sample results to be valid.

A11.0 Digestion

A11.1 Digestion I: Hot re-fluxing HNO_3/H_2SO_4 digestion followed by BrCl oxidation—This procedure is intended for biota, wood, paper, tissue, municipal sludge, and other primarily organic matrices (excluding coal). It does, however, give quantitative recovery for Hg on finely divided geological matrices such as sediments and soils.

A11.1.1 Accurately weigh (to the nearest mg) an aliquot of sample directly into a tared digestion vessel (Appendix Section A6.1). For organic matter such as biota, weigh 0.2-0.4 gram; for tissue (e.g., fish), plant material, or sludge, weigh 0.5-1.5 grams; for dried material

such as wood, paper, and CRMs, weigh 0.2-0.4 gram. The use of too much organic material will consume all of the acid in the digestion, resulting in a low recovery.

A11.1.2 To each sample, add 10.0 mL of HNO_3/H_2SO_4 solution (Appendix Section A7.4). Place the digestion vessel in an acid fume hood and loosely cap with a clean marble or inverted fluoropolymer cone (Appendix Section A6.2). For wood, paper, or other dry carbohydrates that can react violently with the HNO_3/H_2SO_4 solution, allow the sample to sit in the cold acid for at least 4 hours before heating.

A11.1.3 After digesting at room temperature, place the digestion vessel on a hot plate in the hood and slowly bring to a gentle boil by incrementally increasing the plate temperature over a 1-hour period. If excessive sample foaming occurs, bring to temperature more slowly. Reflux for 2-3 hours to fully oxidize remaining organic matter. The mineral portion of soil and sediment samples will not dissolve but will be effectively leached by this digestion.

A11.1.4 After the digestion is complete, bring to the calibration mark on the digestion vessel (40 ± 0.5 mL; Appendix Section A6.1) with 0.02 N BrCl solution (Appendix Section A7.5.2) and mix thoroughly. Shake the sample/BrCl solution to homogenize, and allow to sit at least 4 hours prior to analysis to oxidize remaining dissolved methyl Hg. Analyze the oxidized digestate per Appendix Section A12.0.

Note: Some highly organic matrices will require higher levels of BrCl (Appendix Section A7.5.1) and longer digestion times or elevated temperatures. The amount of reagent added to a sample must be the same as the amount added to the reagent blank to detect contamination in the reagents, and to the method blank and the OPR to demonstrate that mercury can be recovered quantitatively. BrCl oxidation must be continued until it is complete.

A11.2 Digestion II: Cold aqua regia followed by BrCl oxidation—This procedure is intended for coal, ores, sediments, soils, and other geological media. It does, however, give quantitative recovery for Hg on finely divided biological media such as tissues, paper, and wood, because the organic matrix is leached rather than dissolved. Solid, dry geological media such as rocks, ores, and coal must be pulverized using a contamination-free mill prior to digestion. Otherwise, mercury will not be recovered from the interior of large particles.

A11.2.1 Accurately weigh (to the nearest mg) an aliquot of the sample directly into a tared digestion vessel. For wet sediments and soils, weigh 0.5-1.5 grams; for dried materials such as coal, ores, and CRMs, weigh 0.5-1.0 gram. To better assure homogeneity, sediments and soils should be screened through a 2-mm plastic sieve to remove large rocks and sticks before digestion.

A11.2.2 In a fume hood, add 8.0 mL of concentrated HCl (Method 1631B Section 7.3), swirl, and add 2.0 mL of concentrated HNO_3 to the sample in the digestion vessel. Cap the vessel with a clean glass marble or inverted fluoropolymer cone. Allow to digest at room temperature for at least 4 hours but preferably overnight.

A11.2.3 For coal or other elemental carbon-containing sample, dilute the digestate to the calibration mark (40 ± 0.5 mL) with 0.07 N BrCl solution and shake the flask to mix thoroughly. The addition of BrCl ensures that Hg will not re-adsorb to the carbon

particles, producing low recoveries. After dilution and shaking, allow the sample to settle overnight, or centrifuge prior to analysis. Be sure that all fine-grained particles are completely settled prior to analysis. This settling can be hastened by centrifuging for 20 minutes at 3000 RPM or by filtering the sample through a 0.45-mm filter. Analyze per Appendix Section A12.0.

A11.2.4 For other than coal or elemental carbon-containing samples, dilute the digestate to volume (40 ± 0.5 mL) with reagent water so that the meniscus is at the calibration line in the neck of the digestion vessel. Shake vigorously and allow settling until the supernatant is clear prior to analysis. Analyze per Appendix Section A12.0.

A11.3 The diluted digestates may be stored up to one year in glass or fluoropolymer containers prior to analysis, or for future re-analysis, if needed.

A12.0 Digestate Analysis

Diluted digestates are analyzed in a manner analogous to the analysis of standards by Method 1631B (see Section 10.0 of Method 1631B).

A12.1 Pipet a 0.01- to 5.0-mL volume of diluted digestate (Appendix Section A11.1.4, A11.2.3, or A11.2.4) directly into a bubbler containing approximately 100 mL of pre-purged $SnCl_2$-containing water.

Note: The volume of $SnCl_2$-containing water in the bubbler is not critical for the purpose of purging but is assumed to be 0.100 L for the purpose of calculating results (see Appendix Section A13.1.1).

A12.2 Purge the solution onto a gold trap for 20 minutes. These conditions allow measurement of Hg concentrations in the range of 1 – 5,000 ng/g (parts per billion).

A12.3 Change the $SnCl_2$-containing water in the bubbler after a total of 10 mL of digestate has been added. For example, if 2 digestate aliquots of 5 mL each have been added to 100 mL of fresh, pre-purged, $SnCl_2$-containing water, the $SnCl_2$-containing water must be changed and 100 mL of fresh, $SnCl_2$-containing water must be placed in the bubbler and purged for a minimum of 10 minutes prior to addition of another digestate aliquot.

A12.4 For samples known or expected to contain high Hg concentrations, further dilute (usually by a factor of 100) an aliquot of the diluted digestate with 0.02 N BrCl solution, and analyze a sub-aliquot.

A13.0 Data Analysis and Calculations

A13.1 Calculation of solid phase concentrations

A13.1.1 The analytical system in Method 1631B will give analytical results in units of area (or height) for the volume of diluted digestate analyzed. To calculate the solid phase concentration, use the following equation:

$$C_{Hg} = (A_s - A_{BB}) \times V \times d \times 0.1 / (CF_m \times v \times w)$$

where:

C_{Hg}	=	concentration of mercury in the sample (ng/g wet weight)
A_s	=	peak area (or height) for mercury in the sample
A_{BB}	=	peak area (or height) for the average of the bubbler blanks
V	=	volume of diluted digestate (mL) (Appendix Sections A11.1.4, A11.2.3, A11.2.4) = 40 mL
d	=	dilution factor(s); e.g., a factor of 100 in Appendix Section A12.4.
0.1	=	volume in bubbler (L) (Assumed per note in Appendix Section A12.1)
CF_m	=	mean CF from calibration (area (or height))/(ng/L) (Method 1613B Section 10.1.1.4)
v	=	digestate volume analyzed (mL) (Appendix Section A12.1)
w	=	sample weight (g) (Appendix Section A11.1.1 or A11.2.1)

A13.1.2 If desired, determine the moisture content of a sample aliquot and use the dry weight as "w" in the equation above.

A13.2 Reporting

A13.2.1 Report results as required in Method 1631B except use reporting levels and units appropriate to solid samples (ng/g).

A13.2.2 Reagent blank results and method blank results are reported separately and, if requested or required, are subtracted from sample Hg concentrations.

A14.0 Method Performance

A14.1 This Appendix was developed in a single laboratory and validated in a single laboratory. Performance data from these studies are summarized in Tables A2 through A7.

A15.0 References

1. *Development of Digestion Procedures for Determination of Mercury in Solid and Semi-solid Samples*, Frontier Geosciences, available from EPA Sample Control Center DynCorp I&ET, Alexandria, VA 22304 (703-461-2100; SCC@dyncorp.com).

2. *Single Laboratory Validation of Appendix to Method 1631*, June-July 1999, Brooks-Rand Ltd., EPA Sample Control Center Episode Number 6236, DynCorp I&ET, Alexandria, VA 22304 (703-461-2100; SCC@dyncorp.com).

Table A1. Quality control acceptance criteria.

Test	Acceptance Criteria	Spike concentration
Calibration linearity	<15% RSD of CF	0.5, 5, 25, 50, and 100 ng/L = 0.05, 0.5, 2.5, 5.0, and 10.0 ng
Calibration verification (VER)	77-123%	5 ng/L = 0.5 ng
MDL	0.48 ng/g(1)	0.8 ng/g
ML	1 ng/g(2)	0.05 ng (lowest calibration point)
MS/MSD recovery	70-130%	2x background or level in IPR/OPR, whichever is greater
MS/MSD precision	< 30% RPD	2x background or level in IPR/OPR, whichever is greater
IPR recovery	75-125%	4.0 ng
IPR precision	< 20% RSD	4.0 ng
OPR recovery	70 - 130%	4.0 ng
Method blank	< 0.4 ng or < 0.1x sample, whichever is greater	-

(1) See Appendix Table A4
(2) Assuming a 0.5 g sample

Table A2. Method performance for biological samples and CRMs digested using hot re-fluxing HNO_3 digestion plus BrCl dilution and Method 1631B. Blanks and spikes were on three different instruments, over a period of several weeks. Data provided by Frontier Geosciences.

Test/material	n	Hg concentration (ng/g; ppb)			Performance
		mean	SD	certified(1)	
Method blanks	24	0.25	0.13	--	DL = 0.33 ng/g(2)
2.0 ng/g matrix spike	28	1.90(3)	0.22	2.00	95% rec.; 11% RSD
IRM-007 (sludge)	3	3,680	150	3,150	117% rec.; 4% RSD
DOLT-2 (fish liver)	7	2,164	161	2,140	101% rec.; 7%RSD
DORM-2 (fish muscle)	11	4,682	386	4,640	101% rec.; 8% RSD
NIST-2796 (mussel)	12	60.4	6.7	61.0	99% rec.; 11% RSD

(1) value provided by supplier of reference material
(2) detection limit = 2.5 x SD for 24 method blanks (2.5 = student's t @ 23 degrees of freedom)
(3) net recovered; background concentration (chicken breast) was 0.41 ng/g

Table A3. Method performance for geological samples and CRMs using cold aqua regia digestion and Method 1631B. Data provided by Frontier Geosciences.

Test/material	n	Hg concentration (ng/g; ppb)			Performance
		mean	SD	certified[1]	
Method blanks	23	0.045	0.037	--	DL = 0.09 ng/g[2]
0.5 ng/g blank spike	8	0.465	0.079	0.50	MDL = 0.24 ng/g
NIST-2709 (soil)	9	1393	111	1,400	100% rec.; 8% RSD
NIST-1633 (fly ash)	2	163	3.0	160	102% rec.; 2% RSD
NIST-2710 (soil)	3	30888	2,692	32,610	95% rec.; 9% RSD
IAEA-356 (sediment)	1	7152	--	7.62	94% rec.
PACS-1 (sediment)	1	4402	--	4,540	97% rec.
NIST-1630 (coal)	3	108	5.0	127*	85% rec.; 5% RSD
NIST-1632 (coal)	5	79.3	7.0	78	102% rec.; 9% RSD

(1) value provided by supplier of reference material
(2) detection limit = 2.5 x SD for 24 method blanks (2.5 = student's t @ 23 degrees of freedom)

Table A4. Results of MDL Set 2 analyses (spiked with 0.24 ng; ~0.8 ng/g). Data provided by Brooks-Rand.

Rep	Sample Mass (g)	Measured Hg (ng)	Blank-corrected Hg (ng)	Sample Concentration (ng/g)*
1	1.03	0.39	0.13	0.41
2	1.29	0.50	0.23	0.71
3	1.25	0.48	0.22	0.73
4	1.36	0.53	0.26	0.78
5	1.28	0.49	0.23	0.68
6	1.01	0.39	0.12	0.40
7	1.17	0.45	0.19	0.61
				Average: 0.62 ng/g **Std. Dev.: 0.15 ng/g**
				MDL = 0.48

***blank corrected**

Table A5. Analyses of spiked catfish samples (spiked with 17 ng of Hg). Data provided by Brooks-Rand

Replicate	Sample Mass (g)	Measured Hg (ng)	Recovered Hg (ng)*	%Recovery*
1	1.02	30.1	17.1	99.3
2	1.21	31.6	16.2	93.7
3	0.97	31.4	19.0	110.2
4	1.17	23.4	8.41	48.7
*background corrected				**Average: 88%** **Std. Dev.: 27%**

Table A6. Analyses of spiked powdered egg yolk (spiked with 2.9 ng of Hg). Data provided by Brooks-Rand.

Replicate	Sample Mass (g)	Measured Hg (ng)	Recovered Hg* (ng)	%Recovery
1	1.00	3.49	2.34	80.6
2	1.06	3.16	1.94	67
3	1.04	2.56	1.37	47.1
4	1.08	3.75	2.50	86.2
*background corrected				**Average: 70%** **Std. Dev.: 17%**

EPA-821-R-01-013
January 2001

Appendix to Method 1631
Total Mercury in Tissue, Sludge, Sediment, and Soil by Acid Digestion and BrCl Oxidation

Appendix K
Laboratory SOPs

Microbac SOP
Methyl Mercury Draft, Revision 0

Methyl Mercury in Water Using Distillation, Aqueous Ethylation, Purge and Trap, and CVAFS

STANDARD OPERATING PROCEDURE FOR METHYL MERCURY IN WATER USING DISTILLATION, AQUEOUS ETHYLATION, PURGE AND TRAP, AND CVAFS

Revision Author: Matthew Sheehy

DRAFT

This SOP is effective upon signed approval by the following:

Metals Supervisor	Date
Quality Assurance Director	Date

DISCLAIMER: This SOP has been developed for use at the Microbac Laboratories, Merrillville, Indiana facility. It is intended for use by trained analysts. As written, this SOP may not be specifically applicable to the activities of other organizations.

Last Review Date:

No Changes Needed

Approved By:

1.0 TABLE OF CONTENTS

1.0 Table of Contents 2
2.0 Scope and Application 3
3.0 Summary 3
4.0 Definitions 3
5.0 Interferences 5
6.0 Safety 7
7.0 Equipment and Supplies 7
8.0 Reagents and Standards 13
9.0 Sample Collection, Preservation, and Holding Times 16
10.0 Quality Control 16
11.0 Calibration and Standardization 20
12.0 Procedure 22
13.0 Calculations and Data Handling 25
14.0 Method Performance 27
15.0 Pollution Prevention 27
16.0 Waste Management 27
17.0 References 27
18.0 Tables, Forms, Checklists, and Other Attachments 28

DRAFT

2.0 SCOPE AND APPLICATION

2.1 This procedure uses distillation, aqueous ethylation, purge and trap, desorption, and cold-vapor atomic fluorescence spectrometry (CVAFS) for the determination of methyl mercury (CH_3Hg). This procedure is applicable to the analysis of aqueous samples. The applicable analytes, detection limits and routine reporting limits (PQL) are listed at the Limits tab of the applicable test codes in LIMS.

3.0 SUMMARY

3.1 A 100-2000 mL sample is collected directly into specially cleaned, pretested, fluoropolymer or borosilicate bottle(s) using sample handling techniques specially designed for collection of metals at trace levels (Reference 6).

3.2 For dissolved CH_3Hg, samples are filtered through a 0.45-µm capsule filter.

3.3 Fresh water samples are preserved by adding 4 mL/L of pretested 11.6 M HCl, while saline samples ([Cl-] > 500 ppm) are preserved with 2 mL/L of 9 M H2SO4 solution, to avoid distillation interferences caused by excess chloride.

3.4 Prior to analysis, a 45 mL sample aliquot is placed in a specially designed fluoropolymer distillation vessel, and 35 mL of the water is distilled into the receiving vessel at 125°C under N2 flow.

3.5 After distillation, the sample is adjusted to pH 4.9 with an acetate buffer and ethylated in a closed purge vessel by the addition of sodium tetraethyl borate ($NaBEt_4$).

3.6 The ethyl analog of CH_3Hg, methylethyl mercury ($CH_3CH_3CH_2Hg$), is separated from solution by purging with N_2 onto a graphitic carbon (Carbotrap®) trap.

3.7 The trapped methylethyl mercury is thermally desorbed from the Carbotrap® trap into an inert gas stream that carries the released methylethyl mercury first through a pyrolytic decomposition column, which converts organo mercury forms to elemental mercury (Hg), and then into the cell of a cold-vapor atomic fluorescence spectrometer (CVAFS) for detection.

3.8 This procedure is based on the reference methods listed in section 17 of this document. This procedure contains no significant deviations {the following deviations} from the reference methods.

4.0 DEFINITIONS

4.1 A list of definitions is in the Quality Assurance Plan. In addition to the terms defined in the QAP, the terms below, if any, are specific and critical to this procedure.

4.2 Ambient Water – Waters in the natural environment (e.g., rivers, lakes, streams, and other receiving waters), as opposed to effluent discharges.

DRAFT

4.3 Apparatus – Throughout this method, the sample containers, sampling devices, instrumentation, and all other materials and devices used in sample collection, sample processing, and sample analysis that come in contact with the sample and therefore require careful cleaning will be referred to collectively as the Apparatus.

4.4 Dissolved methyl mercury – All distillable CH_3Hg forms and species found in the filtrate of an aqueous solution that has been filtered through a 0.45 micron filter.

4.5 Intercomparison Study – An exercise in which samples are prepared and split by a reference laboratory, then analyzed by one or more testing laboratories and the reference laboratory. The intercomparison, with a reputable laboratory as the reference laboratory, serves as the best test of the precision and accuracy of the analyses at natural environmental levels.

4.6 Methyl mercury – All acid-distillable Hg, which, upon reaction with $NaBEt_4$ yields methylethyl mercury. This includes, but is not limited to, CH_3Hg+, strongly organo-complexed CH_3Hg compounds, adsorbed particulate CH_3Hg, and CH_3Hg bound in microorganisms. In freshly collected samples, dimethyl mercury ($(CH_3)_2Hg$) will not be recovered as CH_3Hg, but in samples which have been acidified for several days, most $(CH_3)_2Hg$ has broken down to CH_3Hg. In this method, CH_3Hg and total recoverable CH_3Hg are synonymous.

4.7 May – This action, activity, or procedural step is allowed but not required.

4.8 May not – This action, activity, or procedural step is prohibited.

4.9 Minimum Level (ML) – The lowest level at which the entire analytical system must give a recognizable signal and acceptable calibration point for the analyte. It is equivalent to the concentration of the lowest calibration standard, assuming that all method-specified sample weights, volumes, and cleanup procedures have been employed. The ML is calculated by multiplying the MDL by 3.18 and rounding the result to the number nearest to (1, 2, or 5) x 10n, where n is an integer.

4.10 Must – This action, activity, or procedural step is required.

4.11 Quality Control Sample (QCS) – A sample containing CH_3Hg at known concentrations. The QCS is obtained from a source external to the laboratory, or is prepared from a source of standards different from the source of calibration standards. It is used as an independent check of instrument calibration.

4.12 Reagent Water – Prepared from 18 MS ultrapure deionized water starting from a prepurified source. Reagent water is used to wash bottles, as source water for trip and field blanks, and in the preparation of standards and reagents.

4.13 Sample set – Samples collected from the same site or, if for compliance monitoring, from a given discharge. This term applies to samples collected at the same time, to a maximum of ten samples.

4.14 Shall – This action, activity, or procedure is required.

DRAFT

4.15 Should – This action, activity, or procedure is suggested, but not required.

4.16 Stock Solution – A solution containing an analyte that is prepared from a reference material traceable to EPA, NIST, or a source that will attest to the purity and authenticity of the reference material.

4.17 Ultraclean Handling – A series of established procedures designed to ensure that samples are not contaminated for CH_3Hg during sample collection, storage, or analysis.

5.0 INTERFERENCES

5.1 Preventing ambient water samples from becoming contaminated during the sampling and analysis process constitutes one of the greatest difficulties encountered in trace metals determinations. Over the last two decades, marine chemists have come to recognize that much of the historical data on the concentrations of dissolved trace metals in seawater are erroneously high because the concentrations reflect contamination from sampling and analysis rather than ambient levels. Therefore, it is imperative that extreme care be taken to avoid contamination when collecting and analyzing ambient water samples for trace metals.

5.2 Potential sources of trace metal contamination include:

5.2.1 *Metallic or metal-containing labware* (e.g., talc gloves that contain high levels of zinc), containers, sampling equipment, reagents, and reagent water; improperly cleaned and stored equipment, labware, and reagents; and atmospheric inputs such as dirt and dust.

5.2.2 *Human contact* can be a source of trace metal contamination. For example, it has been demonstrated that dental work (e.g., mercury amalgam fillings) in the mouths of laboratory personnel can contaminate samples that are directly exposed to exhalation.

5.2.3 *Samples*—Significant laboratory or instrument contamination may result when untreated effluents, in-process waters, landfill leachates, and other samples containing high concentrations of Hg or CH_3Hg are processed and analyzed. This method is not intended for application to these samples, and samples containing high concentrations of trace metals should not be permitted into the clean room and laboratory dedicated for processing trace metals samples.

5.2.4 *Carryover*—Contamination may occur when a sample containing a low concentration of CH_3Hg is processed immediately after a sample containing a relatively high concentration. When an unusually concentrated sample is encountered, an ethylation blank should be analyzed immediately following the sample to check for carryover. Samples known or suspected to contain the lowest concentration of CH_3Hg should be analyzed first followed by samples containing higher levels.

DRAFT

5.2.5 *Indirect contact*—Apparatus that may not directly come in contact with the samples may still be a source of contamination. For example, clean tubing placed in a dirty plastic bag may pick up contamination from the bag and subsequently transfer the contamination to the sample. Therefore, it is imperative that every piece of the Apparatus that is directly or indirectly used in the collection, processing, and analysis of samples be thoroughly cleaned.

5.2.6 *Airborne particulate matter*—Airborne particles are less obvious substances capable of contaminating samples. Samples may be contaminated by airborne dust, dirt, particles, or vapors from unfiltered air supplies; nearby corroded or rusted pipes, wires, or other fixtures; or metal-containing paint. Whenever possible, sample processing and analysis should occur as far as possible from sources of airborne contamination.

5.2.7 *Hydrochloric acid* -- Distillation of CH_3Hg from solution requires a carefully controlled level of HCl in solution. Distillation will not be quantitative if too little HCl is added, but too much HCl results in co-distillation of HCl fumes, which interfere with the ethylation procedure. Therefore fresh water samples must be preserved only with between 0.3% and 0.5% (v/v) 11.6 M HCl, and salt water samples with between 0.1% and 0.2% (v/v) 9 M H_2SO_4.

5.2.8 *Nitric acid* – Samples preserved with nitric acid (HNO_3) cannot be analyzed for CH_3Hg as the analyte is partially decomposed in the distillation step by this reagent.

5.2.9 *Carrier gas* -- The fluorescent intensity is strongly dependent upon the presence of molecular species in the carrier gas that can cause "quenching" of the excited atoms. The Carbotrap® trap eliminates quenching due to trace gases, but it still remains the analyst's responsibility to ensure high purity inert carrier gas and a leak-free analytical train. In some rare cases (such as oil polluted water) low molecular weight organic compounds may purge with the methylethyl mercury and collect on the Carbotrap® trap, subsequently resulting in signal quenching during elution. Such cases are best treated by sample dilution prior to distillation.

5.2.10 *High inorganic mercury concentrations* – Recent investigations have shown that a positive artifact is possible with the distillation procedure in cases where high inorganic Hg concentrations are present. In natural waters, approximately 0.01 to 0.05% of the ambient inorganic Hg in solution may be methylated by ambient organic matter during the distillation step. In most waters, where the percent CH_3Hg is 1-30% of the total, this effect is trivial. However, the analyst should be aware that in inorganic Hg contaminated waters, the fraction CH_3Hg can be <1% of the total, and so flagging of the data (as representing a maximum estimate of CH_3Hg concentration) may be warranted. In samples with high levels of divalent mercury (Hg(II)), solvent extraction may be preferable to distillation.

5.2.11 *Gold dust* – Great care should be taken to avoid contaminating the laboratory with gold dust. This could cause interferences with the analysis if gold becomes incorporated into the samples or equipment. The gilding procedure should be done in a remote laboratory if at all possible.

DRAFT

6.0 SAFETY

6.1 Consult the current revision of the Chemical Hygiene Plan. Requirements for the use of personal protective equipment (e.g. safety glasses, lab coats, gloves) as well as other area-specific safety requirements (e.g. gas cylinders) and MSDS sheets are addressed in the CHP.

6.2 Confinement—Isolated work areas posted with signs, segregated glassware and tools, and plastic absorbent paper on bench tops will aid in confining contamination.

6.3 Waste handling—Good technique includes minimizing contaminated waste. Plastic bag liners should be used in waste cans. Janitors and other personnel must be trained in the safe handling of waste.

6.4 Decontamination of personnel—Use any mild soap with plenty of scrubbing action.

6.5 Decontamination of glassware, tools, and surfaces—Activated carbon powder will adsorb CH3Hg, eliminating the possible volatilization of CH3Hg. Satisfactory cleaning may be accomplished by dusting a surface lightly with activated carbon powder, then washing with any detergent and water.

6.6 Laundry—Clothing known to be contaminated should be collected in plastic bags. Persons who convey the bags and launder the clothing should be advised of the hazard and trained in proper handling. If the launderer knows of the potential problem, the clothing may be put into a washer without contact. The washer should be run through a cycle before being used again for other clothing.

6.7 Wipe tests—A useful method of determining cleanliness of work surfaces and tools is to wipe the surface with a piece of filter paper. Extraction and analysis by this method can achieve a limit of detection of less than 1 ng per wipe. Less than 0.1 µg per wipe indicates acceptable cleanliness; anything higher warrants further cleaning. More than 10 µg on a wipe constitutes an acute hazard, requires prompt cleaning before further use of the equipment or work space, and indicates that unacceptable work practices have been employed.

DRAFT

7.0 EQUIPMENT AND SUPPLIES

The following is a list of materials needed to perform the steps of this procedure as written. See the reference method(s) for equipment and supply specifications.

7.1 All volumetric glassware used shall be ASTM Class A. Class B glassware must be verified for accuracy on an annual basis and labeled with an appropriate correction.

7.2 **Analytical balance** – capable of weighing to the nearest 0.01 g.

7.3 **Borosilicate or fluoropolymer glass sample collection bottles**, 125- to 1000 mL, with fluoropolymer or fluoropolymer-lined cap.

7.3.1 New bottles are cleaned by heating to 65-75°C in 4 N HCl for at least 48 h. The bottles are cooled, rinsed three times with reagent water, and filled with reagent water containing 1% HCl. These bottles are capped and placed in a clean oven at 60-70°C overnight. After cooling, they are rinsed three more times with reagent water, filled with reagent water containing 0.4% (v/v) HCl, capped, and placed in a mercury-free class 100 clean bench until the outside of the bottle is dry. The caps are then tightened with a wrench and the bottles are double-bagged in new polyethylene zip-type bags. The capped bottles are stored in wooden or plastic boxes until use.

7.3.2 To avoid long-term accumulation of Hg or CH_3Hg on the bottle walls due to trace organic coatings, used bottles are filled with reagent water containing 0.02 N BrCl solution and allowed to stand over night. The BrCl is neutralized with the addition of 0.2 mL of 20% NH_2OH solution. The bottles are then cleaned exactly as in the previous section, except that they soak only 6-12 h in hot 4 N HCl.

7.3.3 Bottle blanks should be analyzed to verify the effectiveness of the cleaning procedures.

7.4 **Cold vapor atomic fluorescence spectrometer** (CVAFS) – The system must consist of the following:

7.4.1 Low-pressure 4-W mercury vapor lamp

7.4.2 Far UV quartz flow-through fluorescence cell—12 mm x 12 mm x 45 mm, with a 10-mm path length (NSG Cells, or equivalent).

7.4.3 UV-visible photomultiplier (PMT)—sensitive to < 230 nm. This PMT is isolated from outside light with a 253.7-nm interference filter (Oriel Corp., or equivalent).

7.4.4 Photometer and PMT power supply (Oriel Corp., or equivalent), to convert PMT output (nanoamp) to millivolts.

7.4.5 Black anodized aluminum optical block—holds fluorescence cell, PMT, and light source at perpendicular angles, and provides collimation of incident and fluorescent beams (Frontier Geosciences Inc., or equivalent).

7.4.6 Flowmeter, with needle valve capable of keeping the carrier gas at a reproducible flow rate of 30 mL/min

7.4.7 Ultra high-purity argon (grade 5.0)

7.5 **Distillation unit** – The distillation unit is a custom made temperature controlled aluminum block heater, as shown schematically in Figure 3 (Frontier Geosciences Inc., or equivalent).

7.5.1 Heating block insulation – Each heating block is encased first in refractory spun rock insulation (1 inch thickness) and then an exterior wood shell for rigidity.

DRAFT

7.5.2 Each heating block (10 cm wide x 20 cm long x 15 cm high) is bored with five 31 mm diameter holes (evenly spaced), 120 mm deep. A 3/8 inch diameter hole is bored to 90% of the block length, perpendicular to and behind the distillation tube holes, to accommodate a cylindrical heating element. A 2 mm diameter hole is bored parallel to the heating element hole, and 2 cm above it, to accommodate the temperature sensor.

7.5.3 Heating element—Each heating block is equipped with a 750 watt cylindrical heating element, 6 inches long by 3/8 inch diameter (Omega Inc.), immobilized in its respective hole by a dab of silicone glue.

7.5.4 Type J thermocouple probe—Each heating block is equipped with a type J thermocouple probe immobilized in its respective hole by a dab of silicone glue.

7.5.5 Digital temperature controller—The heating element and thermocouple are connected to a digital temperature controller.

7.5.6 Fluoropolymer vials with caps—The distillation unit is designed to accommodate 60 mL fluoropolymer vials (part number 0202, Savillex, or equivalent). The original caps are used to close the vials when distillate is to be stored until analysis.

7.5.6.1 For each distillation, two identical vials are needed: a distillation vessel and a receiving vessel. For convenience, each vial should be engraved with a line at 40.0 mL (obtained by weighing 40 g of water in the vial), and a unique identification number, both on the vial and the cap.

7.5.6.2 Fluoropolymer vials are acid cleaned initially as described for other fluoropolymer ware and stored filled with 0.5% HCl. After use, receiving vials are rinsed with reagent water and filled with 0.5% HCL. The tubing is looped around the cap as described in Section 6.7.7.1, and the vials are placed in a 70°C (± 5°C) oven overnight. Cleaning is the same for the distillation vials, with the exception that first the vials, caps, and tubing are thoroughly scrubbed with an alkaline detergent and test tube brush to remove any residues from the samples.

7.5.7 Purge caps—The standard caps on the fluoropolymer vials are replaced with purge caps for distillation purposes.

7.5.7.1 Fluoropolymer tubing—each purge cap is threaded with a piece of 1/8 inch fluoropolymer tubing, approximately 30-40 cm long. One end is pulled through one of the holes in the cap, down to a length that will allow it to reach the bottom of the distillation vial when the vial is screwed onto the cap. The bottom end of this tubing is cut at a 45° angle. The outside end of the tubing is cut perpendicularly and is looped around and inserted into the second cap hole when not in use (to keep the system closed and clean).

7.5.8 Aluminum distillation cover—The cover for the heating block consists of a 5 cm high aluminum block of the same cross section as the heating block (10

DRAFT

cm wide x 20 cm long), which has been milled out completely except for a 0.5 cm shell all around. In this lid is placed a series of 5 slots, 0.5 cm wide by 3 cm high, on each of the long sides, to allow passage of the distillation tubing in and out of the distillation vessels. **NOTE**: *It is very important that the heating block have an aluminum top covering the vessels, to avoid condensation and refluxing of the sample in the distillation vessels.*

7.5.9 Polyethylene container—Distillate is received and cooled in a fluoropolymer receiving vial supported in an ice bath in a polyethylene container. A box approximately 15 cm wide x 25 cm long x 10 cm high is a convenient container, and holes to accommodate the receiving vials can be cut into the lid of each box. Suitable boxes are generally available at sundries stores as storage containers.

7.5.10 Rotometer/needle valve—Five needle valve/rotometer (0-300 mL/min N_2) assemblies are required, one for each distillation vessel in the heating block. These rotometers can be mounted in banks of 5 for each distillation block, with all rotometers connected to a common gas manifold.

7.5.10.1 Fluoropolymer tubing–Inert gas (N_2 or Ar at 0.5-1 atm) is brought from the regulator to the manifold and from the rotometer outlets to the distillation vials by 1/8 inch fluoropolymer tubing.

7.5.11 The entire distillation set-up can be mounted on a stepped structure or shelving unit, such that the banks of rotometers are on the top and easily adjustable. Below the rotometers are the distillation blocks, and lower still, the ice baths for the receiving vessels.

7.6 **Filter**—0.45-µm, 15-mm diameter capsule filter (Gelman Supor 12175, or equivalent)

7.7 **Isothermal gas chromatography (GC) system**:

7.7.1 Carbotrap® traps—10-cm x 6.5-mm o.d. x 4-mm i.d. quartz tubing. The tube is filled with 3.4 cm of 30/45 mesh Carbotrap® graphitic carbon adsorbant (Supelco, Inc., or equivalent). The ends are plugged with silanized glass wool. At least six are needed.

7.7.1.1 Traps are fitted with 6.5-mm i.d. fluoropolymer friction-fit sleeves for making connection to the system. When traps are not in use, fluoropolymer end plugs are inserted in trap ends to eliminate contamination.

7.7.1.2 Because the direction of flow is important in this analysis, the crimped end of the Carbotrap® trap will be referred to as “side A,” while the uncrimped end will be referred to as “side B.”

7.7.1.3 Heating of Carbotrap® traps—To desorb CH_3Hg collected on a trap, heat for 45 sec to 450-500EC (a barely visible red glow when the room is darkened) with a coil consisting of 75 cm of 24-gauge Nichrome wire at a

DRAFT

potential of 16-20 vac. Potential is applied and finely adjusted with an autotransformer.

7.7.2 Timer—The heating interval is controlled by a timer-activated 120-V outlet, into which the heating coil autotransformer is plugged.

7.7.3 Isothermal GC—Consists of two parts, a custom fabricated packed GC column, and a custom fabricated constant temperature oven.

7.7.3.1 The column is 1 m long, made from 0.25 inch OD by 4 mm ID borosilicate glass GC column tubing. The column is formed into an 8 cm diameter coil, with 15 cm straight extensions from each end. The column is silanized, packed in the coiled portion with 60/80 mesh 15% OV-3 on acid-washed Chromasorb W, and then conditioned under inert gas flow at 200°C. A column meeting these specifications may be custom fabricated (Supelco Inc., or equivalent).

7.7.3.2 The GC oven consists of a 500-watt aluminum jacketed heating mantle, fitted with a custom machined fluoropolymer lid (14 cm OD by 1 cm thick). The lid is attached with stainless steel screws and contains three threaded holes (0.25 inch female NPT) in a triangular pattern in the top. The spacing of the holes conforms exactly to the spacing between the two 15 cm glass extensions of the GC column.

7.7.3.3 Fluoropolymer fittings, with 0.25-inch male NPT threads on the bottom and 0.25-inch compression fittings on top, are placed into the threaded holes. The GC column is secured into the oven by passing the glass extensions through two of the fluoropolymer fittings, so that 3 cm of the glass extensions protrude from the top, and tightening the compression fittings. The fluoropolymer lid holding the GC column is then screwed to the top of the oven.

7.7.3.4 Temperature feedback control (110 ± 2°C) is achieved through a thermocouple temperature controller. The oven is plugged into the controller and the thermocouple probe is inserted through the third fluoropolymer fitting in the lid, such that the sensor is located near the center of the GC coil.

7.7.3.5 Several research groups have successfully interfaced the Carbotrap®/CVAFS system directly to a commercial gas chromatograph. The use of capillary column GC will result in better peak separation, although at higher cost.

7.7.4 Pyrolytic column—The output from the GC oven is connected directly to a high temperature column to decompose eluted organo-mercurial compounds to Hg_o. The output of the pyrolytic column is connected to the inlet of the CVAFS system.

7.7.4.1 The column consists of a 20-cm length of quartz tubing, packed over the central 10 cm with quartz wool.

DRAFT

7.7.4.2 The column is heated to orange heat (~ 700°C) by a 1 m length of 22 gauge Nichrome wire, tightly wrapped around the quartz wool packed portion of the tube. The temperature of the coil is adjusted by visual inspection of the color, using a 0-120 volt autotransformer.

7.8 **Methyl mercury purging system**

7.8.1 Flow meter/needle valve—capable of controlling and measuring gas flow rate to the purge vessel at 350 (± 50) mL/min.

7.8.2 Fluoropolymer fittings—connections between components and columns are made using 6.4-mm o.d. fluoropolymer tubing and fluoropolymer friction-fit or threaded tubing connectors. Connections between components requiring mobility are made with 3.2-mm o.d. fluoropolymer tubing because of its greater flexibility.

7.8.3 Cold vapor generator (bubbler)—200 mL borosilicate glass (15 cm high x 5.0 cm diameter) with standard taper 24/40 neck, fitted with a sparging stopper having a coarse glass frit that extends to within 0.2 cm of the bubbler bottom (Frontier Geosciences, Inc., or equivalent).

7.9 **Oven**, stainless steel, in class 100 clean area, capable of maintaining ± 5°C in the 60-70°C temperature range.

7.10 **Panel immersion heater**, 500-W, all-fluoropolymer coated, 120 vac (Cole Parmer H-03053-04, or equivalent)

7.11 **Peristaltic pump**—115-V a.c., 12-V d.c., internal battery, variable-speed, single-head (Cole-Parmer, portable, "Masterflex L/S," Catalog No. H-07570-10 drive with Quick Load pump head, Catalog No. H-07021-24, or equivalent)

7.12 **Pipettors**—All-plastic pneumatic fixed-volume and variable pipettors in the range of 10-µL to 5.0 mL.

7.13 **Recorder**—Any multi-range millivolt chart recorder or integrator with a range compatible with the CVAFS is acceptable. By using a two pen recorder with pen sensitivity offset by a factor of 10, the dynamic range of the system is extended to 10^3.

7.14 **Tubing**—styrene/ethylene/butylene/silicone (SEBS) resin for use with peristaltic pump, approx 3/8-in i.d. by approximately 3 ft (Cole-Parmer size 18, Catalog No. G-06464-18, or approximately 1/4-in i.d., Cole-Parmer size 17, Catalog No. G-06464-17, or equivalent).

7.14.1 Tubing is cleaned by soaking in 5-10% HCl solution for 8-24 h. It is rinsed with reagent water on a clean bench in a clean room and dried on the clean bench by purging with metal-free air or nitrogen. After drying, the tubing is double-bagged in clear polyethylene bags, serialized with a unique number, and stored until use.

7.15 **Vat**: 100-200L, HDPE

DRAFT

7.15.1 The vat is half filled with 4N HCl in reagent water.

8.0 REAGENTS AND STANDARDS

8.1 All reagents used must be analytical reagent (AR) grade or higher. All standards must be traceable to NIST, when available. Certificates of traceability must be obtained from the manufacturer. All reagents and standards must be documented in the appropriate preparation logbook. Refer to the requirements in the Labeling of Standards, Reagents, Digestates and Extracts SOP.

8.2 Reagents

All stock reagents are stored in the Metals Cooler unless otherwise noted. Unless otherwise noted, prepared reagents are stored in {container type and location}, and prepared on an as needed basis.

8.2.1 Lab pure water (DI water): Analyte free water is prepared as described in the Quality Assurance Plan. DI water may be obtained from any of the designated taps throughout the lab. Reagent water—18-MΩ minimum, ultrapure deionized water starting from a prepurified (distilled, reverse osmosis, etc.) source. Water should be monitored for Hg, especially after ion exchange beds are changed.

8.2.2 Air—It is very important that the laboratory air be low in both particulate and gaseous Hg. Ideally, Hg work should be conducted in a new laboratory with mercury-free paint on the walls. Outside air, which is very low in Hg, should be brought directly into the class 100 clean bench air intake. If this is impossible, air coming into the clean bench can be cleaned for Hg by placing a gold-coated cloth prefilter over the intake.

8.2.2.1 Gold-coated cloth filter: Soak 2 m^2 of cotton gauze in 500 mL of 2% gold chloride solution at pH 7. In a hood, add 100 mL of 30% $NH_2OH@HCl$ solution, and homogenize into the cloth with gloved hands. The material will turn black as colloidal gold is precipitated. Allow the mixture to set for several hours, then rinse with copious amounts of reagent water. Squeeze-dry the rinsed cloth, and spread flat on newspapers to air-dry. When dry, fold and place over the intake prefilter of the laminar flow hood.

8.2.3 APDC solution, 1% -- To 100 mL of reagent water, add 1.0 g of reagent grade APDC (ammonium pyrrolidine dithiocarbamate), and shake to dissolve. The solution is purified by extraction with three 10 mL aliquots of methylene chloride.

8.2.4 Acetate buffer, 2M – 2 moles of reagent grade sodium acetate (272 g) and 2 moles of reagent grade glacial acetic acid (118 mL) dissolved in reagent water to give a final volume of 1.0 L. To purify the buffer of traces of CH_3Hg, add 0.5 mL of 1% $NaBEt_4$ and purge the solution overnight with Hg-free N_2 or Ar. This solution has an indefinite lifetime when stored in a fluoropolymer bottle at room temperature.

8.2.5 Glacial acetic acid—Reagent grade Source:

DRAFT

8.2.6 Hydrochloric acid—Trace-metal purified reagent HCl containing less than 5 pg/mL Hg. CH_3Hg is not stable in concentrated acid, so the acid does not need to be tested for CH_3Hg. Source:

8.2.7 Methyl mercuric chloride(s)—A 5-g bottle of methyl mercuric chloride (s), reagent grade (Strem Chemical, or equivalent). Source:

8.2.8 Sodium tetraethyl borate, 1% – This reagent is purchased in 1.0-g air-sealed bottles.

8.2.8.1 One hundred milliliters of 2% KOH in reagent water is prepared in a fluoropolymer bottle and chilled to 0°C. The bottle of $NaBEt_4$ is rapidly opened and approximately 5 mL of the KOH solution poured in. The reagent bottle is capped and shaken to dissolve the $NaBEt_4$. This is poured into the 100 mL bottle of KOH solution, and shaken to mix. Immediately, the 1% $NaBEt_4$ solution in 2% KOH is poured into fifteen 7 mL fluoropolymer bottles, which are capped and placed in a low temperature freezer. For use, one of these bottles is removed and thawed until it starts to form a liquid layer. The reagent is then used until just before all of the ice is melted. Usually this lasts about 3 h if the bottle is placed in the refrigerator between uses.

8.2.8.2 *It is imperative that this reagent be exposed to air a minimum length of time. Thus, when removing reagent, open and close the lid quickly and tightly!* Frozen bottles of NaBEt4 will keep for at least one week. Do not use $NaBEt_4$ solid or solutions if they have a yellow color.

8.2.8.3 $NaBEt_4$ is toxic, gives off toxic gases (triethylboron), and is spontaneously combustible. To discard unused portions of ethylating agent and emptybottles, place into a large beaker of 1N HCl in the hood. Triethylboron will bubble off to the air where it is eventually oxidized to harmless boric acid. Leave the acid beaker in the hood indefinitely, or boil down to 1/2 volume to destroy residues before discarding as any acid waste. (Strem Chemical, or equivalent) Source:

8.2.9 Sulfuric acid—Trace-metal purified reagent H_2SO_4 containing less than 5 pg/mL Hg. CH_3Hg is not stable in concentrated acid, so the acid does not need to be tested for CH_3Hg. Source:

8.2.10 IPR and OPR solutions—Using the working CH_3Hg standard prepare IPR and OPR solutions at a concentration of 0.5 ng/L as Hg in reagent water.

8.2.11 Nitrogen—Grade 4.5 (standard laboratory grade) nitrogen that has been further purified by the removal of Hg using a gold-coated sand trap.

8.2.12 Argon—Grade 5.0 (ultra high-purity, GC grade) that has been further purified by the removal of Hg using a gold-coated sand trap.

8.2.13 Gold-coated sand trap—The trap is made from 10-cm x 6.5-mm o.d. x 4-mm i.d. quartz tubing. The tube is filled with 3.4 cm of gold-coated 45/60 mesh quartz sand (Frontier Geosciences Inc., or equivalent). The ends are plugged

DRAFT

with quartz wool. Traps are fitted with 6.5-mm i.d. fluoropolymer friction-fit sleeves for connection to the system.

8.3 Standards

All stock standards are stored in the metals cooler unless otherwise noted. Unless otherwise noted, prepared standards are stored in {container type and location}, and prepared on an as needed basis.

8.3.1 Stock methyl mercury standard—Either procure certified CH_3Hg solution (Frontier Geosciences Inc., or equivalent) or prepare the stock solutions in the laboratory. Dissolve the contents of an entire 5-g bottle of methyl mercuric chloride in reagent water containing 0.5% (v/v) glacial acetic acid and 0.2% (v/v) HCl in a fluoropolymer bottle. This solution contains 4000-5000 mg/L CH_3Hg as Hg. It does not have a specific titre because, due to the contamination danger, the methyl mercuric chloride is not weighed. The stock solution has an indefinite lifetime when stored in an amber glass bottle with a fluoropolymer lid at room temperature. Do not make or keep this concentrated stock solution in the trace mercury laboratory.

8.3.2 ***NOTE:*** *Making a CH_3Hg standard rather than purchasing one requires the laboratory to have available the technology to perform analyses with Method 1631: Mercury in Water by Oxidation, Purge and Trap, and Cold Vapor Atomic Fluorescence Spectrometry. Total Hg and labile Hg (II) determinations, made with Method 1631, are necessary to accurately determine the CH_3Hg concentration of the standards. Additionally, laboratories must be cautioned against assuming that purchased CH_3Hg stock solution will remain constant in concentration. Purchased stock solution has been seen to degrade occasionally, in one case from 1000 mg/L to 4 mg/L.*

8.3.3 Secondary methyl mercury standard – Dilute 1.00 mL of stock solution (B) to 1000.0 mL with reagent water containing 0.5% (v/v) glacial acetic acid and 0.2% (v/v) HCl. This solution contains approximately 4-5 mg/L (5.00 ng/mL) CH_3Hg as Hg. The exact CH_3Hg titre is determined as indicated in Sections 7.11.1-7.11.4. The secondary CH_3Hg standard solution has been observed to maintain its titre over a year when stored in a fluoropolymer bottle in the refrigerator.

8.3.3.1 Dilute the secondary standard 1:10 with concentrated BrCl solution (0.100 mL of secondary stock solution added to 0.900 mL BrCl in a small FEP vial). Allow the solution to oxidize for at least 4 h. The total Hg in the dilution may then be analyzed using dual amalgamation/CVAFS, by comparison to a dilution of NIST-3133 (as in Method 1631). A mean of at least seven replicate analyses of the secondary stock solution is necessary to accurately quantify the total Hg concentration of the solution.

8.3.3.2 Analyze the secondary standard for labile Hg(II) using Method 1631 by directly reducing an aliquot of standard solution with $SnCl_2$, but without

DRAFT

prior BrCl oxidation as performed in Section 7.11.1. At least two determinations of labile Hg(II) must be made of the stock solution.

8.3.3.3 Calculate the CH_3Hg in the secondary CH_3Hg standard solution by subtracting the mean labile Hg(II) concentration from the mean total Hg concentration.

8.3.3.4 If the secondary CH_3Hg stock solution drops below 98.0% CH_3Hg, discard the solution and make a fresh secondary solution.

8.3.4 Working methyl mercury standard—Prepare a dilution of the secondary CH_3Hg standard using reagent water containing 0.5% (v/v) glacial acetic acid and 0.2% (v/v) HCl. A convenient concentration for this standard is 1.00 ng/mL CH_3Hg as Hg. This solution will maintain its titre for more than one month when kept in a fluoropolymer bottle on the lab bench top. Refrigeration is not necessary

9.0 SAMPLE COLLECTION, PRESERVATION, AND HOLDING TIMES

9.1 The client or other trained personnel collect samples. Samples received at the laboratory are considered representative unless otherwise noted.

9.2 Samples should be collected in rigorously cleaned fluropolymer bottles with fluoropolymer or fluropolymer-lined caps. Preservation consists of adding 4 mL/L of concentrated HCl and storage in the range of 0.1-6°C. Saline samples ([Cl-]>500 ppm) are preserved with 2 mL/L of 9 M H_2SO_4 solution.

9.2.1 Samples may be shipped to the laboratory unpreserved if they are (1) collected in fluoropolymer bottles, (2) filled to the top with no head space, (3) capped tightly, (4) maintained at 0-4°C from the time of collection until preservation, and (5) preserved within 48 h of sampling.

9.3 Samples are stored in the {storage location}. Samples that fail to meet the preservation criteria are noted as such on the Cooler Inspection Report in the Login process.

9.3.1 Borosilicate glass bottles may be used if Hg and Hg species are the only target analytes.

9.3.2 It is critical that the bottles have tightly sealing caps to avoid diffusion of atmospheric Hg through the threads.

9.3.3 Polyethylene sample bottles must not be used.

9.4 For dissolved CH_3Hg, samples and field blanks are filtered through a 0.45 µm capsule filter

9.5 Analysis must be performed within the maximum allowable hold time of 180 days from collection.

10.0 QUALITY CONTROL

DRAFT

10.1 An *Initial Demonstration of Capability* study must be performed prior to the initial analysis for each analyst and whenever substantial change has occurred in the procedure or instrument. Refer to the Capability and Detection Limit Studies SOP for details.

10.1.1 Four replicates of the IPR solution (0.5 ng/L) must be analyzed, their average percent recovery and standard deviation calculated, and meet the statistical standards for the method.

10.2 A *Method Detection Limit* study must be performed for each new procedure, annually thereafter, and whenever a change in instrument occurs. Refer to the Capability and Detection Limit Studies SOP for details.

10.2.1 To establish the ability to detect CH3Hg, the analyst shall determine the MDL according to the procedure at 40 *CFR* 136, Appendix B using the apparatus, reagents, and standards that will be used in the practice of this method. The laboratory must produce an MDL that is less than or equal to the MDL listed in Section 1.5 or one-third the regulatory compliance limit, whichever is greater. The MDL should be determined when a new operator begins work or whenever, in the judgment of the analyst, a change in instrument hardware or operating conditions would dictate that the MDL be redetermined.

10.3 {Identify the required QC parameters. Put QC test name in *italics*. List the frequency, acceptance limits, and corrective action if it fails. The effect on sample data and where/how the results of these QC tests are documented (e.g. CAR, data flag as defined in LIMS, etc.) must also be included. If statistical limits are used, include, “Details for the determination of statistical limits are in the Generation and Updating of Statistical Recovery Limits SOP”. Put the QC parameters in their order of occurrence in a batch.}

10.4 A *Calibration Verification Standard* must be analyzed immediately after calibration, after every 10 samples, and after the last sample. The concentration of the ICV must be different than that of the CCV.

10.4.1 Acceptance criteria are the {statistical or nominal} limits listed in the appropriate test code in LIMS. If the acceptance criteria are not met, reanalyze. If reanalysis fails to meet the acceptance criteria, stop analysis and recalibrate or report data with an appropriate qualifier.

10.4.2 ICV and CCV standards that fail to meet the acceptance criteria are automatically flagged in LIMS with a “S” qualifier.

10.4.3 The reporting of data associated with a failed control sample must be documented with a CAR form. If the failure is considered to have a significant affect on the data, client notification is required using the Case Narrative of the report.

10.4.4 Samples associated with a verification that fails with positive bias can be reported without narration if the sample concentration is below the reporting limit.

DRAFT

10.5 A *Calibration Verification Blank* sample must be analyzed after each calibration verification standard.

10.5.1 The acceptance criteria are < PQL. If the acceptance criteria are not met, reanalyze. If reanalysis fails to meet the acceptance criteria, stop analysis and recalibrate or report data with an appropriate qualifier. Samples for compliance with our Wisconsin DNR certification must be evaluated down to the current MDL and corrective action taken if the blank exceeds the routine PQL.

10.5.2 ICB and CCB standards that fail to meet the acceptance criteria are automatically flagged in LIMS with a “S” qualifier. ICB/CCB standards that are below the reporting limit but above the MDL are flagged in LIMS with a “b” qualifier. “b” flagged data is considered as meeting the acceptance criteria.

10.5.3 If the blank does not meet the acceptance criteria, all samples < PQL or greater than 10 times the blank contamination may be reported. All other environmental samples must be reanalyzed or reported with an appropriate qualifier in the Case Narrative of the report. The reporting of data associated with a failed control sample must be documented with a CAR form.

10.6 A *Method Blank* must be prepared and analyzed with each batch of maximum 20 samples and at a minimum of one per batch.

10.6.1 .

10.6.2 The method blank is prepared by the distillation of 45 mL aliquots of 0.4% HCl acidified reagent water, exactly as if they were samples.

10.6.3 The acceptance criteria are < PQL. If the acceptance criteria are not met, reanalyze. If reanalysis fails to meet the acceptance criteria, stop analysis and recalibrate or report data with an appropriate qualifier. Samples for compliance with our Wisconsin DNR certification must be evaluated down to the current MDL and corrective action taken if the blank exceeds the routine PQL.

10.6.4 MBLKs that fail to meet the acceptance criteria cause the sample results to be automatically flagged in LIMS with a “B” qualifier. MBLKs that are below the reporting limit but above the MDL are flagged in LIMS with a “b” qualifier. “b” flagged data is considered as meeting the acceptance criteria.

10.6.5 The reporting of data associated with a failed control sample must be documented with a CAR form. If the failure is considered to have a significant affect on the data, client notification is required using the Case Narrative of the report.

10.6.6 Samples associated with a MBLK that fails with positive bias can be reported without narration if the sample concentration is < PQL or greater than 10 times the blank contamination.

DRAFT

10.7 A *Laboratory Control Sample* must be prepared and analyzed with each batch of maximum 20 samples and at a minimum of one per day.

10.7.1 Acceptance criteria are the {statistical or nominal} limits listed in the appropriate test code in LIMS. If the acceptance criteria are not met, reanalyze. If reanalysis fails to meet the acceptance criteria, stop analysis and recalibrate or report data with an appropriate qualifier.

10.7.2 LCSs that fail to meet the acceptance criteria are automatically flagged in LIMS with a “S” qualifier.

10.7.3 The reporting of data associated with a failed LCS must be documented with a CAR form. If the failure is considered to have a significant affect on the data, client notification is required using the Case Narrative of the report.

10.7.4 Samples associated with a LCS that fails with positive bias can be reported without narration if the sample concentration is below the reporting limit.

10.8 A *Matrix Spike and Matrix Spike Duplicate* sample must be prepared and analyzed with each batch of maximum 10 samples per matrix and at a minimum of one per day.

10.8.1 Acceptance criteria are the {statistical or nominal} limits listed in the appropriate test code in LIMS. (Note: the accuracy criteria have been met provided at least either the MS or MSD meet the %R criteria.) If the acceptance criteria are not met, refer to the MS/MSD Corrective Action Flowchart in the QAP.

10.8.2 MS/MSD’s that fail to meet the accuracy criteria are automatically flagged in LIMS with a “S” qualifier. MSD’s that fail to meet the precision criteria are automatically flagged in LIMS with a “R” qualifier.

10.8.3 The reporting of data associated with a failed MS/MSD must be documented with a CAR form. If the failure is considered to have a significant affect on the data, client notification is required using the Case Narrative of the report.

10.8.4 Samples associated with a MS/MSD that fails the accuracy criteria with positive bias can be reported without narration if the sample concentration is below the reporting limit.

10.8.5 If the concentration measured in the sample is greater than 4-times the concentration of the spike, the spike amount used is insufficient and the MS/MSD not applicable.

10.9 An *Ongoing Precision and Recovery (OPR)* sample must be prepared and analyzed with each batch of maximum 20 samples per matrix and at a minimum of one per day.

10.9.1 Analyze the OPR solution (0.5 ng/L, Section 7.10) followed by a ethylation blank prior to the analysis of each analytical batch. An OPR must also be analyzed at the end of an analytical run or at the end of each 12-hour shift.

DRAFT

Subtract the peak height (or peak area) of the ethlyation blank from the peak height (or area) for the OPR and compute the concentration for the blank-subtracted OPR.

10.9.2 Compare the computed OPR concentration with the limits in Table 2. If the concentration is in the range specified, the analysis system is within specification and analysis of samples and blanks may proceed. If, however, the concentration is not in the specified range, the analytical process is not within the specified limits. Correct the problem and repeat the OPR test.

10.9.3 The laboratory should add results that pass the specification in Section 9.5.2 to IPR and previous OPR data and update QC charts to form a graphic representation of continued laboratory performance. The laboratory should also develop a statement of laboratory data quality for each analyte by calculating the average percent recovery (R) and the standard deviation of the percent recovery (sr). Express the accuracy as a recovery interval from R - 2sr to R + 2sr. For example, if R = 95% and sr = 5%, the accuracy is 85-105%.

10.10 An *Quality Control sample (QCS)* sample must be prepared and analyzed with each batch of maximum 20 samples per matrix and at a minimum of one per day.

10.10.1 Quality control sample (QCS)—The laboratory must obtain a QCS from a source different from the CH_3Hg used to produce the standards used routinely in this method (Sections 7.7-7.10). The QCS should be analyzed as an independent check of instrument calibration in the middle of the analytical batch (e.g., for a batch of 14 samples, the QCS should be analyzed after the seventh sample). Good QCS samples may be made by KOH/methanol digestion (Reference 2) of CH_3Hg certified tissue CRMs.

11.0 CALIBRATION AND STANDARDIZATION

Calibration data is documented and retained using the {printouts from the instrument software or XXX raw data form (copy attached)}. Analytical data must be maintained in accordance with the document control requirements in the Quality Assurance Plan as well as the Document Control SOP.

11.1 {list frequency or criteria that require calibration/standardization. Note any requirements for the concentration of calibration standards. Note any documentation specifics such as naming conventions, location, etc. List the criteria for an acceptable calibration and the corrective action if these criteria are not met. Include “Analysis of environmental samples cannot proceed without the generation of an acceptable calibration.”}

11.2 The analytical/toploading balance must be calibrated/verified in accordance with the Balance Calibration SOP.

11.3 The thermometers used must be verified in accordance with the Thermometer Calibration SOP.

DRAFT

11.4 The repipetters used must be verified in accordance with the Pipette Calibration SOP.

11.5 Perform the required preventative maintenance as necessary. Documentation is retained in the Maintenance Log for the particular instrument used for analysis.

11.6 A new calibration curve must be prepared annually. Verification of the curve is required prior to sample analysis each day of analysis. Analysis of environmental samples cannot proceed without the generation of an acceptable calibration.

11.7 ESTABLISHING A CALIBRATION CURVE

Establish the operating conditions necessary to purge Hg species from the bubbler and to desorb Hg species from the traps so that sharp peaks are given. The system is calibrated using CH_3Hg standards ultimately traceable to NIST standard total Hg reference material, as follows:

11.8 Calibration

11.8.1 The calibration must contain five or more non-zero points and the results of analysis of one ethylation blank. The lowest calibration point must be at the minimum level (ML).

11.8.2 Standards are analyzed by the addition of aliquots of the CH_3Hg working standard directly into the bubblers. Add 50 mL of fresh reagent water, a 0.005 ng aliquot of the standard, 0.3 mL of acetate buffer, and 0.04 mL of $NaBEt_4$ to the bubbler, swirling to mix.

11.8.3 Allow to react for 17 min, and then purge and analyze as below (Section 11). Sequentially follow with aliquots of 0.05, 0.1, 0.2, and 0.01 ng CH_3Hg in separate bubblers.

11.8.4 For each point, correct the standard peak height or area by subtracting the peak height or area of the ethylation blank for the analytical batch. Calculate the calibration factor (CF) for CH3Hg for each of the five standards using the mean ethylation-blank-corrected peak height or area. (Equation 3).

11.8.5 Calculate the mean calibration factor (CFm), the standard deviation of the CFm (SD), and the relative standard deviation (RSD) of the calibration, where RSD = 100 x SD/CFm. If the RSD is # 15%, the CFm may be used to calculate sample concentrations. If RSD > 15%, recalibrate the analytical system and repeat the test.

11.8.6 The net concentration recovery (minus ethylation blank) for the lowest standard must be in the range of 65-135% of the expected value to continue with sample analysis.

11.8.7 Ongoing precision and recovery—Perform the ongoing precision and recovery test to verify calibration prior to analysis of samples in each analytical batch. An OPR must also be analyzed at the end of an analytical run or at the end of each 12-hour shift.

DRAFT

11.8.8 Prepare the standards for the calibration curve as detailed in the Standards section of this SOP.

11.9 DAILY CALIBRATION

12.0 PROCEDURE

Analytical data is documented and retained using the {printouts from the instrument software or XXX raw data form (copy attached)}. Analytical data must be maintained in accordance with the document control requirements in the Quality Assurance Plan as well as the Document Control SOP.

12.1 Sample Distillation

12.1.1 Weigh a 45 mL aliquot from a thoroughly shaken, acidified sample, into a 60 mL fluoropolymer distillation vial. Add 200 µL of 1% APDC solution, and replace the distillation cap, such that the tubing extends to the bottom of the vial.

12.1.1.1 Repeat this procedure for all samples to be distilled in a set, including three reagent water blanks and spiked samples.

12.1.1.2 Matrix spikes and matrix spike duplicates—For every 10 or fewer samples, pour two additional 45 mL aliquots from a randomly selected sample. Spike the aliquots at the level specified in Section 9.3 and process them in the same manner as the samples. There should be two MS/MSD pairs for each analytical batch of 20 samples.

12.1.1.3 For each sample, prepare a 60 mL distillate receiving vial. Add 5.0 mL reagent water to each receiving vial and replace the cap so that the tubing extends into the water layer.

12.1.1.4 Record the sample ID associated with each distillation and receiving vial. It is important to develop an unambiguous tracking system, such as the use of engraved vial numbers, because the distillation vials themselves cannot be labeled (due to the heat).

12.1.2 Place each prepared distillation vial into one of the holes in the heating block and attach the fluoropolymer tubing to the incoming gas supply from the rotometer manifold. Adjust the gas flow rate through the bubbler to 60 ± 20 mL/min.

12.1.3 As each distillation vial with sample is placed into the heating block, place the corresponding labeled distillation vial into the ice bath immediately adjacent to the heating block. Attach the tubing from the receiving vessel to the port of the distillation vessel.

12.1.4 Once all the holes in a heating block are filled, place the aluminum lid over the vessel caps in such a way that all tubing is passing without crimps through the slots, and the lid is making metal-to-metal contact with the block (to provide proper heating of the lid).

DRAFT

12.1.5 Turn on the temperature controllers to the heating blocks to a pre-set block temperature of 125 ± 3°C.

12.1.6 Distill the samples until each receiving vial fills to the engraved 40 mL line. This time period will be approximately 2.5 h to 4 h depending upon exact temperatures, gas flow rates, and water characteristics.

12.1.6.1 Different samples and locations on the block will distill at somewhat different rates, so after about 2 h, all of the tubes should be monitored frequently to avoid over-distillation. As the individual samples fill to the line, they should be removed from the distillation unit.

12.1.6.2 Over-distillation is the greatest potential risk for poor recoveries by this method. If more than the prescribed amount of sample distills over, the risk of HCl fumes co-distilling increases. Chloride and low pH are interferences with the ethylation procedure.

12.1.6.3 If any samples are suspected of over-distillation, they should be checked with pH paper. If the distillate has a pH of less than 3.5, it should be discarded, rather than analyzed.

12.1.7 Once all of the vials are distilled, the distillates may be stored at room temperature and in the dark for up to 48 h before analysis (loop the fluoropolymer tube around to close off the second port on the receiving vial). Do not refrigerate or store longer than 48 h.

12.1.8 The distillation-side (dirty) vials must be scrubbed thoroughly with a test-tube brush and alkaline detergent, then rinsed in reagent water, to remove organics prior to acid cleaning. To acid-clean between uses, the vials are filled with 10% HCl, recapped with the tubing looped around to close off the port, and placed in an oven at 80°C overnight.

12.2 Ethylation and purging of the distillates

12.2.1 Immediately before analysis, add 0.3 mL of acetate buffer to the sample in the receiving vial, and then add another 10 mL of reagent water to the vial (so that the total sample volume is > 50 mL; the vial is almost full).

12.2.2 Pour the buffered sample into the reaction vessel/bubbler, and add 0.04 mL of freshly thawed 1% NaBEt4 solution. Close the reaction vessel with the bubbler cap, and swirl gently to mix.

12.2.3 If standards, ethylation blanks, or QCS are being analyzed, pour 50 mL of reagent water into the bubbler, add 0.3 mL of acetate buffer, the appropriate spike, etc., and 0.04 mL 1% $NaBEt_4$ solution.

12.2.4 Allow the contents of the bubbler to react for 17 min. All CH_3Hg in the sample is converted to volatile methylethyl mercury.

12.2.5 After reaction, attach a Carbotrap® trap to each bubbler with the 1/4” fluoropolymer fitting, and purge the sample with N_2 (200 mL/min) for 17 min.

DRAFT

NOTE: *The Carbotrap® trap must be attached such that the gas from the bubbler enters the trap on side A.*

12.2.6 Once the sample has been purged for 17 min, any adsorbed water must be dried from the Carbotrap® trap. Disconnect the Carbotrap® trap from the bubbler and attach the N_2 flow directly to the trap. Use the same orientation (i.e., N_2 entering from side A), and purge the trap for 7 min.

12.2.7 The sample is now ready for analysis. The methylethyl mercury collected on the trap is quantitatively stable for up to 6 h and must be analyzed within that period.

12.3 Desorption of methylethyl mercury from the Carbotrap® trap

12.3.1 Close the argon stopcock on the GC, and allow 30 sec for the pressure in the system to dissipate. Remove the previous Carbotrap® trap from the GC.

12.3.2 Attach the Carbotrap® trap containing the new sample to the GC column using a 1/4" fluoropolymer friction fit connector, *such that side A is facing toward the GC column.*

12.3.3 Place the Nichrome wire heating coil around the Carbotrap® trap, centered over, and extending beyond the packing material on side A. Re-connect the argon gas to side B of the Carbotrap® trap.

12.3.4 Open the argon stopcock, and allow gas to flow for 30 sec prior to heating the column. Make sure that the post GC pyrolytic column is on and red-hot (~700°C).

12.3.5 Apply power to the coil around the sample trap for 45 sec (using an automatic timer) to thermally desorb the ethylated species from the sample trap into the GC column.

12.3.6 Turn on the chart recorder or other data acquisition device to start data collection.

12.3.7 Three peaks should emerge during the analytical run. The first peak (~1 min) is Hg_0, which is residual, and non-quantitative. This peak signifies the start of the peak set. Usually, the second peak to emerge (~2.5 min) is methylethyl mercury, the peak of interest. Following this (~4 min) is the peak for diethyl mercury ($(CH_3CH_2)_2Hg$), which is the ethylation product of Hg(II). If $(CH_3)_2Hg$ were present in the sample, it would appear as a second peak between Hgo and methylethyl mercury-not fully resolved from the Hgo. See appendix for advice on the quantitation of $(CH_3)_2Hg$.

12.3.8 Allow the GC run to proceed at least 1 min beyond the point that the diethyl mercury(Hg(II)) peak returns to base line. Place the next sample Carbotrap® trap in line and proceed with analysis of the next sample.

12.4 Peaks generated using this technique should be very sharp and almost symmetrical. Methylethyl mercury elutes at approximately 2.5 min and has a

DRAFT

width at half-height of about 10 sec. Earlier peaks (Hg_0, $(CH_3)_2Hg$) are sharper, while later peaks (diethyl mercury) are broader.

12.4.1 The appearance of only one peak (Hgo) usually signifies either that the pyrolytic column is not turned on, or that NaBEt4 was not added to the sample.

12.4.2 Normally the Hg_0 peak is quite small. However, some Hg_0 is generated by thermal degradation of diethyl mercury during the desorption step. Thus, when samples contain a high concentration of Hg(II), both the Hg_0 and the diethyl mercury peaks will be bigger. The ratio of the two peaks is indicative of the quality of the Carbotrap® trap. As the Carbotrap® trap degrades, the amount of thermal breakdown of organo-mercurials increases. Since the diethyl mercury is much more sensitive to thermal breakdown than the methylethyl mercury, monitoring the latter peak can serve as an early warning for Carbotrap® trap replacement. Generally, the Carbotrap® traps should be replaced any time the Hg_0 peak grows to be as large as the diethyl mercury peak. As a rule of thumb for samples with significant Hg(II), use 1.0 ng Hg(II) from a non-acidified solution deliberately added to the reaction vessel as a trap check. For samples very low in Hg(II), such as blanks, the Hg_0 peak is generally higher than the diethyl mercury peak, due to residual sources.

12.4.3 In the event that samples with large Hg(II) content are analyzed, some of the diethyl mercury generated breaks down to monoethyl mercury (CH3CH2Hg) during thermal desorption. If this occurs, a very broad peak (width of several minutes) will appear at some long time after the run is over (5-20 min). Such occurrences result in a confusing and messy increase and then decrease in the baseline. Such peaks can be hurried through the system by turning the GC column to 140°C until the peak emerges, and then reducing the temperature back to 110°C before resuming analysis.

13.0 CALCULATIONS AND DATA HANDLING

13.1 After review, enter final results into the LIMS system. Using the Copy, Paste Special (values only) feature, enter the sample concentrations from the spreadsheet into the Data Import file of LIMS. Results flagged by the LIMS with an “E” qualifier are above the linear range of the instrument. There is less certainty in these data and, if sufficient sample and holding time are available, should be reanalyzed at an appropriate dilution. Details on the procedure for entering analytical data are in the Analytical Data Entry – Wet Chemistry SOP.

13.2 LIMS calculates the final sample concentration as follows:

13.3 Calculate the following parameters for each analytical batch:

13.3.1 Ethylation blank (n = 1) or the mean ethylation blank (n > 1)

13.3.2 Ethylation-blank subtracted calibration factor for each standard (Cfx, Section 10.1.3) and peak measurement for each sample (Rs)

DRAFT

13.3.3 The mean calibration factor (CF_M), standard deviation of the calibration factor (SD), and relative standard deviation (RSD) of the calibration factor (Section 10.1.1.4).

$$\text{Calibration Factor} = \frac{R_s - R_e}{C_s}$$

R_s = Peak height or area of the standard
R_e = Peak height or area of the ethylation blank
C_s = Concentration of the standard (ng/L)

13.4 Compute the concentration of CH_3Hg in ng/L (parts-per-trillion; ppt) according to the following equation:

$$[CH_3Hg]\ (ng/L) = \frac{R_s - R_e}{CF_M \times V}$$

Where:
R_s = gross peak height (or area) of signal for CH_3Hg in sample
R_e = peak height (or area) of signal for CH_3Hg in ethylation blank (n = 1) or mean ethylation blank (n > 1)
CF_M = mean calibration factor
V = Sample volume (L)

13.5 The CH_3Hg concentration of the mean (n=3 or more) method blank (ng/L, Equation 4) should be subtracted from the sample concentration calculated above to obtain the net in situ CH_3Hg concentration

$$[CH_3Hg]_{MB}\ (ng/L) = \frac{R_{MB} - R_{EB}}{CF_M \times V_{MB}} \times \frac{V_{MB}}{V_S}$$

where:
R_{MB} = gross peak height (or area) of signal for CH_3Hg in the mean method blank
R_{EB} = gross peak height (or area) of signal for CH_3Hg in the ethylation blank (n = 1) or the mean ethylation blank (n > 1)
CF_M = Mean calibration factor
V_{MB} = Volume of the method blank
V_s = Volume of the sample

$$[CH_3Hg]_{net} = [CH_3Hg]_{sample} - [CH_3Hg]_{MB}$$

where:
$[CH_3Hg]_{net}$ = net in situ CH_3Hg concentration (ng/L)
$[CH_3Hg]_{sample}$ = ethylation-blank corrected concentration of CH_3Hg in the sample (ng/L)
$[CH_3Hg]_{MB}$ = concentration of CH_3Hg in the mean method blank (ng/L)

13.6 Reporting

DRAFT

13.6.1 All results are reported after subtraction of mean method blanks.

13.6.2 Under the conditions described here, the distillation procedure is not 100% efficient in recovering CH_3Hg because not all of the sample volume can be distilled, to avoid distillation of HCl. Laboratories should calculate the efficiency of the distillation for their laboratory. This calculation is done by keeping a running mean of the last 30 recoveries calculated for precision and recovery samples (IPR and OPR), excluding all values that are more than two standard deviations from the mean. Since the distillation technique is inherently and reproducibly non-quantitative, all results should be recovery corrected by an empirically derived factor.

$$F = \frac{100}{R}$$

Where:
F = Empirically derived correction factor
R = Recovery (the running mean of the last 30 IPR and OPR samples)

13.7 After review, enter final results into the LIMS system. Results flagged by the LIMS with an “E” qualifier are above the linear range of the instrument. There is less certainty in these data and, if sufficient sample and holding time are available, should be reanalyzed at an appropriate dilution. Details on the procedure for entering analytical data are in the Analytical Data Entry – Metals Section SOP. The peak integrations must be performed according to the Manual Integration of Chromatographic Peaks SOP.

14.0 METHOD PERFORMANCE

14.1 Initial Demonstration of Capability study data, Method Detection Limit study data and Performance Testing study data are maintained and available from the QA office.

15.0 POLLUTION PREVENTION

15.1 The quantity of chemicals purchased should be based on expected usage during their shelf life and the disposal cost of unused material.

15.2 Prepare the minimum amount of reagent and standard necessary.

16.0 WASTE MANAGEMENT

16.1 Refer to the Sample Disposal SOP for guidance on the disposal of any resulting residue, digestate, distillate, extract or standard.

17.0 REFERENCES

17.1 USEPA Method 1630, January 2001

DRAFT

17.2 USEPA Method 1669

17.3 Microbac Laboratories Quality Assurance Plan, current revision, all sections

18.0 TABLES, FORMS, CHECKLISTS, AND OTHER ATTACHMENTS

DRAFT

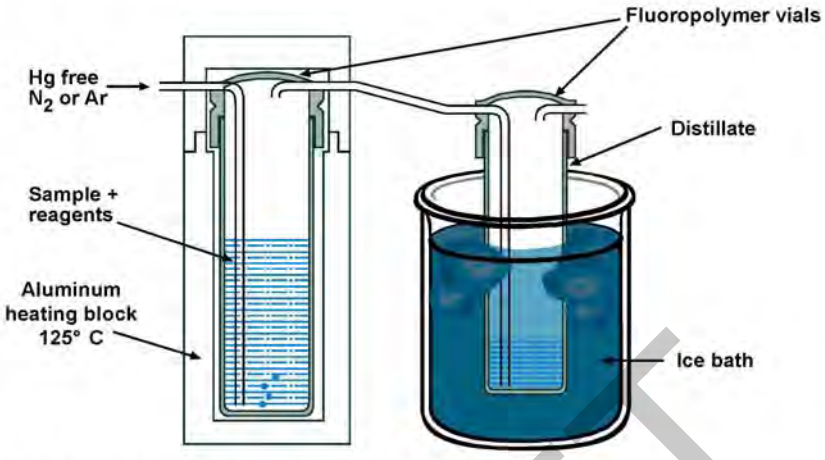

Figure 3 Schematic diagram showing the CH_3Hg distillation set-up.

DRAFT

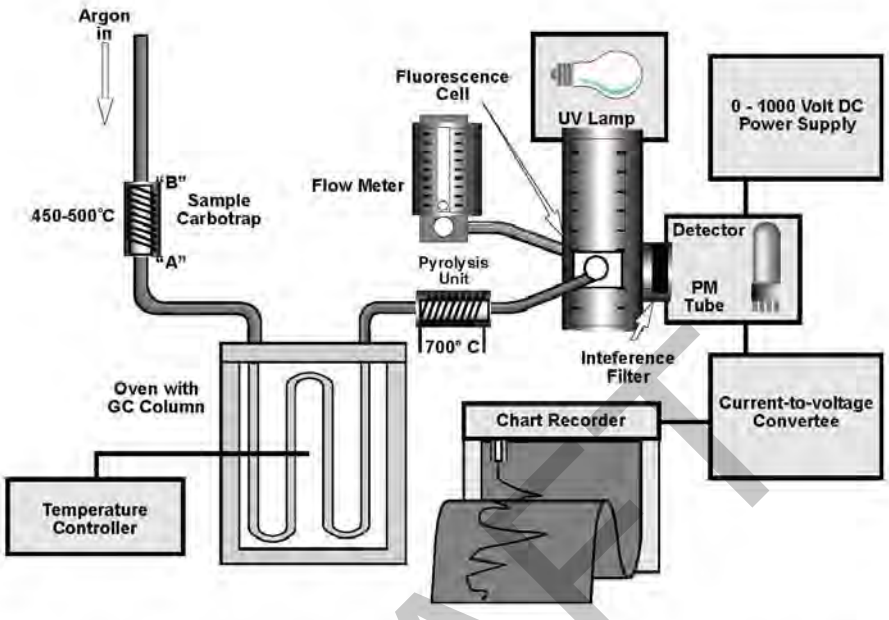

Figure 1 Schematic Diagram of the Cold Vapor Atomic Fluorescence Spectrometer (CVAFS) Detector interfaced with the isothermal GC and pyrolytic decomposition column.

DRAFT

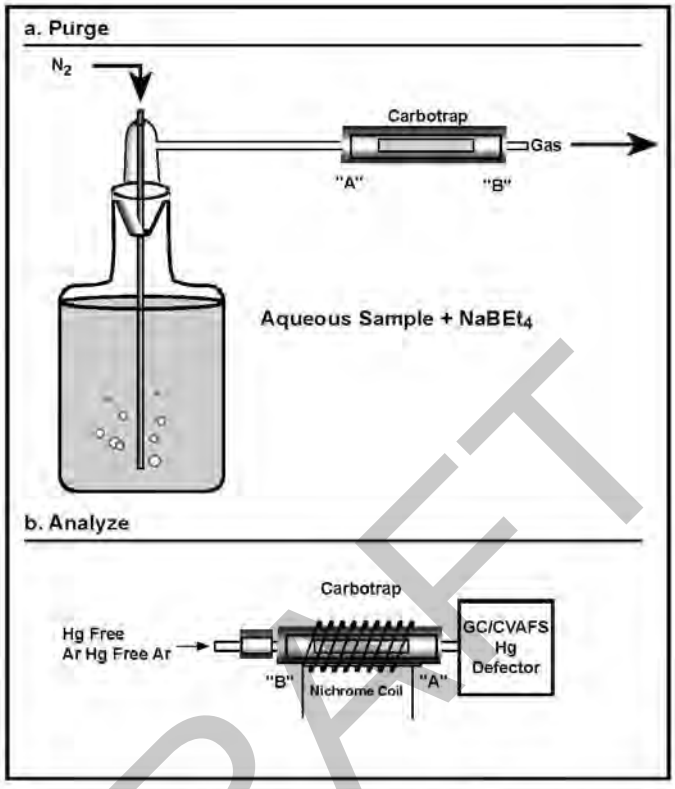

Figure 2 Schematic Diagram of Bubbler Setup (a), and Carbotrap® trap orientation (b).

DRAFT

Appendix K
Laboratory SOPs

CAS SOP
MET-1632, Revision 0

Determination of Arsenic Species by Hydride Generation Cryogenic Trapping GC Atomic Absorption Spectrophotometry

STANDARD OPERATING PROCEDURE

DETERMINATION OF ARSENIC SPECIES BY HYDRIDE GENERATION CRYOGENIC TRAPPING GAS CHROMATOGRAPHY ATOMIC ABSORPTION SPECTROPHOTOMETRY

UNCONTROLLED

MET-1632

Revision 0

July 30, 2010

Approved By: _____ Supervisor — 7/13/10 Date

COPY

_____ QA Manager — 7/15/10 Date

_____ Laboratory Manager — 7/15/10 Date

COLUMBIA ANALYTICAL SERVICES, INC.
1317 South 13th Avenue
Kelso, Washington 98626

© Columbia Analytical Services, Inc. 2010

Annual review of this SOP has been performed and the SOP still reflects current practice.
Initials: _____ Date: _____
Initials: _____ Date: _____
Initials: _____ Date: _____

DOCUMENT CONTROL

NUMBER: _____

Initials: _____ Date: _____

Standard Operating Procedure
for

Determination of Arsenic Species by
Hydride Generation Cryogenic Trapping Gas Chromatography
Atomic Absorption Spectrophotometry

UNCONTROLLED COPY

1. SCOPE AND APPLICATION

1.1. This Standard Operating Procedure (SOP) describes the procedure used for the analysis of Total Inorganic Arsenic (TIAs) and Arsenic species by atomic absorption spectrophotometry based upon EPA 1632. This procedure describes both the preparation and analysis procedures used to determine the target analytes and reporting limits listed.

1.2. This procedure is used to determine the analytes of interest in aqueous samples. The procedure may be applied to other miscellaneous sample matrices providing that the analyst demonstrates the ability of the procedure to give data of acceptable quality in that matrix. The Method Reporting Limits (MRLs) and Method Detection Limits (MDLs) for target analytes are presented in Table 1. This method is designed for the measurement of arsenic species in the range of 0.01-50 ug/L. The method detection limit varies between 0.003 and 0.02 ug/L for a 50 mL sample aliquot, depending upon the species.

1.3. Hydride generation cryogenic trapping gas chromatography atomic absorption spectrophotometry (HG-CT-GC-AAS) is used for sensitive species-specific determination of arsenite [As(III)], monomethyl arsenic [MMAs], and dimethyl arsenic [DMAs]. It is also used for the determination of total inorganic arsenic [TIAs]. Arsenate [As (V)] is determined as the difference between TIAs and As(III): As(V) = TIAs – As(III). The same analyzer may also be used for low level quantification of arsenic speciation in various solid digests and leachates.

1.4. In cases where there is a project-specific quality assurance plan (QAPP), the project manager identifies and communicates the QAPP-specific requirements to the laboratory. In general, project specific QAPP's supersede method specified requirements. An example of this are projects falling under DoD ELAP. QC requirements defined in the SOP *Department of Defense Projects – Laboratory Practices and Project Management (ADM-DOD)* may supersede the requirements defined in this SOP.

2. METHOD SUMMARY

2.1. In this technique arsenic species are selectively volatilized from solution by controlling the pH of the sample solution and reducing them to their corresponding hydrides with borohydride. The arsines are purged from the solution by a helium gas flow and trapped in a liquid nitrogen cooled 'U' tube packed with 15% OV-3 on Chromasorb WAW-DMCS. Heating the column revolatilizes the arsines and allows for chromatographic separation based on boiling points. Once separated the arsines are carried into a quartz furnace with a hydrogen-air flame where they are atomized and detected via atomic absorption spectrophotometry.

UNCONTROLLED

3. DEFINITIONS

3.1. Analysis Sequence - Samples analyzed in a set are referred to as an analysis sequence. The sequence begins with instrument calibration followed by samples, interspersed with calibration standards (Calibration Verifications, Calibration Blanks, etc...) The sequence ends when the set of samples has been injected or when qualitative and/or quantitative QC criteria indicate an out-of-control situation.

3.2. Quality Control Sample (QCS) – The QCS solution is made from a second source stock solution and is used to verify the validity of the calibration standards. This standard is also known as Independent Calibration Verification (ICV).

COPY

3.3. Matrix Spike/Duplicate Matrix Spike (MS/DMS) Analysis - In the matrix spike analysis, predetermined quantities of target analytes are added to a sample matrix prior to sample preparation and analysis. The purpose of the matrix spike is to evaluate the effects of the sample matrix on the method used for the analysis. Sample duplicates are spiked, and analyzed as a MS/DMS pair. Percent recoveries are calculated for each of the analytes detected. The relative percent difference (RPD) between the duplicate spikes (or samples) is calculated and used to assess analytical precision.

3.4. Method Blank (MB) - The method blank is an artificial sample composed of analyte-free water or solid matrix and is designed to monitor the introduction of artifacts into the analytical process. The method blank is carried through the entire analytical procedure. Because water samples do not require digestion prior to analysis, method blank samples are equivalent to instrument blanks or calibration blanks.

3.5. Ongoing Precision Recovery (OPR) – A method blank spiked with known quantities of analytes, carried throughout the digestion procedure. This is also known as a laboratory Control Sample (LCS).

3.6. Continuing Calibration Verification (CCV) – is spiked reagent water (aqueous blank spike) and is used to determine that the instrument remains in control.

3.7. Continuing Calibration Blank (CCB) - The continuing calibration blank is a volume of arsenic-free water (typically 50mL) analyzed in the same manner as samples. The purpose of the instrument blank is to determine the levels of contamination associated with the instrumental analysis itself, particularly with regard to the carry-over of analytes from standards or highly contaminated samples into subsequent sample analyses.

3.8. Initial precision and recovery (IPR) – Four aliquots of the ongoing precision and recovery standard analyzed to establish the ability to generate acceptable precision and recovery. IPR test are performed before a method is used for the first time and any time the methods or instrumentation is modified.

UNCONTROLLED

3.9. Field duplicates – two separate samples collected in separate sample bottles at the same time. Analysis of duplicates give a measure of the precision associated with sample collection and laboratory procedures.

3.10. Dissolved Inorganic Arsenic – All Potassium Borohydride (KBH_4) reducible As^{+3} and As^{+5} found in aqueous solution filtrate after passing the sample through a 0.45 um filter.

3.11. Total Inorganic Arsenic – All KBH_4 reducible As^{+3} and As^{+5} found in a sample. Total inorganic arsenic and total recoverable inorganic arsenic are synonymous.

COPY

4. INTERFERENCES

4.1. Little interference from environmental matrices (i.e. salts, chlorides, nitrates, and organics) has been noted. However high levels of transition metals or noble metals will dramatically inhibit the formation of arsenic hydrides, most likely by consumption of the borohydride, or by co-precipitation of reduced arsenic with other reduced metals. This is particularly a problem with respect to high dissolved Fe and Mn in reducing ground water and mine adduct samples.

4.2. If water is allowed to condense in the trap, multiple and irregular peaks occur in the region where Me_2AsH elutes. This may be overcome by heating the transfer line between the chromatographic column and the furnace. It was also observed that free chlorine (as contained in bad batches of HCl) completely suppresses the signal for all hydrides during cryotrapping. Thus, HCl with obvious green/yellow color must be avoided, and, if in doubt, it can be tested for free chlorine with iodide solution (formation of red/brown iodine). Hydrochloric acid can be purged in the hood of its free chlorine with N_2 (500 mL min^{-1} for 1 hour).

5. SAFETY

5.1. Follow all CAS safety practices as described in the CAS Safety Manual.

5.2. Each chemical compound or reagent should be treated as a potential health hazard. Exposure to these chemicals should be reduced to the lowest possible level. A reference file of material safety data sheets is available to all personnel involved in these analyses.

5.3. Hydrochloric Acid is used in this method. Hydrochloric acid is extremely corrosive and care must be taken while handling it. A face shield should be used while pouring acids. Safety glasses, lab coat and gloves should always be worn while working with these solutions.

5.4. Potassium Borohydride (KBH_4) is used in this method. KBH_4 is a flammable solid, water reactive substance and is harmful if inhaled, ingested, or absorbed. Safety glasses, lab coat and gloves should always be worn while working with this solution.

UNCONTROLLED

5.5. Arsenic standards are used in this method. Arsenic is harmful if inhaled, ingested, or absorbed. CAS purchases dilute standard solutions for this method. If primary solutions are prepared, they must be prepared in a hood. Safety glasses, lab coat and gloves should always be worn while working with arsenic standards.

6. SAMPLE COLLECTION, CONTAINERS, PRESERVATION, AND STORAGE

6.1. Aqueous samples must be collected polyethylene or glass bottles washed in 4 N HCl using accepted clean techniques. Do not use HNO_3 cleaned bottles, as their surfaces are oxidizing with respect to As(III). Caution must be taken with glass as glass containers have been found to contaminate for arsenic.

COPY

6.2. Sample preservation must be performed in the field to reduce changes in Arsenic speciation that may occur during transport and storage. It is very difficult to preserve the original As(III)/As(V) ratio. River water tends to spontaneously reduce As(V) to As(III) and freezing of water tends to induce oxidation of As(III) to As(V), except in the case of very rapid freezing (in liquid nitrogen). Water samples are acidified to pH <2 with hydrochloric acid (3 mL 6M HCL/L) and stored at 0-4°C from the time of collection until analysis. If As species are not target analytes, the samples may be preserved upon receipt by the laboratory. Store the preserved sample for a minimum of 48 hours to allow the As adsorbed on the container walls to completely dissolve in the acidified sample. Holding time is 28 days from the time of collection until the time of analysis.

6.3. The best storage scheme is to quick freeze samples to −196°C in liquid nitrogen and store at −80°C (on dry ice) until analysis. Quick freezing is accomplished by filling a 60 ml polyethylene bottle with 55 ml sample, capping tightly (CAUTION: cap should have a 2 mm hole bored in it to avoid explosion when thawing), and dropping the sample into a Dewar flask filled with liquid nitrogen. The recommended holding time is 28 days.

6.4. Current evidence suggests that HCl acidification is suitable for preserving arsenic speciation and it is valuable in preventing the precipitation of Fe(OH)3 which can both oxidize and co-precipitate As.

7. REAGENTS AND STANDARDS

7.1. Reagent grade chemicals shall be used in all tests. Other grades may be used, provided it is first ascertained that the reagent is of sufficiently high purity to permit its use without increasing the MDL, or lowering the accuracy of the determination.

UNCONTROLLED

7.2. Reagent Water: 18 meg-Ω ultra pure deionized water starting from a prepurified (distilled, R.O., etc.) source.

7.3. Arsenite (As(III)) Stock Solution: A 1,000 ppm stock solution is prepared by dissolving 0.173 g sodium meta-arsenite (>98.7%) in 100 mL of 0.1% ascorbic acid solution. This solution is kept refrigerated at 0°- 4° C in an amber bottle. This solution is stable and is good for 12 months. Arsenite 1,000 ppm stock solutions can also be purchased from Elements Inc., Shasta Lake, CA and Inorganic Ventures, Inc., Lakewood, NJ.

7.4. Arsenate (As(V)) Stock Solution: A 1,000 ppm stock solution is prepared by dissolving 0.416 g sodium arsenate (98.0%) in 100 ml reagent water. This solution is stable and is good for five years. Arsenate 1,000 ppm stock solutions can also be purchased from Elements Inc., Shasta Lake, CA and Inorganic Ventures, Inc., Lakewood, NJ

COPY

7.5. Monomethyl Arsenic (MMAs) Stock Solution: A 1,000 ppm working standard is prepared by diluting 0.1866 g monomethyl arsonic acid in 100 ml reagent water. This solution is good for five years. Monomethyl Arsenic stock solutions can also be purchased from High Purity Standards, Charleston, SC.

7.6. Dimethyl Arsenic (DMAs) Stock Solution: A 1,000 ppm stock solution is prepared by dissolving 0.1842 g dimethylarsenic acid (98%) in 100 mL of water. This solution is good for five years. Dimethyl Arsenic stock solutions can also be purchased from High Purity Standards, Charleston, SC.

7.7. Working Standard A: An intermediate solution containing 10 mg/L of As(III), MMAs, and DMAs is made from measured aliquots of the above stock solutions (7.3, 7.5, 7.6) and diluted to measured volume with reagent water. A working standard containing 100 ug/L of As(III), MMAs, and DMAs is prepared from the intermediate solution.

7.8. Working Standard B: An intermediate solution containing 10 mg/L of As(III), As(V), MMAs, and DMAs is made from a measured aliquot of the above stock solutions (7.3, 7.4, 7.5, 7.6) and diluted to measured volume with reagent water. A working standard

containing 100 ug/L of As(III), As(V), MMAs, and DMAs is prepared from the intermediate solution.

7.9. Quality Control Sample (QCS) –The QCS must be prepared from a source different from that used to produce the calibration standards.

7.10. TRIS Buffer: To prepare pH 6.2 buffer solution, 39.4 g tris(hydroxymethyl)-aminomethane hydrochloride and 0.25 g reagent grade sodium hydroxide are dissolved in water to make 100 mL of solution. This solution is good for five years.

7.11. Borohydride Solution: A 10% solution is prepared by dissolving 10 g KBH_4 into reagent water and diluting up to 100 ml with reagent water. This solution is stable for up to 3 days when kept covered and stored in the refrigerator overnight. For low level TIAs determinations, KBH_4 is preferable over $NaBH_4$ since it was found to contain lower As blanks, dissolves much faster in water, forms a clear solution and liberates much less hydrogen.

UNCONTROLLED

7.11.1. Contamination of low level As(V) has been found to be a concern in the Borohydride solution prepared in section 7.11. The following procedure removes more than 90% of the As in the blanks caused by the Borohydride Solution.

7.11.1.1. To remove As(V) from KBH_4, prepare a 12% KBH_4 solution (a 12% rather than 10% is used to compensate for loss during precipation). Next, add 5.0 mL of 10% $BaCl_2$, and gently shake. Loosen the cap to release the pressure. Gently shake and loosen the cap to release the pressure at least 5 times over 30 minutes.

COPY

7.11.1.2. Filter out the precipitate with an acid cleaned 0.2 um filter. The precipitate contains $Ba(OH)_2$, $Ba(BH_4)_2$ and $BaAsO_4$.

7.12. 6 M Hydrochloric Acid: Equal volumes of reagent grade HCl and water are mixed to give a 6 M solution. This solution must be checked before use and should not have any measurable Arsenic.

7.13. Air: Breathing quality non-flammable gas.

7.14. Helium: High purity non-flammable gas.

7.15. Hydrogen: Ultra-high purity flammable gas.

8. MATERIALS AND APPARATUS

8.1. The apparatus needed for speciation analysis of arsenic is shown in principle in Figure 1. A 1 cm column of silanized glass wool is inserted between the purging vessel and the GC column to prevent transfer of water droplets and aerosols to the GC column, which causes irreproducible elution of DMAs and gradual decomposition of the GC packing material. However, since Teflon and other plastics seem to absorb small quantities of methylated arsines, the aerosol separator should be avoided, and all connections should be as short as possible when analyzing small concentrations of MMAs and DMAs. The specific instruments and equipment used in this laboratory is listed below.

UNCONTROLLED

8.2. Reaction Vessel. The reaction vessel made by grafting an 1/4" O.D. by 15 mm long side-arm inlet onto a 90 ml "Midget Impinger" (Ace Glass #7532-20) at a 45° upward angle, starting at a point 1.0 cm from the bottom of the impinger. The side arm may be fitted with silicone rubber septa (Ace Glass #9096-31) to allow injection of borohydride into the solution. Reaction vessels of other sizes may be used to facilitate the analysis of smaller or larger samples.

8.3. Cryogenic GC Trap and Column. The cryogenic GC trap is constructed from a 10 mm o.d., 4.1 mm i.d. borosilicate glass tubing about 30 cm long bent into a 'U' shape with appropriate dimensions to fit into a tall wide-mouth Dewar flask. The quartz is silanized prior to packing, to minimize active sites, using Sylon-CT (Supelco). The entire column is wrapped in 4 meters of 22 gauge nichrome wire (*ca.* 3 turns cm^{-1}) the ends of which are affixed to electrical contacts. The column is packed at the outlet half with pre-conditioned 15% OV-3 on 60/80 mesh Chromosorb WAW-DMCS (Supelco). The ends are plugged with silanized glass wool. The entire assembly is then preconditioned by heating to 190°C for 30 min with a helium flow of 150 ml min^{-1}. After this it is silanized by placing two 100 ul aliquots of Sylon-CT in the inlet end of the column and heating to 190°C after each for 15 min. This conditioning and silanization process may be repeated whenever broadening or a decrease in sensitivity of analyte peaks is observed.

COPY

8.4. Atomizer: The furnace/atomizer consists of a quartz tube (9.0 mm I.D.) with opposing 6 mm O.D. inlets perpendicular to the furnace. A mixture of hydrogen and the carrier gas are admitted via one inlet and air through the opposing inlet. The opposing inlets minimize flame noise and reduce the possibility of extinguishing the flame with surges of hydrogen gas created by the reaction mixture. To ignite the furnace, all gases are turned on and a flame is brought to the furnace ends. After the furnace has warmed up (*ca.* 5 min), a flat metal spatula is placed smoothly, first, over one end of the furnace and, the, the other. This restricts the flame to the center of the tube and reduces flame noise. Because the flame is invisible, check to see that the flame is still burning by placing a mirror near the furnace openings and inspecting for

water vapor condensation. Furnace temperature can also be monitored using a thermo-couple thermometer, by gluing the sensor tip to the outside, center, of the furnace with silicone glue. Optimal gas flow rates and pressures are as follows.

Gas	Flow Rate (ml/min)	Flow meter setting	Pressure (psi)
Helium	160	'40'	10
Hydrogen	370	'65'	20
Air	180	'45'	20

UNCONTROLLED

8.5. Detector: This work is performed using a Buck Scientific Atomic Absorption Spectrophotometer fitted with a Hollow Cathode Lamp. The 193.7 nm line is used with a 0.7 nm (low) slit width and without background correction.

8.6. Connections: To minimize active sites all connections are either Teflon friction-fit or threaded tubing connectors. All transfer lines are either 3.2 mm O.D. Teflon tubing or silanized 6 mm O.D. borosilicate glass. Teflon connections must be kept as short as possible when analyzing for low levels of methylated As species because they appear to be absorbed.

8.7. Recorder: Multi-range chart recorder or integrator with matching voltage input and variable speeds is acceptable.

COPY

9. PREVENTIVE MAINTENANCE

9.1. All maintenance activities are recorded in a maintenance logbook kept for each instrument. Pertinent information (serial numbers, instrument I.D., etc.) must be in the logbook. Maintenance entries should include date, symptom of problem, corrective actions, and description of maintenance, date, and name. The log should contain a reference to return to analytical control.

9.2. Damage to the GC trap is indicated by irreproducibility, irregular peak shapes, and spurious additional peaks. Replace the GC trap as needed.

9.3. Sometimes a trap can be revitalized by injecting three 50uL aliquots of the silanizing agent "Silyl-8" to the column, held in an oven at 160°C while passing an inert gas through the column.

10. RESPONSIBILITIES

10.1. It is the responsibility of the analyst to perform the analysis according to this SOP and to complete all documentation required for data review. Analysis and interpretation of the results are performed by personnel in the laboratory who have demonstrated the ability to generate acceptable results utilizing this SOP. This demonstration is in accordance with the training program of the laboratory. Final review and sign-off of the data is performed by the department supervisor/manager or designee.

10.2. It is the responsibility of the department supervisor/manager to document analyst training. Documenting method proficiency, as described in the SOP ADM-TRANDOC *Documentation of Training*.

UNCONTROLLED

11. PROCEDURE – Aqueous Samples

11.1. Sample Analysis

11.1.1. Determination of Total Inorganic and Methylated Arsenic: Place 50 ml of aqueous sample (or sample extract containing between 5 and 25 ng As, diluted to 50 ml with reagent water) and 2.0 mL of 6 M HCl in reaction vessel and replace top. At this time raise the Dewar flask filled with liquid nitrogen so that the trap is immersed and top off liquid nitrogen to completely fill the dewar. Turn 4-way valve such that bubbles are purging through the liquid, then slowly (30-45 seconds) inject a 1.25 mL aliquot of 10% KBH4 through the silicon rubber septum with a disposable 3 ml hypodermic syringe. Since all of the substantial As blank comes from the borohydride solution, it is essential that the injected amount is as reproducible as possible if low MDLs are to be met. Purge the system for 3 min (starting from the beginning of the injection), which is sufficient for quantitative recovery of all species. Longer purging times transfer more water vapor to the GC column, which causes faster column deterioration and has a negative influence on the determination of the methylated arsines, namely lower recoveries and worse reproducibility. At the end of purging, first turn the 4-way valve such that gas is flowing around the bubbler, then, as simultaneously as possible, remove the liquid nitrogen from the GC column, turn the chart recorder on, and begin heating the GC column with 28 v (end temperature should be approximately 150° C). Arsines elute in order of their boiling points (AsH_3, $MeAsH_2$, Me_2AsH). A low broad "peak" following the Me_2AsH peak indicates the passage of the water vapour collected during purging – it is critical that the column be heated until this peak has come down to baseline plus one minute.

COPY

11.1.2. Arsenite Determination: Arsenite is determined by varying the pH so that only As(III) reacts to form AsH3. The procedure is similar to that described above except

that 2.0 ml of TRIS buffer is used in place of the 6 M HCl and only 0.75 mL of KBH4 is injected through the septum. In this case the KBH4 is injected quickly, as there will be little or no foaming. Prior to addition of KBH4 the pH of the solution is 6.2. At this pH the separation of As(III) from As(V) is quantitative. If organo-arsenic compounds are present, they will be partially released – ignore these peaks.

11.1.3. There are two different sizes of purge vessels that allow the direct analysis of between 5-20mL of sample, while the larger vessel can be used for 25-90mL of sample. Depending on the sample size used, different amounts of reagents and purge time are required, as follows:

UNCONTROLLED

	TIAs, MMAs, DMAs		As(III)		
Sample Volume (ml)	Volume 6N HCl (mL)	Volume 10% KBH4 (mL)	Volume Tris Buffer (mL)	Volume 10% KBH4 (mL)	Purge time (min)
5-20	1.0	0.75	1.0	0.50	2.5
25-50	2.0	1.25	2.0	0.75	3.0
50-75	2.5	1.75	2.5	1.25	4.0
75-90	3.0	2.25	3.0	1.75	5.0

COPY

11.2. Calibration and Standardization

11.2.1. Allow the AAS instrument to warm up for 15 minutes and the flame on for 30 minutes before beginning the calibration. Verify the wavelength is set to 193.7 nm with a 0.7 nm slit width.

11.2.2. A calibration curve is determined daily from analysis of 4 or more different amounts (from 1.0 ng to 30 ng). The lowest calibration point must be equivalent to the MRL, or lower. The response factors determined from this curve must be less than 20% in order to continue with analysis. Quantitation is based on peak height if a chart recorder is used and peak area if an integrator is used.

11.2.3. For each point, subtract the mean peak height of the instrument blanks (CCBs) from the peak height of each standard. Calculate the response factors for each arsenic species in each of the four standards as follows:

$$RF = (A_x)/(C_x)$$

where:
A_x = peak height of the compound being measured.
C_x = Concentration of the compound being measured (ng).

11.2.4. Calculate the mean response factor $(\overline{RF_x})$ for each analyte from the calibration levels. Calculate standard deviation (SD) and the percent relative standard deviations (%RSD) for each analyte from the mean with:

$$\%RSD = \frac{(SD)}{(\overline{RF_x})} 100.$$

11.2.5. The % RSD should be less than 20% for each compound.

UNCONTROLLED

11.2.6. If the % RSD for any compound is 20% or less, linearity can be assumed over the calibration range, and the relative response factor for each analyte is used to quantitate sample analytes.

11.2.7. Calibration Verification (CCV) - The calibration curve is verified daily and every 10 samples and at the end of the analytical run. Recovery of the CCV standard must be within the limits listed in Table 2

11.2.8. Matrix spike and matrix spike duplicates (MS/MSD) – For each analytical sequence and every 10 samples (or fewer), spike at the level specified in section 12.3.5.1, and process in the same manner as the samples.

COPY

11.2.9. Method Blanks – Analyze at least three method blanks per analytical sequence. One is required after calibration as well as after every CCV analysis. CCBs are equivalent to method blanks for water analysis only. For soils and other leachates 3 method blanks are required in addition to CCBs every 10 samples.

11.3. An analytical sequence is as many samples as can be analyzed in a 24 hour period given the instrument remains in control. The analytical sequence contains the following standards, samples, and blanks, in order:

Total Inorganic and Methylated Arsenic Analytical Sequence:

Working Std A : 30 ng
Working Std A : 20 ng
Working Std A : 10 ng
Working Std A : 1.0 ng
Calibration Blank
Working Std B : CCV 10 ng
Calibration Blank
Up to 10 samples including QC (MS/MSD)
Working Std B : CCV 10 ng
Calibration Blank

UNCONTROLLED

Arsenite (As(III)) Analytical Sequence:

Working Std A : 30 ng
Working Std A : 20 ng
Working Std A : 10 ng
Working Std A : 1.0 ng
Calibration Blank
Working Std B : CCV 10 ng
Calibration Blank
Up to 10 samples including QC (MS/MSD)
Working Std B : CCV 10 ng
Calibration Blank

COPY

12. QUALITY CONTROL

12.1. Initial Precision and Recovery Validation

12.1.1. The accuracy and precision of the procedure must be validated before analysis of samples begins, or whenever significant changes to the procedures have been made. To do this, four water samples are spiked with the QCS solution, then prepared and analyzed.

12.2. Method Detection Limits and Method Reporting Limits

12.2.1. A method detection limit (MDL) study must be undertaken before analysis of samples can begin. To establish detection limits that are precise and accurate, the analyst must perform the following procedure. Spike seven blank matrix (water or soil) samples with MDL spiking solution at a level below the MRL. Follow the analysis procedures in Section 11 to analyze the samples.

12.2.2. Calculate the average concentration found (x) in µg/L, and the standard deviation of the concentrations (s) in µg/L for each analyte. Calculate the MDL for each analyte. Refer to the CAS *SOP for Performing Method Detection Limit Studies and Establishing Limits of Detection and Quantification (ADM-MDL).* The MDL study must be verified annually.

12.2.3. Limits of Quantification (LOQ)

12.2.3.1. The laboratory establishes a LOQ for each analyte as the lowest reliable laboratory reporting concentration or in most cases the lowest point in the calibration curve which is less than or equal to the desired regulatory action levels, based on the stated project requirements. Analysis of a standard or extract prepared at the lowest point calibration standard provides confirmation of the established sensitivity of the method. The LOQ recoveries must be within 50% of the true values to verify the data reporting limit. Refer to the CAS SOP *Performing Method Detection Limit Studies and Establishing Limits of detection and Quantification (ADM-MDL)*

UNCONTROLLED

12.2.4. The Method Reporting Limits (MRLs) used at CAS are the routinely reported lower limits of quantitation which take into account day-to-day fluctuations in instrument sensitivity as well as other factors. These MRLs are the levels to which CAS routinely reports results in order to minimize false positive or false negative results. The MRL is normally two to ten times the method detection limit.

COPY

12.3. Ongoing QC Samples required are described in the CAS-Kelso Quality Assurance Manual, in the SOP for Sample Batches, and in Method 1632. An analytical sequence must contain calibration verification and a calibration blank every 10 samples. One MS/MSD pair must be analyzed for every 10 samples.

12.3.1. Method Blank

12.3.1.1. At least three method blanks are analyzed with every analytical sequence. If the method blank shows any hits above the reporting limit, corrective action must be taken. Corrective action includes recalculation, reanalysis, system cleaning, or re-extraction and reanalysis. For some project specific needs, exceptions may be noted and method blank results above the MRL may be reported.

12.3.1.2. At least one method blank must be analyzed after calibration as well as after every CCV analysis

12.3.1.3. Method Blanks for water samples are identical to calibration blanks.

12.3.2. Calibration Verification – The calibration verification is verified daily and every 10 samples and at the end of the analytical run. Recovery of the CCV standard must be within the limits listed in Table 2

12.3.3. Ongoing and Precision Recovery (OPR) or Lab Control Sample (LCS)

12.3.3.1. CCV analysis is equivalent to the analysis of an aqueous OPR.

12.3.3.2. The OPR is composed of analyte-free water into which is spiked a number of appropriate target analytes. The OPR is designed to monitor the accuracy of the procedure. The concentration of the spike in the OPR matrix should be at 5 to 10 times the MRL or at levels specified by a project analysis plan.

UNCONTROLLED

12.3.3.3. An OPR must be prepared and analyzed with every batch of 20 (or fewer) samples. Calculate the OPR recovery as follows:.

$$\%R = X/TV \times 100$$

Where X = Concentration of the analyte recovered
TV = True value of amount spiked

COPY

12.3.3.4. The acceptance criteria are given in Table 2. If the OPR fails acceptance criteria, corrective action must be taken. Corrective action includes recalculation or reanalysis.

12.3.4. Quality Control Sample (QCS)

12.3.4.1. The QCS is designed to verify the validity of the calibration. The QCS is analyzed on a quarterly basis, and whenever the calibration standards are re-prepared.

12.3.4.2. The QCS is prepared from a source different from that used to produce the calibration standards. The lab may use Certified Reference Materials (CRMs) or prepare a spike solution obtained from a second source to make the QCS.

12.3.4.3. The determined mean concentration from three analyses of the QCS must be within ± 10% of its stated value.

12.3.5. Matrix Spike

12.3.5.1. A matrix spike (MS) and duplicate matrix spike (DMS) must be prepared and analyzed with every batch of 10 (or fewer) samples. The MS/DMS is

prepared by adding a known volume of the matrix spike solution to the sample and determining the spiked sample concentration. The spike must contain analytes at one to five times the background levels in the parent sample. Calculate percent recovery (%R) as:

$$\%R = \frac{X - X1}{TV} \times 100$$

Where X = Concentration of the analyte recovered
X1 = Concentration of unspiked analyte
TV = True value of amount spiked

UNCONTROLLED

12.3.5.2. Calculate Relative Percent Difference (RPD) as:

$$\%RPD = \frac{|R1 - R2|}{(R1 + R2)/2} \times 100$$

Where R1= Higher Result
R2= Lower Result

12.3.5.3. Following analysis of the MS the percent recovery is calculated and compared to acceptance limits in Table 2. If the recovery is within control limits the results may be reported. If not, and the QCS is within control limits, this indicates that the matrix potentially biases analyte recovery. Verify that the spike level is at least five times the background level. If not, the results are reported with a qualifier that the background level is too high for accurate recovery determination.

COPY

13. CALCULATIONS, DATA REDUCTION, AND REPORTING

13.1. Calculate the concentration of each arsenic species in each sample directly from the mean calibration factor.

Aqueous Samples:

$$Concentration\ (\mu g/L) = \frac{(As - Ab)}{(RFx)(V)}$$

Where A_s = peak area (or height) for arsenic species in sample
A_b = peak area (or height) for arsenic species in blank (mean)
RF_x = Response Factor Mean
V = Volume of sample

13.2. The concentration of As(V) is calculated by subtracting the value for As(III) from that of total inorganic As.

13.3. Nonaqueous Samples:

$$Concentration\,(mg/Kg) = \frac{(As - Ab)(D)}{(RFx)(W)}$$

Where	A_s	=	peak area (or height) for arsenic species in sample
	A_b	=	peak area (or height) for arsenic species in blank (mean)
	RF_x	=	Response Factor Mean
	D	=	Dilution Factor
	W	=	Weight of sample extracted in grams. The wet or dry weight may be used, depending upon the specific client requirements.

UNCONTROLLED

13.4. Sample concentrations are reported when all QC criteria for the analysis has been met. Reported results not meeting QC criteria must be qualified with a standard CAS footnote.

13.5. Reporting

COPY

13.5.1. Refer to the SOP for *Data Reporting and Report Generation* for reporting guidelines.

13.5.2. Report results for each As species in ug/L or ug/g to three significant figures.

13.5.3. All sample results are reported blank corrected.

13.5.4. Reports are generated in the CAS LIMS by compiling the SMO login, sample prep database, instrument date, and client-specified report requirements (when specified). This compilation is then transferred to a file which Excel© uses to generate a report. The forms generated may be CAS standard reports, DOD, or client-specific reports. The compiled data from LIMS is also used to create EDDs.

13.5.5. As an alternative, reports are generated using Excel© templates located in R:\ICP\FORMS\DOD\NEW\1632. The analyst should choose the appropriate form and QC pages to correspond to required tier level and deliverables requirements. The results are then transferred, by hand or electronically, to the templates.

13.6. Data Review and Assessment

13.6.1. Following primary data interpretation and calculations, all data is reviewed by a secondary analyst. Following generation of the report, the report is also reviewed. Refer to the *SOP for Laboratory Data Review Process* for details. The person responsible for final review of the data report and/or data package should assess the overall validity and quality of the results and provide any appropriate comments and information to the Project Chemist to inclusion in the report narrative.

14. CORRECTIVE ACTION

UNCONTROLLED

14.1. Refer to the SOP for *Nonconformity and Corrective Action* for procedures for corrective action. Personnel at all levels and positions in the laboratory are to be alert to identifying problems and nonconformities when errors, deficiencies, or out-of-control situations are detected.

14.2. Handling out-of-control or unacceptable data

14.2.1. On-the-spot corrective actions that are routinely made by analysts and result in acceptable analyses should be documented as normal operating procedures, and no specific documentation need be made other than notations in laboratory maintenance logbooks, runlogs, for example.

COPY

14.2.2. Documentation of a nonconformity must be done using a Nonconformity and Corrective Action Report (NCAR) when:

- Corrective action is not taken or not possible
- Corrective action fails to correct an out-of-control problem on a laboratory QC or calibration analysis.
- Reanalysis corrects the nonconformity but is not a procedurally compliant analysis.

15. METHOD PERFORMANCE

15.1. Available method performance data is given in the reference method. In addition, this procedure was validated through single laboratory studies of accuracy and precision as specified in Section 12.1. The method detection limit(s) and method reporting limit(s) were established for this method as specified in Section 12.2.

16. POLLUTION PREVENTION AND WASTE MANAGEMENT

16.1. It is the laboratory's practice to minimize the amount of solvents, acids, and reagents used to perform this method wherever feasibly possible. Standards are prepared in volumes consistent with methodology and only the amount needed for routine laboratory use is kept on site. The threat to the environment from solvents and/or reagents used in this method can be minimized when recycled or disposed of properly.

16.2. The laboratory will comply with all Federal, State, and local regulations governing waste management, particularly the hazardous waste identification rules and land disposal restrictions as specified in the CAS Environmental Health and Safety Manual.

17. TRAINING

UNCONTROLLED

17.1. Training outline

17.1.1. Review literature (see references section). Read and understand the SOP. Also review the applicable MSDS for all reagents and standards used. Following these reviews, observe the procedure as performed by an experienced analyst at least three times.

17.1.2. The next training step is to assist in the procedure under the guidance of an experienced analyst. During this period, the analyst is expected to transition from a role of assisting, to performing the procedure with minimal oversight from an experienced analyst.

COPY

17.1.3. Perform initial precision and recovery (IPR) study as described above for water samples. Summaries of the IPR are reviewed and signed by the supervisor. Copies may be forwarded to the employee's training file. For applicable tests, IPR studies should be performed in order to be equivalent to NELAC's Initial Demonstration of Capability.

17.2. Training is documented following the SOP *for Documentation of Technical Personnel Training.*

17.2.1. NOTE: When the analyst training is documented by the supervisor on internal training documentation forms, the supervisor is acknowledging that the analyst has read and understands this SOP and that adequate training has been given to the analyst to competently perform the analysis independently.

18. REFERENCES

18.1. *Chemical speciation of Arsenic in Water and Tissue by Hydride Generation Quartz Furnace Atomic Absorption Spectrometry,* Method 1632, Revision A, January 2001, U. S. Environmental Protection Agency Office of Water Engineering and Analysis Division.

Table 1

TARGET COMPOUNDS, MRLs, and MDLs

Analyte	Method Detection Limit		Method Reporting Limit	
	Water ug/L	Tissue mg/Kg	Water ug/L	Tissue mg/Kg
Total Inorganic Arsenic	0.003	Tbd	0.02	Tbd
Arsenite (As(III))	0.003	Tbd	0.02	TBd
Monomethyl Arsenic	0.002	Tbd	0.02	Tbd
Dimethyl Arsenic	Tbd	Tbd	Tbd	Tbd

UNCONTROLLED

Table 2

QC ACCEPTANCE CRITERIA

Aqueous Samples

COPY

IPR			QCS/ICV	CCV/OPR	MS/MSD	
Analyte	RPD %	% Rec			% R	%RPD
IA	<25	60-140	90-110%	80-120%	50-150	<35
As^{+3}	<25	40-160	90-110%	70-130%	30-170	<35
MMA	<20	70-130	90-110%	80-120%	60-140	<25
DMA	<30	50-150	90-110%	70-130%	40-160	<40

Figure 1

Figure 1. Arsenic Speciation Apparatus: (a) Quartz Cuvette Burner Tube, (b) Reaction Vessel, and (c) Schematic Diagram

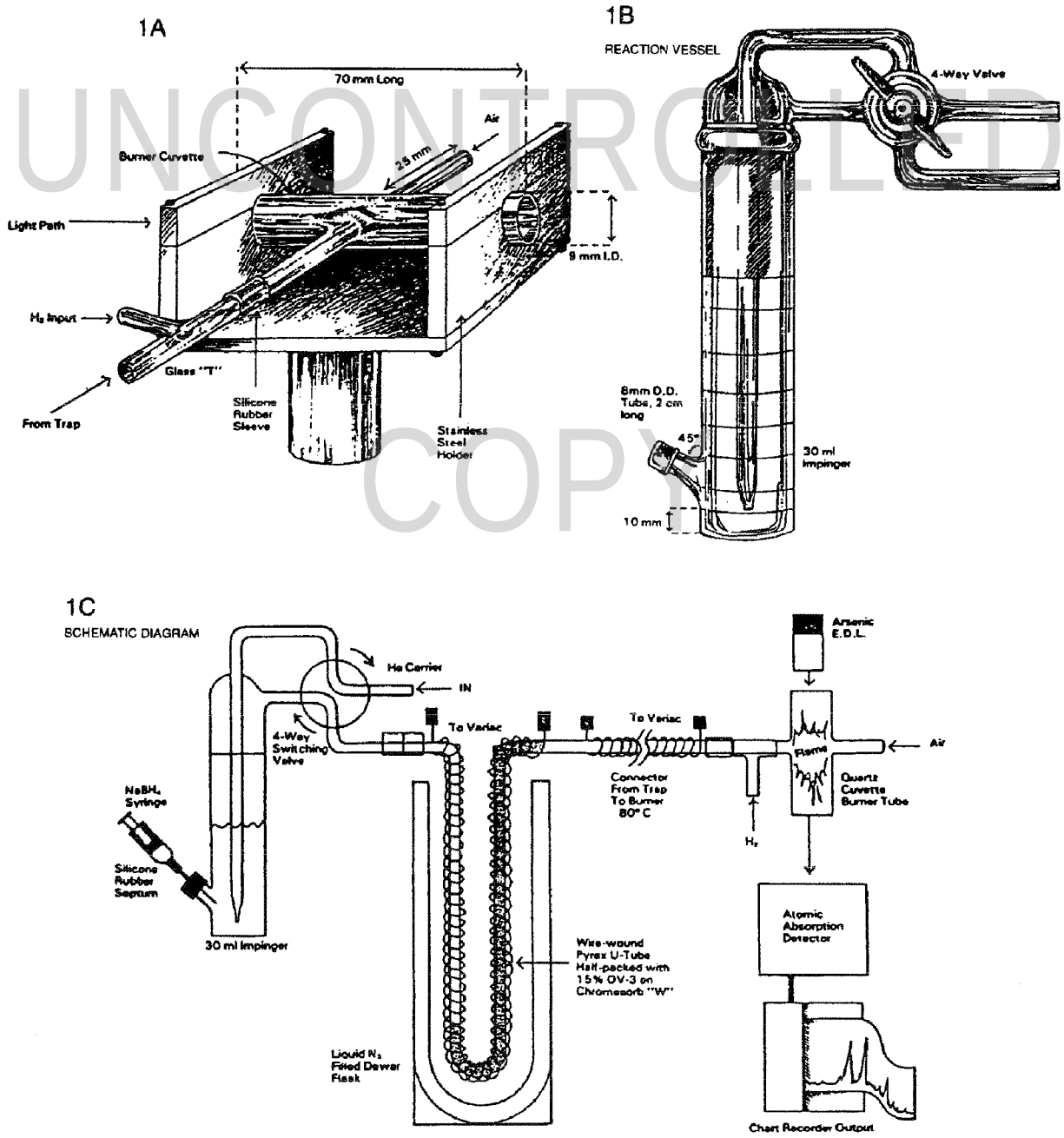

UNCONTROLLED COPY