River Mile 10.9 Removal Action Perimeter Air Monitoring Plan, Lower Passaic River Study Area

Prepared for

Cooperating Parties Group, Newark, New Jersey

July 31, 2013

CH2MHILL®

One South Main Street

Suite 1100

Dayton, OH 45402

616252

Contents

Acronyms and Abbreviations v

1. Introduction 1

1.1. Overview 1
1.2. Program Objectives 1
1.3. Potential Air Emissions: Conceptual Model 1

2. Proposed Controls 4

2.1. Overview 4
2.2. Dredging/Capping Operational Controls 4

3. Air Monitoring 5

3.1. Monitoring Locations 5
3.1.1. In River Monitoring Station 5
3.1.2. Park Monitoring Stations 6
3.2. Real-Time Monitoring 6
3.2.1. VOC Monitoring 6
3.2.2. Particulate (Dust) Monitoring 6
3.2.3. Hydrogen Sulfide Monitoring 7
3.3. COPCs Monitoring 7
3.4. Barge Transport Monitoring 9
3.5. Baseline Monitoring 9
3.6. Monitoring Frequency and Durations 10
3.7. Project-Specific Risk-Based Ambient Air Action Levels 11
3.7.1. Chemicals of Potential Concern 11
3.7.2. Conceptual Exposure Model 11
3.7.3. Exposure Point Concentrations 11
3.7.4. Development of Project-Specific Risk-Based Action Levels 12
3.8 Quality Control 12
3.8.1 Operation and Calibration of Air Monitoring Equipment 13
3.8.2 Laboratory Control 13
3.8.3 Real-Time Monitoring Quality Assurance 14

4. Response 15

4.1. Real-Time Monitoring – Warning and Action Levels 15
4.2. COPC Monitoring – Warning and Action Levels 16
4.3. Operations Below Warning and Action Levels 17
4.4. Warning Level Exceedance 17
4.5. Action Level Exceedance 17

5. Contingency Measures 19

6. References 20

Figures

Figure 1 – Air Monitoring and Weather Station Locations
Figure 2 – Real-Time Air Monitoring Decision Tree
Figure 3 – COPCs Particulate Air Monitoring Decision Tree

Tables

Table 3-1 - COPC Sampling and Analysis Approach
Table 3-2 - Removal Action Air Monitoring Details
Table 4-1 - Real-Time Monitoring – Warning and Action Levels
Table 4-2 - COPC Monitoring – Warning and Action Levels

Attachment 1 – Risk-Based Action Levels Calculations

Table A-1 - Risk-Based Action Levels for Chemicals of Potential Concern: Recreation User (Adult/Child)
Table A-2 - Risk-Based Action Levels for Chemicals of Potential Concern: Park Worker (Adult)
Table A-3 - Risk-Based Action Levels for Chemicals of Potential Concern: Resident (Adult/Child)
Table A-4 - Summary of Calculated Risk-Based Action Levels for Chemicals of Potential Concern

Attachment 2 – Air Monitoring SOPs and Equipment

VOC Monitor MiniRAE-3000 A-2-2
Multi-RAE Monitor A-2-119
Jerome 631-X Hydrogen Sulfide Analyzer A-2-178
Dust Monitor Thermo Electron PersonalDataRAM A-2-230
Dust Monitor Thermo Electron DataRAM 4 A-2-287
High and Low Volume Particulate Samplers (Anderson and BGI PQ-100) A-2-349
Compact Weather Station Lufft WS600-UMB A-2-393
Digital Sound Level Meter Extech A-2-501

Attachment 3 – Laboratory SOPS

Test America – Knoxville – SOP KNOX-GC-0015 Rev. 15 A-3-2
Analysis of PCBs as Aroclors Based on Methods 8082, 8082A, TO-4A, and TO-10A -

Test America – Knoxville – SOP KNOX-ID-004 Rev. 12 A-3-27
Analysis of Polychlorinated Dioxins/Furans by High Resolution Gas Chromatography/High Resolution Mass Spectrometry (HRGC/HRMS) Based on Methods 8290, 8290A, 1613B, 23, 0023A, and TO-9A

Test America – Knoxville – SOP KNOX-WC-0028 Rev. 8 A-3-89
Determination of Particulate Matter as PM_{10} and Total Suspended Particulate Matter (TSP) in Hi-Vol Filters, and Nuisance Dust by NIOSH Method 0500

Test America – Knoxville – SOP KNOX-IP-0003 Rev. 6 A-3-108
Digestion of Total Metals in Filters

Test America – Knoxville – SOP KNOX-MT-0009 Rev. 11 A-3-122
Preparation and Analysis of Mercury in Aqueous Samples by Cold Vapor Atomic Absorption
SW846 7470A and EPA 245.1

Attachment 4 – Potential Emission Calculations LPR RM 10.9 Removal Action – Dredging Operations submitted to NJDEP January 10, 2013.

Acronyms and Abbreviations

BMP	Best Management Practices
COPC	chemical of potential concern
mg/L	milligrams per litre
$\mu g/m^3$	micrograms per cubic meter
LPR	Lower Passaic River
LPRSA	Lower Passaic River Study Area
m	meter
MS	Matrix Spike
MSD	Matrix Spike Duplicate
NJDEP	New Jersey Department of Environmental Protection
NJAC	New Jersey Administrative Code
PCB	Polychlorinated Biphenyl
PCDD	Polychlorinated Dibenzo-p-dioxins
PCDF	Polychlorinated Dibenzofurans
PID	Photo Ionization Detector
PUF Filter	Polyurethane Foam Filter
QA/QC	Quality Assurance/Quality Control
QAPP	Quality Assurance Project Plan
RM	River Mile
RI/FS	Remedial Investigation / Feasibility Study
SOP	Standard Operating Procedure
TOC	Total Organic Carbon
USEPA	United States Environmental Protection Agency
VOC	Volatile Organic Compound
XAD	Polymeric resin bead filter

1.Introduction

1.1. Overview

Perimeter air monitoring is to be conducted by the CPG and its contractors during the RM 10.9 Removal Action. This Perimeter Air Monitoring Program (PAMP) prescribes appropriate management measures and monitoring that protects the public living and working adjacent to the removal area at RM 10.9 from potential airborne contaminants. Specifically, the plan protects nearby residents, recreational users of the park and the park worker. This PAMP is in conjunction with the Community Health and Safety Plan.

The perimeter air monitoring program will be initiated a few days prior to the start of dredging in July 2013 and continue through until the completion of field work early December 2013. There are two aspects of the air monitoring program; real-time air monitoring which provide results immediately during the removal operations, and samples that are collected over a 24-hour period and sent to a laboratory for analysis. Real-time air monitoring will occur during dredging/capping operations roughly 12-hours a day 6-days a week. Twenty-four (24) hour composites samples are collected during the operational and non-operational times of day 6-days a week. Some monitoring may be reduced or eliminated pending regulatory approval at the completion of dredging and not conducted during the capping portion of the project.

1.2. Program Objectives

The main objective of this program is to identify air monitoring and management response measures to be implemented during dredging and capping operations that limit potential exposures to the public. This program details the monitoring and associated warning values which if reached, will be used to initiate further investigation into the cause(s) and impacts that these works may be having on the public in the vicinity of dredging operations, as well as to determine the appropriate management response. This response may include temporary cessation (stop work) of dredging and capping activities if the impact is found attributable to either, to allow for time to effectively resolve the matter and assure that air monitoring levels return to below-warning values.

1.3. Potential Air Emissions: Conceptual Model

The primary activity which could potentially cause air related concerns is the removal of sediment and placing it on the barge. The question that needs to be addressed is whether the sediment or water contain a level of contaminants that could emit vapors or dust and be an inhalation concern to the public. The contaminants at RM 10.9 such as Dioxins/Furans and PCBs have low vapor pressures and adhere tightly to the sediment particles, and thus do not have high vapor emission potential. The contaminants that do have high emission potential such as volatile organics and selected semi-volatile organic compounds such as naphthalene are found at low levels within the RM 10.9 sediment.

The nature of the exposure at an off-site public location can be:

- Sub-chronic, or shorter-term (typically occurring for a few months or a year), or
- Chronic, or longer-term, (typically occurring for several years),

The RM 10.9 dredging activities will only occur for approximately 60-90 days so this is considered a sub-chronic exposure duration. Given the concentration of chemicals of potential concern (COPCs) found in the sediment adverse health effects are not anticipated. Health risks – if any - would only be associated with long-term exposure and not any incidental or short term exposure since:

- The potential adverse health effects from the inhalation of these constituents are associated with much higher concentrations than are reasonably generated in an open air setting by dredging-related dust emissions; and
- Natural atmospheric dispersion and particulate deposition (by gravity, winds, rain or through contact with buildings and structures) prevent high dust concentrations from persisting in the ambient air.

The exposure point concentration for target chemicals in the air at off-site locations where a member of the public may inhale it is conceptually made up of two components:

- The concentration of a chemical that is typically present in the outdoor air that is unrelated to the dredging activities (i.e. the baseline ambient air concentration or "background") and
- The concentration of that chemical that is present due to the transport and dispersion of dust from the removal operations.

The overall purpose of implementing an air monitoring and sampling program at the site is to:

- Establish background levels
- Monitor and document perimeter ambient air levels of target COPCs
- Compare results with screening levels based on appropriate human exposure scenarios
- Determine when to implement appropriate dust and/or odor control measures and/or amend best management practices (BMPs)
- Document actual conditions during the removal action

Due to the proximity of the public to the dredge and barge loading in the vicinity of RM 10.9, the NJDEP requested that the CPG evaluate the potential of the dredging operations to create air emissions (Potential to Emit (PtE)). Potential emissions are assumed to come from the dredged sediment while it is being removed from the river and placed in a barge. Sediment data from the removal area was used for the PtE calculations. The PtE for dioxins and PCBs are 3.5 and 4.5 times below the NJDEP reporting threshold respectively. For all other COPCs present in the RM 10.9 sediment, the PtEs are orders of magnitude below the NJDEP reporting threshold.

The removal process requires the dredge bucket to be pulled through the river water so there will be a fair amount of water with the sediment. The sediment will then be stored and handled on the barge wet. Wet sediment will remain on the barge until it reaches the downstream stabilization facility; during that short time (< 1 day) it is not expected to dry, so very little dust is expected to be generated. It is unlikely that there will be other emissions generated from this process. However wind-borne dust and vapor as a transport pathway with regards to potential inhalation exposure hazards to the public was evaluated and will be monitored.

While PtE calculations show no exceedance of NJDEP reporting threshold values, there is the potential for odors from the operation. The COPCs contained within the sediment that will be dredged generally do not have odors at the concentrations found within the sediment. The most likely odor associated with sediment is that of hydrogen sulfide (H_2S), the rotten egg smell. All natural occurring sediment/dirt will have some odor to it due to the organic matter (decaying leaves, aquatic plants etc.) that has been buried with it. Many sediment samples have been collected from the RM 10.9 area and the levels of hydrogen sulfide have been very low and hardly noticeable. If odors are detected during dredging, they are expected to be more of a nuisance than a potential health impact to the public. Potential odor is included in this monitoring plan.

The CPG will conduct real-time air monitoring for selected indicator compounds supplemented by air sampling and analysis for target COPCs to document the actual conditions.

The PtE calculations requested by NJDEP showed that Volatile Organic Compounds (VOCs) are below NJDEP permitting thresholds. Hydrogen sulfide has been monitored during all sediment collection activities conducted for many years and the levels have been below monitoring requirements. Nevertheless, real-time monitoring of VOCs and hydrogen sulfide will be conducted downwind of the dredging operations at RM 10.9. The hydrogen sulfide monitoring is more for odor control than for a health risk. Real-time monitoring and sampling for particulates (dust) will be conducted at specific fixed locations depending on wind direction surrounding the dredging operations at RM 10.9.

Concentrations of the target COPCs measured in this program will be compared to an appropriate risk-based screening level at the point of potential exposure. These screening levels will be chemical-specific concentrations or concentration limits on total dust (particulates) that are established to be protective of human health assuming potential exposure throughout the duration of the dredging project.

The air monitoring plan will consist of the following:

- real time monitoring of meteorological data to determine what areas are downwind of removal activities,
- real-time monitoring for (VOCs),
- monitoring of hydrogen sulfide (rotten egg smell),
- real-time monitoring of dust (particulates),
- 24-hour composite samples at fixed locations for particulates (dust) to be analyzed for targeted COPCs that would adhere to dust particles.

2.Proposed Controls

2.1. Overview

The proposed Removal Action dredging and capping operations have the potential to release into the air environment what should be low levels of particulates and vapor. Further details of the dredging and capping activities, including volumes and equipment, are provided in the Final Design Report which was submitted and reviewed separately by the United States Environmental Protection Agency (USEPA) and New Jersey Department of Environmental Protection (NJDEP).

This Program describes an air monitoring regime to provide advance warning of conditions that could have the potential to exceed human health risk assessment warning levels and to respond to and manage such events, including investigation and mitigation measures.

2.2. Dredging/Capping Operational Controls

The following Best Management Practices (BMP) will be employed during the dredging/capping operations to minimize the potential for an impact to air quality:

- The use of an environmental clamshell bucket minimizes the air flow and will reduce odor from the dredging process and dredged sediment.
- Maintain expeditious movement of the closed bucket to the receiving barge after completing a cut to reduce water leakage from the clamshell bucket into the river to the extent practicable.
- Prohibit raking for debris removal.
- Keep sediment in barge moist.
- Minimize the exposure time of newly excavated surfaces at low tide.

3.Air Monitoring

Air monitoring will be conducted using a combination of upwind and downwind monitoring stations at fixed and mobile units to provide the best coverage of the removal action operations. As noted the potential of emissions from the dredging operation is expected to be very low due to the moist conditions during sediment handling. The monitoring will consist of real-time direct measurements and 24-hour integrated whole air particulate samples. Real-time monitoring will measure VOCs, H_2S and airborne dust to guide the implementation of BMPs to reduce emissions if necessary. The 24-hour particulate samples will provide the necessary information to document the primary COPCs that are potentially adsorbed to airborne particles or present in vapor-phase.

3.1. Monitoring Stations

A goal of an air monitoring program is to detect air quality impacts coming from the project area by comparing results from upwind and downwind monitoring stations. This makes choosing appropriate monitoring locations an important consideration. The monitoring locations have been selected based on prevailing wind direction, electric power accessibility, and proximity to potential receptors. Wind roses were prepared from wind data for Newark airport. Nine years' worth of data from 1981 to 1990 for the months in which the removal action will take place (July, August, September, October) indicate the prevailing wind directions are from the west and north and lesser degree from southwest and northwest. Based on the prevalent wind conditions and configuration of the removal area the primary receptors are those east of the river in the park and east of the park. The monitoring locations are described below and presented in Figure 1.

In River Station (IRS) #1 - one location on the river which includes real-time monitoring equipment (VOCs, Dust/Aerosol, H_2S) and 24-hour composite particulate sampling equipment for COPCs. This equipment is mounted on a floating platform that will be moved periodically to best monitor the operations.

Park Monitoring Station (PMS) #1 and PMS #2 each includes real-time monitoring equipment (VOCs, Dust/Aerosol, H_2S) and 24-hour composite particulate sampling equipment for COPCs. PMS #3 is a 24-hour composite particulate sampling location. Locations PMS #1 and PMS #3 will remain in the same locations for the duration of the project. PMS #2 will be moved from the south location to the north location as dredging progresses upstream to best monitor the operations.

Mobile #1 includes real-time monitoring equipment for VOCs, Dust/Aerosol, and H_2S. Mobile #1 will be located primarily adjacent to the dredging operations in the park however can be easily moved to other locations if necessary to address issues.

The on-site weather station will provide continuous wind direction information to determine which monitoring locations are upwind versus downwind at any given time.

3.1.1. In River Monitoring Stations

Based on prevalent winds, there will be one primary upwind (background) monitoring station(IRS #1) established on the river to provide data on the quality of air coming into the project area. The western

shore of the river would be a good location for upwind locations except for the proximity to Highway 21 and configuration constraints due to the limited shoreline width. CPG proposes putting the upwind air monitoring equipment on a floating platform in the river. The floating platform will then be moved as the dredging progresses to keep location IRS #1 prevalently upwind, though at times IRS #1 may be considered a downwind monitoring station depending on wind direction determined by the on-site weather station.

3.1.2. Park Monitoring Stations

Due to the irregular shape of the removal area and the possible prevailing wind directions, the primary downwind real-time air monitoring location will be a mobile one (Mobile #1) located primarily adjacent to the dredging operations in the park however, can be easily moved to other locations if necessary to address issues. In addition, there will be three fixed locations (PMS #1, PMS# 2, and PMS #3) at all times. For example, dredging begins in the southern half of the removal area, PMS #1, #2, and #3 will be as depicted on Figure 1. As the project progresses upstream, equipment at monitoring location PMS #2 will be moved to the north location shown in Figure 1.

3.2. Real-Time Monitoring

Real-time monitoring is used to identify promptly when additional investigation or control measures are needed. Real-time monitoring will consist of monitoring for VOCs and dust as well as hydrogen sulfide. Real-time monitoring for VOCs and dust will be conducted at stations IRS #1, PMS #1, PMS #2 and Mobile #1. Real-time monitoring will also include an automated weather station that will be used to monitor wind direction, wind speed, ambient temperature, relative humidity and barometric pressure at the fixed location weather station.

The following are the key elements of the real-time monitoring system to be utilized:

3.2.1. VOC Monitoring

Air will be monitored for VOCs continuously and averaged on 15-minute intervals at stations IRS #1, PMS #1 and #2 and Mobile #1 surrounding the dredging operations to verify that total VOC concentrations within the Park and beyond do not exceed the air indicator established by EPA for this project.

VOC monitoring equipment will consist of photo-ionization detectors (PIDs) via MiniRAE-3000 or equivalent equipment that measures VOC concentrations continuously. The equipment logs real-time data and calculates a 15-minute average. This equipment will be operational during the 12-hour dredging/capping operations shift. Equipment information and SOPs are provided in Attachment 2.

3.2.2. Particulate (Dust) Monitoring

Dust/aerosol will be monitored to verify that concentrations at downwind locations of the dredging/capping operations remain below the air indicator criteria for PM_{10} concentrations.

The particulate monitoring will be conducted with a Thermo MIE DataRam Aerosol Monitor or equivalent capable of monitoring a range of particulates in the air from 1 ug/m^3 to 400,000 ug/m^3. Details of the dust monitoring data collection, operation, and calibration are provided in the air monitoring SOP (Attachment 2).

3.2.3. Hydrogen Sulfide Monitoring

Many sediment samples have been collected from the RM 10.9 area and the levels of hydrogen sulfide have been very low with odor barely noticeable. Sensitive receptors can smell the "rotten egg" odor of H_2S at low concentrations in air 0.5 ppb (0.0005 ppm) and 90 percent of people can smell it at levels of 50 ppb (0.05 ppm). A Jerome Hydrogen Sulfide Analyzer Model J631-X portable gas monitor or equivalent will be used to detect hydrogen sulfide with a range of 0.003 ppm to 50 ppm hydrogen sulphide in four graduated ranges. The data will be collected real-time and averaged over a 15 minute period. The instrument information and SOPS are provided in Attachment 2.

3.2.4. Noise Monitoring

Noise monitoring will consist of sound level measurements and done manually by field personnel periodically while in the park attending to the air monitoring equipment. At a minimum, a reading will be collected once every three hours during the daytime 12-hour construction shift. Additional monitoring will be conducted if there are complaints of noise from people in the park or nearby residents. Routine monitoring will occur along the shoreline 100 feet north, 100 feet south and at the mid-point of the removal area. The noise monitoring will be conducted with a sound level monitor such as the Extech 407730 Digital Sound Level Meter or equivalent capable of measuring sound pressures level in dB from 40 to 130 dB. The New Jersey daytime maximum hourly noise average standard is 75 dB.

3.2.5. Meteorological Measurements

There will be on-site meteorological data collection station located within the park near the RM 10.9 removal area (Figure1). The weather station will continuously monitor and record the following; air temperature, air pressure, wind direction and speed, precipitation quantity and intensity and relative humidity. The wind direction and speed will be used to ensure that air monitoring stations are properly situated to monitoring the dredging activities and to document the conditions during the removal action.

Project personnel will have access to and routinely monitor other weather information sources such as the National Weather Service website and broadcasts as a backup to the on-site real-time weather station.

Details of the real-time monitoring equipment, operation, calibration methods are provided in Attachment 2.

3.3. COPCs Monitoring

In addition to the real-time monitoring of dust, a composite sample of the dust will be collected during 24-hour periods at four locations, one on the river and three in the park (IRS #1, PMS #1, PMS #2, and PMS #3) which surrounds the dredging /capping operations, and these samples will be analyzed for select COPCs. The results will be reviewed during the project and compared to human health risk based criteria as described in Section 3.7. If these criteria are exceeded then appropriate dust controls measure will be implemented. Due to the concentrations in the sediment, the potential dust

concentration of contaminants does not pose an acute (short term) hazard, therefore it is not necessary to monitor for individual COPCs in real-time. Samples that are collected will be analyzed at a laboratory that will provide results in 3 to 5 days. The sampling approach and laboratory methods are listed in Table 3-1.

The 24-hour composite samples will be collected using portable high volume (or equivalent) ambient air sample pumps and the appropriate particulate size selector and filter, PUF sampler cartridge, or XAD cartridge as required by the analytical method. The COPCs that will be analyzed include mercury, PCBs, and 2,3,7,8-tetrachlorodibenzo-*p*-dioxin (2,3,7,8-TCDD) toxicity equivalent (TEQ).

During the first week of dredging (Days 1 through 6 of dredging) simultaneous samples for dioxin, PCBs, mercury and PM10 will be collected at the following locations PMS#1, PMS #2 and PMS #3. Due to limitations of equipment at location IRS #1 only 3 of the 4 parameters will be collected with dioxin and PCBs samples collected in an alternating scheme.

During week 2 of dredging there will be two days where simultaneous samples for dioxin, PCBs, mercury and PM10 will be collected at the following locations PMS#1,PMS#2 and PMS#3. Due to limitations of equipment at location IRS #1 only 3 of the 4 parameters will be collected with dioxin and PCBs samples collected in a rotating scheme.

After this start-up monitoring (Week 1 and 2), and until results are received, the sampling will follow the rotating schedule provided below. These samples will be analyzed with rapid turnaround of 5 days. Once data from the start-up is reviewed it is anticipated that the frequency of COPC sampling will be able to be decreased to 1 time per week.

After the start-up sampling, not all samples collected each day will be analyzed for all COPCs. A rotating scheme will be used to analyze the COPCs. An example rotating scheme is as follows;

Day 1 – PM 10 and Mercury
Day 2 – TCDD
Day 3 – PCB
Day 4 – Start over collecting PM10 and Mercury
Day 5 – TCDD

Day 1 the 24-hour composites from IRS #1, PMS #1, PMS #2, and PMS #3 will be analyzed for PM 10, and mercury. On Day 2 the 24-hour composites from IRS #1, PMS #1, PMS #2, and PMS #3 will be analyzed for TCDD, etc.

When the dredging operations reach the removal area that contains the highest concentrations of COPCs (transects 28+00 to 21+00) simultaneous samples for dioxin, PCBs, mercury and PM10 will again be collected. This monitoring will include the following locations PMS#1, PMS #2, and PMS #3. Due to limitations of equipment at location IRS #1 only 3 of the 4 parameters will be collected with dioxin and PCBs samples collected in a rotating scheme. The length of this intensive sampling will depend on the previous results but could be 2 to 6 days. Details of the high volume sampling data collection, operation, and calibration are provided in Attachment 2.

Table 3-1 COPC Sampling and Analysis Approach

Parameter/Category	Method	Sampling and Analysis Approach	Reporting Limits
2,3,7,8-TCDD	USEPA TO-9A (particulate and gaseous phase)	Ambient air (high volume or equivalent) is drawn through quartz-fiber / polyurethane foam absorbent in a 24 hour period. Analytical procedures are extract followed by HRGC-HRMS	10 pg
Total PCBs	USEPA TO-4A (particulate and gaseous phase)	Ambient air (high volume or equivalent) is drawn through quartz-fiber / polyurethane foam absorbent in a 24 hour period. PCBs are extracted from media and analyzed per GC	1.0 ug
Particulate Matter PM-10	PM10 and Total Suspended Particulate by NIOSH Method 0500	Ambient air (high volume or equivalent) is drawn via a 10 um size inlet through a glass fiber or quartz filter. Gravimetric particulate concentration based on weight difference.	200 µg
Mercury	Test America Knoxville Procedure for Filter Media Metals Digestion, KNOX-MT-009 and KNOX-IP-0003r6TAL	Ambient air (high volume or equivalent) is drawn via a 10 um size inlet through a glass fiber or quartz filter. Extraction followed by TAL metals analysis for mercury.	0.01 ug

Test America – Knoxville - Attachment 3 Analytical SOPs. Particulates size captured will be 10 micrometers in diameter and less.

3.4. Barge Transport Monitoring

The barges used to transfer dredged sediment from RM 10.9 to the stabilization facility are part of the dredging operations so will be included in the air monitoring while at those locations. The dredge material will be wet and may have a layer of water on top of it as the sediment settles to the bottom of the barge and residual water comes to the top. For this reason and as shown in the PtE calculations performed for NJDEP (Attachment 4), emissions from the barged material will be low. It is anticipated that barges full of dredged sediment will only be stationary for very short periods of time, less than an hour, during the trip from RM 10.9 to the stabilization facility preventing downwind impacts.

Air monitoring of barge emissions will be conducted by setting up a real-time monitor (Mobile #1 – VOCs, dust/aerosol, hydrogen sulfide) alongside the barge while it is stationary at the downwind side before it begins the first trip down river and only for the first barge filled unless results indicate a reason for additional monitoring.

3.5. Baseline Monitoring

Prior to the commencement of dredging activities, the fixed air monitoring stations will be installed and at least 48 hours of monitoring will be conducted. These composite samples will be sent to the laboratory and analyzed for 2,3,7,8 TCDD and PCBs as the primary COPCs of concern. Similarly, monitoring of the park with the mobile devices will be conducted prior to dredging.

3.6. Monitoring Frequency and Durations

Air monitoring for the RM 10.9 Removal Action will occur for the duration of the dredging operations at the frequency listed in Table 3-2.

Table 3-2 Removal Action Air Monitoring Details

Monitoring Location	Type of Monitoring Point	Monitoring Frequency	Description of Location
In River Station (IRS #1)	Real time VOCs, Aerosol-Dust, Hydrogen Sulfide	Continuous – averaged every 15 minutes (Frequency may change as project progresses)	Located on a floating platform in the river
	Particulates sample collection analyzed for a COPC each day	24 Hour composites daily; during dredging	
Park Monitoring Station Mobile #1	Real time VOCs, Aerosol-dust, Hydrogen Sulfide	Continuously averaged for 15 minutes at each location (Frequency may change as project progresses)	Adjacent to dredging/capping operations and random locations as needed in the park
	Noise	Once every three hours during the daytime 12-hour construction shift	Shoreline north and south 100 feet of the removal area Shoreline mid-point of the removal area
Park Monitoring Station (PMS #1)	Particulate sample collection analyzed for a COPC each day	24 Hour composites daily; during dredging	Fixed location within the park
	Real time VOCs, Aerosol-dust , Hydrogen Sulfide	Continuously averaged every 15 minutes (Frequency may change as project progresses)	
Park Monitoring Station (PMS #2)	Particulate sample collection analyzed for a COPC each day	24 Hour composites daily; during dredging	Fixed location within the park – south and north areas
	Real time VOCs, Aerosol-dust , Hydrogen Sulfide	Continuously averaged every 15 minutes (Frequency may change as project progresses)	
Park Monitoring Station (PMS #3)	Particulate sample collection analyzed for a COPC each day	24 Hour composites daily; during dredging	Fixed location within the park - central area
Down wind of sediment barge (Using Mobile #1 equipment)	Real time VOCs, Aerosol-dust, Hydrogen Sulfide	Before first sediment barge begins the trip to the stabilization facility	On the river down wind of the sediment barge

3.7. Project-Specific Risk-Based Ambient Air Action Levels

This section describes the basis and calculation of risk-based ambient air action levels for potential public exposure to the target parameter contaminants in the dust associated with contaminated sediment during the sediment dredging. Project-specific risk-based action levels (RBALs) were developed to verify the effectiveness of control measures and to verify that average exposures to the public remain below RBALs during sediment removal activities. In addition, a tiered set of responses are described for implementation when an action level is reached. The RBALs were developed specifically for the planned duration of the removal action and can be refined, as needed, to reflect new information or changes in site conditions that may occur during the remediation. (Section 4 lists the specific RBALs calculated for the RM 10.9 Removal Action project. Attachment 1 describes how the RBALs were calculated. This section discusses the basis of the calculations.)

3.7.1. Chemicals of Potential Concern

The actions taken to address sediment concentrations in the RM 10.9 Sediment Deposit Area are based on concentrations of identified chemicals of potential concern (COPCs): mercury, polychlorinated biphenyls (PCBs), and polychlorinated dibenzo-p-dioxins/polychlorinated dibenzofurans (PCDDs/PCDFs). The planned method to address these COPCs is to mechanically dredge the sediment from the RM 10.9 Removal Area, place the sediment in containers for offsite disposal, and then cap the newly exposed surface sediment. Dredging activities are currently scheduled to begin in summer 2013 with an anticipated duration of less than 60 days during daylight hours (up to 12 hours per day, six days per week).

3.7.2. Conceptual Exposure Model

Sediment handling will be performed in a manner to limit generation of dust during the dredging. RBALs have been developed for use with air monitoring to address the potential for windborne migration of sediment related dust/particulate or volatile emissions into the neighboring adjacent park and nearby offsite residential areas. Based on the close proximity of the dredging to the adjacent park and nearby residential area the following potential inhalation exposure pathways primarily of COPCs in dust associated with contaminated sediment have been identified; recreational users, park workers, and residents.

3.7.3. Exposure Point Concentrations

Air concentrations will be monitored during the planned activities at offsite stations that will be installed near the RM 10.9 Removal Area as discussed in Section 3.1 within downwind areas where there is the potential for exposure. The exposure point concentration for COPCs in the air at an off-site location where potential receptors may be exposed is composed of the baseline ambient air concentration (“background”) concentration and the concentration present due to the dredging. There are no site-specific ambient air concentrations available for COPCs in the vicinity of the RM 10.9 sediment; however, there are air monitoring results in the vicinity of the area for PCBs, and 2,3,7,8-tetrachlorodibenzo-*p*-dioxin (2,3,7,8-TCDD) toxicity equivalent (TEQ) concentrations for dioxins and furans. Air monitoring for dioxins (2,3,7,8-TCDD TEQ) and total PCBs was conducted in March 2012 prior to a separate dredging project 7 miles downstream in the Lower Passaic River. The 2012 average

background 2,3,7,8-TCDD TEQ concentration in that location and time was 2.1E-08 µg/m^3 and the average background PCBs concentration was 0.0016 µg/m^3.

3.7.4. Development of Project-Specific Risk-Based Action Levels

The RBALs for the RM 10.9 Removal Action are chemical-specific levels based on an inhalation exposure pathway. RBALs may be used to determine when response(s) are warranted to maintain protectiveness of receptors potentially exposed to COPCs in air during the planned activities.

The RBALs were calculated using the methodology presented in the *Regional Screening Levels for Chemical Contaminants at Superfund Sites* (USEPA 2012) which are intended to develop levels representative of long-term (i.e., lifetime) exposures. Site-specific exposure parameters that are more appropriate to the duration of the dredging were incorporated in the RBALs calculations. For the park worker exposure scenario at the neighboring park, it was assumed that inhalation could occur for 8 hours in a workday which represents USEPA's standard default exposure for various occupational activities (USEPA 1991). While the offsite resident inhalation exposure duration coincides with the 12-hour dredging schedule since that is the only activity that could produce a potential exposure, a exposure duration of 24-hours has been requested by EPA.

The equations used to calculate the RBALs for the receptors incorporate these exposure factors and inhalation toxicity values to estimate chemical concentrations in air that correspond to the target levels of $1x10^{-6}$ excess lifetime cancer risk and non-cancer hazard quotient of 1 for each target organ and non-carcinogenic endpoint. The exposure assumptions and toxicity values used to calculate the RBALs for recreational users, park workers, and residents are presented in Attachment 1 Tables A-1 through A-3, respectively.

The inhalation toxicity values (non-cancer reference concentration [RfC] and cancer inhalation unit risk factors [IUR]) were obtained following USEPA's recommended hierarchy of toxicity sources including USEPA's Integrated Risk Information System (IRIS), California Environmental Protection Agency (Cal EPA), and World Health Organization (WHO). The inhalation toxicity values are presented for each COPC in Tables A-1 through A-3 of Attachment 1. For PCBs, the toxicity values appropriate for Aroclor 1254 were used in the risk-based calculations.

3.8. Quality Control

Quality Control is the overall system of technical activities that measures the attributes and performance of a process. QC activities are used to ensure that measurement uncertainty is maintained within acceptance criteria for the project objectives. Day-to-day QC activities are implemented through the use of various checks or instruments that are used for comparison. The analytical laboratory has a Quality Management System (QMS) to assess the reliability and validity of the analyses being performed at their facility.

Test America Knoxville has current certification for the analytical methods to be used in the air sampling component of this project.

All purchased or rented supplies and consumables will be inspected to assure that the quality and function will adhere to the standards necessary to meet all project objectives. Documented inspection

and acceptance criteria are necessary to ensure consistency of supplies. All sampling equipment prior to field deployment will be assembled and run in the CPG field facility. The field operators will perform external and internal leak checks and temperature, pressure and flow rate verification as required by the method. If any of these checks are out of specification, the field technicians will perform corrective action or the equipment will be replaced by the vendor.

3.8.1. Operation and Calibration of Air Monitoring Equipment

All instruments will be routinely inspected and undergo calibrated according to the manufacturer specifications for frequency and duration of calibration. All calibrations of the real time monitoring equipment will be recorded on a field calibration sheet (Attachment 1). Any quality assurance (Q/A) checks to confirm instrument accuracy performed will also be recorded on the calibration sheets. Throughout the day real time monitoring on the centralized database will provide real time data to assure the field equipment is in proper working order.

Calibration of the equipment will begin at one air monitoring station and will continue on to the next air monitoring station once quality assurance of all equipment at the station has been completed and verified by the field technician. The real time air monitors will be operating on a 24 hour cycle and the associated Q/A checks of the instruments will be completed as close to the 24 hour cycle as possible in concert with that time period.

Real-time equipment calibration will be required for the PIDs, dust/aerosol and hydrogen sulfide analyzer. Photoionization detectors (MiniRae 3000™ or equivalent) will be calibrated each day to the manufactures specifications. This briefly includes a zero calibration followed by a span calibration using a known concentration of isobutlyene gas. Confirmation of the calibration will completed with the sample isobutlyene gas. The Thermo DataRam-400™ dust and aerosol monitors will undergo a zero calibration at least once per day and when deemed necessary by the field technician. The Jerome 631-X™ hydrogen sulfide analyzer will undergo a zero calibration at least once per day and when deemed necessary by the field technician. Additionally, the Jerome 631-X™ requires sensor regeneration at a frequency of once per day or at the discretion of the field technician. Sensor regeneration clears the analyzer of any hydrogen sulfide build up through the sampling period. Any factory required calibrations will not be performed in the field. The monitoring equipment that will require recurrent factory re-calibration will be removed from service prior to the factory recommended date and replaced with an up to date piece of equipment until it has been serviced of the same make/model with current calibration certification.

The 24-hour composite particulate sampler, Tisch PUF™, will be calibrated using the manufacturer's specifications when the equipment has been installed at its associated air monitoring station. Periodic calibrations will be performed on a monthly basis, when moving locations, or if any maintenance has been performed on the motor. All calibration data will be recorded on data sheets (Attachment B).

3.8.2. Laboratory Quality Controls

Laboratory QA/QC will be in accordance with the analytical method requirements for the air particulates sampling conducted. The laboratory QA/QC components will include instrument calibration activities, blank sample analysis, laboratory control sample, and spike recoveries. CPG's contractors, CH2M HILL

and Test America, Knoxville, will ensure sample collection, holding times, calibration procedures and handling times will be in accordance with appropriate USEPA and NIOSH air sampling and analytical methods. The data will include QA/QC elements specified by the appropriate analytical method. Data validation of the analytical results will be performed by LDC the approved data validators for LPRSA. The purpose of data validation is to assess the effect of the analytical process on the usability of the data. The data validation and review process is independent of the laboratory's QC checks and focuses on the usability of the data to support the project data interpretation and decision making processes. Data validation will follow EPA Region 2 validation guidance as well as those National Function Guidelines.

3.8.3. Real Time Monitoring Quality Assurance

Each real-time monitoring station is connected to a cellular modem that uploads data to a central database so that the project team can monitor the data in real-time. During field calibrations, an general inspection of the monitoring station electronics will be performed to ensure that the modem is on and connected operating normally with connection to the cellular service, no wiring is loose, all of instrument cabling and connections are properly stowed and secured, and that the instruments are properly connected, and any. Any additional observations related to the proper working order of the monitoring station. Any relevant observations will be recorded in the field note book and field personnel will contact the project manager or designee immediately to report any issues in the functionality of the monitoring station. Each station will also be inspected prior to the end of the day's dredging activities and note any observations made in the field note book.

Any alarms of the action levels sent from the central database will be monitored and recorded in the field log book. Project management will be notified immediately for further decision making. A log book will be kept to record daily activities, observations, and any changing site conditions. At a minimum frequency of once per week all data will be downloaded from the central database and saved in the project files.

4.Response

4.1. Real-Time Monitoring – Warning and Action Levels

Real-time air monitoring will be used to provide an early warning to prevent elevated offsite exposures and document conditions occurring during remedial activities. If action levels are exceeded, appropriate actions will be implemented to mitigate potential exposure. Table 4-1 lists the real-time monitoring action levels that will be implemented for VOCs, dust and hydrogen sulfide.

Table 4-1. Real-Time Monitoring – Warning and Action Levels with Responses

Parameter/Action Level	Concentration	Response
VOCs - Warning Level	5 ppm above background (determined at the upwind location) is exceeded over a 15-minute period	Work activities are temporarily suspended and the source of VOCs investigated. Activities may continue after VOC concentrations fall below 5 ppm over a 15 minute period, or if the source of the VOC is determined not to be associated with Removal Action activities.
VOCs – Action Level	10 ppm above background (determined at the upwind location) is exceeded over a 15-minute period	Operations will be suspended until the VOC level returns to below the action level within a subsequent 15-minute period either naturally or as a result of corrective measures, unless it can be demonstrated through investigation that dredging is not the cause of the exceedance.
Dust – Warning Level	100 ug/m^3 of above background (determined at the upwind location) is exceeded over a 15-minute period	The source of the dust will be investigated and if necessary corrective measures will be implemented.
Dust – Action Level	450 ug/m^3 above background (determined at the upwind location) is exceeded over a 15-minute period	Operations will be suspended until the dust level returns to below the action level within a subsequent 15-minute period either naturally or as a result of corrective measures, unless it can be demonstrated through investigation that dredging is not the cause of the exceedance.
Hydrogen Sulfide – Warning Level	0.01 ppm above background (determined at the upwind location)is exceeded over a 15-minute period	The source of the hydrogen sulfide will be investigated and if necessary corrective measures will be implemented.
Hydrogen Sulfide – Action Level	0.02 ppm above background (determined at the upwind location)is exceeded over a 15-minute period	Operations will be suspended until the hydrogen sulfide level returns to below the action level within a subsequent 15-minute period either naturally or as a result of corrective measures, unless it can be demonstrated through investigation or comparison of upwind and downwind data that dredging is not the cause of the exceedance.

4.2. COPC Monitoring – Warning and Action Levels

RBALs were calculated using EPA methods and are based on the exposure period assumptions described above for the public receptors (recreational users, park workers, and residents) and the projected duration of less than 90 days of the dredging (Attachment 1 - Table A-4). They represent the average concentration of COPCs that correspond to the most protective of the target cancer risk level or target hazard if a receptor inhaled air with that concentration over the assumed exposure time. Emissions of particulate dust during the dredging will fluctuate over time resulting in fluctuations of air concentrations at the monitoring stations. As such, these action limits should be viewed as the average target concentrations to be maintained. Monitoring station air concentrations above these RBALs for short durations do not necessarily reflect an immediate or an imminent health risk. Instead, comparisons of the air concentrations at the monitoring stations to these RBALs will be used to guide operations. Recommendations are presented in Table 4-2.

Table 4-2. COPC Monitoring Action Levels

Action Level	Resident	Park Worker	Recreational User	Response
2, 3, 7, 8 TCDD TEQ (ug/m^3) 24-hour sample				
Warning Level	1.92×10^{-5}	5.7×10^{-5}	1.5×10^{-4}	Notify EPA within 24 hours of receipt of analytical data Prepare a summary of data for time period of exceedance and any corrective action taken.
Action Level	2.4×10^{-5}	7.1×10^{-4}	1.9×10^{-4}	Notify EPA immediately of receipt of analytical data Prepare a summary of data for time period of exceedance and any corrective action taken within 3-days of identifying the exceedance.
PCBs (ug/m^3) 24-hour sample				
Warning Level	0.088	0.568	0.648	Notify EPA within 24 hours of receipt of analytical data Prepare a summary of data for time period of exceedance and any corrective action taken.
Action Level	0.11	0.71	0.81	Notify EPA immediately of receipt of analytical data Prepare a summary of data for time period of exceedance and any corrective action taken within 3-days of identifying the exceedance.
Mercury (ug/m^3) 24-hour sample				
Warning Level	1.9	2.96	7.76	Notify EPA within 24 hours of receipt of analytical data Prepare a summary of data for time period of exceedance and any corrective action taken.

Action Level	2.4	3.77	9.7	Notify EPA immediately of receipt of analytical data Prepare a summary of data for time period of exceedance and any corrective action taken within 3-days of identifying the exceedance.

Warning level is 80 percent of Risk Based Levels (Attachment 1 Table A-4)

4.3. Operations Below Warning and Action Levels

Daily air monitoring records are to be kept at the CPG field facility and are to be available for inspection. Reporting of the perimeter air monitoring data will depend on the conditions in which the data was collected and the type of data collection (real-time versus delayed analysis). Real-time perimeter air monitoring data summary for daily operations below all action levels will be provided to USEPA weekly. A data summary of particulate sampling events and preliminary COPC particulate data results received will be provided to EPA weekly. A summary of this information will be posted on the CPG's web site weekly.

4.4. Warning Level Exceedance

If an air monitoring parameter is measured at or above the warning value specified, the CH2M HILL construction manager or safety coordinator (or delegate) will be responsible for overseeing the process of investigation and determination of the appropriate mitigation and other corrective measures in consultation with on-site CPG representatives and other relevant on-site personnel.

If an air monitoring parameter exceeds a warning level the following documentation will be collected, and not limited to the sampling location, time, date, meteorological conditions, location of dredging operations, and the corrective and other measures taken in response to the event. Where relevant, the details of other in-river activities unrelated to RM 10.9 Removal Action will also be noted.

CH2M HILL/dmi will notify EPA's Project Manager within 24-hours if there is an exceedance of a 'warning level' from the time of occurrence for real-time monitoring and receipt of analytical data for COPC particulate monitoring. Further details will be provided in a weekly data summary with descriptions of any corrective actions taken to reduce the levels below the warning level.

4.5. Action Level Exceedance

The CH2M HILL construction manager or safety coordinator (or delegate) will be responsible for overseeing the process of investigation and determination of the appropriate mitigation and other corrective measures in consultation with on-site CPG representatives and other relevant on-site personnel.

Dredging/capping activities will resume only when:

1) It is established that all dredging/capping plant and equipment is operating in a proper and efficient manner; and
2) Appropriate corrective measures have been implemented (note: any modifications to the operation undertaken for the specific purpose of addressing the increase due to dredging must restore air monitoring levels to below the action value within 15 minutes from the time of initiating the response; otherwise activities will remain suspended until this result is achieved).

If factors related to the RM 10.9 dredging activities are, or are likely to be, contributing to the action level exceedances, then the corrective and/or contingency measures identified in Section 5 may be applied.

Details that will be recorded in the event of an exceedence will include, but not be limited to the sampling location, time, date, tidal movements, meteorological conditions, location of dredging operations, and the corrective and other measures taken in response to the event. Where relevant, the details of other in-river activities unrelated to RM 10.9 Removal Action will be noted.

If a real-time monitoring 'action level' is exceeded due to dredging operations, CH2M HILL/dmi will notify the EPA Project Manager or designate immediately. Daily monitoring reports will be provided and a report identifying the cause of the exceedance and details of any corrective actions implemented, will be provided within 3-days.

Samples which are collected will be delivered to the laboratories on the same day where feasible, in accordance with the air monitoring and laboratory SOPs. An expedited turnaround time will be requested from the laboratories at the time of sample delivery, however, given the many external dependencies and inability of the laboratory to commit to a minimum turnaround period on results, this period cannot be guaranteed and will be subject to continual review. The results of the analytical analysis then will be compared the project specific risk based action levels that are described below.

While the data is being validated the preliminary results will be compared to the RBALs and the appropriate action or documentation will be performed. Once the data is validated the results will be shared as specified by data submission requirements of the LPRSA RI/FS. The data will also be provided in the RM10.9 Removal Action final report.

5.Contingency Measures

A range of contingency measures are available to apply in response to air monitoring measurements above the warning/action values where they are found attributable to the RM 10.9 Removal Action dredging and capping activities. The implementation of any of these contingencies will be determined by either the CH2M HILL construction manager or safety coordinator (or delegate) in consultation with on-site CPG representatives and other relevant on-site personnel.

These measures may include:

- Additional air quality monitoring;
- Modifying the dredging/capping operational parameters;
- Modifying the dredging/capping equipment, including bucket
- Reconfiguring the dredging operations; and
- Modifying or suspending activities until air quality is restored to below action values.
- Modifying action levels with concurrence from EPA if background levels consistently exceed action levels.

The written information provided in status reports will include the following:

- A description of the incident, its cause, and any contributing factors
- The exact dates and times of non-compliance
- If not yet corrected, the amount of time anticipated to correct the non-compliance
- Corrective actions taken or planned to prevent a recurrence

6.References

California Environmental Protection Agency (CalEPA). 2008. CalEPA – Office of Environmental Health Hazard Assessment Toxicity Criteria Database.

USEPA. 1991. *Human Health Evaluation Manual, Supplemental Guidance: "Standard Default Exposure Factors".* OSWER Directive 9285.6-03.

USEPA. 2011. *National Ambient Air Quality Standards.* http://www.epa.gov/air/criteria.html (Accessed February 2013)

USEPA. 2012. *Regional Screening Levels for Chemical Contaminants at Superfund Sites*. November.

USEPA. 2013. Integrated Risk Information System (IRIS) Database. (Accessed February 2013)

Van den Berg, M., L.S. Birnbaum, M. Denison, M. De Vito, W. Farland, M. Feeley, H. Fiedler, H. Hakansson, A. Hanberg, L. Haws, M. Rose, S. Safe, D. Schrenk, C. Tohyama, A. Tritscher, J. Tuomisto, M. Tysklind, N. Walker, and R. Peterson. 2006. *The World Health Organization Re-Evaluation of Human and Mammalian Toxic Equivalency Factors for Dioxins and Dioxin-Like Compounds*. Toxicological Sciences. ToxSci Advance. Access published on-line on July 7, 2006.

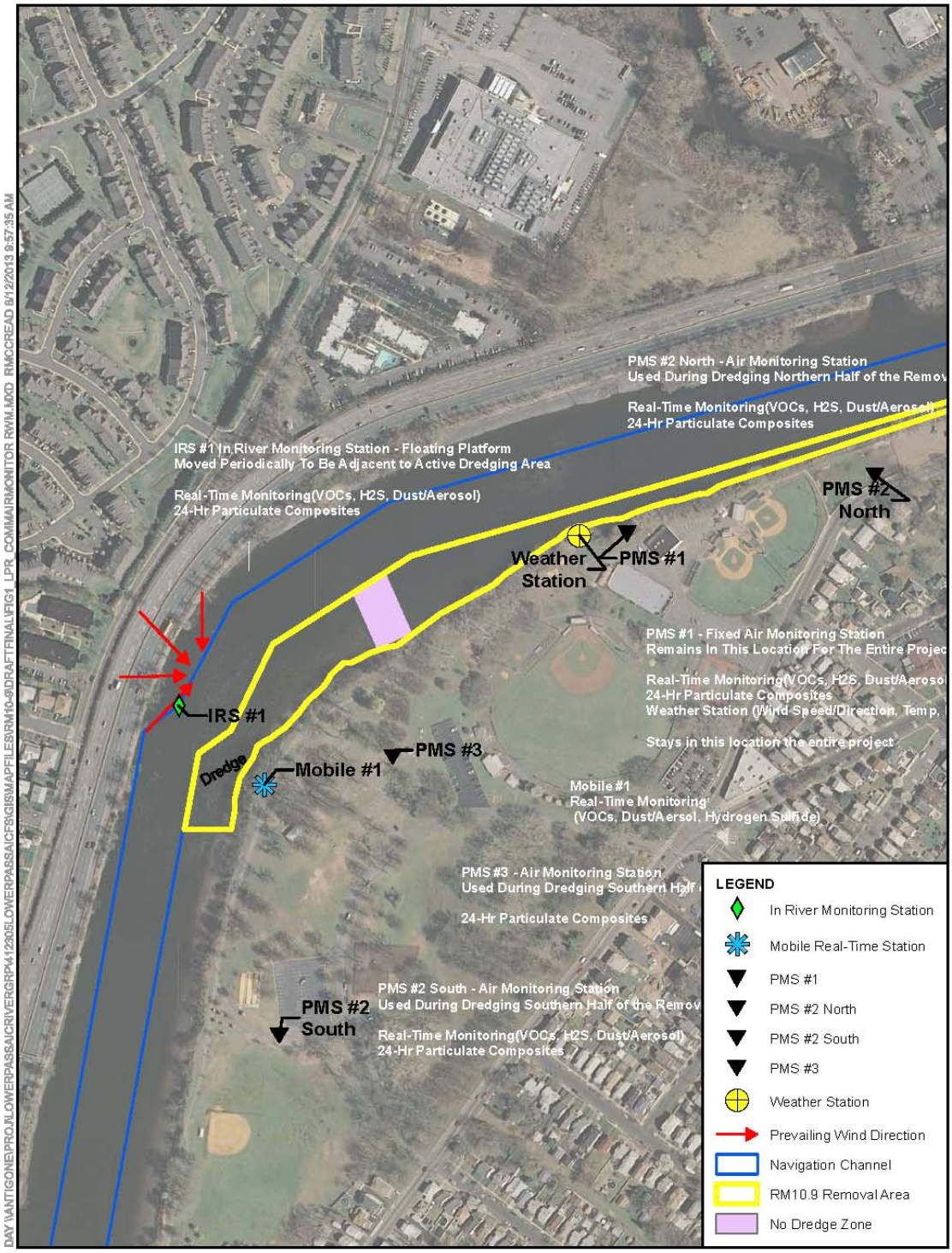

N

0 50 100 200 300 Feet

Notes:
1. Orthophoto: NJGIS, 2007

Figure 1 Perimeter Air Monitoring Stations
RM 10.9 Removal Action Air Monitoring Plan
Lower Passaic River Study Area, New Jersey

CH2MHILL

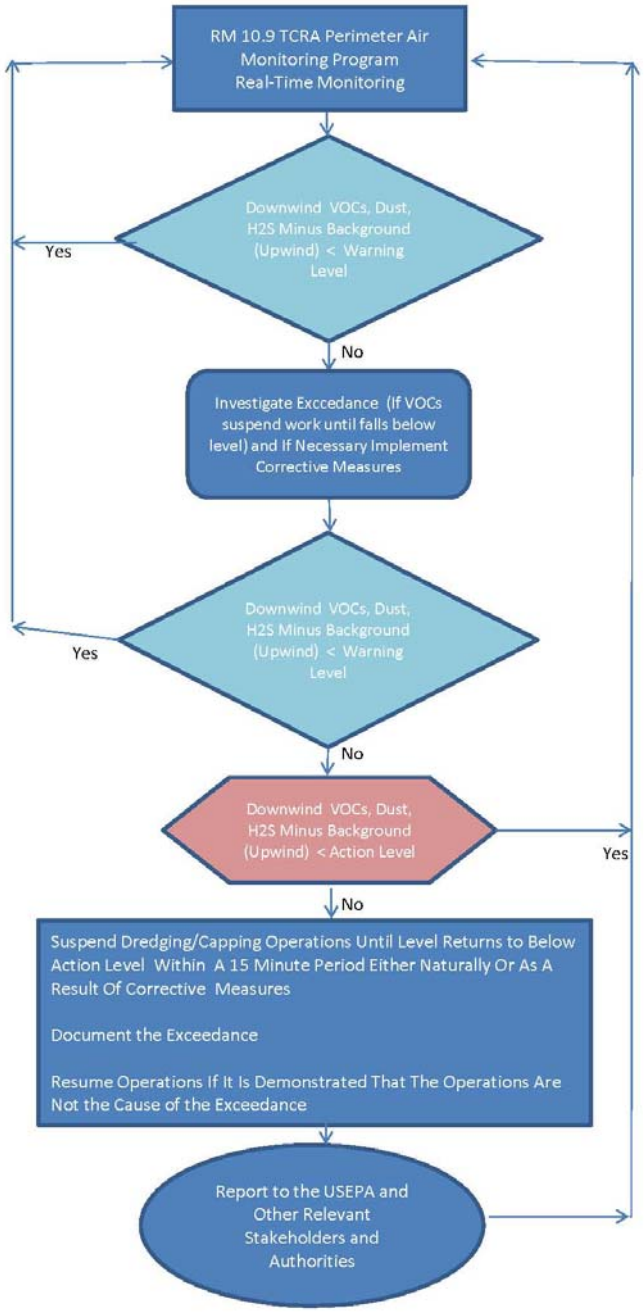

Figure 2. Real-Time Air Monitoring Decision Tree

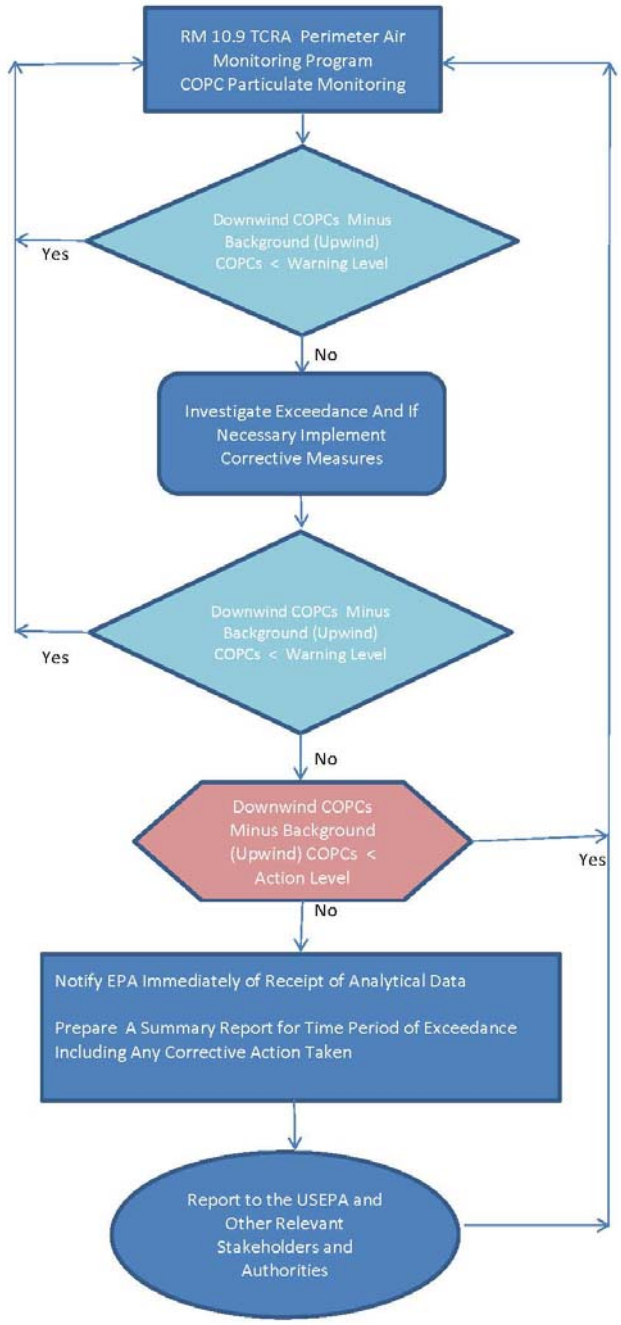

Figure 3 COPCs Particulate Air Monitoring Decision Tree

Attachment 1

Table A-1
Risk-Based Action Levels for Chemicals of Potential Concern: Recreation User (Adult/Child)

Table A-2
Risk-Based Action Levels for Chemicals of Potential Concern: Park Worker (Adult)

Table A-3
Risk-Based Action Levels for Chemicals of Potential Concern: Resident (Adult/Child)

Table A-4
Summary of Calculated Risk-Based Action Levels for Chemicals of Potential Concern

Table A-1

Risk-Based Action Levels for Chemicals of Potential Concern: Recreational User (Adult/Child)

RM 10.9 Removal Action

Lower Passaic River Study Area, New Jersey

Chemical	Inhalation Reference Concentration (mg/m^3)	Source	Basis	Target Organ	Inhalation Unit Risk $(\mu g/m^3)^{-1}$	Source	Noncarcinogenic Risk-Based Action Level THQ = 1 ($\mu g/m^3$)	Carcinogenic Risk-Based Action Level TCR = 1E-06 ($\mu g/m^3$)	Minimum Risk-Based Action Levels for Recreational User ($\mu g/m^3$)
Mercury	3.0E-04	IRIS, HEAST	Chronic, Subchronic	Nervous system, Autoimmune	NA	NA	9.7E+00	--	9.7E+00
PCBs	3.0E-05	IRIS	Chronic	Immune System, Ocular, Toe and Finger Nail	5.7E-04	IRIS	9.7E-01	4.0E+00	9.7E-01
2,3,7,8-TCDD	4.0E-08	Cal EPA	Chronic	Reproductivity	3.8E+01	Cal EPA	1.3E-03	6.0E-05	6.0E-05

Noncarcinogenic calculations:

$$\textbf{Noncarcinogenic Risk-Based Action Level } (\mu g/m^3) = \frac{THQ \times ATnc \times 1000\ \mu g/mg}{EF \times ED \times ET \times (1/RfC)}$$

$$\textbf{Noncarcinogenic Risk-Based Action Level } (\mu g/m^3) = \frac{THQ \times RfDi \times BW \times ATnc \times 1000\ \mu g/mg}{EF \times ED \times ET \times InhR}$$

Carcinogenic calculations:

$$\textbf{Carcinogenic Risk-Based Action Level } (\mu g/m^3) = \frac{TCR \times ATc}{EF \times ED \times ET \times IUR}$$

EXPOSURE ASSUMPTIONS	
ATnc - Averaging time for noncarcinogens (days)	365
ATc - Averaging time for carcinogens (days)	25,550
EF - Exposure frequency (days/year)	90
ED - Exposure duration (year)	1
ET - Exposure time (3-hr exposure time/24-hr day)	0.125
TCR - Target cancer risk	1.0E-06
THQ - Target hazard quotient	1

Notes:

Cal EPA = California EPA

IRIS = Integrated Risk Information System (accessed February 2013)

IUR = Inhalation unit risk

NA = Not available/not applicable

Noncarcinogenic risk-based level calculated such that total HQ for a target organ does not exceed 1

PCBs = Polychlorinated biphenyls

Aroclor 1254 oral reference dose (2×10^{-5} mg/kg-day) used to account for non-cancer effects for PCBs by using following conversion:

$$RfC\ (mg/m^3) = \frac{\text{Oral RfD } (2 \times 10^{-5}\ mg/kg\text{-day}) \times \text{Body Weight (15 kg - child)}}{\text{Inhalation Rate (10 } m^3\text{/day - child)}}$$

RfC = Reference concentration for inhalation

TCDD = Tetrachlorodibenzo-p-dioxin

Table A-2

Risk-Based Action Levels for Chemicals of Potential Concern: Park Worker (Adult)

RM 10.9 Removal Action

Lower Passaic River Study Area, New Jersey

Chemical	Inhalation Reference Concentration (mg/m^3)	Source	Basis	Target Organ	Inhalation Unit Risk ($(\mu g/m^3)^{-1}$)	Source	Noncarcinogenic Risk-Based Action Level THQ = 1 ($\mu g/m^3$)	Carcinogenic Risk-Based Action Level TCR = 1E-06 ($\mu g/m^3$)	Minimum Risk-Based Action Levels for Park Worker ($\mu g/m^3$)
Mercury	3.0E-04	IRIS, HEAST	Chronic, Subchronic	Nervous system, Autoimmune	NA	NA	3.7E+00	--	3.7E+00
PCBs	7.0E-05	IRIS	Chronic	Immune System, Ocular, Toe and Finger Nail	5.7E-04	IRIS	8.5E-01	1.5E+00	8.5E-01
2,3,7,8-TCDD	4.0E-08	Cal EPA	Chronic	Reproductivity	3.8E+01	Cal EPA	4.9E-04	2.2E-05	2.2E-05

Noncarcinogenic calculations:

Noncarcinogenic Risk-Based Action Level = ($\mu g/m^3$) $\dfrac{THQ \times ATnc \times 1000\ \mu g/mg}{EF \times ED \times ET \times (1/RfC)}$

Carcinogenic calculations:

Carcinogenic Risk-Based Action Level = ($\mu g/m^3$) $\dfrac{TCR \times ATc}{EF \times ED \times ET \times IUR}$

EXPOSURE ASSUMPTIONS	
ATnc - Averaging time for noncarcinogens (days)	365
ATc - Averaging time for carcinogens (days)	25,550
EF - Exposure frequency (days/year)	90
ED - Exposure duration (year)	1
ET - Exposure time (8-hr exposure time/24 hr-day)	0.33
TCR - Target cancer risk	1.0E-06
THQ - Target hazard quotient	1

Notes:

Cal EPA = California EPA

IRIS = Integrated Risk Information System (accessed February 2013)

IUR = Inhalation unit risk

NA = Not available/not applicable

Noncarcinogenic risk-based level calculated such that total HQ for a target organ does not exceed 1

PCBs = Polychlorinated biphenyls

Aroclor 1254 oral reference dose (2×10^{-5} mg/kg-day) used to account for non-cancer effects for PCBs by using following conversion:

$$RfC\ (mg/m^3) = \frac{\text{Oral RfD } (2 \times 10^{-5}\ mg/kg\text{-day}) \times \text{Body Weight (70 kg - adult)}}{\text{Inhalation Rate (20 } m^3\text{/day - adult)}}$$

RfC = Reference concentration for inhalation

TCDD = Tetrachlorodibenzo-p-dioxin

Table A-3

Risk-Based Action Levels for Chemicals of Potential Concern: Resident (Adult/Child)

RM 10.9 Removal Action

Lower Passaic River Study Area, New Jersey

Chemical	Inhalation Reference Concentration (mg/m^3)	Source	Basis	Target Organ	Inhalation Unit Risk $(\mu g/m^3)^{-1}$	Source	Noncarcinogenic Risk-Based Action Level THQ = 1 ($\mu g/m^3$)	Carcinogenic Risk-Based Action Level TCR = 1E-06 ($\mu g/m^3$)	Minimum Risk-Based Action Levels for Resident ($\mu g/m^3$)
Mercury	3.0E-04	IRIS, HEAST	Chronic, Subchronic	Nervous system, Autoimmune	NA	NA	1.2E+00	--	1.2E+00
PCBs	3.0E-05	IRIS	Chronic	Immune System, Ocular, Toe and Finger Nail	5.7E-04	IRIS	1.2E-01	5.0E-01	1.2E-01
2,3,7,8-TCDD	4.0E-08	Cal EPA	Chronic	Reproductivity	3.8E+01	Cal EPA	1.6E-04	7.5E-06	7.5E-06

Noncarcinogenic calculations:

Noncarcinogenic Risk-Based Level = ($\mu g/m^3$)

$$\frac{THQ \times ATnc \times 1000\ \mu g/mg}{EF \times ED \times ET \times (1/RfC)}$$

Carcinogenic calculations:

Carcinogenic Risk-Based Level = ($\mu g/m^3$)

$$\frac{TCR \times ATc}{EF \times ED \times ET \times IUR}$$

EXPOSURE ASSUMPTIONS	
ATnc - Averaging time for noncarcinogens (days)	365
ATc - Averaging time for carcinogens (days)	25,550
EF - Exposure frequency (days/year)	90
ED - Exposure duration (year)	1
ET - Exposure time (24-hr exposure time/24-hr day)	1
TCR - Target cancer risk	1.0E-06
THQ - Target hazard quotient	1

Notes:

Cal EPA = California EPA

IRIS = Integrated Risk Information System (accessed February 2013)

IUR = Inhalation unit risk

NA = Not available/not applicable

Noncarcinogenic risk-based level calculated such that total HQ for a target organ does not exceed 1

PCBs = Polychlorinated biphenyls

Aroclor 1254 oral reference dose ($2x10^{-5}$ mg/kg-day) used to account for non-cancer effects for PCBs by using following conversion:

$$RfC\ (mg/m^3) = \frac{\text{Oral RfD } (2x10^{-5}\ mg/kg\text{-day}) \times \text{Body Weight (15 kg - child)}}{\text{Inhalation Rate } (10\ m^3/day\text{ - child})}$$

RfC = Reference concentration for inhalation

TCDD = Tetrachlorodibenzo-p-dioxin

Table A-4

Summary of Calculated Risk-Based Action Levels for Chemicals of Potential Concern

RM 10.9 Removal Action

Lower Passaic River Study Area, New Jersey

Analyte	Risk-Based Action Levels (µg/m^3)	Risk-Based Action Levels (ng/m^3)	Receptor Group	Exposure Setting	Exposure Time (hr/day)	Exposure Frequency (days/year)	Exposure Duration (years)	Basis of Assumed Toxicity
Mercury	3.7E+00	3.7E+03	Adult	Park Worker/ Sub-Chronic	8	90	1	Mercury (elemental)
PCBs	8.5E-01	8.5E+02						Aroclor 1254
2,3,7,8-TCDD	7.1E-05	7.1E-02						2,3,7,8-TCDD
Mercury	9.7E+00	9.7E+03	Child/Adult	Recreational/ Sub-Chronic	3	90	1	Mercury (elemental)
PCBs	9.7E-01	9.7E+02						Aroclor 1254
2,3,7,8-TCDD	1.9E-04	1.9E-01						2,3,7,8-TCDD
Mercury	1.2E+00	1.2E+03	Child/Adult	Residential/ Sub-Chronic	24	90	1	Mercury (elemental)
PCBs	1.2E-01	1.2E+02						Aroclor 1254
2,3,7,8-TCDD	7.5E-06	7.5E-03						2,3,7,8-TCDD

Notes:

Calculated ambient air risk-based levels reflect the low er of the target excess lifetime cancer risk level of 1E-06 for carcinogens or a taget hazard quotient of 1 for noncarcinogens.

NA - not available/not applicable

PCBs = Polychlorinated biphenyls; Aroclor 1254 toxicity values used as surrogate

TCDD = Tetrachlorodibenzo-p-dioxin

Sub-chronic exposure assumed during dredging project that is planned for completion w ithin 90 days.

Attachment 2
Air Monitoring SOPs and Equipment

VOC Monitor MiniRAE-3000	A-2-2
Multi-RAE Monitor	A-2-119
Jerome 631-X Hydrogen Sulfide Analyzer	A-2-178
Dust Monitor Thermo Electron PersonalDataRAM	A-2-230
Dust Monitor Thermo Electron DataRAM 4	A-2-287
High and Low Volume Particulate Samplers (Anderson and BGI PQ-100)	A-2-349
Compact Weather Station Lufft WS600-UMB	A-2-393
Digital Sound Level Meter Extech	A-2-501

STANDARD OPERATING PROCEDURE

Mini RAE VOC Monitor

1. Purpose

The purpose of this SOP is to provide general reference information for using the Mini RAE VOC monitorin in the field. Calibration and operation, along with field maintenance, will be included in this SOP.

2. Scope

This procedure provides information on the field operation and general maintenance of the Mini RAE PID. Review of the information contained herein will ensure that this type of field monitoring equipment will be properly utilized. Review of the owner's instruction manuals is a necessity for more detailed descriptions.

3. Equipment Required

MiniRAE 3000 and accessories , charger etc. See User's Guide
VOC free/ultra pure zero air (THC < 0.01)
Isobutylene calibration gas standard (5ppm) with flow regulator or Tedlar bag
Operation Manual

4. Responsibilities

Project Manager(PM) /Construction Manager(CM) - The PM/CM is responsible for ensuring that project-specific plans are in accordance with these procedures, where applicable, or that other approved procedures are developed. The Project Manager is responsible for selecting qualified individuals for the monitoring activities.

Field Team Leader(FTL) and/or Safety Coordinator(SC) - It is the responsibility of the FLT/SC to implement these procedures in the field, and to ensure that the field team performing air monitoring activities have been briefed and trained to execute these procedures before the start of site operations. FTL/SC is also responsible to ensure that the specified air monitoring equipment is on site, calibrated, and used correctly by the field personnel. The field personnel are responsible for documenting all air monitoring results in the field logbook during each field investigation.

5. Procedures

The Mini RAE utilizes the principle of a detecting sensor. The PID operates on the principle that most organic compounds and some inorganic compounds are ionized when they are bombarded by

high-energy ultraviolet light. These compounds absorb the energy of the light, which excites the molecules and results in a loss of electron and the formation of a positively charged ion. The number of ions formed and the ion current produced is directly proportional to mass and concentration. The amount of energy required to displace an electron is called ionization potential (IP). The air sample is drawn into a UV lamp using a pump or a fan. The energy of the lamp determines whether a particular chemical will be ionized. Each chemical compound has a unique ionizing potential. When the UV light energy is greater than the ionization potential of the chemical, ionization will occur. When the sample is ionized, the electrical signal is displayed on an analog or digital output. Although the output does not distinguish between chemicals, it does detect an increase in the ion current. If only one chemical is present in the air, it is possible to use PIDs quantitatively. Chemical structure and lamp intensity affects the sensitivity of the instrument to a given contaminant. All PID readings are relative to the calibration gas, usually isobutylene. It is important to calibrate the PID in the same temperature and elevation that the equipment will be used, and to determine the background concentrations in the field before taking measurements. For environments where background readings are high, factory zero calibration gas should be used.

The following subsections will discuss Mini RAE calibration, operation, and maintenance. These sections, however, do not take the place of the instruction manual.

5.1 Calibration

Calibration of the Mini RAE should be completed per the manufacturers' instructions (see pages 31 to 34 of the attached operation manual).

5.2 Operation

Due to the Mini RAE having many functions in terms of operation, it is recommended that you follow the operational procedures as outlined in the instruction manual from pages 2-5 to 2-14.

5.3 Maintenance

After each use, the meter should be recharged and the outside of the instruments should be wiped clean with a soft cloth. Additional maintenance is provided in the User's Guide pages

Function	Frequency
Check alarm and settings	Monthly/before each use
Clean screens and gaskets around sensors	Monthly
Replace sensors	Biannually or when calibration is unsuccessful

6. Quality Assurance Records

Quality assurance records will be maintained for each air monitoring event. The following information shall be recorded in the field logbook.

- Identification - Site name, date, location, activity monitored, serial number, time, resulting concentration, comments and identity of air monitoring personnel.
- Field observations -Appearance of sampled media (if definable).
- Additional remarks (e.g, Mini RAE had wide range fluctuations during air monitoring activities.)

7. Supporting Documents and References

Mini RAE 3000 User's Guide, RAE Systems, Revision E, August 2010.

Daily Calibration Form

MiniRAE 3000 Lamp Cleaning Procedure

MiniRAE 3000

Specifications*

Detector Specifications

Size	10" L x 3.0" W x 2.5" H (25.5 cm x 7.6 cm x 6.4 cm)
Weight	26 oz (738 g)
Sensors	Photoionization sensor with standard 10.6 eV or optional 9.8 eV or 11.7 eV lamps
Battery	• Rechargeable, external field-replaceable Lithium-Ion battery pack • Alkaline battery adapter
Operating Hours	16 hours of operation (12 hours with alkaline battery)
Display Graphic	4 lines, 28 x 43 mm, with LED backlight for enhanced display readability
Keypad	1 operation and 2 programming keys, 1 flashlight on/off
Direct Readout	Instantaneous reading • VOCs as ppm by volume • High values • STEL and TWA • Battery and shutdown voltage • Date, time, temperature
Alarms	95dB at 12" (30 cm) buzzer and flashing red LED to indicate exceeded preset limits • High: 3 beeps and flashes per second • Low: 2 beeps and flashes per second • STEL and TWA: 1 beep and flash per second • Alarms latching with manual override or automatic reset • Additional diagnostic alarm and display message for low battery and pump stall
EMI/RFI	Highly resistant to EMI/RFI Compliant with EMC Directive 2004/108/EC
IP Rating	• IP67 unit off and without flexible probe • IP65 unit running
Datalogging	Standard 6 months at one-minute intervals
Calibration	Two-point or three-point calibration for zero and span. Calibration memory for 8 calibration gases, alarm limits, span values and calibration dates
Sampling Pump	• Internal, integrated flow rate at 500 cc/mn • Sample from 100' (30m) horizontally and vertically
Low Flow Alarm	• Auto pump shutoff at low-flow condition
Communication	• Download data and upload instrument set-up from PC through charging cradle or optional Bluetooth™ • Wireless data transmission through built-in RF modem
Frequency	902 to 928 MHz (license-free), 2.400 to 2.4835 GHz (license-free), 433 MHz, 869 MHz
RF Range	Up to 500' (152m; 900 MHz, 433 Mhz, 869 Mhz), extendable with RAELink3 Repeater to 2 miles (3.2km)
Hazard Area Approval	• **US and Canada:** c CSA us, Classified as Intrinsically Safe for use in Class I, Division 1 Groups A, B, C, D • **Europe:** ATEX II 2G EEx ia IIC T4
Temperature	-4° to 113° F (-20° to 50° C)
Humidity	0% to 95% relative humidity (non-condensing)
Attachments	Durable bright yellow rubber boot
Warranty	3 years for 10.6 eV lamp, 1 year for pump, battery, sensor and instrument

*Specifications are subject to change

Sensor Specifications

Gas Monitor	Range	Resolution	Response Time T90
VOCs	0 to 999.9 ppm 1000 to 15,000 ppm	0.1 ppm 1 ppm	< 3 s < 3 s

Monitor only includes:

- MiniRAE 3000 Monitor, Model PGM-7320
- Wireless communication module built in, as specified
- Datalogging with ProRAE Studio Package for Windows™ 98, 2000, NT, ME & XP
- Charging/download adapter
- RAE UV lamp, as specified
- Flex-I-Probe™
- External filter
- Rubber boot
- Alkaline battery adapter
- Lamp-cleaning kit
- Tool kit
- Operation CD-ROM
- Operation & Maintenance manual
- Soft leather case

Monitor with accessories kit adds:

- Hard transport case with pre-cut foam padding
- Charging/download cradle
- 5 Porous metal filters and O-rings
- Organic vapor zeroing kit
- Gas outlet port adapter and tubing

Optional calibration kit adds:

- 100 ppm isobutylene calibration gas, 34L
- Calibration regulator and flow controller

Optional Guaranteed Cost of Ownership Program:

- 4-year repair and replacement guarantee
- Annual maintenance service

DISTRIBUTED BY:

RAE Systems Inc.
3775 North First Street
San Jose, CA 95134 USA
raesales@raesystems.com

USA/Canada 1-877-723-2878
Europe/Russia +45 8652 5155
Middle East/Australia +971 4 3639 427
China +86 10 58858788
Asia +852 2669 0828

www.raesystems.com

BS-1018-01

MiniRAE 3000
User's Guide

Rev. C
August 2010
P/N 059-4020-000

FCC Information

Contains FCC ID: PI4411B

The enclosed device complies with part 15 of the FCC rules. Operation is subject to the following conditions: (1) This device may not cause harmful interference, and (2) This device must accept any interference received, including interference that may cause undesired operation.

© Copyright 2010 RAE Systems, Inc.

Contents

Read Before Operating 5
Special Notes 6
Warnings 7
Standard Contents 9
General Information 9
Physical Description 11
Specifications 11
Charging The Battery 14
  Charging A Spare Rechargeable Battery 15
  Low Voltage Warning 16
  Clock Battery 16
  Data Protection While Power Is Off 16
User Interface 17
Display 19
Operating The Instrument 20
Turning The Instrument On 20
Turning The Instrument Off 21
Operating The Built-In Flashlight 21
Pump Status 21
Calibration Status 22
Operating Modes 23
Basic User Level/Hygiene Mode (Default Settings) 24
Alarm Signals 26
  Alarm Signal Summary 27
  Preset Alarm Limits & Calibration 28
Testing The Alarm 28
Integrated Sampling Pump 28
Backlight 29
  Datalogging 29
    Datalogging event 29
    Datalogging sample 29
    Auto/Manual/Snapshot Datalogging 30
Standard Kit & Accessories 31
  AC Adapter (Battery Charger) 31
  Alkaline Battery Adapter 32
  External Filter 33

Optional Accessories 34
Calibration Adapter 34
Calibration Regulator 34
Organic Vapor Zeroing Kit 34
Standard Two-Point Calibration (Zero & Span) 35
Entering Calibration 35
Entering Calibration 36
Zero (Fresh Air) Calibration 37
Span Calibration 39
Exiting Two-Point Calibration In Basic User Level 41
Three-Point Calibration 42
Span 2 Calibration 43
Span 2 Calibration 44
Exiting Three-Point Calibration 46
Programming Mode 46
Entering Programming Mode 46
Programming Mode Menus 48
Zero Calibration 49
Meas. Gas 49
High Alarm 49
Clear Datalog 49
Op Mode 49
Span Calibration 49
Meas. Unit 49
Low Alarm 49
Interval 49
Site ID 49
STEL Alarm 49
Data Selection 49
User ID 49
TWA Alarm 49
Datalog Type 49
User Mode 49
Alarm Type 49
Date 49
Buzzer & Light 49
Time 49
Pump Duty Cycle 49
Pump Speed 49

Temperature Unit 49
Language 49
Radio Power 49
Real Time Protocol 49
Power On Zero 49
Unit ID 49
LCD Contrast 49
Exiting Programming Mode 50
Navigating Programming Mode Menus 50
Calibration 51
Zero Calibration 51
Span Calibration 51
Measurement 52
Meas. Gas 52
Meas. Unit 53
Alarm Setting 54
High Alarm 55
Low Alarm 55
STEL Alarm 56
TWA Alarm 57
Alarm Type 58
Buzzer & Light 59
Datalog 59
Clear Datalog 60
Interval. 60
Data Selection 61
Datalog Type 62
Manual Datalog 62
Snapshot Datalog 63
Monitor Setup 64
Op Mode 64
Site ID 65
User ID 66
User Mode 66
Date 67
Time 67
Duty Cycle 68
Temperature Unit 69
Pump Speed 69

Language 70
Radio Power 70
Real Time Protocol 71
Power On Zero 71
Unit ID 72
LCD Contrast 72
Hygiene Mode 73
Advanced User Level (Hygiene Mode Or Search Mode) 78
Advanced User Level & Hygiene Mode 78
Basic User Level & Search Mode 79
Basic User Level & Search Mode 80
Advanced User Level & Search Mode 81
Advanced User Level & Search Mode 82
Diagnostic Mode 82
Diagnostic Mode 83
Entering Diagnostic Mode 83
Adjusting The Pump Stall Threshold 84
Pump High 84
Pump Low 84
Exiting Diagnostic Mode 85
Transferring Data To & From A Computer 86
Downloading The Datalog To A PC 86
Maintenance 88
Battery Charging & Replacement 88
Replacing The Li-ion Battery 89
Replacing The Alkaline Battery Adapter 89
PID Sensor & Lamp Cleaning/Replacement 91
Sensor Components 91
Cleaning The Lamp Housing Or Changing The Lamp 92
Determining The Lamp Type 93
Sampling Pump 94
Cleaning The Instrument 94
Ordering Replacement Parts 94
Special Servicing Note 95
Troubleshooting 96
Technical Support 97
RAE Systems Contacts 98
Controlled Part of Manual 101

Read Before Operating

This manual must be carefully read by all individuals who have or will have the responsibility of using, maintaining, or servicing this product. The product will perform as designed only if it is used, maintained, and serviced in accordance with the manufacturer's instructions. The user should understand how to set the correct parameters and interpret the obtained results.

CAUTION!

To reduce the risk of electric shock, turn the power off before removing the instrument cover. Disconnect the battery before removing sensor module for service. Never operate the instrument when the cover is removed. Remove instrument cover and sensor module only in an area known to be non-hazardous.

Special Notes

When the instrument is taken out of the transport case and turned on for the first time, there may be some residual organic or inorganic vapor trapped inside the detector chamber. The initial PID sensor reading may indicate a few ppm. Enter an area known to be free of any organic vapor and turn on the instrument. After running for several minutes, the residual vapor in the detector chamber will be cleared and the reading should return to zero.

The battery of the instrument discharges slowly even if it is turned off. If the instrument has not been charged for 5 to 7 days, the battery voltage will be low. Therefore, it is a good practice to always charge the instrument before using it. It is also recommended to fully charge the instrument for *at least 10 hours* before first use. Refer to this User Guide's section on battery charging for more information on battery charging and replacement.

WARNINGS

STATIC HAZARD: Clean only with damp cloth.

For safety reasons, this equipment must be operated and serviced by qualified personnel only. Read and understand instruction manual completely before operating or servicing.

Use only RAE Systems battery packs, part numbers 059-3051-000, 059-3052-000, and 059-3054-000. This instrument has not been tested in an explosive gas/air atmosphere having an oxygen concentration greater than 21%. Substitution of components may impair intrinsic safety. Recharge batteries only in non-hazardous locations.

Do not mix old and new batteries or batteries from different manufacturers.

The calibration of all newly purchased RAE Systems instruments should be tested by exposing the sensor(s) to known concentration calibration gas before the instrument is put into service.

For maximum safety, the accuracy of the instrument should be checked by exposing it to a known concentration calibration gas before each day's use.

Do not use USB/PC communication in hazardous locations.

AVERTISSEMENT

DANGER RISQUE D'ORIGINE ELECTROSTATIQUE: Nettoyer uniquement avec un chiffon humide.

Pour des raisons de sécurité, cet équipment doit être utilisé, entretenu et réparé uniquement par un personnel qualifié. Étudier le manuel d'instructions en entier avant d'utiliser, d'entretenir ou de réparer l'équipement.

Utiliser seulement l'ensemble de batterie RAE Systems, la reference 059-3051-000 au 059-3052-000 au 059-3054-000. Cet instrument n'a pas été essayé dans une atmosphère de gaz/air explosive ayant une concentration d'oxygène plus élevée que 21%. La substitution de composants peut compromettre la sécurité intrinsique. Ne charger les batteries que dans emplacements désignés non-dangereuse.

Ne pas melanger les anciennes et les nouvelles batteries, ou bien encore les batteries de differents fabriquants.

La calibration de toute instruments de RAE Systems doivent être testé en exposant l'instrument a une concentration de gaz connue par une procédure diétalonnage avant de mettre en service l'instrument pour la première fois.

Pour une securite maximale, la sensibilité du l'instrument doit être verifier en exposant l'instrument a une concentration de gaz connue par une procédure diétalonnage avant chaque utilisation journalière.

Ne pas utiliser de connection USB/PC en zone dangereuse.

Standard Contents

Instrument
Calibration Kit
Charging Cradle
AC/DC Adapter
Alkaline Battery Adapter
Data Cable
CD-ROM With User's Guide, Quick Start Guide, and related materials

General Information

The compact instrument is designed as a broadband VOC gas monitor and datalogger for work in hazardous environments. It monitors Volatile Organic Compounds (VOC) using a photoionization detector (PID) with a 9.8 eV, 10.6 eV, or 11.7 eV gas-discharge lamp. Features are:

Lightweight and Compact

- Compact, lightweight, rugged design
- Built-in sample draw pump

Dependable and Accurate

- Up to 16 hours of continuous monitoring with rechargeable battery pack
- Designed to continuously monitor VOC vapor at parts-per-million (ppm) levels

User-friendly

- Preset alarm thresholds for STEL, TWA, low- and high-level peak values.
- Audio buzzer and flashing LED display are activated when the limits are exceeded.

Datalogging Capabilities

- 260,000-point datalogging storage capacity for data download to PC

The instrument consists of a PID with associated microcomputer and electronic circuit. The unit is housed in a rugged case with a backlit LCD and 3 keys to provide easy user interface. It also has a built-in flashlight for operational ease in dark locations.

Physical Description

The main components of the portable VOC monitoring instrument include:

- Three keys for user to interact with the instrument: 3 operation/programming keys for normal operation or programming
- LCD display with back light for direct readout and calculated measurements
- Built-in flashlight for illuminating testing points in dark environments
- Buzzer and red LEDs for alarm signaling whenever exposures exceed preset limits
- Charge contacts for plugging directly to its charging station
- Gas entry and exit ports
- USB communication port for PC interface
- Protective rubber cover

Specifications

Size:	9.25" L x 3.6" W x 2.9" H
Weight:	28 oz with battery pack
Detector:	Photoionization sensor with 9.8, 10.6, or 11.7 eV UV lamp
Battery:	A 3.7V rechargeable Lithium-Ion battery pack (snap in, field replaceable, at non-hazardous location only)
	Alkaline battery holder (for 4 AA batteries)
Battery Charging:	Less than 8 hours to full charge
Operating Hours:	Up to16 hours continuous operation
Display:	Large dot matrix screen with backlight

Measurement range & resolution

Lamp	Range	Resolution
10.6 eV	0.1 ppm to 15,000 ppm	0.1 ppm
9.8 eV	0.1 ppm to 5,000 ppm	0.1 ppm
11.7 eV	0.1 ppm to 2,000 ppm	0.1 ppm

Response time (T_{90}):	2 seconds
Accuracy (Isobutylene):	10 to 2000 ppm: ±3% at calibration point.
PID Detector:	Easy access to lamp and sensor for cleaning and replacement
Correction Factors:	Over 200 VOC gases built in (based on RAE Systems Technical Note TN-106)
Calibration:	Two-point field calibration of zero and standard reference gases
Calibration Reference:	Store up to 8 sets of calibration data, alarm limits and span values
Inlet Probe:	Flexible 5" tubing
Radio module:	Bluetooth (2.4GHz), RF module (433MHz, 868MHz , 915MHz, or 2.4GHz)
Keypad:	1 operation key and 2 programming keys; 1 flashlight switch
Direct Readout:	Instantaneous, average, STEL, TWA and peak value, and battery voltage
Intrinsic Safety:	US and Canada: Class I, Division 1, Groups A, B, C, D Europe: ATEX (0575 Ex II 2G Ex ia IIC/IIB T4 Gb) KEMA 07 ATEX 0127 Complies with EN60079-0:2009, EN60079-11:2007

	IECEx CSA 10.0005 Ex ia IIC/IIB T4 Gb Complies with IEC 60079-0:2007, IEC 60079-11:2006 (IIC: 059-3051-000 Li-ion bat pack or 059-3054-000 NiMH bat pack; IIB: 059-3052-000 alkaline bat pack)
EM Interference:	Highly resistant to EMI/RFI. Compliant with EMC R&TTE (RF Modules)
Alarm Setting:	Separate alarm limit settings for Low, High, STEL and TWA alarm
Operating Mode:	Hygiene or Search mode
Alarm:	Buzzer 95dB at 30cm and flashing red LEDs to indicate exceeded preset limits, low battery voltage, or sensor failure
Alarm Type:	Latching or automatic reset
Real-time Clock:	Automatic date and time stamps on datalogged information
Datalogging:	260,000 points with time stamp, serial number, user ID, site ID, etc.
Communication:	Upload data to PC and download instrument setup from PC via USB on charging station.
Sampling Pump:	Internally integrated. Flow rate: 450 to 550 cc/min.
Temperature:	-20º C to 50º C (-4º to 122º F)
Humidity:	0% to 95% relative humidity (non-condensing)
Housing (including rubber boot):	Polycarbonate, splashproof and dustproof Battery can be changed without removing rubber boot.

Charging The Battery

Always fully charge the battery before using the instrument. The instrument's Li-ion battery is charged by placing the instrument in its cradle. Contacts on the bottom of the instrument meet the cradle's contacts, transferring power without other connections.

Note: Before setting the instrument into its charging cradle, visually inspect the contacts to make sure they are clean. If they are not, wipe them with a soft cloth. Do not use solvents or cleaners.

Follow this procedure to charge the instrument:

1. Plug the AC/DC adapter's barrel connector into the instrument's cradle.

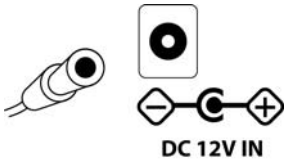

2. Plug the AC/DC adapter into the wall outlet.
3. Place the instrument into the cradle, press down, and lean it back. It locks in place and the LED in the cradle glow

The instrument begins charging automatically. The "Primary" LED in the cradle blinks green to indicate charging. During charging, the diagonal lines in the battery icon on the instrument's display are animated and you see the message "Charging..."

When the instrument's battery is fully charged, the battery icon is no longer animated and shows a full battery. The message "Fully charged!" is shown. The cradle's LED glows continuously green.

Note: If you see the "Battery Charging Error" icon (a battery outline with an exclamation mark inside), check that the instrument or rechargeable battery has been set into the cradle

properly. If you still receive the message, check the Troubleshooting section of this guide.

Note: If the instrument or battery has been in the cradle for more than 10 hours and you see the “Battery Charging Error” icon and a message that says, “Charging Too Long,” this indicates that the battery is not reaching a full charge. Try changing the battery and make sure the contacts between the instrument (or battery) are meeting the cradle. If the message is still shown, consult your distributor or RAE Systems Technical Services.

Charging A Spare Rechargeable Battery

A rechargeable Li-ion battery can be charged when it is not inside the monitor. The charging cradle is designed to accommodate both types of charging. Contacts on the bottom of the battery meet the contacts on the cradle, transferring power without other connections, and a spring-loaded capture holds the battery in place during charging.

1. Plug the AC/DC adapter into the monitor’s cradle.
2. Place the battery into the cradle, with the gold-plated contacts on top of the six matching charging pins.
3. Plug the AC/DC adapter into the wall outlet.

The battery begins charging automatically. During charging, the Secondary LED in the cradle blinks green. When charging is complete, it glows steady green.

Release the battery from the cradle by pulling it back toward the rear of the cradle and tilting it out of its slot.

Note: If you need to replace the Li-ion battery pack, replacements are available from RAE Systems. The part number is 059-3051-000.

Note: An Alkaline Battery Adapter (part number 059-3052-000), which uses four AA alkaline batteries (Duracell MN1500), may be substituted for the Li-Ion battery.

WARNING!

To reduce the risk of ignition of hazardous atmospheres, recharge and replace batteries only in areas known to be non-hazardous. Remove and replace batteries only in areas known to be non-hazardous.

Low Voltage Warning

When the battery's charge falls below a preset voltage, the instrument warns you by beeping once and flashing once every minute, and the "empty battery" icon blinks on and off once per second. You should turn off the instrument within 10 minutes and either recharge the battery by placing the instrument in its cradle, or replace the battery with a fresh one with a full charge.

Clock Battery

An internal clock battery is mounted on one of the instrument's printed circuit boards. This long-life battery keeps settings in memory from being lost whenever the Li-ion battery or alkaline batteries are removed. This backup battery should last approximately five years, and must be replaced by an authorized RAE Systems service technician. It is not user-replaceable.

Data Protection While Power Is Off

When the instrument is turned off, all the current real-time data including last measured values are erased. However, the datalog data is preserved in non-volatile memory. Even if the battery is disconnected, the datalog data will not be lost.

User Interface

The instrument's user interface consists of the display, LEDs, an alarm transducer, and four keys. The keys are:

Y/+
MODE
N/-
Flashlight on/off

The LCD display provides visual feedback that includes the reading, time, battery condition, and other functions.

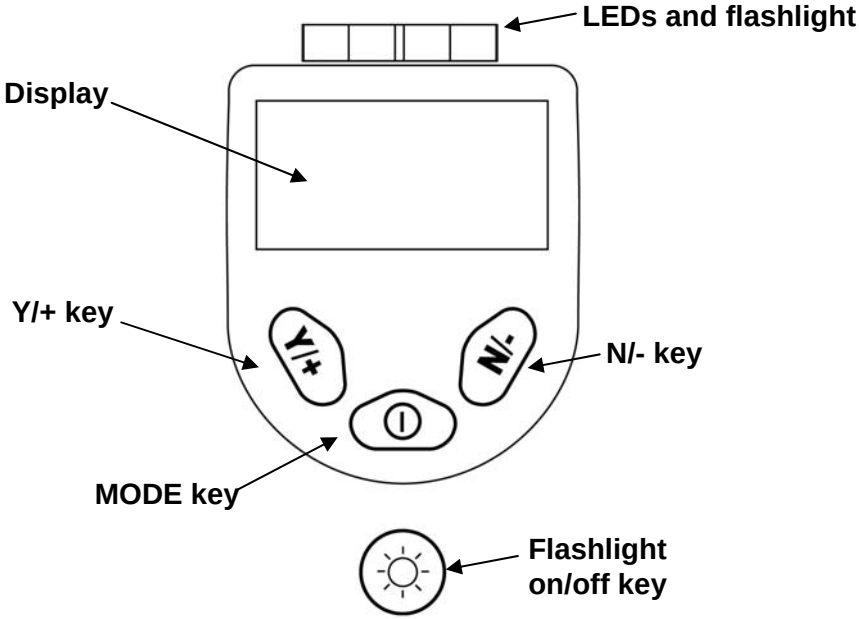

In addition to their labeled functions, the keys labeled Y/+, MODE, and N/- act as "soft keys" that control different parameters and make different selections within the instrument's menus. From menu to

menu, each key controls a different parameter or makes a different selection.

Three panes along the bottom of the display are “mapped” to the keys. These change as menus change, but at all times the left pane corresponds to the [Y/+] key, the center pane corresponds to the [MODE] key, and the right pane corresponds to the [N/-] key. Here are three examples of different menus with the relationships of the keys clearly shown:

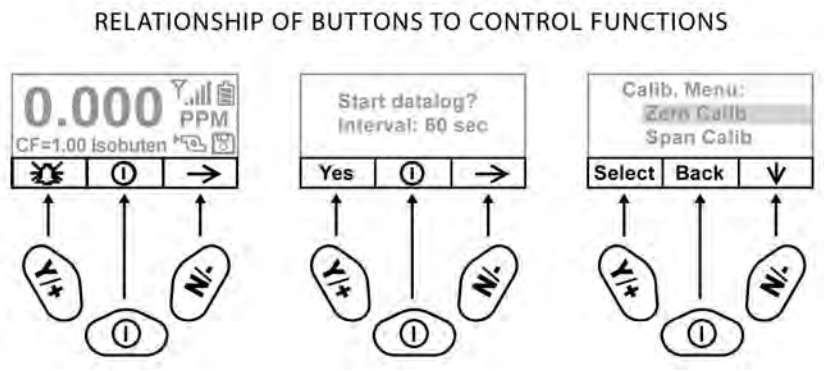

Display

The display shows the following information:

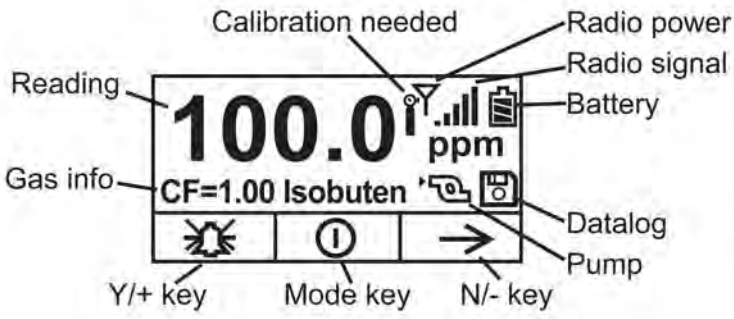

Graph	Graphic representation of concentration plotted over time
Gas info	Tells the Correction Factor and type of calibration gas
Reading	Concentration of gas as measured by the instrument
Calibration needed	Indicates that calibration should be performed
Radio power	Indicates whether radio connection is on or off
Radio signal	Indicates signal strength in 5-bar bargraph
Battery	Indicates battery level in 3 bars
Pump	Indicates that pump is working
Datalog	Indicates whether datalog is on or off
Y/+	Y/+ key's function for this screen
MODE	MODE key's function for this screen
N/-	N/- key's function for this screen

Operating The Instrument

The instrument is designed as a broadband VOC gas monitor and datalogger for work in hazardous environments. It gives real-time measurements and activates alarm signals whenever the exposure exceeds preset limits. Prior to factory shipment, the instrument is preset with default alarm limits and the sensor is pre-calibrated with standard calibration gas. However, you should test the instrument and verify the calibration before the first use. After the instrument is fully charged and calibrated, it is ready for immediate operation.

Turning The Instrument On

1. With the instrument turned off, press and hold [MODE].
2. When the display turns on, release the [MODE] key.

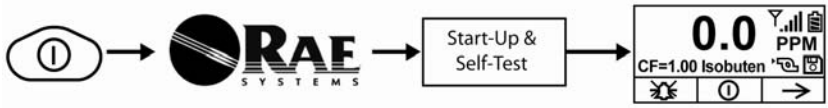

The RAE Systems logo should appear first. (If the logo does not appear, there is likely a problem and you should contact your distributor or RAE Systems Technical Support.) The instrument is now operating and performs self tests. If any tests (including sensor and memory tests fail), refer to the Troubleshooting section of this guide.

Once the startup procedure is complete, the instrument shows a numerical reading screen with icons. This indicates that the instrument is fully functional and ready to use.

Turning The Instrument Off

1. Press and hold the Mode key for 3 seconds. A 5-second countdown to shutoff begins.
2. Once the countdown stops, the instrument is off. Release the Mode key.
3. When you see “Unit off...” release your finger from the [MODE] key. The instrument is now off.

Note: You must hold your finger on the key for the entire shutoff process. If you remove your finger from the key during the countdown, the shutoff operation is canceled and the instrument continues normal operation.

Operating The Built-In Flashlight

The instrument has a built-in flashlight that helps you point the probe in dark places. Press the flashlight key to turn it on. Press it again to turn it off.

Note: Using the flashlight for extended periods shortens the battery’s operating time before it needs recharging.

Pump Status

IMPORTANT!

During operation, make sure the probe inlet and the gas outlet are free of obstructions. Obstructions can cause premature wear on the pump, false readings, or pump stalling. During normal operation, the pump icon alternately shows inflow and outflow as shown here:

During duty cycling (PID lamp cleaning), the display shows these icons in alternation:

If there is a pump failure or obstruction that disrupts the pump, you will see this icon blinking on and off:

If you see this blinking icon, consult the Troubleshooting section of this guide.

Calibration Status

The instrument displays this icon if it requires calibration:

Calibration is required (and indicated by this icon) if:

- The lamp type has been changed (for example, from 10.6 eV to 9.8 eV).
- The sensor has been replaced.
- It has been 30 days or more since the instrument was last calibrated.
- If you have changed the calibration gas type without recalibrating the instrument.

Operating Modes

Your instrument operates in different modes, depending on the model and its factory default settings. In some cases, you can change modes using a password and using the instrument's navigation. In other cases, you must use ProRAE Studio software.

The default setting for your instrument is:

User Mode: Basic
Operation Mode: Hygiene

This is outlined in detail on page 74.

The other options, covered later in this guide, are:

User Mode: Advanced (page 78)
Operation Mode: Hygiene

User Mode: Advanced (page 82)
Operation Mode: Search

Using ProRAE Studio allows access to other options. In addition, Diagnostic Mode (page 83) is available for service technicians.

Basic User Level/Hygiene Mode (Default Settings)

The instrument is programmed to operate in Basic User Level/Hygiene Mode as its default. This gives you the most commonly needed features while requiring the fewest parameter adjustments.

Pressing [N/-] steps you from one screen to the next, and eventually return to the main display. If you do not press a key within 60 seconds after entering a display, the instrument reverts to its main display.

Note: While viewing any of these screens, you can shut off your instrument by pressing [MODE].

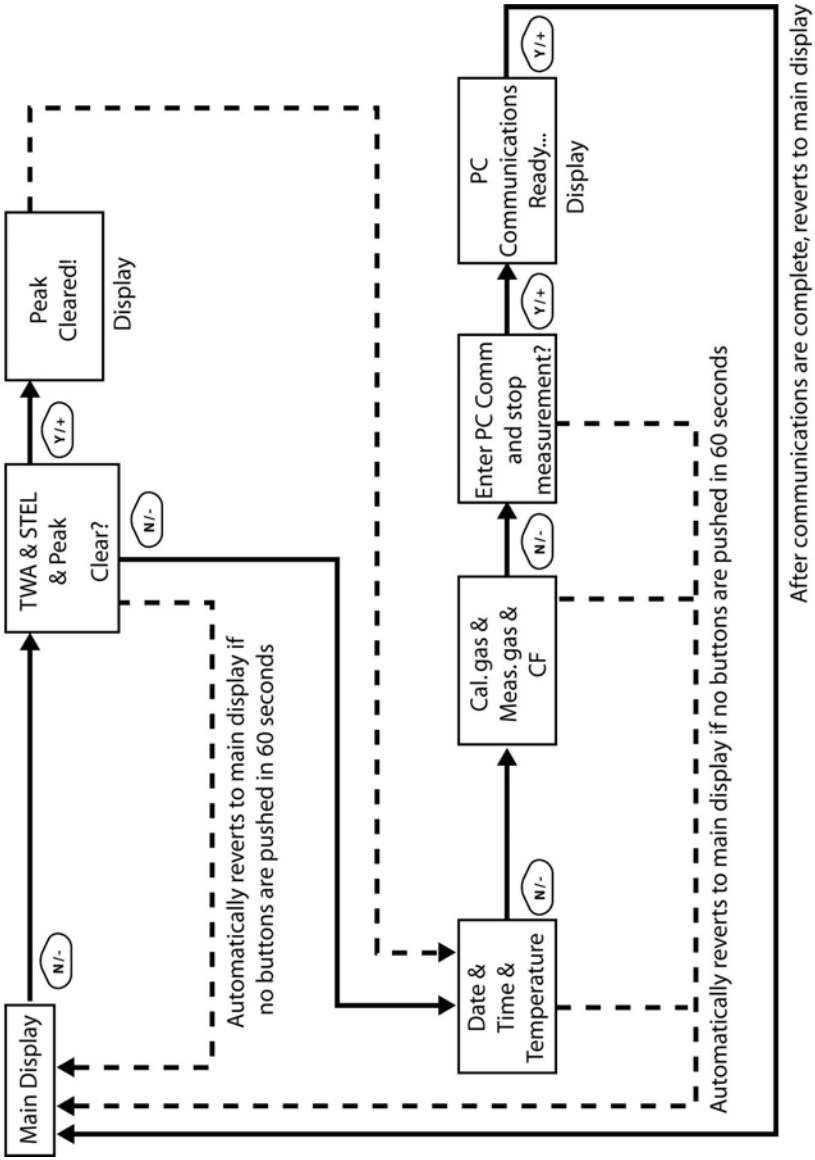

Note: Dashed line indicates automatic progression.

After the instrument is turned on, it runs through the start-up menu. Then the message "**Please apply zero gas…**" is displayed.

At this point, you can perform a zero air (fresh air) calibration. If the ambient air is clean, you can use that. Otherwise, use a cylinder of zero air. Refer to Zero Calibration on page 37 for a more detailed description of zero calibration.

Start zero calibration by pressing Start. You see the message "Zeroing…" followed by a 30-second countdown.

Note: You can press [MODE] to quit, bypassing the zero air calibration.

When zero calibration is complete, you see the message:

Zeroing is done!

Reading = 0.0 ppm

The instrument is now sampling and collecting data.

Note: At the Average & Peak, Date & Time & Temperature, Calibration Gas & Measurement Gas & Correction Factor, and PC Communications screens, the instrument automatically goes to the main display after 60 seconds if you do not push a key to make a selection.

Alarm Signals

During each measurement period, the gas concentration is compared with the programmed alarm limits (gas concentration alarm limit settings). If the concentration exceeds any of the preset limits, the loud buzzer and red flashing LED are activated immediately to warn you of the alarm condition.

In addition, the instrument alarms if one of the following conditions occurs: battery voltage falls below a preset voltage level, failure of the UV lamp, or pump stall.

Alarm Signal Summary

Message	Condition	Alarm Signal
HIGH	Gas exceeds “High Alarm” limit	3 beeps/flashes per second*
OVR	Gas exceeds measurement range	3 beeps/flashes per second*
MAX	Gas exceeds electronics’ maximum range	3 beeps/flashes per second*
LOW	Gas exceeds “Low Alarm” limit	2 beeps/flashes per second*
TWA	Gas exceeds “TWA” limit	1 Beep/flash per second*
STEL	Gas exceeds “STEL” limit	1 Beep/flash per second*
Pump icon flashes	Pump failure	3 beeps/flashes per second
Lamp	PID lamp failure	3 beeps/flashes per second plus “Lamp” message on display
Battery icon flashes	Low battery	1 flash, 1 beep per minute plus battery icon flashes on display
CAL	Calibration failed, or needs calibration	1 beep/flash per second
NEG	Gas reading measures less than number stored in calibration	1 beep/flash per second

* Hygiene mode only. In Search mode, the number of beeps per second (1 to 7) depends upon the concentration of the sampled gas. Faster rates indicate higher concentrations.

Preset Alarm Limits & Calibration

The instrument is factory calibrated with standard calibration gas, and is programmed with default alarm limits.

Cal Gas (Isobutylene)	Cal Span	unit	Low	High	TWA	STEL
MiniRAE 3000	100	ppm	50	100	10	25

Testing The Alarm

You can test the alarm whenever the main (Reading) display is shown. Press [Y/+], and the audible and visible alarms are tested.

Integrated Sampling Pump

The instrument includes an integrated sampling pump. This diaphragm-type pump that provides a 450 to 550 cc per minute flow rate. Connecting a Teflon or metal tubing with 1/8" inside diameter to the gas inlet port of the instrument, this pump can pull in air samples from 100' (30 m) away horizontally or vertically.

Note: In Search Mode, the pump turns on when a sample measurement is started, and turns off when the sample is manually stopped.

If liquid or other objects are pulled into the inlet port filter, the instrument detects the obstruction and immediately shuts down the pump. The alarm is activated and a flashing pump icon is displayed.

You should acknowledge the pump shutoff condition by clearing the obstruction and pressing the [Y/+] key while in the main reading display to restart the pump.

Backlight

The LCD display is equipped with an LED backlight to assist in reading the display under poor lighting conditions.

Datalogging

During datalogging, the instrument displays a disk icon to indicate that datalogging is enabled. The instrument stores the measured gas concentration at the end of every sample period (when data logging is enabled). In addition, the following information is stored: user ID, site ID, serial number, last calibration date, and alarm limits. All data are retained (even after the unit is turned off) in non-volatile memory so that it can be down- loaded at a later time to a PC.

Datalogging event

When Datalogging is enabled, measurement readings are being saved. These data are stored in “groups” or “events.” A new event is created and stored each time the instrument is turned on and is set to automatic datalogging, or a configuration parameter is changed, or datalogging is interrupted. The maximum time for one event is 24 hours or 28,800 points. If an event exceeds 24 hours, a new event is automatically created. Information, such as start time, user ID, site ID, gas name, serial number, last calibration date, and alarm limits are recorded.

Datalogging sample

After an event is recorded, the unit records a shorter form of the data. When transferred to a PC running ProRAE Studio, this data is arranged with a sample number, time, date, gas concentration, and other related information.

Auto/Manual/Snapshot Datalogging

The instrument has three datalog types:

Auto	Default mode. Collects datalog information when the instrument is sampling.
Manual	Datalogging occurs only when the instrument's datalogging is manually started (see page 63 for details).
Snapshot	Datalogs only during snapshot (single-event capture, initiated by pressing [MODE]) sampling. See page 65 for details.

Note: You can only choose one datalog type to be active at a time.

Accessories

The following accessories are included with the instrument:

- An AC Adapter (Battery Charger)
- Alkaline battery adapter
- External Filter
- Organic Vapor Zeroing kit

Hard-case kits also include these accessories:

- Calibration adapter
- Calibration regulator and Flow controller

Standard Kit & Accessories

AC Adapter (Battery Charger)

WARNING

To reduce the risk of ignition of hazardous atmospheres, recharge battery only in area known to be non-hazardous. Remove and replace battery only in area known to be non-hazardous.

Ne charger les batteries que dans emplacements designés non-dangereuses.

A battery charging circuit is built into the instrument cradle. It only needs a regular AC to 12 VDC adapter (wall-mount transformer, part number 500-0114-000) to charge the instrument.

To charge the battery inside the instrument:

1. Power off the instrument.
2. Connect the AC adapter to the DC jack on the instrument's cradle. If the instrument is off, it automatically turns on.
3. While charging, the display message shows "Charging." The Primary LED on the cradle flashes green when charging.
4. When the battery is fully charged, the LED changes to glowing green continuously, and the message "Fully charged" appears on the

display. If there is a charging error, the LED glows red continuously.

A completely discharged instrument can be charged to full capacity within 8 hours. Batteries drain slowly even if an instrument is off. Therefore, if the instrument has been in storage or has not been charged for several days or longer, check the charge before using it.

The factory-supplied battery is designed to last for 16 hours of normal operation (no alarm), for a new battery under the optimum circumstances. As the battery becomes older or is subject to adverse conditions (such as cold ambient temperature), its capacity will be significantly reduced.

Alkaline Battery Adapter

An alkaline battery adapter is supplied with each instrument. The adapter (part number 059-3052-000) accepts four AA alkaline batteries (use only Duracell MN1500) and provides approximately 12 hours of operation. The adapter is intended to be used in emergency situations when there is no time to charge the Li-ion battery pack.

To insert batteries into the adapter:

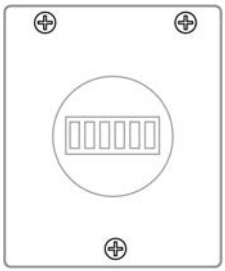

1. Remove the three Philips-head screws to open the compartment in the adapter.
2. Insert four fresh AA batteries as indicated by the polarity (+/-) markings.
3. Replace the cover. Replace the three screws.

To install the adapter in the instrument:

1. Remove the Li-ion battery pack from the instrument by sliding the tab and tilting out the battery.
2. Replace it with the alkaline battery adapter
3. Slide the tab back into place to secure the battery adapter.

IMPORTANT!

Alkaline batteries cannot be recharged. The instrument’s internal circuit detects alkaline batteries and will not allow recharging. If you place the instrument in its cradle, the alkaline battery will not be recharged. The

internal charging circuit is designed to prevent damage to alkaline batteries and the charging circuit when alkaline batteries are installed inside the instrument. If you try to charge an alkaline batteries installed in the instrument, the instrument's display will say, "Alkaline Battery," indicating that it will not charge the alkaline batteries.

Note: When replacing alkaline batteries, dispose of old ones properly.

WARNING!

To reduce the risk of ignition of hazardous atmospheres, recharge the battery only in areas known to be non-hazardous. Remove and replace the battery only in areas known to be non-hazardous.

External Filter

The external filter is made of PTFE (Teflon®) membrane with a 0.45 micron pore size to prevent dust or other particles from being sucked into the sensor manifold, which would cause extensive damage to the instrument. It prolongs the operating life of the sensor. To install the external filter, simply connect it to the instrument's inlet tube.

Optional Accessories

Calibration Adapter

The calibration adapter for the instrument is a simple 6-inch Tygon tubing with a metal adapter on one end. During calibration, simply insert the metal adapter into the regular gas inlet probe of the instrument and the tubing to the gas regulator on the gas bottle.

Calibration Regulator

The Calibration Regulator is used in the calibration process. It regulates the gas flow rate from the Span gas cylinder into the gas inlet of the instrument during calibration process. The maximum flow rate allowed by the flow controller is about 0.5L/min (500 cc per min.). Alternatively, a demand-flow regulator or a Tedlar gas bag may be used to match the pump flow precisely.

Organic Vapor Zeroing Kit

The Organic Vapor Zeroing Kit is used for filtering organic air contaminants that may affect the zero calibration reading. To use the Organic Vapor Zeroing Kit, simply connect the filter to the inlet port of the instrument.

Standard Two-Point Calibration (Zero & Span)

The following diagram shows the instrument's calibrations in Basic/Hygiene mode.

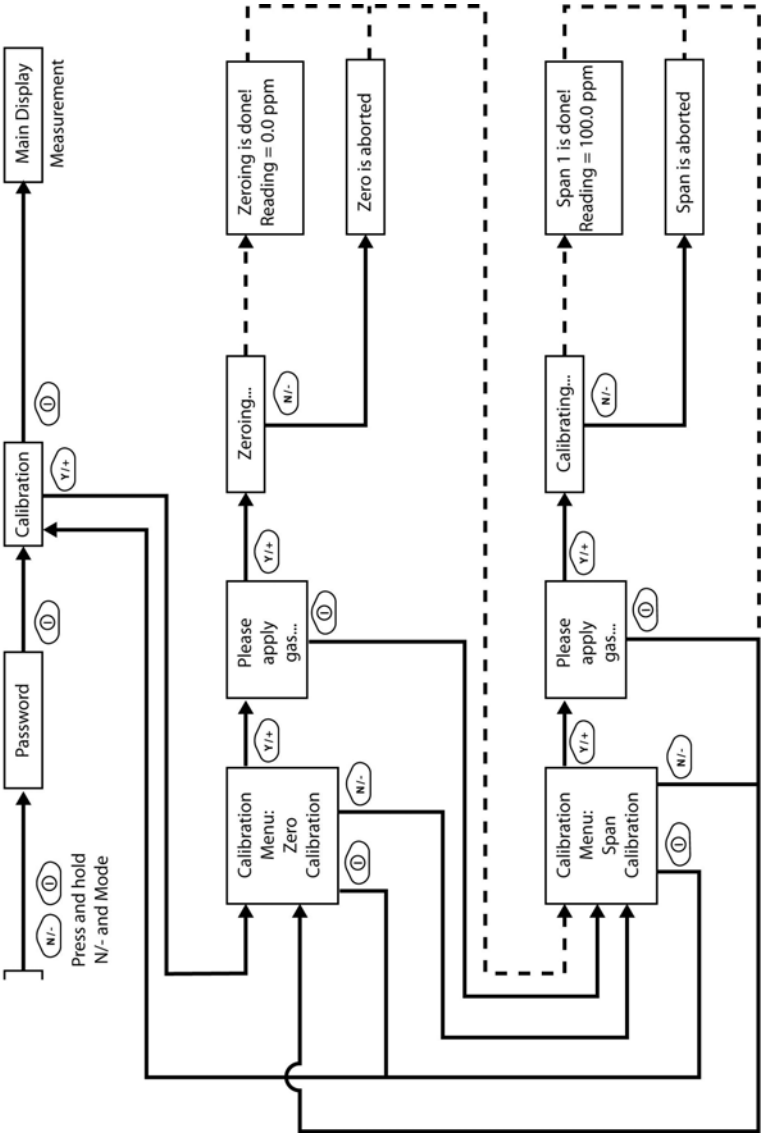

Note: Dashed line indicates automatic progression.

Entering Calibration

1. Press and hold [MODE] and [N/-] until you see the Password screen.

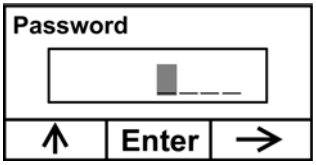

2. In Basic User Level, you do not need a password to perform calibrations. Instead of inputting a password, enter calibration by pressing [MODE].

   Note: If you inadvertently press [Y/+] and change any of the numbers, simply press [MODE] and you will be directed to the calibration menu.

The Calibration screen is now visible with Zero Calibration highlighted.

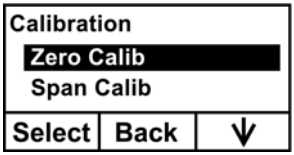

These are your options:

- Press [Y/+] to select the highlighted calibration (Zero Calib or Span Calib).
- Press [MODE] to exit calibration and return to the main display and resume measurement.
- Press [N/-] to toggle the highlighted calibration type.

Zero (Fresh Air) Calibration

This procedure determines the zero point of the sensor calibration curve. To perform a fresh air calibration, use the calibration adapter to connect the instrument to a “fresh” air source such as from a cylinder or Tedlar bag (optional accessory). The “fresh” air is clean, dry air without organic impurities and an oxygen value of 20.9%. If such an air cylinder is not available, any clean ambient air without detectable contaminants or a charcoal filter can be used.

At the Zero Calibration menu, you can proceed to perform a Zero calibration or bypass Zero calibration and perform a Span calibration. You may also go back to the initial Calibration menu if you want to exit calibration.

- Press [Y/+] to start calibration.
- Press [MODE] to quit and return to the main calibration display.

If you have pressed [Y/+] to enter Zero calibration, then you will see this message:

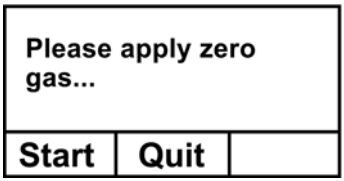

1. Turn on your Zero calibration gas.
2. Press [Y/+] to start calibration.

   Note: At this point, you may press [MODE] if you decide that you do not want to initiate calibration. This will take you directly to the Calibration menu, highlighted for Span calibration.

3. Zero calibration starts a 30-second countdown and displays this message:

Zeroing...

During the zeroing process, the instrument performs the Zero calibration automatically and does not require any action on your part.

Note: To abort the zeroing process at any time and proceed to Span calibration, press [N/-] at any time while zeroing is being performed. You will see a confirmation message that says “Zero aborted!” and then the Span calibration menu appears.

When Zero calibration is complete, you see this message:

Zeroing is done!
Reading = 0.0 ppm

The instrument will then show the Calibration menu on its display, with Span Calib highlighted.

Span Calibration

This procedure determines the second point of the sensor calibration curve for the sensor. A cylinder of standard reference gas (span gas) fitted with a 500 cc/min. flow-limiting regulator or a flow-matching regulator is the simplest way to perform this procedure. Choose the 500 cc/min. regulator only if the flow rate matches or slightly exceeds the flow rate of the instrument pump. Alternatively, the span gas can first be filled into a Tedlar bag or delivered through a demand-flow regulator. Connect the calibration adapter to the inlet port of the instrument, and connect the tubing to the regulator or Tedlar bag.

Another alternative is to use a regulator with >500 cc/min flow but allow the excess flow to escape through a T or an open tube. In the latter method, the span gas flows out through an open tube slightly wider than the probe, and the probe is inserted into the calibration tube.

At the Span Calibration menu, you perform a Span calibration. You may also go back to the Zero calibration menu or to the initial Calibration menu if you want to exit calibration.

- Press [Y/+] to enter Span calibration.
- Press [N/-] to skip Span calibration and return to Zero calibration.
- Press [MODE] to exit Span calibration and return to the top calibration menu.

If you have pressed [Y/+] to enter Span calibration, then you will see the name of your Span gas (the default is isobutylene) and the span value in parts per million (ppm). You will also see this message that prompts you:

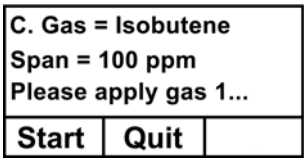

1. Turn on your span calibration gas.
2. Press [Y/+] to initiate calibration.

Note: You may press [MODE] if you decide that you do not want to initiate calibration. This will abort the span calibration and take you directly to the Calibration menu for Zero calibration.

3. Span calibration starts and displays this message:

Calibrating...

During the Span calibration process, there is a 30-second countdown and the instrument performs the Span calibration automatically. It requires no actions on your part.

Note: If you want to abort the Span calibration process, press [N/-] at any time during the process. You will see a confirmation message that says “Span is aborted!” and then the Zero calibration menu appears. You can then proceed to perform a Zero calibration, perform a Span calibration, or exit to the topmost Calibration menu.

When Span calibration is complete, you see a message similar to this (the value is an example only):

Span 1 is done!
Reading = 100.0 ppm

The instrument then exits Span calibration and shows the Zero calibration menu on its display.

Note: The reading should be very close to the span gas value.

Exiting Two-Point Calibration In Basic User Level

When you are done performing calibrations, press [MODE], which corresponds with “Back” on the display. You will see the following message:

Updating settings…

The instrument updates its settings and then returns to the main display. It begins or resumes monitoring.

Three-Point Calibration

For enhanced accuracy, it is possible to perform a second Span calibration in addition to the Zero and Span calibrations outlined in the previous section. Your instrument first must be set to allow this third calibration. This requires using ProRAE Studio software and a PC, as well as a higher concentration of calibration gas.

Note: Once the third calibration is set, you do not need to use ProRAE Studio to allow future 3-point calibrations. Also, you can only disable 3-point calibration capability by using ProRAE Studio again.

Perform the Zero and Span calibrations. After the first Span calibration (Span 1) is completed, the display a second Span calibration (Span 2) can be performed. The process is identical to the first calibration. As in the Span 1 calibration, you may exit and return to the Zero calibration screen if you choose not to perform this calibration or to abort it.

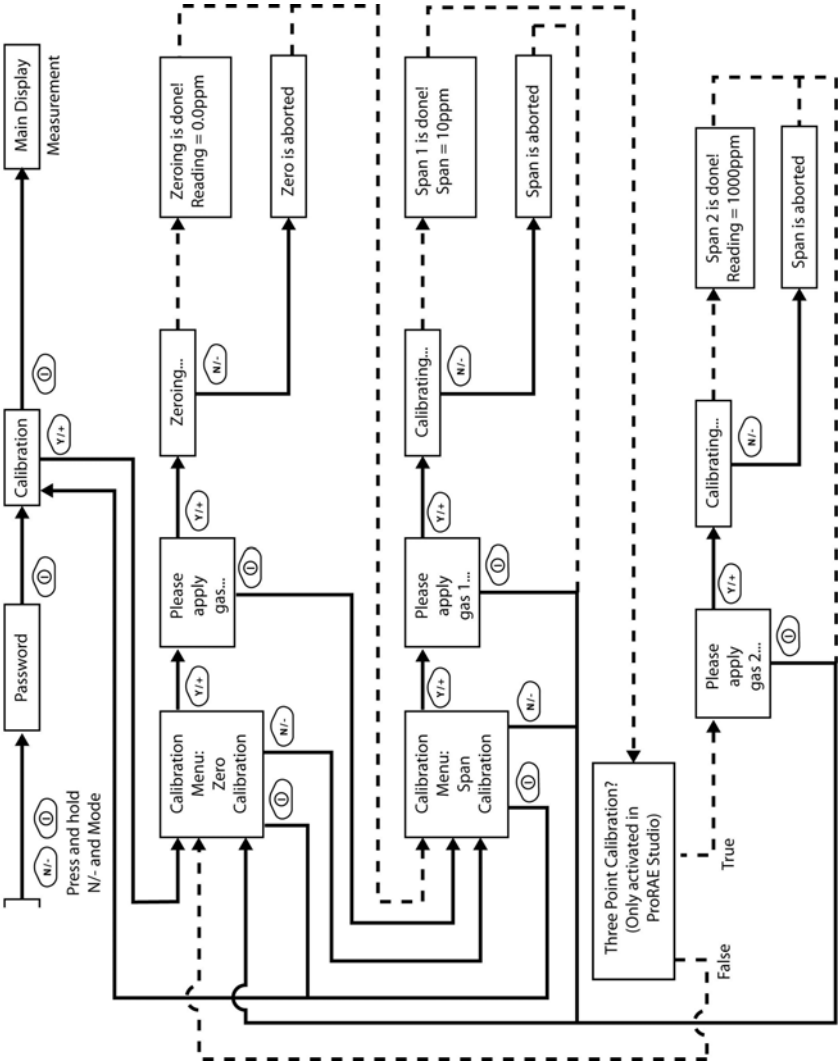

Note: Dashed line indicates automatic progression.

Span 2 Calibration

A cylinder of standard reference gas (span gas) fitted with a 500 cc/min. flow-limiting regulator or a flow-matching regulator is the simplest way to perform this procedure.

Note: This gas should be of a higher concentration than the gas used for Span 1 calibration.

Choose the 500 cc/min. regulator only if the flow rate matches or slightly exceeds the flow rate of the instrument pump. Alternatively, the span gas can first be filled into a Tedlar bag or delivered through a demand-flow regulator. Connect the calibration adapter to the inlet port of the instrument, and connect the tubing to the regulator or Tedlar bag.

Another alternative is to use a regulator with >500 cc/min flow but allow the excess flow to escape through a T or an open tube. In the latter method, the span gas flows out through an open tube slightly wider than the probe, and the probe is inserted into the calibration tube.

At the Span Calibration menu, you perform a Span calibration. You may also go back to the Zero calibration menu or to the initial Calibration menu if you want to exit calibration.

- Press [Y/+] to enter Span 2 calibration.
- Press [N/-] to skip Span calibration and return to Zero calibration.
- Press [MODE] to exit Span calibration and return to the top calibration menu.

If you have pressed [Y/+] to enter Span calibration, then you will see the name of your Span gas (the default is isobutylene) and the span value in parts per million (ppm). You will also see this message that prompts you:

Please apply gas...

4. Turn on your span calibration gas.
5. Press [Y/+] to initiate calibration.

Note: You may press [MODE] if you decide that you do not want to initiate calibration. This will take you directly to the Calibration menu for Zero calibration.

6. Span calibration starts a 30-second countdown and displays this message:

   Calibrating...

During the Span calibration process, the instrument performs the Span calibration automatically and does not require any action on your part.

Note: If you want to abort the Span calibration process, press [N/-] at any time during the process. You will see a confirmation message that says “Span is aborted!” and then the Zero calibration menu will appear. You can then proceed to perform a Zero calibration, perform a Span calibration, or exit to the topmost Calibration menu.

When Span calibration is complete, you will see a message similar to this (the value shown here is for example only):

Span 2 is done!
Reading = 1000 ppm

The instrument then exits Span calibration and shows the Zero calibration menu on its display.

Note: The reading should be very close to the span gas value.

Exiting Three-Point Calibration

When you are done performing calibrations, press [MODE], which corresponds with “Back” on the display. You will see the following message:

Updating settings…

The instrument updates its settings and then returns to the main display. It begins or resumes monitoring.

Programming Mode

Programming Mode can be entered from either Hygiene Mode or Search Mode. If the current user mode is Basic, you must provide a 4-digit password to enter.

Entering Programming Mode

1. Press and hold [MODE] and [N/-] until you see the Password screen.

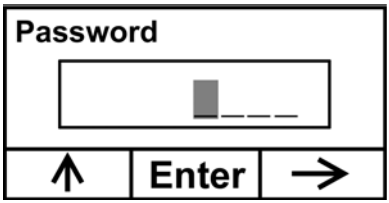

2. Input the 4-digit password:

- Increase the number from 0 through 9 by pressing [Y/+].
- Step from digit to digit using [N/-].
- Press [MODE] when you are done.

If you make a mistake, you can cycle through the digits by pressing [N/-] and then using [Y/+] to change the number in each position.

Note: The default password is 0000.

When you have successfully entered Programming Mode, you see this screen:

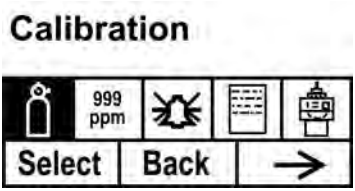

Note: The password can only be changed by connecting the instrument to a PC running ProRAE Studio software. Follow the instructions in ProRAE Studio to change it.

The Calibration label is shown and its icon is highlighted, but you can press [N/-] to step from one programming menu to the next, with the name of the menu shown at the top of the display and the corresponding icon highlighted. As you repeatedly press [N/-], the selection moves from left to right, and you see these screens:

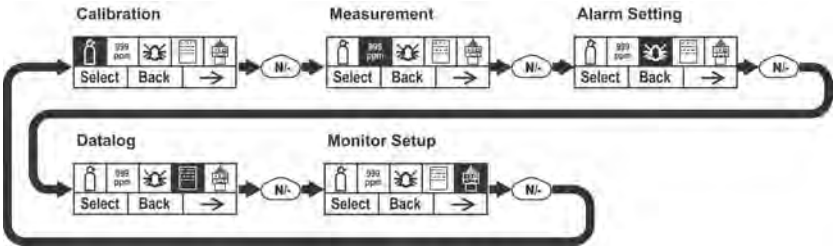

Note: When you reach Monitor Setup and press [N/-], the menu cycles back to Calibration.

Programming Mode Menus

The Programming Mode allows anyone with the password to change the instrument's settings, calibrate the instrument, modify the sensor configuration, enter user information, etc. Programming Mode has five menus. Each menu includes several sub-menus to perform additional programming functions.

This table shows the menus and sub-menus:

	999 ppm			
Calibration	**Measurement**	**Alarm Setting**	**Datalog**	**Monitor Setup**
Zero Calibration	Meas. Gas	High Alarm	Clear Datalog	Op Mode
Span Calibration	Meas. Unit	Low Alarm	Interval	Site ID
		STEL Alarm	Data Selection	User ID
		TWA Alarm	Datalog Type	User Mode
		Alarm Type		Date
		Buzzer & Light		Time
				Pump Duty Cycle
				Pump Speed
				Temperature Unit
				Language
				Radio Power
				Real Time Protocol
				Power On Zero
				Unit ID
				LCD Contrast

Once you enter Programming Mode, the LCD displays the first menu, Calibration. Each subsequent menu is accessed by pressing [N/-] repeatedly until the desired menu is displayed. To enter a sub-menu of a menu, press [Y/+].

Exiting Programming Mode

To exit Programming Mode and return to normal operation, press [MODE] once at any of the programming menu displays. You will see "Updating Settings…" as changes are registered and the mode changes.

Navigating Programming Mode Menus

Navigating through the Programming Mode menus is easy and consistent, using a single interface format of "Select," "Back" and "Next" at the top level. The three control buttons correspond to these choices as shown:

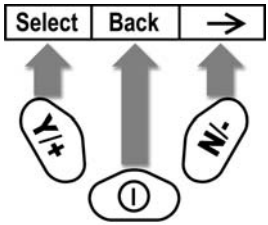

Note: Pressing [MODE] in the Programming Mode's top level causes the instrument to exit Programming Mode and return to monitoring.

The three keys perform the following functions in Programming Mode:

Key	Function in Programming Mode
[MODE]:	Exit menu when pressed momentarily or exit data entry mode
[Y/+]:	Increase alphanumerical value for data entry or confirm (yes) for a question
[N/-]:	Provides a "no" response to a question

Calibration

Two types of calibration are available: Zero (fresh air) and Span.

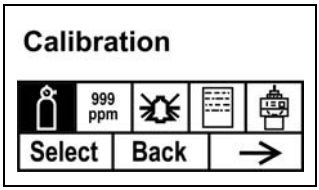

Select Zero or Span Calibration by pressing [N/+]. Once your choice is highlighted, press [Y/+].

Zero Calibration

The procedure for performing a zero calibration is covered on page 35.

Span Calibration

The procedure for performing a basic span calibration is covered on page 35.

Measurement

The sub-menus for Measurement are Measurement Gas and Measurement Unit.

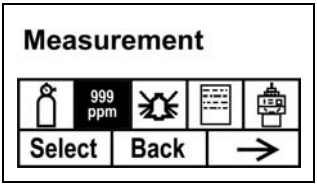

Meas. Gas

Measurement gases are organized in four lists:

- My List is a customized list of gases that you create. It contains a maximum of 10 gases and can only be built in ProRAE Studio on a PC and transferred to the instrument. **Note:** The first gas in the list is always isobutylene (it cannot be removed from the list).
- Last Ten is a list of the last ten gases used by your instrument. The list is built automatically and is only updated if the gas selected from Custom Gases or Library is not already in the Last Ten. This ensures that there is no repetition.
- Gas Library is a library that consists of all the gases found in RAE Systems' Technical Note TN-106 (available online at www.raesystems.com).
- Custom Gases are gases with user-modified parameters. Using ProRAE Studio, all parameters defining a gas can be modified, including the name, span value(s), correction factor, and default alarm limits.

1. Scroll through each list by pressing [N/-].
2. Press [Y/+] to select one (My List, Last Ten, Gas Library, or Custom Gases).

3. Once you are in one of the categories, press [N/-] to scroll through its list of options and [Y/+] to select one. (If you press [MODE], you exit to the next submenu.)
4. Press [Y/+] to save your choice or [N/-] to undo your selection.

Leave the sub-menu and return to the Programming Mode menus by pressing [MODE].

Meas. Unit

Standard available measurement units include:

Abbreviation	Unit	MiniRAE 3000
ppm	parts per million	Yes
ppb	parts per billion	
mg/m3	milligrams per cubic meter	Yes
ug/m3	micrograms per cubic meter	

- Scroll through the list by pressing [N/-].
- Select by pressing [Y/+].
- Save your selection by pressing [Y/+] or undo your selection by pressing [N/-].

Leave the sub-menu and return to the Programming Mode menus by pressing [MODE].

Alarm Setting

During each measurement period, the gas concentration is compared with the programmed alarm limits (gas concentration alarm limit settings: Low, High, TWA and STEL). If the concentration exceeds any of the preset limits, the loud buzzer and red flashing LED are activated immediately to warn of the alarm condition.

An alarm signal summary is shown on page 27.

In this menu, you can change the High and Low alarm limits, the STEL limit, and the TWA. Press [Y/+] to to enter the Alarm Setting menu. **Note:** All settings are shown in ppb (parts per billion), or µg/m^3 (micrograms per cubic meter), depending on your setting.

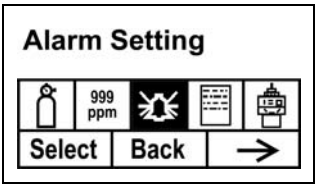

1. Scroll through the Alarm Limit sub-menu using the [N/-] key until the display shows the desired limit to be changed (High Alarm, Low Alarm, STEL Alarm, and TWA Alarm)
2. Press [Y/+] to select one of the alarm types. The display shows a flashing cursor on the left-most digit of the previously stored alarm limit.
3. Press [Y/+] to increase each digit's value.
4. Press [N/-] to advance to the next digit.
5. Again, use [Y/+] to increase the number.

Repeat this process until all numbers are entered.

Press [MODE] when you are done.

- Press [Y/+] to save the changes.
- Press [N/-] to undo the changes and revert to the previous settings.

When all alarm types have been changed or bypassed, press [MODE] to exit to the Programming Menu.

High Alarm

You can change the High Alarm limit value. The value is typically set by the instrument to match the value for the current calibration gas. It is expressed in parts per billion (ppb). **Note:** The default value depends on the measurement gas.

To change the High Alarm value:

1. Press [Y/+] to increase each digit's value.
2. Press [N/-] to advance to the next digit.
3. Again, use [Y/+] to increase the number.

Repeat this process until all numbers are entered.
When you have completed your selections, press [MODE]. You will see two choices: Save and Undo. You have the opportunity to register the new settings or to change your mind and revert to your previous settings.

Press [Y/+] to save the changes.
Press [N/-] to undo the changes and revert to the previous settings.

Low Alarm

You can change the Low Alarm limit value. The value is typically set by the instrument to match the value for the current calibration gas. It is expressed in parts per billion (ppb). **Note:** The default value depends on the measurement gas.

To change the Low Alarm value:

1. Press [Y/+] to increase each digit's value.
2. Press [N/-] to advance to the next digit.
3. Again, use [Y/+] to increase the number.

Repeat this process until all numbers are entered.

When you have completed your selections, press [MODE]. You will see two choices: Save and Undo. You have the opportunity to register the new settings or to change your mind and revert to your previous settings.

- Press [Y/+] to save the changes.
- Press [N/-] to undo the changes and revert to the previous settings.

STEL Alarm

You can change the STEL Alarm limit value. The value is typically set by the instrument to match the value for the calibration gas. It is expressed in parts per billion (ppb). **Note:** The default value depends on the measurement gas.

To change the STEL Alarm value:

1. Press [Y/+] to increase each digit's value.
2. Press [N/-] to advance to the next digit.
3. Again, use [Y/+] to increase the number.

Repeat this process until all numbers are entered.

When you have completed your selections, press [MODE]. You will see two choices: Save and Undo. You have the opportunity to register the new settings or to change your mind and revert to your previous settings.

- Press [Y/+] to save the changes.
- Press [N/-] to undo the changes and revert to the previous settings.

TWA Alarm

You can change the TWA (time-weighted average) Alarm limit value. The value is typically set by the instrument to match the value for the calibration gas. It is expressed in parts per billion (ppb). **Note:** The default value depends on the measurement gas.

To change the TWA Alarm value:

1. Press [Y/+] to increase each digit's value.
2. Press [N/-] to advance to the next digit.
3. Again, use [Y/+] to increase the number.

Repeat this process until all numbers are entered.

When you have completed your selections, press [MODE]. You will see two choices:

- Save
- Undo

You have the opportunity to register the new settings or to change your mind and revert to your previous settings.

- Press [Y/+] to save the changes.
- Press [N/-] to undo the changes and revert to the previous settings.

Alarm Type

There are two selectable alarm types:

Latched	When the alarm is triggered, you can manually stop the alarm. The latched setting only controls alarms for High Alarm, Low Alarm, STEL Alarm, and TWA alarm. **Note:** To clear an alarm when the instrument is set to “Latched,” press [Y/+] when the main (Reading) display is shown.
Automatic Reset	When the alarm condition is no longer present, the alarm stops and resets itself.

1. Press **[N/-]** to step from one alarm type to the other.
2. Press **[Y/+]** to select an alarm type.

When you have completed your selections, press [MODE].

You will see two choices: Save and Undo. You have the opportunity to register the new settings or to change your mind and revert to your previous settings.

- Press [Y/+] to save the changes.
- Press [N/-] to undo the changes and revert to the previous settings.

Buzzer & Light

The buzzer and light alarms can be programmed to be on or off individually or in combination. Your choices are:

- Both on
- Light only
- Buzzer only
- Both off

1. Press [N/-] to step from one option to the next.
2. Press [Y/+] to make your selection (the dark circle in the “radio button” indicates your selection).
3. When you have completed your selections, press [MODE].

   You will see two choices: Save and Undo. You have the opportunity to register the new settings or to change your mind and revert to your previous settings.

   - Press [Y/+] to save the changes.
   - Press [N/-] to undo the changes and revert to the previous settings.

Datalog

The instrument calculates and stores the concentration and ID of each sample taken. In the datalog sub-menu, a user can perform the tasks and functions shown below.

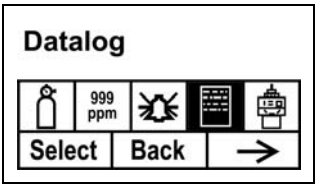

1. Scroll through the Datalog sub-menu using the [N/-] key until the display shows the desired parameter to be changed:

   Clear Datalog
   Interval
   Data Selection
   Datalog Type

2. Press [Y/+] to make your selection. Exit by pressing [MODE] for Back.

Clear Datalog

This erases all the data stored in the datalog.

Note: Once the datalog is cleared, the data cannot be recovered.

Press [Y/+] to clear the datalog. The display asks, “Are you sure?”

- Press [Y/+] if you want to clear the datalog. When it has been cleared, the display shows “Datalog Cleared!”
- Press [N/-] if you do not want to clear the datalog.

The display changes, and you are taken to the next sub-menu, Interval.

Interval

Intervals are shown in seconds. The default value is 60 seconds. The maximum interval is 3600 seconds.

1. Press [Y/+] to increase each digit’s value.
2. Press [N/-] to advance to the next digit.
3. Again, use [Y/+] to increase the number.

Repeat this process until all numbers are entered.

When you have completed your selections, press [MODE].

You will see two choices: Save and Undo. You have the opportunity to register the new settings or to change your mind and revert to your previous settings.

- Press [Y/+] to save the changes.
- Press [N/-] to undo the changes and revert to the previous settings.

Data Selection

Data Selection allows you to select which types of data are stored and made available when you offload your datalog to a computer via ProRAE Studio software.

You can choose any or all of three types of data (you must choose at least one):

- Average
- Maximum
- Minimum

1. Press [N/-] to step from one option to the next. The highlighter indicates your choice.
2. Press [Y/+] to toggle your selection on or off (the check box indicates “on” with an “X”).
3. When you have completed your selections, press [MODE].

You will see two choices: Save and Undo. You have the opportunity to register the new settings or to change your mind and revert to your previous settings.

- Press [Y/+] to save the changes.
- Press [N/-] to undo the changes and revert to the previous settings.

Datalog Type

The instrument has three datalog types:

Auto	Default mode. Collects datalog information when the instrument is sampling.
Manual	Datalogging occurs only when the instrument's datalogging is manually started (see below for details).
Snapshot	Datalogs only during single-event capture sampling.

Note: You can only choose one datalog type to be active at a time.

1. Press [N/-] to step from one option to the next.
2. Press [Y/+] to make your selection (the dark circle in the "radio button" indicates "on").
3. When you have completed your selection, press [MODE].

You will see two choices: Save and Undo. You have the opportunity to register the new settings or to change your mind and revert to your previous settings.

- Press [Y/+] to save the changes.

Press [N/-] to undo the changes and revert to the previous settings.

Manual Datalog

When the instrument is set to Manual Datalog, you turn datalogging on and off by stepping through the displays from the Main Display, and then pressing the keys to select datalog on/off functions.

- When you reach the screen that says "Start Datalog?" press [Y/+] to start it. You see "Datalog Started," confirming that datalogging is now on.

When you reach the screen that says "Stop Datalog?" press [Y/+] to stop it. You see "Datalog Stopped," confirming that datalogging is now off.

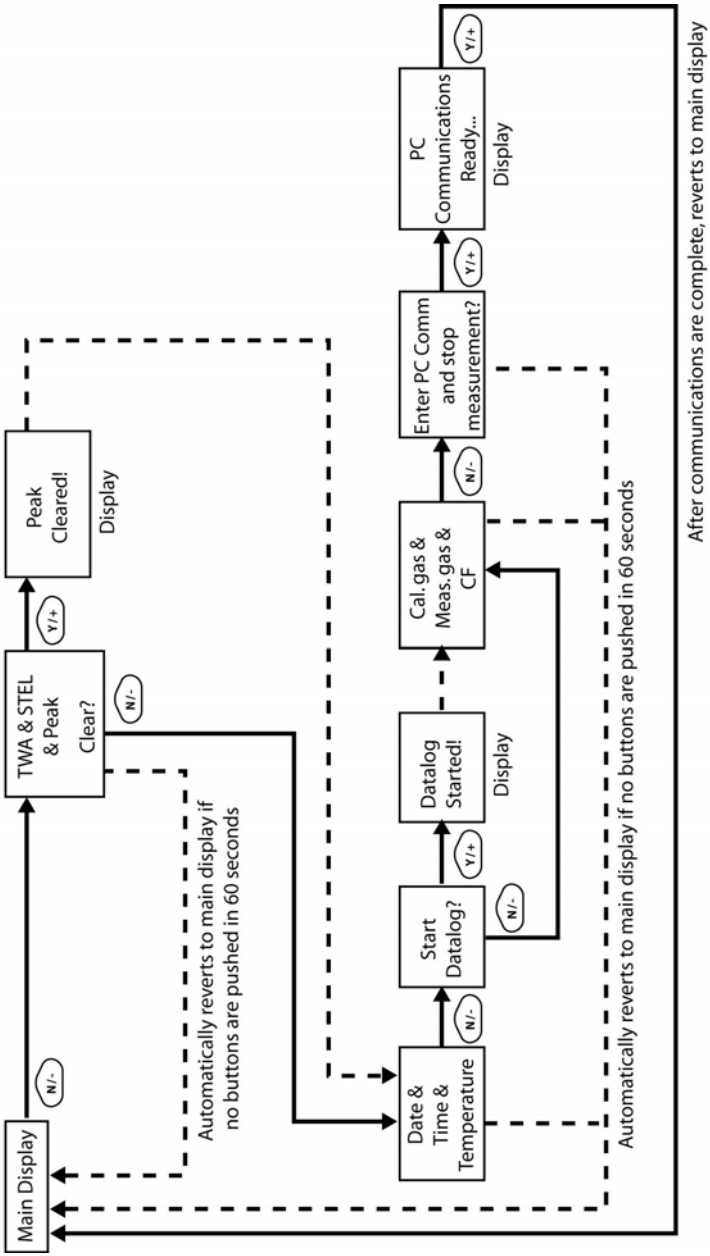

Note: Dashed line indicates automatic progression.

Snapshot Datalog

When the instrument is in Snapshot datalogging mode, it captures a single “snapshot” of the data at the moment of your choosing. Whenever the instrument is on and it is set to Snapshot, all you have to do is press [MODE] each time you want to capture a snapshot of the data at that instant.

When you send the data to a computer using ProRAE Studio, the data snapshots are uniquely identified by time and other parameters.

Monitor Setup

Many settings can be accessed in this menu, including setting the date and time and adjusting the pump’s on/off duty cycle.

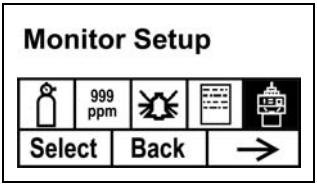

Op Mode

Under Monitor Setup is “Op Mode.”

Press [Y/+] to select.

You see two options (one is highlighted):

Hygiene
Search

The current mode is indicated by a dark circle within the circle in front of either Hygiene or Search.

1. Select Hygiene or Search by pressing [N/-]. The highlighting changes from one to the other each time you press [N/-].
2. Press [Y/+] to select that mode for the instrument.
3. Press [MODE] when you want to register your selection to place the instrument in the selected mode.
4. Press [Y/+] to commit the change and exit to the Monitor Setup screen, or press [N/-] to Undo (exit to the Monitor Setup screen without changing the Mode).

Site ID

Enter an 8-digit alphanumeric/character Site ID in the programming mode. This Site ID is included in the datalog report.

1. Press [Y/+] and the display shows the current site ID. Example: “RAE00001.” Note that the left-most digit flashes to indicate it is the selected one.
2. Press [Y/+] to step through all 26 letters (A to Z) and 10 numerals (0 to 9).
   Note: The last four digits must be numerals.
3. Press [N/-] to advance to the next digit. The next digit to the right flashes.

   Repeat this process until all eight digits of the new site ID are entered.

Press [MODE] to exit.

If there is any change to the existing site ID, the display shows “Save?” Press [Y/+] to accept the new site ID. Press [N/-] to discard the change and move to the next sub-menu.

User ID

Enter an 8-digit alphanumeric User ID in the programming mode. This User ID is included in the datalog report.

1. Press [Y/+] and the display shows the current User ID. Example: “RAE00001.” Note that the left-most digit flashes to indicate it is the selected one.
2. Press [Y/+] to step through all 26 letters (A to Z) and 10 numerals (0 to 9).
3. Press [N/-] to advance to the next digit. The next digit to the right flashes.

   Repeat this process until all eight digits of the new User ID are entered.

Press [MODE] to exit.

If there is any change to the existing User ID, the display shows “Save” Press [Y/+] to accept the new site ID. Press [N/-] to discard (undo) the change and move to the next sub-menu.

User Mode

The instrument has two user modes:

Basic Basic users can only see and use a basic set of functions.
Advanced Advanced users can see all screens and perform all available functions.

Note: The default value for User Mode is Basic.

To change the User Mode:

1. Press [N/-] to step from one option to the next. The highlighting changes each time you press [N/-].
2. Press [Y/+] to make your selection (the dark circle in the “radio button” indicates “on”).
3. When you have completed your selection, press [MODE].
4. Press [Y/+] to accept the new User Mode. Press [N/-] to discard the change and move to the next sub-menu.

Date

The Date is expressed as Month/Day/Year, with two digits for each.

1. Press [Y/+] and the display shows the current date. Note that the left-most digit flashes to indicate it is selected.
2. Press [Y/+] to step through all 10 numerals (0 to 9).
3. Press [N/-] to advance to the next digit. The next digit to the right flashes.

   Repeat this process until all six digits of the new date are entered.

Press [MODE] to exit.

- Press [Y/+] to save the new date.
- Press [N/-] to undo the change and move to the next sub-menu.

Time

The Time is expressed as Hours/Minutes/Seconds, with two digits for each. The time is in 24-hour (military) format.

1. Press [Y/+] and the display shows the current time. Note that the left-most digit flashes to indicate it is selected.
2. Press [Y/+] to step through all 10 numerals (0 to 9).

3. Press [N/-] to advance to the next digit. The next digit to the right flashes.

   Repeat this process until all six digits of the new time are entered.

Press [MODE] to exit.

- Press [Y/+] to save the new date.
- Press [N/-] to undo the change and move to the next sub-menu.

Duty Cycle

The pump's duty cycle is the ratio of its on time to off time. The duty cycle ranges from 50% to 100% (always on), and the period is 10 seconds. Therefore, a duty cycle of 60% means that the pump is on for 6 seconds and off for four seconds. Duty cycling is employed by the instrument to clean the PID. A lower duty cycle has a greater effect on keeping the PID clean than a higher duty cycle.

Important! Pump duty cycling is interrupted when the instrument senses a gas. The pump's duty cycle is disabled when the measurement is greater than the 2ppm threshold and is re-enabled when the reading falls below 90% of the threshold (1.8 ppm).

1. Press [Y/+] to increase the value.
2. When you have completed your selection, press [MODE].
   - Press [Y/+] to save the new duty cycle value.
   - Press [N/-] to undo the change and move to the next sub-menu.

Temperature Unit

The temperature display can be switched between Fahrenheit and Celsius units.

1. Press [N/-] to step from one option to the next.
2. Press [Y/+] to make your selection (the dark circle in the “radio button” indicates “on”).
3. When you have completed your selection, press [MODE].
   - Press [Y/+] to save the new temperature unit.
   - Press [N/-] to undo the change and move to the next sub-menu.

Pump Speed

The pump can operate at two speeds, high and low. Running at low speed is quieter and conserves a small amount of power. There is almost no difference in sampling accuracy.

1. Press [N/-] to step from one option to the next.
2. Press [Y/+] to make your selection (the dark circle in the “radio button” indicates “on”).
3. When you have completed your selection, press [MODE].
   - Press [Y/+] to save the new temperature unit.
   - Press [N/-] to undo the change and move to the next sub-menu.

Language

English is the default language, but other languages can be selected for the instrument.

1. Press [N/-] to step from one option to the next.
2. Press [Y/+] to make your selection (the dark circle in the “radio button” indicates “on”).
3. When you have completed your selection, press [MODE].
   - Press [Y/+] to save your new language choice.
   - Press [N/-] to undo it and return to the previous language selection.

Radio Power

The radio connection can be turned on or off.

1. Press [N/-] to step from one option to the next (on or off).
2. Press [Y/+] to make your selection (the dark circle in the “radio button” indicates that the option is selected).
3. When you have completed your selection, press [MODE].

   - Press [Y/+] to accept the new radio setting (on or off).
   - Press [N/-] to discard the change and move to the next sub-menu.

Real Time Protocol

Real Time Protocol is the setting for data transmission.

The choices are:

P2M (cable)	Point to multipoint. Data is transferred from the instrument to multiple locations using a wired connection. Default data rate: 19200 bps.
P2P (cable)	Point to point. Data is transferred only between the instrument and one other location, such as a computer. Default data rate: 9600 bps.
P2M (wireless)	Point to multipoint, wireless. Data is transferred wirelessly and can be received by multiple receivers.

1. Press [N/-] to step from one option to the next.
2. Press [Y/+] to make your selection (the dark circle in the “radio button” indicates “on”).
3. When you have completed your selection, press [MODE].
   - Press [Y/+] to save the new real-time communications protocol.
   - Press [N/-] to undo the change and move to the next sub-menu.

Power On Zero

When Power On Zero is on, the instrument performs a zero calibration when it is turned on.

1. Press [N/-] to step from one option to the next.
2. Press [Y/+] to make your selection (the dark circle in the “radio button” indicates your selection).
3. When you have completed your selection, press [MODE].
   - Press [Y/+] to save the change.
   - Press [N/-] to discard the change and move to the next sub-menu.

Unit ID

This three-digit number keeps data separated by instrument when more than one instrument is used in a network. If multiple sensing units are attempting to communicate with the same Host, then the units must all have a different Unit ID.

1. Press [Y/+] to step through all 10 numerals (0 to 9). If you pass the numeral you want, keep pressing [Y/+]. After it counts up to 9, it starts counting up from 0 again.
2. Press [N/-] to advance to the next digit. The next digit to the right flashes.

Repeat this process until all three digits of the Unit ID are entered.

3. Press [MODE] when you are done.
   - Press [Y/+] to save the change.
   - Press [N/-] to discard the change and move to the next sub-menu.

LCD Contrast

The display's contrast can be increased or decreased from its default setting. You may not need to ever change the default setting, but sometimes you can optimize the display to suit extreme temperature and ambient brightness/darkness conditions.

- The minimum value is 20.
- The maximum value is 60.

1. Press [Y/+] to increase the value or [N/-] to decrease the value.
2. Press [MODE] to save your selection.
   - Press [Y/+] to save your new contrast value.
   - Press [N/-] to undo it and return to the previous value.

Hygiene Mode

The instrument usually operates in Hygiene Mode, which provides basic functionality. However, it is possible to operate it in a second mode called Search Mode. Here are the primary differences:

Hygiene Mode: Automatic measurements, continuously running and datalogging, and calculates additional exposure values.

Search Mode: Manual start/stop of measurements and display of certain exposure values.

Basic User Level & Hygiene Mode

The default setting is navigated in the following way:

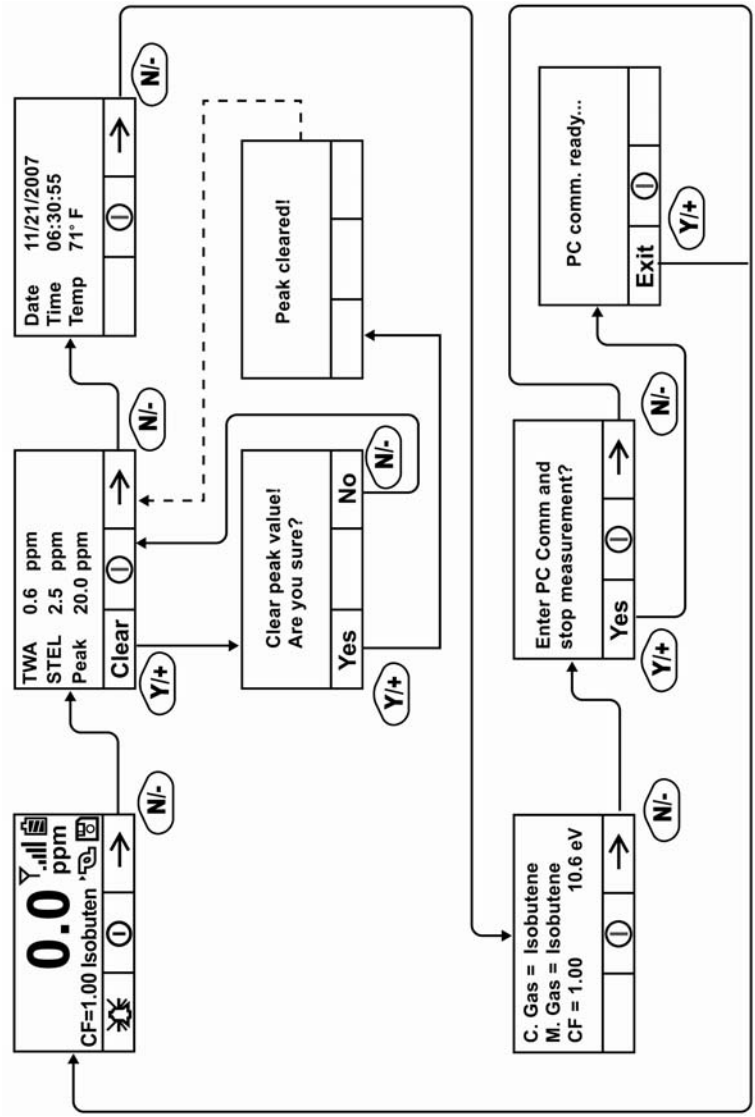

Note: Dashed line indicates automatic progression.

Pressing [N/-] steps you from screen to screen. Options include clearing the Peak value and turning on the instrument's PC Communications for data transfer to a PC.

Entering Search Mode From Hygiene Mode

In order to change the instrument's operational mode from Hygiene Mode to Search Mode, you must enter the password-protected Programming Mode:

1. Hold [MODE] and [N/-] until you see the password screen.
2. Use [Y/+] to increment to the number you want for the first digit. (If you pass by the desired number, press [Y/+] until it cycles through to 0 again. Then press [Y/+] until you reach the desired number.)
3. Press [N/-] to advance to the next digit.
4. Again press [Y/+] to increment the number.
5. Press [N/-] to advance to the next digit.

Continue the process until all four numbers of the password have been input. Then press [MODE] to proceed.

The screen changes to icons with the label "Calibration."

1. Press [N/-] to advance to "Monitor Setup."
2. Press [Y/+] to select Monitor Setup.

Under Monitor Setup, you will see "Op Mode."

Press [Y/+] to select.

You will see:

Hygiene
Search

The current mode is indicated by a dark circle within the circle in front of either Hygiene or Search.

1. Select Hygiene or Search by pressing [N/-].
2. Press [Y/+] to place the instrument into the selected mode.

3. Press [MODE] when you want to register your selection to place the instrument in the selected mode.
4. Press [Y/+] to commit the change and exit to the Monitor Setup screen, or press [N/-] to Undo (exit to the Monitor Setup screen without changing the Mode).

Optional Graphic Screen In Search Mode

Using ProRAE Studio, you can set your instrument to show a graphic display instead of a numeric display of ongoing data. Consult your ProRAE Studio disc for information.

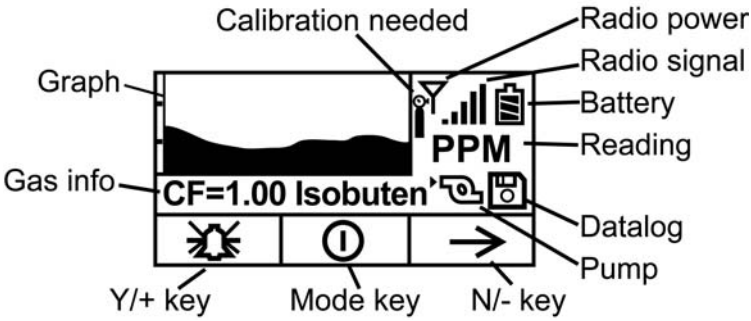

During sampling, the display's readings are shown numerically, plus the graph tracks the highest readings over time. The numeric reading alternates between the value and the measurement units, as well:

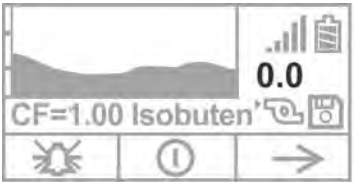

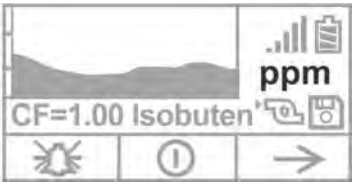

Advanced User Level (Hygiene Mode Or Search Mode)

The User Mode called Advanced User Level allows a greater number of parameters to be changed than Basic User Level. It can be used with either of the Operation Modes, Hygiene Mode or Search Mode.

Advanced User Level & Hygiene Mode

With the instrument in Operation Mode: Hygiene Mode, enter User Mode: Advanced User Level (refer to the section called Monitor Mode for instructions).

Once you are in Advanced User Level and Hygiene Mode together, you can change the calibration reference and measurement gas, in addition to performing normal monitoring functions.

Pressing [N/-] progresses through the screens, while pressing [Y/+] selects options. Pressing [MODE] makes menu choices when it is shown for “Done” or “Back.” Pressing and holding [Mode] whenever the circle with a vertical line in the middle is shown activates the countdown to shutoff.

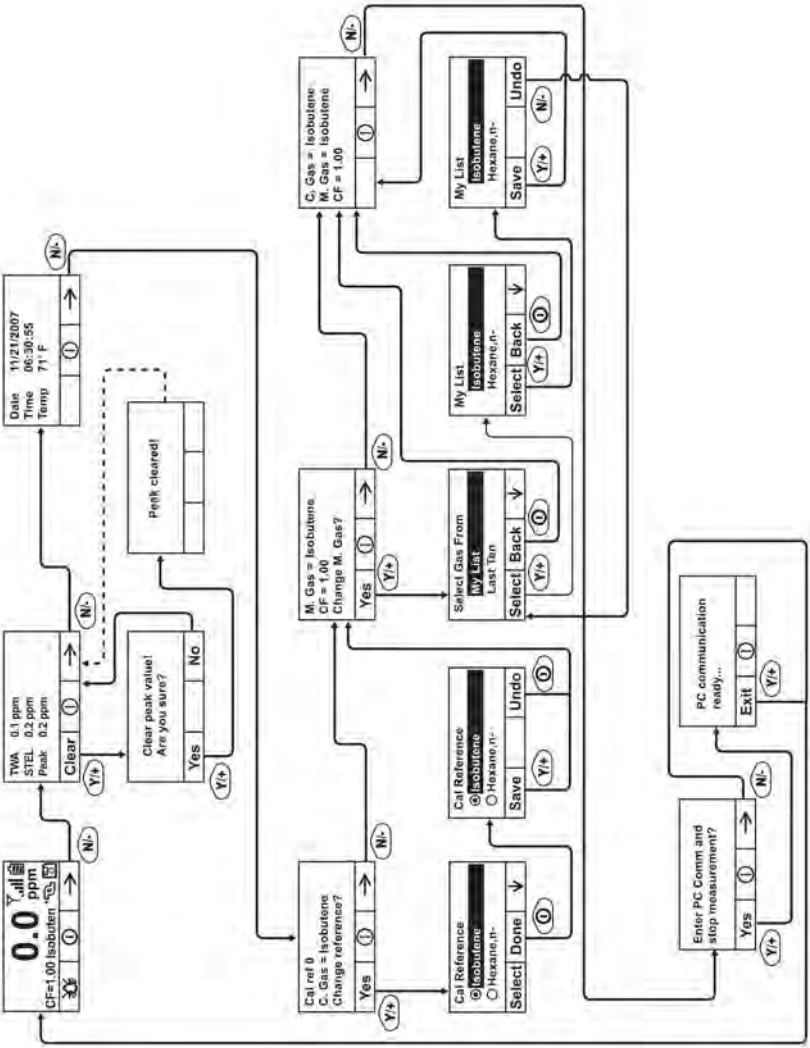

Note: Dashed line indicates automatic progression.

Basic User Level & Search Mode

With the instrument in Operation Mode: Search Mode, enter User Mode and select Basic User Level (refer to the section called User Mode for instructions).

When the instrument is in Search Mode, it only samples when you activate sampling. When you see the display that says, “Ready…Start sampling?” press [Y/+] to start. The pump turns on and the instrument begins collecting data. To stop sampling, press [N/-] while the main display is showing. You will see a new screen that says, “Stop sampling?” Press [Y/+] to stop sampling. Press [N/-] if you want sampling to continue.

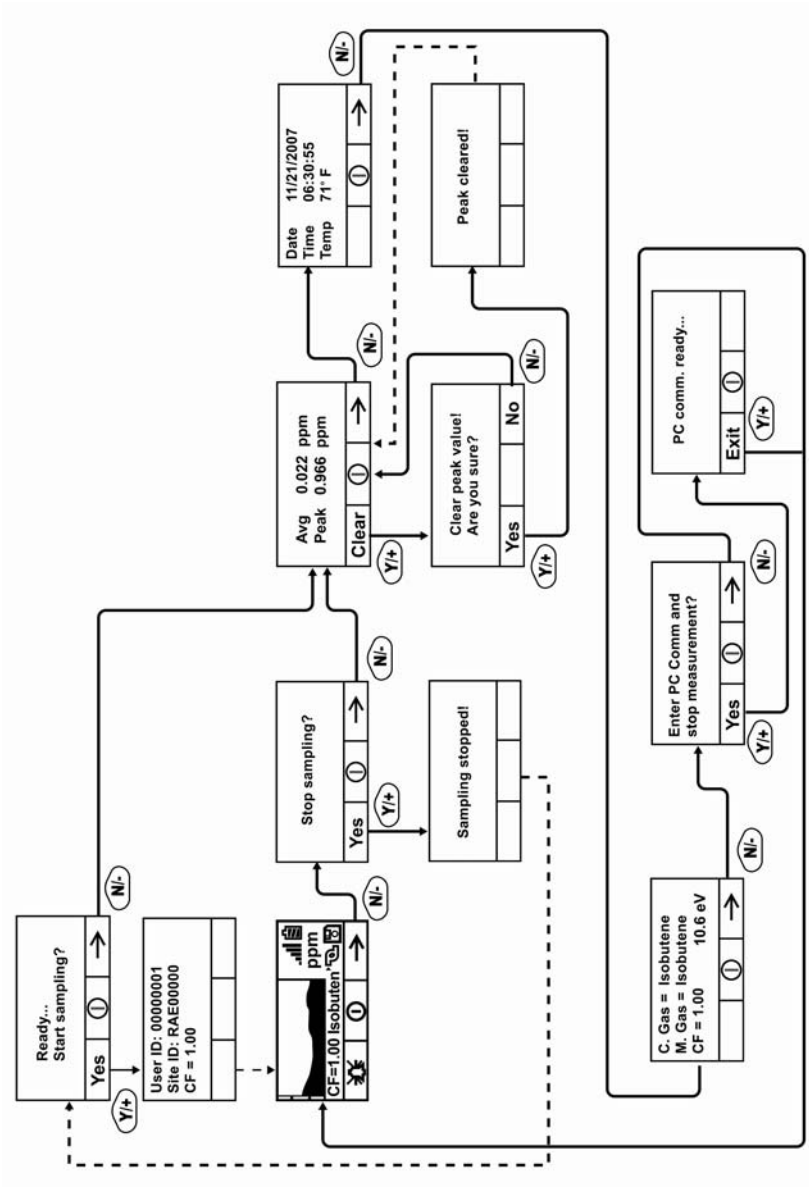

Note: Dashed line indicates automatic progression.

Advanced User Level & Search Mode

With the instrument in Operation Mode: Search Mode, enter User Mode and select Advanced User Level (refer to the section called Monitor Mode for instructions). Operation is similar to Basic User Level & Sampling Mode, but now allows you to change calibration and measurement reference gases. Refer to the section on measurement gases on page 52 for more details.

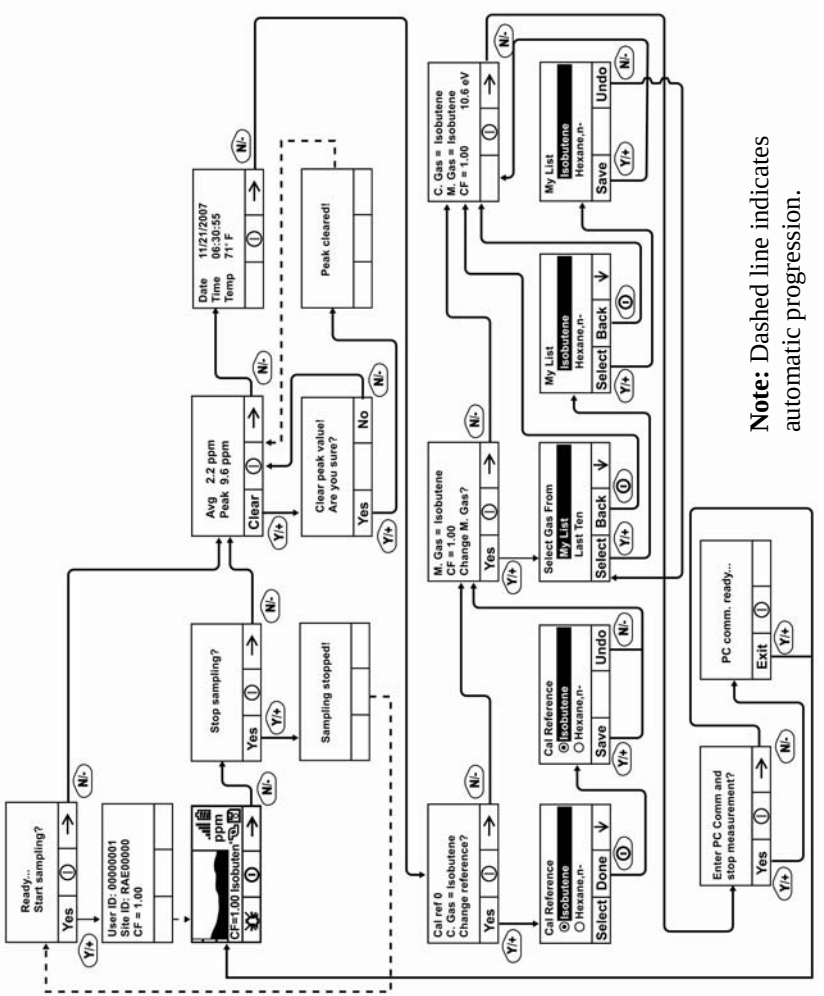

Note: Dashed line indicates automatic progression.

Diagnostic Mode

IMPORTANT! Diagnostic Mode is designed for servicing and manufacturing, and therefore is not intended for everyday use, even by advanced users. It provides raw data from sensors and about settings, but only allows adjustment of pump stall parameters, which should only be changed by qualified personnel.

Note: If the instrument is turned on in Diagnostic Mode and you switch to User Mode, datalog data remains in raw count form. To change to standard readings, you must restart the instrument.

Entering Diagnostic Mode

Note: To enter Diagnostic Mode, you must begin with the instrument turned off.

Press and hold [Y/+] and [MODE] until the instrument starts.

The instrument goes through a brief startup, and then displays raw data for the PID sensor. These numbers are raw sensor readings without calibration. The instrument is now in Diagnostic Mode.

Note: In Diagnostic Mode, the pump and lamp are normally on.

You can enter Programming Mode and calibrate the instrument as usual by pressing both [MODE] and [N/-] for three seconds.

You can enter Monitoring Mode by pressing [MODE] and [Y/+] together for three seconds.

Once the instrument is started up in Diagnostic Mode, you can switch between Diagnostic Mode and Monitoring Mode by pressing and holding [MODE] and [Y/+] simultaneously for two seconds.

In Diagnostic mode, you can step through parameter screens by pressing [MODE].

Adjusting The Pump Stall Threshold

If the gas inlet is blocked but the pump does not shut down, or the pump shuts down too easily with a slight blockage, the pump stall threshold value may be set too high or too low.

Use the following steps to adjust the pump stall threshold:

Pump High

In Diagnostic Mode, press the [MODE] key until “Pump High” is displayed. The display shows the maximum, minimum, and stall values for the pump at its high speed. Write down the “Max” reading.

Block the gas inlet and watch the pump current reading (labeled “I”) increase. Write down its blocked reading. **Note:** If the pump current reading does not increase significantly (less than 10 counts), then there may be a leak in the gas inlet or the pump is weak or defective.

Add the two readings you wrote down. This is the average of the maximum block count and the maximum idle count. Divide that number by 2. Use the [Y/+] or [N/-] key to increase or decrease the stall value to equal that number.

Press the [MODE] key to exit this display.

Pump Low

In Diagnostic Mode, press the [MODE] key until “Pump Low” is displayed. The display shows the maximum, minimum, and stall values for the pump at its low speed. Write down the “Max” reading.

Block the gas inlet and watch the pump current reading (labeled “I”) increase. Write down its blocked reading. **Note:** If the pump current reading does not increase significantly (less than 10 counts), then there may be a leak in the gas inlet or the pump is weak or defective.

Add the two readings you wrote down. This is the average of the maximum block count and the maximum idle count. Divide that

number by 2. Use the [Y/+] or [N/-] key to increase or decrease the stall value to equal that number.

Press the [MODE] key to exit this display.

Exiting Diagnostic Mode

You can exit Diagnostic Mode and go directly to Programming Mode or Monitor Mode as outlined above, or you can exit Diagnostic Mode completely.

To exit Diagnostic Mode so that it cannot be re-entered without a restart:

Shut down the instrument. When it is off, restart it by holding the [MODE] key. Diagnostic Mode cannot be entered until the instrument is restarted as outlined in “Entering Diagnostic Mode.”

Transferring Data To & From A Computer

Once you have connected your instrument cradle to the PC, you can can transfer data, including a download of the datalog to the computer and updates of firmware to the instrument (should this ever be necessary).

Downloading The Datalog To A PC

1. Connect the data cable to the PC and the cradle.
2. Place the instrument into its cradle. The charging LED should be illuminated.
3. Start ProRAE Studio on your PC.
4. From ProRAE Studio, select “Operation” and select Setup Connection.
5. Select the COM port to establish a communication link between the PC and the instrument.
6. To receive the datalog in the PC, select “Downlog Datalog.”
7. When you see “Unit Information,” click OK.

During the data transfer, the display shows a progress bar.

When the transfer is done, you will see a screen with the datalog information. You can now export this datalog for other use or printing.

Uploading Firmware To The instrument From A PC

Uploading new firmware to your instrument requires connecting the instrument and PC. Follow these steps to make the connection:

1. Connect the data cable to the PC and the cradle.
2. Place the instrument into its cradle. The charging LED should be illuminated.
3. Start RAEProgrammer 7000 on your PC.
4. From RAEProgrammer 7000, select “Operation” and select Setup Connection.
5. Select the COM port to establish a communication link between the PC and the instrument.
6. Select Operation → Download Firmware.

Once communication is established, follow the instructions that accompany RAEProgrammer 7000 and the firmware to upload the new firmware to your instrument.

Note: Check for the latest updates to ProRAEProgrammer 7000 at www.raesystems.com.

Maintenance

The major maintenance items of the instrument are:

- Battery pack
- Sensor module
- PID lamp
- Sampling pump
- Inlet connectors and filters

Note: Maintenance should be performed by qualified personnel only.

NOTE: The printed circuit board of the instrument is connected to the battery pack even if the power is turned off. **Therefore, it is very important to disconnect the battery pack before servicing or replacing any components inside the instrument**. **Severe damage to the printed circuit board or battery may occur if the battery pack is not disconnected before servicing the unit.**

Battery Charging & Replacement

When the display shows a flashing empty battery icon, the battery requires recharging. It is recommended to recharge the instrument upon returning from fieldwork. A fully charged battery runs a instrument for 16 hours continuously. The charging time is less than 8 hours for a fully discharged battery. The battery may be replaced in the field (in areas known to be non-hazardous), if required.

WARNING!

To reduce the risk of ignition of hazardous atmospheres, recharge battery only in area known to be non-hazardous. **Remove and replace battery only in areas known to be non-hazardous.**

Replacing The Li-ion Battery

1. Turn off the instrument.
2. Located on the rear of the instrument is a battery tab. Slide it down to unlock the battery.

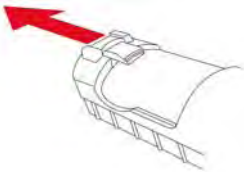

3. Remove the battery pack from the battery compartment by tilting it out.

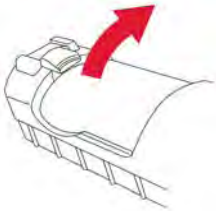

4. Replace a fully charged spare battery pack inside the battery compartment. Make sure the battery pack is oriented properly inside the compartment.
5. Slide the capture tab back up to its locked position.

Replacing The Alkaline Battery Adapter

An alkaline battery adapter is supplied with each instrument. The adapter (part number 059-3052-000) accepts four AA alkaline batteries (use only Duracell MN1500) and provides approximately 12 hours of operation. The adapter is intended to be used in emergency situations when there is no time to charge the Li-ion battery pack.

To insert batteries into the adapter:

1. Remove the three Philips-head screws to open the compartment.
2. Insert four fresh AA batteries as indicated by the polarity (+/-) markings.
3. Replace the cover. Replace the three screws.

To install the adapter in the instrument:

1. Remove the Li-ion battery pack from the battery compartment by sliding the tab and tilting out the battery.
2. Replace it with the alkaline battery adapter
3. Slide the tab back into place to secure the battery adapter.

IMPORTANT!

Alkaline batteries cannot be recharged. The instrument's internal circuit detects alkaline batteries and will not allow recharging. If you place the instrument in its cradle, the alkaline battery will not be recharged. The internal charging circuit is designed to prevent damage to alkaline batteries and the charging circuit when alkaline batteries are installed inside the instrument.

Note: When replacing alkaline batteries, dispose of old ones properly.

WARNING!

To reduce the risk of ignition of hazardous atmospheres, recharge the battery only in areas known to be non-hazardous. Remove and replace the battery only in areas known to be non-hazardous.

Note: The internal charging circuit is designed to prevent charging to alkaline batteries.

PID Sensor & Lamp Cleaning/Replacement

The sensor module is made of several components and is attached to the lamp-housing unit as shown below.

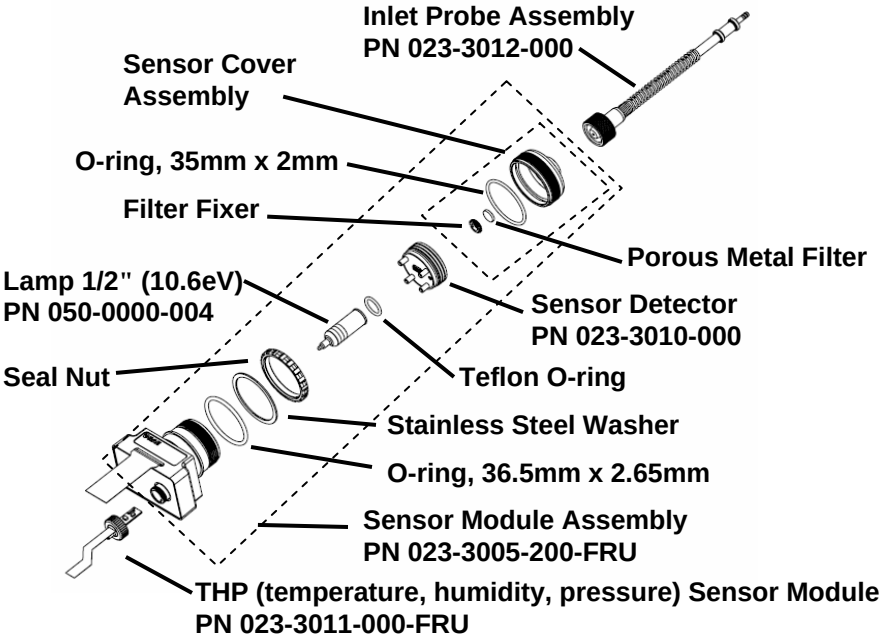

Sensor Components

Note: The cleaning procedure is not normally needed. Clean the PID sensor module, the lamp and the lamp housing only if:

1. The reading is inaccurate even after calibration.
2. The reading is very sensitive to air moisture.
3. A liquid has been sucked into the unit and damaged the unit.

Use of the external filter helps to prevent contamination of the sensor.

To access the sensor components and lamp, gently unscrew the lamp-housing cap, remove the sensor adapter with the gas inlet probe and the metal filter all together. Then hold the PID sensor and pull it straight out. A slight, gentle rocking motion helps release the sensor.

Cleaning The PID Sensor

Place the entire PID sensor module into GC grade methanol. It is highly recommended that an ultrasound bath to be used to clean the sensor for at least 15 minutes. Then dry the sensor thoroughly. Never touch the electrodes of the sensor by hand.
Also use a methanol-soaked cotton swab to wipe off the lamp housing where it contacts the sensor when the sensor is installed.

Turn over the sensor so that the pins point up and the sensor cavity is visible. Examine the sensor electrodes for any corrosion, damage, or bending out of alignment. The metal sensor electrode “fingers” should be flat and straight. If necessary, carefully bend the sensor fingers to ensure that they do not touch the Teflon portions and that they are parallel to each other. Make sure that the nuts on the sensor pins are snug but not overtight. If the sensor is corroded or otherwise damaged, it should be replaced.

Cleaning The Lamp Housing Or Changing The Lamp

If the lamp does not turn on, the instrument will display an error message to indicate replacement of the lamp may be required.

1. If the lamp is operational, clean the lamp window surface and the lamp housing by wiping it with GC grade methanol using a cotton swab using moderate pressure. After cleaning, hold the lamp up to the light at an angle to detect any remaining film. Repeat the process until the lamp window is clean. Never use water solutions to clean the lamp. Dry the lamp and the lamp housing thoroughly after cleaning.

   CAUTION: Never touch the window surface with the fingers or anything else that may leave a film. Never use acetone or aqueous solutions.

2. If the lamp does not turn on, remove the lamp from the lamp housing. Place the lamp O-ring onto the new lamp. Insert the new lamp, avoiding contact with the flat window surface.

3. Reinstall the PID sensor module.

4. Tighten the Lamp Housing Cap.

Determining The Lamp Type

The monitor can accommodate three lamp values: 10.6eV (standard), 9.8eV, and 11.7eV. The monitor automatically reads a marking on the side of the lamp to set the proper Correction Factor. There are two ways to determine the lamp type:

Remove the lamp and look for markings (bars) on the side:

- No bars: 10.6eV
- 1 bar: 11.7eV
- 2 bars: 9.8eV

Also, when the monitor is running, the lamp type is shown along with the calibration and measurement gas and Correction Factor:

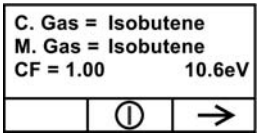

Note: This screen can be accessed from the reading screen by pressing [N/-] four times.

Sampling Pump

When approaching the end of the specified lifetime of the pump, it will consume higher amount of energy and reduce its sample draw capability significantly. When this occurs, it is necessary to replace or rebuild the pump. When checking the pump flow, make sure that the inlet connector is tight and the inlet tubing is in good condition. Connect a flow meter to the gas inlet probe. The flow rate should be above 450 cc/min when there is no air leakage.

If the pump is not working properly, refer the instrument to qualified service personnel for further testing and, if necessary, pump repair or replacement.

Cleaning The Instrument

Occasional cleaning with a soft cloth is recommended. Do not use detergents or chemicals.

Visually inspect the contacts at the base of the instrument, on the battery, and on the charging cradle to make sure they are clean. If they are not, wipe them with a soft, dry cloth. Never use solvents or cleaners.

Ordering Replacement Parts

If you need replacement parts, contact your local RAE Systems distributor. A list is available online:

http://www.raesystems.com

In the U.S., you can order sensors, replacement batteries, and other accessories online at:

http://istore.raesystems.com/

Special Servicing Note

If the instrument needs to be serviced, contact either:

1. The RAE Systems distributor from whom the instrument was purchased; they will return the instrument on your behalf.

   or

2. The RAE Systems Technical Service Department. Before returning the instrument for service or repair, obtain a Returned Material Authorization (RMA) number for proper tracking of your equipment. This number needs to be on all documentation and posted on the outside of the box in which the instrument is returned for service or upgrade. Packages without RMA Numbers will be refused at the factory.

Troubleshooting

Problem	Possible Reasons & Solutions	
Cannot turn on power after charging the battery	**Reasons:**	Discharged battery. Defective battery.
	Solutions:	Charge or replace battery.
Lost password	**Solutions:**	Call Technical Support at +1 408-752-0723 or toll-free at +1 888-723-4800
Reading abnormally High	**Reasons:**	Dirty filter. Dirty sensor module. Excessive moisture and water condensation. Incorrect calibration.
	Solutions:	Replace filter. Blow-dry the sensor module. Calibrate the unit.
Reading abnormally Low	**Reasons:**	Dirty filter. Dirty sensor module. Weak or dirty lamp. Incorrect calibration.
	Solutions:	Replace filter. Remove Calibration Adapter. Calibrate the unit. Check for air leakage.
Buzzer Inoperative	**Reasons:**	Bad buzzer.
	Solutions:	Check that buzzer is not turned off. Call authorized service center.

Inlet flow too low	**Reasons:**	Pump diaphragm damaged or has debris. Flow path leaks.
	Solutions:	Check flow path for leaks; sensor module O-ring, tube connectors, Teflon tube compression fitting. Call Technical Support at +1 408-752-0723 or toll-free at +1 888-723-4800
"Lamp" message during operation	**Reasons:**	Lamp drive circuit. Weak or defective PID lamp, defective.
	Solutions:	Turn the unit off and back on. Replace UV lamp

Technical Support

To contact RAE Systems Technical Support Team:

Monday through Friday, 7:00AM to 5:00PM Pacific (US) Time
Phone (toll-free): +1 888-723-4800
Phone: +1 408-952-8461
Email: tech@raesystems.com

Life-critical after-hours support is available:

+1 408-952-8200 select option 8

RAE Systems Contacts

RAE Systems
World Headquarters
3775 N. First St.
San Jose, CA 95134-1708 USA
Phone: +1 408.952.8200
Fax: +1 408.952.8480

E-mail: customerserv@raesystems.com
Web Site: www.raesystems.com

RAE Systems Technical Support
Monday through Friday, 7:00AM to 5:00PM Pacific Time
Phone: +1.408.952.8461
Email: tech@raesystems.com

Life-critical after-hours support is available:
+1.408.952.8200 select option 9

RAE Systems Europe ApS
Kirstinehøj 23 A
DK-2770 Kastrup
Denmark
Phone: +45 86 52 51 55
Fax: +45 86 52 51 77
orders@raeeurope.com
sales@raeeurope.com
service@raesystems.com
Web: www.raesystems.dk

RAE Systems UK Ltd
D5 Culham Innovation Centre
Culham Science Centre
Abingdon, Oxon OX14 3DB
United Kingdom
Phone: +44 1865408368
Fax: +44 1235531119
Mobile: +44 7841362693
Email: raeuk@raeeurope.com

RAE Systems France
336, rue de la fée des eaux
69390 Vernaison
France
Phone: +33 4 78 46 16 65
Fax: +33 4 78 46 25 98
Email: info-france@raeeurope.com
Web: www.raesystems.fr

RAE BeNeLux BV
Rijndal 20
2904 DC Capelle a/d IJssel
Phone: +31 10 4426149
Fax: +31 10 4426148
Email: info@rae.nl
Web: www.rae.nl

RAE Systems Spain, s.l.
Av. Remolar, 31
08820 El Prat de Llobregat
Spain
Phone: +34 933 788 352
Fax: +34 933 788 353
Mobile: +34 687 491 106
Email: mdelgado@raespain.com
Web: www.raespain.com

RAE Middle East
Lot 7, Ground Floor, Office 19
Jebel Ali Free Zone
Dubai
United Arab Emirates
Phone: +971 4 887 5562
Fax: +971 4 887 5563
Email: mjorgensen@raesystems.com

RAE Systems (Hong Kong) Ltd.
Room 8, 6/F, Hong Leong Plaza
33 Lok Yip Road
Fanling, N.T, Hong Kong
Phone: +852.2669.0828
Fax: +852.2669.0803
Email: hksales@raesystems.com

RAE Systems Japan
403 Plaza Ochanomizu Bldg. 2-1
Surugadai Kanda Chiyoda-Ku
Tokyo, Japan
Phone: 81-3-5283-3268
Fax: 81-3-5283-3275
Email: jpsales@raesystems.com

RAE Systems Korea
#1010, DaeMyungAnsVill First,
Sang-Dong 412-2, Wonmi-Gu, Bucheon,
Kyungki-Do, Korea
Phone: 82-32-328-7123
Fax: 82-32-328-7127
Email: krsales@raesystems.com

Controlled Part of Manual

Intrinsic Safety:
US and Canada: Class I, Division 1, Groups A,B,C,D T4

Europe: ATEX (0575 Ex II 2G Ex ia IIC/IIB T4 Gb)
KEMA 07 ATEX 0127
Complies with EN60079-0:2009, EN60079-11:2007
IECEx CSA 10.0005 Ex ia IIC/IIB T4 Gb
Complies with IEC 60079-0:2007, IEC 60079-11:2006

Temperature: -20º C to 50º C (-4º to 122º F)

Humidity: 0% to 95% relative humidity (non-condensing)

Basic Operation

Turning The Instrument On

1. With the instrument turned off, press and hold [MODE].
2. When the display turns on, release the [MODE] key.

The instrument is now operating and performs self tests. Once the self tests are complete, the display shows a graph or numerical gas reading. This indicates that the instrument is fully functional and ready to use.

Turning The Instrument Off

1. Press and hold the Mode key for 3 seconds. A 5-second countdown to shutoff begins.
2. When you see “Unit off...” release your finger from the [MODE] key. The instrument is now off.

Note: You must hold your finger on the key for the entire shutoff process. If you remove your finger from the key during the countdown, the shutoff operation is canceled and the instrument continues normal operation.

Alarm Signals

During each measurement period, the gas concentration is compared with the programmed alarm limits (gas concentration alarm limit settings). If the concentration exceeds any of the preset limits, the loud buzzer and red flashing LED are activated immediately to warn you of the alarm condition.

In addition, the instrument alarms if one of the following conditions occurs: battery voltage falls below a preset voltage level, failure of the UV lamp, pump stall, or when the datalog memory is full.

Alarm Signal Summary

Message	Condition	Alarm Signal
HIGH	Gas exceeds “High Alarm” limit	3 beeps/flashes per second*
OVR	Gas exceeds measurement range	3 beeps/flashes per second*
MAX	Gas exceeds electronics’ maximum range	3 beeps/flashes per second*
LOW	Gas exceeds “Low Alarm” limit	2 beeps/flashes per second*
TWA	Gas exceeds “TWA” limit	1 Beep/flash per second*
STEL	Gas exceeds “STEL” limit	1 Beep/flash per second*
Pump icon flashes	Pump failure	3 beeps/flashes per second
Lamp	PID lamp failure	3 beeps/flashes per second plus “Lamp” message on display

Battery icon flashes	Low battery	1 flash, 1 beep per minute plus battery icon flashes on display
CAL	Calibration failed, or needs calibration	1 beep/flash per second
NEG	Gas reading measures less than number stored in calibration	1 beep/flash per second

Preset Alarm Limits & Calibration

The instrument is factory calibrated with standard calibration gas, and is programmed with default alarm limits.

Cal Gas (Isobutylene)	Cal Span	unit	Low	High	TWA	STEL
ppbRAE 3000	10	ppm	10	25	10	25
MiniRAE 3000	100	ppm	50	100	10	25
MiniRAE Lite	100	ppm	50	100	10	25
UltraRAE 3000	100	ppm	50	100	10	25

Charging The Battery

Always fully charge the battery before using the instrument. The instrument's Li-ion/NiMH battery is charged by placing the instrument in its cradle. Contacts on the bottom of the instrument meet the cradle's contacts, transferring power without other connections.

Note: Before setting the instrument into its charging cradle, visually inspect the contacts to make sure they are clean. If they are not, wipe them with a soft cloth. Do not use solvents or cleaners.

Follow this procedure to charge the instrument:

1. Plug the AC/DC adapter's barrel connector into the instrument's cradle.

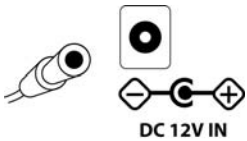

2. Plug the AC/DC adapter into the wall outlet.
3. Place the instrument into the cradle, press down, and lean it back. It locks in place and the LED in the cradle glows.

Note: To release the instrument, press down and tilt the top out of the cradle and lift up.

The instrument begins charging automatically. The LED on the front of the cradle marked "Primary" blinks during charging. During charging, the diagonal lines in the battery icon on the instrument's display are animated and you see the message "Charging..."

When the instrument's battery is fully charged, the battery icon is no longer animated and shows a full battery. The message "Fully charged!" is shown and the Primary LED on the cradle glows continuously green.

Note: A spare Li-ion battery (059-3051-000) or NiMH(059-3054-000) can be charged by placing it directly in the charging port on the back of the cradle. It can be charged at the same time as the instrument. Press the battery in place, sliding it slightly toward the front of the cradle. This locks it in the cradle. To release the battery, slide it forward again and tilt it up.

Note: An Alkaline Battery Adapter (part number 059-3052-000), which uses four AA alkaline batteries (Duracell MN1500), may be substituted for the Li-Ion battery.

WARNING!

To reduce the risk of ignition of hazardous atmospheres, recharge and replace batteries only in areas known to be non-hazardous. **Remove and replace batteries only in areas known to be non-hazardous.**

Low Voltage Warning

When the battery's charge falls below a preset voltage, the instrument warns you by beeping once and flashing once every minute, and the battery icon blinks once per second. You should turn off the instrument within 10 minutes and either recharge the battery by placing the instrument in its cradle, or replace the battery with a fresh one with a full charge.

Clock Battery

An internal clock battery is mounted on one of the instrument's printed circuit boards. This long-life battery keeps settings in memory from being lost whenever the Li-ion, NiMH, or alkaline batteries are removed. This backup battery should last approximately five years, and must be replaced by an authorized RAE Systems service technician. It is not user-replaceable.

WARNING

To reduce the risk of ignition of hazardous atmospheres, recharge battery only in area known to be non-hazardous. Remove and replace battery only in an area known to be non-hazardous.

Replacing Rechargeable Li-Ion or NiMH Battery

Caution: Turn off the instrument before removing or replacing the battery.

Alkaline Battery Adapter

An alkaline battery adapter is supplied with each instrument. The adapter (part number 059-3052-000) accepts four AA alkaline batteries (use only Duracell MN1500).

Do not mix old and new batteries or different type batteries.

Troubleshooting

Problem	Possible Reasons & Solutions	
Cannot turn on power after charging the battery	**Reasons:**	Discharged battery. Defective battery.
	Solutions:	Charge or replace battery.
Lost password	**Solutions:**	Call Technical Support at +1 408-752-0723 or toll-free at +1 888-723-4800
Reading abnormally High	**Reasons:**	Dirty filter. Dirty sensor module. Excessive moisture and water condensation. Incorrect calibration.
	Solutions:	Replace filter. Blow-dry the sensor module. Calibrate the unit.
Reading abnormally Low	**Reasons:**	Dirty filter. Dirty sensor module. Weak or dirty lamp. Incorrect calibration.
	Solutions:	Replace filter. Remove Calibration Adapter. Calibrate the unit. Check for air leakage.
Buzzer Inoperative	**Reasons:**	Bad buzzer.
	Solutions:	Check that buzzer is not turned off. Call authorized service center.

Inlet flow too low	**Reasons:**	Pump diaphragm damaged or has debris. Flow path leaks.
	Solutions:	Check flow path for leaks; sensor module O-ring, tube connectors, Teflon tube compression fitting. Call Technical Support at +1 408-752-0723 or toll-free at +1 888-723-4800
"Lamp" message during operation	**Reasons:**	Lamp drive circuit. Weak or defective PID lamp, defective.
	Solutions:	Turn the unit off and back on. Replace UV lamp

RAE Systems
World Headquarters
3775 N. First St.
San Jose, CA 95134-1708 USA
Phone: 408.952.8200
Toll-Free: 888.723.4800
Fax: 408.952.8480

E-mail (sales support): raesales@raesystems.com
E-mail (technical support): tech@raesystems.com
Web Site: www.raesystems.com

RAE Systems Europe

Kristinehøj 23A, Boulevard 69, DK-2770 Kastrup • Denmark
Tel: +45.8652.5155 • Fax: +45.8652.5177

RAE Systems (Hong Kong) Ltd.

Units 1516-18, 15/F, Delta House, 3 On Yiu Street
Shatin, N.T. Hong Kong
Web: www.raesystems.cn • Email: asiasales@raesystems.com
Phone: +852.2669.0828

RAE Systems Middle East

LOB 7, Ground Floor, Office 19, Jebel Ali Free Zone
Dubai, United Arab Emirates
Email: mesales@raesystems.com • Phone: +971.4.887.5562

Rev. C
August 2010
P/N 059-4020-000

STANDARD OPERATING PROCEDURE

Multi RAE Photoionization Detector (PID)

1. Purpose

The purpose of this SOP is to provide general reference information for using the Multi RAE PID in the field. Calibration and operation, along with field maintenance, will be included in this SOP.

2. Scope

This procedure provides information into the field operation and general maintenance of the Multi RAE PID. Review of the information contained herein will ensure that this type of field monitoring equipment will be properly utilized. Review of the owner's instruction manuals is a necessity for more detailed descriptions.

3. Equipment Required

MultiRAE and accessories , charger etc. See User's Guide
VOC free/ultra pure zero air (THC < 0.01)
Isobutylene calibration gas standard (5ppm) with flow regulator or Tedlar bag
Operation Manual

4. Responsibilities

Project Manager(PM) /Construction Manager(CM) - The PM/CM is responsible for ensuring that project-specific plans are in accordance with these procedures, where applicable, or that other approved procedures are developed. The Project Manager is responsible for selecting qualified individuals for the monitoring activities.

Field Team Leader(FTL) and/or Safety Coordinator(SC) - It is the responsibility of the FLT/SC to implement these procedures in the field, and to ensure that the field team performing air monitoring activities have been briefed and trained to execute these procedures before the start of site operations. FTL/SC is also responsible to ensure that the specified air monitoring equipment is on site, calibrated, and used correctly by the field personnel. The field personnel are responsible for documenting all air monitoring results in the field logbook during each field investigation.

5. Procedures

The Multi RAE utilizes the principle of detecting sensors. The PID operates on the principle that most organic compounds and some inorganic compounds are be ionized when they are bombarded

by high-energy ultraviolet light. These compounds absorb the energy of the light, which excites the molecule and results in a loss of electron and the formation of a positively charged ion. The number of ions formed and the ion current produced is directly proportional to mass and concentration. The amount of energy required to displace an electron is called ionization potential (IP). The air sample is drawn into a UV lamp using a pump or a fan. The energy of the lamp determines whether a particular chemical will be ionized. Each chemical compound has a unique ionizing potential. When the UV light energy is greater than the ionization potential of the chemical, ionization will occur. When the sample is ionized, the electrical signal is displayed on an analog or digital output. Although the output does not distinguish between chemicals, it does detect an increase in the ion current. If only one chemical is present in the air, it is possible to use PIDs quantitatively. Chemical structure and lamp intensity affects the sensitivity of the instrument to a given contaminant. All PID readings are relative to the calibration gas, usually isobutylene. It is important to calibrate the PID in the same temperature and elevation that the equipment will be used, and to determine the background concentrations in the field before taking measurements. For environments where background readings are high, factory zero calibration gas should be used.

The following subsections will discuss Multi RAE calibration, operation, and maintenance. These sections, however, do not take the place of the instruction manual.

5.1 Calibration

For Multi RAE configured with O_2, LEL, H_2S, CO, sensors and a 10.6eV PID Lamp see pages 31 to 34 of the attached operation manual.

5.2 Operation

Due to the Multi RAE having many functions in terms of operation, it is recommended that you follow the operational procedures as outlined in the instruction manual from pages 6 to 20.

5.3 Site Maintenance

After each use, the meter should be recharged and the outside of the instruments should be wiped clean with a soft cloth.

Function	Frequency
Check alarm and settings	Monthly/before each use
Clean screens and gaskets around sensors	Monthly
Replace sensors	Biannually or when calibration is unsuccessful

6. Quality Assurance Records

Quality assurance records will be maintained for each air monitoring event. The following information shall be recorded in the field logbook.

- Identification - Site name, date, location, activity monitored, serial number, time, resulting concentration, comments and identity of air monitoring personnel.
- Field observations - Appearance of sampled media (if definable).
- Additional remarks (e.g, Multi RAE had wide range fluctuations during air monitoring activities.)

7. References

Multi RAE User's Guide, RAE Systems, Revision B1, November 2011.

MultiRAE
User's Guide

Rev C
November 2011
P/N: M01-4003-000

Product Registration

Register your product online by visiting:

http://www.raesystems.com/support/product-registration

By registering your product, you can:

- Receive notification of product upgrades or enhancements
- Be alerted to Training classes in your area
- Take advantage of RAE Systems special offers and promotions

© 2011 RAE Systems, Inc.

MultiRAE User's Guide

Contents

1 Standard Contents 6
2 General Information 7
2.1 Key Features 8
3 User Interface 9
3.1 Display Overview 9
3.1.1 Status Indicator Icons 9
3.1.2 LCD Flip 10
3.1.3 Keys & Interface 10
3.2 Screen Display For Various Numbers Of Active Sensors 11
3.3 Menus 12
4 Battery 15
4.1 Using The Charging Cradle 15
4.2 Using The Travel Charger 15
4.3 Replacing A Battery 16
4.4 Battery States 16
4.5 Alkaline Battery Pack 16
5 Turning The MultiRAE On And Off 18
5.1 Turning The MultiRAE On 18
5.2 Turning The MultiRAE Off 18
5.3 Testing Alarm Indicators 18
5.4 Pump Status 19
5.5 Calibration Status 19
6 Modes Of Operation 20
6.1 Hygiene Operation Mode 20
6.2 Search Operation Mode 20
6.3 Basic User Mode 20
6.4 Advanced User Mode 20
7 Programming 20
7.1 Enter Programming In Advanced Mode 20
7.2 Enter Programming In Basic Mode 21
7.3 Menus And Submenus 22
7.3.1 Editing And Selecting Parameters And Sensors 22
7.3.2 Calibration 23
7.3.2.1 Fresh Air 23
7.3.2.2 Multi Sensor Span 23
7.3.2.3 Single Sensor Zero 23
7.3.2.4 Single Sensor Span 23
7.3.2.5 Cal. Reference 23
7.3.2.6 Change Cal. Gas 23
7.3.2.7 Multi Cal Select 24
7.3.2.8 Change Span Value 24
7.3.2.9 Change Span2 Value 24
7.3.3 Measurement 24
7.3.3.1 Sensor On/Off 24
7.3.3.2 Change Meas. Gas 25
7.3.3.3 Measurement Units 25
7.3.4 Alarms 26
7.3.4.1 Alarm Limits 26
7.3.4.2 Alarm Mode 26
7.3.4.3 Alarm Settings 26
7.3.4.4 Comfort Beep 26
7.3.4.5 Man Down Alarm 26
7.3.5 Datalog 27
7.3.5.1 Clear Datalog 27
7.3.5.2 Datalog Interval 27

7.3.5.3 Sensor Selection 28
7.3.5.4 Data Selection 28
7.3.5.5 Datalog Type 28
7.3.5.6 Memory Full Action 29
7.3.6 Wireless 29
7.3.7 Monitor 29
7.3.7.1 LCD Contrast 29
7.3.7.2 Operation Mode 29
7.3.7.3 Pump Speed 29
7.3.7.4 Zero At Start 29
7.3.7.5 Fast Startup 29
7.3.7.6 Temperature Units 29
7.3.7.7 Language 30
7.3.7.8 Site ID 30
7.3.7.9 User ID 30
7.3.7.10 Date Format 30
7.3.7.11 Date 30
7.3.7.12 Time Format 30
7.3.7.13 Time 30
7.3.7.14 User Mode 30
7.3.7.15 Backlight 30
7.3.7.16 LCD Flip 30
8 Calibration And Testing 31
8.1 Bump Testing And Calibration 31
8.1.1 Bump (Functional) Testing 31
8.2 Zero/Fresh Air Calibration 31
8.2.1 Zero Calibration For A CO_2 Sensor 31
8.2.2 Fresh Air Calibration 31
8.2.3 Single-Sensor Zero Calibration 32
8.3 Span Calibration 32
8.3.1 Multi-Sensor Span Calibration 33
8.3.2 Single-Sensor Span Calibration 34
8.4 Testing The Gamma Sensor 34
9 Datalog Transfer, Monitor Configuration, and Firmware Upgrades Via Computer 35
9.1 Downloading Datalogs And Performing PC-Based Instrument Configuration and Firmware Upgrades 35
10 Maintenance 36
10.1 Removing/Installing The Rubber Boot 36
10.2 Replacing The Filter 36
10.3 Replacing The Inlet 36
10.4 Removing/Cleaning/Replacing A PID (Pump Version Only) 37
10.5 Removing/Cleaning/Replacing Sensor Modules 38
10.6 Replacing The Pump 39
11 Alarms Overview 39
11.1 Alarm Signals 39
11.2 Changing The Alarm Mode 39
11.3 Alarm Signal Summary 40
12 Troubleshooting 43
13 Diagnostic Mode 44
13.1 Entering Diagnostic Mode 44
13.2 Exiting Diagnostic Mode 44
13.3 Navigating Diagnostic Mode 44
14 Specifications 46
15 Technical Support 50
16 RAE Systems Contacts 51

⚠ WARNINGS ⚠

Read Before Operating

This manual must be carefully read by all individuals who have or will have the responsibility of using, maintaining, or servicing this product. The product will perform as designed only if it is used, maintained, and serviced in accordance with the manufacturer's instructions.

CAUTION!

Never operate the monitor when the cover is removed. Remove the monitor rear cover or battery only in an area known to be non-hazardous.

ANY RAPID UP-SCALE READING FOLLOWED BY A DECLINING OR ERRATIC READING MAY INDICATE A GAS CONCENTRATION BEYOND UPPER SCALE LIMIT, WHICH MAY BE HAZARDOUS.

TOUTE LECTURE RAPIDE ET POSITIVE, SUIVIE D'UNE BAISSE SUBITE AU ERRATIQUE DE LA VALEUR, PEUT INDIQUER UNE CONCENTRATION DE GAZ HORS GAMME DE DÉTECTION QUI PEUT ÊTRE DANGEREUSE

ONLY THE COMBUSTIBLE GAS DETECTION PORTION OF THIS INSTRUMENT HAS BEEN ASSESSED FOR PERFORMANCE.

UNIQUMENT, LA PORTION POUR DÉTECTOR LES GAZ COMBUSTIBLES DE CET INSTRUMENT A ÉTÉ ÉVALUÉE.

CAUTION: BEFORE EACH DAY'S USAGE, SENSITIVITY OF THE LEL SENSOR MUST BE TESTED ON A KNOWN CONCENTRATION OF METHANE GAS EQUIVALENT TO 20 TO 50% OF FULL-SCALE CONCENTRATION. ACCURACY MUST BE WITHIN 0 AND +20% OF ACTUAL. ACCURACY MAY BE CORRECTED BY CALIBRATION PROCEDURE.

ATTENTION: AVANT CHAQUE UTILISATION JOURNALIERE, VERIFIER LA SENSIBILITE DU CAPTEUR DE LIE AVEC UNE CONCENTRATION CONNUE DE METHANE EQUIVALENTE DE 20 A 50% DE LA PLEINE ECHELLE. LA PRECISION DOIT ETRE COMPRISE ENTRE 0 ET 20% DE LA VALEUR VRAIE ET PEUT ETRE CORRIGEE PAR UNE PROCEDURE D'ETALONNAGE.

CAUTION: HIGH OFF-SCALE READINGS MAY INDICATE AN EXPLOSIVE CONCENTRATION.

ATTENTION: DES LECTURES HAUTES ET HORS D'ECHELLE PEUVENT INDIQUER DES CONCENTRATIONS DE GAZ INFLAMMABLES

CAUTION: SUBSTITUTION OF COMPONENTS MAY IMPAIR INTRINSIC SAFETY.

Note: Users are recommended to refer to ISA-RP12.13, Part II-1987 for general information on installation, operation, and maintenance of combustible gas detection instruments.

The MultiRAE multi-gas detector must be calibrated if it does not pass a bump test, or at least once every 180 days, depending on use and sensor exposure to poisons and contaminants.

SPECIAL CONDITIONS FOR SAFE USE

1. The PGM-62xx shall only be fitted with RAE Systems Battery Pack type M01-3051-000 or M01-3053-000 or Battery Adapter M01-3052-000 or M01-3054-000 fitted with Duracell MN1500 batteries.
2. The PGM62xx shall only be charged outside hazardous areas.
3. No precautions against electrostatic discharge are necessary for portable equipment that has an enclosure made of plastic, metal, or a combination of the two, except where a significant static-generating mechanism has been identified. Activities such as placing the item in a pocket or on a belt, operating a keypad or cleaning with a damp cloth, do not present a significant electrostatic risk. However, where a static-generating mechanism is identified, such as repeated brushing against clothing, then suitable precautions shall be taken, e.g., the use of anti-static footwear.

The model PGM62xx is certified according to the IECEx scheme, ATEX and cCSAus (for US and Canada). PGM62xx is intrinsically safe and may be used in hazardous locations. SUBSTITUTION OF COMPONENTS MAY IMPAIR INTRINSIC SAFETY.

MARKING

The product is marked with the following information:

RAE SYSTEMS
3775 N. 1st. St., San Jose
CA 95134, USA

Type PGM62x0, PGM 62x6, PGM 62x8
Serial No/matrix: XXX-XXXX-000

IECEx SIR 11.0069X, Ex ia IIC T4 Ga (PGM62x0/PGM62x6) Ex ia d IIC T4 Gb (PGM62x8)	CE 0575 SIRA 11ATEX2152X Ex II 1G Ex ia IIC T4 Ga (PGM62x0/PGM62x6) Ex II 2G Ex ia d IIC T4 Gb (PGM62x8)	CSA Exia Cl I, Dv 1 Gr. A, B, C, D, T4 C22.2 No 152-1984 ISA-12.13.01-2000

Warnings: Understand manual first before operating.
Warning: Do not change batteries in hazardous location.
Do not mix old/new or different type of batteries

PGM62x0: Use only RAE Systems battery pack, PN: M01-3051-000 or M01-3052-000.
PGM62x6/62x8: Use only RAE Systems battery pack, PN: M01-3053-000 or M01-3054-000.
Um: 20V
-20º C ≤ Tamb ≤ +50º C

Operation Area and Conditions

Hazardous Areas classified by Zones

PGM62x0/PGM62x6 are intended to be used in hazardous areas zone 0, zone 1 or zone 2, and PGM62x8 in hazardous areas zone 1 or zone 2 within the temperature range of -20º C to +50º C, where gases of explosion groups IIA, IIB or IIC and T4 may be present.

Hazardous Areas classified by Divisions

PGM62x0/PGM62x6/PGM62x8 are intended to be used in hazardous areas classified for Class I Div. 1 or 2, within the temperature range of -20º C to +50º C, where gases of explosion groups A, B, C or D and temperature class T4 may be present.

WARNINGS:

1. NDIR sensors shall not be installed in PGM62x0 or PGM 62x6 models.
2. NDIR LEL sensors shall not be installed in PGM62x8 diffusion models bearing **cCSAus** logo.

Proper Battery Disposal

This product may contain one or more sealed lead-acid, nickel-cadmium (NiCd), nickel-metal hydride (NiMH), lithium (Li), or lithium-ion batteries. Specific battery information is given in this user guide. Batteries must be recycled or disposed of properly.

This symbol (crossed-out wheeled bin) indicates separate collection of waste electrical and electronic equipment in the EU countries. Please do not throw the equipment into the domestic refuse. Please use the return and collection systems available in your country for the disposal of this product.

Proper Product Disposal At End Of Life

At the end of its life, this product must undergo separate collection and recycling from general or household waste. The black bar below the symbol indicates that the product was put on the market after August 13, 2005.

1 Standard Contents

The MultiRAE is available in four configurations, each with different kits, outlined below.

MultiRAE Pro	MultiRAE
MultiRAE Pro monitor with pump, sensors, battery, and wireless options as specified and protective rubber boot, filter, and belt clip installed	MultiRAE monitor with pump, sensors, battery, and wireless options as specified and protective rubber boot, filter, and belt clip installed
Travel charger / PC communications adapter	Travel charger / PC communications adapter
Desktop charging / PC communications cradle	Desktop charging / PC communications cradle
PC communication cable	PC communication cable
AC adapter	AC adapter
Calibration adapter	Calibration adapter
6" flexible probe	6" flexible probe
Alkaline battery adapter (included with rechargeable configurations only)	Alkaline battery adapter (included with rechargeable configurations only)
3 spare filters	3 spare filters
PID sensor cap removal tool	PID sensor cap removal tool
PID zeroing adapter	Hex tool
Hex tool	QuickStart Guide
QuickStart Guide	CD with documentation
CD with ProRAE Studio II instrument configuration and data management software	CD with ProRAE Studio II instrument configuration and data management software
CD with documentation	Calibration and test certificate
Calibration and test certificate	Warranty / registration card
Technical Note TN-106 with ionization energies and correction factors for 300+ VOCs	Technical Note TN-106 with ionization energies and correction factors for 300+ VOCs
Warranty / registration card	Ships in a hard transport case
IP-67/decontamination valve	
Ships in a Pelican case	

MultiRAE Lite Diffusion	MultiRAE Lite Pumped
MultiRAE Lite monitor with sensors, battery, and wireless options as specified and protective rubber boot installed	MultiRAE Lite monitor with pump, sensors, battery, and wireless options as specified and protective rubber boot, filter, and belt clip installed
Travel charger / PC communications adapter	Travel charger / PC communications adapter
PC communication cable	PC communication cable
AC adapter	AC adapter
Calibration adapter	Calibration adapter
Alkaline battery adapter (included with rechargeable configurations only)	Alkaline battery adapter (included with rechargeable configurations only)
Hex tool	3 spare filters
QuickStart Guide	PID sensor cap removal tool
CD with documentation	Hex tool
CD with ProRAE Studio II instrument configuration and data management software	QuickStart Guide
Calibration and test certificate	CD with documentation
Warranty / registration card	CD with ProRAE Studio II instrument configuration and data management software
	Calibration and test certificate
	Warranty / registration card

Note: A decontamination plug is standard with the MultiRAE Pro and optional with other models. It enhances the IP rating of the instrument from IP-65 to IP-67 (to dust- and water-proof for temporary immersion).

2 General Information

The MultiRAE is a family of multi-threat gas detectors that combine continuous monitoring capabilities for volatile organic compounds (VOCs), toxic and combustible gases, and radiation, with Man Down Alarm functionality in one highly portable instrument. MultiRAE monitors offer an industry-leading selection of interchangeable field-replaceable electrochemical, combustible, infrared, PID (photoionization detector), and gamma radiation sensors to fit a wide variety of applications. The MultiRAE family's wireless capability elevates worker protection to the next level by providing safety officers real-time access to instrument readings and alarm status from any location for better visibility and faster response.

Notes:

- ClO_2 and H_2S sensors cannot be installed in the same instrument.
- NO and NH_3 sensors cannot be installed in the same instrument.
- NDIR combustible sensors are not supported on the diffusion version with CSA certification.
- The PID sensor requires a pumped configuration.
- If a %Vol. NDIR sensor is installed in an instrument, a catalytic bead %LEL sensor must also be installed in the instrument for CSA certification.

2.1 Key Features

- All-in-one continuous monitoring capabilities for radiation, VOCs, oxygen, toxic and combustible gases, for a total of up to six threats at a time
- Highly customizable with over 30 field-interchangeable intelligent sensor options
- Wireless access to real-time instrument readings and alarm status from any location
- Unmistakable five-way local and remote wireless notification of alarm conditions, including Man Down Alarm
- Large graphical display with easy-to-use, icon-driven user interface
- Simple maintenance with easily accessible sensors, pump, and plug-and-play Li-ion battery
- Fully-automated bump testing and calibration with AutoRAE 2

MultiRAE With Pump, front view

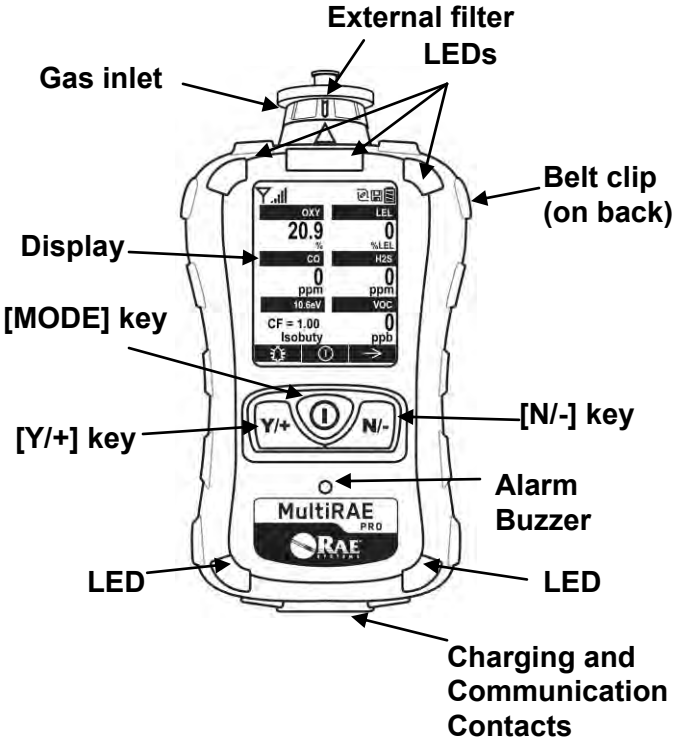

MultiRAE Diffusion Model, rear view

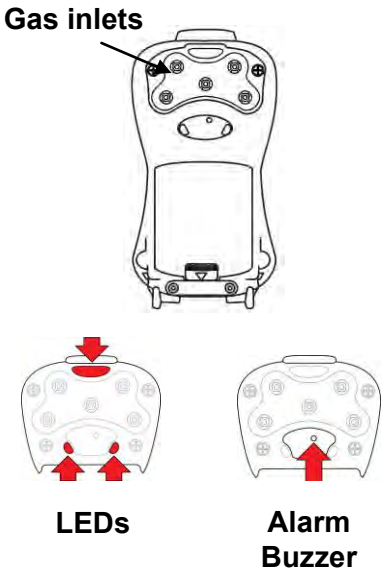

Note: The front of the diffusion model of the MultiRAE is the same as the pumped model, but instead of a single inlet, there are five inlets on the back side, as well as an extra alarm buzzer and LEDs.

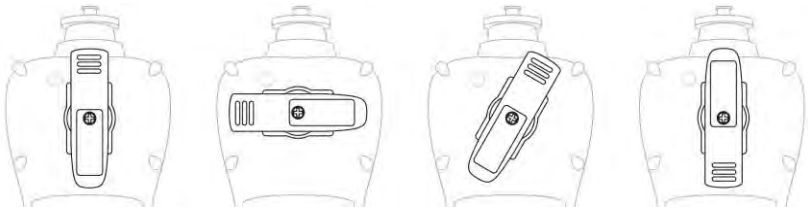

The belt clip on the back of the pump-equipped MultiRAE can be swiveled for holding it at different angles.

3 User Interface

The MultiRAE's user interface consists of the display, LEDs, an alarm buzzer, and three keys.

3.1 Display Overview

The LCD display provides visual feedback that includes the sensor types, readings, time, battery condition, and other functions.

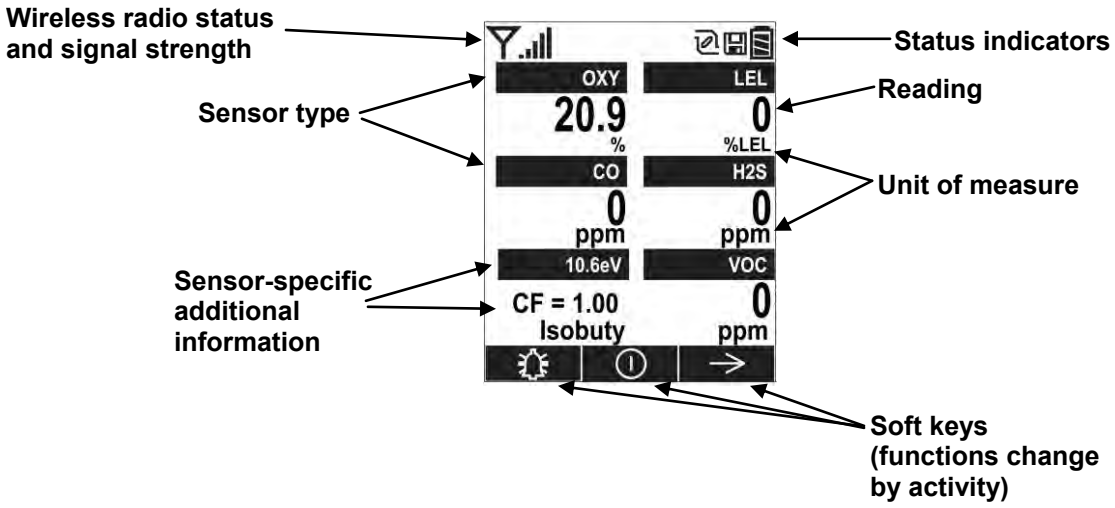

3.1.1 Status Indicator Icons

Along the top of most screens are status indicators that tell you whether a function is operating and/or its strength or level.

Icon	Function
	Wireless status (shown when wireless is on, blank when off)
	Wireless strength (0 to 5 bars)
	Pump status (only on pump-equipped models)
	Datalogging status (shown when datalogging is on, blank when off)
	Battery status (three segments show battery charge level)

3.1.2 LCD Flip

The MultiRAE senses its vertical/horizontal orientation, and can automatically flip the display180 degrees, making it easy to read if the MultiRAE is upside down. (You can turn this feature on or off in Programming Mode, under "Monitor.")

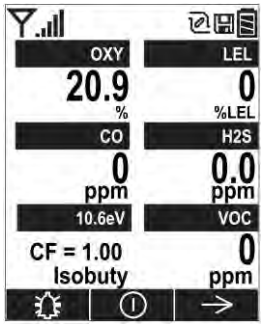

As the MultiRAE is tilted, the sensor detects its orientation and inverts the screen when it past its horizontal position.

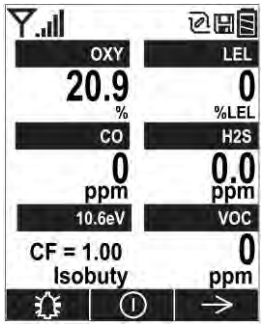

3.1.3 Keys & Interface

The MultiRAE has three buttons:

Y/+ MODE N/-

In addition to their labeled functions, the keys labeled [Y/+], [MODE], and [N/-] act as "soft keys" that control different parameters and make different selections within the instrument's menus. From menu to menu, each key controls a different parameter or makes a different selection.

Three panes along the bottom of the display are "mapped" to the keys. These change as menus change, but at all times the left pane corresponds to the [Y/+] key, the center pane corresponds to the [MODE] key, and the right pane corresponds to the [N/-] key. Here are examples that show the relationships of the keys and functions:

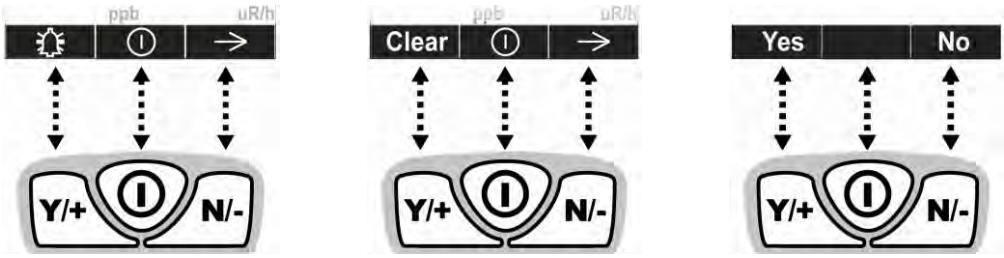

In addition to the functions described above, any of the buttons can be used to manually activate display backlighting. Press any button when the backlighting is off to turn it on.

3.2 Screen Display For Various Numbers Of Active Sensors

The MultiRAE family of instruments can accommodate from one to five sensors (some are dual sensors), depending on the configuration. In order to maximize readability and the amount of information shown, the display is automatically reconfigured, according to the number and types of sensors in the MultiRAE.

If the configuration includes five sensors, and one of them is a PID, then the lamp value (9.8eV or 10.6eV) is shown, along with the currently applied correction factor (CF).

One sensor.

Two sensors.

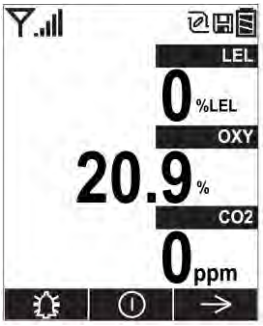

Three sensors.

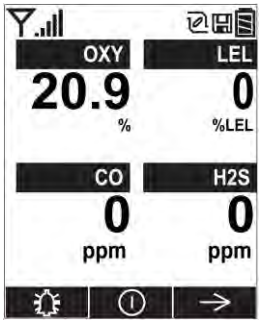

Four sensors.

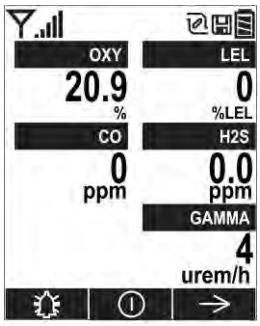

Five sensors, including Gamma radiation sensor

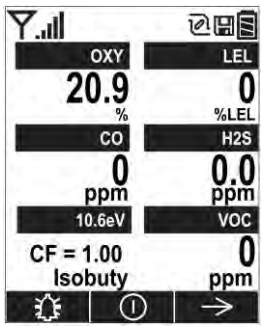

Five sensors, including PID, showing lamp type and correction factor.

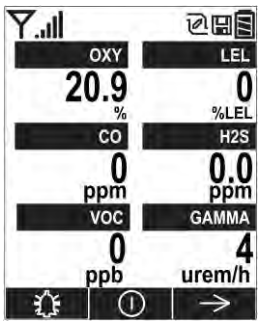

Six-threat configuration with CO+H2S combo sensor

3.3 Menus

The reading menus are easy to step through by pressing the [N/-] button.

Hygiene Mode, in which sampling is continuous, allows you to clear peak and minimum values at any time.

Search Mode allows you to clear peak and minimum values, but samples only when you tell it to sample. This allows you to save sample readings as individual events in the datalog.

Note: You can switch between Hygiene and Search modes via the Programming Menu (Select Monitor and then Operation Mode).

Hygiene Mode

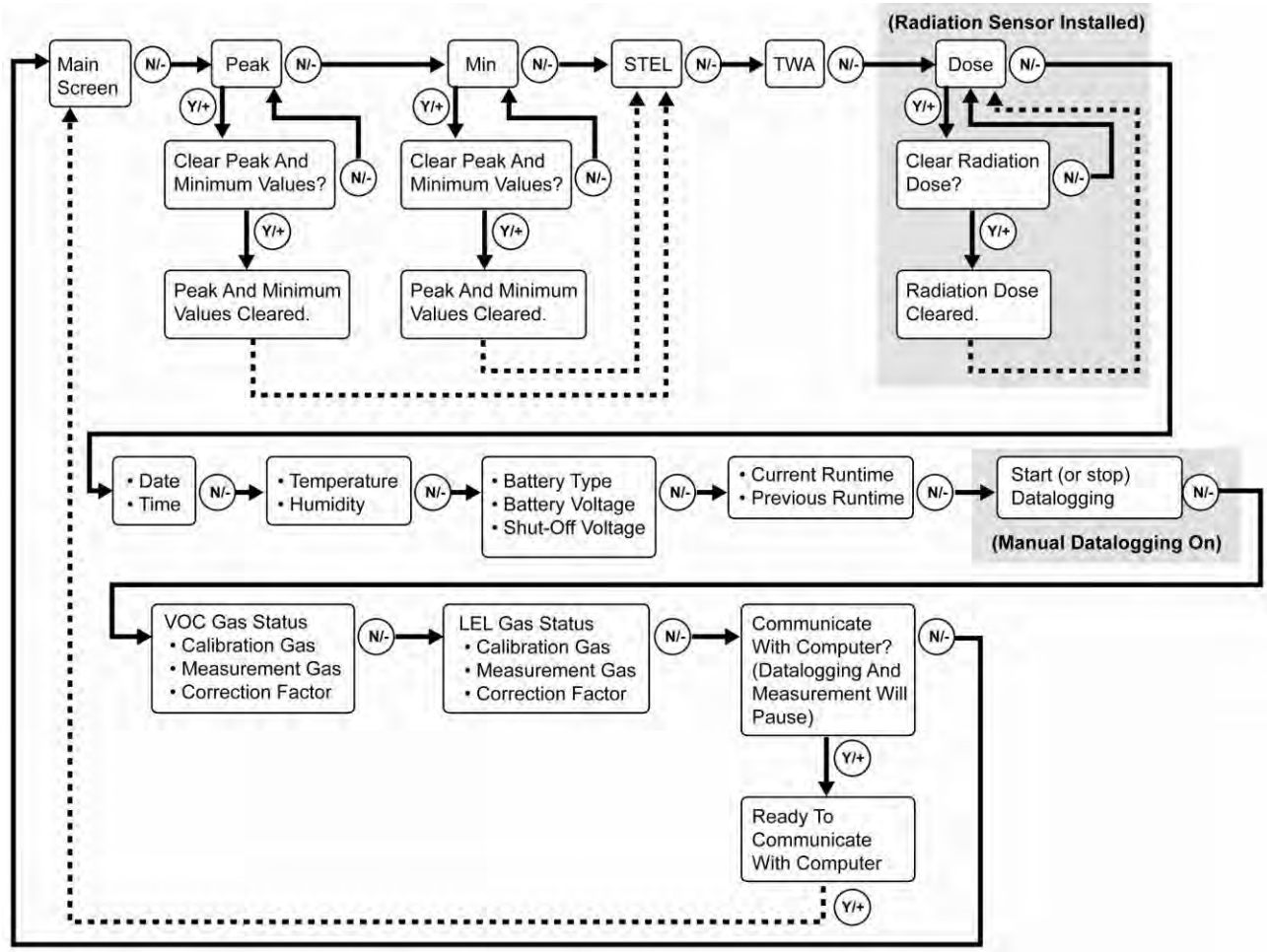

Note: Dashed line indicates automatic progression.

Search Mode

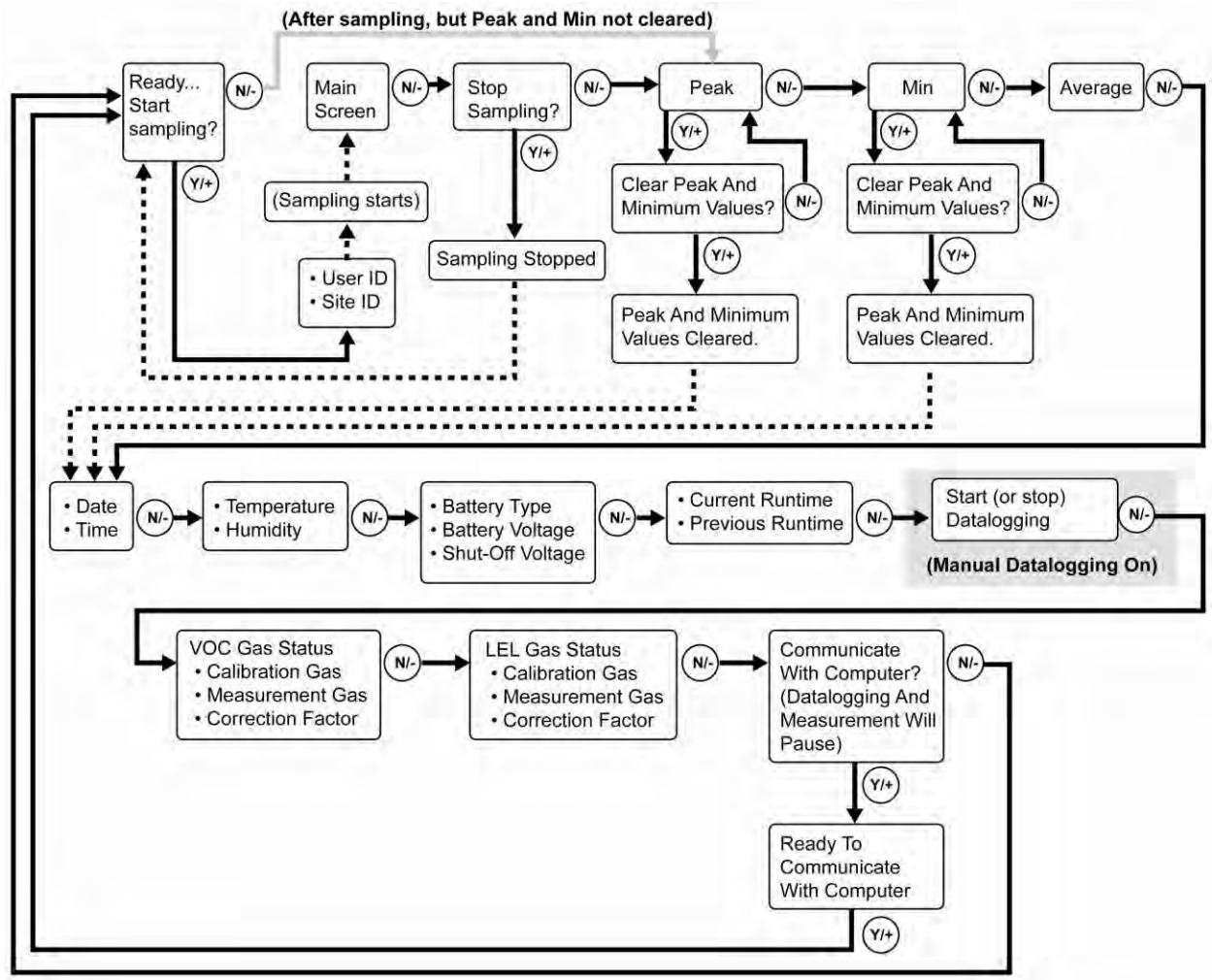

Note: Dashed line indicates automatic progression.

Note: If the Peak or Min is cleared, the Average is also cleared. In addition, each cycle through the main screen after they are cleared will route from "Ready… Start sampling?" directly to Date and Time if you press [N/-] (see red line in diagram below), until you perform a new sample. Also, if you start sampling again and stop sampling, clear the Peak, or clear the Min, it advances to Date and Time, as well.

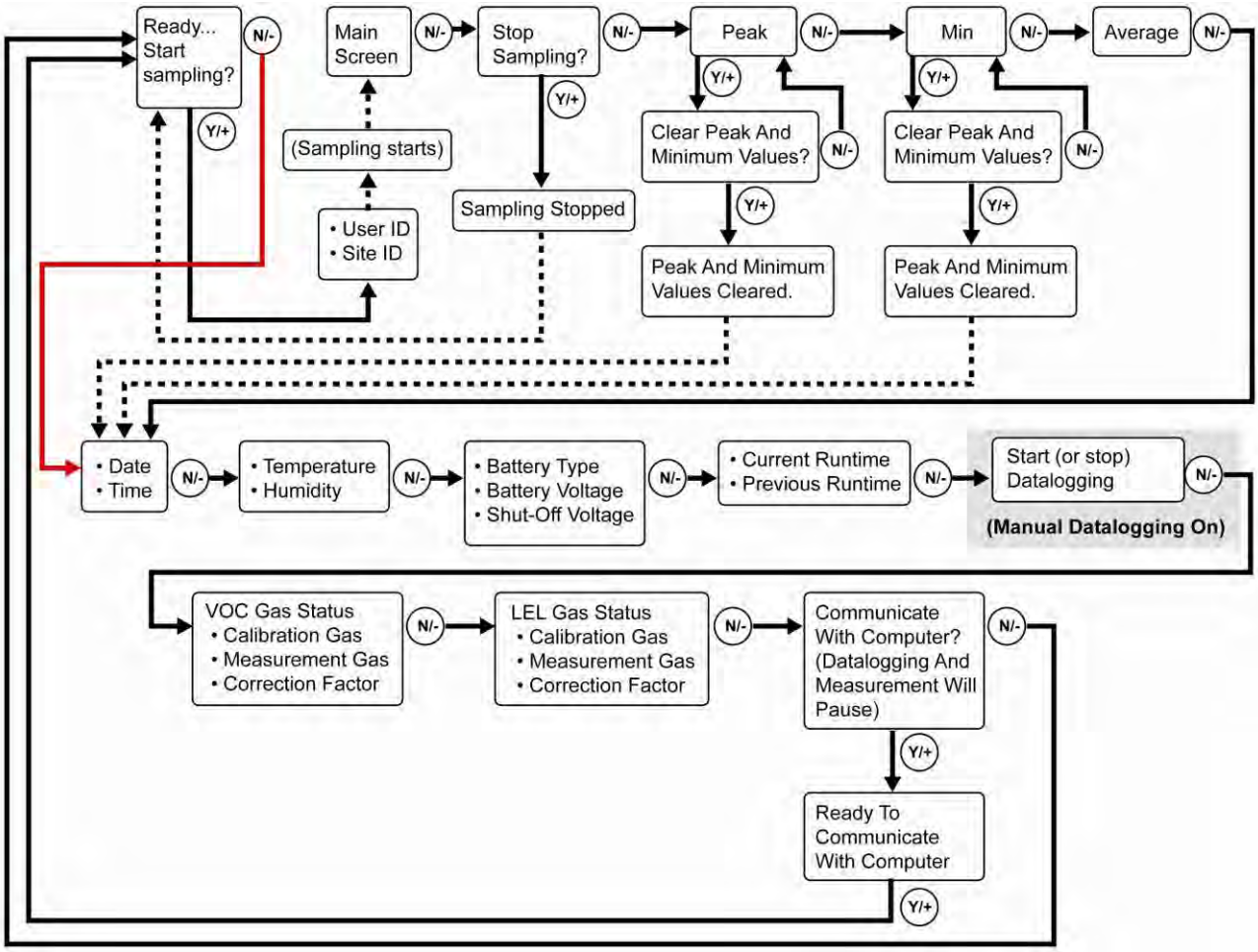

Note: Dashed line indicates automatic progression.

4 Battery

Always fully charge the battery before using the MultiRAE. Its Li-ion battery is charged by placing the MultiRAE in its cradle or using the travel charger. Contacts on the bottom of the instrument meet the cradle's contact pins, transferring power.

There are two types of output power for battery packs or adapters. Battery pack (PN: M01-3051-000) and adapter (PN: M01-3052-000) are used for MultiRAE's model number PGM-62x0. Battery pack (PN: M01-3053-000) and adapter (PN: M01-3054-000) are used for model number PGM-62x6/PGM-62x8.

Note: Before setting the MultiRAE into its charging cradle or attaching its travel charger, visually inspect the contacts to make sure they are clean. If they are not, wipe them with a soft, dry cloth. Do not use solvents or cleaners.

WARNING

To reduce the risk of ignition of hazardous atmospheres, recharge, remove or replace the battery only in an area known to be non-hazardous! Do not mix old and new batteries or batteries from different manufacturers.

4.1 Using The Charging Cradle

Follow this procedure to charge the MultiRAE:

1. Plug the AC/DC adapter into the MultiRAE's cradle.
2. Plug the AC/DC adapter into the wall outlet.
3. Place the MultiRAE into the cradle and press down until it is locked in place.

The MultiRAE begins charging automatically. The LED in the cradle should glow red to indicate charging. When charging is complete, the LED in the cradle glows green.

4.2 Using The Travel Charger

Follow these steps to use the travel charger.

Before attaching the travel charger, check that it is aligned correctly with the base of the MultiRAE. There are two alignment points on one side and one alignment point on the other side, designed to mate with matching points on the bottom of the MultiRAE:

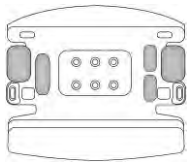

1. Check bottom of MultiRAE Travel Charger's alignment pins for correct orientation with the MultiRAE.

2. Align travel charger with bottom of MultiRAE.

3. Press travel charger onto bottom of MultiRAE.

4. Make sure the travel charger is firmly attached.

Next, put the plug from the power supply into the jack on the side of the travel charger:

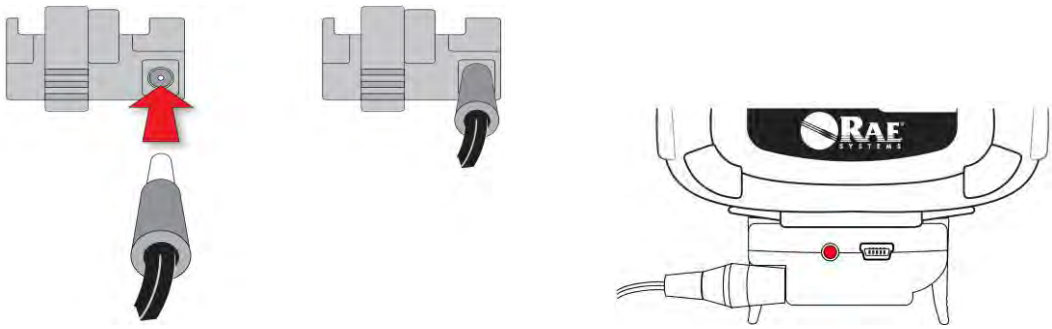

Plug the other end of the charger into a power source (AC outlet or 12VDC mobile power port, depending on the model). When power is applied and the MultiRAE's battery is charging, the LED glows red. The LED glows green when the battery is fully charged.

4.3 Replacing A Battery

The MultiRAE battery packs are plug-and-play, and can be replaced on the go without tools. To replace the MultiRAE battery:

1. Remove the battery adapter from the instrument by sliding the tab and tilting out the adapter.
   Note: The belt clip and rubber boot are removed in the illustration for clarity. They can be left on while replacing a battery.

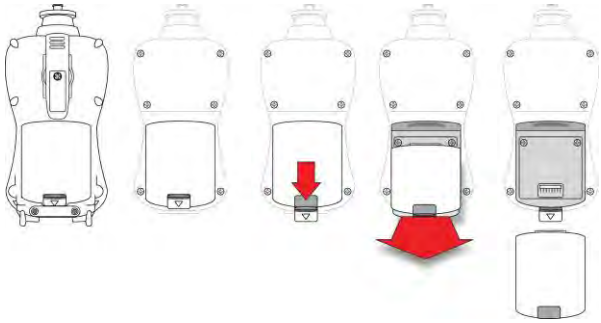

2. Tilt a fully charged battery (or alkaline battery adapter) into the battery compartment and place it in the instrument.
3. Slide the tab back into place to secure the battery.

4.4 Battery States

The battery icon on the display shows how much charge is in the battery and alerts you to any charging problems.

Full charge	2/3 charge	1/3 charge	Low charge	Battery alert

When the battery's charge falls below a preset voltage, the instrument warns you by beeping once and flashing once every minute, and the "empty battery" icon blinks on and off once per second. The instrument automatically powers down within 10 minutes, after which you will need to either recharge the battery, or replace it with a fresh one with a full charge.

4.5 Alkaline Battery Pack

An alkaline battery adapter is supplied with each instrument. The adapter (part number M01-3054-000) is installed and removed just like the rechargeable battery. It accepts four AA alkaline batteries (use only Duracell

MN1500) and provides approximately 8 hours of normal operation. (An optional rechargeable lithium-ion battery pack, part number M01-3053-000.)

Note: The vibration alarm is disabled whenever the alkaline adapter is used.

To replace the alkaline adapter's batteries:

1. Remove the hex-socket screw at the end of the adapter.
2. Lift the cover off the battery compartment.
3. Insert four fresh AA batteries as indicated by the polarity (+/-) markings.
4. Replace the cover and replace the hex screw.

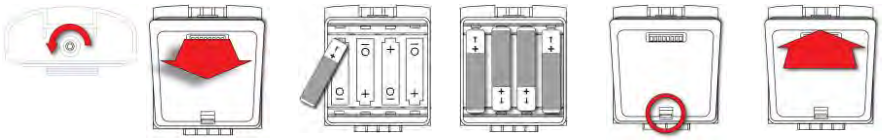

IMPORTANT!

Alkaline batteries cannot be recharged. The instrument's internal circuit detects alkaline battery pack and will not allow recharging. If you place the instrument in its Travel Charger or Charging Cradle, the alkaline battery will not be recharged. The internal charging circuit is designed to prevent damage to alkaline batteries and the charging circuit when alkaline batteries are installed inside the instrument. If you try to charge alkaline batteries installed in the instrument, the Charging Cradle or Travel Charger's charging LED does not glow, indicating that it will not charge them.

The alkaline battery adapter accepts four AA alkaline batteries (use only Duracell MN1500). Do not mix old and new batteries or batteries from different manufacturers.

Note: When replacing alkaline batteries, dispose of old ones properly.

5 Turning The MultiRAE On And Off

5.1 Turning The MultiRAE On

With the instrument turned off, press and hold the [MODE] key until the audible alarm stops, and then release.

When starting up, the MultiRAE turns the backlight on and off, beeps once, blinks once, and vibrates once. A RAE Systems logo (or a company name) should appear first. This is followed by a progression of screens that tell you the MultiRAE's current settings:

- Product model number, serial number and firmware version.
- List of installed sensors.
- Current date, time and temperature.
- User mode,
- Battery type, voltage, shutoff voltage.
- Alarm mode.
- Datalog period (if it is activated).
- Sensor information such as production/expiration/calibration date and alarm limit settings.

Then the MultiRAE's main reading screen appears. It takes 1 to 2 minutes for sensors to show a reading, so if any have not warmed up by the time the main screen is shown, you will see "- -" instead of a numerical value until the sensor provides data (typically less than 2 minutes). Then it displays instantaneous readings similar to the following screen (depending on the sensors installed) and is ready for use.

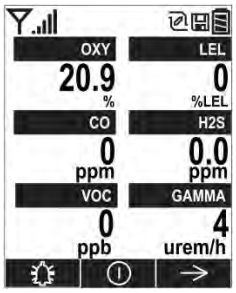

Note: If the battery is completely empty, then the display briefly shows the message "Battery Fully Discharged," and the MultiRAE shuts off. You should charge the battery or replace it with a fully charged battery before turning it on again.

5.2 Turning The MultiRAE Off

Press and hold [MODE]. A 5-second countdown to shutoff begins. You must hold your finger on the key for the entire shutoff process until the MultiRAE is powered off.

Caution: The alarm is very loud. During startup, you can mute most of the sound by holding a finger over the alarm port. Do not put tape over the alarm port to permanently mute it.

5.3 Testing Alarm Indicators

Under normal-operation mode and non-alarm conditions, the buzzer, vibration alarm, LED, and backlight can be tested at any time by pressing [Y/+] once.

IMPORTANT!

If any of the alarms does not respond to this test, check the Alarm Settings in Programming Mode. It is possible that any or all of the alarms have been turned off. If all of the alarms are turned on, but one or more of them (buzzer, LED lights, or vibration alarm) does not respond to this test, do not use the instrument. Contact your RAE Systems distributor for technical support.

5.4 Pump Status

IMPORTANT!

During operation, make sure the probe inlet and the gas outlet are free of obstructions. Obstructions can cause premature wear on the pump, false readings, or pump stalling. During normal operation, the pump icon alternately shows inflow and outflow as shown here:

If there is a pump failure or obstruction that disrupts the pump, the alarm sounds and you see this icon blinking on and off:

Once the obstruction is removed, you can try to restart the pump by pressing the Y/+ button. If the pump does not restart, and the pump stall alarm continues, consult the Troubleshooting section of this guide or contact RAE Systems Technical Support.

Note: Pump Status is not indicated on diffusion MultiRAEs.

5.5 Calibration Status

The instrument displays this icon next to the sensor that requires calibration:

Calibration is required (and indicated by this icon) if:

- The lamp type has been changed (for example, from 10.6 eV to 9.8 eV).
- The sensor module has been replaced with one whose calibration is overdue.
- The defined period of time between calibrations has been exceeded.
- If you have changed the calibration gas type without recalibrating the instrument.
- The sensor has failed a previous calibration.

6 Modes Of Operation

The MultiRAE has two operation modes and two user modes.

6.1 Hygiene Operation Mode

Hygiene Mode provides continuous monitoring.

6.2 Search Operation Mode

Search Mode provides monitoring only when monitoring is turned on. This allows specific samples to be taken at different times, rather than continuously.

6.3 Basic User Mode

In Basic User Mode, some restrictions are applied, including password protection that guards against entering Programming Mode by unauthorized personnel.

6.4 Advanced User Mode

In Advanced User Mode, there are no access restrictions (you do not need a password), and MultiRAE provides the indications and data you need most for typical monitoring applications.

7 Programming

The menu in Programming Mode is to adjust settings, calibrate sensors, and initiate communication with a computer. It has the following submenus:

- Calibration
- Measurement
- Alarms
- Datalog
- Wireless
- Monitor

7.1 Enter Programming In Advanced Mode

1. To enter Programming Mode, press and hold [MODE] and [N/-] until you see the Calibration screen. No password is necessary in Advanced Mode.
2. Press [N/-] to step through the programming screens.

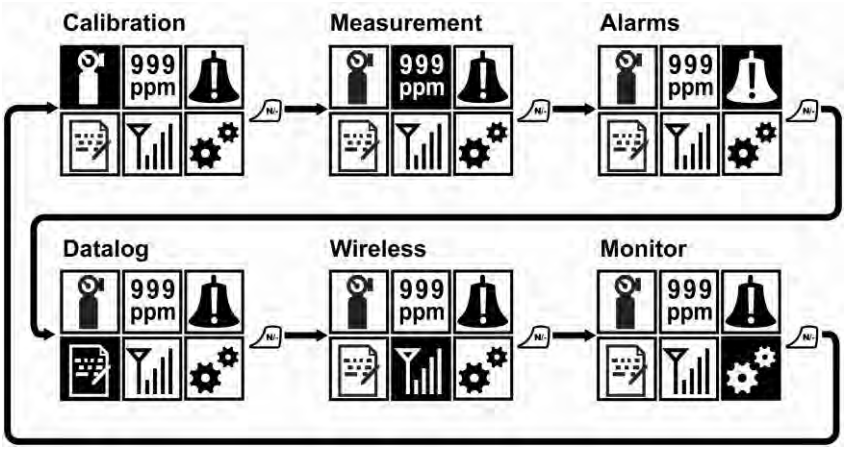

To enter a menu and view or edit parameters in its submenus, press [Y/+].

7.2 Enter Programming In Basic Mode

1. To enter Programming Mode, press and hold [MODE] and [N/-] until you see the Password screen.

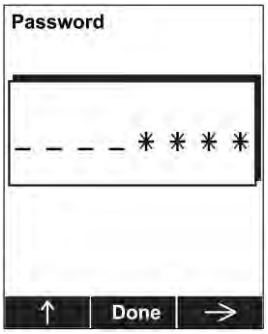

2. Input the 4-digit password:

- Increase the number from 0 through 9 by pressing [Y/+].
- Step from digit to digit using [N/-].
- Press [MODE] when you are done.

If you make a mistake, you can cycle through the digits by pressing [N/-] and then using [Y/+] to change the number in each position.

Note: The default password is 0000.

Note: The password screen only appears when you enter the Programming Mode the first time after turning the instrument on in Basic Mode. If you have input the correct password, you do not have to input it again to enter Programming Mode until you turn the instrument off and on again.

Once you enter Programming Mode, the Calibration screen is shown. Press [N/-] to step through the programming screens.

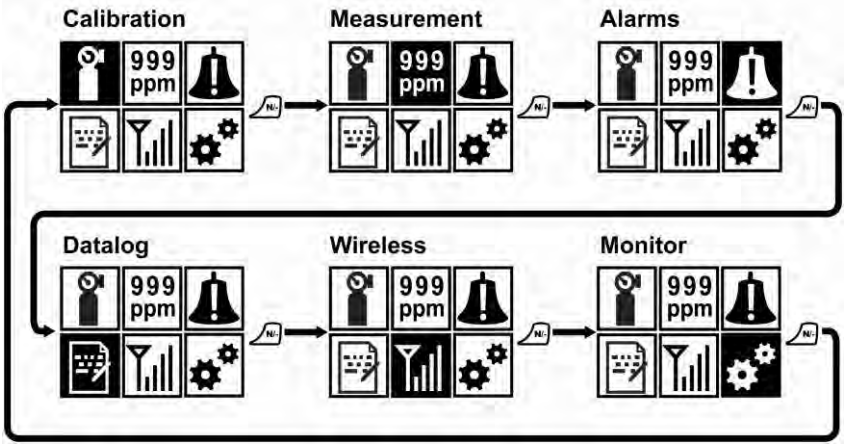

To enter a menu and view or edit parameters in its submenus, press [Y/+].

7.3 Menus And Submenus

In Programming Mode, menus and submenus are organized as shown here:

	999 ppm				
Calibration	**Measurement**	**Alarms**	**Datalog**	**Wireless***	**Monitor**
Fresh Air	Sensor On/Off	Alarm Limits	Clear Datalog		LCD Contrast
Multi Sensor Span	Change Meas. Gas	Alarm Mode	Datalog Interval		Operation Mode
Single Sensor Zero	Measurement Units	Alarm Settings	Sensor Selection		Pump Speed**
Single Sensor Span		Comfort Beep	Data Selection		Zero At Start
Cal. Reference		Man Down Alarm	Datalog Type		Fast Startup
Change Cal. Gas			Memory Full Action		Temperature Units
Multi Cal Select					Language
Change Span Value					Site ID
Change Span2 Value***					User ID
					Date Format
					Date
					Time Format
					Time
					User Mode
					Backlight
					LCD Flip

* Wireless is still in development.
** Pump-equipped version only.
***By default, only a ppb PID sensor (used only in MultiRAE Pro) has 3-point calibration enabled. Third-point calibration can be enabled for the MultiRAE PID (high-range) sensor via ProRAE Studio 2. The MultiRAE Lite PID sensor only supports 2-point calibration.

7.3.1 Editing And Selecting Parameters And Sensors

There are a few basic ways to edit parameters, select sensors, and perform other activities in the MultiRAE. The actions performed by pressing keys always match 1-to-1 with the boxes along the bottom of the display and the three keys. Some parameters are edited by scrolling and selecting individual items (black bars behind white text act as highlighters). Some include a choice via "radio buttons," where only one item in a list can be selected, while other menus use boxes for you to "check" with an "X," and these allow for multiple items in a list to be selected. In all cases of editing, you can save or undo your choice.

7.3.2 Calibration

Use this menu to perform zero or span calibration for one or more sensors, and change the gas concentration value assumed to be used in span calibration, as well as zero calibration and calibration reference gas.

7.3.2.1 Fresh Air

This procedure determines the zero point of the sensor calibration curve for all the sensors that require a zero calibration.

7.3.2.2 Multi Sensor Span

Depending on the configuration of your MultiRAE and span gas you have, you can perform a span calibration simultaneously on multiple sensors.

7.3.2.3 Single Sensor Zero

This allows you to perform zero (fresh air) calibration on individual sensors.

7.3.2.4 Single Sensor Span

Instead of performing a span calibration on more than one sensor simultaneously, you can select a single sensor and perform a span calibration.

7.3.2.5 Cal. Reference

It is sometimes desirable to calibrate a sensor (PID for VOC, and LEL) with a specific gas for best response to a gas you are surveying. Changing the gas requires selecting the right calibration reference gas in the MultiRAE. Choose the sensor, and then select from the list of reference gases.

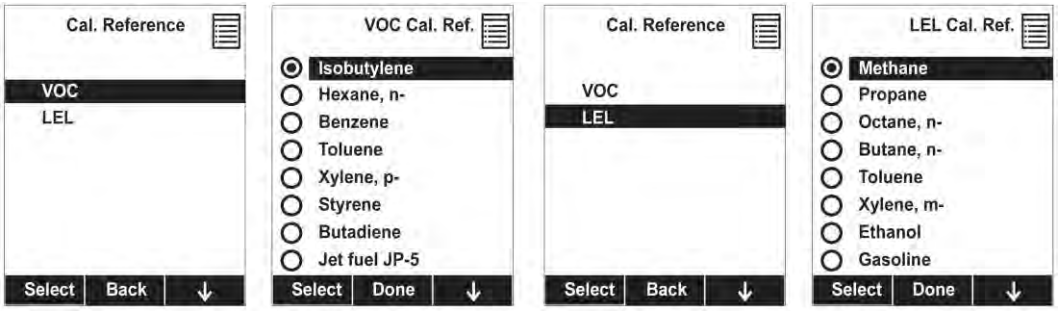

7.3.2.6 Change Cal. Gas

You can change the calibration gas for the MultiRAE's PID and LEL sensors. Select from a custom list that you create (My List), the last ten gases used, the built-in gas library for your PID lamp (taken from RAE Systems' Technical Note TN-106), and custom gases. Each gas is shown in the list for selection and the screen automatically changes to show its full name, chemical formula, molecular weight (M.W.) and correction factor (CF).

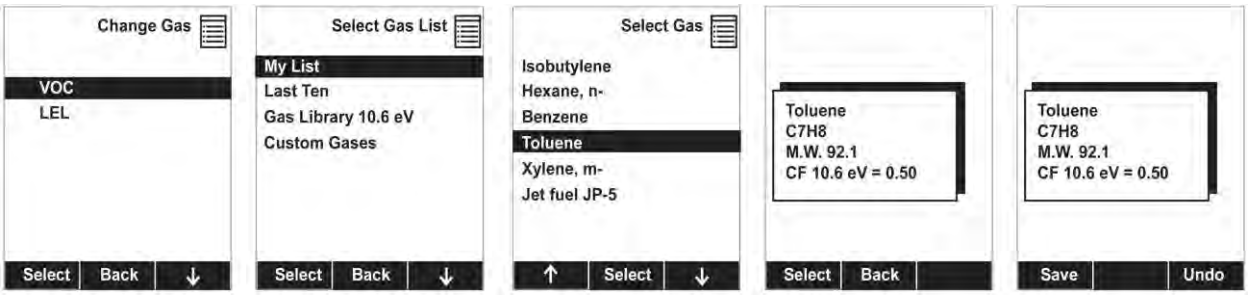

7.3.2.7 Multi Cal Select

You can select one or more sensors to be calibrated at a time. An "X" in a box to the left of a sensor's name indicates it is selected.

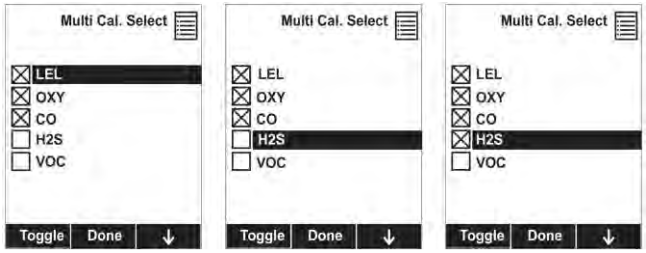

7.3.2.8 Change Span Value

You can individually set the span gas value for each sensor. The units of measure (ppm, %LEL, etc.) are shown on the display.

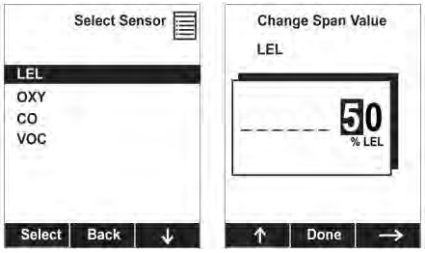

7.3.2.9 Change Span2 Value

If your MultiRAE is equipped with a PID sensor, you can set the span gas value for a third calibration point (Span2). The unit of measure is shown on the display.

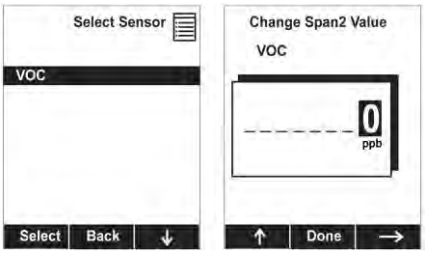

Note: By default, only a ppb PID sensor (used only in MultiRAE Pro) has 3-point calibration enabled. Third-point calibration can be enabled for the MultiRAE PID (high-range) sensor via ProRAE Studio 2. The MultiRAE Lite PID sensor only supports 2-point calibration.

7.3.3 Measurement

The submenus for Measurement include Sensor On/Off, Change Measurement Gas, and VOC and Gamma (if equipped) Measurement Units.

7.3.3.1 Sensor On/Off

You can turn sensors on or off via this set of submenus. An "X" in a box to the left of a sensor's name indicates it is turned on.

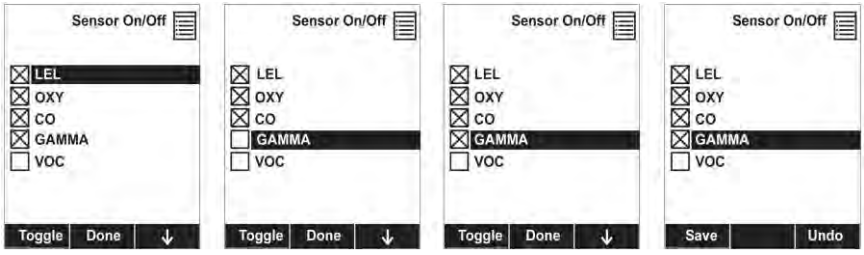

7.3.3.2 Change Meas. Gas

The MultiRAE has extensive onboard gas libraries for combustible gases and VOCs that you can use to configure your MultiRAE to automatically apply the appropriate correction factors and produce readings in the units of the desired combustible gas or VOC.

Measurement gases are organized in four lists:

- **My List** is a customized list of gases that you create. It contains a maximum of 10 gases and can only be built in ProRAE Studio II on a PC and transferred to the instrument. **Note:** The first gas in the list is always isobutylene (it cannot be removed from the list).
- **Last Ten** is a list of the last ten gases used by your instrument. The list is built automatically and is only updated if the gas selected from Custom Gases or Library is not already in the Last Ten. This ensures that there is no repetition.
- **Gas Library** is a library that consists of many of the gases found in RAE Systems' Technical Note TN-106 (available online at www.raesystems.com).
- **Custom Gases** are gases with user-modified parameters. Using ProRAE Studio II, all parameters defining a gas can be modified, including the name, span value(s), correction factor, and default alarm limits.

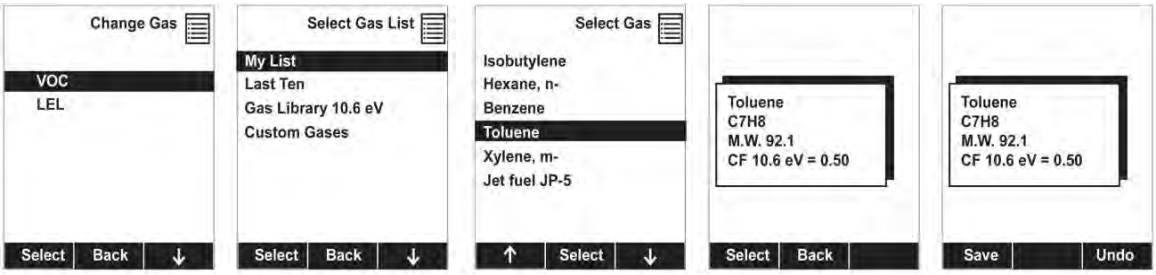

7.3.3.3 Measurement Units

In some cases, the measurement unit for displaying data from sensors can be changed. Standard available measurement units include:

Abbreviation	Unit	Sensor Type
ppm, ppb	parts per million, parts per billion	PID for VOC
mg/m3, ug/m3	milligrams per cubic meter, micrograms per cubic meter	PID for VOC
ppm, mg/m3	parts per million, milligrams per cubic meter	EC (electrochemical)
ppm Only, %VOL only, Auto Range	parts per million, percent by volume, automatically switch from ppm to %VOL at 10000 ppm and higher*	CO_2
urem, mrem	microrems and millirems	Gamma
uSv, mSv	microSieverts and milliSieverts	Gamma
uR, mR	microRoentgens and milliRoentgens	Gamma
uGy, mGy	microGrays and milliGrays	Gamma

* The CO_2 switch point from ppm to %VOL can be changed via ProRAE Studio 2.

Here are two examples of menu hierarchies (select the sensor type and then the measurement unit):

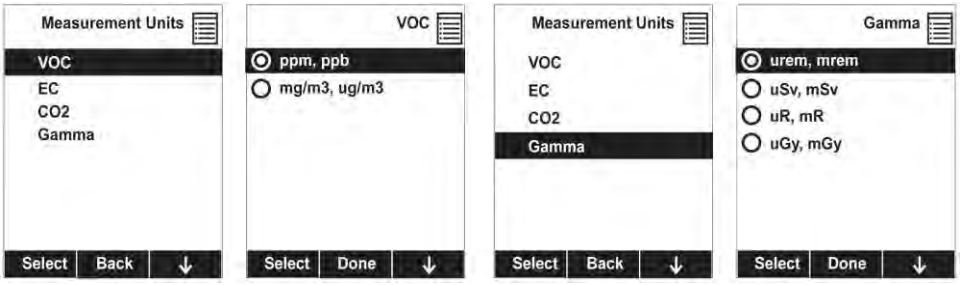

7.3.4 Alarms

Use this menu to change high, low, STEL, and TWA alarm limits - the points at which alarms are triggered. It can also change alarm mode (latched or automatic reset) and alarm output methods (combinations of light, buzzer, and vibration alarm indications).

7.3.4.1 Alarm Limits

There are four groups of alarm settings that you can adjust for each individual sensor for which a particular alarm type is available.

Settings:

- High Alarm
- Low Alarm
- STEL Alarm
- TWA Alarm

Note: Some alarm settings are not applicable to all sensors. If a setting is irrelevant to a sensor (for example, STEL for a gamma radiation sensor), then that sensor does not appear in the list.

7.3.4.2 Alarm Mode

You can program the MultiRAE so that there are two ways to shut off an alarm:

Auto Reset	When the alarm condition is no longer present, the alarm stops and resets itself.
Latch	You can manually stop the alarm when one is triggered. The latched setting only controls alarms for High Alarm, Low Alarm, STEL Alarm, and TWA alarm.

7.3.4.3 Alarm Settings

You can enable/disable any combination of light (LEDs), buzzer, and vibration alarms.

Settings:

- All Enabled
- Light
- Vibration
- Buzzer
- Buzzer & Light
- Buzzer & Vibration
- Vibration & Light
- All Disabled

7.3.4.4 Comfort Beep

A Comfort Beep is a single beep of the audible alarm at 60-second intervals that reminds the person using the MultiRAE that it is functioning. It can be turned on or off.

7.3.4.5 Man Down Alarm

The Man Down Alarm is a critical and potentially lifesaving safety feature of every MultiRAE. The Man Down Alarm is based on the premise that if the instrument is motionless when it is not supposed to be, something wrong may be happening to its user. If that is the case, the MultiRAE blasts the alarm not only locally on the instrument, but also remotely, over the RAE Systems Dedicated Wireless Network to notify people in the vicinity, as well as remote safety officers at the command center, that a person is down, so that help can get on the way quickly.

When the Man Down feature is on and there is no gas or radiation alarm, the MultiRAE senses that it is motionless for the amount of time set in the "Motionless Time" parameter. If the instrument is not moved during that time, then a pre-alarm is activated to alert the user, and shows the "Are You OK?" screen. Pressing [Y/+] clears the alarm and returns the MultiRAE to its normal operation. Pressing [N/-] sets it into Man Down Alarm (and if wireless connectivity is enabled, a Man Down message is sent in real time to remote observers). If neither key is pressed, then after the countdown, it goes into Man Down Alarm (again sending a message to remote observers if wirelessly enabled).

Settings are available for:

- Off/On
- Motionless Time (time the instrument is motionless before initiating a pre-alarm)
- Motion Sensitivity (set to low, medium, or high to compensate for ambient vibration or motion)
- Warning Time (countdown, in seconds, from pre-alarm to Man Down alarm)

When the Man Down alarm is activated, the buzzer sounds and LEDs flash continuously, and a countdown begins.

- If the MultiRAE's user presses [Y/+] for "Yes" in response to the "Are You OK?" question on the screen before the countdown reaches zero, the Man Down alarm stops and the main reading screen is displayed.
- If the person does not press [Y/+] for "Yes" in response to the "Are You OK?" question on the screen before the countdown reaches zero, the Man Down alarm is sounded and LEDs flash continuously.
- If the person presses [N/-] during the countdown, answering the "Are You OK?" question with "No," the Man Down alarm starts.

If wireless connectivity is enabled, a Man Down message is also sent to remote observers.

7.3.5 Datalog

The instrument displays a floppy disk icon to indicate that a datalog is being recorded. The instrument stores the measured gas concentration for each sensor, date and time for each measurement, Site ID, User ID, and other parameters. The MultiRAE memory is sufficient to record six months' worth of data for five sensors at one-minute intervals. All data are retained (even after the unit is turned off) in non-volatile memory so that they can be downloaded at a later time to a PC.

7.3.5.1 Clear Datalog

This operation erases all data stored in the datalog.

Note: Once the datalog is cleared, the data cannot be recovered.

7.3.5.2 Datalog Interval

Intervals are shown in seconds. The default value is 60 seconds. The maximum interval is 3600 seconds, and the minimum is 1 second.

7.3.5.3 Sensor Selection

You can choose which sensors' data are included in the datalog. The entire list of installed sensors is shown, and you can individually select whether their data is included.

Note: Turning a sensor off in the list does not change or erase its settings.

7.3.5.4 Data Selection

Data Selection allows you to select which types of data are stored and made available when you download your datalog to a computer via ProRAE Studio II (version 1.04 or higher) software.

You can choose any or all of four types of data (you must choose at least one):

- Minimum
- Average
- Maximum
- Real Time

7.3.5.5 Datalog Type

The instrument offers three options for starting the datalogging process:

Auto	Automatically collects datalog information every time the instrument is sampling until the datalog memory is full.
Manual	Datalogging occurs only when you manually initiate it (see below for details).
Snapshot	Datalogs only during snapshot (single-event capture, initiated by pressing [MODE]) sampling.

Note: You can only choose one datalog type to be active at a time.

About Manual Datalog

When the instrument is set to Manual Datalog, you can turn datalogging on and off by repeatedly pressing [N/-] and stepping through the screens from the main display until you reach the screen that says "Start Datalog?"

- When you reach the screen that says "Start Datalog?" press [Y/+] to start it. You see "Datalog Started," confirming that datalogging is now on. You can turn it off by pressing [Y/+] again.
- If datalogging is running, you can leave it running. However, if you want to turn it off, follow this procedure:

  Press [N/-] repeatedly to step through the screens until you reach the screen that says, "Stop Datalog?" press [Y/+] to stop datalogging. The screen displays "Datalog Stopped" for a few seconds, before displaying "Start Datalog?" and the datalog interval. You can restart it anytime by pressing [Y/+].

About Snapshot Datalog

When the instrument is in Snapshot datalogging mode, it captures a single "snapshot" of the data at the moment of your choosing. All you have to do is press [MODE] each time you want to capture a snapshot of the data at that instant.

No snapshot.

Press [MODE] for snapshot.

Datalog icon is shown during snapshot

7.3.5.6 Memory Full Action

When the internal datalog memory is full, the MultiRAE can either stop collecting data (Stop when full) or go back to the beginning and overwrite the data from the first entry, second entry, etc. (Wraparound).

7.3.6 Wireless

This feature is currently in development.

7.3.7 Monitor

The submenus under "Monitor" control the LCD's contrast, operation mode, pump speed, and other parameters.

7.3.7.1 LCD Contrast

The display's contrast can be increased or decreased from its default setting. You may not need to ever change the default setting, but sometimes you can optimize the display to suit extreme temperature and ambient brightness/darkness conditions.

Use the [Y/+] and [N/-] keys to decrease or increase LCD contrast, respectively. When you are done, select "Done" and save your change or "Undo" to abort changes and revert to the original setting. If no change is made, you can simply exit LCD Contrast.

7.3.7.2 Operation Mode

There are two operation modes, outlined below.

Hygiene Mode

When the MultiRAE is in Hygiene Mode, it continuously monitors, and if datalogging is on, it saves data continuously.

Search Mode

When the instrument is in Search Mode, it only samples when you activate sampling. When you see the display that says, "Ready…Start sampling?" press [Y/+] to start. The pump turns on and the instrument begins collecting data. To stop sampling, press [N/-] while the main display is showing. You will see a new screen that says, "Stop sampling?" Press [Y/+] to stop sampling. Press [N/-] if you want sampling to continue.

7.3.7.3 Pump Speed

If the MultiRAE is equipped with a pump, the pump can operate at two speeds, high and low. Running at low speed is quieter, extends pump lifespan, and conserves a small amount of power. There is almost no difference in sampling accuracy.

7.3.7.4 Zero At Start

If your MultiRAE has been configured to perform a zero (fresh air) calibration upon startup, called Zero At Start, then the startup routine is interrupted so that you can perform a fresh air calibration.

If you do not want to perform a zero calibration, press [MODE] to bypass it. If you start a zero calibration and want to abort it, press [N/-], and the calibration stops and the main display is shown.

7.3.7.5 Fast Startup

Fast Startup skips showing you many settings and is best suited to environments where the MultiRAE is turned on and off very often during a given day. If Fast Startup is not selected, then when the instrument starts, it shows you details of each sensor, including calibration information, high and low alarm settings, etc.

7.3.7.6 Temperature Units

The display unit of the internal temperature sensor can be switched between Fahrenheit and Celsius.

7.3.7.7 Language
English is the default language, but other languages can also be selected for the instrument.

7.3.7.8 Site ID
Choose and enter an 8-digit Site ID to uniquely identify the particular site where the instrument is to be used. The first four digits can be an alphabet letter or number, while the last four digits can only be numbers. This Site ID is included in the datalog report.

Note: Advance through the alphabet and numbers (0 through 9) by one with each press of the [Y/+] key. To scroll quickly, hold down the [Y/+] key for as long as you want it to scroll rapidly.

7.3.7.9 User ID
Enter an 8-digit alphanumeric User ID to uniquely identify a user. This User ID is included in the datalog report.

Note: Advance through the alphabet and numbers (0 through 9) by one with each press of the [Y/+] key. To scroll quickly, hold down the [Y/+] key for as long as you want it to scroll rapidly.

7.3.7.10 Date Format
Month (MM) and Day (DD) have two digits each, while the year (YYYY) uses four digits. The Date can be expressed in three different formats:

- MM/DD/YYYY
- DD/MM/YYYY
- YYYY/MM/DD

7.3.7.11 Date
Set the date according to the format selected in Date Format.

7.3.7.12 Time Format
The time format can be either of these two options:

- 12 Hour (AM/PM)
- 24 Hour

7.3.7.13 Time
Regardless of the Time Format you select, the MultiRAE's time must be set using the 24-hour format, following hours, minutes, and seconds (HH:MM:SS).

7.3.7.14 User Mode
Two User Modes are available: Advanced and Basic. The Advanced User Mode allows a greater number of parameters to be changed than Basic User Mode. It can be used with either of the Operation Modes, Hygiene or Search. No password is required to enter the Programming Menu when in Advanced User Mode.

7.3.7.15 Backlight
The display's backlight can be set to illuminate either automatically, based on ambient light conditions, or manually, or it can be shut off.

7.3.7.16 LCD Flip
The display can be configured to flip 180° automatically when the MultiRAE is turned upside-down. The LCD Flip feature can be set to On or Off.

8 Calibration And Testing

8.1 Bump Testing And Calibration

RAE Systems recommends a bump test be performed periodically on the MultiRAE. A bump test is defined as a brief exposure of the monitor to the calibration gas to show response and trigger the lowest alarm set point for each sensor.

- The MultiRAE multi-gas detector must be calibrated if it does not pass a bump test, or at least once every 180 days, depending on use and sensor exposure to poisons and contaminants.
- Calibration intervals and bump test procedures may vary due to national legislation.

8.1.1 Bump (Functional) Testing

RAE Systems recommends periodic bump testing to confirm that the sensors and alarms are functional. Test each sensor with an appropriate test gas in a concentration not less than the sensor's low alarm setting. To pass, each sensor should go at least to a low alarm. With the MultiRAE in Normal Mode:

1. Connect the calibration gas cylinder, flow regulator, and calibration adapter to the MultiRAE and start the gas flow.
2. Make sure the unit goes into at least a low alarm for each of the tested sensors and that the buzzer produces at least two beeps per second, the LED lights flash on and off, and the vibration alarm functions. The display backlight should illuminate and an alarm message should be shown in the display.
3. Turn off the gas flow.
4. Remove the calibration adapter.

8.2 Zero/Fresh Air Calibration

This operation sets the zero point of the sensor calibration curve for clean air. It should be performed before other calibrations.

Note: If you use a zero air cylinder, you must use the MultiRAE Calibration Adapter. Using a calibration adapter is not necessary for calibration in fresh air.

8.2.1 Zero Calibration For A CO_2 Sensor

Important! If your MultiRAE is equipped with a CO_2 sensor, it must be zero calibrated using 100% Nitrogen (N_2), which is inert, instead of fresh air or zero air. You can also use CO_2-free isobutylene, which is convenient to use for zeroing the CO_2 sensor and span calibrating a VOC sensor.

8.2.2 Fresh Air Calibration

This procedure determines zero points of most sensors. The MultiRAE should be zero-calibrated in clean air with 20.9% oxygen or with a cylinder of clean zero air.

At the Calibration menu, select "Fresh Air" by pressing [Y/+] once to enter fresh air calibration.

After a timer countdown, the zero calibration is done. The LCD displays the sensor names and tells you whether each calibration passed or failed, followed by the sensor readings.

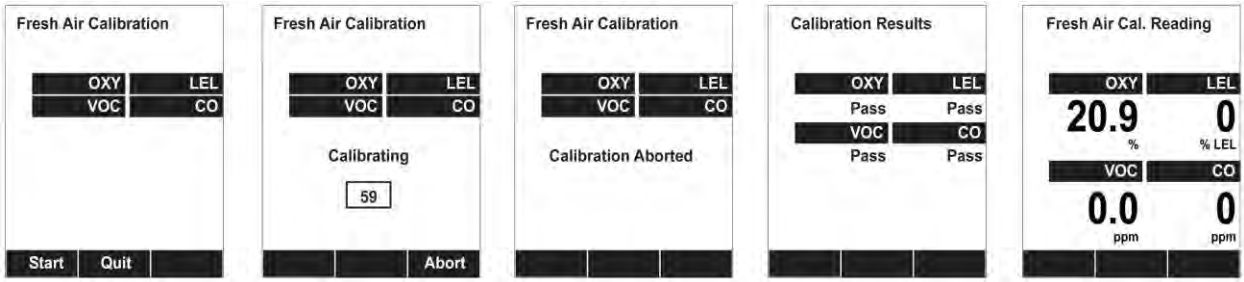

Note: You can abort the calibration at any time during the countdown by pressing [N/-].

8.2.3 Single-Sensor Zero Calibration

Select the sensor and then start the calibration by pressing [Y/+]. You can abort the procedure anytime by pressing [N/-].

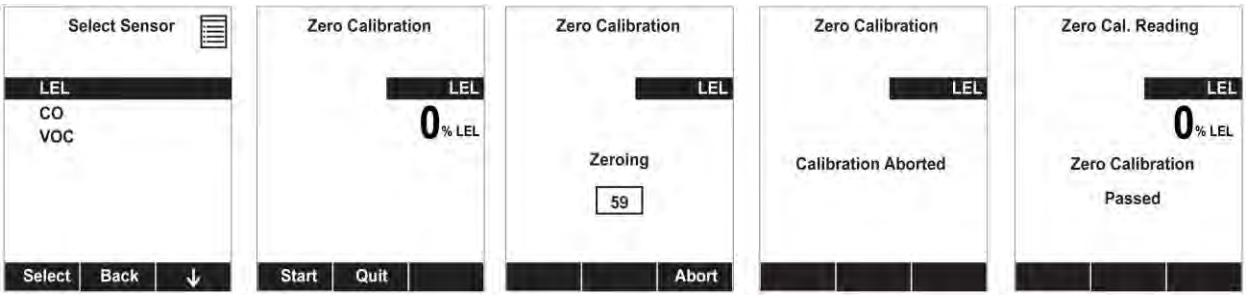

8.3 Span Calibration

This procedure determines the second point of the sensor calibration curve for the sensor.

MultiRAE Equipped With A Pump

With its pump speed setting of low or high, a MultiRAE normally draws in air at a flow rate of between 200 cc/min and 300 cc/min. RAE Systems recommends that a calibration cap to be used with calibration gas flow rates from 500 cc/min to 1000 cc/min.

WARNING: Make sure the calibration cap clips on and stays in the correct position during calibration, as illustrated below. Otherwise, the calibration cap must be manually held in the correct position.

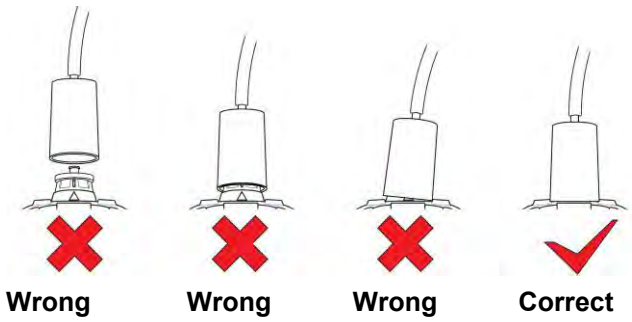

MultiRAE Lite Diffusion Model (No Pump)

Because there is no single inlet on the diffusion (non-pumped) version of the MultiRAE, a Calibration Adapter is used for supplying calibration gas to all sensors at one time. Follow these steps for attaching the Calibration Adapter.

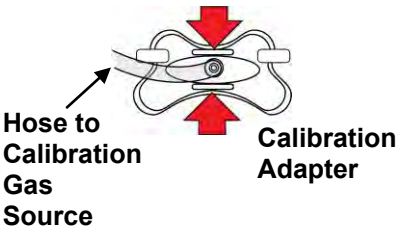

Grasp the small handles on the Calibration Adapter.

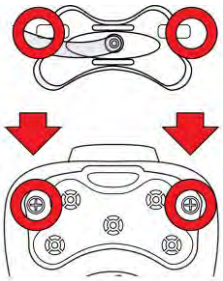

Align the Calibration Adapter's two connectors with the screws on both sides of the MultiRAE's gas inlets.

Make sure the connectors are securely in place before starting the flow of calibration gas. (The Calibration Adapter has small grooves on its underside to allow gas to escape after passing over the sensors.

8.3.1 Multi-Sensor Span Calibration

This lets you perform a span calibration on multiple sensors simultaneously. It requires using the appropriate span gas and that the concentration labeled on the gas cylinder matches the concentration programmed in the MultiRAE.

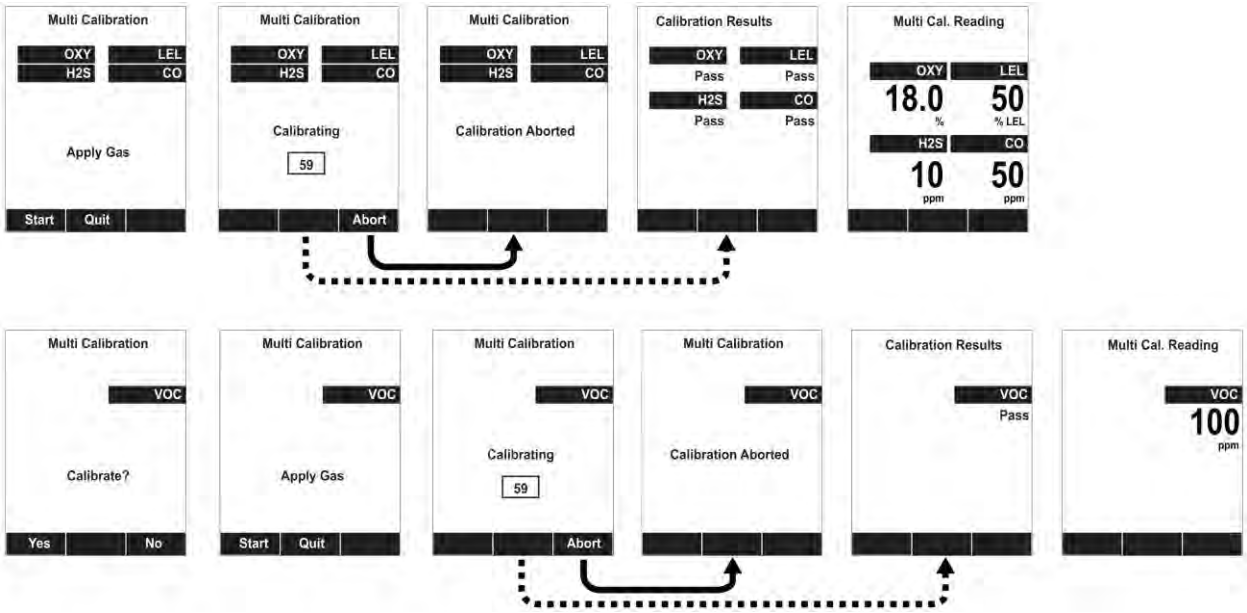

1. Attach the calibration adapter and gas to the MultiRAE.
2. Start the flow of gas and then press [Y/+] to begin calibration. A countdown screen is shown. You can abort the calibration at any time during the countdown by pressing [N/-].

If the calibration reaches its conclusion, it shows the sensor names and tells you whether the calibration passed or failed, followed by the sensor readings.

8.3.2 Single-Sensor Span Calibration

To perform span calibration of an individual sensor, follow these steps:

1. At the Calibration Menu, select "Single Sensor Span."
2. Select a sensor from the list.
3. Connect the calibration adapter and connect it to a source of calibration gas.
4. Start the flow of calibration gas.
5. Verify that the displayed calibration value meets the concentration label on the gas cylinder.

6. Press [Y/+] to start calibrating. You can abort the calibration at any time during the countdown by pressing [N/-].

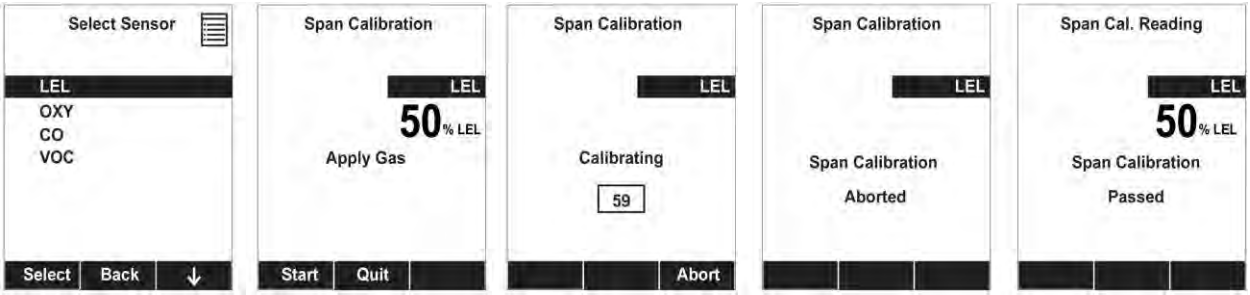

After a timer countdown, the span calibration is done. The LCD will display whether the calibration was successful and the reading for that calibration gas.

Note: If the sensor calibration fails, try again. If calibration fails again, turn off the power and then replace the sensor.

WARNING: Do not replace sensors in hazardous locations

8.4 Testing The Gamma Sensor

The gamma radiation sensor does not require user calibration. You can check it by placing a check-source on the rear of the MultiRAE equipped with a gamma sensor to check the readings. There is a raised dot on the rubber boot that marks where the sensor is located inside the instrument.

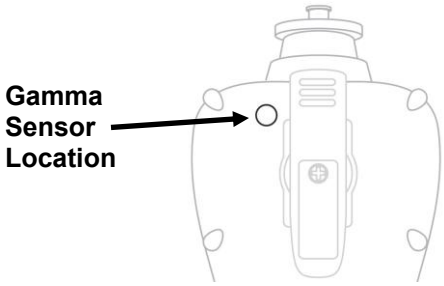

9 Datalog Transfer, Monitor Configuration, and Firmware Upgrades Via Computer

Datalogs can be downloaded from the MultiRAE to a computer, and firmware updates can be uploaded to the MultiRAE via the USB port on the Travel Charger or Charging Cradle. Use the included Mini B USB (5-pin)-to-USB cable to connect the Travel Charger or Charging Cradle to a computer running ProRAE Studio II (version 1.04 or higher).

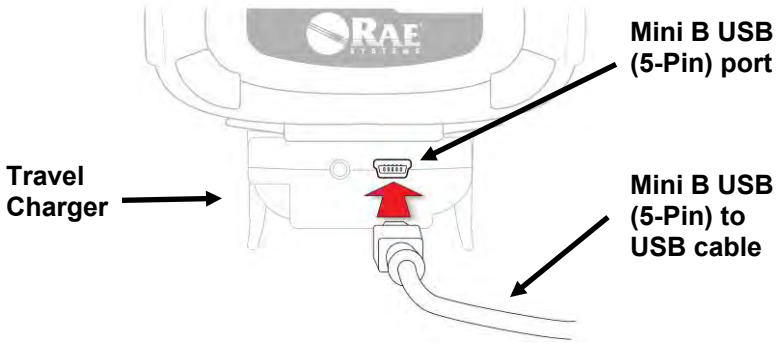

9.1 Downloading Datalogs And Performing PC-Based Instrument Configuration and Firmware Upgrades

The MultiRAE communicates with a PC running ProRAE Studio II Instrument Configuration and Data Management software (version 1.04 or higher) to download datalogs, configure the instrument, or upload new firmware.

The MultiRAE must be connected to a PC through the supplied Charging / PC Communications Cradle and must be in the PC communications mode.

1. Use the supplied PC Communications Cable (USB to mini-USB cable) to connect the Cradle or Travel Charger to a PC.
2. Turn on the MultiRAE. Make sure it is running in Normal mode (with the main measurement screen showing).
3. Insert the MultiRAE in the cradle.
4. Activate the PC communications mode on the MultiRAE by pressing [N/-] repeatedly, starting from the main measurement screen until you reach the "Communicate With Computer?" screen.
5. Press [Y/+]. Measurement and datalogging stop, and the instrument is now ready to communicate with the PC. The display now says "Ready To Communicate With Computer."
6. Start up the ProRAE Studio II software, enter a password, and detect the instrument following the directions provided in the ProRAE Studio II User's Manual.
7. Follow the instructions in the ProRAE Studio II User's Manual to download the datalog, configure the instrument settings, or update the MultiRAE's firmware.
8. When you are done, press [Y/+] to exit the PC communications mode on the MultiRAE. The instrument returns to operating in Normal mode.

10 Maintenance

The MultiRAE requires little maintenance, aside from replacing sensors, the filter, and the battery. If the instrument is equipped with a pump, it may need replacement, as well. If the instrument has a PID, then the PID sensor lamp and sensor electrode panel may require periodic cleaning.

10.1 Removing/Installing The Rubber Boot

In order to open the MultiRAE, it is necessary to remove the belt clip and the rubber boot. Note that there are two hex screws on the bottom rear side that secure the boot.

1. Remove the belt clip by unscrewing the Philips screw (pumped version only).
2. Remove the two hex screws located below the battery area.
3. Pull the bottom of the boot back over the rear side of the instrument.
4. Carefully slide the boot upward, and slide it over the D-ring and clamp.

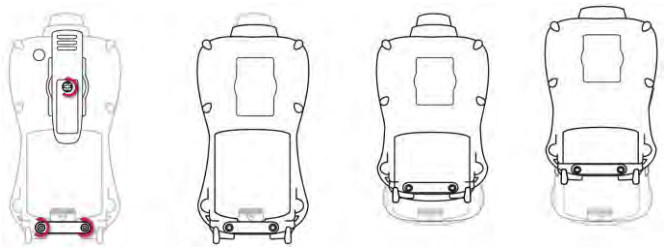

10.2 Replacing The Filter

Pumped Version

If a filter is dirty or clogged, remove it by unscrewing it from the inlet. Discard it and replace it with a new filter.

Diffusion Version

If the filters appear dirty, remove the rear cover to access them (this requires removing the rubber boot first).

Remove the four screws holding the sensor compartment cover in place.

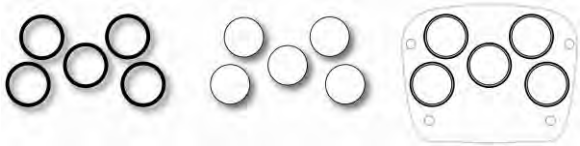

Remove the O-rings and then remove the filters. Replace them with new filters and return the O-rings to their proper locations.

Replace the rear cover and tighten the four screws.

10.3 Replacing The Inlet

When you remove the nozzle, unscrew it in the same manner as the filter. When replacing it, make sure that the arrow on the front points to the triangle on the rubber boot.

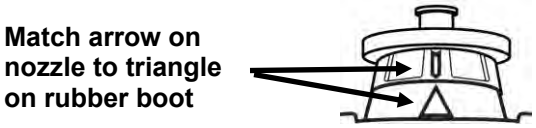

10.4 Removing/Cleaning/Replacing A PID (Pump Version Only)

Note: If you need to access a PID for cleaning or replacement, you must remove the rubber boot and belt clip first.

1. Turn off the instrument.
2. Remove the four screws in holding the MultiRAE sensor compartment cover in place.
3. Remove the cover to expose the sensors.

4. Gently lift out the PID module with your fingers.
5. If the module requires replacement (for example, because the lamp does not illuminate, or the module has been used past its expiration date), place a new module into the slot, being careful to match the indexing keys. The sensor can only go into its slot one way.
6. If you want to open the sensor module to inspect and clean the lamp and sensor electrode panel, you must use the special tool (part number G02-0306-003, package of three). Its "C"-shaped end has small "teeth" inside. Slide the tool so that the teeth slip into the notch between the module's cap and body:

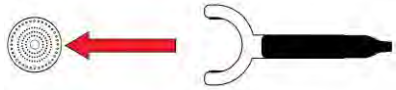

7. Gently pry up the cap using a rocking motion:

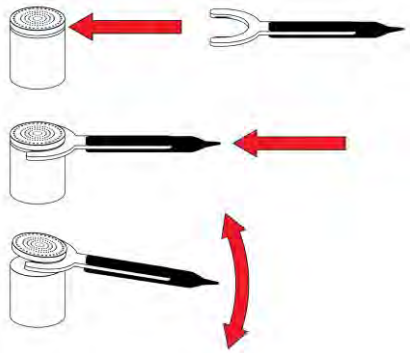

8. Once the cap is removed, set it aside.

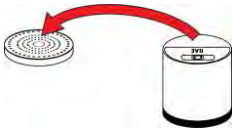

9. Now lift the sensor electrode panel from the module:

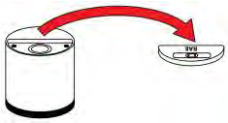

10. Clean the sensor electrode panel in a solution of methanol lamp cleaner (included, along with cleaning swabs, in a PID Lamp Cleaning Kit, part number 081-0002-000), and allow it to dry.

11. Clean the lamp's window with a cleaning swab dipped in methanol lamp cleaner, and allow it to dry. Do not touch the lamp window with your fingers, as the residual oils will shorten its life.

12. Inspect the electrical contacts. Clean them with a swab dipped in lamp cleaner if they appear to need cleaning:

13. Reassemble the sensor module by placing the sensor electrode panel back in place and firmly pressing the cap back onto the top.

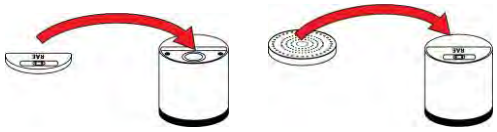

14. Place the sensor module back into the MultiRAE. Make sure the index points are aligned (it can only go in one way).
15. Reinstall the rear cover.
16. Tighten all four screws.

Note: Always calibrate the MultiRAE after replacing the sensor module.

10.5 Removing/Cleaning/Replacing Sensor Modules

WARNING! Do not replace sensors in hazardous locations.

All sensors are located inside the sensor compartment in the upper half of the MultiRAE. They are accessed by removing the cover that is held on by four screws.

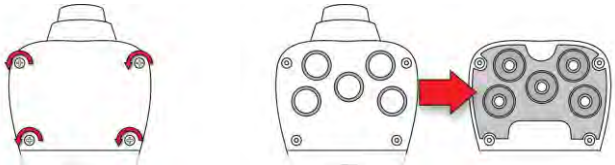

1. Turn off the instrument.
2. Remove the four screws holding the sensor compartment.
3. Remove the cover. The sensors are plugged into the slots.
4. Gently lift out the desired sensor module with your fingers.
5. Install the replacement sensor. It can only go into its slot one way. The connector inside the MultiRAE and the indexing guides are good visual indicators of how to set the sensor into position. Make sure the indexing keys are aligned and that the sensor is seated firmly.

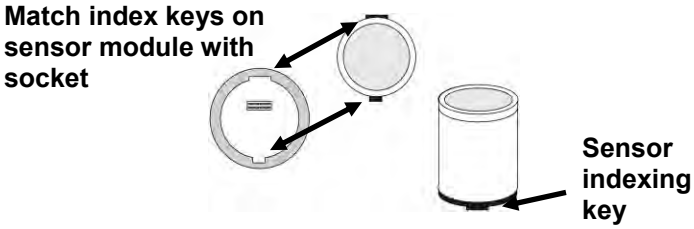

10.6 Replacing The Pump

If your MultiRAE has a pump and it requires replacement, follow these steps. Make sure the battery is removed before proceeding.

1. Remove the rear cover.
2. The pump is held in place by a metal bracket and two Philips screws. Remove the two screws.
3. Lift off the metal bracket.
4. Pressing down on the gas plate with one hand, pull the pump straight out. It has an inlet and outlet that are held in the two holes with rubber gaskets to the left of the pump cavity.

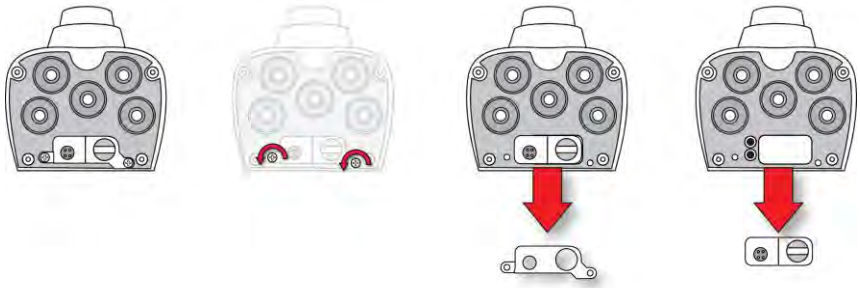

5. Press a new pump into place (a small amount of wiggling helps), making sure that both the inlet and outlet from the pump go into the two holes.
6. Place the metal bracket over the pump.
7. Insert and tighten the two screws that attach the bracket to the housing.
8. Replace the cover.
9. Turn on the instrument and check for proper pump operation.

11 Alarms Overview

The MultiRAE provides an unmistakable five-way alarm notification system that combines local alarms on the device with real-time remote wireless alarm notification to take worker safety to the next level. Local alarms include audible buzzer alarm, visible alarm via bright LED lights, vibration alarm, and an alarm notification on the display. These can be programmed or selectively turned on or off.

Note: The vibration alarm is automatically disabled whenever the alkaline adapter is used.

11.1 Alarm Signals

During each measurement period, the gas concentration is compared with the programmed alarm limits for Low, High, TWA and STEL alarm. If the concentration exceeds any of the preset limits, the alarms are activated immediately to warn both the MultiRAE user and a remote safety officer (if wireless is enabled) of the alarm condition.

In addition, the MultiRAE alarms if one of the following conditions occurs: battery voltage low, pump blocked, PID lamp failed, etc.

When the low battery alarm occurs, there may be approximately 10 minutes of operating time remaining. In this case, it is recommended that you promptly change or charge the battery in a non-hazardous location.

11.2 Changing The Alarm Mode

Your choices are Auto Reset and Latched. A latched alarm stays on until you acknowledge the alarm by pressing a button. An auto-reset alarm turns off when the condition that set off the alarm is no longer present (for instance, a high H2S reading that exceeds the preset threshold and triggers an alarm, but then lowers below that threshold, turning the alarm off).

1. Enter the Alarm Mode sub-menu of the Alarms section under the Programming Menu.
2. Select Auto Reset or Latched by pressing [N/-] to select, and [Y/+] to confirm the choice.
3. Press [Y/+] to save your selection.

11.3 Alarm Signal Summary

Hygiene Mode

Alarm Type	Buzzer & LED	Display	Vibration	Reading	Backlight	Priority
Super Alarm	4 beeps/sec	"Super Alarm" screen	400ms	-	On	Highest
Man Down Alarm	3 beeps/sec	"Man Down Alarm" screen	400ms	-	On	
Man Down Warning	2 beeps/sec	"Are you OK" screen	400ms	-	On	
Fail	3 beeps/sec	"Lamp" at PID location "Off" at LEL location	400ms	Blinking reading	On	
Pump	3 beeps/sec	Blinking pump symbol	400ms	Reading	On	
Max	3 beeps/sec	"Max" at sensor location	400ms	Blinking reading	On	
Over Range	3 beeps/sec	"Over" at sensor location	400ms	Blinking 9999	On	
High	3 beeps/sec	"High" at sensor location	400ms	Reading	On	
Low	2 beeps/sec	"Low" at sensor location	400ms	Reading	On	
Negative	1 beep/sec	"Neg" at sensor location	400ms	0	On	
STEL	1 beep/sec	"STEL" at sensor location	400ms	Reading	On	
TWA	1 beep/sec	"TWA" at sensor location	400ms	Reading	On	
Calibration	1 beep/sec	"Cal" at sensor location	400ms	Reading	On	
Datalog Full	1 beep/sec	Blinking datalog symbol	400ms	Reading	On	
Calib Due	-	Bottle symbol	-	Reading	-	
Battery	1 beep/min	Blinking battery symbol	400ms	Reading	Stays as is	
Nwk Lost	1 beep/min	Blinking RF offline symbol	400ms	Reading	On	
Nwk Joined	1 beep	RF symbol with RSSI	400ms	Reading	On	
Comfort Beep	1 beep/min no LED flash	-	-	Reading	-	Lowest

Notes
"Negative" means that the reading is below zero.
"Nwk Lost" means "Network Lost." This indicates that the MuliRAE has lost wireless connectivity with its network.
"Nwk Joined" means that the MultiRAE has joined a wireless network.

Search Mode

Alarm Type		Buzzer & LED	Display	Vibration	Reading	Backlight	Priority
Super Alarm		4 beeps/sec	"Super Alarm" screen	400ms	-	On	Highest
Man Down Alarm		3 beeps/sec	"Man Down Alarm" screen	400ms	-	On	
Man Down Warning		2 beeps/sec	"Are You OK?" screen	400ms	-	On	
Fail		3 beeps/sec	"Lamp" at PID location "Off" at LEL location	400ms	Blinking reading	On	
Pump		3 beeps/sec	Blinking pump symbol	400ms	Reading	On	
Max		3 beeps/sec	"Max" at sensor location	400ms	Blinking reading	On	
Over Range		3 beeps/sec	"Over" at sensor location	400ms	Blinking 9999	On	
Geiger Counter style Alarm	G7 (>High)	7 beeps(30ms)/sec	No change	400ms	Reading	On	
	G6	6 beeps(40ms)/sec					
	G5	5 beeps(50ms)/sec					
	G4	4 beeps(60ms)/sec					
	G3	3 beeps(70ms)/sec					
	G2	2 beeps(80ms)/sec					
	G1 (>Low)	1 beep(90ms)/sec					
Negative		1 beep/sec	"Neg" at sensor location	400ms	0	On	
STEL		1 beep/sec	"STEL" at sensor location	400ms	Reading	On	
TWA		1 beep/sec	"TWA" at sensor location	400ms	Reading	On	
Calibration		1 beep/sec	"Cal" at sensor location	400ms	Reading	On	
Datalog Full		1 beep/sec	Blinking datalog symbol	400ms	Reading	On	
Calib Due		-	Bottle symbol	-	Reading	-	
Battery		1 beep/min	Blinking battery symbol	400ms	Reading	Stays as is	
Nwk Lost		1 beep/min	Blinking RF offline symbol	400ms	Reading	On	
Nwk Joined		1 beep	RF symbol with RSSI	400ms	Reading	On	

General Alarms

Message	Condition	Alarm Indications
HIGH	Gas exceeds "High Alarm" limit	3 beeps/flashes per second
OVR	Gas exceeds sensor's measurement range	3 beeps/flashes per second
MAX	Gas exceeds electronic circuit's maximum range	3 beeps/flashes per second
LOW	Gas exceeds "Low Alarm" limit*	2 beeps/flashes per second
TWA	Gas exceeds "TWA" limit	1 Beep/flash per second
STEL	Gas exceeds "STEL" limit	1 Beep/flash per second
Crossed pump icon flashes	Inlet blocked or pump failure	3 beeps/flashes per second
"Lamp" flashes	PID lamp failure	3 beeps/flashes per second
Empty battery icon flashes	Low battery	1 flash, 1 beep per minute
CAL	Calibration failed, or needs calibration	1 beep/flash per second
NEG	Zero gas reading measures less than number stored in calibration	1 beep/flash per second

* For oxygen, "low alarm limit" means a concentration is lower than the low alarm limit.

12 Troubleshooting

Problem	Possible Reasons & Solutions
Cannot turn on power after charging the battery	**Reasons:** Defective charging circuit. Defective battery. **Solutions:** Replace battery or charger. Try another charge of battery.
Lost password	**Solutions:** Call Technical Support at +1 408-952-8461 or toll-free at +1 888-723-4800
Buzzer, LED lights, and vibration motor inoperative	**Reasons:** Buzzer and/or other alarms disabled. Bad buzzer. **Solutions:** Check under "Alarm Settings" in Programming Mode that buzzer and/or other alarms are not turned off. Call authorized service center.
"Lamp" message when power on. Lamp alarm.	**Reasons:** Low ion concentration inside PID lamp especially in cold environment when first powered on. Defective PID lamp or defective circuit. **Solutions:** Turn the unit off and back on. Replace UV lamp.
Pump failed message. Pump alarm.	**Reasons:** Inlet probe blocked. Direct connection to a gas outlet while the gas value is turned off. Water trap filter sucks in water. Water trap filter too dirty. Water condensed along the inlet probe. Bad pump or pump circuit. **Solutions:** Remove the blocking objects and then press [Y/+] key to reset the pump alarm. Replace contaminated water trap filter. Be careful not to allow water condensation inside the unit. Replace the pump.

If you need replacement parts, a list is available online:

www.raesystems.com

13 Diagnostic Mode

In Diagnostic Mode, the MultiRAE provides raw counts for sensor, battery, and other readings, as well as a list of installed sensors and information about them (expiration date, serial number, etc.). Most of these screens are useful only to service technicians. A few allow access for changing settings.

The MultiRAE's Diagnostic Mode can only be accessed at startup time. In Diagnostic Mode, MultiRAE displays readings in raw counts instead of units such as parts per million (ppm).

13.1 Entering Diagnostic Mode

1. With the MultiRAE turned off, press and hold both [MODE] and [Y/+].
2. When the display turns on and the password screen appears, release the keys.
3. Enter the 4-digit password (the password is the same as the one for the Programming Mode; the default password is 0000):

   - Step from one position in the four-character string to the other by pressing [N/-].
   - Press [Y/+] repeatedly to select a desired number. Numbers increase from 0 to 9.
   - Once 9 is reached, pressing [Y/+] again "wraps" around back to 0.

4. When you are done, press [MODE]. If you input the correct password, you see the "Product Model" screen.

13.2 Exiting Diagnostic Mode

1. Turn off the MultiRAE by pressing and holding [MODE]. There will be a standard shutoff countdown.
2. When the instrument shuts off, you will be alerted. Release your finger.

Note: The next time you start MultiRAE, hold only [MODE], and it will automatically start in Normal Mode.

13.3 Navigating Diagnostic Mode

Step through Diagnostic Mode by pressing [MODE]. The first screen you see is information about the product, including the serial number, firmware version, etc.:

Press [MODE] to advance through the screens:

- Sensor Firmware
- ExtFlash
- Sensor Installed
- Location 1
- Location 2
- Location 3
- Location 4
- Location 5

- Socket Raw Count
- Calibration Data
- Buzzer
- Pump
- Battery
- RTC (real-time clock)
- Lights/Vibrator
- T.H. (temperature and humidity)
- LCD Contrast
- Position Sensor
- Communicate With Computer? (Datalogging And Measurement Will Pause)

14 Specifications

Instrument Specifications

Size	7.6" H x 3.8" W x 2.6" D (193 x 96.5 x 66 mm)
Weight	Pumped models: 31 oz. (880 g) Diffusion models: 26.8 oz. (760 g)
Sensor	Over 30 intelligent interchangeable field-replaceable sensors, including Gamma radiation, ppb and ppm PIDs, electrochemicals for toxics and oxygen, combustible LEL and NDIR, and CO_2 NDIR
Battery Options	• Rechargeable Li-ion (~12 hours runtime, pumped/18 hours, diffusion; < 6 hours recharge time) • Alkaline adapter for 4 x AA batteries (~ 6 hours runtime, pumped/8 hours, diffusion)
Display	• Monochrome graphical LCD display (128 x 160) with backlighting (activated automatically in dim ambient lighting conditions, when monitor is in alarm, or with a button press) • Automatic screen flipping.
Display Readout	• Real-time reading of gas concentrations; PID measurement gas and correction factor; battery status; datalogging on/off; wireless on/off and reception quality. • STEL, TWA, peak, and minimum values
Keypad	1 operation and 2 programming keys (MODE, Y/+, and N/-)
Sampling	Built-in pump or diffusion. Average flow rate, pumped: 250 cc/min. Auto shutoff in low-flow conditions
Calibration	Automatic with AutoRAE 2 Test and Calibration Station or manual
Alarms	• Wireless remote alarm notification; multi-tone audible (95 dB @ 30 cm), vibration, visible (flashing bright red LEDs), and on-screen indication of alarm conditions • Man Down Alarm with pre-alarm and real-time remote wireless notification
Datalogging	• Continuous datalogging (six months for 5 sensors at 1-minute intervals, 24/7) • User-configurable datalogging interval (from 1 to 3,600 seconds)
Communication and Data Download	• Data download and instrument set-up and upgrades on PC via charging and PC communication cradle, travel charger, or AutoRAE 2 Automated Test and Calibration Station[1] • Wireless data and status transmission via built-in RF modem (optional)
Wireless Network	RAE Systems Dedicated Wireless Network
Wireless Frequency	ISM license-free bands
Wireless Range (Typical)	656 feet (200 meters)
EM Immunity	No effect when exposed to 0.43mW/cm^2 RF interference (5-watt transmitter at 12")
Operating Temperature	-4° to 122° F (-20° to 50° C)

Instrument Specifications *continued*	
Humidity	0% to 95% relative humidity (non-condensing)
Dust and Water Resistance	IP-65 (pumped), IP-67 (diffusion)
Hazardous Location Approvals	Exia Class I, Division 1, Groups A, B, C, D, T4 SIRA 11ATEX2152X, CE 0575 Ex II 1G Ex ia IIC T4 Ga (for PGM62x0/PGM62x6) SIRA 11ATEX2152X, CE 0575 Ex II 2G Ex ia d IIC T4 Gb (for PGM62x8) UM=20V IECEx SIR 11.0069X, Ex ia IIC T4 Ga (for PGM62x0/PGM62x6) IECEx SIR 11.0069X, Ex ia d IIC T4 Gb (for PGM62x8)
CE Compliance (European Conformity)	EMC directive: 2004/108/EC R&TTE directive: 1999/5/EC ATEX directive: 94/9/EC
Performance Tests	LEL CSA C22.2 No. 152; ISA-12.13.01
Languages	Arabic, Chinese, Czech, Danish, Dutch, English, French, German, Indonesian, Italian, Japanese, Korean, Norwegian, Polish, Portuguese, Russian, Spanish, and Swedish
Warranty	• Two years on non-consumable components and catalytic LEL, CO, H_2S, and O_2 sensors • One year on all other sensors, battery, and other consumable parts
Specifications are subject to change.	

Sensor Specifications

Radiation Sensor	Range	Resolution
Gamma	0 to 20,000 microREM/h	1 microREM/h
PID Sensors	**Range**	**Resolution**
VOC 10.6 eV (HR) VOC 10.6 eV (ppb) VOC 9.8 eV[1]	0.1 to 5,000 ppm 10 ppb to 2,000 ppm 0.1 to 1,000 ppm	0.1 ppm 10 ppb 0.1 ppm
Combustible Sensors	**Range**	**Resolution**
Catalytic bead LEL NDIR (0-100% LEL Methane) NDIR (0-100% Vol. Methane)	0 to 100% LEL 0 to 100% LEL 0 to 100% Vol.	1% LEL 1% LEL 0.1% Vol.
Carbon Dioxide Sensor	**Range**	**Resolution**
Carbon Dioxide (CO_2) NDIR	0 to 50,000 ppm	100 ppm
Electrochemical Sensors	**Range**	**Resolution**
Ammonia (NH_3)	0 to 100 ppm	1 ppm
Carbon Monoxide (CO) Carbon Monoxide (CO), Ext. Range Carbon Monoxide (CO), H_2-comp. Carbon Monoxide (CO) + Hydrogen Sulfide (H_2S) Combo	0 to 500 ppm 0 to 2,000 ppm 0 to 2,000 ppm 0 to 500 ppm 0 to 200 ppm	1 ppm 10 ppm 10 ppm 1 ppm 0.1 ppm
Chlorine (Cl_2)	0 to 50 ppm	0.1 ppm
Chlorine Dioxide (ClO_2)	0 to 1 ppm	0.03 ppm
Ethylene Oxide (EtO-A) Ethylene Oxide (EtO-B) Ethylene Oxide (EtO-C), Ext. Range	0 to 100 ppm 0 to 10 ppm 0 to 500 ppm	0.5 ppm 0.1 ppm 10 ppm
Formaldehyde (HCHO)	0 to 10 ppm	0.01 ppm
Hydrogen (H_2)	0 to 1,000 ppm	2 ppm
Hydrogen Chloride (HCl)	0 to 15 ppm	1 ppm
Hydrogen Cyanide (HCN)	0 to 50 ppm	0.5 ppm
Hydrogen Fluoride (HF)	0 to 10 ppm	0.1 ppm
Methyl Mercaptan (CH_3-SH)	0 to 10 ppm	0.1 ppm
Nitric Oxide (NO)	0 to 250 ppm	0.5 ppm
Nitrogen Dioxide (NO_2)	0 to 20 ppm	0.1 ppm
Oxygen (O_2)	0 to 30% Vol.	0.1% Vol.
Phosgene ($COCl_2$)	0 to 1 ppm	0.02 ppm
Phosphine (PH_3) Phosphine (PH_3), Ext. Range	0 to 20 ppm 0 to 1,000 ppm	0.1 ppm 1 ppm
Sulfur Dioxide (SO_2)	0 to 20 ppm	0.1 ppm

All specifications are subject to change without notice.

LEL Range, Resolution & Response Time

LEL 0-100% 1 % 15 sec

LEL Cross-Sensitivity

Compound	LEL Relative Sensitivity*	LEL CF
Methane	100	1.0
Propane	62	1.6
Propene	67	1.5
n-Butane	50	2.0
Isobutylene	67	1.5
n-Pentane	45	2.2
n-Hexane	43	2.3
Cyclohexane	40	2.5
Benzene	45	2.2
Toluene	38	2.6
n-Heptane	42	2.4
n-Octane	34	2.9
Turpentine	34	2.9
Leaded Gasoline	48	2.1
Methanol	67	1.5
Ethanol	59	1.7
Isopropanol	38	2.6
Acetone	45	2.2
Methyl Ethyl Ketone	38	2.6
Ethyl Acetate	45	2.2
Carbon Monoxide	75	1.2
Hydrogen	91	1.1
Ammonia	125	0.80

* Response of the RAE Systems LEL sensor to a range of gases at the same LEL, expressed as percent of methane response (=100). These figures are for guidance only and are rounded to the nearest 5%. For the most accurate measurements, the instrument should be calibrated with the gas under investigation. See RAE Systems Technical Note TN-156 for more details and other compounds.

Caution:
Refer to RAE Systems Technical Note TN-144 for LEL sensor poisoning.

Year Of Manufacture

To identify the year of manufacture, refer to the serial number of the instrument.

The second to last digit in the serial number indicates the year of manufacture. For example, "M" indicates the manufacturing year is 2010.

First digit	Year
J	2008
K	2009
M	2010
N	2011
P	2012
Q	2013
R	2014
S	2015
T	2016
U	2017
V	2018
W	2019

15 Technical Support

To contact RAE Systems Technical Support Team:

Monday through Friday, 7:00AM to 5:00PM Pacific (US) Time
Phone (toll-free): +1 888-723-4800
Phone: +1 408-952-8461
Email: tech@raesystems.com

Critical after-hours support is available:
+1 408-952-8200 select option 9

16 RAE Systems Contacts

RAE Systems
World Headquarters
3775 N. First St.
San Jose, CA 95134-1708 USA
Phone: +1 408.952.8200
Fax: +1 408.952.8480

E-mail: customerserv@raesystems.com
Web Site: www.raesystems.com

RAE Systems Technical Support
Monday through Friday, 7:00AM to 5:00PM Pacific Time
Phone: +1.408.952.8461
Email: tech@raesystems.com

Critical after-hours support is available
+1.408.952.8200 select option 9

RAE Systems Europe ApS
Kirstinehøj 23 A
DK-2770 Kastrup
Denmark
Phone: +45 86 52 51 55
Fax: +45 86 52 51 77
orders@raeeurope.com
sales@raeeurope.com
service@raeeurope.com
Web: www.raesystems.eu

RAE Systems UK Ltd
D5 Culham Innovation Centre
Culham Science Centre
Abingdon, Oxon OX14 3DB
United Kingdom
Phone: +44 1865408368
Fax: +44 1235531119
Mobile: +44 7841362693
Email: raeuk@raeeurope.com

RAE Systems France
336, rue de la fée des eaux
69390 Vernaison
France
Phone: +33 4 78 46 16 65
Fax: +33 4 78 46 25 98
Email: info-france@raeeurope.com
Web: www.raesystems.fr

RAE BeNeLux BV
Hoofdweg 34C
2908 LC Capelle a/d IJssel
The Netherlands
Phone: +31 10 4426149
Fax: +31 10 4426148
Email: info@rae.nl
Web: www.rae.nl

RAE Systems Spain, s.l.
Av. Remolar, 31
08820 El Prat de Llobregat
Spain
Phone: +34 933 788 352
Fax: +34 933 788 353
Mobile: +34 687 491 106
Email: mdelgado@raespain.com
Web: www.raespain.com

RAE Middle East
LOB 7, Ground Floor, Office 19
Jebel Ali Free Zone
Dubai, United Arab Emirates
Phone: +971.4.887.5562
Email: mesales@raesystems.com

RAE Systems (Hong Kong) Ltd.
Room 8, 6/F, Hong Leong Plaza
33 Lok Yip Road
Fanling, N.T, Hong Kong
Phone: +852.2669.0828
Fax: +852.2669.0803
Email: hksales@raesystems.com

RAE Systems Japan
403 Plaza Ochanomizu Bldg. 2-1
Surugadai Kanda Chiyoda-Ku
Tokyo, Japan
Phone: 81-3-5283-3268
Fax: 81-3-5283-3275
Email: jpsales@raesystems.com

RAE Systems Korea
#1010, DaeMyungAnsVill First,
Sang-Dong 412-2, Wonmi-Gu, Bucheon,
Kyungki-Do, Korea
Phone: 82-32-328-7123
Fax: 82-32-328-7127
Email: krsales@raesystems.com

RAE Systems
World Headquarters
3775 N. First St.
San Jose, CA 95134-1708 USA
Phone: 408.952.8200
Fax: 408.952.8480

E-mail: customerserv@raesystems.com
Web Site: www.raesystems.com

Rev C
November 2011
P/N: M01-4003-000

STANDARD OPERATING PROCEDURE

Jerome 631-X Hydrogen Sulfide Monitor

1. Purpose

The purpose of this SOP is to provide general reference information for using the Jerome H_2S analyzer in the field. Calibration and operation, along with field maintenance, will be included in this SOP.

2. Scope

This procedure provides information for the field operation and general maintenance of the Jerome H_2S monitor. This ambient air monitor is capable of detecting hydrogen sulfide concentrations from 0.003 ppb to 50 ppm. A thin gold film, in the presence of hydrogen sulfide, undergoes an increase in electrical resistance proportional to the mass of hydrogen sulfide in the sample. When the SAMPLE button is pressed, an internal pump pulls ambient air over the gold film sensor for a precise period. The sensor absorbs the hydrogen sulfide. The instrument determines the amount absorbed and displays the measured concentration of hydrogen sulfide in ppm.

Review of the information contained herein will ensure that this type of field monitoring equipment will be properly utilized. Review of the owner's instruction manuals is a necessity for more detailed descriptions.

3. Equipment Required

Jerome H_2S monitor and accessories , charger etc. See User's Guide
Zero air filter
Potentiometer adjustment tool (trimmer)
631-X inlet tube (probe)
Intake assembly
Intake filter (0.25 inch fritware) (optional)
Operation Manual

4. Responsibilities

Project Manager(PM) /Construction Manager(CM) - The PM/CM is responsible for ensuring that project-specific plans are in accordance with these procedures, where applicable, or that other approved procedures are developed. The Project Manager is responsible for selecting qualified individuals for the monitoring activities.

Field Team Leader(FTL) and/or Safety Coordinator(SC) - It is the responsibility of the FLT/SC to implement these procedures in the field, and to ensure that the field team performing air

monitoring activities have been briefed and trained to execute these procedures before the start of site operations. FTL/SC is also responsible to ensure that the specified air monitoring equipment is on site, calibrated, and used correctly by the field personnel. The field personnel are responsible for documenting all air monitoring results in the field logbook during each field investigation.

5. Procedures

The Jerome H_2S monitor

The following subsections will discuss Jerome H_2S monitor calibration, operation, and maintenance. These sections, however, do not take the place of the instruction manual.

5.1 Calibration

For Jerome H_2S monitor see page 23 of the attached operation manual.

5.2 Operation

Due to the Jerome H_2S monitor having many functions in terms of operation, it is recommended that you follow the operational procedures as outlined in the instruction manual from pages 10 to 17.

5.3 Maintenance

After each use, intall the zero air filter into the instrument's intake during storage.

Function	Frequency
Check alarm and settings	Monthly/before each use
Change 0.25 fritware	Weekly or as needed
Change internal filters and tubing	Every 6 months
Replace zero air filter	Annually

6. Quality Assurance Records

Quality assurance records will be maintained for each air monitoring event. The following information shall be recorded in the field logbook.

- Identification - Site name, date, location, activity monitored, serial number, time, resulting concentration, comments and identity of air monitoring personnel.
- Field observations - Appearance of sampled media (if definable).
- Additional remarks (e.g, Jerome H_2S monitor had wide range fluctuations during air monitoring activities.)

7. References

Jerome 631-X Hydrogen Sulfide Analyzer Operation Manual, Arizona Instrument LLC., January 2011

USER MANUAL

JEROME® 631-X
HYDROGEN SULFIDE ANALYZER
OPERATION MANUAL

January 2011

ARIZONA INSTRUMENT LLC
3375 N Delaware Street | Chandler, AZ 85225 USA
800.528.7411 | 602.470.1414 | f 602.281.1745

www.azic.com

Email:
General – azi@azic.com
International – intl@azic.com
Customer Service – support@azic.com

JEROME® 631-X

Hydrogen Sulfide Analyzer

Operation Manual

PROPRIETARY RIGHTS NOTICE

This manual contains valuable information and material developed by Arizona Instrument LLC for use with the Jerome® 631-X Hydrogen Sulfide Analyzer. No part of this manual can be reproduced or transmitted in any form or by any means, electronic, mechanical or otherwise. This includes photocopying and recording or in connection with any information storage or retrieval system without the express written permission of Arizona Instrument LLC.

ALL RIGHTS RESERVED

© Copyright 1990-2011, Arizona Instrument LLC

Acrodisc® is a registered trademark of Pall Gelman Sciences, Inc.
Resisorb® is a registered trademark of Avantor Performance Materials.
Tygon® is a registered trademark of Saint-Gobain Performance Plastics Corporation.

AZI Customer Service 800-528-7411 or 602-470-1414

Table of Contents

1. FOR THOSE WHO CAN'T READ THE WHOLE MANUAL NOW 4
2. INTRODUCTION 6
3. PRINCIPLE OF OPERATION 7
Zero Air Filter 8
Gas Flow Schematics 8
4. INSTRUMENT OPERATION 10
LCD Codes 10
Daily Operations 11
Sensor Regeneration 12
Zero Adjust 13
Sample Mode 14
Survey Mode 15
Operating on AC Power or Generator 16
Operating on Internal Battery Power 16
External battery power 16
Charging Batteries 17
Obtaining Maximum Battery Life 17
5. MAINTENANCE 18
Preventive Maintenance Calendar 18
Flow System 19
0.25 inch Fritware Filter 19
Internal Filters 20
Replacing the Battery Pack 21
Setting the Input Voltage 21
Changing the Fuse 22
6. CALIBRATION 23
Verification of Functionality and Quality Control 23
7. 631-X TROUBLESHOOTING 24
8. JEROME® 631-X TECHNICAL SPECIFICATIONS 27
Optional Communications Capability 28
Instrument I/O Interface 28
Potential Interferences 29
9. ACCESSORIES & MAINTENANCE PARTS 30
Spare Parts 32
10. FACTORY CALIBRATION SERVICE 35
11. APPENDIX A - 631-X FUNCTIONAL TEST MODULE 36
Simple Operation 36
12. APPENDIX B - JEROME® COMMUNICATIONS SOFTWARE 37
JCS Kit Contents 38
System Requirements 38
Data Logger Option 38
13. APPENDIX C - INTERNAL DIP SWITCH SETTINGS 39
DIP Switch Settings: 39
14. APPENDIX D - JEROME® 631-X OPTION BOARD 40
Auto-Zero 40
Instrument Zeroing 40
Timed Regeneration 41
Auto-Sample 42
4-20 mA Analog Output 42
SW101 Functions: 42
Connection and Setup: 43
Fresh Air Solenoid 45
DC Power Operation 46
DC Power Adaptor Kit, AZI P/N Y031 0902 46
15. WARRANTY 48

An up-to-date electronic copy of this manual can be found at:
http://www.azic.com/downloads.aspx

1. FOR THOSE WHO CAN'T READ THE WHOLE MANUAL NOW

This manual contains details that will optimize the results and the life of your instrument. Read and refer to the manual for complete details on operation, maintenance and troubleshooting, special voltage inputs and data output.

The Jerome® 631-X is easy to operate and ready for use upon receipt from the factory.

- Remove the instrument from the packing material.

Retain all packaging materials for any future shipment of the instrument.
If the instrument is returned to AZI for any reason, it must be placed in the original packaging materials that have been tested and proven to be effective protection during shipment.

- Call AZI Customer Service at 800-528-7411 or 602-470-1414 for Return Material Authorization (RMA) information prior to returning a unit.
- For all shipments, boxes and packing materials are available from AZI.
- Pack the Jerome® instrument only in a Jerome® shipping container.

AZI WILL NOT BE RESPONSIBLE FOR SHIPPING DAMAGE.
IF YOU RETURN THE INSTRUMENT IMPROPERLY PACKAGED OR SHIPPED,
YOU SHOULD INSURE IT FOR FULL VALUE.

- Check for any damage and confirm receipt of all parts on your packing list. Contact Arizona Instrument Customer Service at (800) 528-7411 or (602) 470-1414 if you have any questions.
- Press the ON button. The display should read 000 in less than one second.
  - A LO BAT message appears briefly in the upper left corner.
  - If the LO BAT light persists, recharge the battery. See page 17.

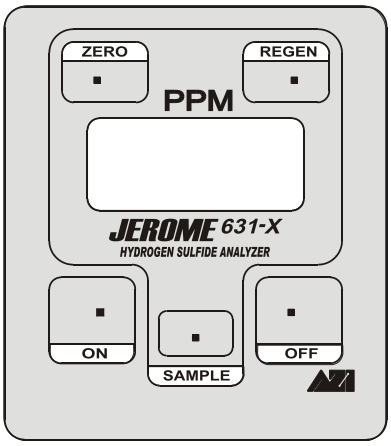

AZI Customer Service 800-528-7411 or 602-470-1414

- Check the voltage setting (110 or 220 VAC) on the back of the instrument. Ensure that it is set to the correct voltage. If the pointer is not aligned to the local voltage, turn the selector to point to the correct voltage.

- Perform a sensor regeneration by following these steps:
  - Connect the line cord between the connector on the back of the 631-X and an AC power outlet.
  - Press the ON switch and then press the REGEN button.
    - The instrument will begin a 10 minute regeneration cycle, indicated by .H.H.H flashing on the display. **Do not interrupt this cycle.** For a complete description of this process, see page 12.
    - If any error message, such as .P.P.P, appears on the display, see the "Troubleshooting" section beginning on page 24.
- When regeneration is complete, zero the sensor by pressing the ZERO button and turning the zero adjust screw, located under the handle, until the display reads 0.
- The instrument is now ready to sample.
- To ensure the input to the instrument contains no hydrogen sulfide or mercaptans, use a Zero Air Filter, AZI P/N Z2600 3905. The Zero Air Filter cleans the air sample and should produce sample readings of less than 0.003 ppm. Therefore, use the filter to:
  - Equilibrate the instrument to temperatures that are higher or lower than the instrument. Sample with filter installed until the reading is below 0.003 ppm.
  - Identify contamination within the unit.
  - Confirm the presence of hydrogen sulfide when readings are elevated. Install filter and verify that the readings go down with filter installed.
- When the instrument measures hydrogen sulfide, the zero display will be replaced with a value.

CAUTION

Do not adjust the ZERO after the instrument has measured hydrogen sulfide or before the next regeneration. (Occasionally the display may drop to .L.L.L (indicating low) between the initial zeroing and the first sample. It is OK to readjust the ZERO if the instrument has not measured hydrogen sulfide.)

- The instrument is designed for ambient air monitoring. **DO NOT allow the probe or the instrument's intake to be exposed to any liquid.**
- The instrument is not explosion proof.
- Press the SAMPLE button to start a 10 second sampling cycle.
- Perform sensor regeneration after each day's testing.
- Perform another sensor regeneration and re-zero the instrument before each day's use.
- Perform sensor regeneration after 30 days of storage or inactivity.

Call AZI Customer Service, at (800) 528-7411 from the United States and Canada or (602) 470-1414 if you have any questions. If you prefer, you may send e-mail to support@azic.com

2. INTRODUCTION

The Jerome® 631-X Hydrogen Sulfide Analyzer is an ambient air analyzer with a range of 0.003 ppm to 50 ppm (parts per million).

CAUTION:

The Jerome® 631-X is for vapor use only.
DO NOT allow the probe or the instrument's intake to be exposed to any liquid, dust or other foreign material.

The 631-X is designed to be easy to operate for quick and accurate analysis of hydrogen sulfide vapor levels. It has few maintenance requirements. However, please take a moment to read this manual before attempting operation. If you have any questions about your application or operation, please call AZI Customer Service at (800) 528-7411 or (602) 470-1414 or e-mail support@azic.com for assistance.

631-X Features

- Accurate analysis of hydrogen sulfide in seconds
- Wide detection range allows multiple applications
- Survey mode for rapid source detection of hydrogen sulfide concentrations
- Rechargeable internal battery pack for portability
- Automatic backlight for LCD during low light conditions
- Microprocessor ensures a linear response throughout the entire range of the sensor
- Inherently stable gold film sensor

Optional Accessories

- Data Logger, P/N Y990-0169, to record field monitoring information
- Jerome® Communication Software Kit, P/N Y990-0168, for unattended fixed-point sampling and downloading information from the data logger to a computer.
- Option Board (factory installed option) for external fresh air solenoid support, auto-zeroing, DC power operation, timed regeneration, 4-20 mA or 0-2 V analog output, and timed sampling
- Functional Test Module (FTM) (P/N Z2600 0918 or Z2600 0930) and Accessory Kit (Y2600 0920), for field verification of instrument functionality.
- Field Carrying Cases, hard sided P/N Y411 0904 or soft P/N 1400 0052, for versatile handling and additional storage
- Maintenance Kit, P/N Y631 0905 for routine maintenance and upkeep

Applications

- Ambient air analysis
- Odor nuisance monitoring
- Regulatory compliance
- Control room corrosion monitoring
- Quality control
- Scrubber efficiency testing
- Accuracy check for other hydrogen sulfide monitors and control systems
- Hydrogen sulfide source detection
- Leak detection
- Portable hydrogen sulfide detection

The Jerome® 631-X can be operated from 100-120 or 200-240 VAC. To change the default voltage range, refer to "Setting the Input Voltage" on page 21.

3. PRINCIPLE OF OPERATION

A thin gold film, in the presence of hydrogen sulfide, undergoes an increase in electrical resistance proportional to the mass of hydrogen sulfide in the sample.

When the SAMPLE button is pressed, an internal pump pulls ambient air over the gold film sensor for a precise period. The sensor absorbs the hydrogen sulfide. The instrument determines the amount absorbed and displays the measured concentration of hydrogen sulfide in ppm. During normal sampling, the ambient air sample is diluted in the flow system at a ratio of 100:1. When sampling in Range 0, (where low levels of hydrogen sulfide are expected) undiluted air samples are drawn across the gold film sensor.

The instrument's microprocessor automatically re-zeroes the digital meter at the start of each sample cycle and freezes the meter reading until the next sample cycle is activated, thus eliminating drift between samples.

During the sample mode cycle, bars on the LCD represent the percentage of sensor saturation. Depending on the concentrations, 50 to 500 samples may be taken before the sensor reaches saturation. At that point, a 10-minute heat cycle must be initiated to remove the accumulated hydrogen sulfide from the sensor. During the sensor regeneration cycle, both solenoids are closed to cause air to pass through a scrubber filter and provide clean air for the regeneration process. The flow system's final scrubber filter prevents contamination of the environment.

The heat generated during the regeneration may cause some low level thermal drift. To ensure maximum sample accuracy, wait 30 minutes after regeneration before zeroing and using the instrument.

Zero Air Filter

The Zero Air Filter removes mercury vapor, mercaptans, and hydrogen sulfide from the air sample. Readings with the filter installed should be near zero.

Because air that is cooler than the instrument will cause low readings and warmer air will cause higher readings, the Zero Air Filter should be used to equilibrate the unit to ambient air temperature. Continuous sampling with clean air will not cause saturation of the gold film sensor but will equalize temperatures faster to allow accurate analysis to begin sooner. For best results, be sure that the instrument is at the same temperature as the environment before testing.

The Zero Air Filter can also be used to identify contamination within the instrument. If the readings do not reduce to near zero with the filter installed, contamination should be suspected. If the readings do drop to near zero with the filter installed but elevate with the filter removed, the presence of hydrogen sulfide at the sampled location is confirmed.

For more information on the use of the Zero Air Filter, contact customer service at 1-800-528-7411, 1-602-470-1414, or visit our web site at http://www.azic.com.

Gas Flow Schematics

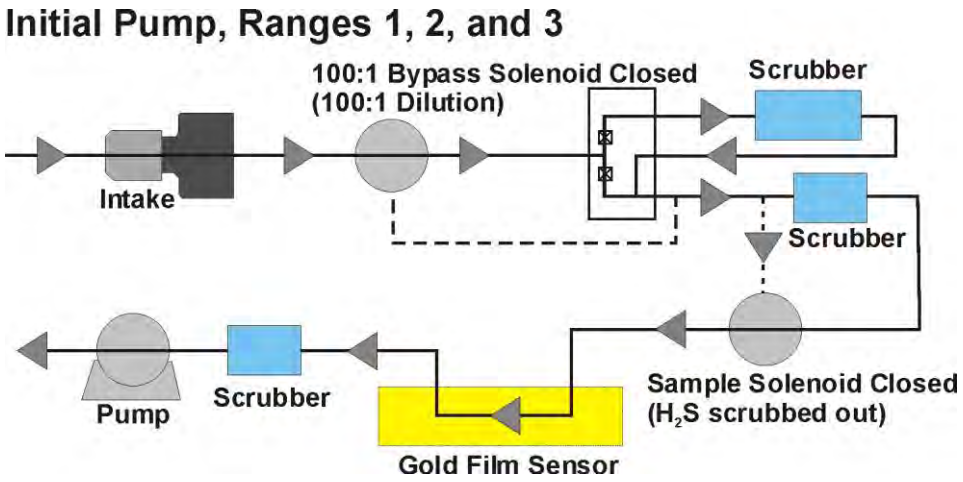

Sample Period, Ranges 1, 2, and 3

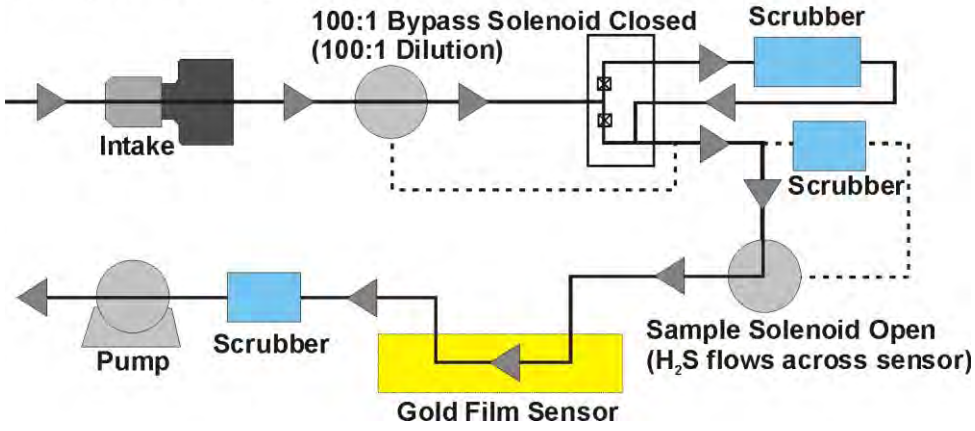

Initial Pump, Ranges 0

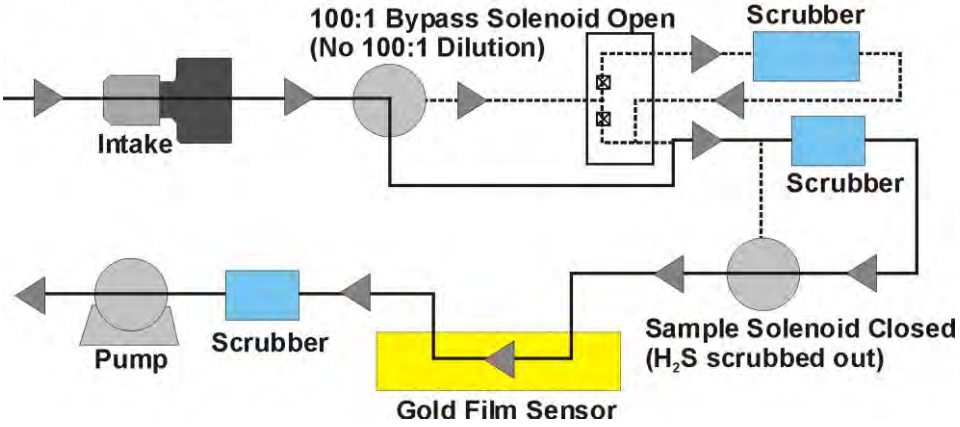

Sample Period, Ranges 0

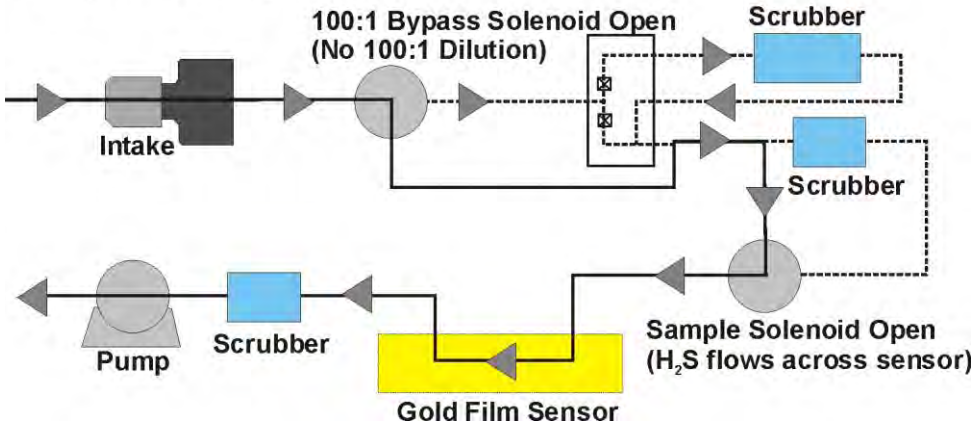

4. INSTRUMENT OPERATION

LCD Codes

LCD CODE	EXPLANATION
000	Ready to sample
.000	No hydrogen sulfide reading
.8.8.8	Sensor saturated-regeneration needed (refer to page 12)
.H.H.H	Sensor regeneration in progress (.H.H.H flashes)
.L.L.L	Re-zero needed (refer to page 13)
.P.P.P	Power cord required or low line power, <100 VAC (or 200 VAC) (see pages 16 and 17, Changing the Fuse, if .P.P.P remains on after the cord is connected.)
.LO BAT	Recharge batteries (refer to page 17)
.E.E.E	Same as LO BAT, automatically shuts off
.HL	Very high concentration has been detected. Refer to your safety policy for additional direction to confirm the concentrations."
DURING SAMPLING	
.-	0-25% sensor saturation
.--	25-50% sensor saturation
.---	50-75% sensor saturation
-.---	75-100% sensor saturation
DURING SAMPLING, USING SURVEY MODE	
-	Survey sampling (minus sign flashes continuously)
WHEN ZERO IS DEPRESSED	**Adjust to 0 only after sensor regeneration. It is normal for the display to read H after sampling has started.**
0	Zero, ready to sample
H	High, turn Zero potentiometer counterclockwise
L	Low, turn Zero potentiometer clockwise

Daily Operations

Before each day's use of the Jerome® 631-X, perform the following steps to verify proper instrument operation:

- Press the power ON button.
  - ➢ The digital meter displays 000.
    - ♦ (Disregard the digital meter's initial momentary reading.)
    - ♦ Recharge or replace the battery pack if the LO BAT indicator REMAINS ON. Refer to "Charging Batteries" on page 17 and/or "Replacing the Battery Pack" on page 21.
    - ♦ To ensure the instrument's electronics have stabilized, allow a 1-minute warm up before beginning the next step.
- Use the Zero Air Filter to equilibrate the instrument to ambient air temperature.
  - ➢ Install the Zero Air Filter in the instrument's intake.
  - ➢ Sample continuously until the readings stabilize.

- Perform sensor regeneration. Refer to page 12 for the procedure.

- Thirty minutes after sensor regeneration is complete, zero the instrument. See page 13.

  NOTE: For maximum accuracy, such as when testing with the Functional Test Module, wait 30 minutes after the sensor regeneration cycle to re-zero the unit. For immediate use, the unit can be re-zeroed immediately after sensor regeneration. See the notes on page 13.

- Press the SAMPLE button.
  - ➢ During the sample cycle, the digital meter displays bars (-, --, or ---) to indicate the amount of sensor saturation.

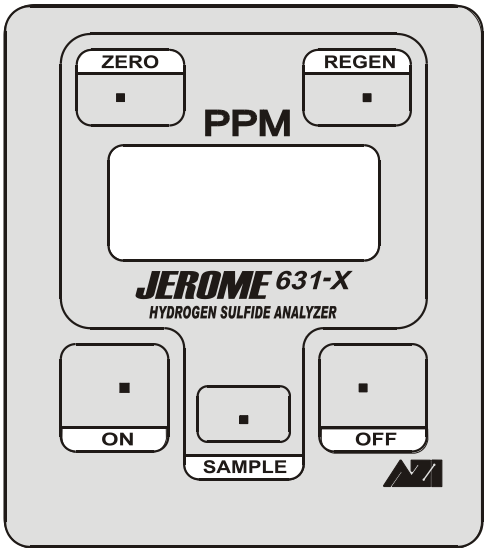

- At the end of the sampling cycle, read the digital meter.
  - ➢ The number shown on the digital meter is the hydrogen sulfide concentration in ppm.
  - ➢ This value remains on the display until the next sample is taken.
  - ➢ The digital meter automatically zeroes at the start of each sample.

- At the end of each day's use, perform sensor regeneration as described in the next section.

DO NOT ALLOW HYDROGEN SULFIDE TO STAY ON THE GOLD FILM SENSOR OVERNIGHT.

Sensor Regeneration

Sensor regeneration is needed to clear the 631-X sensor of any accumulated hydrogen sulfide. This simple procedure should be done:

- At the beginning of the day on which the instrument is to be used.
- During the day when the sensor becomes saturated.
- At the end of the day before storing the instrument.

CAUTION:

Ensure the voltage selector on the back of the instrument, near the power cord inlet connector, points to the local AC power value. See "Setting the Input Voltage" on page 21.

To clean and protect the sensor, the supplied AC power must be 100 to 120 VAC or 220 to 240 VAC, depending on the available power source.

Once sensor regeneration is initiated, DO NOT interrupt the cycle.

- Attach the power cord to the 631-X and plug it into AC power. AC power is required to thermally regenerate the sensor.
- Press the power ON button.
- Press the REGEN button.
  - ➢ The digital meter flashes .H.H.H for the duration of the 10-minute cycle and displays .0.0.0 when the cycle is completed.

DO NOT INTERRUPT THIS CYCLE.
Wait until the cycle is completed before continuing with the next step.

- **A minimum 30-minute wait after the sensor regeneration cycle is complete ensures maximum sample accuracy. However, the unit can be used immediately following the sensor regeneration if necessary. When the sensor regeneration is complete, press ZERO and adjust the ZERO ADJUST pot until 0 appears on the display. Install the zero air filter in the intake and take several samples or lock the instrument into survey mode (see page 15). After approximately one minute, stop sampling and check the ZERO. Adjust to 0. Repeat sampling through the zero air filter until reading remains on 0.**

NOTE: The digital meter will read .P.P.P after REGEN is activated if the power cord is not plugged in or if the instrument's fuse needs to be replaced. Connect the power cord, or if necessary, replace the fuse. See "Changing the Fuse" on page 22.

Zero Adjust

- To ensure air entering the instrument is clean, install the zero air filter in the instrument's intake and sample until the readings stabilize.
- While pressing the ZERO button, turn the ZERO ADJUST potentiometer (shown at right) using the trimmer tool until the digital meter reads 0.
  - If the LCD reads H, turn the ZERO ADJUST counter-clockwise;
  - If the LCD reads L, turn the ZERO ADJUST clockwise.

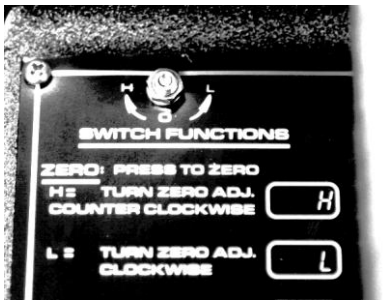

NOTE: A minimum 30-minute wait after the sensor regeneration cycle is complete ensures maximum sample accuracy. The unit can be used immediately following the sensor regeneration if necessary. When the sensor regeneration is complete, press ZERO and adjust the ZERO ADJUST pot until 0 appears on the display. Install the zero air filter in the intake and take several samples or lock the instrument into survey mode (see page 15). After approximately one minute, stop sampling and check the ZERO. Adjust to 0 if necessary. Repeat sampling through the zero air filter until sensor remains on 0.

NOTE: When ZERO is pressed, depending upon internal configuration, a number between 00 and 100 may appear on the display instead of H, L, or O. See APPENDIX C - INTERNAL DIP SWITCH SETTINGS, on page 39, for details. If the instrument is configured with an Option Board, see APPENDIX D - JEROME® 631-X OPTION BOARD beginning on page 40.

CAUTION:
Do not turn the ZERO ADJUST potentiometer between samples.

Turn the ZERO ADJUST only after a sensor regeneration cycle, otherwise invalid readings will result.

- Press the power OFF button and disconnect the power cord.
- The Jerome® 631-X is ready for sampling.

CAUTION:
The Jerome® 631-X is intended for vapor use only. DO NOT allow the probe or the instrument's intake to be exposed to liquids, dust or other foreign material. Moisture or liquids drawn into the instrument can damage the sensor and flow system.

Sample Mode

This is the standard operation mode and is used for optimum accuracy.

- Press the power ON button.
  - The LCD displays 000.
  - Disregard the LCD's initial momentary readings.
  - Recharge or replace the battery pack if the LO BAT indicator REMAINS ON, see page 17 and/or page 21 if necessary.

- Allow a 1-minute warm up before beginning the next step to ensure the instrument's electronics have stabilized.

- Press the SAMPLE button.
  - During the sampling cycle, the bar (or bars) shown on the LCD indicates the current percentage of sensor saturation. (Refer to "LCD Codes" on page 10 for code descriptions.)
  - The length of the sample cycle depends on the concentration of hydrogen sulfide.

RANGE	CONCENTRATION	RESPONSE TIME	ACCURACY at MID-RANGE
0	0.001 to 0 .099 ppm	30 Seconds	◯ 0.003ppm at 0.050ppm
1	0.10 to 0.99 ppm	25 Seconds	◯ 0.03ppm at 0.50ppm
2	1.0 to 9.9 ppm	16 Seconds	◯ 0.3ppm at 5.0ppm
3	10 to 50 ppm	13 Seconds	◯ 2ppm at 25ppm

- At the end of the sampling cycle, read the LCD.
  - The number shown on the digital meter is the hydrogen sulfide concentration in ppm.
  - As the instrument auto-ranges, the decimal point moves to the correct position to show the concentration.
  - The value remains displayed until the next sample is taken. The digital meter will then automatically zero before displaying the next sample value.
  - When elevated readings are detected:
    - Confirm the reading by taking an additional sample.
    - Install the zero air filter and verify that the readings reduce to zero or very near zero.
    - Remove the filter and sample the location again to verify that elevated readings do exist.
  - When the sensor is completely saturated, the LCD displays .8.8.8 instead of a value. No further operation is possible until sensor regeneration is performed. (Refer to "Sensor Regeneration" on page 12.)
- Press the power OFF button when not in use.

Note: The Jerome® 631-X operates approximately six (6) hours on a fully charged battery.

Survey Mode

The survey mode takes samples every 3 to 20 seconds automatically. The length of time varies with the hydrogen sulfide concentration. Use this mode to locate the source of hydrogen sulfide, such as a leak, a hot spot, or to assess areas of potentially high hydrogen sulfide concentrations. After the survey mode is activated, the 631-X samples continuously.

- Press the power ON button.
  - The digital meter displays 000.
  - Disregard the LCD's initial momentary readings.
  - Recharge or replace the battery pack if the LO BAT indicator REMAINS ON, see page 17 and/or page 21 if necessary.

- Allow a 1-minute warm up before beginning the next step to ensure the instrument's electronics have stabilized.

- Lock the instrument in the survey mode:
  - Hold the SAMPLE button down until the sensor status indicator bar(s) begin flashing on the display.
  - Press the ZERO button, then release the SAMPLE button.
  - The pump should continue to run and the display should update every survey cycle.

- The instrument remains in the survey mode until one of the following occurs:
  - The sensor is saturated.
  - A LO BAT (low battery) signal is encountered.
  - An HL (high hydrogen sulfide level) is encountered.
  - The instrument is turned OFF.

- Press the power OFF button to end the survey mode.

RANGE	CONCENTRATION	RESPONSE TIME
0	0.001 to 0 .099 ppm	20 Seconds
1	0.10 to 0.99 ppm	15 Seconds
2	1.0 to 9.9 ppm	6 Seconds
3	10 to 50 ppm	3 Seconds

NOTE: Approximately 100 samples at 0.5 ppm may be taken before the sensor saturates and regeneration is required.

Operating on AC Power or Generator

- For stationary use, the 631-X may be operated on AC power.
  - Operating the instrument on AC power at all times eliminates the need for the battery pack and its necessary maintenance.
  - The battery may be unplugged or removed completely whenever the instrument is operating on AC power.

- When a generator is used to power the Jerome® 631-X, a high quality line conditioner or voltage regulator is required to ensure a pure sine wave and regulated voltage is applied to the instrument. The gold film sensor may be damaged by voltage that varies in amplitude or by surges, spikes, and/or noise on the power line.

Operating on Internal Battery Power

- For portable use, the 631-X may be operated on Battery power.
  - When you operate the instrument on battery power, please be aware of the following:
    - A fully charged battery pack, AZI P/N Z4000 0907 (115V) or Z4000 0908 (230V), provides power for a minimum of six (6) hours of operation.
    - For operating more than six (6) hours, an extra fully charged battery pack is needed.
    - Complete battery recharging takes 14 hours. Refer to Charging Batteries on page 17.
    - The 631-X uses a rechargeable Nickel Cadmium (NiCad) battery. Dispose of worn-out batteries properly when you are replacing the battery pack.

External battery power

A special version of the Jerome® 631-X and a DC Power Kit are available to operate the instrument from a secondary DC source. The source may be a car/truck battery or a storage cell used in conjunction with solar panels.

Call AZI Customer Service at 800-528-7411, 602-470-1414, or e-mail support@azic.com for additional information.

Charging Batteries

- Press the power OFF button.
- Connect the AC power cord between the 631-X power receptacle and an AC power source.
  - Complete battery recharging takes 14 hours.
  - The 631-X contains a trickle charger so it may be continually plugged into an AC power source without damaging the battery pack.
- The battery pack may be charged outside the instrument with an optional AZI IDC Battery Charger. (AZI P/N 4000-1011, for 115 VAC, P/N 4000-1012, for 230 VAC)

Obtaining Maximum Battery Life

There are certain inherent limitations to NiCad batteries. The primary limitation is a memory effect that occurs when the batteries are partially discharged and then recharged, repeatedly. This memory leads to a drastic reduction in the usable battery life. To prevent this memory effect, periodically allow the battery pack to discharge completely, and then recharge the battery pack.

- To obtain maximum battery life, follow these three (3) steps:
  - At least once a month wait until LO BAT appears on the digital meter before recharging the battery pack.
  - Charge the battery pack when the LO BAT indicator comes on. Excessive discharge can damage the battery pack.
  - Before storing the instrument verify the power is OFF.

- When the batteries fail to hold a charge, the battery pack should be replaced.
  - Battery life under normal usage is approximately 1 year, depending on the number of charge and discharge cycles.

5. MAINTENANCE

Preventive Maintenance Calendar

To keep the Jerome® 631-X operating at peak performance, follow the maintenance schedule below as a guide. Since maintenance is more a function of application and amount of use rather than time, your requirements may be different from the listed schedule. Call AZI Customer Service at 800-528-7411, 602-470-1414, or e-mail support@azic.com for additional guidance for your environment and operation.

PART/COMPONENT	MAINTENANCE CYCLE	REFER TO PAGE
Charge batteries	At least once per month, after 1 month's storage, or when LO BAT appears	Page 17
Change 0.25 inch fritware	Weekly or as needed	Page 19
Change internal filters and tubing	After 6 months of use or as needed	Page 20
Replace zero air filter[1]	Annually	
Factory calibration	Annually	Page 23
Calibration check	Monthly or as needed	Appendix A, Page 36
Replace batteries	Annually or as needed. The battery pack contains NiCad batteries. Dispose of properly.	Page 21

NOTE: Install the zero air filter into the instrument's intake during storage.

[1] Zero air filters, LFS and LFD scrubber filters contain Resisorb®. Call AZI Customer Service at 800-528-7411, 602-470-1414, or e-mail support@azic.com for a copy of the Material Safety Data Sheet. Dispose of all filters properly.

Flow System

The Jerome® 631-X's flow system is the crucial link between the sensor and the sample. For the instrument to perform correctly, the flow system must be properly maintained. The user maintainable components of this system are the intake filter (0.25 inch fritware), two scrubber filters and connecting tubing.

Check the Preventive Maintenance Calendar on page 18, for a suggested schedule for changing fritware and scrubber filters. The Tygon® tubing in the system must be free of crimps for proper flow.

Part	Part Number
Scrubber Filter	Z2600 3930
LFS Scrubber Filter	Z2600 3933
LFD Scrubber Filter	Z2600 3934
0.25 inch Fritware Filter	2600 3039
Tygon® Tubing - 1/8" I.D. (1')	2500 3001
Tygon® Tubing - 1/16" I.D. (1')	2500 3002

0.25 inch Fritware Filter

Replace the 0.25 inch fritware filter once each week or as needed. In dusty environments, the fritware filter may need to be replaced as often as once a day. Replacement 0.25-inch fritware filters are available from AZI, Consumable Sales at 800-528-7411 or 602-470-1414.

- Unscrew and remove the intake.

- Push the old fritware filter disc out of the intake with your trimmer tool.
- Avoid touching the new fritware disc with fingers. Use tweezers to insert the new fritware.
- Use the blunt end of the trimmer tool to seat the fritware disc firmly against the inner ledge of the intake.
- Screw the intake back on the Jerome® 631-X.

CAUTION:

The stem coming from the instrument onto which the outer intake housing is attached must be securely held in place. If loose, the tubing inside the instrument can become twisted when the intake housing is replaced. It may be necessary to open the instrument and tighten the hold-down nuts inside the instrument. Call AZI Customer Service at 800-528-7411, 601-470-1414, or e-mail support@azic.com if you have any questions

Internal Filters

- Replace the internal filters after six (6) months of use, or as needed.
- Press the power OFF button and unplug the power cord.
- Remove the two (2) side screws from the intake end of the instrument and open the case.
- Carefully disconnect the Tygon® tubing from both ends of the filters and discard the old filters.

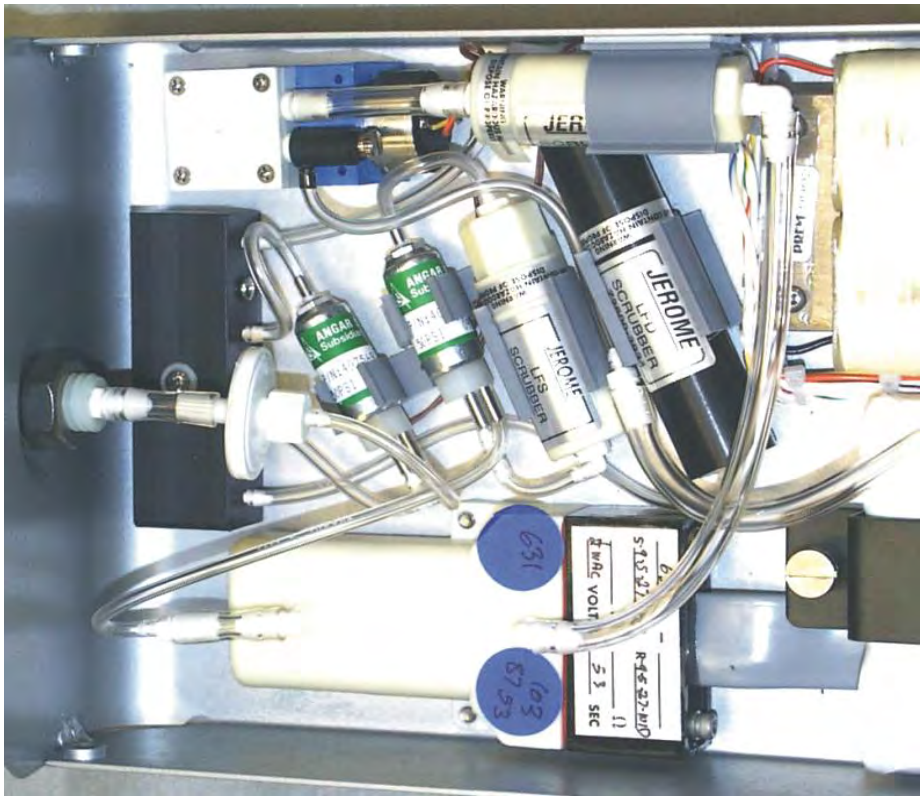

CAUTION:
Scrubber filters contain Resisorb®. Used filters, especially the scrubber filter may contain hydrogen sulfide also. Use proper methods when disposing of used filters. Call AZI Customer Service at 800-528-7411, 601-470-1414, or e-mail support@azic.com for a copy of the Resisorb® MSDS or for other questions.

- Connect the new filters to the Tygon® tubing, ensuring all straight hose barbs point toward the intake/pump corner of the case and elbow hose barbs point toward the sensor housing as shown in the illustration.
  - ➢ Push the Tygon® as far as it will go onto the filter fittings.
- Push the filters into the mounting clips.
- Remove any crimps or twists in the tubing and ensure that tubing connections are secure. If the tubing is loose, readings may not be accurate. Replace any tubing that has deteriorated due to heat and/or age.
- Close the case and replace the screws.
- Dispose of all filters in accordance with state and federal environmental regulations.

Replacing the Battery Pack

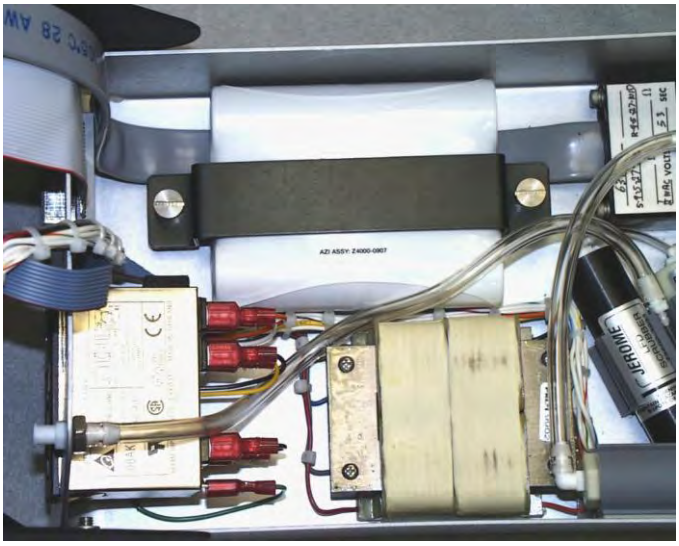

- Press the power OFF button.
- Unplug the power cord.
- Remove the two (2) side screws from the intake end of the instrument and open the case lid.
- Disconnect the battery connector from the board.
- Loosen the two (2) captive screws holding the battery bracket and remove the bracket.
- Remove the old battery pack and replace with a new battery pack.
- Replace the battery bracket and tighten the captive screws.
- Connect the new battery connector to the board.
- Close the case and replace the two (2) side screws.
- Dispose of the old NiCad battery in accordance with state and federal regulations.

Setting the Input Voltage

Instruments are factory set and calibrated to use the power setting requested on the order. However, the voltage setting is easily changed to use either 110 or 220 VAC.

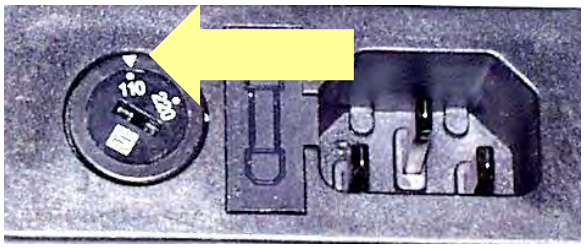

- Ensure the instrument is turned OFF and unplugged.
- Locate the voltage selector on the rear of the instrument.
- Insert a small screwdriver in the voltage selector slot and turn the selector until the arrow points toward your setting choice and a click is heard.

Changing the Fuse

If the instrument display reads .P.P.P when the instrument is connected to AC power or when REGEN is pressed, or if the battery will not charge, the fuse may need to be replaced. The AC line power could also be less than 100 VAC (220 VAC). Check the fuse with an ohmmeter and the AC line power with a voltage meter.

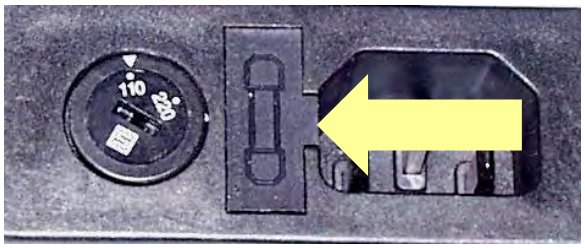

- Locate the power receptacle on the rear of the instrument.
- Insert a small screwdriver in the slot, located in the power receptacle, and gently slide the fuse compartment out.
- If the fuse in the open-sided clip is open, remove and discard it.
- Replace the discarded fuse with the spare fuse located in the slide-out spare fuse compartment.
- Replace the fuse compartment in the power receptacle.
  - As soon as possible, replace the spare fuse with another 1A, 250V, time delay fuse, AZI P/N 5100 1012).

AZI Customer Service 800-528-7411 or 602-470-1414

6. CALIBRATION

The Jerome® 631-X's gold film sensor is inherently stable and does not require frequent calibration. The interval between calibrations depends upon the application and frequency of use; however, the recommended interval is every 12 months.

The Jerome® 631-X has been factory calibrated using laboratory equipment containing NIST traceable permeation tubes. In order to calibrate the Jerome® 631-X, a sophisticated calibration system is required that ensures stability of the calibration gas source, eliminates any pressure in the calibration gas stream, and controls the temperature of the calibration environment. Calibration requires the controlled environment, gas source, and computer software available only at the factory or authorized repair/calibration facility.

We strongly recommend you take advantage of our calibration and maintenance service at Arizona Instrument. Call Customer Service at (800) 528-7411 or (602) 470-1414 to arrange re-calibration. A certificate of calibration is issued from AZI when your instrument is factory calibrated.

Verification of Functionality and Quality Control

The Functional Test Module, AZI P/N Z2600 0918 or Z2600 0930, is used to determine if your instrument is functioning correctly between recommended annual factory calibrations. It allows you to have complete confidence in the sample results. This test verifies proper instrument operation through the introduction of a known concentration of hydrogen sulfide into the Jerome® analyzer.

THIS IS A FIELD CHECK OF THE FUNCTIONALITY OF THE INSTRUMENT.

THIS TEST DOES NOT CALIBRATE THE INSTRUMENT.

If your application requires frequent verification of instrument function, this test demonstrates the unit's operation and function. Recording FTM results in an instrument log provides a quality control/quality assurance record of instrument function between regular calibrations. If test results fall within the expected range, you may assume the instrument is functioning correctly.

See APPENDIX A - 631-X FUNCTIONAL TEST MODULE on page 36 for more information about the FTM procedures. Complete instructions for use are supplied with the test kit, AZI P/N Z2600 0918 or Z2600 0930.

To order the FTM, contact your AZI Sales Representative at (800) 528-7411 or (602) 470-1414.

7. 631-X TROUBLESHOOTING

Symptom	Possible Cause	Solution
Power Problems		
Unit does not turn ON. Unit turns on when power cord is plugged in. LCD displays 000 when instrument is operating on AC power.	Discharged battery or Dead battery.	Recharge battery for a minimum of 14 hours. Refer to page 17. Replace battery. Refer to page 21.
Unit does not turn on when connected to AC power cord.	Open fuse. Insufficient power. Internal component failure.	Replace fuse. Refer to page 22. Use a voltmeter to verify there is power to the AC outlet. Call AZI Customer Service for information at 800-528-7411 or 602-470-1414.
Regeneration & Zero Problems		
LCD displays .8.8.8.	Sensor saturated.	Do not attempt to adjust zero pot. The sensor must be regenerated. Refer to page 12 for information.
LCD displays .L.L.L when taking first sample.	Changes in temperature.	Readjust zero pot. See page 13 for information.
LCD displays H at finish of sensor regeneration when zero is pressed.	Internal contamination may redeposit hydrogen sulfide from flow system onto gold film sensor.	Remove and replace fritware filter, intake filter disk, scrubber filters and Tygon® tubing. Refer to "Flow System" on page 19. Check tubing for kinks or crimps. Repeat regeneration cycle. Refer to page 12.
Zero adjust pot cannot be adjusted to 0.	Pot not turned sufficiently. Sensor may be ruptured or pot may be broken.	1. Turn zero adjust up to 20 times to reach the end. Pot will "click" softly. 2. If no "0", turn pot slowly in opposite direction until display reads "0". 3. If still unchanged, call AZI Customer Service at (800) 528-7411 or 602-470-1414.

Sampling Problems		
Airflow is restricted during the sensor regeneration cycle, causing possible permanent damage.	Kinks and crimps in the Tygon® tubing.	Periodically check the Tygon® tubing inside the instrument. Refer to page 20.
High erratic results.	Internal hydrogen sulfide contamination.	1. Install zero air filter in intake and tighten intake nut. Press SAMPLE button. After three samples, if readings are over 0.003 ppm, replace fritware filter, intake filter disk, and Tygon® tubing. Refer to page 19. 2. Perform sensor regeneration with the zero air filter in intake. Refer to page 12. Retest if necessary. Replace scrubber filters and Tygon® tubing. Refer to page 20.
High/erratic results	Intake and internal filters may become clogged and need replacement when sampling in a dusty or humid area.	1. Open instrument and check for pinched, crimped or disconnected internal tubing. 2. In extreme conditions, an additional particle filter may be installed on the intake.
High/erratic results Readings vary more than 0.003 ppm when in survey mode.	Loose connections to gold film sensor.	Place a zero air filter into the intake. Place the instrument in survey mode. Move the unit as samples are being taken. Call AZI Customer Service at 800-528-7411 or 602-470-1414 for assistance.
Low response or erratic readings after a long period of non-use.	May need a second regeneration cycle.	1. Wait 30 minutes and perform another sensor regeneration. 2. Test with FTM. Refer to page 36. 3. If still unresponsive,
False readings, may go to .8.8.8 or .L.L.L.	Extremely cold or extremely warm air sampled into unit.	If sampling under these conditions, install zero air filter in intake. Sample until display reads 0.003 ppm or less. This equilibrates sensor temperature with the temperature of the sample air stream. Remove filter and take samples.

Miscellaneous Problems		
Display reads .P.P.P when regeneration is attempted.	Power cord not attached. Blown fuse. Line voltage less than 100 VAC (or less than 200 VAC for 220V instruments). Cycles dipswitch set incorrectly.	Check power cord for connection Replace fuse. Refer to page 22. Check line voltage settings. Refer to page 21. Check input cycle settings. Refer to page 39. If fuse and line voltage are OK, it may be circuit board adjustment or component failure. Call AZI Customer Service at 800-528-7411 or 602 470-1414.
Display reads .E.E.E	Very low battery.	Recharge battery. Refer to page 17. Replace battery. Refer to page 21.

8. JEROME® 631-X TECHNICAL SPECIFICATIONS

Range	0.003ppm (3ppb) to 50ppm H_2S in four graduated ranges
Sensitivity	0.003ppm H_2S
Precision	5% relative standard deviation
Accuracy	Range 0: ± 0.003ppm at 0.050ppm H_2S Range 1: ± 0.03ppm at 0.50ppm H_2S Range 2: ± 0.3ppm at 5.0ppm H_2S Range 3: ± 2ppm at 25ppm H_2S
Response time-sample mode	
10 to 50 ppm (Range 3)	13 seconds
1.0 to 10.0 ppm (Range 2)	16 seconds
0.10 to 1.00 ppm (Range 1)	25 seconds
0.001 to 0.100 ppm (Range 0)	30 seconds
Response time-survey mode	
10 to 50 ppm (Range 3)	3 seconds
1.0 to 9.9 ppm (Range 2)	6 seconds
0.10 to 0.99 ppm (Range 1)	15 seconds
0.001 to 0.099 ppm (Range 0)	20 seconds
Flow rate	150 ± 10ml/min (0.15 ± .01 liters/min)
Power requirements	100-120 V~, 50/60 Hz, 1 A or 220-240 V~, 50/60 Hz, 1 A
Fuse	F1A 250V, 5mm X 20mm
Internal battery pack	Rechargeable Nickel Cadmium
Operating environment	0° to 40 °C, non-condensing, non-explosive
Case construction	Aluminum alloy
Dimensions – standard model	33 cm L x 15 cm W x 10 cm H (13" L x 6" W x 4" H)
Dimensions – XE model	35 cm L x 18 cm W x 18 cm H (14" L x 7" W x 7" H)
Weight – standard model	3.18 kilos (7 pounds)
Weight – XE model	3.5 kilos (8 pounds)
Digital meter display	Liquid crystal display (LCD)
Certification	CE mark on 220-240 V~, 631-XE model only.

Optional Communications Capability

Data output	1. RS-232 Serial, Baud Rate 1200 for use with data logger, and/or Jerome® communication program. 2. RS-232 Serial data format with 0 & 20mA current logic levels; Baud Rate 1200 (special industrial applications) and Analog 20 mA output.

"OPTION BOARD" - See APPENDIX D - JEROME® 631-X OPTION BOARD on page 40.

Analog output	0 to 2V or 4 to 20 mA
Auto sample interval	5, 15, 30, or 60 minutes[2]
Auto regeneration interval	6, 12 or 24 hours

Instrument I/O Interface

The 631-X I/O port (25 pin D-sub) provides the following functions:

- Serial data communication
  - Interface type: RS-232C full duplex, DCE
  - Parameters: 1200 Baud, 1 start bit, 8 data bits, 2 stop bits, no parity
  - Pin assignments:

Pin 1	Protective ground
Pin 2	Data in
Pin 3	Data out
Pin 7	Data ground

- Serial current loop
  - Interface type: 20mA current loop, full duplex
  - Parameters - 1200 Baud, 1 start bit, 8 data bits, 2 stop bits, no parity
  - Pin assignments:

Pin 1	Protective ground
Pin 4	Data out (+)
Pin 5	Data in (+)
Pin 14	Data out (-)
Pin 16	Data in (-)

[2] When the instrument is used for continuous auto-sampling, the estimated life of the gold film sensor decreases and the sensor will become a maintenance item. For example, sensor life is reduced to approximately six months if the instrument is run continuously with a 30-minute sample interval and a 48-hour regeneration interval or reduced to three months when using a 15-minute sample interval and a 24-hour regeneration interval.

- Switched battery connection for data logger
  - Pin assignments:

    Pin 9 Battery (+)
    Pin 7 Battery ground (-)
    Pin 23 Battery ground (-)

- Unswitched battery connection for external battery pack pin assignments
  - Pin assignments:

    Pin 15 Battery (+)
    Pin 19 Battery (+)
    Pin 7 Battery ground (-)
    Pin 23 Battery ground (-)

NOTE: Pins 6, 8, 11, 17, 18, 20 and 21 are non-standard and should not be connected.

Potential Interferences

Potential interferences to the Jerome® hydrogen sulfide analyzers are rare and most of these can be eliminated with proper maintenance procedures. However, erroneously high readings can sometimes occur. Here are a few things to be aware of when using the instrument:

The gold film sensors used in the Jerome® hydrogen sulfide analyzers do not respond to the following compounds:

- Hydrocarbons
- CO, CO_2, and SO_2
- Water vapor (Note that water vapor condensation on the gold film can cause irreparable harm to the sensor and must be avoided.)

However, the following compounds may cause the gold film sensor to respond:

- Chlorine
- Ammonia
- NO_2
- Most mercaptans (organic sulfur compounds or "thiols")

Special filters designed to remove chlorine or ammonia gas are available from Arizona Instrument and may be ordered as Chlorine Filter, AZI P/N Z2600-3940 or Ammonia Filter, AZI P/N 990-0183. Visit the "Tech Notes" section at www.azic.com for more information concerning the chlorine and ammonia filters.

Filter replacement at regular intervals, or when unexpectedly high readings are encountered in areas of these potential interferents, may resolve these problems.

9. ACCESSORIES & MAINTENANCE PARTS

PART #	ITEM DESCRIPTION	
Y631 0901	**631 Accessory Kit** (See pictures beginning on page 32)	
	1400 2002	Probe
	1400 3010	Tubing Adapter, 1/4” to 1/8”
	2300 0001	Trimmer Tool
	2600 3039	0.25 Fritware
	6000 4003	Line Cord, 115 VAC - USA and Canada
	Alt. 200-0003	Line Cord, 220-240 VAC - England
	Alt. 200-0008	Line Cord, 220-240 VAC - Europe
	Z2600 3905	Zero Air Filter
Z2600 0918 or Z2600 0930 & Y2600 0920	**631 Functional Test Module (FTM) or** **631 Low-Level Functional Test Module** **FTM Accessory Kit** (See pictures beginning on page 32)	
	1300 0031	1/8" x 3/16" reducer
	1400 3010	Tubing adaptor
	2300 0003	Allen wrench
	2500 3001	1' of 1/8" Tygon® tubing
	2500 3010	1' of 3/16” Tygon® tubing
	2600 3010	Filter cap
	2600 3055	1 Lb. Desiccant
	2800 2044	(2) Guide pins
	6000 4003	115 VAC Line Cord
		Permeation Tube Assembly
	1400 3196	Perm Tube Housing
	2600 3054	0.63” Diameter Fritware
	1300 1025 or	Perm Tube (0.250 ppm / 250 ppb) (for Z2600 0918)
	1300 1040	Perm Tube (0.030 ppm / 30 ppb) (for Z2600 0930)
	700-0095	FTM Operation Manual
Y631 0905	**631 Maintenance Kit** (See pictures beginning on page 32)	
	2500 3001	1' of 1/8" Tygon® tubing
	2500 3002	2' of 1/16" Tygon® tubing
	2600 3039	0.25 inch fritware
	Z2600 3905	Zero Air Filter
	Z2600 3930	Scrubber Filter
	Z2600 3933	LFS Scrubber Filter
	Z2600 3934	LFD Scrubber Filter
	Z4000 0907	Battery Pack Assembly

Y990-0169	**Jerome® Data Logger** Includes the Jerome® Data Logger and JCS Software Kit.	
Y990-0168 (with cable) Y990-0170 (without cable)	**Jerome® Communication Software Kit (JCS)**	
Y411 0904	**Hard Side Carry Case** Includes a molded case with die cut foam rubber inserts to hold the Jerome® 631-X and accessories.	

1400 0052	**Soft Field Carrying Case** Hand/shoulder case with pockets for accessories.	

Spare Parts

1400 2002	Probe	
2300 0001	Trimmer	
1300 0031	1/8” x 3/16” reducer	
Z4000 0907 Z4000 0908	Battery Pack Assembly (115V) Battery Pack Assembly (230V)	
Z2600 3905	Zero air filter	
Z2600 3933	LFS scrubber filter	
Z2600 3934	LFD scrubber filter	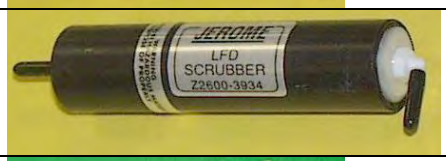
Z2600 3930	Scrubber filter	
Z2600 3940	Chlorine Filter	

AZI Customer Service 800-528-7411 or 602-470-1414

990-0183	Ammonia Filter		
1400 3010	Tubing adapter		
Y2600 3945	Intake Kit	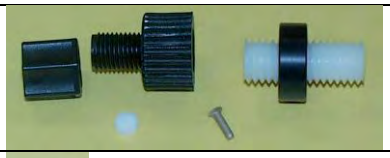	Includes mounting hardware.
PS-151	Tube Nut		
2600 3039	0.25 inch fritware		
2600 3061	Acrodisc® Filter		
2500 3001	Tygon® tubing 1/8" I.D. (1 foot)		
2500 3002	Tygon® tubing 1/16" I.D. (1 foot)		

4000 1011	115 VAC IDC battery charger (Used to charge an uninstalled battery)	
4000 1012	230 VAC IDC battery charger (Used to charge an uninstalled battery)	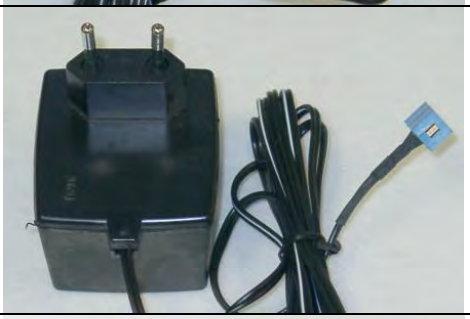
6000 4003	100-120 VAC Line Cord	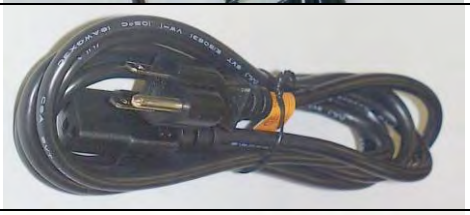
Alternate – 200-0003	220-240 VAC Line Cord for England	
Alternate – 200-0008	220-240 VAC Line Cord for Europe	

AZI Customer Service 800-528-7411 or 602-470-1414

990-0225	10 to 1 Dilution Module	
5100 1012	Spare Fuse	
6000 1055	Jerome® Communication Cable	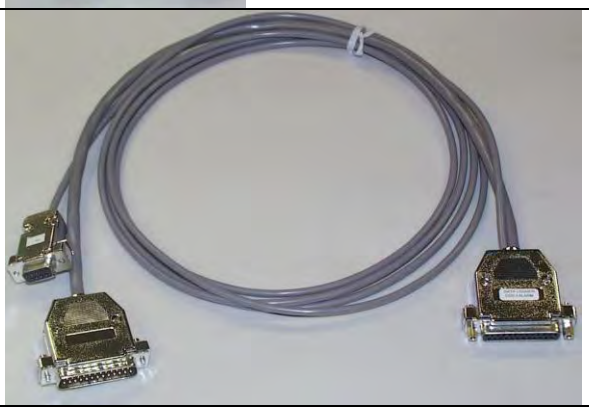

For current prices and delivery information, call AZI Customer Service at (800) 528-7411 or (602) 470-1414.

10. Factory Calibration Service

Service includes filter replacement, component testing, and instrument calibration to NIST traceable standards.

For scheduling and shipping authorization, call AZI Customer Service at (800) 528-7411 or (602) 470-1414.

11. APPENDIX A - 631-X FUNCTIONAL TEST MODULE

The Jerome® Hydrogen Sulfide Functional Test Module (FTM) provides a fast and easy method of verifying that Jerome® 631-X Hydrogen Sulfide Analyzers are functioning correctly.

THIS IS A FIELD CHECK OF THE FUNCTIONALITY OF THE INSTRUMENT.

THIS TEST DOES NOT CALIBRATE THE INSTRUMENT.

The Functional Test Module is beneficial:

- In applications where frequent verification of functionality is required, such as ISO 9000 documentation,
- To verify proper instrument operation when unexpected readings are obtained in normal sampling,
- As part of a weekly maintenance routine, and
- To determine if analyzer calibration is needed.

Simple Operation

The Functional Test Module includes a permeation tube containing hydrogen sulfide. When activated, the test module releases this H_2S from the permeation tube at a specific, known concentration. The H_2S flows over the gold film sensor of the Jerome® analyzer, which then measures the amount of exposure to the gas. The flow rate and temperature of this release are factory set to provide a concentration of approximately 250 ppb (0.250 ppm) ±20% when using FTM Z2600 0918 or approximately 30 ppb ± 20% when using the Low-Level FTM (Z2600 0930). The user then compares the reading on the Jerome® analyzer with the known concentration from the module. If the H_2S level shown on the analyzer's display falls within the expected range for the FTM being used, the instrument is functioning properly. If the level is not in the expected range, it should be returned to the factory for NIST-traceable calibration.

See page 30 for a list of the components that make up the FTM and its accessory kit.

The FTM, with the exception of the permeation tube, carries a limited one-year warranty to be free from defects or workmanship. The permeation tube is warranted for 90 days. Refer to the FTM Operation Manual AZI P/N 700-0095 for complete operation and warranty information.

12. APPENDIX B - JEROME® COMMUNICATIONS SOFTWARE

The Jerome® Communications Software (JCS) is used with 631-X Hydrogen Sulfide Analyzers that feature the communications configuration option.

- The JCS allows the user to program the instrument for unattended monitoring and to download recorded data stored in the Jerome® data logger.
- Automatic sampling can be initiated every one (1) to sixty (60) minutes with programmable audible alarm levels.

The Jerome® Communications Software (JCS) operates with the Jerome® 431-X Mercury Vapor and Jerome® 631-X Hydrogen Sulfide Analyzers that have the "Communications Configuration" option installed. The software can control instrument sampling for unattended continuous operation, collect data, graph this data in real time and perform statistical analysis.

The software can also program the Jerome® Data Logger, AZI P/N 6100-0010. This optional accessory enables data storage during manual sampling or portable automatic sampling without being attached to a computer. The data logger initiates automatic sampling, triggers alarms and stores data. The logged data may then be downloaded to the computer when it is convenient. The data logger stores up to 1,000 data points.

The JCS is menu-driven and easy to use. Each display screen is designed for clarity with self-explanatory menu options, such as "Operate Instrument" or "Display Stored Data." Select menu options using either a mouse or a track ball pointing device or a standard keyboard. The user creates records, or files, for computer storage of collected data. Data is easily retrieved for later viewing, graphing, printing or editing with spreadsheet or word processing software (not provided). Data can be used for ongoing record keeping or for fulfilling local regulatory requirements.

Before using this software, familiarization with the operation of the Jerome® Hydrogen Sulfide Analyzer or Mercury Vapor Analyzer is important. Also, prior to installation of this software you should be familiar with the personal computer and operating system you are using. If you have any questions about how to proceed, call AZI Customer Service at (800) 528-7411 or (602) 470-1414 or send an e-mail to support@azic.com for assistance.

JCS Kit Contents

- Jerome® Communication Software on CD-ROM with security key
- Jerome® Communication Cable, AZI P/N 6000 1055
- User's manual

System Requirements

- Jerome® 631-X with the "Communications Option." These Jerome® instruments have a DB-25 connector and related internal hardware and firmware.
- Windows 98 Second Edition, ME, NT, 2000 or XP
- At least one free serial port
- One free USB port

Optional equipment:

- Jerome® Data Logger, AZI P/N 6100 0010 (to capture data without a computer nearby)

Data Logger Option

The software can also program the Jerome® Data Logger (AZI P/N 6100 0010) used with the Jerome® analyzer. The computer programs the data logger that then attaches to the DB-25 connector on the rear of the instrument. The data logger initiates automatic sampling, triggers alarms and stores data. This optional accessory enables portable automatic sampling without a dedicated computer.

13. APPENDIX C - INTERNAL DIP SWITCH SETTINGS

The DIP switch identified as SW2 on the 631-X control board is located at the top center of the board.

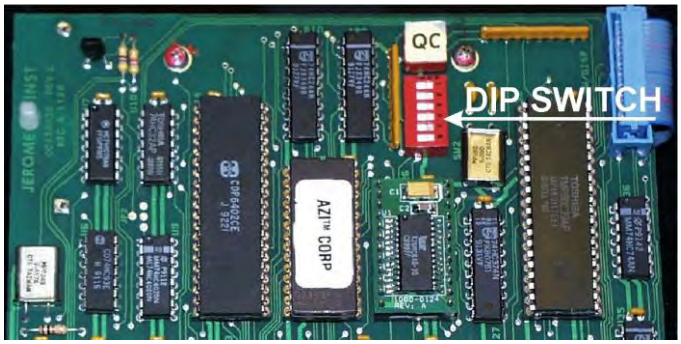

CAUTION:
Switch the instrument's power to OFF before opening the instrument and changing DIP switch settings.

DIP Switch Settings:

Switch #	Position	Function	Comment
1	ON	AUTORANGE	DISABLED (SEE DIP SWITCHES 5 & 6)
1	OFF	AUTORANGE	ENABLED
2	X	NOT USED	
3	X	NOT USED	
4	ON	ZERO DISPLAY: 00-99	
4	OFF	ZERO DISPLAY: L-O-H	

Switch #		Function	Comment
5	6	RANGE	SAMPLE TIME
ON	ON	0 (.000 - .099PPM)	30 SECONDS
ON	OFF	1 (0.10 - 0.99 PPM)	25 SECONDS
OFF	ON	2 (01.0 - 09.9 PPM)	16 SECONDS
OFF	OFF	3 (10 - 50 PPM)	13 SECONDS

14. APPENDIX D - JEROME® 631-X OPTION BOARD

Proper use of this board requires that the base instrument be fully functional and set correctly for the intended operation.

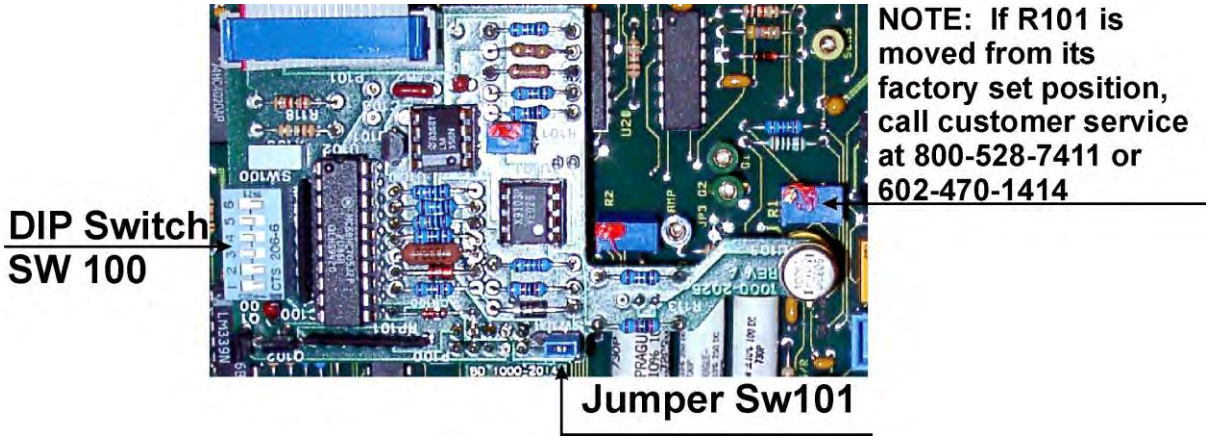

Auto-Zero

With the option board installed, the 631-X has a limited auto-zero function. This function cannot be disabled and is transparent to the user. The instrument can be manually zeroed as described in "Zero Adjust" on page 13. However, if the instrument is to be operated by personnel not familiar with the procedure or if it is operated unattended, the auto-zero function should satisfactorily zero the unit after each sensor regeneration.

Instrument Zeroing

The Jerome® 631-X has essentially three ways to zero the sensor reading before samples are taken if the option board is installed.

- The instrument automatically re-zeroes between samples so that each sample is a unique reading. To take a sample, simply press the SAMPLE button.
- The manually adjusted zero, using the switch on the top of the 631-X is used to re-establish a baseline between the reference and sensor gold films **only after a sensor regeneration**. This zero is manually adjusted by pressing the ZERO button and turning the potentiometer on the top of the instrument until the display reads 0. **Adjust only after sensor regeneration;** it is normal for H to be displayed after sampling.
- The 631-X option board provides an auto-zero feature following regeneration that is invisible to the user.

- In some cases, the instrument cannot resume sampling after regeneration. .L.L.L appears on the display when the ZERO button is pressed and the error message "manual bridge adjust needed" is added to the notes column of the JCS text file when the JCS is used. If this problem persists, it may be necessary to re-set the auto-zero.
- When necessary to re-adjust the auto-zero point:
  - Turn the instrument off.
  - Make a note of the original DIP switch settings of SW100 on the option board.
  - On red DIP switch on the control board, SW2, turn DIP switch 4 to ON.
  - Set the switches on the option board's blue DIP box, SW100, to 1,2,6 OFF; 3,4,5 ON.
  - Turn the instrument ON.
  - Press and hold the ZERO button and adjust the potentiometer on top of the instrument until the number 20 is displayed, then release the ZERO button.
  - Switch option board DIP #1 from OFF to ON three times, leaving it set to ON. (i.e. starting from OFF, switch it ON, OFF, ON, OFF, ON).
  - Press and hold the ZERO button while turning the potentiometer on the option board until the number 20 is displayed. Note the display may flicker one digit.
  - Return all switches to their original position.

NOTE: The higher the auto-zero number, the lower the sensor capacity and the more sensor regenerations are needed.

Timed Regeneration

If the unit is to be operated unattended for extended periods, AZI recommends that the sensor be regenerated regularly. Operation under JCS or data logger control automatically regenerates saturated sensors. Regeneration will not occur as shown when sample streams have a very low concentration of H_2S. The option board controls regeneration on a regular basis, every 6, 12 or 24 hours.

The regeneration intervals are set through a combination of switch settings as shown in the following table:

------- SW100---------		REGENERATION
Switch #1	Switch #2	Interval (Hrs.)
OFF	OFF	OFF
ON	OFF	6
OFF	ON	12
ON	ON	24

Auto-Sample

If a data logger is connected and operating in the manual sampling mode or a data logger is not connected the following automatic sampling rates may be selected with SW100 dip switch settings:

Dip switch settings			Sampling frequency
3	4	5	
ON	ON	ON	No automatic sampling
OFF	ON	ON	5 minutes
OFF	OFF	ON	15 minutes
OFF	ON	OFF	30 minutes
OFF	OFF	OFF	1 hour

This auto-sample function will not function if a data logger is connected and operating in automatic sampler mode programmed through the JCS.

4-20 mA Analog Output

The analog output signal at pin 18 of the 25 pin connector can be configured to provide the instrument's native mode 0-2 Volt output or the optional 4-20 mA output by setting the option board jumper (SW101) to the "V" position for voltage, or the "I" position for current. (Pin 23 is the ground pin for the analog output function. Pin 18 is positive with respect to the ground pin).

- The 0-2 Volt output circuit can drive loads of 10 kilohms or higher.
- The 4-20 mA output is a passive transmitter and requires the connected receiver to supply between 10 and 28 volts DC.

The 631-X must have the auto ranging feature disabled in order to get accurate analog output readings. The approximate range of the H_2S concentration must be known before the instrument can be set into that specific range (0, 1, 2 or 3). The analog output signal is based on each individual range and not the entire range (0-50 ppm).

Note that neither analog output circuit is floating. The negative terminals of both circuits are connected to the instrument's common ground bus.

SW101 Functions:

V =	0-2V analog output
I =	4-20 mA analog output

Jerome® 631-X instruments shipped after early 1995 are capable of providing 0-2 volts analog output. Instruments shipped before that time can be upgraded by a firmware update and adjustment.

Instruments that are capable of 0-2 volt output can be upgraded to the 4-20 mA output with the addition of an option board upgrade. This must be installed at the factory.

Connection and Setup:

- 0-2 volt devices connect as shown in Figure 1. If the instrument includes an option board, be sure its analog jumper (SW101) is set to the "V" position.

REAR OF CONNECTOR, CONNECT PINS 18 AND 23 FOR 0-2 VOLT OUTPUT. JUMPER ON BOARD IS AT "V"

Figure 1

- The 4-20 mA active receivers connect as shown in Figure 2. The active receiver contains a voltage source to power the loop current. The receiver must have an isolated input circuit. That is, it must not be connected to ground or to a voltage source referenced to ground. Be sure that jumper SW101 is set to the "I" position before power is applied.

REAR OF CONNECTOR, CONNECT PINS 18 AND 23 FOR 4-20 mA OUTPUT. JUMPER ON BOARD IS AT "I"

Figure 2

- The 4-20 mA passive receivers do not contain a voltage source to power the loop current. They require the addition of a separate isolated power supply. Typically a supply that delivers 15 to 20 volts DC at 50 mA is sufficient. Wire these as in Figure 3. Note that some 12-volt DC wall transformers (as used on portable equipment) may deliver 15 to 20 volts when they are lightly loaded. The Digi-Key T509-P1P-ND is a commonly available example of a 12 volt 200mA supply that will deliver around 18 volts nominal when loaded below 20 mA.
- Be sure that both the power supply used and the passive receiver are floating (not connected to earth ground). If either is not floating, the circuit will not work and damage may occur.
- Ensure that jumper SW101 is set to the "I" position before power-up.

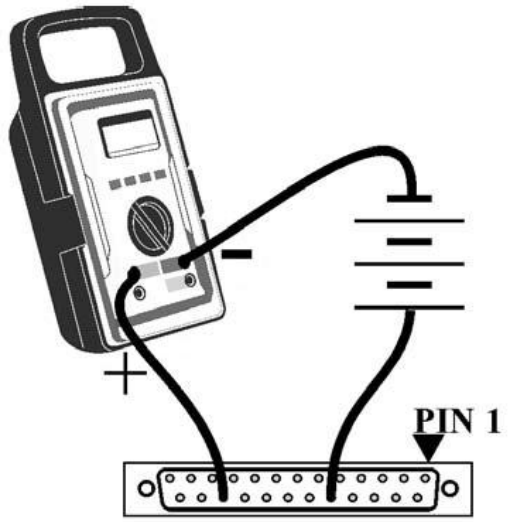

REAR OF CONNECTOR, CONNECT PINS 18 AND 23 FOR 4-20 mA OUTPUT. JUMPER ON BOARD IS AT "I"

Figure 3

Example Calculations:

- Example 1: Locked in Range 1 (0.10 to 1.00 ppm)
  - 631-X reading — Current
    - 0.10 ppm or less — 4mA
    - 1.00 ppm — 20mA
  - The formula relating the current to the concentration is:
    Concentration = [Range Maximum x (Current – 4)]/16
  - An output current of 12mA (in Range 1) corresponds to a concentration of 0.500 ppm:
    Concentration = [1.00 x (12 – 4)]/16 = 0.500 ppm
- Example 2: Locked in Range 2 (1.0 to 10.0 ppm)
  - 631-X reading — Current
    - 1.0 ppm or less — 4mA
    - 10.0 ppm — 20mA
  - The formula relating the current to the concentration is:
    Concentration = [Range Maximum x (Current – 4)]/16
  - An output current of 12mA (in Range 2) corresponds to a concentration of 5.00 ppm:
    Concentration = [10.0 x (12 – 4)]/16 = 5.00 ppm

Fresh Air Solenoid

An external three-way solenoid can be used to provide fresh air or conditioned air during sensor regeneration. This may be necessary if the sample stream lacks molecular oxygen. A low current six volt DC solenoid, connected between pins 19 and 11 of the 25 pin rear panel connector, will be energized during the regeneration cycle if the option board SW100 switch 6 is placed in the OFF position.

If needed, the circuit may be built from the following components and configured as shown in the following diagram. It will only function if the option board is installed in the 631-X instrument.

Required Parts:	**Suggested Part**	**Similar AZI P/N**
1 solenoid, 6volt 3way	Angar P/N 407569	1300 1004
1/8" to 1/16" tubing adaptor	Any	1300 0025
1/2" clamp, adhesive mount	Any	6000 0013
1/8" tube to instrument adaptor	Any	1400 3010
3" 1/8" tubing	Tygon® Formula R3603	2500 3001
A/R 1/16" tubing	Tygon® Formula R3603	2500 3002
1 25 pin male DB-25 connector Solder-cup style	AMP 747912-2	None *
1 connector hood	AMP 749626-2	None *

* These are types not stocked by AZI, but should be available overnight from many AMP stocking distributors such as Digi-Key Corporation. There are multiple suitable alternatives such as Radio Shack's 276-1547 and 276-1549.

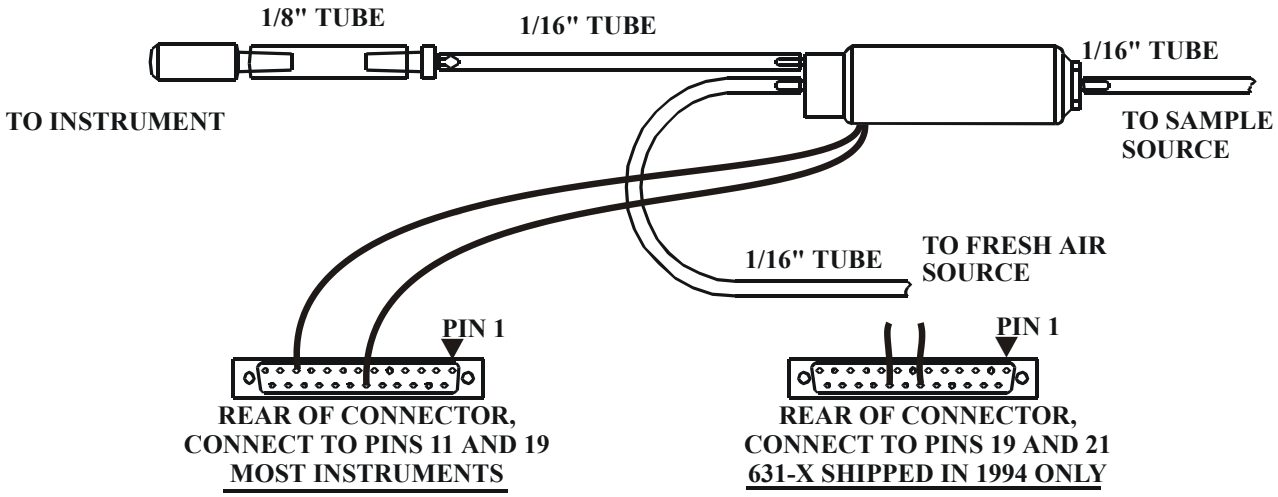

DC Power Operation

Instruments with the 631-X option board modification can be used with any +12 VDC source for continuous operation, if the AZI Power Inverter Kit, P/N Y031 0902 is installed along with the option board. To preserve the life of the DC power source, usually a car or truck battery, the power inverter will switch on automatically to supply the AC necessary for regeneration only. The external switch on the inverter should always be OFF to preserve battery life during normal sampling.

To work with the power inverter kit, place option board SW100 DIP Switch #6 to the ON position.

When the instrument starts a regeneration with option board SW100 DIP Switch #6 ON, the instrument sends a signal to close the relay on the DC Power Adaptor, AZI P/N 1000 0089, mounted between the data logger and the instrument. This switches the power inverter ON using the inverter's internal switch.

NOTE: When this mode is enabled, the instrument does NOT check for 115 VAC for the regeneration. If there is no AC power to the instrument, and a regeneration is initiated, the instrument will flash .H.H.H (rather than .P.P.P), however the sensor will not heat, nor will the sensor be cleaned.

DC Power Adaptor Kit, AZI P/N Y031 0902

- The DC power adaptor kit consists of:
  - DC Power Adaptor, P/N 1000 0089
  - DC Power Inverter, P/N 4000 1021
  - DC Power Cable Assembly, P/N 6000 1093

Installation

- Ensure that the instrument's option board switches are set correctly for the intended operation with the option board's SW100 DIP Switch #6 set to "ON" for DC operation.
- Mount the interface board to the rear of the instrument. Tighten the mounting screws.
- Place or mount the DC/AC power inverter in a secure position near the instrument.
- Connect the cable from the DC/AC power inverter to the matching connecter on the interface board. Note that the connectors are keyed to prevent improper connection.
- Plug the instrument's AC power cord into the power inverter and connect it to the instrument.

Ensure that the inverter's power switch is in the "OFF" position. LEAVE the power switch in the "OFF" position at all times. The interface board will activate the inverter when necessary. If the inverter power switch is placed in the "ON" position, it will cause a continuous drain on the external 12-volt power system.

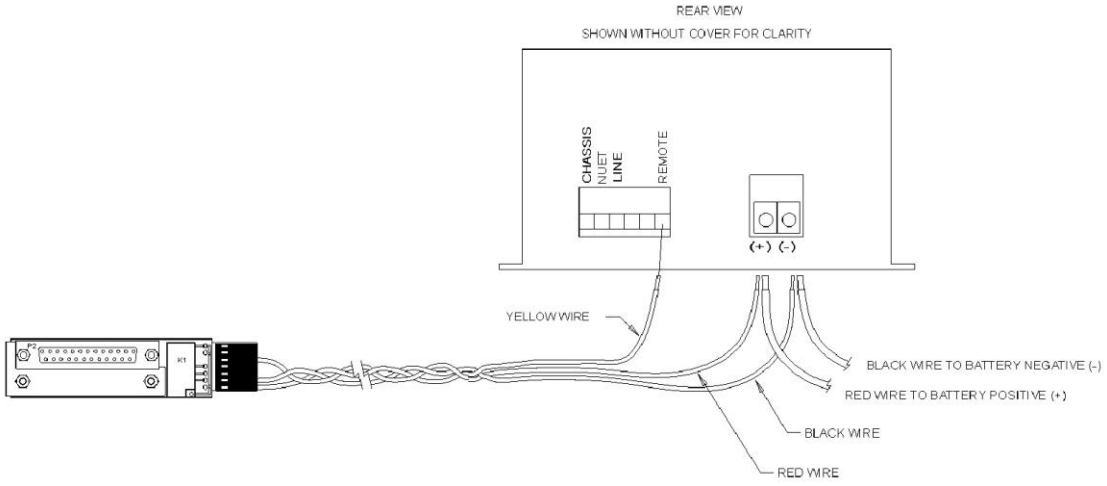

- Remove the screws from the rear cover of the inverter and remove the cover.
- Place the wires from the external DC source (battery) and the wires from the DC power cable through the holes in the end plate.
- Connect cables from the external 12-volt power source and the DC power cable assembly to the appropriate positive (+) and negative (-) terminals on the back of the inverter and tighten the hold down screws.
- Connect the yellow wire from the DC power cable to the "REMOTE" terminal on the power inverter and tighten the hold down screw.
- Reinstall the cover.
- If the external 12volt lines are not powered, power them now. (Connect them to the battery)
- Connect the instrument's AC power cord between the instrument and the front of the power inverter.
- Turn the instrument "ON."
- Press the "REGEN" switch on the instrument. Inverter operation can be verified in either of two ways:
  - Immediately after pressing "REGEN" the inverter will intermittently "sing." This tone slowly becomes nearly continuous and then ends after 64 seconds.
  - If the area is noisy, use a voltmeter or test lamp to verify that approximately 115 volts is present for about 64 seconds, starting when the "REGEN" switch is pressed.
- Allow the instrument to complete its regeneration before turning it off.
- With the instrument turned off, complete the installation (i.e. connect data logger, communications cables, or other devices and ensure that the DIP switches for the instrument and option board are set correctly.

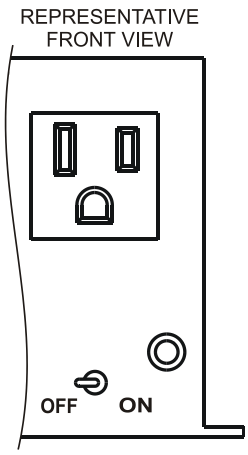

15. WARRANTY

Arizona Instrument LLC (seller) warrants to buyer that Jerome® products delivered pursuant to this agreement shall, at the time of delivery, and for a period of one (1) year. Thereafter (the Internal Battery Pack, where applicable, is warranted for a period of ninety [90] days only), to be free from defects in material or workmanship and shall conform to seller's specifications or such other specifications as seller has agreed to in writing. Seller's obligations with respect to claims under this warranty shall be limited, at seller's option, either to the replacement of defective or non-conforming product or to an appropriate credit for the purchase price thereof subject to the provisions of seller's Warranty Policy as amended from time to time, said Policy being incorporated herein by reference.

Returned products under warranty claims will be shipped to seller's plant by buyer at buyer's expense and shall be accompanied by a statement of the reason for the return and an approved Return Material Authorization Number issued by seller. Buyer remains responsible for payment for products not accepted for warranty adjustment, handling costs, and freight costs associated therewith.

Notwithstanding the foregoing, no warranty shall be enforceable in the event that product has been subjected to environmental or stress testing by buyer or any third party without written approval of seller prior to such testing. Further, no warranty shall be enforceable if the alleged defect is found to have occurred because of misuse, neglect, improper installation, repair, alteration, accident, or improper return handling procedure by buyer.

Discontinued product is warranted only for a credit or replacement at seller's option.

THE EXPRESS WARRANTIES GRANTED ABOVE SHALL EXTEND DIRECTLY TO BUYER AND NOT TO BUYER'S CUSTOMERS, AGENTS, OR REPRESENTATIVES AND, EXCEPT FOR WARRANTY OF TITLE, IS IN LIEU OF ALL OTHER WARRANTIES, WHETHER EXPRESSED OR IMPLIED, INCLUDING ANY IMPLIED WARRANTIES OF FITNESS FOR A PARTICULAR PURPOSE AND MERCHANTABILITY, SUCH OTHER WARRANTIES BEING SPECIFICALLY DISCLAIMED BY SELLER. IN NO EVENT SHALL EITHER PARTY'S LIABILITY FOR ANY BREACH OR ALLEGED BREACH OF THIS AGREEMENT EXCEED THE TOTAL EXTENDED PRICE OR PRICES SHOWN ON UNFILLED ORDERS, NOR SHALL EITHER PARTY BE LIABLE FOR ANY SPECIAL, INCIDENTAL OR CONSEQUENTIAL DAMAGES RESULTING FROM BREACH OR ALLEGED BREACH.

Notwithstanding the foregoing, if any product covered by order(s) placed hereunder is designated as "developmental," "prototype" or "experimental," no warranty whatsoever except a warranty of title to component materials, will be applicable thereto and buyer shall indemnify seller for any claims for liability asserted seller in connection therewith.

The foregoing state the entire liability of seller in connection with products supplied hereunder.

TRADEMARK AND COPYRIGHT PROTECTION

Jerome®, Arizona Instrument®, AZI® and the stylized AZI are all registered trademarks of Arizona Instrument LLC.

Instrument firmware is copyright protected.
All specifications subject to change without notice.

Copyright 1990-2011 Arizona Instrument LLC. All Rights Reserved.

Acrodisc® is a registered trademark of Pall Gelman Sciences, Inc.
Resisorb® is a registered trademark of Avantor Performance Materials.
Tygon® is a registered trademark of Saint-Gobain Performance Plastics Corporation.

Arizona Instrument LLC
Jerome® 631-X Hydrogen Sulfide Analyzer Operation Manual
Part Number 700-0037
January 2011

If you have any questions regarding the operation of this instrument, please call our toll free number (800) 528-7411. Internationally, call (602) 470-1414 or fax (480) 804-0656.

STANDARD OPERATING PROCEDURE

Personal/DataRAM–Particulate Monitoring

1. Purpose

The purpose of this SOP is to provide general reference information for using the Thermo Electron Model PDR-1000AN & PDR-1200S Personal DataRAM Particulate Monitor in the field. Calibration and operation, along with field maintenance, will be included in this SOP.

2. Scope

This procedure provides information for the field operation and general maintenance of the Personal DataRAM . The MIE *persona*lDataRAM(for Personal Data-logging Real-time Aerosol Monitor)
is a technologically advanced instrument designed to measure the concentration of airborne particulate matter (liquid or solid), providing direct and continuous readout as well as electronic recording of the information.

The *persona*lDataRAM is a high sensitivity nephelometric (i.e. photometric) monitor whose light scattering sensing configuration has been optimized for the measurement of the respirable fraction of airborne dust, smoke, fumes and mists in industrial and other indoor environments. The *persona*lDataRAM is available in two versions: model *p*DR-1000AN and model *p*DR-1200. The model *p*DR-1000AN operates as a passive air sampler whereas the model *p*DR-1200 uses active air sampling. The *persona*lDataRAM covers a wide measurement range: from 0.001 mg/m3 (1 µg/m3) to 400 mg/m3, a 400,000-fold span, corresponding to very clean air up to extremely high particle levels.

Review of the information contained herein will ensure that this type of field monitoring equipment will be properly utilized. Review of the owner's instruction manuals is a necessity for more detailed descriptions.

3. Equipment Required

Personal DataRAM and accessories , charger etc. See User's Guide
Digital communications cable
Universal AC power supply/charger
Z-Pouch zeroing kit
Zeroing filter cartridge and tubing
Metal cyclone (for PDR-1200 only)
Operation Manual

4. Responsibilities

Project Manager(PM) /Construction Manager(CM) - The PM/CM is responsible for ensuring that project-specific plans are in accordance with these procedures, where applicable, or that other approved procedures are developed. The Project Manager is responsible for selecting qualified individuals for the monitoring activities.

Field Team Leader(FTL) and/or Safety Coordinator(SC) - It is the responsibility of the FLT/SC to implement these procedures in the field, and to ensure that the field team performing air monitoring activities have been briefed and trained to execute these procedures before the start of site operations. FTL/SC is also responsible to ensure that the specified air monitoring equipment is on site, calibrated, and used correctly by the field personnel. The field personnel are responsible for documenting all air monitoring results in the field logbook during each field investigation.

5. Procedures

The Personal DataRAM must be protected from all forms of precipitation.

The following subsections will discuss Personal DataRAM calibration, operation, and maintenance. These sections, however, do not take the place of the instruction manual.

5.1 Calibration

For Personal DataRAM see page 44 of the attached operation manual.

5.2 Operation

Due to the Personal DataRAM having many functions in terms of operation, it is recommended that you follow the operational procedures as outlined in the instruction manual from pages 12 to 33.

5.3 Maintenance

The DataRAM 4 is designed to be repaired at the factory. No user serviceable components are inside the metal enclosure of the DataRAM 4 with exception of the filter cartridge or the analytic filter holder. Access to the internal components of the unit by others than authorized MIE personnel voids warranty

Function	Frequency
Check alarm and settings	Monthly/before each use
Factory Calibrated	
Cleaning Optical Sensing Chamber	As needed – Background High Message
Cyclone Cleaning Model 1200 only	As Needed

6. Quality Assurance Records

Quality assurance records will be maintained for each air monitoring event. The following information shall be recorded in the field logbook.

- Identification - Site name, date, location, activity monitored, serial number, time, resulting concentration, comments and identity of air monitoring personnel.
- Field observations - Appearance of sampled media (if definable).
- Additional remarks (e.g, Personal DataRAM had wide range fluctuations during air monitoring activities.)

7. References

Models PDR-1000AN and PDR-1200S Personal DataRam Particulate Monitoring Instruction Manual, Thermo Electron Corporation, January 2004

For Sales & Service Contact
geotech
2650 E. 40th Ave. • Denver, CO 80205
Phone 303-320-4764 • Fax 303-322-7242
1-800-833-7958
www.geotechenv.com

MODELS
PDR-1000AN & PDR-1200S
PERSONAL DATARAM PARTICULATE MONITORING

INSTRUCTION MANUAL
P/N (tba)

THERMO ELECTRON CORPORATION
ENVIRONMENTAL INSTRUMENTS
27 FORGE PARKWAY FRANKLIN MASSACHUSETTS 02038

(866) 282-0430 Toll Free
(508) 520-0430 International
(508) 520-1460 Fax

www.thermo.com/ih

REVISED: January 2004
ORIGIN: APRIL 2000

© 2003 Thermo Electron Corporation. All rights reserved. Thermo Electron Corporation, question everything, and Analyze. Detect. Measure. Control are trademarks of Thermo Electron Corporation. All other product names and logos are the property of their respective owner.

Specifications, terms and pricing are subject to change. Not all products are available in all countries. Please consult your local sales representative for details.

WARRANTY

Seller warrants that the Products will operate substantially in conformance with Seller's published specifications, when subjected to normal, proper and intended usage by properly trained personnel, for 13 months from date of installation or 12 months from date of shipment, whichever is less (the "Warranty Period"). Seller agrees during the Warranty Period, provided it is promptly notified in writing upon the discovery of any defect and further provided that all costs of returning the defective Products to Seller are pre-paid by Buyer, to repair or replace, at Seller's option, defective Products so as to cause the same to operate in substantial conformance with said specifications. Replacement parts may be new or refurbished, at the election of Seller. All replaced parts shall become the property of Seller. Shipment to Buyer of repaired or replacement Products shall be made in accordance with the provisions of Section 5 above. Lamps, fuses, bulbs and other expendable items are expressly excluded from the warranty under this Section 8. Seller's sole liability with respect to equipment, materials, parts or software furnished to Seller by third party suppliers shall be limited to the assignment by Seller to Buyer of any such third party supplier's warranty, to the extent the same is assignable. In no event shall Seller have any obligation to make repairs, replacements or corrections required, in whole or in part, as the result of (i) normal wear and tear, (ii) accident, disaster or event of force majeure, (iii) misuse, fault or negligence of or by Buyer, (iv) use of the Products in a manner for which they were not designed, (v) causes external to the Products such as, but not limited to, power failure or electrical power surges, (vi) improper storage of the Products or (vii) use of the Products in combination with equipment or software not supplied by Seller. If Seller determines that Products for which Buyer has requested warranty services are not covered by the warranty hereunder, Buyer shall pay or reimburse Seller for all costs of investigating and responding to such request at Seller's then prevailing time and materials rates. If Seller provides repair services or replacement parts that are not covered by the warranty provided in this Section 8, Buyer shall pay Seller therefore at Seller's then prevailing time and materials rates.

ANY INSTALLATION, MAINTENANCE, REPAIR, SERVICE, RELOCATION OR ALTERATION TO OR OF, OR OTHER TAMPERING WITH, THE PRODUCTS PERFORMED BY ANY PERSON OR ENTITY OTHER THAN SELLER WITHOUT SELLER'S PRIOR WRITTEN APPROVAL, OR ANY USE OF REPLACEMENT PARTS NOT SUPPLIED BY SELLER, SHALL IMMEDIATELY VOID AND CANCEL ALL WARRANTIES WITH RESPECT TO THE AFFECTED PRODUCTS.

THE OBLIGATIONS CREATED BY THIS SECTION TO REPAIR OR REPLACE A DEFECTIVE PRODUCT SHALL BE THE SOLE REMEDY OF BUYER IN THE EVENT OF A DEFECTIVE PRODUCT. EXCEPT AS EXPRESSLY PROVIDED IN THIS SECTION 8, SELLER DISCLAIMS ALL WARRANTIES, WHETHER EXPRESS OR IMPLIED, ORAL OR WRITTEN, WITH RESPECT TO THE PRODUCTS, INCLUDING WITHOUT LIMITATION ALL IMPLIED WARRANTIES OF MERCHANTABILITY OR FITNESS FOR ANY PARTICULAR PURPOSE. SELLER DOES NOT WARRANT THAT THE PRODUCTS ARE ERROR-FREE OR WILL ACCOMPLISH ANY PARTICULAR RESULT.

Table of Contents

1.0 GENERAL DESCRIPTION 7

2.0 SPECIFICATIONS 9

3.0 USER GUIDELINES 12

3.1 Handling Instructions 12
3.2 Safety Instructions 12
3.3 Handling and Operation 12
3.3.1 Model *p*DR-1000AN 12
3.3.2 Model *p*DR-1200 13
3.4 Air Sampling Guidelines 14
3.5 Environmental Constraints and Certifications 14

4.0 ACCESSORIES 14

4.1 Standard Accessories 14
4.2 Optional Accessories 15

5.0 INSTRUMENT LAYOUT 15

5.1 Front Panel 15
5.2 Bottom Base 20
5.3 Right Side Panel 20
5.4 Back Panel and Belt Clip 22
5.5 Sensing Chamber 23

6.0 PREPARATION FOR OPERATION 23

6.1 Battery Installation 23
6.2 Battery Replacement 24
6.3 AC Power Supply 25
6.4 Rechargeable Battery Module 25
6.5 Zeroing the *personal*DataRAM 25
6.5.1 Zeroing the model *p*DR-1000AN 26
6.5.2 Zeroing the model *p*DR-1200 26
6.6 *p*DR-1200 Filter Holder Installation 27

7.0 OPERATING MODES 27

7.1 Start-Up Mode 27

7.2 Ready Mode 27
7.3 Run and Logging Mode Mode 28
7.3.1 Data Logging 28
7.3.2 Clearing Memory 28
7.3.3 Run Mode Display and Commands 28

8.0 OPERATION 29
8.1 Start-Up 29
8.2 Setting Up For A Run 30
8.3 Measurement Run Procedure 31
8.4 Abbreviated Run Start/Stop Instructions 33
8.5 Resetting Procedure 33

9.0 COMMUNICATIONS WITH COMPUTER 34
9.1 Hardware and Software Requirements 34
9.2 Software Installation Procedure 34
9.3 Communications Between *personal*DataRAM and Computer 35
9.4 Real-Time RS-232 Output 36

10.0 ANALOG SIGNAL OUTPUT 37
10.1 Analog Output Description 37
10.2 Analog Output Connection 37

11.0 ALARM 38
11.1 Alarm Description and Operation 38
11.2 Alarm Output 38
11.3 Remote Alarm Unit 38

12.0 MAINTENANCE 39
12.1 General Guidelines 39
12.2 Cleaning of Optical Sensing Chamber 39
12.2.1 Model *p*DR-1000AN 39
12.2.2 Model *p*DR-1200 40
12.3 Cyclone Cleaning (Model *p*DR-1200 only) 40

13.0 CALIBRATION 40
13.1 Factory Calibration 40
13.2 Field Gravimetric Calibration 41
13.3 Scattering Coefficient Calibration 42

13.4 Internal Span Check 42

14.0 PARTICLE SIZE CLASSIFICATION (Model *p*DR-1200 only) 42

14.1 Size Fractionated Monitoring 43

14.2 Particle Sizing 43

15.0 CONVERSION BETWEEN *p*ersonalDataRAM VERSIONS 45

15.1 Conversion procedure from *p*DR-1000AN to *p*DR-1200 45

15.2 Conversion procedure from *p*DR-1200 to *p*DR-1000AN 46

16.0 SEQUENCE OF KEYSTROKES AND SCREENS 48

1.0 GENERAL DESCRIPTION

The MIE *personal*DataRAM™ (for Personal Data-logging Real-time Aerosol Monitor) is a technologically advanced instrument designed to measure the concentration of airborne particulate matter (liquid or solid), providing direct and continuous readout as well as electronic recording of the information.

The *personal*DataRAM is available in two versions: model *p*DR-1000AN and model *p*DR-1200. The model *p*DR-1000AN operates as a passive air sampler whereas the model *p*DR-1200 uses active air sampling. The user can convert from one to the other of these two versions by means of optional conversion kits offered by MIE, Inc. (see Sections 4.2 and 15.0 of this manual).

The model *p*DR-1000AN samples passively (i.e., without a pump) the air surrounding the monitor; air accesses freely the sensing chamber of the instrument by means of convection, diffusion, and adventitious air motion. The model *p*DR-1200, on the other hand, requires a separate air driver (not included) such as a personal-type pump for its operation.

In addition, the model *p*DR-1200 includes a particle size-selective inlet cyclone which permits size segregated measurements (i.e., PM_{10}, $PM_{2.5}$, respirable, etc.) as well as enables the user to perform aerodynamic particle sizing by varying the sampling flow rate. The model *p*DR-1200 incorporates, downstream of its photometric sensing stage, a standard 37-mm filter holder on which all sampled particles are collected for subsequent analysis or gravimetric referencing/calibration, if so desired.

The *personal*DataRAM is the result of many years of field experience acquired with thousands of units of its well known predecessor, the MIE MINIRAM, and embodies many technological advances made possible by the latest electronic hardware and software. The *personal*DataRAM is also a worthy miniaturized companion to the MIE DataRAM, a recognized paragon of portable aerosol monitors.

The *personal*DataRAM is a high sensitivity nephelometric (i.e. photometric) monitor whose light scattering sensing configuration has been optimized for the measurement of the respirable fraction of airborne dust, smoke, fumes and mists in industrial and other indoor environments.

The *personal*DataRAM is an ultra-compact, rugged and totally self-contained instrument designed for hand-held, belt-worn, as well as unattended operation. It is powered either by its internal replaceable battery, or by an optional attachable rechargeable battery pack, or by an AC supply (included as standard accessory). For the model *p*DR-1200, power to an adjunct pump must be provided separately.

Zeroing is accomplished by means of a hand-inflatable “zero air” pouch included with the model *p*DR-1000AN, and by an inlet filter cartridge provided with the model *p*DR-1200. In addition, the instrument automatically checks agreement with

its original factory calibration by checking its optical background during the zeroing sequence.

The *personal*DataRAM covers a wide measurement range: from 0.001 mg/m^3 (1 µg/m^3) to 400 mg/m^3, a 400,000-fold span, corresponding to very clean air up to extremely high particle levels.

In addition to the auto-ranging real-time concentration readout, the *personal*DataRAM offers the user a wide range of information by scrolling its two-line LCD screen, such as run start time and date, time averaged concentration, elapsed run time, maximum and STEL values with times of occurrence, etc.

Operating parameters selected and diagnostic information displays are also available. Furthermore, the *personal*DataRAM features complete, large capacity internal data logging capabilities with retrieval through an externally connected computer. The stored information (up to 13,000 data points) includes average concentration values, maximum and STEL values with time information as well as tag numbers.

Selectable alarm levels with built-in audible signal and switched output, a RS-232 communications port, and a programmable analog concentration output (voltage and current) are all part of this versatile instrument.

A custom software package is provided with the *personal*DataRAM to program operating/logging parameters (e.g. logging period, alarm level, concentration display averaging time, etc.) as well as to download stored or real-time data to a PC or laptop for tabular and/or graphic presentation. If required, the data can also be imported to standard spreadsheet packages (e.g. Microsoft Excel™, Lotus 1-2-3™, etc.).

2.0 SPECIFICATIONS

- Concentration measurement range (auto-ranging)[1]: 0.001 to 400 mg / m^3
- Scattering coefficient range: 1.5 x 10^{-6} to 0.6 m^{-1} (approx.) @ λ =880 nm
- Precision / repeatability over 30 days (2-sigma)[2]:
  ± 2% of reading or ±0.005 mg / m^3, whichever is larger, for 1-sec. averaging time
  ±0.5% of reading or ±0.0015 mg / m^3, whichever is larger, for 10-sec. averaging time
  ±0.2% of reading or ±0.0005 mg / m^3, whichever is larger, for 60-sec. averaging time
- Accuracy[1]: ±5% of reading ±precision
- Resolution: 0.1% of reading or 0.001 mg / m^3, whichever is larger
- Particle size range of maximum response: 0.1 to 10 µm
- Flow rate range (model *p*DR-1200 only): 1 to 10 liters / minute (external pump required)
- Aerodynamic particle sizing range (model*p*DR-1200 only): 1.0 to 10 µm
- Concentration display updating interval: 1 second
- Concentration display averaging time[3]: 1 to 60 seconds
- Alarm level adjustment range[3]: selectable over entire measurement range
- Alarm averaging time[3]: real-time (1 to 60 seconds), or STEL (15 minutes)
- Datalogging averaging periods[3]: 1 second to 4 hours
- Total number of data points that can be logged in memory: 13,391
- Number of data tags (data sets): 99 (maximum)
- Logged data:
  - ◊ Each data point: average concentration, time / date, and data point number
  - ◊ Run summary: overall average and maximum concentrations, time / date of maximum, total number of logged points, start time / date, total elapsed time (run duration), STEL concentration and time / date of occurrence, averaging (logging) period, calibration factor, and tag number.

- Elapsed time range: 0 to 100 hours (resets to 0 after 100 hours)

- Time keeping and data retention: › 10 years

- Readout display: LCD 16 characters (4 mm height) x 2 lines

- Serial interface: RS-232, 4,800 baud

  ◊ Computer requirements: IBM-PC compatible, 486 or higher, Windows™ '95 or higher, ≥ 8 MB memory, hard disk drive, 3.5" floppy, VGA or higher resolution monitor

- Outputs:
  ◊ Real-time digital signal (1 sec^{-1}): concentration, 16-character code

  ◊ Real-time analog signal: 0 to 5 V and 4 to 20 mA. Selectable full scale ranges of ^{3}: 0 - 0.1, 0 - 0.4, 0 - 1.0, 0 - 4.0, 0 - 10, 0 - 40, 0 - 100, and 0 - 400 mg / m^3.

  ◊ Minimum load impedance for voltage output: 200 kΩ.

  ◊ Maximum load impedance for current output: 300 Ω (when powered by A C power supply)

  ◊ Alarm output: 1 Hz square wave, 5 V peak-to-peak amplitude. Load impedance > 100 kΩ

- Internal battery: 9V alkaline, 20-hour run time (typical)

- Current consumption: 15 to 25 mA (in Run Mode); 10 to 20 mA (in Ready Mode)

- AC source: universal voltage adapter (included) 100-250 V~, 50-60 Hz (CE marked)

- Optional battery pack: model *p*DR-BP, rechargeable NiMH, 72-hour run time (typical)

- Operating environment: -10° to 50° C (14° to 122° F), 10 to 95% RH, non-condensing

- Storage environment: -20° to 70° C (-4° to 158° F)

- Dimensions (max. external):
  ◊ Model *p*DR-1000AN: 153 mm (6.0 in) H x 92 mm (3.6 in) W x 63 mm (2.5 in) D
  ◊ Model *p*DR-1200 (including cyclone and filter holder): 160 mm (6.3 in) H x 205 mm (8.1in) W x 60 mm (2.4 in) D

- Weight:
  - ◊ Model *p*DR-1000AN: 0.5 kg (18 oz)
  - ◊ Model *p*DR-1200: 0.68 kg (24 oz)

- Cyclone (included in model *p*DR-1200 only): BGI model GK 2.05

- Filter holder (included in model *p*DR-1200 only): Millipore type MAWP 037 AO (with 0.8 µm pore size filter)

---

[1] Referred to gravimetric calibration with SAE Fine (ISO Fine) test dust (mmd = 2 to 3 µm, s_g = 2.5, as aerosolized)

[2] At constant temperature and full battery voltage

[3] User selectable

3.0 USER GUIDELINES

3.1 Handling Instructions

The *personal*DataRAM is a sophisticated optical/electronic instrument and should be handled accordingly. Although the *personal*DataRAM is very rugged, it should not be subjected to excessive shock, vibration, temperature or humidity. As a practical guideline, the *personal*DataRAM should be handled with the same care as a portable CD player.

If the *personal*DataRAM has been exposed to low temperatures (e.g. in the trunk of a car during winter) for more than a few minutes, care should be taken to allow the instrument to return near room temperature before operating it indoors. This is advisable because water vapor may condense on the interior surfaces of the *personal*DataRAM causing temporary malfunction or erroneous readings. Once the instrument warms up to near room temperature, such condensation will have evaporated. If the *personal*DataRAM becomes wet (e.g. due to exposure to water sprays, rain, etc.), allow the unit to dry thoroughly before operating.

Whenever the *personal*DataRAM is shipped care should be taken in placing it in its carrying case and repackaging it with the original cardboard box with the factory provided padding.

3.2 Safety Instructions

- Read and understand all instructions in this manual.
- Do not attempt to disassemble the instrument. If maintenance is required, return unit to the factory for qualified service.
- The *personal*DataRAM should be operated only from the type of power sources described in this manual.
- When replacing the internal 9-V battery, follow the instructions provided on the back panel of the unit.
- Shut off *personal*DataRAM and any external devices (e.g. PC) before connecting or disconnecting them.
- Shut off *personal*DataRAM before replacing the internal battery, or when plugging in or disconnecting the AC power supply or the optional rechargeable battery pack.

3.3 Handling and Operation

3.3.1 Model *p*DR-1000AN

The model *p*DR-1000AN can be operated in any position or orientation. Exposure to high intensity fluctuating light of the interior of the sensing chamber, through the front and back slotted air openings (see Section 5.5), should be avoided. Such large intensity transients may cause erroneous

readings. Direct access of sunlight to the sensing chamber should be prevented.

Typical modes of instrument support / handling include:

- Hand-held. Do not obstruct or cover the sensing chamber opening slots on front and back of unit.
- Belt attached. Use belt clip provided as standard accessory. The unit can be worn on a waist belt, or with optional shoulder belt (model *p*DR-SS) for breathing zone monitoring.
- Tabletop operation. The *p*DR-1000AN can be placed on a table either in an upright position (i.e., resting on its lower protective bumper), or on its back (i.e., resting on the rear edges of its two protective bumpers).
- Tripod mounted. The unit can be attached to any standard tripod using the threaded bushing on the bottom of the monitor (see Figure 3).
- Fixed point operation. The model *p*DR-1000AN can be mounted at a fixed location (e.g., wall or post) using the optional wall-mounting bracket, model *p*DR-WB.

3.3.2 Model *p*DR-1200

The *p*DR-1200 requires an external air suction device, such as a small diaphragm pump (e.g., model *p*DR-PU) for its sampling operation. The inlet of the pump must be connected by means of tubing to the hose fitting on the *p*DR-1200 filter holder attached to sensing chamber (see Figure 2).

The inlet metal tube of the cyclone can be oriented in any desired direction (i.e., upward, forward, downward or backward) by rotating the cyclone body within its holder cup on the right side of the sensing chamber (see Figure 2).

Always ensure unobstructed access to the cyclone inlet when sampling directly the air in the instrument's vicinity. Alternatively, tubing can be connected to the
cyclone inlet in order to extract a sample stream from a duct, chamber or other enclosed volume.

Typical modes of instrument support / handling include:

- Hand-held. For example, using a personal type pump, clipped to the belt and using a tubing connection to the *p*DR-1200.
- Belt attached. Use belt clip kit provided as standard accessory. The unit can be worn on a waist belt, or with the optional shoulder belt (model *p*DR-SS*)* for breathing zone monitoring. A personal pump can then be belt-worn as well.
- Tabletop operation. The *p*DR-1200 can be placed on a table either in an upright position (i.e. resting on its lower protective bumper), or on its back (i.e. resting on its backside).

- Tripod mounted. The unit can be attached to any standard tripod using the threaded opening on the bottom base (see accessory attachment fitting on Fig. 4).
- Wall mounted for fixed point monitoring. Use optional wall mounting bracket, model *p*DR-WB, either in combination with model *p*DR-PU pump module and model *p*DR-AC power supply (powering both the *p*DR-1200 and the *p*DR-PU), or with a separate pump.

3.4 Air Sampling Guidelines

Although the *personal*DataRAM is designed primarily for intramural use, i.e. for indoor air quality, in-plant, or mining environment monitoring, its active sampling version (model *p*DR-1200) also makes it compatible with extramural use (i.e. ambient monitoring). General ambient monitoring applications, however, are performed preferentially using an appropriate inlet configuration, in order to ensure representative particle sampling under conditions of variable wind speed and direction. Consult with MIE for such outdoor applications.

For typical area monitoring applications, the *personal*DataRAM should be placed and operated centrally within the area to be monitored, away from localized air currents due to fans, blowers, ventilation intakes/exhausts, etc. This is to ensure representative sampling within the area to be assessed.

3.5 Environmental Constraints and Certifications

The *personal*DataRAM is designed to be reasonably dust and splash resistant, however, it is not weatherproof. To operate the unit outdoors provisions should be made to protect it from environmental extremes outside its specified range, and <u>from any exposure to precipitation</u>.

The *personal*DataRAM is certified for compliance with the electromagnetic radiation limits for a Class A digital device, pursuant to part 15 of the FCC Rules. The unit also complies and is marked with the CE (European Community) approval for both immunity to electromagnetic radiation and absence of excessive emission interference.

4.0 ACCESSORIES

4.1 Standard Accessories

The *personal*DataRAM is provided to the user with the following standard accessories:

- Soft-shell carrying case (MIE model *p*DR-CC-1)
- Digital communications cable (MIE model *p*DR-DCC)
- Analog signal/alarm output cable (MIE model *p*DR-ANC)
- Communications software disk (MIE model *p*DR-COM)

- Z-Pouch zeroing kit (MIE model *p*DR-ZP)(for use with *p*DR-1000AN only)
- Zeroing filter cartridge and tubing (MIE model *p*DR-ZF)(for use with *p*DR-1200 only)
- Belt clip kit (MIE model *p*DR-CA)
- AC power supply (and charger for optional MIE model *p*DR-BP) (MIE model *p*DR-AC)
- Metal cyclone (MIE model *p*DR-GK2.05)(for use with *p*DR-1200 only)
- 37-mm filter holder and hose fitting (MIE model *p*DR-FH)(for use with *p*DR-1200 only)
- Instruction manual

4.2 Optional Accessories

The following optional accessories are available from MIE for use with the *personal*DataRAM:

- Rechargeable battery module (MIE model *p*DR-BP)
- Shoulder strap (MIE model *p*DR-SS)
- Remote alarm unit (MIE model *p*DR-RA)
- Wall mounting bracket (MIE model *p*DR-WB)
- Active sampling kit to convert model *p*DR-1000AN to model *p*DR-1200 (MIE model *p*DR-ASC)
- Upper bumper kit to convert model *p*DR-1200 to model *p*DR-1000AN (MIE model *p*DR-UB)
- Attachable pump unit (MIE model *p*DR-PU)(for use with *p*DR-1200 only)

5.0 INSTRUMENT LAYOUT

The user should become familiar with the location and function of all externally accessible controls, connectors and other features of the *personal*DataRAM. Refer to Figures 1 through 6.

All user related functions are externally accessible. All repair and maintenance should be performed by qualified MIE personnel. Please contact the factory if any problem should arise. Do not attempt to disassemble the *personal*DataRAM, except as described in Section 12.0 (Maintenance), **otherwise voiding of instrument warranty will result**.

5.1 Front Panel

Refer to Figures 1 (for model *p*DR-1000AN) or 2 (for model *p*DR-1200) for location of controls and display.

The front panel contains the four touch switches (keys) and the LCD screen required for the operation of the *personal*DataRAM.

The four touch switches provide tactile ("popping") feedback when properly actuated.

The ON / OFF key serves only to turn on the unit (while it is in the off state), and to turn it off (when it is operating).

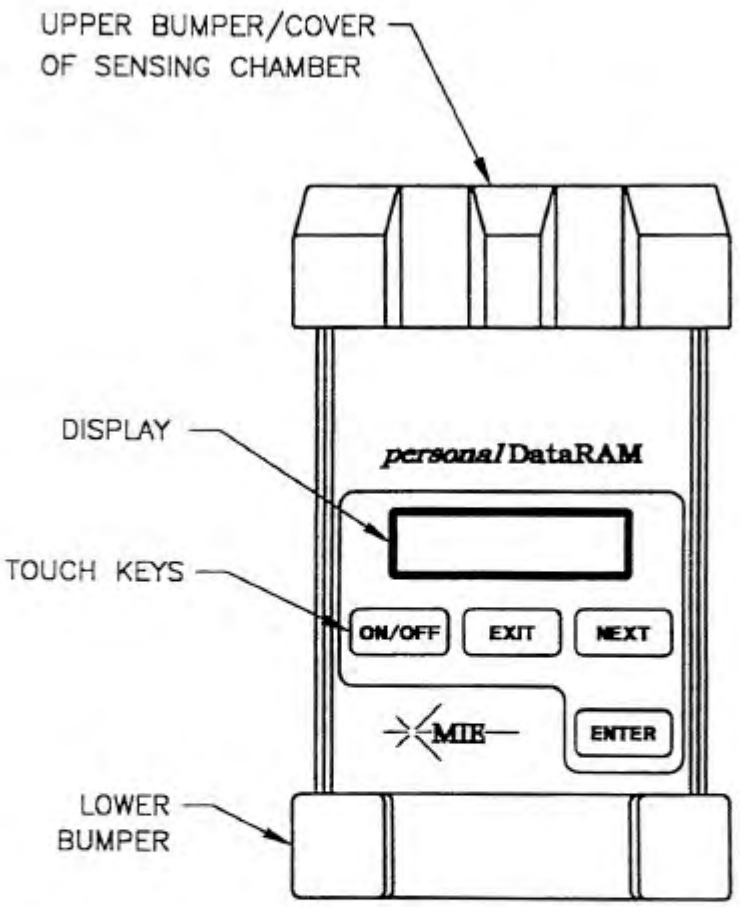

Figure 1 – FRONT PANEL (MODEL pDR–1000AN)

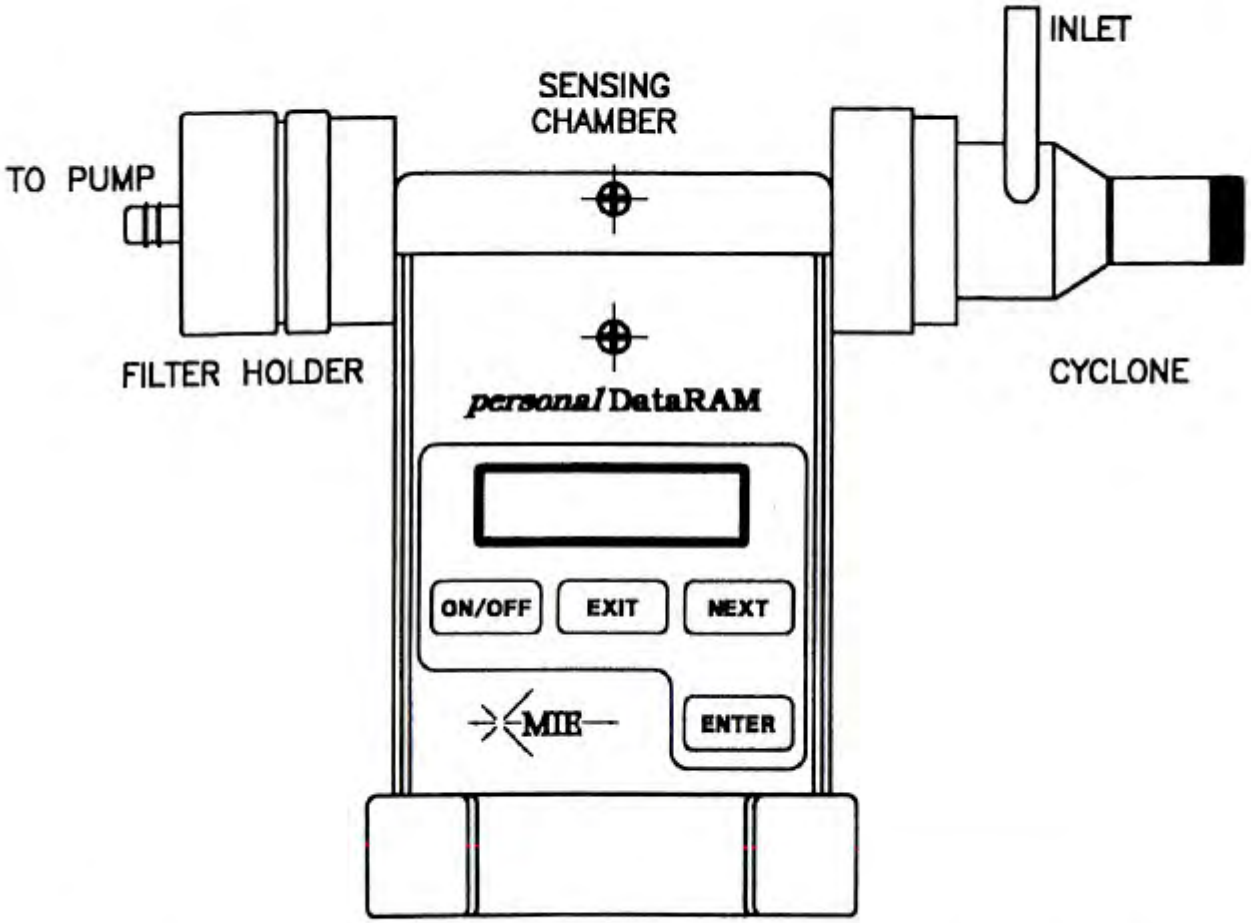

Figure 2. MODEL pDR-1200 WITH CYCLONE & 37MM FILTER HOLDER

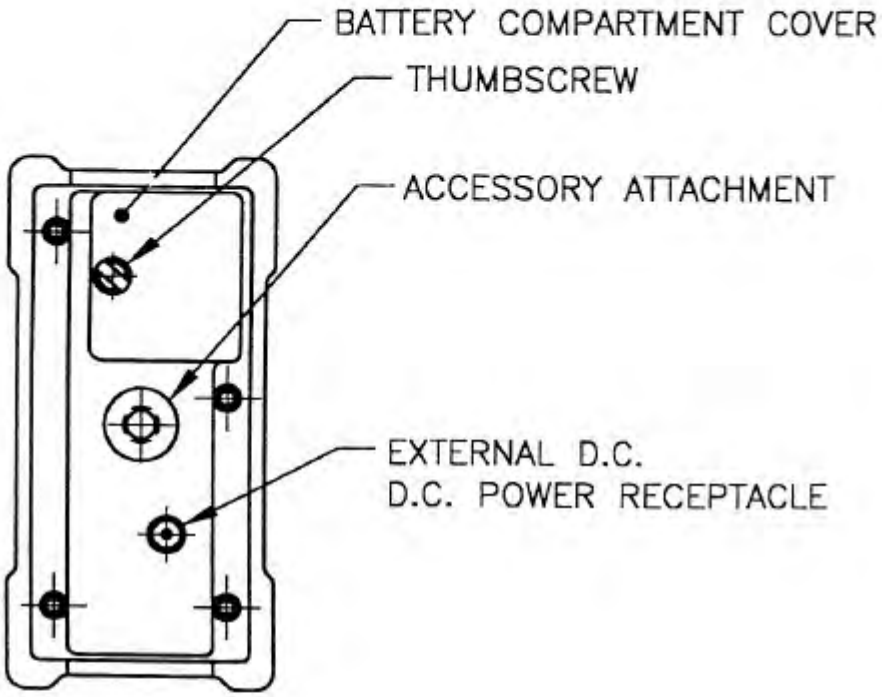

Figure 3 – BOTTOM BASE (MODEL pDR–1000AN)

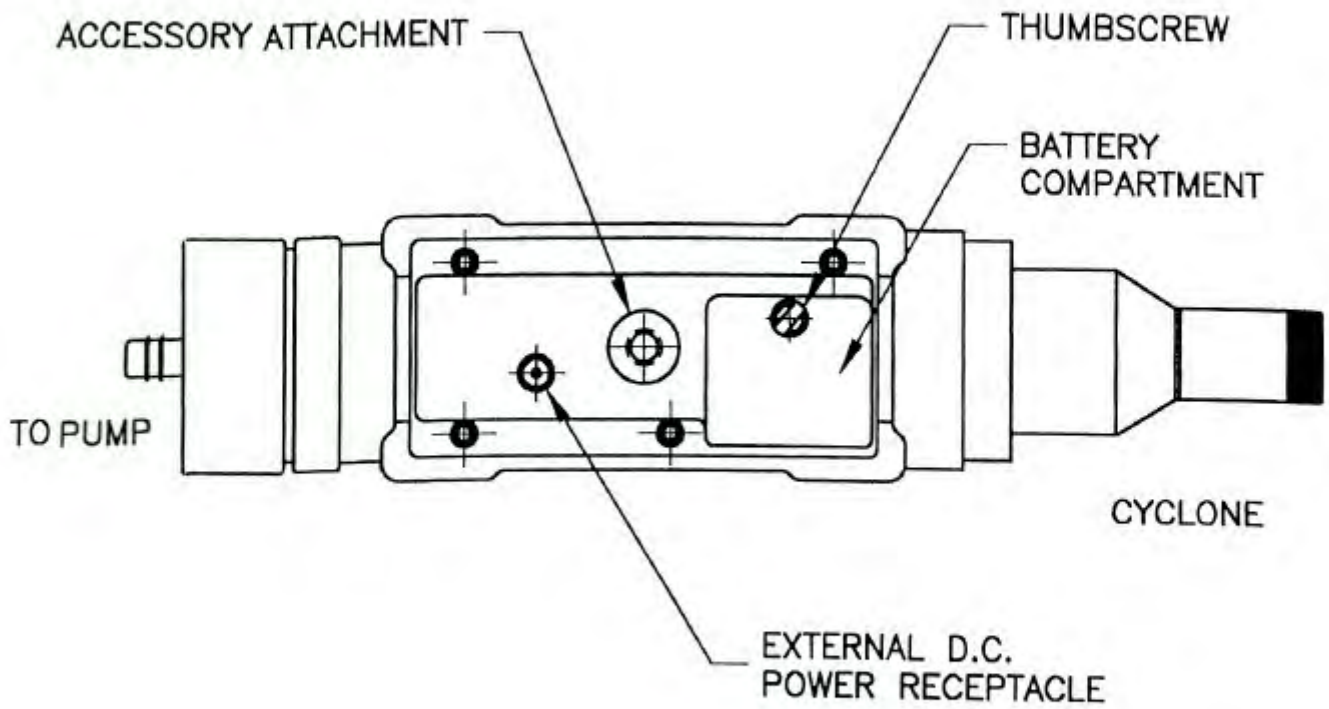

Figure 4 – BOTTOM VIEW (MODEL pDR–1200)

The EXIT and ENTER keys serve to execute specific commands that may be indicated on the screen, and the NEXT key generally serves to scroll the displayed information, e.g. to review the operating parameters that have been programmed, display maximum / STEL values, diagnostic values, etc.

If an incorrect command is keyed (e.g. ENTER when the *personal*DataRAM displays real-time concentration) a beep is heard to alert the user.

The two-line, 16-character per line LCD indicates either measured values of concentration (instantaneous and time averaged on the same screen), elapsed run time, maximum and STEL (short term excursion limit) values, operating and logging parameters, diagnostics, or other messages.

The acoustic alarm transducer is located directly behind the center of the MIE arrow logo on the front panel.

5.2 Bottom Base

Refer to Figures 3 (for model *p*DR-1000AN) or 4 (for model *p*DR-1200). The base of the *personal*DataRAM contains the following: a) internal battery compartment cover, b) external DC power input receptacle, and c) threaded bushing for the attachment of optional battery pack, tripod, or other mounting / support hardware.

Only the internal battery compartment cover should be opened by the user, for removal and replacement of the on-board 9-V battery. Removal of the base plate could result in voiding of instrument warranty.

5.3 Right Side Panel

Refer to Figures 5 (for model *p*DR-1000AN) or 6 (for model *p*DR-1200) which shows the manner of attachment of the belt clip assembly (belt clip should be attached only if required by the user). The right side panel (as viewed from front panel) contains the 6-contact modular jack connector receptacle for digital (RS-232) communications and analog signal output. This connector also provides the alarm output control for a remote / auxiliary alarm signal. The contacts (from top to bottom) are:

1: 4 – 20 mA analog output (positive)
2: Alarm output
3: Digital data transmission
4: Digital input
5: Common ground (signal returns)
6: 0 to 5 V analog output (positive)

The digital communications cable provided as a standard accessory is to be inserted into this receptacle for interconnection to a computer (for data downloading or to

reprogram parameters). The analog output cable is provided with flying leads for interconnection with other data processing and / or control systems.

WARNING: The modular jack receptacle on the side of the *personal*DataRAM should be used only for communications with computers and alarm circuitry. **Do not, under any circumstance, connect any communications equipment (e.g., telephone) to this receptacle.**

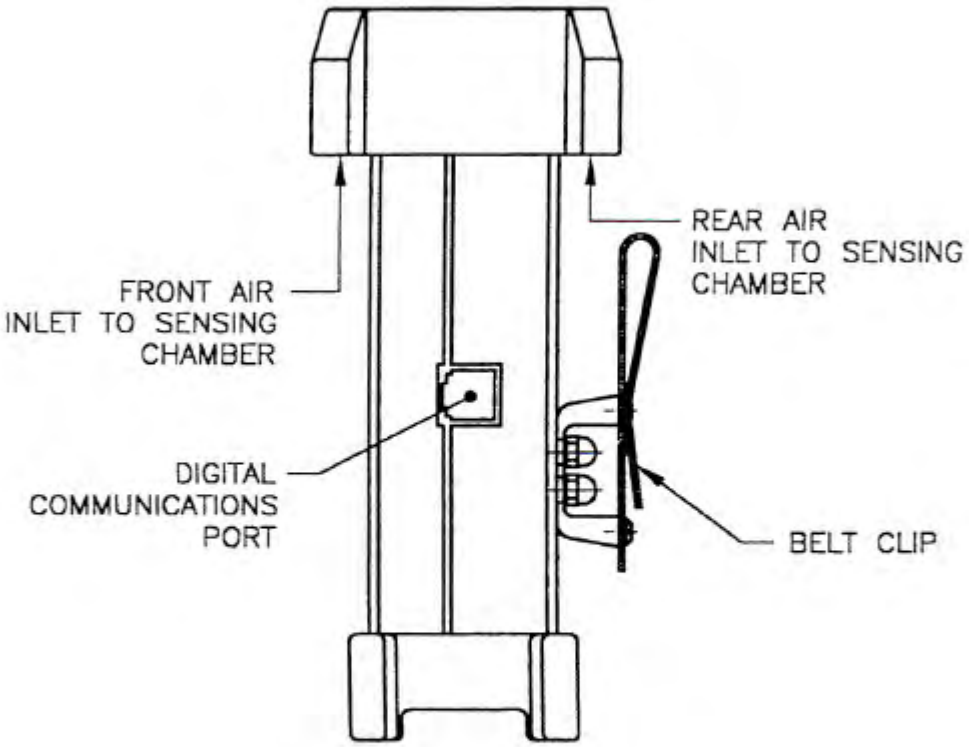

Figure 5 – RIGHT SIDE PANEL (MODEL pDR–1000AN)
(SHOWN WITH BELT CLIP ATTACHED)

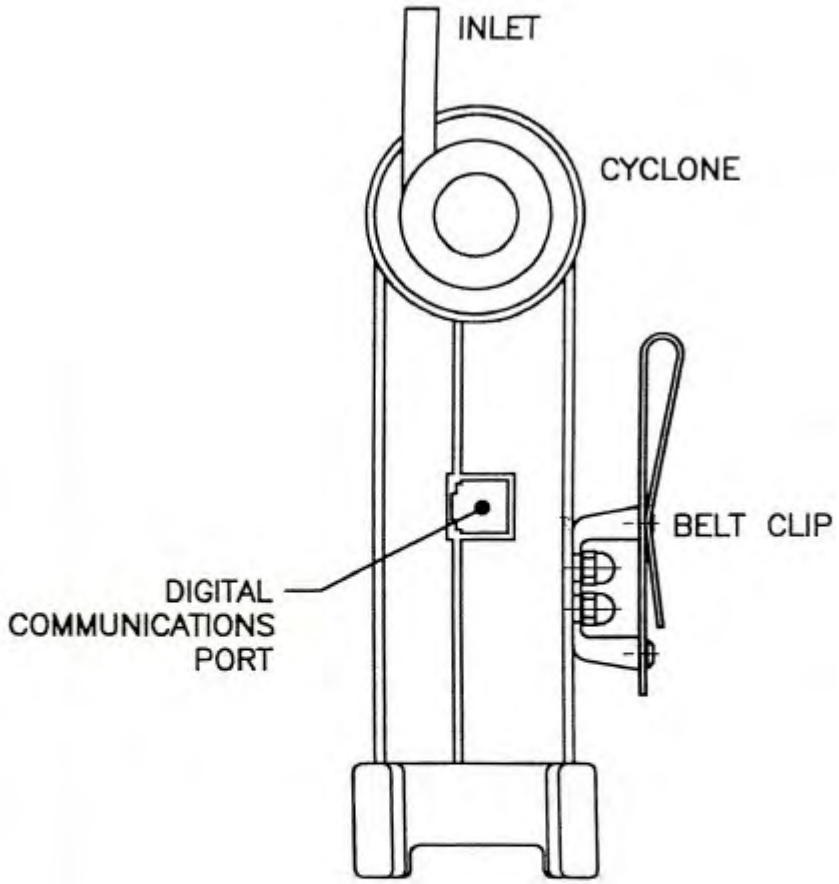

Figure 6 – RIGHT SIDE VIEW (MODEL pDR–1200)
(SHOWN WITH BELT CLIP ATTACHED)

5.4 Back Panel and Belt Clip

The back panel consists of a label with important user information on safety procedures and certifications, model and serial numbers, etc.

The back panel is provided with mounting hardware for the attachment of the belt clip kit (see Figures 5 or 6 for mounting configuration of the belt clip).

5.5 Sensing Chamber

Referring to Figure 1 or 2, the upper mid-section of the *personal*DataRAM contains the optical sensing chamber. This chamber is the only internal section that the user should access for maintenance purposes (see Section 12.2).

On the model *p*DR-1000AN, air enters the sensing chamber through the two slot shaped inlets (one on the front and other on the back) under the protective bumper. During instrument operation those two openings should remain unobstructed in order to ensure free access of the surrounding air. When the model *p*DR-1000AN is used as personal monitor, i.e., clipped to a person's belt, the rear air inlet opening may be partially obstructed, but care should be exercised in ensuring that the front air inlet remains free of any obstructions.

On the model *p*DR-1200, air enters the sensing chamber through the opening in the cyclone receptacle cup (black cup on right side of sensing chamber), passes through the photometric stage, and exits through the opening in the filter holder receptacle cup (black cup on left side of sensing chamber), after which the air passes through the filter.

6.0 PREPARATION FOR OPERATION

6.1 Battery Installation

When shipped from the factory, the *personal*DataRAM will arrive without its replaceable 9V battery installed. Two fresh alkaline batteries are factory packed separately in the carrying case, one of which should be installed in the *personal*DataRAM when preparing it for operation.

NOTE: Whenever the *personal*DataRAM is to be left unused for an extended time (i.e. longer than a month), the 9V battery should be removed from the unit.

Removing the battery will lose neither the program, time/date keeping, nor stored data.

To install the battery proceed as follows:

- Hold the *personal*DataRAM upside down.
- Loosen thumbscrew that secures the battery compartment cover (see Figure 3 or 4), and remove that cover.
- Observe battery polarity and the back panel battery orientation pattern (the negative battery terminal is the one closer to the side of the instrument).
- Insert the battery by sliding it in until it bottoms out. It should protrude slightly above the bottom surface of the instrument.
- Place battery compartment cover over battery and, while pushing down the cover firmly (taking care that the cover seats flush on the bottom surface of the *personal*DataRAM), tighten thumbscrew securely.

6.2 Battery Replacement

Normally, only alkaline type 9V batteries (type 1604A, or equivalent) should be used with the *personal*DataRAM.

Only fresh batteries should be used in order to ensure the maximum operating time. The *personal*DataRAM shuts itself off whenever the battery voltage falls below 6 volts (while retaining all programming and data). A fresh 9V alkaline battery, at room temperature, should provide typically 20 hours of continuous operation (please note that not all manufacturers produce batteries of equal capacity). Intermittent operation should extend the total running time because of partial battery recovery effects.

The approximate remaining battery capacity is indicated by the *personal*DataRAM (see Section 8.2) in increments of 1%, starting from 99%. If the remaining battery capacity is 40% or less, immediate restarting after shut off is automatically inhibited to prevent incomplete runs. If, nevertheless, a new run is to be initiated with low remaining battery capacity, do not shut off the *personal*DataRAM at the end of the previous run (i.e., remain in the Ready Mode, see section 7.0).

When significantly extended operating times are required (beyond the typical 20 hours), the use of either lithium or zinc-air batteries can be considered. The use of such alternative battery types can provide about 2 to 3 times longer operation than alkaline batteries.

6.3 AC Power Supply

A universal line voltage AC to DC power supply (MIE model *p*DR-AC) is provided as standard accessory with the *personal*DataRAM. This power supply can be used with any line with a voltage between 100 and 240 VAC (50 to 60 Hz). When using that power supply, its output plug should be inserted into the external DC receptacle at the base of the *personal*DataRAM (see Figure 3 or 4). Insertion of that connector automatically disables the internal 9V battery of the instrument. Removal of the *p*DR-AC plug from the instrument automatically re-connects the internal 9V battery.

NOTE: Before plugging in or unplugging the external power supply, the *personal*DataRAM must be shut off.

6.4 Rechargeable Battery Module

A rechargeable battery pack (MIE model *p*DR-BP) is available as an optional accessory. This unit attaches directly to the base of the *personal*DataRAM.

The *p*DR-BP contains a sealed nickel-metal-hydride battery, which provides typically 72 hours of continuous operation between successive charges (for 3-hour charging).

The use of the *personal*DataRAM, in combination with the *p*DR-BP connected to the a.c. power line ensures totally uninterruptible operation over indefinitely long time. In this operating mode, line power interruptions lasting up to 72 hours have no effect on measurement run continuity.

To attach the *p*DR-BP to the *personal*DataRAM, the instrument should be shut off. Carefully plug the *p*DR-BP into the external DC RECEPTACLE on the *personal*DataRAM. Rotate the large thumbscrew at the opposite end of the *p*DR-BP tightening it firmly. The *p*DR-BP can be recharged by means of the AC power supply of the *personal*DataRAM.

Detailed instructions for the use of the rechargeable battery module are furnished with that accessory.

6.5 Zeroing the *personal*DataRAM

One of the most important steps to be performed by the user before initiating a measurement run with the *personal*DataRAM is to zero the instrument. This is required to ensure maximum accuracy of concentration measurements, especially at low levels, i.e. below about 0.1 mg/m^3.

During the 2-minute pre-run automatic zeroing sequence (see Section 8.1), the *personal*DataRAM registers its own optical background, stores that level in its memory, and then subtracts that background from all measured concentration values, until the zero is updated again by the user.

Although zeroing can be performed as often as desired (e.g., before every run), in practice it should not be necessary to do so more than once-a-month or even less frequently, except if average particulate concentrations should exceed about 0.5 mg/m^3.

6.5.1 Zeroing the model *p*DR-1000AN

Zeroing of the model *p*DR-1000AN requires a particle-free environment such as a clean room, clean bench, duct or area directly downstream of a HEPA filter, or the *p*DR-1000AN Z-Pouch (standard accessory). In some cases, a very clean, well air-conditioned office may offer a sufficiently low particle concentration environment (i.e., $\leq 5\ \mu g/m^3$) for zeroing, as determined by another monitor (e.g., MIE DataRAM).

To zero the model *p*DR-1000AN by means of its Z-Pouch, proceed as follows:

- Wipe the outside surfaces of the *p*DR-1000AN to remove as much dust from those surfaces as possible before placing the instrument inside the Z-Pouch.
- In a reasonably clean environment, open the zipper of the Z-Pouch and place the *p*DR-1000AN inside it. Close the zipper shut.
- Open the small nipple on the Z-Pouch, and insert the fitting of the hand pump/in-line filter unit into the nipple.
- Start pumping the hand-pump until the Z-Pouch begins to bulge, and proceed with the steps in Section 8.1, pressing the keys of the instrument through the wall of the Z-Pouch. Then continue pumping.
- After completing the zeroing (step 2. of Section 8.1) procedure, open the Z-Pouch zipper and remove the *p*DR-1000AN. Close the zipper and flatten the Z-Pouch while plugging its nipple, in order to prevent dust contamination of the interior of the Z-Pouch.
- The *p*DR-1000AN is now zeroed and ready for a measurement run.

6.5.2 Zeroing the model *p*DR-1200

To provide the particle-free air required to zero the *p*DR-1200, either of two methods can be used: a) place the instrument on a clean-air bench or in a clean room, or b) connect to the cyclone inlet the green zeroing filter cartridge supplied with the *p*DR-1200. In either case, proceed as follows:

- After implementing either of the two methods, above, run the attached pump for at least one minute (e.g., at 4 liters/minute), and then proceed as described in Section 8.1 of this instruction manual, while continuing to run the pump (or leaving the unit in the clean air environment).
- Once the CALIBRATION: OK message appears on the *p*DR-1200 display, stop the pump and disconnect the zeroing filter cartridge from the cyclone inlet (or remove *p*DR-1200 from clean bench/room).
- The *p*DR-1200 is now zeroed and ready for a measurement run.

Note: While the *p*DR-1200 is used to monitor high dust concentrations (^{3} 0.5 mg/m^{3}), the flow through its sensing chamber should not be stopped before purging it, which can be done by connecting the green zeroing filter to the cyclone inlet and continuing to run the pump for about 2 minutes before shutting it off. This is to prevent dust contamination of the sensing chamber.

6.6 *p*DR-1200 Filter Holder Installation

The 37-mm filter holder provided with the *p*DR-1200 must be installed before operation of the instrument, in order to connect a sampling pump. To install the filter holder, remove protective cover, and insert the open collar over the black attachment cup with the external o-ring, on the left side of the *p*DR-1200 sensing chamber. Ensure complete insertion.

To replace the membrane filter separate the two sections of the plastic holder prying them apart with screwdriver or a coin. Make sure to place backing under the membrane filter before rejoining the two plastic rings.

7.0 OPERATING MODES

The *personal*DataRAM has several different operating modes which will be described in what follows. The specific commands and displays within each of these operating modes will be explained in detail in Section 8.0. A complete flow chart of keystrokes and screens is provided in Section 16.0.

7.1 Start-Up Mode

The *personal*DataRAM enters the Start-Up Mode as soon as the instrument is switched on. The user then has the choice to:

a) Wait before proceeding;
b) Zero the instrument and check its readiness; or
c) Proceed directly to the Ready Mode.

7.2 Ready Mode

Once the *personal*DataRAM is in the Ready Mode, the user is presented with the following alternatives:

a) Start a run immediately, or after any of the subsequent steps;
b) Review (by scrolling the display) all operating parameters, status and diagnostic data;
c) Activate or deactivate the logging function; activate, select (instantaneous or STEL), or deactivate alarm;
d) Program parameters or output logged data through a computer.

7.3 Run and Logging Mode

The Run Mode is the measurement/logging mode. The user can operate the *personal*DataRAM in this mode either with or without data logging. For example, the instrument may be used first as a survey monitor without logging, for walk-through assessment of an industrial plant, before deciding where to set up the unit for continuous monitoring and logging.

7.3.1 Data Logging

In order to activate the logging function, the unit must be in (or returned to) the Ready Mode (see Section 8.2).

If data logging has been enabled, the data will be logged in the next free (unrecorded) tag or data set. For example, if data had been recorded previously in tags # 1, 2 and 3 then, when a new run is initiated, the new data will be stored in tag #4. The data can be separated into number of sets (tags) up to a total of 99.

Any number of individual data points can be stored in a given tag, i.e. up to a maximum of 13,000 points (i.e. the total memory capacity of the *personal*DataRAM) assuming that no other data had been logged in other tags. This means that the total memory capacity of 13,000 data points can be grouped into any number of the available 99 data sets (tags).

7.3.2 Clearing of Memory

Data recorded in the *personal*DataRAM memory can be erased either through an external PC command using the MIE *p*DR-COM Custom Communications software provided as a standard accessory, or resetting the instrument (see Section 8.5). The PC method permits to erase the data in any number of selected tags, whereas the resetting method results in the deletion of all data stored in the *personal*DataRAM.

7.3.3 Run Mode Display and Commands

When a measurement run has been initiated (see Section 8.3), the user has the following display choices:

a) Instantaneous and time-averaged concentrations (both on the same screen);
b) Elapsed run time, and run start time and date (both on the same screen);
c) Maximum displayed concentration from run start, and time/date at which current maximum occurred;
d) Short term excursion limit (STEL) from run start, and time/date at which current STEL occurred;
e) Remaining battery charge, and (if logging function is enabled) remaining free memory.
f) Analog output concentration range (if enabled)

The user can command the termination of the run at any time returning it to the Ready Mode. To download logged data into a PC, the *personal*DataRAM must be in

the Ready Mode. No changes in the program parameters or operating conditions can be made while in the Run Mode.

The *personal*DataRAM can be shut off from any of the three operating modes. Even if shut off while in the Run Mode, the instrument will save all stored data.

8.0 OPERATION

8.1 Start-Up

	KEY	DISPLAY	NOTES
1.	**ON/OFF**	START ZERO:ENTER GO TO RUN: NEXT	Before starting a run with the *personal*DataRAM, zero it (see Section 6.5) and key **ENTER** while the unit is exposed to particle-free air. Alternatively, key **NEXT** to go to RUN/READY mode. If **ENTER** is keyed:
2.	**ENTER**	ZEROING V2.00	Keep clean air flowing while ZEROING is displayed* for 1.1 min., followed by one of these screens:
		CALIBRATION: OK	or,
		BACKGROUND HIGH	or,
		MALFUNCTION	If CALIBRATION: OK, then go to step 3. If one of the other two screens is displayed, consult Section 12.0.
3.	**NEXT**	START RUN: ENTER READY: NEXT	To start a measurement run key **ENTER** (Section 8.3, step 1). To set up for a run and scroll logging/operating parameters, key **NEXT** (see Section 8.2).
4.	**ON/OFF**	TURN OFF PDR? Y:ENTER N:NEXT	Keying **ON/OFF** while the unit is operating will elicit this message to prevent accidental shut off. To confirm shut down, key **ENTER**. To continue operation, key **NEXT**.

*The number following the V on the screen refers to the installed firmware version.

8.2 Setting Up For A Run (Ready Mode)

	KEY	DISPLAY	NOTES
1.	**NEXT**	LOGGING DISABLED	This screen indicates the logging status. **To enable the logging function**, key **ENTER**. Toggling of the on/off logging status can be done by keying **ENTER**.
2.	**ENTER**	LOG INTRVL 600s TAG#: 4	This message indicates that logging is enabled. Example is for 10-min log period, selected through the PC (see Section 9.0), and next free tag is #4.
3.	**NEXT**	ALARM: OFF	This screen indicates the alarm status. Keying **ENTER** repeatedly toggles through the 3 alarm modes:
4.	**ENTER**	ALARM: INSTANT LEVEL:1.50 mg/m3	This enables the alarm based on the real-time concentration. The level (e.g. 1.50 mg/m3) must be set on the PC.
5.	**ENTER**	ALARM: STEL LEVEL:0.50 mg/m3	This enables the alarm based on the 15-min STEL value. The level (e.g. 0.50 mg/m3) must be set on the PC.
6.	**NEXT**	ANALOG OUTPUT: DISABLED	This screen indicates the analog signal output status. Keying **ENTER** will enable the analog output. Toggling the analog output on/off can be done by keying **ENTER**:
7.	**ENTER**	ANALOG OUTPUT: 0 – 0.400 mg/m3	This enables the analog output. The concentration range (e.g., 0 – 0.400 mg/m^3) must be set on the PC.
8.	**NEXT**	CAL FACTOR: 1.00 DIS AVG TIME 10s	This screen displays the calibration factor and the display averaging time. Both values can be edited via PC.

9.	**NEXT**	BATTERY LEFT 83% MEMORY LEFT 96%	This screen displays the remaining battery charge, and the remaining percentage of free memory.
10.	**NEXT**	CONNECT TO PC	When this screen has been selected, the operating parameters can be edited and/or the logged data can be downloaded via the PC (see Section 9.0). If **NEXT** is keyed again, the screen returns to RUN/READY:
11.	**NEXT**	START RUN: ENTER READY: NEXT	The instrument is now ready to run following the procedure in section 8.3.

8.3 Measurement Run Procedure

	KEY	DISPLAY	NOTES
1.	**ENTER**	LOGGING DISABLED	or, if logging was enabled:
		LOG INTRVL 600s TAG #: 4	Logging status will be displayed for 3 seconds.
		CONC*0.047 mg/m3 TWA 0.039 mg/m3	After a 3-second delay, the concentration screen appears (values shown here are examples). CONC is the real-time and TWA is the time-averaged concentration**. The * appears only if logging has been enabled.**
2.	**EXIT**	TERMINATE RUN? Y:ENTER N:EXIT	To terminate the current run and return to the Ready Mode, key **ENTER**. To continue the run, key **EXIT**.
3.	**EXIT**	CONC*0.047 mg/m3 TWA 0.039 mg/m3	Keying **NEXT** successively scrolls the display to show various run values (elapsed run time, maximum, STEL, etc.). Keying **EXIT** from any of those screens returns to the concentration display.

4.	**NEXT**	ET 06:12:49 ST 08:18:26MAY15	This screen shows the elapsed run time (ET) and the run start time / date (ST).
5.	**NEXT**	MAX: 0.113 mg / m3 T 10:08:44 MAY15	This screen shows the maximum concentration of current run and time / date of occurrence.
6.	**NEXT**	STEL:0.058 mg / m3 T 09:59:22 MAY15	This screen shows the 15-min STEL value of the current run and the time / date of occurrence.
7.	**NEXT**	BATTERY LEFT 83%	or, if logging was enabled:
		BATTERY LEFT 83% MEMORY LEFT 96%	This screen shows the amount of usable charge left in the battery and, if logging has been enabled, the overall amount of free memory left.
8.	**NEXT**	ANALOG OUTPUT: 0 – 0.400 mg / m3	This screen shows the status of the analog signal output, and the range, if this output has been enabled.
9.	**NEXT**	CONC*0.047 mg / m3 TWA 0.039 mg / m3	The last **NEXT** command returns the display to the concentration screen.
10.	**EXIT**	TERMINATE RUN? Y:ENTER N:NEXT	As indicated in step 2, to end current run, key **ENTER**, to return to the Ready Mode:
11.	**ENTER**	START RUN: ENTER READY: NEXT	This keystroke terminates the current run and returns the unit to the Ready Mode.

If during a run the instrument memory is filled completely, or if all 99 tags have been used, the run is automatically terminated and the display will indicate:

RUN TERMINATED
FULL MEMORY

If a new run is initiated after the memory has been filled, the *personal*DataRAM can be operated only as a monitor without logging. The memory must then be cleared (see Section 7.3.2) first before logging can be enabled again.

8.4 Abbreviated Run Start/Stop Instructions

To power-up and start a measurement run without zeroing and without logging, proceed as follows:

- Key sequentially **ON/OFF**, **NEXT** and **ENTER**.

To terminate run and shut down, proceed as follows starting from the concentration screen (otherwise key **EXIT** first):

- Key sequentially **EXIT**, **ENTER, ON/OFF** and **ENTER**.

8.5 Resetting Procedure

The *personal*DataRAM memory can be reset through commands entered on its own keypad (i.e. without requiring a PC).

Resetting accomplishes the following:

- Erases all stored data from memory;
- Resets all parameters and operating conditions to their default values and conditions; and
- Cancels the zero correction offset.

WARRING: THE RESET TEST WILL ERASE ALL DATA STORED IN MEMORY AND SET ALL PARAMETERS TO FACTORY DEFAULT SETTINGS. Download any data before the reset procedure.

The procedure to reset the instrument is as follows:

Starting with the unit shut off, press the EXIT and ENTER keys at the same time, and while holding down those two keys, press ON. The screen will then indicate:
PDR SELF-TEST... and several diagnostic screens will appear in rapid sequence (see Section 16.0, Resetting/Electronics Checking Mode), ending in the message TESTING COMPLETE. The unit will shut off. When turned on again, the *personal*DataRAM memory will have been reset, as described above.

The **default** values and operating conditions of the *personal*DataRAM are:

- Logging period (LOG INTRVL): 60 seconds
- Logging status: disabled (LOGGING DISABLED)
- Alarm level: 1 mg/m^3
- Alarm status: disabled (ALARM: OFF)
- Analog output: 0 to 4 mg/m^3
- Analog output status: disabled (ANALOG OUTPUT :DISABLED)
- Real-time display averaging time (DIS AVG TIME): 10 seconds

- Calibration factor (CAL FACTOR): 1.00

When turning on the *personal*DataRAM after resetting the instrument, it should be zeroed (see steps 1. and 2. of Section 8.1) before a run is initiated. Otherwise, its internal optical background level will not be subtracted from the indicated concentration readings. Alternatively, if the instrument is not zeroed after resetting, it will indicate its unsubtracted optical background when run under particle free conditions.

9.0 COMMUNICATIONS WITH COMPUTER

9.1 Hardware and Software Requirements

The computer requirements to install the software provided with the *personal*DataRAM (MIE *p*DR-COM) are the following:

- IBM-PC compatible
- 486 or better processor
- Minimum operating system: Windows 95™ or better
- ≥ 8 MB of RAM
- 2 MB hard disk drive
- 3.5" floppy drive
- VGA or higher resolution monitor

NOTE: When large files are logged in the *personal*DataRAM in one single tag, a faster computer speed is required to handle the data. For example, if all 13,000 data points are logged in one tag, a Pentium I or II processor with a minimum speed of 166 MHz will be required. If, however, the maximum number of data points per tag is 1,000 or below, a 33 MHz, 486 DX processor will suffice.

MIE custom hardware and software (provided as standard accessories):

- Digital communications cable (MIE model *p*DR-DCC)
- Software floppy disk (3.5", MIE model *p*DR-COM)

9.2 Software Installation Procedure

To install the MIE provided software in the computer, proceed as follows:

1. Insert the 3.5" disk labeled "*p*DR-COM" into computer.
2. For Windows 95™ users, select **Start** and then **Run**. For Windows 3.1 and 3.11 users, from Program Manager select **File** and then **Run**.
3. Type in on the **Command Line**: **a: install** (or **b: install**, as required).
4. The message "**Do you wish to install *p*DR-COM?**" will appear. Click **OK** to continue, or **Cancel**.
5. A message appears allowing the option to change the default directory:

"**C:\PDRCOM**". It is advisable to leave the default directory (unless you address the hard drive by a different letter), and select **OK**.

6. After a successful installation, the message "**Installation Complete!**" will appear.

9.3 Communication Between *personal*DataRAM and Computer

To effect the communication between the *personal*DataRAM (via the *p*DR-COM software installed in the computer as described in the preceding section) and the PC, proceed as follows:

1. Connect the *personal*DataRAM to one of the computer's serial ports using the *p*DR-DCC cable provided by MIE. This cable has a 9-pin female connector for the computer port.

2. Key **ON** the *personal*DataRAM and then key **NEXT** repeatedly until CONNECT TO PC is displayed on the *personal*DataRAM.

3. On the computer, double click on the ***p*DR-COM** icon. A four-tabbed notebook display should appear. Click on the **Com Port Select** and select the port to which the *p*DR-DCC cable has been connected.

4. From the four-tabbed notebook displayed on the computer screen select the tab with the desired option. The options are:

   - **Main**: This page allows the user to input the *personal*DataRAM serial number (or any other desired label), and select the Serial Com Port.

   - **Logged data**: This page allows the user to download, tabulate, print data, or transfer to a CSV file the data stored in the *personal*DataRAM. This page also serves to display real-time numerical data when the computer is connected to the *personal*DataRAM in the Run Mode.

   - **Graph data**: This page enables the downloading and graphing of stored data to the computer screen and to a printer. In the Run Mode, this page displays the real-time data in graphic format.

   - **Configure pDR**: This screen allows the user to edit the operating/logging parameters. Click on the item to be edited and select or type in the new value. To review the parameter values currently programmed into the *personal*DataRAM, click on **Get configuration**. After editing the parameters, click on **Set configuration** to input the new values into the *personal*DataRAM program.

Most operations within *p*DR-COM are self-evidently labeled, including fly-over dialog boxes. In addition, instructions may be found in the On-line Help files by selecting **Help** and then **Contents**.

The following operating/logging parameters of the *personal*DataRAM are selected (edited) via the computer:

- Current date (month and day of the month)

- Current time (hour, minute and second)
- Display averaging time (1 to 60 seconds, in 1-second increments)
- Calibration factor (0.01 to 9.99, in 0.01 increments)
- Logging interval (1 to 14,400 seconds, in 1-second increments)
- Analog output full scale concentration (0.1, 0.4, 1, 4, 10, 40, 100, or 400 mg/m^3)
- Analog output status (enabled, or disabled) (can also be selected directly through *personal*DataRAM keyboard, see Section 8.2)
- Alarm level (0.001 to 409.599 mg/m^3, in 1-$\mu g/m^3$ increments)
- Alarm mode (Off, Instantaneous, or STEL) (can also be selected directly through *personal*DataRAM keyboard, see Section 8.2)

The serial number of the *personal*DataRAM is transferred automatically to the PC and displayed on its screen.

In addition, the user can input any other identification for the instrument (up to 20 characters).

Note: The year is entered as a two-digit number; year 2000 is treated correctly as a leap year (*personal*DataRAM version 1.70 or higher).

9.4 Real-Time RS-232 Output

During the RUN mode, the *personal*DataRAM can communicate real-time concentration data through its serial port via the *p*DR-COM software package. This software application decodes the data and displays it on the computer screen in both graphical and tabulated form.

In order to use this output with some other application, the following information will enable the user to decipher the encoded output signal.

The communication settings for the digital output of the *personal*DataRAM are:

- Baud rate: 4800 bps or 9600 bps
- Data bits: 8
- Stop bits: 1
- Parity: none
- Flow control: Xon / Xoff

Every second during a run, the *personal*DataRAM serial port will output a sixteen-character code. It consists of two brackets with 14 hexadecimal digits between them, representing sum check (2 digits), sensed concentration (8 digits), and calibration factor (%, 4 digits). The concentration in $\mu g/m^3$ is obtained by multiplying the sensed concentration times the calibration factor and dividing by 100.

10.0 ANALOG SIGNAL OUTPUT

10.1 Analog Output Description

The *personal*DataRAM incorporates the capability to provide both a voltage and a current signal output directly proportional to the sensed concentration of airborne particulates. Both these analog signal outputs are concurrently available. These outputs are provided, principally, for fixed-point applications with hard-wired installations, such as for continuous HVAC monitoring and control.

The particulate concentration range corresponding to the output voltage and current ranges (0 to 5 V and 4 to 20 mA) can be user selected (via a PC). The most sensitive range available is 0 to 0.100 mg/m^3, and the least sensitive range is 0 to 400 mg/m^3. For example, if the user selects the analog output range of 0 to 0.400 mg/m^3 then the analog output signal levels, at a concentration of 0.200 mg/m^3, would be 2.5 V and 12 mA.

Selection of the concentration range of the analog output must be performed on the PC. This range is independent of the digital display, data logging and real-time digital output range which are controlled automatically (auto-ranging).

Enabling the analog output increases the current consumption from the power source (battery or power supply) of the *personal*DataRAM by typically 5 mA when no load is connected to the analog signal current output. If such a load is connected then the current consumption of the *personal*DataRAM further increases by the magnitude of the output signal current (up to a maximum increment of 20 mA). Therefore, when not using the analog output, it is advisable to disable that output (see Section 8.2) in order to minimize power consumption (this is important only when powering the *personal*DataRAM from a battery source).

10.2 Analog Output Connection

The *personal*DataRAM is provided with a cable (model *p*DR-ANC) which has a 6-contact plug at one end and flying leads at the other. There are 4 leads for the analog and alarm outputs. The additional two contacts of the connector are used only for digital communication with a PC, for which a separate cable (model *p*DR-DCC) is provided.

Counting from top to bottom on the *personal*DataRAM connector receptacle, contact #1 is the positive 4 – 20 mA analog output, contact #2 is the alarm output, contact #5 is the common ground (return for all signals), and contact #6 is the positive 0 – 5 V analog output.

For the 0 – 5 V output signal, the externally connected load must have an impedance of more than 200 kilo-ohms. For the 4 – 20 mA output signal, the externally connected load must have an impedance of less than 200 ohms when powering the

*personal*DataRAM with a battery, or less than 300 ohms when using the its AC supply.

Since both voltage and current outputs are present at the same time, both can be used concurrently, if so required.

The accuracy of the analog output signals is better than 1% of the reading with respect to the digital reading.

11.0 ALARM

11.1 Alarm Description and Operation

The *personal*DataRAM alarm function is provided both as an audible signal as well as an electrical output. The audible alarm consists of a series of beeps generated by an on-board piezo-transducer. The electrical output, available at the digital communications port, consists of a 1 Hz square wave signal which can be used to trigger/activate other equipment through an appropriate interface (consult with the factory).

The alarm function can be enabled/disabled by the user through the *personal*DataRAM keyboard (see Section 8.2). Setting of the alarm level must be performed on the PC (see Section 9.0).

The alarm is triggered whenever the preset alarm level is exceeded based either on : a) the displayed real-time concentration, if ALARM: INSTANT was selected (see Section 8.2), or b) a 15-minute running average concentration, if ALARM: STEL was selected. When the concentration falls below that level the alarm condition stops. While the alarm is on the user can stop it (i.e. silence the alarm) by pressing any key of the *personal*DataRAM. If the concentration continues to exceed the set alarm level after 10 seconds, however, the alarm restarts.

11.2 Alarm Output

A pulsed voltage output is available on the *personal*DataRAM in synchronism with the audible signal. This signal consists of a 1 Hz square wave with an amplitude level of 5 V pp. An externally connected load should have an impedance of no less than 100 kilo-ohms. This alarm output signal is available at pins 2 and 5 (counting from top to bottom) of the 6-contact output/communications port on the side of the *personal*DataRAM (see Figure 5 or 6).

11.3 Remote Alarm Unit

An alarm relay unit (MIE model *p*DR-RA) is available as an optional accessory for the *personal*DataRAM. The *p*DR-RA, when connected to the alarm output of the *personal*DataRAM, provides a switched output triggered by the alarm signal of the monitor. This switched output (up to 8 amperes, 250 volts) can be used to activate or

deactivate other equipment (e.g. ventilation systems, machinery, etc.), or to control remotely located (by wire connection) alarm indicators (e.g. buzzers, lights, etc.).

12.0 MAINTENANCE

12.1 General Guidelines

The *personal*DataRAM is designed to be repaired at the factory. Access to the internal components of the unit by others than authorized personnel voids warranty. The exception to this rule is the occasional cleaning of the optical sensing chamber.

Unless a MALFUNCTION message is displayed, or other operational problems occur, the *personal*DataRAM should be returned to the factory once every two years for routine check out, test, cleaning and calibration check.

12.2 Cleaning of Optical Sensing Chamber

Continued sampling of airborne particles may result in gradual build-up of contamination on the interior surfaces of the sensing chamber components. This may cause an excessive rate of increase in the optical background. If this background level becomes excessive, the *personal*DataRAM will alert the user at the completion of the zeroing sequence, as indicated in Section 8.1, by the display of a BACKGROUND HIGH message. If this message is presented, the *personal*DataRAM can continue to be operated providing accurate measurements. However, it is then advisable to clean the interior of the sensing chamber at the first convenient opportunity, proceeding as indicated below.

12.2.1 Model *p*DR-1000AN

- Remove the two screws on the top of the large protective bumper that covers the sensing chamber (see Figure 1);
- Remove the large protective bumper by lifting it firmly upwards and away from the sensing chamber;
- Remove the socket-head screws on the front and back black covers that were exposed by removal of the large top bumper. Lift away the freed front and back covers of the sensing chamber; set them aside carefully and such that they can be reattached in the same position as they were previously; avoid touching the dull black side of these plates;
- Using filtered (particle-free) pressurized air, blow the inside of the sensing chamber taking great care in not marring or scratching any of the exposed surfaces;
- Reposition the two sensing chamber cover plates in the same location (front and back) as they had been originally. Insert and tighten socket head screws firmly making sure that the two plates are aligned perfectly with the top of the sensing chamber;

- Reposition large protective bumper over sensing chamber pushing down until properly seated. Insert the two top screws holding down the bumper and tighten gently (do not over-tighten);
- Check optical background by zeroing the *p*DR-1000AN as indicated in Section 8.1. If the sensing chamber cleaning was performed correctly, the message CALIBRATION: OK should be displayed at the end of the zeroing period.

12.2.2 Model *p*DR-1200

- Remove the two screws (one in the front and one in the back) holding the front and back gasketed covering plates of the sensing chamber, and set these plates aside, such that they may be reattached in the same location as they were previously.
- Using filtered (particle-free) pressurized air, blow the inside of sensing chamber taking great care in not marring or scratching any of the exposed surfaces.
- Reposition the two sensing chamber cover plates in the same location (front and back) as they had been originally. Insert and tighten socket head screws firmly making sure that the two plates are aligned perfectly with the top of the sensing chamber.
- Check optical background by zeroing the *p*DR-1200 as indicated in Section 8.1. If the sensing chamber cleaning was performed correctly, the message CALIBRATION: OK should be displayed at the end of the zeroing period.

12.3 Cyclone Cleaning (Model *p*DR-1200 only)

The cyclone will require occasional cleaning. It is advisable to do so whenever the sensing chamber of the *p*DR-1200 is cleaned (see above). To clean the cyclone, remove it from its black attachment cup on the sensing chamber, and unscrew the grit pot (narrower knurled end). Use clean pressurized air to blow out the grit pot and through all openings of cyclone body. Reattach grit pot to cyclone body and insert cyclone body into attachment cup making sure it is fully inserted.

13.0 CALIBRATION

13.1 Factory Calibration

Each *personal*DataRAM is factory calibrated against a set of reference monitors that, in turn, are periodically calibrated against a gravimetric standard traceable to the National Institute of Standards and Testing (NIST).

The primary factory reference method consists of generating a dust aerosol by means of a fluidized bed generator, and injecting continuously the dust into a mixing chamber from which samples are extracted concurrently by two reference filter collectors and by two master real-time monitors (MIE DataRAMs) that are used for the routine calibration of every *personal*DataRAM.

The primary dust concentration reference value is obtained from the weight increase of the two filters due to the dust collected over a measured period of time, at a constant and known flow rate. The two master real-time monitors are then adjusted to agree with the reference mass concentration value (obtained from averaging the measurements of the two gravimetric filters) to within ±1%.

Three primary, NIST traceable, measurements are involved in the determination of the reference mass concentration: the weight increment from the dust collected on the filter, the sampling flowrate, and the sampling time. Additional conditions that must be met are: a) suspended dust concentration uniformity at all sampling inlets of the mixing chamber; b) identical sample transport configurations leading to reference and instrument under calibration; and c) essentially 100% collection efficiency of filters used for gravimetric reference for the particle size range of the test dust.

The test dust used for the MIE factory calibration of the *personal*DataRAM is SAE Fine (ISO Fine) supplied by Powder Technology, Inc. It has the following physical characteristics (as dispersed into the mixing chamber):

- Mass median aerodynamic particle diameter: 2 to 3 µm
- Geometric standard deviation of lognormal size distribution: 2.5
- Bulk density: 2.60 to 2.65 g/cm^3
- Refractive index: 1.54

13.2 Field Gravimetric Calibration

If desired, the *personal*DataRAM can be calibrated gravimetrically for a particular aerosol (dust, smoke, mist, etc.) under field conditions (actual conditions of use).
To effect such calibration in the particle environment of interest, proceed as indicated below.

For field calibration of the model *p*DR-1000AN, a personal type filter sampler is placed side-by-side (collocated) to the *p*DR-1000AN to be calibrated, and the two units should be started simultaneously. For the model *p*DR-1200, its own filter and attached pump can be conveniently used for the same purpose.

- Weigh and load into filter holder a fresh membrane filter.
- Start pump.
- Immediately turn on *personal*DataRAM and start a run such that the pump and the *personal*DataRAM are started nearly simultaneously.

The duration of this comparison run should be sufficient to collect a mass of at least 1 mg on the reference filter (in order to permit accurate weighing of the collected mass by means of an analytical balance). The time-weighted average (TWA) reading of the *personal*DataRAM can be used to estimate the required sampling time to collect the above-mentioned mass on the filter. To estimate the required sampling time (ET as measured on the *personal*DataRAM) in minutes, read the TWA value (see Section 8.3)

after an elapsed time (ET) of one minute or more, and apply the following relationship:

$$ET \geq 500 / TWA$$

For example, if TWA = 2.5 mg/m^3, then ET ≥ 200 minutes (approximately 3 hours). If the TWA value changes significantly as the run proceeds, recalculate the required ET accordingly.

At the end of the run (after time ET has elapsed), record TWA, ET and the flow rate Q used to sample the air. Weigh the filter on an analytical balance and obtain Δm, the mass increment due to the collected particles.

Calculate the average gravimetric concentration C, as follows:

$$C = 1000\ \Delta m / ETxQ$$

Compare the recorded value of TWA and the calculated value C, and calculate the calibration factor to be programmed into the *personal*DataRAM (see Section 9.0) as follows:

$$CAL\ FACTOR = C / TWA$$

For example, if C was found to be 3.2 mg/m^3, and TWA had been determined to be 2.5 mg/m^3, the CAL FACTOR equals 1.28. Select this value on the PC, as described in Section 9.0. This completes the gravimetric calibration of the *personal*DataRAM for a specific aerosol.

13.3 Scattering Coefficient Calibration

Users interested in using the *personal*DataRAM for scattering coefficient measurements (e.g., for atmospheric visibility monitoring) should contact the factory. A special primary Rayleigh scattering calibration for such purpose can be performed by the factory.

13.4 Internal Span Check

The zeroing procedure (see Section 8.1) and the resulting normal diagnostic display of "CALIBRATION: OK" (step 2) informs the user that the instrument's calibration agrees with the original factory setting. This is an internal span check that consists of an automatic comparison between the initial (factory) optical background of the *personal*DataRAM (registered in its non-volatile memory), and the current optical background sensed during the zeroing sequence.

14.0 PARTICLE SIZE CLASSIFICATION (model *p*DR-1200 only)

The particle size selective cyclone of the *p*DR-1200 provides the user with two important capabilities: a) to measure the particulate matter concentration of a specific aerodynamic size fraction, and b) to determine the mass median size of a particle population. These two applications will be discussed in what follows. For both these applications, a variable measured flow rate pump is required, such as the model *p*DR-PU (for which a separate instruction manual is provided).

14.1 Size Fractionated Monitoring

The *p*DR-1200 can be used to monitor a specific particle size fraction below a selectable cut off equivalent aerodynamic diameter. The particle size cut point can be selected by adjustment of the sampling flow rate. The higher this flow rate through the cyclone the smaller the cut off particle diameter. Figure 7 is a graph showing the dependence of the particle cut off size in micrometers as a function of the sampling flow rate in liters per minute. The cut off size is the particle aerodynamic diameter at which the collection efficiency of the cyclone is 50%, or conversely, the size at which the cyclone transmission is 50%. For example, to obtain a particle size cut off of 2.5 µm (i.e., $PM_{2.5}$), the required sampling flow rate is 4 liters/minute. A that flow rate only particles smaller than (approximately) 2.5 µm are allowed to pass into the *p*DR-1200 sensing stage, to be monitored and then to be collected on the filter.

As can be seen on Fig. 7, the lowest particle size cut for the GK 2.05 cyclone included with the *p*DR-1200 is about 1 µm, and the largest is about 12 µm. For particle size classification outside this range, consult with the factory.

14.2 Particle Sizing

The selectable particle size capability of the cyclone, in combination with the concentration measuring capability of the photometric system of the *p*DR-1200 permits the user to determine the mass median aerodynamic particle diameter of an aerosol, i.e., of the airborne particle population being sampled.

One simple procedure to determine the median particle size is as follows (please refer to the graph of Fig. 7):

- Remove cyclone from its black attachment cup and set cyclone aside
- Start pump and sample aerosol at a flow rate between 2 and 4 liters/minute
- Press **ON** key on *p*DR-1200 panel and after about one minute key **NEXT** and then **ENTER**
- After an elapsed time (ET) of about one minute, read and note TWA concentration
- Shut off pump

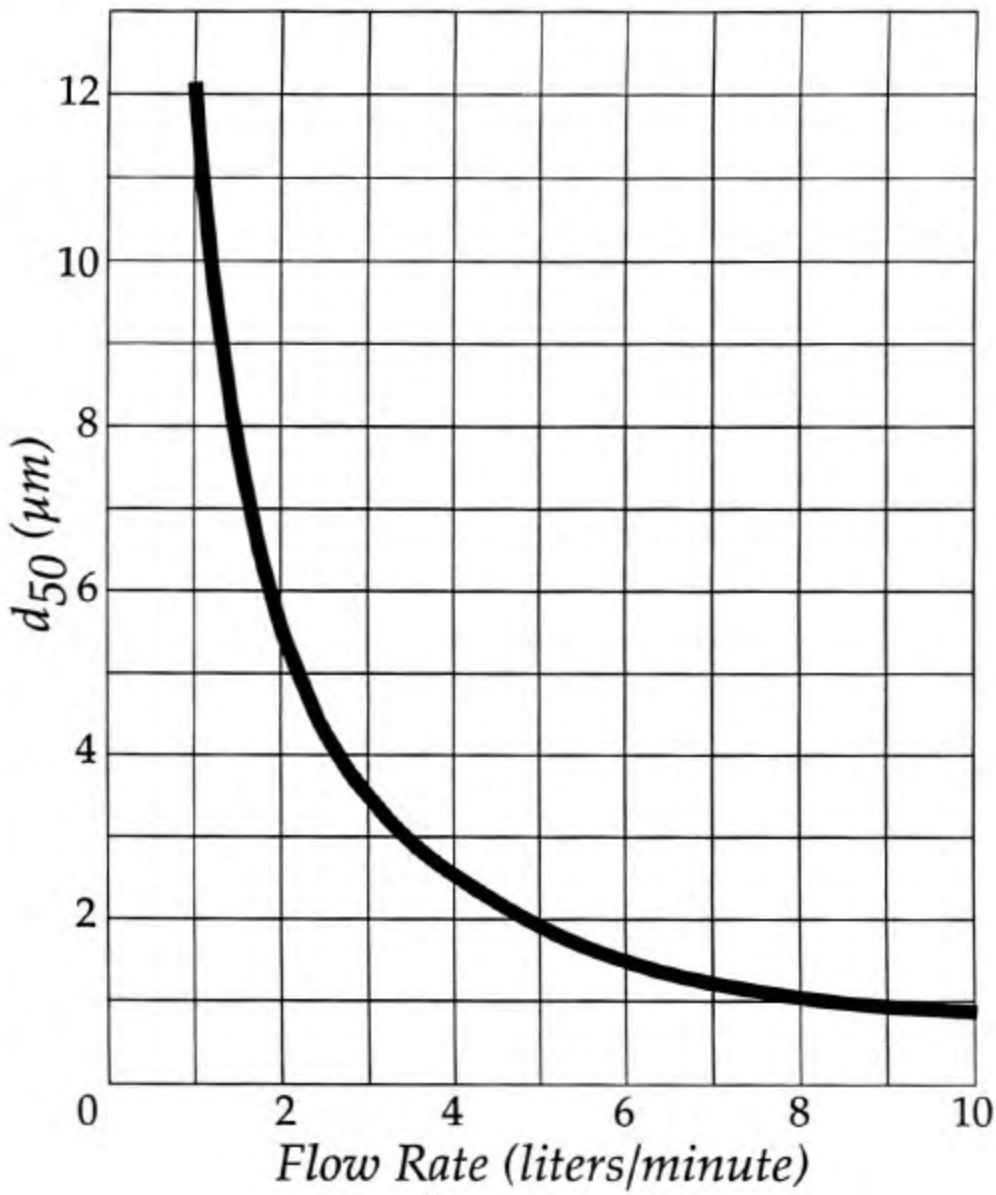

Figure 7. GK 2.05 Cyclone Cut Point (d_{50}) as a Function of Flow Rate

- Plug in cyclone into its attachment cup

- Start pump and run at about 1 liter/minute. Observe real-time concentration (CONC) reading

- Increase flow rate very slowly and gradually until CONC reading is one-half of the initial concentration measured without the cyclone. Continue sampling at this flow rate for about one minute and confirm that TWA reading is about one-half of the initial one. Otherwise readjust flow rate. Note final flow rate at which the TWA value has decreased to one-half the value noted without the cyclone.

- Enter the final flow rate for which the TWA value is one-half of the initial value into the graph of Fig. 7 and read the corresponding d_{50} particle size in micrometers. This represents the mass median particle diameter of the aerosol.

For example, if the TWA value without the cyclone was 0.8 mg/m^3, and the flow rate (with the cyclone attached) required to reduce the TWA to 0.4 mg/m^3 is 2 liters/minute, the mass median particle size (as obtained from the curve of Fig. 7) is approximately 5.5 µm.

15.0 CONVERSION BETWEEN *personal*DataRAM VERSIONS

The *personal*DataRAM user has the option to convert from a model *p*DR-1000AN to a model*p*DR-1200 or vice versa using the appropriate conversion kit. To convert from a *p*DR-1000AN to a *p*DR-1200 (i.e., from a passive air sampling configuration to an active one), the user requires the model *p*DR-ASC conversion kit. To convert from a *p*DR-1200 to a *p*DR-1000AN (i.e., from an active air sampling configuration to a passive one), the user requires the model *p*DR-UB conversion kit.

15.1 Conversion Procedure From *p*DR-1000AN to *p*DR-1200

To effect this conversion, use model *p*DR-ASC conversion kit. As you remove parts from the *p*DR-1000AN, in order to attach the conversion kit components, store these parts carefully for possible future re-conversion. Proceed as follows:

- Remove the two screws on the top of the large protective bumper that covers the sensing chamber (see Figure 1). This bumper is not used on the *p*DR-1200;
- Remove the large protective bumper by lifting it firmly upwards and away from the sensing chamber;
- Reinsert in the upper two threaded holes and tighten the two screws that had held the protective bumper;
- Remove the socket-head screws on the front and back black covers that were exposed by removal of the large top bumper. Lift away the freed front and back covers of the sensing chamber; store them carefully for future use, ensuring that their surfaces are not scratched or marred;

- Position one of the two gasketed (soft rubber) sensing chamber cover plates provided in the conversion kit on the front side of the sensing chamber. Insert and tighten the included socket head screw firmly making sure that the plate is aligned perfectly with the top of the sensing chamber. Similarly, attach the other cover plate on the back side of the sensing chamber;
- Identify the two black cups of the *p*DR-ASC conversion kit. One of them has an external o-ring (filter holder cup), and the other has no o-ring (cyclone cup); refer to Figures 2 and 4 for the location of these cups on the *p*DR-1200 sensing chamber. These cups can be installed on either side of the sensing chamber, i.e., the cyclone can be either on the left or the right side of the sensing chamber (Figure 2 shows the case where the cyclone is on the right side);
- Attach one cup to the left side of the sensing chamber using the two black socket head screws. Tighten screws firmly. Similarly, attach the other cup to the right side of the sensing chamber;
- Take the cyclone/filter holder unit provided as part of the conversion kit, and separate the 37-mm plastic filter holder from the metal cyclone by firmly pulling the two units apart;
- Carefully slide the large open end of the plastic filter holder over the cup with the external o-ring, previously attached to the sensing chamber. Ensure that the cup is fully inserted into the filter holder;
- Carefully insert the large diameter open end of the metal cyclone into the other cup on the opposite side of the sensing chamber. The cyclone inlet (small short metal tube on side of cyclone) can be oriented as desired (upwards, as shown in Figure 2, sideways, downwards, etc.). Ensure that the cyclone is fully inserted into the cup;
- When ready to operate, connect a length of tubing between the barbed fitting at the downstream end of the plastic filter holder and the pump to be used in combination with the *p*DR-1200.
- Perform a zeroing sequence (see Sections 6.5.2 and 8.1) before starting a run. This completes the conversion of the *p*DR-1000AN to the *p*DR-1200.

15.2 Conversion Procedure from *p*DR-1200 to *p*DR-1000AN

To effect this conversion use model *p*DR-UB conversion kit. As you remove parts from the *p*DR-1200, in order to attach the conversion kit components, store these parts carefully for possible future re-conversion. Proceed as follows:

- Pull off both the cyclone and the filter holder from their respective cups on the two sides of the sensing chamber;
- Loosen the two screws that hold each of the two cups on the sides of the sensing chamber (total of 4 screws), and remove the two side cups;
- Loosen the single screw on each of the two (front and back) gasketed sealing covers enclosing the sensing chamber, and remove the two covers;

- Identify the two flat sensing chamber cover plates provided in the conversion kit; one face of each of each of these two plates has a dull black finish (antireflective); avoid touching those surfaces;
- Position one of the two sensing chamber cover plates over the open front of the sensing chamber with the dull surface on the inside, and such that the hole in the plate is aligned with the corresponding threaded mounting hole on the upper wall of the sensing chamber. Insert and tighten firmly black socket head screw provided with the conversion kit, making sure that the plate is aligned perfectly with the top of the sensing chamber. Similarly, attach the other cover plate to the rear of the sensing chamber, with the dull surface facing inward;
- Loosen and remove the two small screws on the top surface of the sensing chamber;
- Position large protective bumper (provided in the conversion kit) over sensing chamber pushing down until properly seated. Insert the two top screws (two shiny Phillips-head screws provided in the conversion kit) Into the two holes In the bumper while holding down the bumper, and tighten gently (do not over-tighten) making sure that the heads of these screws are well Inside their cavities In the bumper;
- Perform a zeroing sequence (see Sections 6.5.1 and 8.1) before starting a run. This completes the conversion from a *p*DR-1200 to a *p*DR-1000AN.

16.0 SEQUENCE OF KEYSTROKES AND SCREENS (*p*DR-1000 AN, -1200, HPM-1000) Start-Up and Survey Run Mode (***Without*** Data Logging)

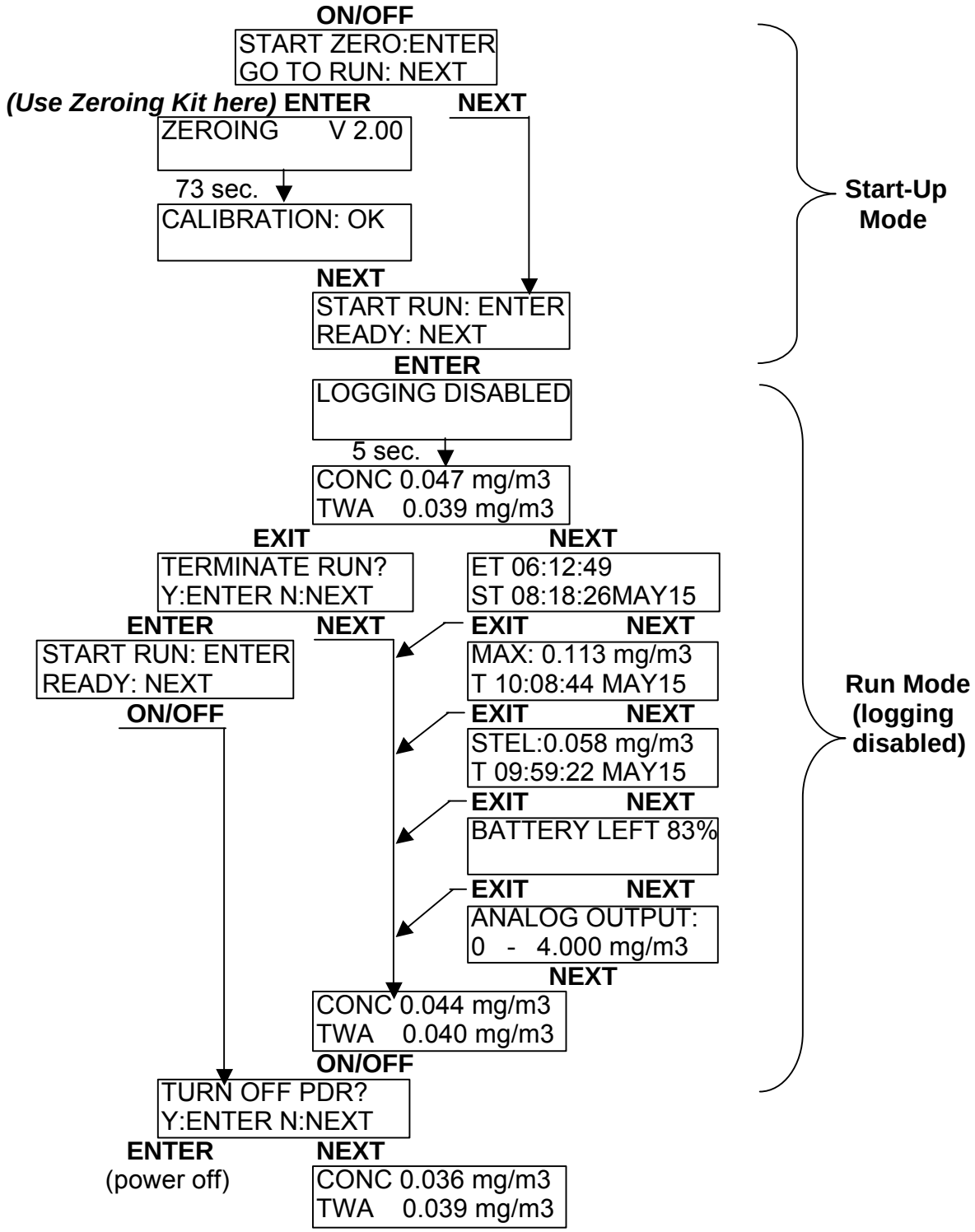

Start-Up, Set-Up and Run Mode (*With* Data Logging)

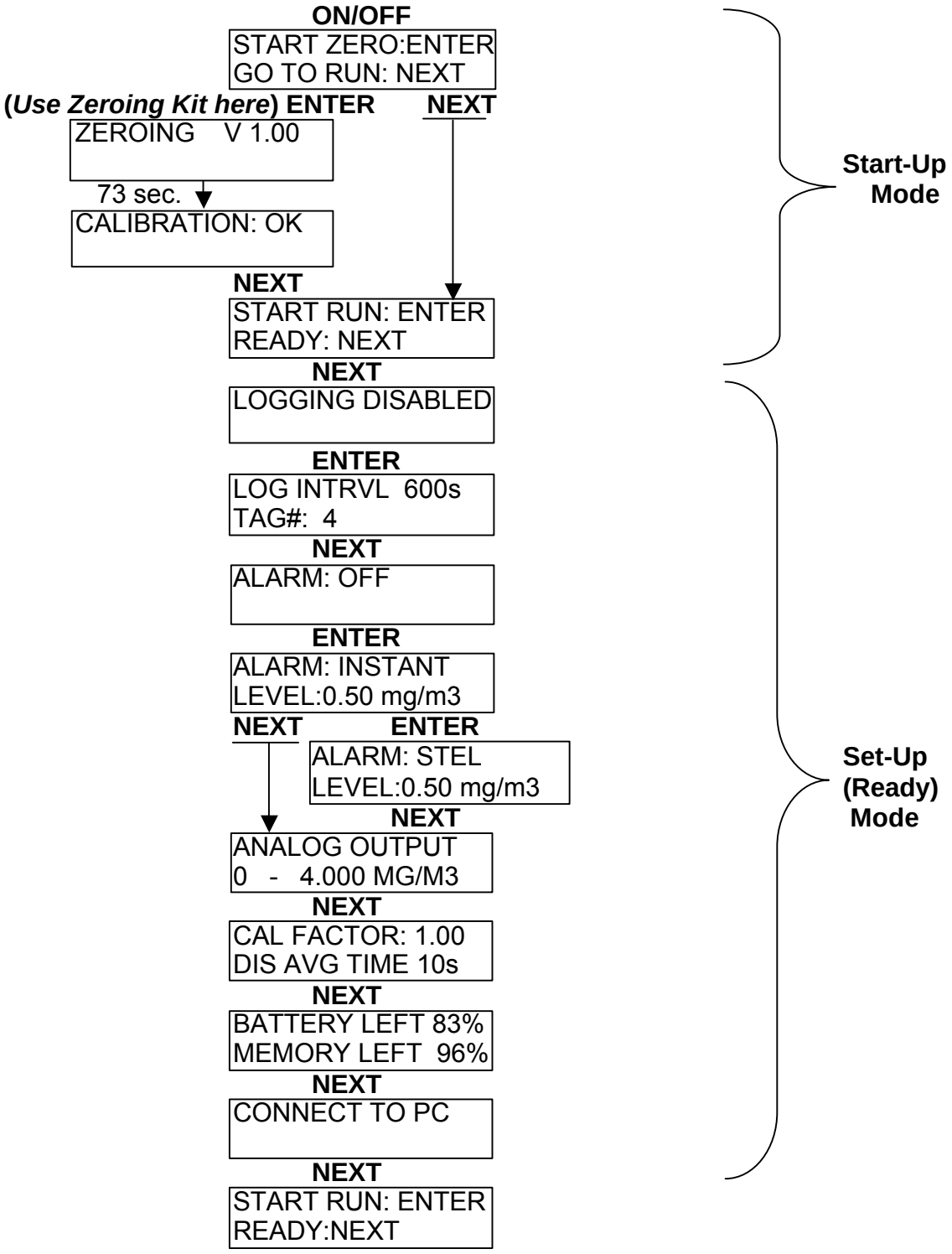

(Continues on next page)

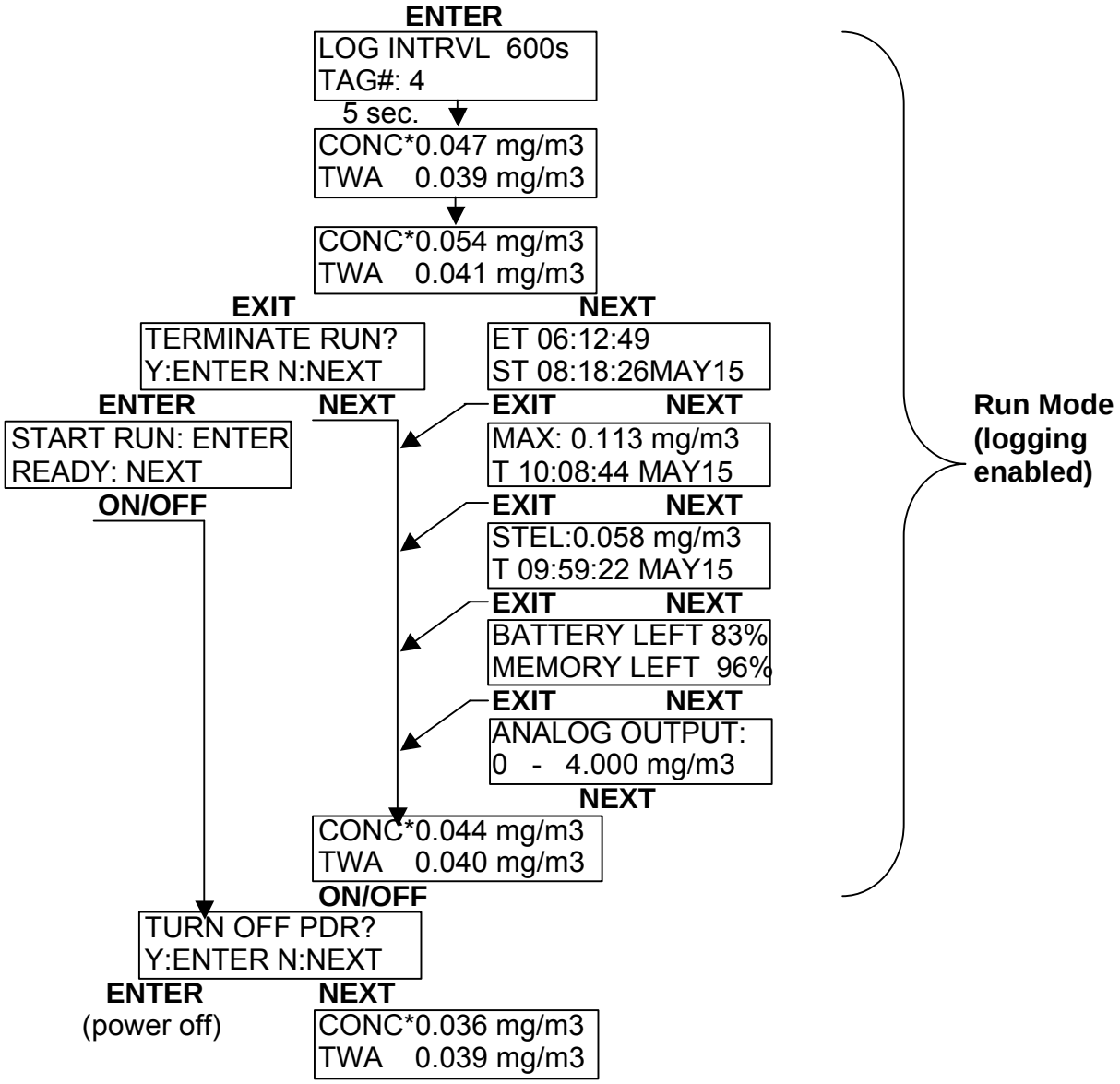
ENTER
LOG INTRVL 600s
TAG#: 4
5 sec.
CONC*0.047 mg/m3
TWA 0.039 mg/m3
CONC*0.054 mg/m3
TWA 0.041 mg/m3
EXIT
TERMINATE RUN?
Y:ENTER N:NEXT
NEXT
ET 06:12:49
ST 08:18:26MAY15
ENTER
START RUN: ENTER
READY: NEXT
NEXT
EXIT
NEXT
MAX: 0.113 mg/m3
T 10:08:44 MAY15
ON/OFF
EXIT
NEXT
STEL:0.058 mg/m3
T 09:59:22 MAY15
EXIT
NEXT
BATTERY LEFT 83%
MEMORY LEFT 96%
EXIT
NEXT
ANALOG OUTPUT:
0 - 4.000 mg/m3
NEXT
CONC*0.044 mg/m3
TWA 0.040 mg/m3
ON/OFF
TURN OFF PDR?
Y:ENTER N:NEXT
ENTER
(power off)
NEXT
CONC*0.036 mg/m3
TWA 0.039 mg/m3
Run Mode
(logging
enabled)

Resetting/Electronic Checking Mode

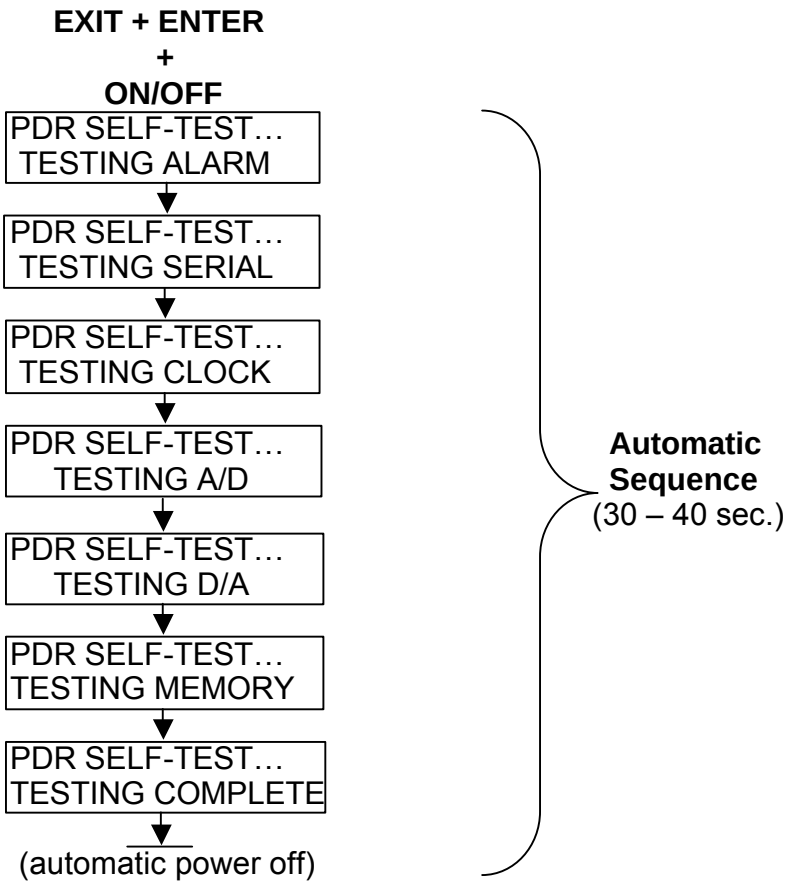

NOTE: After the preceding resetting sequence, the instrument should be zeroed; otherwise its optical background will remain unsubtracted.

When the Error Message "Malfunction" displays

In the event that the PDR series instrument displays the error message "Malfunction" here are two steps that should be taken by the owner/ operator. With unit attached to the computer, proceed as follows:

Check the minimum background of the unit. To do this you need to utilize pDR-COM software (**PDRCOM.EXE)** loaded into your computer. Click on `Configure pDR'. Click on `Get Configuration'. Press both the "ALT" key and the letter "B" key of the computer keyboard and the following message will be displayed:

Waring! Consult the manufacturer before editing MinBG, MaxBG or the Serial Number.

Click on the `OK' box and you should see S/N, MinBG, MaxBG boxes. Set the MinBG to 100 and click on `Set Configuration'. Click on `OK' then exit program. Now try zeroing the pDR. Alternatively try to Reset as outlined in section 8.5 of this manual.

STANDARD OPERATING PROCEDURE

Model DR-4000 DataRAM 4 Dust Monitor

1. Purpose

The purpose of this SOP is to provide general reference information for using the Model DR-4000 DataRAM4 in the field. Calibration and operation, along with field maintenance, will be included in this SOP.

2. Scope

This procedure provides information for the field operation and general maintenance of the DataRAM4. The MIE DataRAM 4 (for Data-logging Real-time Aerosol Monitor 4), model DR-4000 is a technologically advanced instrument designed to measure the concentration of airborne particulate matter(liquid or solid), as well as mean particle size, air temperature and humidity, providing direct and continuous readout as well as electronic recording of the information.

The DataRAM 4 is a high sensitivity, two-wavelength nephelometric (i.e. photometric) monitor whose light scattering sensing configuration has been optimized for the measurement of the fine particle fraction of airborne dust, smoke,fumes and mists in ambient, atmospheric, industrial, research, and indoor environments. The DataRAM 4 covers a wide measurement range: from 0.0001 mg/m3 (0.1 µg/m3) to 400 mg/m3, a 4 million-fold span, corresponding to very clean air up to extremely high particle levels.

Review of the information contained herein will ensure that this type of field monitoring equipment will be properly utilized. Review of the owner's instruction manuals is a necessity for more detailed descriptions.

3. Equipment Required

DataRAM4 and accessories , charger etc. See User's Guide
Digital communications cable
Universal AC power supply/charger
Standard filter cartridge
Analytical filter holder
Operation Manual

4. Responsibilities

Project Manager(PM) /Construction Manager(CM) - The PM/CM is responsible for ensuring that project-specific plans are in accordance with these procedures, where applicable, or that other

approved procedures are developed. The Project Manager is responsible for selecting qualified individuals for the monitoring activities.

Field Team Leader(FTL) and/or Safety Coordinator(SC) - It is the responsibility of the FLT/SC to implement these procedures in the field, and to ensure that the field team performing air monitoring activities have been briefed and trained to execute these procedures before the start of site operations. FTL/SC is also responsible to ensure that the specified air monitoring equipment is on site, calibrated, and used correctly by the field personnel. The field personnel are responsible for documenting all air monitoring results in the field logbook during each field investigation.

5. Procedures

The DataRAM4 must be protected from all forms of precipitation.

The following subsections will discuss DataRAM4 calibration, operation, and maintenance. These sections, however, do not take the place of the instruction manual.

5.1 Calibration

For DataRAM4monitor see page 37 of the attached operation manual.

5.2 Operation

Due to the DataRAM4 having many functions in terms of operation, it is recommended that you follow the operational procedures as outlined in the instruction manual from pages 2 to 32.

5.3 Maintenance

The DataRAM 4 is designed to be repaired at the factory. No user serviceable components are inside the metal enclosure of the DataRAM 4 with exception of the filter cartridge or the analytic filter holder. Access to the internal components of the unit by others than authorized MIE personnel voids warranty.

Function	Frequency
Check alarm and settings	Monthly/before each use
Factory Calibrated	
Cleaning Optical Sensing Chamber	As needed – Background High Message

6. Quality Assurance Records

Quality assurance records will be maintained for each air monitoring event. The following information shall be recorded in the field logbook.

- Identification - Site name, date, location, activity monitored, serial number, time, resulting concentration, comments and identity of air monitoring personnel.

- Field observations - Appearance of sampled media (if definable).
- Additional remarks (e.g, DataRAM4 had wide range fluctuations during air monitoring activities.)

7. References

Model DR-4000 DataRAM 4 Instruction Manual, Thermo Electron Corporation, December 2003

Product Specifications

Thermo Scientific DataRAM 4™

Portable continuous particle sizing monitor/Dual Wavelength Nephelometer

Expandable to a complete particle characterization system

- Aerodynamic particle size separators allow measurement of specific particulate fractions such as the thoracic, respirable, PM10, PM2.5, and PM1.0 fractions.
- An omnidirectional sampling inlet and an in-line mist and fog elimination heater are available for ambient air monitoring.
- An isokinetic sampling probe / nozzle kit enables duct / stack monitoring.
- Self calibration extends unattended operation
- A unique programmable automatic zeroing feature permits longterm unattended field operation
- Has both RS232 and RS485 data ports for bi-directional digital communications.

The Thermo Scientific DataRAM 4™ continuously monitors and logs the real-time concentration and median particle size of airborne dust, smoke, mist and fumes. In addition, air temperature and humidity are displayed and recorded. With appropriate particle discriminators, it provides measurements correlated with PM10, PM2.5, PM1.0, and respirable fractions. Its patented two-wavelength particle detection system provides the volume median particle diameter of the sampled aerosol, over a concentration range up to 400 mg/m^3. Unlike typical particle counting devices, the Thermo Scientific DataRAM 4™ is totally immune to particle coincidence errors, even at the highest concentrations.

Volume median particle sizes down to 0.05 µm can be measured by this unique spectral nephelometric technique.
The Thermo Scientific DataRAM 4™ monitors the concentrations of fine particulates in ambient air by a combination of aerodynamic size preselection, two wavelength nephelometry, and concurrent sensing / correction for relative humidity. This patented technique provides a continuous measurement of PM2.5, independent of particle size and moisture - without heating, diffusion drying, or denuding the sample stream.

Thermo SCIENTIFIC

Thermo Scientific DataRAM4™ Specifications

Concentration measurement range	(Referred to gravimetric calibration with SAE Fine test dust) (mmd = 2 to 3 µm, 8g = 2.5, as aerosolized) 0.001 to 400 mg/m^3
Scattered coefficient range	1.1 x 10^{-6} to 0.6m^{-1} (approximately) @ ⊠= 880 nm
Precision/ repeatability	(2-sigma - at constant temperature):
Concentration measurement range	(auto ranging) Referenced to gravimetric calibration (NIST traceable) with SAE Fine test dust (mmd - 2 to 3 µm, ⊠$_g$ = 2.5, as aerosolized) 0.0001 to 400 mg/m^3
Precision / repeatability	(2-sigma)For single-wavelength concentration sensing at 25°C ±1% of reading or ± 0.001 mg/m^3, whichever is greater
Accuracy	Referenced to gravimetric calibration (NIST traceable) with SAE Fine test dust (mmd = 2 to 3 µm, ⊠$_g$ = 2.5, as aerosolized) ±2% of reading ± precision
Resolution	0.1% of reading or 0.1 µg/m^3, whichever is greater
Scattering coefficient range	10^{-7} to 0.4 m^{-1} (resolution: 3 significant digits, maximum)
Visual range (@⊠ = 550 nm)	0.001 to 337 km (resolution: 3 significant digits, maximum)
Angström coefficient measurement range	0.0 to 4.0
Particle sizing range	(log-normal, ⊠g = 2.0, m = 1.50) 0.05 to 4 µm
Particle size range for concentration measurements	0.08 to 10 µm
Temperature measurement range	5°F to 140°F (-15°C to 60°C); accuracy: 0.05°C
Relative humidity measurement range (@ 25°F)	0 to 100% noncondensing (accuracy: 2%)
Sampling flow rate range (user selectable)	1.0 to 3.0 liters/min. (accuracy: 0.05 liters/min., adjustability: 0.1 liters/min.)
Measurement/display integration time range	(user selectable) 1 to 60 sec. (selectable in 1-sec. steps)
Measurement/display update frequency	1 per sec.
HEPA filter cartridge replacement frequency	(typical) less than 1 per 5 yrs (@ < 1 mg/m^3)
Alarm level range	(user selectable) selectable over entire measurement range 0.001-400mg/m^3
Data logging averaging periods	(user selectable) 1 sec. to 24 hrs. (selectable in 1-sec. increments)
Data logging memory capacity	50,000 data points in up to 99 tags (data sets)
Programmable zeroing periods	(user selectable)1 to 168 hrs. (selectable in 1-hr increments; if enabled, logging period must be more than 10 min.)
Elapsed time readout range	1 sec. to 100,000 hrs. (over 11 yrs.), in sec., min., and hrs.
Digital communications	RS232/RS485; full duplex, 9600 baud, software-controlled, filtered
Computer requirements	IBM-compatible PC, Windows™ 95 or higher; 8 MB memory or more
Analog outputs	(user selectable) 0 to 5 V and 4 to 20 mA with selectable full scale ranges between 0.1 and 400 mg/m^3
Power	Internal battery; rechargeable, sealed lead-acid, 6.5 Ahr, 6 V, 20-hr run time between charges (typical) AC line: universal voltage charger / power supply (included) 100-250 V, 50-60 Hz (CE marked) Optional solar power system (Model DR-SOL)
Alarm Outputs	Alarm switch: 30 V (off,open), 2.5 A (on, closed) Alarm signal: 0 V (off), 5 V (on) (1 mA maximum load current) Audio alarm (back panel): More than 65 dB @ 1 m
Operating environment	14°F to 122°F (-10°C to 50°C); 10 to 95% RH, noncondensing
Storage environment	-4°F to 158°F (-20°C to 70°C)
Dimensions	5.28 in. (134 mm) H x 7.25 in. (184mm) W x 13.63 in. (346 mm) D
Weight	11.7 lbs (5.3kg)
Safety approvals and certificates	The DataRAM 4™ complies with US FCC rules (Part 15) and has received CE certification.
Standard accessories included	Universal voltage battery charger / power supply Standard HEPA filter cartridge Analytical filter holder PC communications software disk Digital output cable

Lit DR4MC1004

This specification sheet is for informational purposes only and is subject to change without notice. Thermo makes no warranties, expressed or implied, in this product summary. © Copyright 2007 Thermo Fisher Scientific Inc.

Environmental Instruments
First Responder / Industrial Hygiene Products

27 Forge Parkway
Franklin, MA
02038

toll free
(866) 282-0430
(508) 520-0430
(508) 520-1460 fax

www.thermo.com/ih

Thermo SCIENTIFIC

MODEL DR-4000

DataRAM 4

INSTRUCTION MANUAL
P/N 100334-00

THERMO ELECTRON CORPORATION
ENVIRONMENTAL INSTRUMENTS
27 FORGE PARKWAY FRANKLIN MASSACHUSETTS 02038

(866) 282-0430 Toll Free
(508) 520-0430 International
(508) 520-1460 Fax

www.thermo.com/eid

1Dec2003

© 2003 Thermo Electron Corporation. All rights reserved. Thermo Electron Corporation, *question everything*, and *Analyze. Detect. Measure. Control* are trademarks of Thermo Electron Corporation. All other product names and logos are the property of their respective owner.

Specifications, terms and pricing are subject to change. Not all products are available in all countries. Please consult your local sales representative for details.

CONTENTS

Section No. **Page**

WARRANTY ..... **v**

1.0 GENERAL DESCRIPTION **1**
2.0 SPECIFICATIONS **2**
3.0 USER GUIDELINES **5**
3.1 Handling Instructions 5
3.2 Safety Instructions 5
3.3 Orientation During Operation 6
3.4 Air Sampling Guidelines 6
3.4.1 Area Monitoring 6
3.4.2 Ambient Air Monitoring 6
3.4.3 Extractive Sampling 7
3.5 Environmental Constraints and Certifications 8
4.0 ACCESSORIES **8**
4.1 Standard Accessories 8
4.2 Optional Accessories 8
5.0 INSTRUMENT LAYOUT **9**
5.1 Front Panel 9
5.2 Rear Panel 13
5.3 Bottom Base 14
5.4 Carrying Handle 14
5.5 Sampling Inlet 14
6.0 PREPARATION FOR OPERATION **14**
6.1 Battery Charging and Operation 14
6.2 Inlet Uncapping 15
6.3 Filter Cartridge Installation 15
6.4 Power Selector Switch 16
6.5 External Electrical Connections 16
6.6 External D.C. Power Operation 16

7.0 OPERATING MODES **17**
7.1 Set-Up Mode 17
7.2 Run/Data Logging Mode 17
8.0 KEY SWITCHES AND SCREEN CURSOR FUNCTIONS **17**
8.1 ON/OFF Key 17
8.2 Screen Cursor, Arrow and +/- Keys 18
8.3 ENTER, NEXT and EXIT Keys 18
9.0 START-UP PREPARATION **19**
9.1 The Menu Screens 19
9.2 ZERO/INITIALIZE Operation 20
9.3 Selecting Logging Parameters 21
9.4 Selecting Set-Up Parameters 22
9.5 Review or Transfer Stored Data 25
9.6 Run Start 27
9.7 Run Termination 29
9.8 Resetting and Defaults 29
10.0 ANALOG SIGNAL OUTPUT **30**
10.1 Analog Output Description 30
10.2 Analog Output Connection 31
11.0 ALARM **31**
11.1 Alarm Description and Operation 31
11.2 Alarm Output Connection 32
12.0 MAINTENANCE **32**
12.1 General Guidelines 32
12.2 Battery Charging and Cycling 32
12.3 Instrument Storage 33
12.4 Filter Replacement 33
12.4.1 HEPA Filter Cartridge Replacement 33
12.4.2 Analytic Filter Installation/Replacement 33
12.5 Cleaning of Optical Sensing Chamber 34
13.0 CALIBRATION **37**
13.1 Factory Calibration 37
13.2 Field Gravimetric Calibration 37
14.0 COMMUNICATIONS WITH COMPUTER **38**
14.1 Computer Hardware and Software Requirements 38
14.2 Software Installation Procedure 39
14.3 Communication Between DataRAM 4 and Computer 39

14.4 Real-Time RS-232 Output 40
14.5 Serial Communications Protocols of the DataRAM 4 41

APPENDIX A 42
APPENDIX B 42

WARRANTY

Seller warrants that the Products will operate substantially in conformance with Seller's published specifications, when subjected to normal, proper and intended usage by properly trained personnel, for 13 months from date of installation or 12 months from date of shipment, whichever is less (the "Warranty Period"). Seller agrees during the Warranty Period, provided it is promptly notified in writing upon the discovery of any defect and further provided that all costs of returning the defective Products to Seller are pre-paid by Buyer, to repair or replace, at Seller's option, defective Products so as to cause the same to operate in substantial conformance with said specifications. Replacement parts may be new or refurbished, at the election of Seller. All replaced parts shall become the property of Seller. Shipment to Buyer of repaired or replacement Products shall be made in accordance with the provisions of Section 5 above. Lamps, fuses, bulbs and other expendable items are expressly excluded from the warranty under this Section 8. Seller's sole liability with respect to equipment, materials, parts or software furnished to Seller by third party suppliers shall be limited to the assignment by Seller to Buyer of any such third party supplier's warranty, to the extent the same is assignable. In no event shall Seller have any obligation to make repairs, replacements or corrections required, in whole or in part, as the result of (i) normal wear and tear, (ii) accident, disaster or event of force majeure, (iii) misuse, fault or negligence of or by Buyer, (iv) use of the Products in a manner for which they were not designed, (v) causes external to the Products such as, but not limited to, power failure or electrical power surges, (vi) improper storage of the Products or (vii) use of the Products in combination with equipment or software not supplied by Seller. If Seller determines that Products for which Buyer has requested warranty services are not covered by the warranty hereunder, Buyer shall pay or reimburse Seller for all costs of investigating and responding to such request at Seller's then prevailing time and materials rates. If Seller provides repair services or replacement parts that are not covered by the warranty provided in this Section 8, Buyer shall pay Seller therefore at Seller's then prevailing time and materials rates. ANY INSTALLATION, MAINTENANCE, REPAIR, SERVICE, RELOCATION OR ALTERATION TO OR OF, OR OTHER TAMPERING WITH, THE PRODUCTS PERFORMED BY ANY PERSON OR ENTITY OTHER THAN SELLER WITHOUT SELLER'S PRIOR WRITTEN APPROVAL, OR ANY USE OF REPLACEMENT PARTS NOT SUPPLIED BY SELLER, SHALL IMMEDIATELY VOID AND CANCEL ALL WARRANTIES WITH RESPECT TO THE AFFECTED PRODUCTS.

THE OBLIGATIONS CREATED BY THIS SECTION TO REPAIR OR REPLACE A DEFECTIVE PRODUCT SHALL BE THE SOLE REMEDY OF BUYER IN THE EVENT OF A DEFECTIVE PRODUCT. EXCEPT AS EXPRESSLY PROVIDED IN THIS SECTION 8, SELLER DISCLAIMS ALL WARRANTIES, WHETHER EXPRESS OR IMPLIED, ORAL OR WRITTEN, WITH RESPECT TO THE PRODUCTS, INCLUDING WITHOUT LIMITATION ALL IMPLIED WARRANTIES OF MERCHANTABILITY OR FITNESS FOR ANY PARTICULAR PURPOSE. SELLER DOES NOT WARRANT THAT THE PRODUCTS ARE ERROR-FREE OR WILL ACCOMPLISH ANY PARTICULAR RESULT.

1.0 GENERAL DESCRIPTION

The MIE DataRAM 4 (for Data-logging Real-time Aerosol Monitor 4), model DR-4000 is a technologically advanced instrument (**embodies U.S. Patent No. 6,055,052**) designed to measure the concentration of airborne particulate matter (liquid or solid), as well as mean particle size, air temperature and humidity, providing direct and continuous readout as well as electronic recording of the information.

The DataRAM 4 is the result of many years of field experience acquired with thousands of units of its well known predecessors, the MIE model RAM-1 and its successor, the DataRAM, and embodies many technological advances made possible by the latest electronic hardware and software.

The DataRAM 4 is a high sensitivity, two-wavelength nephelometric (i.e. photometric) monitor whose light scattering sensing configuration has been optimized for the measurement of the fine particle fraction of airborne dust, smoke, fumes and mists in ambient, atmospheric, industrial, research, and indoor environments.

The DataRAM 4 is a compact, rugged and totally self-contained instrument designed for portable, as well as unattended fixed-point operation. It is powered by its internal rechargeable battery, or by an AC power supply/charger (included as standard accessory).

In addition, the instrument automatically checks its own optical background during the zeroing sequence and indicates any significant deviations requiring maintenance.

The DataRAM 4 covers a wide measurement range: from 0.0001 mg/m^3 (0.1 $\mu g/m^3$) to 400 mg/m^3, a 4 million-fold span, corresponding to very clean air up to extremely high particle levels.

In addition to the auto-ranging real-time concentration readout, the DataRAM 4 offers the user a wide range of information by scrolling its four-line LCD screen. This information includes: median particle diameter, scattering coefficient, Ångström coefficient, visual range, run start time and date, time averaged concentration, elapsed run time, maximum with time of occurrence, air temperature and relative humidity, etc. Operating parameters and diagnostic information screens can also be displayed.

Furthermore, the DataRAM 4 features complete, large capacity internal data logging capabilities with data retrieval on screen or through an externally connected computer. The stored information (up to 50,000 data points) includes individual point averages, particle size, temperature and humidity with time information as well as overall average and maximum concentration, and tag numbers.

Selectable alarm levels with built-in audible signal as well as switched and signal outputs, RS-232 and RS-485 communications ports, and a programmable analog (voltage and current) concentration output are all part of this versatile instrument.

A custom software package is provided with the DataRAM 4 for communications to and from a PC.

2.0 SPECIFICATIONS

Concentration measurement range (auto-ranging)[1]:
0.0001 to 400 mg/m^3

Precision/repeatability (2-sigma)[2,3]:
± 1% of reading or ± 0.001 mg/m^3, whichever is greater (1-second averaging)
± 0.3% of reading or ± 0.0003 mg/m^3, whichever is greater (10-second averaging)

Accuracy[1]:
± 2% of reading ± precision

Resolution:
0.1% of reading or 0.0001 mg/m^3, whichever is greater

Scattering coefficient range:
10^{-7} to 0.4 m^{-1} (resolution: 3 significant digits, max.)

Visual range:
0.01 to 337 km (@ λ = 550 nm) (resolution: 3 significant digits, max.)

Ångström coefficient measurement range:
0.0 to 4.0

Particle sizing range (log-normal, σ_g = 2.0, m = 1.50):
0.04 to 4.0 µm

Temperature measurement range:
-15 to 60 C° (accuracy: 0.5 C°)

Relative humidity measurement range:
0 to 100% (accuracy: 2%, non-condensing, @ 25 C°)

Sampling flow rate range[4]:
1.0 to 3.0 liters/minute (accuracy[2]: 0.05 liters/minute; adjustability: 0.1 liters/minute)

Measurement/display integration time range[4]:
1 to 60 seconds (selectable in 1-second steps)

Measurement/display update frequency:
1/second

HEPA filter cartridge replacement frequency (typical):
< I per 5 years (@ < 1 mg/m^3)

Alarm level adjustment range[4]:
Selectable over entire measurement range for any of the selected measurement units (concentration, scattering coefficient or visual range)

Data logging averaging periods[4]:
1 second to 24 hours (selectable in 1-second increments)

Data logging memory capacity:
50,000 data points in up to 99 tags (data groups)

Programmable zeroing periods[4]:
1 to 168 hours (selectable in 1-hour increments; if enabled, logging period must be > 10 minutes)

Elapsed time readout range:
1 second to 100,000 hours (over 11 years), in seconds, minutes and hours

Digital communications:
RS232/RS485: full duplex, 9600 baud, software controlled, device filtered

Computer requirements:
IBM-compatible PC, 486 or higher (Pentium I or higher, preferred); Windows™95 or higher; 8 MB memory or more

Analog outputs:
0 to 5 V and 4 to 20 mA, with selectable full scale ranges between 0.1 and 400 mg/m^3

Power:
- Internal battery: rechargeable sealed lead-acid, 7.2 Ah, 6 V, 20-hour run time between charges (typical)
- AC line: universal voltage charger/power supply (included), 100 – 250 V, 50 – 60 HZ (CE marked)
- Optional solar power system, model DR-SOL

Alarm outputs:
- Alarm switch: 0 to +30 VDC (off, open), 2.5 A (on, closed)
- Alarm signal: 0 V (off), 5 V (on) (1 mA maximum load current)

- Audio alarm (back panel): > 60 dB @ 1 m

Operating environment:
-10 to 50 C° (14º to 122º F), 10 to 95% RH, noncondensing

Storage environment:
-20 to 70 C° (-4º to 158º F)

Dimensions (maximum external, including handle and inlet fitting):
166 mm (6.54 in) H x 226 mm (8.90 in) W x 327 mm (12.87 in) D

Weight:
5.5 kg (12 lbs)

[1] Referred to gravimetric reference calibration (NIST traceable) with SAE Fine test dust (mmd = 2 to 3 μm, σ_g = 2.5, as aerosolized)
[2] At 25 °C
[3] For single wavelength concentration sensing
[4] User selectable

3.0 USER GUIDELINES

3.1 Handling Instructions

The DataRAM 4 is a sophisticated optical/electronic instrument and should be handled accordingly. Although the DataRAM 4 is very rugged, it should not be subjected to excessive shock, vibration, temperature or humidity. As a practical guideline, the DataRAM 4 should be handled with the same care as a portable CD player. ***The DataRAM 4 must be protected from all forms of precipitation***.

If the DataRAM 4 has been exposed to low temperatures (e.g. in the trunk of a car during winter) for more than a few minutes, care should be taken to allow the instrument to return to near room temperature before operating it indoors. This is advisable because water vapor may condense on the interior surfaces of the DataRAM 4 causing temporary malfunction or erroneous readings. Once the instrument warms up to near room temperature, such condensation will have evaporated. If the DataRAM 4 becomes wet (e.g. due to exposure to water sprays, rain, etc.), allow the unit to dry thoroughly before operating it.

Whenever the DataRAM 4 is shipped care should be taken in placing it in its carrying case and repackaging it with the original cardboard box with the factory provided padding.

3.2 Safety Instructions

- ***Read and understand all instructions in this manual.***
- ***Do not attempt to disassemble the instrument. If maintenance is required, return unit to the factory for qualified service.***
- ***The DataRAM 4 should be operated only from the type of power sources described in this manual.***
- ***Shut off DataRAM 4 and any external devices (e.g. PC) before connecting or disconnecting them.***
- ***Shut off DataRAM 4 before plugging in or disconnecting the AC power supply.***
- ***Never operate the DataRAM 4 without one of its internal filters in place.***
- ***If the internal battery of the DataRAM 4 has been allowed to discharge completely, recharge the battery for at least 30 minutes before operating the DataRAM 4.***
- ***During battery charging the DataRAM 4 should not rest on its front (i.e., bottom up).***
- ***To change position (angle) of the carrying/support handle, the large buttons on both sides of the handle must be pushed in at the same time to release handle lock. Do not attempt to rotate handle without releasing its lock.***

3.3 Orientation During Operation

The DataRAM 4 can be operated and/or charged in any of three orientations or attitudes:

- Horizontally (front panel vertical), resting on its 4 bottom rubber pads.
- Tilted with front panel up, resting on 2 rear rubber pads and locked down handle.
- Vertical (front panel horizontal, upwards) resting on 4 rear rubber pads.

3.4 Air Sampling Guidelines

Caution: The DataRAM 4 is not designed to sample highly corrosive aerosols or solvent fumes

3.4.1 Area Monitoring

For typical area monitoring applications, the DataRAM 4 should be placed and operated centrally within the area to be monitored, away from localized air currents due to fans, blowers, ventilation intakes/exhausts, etc. This is to ensure representative sampling within the area to be assessed.

3.4.2 Ambient Air Monitoring

For ambient (extramural) sampling/monitoring the following procedures and precautions should be applied:

- The sampling inlet should be away and above any obstructions whose wake may affect sampling representativeness. Typically, the inlet should be about 1 m (or more) above ground or any major surface (e.g., roof).
- Under typical horizontally directed and variable wind conditions, the use of the MIE Omnidirectional Inlet, model DR-OSI, is required, otherwise particles with equivalent (inertial) diameters larger than about 1 μm may not be sampled representatively.
- At ambient relative humidity above 65% to 70% airborne particles are likely to grow by accretion of water. If only the solid portion of the particulates is to be measured, the use of the MIE Temperature Conditioning Heater, model DR-TCH should be considered, especially when monitoring under fog or water mist conditions. On the other hand, the user should be aware that such heating of the sample stream might result in the evaporation of some volatile and semi-volatile particles of interest.
- The DataRAM 4 is not weatherproof. To operate the DataRAM 4 outdoors, provisions must be made to protect it from environmental extremes such temperatures beyond its specified range, and from any form of precipitation. A small shelter or roof may be required, with a modicum of heating during the winter.

3.4.3 Extractive Sampling

Two general types of extractive sampling occur: a) from a chamber/vessel/room, and b) from a duct or stack. In the first case the air to be monitored is generally nearly stagnant or gently stirred (by means of a fan or blower). The second case almost invariably involves a directed flowing stream at typical speeds of 3 to 30 m/s (600 to 6,000 ft/min).

To sample either from an enclosure (assuming the DataRAM 4 is to be located externally to that enclosure), or a duct/stack, a length of tubing can be used to which the following guidelines should be applied:

- Minimize tubing length, especially horizontally running lengths.
- Minimize the number bends and angle of change in direction.
- Minimize tubing inner diameter thus maximizing transport velocity (a practical lower limit of about 2 mm, or 0.08 in. ID is indicated for reasons of excessive pressure drop).
- If possible, changes in inner diameter (at unions, couplings, etc.) should be incremental in the direction of flow, i.e., the inner diameter should only increase in the direction of flow.
- Use non-electrostatic tubing. Best is electrically grounded metal or conductive plastic (black) tubing, Tygon™ is acceptable, and Teflon™ is not to be used.

For tubing lengths of up to 2 m (6 ft.), 6 mm ID (1/4 in. ID) plastic tubing with wall thickness of 1/16 in. is a practical size which can be stretched over the DataRAM 4 inlet stem.

For enclosure monitoring, the sampling inlet should be at some distance from the inner wall of the enclosure in order to ensure sampling representativeness. Typically, a minimum of 20 or 30 cm (1 ft.) is advisable. If a particle precollector is required (e.g., a cyclone) it should be used as the inlet to the tubing, within the enclosure to be monitored. If there is any pressure difference between the interior of the enclosure and the location of the DataRAM 4, its exhaust port (on rear panel) must be connected by tubing to the enclosure, i.e., the air stream extracted from the enclosure must be returned to it after passing through the DataRAM 4.

For duct/stack monitoring, a probe should be used whose inlet faces the direction of the airflow. If particles in the stream are larger than about 1 μm, sampling should be under isokinetic conditions, i.e., the velocity of the air entering the sampling inlet should equal the air velocity in the duct/stack at that point. This can be achieved using the MIE Isokinetic Sampling Kit model RAM-ISN which, in combination with the DataRAM 4 covers the range of about 3 to 30 m/s (600 to 6000 ft./min). As in the case of enclosure monitoring, it is advisable to return the DataRAM 4 exhaust air stream to the duct/stack in order to ensure proper internal flow conditions within the instrument.

3.5 Environmental Constraints and Certifications

The DataRAM is designed to be reasonably dust and splash resistant, however, it is not weatherproof. To operate the unit outdoors provisions should be made to protect it from environmental extremes outside its specified range, and ***from any exposure to precipitation.***

The DataRAM 4 is certified for compliance with the electromagnetic radiation limits for a Class A digital device, pursuant to part 15 of the FCC Rules. The unit also complies and is marked with the CE (European Community) approval for both immunity to electromagnetic radiation and absence of excessive emission interference.

4.0 ACCESSORIES

4.1 Standard Accessories

The DataRAM 4 is provided to the user with the following standard accessories:

- Soft-shell carrying case (MIE model RAM-2-184-1))
- Digital communications cable (MIE model DR-DOC)
- Communications software disk (MIE model DR4-COM)
- Universal AC power supply/charger (MIE model RAM-2-183-1)
- Standard filter cartridge (installed)(MIE model MSA-95302)
- Analytical Filter Holder (MIE model RAM-2-182-1)
- Instruction manual

4.2 Optional Accessories

The following optional accessories are available from MIE for use with the DataRAM 4:

- Omnidirectional Sampling Inlet (MIE model DR-OSI)
- Temperature Conditioning Heater (MIE model DR-TCH)
- In-line Impactor Head (10 and 2.5 μm) (MIE model DR-PM10/2.5)
- Impaction Nozzle for 1 μm (MIE model DR-PM1N)
- Ambient Sampling Inlet Set (consists of DR-OSI, DR-TCH and DR-PM10/2.5)
- Isokinetic Sampling Set (MIE model RAM-ISN)
- Sampling Dilution Unit (MIE model DR-SDU)
- Respirable Cyclone Precollector (MIE model DR-RCP10)
- Solar Power Supply (MIE model DR-SOL)
- External DC cable assembly (MIE model DR-DCS)
- Analog signal output cable (MIE model DR-ANC

5.0 INSTRUMENT LAYOUT

The user should become familiar with the location and function of all externally accessible controls, connectors and other features of the DataRAM 4. Refer to Figures 1 through 3.

All user related functions are externally accessible. Qualified MIE personnel should perform all repair and maintenance. Please contact the factory if any problem should arise. Do not attempt to disassemble the DataRAM 4, except as described in Section 12.0 (Maintenance), otherwise voiding of instrument warranty will result.

5.1 Front Panel

Refer to Figure 1 for location of controls and display.

The front panel contains the 10 touch switches (keys) and the LCD screen required for the operation of the DataRAM 4.

The touch switches provide tactile ("popping") feedback when properly actuated.

The ON/OFF key serves only to turn on the unit (while it is in the off state), and to turn it off (when it is operating). In the latter case, the DataRAM 4 switches automatically to its internal purge mode for about one minute, and then shuts itself off.

The EXIT and ENTER keys serve to execute specific commands that may be indicated on the screen, and the NEXT key generally serves to scroll the displayed information, e.g. to review the operating parameters that have been programmed, diagnostic values, etc.

The four-line, 20-character per line LCD indicates either measured values of concentration (instantaneous and time averaged on the same screen), elapsed run time, maximum and STEL (short term excursion limit) values, operating and logging parameters, diagnostics, command prompting or other messages.

The LCD screen is backlighted whenever the DataRAM 4 is powered by its AC charger/power supply. When operating from the internal battery, the screen backlighting is disabled in order to save battery charge.

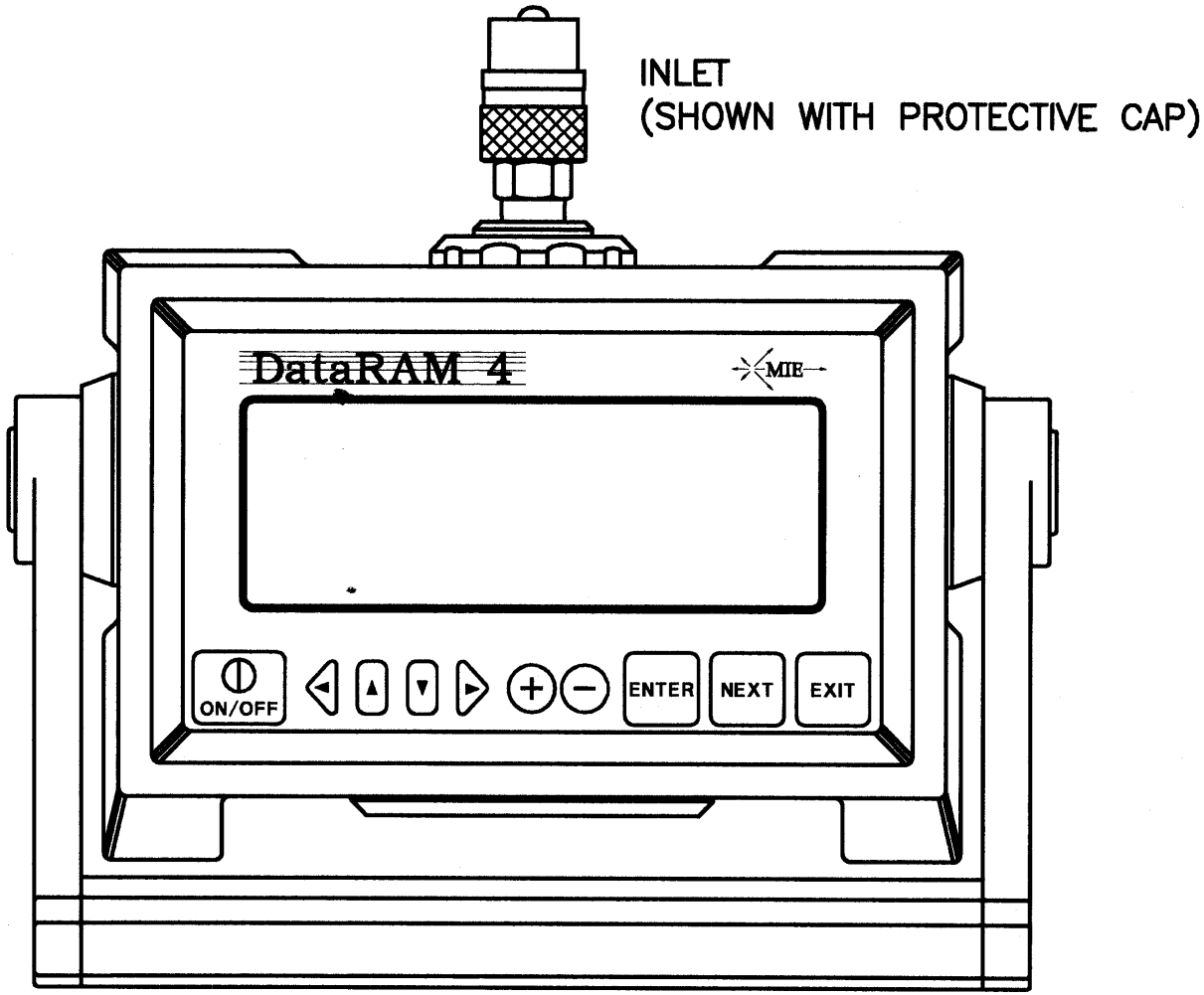

FIGURE 1. FRONT–PANEL VIEW OF DataRAM

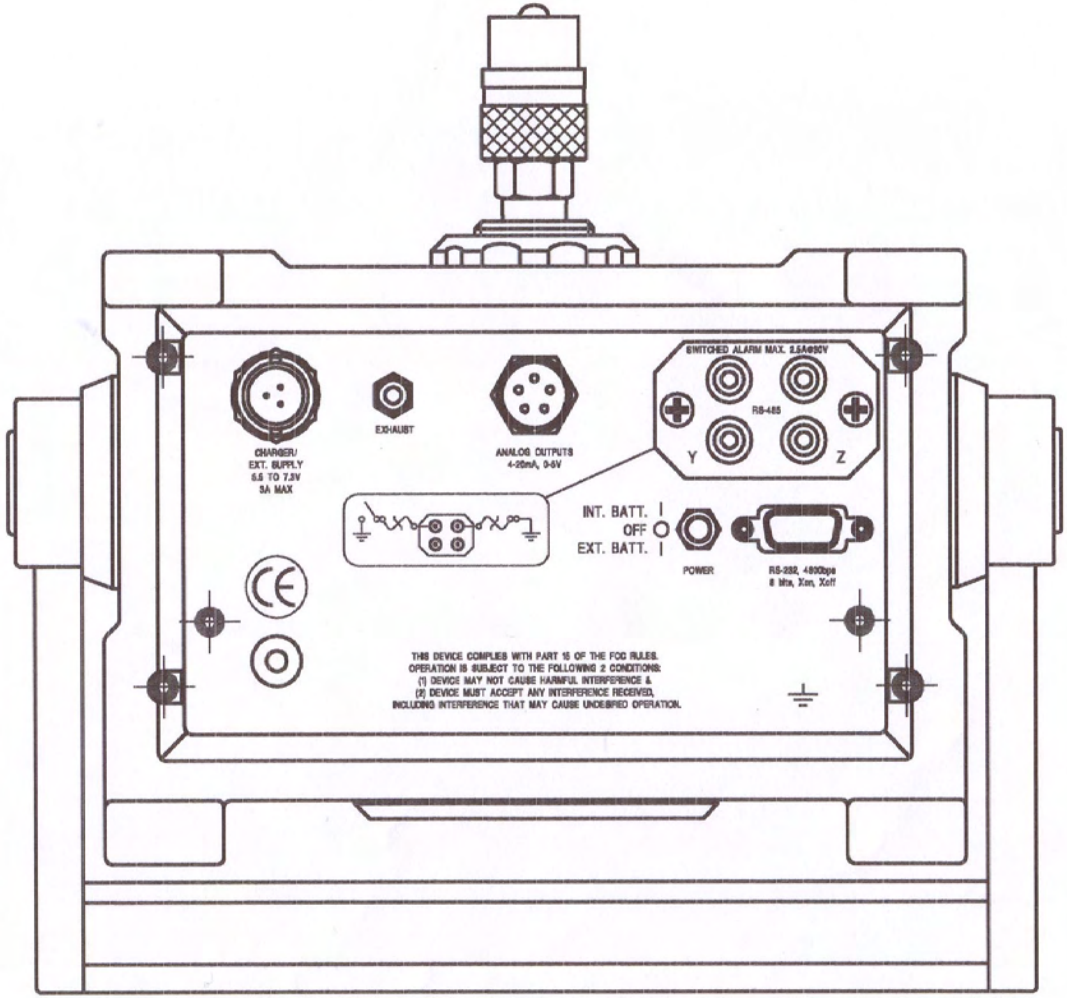

FIGURE 2. BACK–PANEL VIEW OF DataRAM

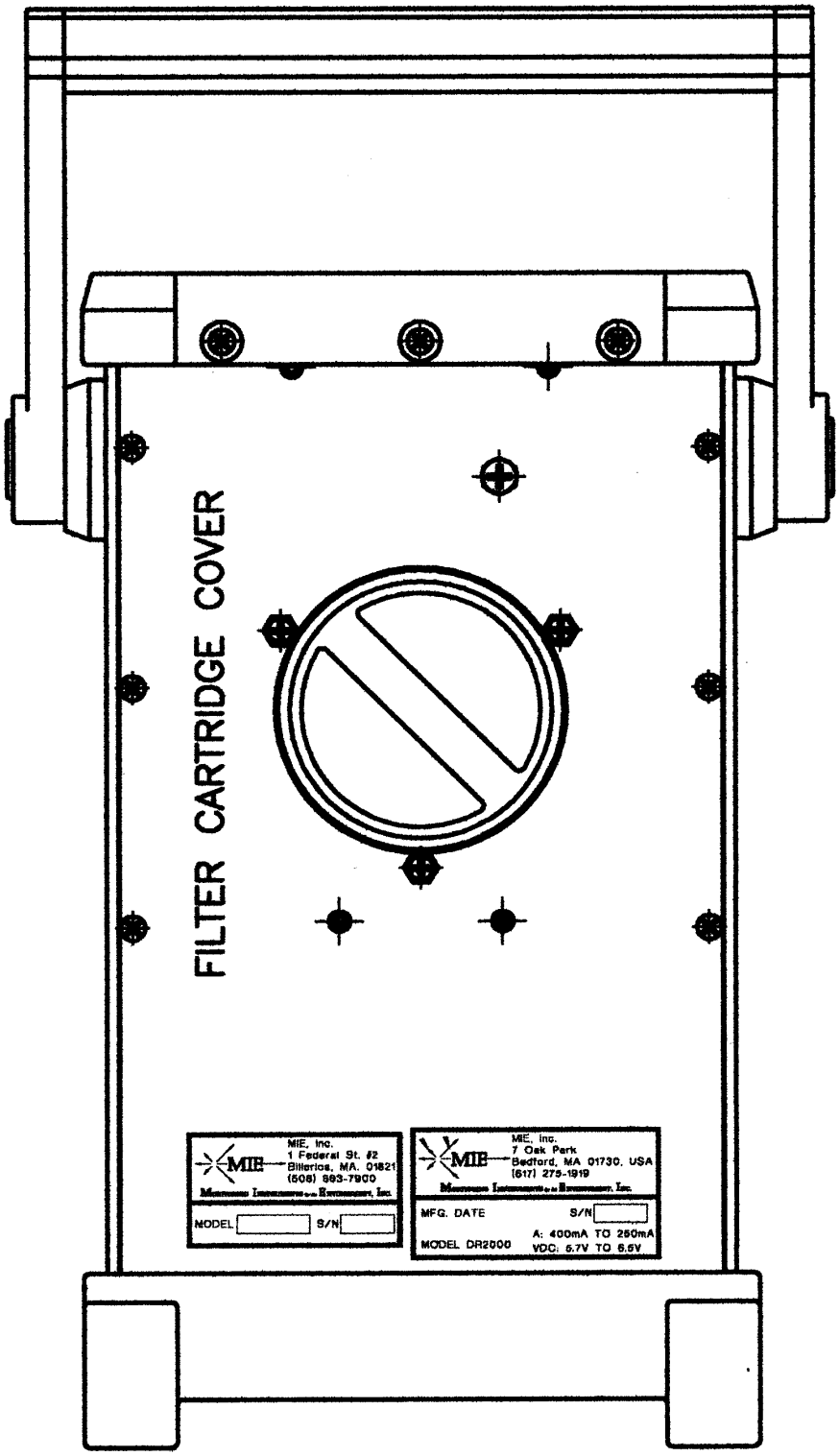

FIGURE 3. BOTTOM VIEW OF DataRAM

5.2 Rear Panel

Refer to Figure 2 for the location of items on the back panel of the DataRAM 4.

All components on the back panel are either labeled to indicate their respective functions, or are self-explanatory. Viewing the back panel from the rear of the DataRAM 4, the user should identify and become familiar with the following items:

- The **CHARGER/EXT. SUPPLY** 3-pin male receptacle. The AC power supply/charger provided with the DataRAM should be connected here whenever the internal battery is to be recharged and/or when running continuously from the AC line. Any other DC source (e.g., solar power supply, external battery, etc.) to be used to power the DataRAM would be connected at this location.
- **Inlet cap storage pod**. Directly below the charger/power supply connector is a gray plastic pod provided for storage of the metal inlet cap whenever the DataRAM 4 is in operation. The cap is snapped onto, or removed from the pod by pulling the knurled sealing ring away from the opening of the cap.
- The **CE** marking above the pod signifies that the DataRAM 4 has been certified to satisfy all requirements that are implied in that marking (please consult with MIE about any questions on the CE certification).
- To the right of the charger/ext. supply receptacle is the **EXHAUST** fitting. This is the point where the sampled air exhausts from the DataRAM 4. This exhaust airflow is particle-free as it has passed through the internal filter of the DataRAM 4.
- To the right of the exhaust fitting is the **ANALOG OUTPUTS** signal connector. Both 4 to 20 mA and 0 to 5 V outputs are available at that connector. In addition, this connector also provides a **VOLTAGE ALARM** output (0 to 5 V).
- At the upper right hand of the back panel is a 4-post connector. The upper two binding posts provide a **SWITCHED ALARM** output activated whenever the measured concentration exceeds a user set level (same as the voltage alarm output). The lower two posts are for **RS-485** communications.
- Below the 4-post connector is a standard 9-pin male connector for **RS-232** communications.
- Directly to the left of the RS-232 connector is a 3-position switch provided for **POWER** selection and shut off. To actuate this locking switch, pull its small handle outwards while moving it up or down. In the mid position (handle horizontal), the DataRAM 4 is shut off from any source of power, internal or external. This position should be used for transport, or when the DataRAM 4 is not to be used for an extended period of time***. The upward position is for normal operation, and should be used whether the DataRAM 4 is powered from its internal battery, being charged or when powered from its AC power supply***. The downward position is only to be used when an external DC source is applied (e.g., solar power supply, external battery, etc.).
- In the lower right hand corner is a chassis ground post to which a grounding connection may be made for fixed-point uses.

5.3 Bottom Base

Refer to Figure 3 for the location of items on the bottom surface of the DataRAM 4.

A large threaded plastic cover that seals the internal filter holder (either the large capacity HEPA metal cartridge, or the analytical plastic filter holder) can be accessed on the DataRAM 4 bottom panel. See Sections 6.3 and 12.4 for filter replacement procedures.

5.4 Carrying Handle

The swivel-type carrying handle can be locked at any of several angles, 30° apart. To unlock, press inwards the large buttons on both hinges, while rotating the handle. Allow these buttons to lock (by springing outwards) at any desired angle. At a 90° downward position the handle will provide an upward tilted position for the DataRAM 4, facilitating access and viewing of the front panel. ***Under no conditions should the handle be rotated without unlocking the hinges on both sides. Otherwise, the internal mechanism of the handle lock will be damaged.***

5.5 Sampling Inlet

The sampling inlet of the DataRAM 4 is located on the upper face of the instrument. This inlet is a quick-connect ¼-inch stem compatible with all inlet accessories available from MIE. When the DataRAM 4 is not in use, the inlet should be closed by means of the metal stem cap provided with the instrument. During DataRAM 4 operation this cap should be stored on its pod on the back panel. This stem cap serves to prevent accidental entry of objects, debris, or other form of contamination into the sensing stage of the DataRAM 4, as well as to protect the inlet stem from any surface damage. Figure 1 shows the inlet covered with the stem cap.

To remove the stem cap from the inlet, slide spring-loaded knurled sleeve backwards, and pull cap away from inlet. To insert cap, slide spring-loaded sleeve back, push cap down on inlet stem until it bottoms, and release knurled sleeve. The same procedure applies when removing cap from or inserting it onto the storage pod on the back panel of the DataRAM 4.

Do not loosen the large notched aluminum nut that secures the inlet stem to the DataRAM 4 case.

6.0 PREPARATION FOR OPERATION

6.1 Battery Charging and Operation

The internal rechargeable battery of the DataRAM 4 is a sealed lead-acid gel-cell type with very long lifetime. Under normal circumstances, the battery will provide reliable operation for several years.

When shipped from the factory, The DataRAM 4 internal battery has been fully charged allowing immediate operation of the instrument as received by the user.

Always recharge the battery after use and before storing the instrument for any length of time. The battery of a stored instrument must be recharged at least every three months.

If the DataRAM 4 has not been used for more than one month, it is advisable to recharge its battery to full capacity before operating.

A fully discharged battery requires at least ***12 hours of charging***, using the MIE supplied charger, in order to attain full capacity.

A new and fully charged battery, at temperatures above 15°C (60°F), approx., is expected to provide at least 20 hours of continuous operation.

During battery charging the DataRAM 4 can be placed in any of its operating positions, ***but not resting on its front (upside down position).***

If, while operating the DataRAM 4 from its internal battery, the battery charge were to be nearly depleted such that its voltage drops below an acceptable level, the DataRAM 4 will automatically switch to internal air purging and then shut itself off.

The DataRAM 4 can be operated continuously and for an indefinite time using its universal charger/power supply. This charger/power supply accepts any line voltage between 100 and 240 VAC, 50 to 60 Hz, without requiring any adjustments. When using this charger/power supply, its connector should be plugged into and fastened to the corresponding receptacle on the rear panel of the DataRAM 4 (see Section 5.2).

6.2 Inlet Uncapping

Before starting a measurement run, the protective stem cap must be removed from the inlet and stored on the pod on the back panel (see Section 5.2). ***The DataRAM 4 should never be in its run mode (pump operating) with the cap covering the inlet.***

6.3 Filter Cartridge Installation

Ensure that one of the two types of filter cartridges has been installed in the filter chamber accessible from the bottom panel of the DataRAM 4 (see Figure 3). The DataRAM 4 is shipped from the factory with the large capacity HEPA (High Efficiency Particulate Air) filter cartridge in place. See Section 12.4.1 for procedures to replace this cartridge or to install the analytic filter holder (Section 12.4.2). ***Except when gravimetric measurements or chemical analysis of the filter collection are to be performed, only the HEPA filter cartridge should be installed in the DataRAM 4.***

In order to gain access to the filter chamber, the large threaded plastic cap covering the filter chamber must be rotated counterclockwise (as viewed from the bottom). Do not leave this chamber open for any extended period of time, otherwise dust may settle on the internal optical surfaces. Hand tighten the plastic cap firmly after filter cassette replacement, to ensure a proper seal. ***At no time should the DataRAM 4 be running without a filter in place, otherwise serious damage to internal components may result.***

6.4 Power Selector Switch

When the DataRAM 4 is received from the factory, the 3-position power selector switch will typically be in its OFF position (mid-position). **To enable operation with either its internal battery or with the charger/power supply provided with the DataRAM 4, this switch must be placed in its INT. BATT. position (handle upward).** Refer to section 5.2 on how to operate this locking-type switch.

6.5 External Electrical Connections

Plugging in or unplugging any external equipment (e.g., computer, modem, alarm circuitry, etc.) should be made only while both the DataRAM 4 and the external equipment are shut off, in order to prevent damage or interference due to transient electrical effects.

6.6 External DC Power Operation

If an external DC source of power is used, for example if AC power is not available and continuous operation over more than 20 hours is required, an external battery or other DC source (e.g., solar power) can be used.

If an external battery is used, its specifications are:

- Voltage: 6.0 to 9.0 VDC
- Instantaneous current capability: 3 A
- Continuous average current requirement: 300 mA
- To calculate the required ampere-hour capacity:
  Ampere-hours = 0.3 x hours of operation

To connect external DC source to DataRAM 4, place 3-position **POWER** switch in its OFF position. Use special cable assembly, MIE model DR-DCS. Insert its 3-pin connector into the **CHARGER/EXT. SUPPLY** receptacle on the rear panel of the DataRAM 4 See Section 5.2 and Figure 2). Connect positive (+) side of external battery to the lead marked (+), and the negative side (-) to the lead marked (-). Once the connections have been completed, place the **POWER** switch in its downward position (EXT. BATT.). Again, before disconnecting external battery, return **POWER** switch to its OFF position.

7.0 OPERATING MODES

The DataRAM 4 has several different operating modes which will be described in what follows. The specific commands and displays within each of these operating modes will be explained in detail in Section 9.0

7.1 Set-Up Mode

The DataRAM 4 enters the Start-Up Mode as soon as the instrument is switched on. The user then has the choice to:
a) Wait before proceeding;
b) Zero the instrument and check its readiness;
c) Review or export previously logged data;
d) Edit data logging parameters; or
e) Edit operating/measurement parameters

All parameter and status changes must be performed while in the set-up mode. Once the DataRAM 4 is in the run (measurement) mode no changes can be made in the parameters or status of the instrument.

While the DataRAM 4 is in the set-up mode the internal pump is not activated, except while zeroing.

7.2 Run/Data Logging Mode

The Run Mode is the measurement/logging mode. The user can operate the DataRAM 4 in this mode either with or without data logging. For example, the instrument may be used first as a survey monitor without logging, for walk-through assessment of an industrial plant, before deciding where to set up the unit for continuous monitoring and logging. While in the run mode, the user will be able to view all current measurement values, operating parameters, diagnostic status, as well as any logged values up to that moment.

While the DataRAM 4 is in the run mode the internal pump is always activated.

8.0 KEY SWITCHES AND SCREEN CURSOR FUNCTIONS

Refer to Figure 1 showing the location of the front panel keys.

8.1 ON/OFF Key

The only function of the **ON/OFF** key is to switch the DataRAM 4 on or off depending on whether the instrument is shut off or operating, respectively. When keying **ON** (while instrument is off) the screen will display an identification screen and then the MAIN MENU (see Section 9.1).

When keying **OFF** the screen will request confirmation by keying **ENTER.** If the DataRAM 4 is in the run mode, this will then terminate the run and initiate the

automatic internal purging sequence with particle free air for about 1 minute, at the end of which the DataRAM 4 will shut itself off. If the DataRAM 4 is not in the run mode, keying **OFF** and then **ENTER** will also initiate the automatic purging sequence followed by automatic shut off. In either case, keying **EXIT** instead of **ENTER** after keying **OFF** cancels the termination command (the DataRAM 4 continues the run). Regardless of whether the DataRAM 4 was in the run mode or any other mode when shutting the unit off, all previously stored data remains in memory.

8.2 Screen Cursor, Arrow and +/- Keys

The cursor on the display screen is a blinking black rectangle marking a specific function, status or parameter value that can be selected or modified. When the cursor marks a **>** on the screen that specific function can be enabled by keying **ENTER**.

To move the cursor from one line to the other on the screen use the ∨ or ∧ keys.

When the cursor marks the first letter of a status, that status can be toggled (changed) by keying **+** or **-**.

When the cursor marks a digit of a parameter, the value of that digit can be incremented by keying **+** or decreased by keying **-**. To move the cursor to the next significant digit, either the **<** or the **>** keys should be used.

8.3 ENTER, NEXT and EXIT Keys

The **ENTER** key serves to implement or activate a specific function indicated by the screen cursor, or when the screen display presents ENTER as a command selection.

The **NEXT** key is used principally to go from one screen to the next either in the set-up or in the run/logging mode.

The **EXIT** key is provided to initiate the run termination sequence, or to return to the basic run screen (Run 1 screen) while the DataRAM 4 is in the run mode, to interrupt zeroing, or to return to a previous screen.

9.0 START-UP PREPARATION

Please ensure that the rear panel power switch is in the upward position (see Section 6.4).

9.1 The MENU Screens

Note: Bold, underlined symbols of the screens printed in this manual will denote blinking cursor location (e.g., **>**).

Press **ON** key. The following screen appears for about 5 seconds:

```
MIE        DataRAM 4
VER        35
S/N        D376
DEV#       1
```

The first line identifies the type of instrument, the second indicates the installed firmware version, the third is the serial number of the instrument, and the fourth line indicates an instrument identification number for serial communication purposes. Then the display automatically changes to the following screen:

```
        MAIN MENU
> START RUN
> ZERO/INITIALIZE
> VIEW/TRANSFER DATA
```

At this point, there are the following options:

- Keying **ENTER** starts a measurement run.
- Keying ∨ moves cursor to the next line (ZERO/INITIALIZE)
- Keying **NEXT** selects the next MENU screen:

```
        EDIT MENU

> LOGGING PARAMETERS
> SETUP PARAMETERS
```

Keying **NEXT** from the EDIT MENU returns the screen to the initial MAIN MENU screen.

9.2 ZERO/INITIALIZE Operation

Before initiating a measurement run it is advisable to perform the automatic zeroing and internal check out sequences, to ensure optimal operation.

- From the MAIN MENU select ZERO/INITIALIZE by moving the cursor to that line.
- Key **ENTER**

The pump starts up and the following screen appears initially:

```
 ZEROING/INITIALIZING
COUNTDOWN:      194 sec
MEMORY LEFT:       100%
BATT. CHARGE     412 mA
```

NOTE: Specific numbers used in his manual are given only as examples; values actually displayed may differ.

The time indicated on the second line is the countdown time required to complete the automatic zeroing/initializing sequence. The MEMORY LEFT indication is the unused percentage of the total logging memory. The BATT CHARGE reading is the charging current when the DataRAM 4 is connected to the a.c. line through its charger/power supply. If the charger is not used, that line on the screen will indicate BATTERY LEFT, i.e., the percentage of charge still available from the battery.

A few seconds after the above display appears, the screen will go to:

```
 ZEROING/INITIALIZING
COUNTDOWN:      186 sec
SOURCE 1:        NORMAL
SOURCE 2:        NORMAL
```

And finally to the following screen, indicating that the zeroing/initializing sequence has been completed:

```
 ZEROING/INITIALIZING
READY!:                0 sec
SOURCE 1:        NORMAL
SOURCE 2:        NORMAL
```

If the second line of the above screen indicates BACKGROUND HIGH instead of READY!, it is probable that the lenses in the sensing chamber require cleaning. Please refer to Section 12.2 for such cleaning procedures.

If the READY! message is displayed, return to the MAIN MENU by keying **EXIT**.

9.3 Selecting Logging Parameters

To select the data logging parameters, key **NEXT** from the MAIN MENU and the EDIT MENU is displayed. The flashing cursor appears on the LOGGING PARAMETERS line. Key **ENTER** to activate that function. The following screen appears:

```
LOG DATA:      DISABLED
LOG PERIOD:     00:00:05
TAG #:                13
AUTO START:  DISABLED
```

In order to activate (enable) the data logging function for the next measurement run, key **+** or **–** and the first line will display **E**NABLED (either of these two keys can be used to toggle between **D**ISABLED and **E**NABLED).
Key ∨ and the following screen is displayed:

```
LOG DATA:      ENABLED
LOG PERIOD:     00:00:05
TAG #:                13
AUTO START:  DISABLED
```

The cursor in this line indicates that logging period can be selected (to any period between 1 second to 4 hours). The value of the flashing digit can be changed up or down by keying **+** or **-**, respectively. To change from one significant digit to another, key either **>** or **<**.

To select another tag number (the one displayed automatically is always the next one available, e.g., in this case, 12 tags would have been used already, and tag # 13 is the next one available), key ∨ and the cursor will be on one of the tag # digits. Change/select as desired, or leave unchanged.

The last line of the logging parameters allows for programming a specific start time and date for logging the data (the DataRAM 4 must be operating in the run mode to effect such delayed logging). If the automatic start is disabled (as shown in the above screen) and logging has been enabled, then the logging of data starts as soon as a measurement run is initiated (see Section 9.6). If the user desires to start the logging at a later time (or date), the cursor should be moved to the last line and use either the **+** or **–** keys to enable the logging auto start function (toggling between enabling and disabling is accomplished by these same keys). If this function is enabled, the following screen is displayed:

```
LOG DATA:      ENABLED
LOG PERIOD:     00:00:05
TAG #:                13
AUTO:        16:25 JAN 17
```

As usual, the desired time and date for the automatic start of logging can be selected as described previously.

To return to the EDIT MENU screen, key **EXIT**.

9.4 Selecting Set-Up Parameters

To select operating parameters, set time and date, etc., key ∨ to select SETUP PARAMETERS on the EDIT MENU. Key **ENTER** and the first of 4 set up parameters screen is displayed:

```
DISPLAY AVG:       10 SEC
CAL FACTOR:          1.00
UNITS:       (MASS) ug/m3
SIZE CORRECT:    DISABL
```

As described before, the numerical values are changed by using the **+** and **–** keys, selecting significant digits by using the **>** and **<** keys, and selecting lines by using the∨ and ∧ keys. Toggling or scrolling the units of the third line, or enabling/disabling the relative humidity correction algorithm of the fourth line are performed using the **+** and **–** keys.

The **display averaging time** (first line) determines the smoothing of the displayed measurement values. This time can be selected between 1 and 60 seconds. Short averaging times provide faster response but noisier (more fluctuating) data. Conversely, long averaging times slow down time response but provide smoother (less fluctuating) data.

The **calibration factor** (second line) is the multiplier of the calibration slope programmed at the factory. A factor of 1.00 indicates that the calibration slope is identical to that programmed at the factory. This factor can be changed to agree with a user calibration (see Section 13.2).

The **measurement parameters (units)** can be selected on the third line. The selection alternatives are: mass concentration in $\mu g/m^3$, scattering coefficient in $(Mm)^{-1}$, or visual range in kilometers.

The **particle size correction** refers to the computation of the mass concentration. When this function is enabled, the measured mass concentration automatically takes into account the volume median particle diameter determined in real time from the ratio of the scattering irradiances at the two wavelengths of illumination of the DataRAM 4. When this function is disabled, the monitor behaves as a single wavelength (880 nm) nephelometer with its characteristic size dependence (similar to that of the DataRAM, model DR-2000).

The second set up screen can be displayed by keying **NEXT**:

```
RH CORRECT: DISABL
TEMPERATURE UNITS: C
FLOW RATE:  2.00 LPM
```

The first line of this screen refers to the **relative humidity correction**. When this function is enabled, the particle growth effect due to a high humidity environment is corrected for. This means that the computed mass concentration is based on the original dry environment particle population. This correction only applies when mass concentration units have been selected, but not when scattering coefficient or visual range has been selected.

The indicated **temperature units** can be selected between degrees Celsius (°C) and degrees Fahrenheit (°F).

The air sampling **flow rate** of the DataRAM 4 can be adjusted over the range of 1.00 to 3.00 liters per minute (LPM). The nominal operating flow rate is 2.00 LPM. What ever the selected flow rate, it will be maintained at a constant volumetric rate during the measurement run regardless of any changes in the system flow resistance, up to a maximum pump load.

Key **NEXT** to view the following screen:

```
ANLG OUT:      4.00 mg/m3
SERIAL MODE:     RS-232

DEVICE #:           124
```

The first line refers to the full-scale concentration of the **analog output** signal (0 to 5 V and 4 to 20 mA) available at the back panel of the DataRAM 4. The full-scale concentration ranges that can be selected (if mass concentration units are selected) are: 0.1, 0.4, 1, 4, 10, 40, 100 and 400 mg/m^3. If scattering coefficient units are selected, the ranges are: 10, 100, 1,000, 10,000 and 100,000 (Mm)$^{-1}$. If visual range has been selected the full scale range is fixed at 500 km.

The **serial mode** of digital communication can be selected on the second line between RS-232 and RS-485.

The last line is an **identification number** that the user can select to label this particular DataRAM 4 for future reference. This number will accompany the logged data information.

The next set up screen can be displayed by keying **NEXT**:

```
16:49:11        10 May 2000
TIME                 16:48:55
DATE            10 May 2000
TO SET PRESS => ENTER
```

This screen is used to set the **time and date**, should these require resetting. The first line indicates the time presently registered by the DataRAM 4. The second is the time editing line. To set the time accurately, select a time (on the second line) that is slightly ahead of the actual time (e.g., by 30 seconds) and select the seconds as a multiple of 10. In the U.S., it is convenient to dial 1-900-410-8463 (U.S. Naval Observatory time information), and at the instant when the time announced equals the time preset on the second line of the above screen, key **ENTER**, as instructed on the last line.

To display the next set up screen, key **NEXT**:

```
ALARM            ENABLED
LEVEL (ug/m3)       1000
AUTO ZERO       ENABLED
INTERVAL          48 hrs
```

The first line of the above screen allows enabling or disabling of the alarm function. When the flashing marker is on that first line it is possible to toggle between those two conditions by keying either **+** or **-**. The alarm level in the units of micrograms per cubic meter can be selected on the second line.

The third line of the above screen allows enabling or disabling of the automatic zeroing function whereby the DataRAM 4 automatically purges itself with particle-free air, and registers and then subtracts its optical background from all subsequent measurements. The fourth line allows for the selection of the time interval in hours (in one-hour steps up to 200 hours) between consecutive automatic zeroings.

To return to the MAIN MENU screen, key **EXIT**.

9.5 Review or Transfer Stored Data

To access stored data either for viewing on the DataRAM 4 screen or for transfer to a PC or other external device, select the VIEW/TRANSFER DATA line on the MAIN MENU, and then key **ENTER**. The following screen appears:

```
TAG # 12
> VIEW LOGGED DATA
> TRANSFER TEXT FILE
> DELETE LOGGED DATA
```

The above screen provides a selection of commands with respect to the last logged run (e.g., tag # 12). To select the contents of another tag, select the appropriate number, using the **+ - > <** key strokes, as described previously.

To review the data logged for a selected tag #, key ∨ to select the VIEW LOGGED DATA line, then key **ENTER** and the following screen appears:

```
TAG # 12        43 POINTS
START   11:23  09 May 00
END      11:27  09 May 00
LOG PERIOD      00:00:06
```

The above screen is the first of two available **tag summary** screens. The first line identifies the tag # and the number of data points logged during that run. The second line provides the run start time and date. The third line indicates the end time and date for that run. The fourth line indicates the logging period use during that run. For the above example, 43 data points of 6 seconds each were logged between 11:23 and 11:27 on May 9, 2000.

Keying **NEXT** displays the second tag summary screen:

```
TAG # 12        43 POINTS
AVG SCATR       0.00 1/Mm
MAX 207.33 11:23 09 May
AVG. DIA:        0.653 um
```

The first line of the above screen repeats the information of the first tag summary screen. The second line indicates the average measured value for that run. This average is given in whatever units were selected originally on the first set-up screen (Section 9.4). The third line indicates the maximum registered instantaneous value in the same selected units, and the time and date when this maximum occurred. The last line indicates the average volume median particle diameter in micrometers for that run.

In order to review the individual **data points** within a tag, key **NEXT** and the following screen is displayed:

```
TAG # 12       POINT #     1
11:23:20   09 May 2000
171.46 1/Mm     D = 0.40
um
```

The first line indicates the tag # and the point # within that run, the second line is the time and date of that point, the third line indicates the average measured valued and the average volume median particle diameter for that logging period, and the last line indicates the corresponding temperature and relative humidity values.

Keying **+** advances the point # scrolling the screens through all data points within the selected tag # or run.

Keying **NEXT** returns the screen to the first tag summary table then, keying **EXIT** returns to the VIEW/TRANSFER DATA screen (i.e., the first screen of this section).

In order to delete (erase) logged data, select the DELETE LOGGED DATA line from the VIEW/TRANSFER DATA screen, and key **ENTER**. The following screen appears:

```
DELETE LOGGED DATA
    TAG # 01
> DELETE TAG DATA
> DELETE ALL DATA
```

Select either DELETE TAG DATA or DELETE ALL DATA, as preferred. In the first case, only the data in the selected tag # are erased from memory, whereas in the second case all stored data are erased. After the appropriate selection of the data to be deleted, key **ENTER**, and the following screen is displayed (as an example it is assumed that only the data of tag #1 are to be erased):

```
DELETING LOGGED DATA
    TAG # 01
  ENTER TO CONFIRM
   EXIT TO CANCEL
```

To confirm the deletion command, key **ENTER**, or to rescind the deletion command, key **EXIT**. If **ENTER** is keyed, the following screen is displayed:

```
TAG # 01
HAS BEEN DELETED
PRESS ANY KEY
```

After confirmation that the data have been deleted, pressing any key (e.g., **EXIT** or **NEXT**) reverts the display to the DELETE LOGGED DATA screen if not all the data have been erased. Otherwise, the VIEW/TRANFER DATA screen appears.

9.6 Run Start

From the MAIN MENU (see Section 9.1), select START RUN. When ready to initiate the run, key **ENTER**, and one of the following types of screen appears (depending on which measurement units were selected in the set-up procedure described in Section 9.4):

```
16:08:09        10 May 2000
  CONC:           5.7 ug/m3
  TWA:           11.0 ug/m3
RUN TIME:     00000:02:25
```

or:

```
16:08:09        10 May 2000
  SCATR:         10.33 1/Mm
  TWA:            6.83  1/Mm
RUN TIME:     00000:02:25
```

or:

```
16:08:09        10 May 2000
  RANGE:          17.6 km
  TWA:            15.2 km
RUN TIME:     00000:02:25
```

It should be remembered that the measurement units can only be selected in the set-up mode and not during a run.

The first line of the above run measurement screen shows the real time (24-hour format) and date. The second line displays the real-time (instantaneous) measurement value (mass concentration, or scattering coefficient, or range, depending on the selected units) updated every second. The third line displays the time-weighted average measurement value (TWA) from run start, in whatever units were selected. The last line shows the elapsed run time in hours, minutes and seconds.

In order to view the other run parameters and diagnostic information, key **NEXT** and the following screen appears if the charger/power supply is **not** connected and the DataRAM 4 is being powered by its internal battery.

```
MEMORY LEFT          87%
BATT. LEFT           76%
FLOW RATE       1.99 LPM
TEMP= 25.3C     RH= 59%
```

If the DataRAM 4 is being powered by its charger/power supply, this screen will automatically display the charging current:

```
MEMORY LEFT        87%
BATT. CHARGE    326 mA
FLOW RATE      1.99 LPM
TEMP= 25.3C     RH= 59%
```

Key **NEXT** again and the following screen appears:

```
FLOW:            NORMAL
SOURCE 1:        NORMAL
SOURCE 2:        NORMAL
DETECTOR:        NORMAL
```

If any of the above functions or components is not operating correctly, the corresponding message will change from NORMAL to FAULT.

Key **NEXT** again and the following screen will be displayed:

```
SCATR PARAMETERS
PAR SCAT RATIO    0.5133
ANGSTROM COEF:    2.336
PARTIC. DIA:      0.454 um
```

The above screen shows the scattering parameters and the computed volume median particle diameter in micrometers. The SCA RATIO value is the ratio of the scattering irradiances detected at the two internal source wavelengths, i.e., at 880 nm and at 660 nm, respectively. If mass measurement units are selected (see Section 9.4), the second line of the above screen will display PAR SCAT RATIO which means that the indicated ratio is that due to particle scattering alone. If scattering coefficient or visual range units have been selected (see Section 9.4), that second line will read TOT SCAT RATIO, i.e., the ratio due to particle plus air scattering. The Ångström coefficient is the exponent that defines the wavelength-dependence of the scattering irradiance. This coefficient varies between 4 for pure Rayleigh scattering (molecular scattering), and 0 for wavelength-independent geometric scattering.

9.7 Run Termination

To terminate a run key **EXIT**. The following screen will then appear:

```
TERMINATE RUN ?

TERMINATE:     => ENTER
CANCEL:        =>    EXIT
```

To confirm the run termination, key **ENTER**. To continue the current run, key **EXIT**. If **ENTER** is keyed, the DataRAM 4 performs a purging operation for about 1 minute, and then displaying the initial MAIN MENU screen from which a new run can then be started. A new run can be started during the 1-minute purging cycle, thus interrupting that cycle. Alternatively, if during this purging period (following run

termination) the **OFF** key is pressed, the purging operation will continue while the following screen will appear indicating the countdown time in seconds for the completion of the purging cycle. At the end of that period the DataRAM shuts off automatically.

```
TURN POWER OFF ?
            PURGING:    39
POWER OFF:    => ENTER
CANCEL:       =>    EXIT
```

If **EXIT** is keyed while the above screen is displayed, the MAIN MENU screen will appear and remain after the purging has been completed. If the **OFF** key is then pressed the DataRAM 4 will shut off without further purging since the instrument had already purged itself.

9.8 Resetting and Defaults

The DataRAM 4 memory can be reset through commands entered on its keypad, as follows:

- Starting with the DataRAM 4 shut off, press the EXIT and ENTER keys at the same time, and while holding down those two keys, press ON;
- The screen will then indicate DataRAM 4 SELF-TEST followed in rapid succession by several diagnostic screens, ending with TESTING COMPLETE;
- Shut off unit. When turned on again, the DataRAM 4 memory will have been reset.

Resetting, as described above, accomplishes the following:

- Erases all stored (logged) data from memory;
- Resets all parameters and operating conditions to their default values and conditions (see below); and
- Cancels the zero correction offset.

The **default** values and operating conditions of the DataRAM 4 are:

- Logging period (LOG PERIOD): 60 seconds
- Logging status: disabled (LOG DATA: DISABLED)
- Alarm level (LEVEL): 1 mg/m^3
- Alarm status: disabled (ALARM: DISABLED)
- Analog output full scale: 1 mg/m^3
- Measurement units (UNITS): MASS
- Calibration factor (CAL FACTOR): 1.00
- Real-time display averaging time (DISPLAY AVG): 10 seconds
- Flow rate: 2 liters/minute
- Temperature units: C
- Particle size correction ((SIZE CORRECT): disabled (DISABL)
- Humidity correction (RH CORRECT): disabled (DISABL)
- Auto zero: disabled (DISABL)
- Serial port output format (SERIAL MODE): RS-232
- Data output mode (DATA OUT): continuous

When turning on the DataRAM 4 after resetting the instrument, it will automatically go to the zeroing mode. The DataRAM 4 will not measure (operate in the run mode) unless an initial zeroing operation has been completed.

10.0 ANALOG SIGNAL OUTPUT

10.1 Analog Output Description

The DataRAM 4 incorporates the capability to provide both a voltage and a current signal output directly proportional to the sensed concentration of airborne particulates. Both these analog signal outputs are concurrently available. These outputs are provided, principally, for fixed-point applications with hard-wired installations.

The particulate concentration range corresponding to the output voltage and current ranges (0 to 5 V and 4 to 20 mA) can be user selected on the DataRAM 4 screen (see Section 9.4) or via a PC using the communications software package included with the instrument. The most sensitive range available is 0 to 0.100 mg/m^3 (0 to 100 µg/m^3), and the least sensitive range is 0 to 400 mg/m^3. For example, if the user selects the analog output range of 0 to 0.400 mg/m^3 then the analog output signal levels, at a concentration of 0.200 mg/m^3, would be 2.5 V and 12 mA.

This concentration range is independent of the digital display, data logging and real-time digital output range which are controlled automatically (auto-ranging).

10.2 Analog Output Connection

For the 0 – 5 V output signal, the externally connected load must have an impedance of more than 200 kilo-ohms. For the 4 – 20 mA output signal, the externally connected load must have an impedance of less than 300 ohms.

Since both voltage and current outputs are present at the same time, both can be used concurrently, if so required.

The accuracy of the analog output signals is better than 1% of the reading with respect to the digital reading.

The 4 to 20 mA current output is available between pins # 1 and 4 of the 5-pin ANALOG OUTPUTS connector on the back panel (see Section 5.2). The 0 to 5 V analog voltage output is available between pins # 2 and 4 of that connector. Pin # 4 is common ground.

11.0 ALARM

11.1 Alarm Description and Operation

There are two alarm outputs available on the back panel of the DataRAM 4: a switching alarm and a voltage alarm. The switching alarm output is capable of sinking a current of up to 2.5 amperes to ground. The voltage alarm output goes from 0 to 5 volts when the alarm is triggered. Whenever the alarm is triggered, the on-board sound will be activated.

The alarm function can be enabled/disabled and the alarm level (trigger threshold) can be selected by the user through the DataRAM 4 keyboard (see Section 9.4).

The alarm is triggered whenever the selected alarm level is exceeded. When the displayed concentration falls below that level the alarm conditions stops. While the alarm is on, the user can disable it momentarily by pressing any key on the DataRAM 4. If the concentration continues to exceed the set alarm level after 10 seconds, the alarm condition will be reactivated.

11.2 Alarm Output Connection

There are two alarm outputs on the DataRAM 4:

a) **Switching alarm**. This alarm is available between the two upper terminals of the 4-terminal block on the upper right side of the back panel. The right-most terminal is ground and the left terminal is normally open. When the alarm level is exceeded, this latter terminal becomes grounded. A maximum load current of 2.5 A is allowed.

b) **Voltage alarm**. This alarm signal is available between pins # 3 and 4 on the ANALOG OUTPUTS connector in the upper middle of the back panel. This output consists of a voltage that steps from 0 to 5 V whenever the alarm is triggered. The minimum external load impedance for this output is 10 kilo-ohms.

12.0 MAINTENANCE

12.1 General Guidelines

The DataRAM 4 is designed to be repaired at the factory. No user serviceable components are inside the metal enclosure of the DataRAM 4 with exception of the filter cartridge or the analytic filter holder. Access to the internal components of the unit by others than authorized MIE personnel voids warranty.

Unless a MALFUNCTION message is displayed, or other operational problems occur, the DataRAM 4 should be returned to the factory once every two years for routine check out, test, cleaning and calibration check.

12.2 Battery Charging and Cycling

If the DataRAM 4 is to be operated without its charger/power supply, i.e., deriving power from its internal battery, this battery should be fully charged before initiating a run. The DataRAM 4 charger/power supply can be connected continuously to the instrument whether the DataRAM 4 is on or off. If the charger/power supply is not connected, the internal battery will discharge very slowly depending on storage temperature. Low storage temperature reduces battery capacity. High storage temperatures, however, reduce battery life which is of the order of 8 years at 20°C (68°F), and only 2 years at 40°C (104°F).

In general, the user should maintain the battery charge as high as possible in order to extend its charge/discharge cycling capacity (this characteristic differs from that of nickel-cadmium batteries).

12.3 Instrument Storage

If the DataRAM 4 is to be stored for an extended period of time (i.e., 3 months or more), place the 3-position switch on the back panel in its OFF position (mid-position), in order to minimize gradual battery discharge. This will have no effect on data retention or internal clock function. It is recommended, however, that the battery be recharged every 3 months in order to prolong battery life (see Section 6.1).

During storage always snap on quick-connect cap over the instrument inlet to protect the sensing optics from gradual dust contamination. Store DataRAM 4 in a dry environment.

12.4 Filter Replacement

To replace either of two types of filters used with DataRAM 4, place the instrument on its back rubber feet (front panel facing upward). On the bottom surface of the

DataRAM, locate the large threaded plastic filter cover and holding the cross bar, rotate this cover counterclockwise. Remove cover and the filter holder within the open cavity.

12.4.1 HEPA Filter Cartridge Replacement

The DataRAM 4 is shipped from the factory with the HEPA filter cartridge installed. This cartridge can be identified by its metallic cover. Remove this cartridge as indicated in Section 12.4, above. Clean the internal black rubber gasket against which the cartridge is normally compressed. Install new HEPA-type cartridge (MIE part no. MSA-95302) by inserting its wider ridged end first. Reposition threaded plastic cover engaging threads carefully; rotate cover clockwise, hand tightening firmly. Properly dispose of used cartridge to prevent inadvertent re-use.

12.4.2 Analytic Filter Installation/Replacement

In order to install or replace the analytical filter holder, proceed as follows. Remove the HEPA cartridge normally in place, as described in Section 12.4.1. Remove (separate) the inlet cover (with the blue plug) of the Millipore plastic filter holder from the rest of that holder assembly containing the white membrane filter. Insert firmly the gray plastic adapter annulus into the open face of the filter holder assembly, as shown in Figure 4. Remove the red plastic plug from the exhaust nipple of the filter holder assembly. Ensure that all three components of the holder assembly are fully compressed to preclude any leafage. Insert the assembly into the filter cavity of the DataRAM 4 with the gray plastic adapter annulus bearing against the internal black gasket (adapter annulus inserted first). Reposition threaded plastic cover and hand-tighten carefully and firmly. Set aside HEPA cartridge for future use.

In order to remove and/or to replace the membrane filter within its holder, remove the gray plastic adapter annulus and separate (pry apart) the two transparent plastic rings that compress the membrane filter. Make sure to remove and replace only the membrane filter (using tweezers), leaving the white backing disc in the holder. A new membrane filter should then be placed over that backing and the sealing ring should then be inserted to trap and compress the filter and backing discs. For storage, the inlet cap with the blue plug should be inserted as well as the red plug on the back of the filter holder.

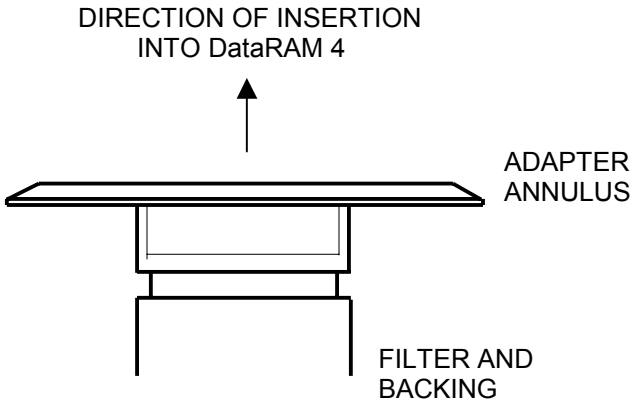

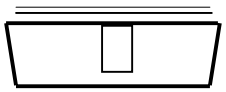

Figure 4. Analytical filter holder with adapter annulus inserted

12.5 Cleaning of Optical Sensing Chamber

Although the DataRAM 4 incorporates filtered air shielding of the critical optical sensing surfaces, continued sampling of airborne particles at high concentrations may result in gradual build-up of contamination on those interior surfaces of the sensing chamber components. This may cause an excessively high optical background level. If this background level does becomes excessive, the DataRAM 4 will alert the user at the completion of the zeroing sequence, as indicated in Section 9.2 by the display of a BACKGROUND HIGH message. If this message is presented, the DataRAM 4 can continue to be operated providing accurate measurements. However, it is then advisable to clean the front surfaces of the optical lenses within the sensing chamber at the first convenient opportunity, as described below. The tools required for this cleaning are: an intense concentrated light source (e.g., flash light) to view the inside of the sensing chamber, denatured alcohol, a soft lint-free cloth, and the special cleaning tool provided with the DataRAM 4 consisting of a cut-off cotton swab inserted in a plastic sleeve and held by a right-angle Allen wrench (see Fig. 5).

Proceed as follows to clean the lens surfaces within the sensing chamber:

- ***Make sure to shut off power completely before proceeding with cleaning***

- Install the stainless steel cover on the inlet of the DataRAM 4 to protect this fitting.
- Place the DataRAM 4 upside down on a table, resting the instrument on the inlet cover and the rear protective bumper.
- Unscrew the gray plastic cover of the filter cavity on the bottom surface of the DataRAM 4.
- Remove the filter cartridge from its cavity.
- Carefully clean the black soft filter-sealing gasket within the filter cavity by wiping it with the lint-free soft cloth. Use alcohol if necessary.
- Shine the concentrated light source into the sensing chamber located about 3 cm (1¼ in.) beyond the soft-sealing gasket in the filter cavity.
- Using the layout of the Figure 5 as a guide, locate the three smaller side cavities inside the sensing chamber, identified by the arrows on that figure. These three cavities contain the lenses of the two sources and the common detector of the DataRAM 4. The frontal surfaces of these lenses are likely to require cleaning if the instrument indicates BACKGROUND HIGH.
- Wet the cotton swab of the lens-cleaning tool with alcohol (e.g., methanol, ethanol, or rubbing alcohol).

- Holding the cleaning tool by its long handle, insert this tool into the sensing chamber without touching the walls of this chamber.
- Direct the cotton swab tip towards the opening of one of the three smaller cavities as indicated by the arrows of Figure 5, and insert the cotton tip into this cavity as far as it will go. Gently wipe that internal surface touched by the swab tip by a rotating motion. Carefully withdraw the swab tip from the cavity.
- Repeat previous cleaning step for the other two small cavities as indicated by the arrows of Figure 5.
- Carefully remove the cleaning tool from the sensing chamber. Allow the alcohol to dry leaving the filter cavity open for about 15 minutes.
- Re-insert the filter cartridge into its cavity and close it with its gray plastic cover, hand-tightening it firmly. Remove the inlet cap and store on its pod on the back panel.
- Place the DataRAM 4 right side up and key **ON**. Proceed to check its optical background by running the ZERO/INITIALIZE check as described in Section 9.2. The message READY! should appear at the end of this check indicating that the lens contamination has been eliminated. Should the message BACKGROUND HIGH persist after completion of the above-described lens cleaning procedure, please contact the factory.

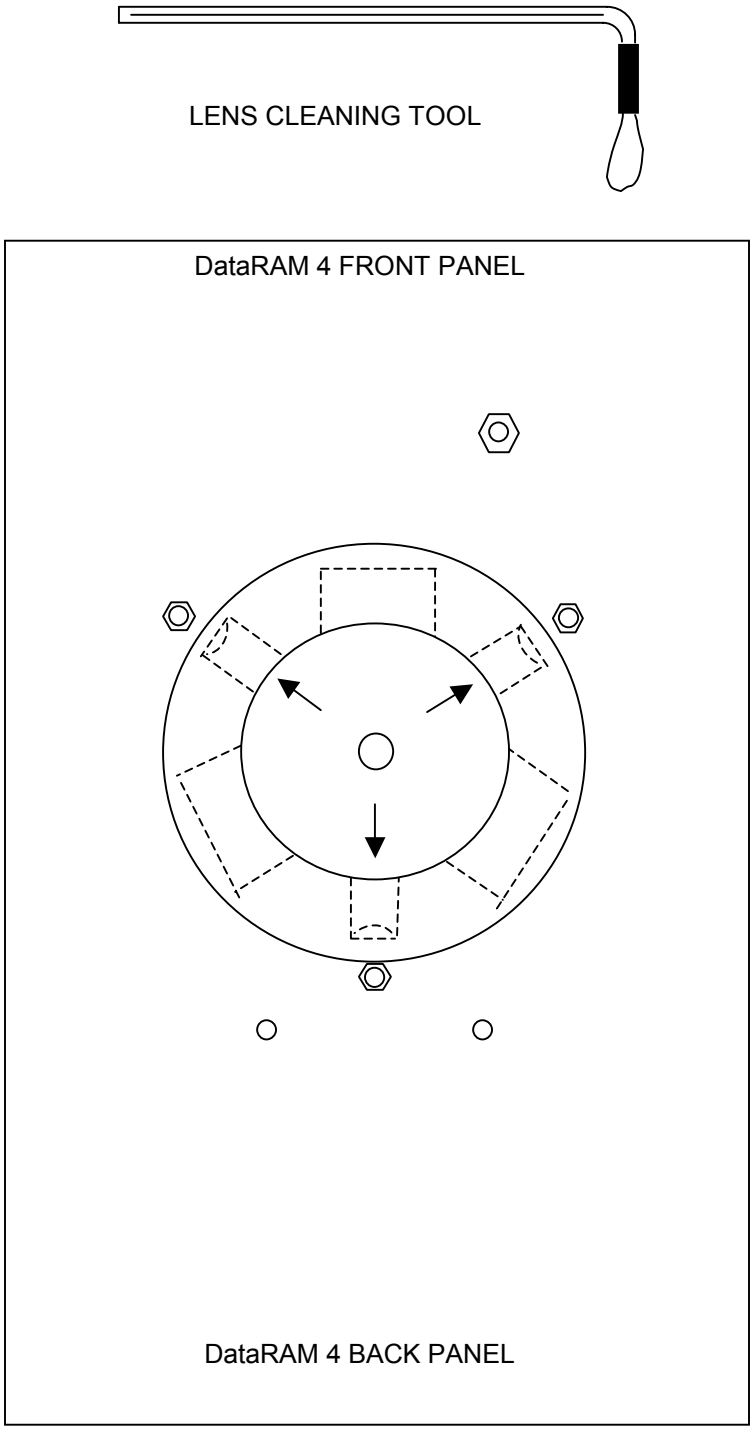

Fig. 5. Lens cleaning tool and bottom view of open filter cavity showing location of sensor chamber lens cavities (arrows).

13.0 CALIBRATION

13.1 Factory Calibration

For mass concentration measurements, each DataRAM 4 is factory calibrated against a set of reference monitors that, in turn, are periodically calibrated against a gravimetric standard traceable to the National Institute of Standards and Testing (NIST).

The primary factory reference method consists of generating a dust aerosol by means of a fluidized bed generator, and injecting continuously the dust into a mixing chamber from which samples are extracted concurrently by two reference filter collectors and by two master real-time monitors that are used for the routine calibration of every DataRAM 4.

The primary dust concentration reference value is obtained from the weight increase of the two filters due to the dust collected over a measured period of time, at a constant and known flow rate. The two master real-time monitors are then adjusted to agree with the reference mass concentration value (obtained from averaging the measurements of the two gravimetric filters) to within ±1%.

Three primary, NIST traceable, measurements are involved in the determination of the reference mass concentration: the weight increment from the dust collected on the filter, the sampling flow rate, and the sampling time. Additional conditions that must be met are: a) suspended dust concentration uniformity at all sampling inlets of the mixing chamber; b) identical sample transport configurations leading to reference and instrument under calibration; and c) essentially 100% collection efficiency of filters used for gravimetric reference for the particle size range of the test dust.

The test dust used for the MIE factory calibration of the DataRAM 4 is SAE Fine (ISO Fine) supplied by Powder Technology, Inc. It has the following physical characteristics (as dispersed into the mixing chamber):

- Mass median aerodynamic particle diameter: 2 to 3 µm
- Geometric standard deviation of lognormal size distribution: 2.5
- Bulk density: 2.60 to 2.65 g/cm^3
- Refractive index: 1.54

In addition to the mass calibration described above, the DataRAM 4 is factory calibrated using a gas with known scattering coefficient in order to adjust the relative scattering irradiance at the two source wavelengths.

13.2 Field Gravimetric Calibration

If desired, the DataRAM 4 can be calibrated gravimetrically for a particular aerosol (dust, smoke, mist, etc.) under field conditions (actual conditions of use).
To effect such calibration in the particle environment of interest, proceed as indicated below:

- Weigh and load into the analytical filter holder a fresh membrane filter (see Section 12.4.2).
- Start measurement run.

The duration of this comparison run should be sufficient to collect a mass of at least 1 mg on the reference filter (in order to permit accurate weighing of the collected mass by means of an analytical balance). The time-weighted average (TWA) reading of the DataRAM 4 can be used to estimate the required sampling time to collect the above-mentioned mass on the filter. To estimate the required sampling time (RUN TIME as measured on the DataRAM 4) in minutes, read the TWA value (see Section 9.6) after a RUN TIME of one minute or more, and apply the following relationship:

$$\text{RUN TIME} \geq 500/\text{TWA}$$

For example, if TWA = 2.5 mg/m^3, then RUN TIME ≥ 200 minutes (approximately 3 hours). If the TWA value changes significantly as the run proceeds, recalculate the required RUN TIME accordingly.

At the end of the run record TWA (in mg/m^3), RUN TIME (in minutes), and the flow rate Q (in liters per minute) used to sample the air. Weigh the filter on an analytical balance and obtain Δm, the mass increment due to the collected particles. Calculate the average gravimetric concentration C, as follows:

$$C = 1000\ \Delta m\ /\ [(\text{RUN TIME}) \times Q]$$

Compare the recorded value of TWA and the calculated value C, and calculate the calibration factor to be programmed into the DataRAM 4 (see Section 9.0) as follows:

$$\text{CAL FACTOR} = C / \text{TWA}$$

For example, if C was found to be 3.2 mg/m^3, and TWA had been determined to be 2.5 mg/m^3, the CAL FACTOR equals 1.28. Select this value on the DataRAM 4 screen (or on the PC), as described in Section . This completes the gravimetric calibration of the DataRAM 4 for a specific aerosol.

14.0 COMMUNICATIONS WITH COMPUTER

14.1 Computer Hardware and Software Requirements

The computer requirements to install and run the software provided with the DataRAM 4 (MIE DR4-COM) are the following:

- IBM-PC compatible
- Pentium I or higher processor

- Minimum operating system: Windows 95™ or better
- 32 MB of RAM
- 8 MB hard disk drive
- 3.5” floppy drive
- VGA or higher resolution monitor

MIE custom hardware and software provided with DataRAM 4 as standard accessories:

- Digital communications cable (MIE model DR-DOC))
- Software floppy disk (3.5”, MIE model DR4-COM)

14.2 Software Installation Procedure

To install the MIE provided software (DR4-COM) in the computer, proceed as follows:

- Insert the 3.5” disk labeled DR4-COM into the computer;
- Select **Start** and then **Run** on the computer screen;
- Type in on the **Command Line: a: install** (or **b: install**, as required);
- The computer displayed install shield then serves to guide the rest of the installation.

14.3 Communication Between DataRAM 4 and Computer

To effect the communication between the DataRAM 4 (via the DR4-COM software installed in the computer as described in the preceding section) and the PC proceed as follows:

- Connect the DataRAM 4 to one of the computer’s serial ports using the DR-DOC cable provided by MIE. This cable has a 9-pin female connector for the computer port.
- Key **ON** the DataRAM 4. Select the ZERO/INITIALIZE line on the MAIN MENU screen and key **NEXT** to display the EDIT MENU screen. Then select the SETUP PARAMETERS line and key **ENTER**. Key **NEXT** repeatedly until SERIAL MODE appears. Select RS-232 if this has not been selected already.
- On the computer, double click on the **DR4-COM** icon. A multi-tabbed notebook display should appear on the computer screen. From the Menu Bar, select **Settings** and **Select Serial Port.** Select the port to which the DR-DOC cable has been connected. From the multi-tabbed notebook displayed on the computer screen select the tab with the desired option. The options are:

  - **Main**: This page allows the user to Device Filter and to operate the DataRAM 4 through the serial port;
  - **Logged data**: This page allows the user to download, tabulate, print data, or transfer to a CSV file the data stored in the DataRAM 4. This page also

serves to display real-time numerical data when the computer is connected to the DataRAM 4 in the Run Mode of the instrument;

- **Graph data**: This page enables the downloading and graphing of stored data to the computer screen and to a printer. In the Run Mode, this page displays the real-time data in graphic format;
- **Configure instrument**: This screen allows the user to edit the operating/logging parameters. Click on the item to be edited and select or type in the new value. To review the parameter values currently programmed into the DataRAM 4, click on **Get configuration**. After editing the parameters, click on **Set configuration** to input the newly selected values into the DataRAM 4.

Most operations with the DR4-COM software program are self-evidently labeled, including fly-over dialog boxes. In addition, instructions may be found in the On-line Help files by selecting **Help** and then **Contents**.

The following operating/logging parameters of the DataRAM 4 can be selected (edited) via the computer:

- Current date (year, month and day of the month)
- Current time (hour, minute and second)
- Display averaging time (1 to 60 seconds, in 1-second increments)
- Calibration factor (0.01 to 9.99, in 0.01 increments)
- Analog output full scale concentration (0.1, 0.4, 1, 4, 10, 40, 100, or 400 mg/m^3
- Analog output status (enabled or disabled)
- Alarm level (0.001 to 409.5 mg/m^3, in 1-µg/m^3 increments)
- Alarm status (enabled or disabled)
- Particle size correction (enabled or disabled)
- Humidity correction (enabled or disabled)

The serial number of the DataRAM 4 is transferred automatically to the PC and displayed on the screen.

The year is to be entered as a two-digit number. Leap years are treated correctly until the end of the 21st century.

14.4 Real-Time RS-232 Output

During the RUN mode the DataRAM 4 can communicate real-time concentration data through its serial port via the DR4-COM software package. This software application decodes the data and displays it on the computer screen in both graphical and tabulated form.

In order to use this output with some other application, the following information will enable the user to decipher the encoded output signal. The communication settings for the digital output of the DataRAM 4 are:

- Baud rate: 9,600
- Data bits: 8
- Stop bits: 1
- Parity: none
- Flow control: Xon/Xoff

14.5 Serial Communications Protocols of the DataRAM 4

The DataRAM 4 has two serial ports. These are RS-485 or RS-232. Only one can be active at a time. The active port is selected via the setup screen of the DataRAM 4 (see Section 9.4).

The RS-232 port is for direct connection of a single DataRAM 4 to a PC's comport as described in Sections 14.1 through 14.4.

The RS-485 port is intended for connecting the DataRAM 4 to a "2-wire" network of DataRAM 4's. If there is more than one DataRAM 4 on the network each unit will need to have a unique device number. A PC can be attached to the network with a RS-232/RS-485 interface. The PC will be the master and the DataRAM 4s are all slaves. The interface needs to be set as DCE and support the T-RTS/R-~RTS protocol. (The interface transmitter is turned on with RTS from the computer). The RS-485 runs at 9600 baud.

The communications protocol is the same for both RS-485 and RS-232. It is a TTY type protocol. (i.e., not encoded; communication to a DataRAM 4 is performed with a simple terminal program.) The master PC sends a single line command terminated with a **<cr>.** A slave DataRAM 4 answers the command with possibly many lines, ending with the signal character of "**>**". The master times out after 2 seconds if there is no response from a slave.

The command format follows this general pattern:

<addr> <command> <parameter(s)> <cr>

<addr> is a numeric DataRAM 4 address, 1-125. Only the device named in the address is allowed to respond. This address is required for a network setup. If there is only one device on the network or if RS-232 is being used, then the **addr** can be either blank or "0". Then that device will answer, whatever its number.

<command> is a one keyword command. The commands recognized are listed in Appendix A. Mostly these pertain to setup variables in the DataRAM 4.

<parameters> depend on the command.

The response format will generally repeat the address and command and then follow with the DataRAM 4's current settings.

For example:

- The master PC sends: 27 backlight<cr>
- DataRAM 4 #27 responds: 27 backlight enabled<cr>> (note the following ">")
- The master PC sends: 27 backlight off<cr>
- DataRAM 4 #27 responds: 27 backlight disabled<cr>>

APPENDIX A

LIST OF REMOTE DIGITAL COMMANDS

Please contact MIE for information on external commands to control operation of the DataRAM 4 and to retrieve data.

APPENDIX B

PRINCIPLE OF OPERATION OF THE DataRAM 4

General Description

The DataRAM 4 is a two-wavelength nephelometer (light scattering photometer) with active air sampling (i.e., using an internal pump). The patented optical system (US Patent No. 6,055,052) incorporates two sources of illumination (light emitting diodes). One of these emits at a peak wavelength of 660 nanometers (red) and the other at 880 nanometers (near infrared). The light beams from these two sources is collimated by means of corresponding lens systems such that these beams illuminate the same axial portion of the air flow duct. Figure 1B depicts the sensing configuration of the DataRAM 4.

The axes of the two source beams are angularly symmetrical with respect to the axis of a common detector (silicon-hybrid preamplifier type) that senses the light scattered by particles passing through the illumination beams. The two sources are alternatively activated at a frequency of 27 pulses per second, i.e., only one source

is turned on at a time. The detector output signal is gated in synchronism with the alternating source pulses, providing two signal channels, one for each wavelength.

The scattering angle for both source-detector combinations is centered on 60° (±18°) with respect to the forward direction of the two beams.

MIE

Figure 1β

DataRAM 4 Two-Wavelength Portable Nephelometer

***

Optical Sensing Configuration

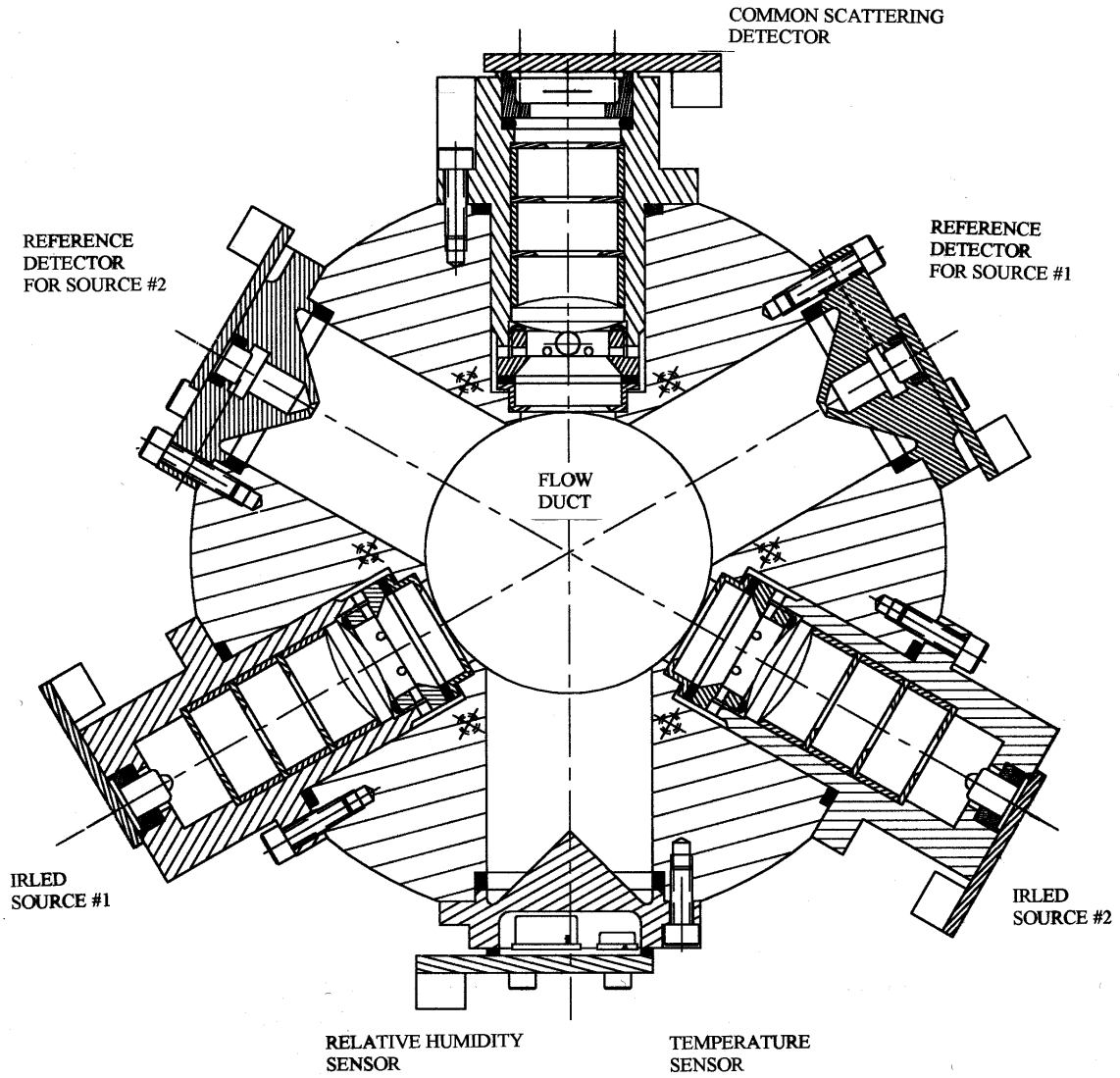

After these two beams traverse the sensing region within the flow duct, they enter their respective light traps at the end of which there are corresponding reference detectors that sense the intensity of each of the illumination beams. Feedback circuits ensure that the light output of both sources remains constant.

The Effect of Particle Size

The magnitude of the detected light scatter at either of the two wavelengths is directly proportional to the amount of particles passing through the sensing region of the DataRAM 4, defined as the volume of intersection between the illumination beams and the field of view of the common scattering detector. This response linearity, however, assumes that the optical properties of the particle population remain constant, i.e., that particle size and shape distributions, and effective particle refractive index do not change appreciably[*]. In practice however, and especially for the fine particle fraction ($PM_{2.5}$) in ambient environments, particle size can vary appreciably over time and from site to site due to particulate emission and climatic changes. The effect of particle size changes on the scattering signal depends on the ratio of that size to the wavelength used to generate that scatter, and also on the breadth of the size distribution.

Figure 2B shows the relative scattering signal (at the 660 nm wavelength) as a function of the volume median particle diameter for several different geometric standard deviations (σ_g, a measure of the spread of particle sizes) for single-mode log-normally distributed particle populations, for an effective particle refractive index of 1.50 (a typical value for ambient environments). This graph represents the response (output) of the DataRAM 4 assuming constant particle volume concentration (constant mass concentration for a given particle density) as a function of the median size of the particle population being measured. Under most practical situations, this population will not be monodisperse (geometric standard deviation of 1.0) but will be polydisperse, i.e., will have a range of sizes with a single or a multi-mode log-normal distribution. The fine particle fraction of ambient environments ($PM_{2.5}$) can usually be modeled by a single-mode log normal distribution with a geometric standard deviation of 2.0 and a refractive index of approximately 1.50 (for low relative humidity conditions). The response of the DataRAM 4 to that population of particles is represented by the curve labeled 2.0 of Figure 2B.

[*] Additional conditions that must be satisfied for response linearity are those of independent and single scattering, both of which are fulfilled over the operating range of the DataRAM 4.

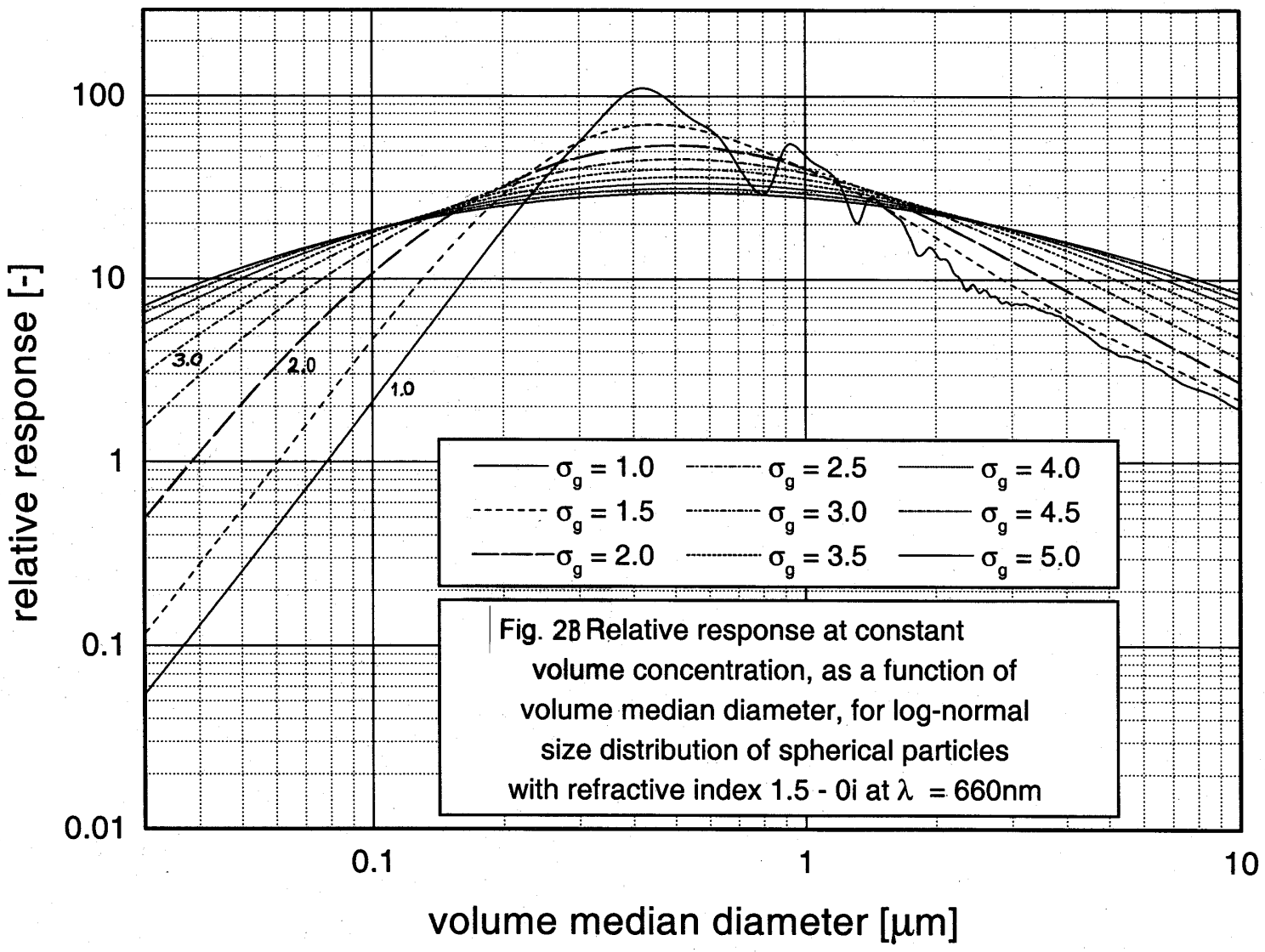

Fig. 2B Relative response at constant volume concentration, as a function of volume median diameter, for log-normal size distribution of spherical particles with refractive index 1.5 - 0i at λ = 660nm

For an idealized mass monitor, the response curves of Figure 2B would be reduced to a single horizontal line, implying that the measurement of mass concentration is independent of particle size. The inherent behavior of light scattering (as modeled by the rigorous Lorenz-Mie theory for spherical particles[*]), however, precludes such size independence. Alternatively, based on that size dependence and by measuring the ratio of the responses at two different wavelengths it is possible to determine the particle size and, consequently, to correct the mass measurement accordingly. This capability has been incorporated in the DataRAM 4 and is intended to be applied to fine particle monitoring, in combination with an inertial coarse-particle precollector (e.g., impactor). This precollector removes the particle population (typically larger than an aerodynamic diameter of 2.5 μm) whose size exceeds that of the fine particle fraction.

When the particle size correction algorithm is enabled (the user has the option to disable it), the DataRAM 4 computes the mass concentration as follows:

a) The scattering signal detected at the wavelength of 880 nm (after subtraction of the zero particle concentration offset) is cross correlated with the corresponding signal detected at 660 nm, and a combined signal is generated;
b) The ratio of the signals at 880 nm and at 660 nm is computed;
c) Based on the ratio determined in step b), the volume median particle diameter is determined (from a stored look-up table derived from Lorenz-Mie calculations based on the DataRAM 4 optical geometry and spectral sensing characteristics) for a particle refractive index of 1.50 and a log-normal size distribution with a σ_g of 2.0[**];
d) The particle size determined in step c) is then used to obtain the particle volume (i.e., mass) correction factor (also stored as a look-up table); and
e) The above determined particle volume correction factor is applied to the combined signal generated in step a) in order to compute the mass concentration.

The equivalence between particle volume and mass used within the DataRAM 4 is based on the calibration dust (SAE Fine) density of about 2.6 g/cm^3 which is representative of a wide range of particle materials in the environment. The user, however, can select a different particle density scaling factor on the DataRAM 4 (i.e., the CAL FACTOR).

The DataRAM 4 performs the above discussed particle size computation in real time on condition that the sensed mass concentration exceeds 0.005 mg/m^3 (5 μg/m^3). If the concentration falls below that threshold, the DataRAM 4 performs this computation and the size correction of the mass measurement based on the last size determination that had been performed when the above concentration threshold was exceeded.

---

[*] Field investigations indicate that the fine particulate fraction consists predominantly of spherical particles

[**] For custom applications involving different refractive indexes and/or particle size distributions, please consult MIE

Scattering Coefficient, Visual Range and Ångström Coefficient

The fact that the DataRAM 4 incorporates the capability to measure the wavelength dependence of the scattering of light by airborne particles allows the determination of the atmospheric visibility effects of that population. These effects are customarily referred to a standard wavelength of 550 nm, the approximate center of the photopic response of the human eye as well as the peak of the solar irradiance spectrum.*

The **scattering coefficient** is the primary parameter sensed by the light scattering system of a nephelometer such as the DataRAM 4. This coefficient is a logarithmic exponent that represents the degree of light attenuation due to scattering, per unit path length, expressed in the units of inverse length (e.g., inverse megameters, abbreviated as Mm^{-1}). By measuring the scattering coefficient at two different wavelengths it is possible to establish the wavelength dependence of that coefficient and, consequently, calculate the scattering coefficient at the reference wavelength of 550 nm. This calculation is performed within the DataRAM 4 and this information can be displayed/logged as measurement parameter in lieu of the mass concentration data.

Based on the value of the measured scattering coefficient the DataRAM 4 then computes what is called the **visual range** defined as the distance, under daylight conditions, at which the apparent contrast between a specified target (usually a black surface) and its background (horizon sky) becomes just equal to the threshold contrast of the average observer. This dependence of the visual range on the scattering coefficient assumes that light absorption by the particle population under scrutiny is negligible compared to scattering. Although this assumption is not always satisfied, for a majority of cases it constitutes an acceptable approximation. The empirical relationship between the scattering coefficient sensed by the DataRAM 4 and the visual range is given by the Koschmieder equation. The visual range (in the units of kilometers) can also be displayed/logged as measurement parameter in lieu of either the mass concentration or of the scattering coefficient.

Finally, and based on the ratio of the detected irradiances at the two operating wavelengths, the DataRAM 4 is programmed to compute the **Ångström coefficient**. This coefficient is a dimensionless exponent that expresses the functional relationship between the atmospheric scattering coefficient and the wavelength of light, and is dependent on the size distribution of the fine particle fraction. Theoretically, the Ångström coefficient varies over the range of 0 to 4. The limit value of 4 is for scattering by particles whose size is much smaller than the wavelength of visible light (Rayleigh or molecular scattering regime). The limit of 0 is for particles larger than the wavelength of the illuminating light (geometric regime). This coefficient can also be displayed on the DataRAM 4 screen, as a secondary parameter.

---

* The near matching between these two peaks is generally attributed to an evolutionary selection process

The Effect of Ambient Humidity

Fine airborne particles tend to accrete liquid water whenever the relative ambient humidity is high. Therefore, particles grow in size as humidity increases. This growth has been found to be generally negligible up to relative humidity (RH) levels of about 50%. At higher levels, especially over 70% this growth becomes very significant to the point that the majority of the mass of the fine particulate matter is constituted of water.

Figure 3B shows the relationship between the concentration measured by a nephelometer (MIE model DR-2000, DataRAM) and a collocated gravimetric sampler. The curve is an interpolation of experimentally obtained field data. This curve shows that below a RH of 50% the two devices agree whereas above that point the nephelometer indicates a higher value which is the result of the humidity induced particle growth mentioned above.

For atmospheric visibility measurements this high-humidity particle growth effect must be included since the purpose of such measurements is to assess the actual visual effects of airborne particles. For fine particle mass concentration determinations, however, the accreted water interferes with the measurement of interest, i.e., monitoring the mass of the original core particles. Gravimetric methods require sample conditioning (post sampling drying) to eliminate the water accreted by the collected particulate matter sample. Continuous mass monitors such as those based on beta attenuation or on mechanical resonance have heretofore relied on sample heating to enhance water evaporation. This later approach, however, not only reduces the amount of interfering water but also causes partial evaporation of semi-volatile particle components of interest, thus introducing a measurement error. Other methods, such as diffusion drying can be applied without affecting the measurement of semi-volatiles, but are inconvenient in their application to continuous unattended ambient monitoring.

In the case of the DataRAM 4, the user has the option to activate an automatic humidity correction that is based on the experimentally obtained curve of Figure 3B. When the humidity correction process is enabled (by keystroke selection), the DataRAM 4 applies a correction factor to the measured mass concentration that depends on the relative humidity measured within the optical sensing chamber. For example, if the sensed humidity were to be 80%, the DataRAM 4 without correction would over-read by a factor of 1.8 with respect to a gravimetric sampler. If the automatic humidity correction is enabled, the optically sensed concentration will be internally multiplied by 1/1.8, or 0.56, in order to compensate for the humidity induced particle growth. This correction is valid for most fine particle measurements, but should not be applied to measurements of larger particle sizes. This correction takes into account the change (decrease) in the refractive index of the grown particles due to the predominance of water (with its lower index).

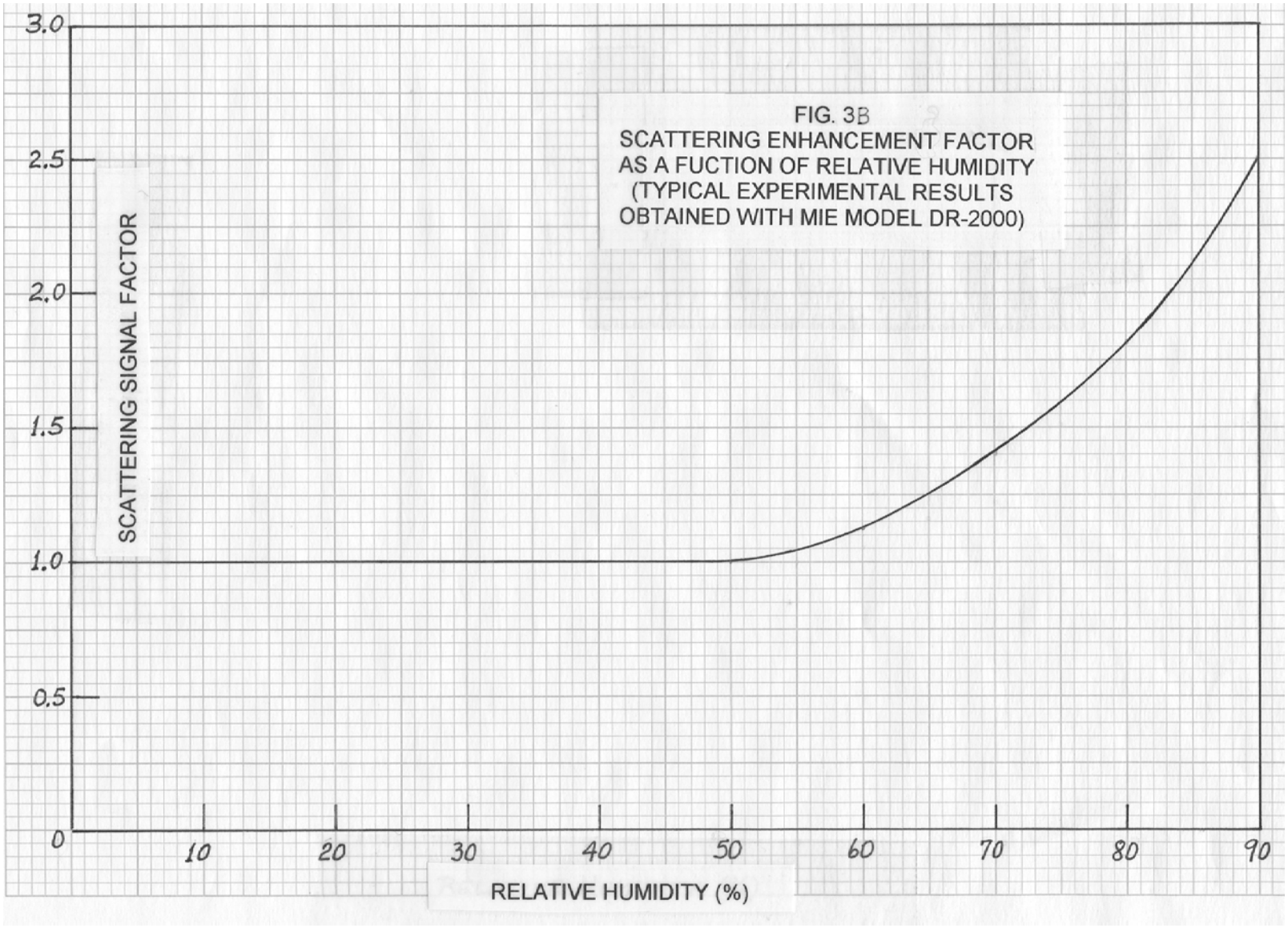
FIG. 3B
SCATTERING ENHANCEMENT FACTOR
AS A FUCTION OF RELATIVE HUMIDITY
(TYPICAL EXPERIMENTAL RESULTS
OBTAINED WITH MIE MODEL DR-2000)
SCATTERING SIGNAL FACTOR
3.0
2.5
2.0
1.5
1.0
0.5
0
10
20
30
40
50
60
70
80
90
RELATIVE HUMIDITY (%)

The particle size determination, based on the ratio of signals at the two DataRAM 4 wavelengths (discussed above) is not significantly affected by the change in refractive index associated with the particle uptake of liquid water. In the $PM_{2.5}$ range, a change of particle refractive index from the typical dry value of about 1.50 to that of pure water (1.33) causes a sizing error ranging from 0% for 0.1 μm particles to 7% for 2.5 μm particles. The actual sizing error is likely to be smaller since the refractive index of water-accreted ambient particles generally exceeds 1.40.

It is of interest to note that if the DataRAM 4 is used in conjunction with an in-line sample stream heater (e.g., MIE model DR-TCH), and the resultant measurements are compared with the humidity corrected measurements mentioned above (without the heater), it is possible to assess the loss of particle mass due to evaporation of semi-volatile particles. Alternatively, if there were no difference between measurements obtained with and without the inlet heater, it would indicate that there is no humidity induced particle growth and thus, the humidity correction should not be enabled.

NOTE: For an explanation of some of the terms used in this Appendix, please consult the MIE website: www.mieinc.com and click on **Aerosol Optics Glossary**.

SERVICE LOCATIONS

For additional assistance, Environmental Instruments Division has service available from exclusive distributors worldwide. Contact one of the phone numbers below for product support and technical information.

866-282-0430 Toll Free
508-520-0430 International

STANDARD OPERATING PROCEDURE

High and Low Volume Particulate Samplers

1.0 Introduction

This sampling method describes the procedure for collecting time integrated samples of outdoor air samples for the following analytical fractions:

1. Particulate Matter (PM10)
2. Mercury
3. Polychlorinated Biphenyls (PCB)
4. 2,3,7,8-tetrachlorodibenzo-p-dioxin (2,3,7,8-TCDD)

The analytical methods presented here are based on USEPA methods for air analysis. The analytical methods are the following:

1. Method TO-9A (2,3,7,8-TCDD)
2. Method TO-4A (PCB)
3. PM10 (Particulate Matter)

The analytical contractor (Test America-Knoxville) will be analyzing all samples collected from the construction site.

2.0 Collection Overview

2.1 Polyurethane foam (PUF) Sample

The sampling procedure for 'PCB' and '2,3,7,8-TCDD' is based on the adsorption of chemicals from ambient air on polyurethane foam (PUF) using a high volume sample pump. A sample of air is drawn into a covered housing, through a quartz filter, and through a laboratory certified pre-cleaned PUF filter using a high volume sampling pump set to a flow rate of 200-280 liters per minute (LPM) over a 24 hour sample period. The mass concentration of 2,3,7,8-TCDD & PCBs in the ambient air is computed by measuring the mass of the compounds collected on the quartz filter and PUF and in relation to the volume of air sampled. Great care must be taken in handling the PUF and quartz filter to ensure that no contamination is introduced onto the media.

2.2 PQ-100

The sampling procedure for the PM10/TSP/Mercury is based on the amount of ambient air drawn though the 47mm Quartz filter. A portion of the filter is removed in the laboratory and digested for the Mercury analysis. The remaining portion undergoes gravimetric analysis based on the weight difference (before and after the sampling event) to determine particulate matter.

3.0 High Volume Sampling Procedures

3.1 Sampling Material

- High volume sample pump - capable of 280 LPM (such as an Andersen PUF Sampler)
- Certified clean PUF sorbent tube - glass tube containing 75 mm PUF insert
- 102mm Quartz filter
- Flow recording charts
- Hand tools including a screwdriver and wrenches (clean and free of contaminants)
- Barometer and thermometer
- Latex or nitrile gloves
- Field data sheets
- Shipping container (such as a cooler), bubble wrap, and ice.

3.2 Calibration Equipment

The following equipment will be required for field calibration of the sampler:

- Orifice transfer standard with calibration that meets National Institute of Standards and Technology (NIST) criteria. The calibration certification papers will also be needed to calculate the flows for the transfer standard.
- An associated water or oil manometer, with 0- to 16-inch range and a minimum scale division of 0.1 inch for measurement of the transfer standard's flow. (Note: Manometers used for field calibration are subject to damage or malfunction and should be checked frequently.)
- Thermometer capable of accurately measuring temperature ranging from 0 to 50°C (273 to 323 K) to the nearest ±C calibrated annually to within ±2°C of a NIST or ASTM thermometer.
- A portable aneroid barometer (e.g., a climber's or engineer's altimeter) capable of accurately measuring ambient barometric pressure ranging from 500 to 800 millimeters mercury (mm Hg) (106 kiloPascals [kPa]) to the nearest mm Hg and calibrated at least annually to within ±5 mm Hg of a barometer of known accuracy.

  The operator can also use the barometric pressure reading from the National Weather Service.
- Miscellaneous hand tools, calibration data sheets or station log book, and 51-mm (2-inch) duct tape or rubber stoppers.

3.3 Equipment Set-Up

3.3.1 Clean' sampling protocols must be followed when handling and collecting samples. This requires care in the shipping, storage, and use of sampling equipment. Cleanliness of personnel who come in contact with the sampling equipment is also important: no smoking, no eating, no drinking, no perfumes, no deodorants, no dry cleaned clothing, etc. Sampling equipment should not be transported in vehicles with gas-powered equipment or gasoline cans. Sharpie markers should not be used for labeling or note- taking during sampling.

3.3.2 When taking outdoor samples, be sure to note on the datasheet any items that might bias analytical results (such as gasoline cans, garbage, fresh paint, etc.)

3.3.3 Collect particulate monitoring supplies, including filters, blank field data sheets, dusting cloth, flow recorder charts.

3.3.4 Pull the exhaust hose from out of the shlter bottom and extend it away from the shelter on the ground.

3.3.5 Gently open the shelter hood to allow access to the filter holder and screen.

3.3.6 Examine the filter screen. If the screen or the metal area round the screen appears dirty, wipe it clean with the dusting cloth.

3.4 Basic Calibration Procedure for a High-Volume Sampler Using an Orifice Transfer Standard

The samplers are calibrated before sampling begins and routinely throughout the sampling program as outlined below:

3.4.1 After a motor brush change or any repair work has been done to alter the speed of the motor

3.4.2 At least once a month or whenever the sampler has failed a performance audit or a QC flow check

A sampler essentially pulls a sample of a known volume of ambient air through a filter during a measured period of time. In order to establish PCB concentrations, three independent determinations are made: air volume flowrate, sampling time, and concentration of PCB per filter and PUF cartridge.

The sampler calibration procedure presented in this SOP relates known flowrates to the pressure in the exit orifice plenum. The known flowrates are determined by an orifice transfer standard that has been certified according to the procedure presented in the *Quality Assurance Handbook for Air Pollution Measurement Systems, Volume II (*EPA-600/4-77-027a). The exit orifice plenum is the area within the motor housing (below the motor unit) through which the air flows just before it is exhausted to the atmosphere through the exit orifice. This exit orifice plenum pressure is measured with an 8-inch oil manometer. A 4-inch continuous pressure flow recorder chart is used to determine flow rate and verify that flow was constant and uninterrupted over the sample period. The transfer standard for the flow-rate calibration is an orifice device equipped with five resistance plates to simulate various flowrates within a specified range of 39 to 60 cfm or 1.10 to 1.70 m^3/min. The pressure drop across the orifice is measured by an associated water or oil manometer. The sampler will be calibrated in standard volumetric flow-rate units (Q_{std}), and the orifice transfer standard is also calibrated in Q_{std}.

3.5 Multipoint Flow-Rate Calibration Procedure

Caution: Do not attempt to calibrate the sampler under windy conditions. Short-term wind velocity fluctuations will produce variable pressure readings by the orifice transfer standard's manometer. The calibration will be less precise because of the pressure variations.

3.5.1 Set up the calibration system as illustrated in the instrument manual. Samplers are calibrated without a filter or filter cassette installed.

3.5.2 Install the orifice transfer standard and its adapter faceplate on the sampler. Check all gaskets and replace any questionable ones.

Caution: Tighten the faceplate nuts evenly on alternate corners to properly align and seat the gaskets. The nuts should be only hand-tightened because too much compression can damage the sealing gasket.

3.5.3 Leak Test: Block the orifice with rubber stoppers, wide duct tape, or other suitable means. Make sure the manometer is not connected to the orifice. The vacuum created by the leak check will draw the liquid out of the manometer and into the sampler, resulting in damage to the motor. Seal the pressure port of the orifice by crimping the manometer hose (a rubber cap can also be used). Turn on the sampler.

Caution: Avoid running the sampler for more than 30 seconds at a time with the orifice blocked. This precaution will reduce the chance that the motor will overheat from the lack of air cooling. Such overheating can shorten the motor's lifetime and can raise temperatures to the point of defeating the electrical insulation, which could result in fire or electric shock to the user.

3.5.4 Gently rock the orifice transfer standard and listen for a whistling sound that wouldindicate a leak in the system. A leak-free system should read approximately zero on the flow recorder chart. Leaks are usually caused either by a damaged or missing gasket between the orifice transfer standard and the faceplate or by cross threading of the orifice transfer standard on the faceplate. All leaks must be eliminated before calibration. When the system is determined to be leak-free, turn off the sampler and unblock the orifice.

3.5.5 Inspect the connecting tubing of both manometers for crimps or cracks. Open the manometer valves (if present) and blow gently through the tubing, watching for the free flow of the fluid.

3.5.6 Adjust the manometers' sliding scales so that their zero lines are at the bottom of the meniscus. Connect the orifice transfer standard manometer to the orifice transfer standard. Ensure that one side of the manometer is open to atmospheric pressure. Make sure that the tubing fits snugly on the pressure ports and on the manometer.

3.5.7 Read and record the following parameters on the one point flow check sheet (see Appendix).

- Date, location, and operator's signature
- Sampler number
- Ambient barometric pressure (P_{av}), mm Hg or kPa
- Ambient temperature (T_{av}), K (K = °C + 273)
- Orifice S/N and calibration relationship

Note: Consistency of temperature and barometric pressure units is required. All temperatures will be expressed in Kelvin (K = °C + 273) and all barometric pressures will be expressed in mm Hg.

3.5.8 Turn on the sampler and allow it to warm up to operating temperature (3 to 5 minutes). Then, read and record the orifice transfer standard's manometer in total inches of water in the second column of the calibration data sheet [(Total ΔH_2O (in.) (trsf. Standard)] (see Appendix). Record the flow recorder chart reading in the fourth column, "I (Indicated flow from Dickson Chart)" on the calibration data sheet. Tap the box the flow recorder chart is mounted in to ensure that the pen is not stuck.

Note: The sampler inlet may be partially lowered over the orifice transfer standard to act as a draft shield (if a shield is not otherwise provided).

3.5.9 Select the first calibration resistance plate and adjust the variable orifice valve.

3.5.10 Change the resistance plate to obtain each of the other calibration flowrates. At least five calibration flowrates are measured The sampler's previous calibration values should be consulted for reasonability. If this is an initial calibration, the operator should consult the transfer standard's calibration to determine flowrates from the associated manometer readings. The same manometer readings can be generated for the calibration provided they are in the corrected range.

3.5.11 Repeat Step 10 for any data points that are questionable. Running additional calibration points at differing flowrates or repeating the calibration points at the same flowrates is encouraged to improve the precision of the calibration.

Note: The data points should be verified in the field as the calibration is occurring.

3.5.12 Turn off the sampler and remove the orifice transfer standard.

3.5.13 The Data Manager will perform the calibration calculations shown on the calculation data sheet. The data generated will be used to determine the flowrate of each sample run. The flow recorder chart reading for each sample run will be entered into the regression equation for that particular sampler to determine actual flow.

3.6 Calibration Calculations

Gather together all the calibration data, including the orifice calibration information and the sampler calibration data sheet.

Note: These calculations should be done at the time of the calibration, rather than later. This approach will allow additional calibration points to be run if questions arise about the data obtained.

3.6.1 Verify that the orifice transfer standard calibration relationship is current and traceable to an acceptable primary standard.

3.6.2 Calculate and record Q_{std} for each calibration point from the orifice calibration information and write these values under the column labeled "X-Axis" on the sampler calibration data sheet.

$$Q_{std}\ (orifice) = \{[\Delta H_2 0(298/T_{av})P_{av}/760)]^{1/2} - b\}\ \{1/m\}$$

where:

Q_{std}(orifice) = standard volumetric flowrate as indicated by the transfer standard orifice, standard m^3/minute

ΔH_2O = pressure drop across the orifice, in. H2O (from manometer)
T_{av} = ambient temperature during use, K (K = °C + 273)
P_{av} = ambient barometric pressure during use, mm Hg (or kPa)
b = y intercept of the orifice calibration relationship
m = slope of the orifice calibration relationship

3.6.3 Calculate and record in the fifth column, Y-Axis, on the data sheet the quantity for each calibration point as:

$$\text{Y-Axis } t = It = I[(298/T_{av})(P_{av}/760)]^{1/2} \text{ (when calibrating with a flow recorder chart)}$$

where:

T_{av} = ambient temperature, K (K = °C + 273)
P_{av} = ambient barometric pressure, mm Hg
It = transformed flow chart reading indicated by flow recorder chart
I = indicated flow reading from flow recorder chart

3.6.4 Determine the linear regression slope (m), intercept (b), and correlation coefficient (r) and record them on the data sheet. A five-point calibration should yield a regression equation with a correlation coefficient of R > 0.995 . For the regression equation, calculate the data points as follows and record them in the sixth column on the data sheet under "Y-Calc."

$$Y\ calculated = m[Q_{std}\ orifice] + b$$

where:

m = slope of the sampler calibration relationship
Q_{std} = transfer standard orifice's standard volumetric flowrate
b = intercept of the sampler calibration relationship

3.6.5 For subsequent sample periods or flow checks, the sampler's average standard operational flowrate, Q_{std}, is calculated from the calibration slope and intercept using the following equation:

$$Q_{std} = \{mean\ \ I(Tav+- b\}\{ 1/m\}$$

where:

Q_{std} = the sampler's average standard flowrate, m^3/minute
Mean I = average of sampler chart readings,
T_{av} = average ambient temperature for the sample period, K (K = °C + 273)
P_{av} = average ambient pressure for the sample period, mm Hg
b = intercept of the sampler calibration relationship
m = slope of the sampler calibration relationship

3.7 Sample Collection Procedures

3.7.1 Once the equipment has been adqequetly calibrated, note the filter number on the Field Data Sheet and place the clean 102mm quartz filter on the support screen and secure it with the hold down ring and swing bolts. Tighten the bolts sufficiently to hold the filter cassette securely and check that the ring is in good condition and has not deteriorated.

Caution: Tighten the bolts evenly on alternate corners to properly align and seat the gasket. The bolts should be only hand-tightened because too much compression can damage the sealing ring.

3.7.2 Unscrew the 4” filter holder and the sampling module cap leaving the module tube in place with the glass cartridge exposed.

3.7.3 Load the glass cartridge containing the PUF into the module tube and record the PUF model and serial number on the data sheet. Fasten the glass cartridge with the

module cap and 4” filter holder assembly while making sure that the module assembly, 4” filter holder, and all fittings are snug and not over tightened. Lower the sampler inlet hood and secure as necessary so the hood cannot blow open.

3.7.4 Open the front door of the sampler and the door to the flow recorder, then examine the flow recorder. Record the sampler number, filter ID number, site location, and sampling date on the back of a clean chart and install the chart in the flow recorder.

While installing the chart, raise the pen head by pushing on the very top of the pen arm (or by using the pen lift). Be sure that the chart tab is centered on the slotted drive to ensure full 360-degree rotation in 24 hours. Make sure that the chart edges are properly located beneath the retaining clips. Lower the pen arm and tap the recorder face lightly to make certain that the pen is free.

Note: During periods of inclement weather, the chart tends to stick to the recorder face. Two charts can be installed simultaneously to enable the sample (top, annotated) chart to rotate freely.

3.7.5 Using a coin or slotted screwdriver, advance the chart and check to see that the pen rests on zero – the smallest circle diameter. If necessary, adjust the zero setscrew while gently tapping on the side of the flow recorder. If a chart with a linear-function scale is used, some positive zero offset may be desirable to allow for normal variations in the zero readings.

3.7.6 Turn on the sampler and allow it to equilibrate to operating temperature (3 to 5 minutes).

3.7.7 While the sampler is equilibrating, record the following parameters on the field data sheet. A copy of the field data sheet is located in the Appendix A.

Site location

- Sample date
- Filter ID number
- Sampler number
- Sampler calibration information
- Weather conditions

3.7.8 Verify that the flow recorder is operational and that the pen is inking. Adjust the flow rate to approximately 250 LPM (8.8 cubic feet per minute). Record the observed flowrate on the field data sheet. This will provide a record that the sampler was checked for proper operation before each sampling event.

3.7.9 Turn the sampler off.

3.7.10 Check the time indicated by the time-set pointer on the flow recorder. If it is in error, rotate the chart clockwise by inserting a screwdriver or coin in the slotted drive in the center of the chart face until the correct time is indicated. Close and secure the flow recorder door.

3.7.11 Set the circular timer to turn on at the appropriate time or turn the sampler on manually, then close the sampler door.

3.7.12 Review the flowrate periodically during operation to ensure that the desired flowrate is being consistantly produced. If the flow rate increases or decreased by more than 10% of the desired flow rate and cannot be stabilized or corrected, the sampling event will be terminated and the sample pump will be returned to the vendor for proper calibration or replacement prior to recollecting a sample. A new sample will be collected once the problem has been rectified.

3.8 Sample Recovery Procedure

3.8.1 At the completion of each day's sampling event, the operator should return to the monitoring sites to retrieve the exposed PUF and filter. Particle gain, loss or filter damage will result if the PUF if left in the sampler for extended periods. Every effort shall be made to remove the PUF as soon as possible after sampling for the day is completed.

3.8.2 Note the final flow reading from the flow recorder chart and record it on the field data sheet.

3.8.3 Turn off the sampler.

3.8.4 Open the door of the sampler, remove the flow recorder chart, and examine the recorder trace. If the trace indicates extensive flow fluctuations above or below the acceptable flow range, the sample will be discarded and the sample pump will be returned to the vendor for repair and/or proper calibration.

3.8.5 Record the elapsed time of the sampling period on the field data sheet.

Note: Average ambient temperature (T_{av}) and average ambient pressure (P_{av}) readings will be obtained by the data coordinator using the meteorological data available from a local weather station.

3.8.6 Observe conditions around the monitoring site. Note any activities that may affect filter particle loading (e.g., paving, mowing, fire) and record this information on the field data sheet under "Remarks."

3.8.7 PUF recovery and handling procedures include the following:

NOTE: PUF & Filter recovery should take place during calm wind conditions if possible.

- Remove the sample inlet hood and remove the 4" filter holder care not to disturb the sample.
- Check the sample's validity using the validation criteria found in the next section.
- Carefully remove the glass cartridge with forceps and clean, gloved hands and immediately place the catridge in a sealed container for transport to the laboratory.
- Place a label on the container with all pertinent sample information on it.

3.8.8 Filter recovery and handling procedures include the following:

- Remove the top frame of the filter unit, taking care not to disturb the sample.
- Check the sample's validity using the validation criteria found in the next section.

- Carefully slip a manila folder underneath the edge of the exposed filter. The filter may stick in the cassette because of overcompression of the filter cassette gasket. Be extremely careful to avoid damage to the brittle quartz filter.
- Fold the filter once lengthwise with the exposed portions of the filter touching only exposed portions of the filter. Place the folded filter in the 4.5 by 10.5 glycine envelope provided in each filter packet. If pieces of filter get broken off while placing the filter in the envelope, gather the pieces and place them into the envelope also. Note this on the field data sheet also.
- Place the filter, the flow recorder chart, and the top copy of the field data sheet in the envelope in which the filter was originally shipped. This envelope should be stamped with the filter's number.

3.9 Sample Handling and Shipping

3.9.1 Fill out all appropriate documentation (chain of custody, sample tags) and return the PUF cartridges and equipment to the laboratory.

3.9.2 The PUF cartridges and filters should be secured inside the sample cooler with bubble wrap and shipped to the laboratory on ice. Never pack the cartridges with other objects or materials that could cause them to be punctured or damaged.

3.9.3 Place a custody seal over the openings to the shipping container.

3.9.4 Ship the samples with the accompanying chain of custody in a cooler filled with ice.

3.10 Single-Point Audit of the High Volume Sampling System Utilizing Calibrated Orifice Transfer Standard

3.10.1 A single point calibration check is required after each 24-hour test period. The purpose of this check is to track the sampler's calibration stability. Maintain a control chart presenting the percentage difference between a sampler's indicated and measured flow rates. This chart provides a quick reference of sampler flow-rate drift problems and is useful for tracking the performance of the sampler. Either the sampler log book or a data sheet will be used to document flow check information. This information includes, but is not limited to, sampler and orifice transfer standard serial number, ambient temperature, pressure conditions, and collected flow-check data.

3.10.2 Prior to single point audit, place a "dummy" glass cartridge in the sampling head and activate the sampling motor. Fully open the flow control valve and adjust the voltage variator so that a sample flow rate corresponding to 110 percent of the desired flow rate (typically 0.19 to 0.28 m /min) is indicated on the Magnehelic gauge (based on the previously obtained multipoint calibration curve). Allow the motor to warm up for 10 minutes and then adjust the flow control valve to achieve the desired flow rate. Turn off the sampler. Record the ambient temperature and barometric pressure on the Field Test Data Sheet.

3.10.3 Place the flow rate transfer standard on the sampling head. Properly align the retaining rings with the filter holder and secure by tightening the 3 screw clamps. Connect the flow rate transfer standard to the manometer using a length of tubing.

3.10.4 Using tubing, attach 1 manometer connector to the pressure tap of the transfer

standard. Leave the other connector open to the atmosphere.

3.10.5 Adjust the manometer midpoint by sliding the movable scale until the zero point corresponds with the water meniscus. Gently shake or tap to remove any air bubbles and/or liquid remaining on tubing connectors. (If additional liquid is required, remove tubing connector and add clean water.)

3.10.6 Turn on high-volume motor and let run for 5 minutes.

3.10.7 Record the pressure differential indicated, ΔH, in inches of water, on the Field Test Data Sheet. Be sure stable ΔH has been established.

3.10.8 Record the observed Magnehelic gauge reading, in inches of water, on the Field Test Data Sheet. Be sure stable ªM has been established.

3.10.9 Using previous established Orifice Transfer Standard curve, calculate Q_{std}.

3.10.10 This flow should be within ±10 percent of the sampler set point, normally, 8 ft. If not, perform a new multipoint calibration of the sampler.

3.10.11 Remove flow rate transfer standard and dummy adsorbent cartridge.

4.0 Low Volume Sampling Procedures

The PQ-100 device is an automated Air Pump that has internal capabilities to monitor airflow rate and adjust pump speed to compensate for ambient changes and conditions. The device is programmable for independent start/stop times.

4.1 Sampler Setup

Check the areas for safety. Ensure there will be enough room for the operator to move freely while working, and ensure physical conditions of the location will allow the operator to work safely.

The sampler should be set in a location unobstructed from any side. No tree limbs or other hanging obstructions should be above the sampler. It is suggested that the horizontal distance from the sampler to the closest vertical obstruction higher than the sampler be at least twice the height of the vertical obstruction.

Locate the sampler on a reasonably level structure at a height between two (2) and fifteen (15) meters above the ground.

4.2 Sampler Installation

Assemble the filter cassette holder according to Figure 1 and sampler assembly according to Figure 2.

If collocated samplers will be located at the site, the two samplers must be within four (4) meters of each other, but outside of two (2) meters. The inlet heights must be within one (1) meter vertically.

4.3 OPERATING PROCEDURE

4.3.1 Equipment and Supplies

1. BGI PQ-100
2. Flow Calibrator
3. Logbook Pre-weighed
4. 47mm filter cassette(s) in antistatic bag
5. Powderfree gloves
6. ERG sample paperwork

4.3.2 Initial Receipt Activities

Plug sampler into AC power and charge the internal battery for at least 24 hours. Check parts and components against the packing list. After charging, ensure sampler will power up and that the main screen is operational.

4.3.3 Verification

NOTE: THE PQ100 DOES *NOT* REQUIRE A LEAK TEST. CUTTING OFF THE FLOW OF AIR BY COVERING OR RESTRICTING THE AIR FLOW TO THE INLET WILL CAUSE DAMAGE TO THE INTERNAL PUMP AND WILL VOID THE WARRANTY.

To VERIFY flow: 1. Remove the PM10 inlet head and downtube. Unscrew filter cassette holder assembly and place a test filter cassette, with filter facing up, in the bottom holder assembly. Replace top holder assembly and reinstall the entire filter cassette assembly on the sampler. NOTE: The filter cassette should not be the same one used for the actual run event.

2. Take off the PM10 inlet head and replace with a NIST traceable flow standard. Ensure the flow standard in on and has equilibrated to ambient conditions.

3. Turn on the PQ167R by pushing the "ON/OFF" button. If a message is blinking on the display, press "ENTER" to proceed to the "MAIN IDLE DISPLAY".

The screen display should read:

ET0000Min TS00.00M (Date) Q (Flow)Lpm T(Time) Bty (Capacity)%

(Date) – today's date in military notation; e.g., 01JAN= January 1st (Flow) - the current flow rate selected to be regulated. (Time) - military time; e.g., 13:08= 13 Hours 8 Minutes or 1:08 PM (Capacity) - remaining charge in the internal battery.

4. Press SETUP three times until the Set START DATE and TIME screen appears: The screen should appear as below:

Set START DATE and TIME (Date) (Time) Off

5. The word, “Off”, should be displayed in the lower right corner of the screen. The bottom line of the display should be flashing. If “On” is displayed, press the “ENTER” button until “On” stops flashing. Then toggle to “Off” by pressing the + or – buttons.

6. Press the “SETUP” button twice to get to the “MAIN IDLE DISPLAY”

7. Press the “RUN/STOP” button to activate the pump.

8. Allow the pump to stabilize for at least 2 minutes.

9. If the measured flow and the flow indicated on the flow standard are within 4%, the sampler’s calibration is acceptable. If the flow is outside 4%, the unit must be recalibrated.

10. Press the “RUN/STOP” button to turn off the pump.

4.3.4 Calibration

NOTE: THE PQ100 DOES *NOT* REQUIRE A LEAK TEST. CUTTING OFF THE FLOW OF AIR BY COVERING OR RESTRICTING THE AIR FLOW TO THE INLET WILL CAUSE DAMAGE TO THE INTERNAL PUMP AND WILL VOID THE WARRANTY.

To CALIBRATE flow:

1. Insert test filter cassette in filter cassette holder as described in
C. Verifications Step 1.

1 Press "SETUP". The screen will read; "Select FLOW RATE"

2 From the "MAIN IDLE DISPLAY" press the "Setup" key once until the message below appears;

Select FLOW RATE

Target Q should read 16.7 (See Sect. 6.4 of the operator’s manual to select a new target Flow Rate.)

4. From the "Select FLOW RATE" message screen, press both the "Reset" key and the "Run/Stop" key simultaneously to enter the calibration mode and the message below will appear; CALIBRATE Target=16.7 Lpm

5. Press the “RUN/STOP” button to activate the pump and the message below will appear:

CALIBRATE Target = 16.7 Lpm
Reference Q.. XX.X

The Reference Q is an approximate flow rate used only as a visual aid in finding the corrected flow on the calibration device. This value may indicate 5 to 15% error. This is for reference only!

6. Use the "+/-" keys to move the pump speed up or down until the calibration device indicates the desired flow rate.

1. When a stable reading has been achieved, press the "ENTER" key to store the flow rate.

2. Exit the Setup menu and return to the "MAIN IDLE DISPLAY". CALIBRATIONS ARE NOT AFFECTED UNTIL THE ENTER KEY IS PRESSED AND THE PUMP IS RUNNING.

3. Record pre- and post- flow measurements and adjustments in the logbook.

4.2.5 Conducting the Sampling Event

Prior to going to the monitoring site, a filter must be loaded into a clean cassette. The following describes procedures for cleaning the filter cassette and loading the filter into the cassette.

<u>Cleaning the filter cassette</u>

Disassemble the “sandwiched” three parts of the cassette (top, bottom, and stainless steel screen). The easiest way to remove the top from the bottom is to firmly grasp the top and bottom and firmly twist.

The components of the cassette should be cleaned using a detergent or solvent that will not leave a residue that may contaminate the sample. A 1% solution of Liquino**x©** and deionized water has been used successfully for cleaning, but Staticid**e©**, or another alcohol

1. Wearing gloves, wipe down the surfaces of the disassembled cassette parts with a low-lint wipe such Kim-wipes©. Set the parts aside to dry for approximately 30 minutes.
2. The components of the cassette should be cleaned using a detergent or solvent that will not leave a residue that may contaminate the sample. A 1% solution of Liquinox**©** and deionized water has been used successfully for cleaning, but Staticide**©**, or another alcohol based cleaner may be used without dilution.

3. Wearing gloves, wipe down the surfaces of the disassembled cassette parts with a low-lint wipe such Kim-wipes©. Set the parts aside to dry for approximately 30 minutes.

4. Filters should be loaded into the cassettes in clean laboratory or office environment. Do not load filters in the field.

5. Clean the area where loading will occur and put on powder-free latex gloves.

6. Identify the lower half of the cassette (i.e., the portion with the wider “inner ring”); place this item on a clean surface with the flat wide surface down.

7. Using Teflon forceps, pick up the stainless steel screen and place it in the lower half of the cassette. There is no “up side” to the screen.

8. Using Teflon forceps (do not use metal), carefully pick up a filter **touching only the plastic**

ring on the filter from the shipping holder (i.e., Petri dish in which it was shipped and received). Hold the filter against a light to inspect for pinholes, discoloration, wrinkles, tears, or contamination. If any of these defects are discovered, discard the filter and select another.

9. Using Teflon forceps, place the filter in the lower half of the assembly on top of the screen. The side of the filter displaying a number should be visible when looking down at the filter. The filter must be discarded if the filter itself is touched by anything other than the forceps.

10. Place the upper half of the cassette on top of the lower half and firmly press down until the top and bottom halves are seated. Use equal pressure across the top half; do not twist.

11. The filter should be flat in the cassette without wrinkles, contamination, or holes. If any of these issues are observed; repeat the loading procedure.

12. Place the filter cassette assembly in the transport container provided by the laboratory to protect it during transit to the monitoring site.

13. Note: if a PM2.5 FRM or low volume PM10 weighing laboratory operates locally within the agency, the cassettes can be cleaned and loaded using their facility and procedure.

Site arrival activities

1. Visually inspect the filter holder and confirm the O-rings are in place and secure. Inspect all visible O-rings and replace if necessary.
2. Confirm all cables (electrical connections) are secure, and that exterior connections are protected from the elements.
3. Inspect the water collection jar. As needed, drain and clean, inspect the seal and replace the glassware on the holder.
4. Record activities and/or maintenance activities in logbook.

Preparing Sampler for a Sampling Event

1. Prepare sample paperwork. On the ERG PM10 Metals Sample Data Sheet, complete the “Lab Pre-Samp.” and “Field Setup” sections. In the top part of the TSP/PM10 Metals table, record the filter number under “Filter #” and sampler ID under “System #” for the run. Record any pertinent observations in the notes section at the bottom of the form.
2. Turn on the PQ167R by pushing the "ON/OFF" button. If a message is blinking on the display, press "ENTER" to proceed to the "MAIN IDLE DISPLAY". Then press “RESET” to clear prior run data.
3. The screen display should read:

ET0000Min TS00.00M (Date) Q(Flow) Lpm T(Time) Bty(Capacity)% (Date) – today’s date in military notation; e.g., 01JAN= January 1st (Flow) - the current flow rate selected to be regulated. (Time) - military time; e.g., 13:08= 13 Hours 8 Minutes or 1:08 PM (Capacity) - remaining charge in the

internal battery.

1. Press "SETUP". The screen will read; "Select FLOW RATE" The flow rate value will be blinking.

2. The flow rate should read 16.7 Lpm. If it does not read 16.7 Lpm, set TARGET FLOW RATE to 16.7 Lpm by pressing ENTER. The whole number value will remain on constant while the tenths still blink); use "+" or "-" to increase or decrease until 16 is displayed. Press ENTER (Tenths value will now remain constant while whole number blinks); use "+" or "-" to increase or decrease until .7 is displayed.

3. Press "SETUP". This is the date and time screen.

The screen should read;

Set DATE and TIME (dd) (mmm) (yyyy) (time)

To change the Date and Time;

TIP: Only the field not blinking can be adjusted. Push enter to move to the next field.

a. DAY: Press ENTER and change by pressing the + or - key. When the day is correct, press ENTER.
b. MONTH: To change, press + or - key. When correct, press ENTER.
c. YEAR: To change, press + or - key. When correct, press ENTER.
d. TIME (hrs): To change, press + or - key. When correct, press ENTER.
e. TIME (min): To change, press + or - key. When correct, press ENTER.

1. When date and time are correct press "SETUP"

2. This is the sample start screen which reads;

Set START DATE and TIME (dd) (mmm) 00:00 Off

This screen allows you to set a start date and time for a sampling run. The default is set to midnight the next day. To designate your own start date and time:

a. **DAY**: Press ENTER and change by pressing the + or - key. When the day is correct, press ENTER.

b. **MONTH**: To change, press + or - key. When correct, press ENTER.

c. **YEAR**: To change, press + or - key. When correct, press ENTER.

d. **TIME** (hrs): To change, press + or - key. When correct, press ENTER.

e. **TIME** (min): To change, press + or - key. When correct, press ENTER.

f. Enable the run by setting the “On/Off” function on the screen to “On”.

WARNING: The sampler will not automatically activate if
this option is set to “Off”.

9. Press "SETUP"

The screen will read;

Set RUN TIME Hours: 24 Min: 00 On

Set to 24 hours 0 minutes. The default is always 24 hrs 0 min, the required sample duration. If the sample time needs to be modified, adjust as instructed in step 6 and 8.

10. Press "SETUP". The screen will return to the "MAIN IDLE DISPLAY"

WARNING: DO NOT PRESS THE RESET BUTTON AT THIS TIME AS THE START TIME AND RUN TIME WILL DEFAULT.

11. Press "RUN/STOP"

If the START TIME ENABLE is set to "On" then the message "Alarm Triggered Run..." followed by "PQ100 Powering Down.." will appear briefly. The PQ100 is now waiting for the internal real time clock to achieve the designated start time and will then power itself on and begin the sampling run. If the START TIME ENABLE is set to "Off" then the pump will begin to run immediately. If this occurs, press RUN/STOP and begin back at step 2 ensuring START TIME ENABLE is set to “On”.

Retrieving Filter Cassette from Filter Cassette Holder

Prior to loading a new filter cassette into the sampler, the sample cassette must be removed

1. Remove the PM10 inlet head and downtube and set aside.
2. Remove filter cassette holder.
3. Put on a clean pair of powder free gloves
4. Open a cassette transport container and set aside.
5. Unscrew filter holder top from filter holder bottom. NOTE: Gloves must be changed for each sample, i.e. between retrieving a sample and preparing a new run, gloves MUST be changed to prevent cross contamination.

6. Remove filter cassette and place it back into the cassette transport container.

Loading Filter Cassette into Filter Cassette Holder Assembly

1. Remove gloves and put on new pair of powder free gloves.
2. Open the cassette transport carrier containing the clean filter and cassette; set the cap to the side and remove the clean cassette.
3. Place the filter cassette filter side up onto the filter holder bottom. Carefully screw the filter holder top onto the filter holder bottom. Remember to annotate the filter number on the ERG PM10 Metals Sample Data Sheet.
4. If running a field blank, repeat steps 1 through 3, count to 10, and then remove the field

blank filter cassette placing it back into its transport container. Ensure the transport container carrying the blank is clearly labeled / distinguishable from the other transport containers. Log the filter ID as field blank in the comments section of the ERG PM10 Metals Sample Data Sheet. The field blank must be run before the sample filter cassette is loaded into the sampler.

5. Replace the filter cassette holder assembly on the sampler.

6. Replace the downtube and the PM10 head.

Field Data Recovery

On the ERG PM10 Metals Sample Data Sheet, fill in the "Field Recovery" section. In the TSP/PM10 Metals table, fill in the "End Time", "Total Time" (ETXXXXMin), and "Avg Flow (L)" (QXX.XLpm). Record the total sample volume (TSXX.XM) in the comments section. "Start MFC" and "Stop MFC" are not used; in their place record start and end flow rates in LPM.

Filter Retrieval from Cassette

Filters should be retrieved from the cassettes in clean laboratory or office environment. Do not retrieve filters in the field.

1. Clean the area where loading will occur and put on powder-free latex gloves.

2. Open the filter cassette transport container and remove the sample cassette.

3. Open the cassette ensuring the bottom portion of the cassette (i.e., where filter is seated) is down. Place upper / top portion of the cassette to the side.

4. Using Teflon forceps (do not use metal), carefully pick up the filter touching only the plastic ring on the filter and place in the shipping holder (i.e., Petri dish in which it was shipped and received).

5. Place the shipping holder and transport back to the laboratory.

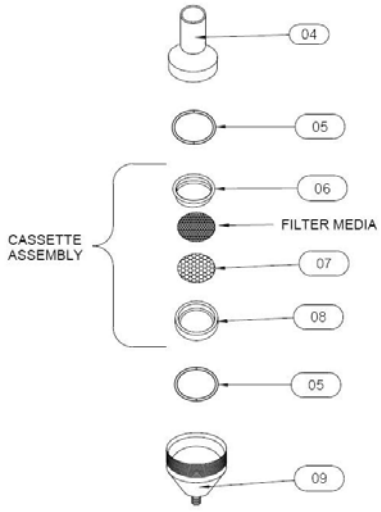

4	5,4,8	A1752	Filter Holder Top
5	4,8	BUNA135	O-Rings
6	4,8	A1727-L27	Cassette Top - New Model
7	4,8	F1/U	Screen
8	4,8	A1729-L29	Cassette Bottom - New Model
9	5,4,8	B1425	Filter Holder Bottom

Figure 1. Filter cassette holder assembly diagram

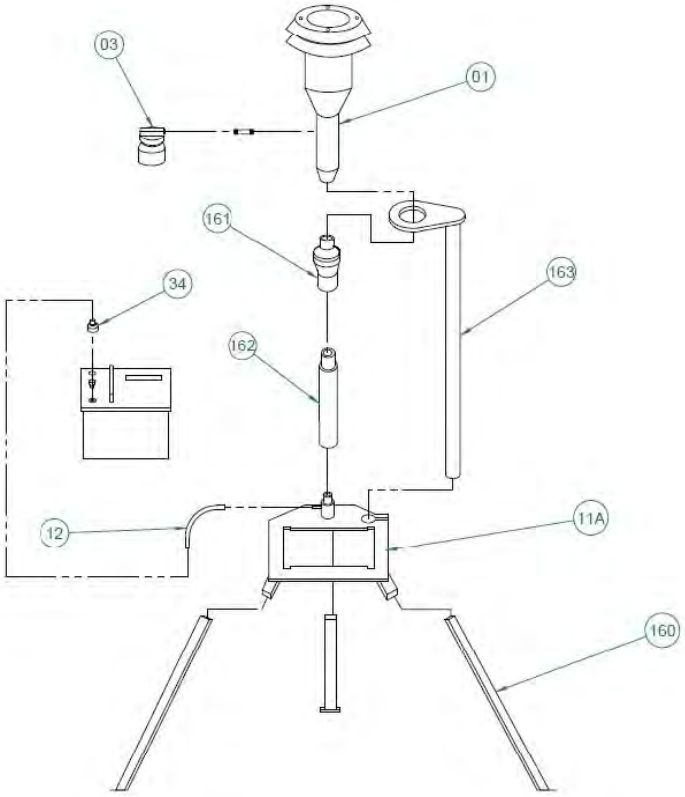

01 PM10 Inlet head
03 Water collection bottle
11A Tripod frame
12 Rubber hose
34 Hose adapter
160 Sampler leg
161 Filter cassette holder assembly 162, 163 Downtubes assembly brace Place and level the sampler on site. To secure the sampler and protect membrane roofs, 2 x 4 wooden studs may be cut into one foot sections and fastened to the feet of the legs using lag bolts. Place sand bags on these skids to prevent tipping of the sampler. Connect the sampler to a grounded electrical outlet with 115 volts, and at least 5 amp service. Protect the connector from precipitation by fastening beneath the sampler or wrapping it with plastic tape.

Figure 2. PQ-100 sampler assembly diagram

Appendix A
Air Sampling Field Forms

COMPENDIUM METHOD TO-4A
FIELD CALIBRATION DATA SHEET FOR SAMPLER CALIBRATION

Sampler ID: Calibration Orifice ID:

Sampler Location: Job No.:

High Volume Transfer Orifice Data:

Correlation Coefficient (CC1): Slope (M1):

(CC2): (M2):

Intercept (B1):

(B2):

Calibration Date: ___ Time:

Calibration Ambient Temperature: ___ °F ___ °C CALIBRATOR'S SIGNATURE

Calibration Ambient Barometric Pressure: ___ "Hg ___ mm Hg

Calibration set point (SP): _____

SAMPLER CALIBRATION

Actual values from calibration		Calibrated values		
Orifice manometer, inches (Y1)	Monitor Magnehelic, inches (Y2)	Orifice manometer (Y3)	Monitor Magnehelic (Y4)	Calculated value orifice flow, scm (X1)
	70			
	60			
	50			
	40			
	30			
	20			
	10			

Definitions

Y1 = Calibration orifice reading, in. H_2O

Y2 = Monitor Magnehelic reading, in. H_2O

P_a = Barometric pressure actual, mm Hg

B1 = Manfacturer's Calibration orifice Intercept

M1 = Manufacturer's Calibration orifice manometer slope

Y3 = Calculated value for orifice manometer

= $[Y1(Pa/760)(298/\{Ta + 273\})]^{1/2}$

Y4 = Calculated value for Magnehelic

= $[Y2(Pa/760)(298/\{Ta + 273\})]^{1/2}$

X1 = Calculated value orifice flow, scm

$= \frac{Y3 - B1}{M1}$

P_{std} = Barometric pressure standard, 760 mm Hg

T_a = Temperature actual, °C

T_{std} = Temperature standard, 25°C

Figure 9. Orifice transfer standard field calibration data sheet.

COMPENDIUM METHOD TO-4A
ORIFICE CALIBRATION DATA SHEET

T_1 _____ Name _____

P_1 _____ mmHg Date _____

Orifice No. _____

Rootsmeter No. _____

Resistance Plants (No. of holes)	Air Volume Measured by Rootsmeter V_m		Standard Volume, V_{std} (std m^3)	Time for Air Volume to Pass Through Rootsmeter, θ (min)	Rootsmeter Pressure Differential, ΔP (mm Hg)	Pressure Drop Across Orifice, ΔH (in. H_2O)	x-Axis Standard Flowrate, Q_{std} (std m^3/min)	Y - axis $\sqrt{\Delta H(P_1/P_{std})(298/T_1)}$ value
	(R^3)	(m^3)						
5	200	5.66						
7	200	5.66						
10	300	8.50						
13	300	8.50						
18	300	8.50						

Factors: $(R^3)(0.02832\ \frac{m^3}{R^3}) = m^3$ and (in. Hg) $25.4\ (\frac{mm\ Hg}{in.\ Hg}) = mm\ Hg$

Calculation Equations:

1. $V_{std} = V_m\ (\frac{P_1 - \Delta P}{P_{std}})(\frac{T_{std}}{T_1})$

where:

$T_{std} = 296°K$
$P_{std} = 760.0$ mm Hg

2. $Q_{std} = \frac{V_{std}}{\theta}$

Figure 7. Orifice calibration data sheet.

COMPENDIUM METHOD TO-4A
FIELD TEST DATA SHEET
GENERAL INFORMATION

Sampler I.D. No.: _____
Lab PUF Sample No.: _____
Sample location: _____
_____
_____

Operator: _____
Other: _____
_____
_____

PUF Cartridge Certification Date: _____
Date/Time PUF Cartridge Installed: _____
Elapsed Timer: _____
Start _____
Stop _____
Diff. _____
Sampling

M1 _____ B1 _____
M2 _____ B2 _____

	Start	Stop
Barometric pressure ("Hg)	_____	_____
Ambient Temperature (°F)	_____	_____
Rain	Yes _____	Yes _____
	No _____	No _____

Sampling time
Start _____
Stop _____
Diff. _____

Audit flow check within ±10 of set point
_____ Yes
_____ No

TIME	TEMP	BAROMETRIC PRESSURE	MAGNEHELIC READING	CALCULATED FLOW RATE (scmm)	READ BY
Avg.					

Comments
_____
_____
_____

Figure 11. Field test data sheet.

Instrument and Sample Media Diagrams

Exhibit 1. Thermo Anderson PUF Sampler

Exhibit 2. PUF Sample Cartridge

Exhibit 3. PQ-100 Low Volume Sampler

Exhibit 4. PQ-100 Front Panel View

Exhibit 5. PQ-100 Filter Cartridge

Acknowledgements and References

- USEPA Region 4 Science and Ecosystem Support Division, Standard Operating Procedure for Measurement of PM10 Metals using the BGI PQ-167R Low Volume sampler
- BGI Corporation for instrument technical contents and illustration, PQ-100
- Commonwealth of Kentucky Ambient Monitoring SOP Template
- Thermo Anderson Corporation, illustrations

BGI
58 Guinan St.
Waltham, MA 02451
V: 781.891.9380
F: 781.891.8151

PQ100 – U.S. EPA FRM
Model PQ167R Portable Ambient Particulate Sampler
Provides EPA Reference Method Data for PM10. Can be configured for TSP and PM2.5

PQ 100 Ambient PM10 Sampler
With Solar Panel

EPA Designated Inlet and
*mini*PM High Altitude Inlet

The BGI PQ100-FRM Sampler incorporates BGI's pioneering technology to meet the requirements for ambient particulate sampling dictated by the U.S. Environmental Protection Agency. This includes the design of novel PM10, PM2.5 and PM1 Inlets, Volumetric sample flow rate control, data logging and software for report and data processing. The sampler is based upon the BGI PQ family of ambient particulate samplers and has demonstrated its use over the past ten years in a multitude of domestic and international sampling scenarios. Most recently the introduction of the BGI *mini*PM Inlet, the PQ167R can be operated at sampling sites as high as 15,000 feet (4572meters) elevation.

The PQ100 – FRM Sampler meets and exceeds the US EPA requirements for manual ambient particulate sampling. BGI cooperated with the EPA in 1996 to provide design and parts of the PQ100 that later became design and performance specifications dictated by the EPA in 40CFRPart 53 in 1997 for PM2.5 FRM sampling. BGI was pleased to provide the following:

- Ambient Temperature and Filter Temperature Testing
- PM10 Inlet Design
- Prototyped the EPA PM2.5 WINS Impactor

BGI
58 Guinan St.
Waltham, MA 02451
V: 781.891.9380
F: 781.891.8151

Applications

- Ambient Particulate Monitoring (RFPS-1298-124)
- Fence Line Monitoring
- Remediation Projects
- Remote Site Monitoring
- High Altitude Sampling with Patented miniPM Inlet
- Suitable for Lead, Asbestos, Oil Mists, Indoor Air Pollutants and Allergens

Features

- US EPA designated for PM-10
- Volumetric Flow Control, using ambient temperature and barometric pressure compensated mass flow sensor
- BGI's own Dual Diaphragm Vacuum Pump
- Portable and only EPA designated sampler with solar augmentation approval
- Operates up to 30 hours from its internal 12Volt DC Battery. AC power outages do not effect the sample event, true continuous sampling with no interruptions
- Can be configured for PM10, PM 4.0, PM 2.5. PM 1 and TSP for Low or Ultra high Altitude
- PQ100 Base can be used as an IAQ and Special Study Flow Controlled Vacuum Pump

Part#	Description
PQ167R	Portable PM10 Sampling System w/ Rigid Stand (120 or 240 volts)
3410	Portable TSP Sampling System w/ Rigid Tripod (120 or 240 volts)
PQ100	Portable Battery Operated Pump, w/ charger/ cables/ download software
A1904	Filter Holder Adapter
VSCCA	PM2.5 In Line Cyclone to convert from PM10 to PM2.5 Sampling
SP21	Solar Panel 32 Watt Power with Cables, Hardware and Regulator
A1446	Hose Adapter-Filter Holder (Silver)
F215	Spare 47mm Plastic Filter Holder and Metal Carrying Canister
CQ2	Download Cable
5011	miniPM Inlet Complete for TSP, PM1.0, PM2.5 and PM10

BGI
www.bgiusa.com

PQ167 QUICK START rev G

USING THE PQ100 IMMEDIATELY

BGI INC
58 Guinan Street
Waltham, MA 02451
781-891-8151
info@bgiusa.com

BGI Incorporated
58 Guinan Street Waltham, Massachusetts 02451
Telephone: 781-891-9380 Fax: 781-891-8151

I. SETTING UP THE INSTRUMENT TO BEGIN A SAMPLING RUN

INSTALLATION PROCEDURE

1) Included components:

a) PQ101 charger
b) SSI2.5 Inlet
c) Rigid Stand with Hose
d) Stabilizer Assembly
e) PQ-102 Adaptor
f) F-20 Filter Holder
g) A1904 Filter Holder Adaptor
h) A1751 Long Down Tube
i) F21/2 Filter Cassettes in Clear Case
j) PQ200 PC software CD
k) CQ-2 Download Cable
l) Set of legs

SEE PAGE 7 FOR COMPONENT IDENTIFICATION

2. Instrument set-up on site

a) Unpack instrument and legs checking packing list against received items.

b) Begin setup by attaching the legs to the rigid stand using attached knurled snap lock fittings. **FIGURE 1**

c) Fit the filter holder adaptor (A1904) into the hole in the rigid stand. **FIGURE 2**

d) Install the appropriate filter media **c**assette into the filter holder (F20). **FIGURE 3**

e) Screw the filter holder (F20) into the filter holder adaptor (A1904). **FIGURE 4**

f) Install the down tube (A1751) onto the filter holder. **FIGURE 5**

g) Install Stabilizer Assembly and tighten using 1/4" allen wrench. **FIGURE 6**

h) Attach SSI2.5 PM10 Inlet into download tube and adjust the stabilizer to hold inlet. **FIGURE 7**

i) Gently set PQ100 pump into the stand and screw in the Hose Adaptor (A1902) and attach hose. **FIGURE 8**

j) Position battery charger box on left side of rigid stand and secure with thumbscrews provided. **FIGURE 9 and 10**

k) Install battery charger up inside the charger box and hook along edge of box. **FIGURE 11 and 11b (**CUTAWAY OF BATTERY BOX)

REFER TO PHOTOS ON NEXT 2 PAGES TO IDENTIFY COMPONENTS AND ASSEMBLY STEPS

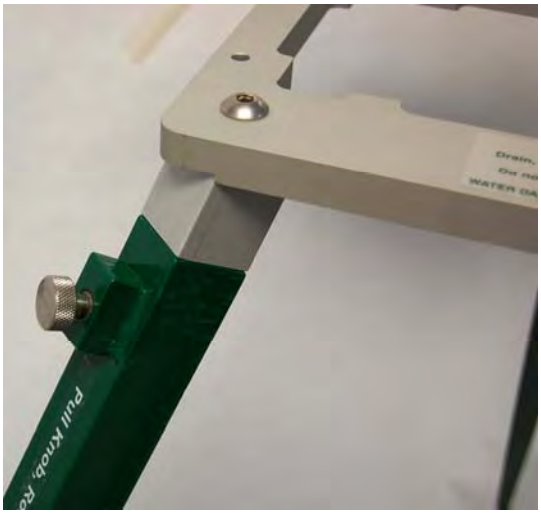

Figure 1

Figure 2

Figure 3

Figure 4

Figure 5

Figure 6

Figure 7

Figure 8

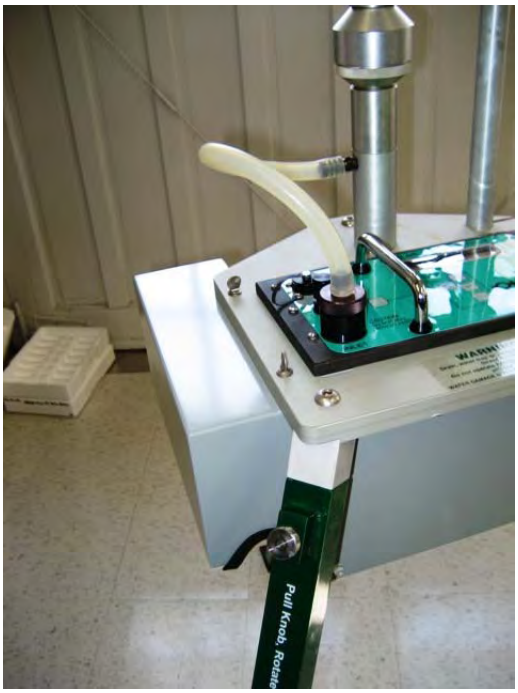

Figure 9

Figure 10

Figure 11a

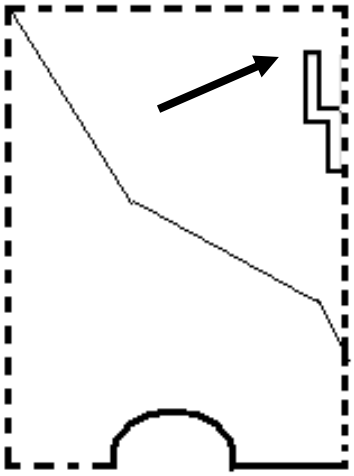

Figure 11b

Install battery by hooking the edge on the bracket. (SEE ARROWS)

Figure A

PICTURE OF TYPICAL INSTALLATION

NOTE POSTION OF FILTER HOLDER

DO NOT INSTALL DIRECTLY ON INSTRUMENT

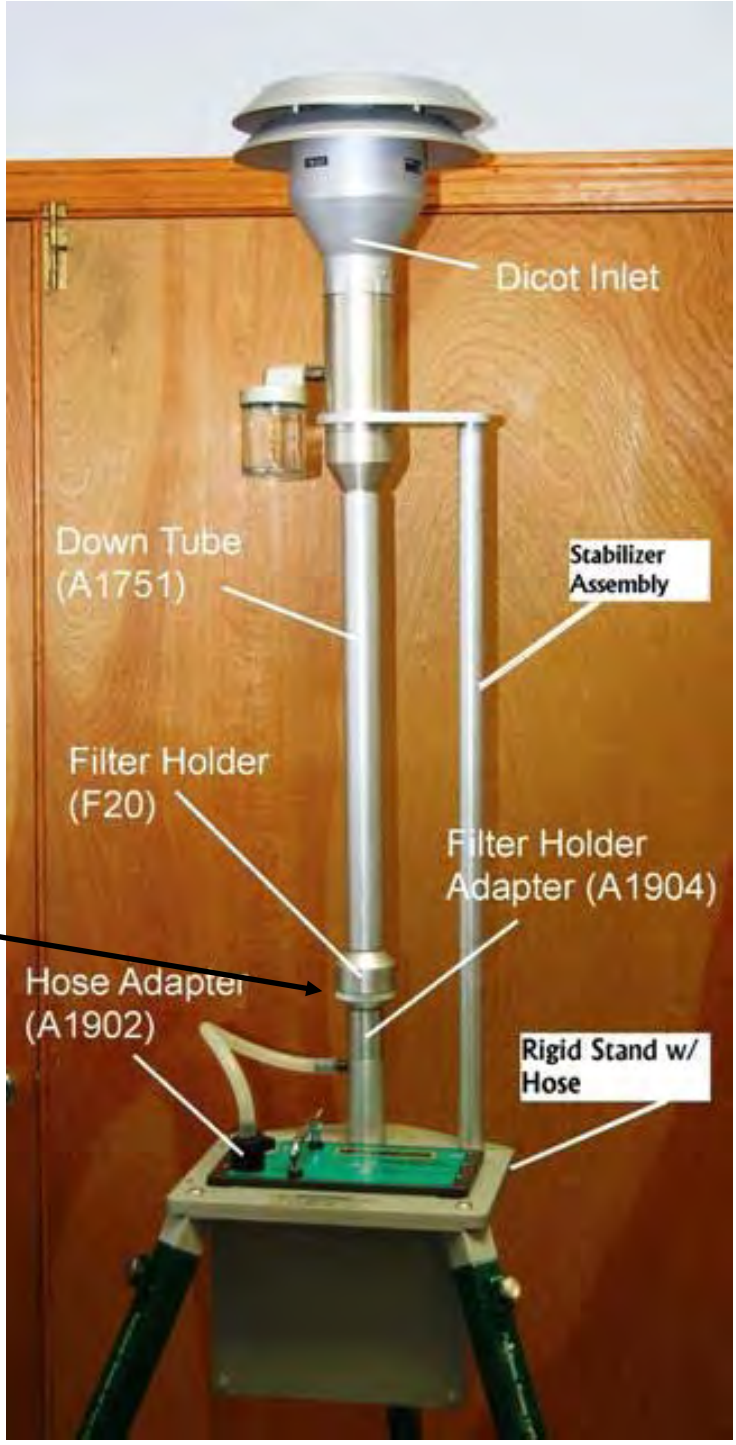

II. OPERATING THE PQ100

1) What the Buttons do:

a) "**ON/OFF -** Turns the PQ100 On or Off.

b) "**RESET**" - Press after a sampling job to clear all the counters in preparation for the next sampling job.

c) "**RUN/STOP**" - Use when the PQ100 has been reset and programmed for another run and you now wish to start the pump.

d) **"+" Increase "-" Decrease**

e) **"SETUP"** - Moving from screen to screen to check or change values set on the screen.

f) **"ENTER"** – Press the enter key to move the flashing value across the screen.

The non-blinking value can be changed with the **"+"** and **"-"** buttons. Press enter again to accept new setting within the screen.

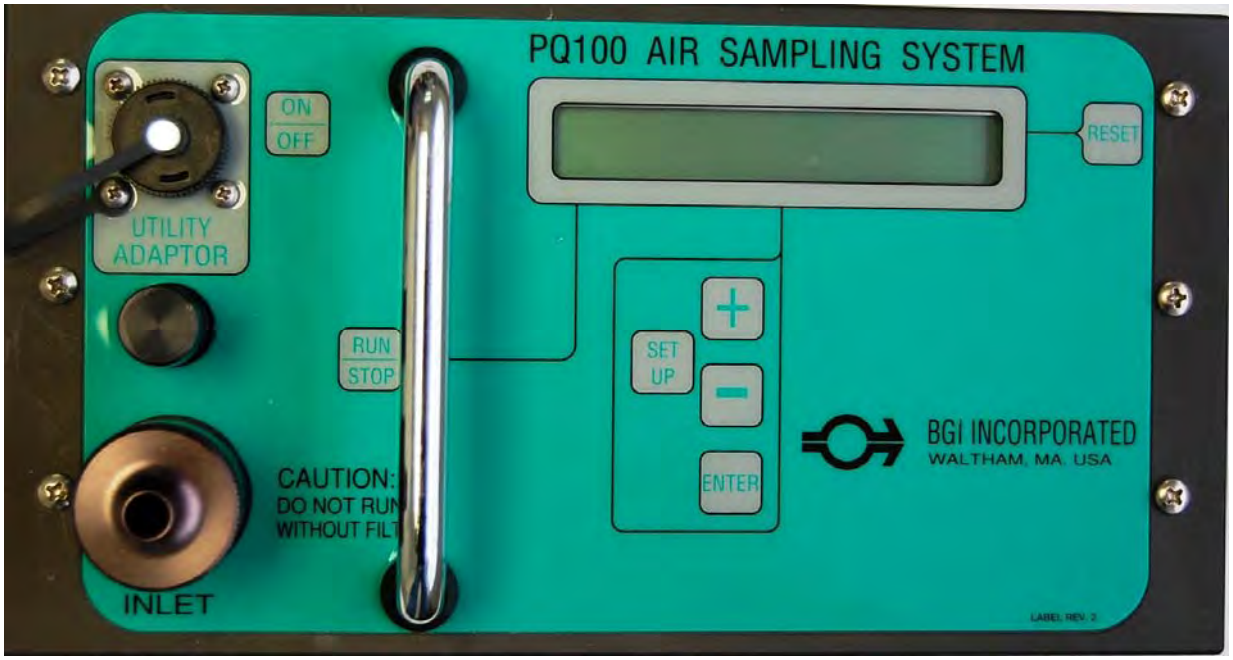

2) Running the PQ100 at 16.7 Liters per Minute

a) Turn the PQ-100 on (**Push the "ON/OFF" button**). If a message is blinking on the display, press "**ENTER**" to proceed to the "**MAIN DISPLAY**".

b) Before you change any setups and to delete the last run push the "**RESET**" button. Screen display should be:

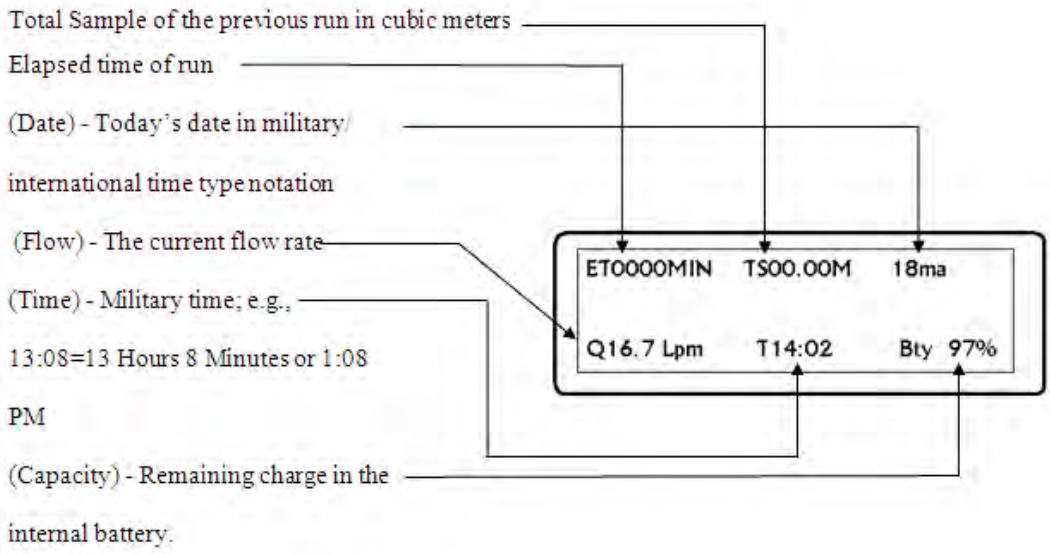

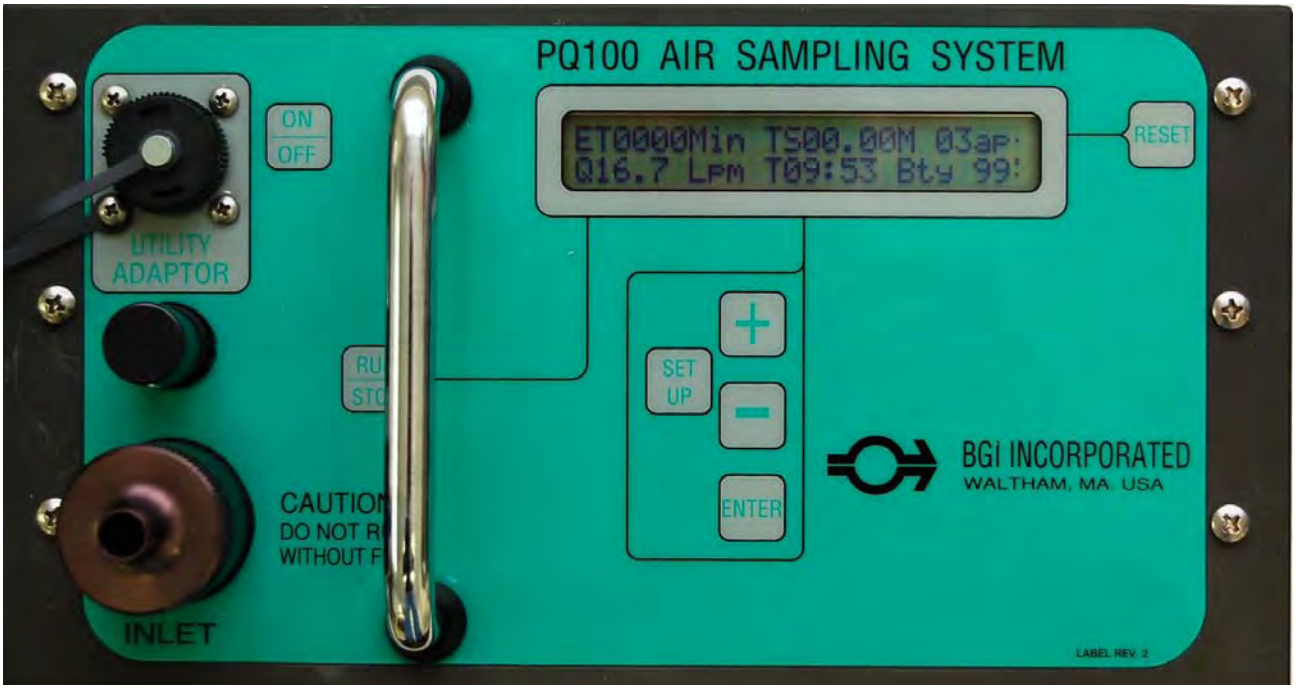

3) Press "SETUP"

Screen reads; **"Select FLOW RATE"**

a) To change TARGET FLOW RATE:

a) Press **ENTER** (Whole number value will remain on constant while the tenths still **blink**); use "+" or "-" to increase or decrease until 16 is displayed.

b) Press **ENTER** (Tenths value will now remain constant while whole number **blinks**); use "+" or "-" to increase or decrease until .7 is displayed.

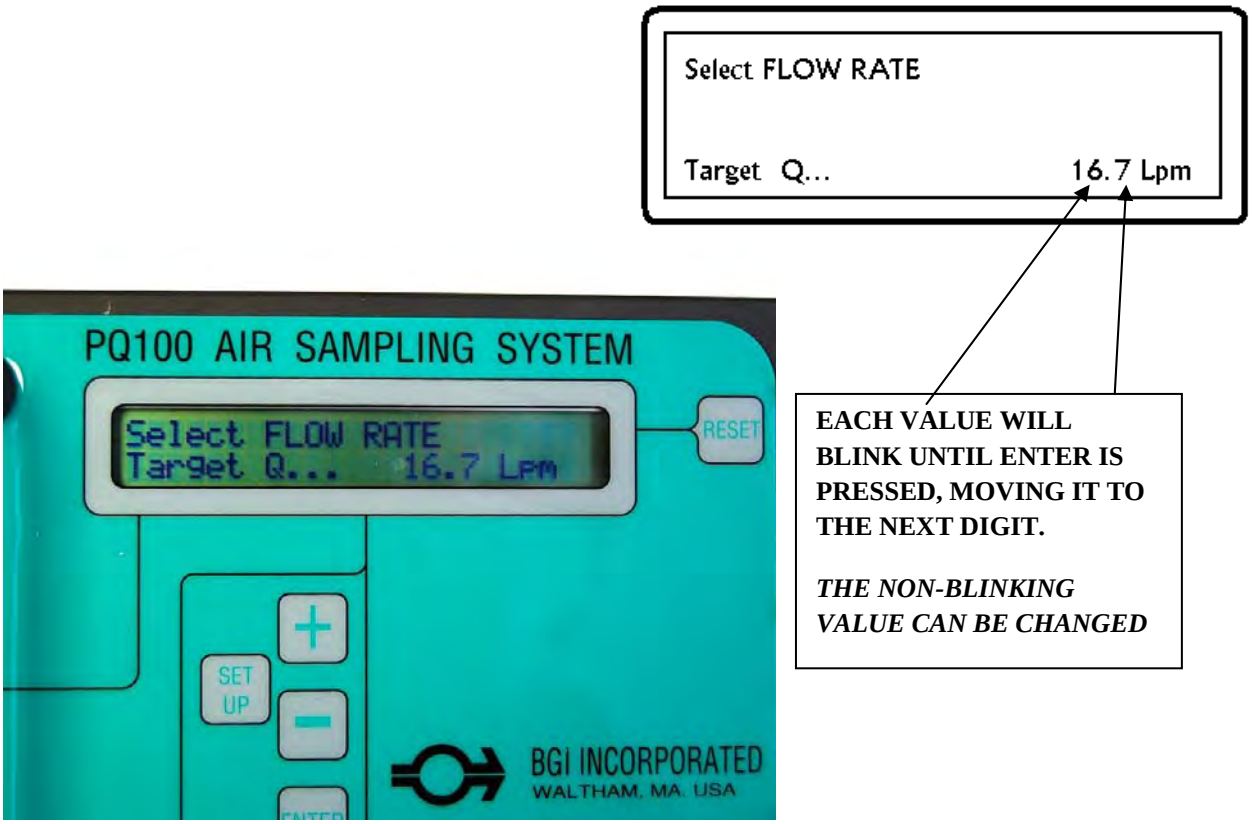

Press "SETUP" TO SAVE AND MOVE TO NEXT SCREEN

4) Screen reads;

"Set DATE and TIME"

NOTE: FACTORY SET TO EASTERN STANDARD TIME EST (US)

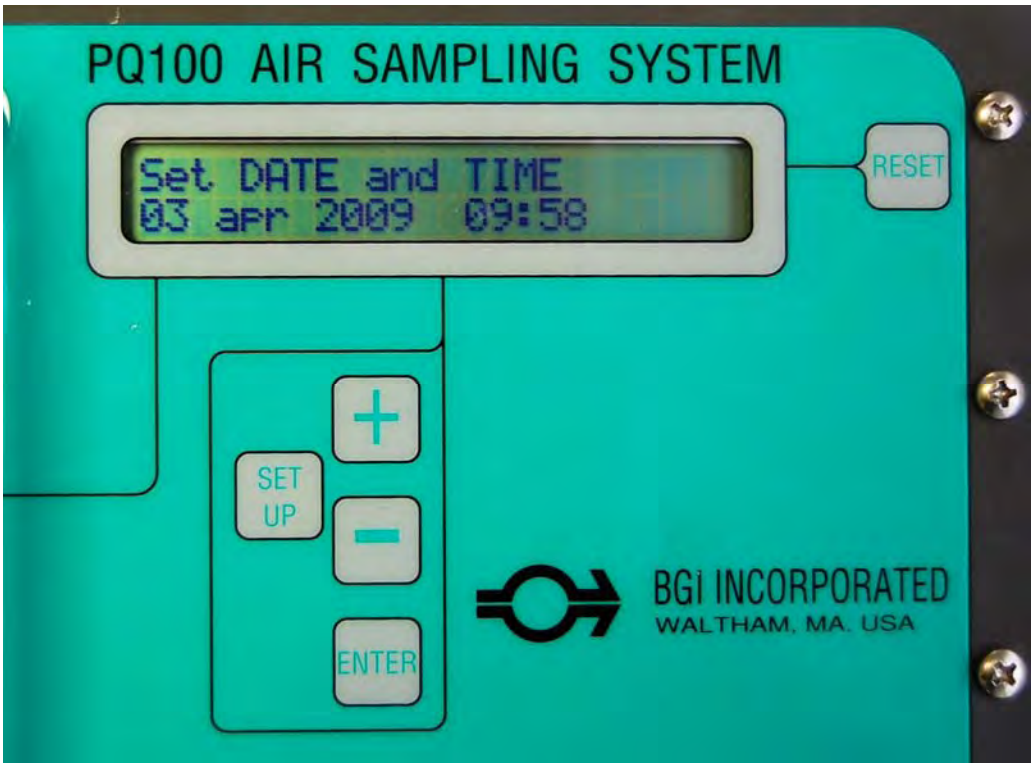

a) TO CHANGE THE DATE AND TIME:

- **a) Calendar day**: Press **ENTER** and change by pressing the + or - key.
- **b)** When the day is correct, press **ENTER**.
- **c) MONTH**: To change, press + or - key. When correct, press **ENTER**.
- **d) YEAR**: To change, press + or - key. When correct, press **ENTER**.
- **e) TIME** (hrs): To change, press + or - key. When correct, press **ENTER**.
- **f) TIME** (mins): To change, press + or - key. When correct, press **ENTER**

Press "SETUP" TO SAVE AND MOVE TO NEXT SCREEN

5) Screen reads:

"**Set START DATE and TIME**"

This determines when you wish to start a sample job.

It always defaults to midnight of the current day.

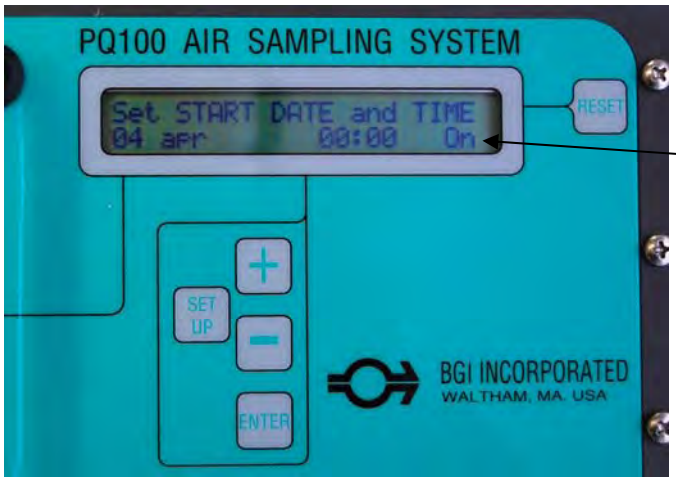

<u>THIS MUST BE SET "ON" TO INITIATE SCHEDULED RUN</u>

(SEE LINE f BELOW)

TO CHANGE THE START DATE AND TIME:

a) **Calendar day**: Press **ENTER** and change by pressing the + or - key. When correct, press **ENTER**.

b) **MONTH**: To change, press + or - key. When correct, press **ENTER**.

c) **YEAR**: To change, press + or - key. When correct, press **ENTER**.

d) **TIME** (hrs): To change, press + or - key. When correct, press **ENTER**.

e) **TIME** (mins): To change, press + or - key. When correct, press **ENTER**

f) **ON/OFF**: This is to turn this function On or Off. If "Off" then a sample job (pump starts running) is initiated as soon as the "RUN/STOP" key is pressed from the "**MAIN DISPLAY**".

If "On" then the sample job is initiated when the start date and time are reached.

Press "SETUP" TO SAVE AND MOVE TO NEXT SCREEN

6) Screen reads;

"Set RUN TIME"

This is for when you wish to set the length of time that the pump will run for, Other than for 24 hrs). It always defaults to 24 hrs 0 min.

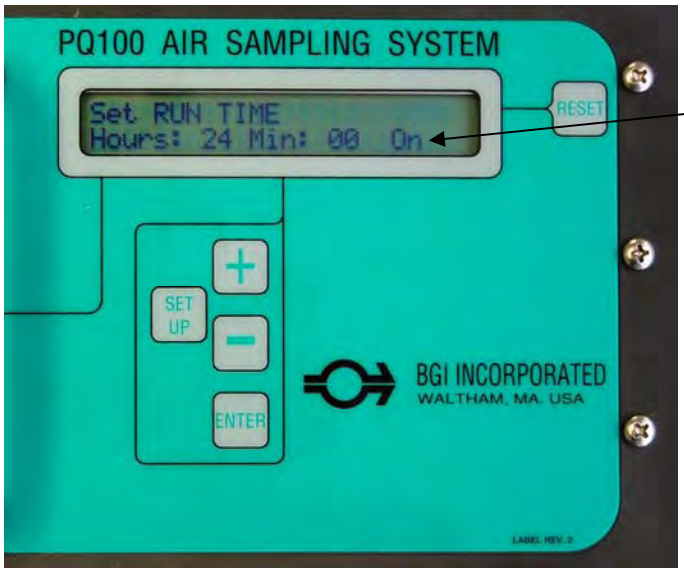

THIS MUST BE SET "ON" TO INITIATE SCHEDULED RUN

(SEE LINE c BELOW)

TO CHANGE RUN TIME:

a) **HOURS**: Press ENTER and change by pressing the + or - key. When the hours are correct, press ENTER.

b) **MINUTES**: To change, press + or - key. When correct, press ENTER.

c) **ON/OFF**: This is to turn this function On or Off. If "On" then the pump will run for the amount of time specified and then power itself off.

d) When correct, press ENTER.

Press "SETUP" TO SAVE AND MOVE TO NEXT SCREEN

7) Screen reads;

"To Initiate a Timed Run

Press Run/Stop Now!"

THIS CONFIRMS A TIMED RUN HAS BEEN SET.

a) Press "SETUP"

b) Screen reads;

"EVENT TRIGGERED RUN POWERING DOWN"

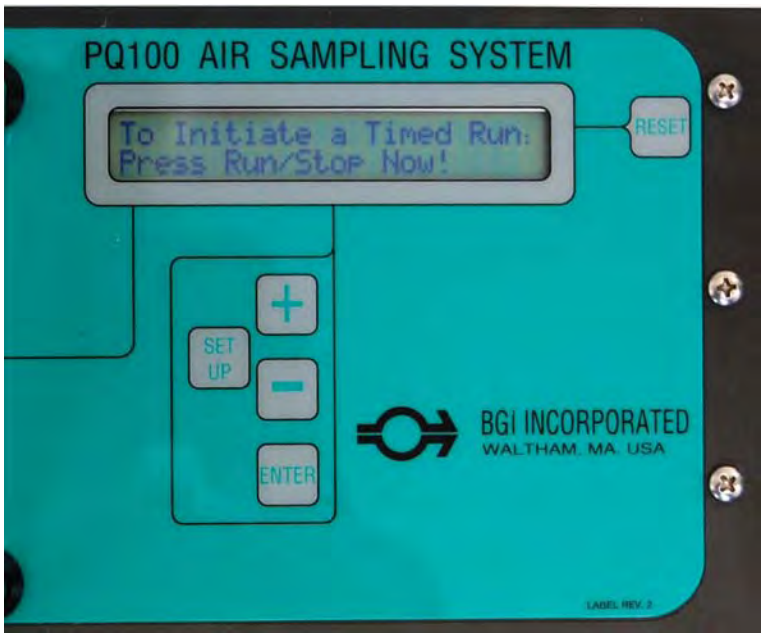

<u>The FRM sampler is now programmed to run according to the defined start and stop time.</u>

NOTE: THE PQ100 DOES *NOT* REQUIRE A LEAK TEST. CUTTING OFF THE FLOW OF AIR BY COVERING OR RESTRICTING THE AIR FLOW TO THE INLET WILL CAUSE DAMAGE TO THE INTERNAL PUMP AND WILL VOID THE WARRANTY.

III. `Downloading (A Quick Start Overview)

1. Using device Manager on the pc/laptop, note the com-port to be used.

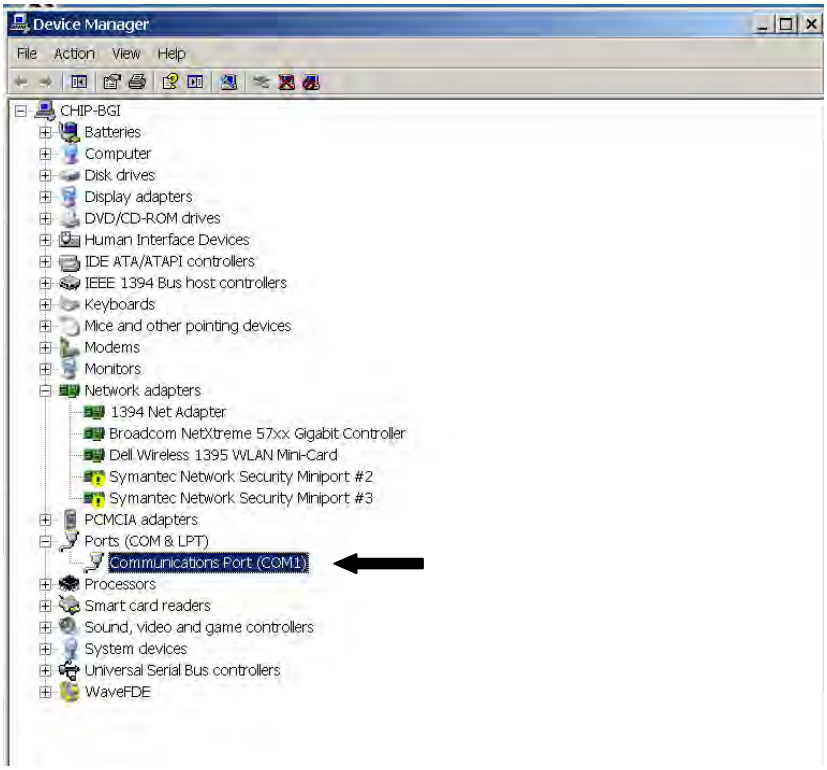

2. Install PQ200 job controller software ("PQ100/200 DOWNLOAD SOFTWARE") from disk on pc/laptop. Click **Air Samplers** and then click **PQ100/PQ167HA MANUAL.**

3. Click on “Air Samplers” tab and Install “PQ100/200 DOWNLOAD SOFTWARE”.
4. Follow screen instructions until installed.
5. Set up program for use: Pq200.exe
    a. Open FILE, user prefs; select serial port you wish to download to.
    b. Fill-in any appropriate new job information, NOTE OR CHANGE THE DEFAULT DATA DIRECTORY, then click SAVE.
6. Start download:
    a. Click FILE, NEW, fill-in any site/job specific information as required, and SAVE. NOTE OR CHANGE THE DEFAULT DATA DIRECTORY, then click SAVE. (YOU WILL SEE A SPREADSHEET APPEAR)
7. To DOWNLOAD:
    a. Click DOWNLOAD, BEGIN,(You will see data scrolling down the window).
    b. When it stops click RETURN.
    c. Information will appear in the spreadsheet.
8. You can print the data sheet if desired by using the print function under the FILE tab.

STANDARD OPERATING PROCEDURE

Compact Weather Station (Lufft WS600)

1. Purpose

The purpose of this SOP is to provide general reference information for using the Lufft WS600 Compact Weather Station in the field. Calibration and operation, along with field maintenance, will be included in this SOP.

2. Scope

The WS600 is a low cost, compact weather stations for the acquisition of a variety of measurement variables, as used for example for environmental data logging the WS600 includes sensors for the various measurement variables including temperature, humidity, air pressure, precipitation, wind direction and speed and compass.

Temperature is measured by way of a highly accurate NTC-resistor while humidity is measured using a capacitive humidity sensor. In order to keep the effects of external influences (e.g. solar radiation) as low as possible, these sensors are located in a ventilated housing with radiation protection. In contrast to conventional non-ventilated sensors, this allows significantly more accurate measurement during high radiation conditions. Additional variables such as dewpoint, absolute humidity and mixing ratio are calculated from air temperature and relative humidity, taking account of air pressure.

Absolute air pressure is measured by way of a built-in sensor (MEMS). The relative air pressure referenced to sea level is calculated using the barometric formula with the aid of the local altitude, which is user-configurable on the equipment.

Tried and tested radar technology from the R2S-UMB sensor is used to measure precipitation. The precipitation sensor works with a 24GHz Doppler radar, which measures the drop speed and calculates precipitation quantity and type by correlating drop size and speed.

The wind meter uses 4 ultrasound sensors which take cyclical measurements in all directions. The resulting wind speed and direction are calculated from the measured run-time sound differential.

The integrated electronical compass (only device version 023 or higher) can be used to check the north – south adjustment of the sensor housing for wind direction measurement. It is also used to calculate the compass corrected wind direction.

This procedure provides information into the field operation and general maintenance of the Lufft WS600. Review of the information contained herein will ensure that this type of field monitoring

equipment will be properly utilized. Review of the owner's instruction manuals is a necessity for more detailed descriptions.

3. Equipment Required

WS600-UMB
Power supply unit with surge protector
Mast hardware to support WS-600 with appropriate clearance from obstructions
Connection cable
Operation Manual

4. Responsibilities

Project Manager(PM) /Construction Manager(CM) - The PM/CM is responsible for ensuring that project-specific plans are in accordance with these procedures, where applicable, or that other approved procedures are developed. The Project Manager is responsible for selecting qualified individuals for the monitoring activities.

Field Team Leader(FTL) and/or Safety Coordinator(SC) - It is the responsibility of the FLT/SC to implement these procedures in the field, and to ensure that the field team performing air monitoring activities have been briefed and trained to execute these procedures before the start of site operations. FTL/SC is also responsible to ensure that the specified air monitoring equipment is on site, calibrated, and used correctly by the field personnel. The field personnel are responsible for documenting all air monitoring results in the field logbook during each field investigation.

5. Procedures

The following subsections will discuss WS 600 calibration, operation, and maintenance. These sections, however, do not take the place of the instruction manual.

5.1 Calibration

The Lufft WS600 does not require in field calibration.

5.2 Operation

Due to the WS600 having many functions in terms of operation, it is recommended that you follow the operational procedures as outlined in the instruction manual attached.

5.3 Site Maintenance

In principle the WS600 is maintenance free. However, it is recommended to carry out a functional test on an annual basis. When doing so pay attention to the following points

- Visual inspection of the equipment for soiling

- Check the sensors by carrying out a measurement requests
- Check the operation of the fan

6. Quality Assurance Records

Quality assurance records will be maintained for each air monitoring event. The following information shall be recorded in the field logbook.

- Identification - Site name, date, location, activity monitored, serial number, time, resulting concentration, comments and identity of air monitoring personnel.
- Field observations - Appearance of sampled media (if definable).
- Additional remarks (e.g, WS 600 had wide range fluctuations during air monitoring activities.)

7. References

Compact Weather Station WS600-UMB, G. Lufft Mess – und Regeltechnik GmbH, V15 July 2011.

Lufft WS600-UMB – Temperature, Relative Humidity, Precipitation, Air Pressure, Wind, Electronic Compass

From the WS product family of professional intelligent measurement transducers with digital interface for environmental applications.

Integrated design with ventilated radiation protection for measuring:

- **Air temperature**
- **Relative humidity**
- **Precipitation intensity**
- **Precipitation type**
- **Precipitation quantity**
- **Air pressure**
- **Wind direction**
- **Wind speed**

Relative humidity is measured by means of a capacitive sensor element; a precision NTC measuring element is used to measure air temperature.

Precipitation is measured by a 24 GHz Doppler radar, which measures the drop speed of an individual drop of rain/snow.

Precipitation quantity and intensity are calculated from the correlation between drop size and speed.

The difference in drop speed determines the type of precipitation (rain/snow).

Maintenance-free measurement offers a major advantage over the common tipping spoon and tipping bucket processes.

Ultrasonic sensor technology is used to take wind measurements.

Measurement output can be accessed by the following protocolls:
UMB-Binary, UMB-ASCII, SDI-12, MODBUS

One external temperature sensor is connectable.

All in One

Aspirated temperature/humidity measurement

Maintenance-free operation

Open communication protocol:
- UMB-ASCII
- UMB-Binary
- SDI-12
- MODBUS
- Analoge outputs in combination with 8160.UDAC

Lufft WS600-UMB Compact Weather Station			Order No.
WS600-UMB EU, USA, Canada			**8370.U01**
WS600-UMB UK			**8370.U02**
Technical Data	Dimensions	Ø approx. 150 mm, height approx. 343 mm	
	Weight	approx. 1.5 kg	
Temperature	Principle	NTC	
	Measuring range	–50 … 60 °C	
	Accuracy	±0.2 °C (–20 °C … +50 °C), otherwise ±0.5 °C (> –30 °C)	
Relative humidity	Principle	Capacitive	
	Measuring range	0 … 100 % RH	
	Accuracy	±2 % RH	
Precipitation quantity	Resolution	0.01 mm	
	Measuring range	Drop size 0.3 … 5 mm	
	Reproducibility	typ. > 90 %	
Precipitation type	Rain/snow		
Air pressure	Principle	MEMS capacitive	
	Measuring range	300 … 1200 hPa	
	Accuracy	+/- 0.5 hPa (0...+40°C)	
Wind direction	Principle	Ultrasonic	
	Measuring range	0 … 359.9 °	
	Accuracy	< 3 ° RMSE >1.0 m/s	
Wind speed	Principle	Ultrasonic	
	Measuring range	0 … 60 m/s	
	Accuracy	±0.3 m/s or 3 % (0 … 35 m/s) RMS of reading, whichever is greater ±5 % (> 35 m/s) RMS	
General Information	Heating	40 VA at 24 VDC	
	Protection type housing	IP66	
	Interface	RS485, 2-wire, half-duplex	
	Op. power consumption	12-24 VDC ±10%	
	Operating humidity range	0 … 100 %	
	Op. temperature range	–50 … 60 °C	
Accessories	Surge protection		**8379.USP**
	Power supply 24V/4A		**8366.USV1**
	UMB Interface converter ISOCON-UMB		**8160.UISO**
	Digital-analog-converter DACON8-UMB		**8160.UDAC**
	Temperature Sensor WT1		**8160.WT1**
	Road Surface Temperature Sensor WST1		**8160.WST1**
	Connection cable, 20m		**8370.UKAB20**

Operating Manual English

Compact Weather Station

WS200-UMB WS300-UMB
WS301-UMB WS400-UMB
WS500-UMB WS501-UMB
WS600-UMB

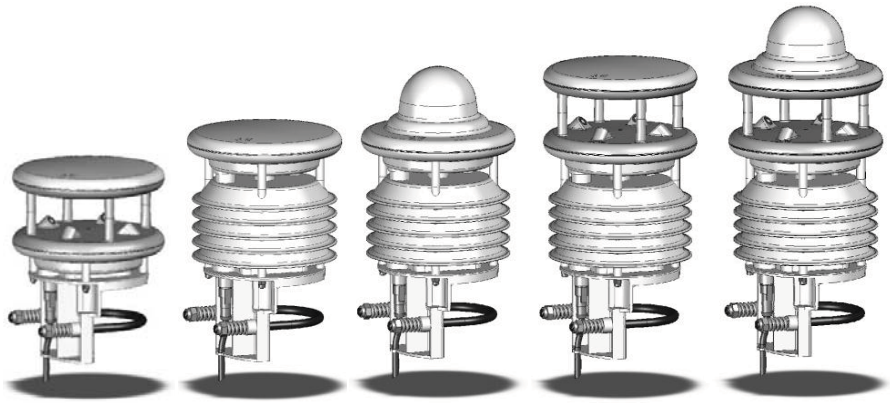

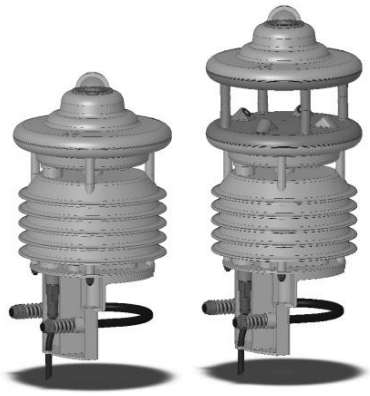

www.lufft.com

© Gerätebau Mess- und Regeltechnik GmbH, Fellbach, Germany. We reserve the right to make technical changes at any time without notice.

Contents

1 Please Read Before Use 5
1.1 Symbols Used 5
1.2 Safety Instructions 5
1.3 Designated Use 5
1.4 Incorrect Use 5
1.5 Guarantee 5
1.6 Brand Names 5
2 Scope of Delivery 6
3 Order Numbers 6
3.1 Accessories 8
3.2 Spare Parts 8
3.3 Additional Documents and Software 8
4 Equipment Description 9
4.1 Air Temperature and Humidity 9
4.2 Air Pressure 9
4.3 Precipitation 9
4.4 Wet Bulb Temperature 9
4.5 Specific Enthalpy 9
4.6 Air Density 10
4.7 Wind 10
4.8 Compass 10
4.9 Heating 10
4.10 Global Radiation 10
4.11 Sensor Technology (example: WS600-UMB) 11
5 Generation of Measurements 12
5.1 Current Measurement (act) 12
5.2 Minimum and Maximum Values (min and max) 12
5.3 Average Value (avg) 12
5.4 Vectorial Average Value (vct) 12
6 Measurement Output 13
6.1 Air and Dewpoint Temperature 13
6.2 Wind Chill Temperature 13
6.3 Humidity 13
6.4 Air Pressure 13
6.5 Wet Bulb Temperature 14
6.6 Specific Enthalpy 14
6.7 Air Density 14
6.8 Wind Speed 15
6.9 Wind Direction 15
6.10 Wind Measurement Quality 16
6.11 Compass 16
6.12 Precipitation Quantity - Absolute 17
6.13 Precipitation Quantity - Differential 17
6.14 Precipitation Intensity 17
6.15 Precipitation Type 18
6.16 Heating Temperature 18
6.17 Global Radiation 18
7 Installation 19
7.1 Fastening 19
7.2 North Alignment 20
7.3 Selecting the Installation Location 21

8 Connections ... **23**
8.1 Supply Voltage ... 23
8.2 RS485 Interface ... 23
8.3 Connection to ISOCON-UMB (8160.UISO) ... 24
8.4 Use of Surge Protection (8379.USP) ... 24
9 Commissioning ... **25**
10 Configuration and Test ... **26**
10.1 Factory Settings ... 26
10.2 Configuration with the UMB-Config-Tool ... 26
10.3 Function Test with UMB-Config-Tool ... 31
10.4 Operating Modes for Equipment Heating ... 32
11 Firmware Update ... **34**
12 Maintenance ... **34**
13 Technical Data ... **35**
13.1 Measuring Range / Accuracy ... 36
13.2 Drawings ... 38
14 EC Certificate of Conformity ... **44**
15 Fault Description ... **45**
16 Disposal ... **46**
16.1 Within the EC ... 46
16.2 Outside the EC ... 46
17 Repair / Corrective Maintenance ... **46**
17.1 Technical Support ... 46
18 Appendix ... **47**
18.1 Channel List Summary ... 47
18.2 Channel List Summary per TLS2002 FG3 ... 49
18.3 Communication in Binary Protocol ... 50
18.4 Communication in ASCII Protocol ... 53
18.5 Communication in Terminal Mode ... 55
18.6 Communication in SDI-12 Mode ... 58
18.7 Communication in Modbus Mode ... 90
19 List of Figures ... **98**
20 Index ... **99**

1 Please Read Before Use

1.1 Symbols Used

Important information concerning potential hazards to the user

Important information concerning the correct operation of the equipment

1.2 Safety Instructions

- Installation and commissioning must be carried out by suitably qualified specialist personnel only.
- Never take measurements on or touch live electrical parts.
- Pay attention to the technical data and storage and operating conditions.

1.3 Designated Use

- The equipment must only be operated within the range of the specified technical data.
- The equipment must only be used under the conditions and for the purposes for which it was designed.
- The safety and operation of the equipment can no longer be guaranteed if it is modified or adapted.

1.4 Incorrect Use

If the equipment is installed incorrectly

- It may not function.
- It may be permanently damaged.
- Danger of injury may exist if the equipment is allowed to fall.

If the equipment is not connected correctly

- It may not function.
- It may be permanently damaged.
- The possibility of an electrical shock may exist.

1.5 Guarantee

The guarantee period is 12 months from the date of delivery. The guarantee is forfeited if the designated use is violated.

1.6 Brand Names

All brand names referred to are subject without limitation to the valid trademark and ownership rights of the respective owner.

2 Scope of Delivery

- Equipment

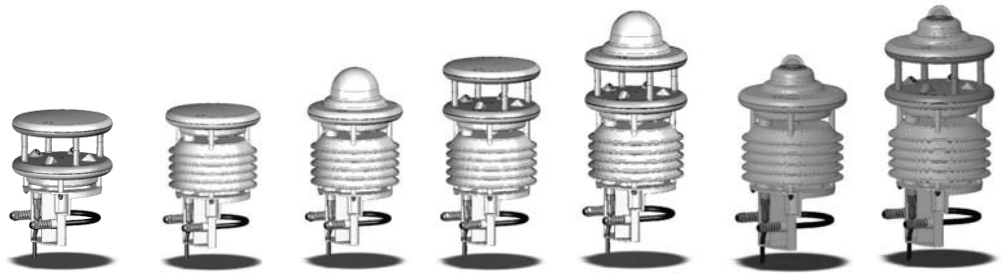

WS200-UMB WS300-UMB WS400-UMB WS500-UMB WS600-UMB WS301-UMB WS501-UMB

- Connection cable 10m

- Operating manual

3 Order Numbers

WS200-UMB **8371.U01**

- Wind direction
- Wind speed
- Compass

WS300-UMB **8372.U01**

- Air temperature
- Relative humidity
- Air pressure

WS301-UMB **8374.U01**

- Air temperature
- Relative humidity
- Air pressure
- Global Radiation

WS400-UMB **8369.U01** (Europe, USA, Canada)
8369.U02 (UK)

- Precipitation
- Air temperature
- Relative humidity
- Air pressure

WS500-UMB **8373.U01**

- Wind direction
- Wind speed
- Air temperature
- Relative humidity
- Air pressure
- Compass

WS501-UMB **8375.U01**

- Wind direction
- Wind speed
- Air temperature
- Relative humidity
- Air pressure
- Compass
- Global Radiation

WS600-UMB **8370.U01** (Europe, USA, Canada)
8370.U02 (UK)

- Precipitation
- Wind direction
- Wind speed
- Air temperature
- Relative humidity
- Air pressure
- Compass

3.1 Accessories

Power supply unit 24V/100VA	8366.USV1
ISOCON-UMB	8160.UISO
Surge protection	8379.USP

3.2 Spare Parts

Connection cable 10m	On enquiry

3.3 Additional Documents and Software

You can download the following documents and software via the Internet at www.lufft.com.

Operating Manual	• This document
UMB-Config-Tool	• Windows® software for testing, firmware updates and configuration of UMB devices
UMB Protocol	• Communications protocol for UMB devices
Firmware	• The current device firmware

4 Equipment Description

The WS family is a range of low cost, compact weather stations for the acquisition of a variety of measurement variables, as used for example for environmental data logging in road traffic management systems. Depending on the model, each device has a different combination of sensors for the various measurement variables.

	WS200-UMB	WS300-UMB	WS301-UMB	WS400-UMB	WS500-UMB	WS501-UMB	WS600-UMB
Air temperature		●	●	●	●	●	●
Humidity		●	●	●	●	●	●
Air pressure		●	●	●	●	●	●
Precipitation				●			●
Wind direction	●				●	●	●
Wind speed	●				●	●	●
Compass	●				●	●	●
Global Radiation			●			●	

Attention: Please note that, due to the approval of the radar sensor used, there are different country options on equipment which includes precipitation measurement.

The equipment is connected by way of an 8 pole screw connector and associated connection cable (length 10m).

The measured values are requested over the RS485 interface in accordance with UMB protocol.

During commissioning, configuration and measurement polling takes place using the UMB-Config-Tool (Windows® PC software).

4.1 Air Temperature and Humidity

Temperature is measured by way of a highly accurate NTC-resistor while humidity is measured using a capacitive humidity sensor. In order to keep the effects of external influences (e.g. solar radiation) as low as possible, these sensors are located in a ventilated housing with radiation protection. In contrast to conventional non-ventilated sensors, this allows significantly more accurate measurement during high radiation conditions.

Additional variables such as dewpoint, absolute humidity and mixing ratio are calculated from air temperature and relative humidity, taking account of air pressure.

4.2 Air Pressure

Absolute air pressure is measured by way of a built-in sensor (MEMS). The relative air pressure referenced to sea level is calculated using the barometric formula with the aid of the local altitude, which is user-configurable on the equipment.

4.3 Precipitation

Tried and tested radar technology from the R2S-UMB sensor is used to measure precipitation. The precipitation sensor works with a 24GHz Doppler radar, which measures the drop speed and calculates precipitation quantity and type by correlating drop size and speed.

4.4 Wet Bulb Temperature

The wet bulb temperature is the temperature resulting between a wetted or iced surface at a flowing air.

4.5 Specific Enthalpy

Parameter of state of the humid air, composed of the specific enthalpies (heat capacity) of the components of the mixture and related to the mass fraction of the dry air (at 0°C).

4.6 Air Density

The air density indicates how much mass in a given volume of air is contained and it is calculated from the measured values of air temperature, humidity and air pressure.

4.7 Wind

The wind meter uses 4 ultrasound sensors which take cyclical measurements in all directions. The resulting wind speed and direction are calculated from the measured run-time sound differential.

4.8 Compass

The integrated electronical compass (only device version 023 or higher) can be used to check the north – south adjustment of the sensor housing for wind direction measurement. It is also used to calculate the compass corrected wind direction.

4.9 Heating

The precipitation sensor and wind meter are heated for operation in winter.

Note: the heating is designed for ambient temperatures down to -10°C, below -10°C the function cannot be ensured under all conditions.

4.10 Global Radiation

The global radiation is measured by a pyranometer mounted in the top cover of the WS301 and WS501.

4.11 Sensor Technology (example: WS600-UMB)

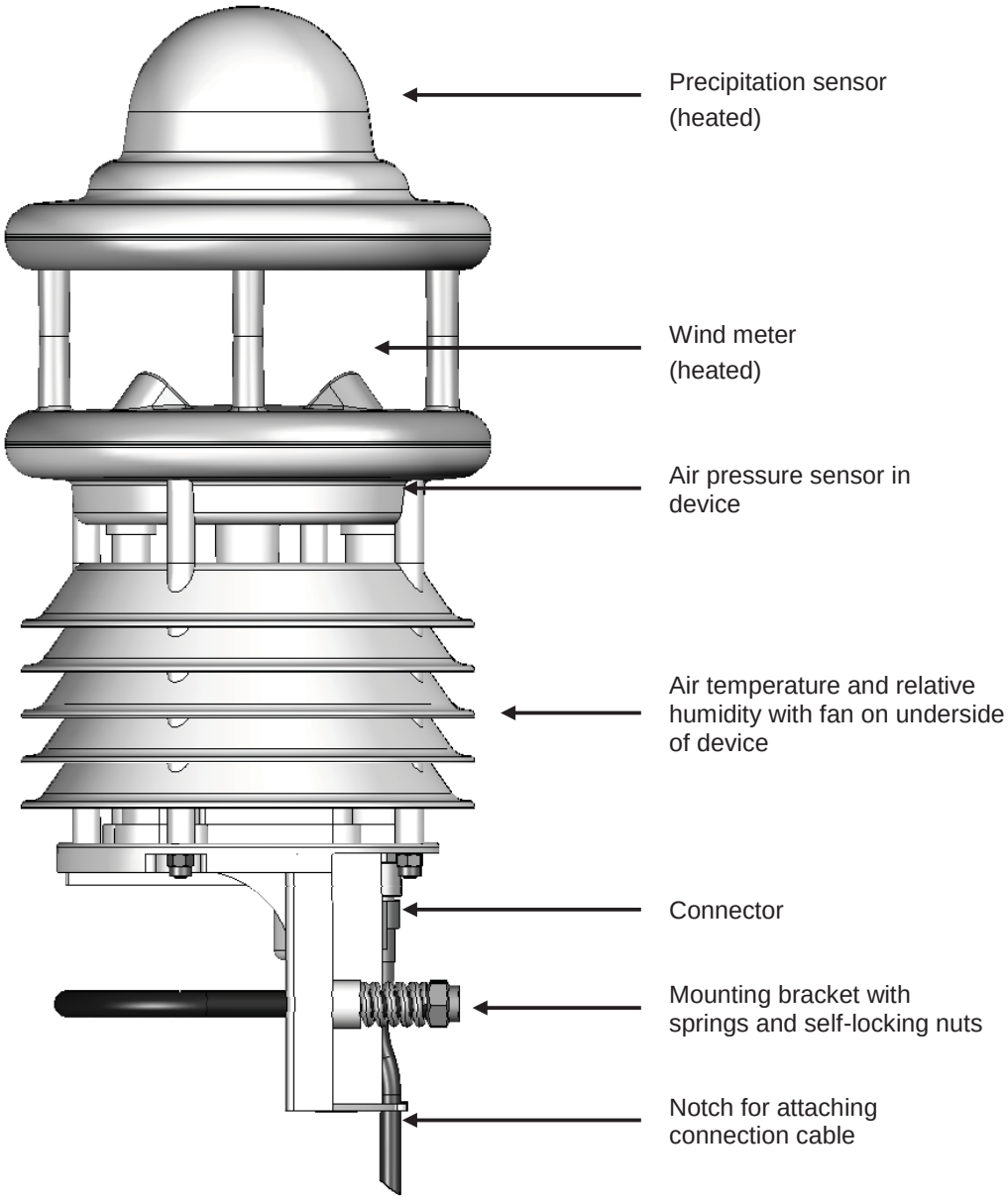

Figure 1: Sensor Technology

5 Generation of Measurements

5.1 Current Measurement (act)

In accordance with the specified sampling rate, the value of the last measurement is transmitted when the current measurement value is requested. Each measurement is stored in a circular buffer for the subsequent calculation of minimum, maximum and average values.

5.2 Minimum and Maximum Values (min and max)

When requesting the minimum and maximum values, the corresponding value is calculated - via the circular buffer at the interval (1 – 10 minutes) specified in the configuration - and transmitted.

Note: In the case of wind direction, the minimum / maximum value indicates the direction at which the minimum / maximum wind speed was measured.

5.3 Average Value (avg)

When requesting the average value, this is calculated - via the circular buffer at the interval (1 – 10 minutes) specified in the configuration - and transmitted. In this way moving averages can also be calculated.

For some values the standard deviation is calculated for the same interval. The calculation of standard deviation will only be activated after the related UMB channel has been requested for the first time.

5.4 Vectorial Average Value (vct)

In the specific case of wind measurement, measurements are calculated vectorially. To this end, the average values of the vectors are generated internally. Hence the value (wind speed) and angle (wind direction) of the vector are calculated.

Note: On delivery, the interval for the calculation of minimum, maximum and average values is set at 10 minutes. If necessary, this can be adjusted to the particular requirements (1 – 10 minutes) with the aid of the UMB-Config-Tool (see page 26).

6 Measurement Output

Measurements are transmitted in accordance with UMB binary protocol (Factory Settings).

You can find an example of a measurement request in different protocols and a complete summary of the list of channels in the Appendix.

6.1 Air and Dewpoint Temperature

Sampling rate 1 minute

Generation of average value 1 – 10 minutes

Units °C; °F

Request channels:

UMB Channel					Measuring Range		
act	min	max	avg	Measurement Variable (float)	min	max	unit
100	120	140	160	Air temperature	-50.0	60.0	°C
105	125	145	165	Air temperature	-58.0	140.0	°F
110	130	150	170	Dewpoint temperature	-50.0	60.0	°C
115	135	155	175	Dewpoint temperature	-58.0	140.0	°F

6.2 Wind Chill Temperature

Sampling rate 1 minute, computed on base of the average temperature and average wind speed

Units °C; °F

Request channels:

UMB Channel					Measuring Range		
act	min	max	avg	Measurement Variable (float)	min	max	unit
111				Wind chill temperature	-60.0	70.0	°C
116				Wind chill temperature	-76.0	158.0	°F

6.3 Humidity

Sampling rate 1 minute

Generation of average value 1 – 10 minutes

Units %RH; g/m³; g/kg

Request channels:

UMB Channel					Measuring Range		
act	min	max	avg	Measurement Variable (float)	min	max	unit
200	220	240	260	Relative humidity	0.0	100.0	%
205	225	245	265	Absolute humidity	0.0	1000.0	g/m³
210	230	250	270	Mixing ratio	0.0	1000.0	g/kg

6.4 Air Pressure

Sampling rate 1 minute

Generation of average value 1 – 10 minutes

Unit hPa

Request channels:

UMB Channel					Measuring Range		
act	min	max	avg	Measurement Variable (float)	min	max	unit
300	320	340	360	Absolute air pressure	300	1200	hPa
305	325	345	365	Relative air pressure	300	1200	hPa

Note: For the correct calculation of relative air pressure, the altitude of the location must be entered in the device configuration (see Figure 11 on page 28). The factory setting for altitude is 0m; in this way both measurement variables deliver the same values.

6.5 Wet Bulb Temperature

Sampling rate 1 minute

Units °C; °F

Request channels:

UMB-Kanal					Measuring Range		
act				**Measurement Variable (float)**	**min**	**max**	**unit**
114				WetBulbTemperature	-50.0	60.0	°C
119				WetBulbTemperature	-58.0	140.0	°F

6.6 Specific Enthalpy

Sampling rate 1 minute

Unit kJ/kg

Request channels:

UMB-Kanal					Measuring Range		
act				**Measurement Variable (float)**	**min**	**max**	**unit**
215				SpecificEnthalpy	-100.0	1000.0	kJ/kg

6.7 Air Density

Sampling rate 1 minute

Unit kg/m³

Request channels:

UMB-Kanal					Measuring Range		
act				**Measurement Variable (float)**	**min**	**max**	**unit**
310				Air Density	0.0	3.0	kg/m³

6.8 Wind Speed

Sampling rate	10 seconds
Generation of average value	1 – 10 minutes
Generation of maximum value	1 – 10 minutes based on the internal second measurements
Units	m/s; km/h; mph; kts
Response threshold	0.3 m/s

Request channels:

UMB Channel						Measuring Range		
act	min	max	avg	vct	Measurement Variable (float)	min	max	unit
400	420	440	460	480	Wind Speed	0	60.0	m/s
405	425	445	465	485	Wind Speed	0	216.0	km/h
410	430	450	470	490	Wind Speed	0	134.2	mph
415	435	455	475	495	Wind Speed	0	116.6	kts
401					Wind Speed Fast	0	60.0	m/s
406					Wind Speed Fast	0	216.0	km/h
411					Wind Speed Fast	0	134.2	mph
416					Wind Speed Fast	0	116.6	kts
403					Wind Speed Standard Deviation	0	60.0	m/s
413					Wind Speed Standard Deviation	0	134.2	mph

Note: The second measurements are averaged over 10 seconds for the output of the current measurement. The 'fast' channels deliver every second a current value, but with reduced accuracy.

6.9 Wind Direction

Sampling rate	10 seconds
Generation of average value	1 – 10 minutes
Generation of maximum value	1 – 10 minutes based on the internal second measurements
Unit	°
Response threshold	0.3 m/s

Request channels:

UMB Channel						Measuring Range		
act	min	max	avg	vct	Measurement Variable (float)	min	max	unit
500	520	540		580	Wind Direction	0	359.9	°
501					Wind Direction Fast	0	359.9	°
502					Wind Direction Corrected	0	359.9	°
503					Wind Direction Standard Deviation	0	359.0	°

Note: The second measurements are averaged over 10 seconds for the output of the current measurement. The 'fast' channels deliver every second a current value, but with reduced accuracy.

The minimum / maximum wind direction indicates the direction at which the minimum / maximum wind speed was measured.

The corrected wind direction is calculated from the wind direction measured by the wind sensor and the heading measured by the compass.

Optionally the compass correction of the wind direction can be activated for all wind direction values. (Settings by UMB Config Tool)

Note: The correction function is designed for correction of the wind direction of a statically mounted sensor. If the alignment of the sensor changes during the measurement (i.e. if the sensor is mounted on a rotating platform or similar) the correction function will not in all cases work properly, specially not for the vector average.

It is of course possible to use the correction function for mobile measurement units, where the alignment is changed between measurement periods.

6.10 Wind Measurement Quality

Sampling rate 10 seconds

Unit %

Request channels:

UMB Channel						Measuring Range		
act	min	max	avg	vct	Measurement Variable (float)	min	max	unit
805					Wind Value Quality	0	100	%

Note: The value is updated every 10 seconds and transmits the minimum wind measurement quality for the last minute.

This value allows the user to assess how well the measurement system is functioning in the respective ambient conditions. In normal circumstances the value is 90 - 100%. Values up to 50% do not represent a general problem. If the value falls towards zero the measuring system is reaching its limits.

If during critical ambient conditions the system is no longer able to conduct reliable measurements, error value 55h (85d) is transmitted (device unable to execute valid measurement due to ambient conditions).

6.11 Compass

(only device version 023 or higher)

Sampling rate: 5 min

Unit °

Request channels:

UMB Channel						Measuring Range		
act	min	max	avg	vct	Measurement Variable (float)	min	max	unit
510					Compass Heading	0	359	°

Note: Reliable operation of the compass is only possible, if the sensor has been mounted according to the instructions in this manual, i.e. on top of the pole. Should the sensor be mounted on a traverse, the distribution of iron masses will be different from the situation during factory calibration. This may lead to additional deviation of the bearing. This also applies to lightning rods mounted at the pole top!

Dependent on the location of the installation the local declination of the earth magnetic field has to be considered. The declination value is entered using the UMB-Config-Tool (see page 28). The declination for the installation location can be found in the Internet, e.g. at

http://www-app3.gfz-potsdam.de/Declinationcalc/declinationcalc.html

http://www.ngdc.noaa.gov/geomagmodels/Declination.jsp

6.12 Precipitation Quantity - Absolute

Sampling rate Event-dependent on reaching the response threshold

Response threshold 0.01mm

Units l/m²; mm; in; mil

Request channels:

UMB Channel	Measurement Variable (float)	Unit
600	Precipitation Quantity - Absolute	l/m²
620	Precipitation Quantity - Absolute	mm
640	Precipitation Quantity - Absolute	in
660	Precipitation Quantity - Absolute	mil

Note: This measurement indicates the accumulated precipitation quantity since the last device reboot. The measurement is retained for the duration of a short power failure (up to 15 minutes). To reset this value, use the corresponding function in the UMB-Config-Tool (see page 30) or disconnect the device from the power supply for at least one hour.

6.13 Precipitation Quantity - Differential

Sampling rate Event-dependent on reaching the response threshold

Response threshold 0.01mm

Units l/m²; mm; in; mil

Request channels:

UMB Chanel	Measurement Variable (float)	Unit
605	Precipitation Quantity - Differential	l/m²
625	Precipitation Quantity - Differential	mm
645	Precipitation Quantity - Differential	in
665	Precipitation Quantity - Differential	mil

Note: Each request from a differential channel sets the accumulated quantity back to zero. If the response from the device is lost due to a transmission error (e.g. poor GPRS connection), the quantity accumulated to date is also lost. The quantity accumulated to date is also reset each time the equipment is rebooted.

6.14 Precipitation Intensity

Sampling rate 1 minute

Response threshold 0.6 mm/h

Units l/m²/h; mm/h; in/h; mil/h

Request channels:

UMB Channel	Measurement Variable (float)	Unit
800	Precipitation Intensity	l/m²/h
820	Precipitation Intensity	mm/h
840	Precipitation Intensity	in/h
860	Precipitation Intensity	mil/h

Note: The precipitation intensity is always calculated on the basis of the precipitation intensity of the previous minute.

6.15 Precipitation Type

Sampling rate Event-dependent on reaching the response threshold
Response threshold 0.01mm
Follow-up time 2 minutes
Request channels:

UMB Channel	Measurement Variable (unsigned char)	Coding
700	Precipitation Type	0 = No precipitation 60 = Liquid precipitation, e.g. rain 70 = Solid precipitation, e.g. snow

Note: A detected precipitation type remains valid for 2 minutes after the end of the precipitation event. In order to record precipitation types which only occur for a short period (e.g. short-term rain), the request time should be at least 1 minute.

Ice, hail and sleet are transmitted as rain (60).

6.16 Heating Temperature

Sampling Rate 1 Minute
Units °C; °F
Request Channels:

UMB Channel					Measuring Range		
act	min	max	avg	Measurement Variable (float)	min	max	Unit
112				Heating Temperature Wind Sensor	-50.0	150.0	°C
113				Heating Temperature Precipitation Sensor	-50.0	150.0	°C
117				Heating Temperature Wind Sensor	-58.0	302.0	°F
118				Heating Temperature Precipitation Sensor	-58.0	302.0	°F

6.17 Global Radiation

Sampling Rate 1 minute
Generation of average values 1 – 10 minutes
Unit W/m²
Request Channels:

UMB Channel					Measuring Range		
act	min	max	avg	Measurement Variable (float)	min	max	unit
900	920	940	960	Global Radiation	0.0	1400.0	W/m²

7 Installation

The sensor bracket is designed to be installed on the top of a mast with a diameter of 60 – 76mm.

The following tools are required for the installation:

- Open-end or ring spanner (SW13)
- Compass for aligning the wind meter to the North

7.1 Fastening

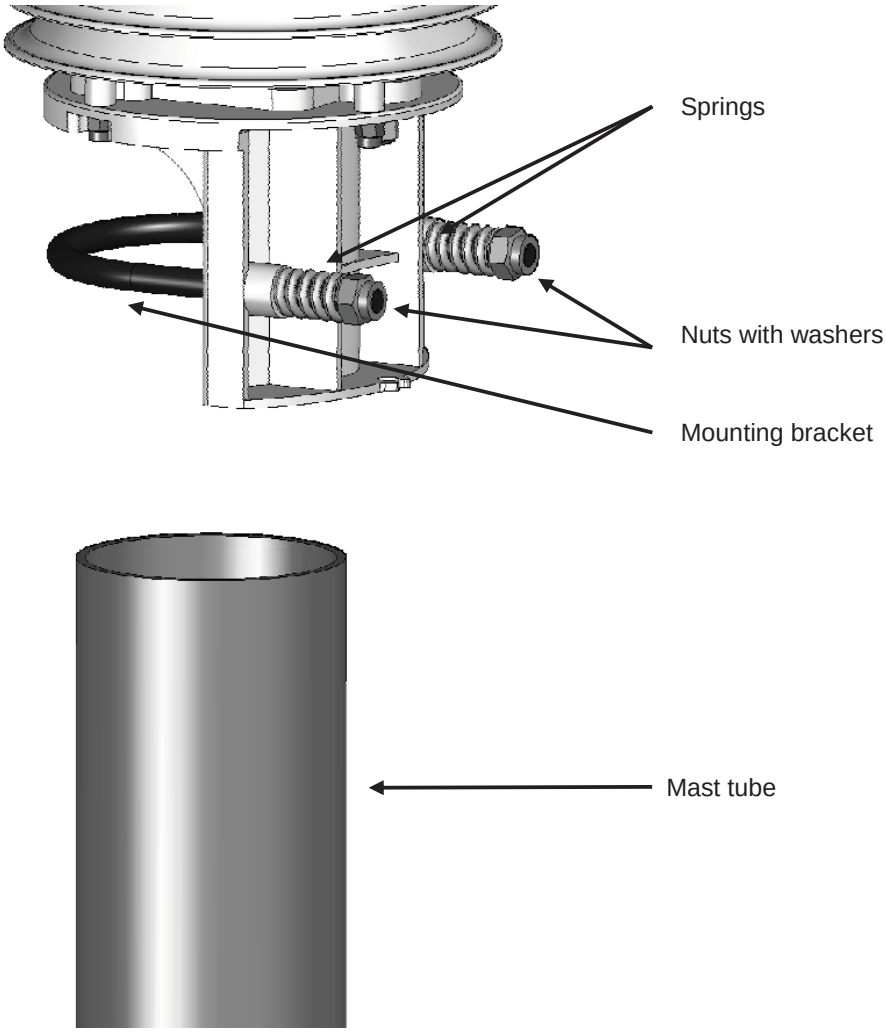

Figure 2: Fastening to the Mast

- Loosen nuts
- Push the sensor onto the top of the mast from above
- Tighten the nuts evenly until contact is made with the springs but the sensor can still be moved easily
- Align the sensor to the North (for wind meters)
- Tighten both nuts with **3 revolutions**

7.2 North Alignment

In order for the wind direction to display correctly, the sensor must be aligned to the North. The sensor has a number of directional arrows for this purpose.

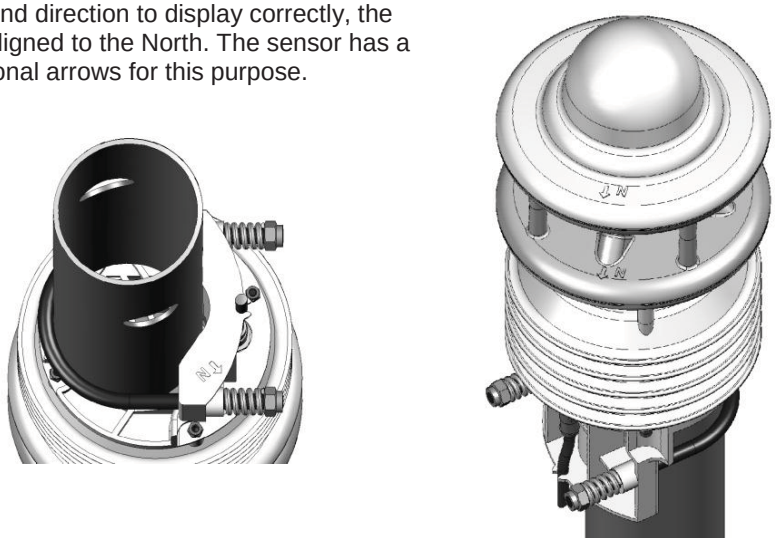

Figure 3: North Markings

Procedure:

- If the sensor is already installed, first loosen both nuts evenly until you can turn the sensor easily
- Using the compass, identify the North and fix a point of reference on the horizon
- Position the sensor in such a way that the South and North sensors are in alignment with the fixed point of reference in the North
- Tighten both nuts with 3 revolutions

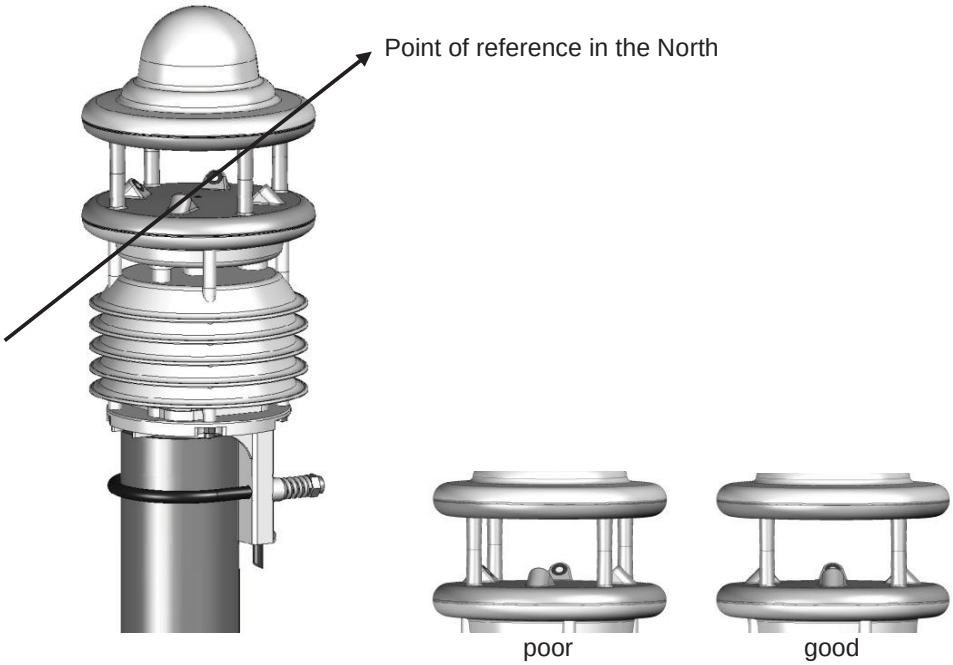

Figure 4: Alignment to North

Note: As the magnetic North Pole indicated by the compass differs from the Geographic North Pole, account must be taken of the declination (variation) at the location when aligning the sensor.

Depending on the location, the variation can be more than 15° (in North America for example). In Central Europe the variation can be largely ignored at present (< 3°). You can find further helpful information on this subject on the Internet.

7.3 Selecting the Installation Location

In order to guarantee long service life and correct equipment operation, please pay attention to the following points when selecting the installation location.

7.3.1 General Instructions

- Stable subsurface for installing the mast
- Free access to the equipment for maintenance works
- Reliable power supply for permanent operation
- Good network coverage when transmitting over a mobile communications network

Note: The computed measurements specifically apply to the equipment location only. No conclusions can be drawn with regard to the wider environment or a complete road section.

ATTENTION:

- Only approved and tested appliances (conductors, risers etc.) should be used to install the device on the mast.
- All relevant regulations for working at this height must be observed.
- The mast must be sized and anchored appropriately.
- The mast must be earthed in accordance with regulations.
- The corresponding safety regulations for working at road side and in the vicinity of the road carriageway must be observed.

If the equipment is installed incorrectly

- It may not function.
- It may be permanently damaged.
- Danger of injury may exist if the equipment is allowed to fall.

7.3.2 Sensors with Wind Measurement

- Installation at the top of the mast
- Installation height at least 2m above the ground
- Free field around the sensor

Note: Buildings, bridges, embankments and trees may corrupt the wind measurement. Equally, passing traffic may cause gusts which may influence the wind measurement.

7.3.3 Sensors with Precipitation Measurement

- Installation on the top of the mast
- Installation height at least 4.5m above the ground
- Distance to road carriageway at least 10m
- Distance from moving objects (e.g. trees, bushes and even bridges) at least 10m at the height of the sensor

Note: Falling or moving objects, e.g. falling leaves or leaves blowing in the wind, may cause false measurements and/or precipitation types.

Note: Strong wind can influence the accuracy of the precipitation measurement.

Note: When selecting the installation location please take care to position the device at a suitable distance from other systems incorporating a 24GHz radar sensor, such as traffic counting devices on overhead gantry signs. Otherwise cross effects and system malfunctions may occur. In the final analysis, the distance to other measuring systems also depends on their range of coverage and signal strength.

7.3.4 Sensors with Global Radiation Measurement

- Installation on top of the pole
- Shadow free location, if possible 360° free view to the horizon at the height of the pyranometer
- Distance to shadow casting objects (trees, buildings) at least 10 times of the object height relative to the sensor.

7.3.5 Installation Sketch

Example WS600-UMB:

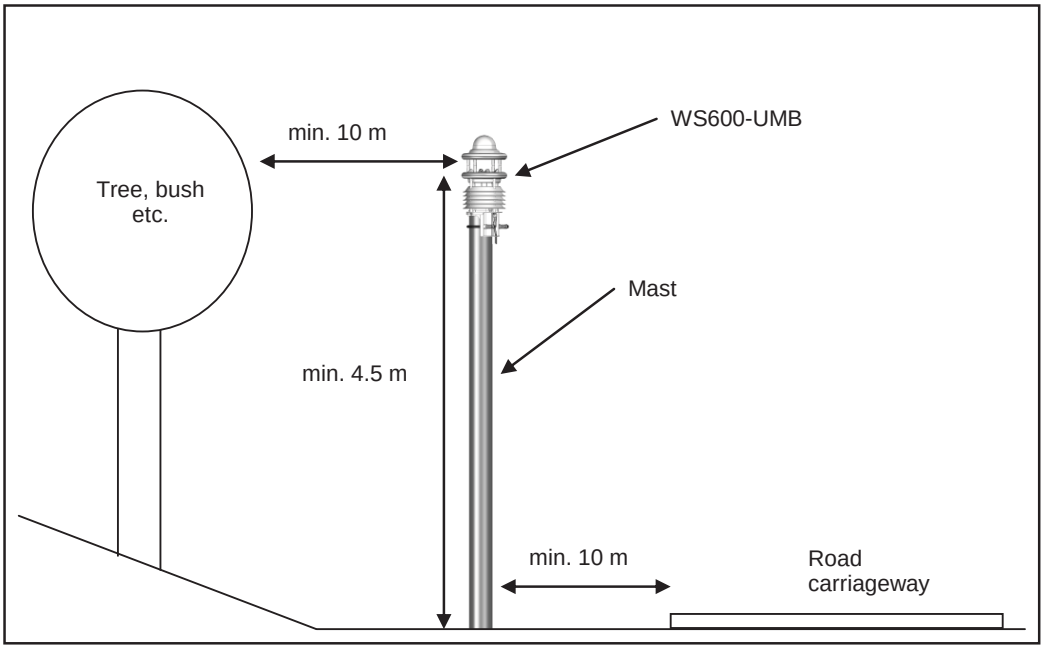

Figure 5: Installation Sketch

8 Connections

There is an 8 pole screw connector on the underside of the equipment. This serves to connect the supply voltage and interfaces by way of the supplied connection cable.

Equipment connector:

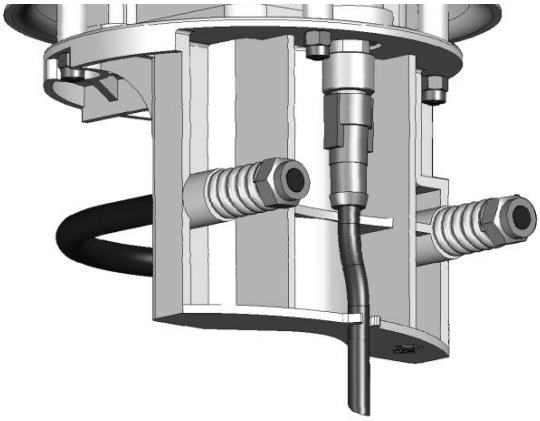

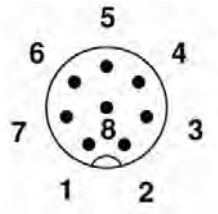

View on sensor connection

Figure 6: Connections

Pin assignment:

1	White	Supply voltage ground
2	Brown	Positive supply voltage
3	Green	RS485_A / SDI-12 GND
4	Yellow	RS485_B / SDI-12 Data Line
5	Gray	Jumper for activation of SDI-12 mode
6	Pink	Jumper for activation of SDI-12 mode
7	Blue	Heating voltage ground
8	Red	Positive heating voltage

The cable marking is in accordance with DIN 47100.

Note: The yellow protective cap must be removed before plugging in the equipment.

If the equipment is not connected correctly

- It may not function
- It may be permanently damaged
- The possibility of an electrical shock may exist

When connecting the heating voltage the correct polarity must be strictly observed. Wrong polarity of the heating voltage, as well as wrong polarity of the supply voltage will cause damage of the instrument.

8.1 Supply Voltage

The supply voltage for the compact weather station is 12 - 24V DC. The power supply unit used must be approved for operation with equipment of protection class III (SELV).

8.1.1 Limitations in 12V mode

If the heating is operated on 12V DC, account must be taken of the functional restrictions in winter operation.

Note: A heating voltage of 24V DC is recommended to guarantee full heating duty.

8.2 RS485 Interface

The equipment has an electrically isolated, half-duplex, 2 wire RS485 interface for configuration, measurement polling and the firmware update.

See page 35 for technical details.

8.3 Connection to ISOCON-UMB (8160.UISO)

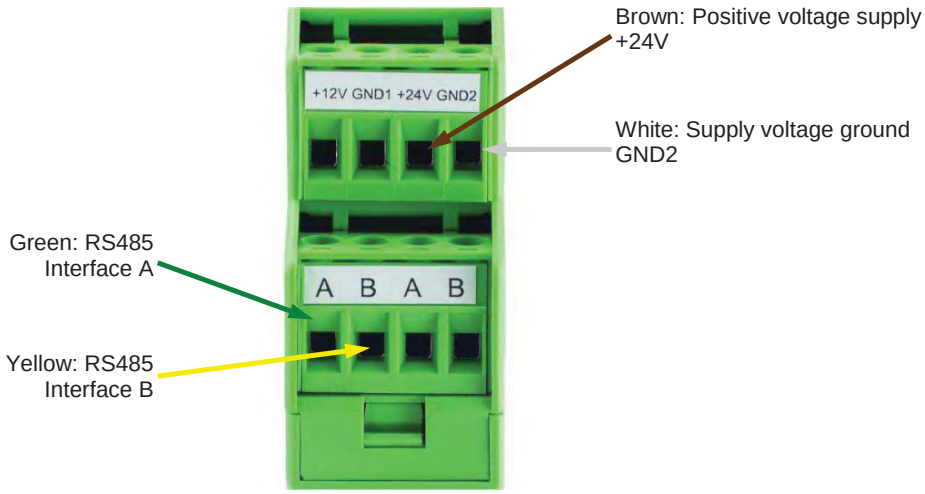

Figure 7: Connection to ISOCON-UMB

Warning: The heating voltage (red = positive heating voltage; blue = heating voltage ground) is **not** connected to the ISOCON-UMB but wired direct to the power supply unit.

During installation please also refer to the operating manual for the ISOCON-UMB.

8.4 Use of Surge Protection (8379.USP)

When using surge protection (Order No.: 8379.USP), please pay attention to the connection example in the surge protection operating instructions.

9 Commissioning

After the equipment has been installed and connected correctly, the sensor begins autonomously to take measurements. A Windows® PC with serial interface, UMB-Config-Tool software and interface cable (SUB-D 9 pole; jack - socket; 1:1) are required for configuration and test purposes.

Attention must be paid to the following points:

Check for correct equipment operation on site by carrying out a measurement request with the aid of the UMB-Config-Tool (see page 31).

- Configure the local altitude in order to ensure the correct calculation of relative air pressure (see page 28).
- The device must be aligned to the North in order to ensure correct wind measurement (see page 20).
- In order to get correct compass headings the local declination must be configured (see page 16and 28).
- If several compact weather stations are operated on a UMB network, a unique device ID must be assigned to each device (see page 27).

There is no protective cover to remove on the sensor itself.

10 Configuration and Test

Lufft provides Windows® PC software (UMB-Config-Tool) for configuration purposes. The sensor can also be tested and the firmware updated with the aid of this software.

10.1 Factory Settings

The compact weather station is delivered with the following settings:

Class ID:	7 (cannot be modified)
Device ID:	1 (gives address 7001h = 28673d)
Baud rate:	19200
RS485 protocol:	Binary
Calculation interval:	10 measurements
Local altitude:	0 m

Note: The device ID must be changed if several compact weather stations are operated on a UMB network, as each device requires a unique ID. It makes sense to start from ID 1 and continue in ascending order.

10.2 Configuration with the UMB-Config-Tool

The operation of the UMB-Config-Tool is described in detail in the operating instructions for the Windows® PC software. For this reason only the menus and functions specific to the compact weather station are described here.

10.2.1 Sensor Selection

The compact weather station is shown here with sensor selection WSx-UMB (Class ID 7).

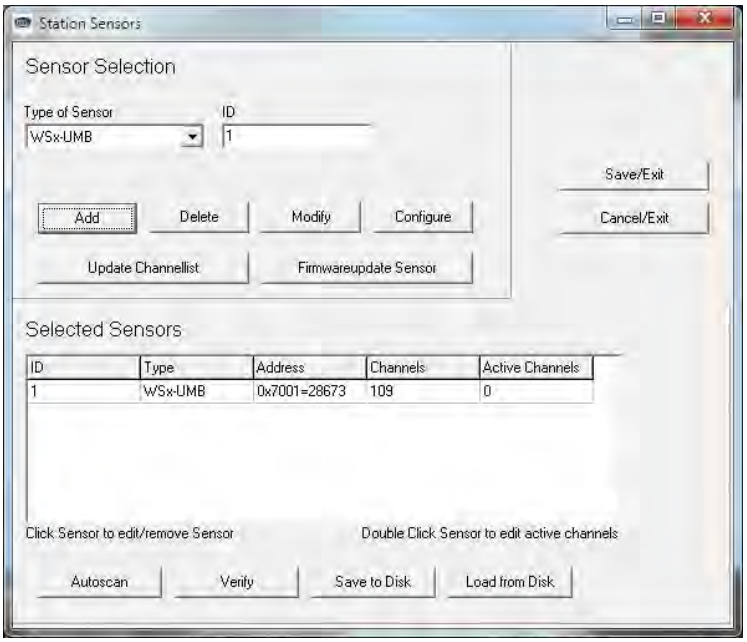

Figure 8: Sensor Selection

Note: You do require the current version of the UMB-Config-Tool to configure the compact weather station.

Note: All other devices which are used in the polling process, e.g. modems, LCOM etc., must be disconnected from the UMB network during configuration.

10.2.2 Configuration

After a configuration has been loaded, all relevant settings and values can be adjusted. Depending on the device type, only the settings pertinent to the respective available sensors are relevant.

10.2.3 General Settings

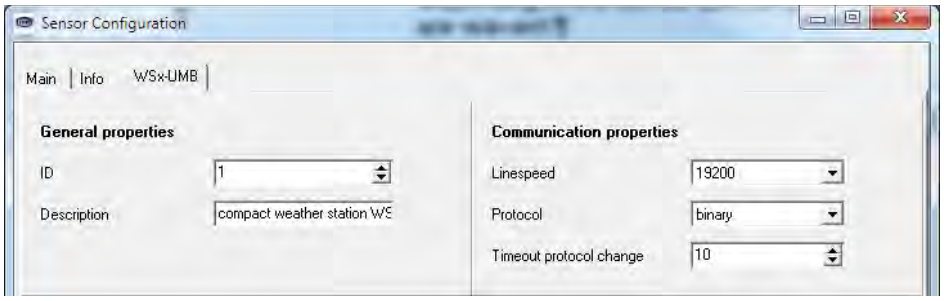

Figure 9: General Settings

ID: Device ID (factory setting 1; assign device IDs to additional devices in ascending order).

Description: In order to differentiate the devices you can enter a description here, e.g. the location.

Linespeed: Transmission speed of the RS485 interface (factory setting 19200; **DO NOT CHANGE for operation with ISOCON-UMB**).

Protocol: Communications protocol of the sensor (Binär, ASCII, SDI-12, Modbus-RTU, Modbus-ASCII, Terminal).

Timeout: In the event of a temporary changeover of the communications protocol, the system switches back to the configured protocol after this time (in minutes)

Important note: If the baud rate is changed, after saving the configuration on the sensor, the sensor communicates at the new baud rate. When operating the sensor in a UMB network with ISOCON-UMB, **this baud rate must not be changed**; otherwise the sensor **is no longer addressable** and can no longer be configured.

10.2.4 Temperature, Humidity and Fan Settings

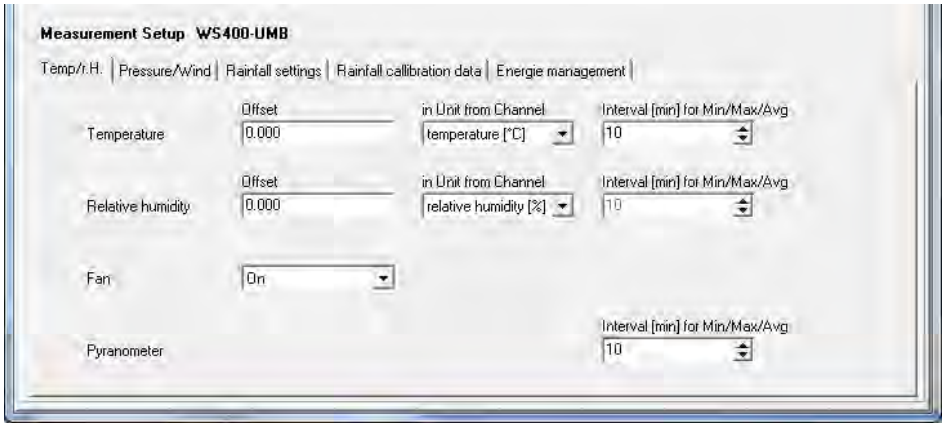

Figure 10 Temperature, Humidity and Fan Settings

Offset: Absolute offset on the measurement in the unit of the accompanying channel (for on site calibration).

Interval: Time in minutes for the minimum, maximum and average value calculation interval.

Fan: to reduce electrical power consumption, the fan can be switched off. **Note:if the fan is switched off, all heaters will also be switched off! With the fan switched off deviations in temperature and humidity measurement can occur by solar radiation!**

Note: In order to calculate dewpoint, absolute humidity and mixing ratio, the temperature and humidity measurement always requires the same interval. For this reason different intervals cannot be set.

10.2.5 Pressure, Wind and Compass Settings

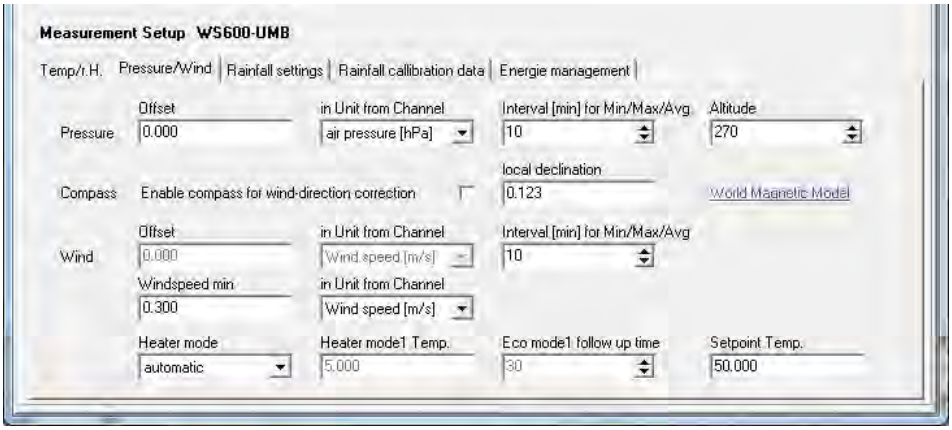

Figure 11 Pressure and Wind Settings

Offset: Absolute offset on the measurement in the unit of the accompanying channel.

Interval: Time in minutes for the minimum, maximum and average value calculation interval.

Altitude: Enter the local altitude in meters here for the correct calculation of relative air pressure (referenced to sea level).

Windspeed min: Approach velocity onto the wind meter with effect from which a measurement is transmitted, in the unit of the accompanying channel.

Heater mode: The device can be configured for heating in different operating modes. Configure as ‘automatic’ in normal operating mode. You can find a precise description of the operating modes on page 32.

Local declination: Dependent on the location of the installation; the local declination of the earth magnetic field has to be considered.

Enable Compass for wind-direction correction:
With activated compass correction all wind direction values will be corrected according to the alignment of the sensor, as evaluated by the compass.

Note: The offset is not used for the wind meter at present because on-site calibration is not possible in this case.

10.2.6 Rain Gauge Settings

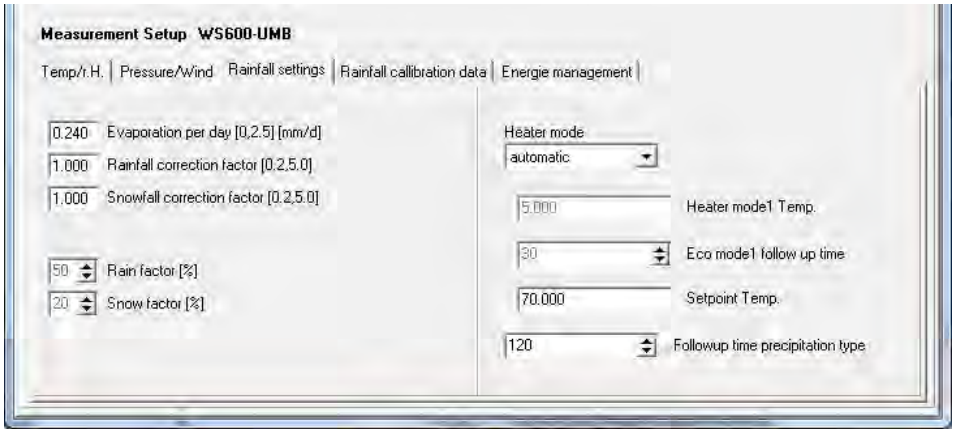

Figure 12 Rain Gauge Settings

Heater mode: The device can be configured for heating in different operating modes. Configure as ‘automatic’ in normal operating mode. You can find a precise description of the operating modes on page 32.

Followup time precipitation type: for this time (in seconds) the detected precipitation type is shown; to cover all events, this time must be adjusted to the poll rate.

Note: All other parameters, especially those in the ‘Rainfall calibration data’ tab, may only be changed after consultation with the manufacturer, as they have a major influence on the functioning and accuracy of the sensor.

10.2.7 Energy Management

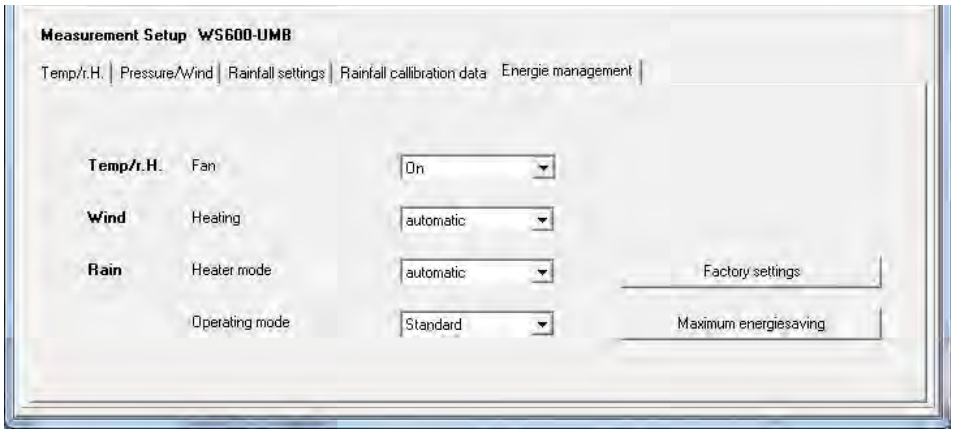

Figure 13 Energy Management Settings

With the button "Maximum energiesaving", the power consumption of the device is reduced by the following action:

- The ventilation of the temperature / humidity unit is switched off
- All heaters are switched off
- The rain sensor is not working continuously; per minute, the sensor is activated for one second, if then precipitation is detected, it remains until the end of the event turned on, otherwise it is deactivated after the one second again.

Note: This setting has the following restrictions:

- With the fan switched off deviations in temperature and humidity measurement can occur by solar radiation.
- Winter operation is not possible in this operating mode because any icing might prevent the correct operation of the rain sensor or wind meter.
- The rain detection may be delayed up to 2 minutes. Short events are possibly not detected. Thus, deviations in the accuracy of the precipitation quantity are possible.
- For maximum energy saving, a device with version 025 or higher is required (last position of the serial number).

10.2.8 Reset Precipitation Quantity

To reset the accumulated absolute precipitation quantity the UMB-Config-Tool offers the following function:

Options → WSxUMB reset rain

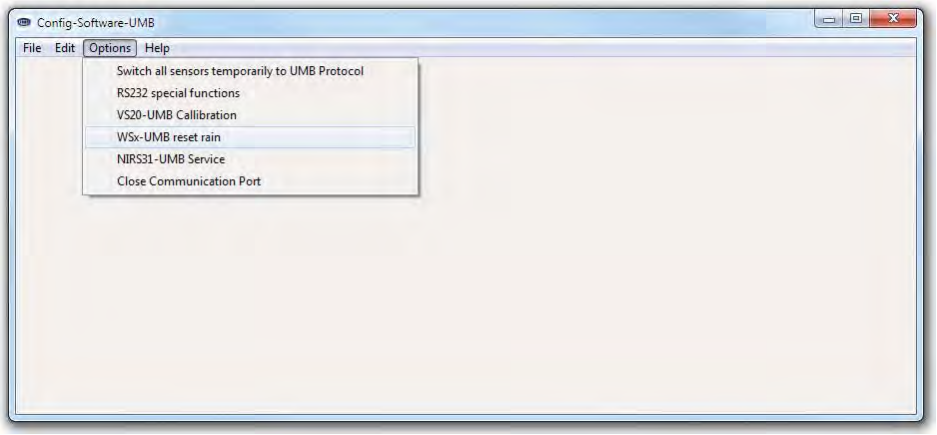

Figure 14: Reset Precipitation Quantity

Confirm the reset with 'Yes'

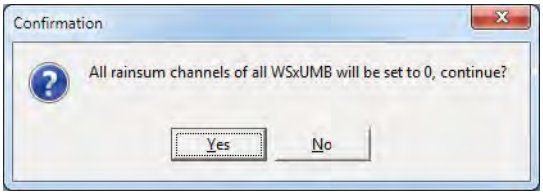

Note: The precipitation quantities are reset in ALL compact weather stations on the respective UMB network. The devices reboots after this function has been used.

10.3 Function Test with UMB-Config-Tool

The functions of the compact weather station can be tested with the UMB-Config-Tool by polling various channels.

Note: All other devices which are used in the polling process, e.g. modems, LCOM etc., must be disconnected from the UMB network during configuration.

10.3.1 Channels for Measurement Polling

You can select the channel for measurement polling by the UMB-Config-Tool by clicking on the respective channel.

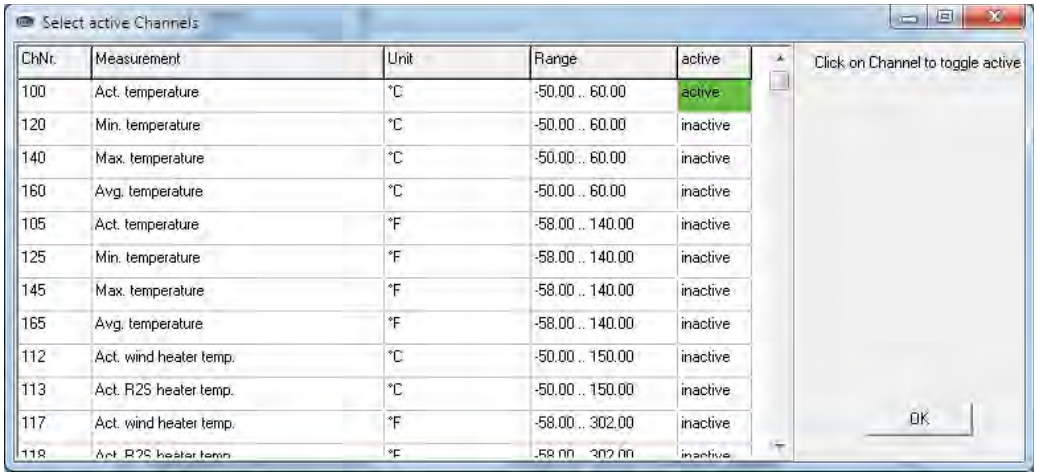

ChNr.	Measurement	Unit	Range	active
100	Act. temperature	°C	-50.00 .. 60.00	active
120	Min. temperature	°C	-50.00 .. 60.00	inactive
140	Max. temperature	°C	-50.00 .. 60.00	inactive
160	Avg. temperature	°C	-50.00 .. 60.00	inactive
105	Act. temperature	°F	-58.00 .. 140.00	inactive
125	Min. temperature	°F	-58.00 .. 140.00	inactive
145	Max. temperature	°F	-58.00 .. 140.00	inactive
165	Avg. temperature	°F	-58.00 .. 140.00	inactive
112	Act. wind heater temp.	°C	-50.00 .. 150.00	inactive
113	Act. R2S heater temp.	°C	-50.00 .. 150.00	inactive
117	Act. wind heater temp.	°F	-58.00 .. 302.00	inactive

Figure 15 Measurement Polling Channels

10.3.2 Example of Measurement Polling

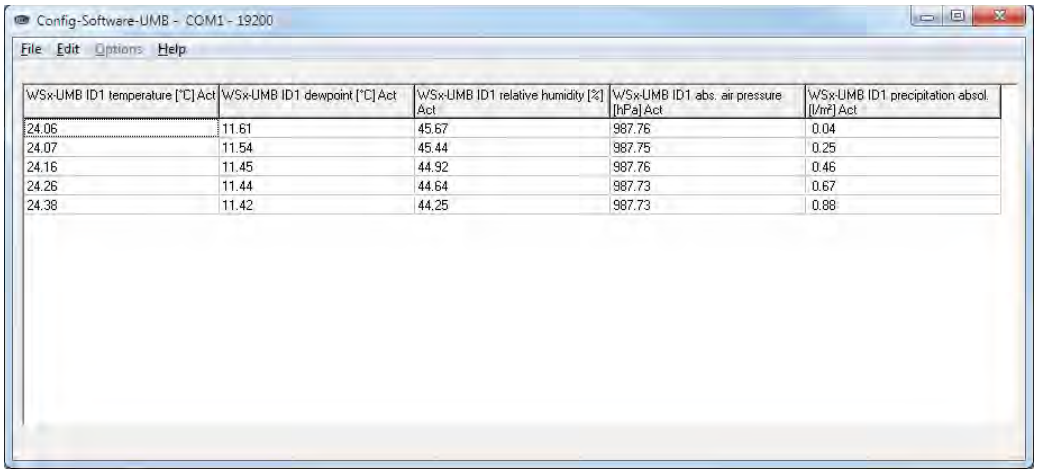

WSx-UMB ID1 temperature [°C] Act	WSx-UMB ID1 dewpoint [°C] Act	WSx-UMB ID1 relative humidity [%] Act	WSx-UMB ID1 abs. air pressure [hPa] Act	WSx-UMB ID1 precipitation absol. [l/m²] Act
24.06	11.61	45.67	987.76	0.04
24.07	11.54	45.44	987.75	0.25
24.16	11.45	44.92	987.76	0.46
24.26	11.44	44.64	987.73	0.67
24.38	11.42	44.25	987.73	0.88

Figure 16 Example of Measurement Polling

Note: The UMB-Config-Tool is provided for test and configuration purposes only. It is not suitable for the permanent acquisition of measurement data. We recommend the use of professional software solutions for this purpose, e.g. SmartView3.

10.4 Operating Modes for Equipment Heating

Heating is configured to ‘Automatic’ when the product is delivered. This is the recommended operating mode for heating the sensor.

You can set the following operating modes:

Heater Mode	WS200-UMB	WS400-UMB	WS500-UMB	WS501-UMB	WS600-UMB
Automatic	●	●	●	●	●
Off	●	●	●	●	●
Mode 1		●	●	●	●
Eco-Mode 1		●			●

Note: Model WS300-UMB and WS301-UMB are not heated because neither rain sensor nor wind meter is included.

The rain sensor and wind meter settings must be adjusted in the respective configuration mask. The examples show the wind meter setting.

10.4.1 Automatic

In this operating mode, the sensor is maintained constantly at the control temperature, generally in order to prevent the effects of snow and ice.

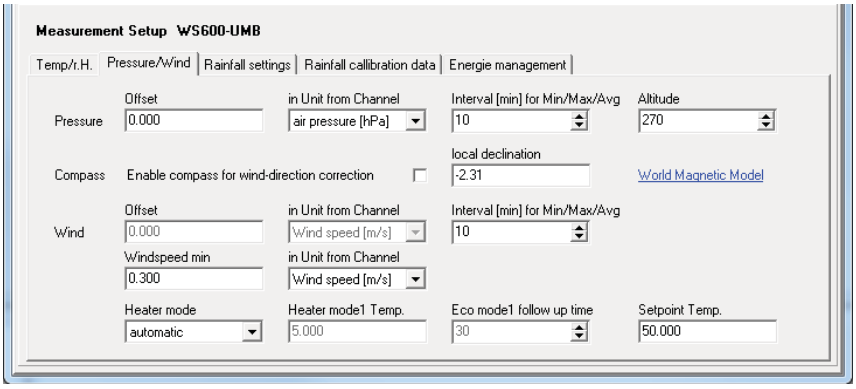

Figure 17: Operating Modes for Equipment Heating

Setpoint Temp.: The heating controls at this temperature (in °C)

The settings for the other values are not relevant.

10.4.2 Off

In the ‘Off’ operating mode heating is completely disabled. Winter operation is not possible in this operating mode because any icing might prevent the correct operation of the rain sensor or wind meter.

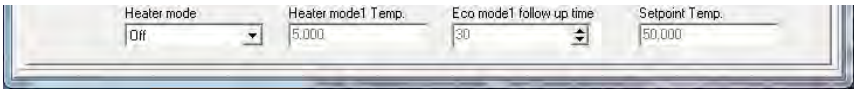

The value settings are not relevant.

10.4.3 Mode 1

In ‘Mode 1’ operating mode heating is only enabled when the outside temperature falls below the HeatingMode1 temperature (in °C). In this mode power consumption can be reduced in frost-free situations with no great restriction on winter operation.

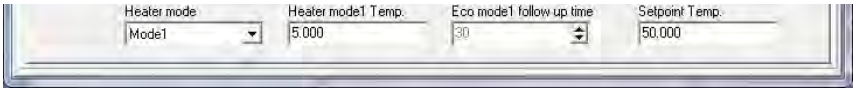

Setpoint Temp.: The heating controls at this temperature (in °C)

Heating mode1 Temp.: Threshold temperature (in °C) with effect from which air temperature heating is enabled

The ‘Eco Mode1 follow-up time’ setting is not relevant.

10.4.4 Eco-Mode 1

Eco Mode1 is an advanced energy saving mode.

Heating is only switched on when the following conditions are met:

- The outside temperature is below the threshold temperature and precipitation was detected. Heating then runs at the control temperature for 30 minutes (after the last precipitation event).
- When the outside temperature lies constantly below the threshold temperature and there was no heating for more than 20h, heating is switched on for 30 minutes as a precautionary measure in order to thaw any icing.

However, the precautionary 20h-heating only runs if the outside temperature was measured at below the threshold temperature for the entire period and conditions were constantly bright for at least 3 hours.

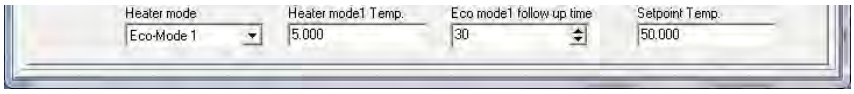

Setpoint Temp.:	The heating controls at this temperature (in °C)
Heating mode1 Temp.:	Threshold temperature (in °C) with effect from which heating is enabled
Eco mode1 follow-up time:	Follow-up time (in minutes)

Examples:

Outside temperature constantly below 5°C; no precipitation for more than 24h

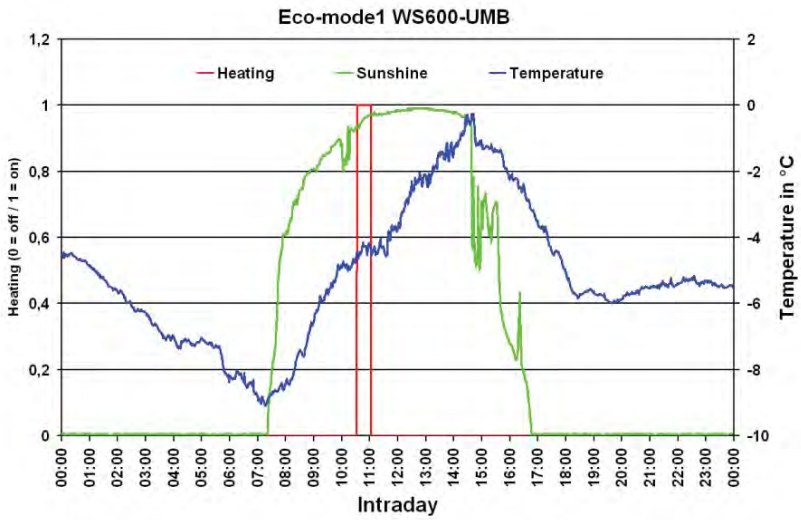

Outside temperature constantly below 5°C; with precipitation

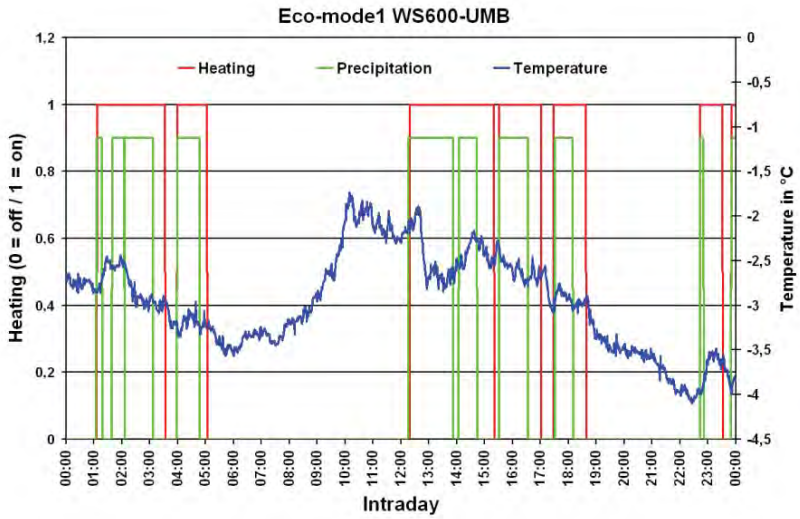

11 Firmware Update

To keep the sensor in accordance with the latest state-of-the-art, it is possible to carry out a firmware update on site with no need to remove the sensor and return it to the manufacturer.

The firmware update is carried out with the aid of the UMB-Config-Tool.

The description of the firmware update can be found in the instructions for the UMB-Config-Tool. Please download the latest firmware and UMB-Config-Tool from our website www.lufft.com and install it on a Windows® PC. You can find the instructions here:

Note: When a firmware update takes place, under certain circumstances the absolute precipitation quantities are reset (channel 600 – 660).

There is only one firmware for the entire product family which supports all models (WSx_Release_VXX.mot).

12 Maintenance

In principle the equipment is maintenance-free.

However, it is recommended to carry out a functional test on an annual basis. When doing so, pay attention to the following points:

- Visual inspection of the equipment for soiling
- Check the sensors by carrying out a measurement request
- Check the operation of the fan (not on WS200-UMB)

In addition, an annual calibration check by the manufacturer is recommended for the humidity sensor (not on WS200-UMB). It is not possible to remove or replace the humidity sensor. The complete compact weather station must be sent to the manufacturer for testing.

Cleaning of the glass dome at regular intervals is suggested for devices with global radiation measurement. The length of the interval should be adapted to the local degree of pollution.

13 Technical Data

Power supply: 24VDC +/- 10%
12VDC with restrictions (see page 23)

Current consumption and power input - sensor:

	24VDC standard[1]	12VDC energy save mode[2]
WS200-UMB	ca. 50 mA / 1.2VA	ca. 16.5mA / 0.2VA
WS300-UMB, WS301-UMB	ca. 145 mA / 3.5VA	ca. 16.5mA / 0.2VA
WS400-UMB	ca. 170 mA / 4.1VA	ca. 17.5mA / 0.2VA
WS500-UMB, WS501-UMB	ca. 150 mA / 3.6VA	ca. 16.5mA / 0.2VA
WS600-UMB	ca. 175mA / 4,2VA	ca. 17.5mA / 0.2VA

Current consumption and power input - heating:

WS200-UMB	833 mA / 20VA at 24VDC
WS400-UMB	833 mA / 20VA at 24VDC
WS500-UMB, WS501-UMB	833 mA / 20VA at 24VDC
WS600-UMB	1.7 A / 40VA at 24VDC

Dimensions including mounting bracket:

WS200-UMB	Ø 150mm, height 194mm
WS300-UMB	Ø 150mm, height 223mm
WS301-UMB	Ø 150mm, height 268mm
WS400-UMB	Ø 150mm, height 279mm
WS500-UMB	Ø 150mm, height 287mm
WS501-UMB	Ø 150mm, height 332mm
WS600-UMB	Ø 150mm, height 343mm

Weight including mounting bracket, excluding connection cable:

WS200-UMB	ca. 0.8 kg
WS300-UMB	ca. 1.0 kg
WS400-UMB, WS301-UMB	ca. 1.3 kg
WS500-UMB	ca. 1.2 kg
WS600-UMB, WS501-UMB	ca. 1.5 kg

Fastening: Stainless steel mast bracket for Ø 60 - 76mm

Protection class: III (SELV)
Protection type: IP64

Storage Conditions

Permissible storage temperature: -50°C ... +70°C
Permissible relative humidity: 0 ... 100% RH

Operating Conditions

Permissible operating temperature: -50°C ... +60°C
Permissible relative humidity: 0 ... 100% RH
Permissible altitude above sea level: N/A

RS485 interface, 2 wire, half-duplex

Data bits:	8	(SDI-12 mode: 7)
Stop bit:	1	
Parity:	No	(SDI-12 mode: even, Modbus mode none or even)
Tri-state:	2 bits after stop bit edge	
Adjustable baud rates:	1200, 2400, 4800, 9600, 14400, 19200[3], 28800, 57600	

(In SDI-12 mode, the interface is changed to meet the requirements of the standard.)

Housing: Plastic (PC)

[1] Factory setting; recommended setting

[2] This setting must be set in the device configuration. For maximum energy saving, a device with version 025 or higher is required (last position of the serial number).

[3] Factory setting; baud rate for operation with ISOCON-UMB and firmware update.

13.1 Measuring Range / Accuracy

13.1.1 Air temperature

Measurement process:	NTC
Measuring range:	-50°C ... +60°C
Resolution:	0.1°C(-20°C...+50°C), otherwise 0.2°C
Sensor accuracy:	+/- 0.2°C (-20°C ... +50°C), otherwise +/-0.5°C (>-30°C)
Sampling rate:	1 minute
Units:	°C; °F

13.1.2 Humidity

Measurement process:	Capacitive
Measuring range:	0 ... 100% RH
Resolution:	0.1% RH
Accuracy:	+/- 2% RH
Sampling rate:	1 minute
Units:	% RH; g/m³; g/kg

13.1.3 Dewpoint Temperature

Measurement process:	Passive, calculated from temperature and humidity
Measuring range:	-50°C ... +60°C
Resolution:	0.1°C
Accuracy:	Computed +/- 0.7°C
Units:	°C; °F

13.1.4 Air Pressure

Measurement process:	MEMS sensor - capacitive
Measuring range:	300 ... 1200hPa
Resolution:	0.1hPa
Accuracy:	+/- 1.5hPa
Sampling rate:	1 minute
Unit:	hPa

13.1.5 Wind Speed

Measurement process:	Ultrasound
Measuring range:	0 … 60m/s
Resolution:	0.1m/s
Accuracy:	±0.3 m/s or ±3% (0...35 m/s) ±5% (>35m/s) RMSE
Response threshold:	0.3 m/s
Sampling rate:	10 seconds / 1 second with restrictions
Units:	m/s; km/h; mph; kts

13.1.6 Wind Direction

Measurement process:	Ultrasound
Measuring range:	0 – 359.9°
Resolution:	0.1°
Accuracy:	< 3° RMSE from 1.0 m/s
Response threshold:	0.3 m/s
Sampling rate:	10 seconds / 1 second with restrictions

13.1.7 Precipitation

Measurement process:	Radar sensor
Measuring range (drop size):	0.3 mm ... 5.0 mm
Liquid precipitation resolution:	0.01 mm
Precipitation types:	Rain, snow
Repeatability:	Typically > 90%
Response threshold:	0.01 mm
Sampling rate:	Event-dependent on reaching response threshold

13.1.8 Compass

Measurement process:	Integrated electronic compass
Measurement range:	0 ... 359°
Resolution:	1.0°
Sampling rate:	5 min

13.1.9 Global Radiation

Measurement Process	Thermopile pyranometer
Measurement Range	0.0 ... 1400.0 W/m²
Resolution	< 1W/m²
Sampling Rate	1 min

13.2 Drawings

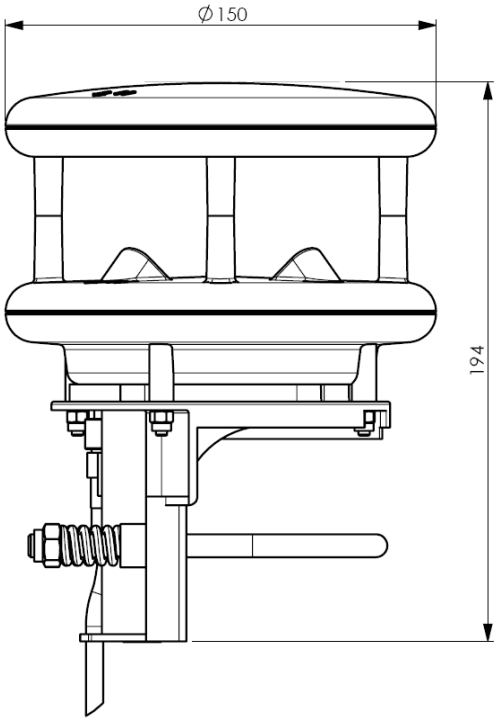

Figure 18: WS200-UMB

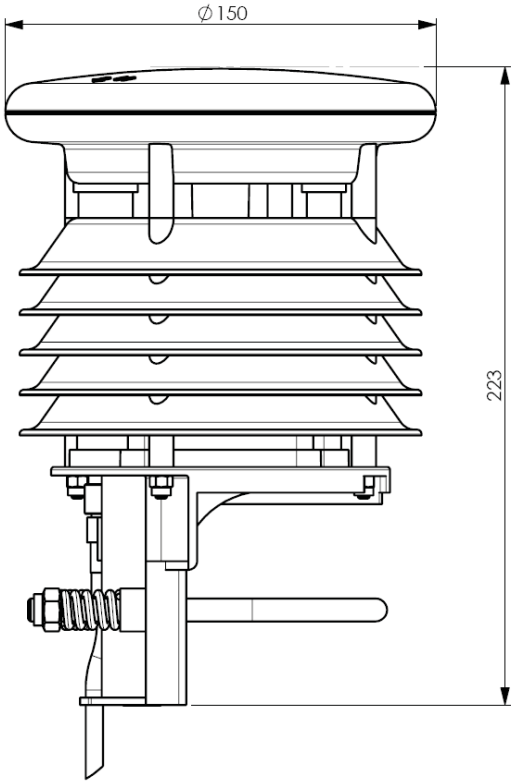

Figure 19: WS300-UMB

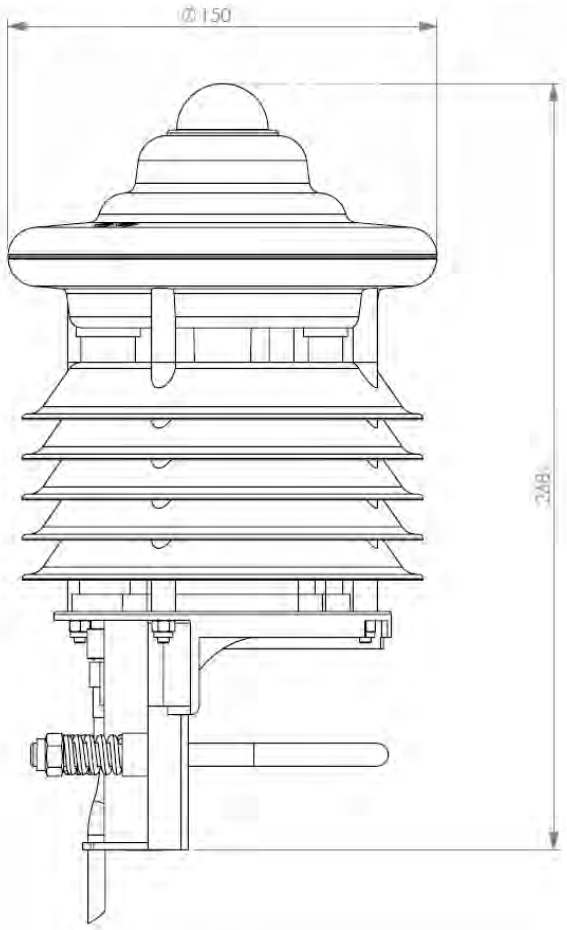

Figure 20: WS301-UMB

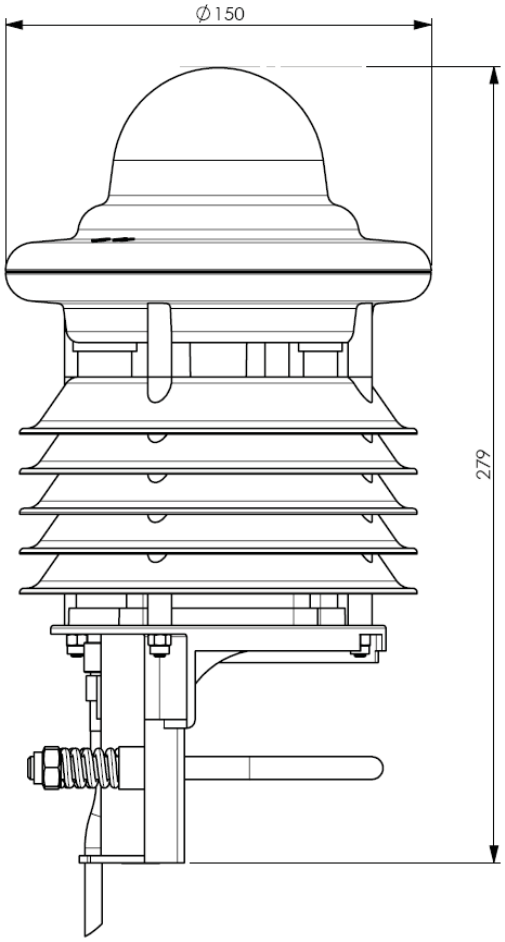

Figure 21: WS400-UMB

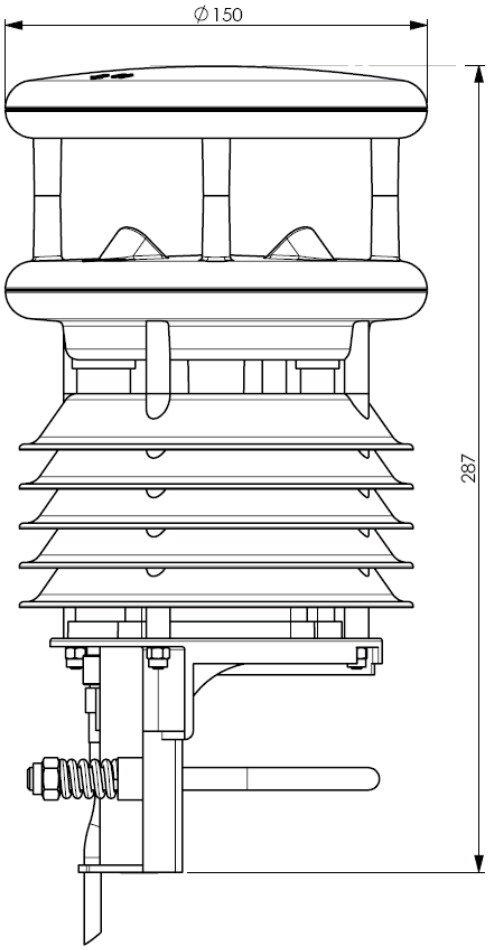

Figure 22: WS500-UMB

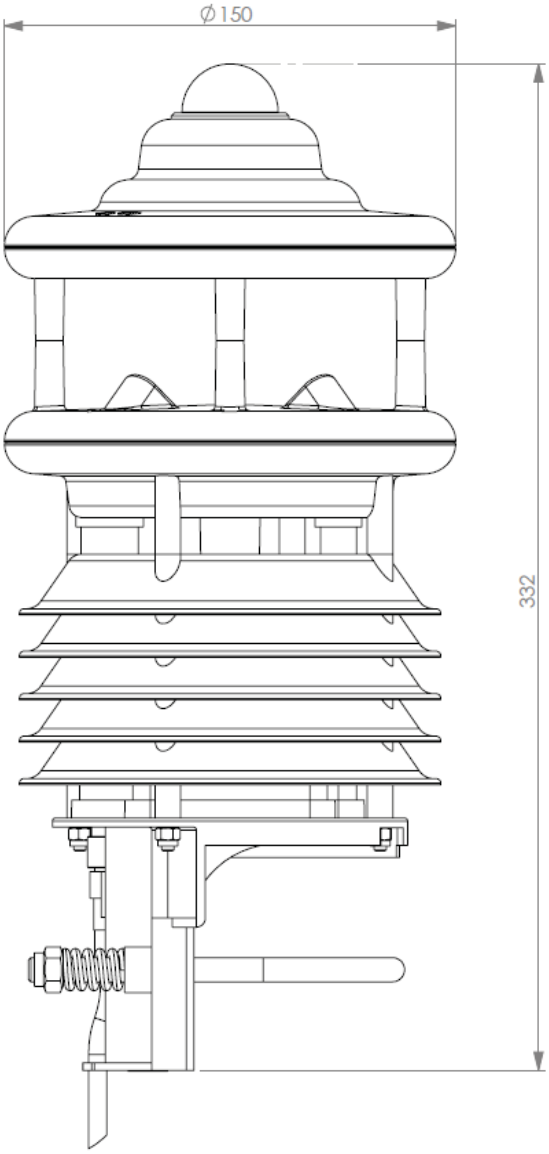

Figure 23: WS501-UMB

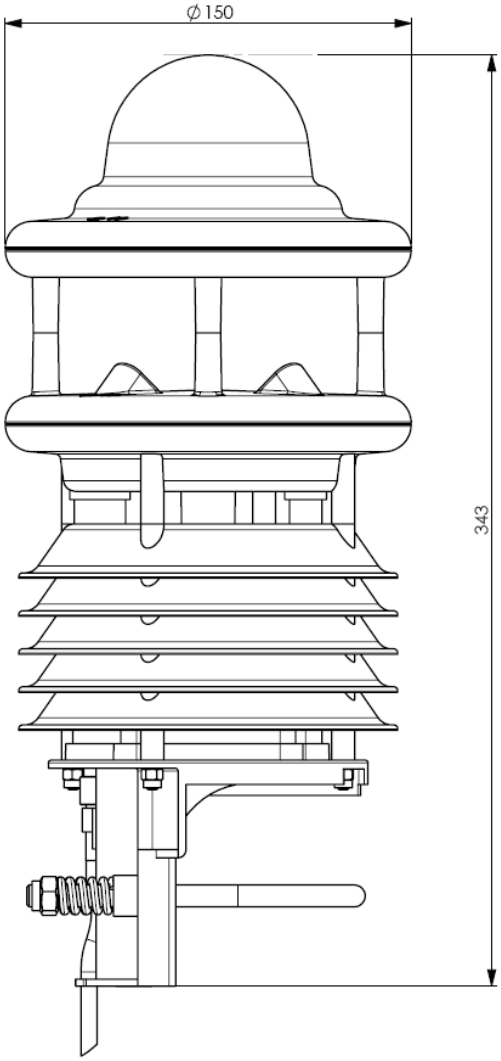

Figure 24: WS600-UMB

14 EC Certificate of Conformity

Product: **Compact Weather Station**

Type: **WS200-UMB (Order No.: 8371.U01)**
WS300-UMB (Order No.: 8372.U01)
WS301-UMB (Order No.: 8374.U01)
WS400-UMB (Order No.: 8369.U01 / 8369.U02)
WS500-UMB (Order No.: 8373.U01)
WS501-UMB (Order No.: 8375.U01)
WS600-UMB (Order No.: 8370.U01 / 8370.U02)

We herewith certify that the above mentioned equipment complies in design and construction with the Directives of the European Union and specifically the EMC Directive in accordance with 89/336/EC and the Low Voltage Directive in accordance with 73/23/EC.

The above mentioned equipment conforms to the following specific EMC Standards:

EN 61000-6-2:2005 Part 6-2: Generic Standards - Immunity for Industrial Environments

EN 61000-4-2	ESD
EN 61000-4-3	Radiated electromagnetic field
EN 61000-4-4	Burst
EN 61000-4-5	Surge
EN 61000-4-6	Conducted disturbances
EN 61000-4-8	Magnetic field 50Hz

EN 61000-6-3:2001 Part 6-3: Generic Standards - Emission Standard for Residential, Commercial and Light Industrial Environments

EN 55022:1998 +A1:2000 +A2:2003	Line-conducted disturbances
prEN 50147-3:2000	Radiated emission

IEC / CISPR 22 Class B

Fellbach, 28.11.2008 Axel Schmitz-Hübsch

15 Fault Description

Error description	Cause - Remedy
Device does not allow polling / does not respond	- Check power supply - Check interface connection - Incorrect device ID → check ID; devices are delivered with ID 1.
The device measures precipitation but it is not raining	Check that the sensor was installed correctly in accordance with the instructions.
The measured temperature appears too high / measured humidity appears too low	Check the operation of the fan on the underside of the device.
Wind direction values are incorrect	Device is not correctly aligned → check that the device is aligned to the North.
Device transmits error value 24h (36d)	A channel is being polled that is not available on this device type; e.g. Channel 200 = humidity is being polled on a WS200-UMB.
Device transmits error value 28h (40d)	The device is in the initialization phase following startup→ the device delivers measurements after approx. 10 seconds.
Device transmits error value 50h (80d)	The device is being operated above the limit of the specified measuring range.
Device transmits error value 51h (81d)	The device is being operated below the limit of the specified measuring range.
Device transmits error value 55h (85d) during wind measurement	The device is unable to execute a valid measurement due to the ambient conditions. This may be due to the following reasons: - The device is being operated well above the limit of the specified measuring range - Very strong horizontal rain or snow - The wind meter sensors are very dirty → clean sensor - The wind meter sensors are iced over → check heating mode in the configuration and check heating function / connection - There are foreign objects within the measuring section of the wind meter - One of the wind meter's sensors is faulty → return device to manufacturer for repair
The quality of the wind measurement is not always100%	In normal operation the device should always transmit 90 – 100%. Values up to 50% do not represent a general problem. When the error value 55h (85d) is transmitted this value is 0%. If the device permanently transmits values below 50% this may mean that there is a fault.
Device transmits an error value not listed here	This may be due to a number of reasons → contact the manufacturer's technical support department.

16 Disposal

16.1 Within the EC

The device must be disposed of in accordance with European Directives 2002/96/EC and 2003/108/EC (waste electrical and electronic equipment). Waste equipment must not be disposed of as household waste! For environmentally sound recycling and the disposal of your waste equipment please contact a certified electronic waste disposal company.

16.2 Outside the EC

Please comply with the applicable regulations for the proper disposal of waste electrical and electronic equipment in your respective country.

17 Repair / Corrective Maintenance

Please arrange for any faulty equipment to be checked and, if necessary, repaired by the manufacturer exclusively. Do not open the equipment and do not under any circumstances attempt to carry out your own repairs.

In matters of guarantee or repair please contact:

G. Lufft Mess- und Regeltechnik GmbH

Gutenbergstraße 20
70736 Fellbach

P.O. Box 4252
70719 Fellbach

Germany

Phone: +49 711 51822-0
Hotline: +49 711 51822-52
Fax: +49 711 51822-41

E-mail: info@lufft.de

or your local distributor.

17.1 Technical Support

Our Hotline is available for technical questions via the following e-mail address:

hotline@lufft.de

You can also consult frequently asked questions at http://www.lufft.com/ (menu header: FAQs).

18 Appendix

18.1 Channel List Summary

The channel assignment applies to online data requests in binary and ASCII protocol.

UMB Channel						Measuring Range		
act	min	max	avg	special	Measurement Variable (float)	min	max	unit
Temperatures								
100	120	140	160		temperature	-50.0	60.0	°C
105	125	145	165		temperature	-58.0	140.0	°F
110	130	150	170		dewpoint	-50.0	60.0	°C
115	135	155	175		dewpoint	-58.0	140.0	°F
111					wind chill temperature	-60.0	70.0	°C
116					wind chill temperature	-76.0	158.0	°F
114					wet bulb temperature	-50.0	60.0	°C
119					wet bulb temperature	-58.0	140.0	°F
112					wind heatertemp.	-50.0	150.0	°C
113					R2S heatertemp.	-50.0	150.0	°C
117					wind heatertemp.	-58.0	302.0	°F
118					R2S heatertemp.	-58.0	302.0	°F
Humidity								
200	220	240	260		relative humidity	0.0	100.0	%
205	225	245	265		absolute humidity	0.0	1000.0	g/m³
210	230	250	270		mixing ratio	0.0	1000.0	g/kg
Enthalpy								
215					specific enthalpy	-100.0	1000.0	kJ/kg
Pressure								
300	320	340	360		abs. air pressure	300	1200	hPa
305	325	345	365		rel. air pressure	300	1200	hPa
Air Density								
310					air density	0.0	3.0	kg/m³
Wind								
				vect. avg				
400	420	440	460	480	wind speed	0	60.0	m/s
405	425	445	465	485	wind speed	0	216.0	km/h
410	430	450	470	490	wind speed	0	134.2	mph
415	435	455	475	495	wind speed	0	116.6	kts
401					wind speed fast	0	60.0	m/s
406					wind speed fast	0	216.0	km/h
411					wind speed fast	0	134.2	mph
416					wind speed fast	0	116.6	kts
403					wind speed standard deviation	0	60.0	m/s
413					wind speed standard deviation	0	134.2	Mph
500	520	540		580	wind direction	0	359.9	°
501					wind direction fast	0	359.9	°
502					wind direction corr.	0	359,9	°
503					wind direction standard deviation	0	359.0	°
805					wind value quality	0	100.0	%
Compass								
510					compass heading	0	359	°

Precipitation Quantity			Range	Unit
600	float	Precipitation Quantity - Absolute	0 … 100000	liters/m²
620	float	Precipitation Quantity - Absolute	0 … 100000	mm
640	float	Precipitation Quantity - Absolute	0 … 3937	inches
660	float	Precipitation Quantity - Absolute	0 … 3937008	mil
605	float	Precipitation Quantity - Differential	0 … 100000	liters/m²
625	float	Precipitation Quantity - Differential	0 … 100000	mm
645	float	Precipitation Quantity - Differential	0 … 3937	inches
665	float	Precipitation Quantity - Differential	0 … 3937008	mil
Precipitation Type				
700	Unsigned char	Precipitation Type	0 = No precipitation 60 = Liquid precipitation, e.g. rain 70 = Solid precipitation, e.g. snow	
Precipitation Intensity			**Range**	**unit**
800	float	Precipitation Intensity	0 … 200.0	l/m²/h
820	float	Precipitation Intensity	0 … 200.0	mm/h
840	float	Precipitation Intensity	0 … 7.874	in/h
860	float	Precipitation Intensity	0 … 7874	mil/h

Global Radiation								
900	920	940	960		Global Radiation	0	1400	W/m²

Note: The channels which are actually available are dependent on the WSx-UMB type in use.

18.2 Channel List Summary per TLS2002 FG3

The following channels are available specifically for data requests for further processing in TLS format. These channels are only avalibaleind the binary protocol.

DE Type	UMB Channel	Meaning	Format	Range	Resolution	Coding
48	1048	Result message Air Temperature LT	16 bit	-30 ... +60°C	0.1°C	60.0 = 600d = 0258h 0.0 = 0d = 0000h -0.1 = -1d = FFFFh -30.0 = -300d = FED4h
53	1053	Result message Precipitation Intensity NI	16 bit	0 ... 200 mm/h	0.1 mm/h	0.0 = 0d = 0000h 200.0 = 2000d = 07D0h
54	1054	Result message Air Pressure LD	16 bit	800...1200 hPa	1 hPa	800 = 800d = 0320h 1200 = 1200d = 04B0h
55	1055	Result message Relative Humidity RLF	8 bit	10% ... 100%	1% RH	10% = 10d = 0Ah 100% = 100d = 64h
56	1056	Result message Wind Direction WR	16 bit	0 ... 359°	1°	0° (N) = 0d = 0000h 90° (O) = 90d = 005Ah 180° (S) = 180d = 00B4h 270° (W) = 270d = 010Eh FFFFh = not definable
57	1057	Result message Wind Speed. (average) WGM	16 bit	0.0 ... 60.0 m/s	0.1 m/s	0.0 = 0d = 0000h 60.0 = 600d = 0258h
64	1064	Result message Wind Speed (peak) WGS	16 bit	0.0 ... 60.0 m/s	0.1 m/s	0.0 = 0d = 0000h 60.0 = 600d = 0258h
66	1066	Result message Dewpoint Temperature TPT	16 bit	-30 ... +60°C	0.1°C	60.0 = 600d = 0258h 0.0 = 0d = 0000h -0.1 = -1d = FFFFh -30.0 = -300d = FED4h
71	1071	Result message Precipitation Type NS	8 bit			0 = No precipitation 60 = Liquid precipitation, e.g. rain 70 = Solid precipitation, e.g. snow

Note: The channels which are actually available are dependent on the WSx-UMB type in use.

The previous channels 1153 and 1253 are no longer supported. Channels 840 and 860 can be used in their place.

18.3 Communication in Binary Protocol

Only one example of an online data request is described in this operating manual. Please refer to the current version of the UMB Protocolfor all commands and the exact mode of operation of the protocol (available for download at www.lufft.com).

Note: Communication with the sensor takes place in accordance with the master-slave principle, i.e. there may only be ONE requesting unit on a network.

18.3.1 Framing

The data frame is constructed as follows:

1	2	3 - 4	5 - 6	7	8	9	10	11 ... (8 + len) optional	9 + len	10 + len 11 + len	12 + len
SOH	<ver>	<to>	<from>	<len>	STX	<cmd>	<verc>	<payload>	ETX	<cs>	EOT

SOH	Control character for the start of a frame (01h); 1 byte
<ver>	Header version number, e.g.: V 1.0 →<ver> = 10h = 16d; 1 byte
<to>	Receiver address; 2 bytes
<from>	Sender address; 2 bytes
<len>	Number of data bytes between STX and ETX; 1 byte
STX	Control character for the start of payload transmission (02h); 1 byte
<cmd>	Command; 1 byte
<verc>	Version number of the command; 1 byte
<payload>	Data bytes; 0 – 210 bytes
ETX	Control character for the end of payload transmission (03h); 1 byte
<cs>	Check sum, 16 bit CRC; 2 bytes
EOT	Control character for the end of the frame (04h); 1 byte

Control characters: SOH (01h), STX (02h), ETX (03h), EOT (04h).

18.3.2 Addressing with Class and Device ID

Addressing takes place by way of a 16 bit address. This breaks down into a Class ID and a Device ID.

Address (2 bytes = 16 bit)				
Bits 15 – 12 (upper 4 bits)		**Bits 11 – 8 (middle 4 bits)**	**Bits 7 – 0 (lower 8 bits)**	
Class ID (0 to 15)		**Reserve**	**Device ID** (0 – 255)	
0	Broadcast		0	Broadcast
7	Compact Weather Station (WS200-UMB – WS600-UMB)		1 - 255	Available
15	Master or control devices			

ID = 0 is provided as broadcast for classes and devices. Thus it is possible to transmit a broadcast on a specific class. However this only makes sense if there is only one device of this class on the bus; or in the case of a command, e.g. reset.

18.3.3 Examples for Creating Addresses

If, for example, you want to address WS400-UMB with the device ID 001, this takes place as follows:

The class ID for the compact weather station is 7d = 7h;
the device ID is e.g. 001d = 001h

Putting the class and device IDs together gives the address 7001h (28673d).

18.3.4 Example of a Binary Protocol Request

If, for example, a compact weather station with the device ID 001 is to be polled from a PC for the current temperature, this takes place as follows:

Sensor:

The class ID for the compact weather stationis 7 = 7h;

the device ID is 001 = 001h

Putting the class and device IDs together gives a target address of 7001h.

PC:

The class ID for the PC (master unit) is 15 = Fh;
the PC ID is e.g. 001d = 01h.

Putting the class and device IDs together gives a sender address of F001h.

The length <len> for the online data request command is 4d = 04h;

the command for the online data request is 23h;

the version number of the command is 1.0 = 10h.

The channel number is in <payload>; as can be seen from the channel list (page 47), the current temperature in °C in the channel is 100d = 0064h.

The calculated CRC is D961h.

The request to the device:

SOH	<ver>	<to>		<from>		<len>	STX	<cmd>	<verc>	<channel>		ETX	<cs>		EOT
1	**2**	**3**	**4**	**5**	**6**	**7**	**8**	**9**	**10**	**11**	**12**	**13**	**14**	**15**	**16**
01h	10h	01h	70h	01h	F0h	04h	02h	23h	10h	64h	00h	03h	61h	D9h	04h

The response from the device:

SOH	<ver>	<to>		<from>		<len>	STX	<cmd>	<verc>	<status>	<channel>		<typ>
1	**2**	**3**	**4**	**5**	**6**	**7**	**8**	**9**	**10**	**11**	**12**	**13**	**14**
01h	10h	01h	F0h	01h	70h	0Ah	02h	23h	10h	00h	64h	00h	16h

<value>				ETX	<cs>		EOT
15	**16**	**17**	**18**	**19**	**20**	**21**	**22**
00h	00h	B4h	41h	03h	C6h	22h	04h

Interpretation of the response:

<status> = 00h device o.k. (≠ 00h signifies error code; see page 52)

<typ> = Data type of the following value; 16h = float (4 bytes, IEEE format)

<value> = 41B40000h as a float value corresponds to 22.5

The temperature is therefore 22.5°C.

The correct data transmission can be checked with the aid of the check sum (22C6h).

Note: Little Endian (Intel, low byte first) applies when transmitting word and float variables of addresses or the CRC, for example. This means first the LowByte and then the HighByte.

18.3.5 Status and Error Codes in Binary Protocol

If a measurement request delivers the <status> 00h, the sensor is working correctly. You can find a complete list of additional codes in the description of the UMB protocol.

Extract from list:

<status>	Description
00h (0d)	Command successful; no error; all o.k.
10h (16d)	Unknown command; not supported by this device
11h (17d)	Invalid parameter
24h (36d)	Invalid channel
28h (40d)	Device not ready; e.g. initialization / calibration running
50h (80d)	Measurement variable (+offset) is outside the set display range
51h (81d)	
52h (82d)	Measurement value (physical) is outside the measuring range (e.g. ADC over range)
53h (83d)	
54h (84d)	Error in measurement data or no valid data available
55h (85d)	Device / sensor is unable to execute valid measurement due to ambient conditions

18.3.6 CRC Calculation

CRC is calculated according to the following rules:

Norm: CRC-CCITT

Polynomial: 1021h = $x^{16} + x^{12} + x^{5} + 1$ (LSB first mode)

Start value: FFFFh

You can find further information in the description of a CRC calculation in UMB Protocol.

18.4 Communication in ASCII Protocol

Text-based communication with devices is possible using ASCII protocol.

To do this, in the device configuration, interface settings, the protocol mode must be set to ASCII (see page 27).

ASCII protocol is network-compatible and serves exclusively for online data requests. The device will not respond to incomprehensible ASCII commands.

Note: The use of binary protocol is recommended for lengthy transmission routes (e.g. network, GPRS/UMTS), as ASCII protocol is unable to detect transmission errors (not CRC-secured).

Note: TLS channels are not available in ASCII protocol.

18.4.1 Structure

An ASCII command is introduced by the '&' character and completed by the CR (0Dh) sign. There is a space character (20h) between the individual blocks in each case; this is represented by an underscore character '_'. Characters that represent an ASCII value are in ordinary inverted commas.

18.4.2 Summary of ASCII Commands

Command	Function	BC	AZ
M	Online data request		I
X	Switches to binary protocol		k
R	Triggers software reset	●	k
D	Software reset with delay	●	k
I	Device information		k

These operating instructions describe the online data request only. You can find the description of the other commands in the UMB protocol.

18.4.3 Online Data Request (M)

Description: By way of this command, a measurement value is requested from a specific channel.

Request: '&'_<ID>[5]_'M'_<channel>[5] CR

Response: '$'_<ID>[5]_'M'_<channel>[5]_<value>[5] CR

<ID>[5] Device address (5 decimal places with leading zeros)

<channel>[5] Indicates the channel number (5 decimal places with leading zeros)

<value>[5] Measurement value (5 decimal places with leading zeros); a measurement value standardized to 0 – 65520d. Various error codes are defined from 65521d – 65535d.

Example:

Request: &_28673_M_00100

By way of this request, channel 100 of the device with address 28673 is interrogated (compact weather station with device ID 001).

Response: $_28673_M_00100_34785

This channel outputs a temperature from –50 to +60°C, which is calculated as follows:

0d	corresponds to	-50°C
65520d	corresponds to	+60°C
36789d	corresponds to	[+60°C – (-50°C)] / 65520 * 34785 +(-50°C) = 8.4°C

Note: TLS channels are not available in ASCII protocol.

18.4.4 Standardization of Measurement Values in ASCII Protocol

The standardization of measurement values from 0d – 65520d corresponds to the measuring range of the respective measurement variable.

Measurement Variable	Measuring Range		
	Min	Max	Unit
Temperature			
Temperature Dew point Wet Bulb Temperature	-50.0	60.0	°C
	-58.0	140.0	°F
Wind chill temperature	-60.0	70.0	°C
	-76.0	158.0	°F
Humidity			
Relative humidity	0.0	100.0	%
Absolute humidity Mixing ratio	0.0	1000.0	g/m³ g/kg
Specific Enthalpy	-100.0	1000.0	kJ/kg
Pressure			
Relative air pressure Absolute air pressure	300.0	1200.0	hPa
Air Density			
air density	0.0	3.0	kg/m³
Wind			
Wind speed	0.0	60.0	m/s
	0.0	216.0	km/h
	0.0	134.2	mph
	0.0	116.6	kts
Wind direction	0.0	359.9	°
wind value quality	0.0	100.0	%
Rain			
Quantity	0.0	6552.0	liters / m²
	0.0	6552.0	mm
	0.0	257.9	inches
	0.0	257952.7	mil
Quantity since last request	0.0	655.2	liters / m²
	0.0	655.2	mm
	0.0	25.79	inches
	0.0	25795.2	mil
Precipitation type	0 = No precipitation 60 = Liquid precipitation, e.g. rain 70 = Solid precipitation, e.g. snow		
Precipitation intensity	0.0	200.0	l/m²/h
	0.0	200.0	mm/h
	0.0	7.874	in/h
	0.0	7874	mil/h
Global Radiation			
Global Radiation	0.0	1400.0	W/m²

18.4.5 Error Codes in the ASCII Protocol

Various error codes are defined from 65521d – 65535d in addition to the standardisation for the transmission of measurement values.

<code>	Description
65521d	Invalid Channel
65523d	Value Overflow
65524d	Value Underflow
65525d	Error in measurement data or no valid data available
65526d	Device / sensor is unable to execute valid measurement due to ambient conditions
65534d	Invalid Calibration
65535d	Unknown Error

18.5 Communication in Terminal Mode

It is possible to communicate with a device in a very simple text-based manner using the terminal mode.

To do this, in the device configuration, interface settings, the protocol mode must be set to terminal (see page 27).

Note: In the case of communication in the terminal mode, only one single unit may be connected to the interface, as this protocol is **NOT** network-compatible. It is used for very simple measurement value requests.

Note: The use of binary protocol is recommended for lengthy transmission routes (e.g. network, GPRS/UMTS), as it is not possible to detect transmission errors in terminal mode (not CRC-secured).

Note: In the terminal mode, measurement values are not available in all units. Furthermore, status and error messages are not transmitted.

18.5.1 Structure

A terminal consists of an ASCII character and a numeric character. The command is completed with the <CR> sign. There is no echo on entry.

The individual values in the response are separated by a semi-colon (;). The response is completed with <CR><LF>.

An invalid terminal command is acknowledged with ‘FAILED’. Control commands are acknowledged with ‘OK’.

The command to which the response relates is given at the beginning of each response.

Note: No response times are specified in the terminal mode.

18.5.2 Terminal Commands

The terminal commands transmit the following values or have the following functions:

E0<CR>	Temperature in °C	Ta	C	(Channel 100)
	Dew point temperature in °C	Tp	C	(Channel 110)
	Wind chill temperature in °C	Tw	C	(Channel 111)
	Relative humidity in %	Hr	P	(Channel 200)
	Relative air pressure in hPa	Pa	H	(Channel 305)
	Wind speed in m/s	Sa	M	(Channel 400)
	Wind direction in °	Da	D	(Channel 500)
	Precipitation quantity in mm	Ra	M	(Channel 620)
	Precipitation type	Rt	N	(Channel 700)
	Precipitation intensity in mm/h	Ri	M	(Channel 820)
E1<CR>	Temperature in °F	Ta	F	(Channel 105)
	Dew point temperature in °F	Tp	F	(Channel 115)
	Wind chill temperature in °F	Tw	F	(Channel 116)
	Relative humidity in %	Hr	P	(Channel 200)
	Relative air pressure in hPa	Pa	H	(Channel 305)
	Wind speed in mph	Sa	S	(Channel 410)
	Wind direction in °	Da	D	(Channel 500)
	Precipitation quantity in inches	Ra	I	(Channel 640)
	Precipitation type	Rt	N	(Channel 700)
	Precipitation intensity in inches/h	Ri	I	(Channel 840)
E2<CR>	Act.wind speed in m/s	Sa	M	(Channel 400)
	Min. wind speed in m/s	Sn	M	(Channel 420)
	Max. wind speed in m/s	Sx	M	(Channel 440)
	Avg. wind speed in m/s	Sg	M	(Channel 460)
	Vct. wind speed in m/s	Sv	M	(Channel 480)
	Act.wind direction in °	Da	D	(Channel 500)
	Min. wind direction in °	Dn	D	(Channel 520)
	Max. winddirection in °	Dx	D	(Channel 540)
	Vct. wind direction in °	Dv	D	(Channel 580)
E3<CR>	Act.wind speed in mph	Sa	S	(Channel 410)
	Min. wind speed in mph	Sn	S	(Channel 430)
	Max. wind speed in mph	Sx	S	(Channel 450)
	Avg. wind speed in mph	Sg	S	(Channel 470)
	Vct. wind speed in mph	Sv	S	(Channel 490)
	Act.wind direction in °	Da	D	(Channel 500)
	Min. wind direction in °	Dn	D	(Channel 520)
	Max. wind direction in °	Dx	D	(Channel 540)
	Vectorial wind direction in °	Dv	D	(Channel 580)
E4<CR>	Act.compassheadingin °	Ca	D	(Channel 510)
	Act.Global Radiation in W/m²	Ga	W	(Channel 900)
	Min. Global Radiation in W/m²	Gn	W	(Channel 920)
	Max. Global Radiation in W/m²	Gx	W	(Channel 940)
	Avg. Global Radiation in W/m²	Gg	W	(Channel 960)
	Act. Specific Enthalpy in KJ/Kg	Ea	J	(Channel 215)
	Act. Wet Bulb Temperature in °C	Ba	C	(Channel 114)
	Act.Wet Bulb Temperature in °F	Ba	F	(Channel 119)
	Akt. Air Density in kg/m³	Ad	G	(Channel 310)

Mx<CR> Displays the same values as Ex<CR>, but without additional information such as the measurement variable and unit

I0<CR> Serial number; date of manufacture; project number; parts list version; SPLAN version; hardware version; firmware version; E2 version; device version

I1<CR> Outputs the device description

R0<CR> Executes a device reset

R1<CR> Resets the accumulated rain quantity and executes a device reset

X0<CR> Temporarily switches to UMB binary protocol

Examples:

```
E0<CR>     E0;Ta+024.9C;Tp+012.2C;Tw+026.8C;Hr+045.0P;Pa+0980.6H;
           Sa+005.1M;Da+156.6D;Ra+00042.24M;Rt+060N;Ri+002.6M;
M0<CR>     M0;+024.9;+012.2;+026.8;+045.0;+0980.6;
           +005.1;+156.6;+00042.24;+060;+002.6;
E2<CR>     E2;Sa+005.1M;Sn+001.1M;Sx+007.1M;Sg+005.1M;Sv+005.0M;
           Da+156.6D;Dn+166.6D;Dx+176.6D;Dv+156.6D;
M2<CR>     M2;+005.1;+001.1;+007.1;+005.1;+005.0;
           +156.6;+166.6;+176.6;+156.6;
I0<CR>     I0;001;0109;0701;004;005;001;016;011;00002;<CR><LF>
R0<CR>     R0;OK;<CR><LF>
```

18.6 Communication in SDI-12 Mode

The communication in the SDI-12 mode of the WSxxx is conforming to the standard defined in ‚SDI-12 A Serial-Digital Interface Standard for Microprocessor-Based Sensors Version 1.3 January 12, 2009‘ . The station may be operated in bus mode together with other SDI-12 sensors, connected to one SDI master (logger).

18.6.1 Preconditions for SDI-12 Operation

As the interface settings defined in the SDI-12 standard are significantly different from the UMB default settings, some preconditions have to be met for operation:

- Hardware version equal or higher 5
- Software version equal or higher 2.2
- Jumper for activation of SDI-12 mode has to be wired (see below)
- Setting for SDI-12 mode in the configuration with UMB Config Tool (at least V1.2)

Note: To activate the SDI-12 mode a jumper has to be wired between the gray and pink wire of the connector cable.

Using the UMB Config Tool the protocol mode of the station has to be set to “SDI-12”. This will automatically set the baud rate to 1200.

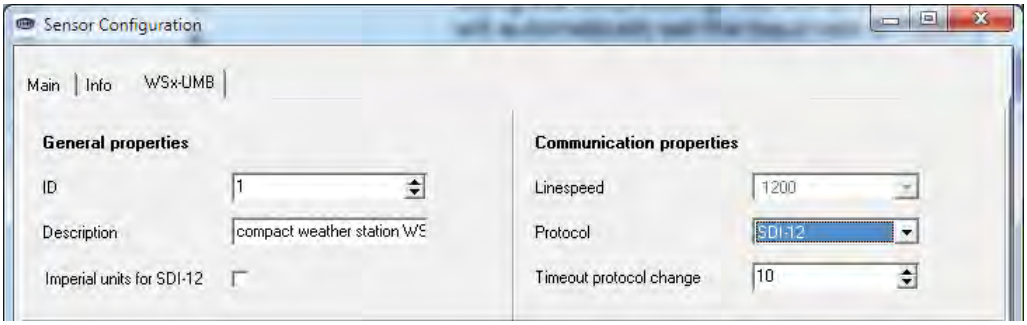

Figure 25Sensor Configuration SDI-12

Note: devices with older hardware can not to be set to SDI-12!

Measurement data can be transmitted alternatively in metric or US units. The selection is done by the UMB Config Tool.

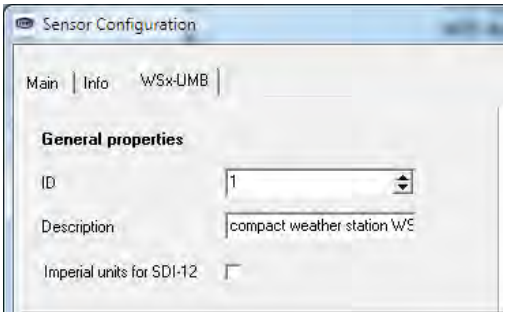

Metric units

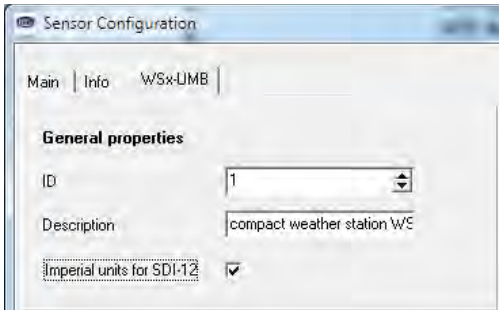

US units

Figure 26Sensor Configuration SDI-12 Units

When operating the device in SDI-12 mode it is basically no more possible to access the device with the UMB Config Tool, due to the different interface parameter settings. To enable configuration access nevertheless the interface is operated in standard UMB mode (19200 8N1) for the first 5 seconds after reset / power on. If a valid UMB telegram is received within this time, the device will stay in UMB mode for the configured time out (several minutes) so that the configuration can be modified.

- Connect the PC to the WSxxx-UMB through an RS-485 converter
- Start the UMB Config Tool and create a WSxxx-UMB with the address of the actual device and activate at least one sensor. Start the measurement (will report connection error at first)
- Reset the device (Power off / on)
- When measurement values are received the measurement can be terminated, the interface is now open for configuration.

18.6.2 Command Set

For details of the SDI-12 protocol please refer to the above mentioned standard document.

Following commands are available for devices of the WS family:

Note: The examples in the following sections use italics to print the requests from the logger (*0V!*)

Command	Function
?!	Address search (Wildcard request, one device only on bus!)
a!	Request device active?
aI!	Request device identification
aAb!	Address change to b (0 … 9, A …Z, a … z)
aM!	Measurement basic minimal data set
aM1!	Measurement temperatures
aM2!	Measurement humidity
aM3!	Measurement air pressure
aM4!	Measurement wind
aM5!	Measurement compass
aM6!	Measurement precipitation
aMC!	Measurement, basic minimal data set, transmit values with CRC
aMC1! ... aMC6!	Measurement (assignment of values as for aMn! commands), transmit values with CRC
aC!	Concurrent measurement, full basic data set
aC1! ... aC6!	Concurrent measurement, assignment of values as for aMn! commands, partly extended data sets
aCC!	Concurrent measurement, transmit values with CRC
aCC1! ... aCC6!	Concurrent measurement, assignment of values as for aMn! commands, partly extended data sets, transmit values with CRC
aD0!	Data request buffer 0
aD1!	Data request buffer 1
aD2!	Data request buffer 2
aD3!	Data request buffer 3
aD4!	Data request buffer 4
aR0!	Data request from continuous measurement, data set 0
aR1!	Data request from continuous measurement, data set 1
aR2!	Data request from continuous measurement, data set 2
aR3!	Data request from continuous measurement, data set 3
aR4!	Data request from continuous measurement, data set 4
aRC0!	Data request from continuous measurement, data set 0 with CRC
aRC1!	Data request from continuous measurement, data set 1 with CRC
aRC2!	Data request from continuous measurement, data set 2 with CRC
aRC3!	Data request from continuous measurement, data set 3 with CRC
aRC4!	Data request from continuous measurement, data set 4 with CRC
aV!	Command verification: Evaluate sensor status and heating temperatures, data request with aD0!, aD1!
aXU<m/u>!	Change the unit system for SDI data
aXH+nnnn!	Set local altitude of the device for calculation of rel. air pressure

Command	Function
aXMn!	Set the heating mode of the device
aXA<t/p/w>+nn!	Integration time for average and min/max evaluation
aXC!	Clear the abs. precipitation amount (includes a device reset)
aXR!	Device reset

The composition of the minimal and the full basic data set depends on the variant (WS200 ... WS600) of the device in question (see below). The same applies to the availability of the additional measurement commands (aM1!, aC1! Etc.)

Due the applied measurement processes the devices of the WS family will, different from other sensors described in the SDI-12 document, always measure continuously. This causes some special properties:

- The device does not need a “Wakeup” and does not have a sleep mode. So the reactions to “Break” signals and any related timings are inapplicable. “Break” will be ignored by WS devices.
- Data requested with M- or C- commands are always available immediately. The device will always respond with `a000n` resp. `a000nn` . This means the device will not send any service request and will ignore measurement abort signals. The logger should request the data immediately.
- M- and C- command only differ in the number of values made available in the buffers (in both cases the maximum permitted by the standards of 9 resp. 20).
- We recommend to use the commands for continuous measurement (R-commands) to request the data.

18.6.3 Address Configuration

UMB Device-ID and SDI-12 Address are connected, but the different address ranges and the fact, that UMB ID's are integer numbers, while SDI-12 addresses are ASCII characters, have to be considered.

UMB Device ID1 (default) corresponds to SDI-12 Address '0' (SDI-12 default).

Valid Address Ranges:

UMB (dec)			SDI-12 (ASCII)		
1	to	10	'0'	to	'9'
18	to	43	'A'	to	'Z'
50	to	75	'a'	to	'z'

18.6.4 Data Messages

In the interest of simplified evaluation the assignment of measurement values to data buffers '0' ... '9' has been defined unified for all measurement commands. For this reason the responses to C-requests have been restricted to 35 characters, not using the 75 characters permitted for these requests

Currently buffers '0' to '4' are in use.

As with M-requests max. 9 values may be transmitted, the base data set of 9 values has been assigned to buffers '0' and '1'. Buffers '2' to '4' contain further measurement values. This definition guaranties the compatibility to loggers designed according to older versions of the SDI-12 standard.

The buffer assignment depends on the device variant (WS200-UMB ... WS600-UMB).

The complete set of measurement values, as defined for the UMB protocol has been made available also in the SDI-12 environment. They can be accessed using the additional M and C commands (aM1! ... aM6!, aMC1! ... aMC6!, aC1! ... aC6!, aCC1! ... aCC6!) (see below).

If the measurement value is not available for some reason, e.g. sensor failure, this is indicated by a value of +999.0. or -999.9 The logger can then evaluate the reason of failure by a aV! verificationrequest.The following tables show the measurement values in the sequence they are arranged in the telegram (see example).

Depending on the configuration of the device the values will be transmitted in metric or US units.

Note: The configured system of units is not indicated in the data messages. The logger may request this setting with the I-command and adjust the evaluation of the data messages accordingly

Example: M Request from a WS600-UMB station

```
0M!
00009<CR><LF>                          9 measurement values are available
0D0!
0+13.5+85.7+1017.0+2.5+3.7<CR><LF>
        Air temperature 13.5°C, rel. humidity 85.7%, rel. air pressure 1017hPa
        avg. wind speed 2.5m/s, max wind speed 3.7m/s.
0D1!
0+43.7+9.8+60+4.4<CR><LF>
        Wind direction 43.7° wet bulb temperature 9.8°C,
        type of precipitation 60 (rain), precipitation intensity 4.4mm/h
```

Example: C Request from a WS600-UMB station

0M!

000020<CR><LF> 20 measurement values are available

0D0!

0+13.5+85.7+1017+2.5+3.7<CR><LF>

air temperature 13.5°C, rel. humidity 85.7%, rel. air pressure 1017hPa
avg. wind speed 2.5m/s, max wind speed 3.7m/s.

0D1!

0+43.7+9.8+60+4.4<CR><LF>

wind direction 43.7° wet bulb temperature 9.8°C,
type of precipitation 60 (rain), precipitation intensity 4.4mm/h

0D2!

0+11.2+10.3+1.10<CR><LF>

dewpoint 11.2°C, wind chill temperature 10,3°C
diff. precipitation 1.10mm

0D3!

0+3.2+0.0+3.5+100.0<CR><LF>

act. wind speed 3,2m/s, min. wind speed 0.0 m/s
vect. avg. wind speed 3.5m/s, quality of wind values 100%

0D4!

0+43.7+41.3+45.7+29.3<CR><LF>

act. wind direction 43,7°, min. wind direction 41,3°,
max. wind direction 45,7°, specific enthalpy29,3kJ/kg

18.6.4.1 Buffer assignment Basic Data Set WS600-UMB

Device configured for measurement values in metric units:

Measurement value	UMB Channel	Min	Max	Unit
Buffer ‘0’				
Air temperature (act)	100	-50.0	60.0	°C
Rel. Humidity (act)	200	0.0	100.0	%
Rel. Air Pressure	305	300.0	1200.0	hPa
Wind Speed (avg)	460	0.0	60.0	m/s
Wind Speed (max)	440	0.0	60.0	m/s
Buffer ‘1’				
Wind Direction (vct)	580	0.0	359.9	°
Wet Bulb Temperature (act)	114	-50.0	60.0	°C
Precipitation Type	700	0, 60, 70		
Precipitation Intensity	820	0.0	200.0	mm/h
Buffer ‘2’				
Dew Point (act)	110	-50.0	60.0	°C
Windchill Temperature (act)	111	-60.0	70.0	°C
Amount of Precip. difference	625	0.00	100000.00	mm
Buffer ‘3’				
Wind Speed (act)	400	0.0	60.0	m/s
Wind Speed (min)	420	0.0	60.0	m/s
Wind Speed (vct)	480	0.0	60.0	m/s
Wind Quality	805	0.0	100.0	%
Buffer ‘4’				
Wind Direction (act)	500	0.0	359.9	°
Wind Direction (min)	520	0.0	359.9	°
Wind Direction (max)	540	0.0	359.9	°
Specific Enthalpy (act)	215	-100.0	1000.0	kJ/kg

Example: Request Buffer ‘0’

```
0D0!
0+13.5+85.7+2.5+3.7<CR><LF>
```

Air Temperature 13,5°C, rel. Humidity 85,7%, average wind speed 2,5m/s, peak wind speed 3,7m/s

Device configured for measurement values in US units:

Measurement Value	UMB Channel	Min	Max	Unit
Buffer ‘0’				
Air Temperature (act)	105	-58.0	140.0	°F
Rel. Humidity (act)	200	0.0	100.0	%
Rel. Air Pressure	305	300.0	1200.0	hPa
Wind Speed (avg)	470	0.0	134.2	mph
Wind Speed (max)	450	0.0	134.2	mph
Buffer ‘1’				
Wind Direction (vct)	580	0.0	359.9	°
Wet Bulb Temperature (act)	119	-58.0	140.0	°F
Precipitation Type	700	0, 60, 70		
Precipitation Intensity	840	0.000	7.874	in/h
Buffer ‘2’				
Dew Point (act)	115	-58.0	140.0	°F
Windchill Temperature (act)	116	-76.0	158.0	°F
Amount of Precip. difference	645	0.0000	3937.0000	in
Buffer ‘3’				
Wind Speed (act)	410	0.0	134.2	mph
Wind Speed (min)	430	0.0	134.2	mph
Wind Speed (vct)	490	0.0	134.2	mph
Wind Quality	805	0.0	100.0	%
Puffer ‘4’				
Wind Direction(act)	500	0.0	359.9	°
Wind Direction (min)	520	0.0	359.9	°
Wind Direction (max)	540	0.0	359.9	°
Specific Enthalpy (act)	215	-100.0	1000.0	kJ/kg

18.6.4.2 Buffer Assignment Basic Data Set WS500-UMB

Device configured for measurement values in metric units:

Measurement value	UMB Channel	Min	Max	Unit
Buffer ‘0’				
Air temperature (act)	100	-50.0	60.0	°C
Rel. Humidity (act)	200	0.0	100.0	%
Rel. Air Pressure	305	300.0	1200.0	hPa
Wind Speed (avg)	460	0.0	60.0	m/s
Wind Speed (max)	440	0.0	60.0	m/s
Buffer ‘1’				
Wind Direction (vct)	580	0.0	359.9	°
Wet Bulb Temperature (act)	114	0.0	359.9	°C
Dew Point (act)	110	-50.0	60.0	°C
Windchill Temperature (act)	111	-60.0	70.0	°C
Buffer ‘2’				
Wind Speed (act)	400	0.0	60.0	m/s
Wind Speed (min)	420	0.0	60.0	m/s
Wind Speed (vct)	480	0.0	60.0	m/s
Wind Quality	805	0.0	100.0	%
Buffer ‘3’				
Wind Direction (act)	500	0.0	359.9	°
Wind Direction (min)	520	0.0	359.9	°
Wind Direction (max)	540	0.0	359.9	°
Specific Enthalpy (act)	215	-100.0	1000.0	kJ/kg

Example: Request Buffer ‘0’

```
0D0!
0+13.5+85.7+2.5+3.7<CR><LF>
```

Air Temperature 13,5°C, rel. Humidity 85,7%, average wind speed 2,5m/s, peak wind speed 3,7m/s

Device configured for measurement values in US units:

Measurement Value	UMB Channel	Min	Max	Unit
Buffer ‘0’				
Air Temperature (act)	105	-58.0	140.0	°F
Rel. Humidity (act)	200	0.0	100.0	%
Rel. Air Pressure	305	300.0	1200.0	hPa
Wind Speed (avg)	470	0.0	134.2	mph
Wind Speed (max)	450	0.0	134.2	mph
Buffer ‘1’				
Wind Direction (vct)	580	0.0	359.9	°
Wet Bulb Temperatur (act)	119	-58.0	140.0	°F
Dew Point (act)	115	-58.0	140.0	°F
Windchill Temperature (act)	116	-76.0	158.0	°F
Buffer ‘2’				
Wind Speed (act)	410	0.0	134.2	mph
Wind Speed (min)	430	0.0	134.2	mph
Wind Speed (vct)	490	0.0	134.2	mph
Wind Quality	805	0.0	100.0	%
Puffer ‘3’				
Wind Direction(act)	500	0.0	359.9	°
Wind Direction (min)	520	0.0	359.9	°
Wind Direction (max)	540	0.0	359.9	°
Specific Enthalpy (act)	215	-100.0	1000.0	kJ/kg

18.6.4.3 Buffer Assignment Basic Data Set WS400-UMB

Device configured for measurement in metric units:

Measurement Value	UMB Channel	Min	Max	Unit
Buffer ‘0’				
Air Temperature (act)	100	-50.0	60.0	°C
Rel. Humidity (act)	200	0.0	100,0	%
Dew Point (act)	110	-50.0	60.0	°C
Abs. Air Pressure(act)	300	300.0	1200.0	hPa
Rel. Air Pressure (act)	305	300.0	1200.0	hPa
Buffer ‘1’				
Precipitation Type	700	0, 60, 70		
Precipitation Intensity	820	0.0	200.0	mm/h
Amount of Precip. Difference	625	0.00	100000.00	mm
Amount of Precip. Absolute	620	0.0	100000.0	mm
Buffer ‘2’				
Air Temperature (min)	120	-50.0	60.0	°C
Air Temperature (max)	140	-50.0	60.0	°C
Air Temperature (avg)	160	-50.0	60.0	°C
Rel. Humidity (min)	220	0.0	100.0	%
Rel. Humidity (max)	240	0.0	100.0	%
Buffer ‘3’				
Rel. Humidity (avg)	260	0.0	100.0	%
Rel. Air Pressure(min)	325	300.0	1200.0	hPa
Rel. Rel. Humidity (max)	345	300.0	1200.0	hPa
Rel. Rel. Humidity (avg)	365	300.0	1200.0	hPa
Wet Bulb Temperature (act)	114	-50.0	60.0	°C
Specific Enthalpy (act)	215	-100.0	1000.0	kJ/kg

Example: Request Buffer ‘0’

```
0D0!
0+13.5+85.7+11.2+1017.0+1001.0
```

Air temperature 13,5°C, rel. humidity 85,7%, dew point 11,2°C, rel. air pressure 1017hPa, abs. pressure 1001hPa

Device configured for measurement in US units:

Measurement Value	UMB Channel	Min	Max	Unit
Buffer ‘0’				
Air Temperature (act)	105	-58.0	140.0	°F
Rel. Humidity (act)	200	0.0	100.0	%
Dew Point (act)	115	-58.0	14.0	°F
Abs. Air Pressure(act)	300	300.0	1200.0	hPa
Rel. Air Pressure (act)	305	300.0	1200.0	hPa
Buffer ‘1’				
Precipitation Type	700	0, 60, 70		
Precipitation Intensity	840	0.000	7.874	in/h
Amount of Precip. Difference	645	0.0000	3937.0000	in
Amount of Precip. Absolute	640	0.000	3937.000	in
Buffer ‘2’				
Air Temperature (min)	125	-58.0	140.0	°F
Air Temperature (max)	145	-58.0	140.0	°F
Air Temperature (avg)	165	-58.0	140.0	°F
Rel. Humidity (min)	220	0.0	100.0	%
Rel. Humidity (max)	240	0.0	100.0	%
Buffer ‘3’				
Rel. Humidity (avg)	260	0.0	100.0	%
Rel. Air Pressure(min)	325	300.0	1200.0	hPa
Rel. Rel. Humidity (max)	345	300.0	1200.0	hPa
Rel. Rel. Humidity (avg)	365	300.0	1200.0	hPa
Wet Bulb Temperature (act)	119	-58.0	140.0	°F
Specific Enthalpy	215	-100.0	1000.0	kJ/kg

18.6.4.4 Buffer Assignment Basic Data Set WS300-UMB

Device configured for measurement in metric units:

Measurement Value	UMB Channel	Min	Max	Unit
Puffer ‘0’				
Air Temperature (act)	100	-50.0	60.0	°C
Rel. Humidity (act)	200	0.0	100.0	%
Dew Point (act)	110	-50.0	60.0	°C
Abs. Air Pressure(act)	300	300.0	1200.0	hPa
Rel. Air Pressure (act)	305	300.0	1200.0	hPa
Puffer ‘1’				
Air Temperature (min)	120	-50.0	60.0	°C
Air Temperature (max)	140	-50.0	60.0	°C
Air Temperature (avg)	160	-50.0	60.0	°C
Rel. Humidity (avg)	260	0.0	100.0	%
Puffer ‘2’				
Rel. Humidity (min)	220	0.0	100,0	%
Rel. Humidity (max)	240	0.0	100,0	%
Rel. Air Pressure (min)	325	300.0	1200.0	hPa
Rel. Air Pressure (max)	345	300.0	1200.0	hPa
Rel. Air Pressure (avg)	365	300.0	1200.0	hPa
Puffer ‘3’				
Abs. Humidity (min)	225	0.0	1000.0	g/m³
Abs. Humidity (max)	245	0.0	1000.0	g/m³
Abs. Humidity (avg)	265	0.0	1000.0	g/m³
Puffer ‘4’				
Wet Bulb Temperature (act)	114	-50.0	60.0	°C
Specific Enthalpy (act)	215	-100.0	1000.0	kJ/kg

Example: Request buffer ‘0’

```
0D0!
0+13.5+85.7+11.2+1017.0+1001.0
```

Air temperature 13,5°C, rel. humidity 85,7%, dew point 11,2°C, rel. air pressure 1017hPa, abs. pressure 1001hPa

Device configured for measurement in US units:

Measurement Value	UMB Channel	Min	Max	Unit
Buffer ‘0’				
Air Temperature (act)	105	-58.0	140.0	°F
Rel. Humidity (act)	200	0.0	100.0	%
Dew Point (act)	115	-58.0	140.0	°F
Abs. Air Pressure(act)	300	300.0	1200.0	hPa
Rel. Air Pressure (act)	305	300.0	1200.0	hPa
Buffer ‘1’				
Air Temperature (min)	125	-58.0	140.0	°F
Air Temperature (max)	145	-58.0	140.0	°F
Air Temperature (avg)	165	-58.0	140.0	°F
Rel. Humidity (avg)	260	0.0	100.0	%
Buffer ‘2’				
Rel. Humidity (min)	220	0.0	100,0	%
Rel. Humidity (max)	240	0.0	100,0	%
Rel. Air Pressure (min)	325	300.0	1200.0	hPa
Rel. Air Pressure (max)	345	300.0	1200.0	hPa
Rel. Air Pressure (avg)	365	300.0	1200.0	hPa
Buffer ‘3’				
Abs. Humidity (min)	225	0.0	1000.0	g/m³
Abs. Humidity (max)	245	0.0	1000.0	g/m³
Abs. Humidity (avg)	265	0.0	1000.0	g/m³
Buffer ‘4’				
Wet Bulb Temperature (act)	119	-58.0	140.0	°F
Specific Enthalpy (act)	215	-100.0	1000.0	kJ/kg

18.6.4.5 Buffer Assignment Basic Data Set WS200-UMB

Device configured for measurement values in metric units:

Measurement Value	UMB Channel	Min	Max	Unit
Buffer ‘0’				
Wind Speed (avg)	460	0.0	60.0	m/s
Wind Speed (max)	440	0.0	60.0	m/s
Wind Direction (vct)	580	0.0	359.9	°
Wind Direction (act)	500	0.0	359.9	°
Compass Heading(act)	510	0.0	359.0	°
Buffer ‘1’				
Wind Speed (act)	400	0.0	60.0	m/s
Wind Speed (min)	420	0.0	60.0	m/s
Wind Speed (vct)	480	0.0	60.0	m/s
Wind Quality	805	0.0	100.0	%
Buffer ‘2’				
Wind Direction (min)	520	0.0	359.9	°
Wind Direction (max)	540	0.0	359.9	°
Wind Direction corr. (act)	502	0.0	359.9	°

Beispiel: Request Buffer ‘0’

```
0D0!
0+2.5+3.7+45.5+37.8+10.3<CR><LF>
```

Avg. wind speed 2,5m/s, peak wind speed 3,7m/s, avg wind direction (vect.) 45,5°, wind direction (act.) 37,8°, compass heading 10,3°

Device configured for measurement values in US units:

Measurement Value	UMB Channel	Min	Max	Unit
Buffer ‘0’				
Wind Speed (avg)	470	0.0	134.2	mph
Wind Speed (max)	450	0.0	134.2	mph
Wind Direction (vct)	580	0.0	359.9	°
Wind Direction (act)	500	0.0	359.9	°
Compass Heading(act)	510	0.0	359.0	°
Buffer ‘1’				
Wind Speed (act)	410	0.0	134.2	mph
Wind Speed (min)	430	0.0	134.2	mph
Wind Speed (vct)	490	0.0	134.2	mph
Wind Quality	805	0.0	100.0	%
Buffer ‘2’				
Wind Direction (min)	520	0.0	359.9	°
Wind Direction (max)	540	0.0	359.9	°
Wind Direction corr. (act)	502	0.0	359.9	°

18.6.4.6 Buffer Assignment Basic Data Set WS501-UMB

Device configured for measurement values in metric units:

Measurement value	UMB Channel	Min	Max	Unit
Buffer ‘0’				
Air temperature (act)	100	-50.0	60.0	°C
Rel. Humidity (act)	200	0.0	100.0	%
Rel. Air Pressure	305	300.0	1200.0	hPa
Wind Speed (avg)	460	0.0	60.0	m/s
Wind Speed (max)	440	0.0	60.0	m/s
Buffer ‘1’				
Wind Direction (vct)	580	0.0	359.9	°
Global Radiation (act)	900	0.0	1400.0	W/m²
Dew Point (act)	110	-50.0	60.0	°C
Windchill Temperature (act)	111	-60.0	70.0	°C
Buffer ‘2’				
Wind Speed (act)	400	0.0	60.0	m/s
Wind Speed (min)	420	0.0	60.0	m/s
Wind Speed (vct)	480	0.0	60.0	m/s
Wind Quality	805	0.0	100.0	%
Buffer ‘3’				
Wind Direction (act)	500	0.0	359.9	°
Wet Bulb Temperature (act)	114	-50.0	60.0	°C
Specific Enthalpy (act)	215	-100.0	1000.0	kJ/kg
Buffer ‘4’				
Global Radiation (min)	920	0.0	1400.0	W/m²
Global Radiation (max)	940	0.0	1400.0	W/m²
Global Radiation (avg)	960	0.0	1400.0	W/m²

Example: Request Buffer ‘0’

0D0!

0+13.5+85.7+2.5+3.7<CR><LF>

Air Temperature 13,5°C, rel. Humidity 85,7%, average wind speed 2,5m/s, peak wind speed 3,7m/s

Device configured for measurement values in US units:

Measurement Value	UMB Channel	Min	Max	Unit
Buffer ‘0’				
Air Temperature (act)	105	-58.0	140.0	°F
Rel. Humidity (act)	200	0.0	100.0	%
Rel. Air Pressure	305	300.0	1200.0	hPa
Wind Speed (avg)	470	0.0	134.2	mph
Wind Speed (max)	450	0.0	134.2	mph
Buffer ‘1’				
Wind Direction (vct)	580	0.0	359.9	°
Global Radiation (act)	900	0.0	1400.0	W/m²
Dew Point (act)	115	-58.0	140.0	°F
Windchill Temperature (act)	116	-76.0	158.0	°F
Buffer ‘2’				
Wind Speed (act)	410	0.0	134.2	mph
Wind Speed (min)	430	0.0	134.2	mph
Wind Speed (vct)	490	0.0	134.2	mph
Wind Quality	805	0.0	100.0	%
Puffer ‘3’				
Wind Direction(act)	500	0.0	359.9	°
Wet Bulb Temperature (act)	119	-58.0	140.0	°F
Specific Enthalpy (act)	215	-100.0	1000.0	kJ/kg
Buffer ‘4’				
Global Radiation (min)	920	0.0	1400.0	W/m²
Global Radiation (max)	940	0.0	1400.0	W/m²
Global Radiation (avg)	960	0.0	1400.0	W/m²

18.6.4.7 Buffer Assignment Basic Data Set WS301-UMB

Device configured for measurement in metric units:

Measurement Value	UMB Channel	Min	Max	Unit
Puffer ‘0’				
Air Temperature (act)	100	-50.0	60.0	°C
Rel. Humidity (act)	200	0.0	100.0	%
Dew Point (act)	110	-50.0	60.0	°C
Global Radiation(act)	900	0.0	1400.0	W/m²
Rel. Air Pressure (act)	305	300.0	1200.0	hPa
Puffer ‘1’				
Air Temperature (min)	120	-50.0	60.0	°C
Air Temperature (max)	140	-50.0	60.0	°C
Air Temperature (avg)	160	-50.0	60.0	°C
Rel. Humidity (avg)	260	0.0	100.0	%
Puffer ‘2’				
Rel. Humidity (min)	220	0.0	100,0	%
Rel. Humidity (max)	240	0.0	100,0	%
Rel. Air Pressure (min)	325	300.0	1200.0	hPa
Rel. Air Pressure (max)	345	300.0	1200.0	hPa
Rel. Air Pressure (avg)	365	300.0	1200.0	hPa
Puffer ‘3’				
Abs. Humidity (act)	205	0.0	1000.0	g/m³
Wet Bulb Temperature (act)	114	-50.0	60.0	°C
Specific Enthalpy (act)	215	-100.0	1000.0	kJ/kg
Puffer ‘4’				
Global Radiation (min)	920	0.0	1400.0	W/m²
Global Radiation (max)	940	0.0	1400.0	W/m²
Global Radiation (avg)	960	0.0	1400.0	W/m²

Example: Request buffer ‘0’

```
0D0!
0+13.5+85.7+11.2+1017.0+780.0
```

Air temperature 13,5°C, rel. humidity 85,7%, dew point 11,2°C, rel. air pressure 1017hPa, global radiation 780W/m²

Device configured for measurement in US units:

Measurement Value	UMB Channel	Min	Max	Unit
Buffer ‘0’				
Air Temperature (act)	105	-58.0	140.0	°F
Rel. Humidity (act)	200	0.0	100.0	%
Dew Point (act)	115	-58.0	140.0	°F
Global Radiation(act)	900	0.0	1400.0	W/m²
Rel. Air Pressure (act)	305	300.0	1200.0	hPa
Buffer ‘1’				
Air Temperature (min)	125	-58.0	140.0	°F
Air Temperature (max)	145	-58.0	140.0	°F
Air Temperature (avg)	165	-58.0	140.0	°F
Rel. Humidity (avg)	260	0.0	100.0	%
Buffer ‘2’				
Rel. Humidity (min)	220	0.0	100,0	%
Rel. Humidity (max)	240	0.0	100,0	%
Rel. Air Pressure (min)	325	300.0	1200.0	hPa
Rel. Air Pressure (max)	345	300.0	1200.0	hPa
Rel. Air Pressure (avg)	365	300.0	1200.0	hPa
Buffer ‘3’				
Abs. Humidity (act)	205	0.0	1000.0	g/m³
Wet Bulb Temperature (act)	119	-58.0	140.0	°F
Specific Enthalpy (act)	215	-100.0	1000.0	kJ/kg
Buffer ‘4’				
Global Radiation (min)	920	0.0	1400.0	W/m²
Global Radiation (max)	940	0.0	1400.0	W/m²
Global Radiation (avg)	960	0.0	1400.0	W/m²

18.6.5 Additional Measurement Commands

With the additional measurement commands

aM1! … aM6!

aMC1! … aMC6! (M-Command, data transmission with CRC)

aC1! … aC6!

aCC1! … aCC6! (C- Command, data transmission with CRC)

the complete data set of the compact weather station, as defined for the UMB protocol are available in a SDI-12 environment as well.

The measurement values are ordered according to sensor types.

Equally to the base data sets max. 9 values can be requested with an additional M command, while an additional C request allows for up to 20 values.

The buffer assignment as documented in the following paragraphs has consequently been structured in a way that with each M command the buffers D0 and D1 are used. If the respective sensor type has more values available the buffers D2 up to D4 will be occupied if required.

M1 / C1	Temperature	M: 8 Values	C: 8 Values
M2 / C2	Humidity	M: 8 Values	C: 12 Values
M3 / C3	Air Pressure	M: 8 Values	C: 8 Values
M4 / C4	Wind	M: 9 Values	C: 12 Values
M5 / C5	Compass	M: 1 Values	C: 1 Values
M6 / C6:	Precipitation	M: 4 Values	C: 4 Values
M7 / C7	Global Radiation	M: 4 Values	C: 4 Values

If the sensor type requested with the measurement command is not available with the actual variant of the compact weather station (WS200 ... WS600) the station will respond with

`a0000<CR><LF>`bzw.

`a00000<CR><LF>`

18.6.5.1 Buffer Assignment Additional Measurement Commands M1 / C1: Temperatur

Device configured for measurement values in metric units:

Measurement Value	UMB Channel	Min	Max	Unit
Buffer ‘0’				
Air Temperatur (act)	100	-50.0	60.0	°C
Air Temperatur (min)	120	-50.0	60.0	°C
Air Temperatur (max)	140	-50.0	60.0	°C
Air Temperatur (avg)	160	-50.0	60.0	°C
Dew Point (act)	110	-50.0	60.0	°C
Buffer ‘1’				
Dew Point (min)	130	-50.0	60.0	°C
Dew Point (max)	150	-50.0	60.0	°C
Dew Point (avg)	170	-50.0	60.0	°C
Wet Bulb Temperature (act)	114	-50.0	60.0	°C

Example: Request with M command

```
0M1!
00008<CR><LF>
0D0!
0+12.5+10.7+13.5+11.8+5.3<CR><LF>
0D1!
0+4.2+5.9+5.6+9.8<CR><LF>
```

Device configured for measurement values in US units:

Measurement Value	UMB Channel	Min	Max	Unit
Buffer ‘0’				
Air Temperatur (act)	105	-58.0	140.0	°F
Air Temperatur (min)	125	-58.0	140.0	°F
Air Temperatur (max)	145	-58.0	140.0	°F
Air Temperatur (avg)	165	-58.0	140.0	°F
Dew Point (act)	115	-58.0	140.0	°F
Buffer ‘1’				
Dew Point (min)	135	-58.0	140.0	°F
Dew Point (max)	155	-58.0	140.0	°F
Dew Point (avg)	175	-58.0	140.0	°F
Wet Bulb Temperature (act)	119	-58.0	140.0	°F

18.6.5.2 Buffer Assignment Additional Measurement Commands M2 / C2: Humidity

Device configured for measurement values in metric or US units:

Measurement Value	UMB Channel	Min	Max	Unit
Buffer ‘0’				
Rel. Humidity (act)	200	0.0	100.0	%
Rel. Humidity (min)	220	0.0	100.0	%
Rel. Humidity (max)	240	0.0	100.0	%
Rel. Humidity (avg)	260	0.0	100.0	%
Puffer ‘1’				
Abs. Humidity (act)	205	0.0	1000.0	g/m³
Abs. Humidity (min)	225	0.0	1000.0	g/m³
Abs. Humidity (max)	245	0.0	1000.0	g/m³
Abs. Humidity (avg)	265	0.0	1000.0	g/m³
Specific Enthalpy (act)	215	-100.0	1000.0	kJ/kg
Puffer ‘2’				
Mixing Ratio(act)	210	0.0	1000.0	g/kg
Mixing Ratio (min)	230	0.0	1000.0	g/kg
Mixing Ratio (max)	250	0.0	1000.0	g/kg
Mixing Ratio (avg)	270	0.0	1000.0	g/kg

Example: Request with M command

```
0M2!
00008<CR><LF>
0D0!
0+48.5+48.2+48.8+48.5<CR><LF>
0D1!
0+5.7+5.5+5.9+5.7+29.3<CR><LF>
```

Example: Request with C command

```
0C2!
000012<CR><LF>
0D0!
0+48.5+48.2+48.8+48.5<CR><LF>
0D1!
0+5.7+5.5+5.9+5.7+29.3<CR><LF>
0D2!
0+4.6+4.4+5.0+4.6<CR><LF>
```

18.6.5.3 Buffer Assignment Additional Measurement Commands M3 / C3: Air Pressure

Device configured for measurement values in metric or US units:

Measurement Value	UMB Channel	Min	Max	Unit
Buffer ‘0’				
Abs. Air Pressure(act)	300	300.0	1200.0	hPa
Abs. Air Pressure (min)	320	300.0	1200.0	hPa
Abs. Air Pressure (max)	340	300.0	1200.0	hPa
Abs. Air Pressure (avg)	360	300.0	1200.0	hPa
Air Density (act)	310	0.000	3.000	kg/m3
Puffer ‘1’				
Rel. Air Pressure (act)	305	300.0	1200.0	hPa
Rel. Air Pressure (min)	325	300.0	1200.0	hPa
Rel. Air Pressure (max)	345	300.0	1200.0	hPa
Rel. Air Pressure (avg)	365	300.0	1200.0	hPa

Example: Request with M command

```
0M3!
00009<CR><LF>
0D0!
0+1001.0+1000.0+1002.0+1001.0+1.119<CR><LF>
0D1!
0+1017.0+1016.0+1018.0+1017.0<CR><LF>
```

Example: Request with C command

```
0C3!
000009<CR><LF>
0D0!
0+1001.0+1000.0+1002.0+1001.0+1.119<CR><LF>
0D1!
0+1017.0+1016.0+1018.0+1017.0<CR><LF>
```

18.6.5.4 Buffer Assignment Additional Measurement Commands M4 / C4: Wind

Device configured for measurement values in metric units:

Measurement Value	UMB Channel	Min	Max	Unit
Buffer ‘0’				
Wind Speed (act)	400	0.0	60.0	m/s
Wind Speed (min)	420	0.0	60.0	m/s
Wind Speed (max)	440	0.0	60.0	m/s
Wind Speed (avg)	460	0.0	60.0	m/s
Wind Speed (vct)	480	0.0	60.0	m/s
Puffer ‘1’				
Wind Direction (act)	500	0.0	359.9	°
Wind Direction (min)	520	0.0	359.9	°
Wind Direction (max)	540	0.0	359.9	°
Wind Direction (vct)	580	0.0	359.9	°
Puffer ‘2’				
Wind Direction corr. (act)	502	0.0	359.9	°
Wind Quality	805	0.0	100.0	%
Windchill Temperature (act)	111	-60.0	70.0	°C
Wind Speed Standard Dev.	403	0.0	60.0	m/s
Wind Direction Standard Dev.	503	0.0	359.9	°

Device configured for measurement values in US units:

Measurement Value	UMB Channel	Min	Max	Unit
Buffer ‘0’				
Wind Speed (act)	410	0.0	134.2	Mph
Wind Speed (min)	430	0.0	134.2	Mph
Wind Speed (max)	450	0.0	134.2	Mph
Wind Speed (avg)	470	0.0	134.2	Mph
Wind Speed (vct)	490	0.0	134.2	Mph
Puffer ‘1’				
Wind Direction (act)	500	0.0	359.9	°
Wind Direction (min)	520	0.0	359.9	°
Wind Direction (max)	540	0.0	359.9	°
Wind Direction (vct)	580	0.0	359.9	°
Puffer ‘2’				
Wind Direction corr. (act)	502	0.0	359.9	°
Wind Quality	805	0.0	100.0	%
Windchill Temperature (act)	116	-76.0	158.0	°F
Wind Speed Standard Dev.	413	0.0	60.0	m/s
Wind Direction Standard Dev.	503	0.0	359.9	°

18.6.5.5 Buffer Assignment Additional Measurement Commands M5 / C5: Compass

Device configured for measurement values in metric or US units:

Measurement Value	UMB Channel	Min	Max	Unit
Buffer ‘0’				
Compass (act)	510	0.0	359.0	°

Example: Request with M command

```
0M5!
00001<CR><LF>
0D0!
0+348.0<CR><LF>
```

Example: Request with C command

```
0C5!
000001<CR><LF>
0D0!
0+348.0<CR><LF>
```

18.6.5.6 Buffer Assignment Additional Measurement Commands M6 / C6: Precipitation

Device configured for measurement values in metric units:

Measurement Value	UMB Channel	Min	Max	Unit
Buffer ‘0’				
Precip. Amount absolute	620	0.0	100000.0	Mm
Precip. Amount difference	625	0.00	100000.00	Mm
Precipitation Intensity	820	0.0	200.0	mm/h
Precipitation Type	700	0, 60, 70		

Example: Request with M command

```
0M6!
00004<CR><LF>
0D0!
0+1324.5+1.10+4.4+60<CR><LF>
```

Device configured for measurement values in US units:

Measurement Value	UMB Channel	Min	Max	Unit
Buffer ‘0’				
Precip. Amount absolute	640	0.000	3937.000	In
Precip. Amount difference	645	0.0000	3937.0000	In
Precipitation Intensity	840	0.000	7.874	in/h
Precipitation Type	700	0, 60, 70		

18.6.5.7 Buffer Assignment Additional Measurement Commands M7 / C7: Global Radiation

Device configured for measurement values in metric or US units:

Measurement Value	UMB Channel	Min	Max	Unit
Buffer ‘0’				
Global Radiation (act)	900	0.0	1400.0	W/m²
Global Radiation (min)	920	0.0	1400.0	W/m²
Global Radiation (max)	940	0.0	1400,0	W/m²
Global Radiation (avg)	960	0.0	1400.0	W/m²

Example: Request with M Command

```
0M7!
00004<CR><LF>
0D0!
0+780.0+135.0+920.0+530.0<CR><LF>
```

18.6.6 Message Device Identification

The device responds to the identification request with following message (example for SDI-12 device address ‘0’:

```
0I!
013Lufft.deWSx00ynnn
```

x: device type (4, 5, 6, 2, 3)

y: Metric / US units (m = metric, u = US)

nnn: Software version

i.e. for a WS600-UMB, configured for US units:

```
0I!
013Lufft.deWS600u022
```

18.6.7 Message Verification

The command verification aV! is used to evaluate status information of the device. The device responds with

```
a0005<CR<LF>
```

to the request, i.e. 5 values are available in the buffers.

The first 3 “measurement values”, transmitted in buffer ‘0’ contain the status information of the measurement channels.

The status data of the channels are assembled to form “fake measurement values”, where each digit represents one status. See below for the coding of states. Generally each sensor has two status values, one for the direct value, another for the measurement value buffer used for the evaluation of the average, min, and max values.

The last two values, transmitted in buffer ‘1’, show the heating temperatures of wind and precipitation sensor.

Buffer ‘0’				
Status buffer ‘0’: +nnnn	Air temperature, air temperature buffer, dew point, dew point buffer			
Status buffer ‘1’: +nnnnnn	Rel. Humidity, rel. Humidity buffer, abs. Humidity, abs humidity buffer, mixing ration, mixing ration buffer			
Status buffer ‘2’: +nnnnnn	Air pressure, air pressure buffer, wind, wind buffer, compass, precipitation (WS301/501 transmits the global radiation status instead of the precipitation status)			
Buffer ‘1’, device configured for metric units				
Measurement value	UMB Channel	min	max	Unit
Heating temp. Windsensor	112	-50	+150	°C
Heating temp. Precip. sensor	113	-50	+150	°C
Puffer ‘1’, device configured for US units				
Heating temp. Wind sensor	117	-58	+302	°F
Heating temp. Precip. sensor	118	-58	+302	°F

Sensor status codes:

Sensor status	Code
OK	0
UNGLTG_KANAL	1
E2_CAL_ERROR E2_CRC_KAL_ERR FLASH_CRC_ERR FLASH_WRITE_ERR FLASH_FLOAT_ERR	2
MEAS_ERROR	3
MEAS_UNABLE	4
INIT_ERROR	5
VALUE_OVERFLOW CHANNEL_OVERRANGE	6
VALUE_UNDERFLOW CHANNEL_UNDERRANGE	7
BUSY	8
other sensorstatus	9

Example (WS600-UMB, SDI-12 Address ‘0’, no error):

```
0V!
00007<CR><LF>
0D0!
0+0000+000000+00000<CR><LF>
0D1!
0+73.0+65.3<CR><LF>
```

Example (WS600-UMB, SDI-12 Address ‘0’, compass failure):

```
0V!
00005<CR><LF>
0D0!
0+0000+000000+000030<CR><LF>
0D1!
0+73.0+65.3<CR><LF>
```

18.6.8 Message Change of Unit System

The command is used to change the unit system used for the SDI12 data between metric and US units. It is implemented as manufacturer specific X command.

Command: `aXU<u/m>!`

Response: `aU<u/m><CR><LF>`

u : US units, m: metric units

Example: change to metric units, SDI-12 address ‘0’

`0XUm!`

`0Um<CR><LF>`

18.6.9 Message: Setting of the Averaging Interval Length

The avg, min, max and vct values of the measurement values are evaluated over a floating interval with a length of 1 to 10 min. The length of this interval can be adjusted separately for the groups temperature / humidity, air pressure and wind. (The averaging algorithm is not applied to precipitation and compass).

Command: `aXA<t/p/w/r>+nn!`

t : Temperature and Humidity

p: Air pressure

w: Wind

r: Global radiation

nn: Interval in minutes, valid range: 1 bis 10

Response: `aXA<t/p/w/r>+nn<CR><LF>`

The response to the attempt of setting of an invalid interval length is

`aXAf<CR><LF>`

Example: Setting the interval for temperature and humidity to 5 minutes

`0XAt+5!`

`0XAt+5<CR><LF>`

18.6.10 Message: Setting of the Local Altitude

For the calculation of the relative air pressure the local altitude of the device is required.

Command:`aXH+nnnn!`

nnnn: local altitude of the sensor in m

Response: `aXH+nnnn<CR><LF>`

The response to the attempt of setting of an invalid altitude (-100 < altitude < 5000) is

`aXHf<CR<<LF>`

Example: The altitude of the installation location is 135m above sea level

`0XH+135!`

`0XH+135<CR><LF>`

18.6.11 Message: Setting the Heating Mode

The heating of the precipitation and the wind sensors can be configured in different operation modes (see chapter 10.4). Depending on the actual variant of the compact weather station (WS200 ...WS600) only certain combination of operating modes are available. The station evaluates the valid combinations from the station heating mode requested in the command automatically.

Command: `aXMn!`

n: Heating Operating Mode (0: Automatic, 1: Mode 1, 2: Off, 3: Eco Mode 1)

Response: `aXMnm<CR><LF>`

n: Selected Heating Mode Wind Sensor

m: Selected Heating Mode Precipitation Sensor

The response to the attempt of setting an invalid operation mode is

`aXMf<CR><LF>`

Example: A WS400-UMB shall be set to Mode 1

0XM1!

`0XM21<CR><LF>`

As the WS400-UMB does not have a wind sensor the heating mode wind is automatically set to 2 (= Off).

18.6.12 Message: Clearing the Absolute Precipitation Amount

The command clears the accumulated absolute precipitation amount to 0.0mm. At the same time a station reset is applied..

Command: `aXC!`

Response: `aXCok<CR><LF>`

The response is followed by the station reset, i.e. the station will be offline for a few seconds.

Example:

0XC!

`0XCok<CR><LF>`

18.6.13 Message: Station Reset

The command initiates a station reset.

Command: `aXR!`

Response: `aXRok<CR><LF>`

The response is followed by the station reset, i.e. the station will be offline for a few seconds.

Example:

0XR!

`0XRok<CR><LF>`

18.7 Communication in Modbus Mode

For a simpler integration of WS family Compact Weather Stations into a PLC environment the Modbus communication protocol has been made available.

Measurement values are mapped to Modbus Input Registers. The range of values available is basically the same as for the UMB protocol, including different unit systems.

In the interest of simple and safe integration the use of register pairs for floating point values or 32 bit integers, which is not part of the Modbus standard, has not been applied. All measurement values are mapped to 16bit integers using suitable scaling factors.

18.7.1 Modbus Communication Parameters

The WSxxx can be configured for MODBUS-RTU or for MODBUS-ASCII.

The base configuration has to be done using the UMB Config Tool.

When selecting MODBUS RTU or MODBUS-ASCII with the UMB Config Tool communicationparameters 19200 Bd, evenparity, will be preselected.

Modbus operating modes:	MODBUS-RTU, MODBUS-ASCII
Baudrate:	19200 (9600, 4800 or lower)
Interface Setting	8E1, 8N1

NOTE: The Modbus communication has been tested for a poll rate of 1 sec. The proper function of the Compact Weather Station with higher Modbus poll rates has not been tested.

We suggest to set the poll rate to 10 sec or slower, as, with the exception of the channels „wind speed / wind directions fast“, which are provided for special purposes, the update rate of the data is >= 10sec. Anyway for most of the weather data significant changes have tob e expected more in the range of minutes.

18.7.2 Modbus Functions

The functions of conformance class 0 and 1 havebeen implemented as far as they are applicable for WSxxx, i.e. all functions operating on register level.

	Conformance Class 0	
0x03	Read Holding Registers	Selected configuration settings
0x16	Write Multiple Registers	Selected configuration settings
	Conformance Class 1	
0x04	Read Input Registers	Measurement values and statusinformation
0x06	Write Single Register	Selected configuration settings
0x07	Read Exception Status	Currently not used
	Diagnostics	
0x11	Report Slave ID	(responds also tobroadcastaddress)

18.7.2.1 Function 0x03 Read Holding Registers

The Holding Registers are used to make a selected set of adjustable parameters available for Modbus access. As for the measurement values the parameters are mapped to 16bit integers.

Reg. No.	Reg. Addr	Function	Values	Scale
1	0	Local Altitude	Altitude in m, for calculation of relative air pressure Value range -100 … 5000	1.0
2	1	Deviation	Local deviation for the correction of compass heading. Value range -3599 … 3599 (equalling -359.9° … +359.9°)	10.0
3	2	Averaging Intervall TFF	Intervall for averaging and min/max evaluation in minutes Value range 1 … 10	1.0
4	3	Averaging Intervall Air Pressure	Intervall for averaging and min/max evaluation in minutes Value range 1 … 10	1.0
5	4	Averaging Intervall Wind	Intervall for averaging and min/max evaluation in minutes Value range 1 … 10	1.0
6	5	Averaging Intervall Global Radiation	Intervall for averaging and min/max evaluation in minutes Value range 1 … 10	1.0
7	6	Heating Mode	High-Byte: Heating Mode Wind Low-Byte Heating Mode R2S Value range of each byte 0 … 3 (Details s. 10.4)	
8	7	Reset abs. Rain	(Function only when writing to the register, reading will give 0 always)	
9	8	Station reset	(Function only when writing to the register, reading will give 0 always)	

18.7.2.2 Function 0x06 Write Holding Register, 0x16 Write Multiple Registers

By writing into the holding registers selected parameters of the WSxxx can be adjusted through Modbus.

Register assignment see18.7.2.1

The transmitted values will be checked for plausibility. Illegal values will not be accepted and cause a modbus exception.

When writing the value 0x3247 (12871d) to register 6 the stored absolute rain amount will be set to 0. Subsequently a station reset will be initiated.

When writing the value 0x3247 (12871d) to register 7 a station reset will be initiated.

18.7.2.3 Function 0x04 Read Input Registers

Theinput registersare containing the measurement values of the compact weather station and the related status information.

The measurement values are mapped to the 16bit registers using scaling factors (0 … max. 65530 for unsignedvalues, -32762 … 32762 for signedvalues).

Values 65535 (0xffff) resp. 32767 are used for the indication of erroneous or not available measurement values. A more detailed specification of the error can be evaluated from the status registers.

The assignment of values to the available register addresses (0 … 124) has been arranged in a way so that the user can read the most frequently used data with few (ideally only one) register block requests

Following blocks have been defined:

- Statusinformation
- Frequently used values which are independent of the unit system (metric / imperial) in use
- Frequently used values in metricunits
- Frequently used values in imperial units
- Other measurement values

When using the metric unit system the first three blocks can the supply all data usually required with one request.

There is no difference in the register assignment between the sub types of the WS family. If, dependent on the type, some value is not available, this will be indicated by setting the register to the error value.

For detailed information about measurement ranges, units etc. please refer to the related description of the UMB channels (Chapter 6 and 18.1)

Reg. No.	**Reg. Addr**	**Value (UMB Channel)**	**Range**	**Scaling Factor, Remarks**
		Status Information		
1	0	Identification	Low Byte: WS-Type (2,3,4,5,6) High Byte: Software Version	
2	1	Device Status		
3	2	Sensor Status 1	Air temperature, air temperature buffer, dew point, dew point buffer	Coding 4 bit per status, see below
4	3	Sensor Status 2	Rel.humidity, rel.humidity buffer, abs.humdity, abs.humidity buffer,	Coding 4 bit per status, see below
5	4	Sensor Status 3	Mixing ratio, mixing ration buffer, air pressure, air pressure buffer	Coding 4 bit per status, see below
6	5	Sensor Status 4	Wind, wind buffer, compass, precipitation	Coding 4 bit per status, see below
7	6	Reserve		
8	7	Reserve		
9	8	Reserve		
10	9		Diagnostic: run time in 10sec steps	

Reg. No.	Reg. Addr	Value (UMB Channel)	Range	Scaling Factor, signed/unsigned, Remarks
		Values Independent of the Unit System		
11	10	200	Relative Humidity (act.)	Factor 10, s
12	11	220	Relative Humidity (min.)	Factor 10, s
13	12	240	Relative Humidity (max.)	Factor 10, s
14	13	260	Relative Humidity (avg.)	Factor 10, s
15	14	305	Rel. Air Pressure (act.)	Factor 10, s
16	15	325	Rel. Air Pressure (min.)	Factor 10, s
17	16	345	Rel. Air Pressure (max.)	Factor 10, s
18	17	365	Rel. Air Pressure (avg.)	Factor 10, s
19	18	500	Wind Direction (act.)	Factor 10, s
20	19	520	Wind Direction (min.)	Factor 10, s
21	20	540	Wind Direction (max.)	Factor 10, s
22	21	580	Wind Direction (vct.)	Factor 10, s
23	22	501	Wind Direction fast	Factor 10, s
24	23	502	Wind Direction compass corr.	Factor 10, s
25	24	510	Compass	Factor 10, s
26	25	805	Wind Measurement Quality	Factor 1, s
27	26	700	Precipitation Type	Factor 1, u
28	27	900	Global Radiation	Factor 10, s
29	28	920	Global Radiation	Factor 10, s
30	29	940	Global Radiation	Factor 10, s
31	30	960	Global Radiation	Factor 10, s

Reg. No.	Reg. Addr	Value (UMB Channel)	Range	Scaling Factor, signed/unsigned Remarks
		Values in Metric Units		
32	31	100	Air Temperature °C (act.)	Factor 10, s
33	32	120	Air Temperature °C (min.)	Factor 10, s
34	33	140	Air Temperature °C (max.)	Factor 10, s
35	34	160	Air Temperature °C (avg.)	Factor 10, s
36	35	110	Dew Point °C (akt.)	Factor 10, s
37	36	130	Dew Point °C (min.)	Factor 10, s
38	37	150	Dew Point °C (max.)	Factor 10, s
39	38	170	Dew Point °C (avg.)	Factor 10, s
40	39	111	Wind Chill-Temperature °C	Factor 10, s
41	40	112	Heating Temperature Wind °C	Factor 10, s
42	41	113	Heating Temperature R2S °C	Factor 10, s
43	42	400	Wind Speed m/s (akt.)	Factor 10, s
44	43	420	Wind Speed m/s (min.)	Factor 10, s
45	44	440	Wind Speed m/s (max.)	Factor 10, s
46	45	460	Wind Speed m/s (avg.)	Factor 10, s
47	46	480	Wind Speed m/s (vct.)	Factor 10, s
48	47	401	Wind Speed fast m/s	Factor 10, s
49	48	620	Precipitation abs. mm	Factor 100, u, limited to 655.34mm
50	49	620	Precipitation diff. mm	Factor 100, u, limited to 100.00mm
51	50	820	Precipitation intens. mm/h	Factor 100, u, limited to 200.00mm/h

Reg. No.	Reg. Addr	Value (UMB Channel)	Range	Scaling Factor, signed/unsigned Remarks
		Values in US Units		
52	51	105	Air Temperatur °F (act.)	Factor 10, s
53	52	125	Air Temperatur °F (min.)	Factor 10, s
54	53	145	Air Temperatur °F (max.)	Factor 10, s
55	54	165	Air Temperatur °F (avg.)	Factor 10, s
56	55	115	Dew Point °F (act.)	Factor 10, s
57	56	135	Dew Point °F (min.)	Factor 10, s
58	57	155	Dew Point °F (max.)	Factor 10, s
59	58	175	Dew Point °F (avg.)	Factor 10, s
60	59	116	Wind Chill-Temperature °F	Factor 10, s
61	60	117	Heating Temperature Wind °F	Factor 10, s
62	61	118	Heating Temperature R2S °F	Factor 10, s
63	62	410	Wind Speed mph (act.)	Factor 10, s
64	63	430	Wind Speed mph (min.)	Factor 10, s
65	64	450	Wind Speed mph (max.)	Factor 10, s
66	65	470	Wind Speed mph (avg.)	Factor 10, s
67	66	490	Wind Speed mph (vct.)	Factor 10, s
68	67	411	Wind Speed fast mph	Factor 10, s
69	68	640	Precipitation abs. In	Factor 1000, u, limited to 25.800 in
70	69	640	Precipitation diff. in	Faktor 10000, u, limited to 3.9370in
71	70	840	Precipitation Intens. in/h	Faktor 10000, u, limited to 6.5534 in

Reg. No.	Reg. Addr	Value (UMB Channel)	Range	Scaling Factor, signed/unsigned, Remarks
		Further Values		
	71	205	Absolute Humidity (act.)	Factor 10, s
73	72	225	Absolute Humidity (min.)	Factor 10, s
74	73	245	Absolute Humidity (max.)	Factor 10, s
75	74	265	Absolute Humidity (avg.)	Factor 10, s
76	75	210	Mixing Ratio (act.)	Factor 10, s
77	76	230	Mixing Ratio (min.)	Factor 10, s
78	77	250	Mixing Ratio (max.)	Factor 10, s
79	78	270	Mixing Ratio (vct.)	Factor 10, s
80	79	300	Abs. Air Pressure (act.)	Factor 10, s
81	80	320	Abs. Air Pressure (min.)	Factor 10, s
82	81	340	Abs. Air Pressure (max.)	Factor 10, s
83	82	360	Abs. Air Pressure (avg.)	Factor 10, s
84	83	405	Wind Speed km/h (act.)	Factor 10, s
85	84	425	Wind Speed km/h (min.)	Factor 10, s
86	85	445	Wind Speed km/h (max.)	Factor 10, s
87	86	465	Wind Speed km/h (avg.)	Factor 10, s
88	87	485	Wind Speed km/h (vct.)	Factor 10, s
89	88	415	Wind Speed kts (act.)	Factor 10, s
90	89	435	Wind Speed kts (min.)	Factor 10, s
91	90	455	Wind Speed kts (max.)	Factor 10 , s
92	91	475	Wind Speed kts (avg.)	Factor 10, s
93	92	495	Wind Speed kts (vct.)	Factor 10, s
94	93	406	Wind Speed fast km/h	Factor 10, s
95	94	416	Wind Speed fast kts	Factor 10, s
96	95	403	Wind Speed Std. Dev. m/s	Factor 100, s
97	96	413	Wind Speed Std. Dev. mph	Factor 100, s
98	97	503	Wind Dir. Standard Dev.	Factor 100, s
99	98	114	Wet Bulb Temp. °C (act)	Factor 10, s
100	99	119	Wet Bulb Temp. °F (act)	Factor 10, s
101	100	215	Specific Enthalpy (act)	Factor 10, s
102	101	310	Air Density (act)	Factor 1000, s
	...	Reserved		
125	124			

Sensor Status:

Each register holds 4 sensor status coded with 4 bits per status. The sequence defined in the table above is to understand as from most significant half byte to least significant half byte. Most of the sensors have two status values, one for the sensor itself and the current measurement value, another one for the buffer, from which average, min. And max values are evaluated.

Following table shows the status coding:

Coding of Sensor Status:

Sensor State	Code
OK	0
UNGLTG_KANAL	1
E2_CAL_ERROR E2_CRC_KAL_ERR FLASH_CRC_ERR FLASH_WRITE_ERR FLASH_FLOAT_ERR	2
MEAS_ERROR, MEAS_UNABLE	3
INIT_ERROR	4
VALUE_OVERFLOW CHANNEL_OVERRANGE VALUE_UNDERFLOW CHANNEL_UNDERRANGE	5
BUSY	6
Other Sensor State	7

19 List of Figures

Figure 1: Sensor Technology 11
Figure 2: Fastening to the Mast 19
Figure 3: North Markings 20
Figure 4: Alignment to North 20
Figure 5: Installation Sketch 22
Figure 6: Connections 23
Figure 7: Connection to ISOCON-UMB 24
Figure 8: Sensor Selection 26
Figure 9: General Settings 27
Figure 10 Temperature, Humidity and Fan Settings 27
Figure 11 Pressure and Wind Settings 28
Figure 12 Rain Gauge Settings 29
Figure 13 Energy Management Settings 29
Figure 14: Reset Precipitation Quantity 30
Figure 15 Measurement Polling Channels 31
Figure 16 Example of Measurement Polling 31
Figure 17: Operating Modes for Equipment Heating 32
Figure 18: WS200-UMB 38
Figure 19: WS300-UMB 38
Figure 20: WS301-UMB 39
Figure 21: WS400-UMB 40
Figure 22: WS500-UMB 41
Figure 23: WS501-UMB 42
Figure 24: WS600-UMB 43
Figure 25Sensor Configuration SDI-12 58
Figure 26Sensor Configuration SDI-12 Units 58

20 Index

A

Accessories ... 8
Accuracy ... 36
Air Density ... 10, 14
Air Pressure ... 9, 13
Air Temperature ... 9
Altitude ... 28
ASCII-Protokoll ... 53

B

Binary Protocol ... 50

C

Certificate of Conformity ... 44
Channel List ... 47
Channel List per TLS2002 ... 49
Class ID ... 50, 51
Commissioning ... 25
Communication ... 53, 55
Communication ... 90
Compass ... 10, 16, 28
Configuration ... 26
Connections ... 23

D

Data Request ... 50
Declination ... 28
Delivery Status ... 26
Designated Use ... 5
Device ID ... 50, 51
Dimensions ... 35
Disposal ... 46
Distance between objects ... 21
Drawings ... 38

E

Energy Management ... 29
Enthalpy ... 9, 14
Error Codes ... 52, 54

F

Factory Settings ... 26
Fan ... 27
Fault Description ... 45
Firmware Update ... 34

G

Global Radiation ... 10, 18
Guarantee ... 5, 46

H

Heating ... 10, 18, 23, 24, 32, 35
Humidity ... 9, 13

I

Incorrect Use ... 5
Installation ... 19
Installation Location ... 21
Interface ... 23, 35
ISOCON-UMB ... 24

L

Local Altitude ... 28

M

Maintenance ... 34
Measurement Output ... 13
Measurement Polling (UMB-Config-Tool) ... 31
Measurement Values ... 12
Measuring Range ... 36
Modbus ... 90

N

North Alignment ... 20

O

Operating Conditions ... 35
Order Numbers ... 6

P

Power Supply Unit ... 23
Precipitation ... 9, 17
Protectiontype ... 35

R

Relative Air Pressure ... 28
Reset Precipitation Quantity ... 30

S

Safety Instructions ... 5
Scope of Delivery ... 6
SDI-12 Mode ... 23, 58
Sensor Technology ... 11
Storage Conditions ... 35
Supply Voltage ... 23
Symbols Used ... 5

T

Technical Data ... 35
Technical Support ... 46
Temperature ... 13
Terminal-Mode ... 55
Test ... 26

U

UMB-Config-Tool ... 26, 31

W

Weight ... 35
WetBulb Temperature ... 9, 14
Wind ... 10, 15

Blank page for printing purposes.

Blank page for printing purposes.

Blank page for printing purposes.

Blank page for printing purposes.

G. Lufft Mess- und Regeltechnik GmbH

Gutenbergstraße 20
70736 Fellbach

P.O. Box 4252
70719 Fellbach
Germany

Phone: +49 711 51822-0
Hotline: +49 711 51822-52
Fax: +49 711 51822-41
E-Mail: info@lufft.com

48.7230-WSX-E
Documentversion V15 (07/2011)

STANDARD OPERATING PROCEDURE

Digital Sound Level Meter

1. Purpose

The purpose of this SOP is to provide general reference information for using the Extech Digital Sound Level Meter in the field. Calibration and operation, along with field maintenance, will be included in this SOP.

2. Scope

This procedure provides information into the field operation and general maintenance of the Extech Digital Sound Level Meter. Review of the information contained herein will ensure that this type of field monitoring equipment will be properly utilized. Review of the owner's instruction manuals is a necessity for more detailed descriptions.

3. Equipment Required

Sound meter and accessories, charger etc.
Operation Manual

4. Responsibilities

Project Manager(PM) /Construction Manager(CM) - The PM/CM is responsible for ensuring that project-specific plans are in accordance with these procedures, where applicable, or that other approved procedures are developed. The Project Manager is responsible for selecting qualified individuals for the monitoring activities.

Field Team Leader(FTL) and/or Safety Coordinator(SC) - It is the responsibility of the FLT/SC to implement these procedures in the field, and to ensure that the field team performing air monitoring activities have been briefed and trained to execute these procedures before the start of site operations. FTL/SC is also responsible to ensure that the specified air monitoring equipment is on site, calibrated, and used correctly by the field personnel. The field personnel are responsible for documenting all air monitoring results in the field logbook during each field investigation.

5. Procedures

The sound level meter measures and displays sound pressure levels in dB from 40 to 130 dB. The frequency weighting A or C can be selected. The response time (fast or slow) can be chosen as well as max/min recording. The following subsections will discuss sound meter calibration, operation, and maintenance. These sections, however, do not take the place of the instruction manual.

5.1 Calibration

The Extech Digital Sound Level Meter requires additional equipment to be calibrated. It will be verified with the equipment rental company that the meter is calibrated before going to the field.

5.2 Operation

The operation of the digital sound meter is relatively simple. It is recommended that you follow the operational procedures as outlined in the instruction manual from pages 3 to 4.

5.3 Site Maintenance

The digital sound meter doesn't have any field maintenance operations except to not store or operate in high temperature or humid areas. Keep meter and microphone dry and avoid severe vibration. And remove the battery for long term storage.

6. Quality Assurance Records

Quality assurance records will be maintained for each air monitoring event. The following information shall be recorded in the field logbook.

- Identification - Site name, date, location, activity monitored, serial number, time, resulting concentration, comments and identity of air monitoring personnel.
- Field observations - Appearance of sampled media (if definable).
- Additional remarks (e.g, digital sound meter had wide range fluctuations during noise monitoring activities.)

7. References

Digital Sound Level Meter Model 407730, User's Guide, Extech Instruments A Flir Company, 2012.

User's Guide

EXTECH® INSTRUMENTS
A FLIR COMPANY

Digital Sound Level Meter

Model 407730

RM 10.9 Perimeter Air Monitoring Plan
Attachment 2
A-2-502

Introduction

Congratulations on your purchase of the Extech 407730 Digital Sound Level Meter. The 407730 measures and displays sound pressure levels in dB from 40 to 130dB. User selectable features include Frequency Weighting ('A' and 'C'), Response Time (Fast and Slow), Max Hold, and Max/Min recording. Careful use of this meter will provide years of reliable service.

Meter Description

1. Microphone
2. LCD Display
3. ON-OFF button
4. A/C weighting selection button
5. Min/Max Record button
6. Range selector button
7. F/S response selection button
8. Max Hold selector button
9. Calibration adjustment
10. AC analog output jack
11. Windscreen

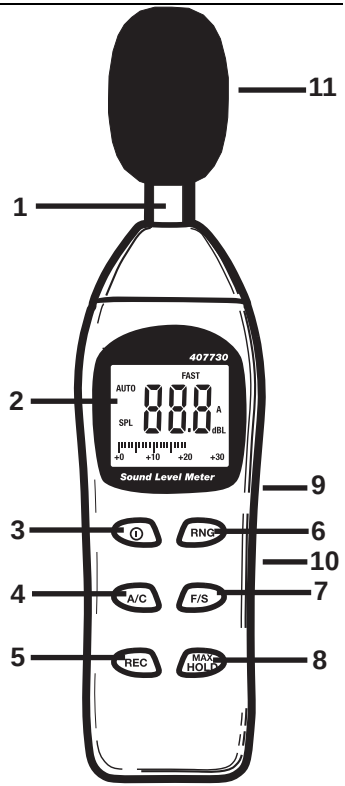

1. Record icon
2. Auto or Manual range
3. Range indicator
4. Bargraph
5. A or C weighting
6. Low bat icon
7. Max level indicator
8. Hold indicator
9. Min indicator
10. Fast or Slow weighting
11. dB display

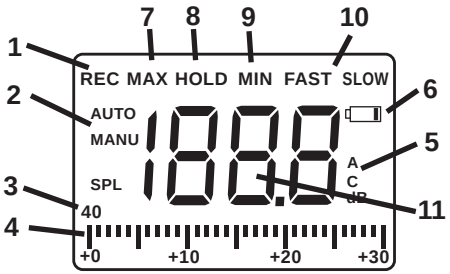

Operation

1. Power the meter by pressing the ⏻ power button. The meter will begin displaying sound level readings. If the LCD does not switch on, check the 9V battery located in the rear battery compartment.
2. Hold the meter away from the body.
3. View the measurement on the meter's display. If the meter is in the autoranging mode, the display may briefly indicate "HI" or "LO" if the noise level is above or below the currently selected range. The meter will change the range as needed to display the dB level.

'A' and 'C' Frequency Weighting

Use the 'A/C' button to select 'A' or 'C' frequency weighting.

With 'A' weighting selected, the frequency response of the meter is similar to the response of the human ear. 'A' weighting is commonly used for environmental or hearing conservation programs such as OSHA regulatory testing and noise ordinance law enforcement. 'C' weighting is a much flatter response and is suitable for the sound level analysis of machines, engines, etc. "A" or "C" icons will appear in the display.

Most noise measurements are performed using 'A' Weighting and SLOW Response.

'FAST' and 'SLOW' Response Time

Use the 'F/S' button to select FAST (125 ms) or SLOW (1 second) response time. Select FAST to capture noise peaks and noises that occur very quickly. Select the SLOW response to monitor a sound source that has a consistent noise level or to average quickly changing levels. "FAST" or "SLOW" icons will appear in the display.

Select Slow response for most applications.

Auto or Manual Ranging

The meter will turn on in the auto-ranging mode and "AUTO" will be indicated on the display. In this mode the meter will automatically select the best range for the noise level being measured. If the measured dB level exceeds the range of the meter or the range of a selected range, "HI" will appear in the display. If the measured dB level is lower than the selected range, "LO" will appear in the display.

1. Press the **RNG** button to manually select the range, "MANU" will be indicated on the display. The four ranges are: 40-70, 60-90, 80-110 and 100-130. Press the **RNG** button to step through the ranges.
2. Press and Hold the **RNG** button for 2 seconds to exit the manual range mode.

MAX HOLD

In this mode the meter only updates the LCD when a higher reading than the one presently on the display is detected.

1. Press the **MAX HOLD** button to enter the Max Hold mode.. The "MAX HOLD" icon will appear in the display.
2. Press the **MAX HOLD** button again to exit this mode.

MAX/MIN Recording

In this mode the meter records the Maximum and Minimum readings and stores them into memory.

1. Press the **REC** button to enter the RECORD mode. The “REC” icon will appear in the display.
2. Press the **REC** button again to display the minimum value recorded since the mode was entered. The “MIN” icon will appear in the display. The meter is not recording during this time.
3. Press the **REC** button again to display the maximum value recorded since the mode was entered. The “MAX” icon will appear in the display. The meter is not recording during this time.
4. Press the **REC** button again to display the present dB level and continue recording.
5. Press and hold the **REC** button until the “REC” icon clears to exit the mode.

Auto-Power Off

The meter will automatically shut off after 20 minutes of operation. To disable this feature:

1. With the meter OFF, Press the ⏻ and **MAX HOLD** buttons simultaneously.
2. ⊓ will appear in the display
3. Release the ⏻ button and then release the **MAX HOLD** button.
4. The meter will remain on until the power button is pressed.

Calibration

To calibrate the meter, an external calibrator such as the Extech 407744 or the Extech 407766 is required in addition to a small screw-driver.

1. Turn the meter ON
2. Select the 80 to 110dB range
3. Select ‘A’ weighting and ‘SLOW’ response
4. Place the microphone into the calibrator. Set the calibrator to output a 1kHz sine wave @ 94dB
5. Adjust the calibration potentiometer for a display as close as possible to the calibrator’s output

Battery Replacement

When the low battery icon appear replace the battery by removing the screw securing the rear battery compartment and replacing the 4 AAA batteries.

You, as the end user, are legally bound (**Battery ordinance**) to return all used batteries and accumulators; **disposal in the household garbage is prohibited!**

You can hand over your used batteries / accumulators at collection points in your community or wherever batteries / accumulators are sold!

Disposal: Follow the valid legal stipulations in respect of the disposal of the device at the end of its lifecycle

Tripod Mount

A camera tripod mount is located on the rear of the meter for increased stability and elimination of body reflections.

Measurement Considerations

1. Wind blowing across the microphone increases the noise measurement. Use the supplied windscreen to cover the microphone when applicable.
2. Calibrate the instrument before each use if possible. Especially if the meter has not been used for a long period of time.
3. Do not store or operate the instrument in areas of high temperature or humidity.
4. Keep meter and microphone dry.
5. Avoid severe vibration.
6. Remove the battery when the meter is to be stored for long periods of time.

Specifications

Display	LCD with bargraph
Microphone	10mm (0.5”) Electret condensor
Measurement Bandwidth	300Hz to 8KHz
Measurement Range	40 to 130dB (A wtg), 45 to 130dB (C wtg)
Frequency weighting	‘A’ and ‘C’ (selectable)
Accuracy / Resolution	± 2dB @1kHz (under reference conditions) / 0.1dB
Response time	Fast: 125 milliseconds / Slow: 1 second
Calibration source	1KHz sine wave @ 94 or 114dB
AC output	0.707Vrms full scale
Power	4 AAA Batteries
Battery life	30 hours (typical); low battery indicator alerts user
Automatic power off	After approx. 20 minutes
Operating temperature	0 to 50°C (32 to 122°F)
Operating humidity	10 to 90% RH
Storage temperature	-20 to 60°C (-4 to 140°F)
Dimensions/weight	230 x 57 x 44mm (9 x 2.3 x 1.7”) / 172g (6oz)

Copyright © 2012 Extech Instruments Corporation (a FLIR company)
All rights reserved including the right of reproduction in whole or in part in any form.
www.extech.com

Attachment 3
Laboratory SOPs

Test America – Knoxville – SOP KNOX-GC-0015 Rev. 15 A-3-2
Analysis of PCBs as Aroclors Based on Methods 8082, 8082A, TO-4A, and TO-10A -

Test America – Knoxville – SOP KNOX-ID-004 Rev. 12 A-3-27
Analysis of Polychlorinated Dioxins/Furans by High Resolution Gas Chormatography/High Resolution Mass Spectrometry (HRGC/HRMS) Based on Methods 8290, 8290A, 1613B, 23, 0023A, and TO-9A

Test America – Knoxville – SOP KNOX-WC-0028 Rev. 8 A-3-89
Determination of Particulate Matter as PM_{10} and Total Suspended Particulate Matter (TSP) in Hi-Vol Filters, and Nuisance Dust by NIOSH Method 0500

Test America – Knoxville – SOP KNOX-IP-0003 Rev. 6 A-3-108
Digestion of Total Metals in Filters

Test America – Knoxville – SOP KNOX-MT-0009 Rev. 11 A-3-122
Preparation and Analysis of Mercury in Aqueous Samples by Cold Vapor Atomic Absorption SW846 7470A and EPA 245.1

TESTAMERICA KNOXVILLE

STANDARD OPERATING PROCEDURE

TITLE: Analysis of PCBs as Aroclors Based on Methods 8082, 8082A, TO-4A, and TO-10A

(SUPERSEDES: KNOX-GC-0015, Rev. 14)

Prepared By: Michael S. Patty

Reviewed By: Robyn M. Wagner 7/11/11
Technical Specialist

Approved By: Christopher White Rugett 07/11/11
Quality Assurance Manager

Approved By: Barry L. Clark 7-11-11
Environmental, Health and Safety Coordinator

Approved By: [signature] 7/11/11
Laboratory Director

Copyright Information:

This documentation has been prepared by TestAmerica Laboratories, Inc. and its affiliates ("TestAmerica"), solely for their own use and the use of their customers in evaluating their qualifications and capabilities in connection with a particular project. The user of this document agrees by its acceptance to return it to TestAmerica upon request and not to reproduce, copy, lend, or otherwise disclose its contents, directly or indirectly, and not to use it for any other purpose other than that for which it was specifically provided. The user also agrees that where consultants or other outside parties are involved in the evaluation process, access to these documents shall not be given to said parties unless those parties also specifically agree to these conditions.

THIS DOCUMENT CONTAINS VALUABLE CONFIDENTIAL AND PROPRIETARY INFORMATION. DISCLOSURE, USE OR REPRODUCTION OF THESE MATERIALS WITHOUT THE WRITTEN AUTHORIZATION OF TESTAMERICA IS STRICTLY PROHIBITED. THIS UNPUBLISHED WORK BY TESTAMERICA IS PROTECTED BY STATE AND FEDERAL LAW OF THE UNITED STATES. IF PUBLICATION OF THIS WORK SHOULD OCCUR THE FOLLOWING NOTICE SHALL APPLY: @COPYRIGHT 2011 TESTAMERICA LABORATORIES, INC. ALL RIGHTS RESERVED

1. Scope and Application

1.1. This SOP describes procedures to be used for the analysis of polychlorinated biphenyls (PCBs) by gas chromatography/electron capture detection (GC/ECD). It is based on SW-846 Methods 8082, 8082A and EPA Method TO-4A and TO-10A. It is applicable to extracts derived from any matrix which are prepared according to the appropriate sample extraction SOP (KNOX-OP-0011 and KNOX-OP-0002). The PCBs are determined and quantitated as Aroclor mixes.

1.2. Table 1 lists compounds that are routinely determined by this procedure and gives the reporting limits (RL) for each matrix. RLs are based on the low level standard and the sample preparation concentration factors. Matrix interferences may result in higher RLs than those listed.

2. Summary of Method

2.1. This method presents conditions for the analysis of prepared extracts for PCBs as Aroclors. The PCBs are injected onto a GC column and separated and detected by electron capture detection. Quantitation is by the external standard method.

2.2. In general, aqueous samples are prepared for analysis using continuous or separatory funnel liquid / liquid extraction; solid samples are prepared using sonication or Soxhlet extraction; air samples are prepared by Soxhlet extraction; tissue samples are extracted with methylene chloride using Soxhlet extraction; and waste dilution is used for samples that are miscible with solvent.

2.3. After the initial preparation step, the sample is introduced to the GC and concentrations of target analytes are measured by the detector response, within a defined retention time window, relative to the response to standard concentrations.

3. Definitions

3.1. Definitions of terms used in this SOP may be found in the glossary of the TestAmerica Knoxville Quality Assurance Manual (QAM).

4. Interferences

4.1. Contamination by carryover can occur when a low concentration sample is analyzed after a high concentration sample. Co-elution of target analytes with non-targets can occur, resulting in false positives or biased high results.

4.2. Interferences in the GC analysis arise from many compounds amenable to gas chromatography that give a measurable response on the electron capture detector.

Phthalate esters, which are common plasticizers, can pose a major problem in the determination. Interferences from phthalates are minimized by avoiding contact with any plastic materials.

4.3. Sulfur will interfere and can be removed using procedures described in section 11.2.

4.4. Interferences co-extracted from samples will vary considerably from source to source. The presence of interferences may raise quantitation limits for individual samples. Specific cleanups may be performed on the sample extracts, including Florisil cleanup (Method 3620), Gel Permeation Chromatography (Method 3640), sulfur cleanup (Method 3660), and sulfuric acid cleanup (Method 3665A). These cleanup procedures are included in SOPs KNOX-OP-0011 and KNOX-OP-0002.

5. Safety

5.1. Employees must abide by the policies and procedures in the Corporate Safety Manual, Radiation Safety Manual and this document.

5.2. Specific Safety Concerns or Requirements

5.2.1. The gas chromatograph contains zones that have elevated temperatures. The analyst needs to be aware of the locations of those zones, and must cool them to room temperature prior to working on them.

5.2.2. There are areas of high voltage in the gas chromatograph. Depending on the type of work involved, either turn the power to the instrument off, or disconnect it from its source of power.

5.3. Primary Materials Used: The following is a list of the materials used in this method, which have a serious or significant hazard rating. NOTE: This list does not include all materials used in the method. A complete list of materials used in the method can be found in the reagents and materials section. Employees must review the information in the MSDS for each material before using it for the first time or when there are major changes to the MSDS.

Material (1)	Hazards	Exposure Limit (2)	Signs and symptoms of exposure
Hexane	Flammable Irritant	500 ppm-TWA	Inhalation of vapors irritates the respiratory tract. Overexposure may cause lightheadedness, nausea, headache, and blurred vision. Vapors may cause irritation to the skin and eyes.

Material (1)	Hazards	Exposure Limit (2)	Signs and symptoms of exposure
Sulfuric Acid	Corrosive Oxidizer Dehydrator Poison Carcinogen	1 Mg/M3-TWA	Inhalation produces damaging effects on the mucous membranes and upper respiratory tract. Symptoms may include irritation of the nose and throat, and labored breathing. Symptoms of redness, pain, and severe burn can occur. Contact can cause blurred vision, redness, pain and severe tissue burns. Can cause blindness.
1 – Always add acid to water to prevent violent reactions.			
2 – Exposure limit refers to the OSHA regulatory exposure limit.			

5.3.1. Aroclors have been classified as potential carcinogens under OSHA. Concentrated solutions of Aroclors must be handled with extreme care to avoid excess exposure. Contaminated gloves and clothing must be removed immediately. Contaminated skin surfaces must be washed thoroughly.

5.4. Opened containers of neat standards will be handled in a fume hood.

5.5. When using hydrogen gas as a carrier, all precautions listed in the TestAmerica Environmental Health and Safety Manual shall be observed.

5.6. Equipment goggles or a face shield **must** be used when employees are using solvents to rinse or clean glassware.

5.7. All work must be stopped in the event of a known or potential compromise to the health or safety of an associate. The situation must be reported **immediately** to a laboratory supervisor.

6. Equipment and Supplies

6.1. An analytical system complete with a gas chromatograph and a ^{63}Ni electron capture detector is required. A data system capable of measuring peak height is required.

6.2. Refer to Table 2 for analytical columns.

6.3. Microsyringes, various sizes, for standards preparation, sample injection, and extract dilution.

7. Reagents and Standards

7.1. Stock Standards: Stock standards are purchased as certified solutions or prepared from pure solutions. Stock standard solutions are stored at $\leq 6^{o}$C and must be replaced after one year. All stock standards must be protected from light. Stock standard solutions should be brought to room temperature before using.

7.1.1. Expiration times for all standards are measured from the time the standard is prepared or from the time that the standard ampoule is opened if the standard is supplied in a sealed ampoule. If a vendor supplied standard has an earlier expiration date, then that date is used.

7.2. Calibration Standards: Refer to Table 3 for concentrations of calibration standards.

7.2.1. Calibration standards are prepared as dilutions of the stock standards. Calibration solutions must be refrigerated at $\leq 6^{o}C$ and protected from light. The standards must be replaced at least every six months or sooner if comparison with check standards indicates a problem.

7.3. Surrogate Standards: Tetrachloro-m-xylene and decachlorobiphenyl are the surrogate standards. Other surrogates may be used at client request. Refer to Tables 3 and 4 for concentrations of surrogate standards.

7.4. DDT, DDD, and DDE retention time standard. Prepare a mixture (e.g., 200ug/L) of Accustandard AS-E0124, AS-E0091, and AS-E0092, or equivalent.

7.5. Quality control (QC) Standards: QC standards (matrix spiking and LCS standards) are prepared and stored in the same way as calibration standards. Refer to Table 4 for concentrations of the QC standards.

7.6. Initial Calibration Verification Standard (2nd Source Standard): Initial calibration verification (ICV) standards are to be prepared and stored in the same way as the calibration standards. The mid-level ICV standard includes each multi-component target analyte. The standards must be prepared from a stock independent from the calibration standards. (Refer to section 10.11 for the ICV analysis frequency and acceptance criteria.)

8. Sample Collection, Preservation and Storage

8.1. Sampling is not performed for this method by TestAmerica Knoxville. For information regarding sample shipping, refer to SOP KNOX-SC-0003, “Receipt and Log In of Commercial Samples”, current revision.

8.2. Extracts must be refrigerated at $\leq 6^{o}C$ and analyzed within 40 days of extraction.

9. Quality Control

9.1. Initial Demonstration of Capability: For the standard analyte list, the initial demonstration and method detection limit (MDL) studies described in section 13 must be acceptable before analysis of samples may begin.

9.2. Batch: Batches are defined at the sample preparation stage. Batches should be kept together through the entire analytical process as far as possible, but it is not mandatory to analyze prepared extracts on the same instrument or in the same sequence. Refer to the QC Program document (QA-003) for further details of the batch definition.

9.2.1. Quality Control Batch: The batch is a set of up to 20 samples of the same matrix processed using the same procedures and reagents within the same time period. The Quality Control batch must contain a matrix spike/spike duplicate (MS/MSD), a laboratory control sample (LCS), and a method blank. Laboratory generated QC samples (blank, LCS, MS/MSD) do not count towards the maximum 20 samples in a batch. Field QC samples are included in the batch count. In some cases, at client request, the MS/MSD may be replaced with a matrix spike and sample duplicate. If insufficient sample is available for an MS/MSD, a LCS duplicate may be substituted.

NOTE: LCS duplicates are not required for methods TO-4A and TO-10A.

9.3. Control Limits: In-house historical control limits must be determined for surrogates, matrix spikes, and laboratory control samples. These limits must be determined at least annually. The recovery limits are mean recovery +/- 3 standard deviations, unless that limit is tighter than the calibration criteria, in which case limits may be widened. Refer to policy QA-003 for more details. Spiked analyte control limits for all aqueous, soil, and waste matrices must not exceed 70-130% recovery for Laboratory Control Samples in quality control sample batches containing regulatory compliance samples for reporting to South Carolina DHEC. This includes any samples required by or which will be officially submitted to South Carolina DHEC.

9.3.1. These limits do not apply to dilutions, but surrogate and matrix spike recoveries will be reported unless the dilution is more than 5X.

9.3.2. All surrogate, LCS, and MS recoveries (except for dilutions greater than 5X) must be entered into QuantIMS so that accurate historical control limits can be generated.

9.4. Surrogates: Surrogates in samples and QC samples must be assessed to ensure that recoveries are within established limits. If any surrogates are outside limits, the following corrective actions must take place (except for dilutions greater than 5X):

- Check all calculations for error.
- Ensure that instrument performance is acceptable.
- Recalculate the data and/or reanalyze the extract if either of the above checks reveal a problem.

- Reprepare and reanalyze the sample or flag the data as "Estimated Concentration" if none of the above resolves the problem. Repreparation is not necessary if there is obvious chromatographic interference.
- The decision to reanalyze or flag the data should be made in consultation with the client. It is only necessary to reprepare/reanalyze a sample once to demonstrate that poor surrogate recovery is due to a matrix effect, unless the analyst believes that the repeated out of control results are not due to a matrix effect.

9.4.1. If the surrogates are out of control for the sample, matrix spike, and matrix spike duplicate, then a matrix effect has been demonstrated for that sample and repreparation is not necessary. If the sample is out of control and the MS and/or MSD is in control, then repreparation or flagging of the data is required.

9.4.2. If one surrogate is out of control in a sample and all surrogates are in control for the method blank and LCS, then a matrix effect has been demonstrated for the sample and repreparation is not necessary.

9.5. Method Blanks: For each batch of samples, analyze a method blank. The method blank consists of all reagents added to the sample. (Refer to SOP KNOX-OP-0011 and KNOX-OP-0002 for details). Surrogates are added and the method blank is carried through the entire analytical procedure. The concentration of any target analyte must be ≤RL and the method blank must meet the following acceptance criteria:

Method Blank Concentration	Sample Concentration	Corrective Action
>MDL but <RL	>MDL	Report results. Flag samples with "B" qualifier if estimated values below RL are requested.
>RL	>20X method blank concentration	Report results. Flag samples with "B" qualifier.
>RL	>RL and <20X method blank concentration	Re-extract sample.
>RL	<RL	Report results. Flag samples with "B" qualifier if estimated values below RL are requested.

9.6. Instrument Blanks

9.6.1. An instrument blank must be analyzed during any 12 hour period of analysis that does not contain a method blank.

9.6.2. An instrument blank consists of the appropriate solvent with surrogates added.

9.6.3. Control criteria are the same as for the method blank, except that only reanalysis of affected samples would be required, not re-extraction.

9.7. Laboratory Control Samples (LCS): For each batch of samples, analyze a LCS. The LCS contains a representative subset of the analytes of interest (i.e., Aroclors 1016 and 1260) and must contain the same analytes as the matrix spike. If any analyte or surrogate is outside the established control limits, the system is out of control and corrective action must occur. Corrective action will normally be repreparation and reanalysis of the batch.

9.8. Matrix Spikes: For each QC batch, analyze a matrix spike and matrix spike duplicate. Spiking compounds and levels are given in Table 4. Compare the percent recovery and relative percent difference (RPD) to those in the laboratory specific, historically generated limits.

9.8.1. If any individual recovery or RPD falls outside the acceptance range, corrective action must occur. The initial corrective action will be to check the recovery of that analyte in the LCS. Generally, if the recovery of the analyte in the LCS is within limits, then the laboratory operation is in control and analysis may proceed.

9.8.2. If the recovery for any component is outside QC limits for both the matrix spike/spike duplicate and the LCS, the laboratory is out of control and corrective action must be taken. Corrective action will normally include repreparation and reanalysis of the batch.

9.8.3. If a MS/MSD is not possible due to limited sample, then a LCS duplicate should be analyzed.

NOTE: LCS duplicates are not required for methods TO-4A and TO-10A.

9.8.4. The MS/MSD must be analyzed at the same dilution as the unspiked sample, whenever possible. It is acceptable to report spiked analyte concentrations above the calibration range (flagged with “E” qualifier) if it is necessary in order to meet this dilution requirement.

9.9. Quality Assurance Summaries: Certain clients may require specific project or program QC that may supersede these method requirements. Quality Assurance Summaries should be developed to address these requirements.

9.10. QC Program: Further details of QC and corrective action guidelines are presented in the QC Program document (QA-003). Refer to this document if in doubt regarding corrective actions.

10. Calibration and Standardization

10.1. Refer to Table 2 for GC operating conditions.

10.2. Refer to Table 5 for a suggested analytical sequence.

10.3. Refer to policy CA-Q-S-002, current revision, Acceptable Manual Integration Practices and the Knoxville attachment for information on manual integration practices and documentation requirements.

10.4. External standard calibration is performed. Prepare standards at five concentration levels. The low level standard should be at or below the reporting limit. The other standards define the working range of the detector. Typical calibration levels are listed in Table 3.

10.4.1. A five point calibration of the Aroclor 1016/1260 mix is generated with at least mid-level single point standards for the other Aroclor mixes. The average calibration factor is used to quantitate Aroclors 1016 and 1260; other Aroclors are quantitated from the mid-level single point standard.

10.4.2. The analyst may include a full 5 point calibration for any of the Aroclors with the initial calibration.

10.4.3. The high and low standards for the initial 5 point calibration of Aroclors1016/1260 define the acceptable quantitation range for the other Aroclors. If any Aroclor is determined above this concentration, the extract must be diluted and reanalyzed.

10.4.4. If the analyst knows that a specific Aroclor is of interest for a particular project, that Aroclor may be used for the five point calibration rather than the 1016/1260 mix.

10.4.5. The surrogate calibration curve is calculated from the Aroclor 1016/1260 mix. Surrogates in the other calibration standards are used only as retention time markers.

10.5. A new calibration curve must be generated after major changes to the system or when the continuing calibration criteria cannot be met. Major changes include new columns or replacing the electron capture detector. A new calibration is not required after clipping the column, replacing the septum or syringe, or other minor maintenance.

10.6. With the exception of section 10.7 below, it is NOT acceptable to remove points from a calibration curve for the purpose of meeting criteria, unless the points are the highest or lowest on the curve AND the reporting limit and/or linear range is adjusted accordingly. In any event, at least 5 points must be included in the calibration curve.

10.7. A level may be removed from the calibration if the reason can be clearly documented, for example a broken vial. A minimum of five levels must remain in the calibration. The documentation must be retained with the initial calibration. Alternatively, if the analyst believes that a point on the curve is inaccurate, the point may be reanalyzed once and the reanalysis used for the calibration. (Refer to

Policy CA-T-P-002, current revision, Selection of Calibration Points.) All initial calibration points must be analyzed without any changes to instrument conditions, and all points must be analyzed within 24 hours.

10.8. External standard calibration: Quantitation by the external standard method assumes a proportional relationship between the calibration run and the analyte in the sample. To use this approach, introduce each calibration standard into the GC using the technique that will be used for samples. The ratio of the peak height response to the mass or concentration injected may be used to prepare a calibration curve.

$$\text{Calibration Factor (CF)} = \frac{\text{Height of Peak}}{\text{Concentration Injected (ng/mL, ppb)}}$$

10.9. Average calibration factor: When determining Aroclors by the external standard technique, calculate the average calibration factor for each characteristic Aroclor peak in the Aroclor pattern. The average calibration factor for each individual peak is used to evaluate the initial calibration for linearity. The average calibration factor for each peak may be used if the relative standard deviation (%RSD) is $\leq$ 20%.

The equation for average calibration factor is:

$$\text{Average calibration factor } (\overline{CF}) = \frac{\sum_{i=1}^{n} CF}{n}$$

Where: n = the number of calibration levels

$\sum_{i=1}^{n} CF$ = the sum of the calibration factors for each calibration level

The equation for %RSD is:

$$\%RSD = \frac{SD}{\overline{CF}} \times 100$$

Where: SD = standard deviation of the CFs for the initial calibration

$$SD = \sqrt{\sum_{i=1}^{N} \frac{\left(CFi - \overline{CF}\right)^2}{N-1}}$$

$\overline{CF}$ = the average calibration factor

CFi = CF for each of the calibration levels

10.10. Quantitation of Aroclors

10.10.1. Select 3-10 major peaks in the Aroclor pattern. A minimum of 5 peaks is required for the Aroclor 1016/1260 mixture and a minimum of 3 peaks is required for all other Aroclors. Calculate the concentration of each peak, using the peak height and average calibration factor for that peak in the initial calibration. Average the resultant concentrations of the individual peaks to give a final concentration result for the Aroclor. When quantitating samples, it is important to omit from the quantitation any peaks that appear to be coeluting with contaminant peaks (i.e., peaks that are significantly larger or smaller than would be expected from the rest of the pattern).

10.10.2. Alternately, Aroclor patterns that exhibit no coelution can be quantitated by totaling the heights of the characteristic peaks and dividing by the average calibration factor for the group. The same quantitation method must be used for standards and samples.

10.11. Initial Calibration Verification Standard (2nd Source Standard)

10.11.1. A mid-level standard from a second source is analyzed as the initial calibration verification (ICV).

10.11.2. A separate ICV standard is required for each multi-component target analyte and must be performed each time a new calibration standard is prepared. The ICV must be within $\pm$ 20% of its expected value.

10.12. Calibration Verification (CCV)

10.12.1. The working calibration curve or RF must be verified by the analysis of a mid point calibration standard at the beginning, after every 12 hours or every 20 samples (including matrix spikes, LCSs and method blanks), whichever is more frequent, and at the end of the analysis sequence. The center of each retention time window may be updated with each calibration verification at the discretion of the analyst.

10.12.2. At a minimum, the calibration verification includes analysis of the Aroclor 1016/1260 mix. If a specific Aroclor is expected, it should be included in the daily calibration check.

10.12.3. % Drift calculation

% Drift is used for evaluating calibration verification.

$$\%\text{Drift} = \frac{\text{Calculated Concentration} - \text{Theoretical Concentration}}{\text{Theoretical Concentration}} \text{x}100$$

10.12.4. For method 8082A and TO-4A, any analytes and surrogates with %Drift $\leq$20% meet the calibration criteria. The acceptance limit for method 8082 is $\leq$15% drift.

10.12.5. It is not necessary to run a daily calibration verification standard (CCV) at the beginning of the sequence if samples are analyzed immediately after the completion of the initial calibration and second source standard (ICV).

10.12.6. Samples quantitated by the external standard method must be bracketed by calibration verification standards that meet the criteria listed above. However, sample data associated with an unacceptable calibration verification may be reported as qualified data under the following special conditions:

10.12.6.1. When the acceptance criteria for the continuing calibration verification is exceeded high, i.e., high bias, and there are associated samples that are non-detect, then those results may be reported. Otherwise, the samples affected by the unacceptable calibration verification shall be reanalyzed.

10.12.6.2. When the acceptance criteria for the continuing calibration verification is exceeded low, i.e., low bias, the samples affected by the unacceptable verification shall be reanalyzed.

10.12.7. If the analyst notes that a CCV failed and can document the reason for failure (e.g., broken vial, carryover from the previous sample, etc.), then a second CCV may be analyzed without any adjustments to the instrument. If this CCV meets the criteria, then the preceding samples have been successfully bracketed. If adjustments to the instrument are performed before the repeat CCV, then the preceding samples have not been successfully bracketed, but analysis may continue.

10.12.8. If routine corrective action procedures fail to produce a second consecutive (immediate) calibration verification within acceptance criteria, then the laboratory has to demonstrate performance after corrective action with two consecutive successful calibration verifications. If the laboratory has not demonstrated acceptable

performance, sample analyses must not occur until a new initial calibration curve is established and verified.

10.12.9. If highly contaminated samples are expected, it is acceptable to analyze blanks or primers at any point in the run.

11. Procedure

11.1. Extraction and Cleanup: The extraction and cleanup procedures are described in SOPs KNOX-OP-0011 and KNOX-OP-0002.

11.2. Sulfur Removal with Elemental Mercury

11.2.1. If the sulfur concentration is such that crystallization occurs in the concentrated extract, centrifuge the extract to settle the crystals, and carefully draw off the sample extract with a disposable pipet, leaving the excess sulfur in the centrifuge tube. Transfer the extract to a clean concentrator tube before proceeding with further sulfur cleanup.

Note: Use Mercury sparingly in order to minimize exposure and disposal costs.

11.2.2. Transfer the sample extract into a clean concentrator tube or Teflon sealed vial.

11.2.3. Add one to three drops of mercury to the extract vial and seal.

11.2.4. Shake for approximately 30 minutes using a mechanical shaker.

11.2.5. Remove the extract from the mercury using a disposable pipette and transfer to a clean vial.

11.2.6. If a black precipitate forms, sulfur was present. Shake again, then centrifuge. After centrifugation, transfer the supernatant to a clean test tube and repeat. Do this until relatively little precipitate remains, or the screens indicate that cleanup is complete.

11.2.7. Properly dispose of the mercury waste.

11.3. Gas Chromatography: Suggested gas chromatographic conditions are listed in Table 2.

11.4. Sample Introduction: Analytes are introduced by direct injection of the extract. Samples, standards, and QC must be introduced using the same procedure. Allow extracts to warm to ambient temperature before injection.

11.5. Analytical Sequence: An analytical sequence starts with an initial calibration or CCV. The suggested analytical sequence is provided in Table 5. If there is a break

in the analytical sequence of greater than 12 hours, a 12 hour calibration verification standard must be analyzed before proceeding with the sequence.

11.6. Retention Time Windows

11.6.1. Retention time windows must be determined for all analytes. Make an injection of all analytes of interest each day over a 72-hour period. Calculate the standard deviation of the three retention times for each of the Aroclor characteristic peak (relative retention times may also be used). Plus or minus three times the standard deviation of the retention times of each peak defines the retention time window.

11.6.2. The centers of the windows are updated with the mid-point of the initial calibration and, at the discretion of the analyst, with each 12 hour calibration verification.

11.6.3. If the retention time window as calculated above is less than +/- 0.05 minutes, use +/- 0.05 minutes as the retention time window. This allows for slight variations in retention times caused by sample matrix.

11.6.4. The laboratory must calculate new retention time windows each time a new column is installed. The new windows must be generated within one week of the installation of the new column. Until these standards have been run on the new column, the retention time windows from the old column may be used, updated with the retention times from the new initial calibration.

11.6.5. Corrective Action for Retention Times: The retention times of all compounds in each continuing calibration must be within the most recently updated retention time windows. If this condition is not met, all samples analyzed after the last compliant standard must be reanalyzed.

11.7. Troubleshooting Guide: Refer to instrument manual as well as the following troubleshooting guides for specific troubleshooting techniques.

11.7.1. Baseline problems arise from many causes such as electronic or mechanical failure; contamination in critical areas, such as detectors; incorrect or inappropriate setpoints; leaks, column or septum bleed, or other chromatographic difficulties. Refer to the Agilent Technologies guide, “Troubleshooting GC Baseline Problems”, for procedures for systematically troubleshooting the GC in order to diagnose the cause of baseline problems.

11.7.2. Performance problems associated with the electron capture detector include loss of sensitivity, high signal background, noisy baseline, and chromatographic peaks or humps that are not characteristic of the samples being introduced in the inlet. Refer to the Agilent Technologies

"Electron Capture Detector Troubleshooting Tips" guide for procedures for diagnosing these problems.

11.7.3. Refer to the Agilent Technologies "Troubleshooting Chromatographic Contamination – Ghost Peaks/Carryover" for a logical procedure for troubleshooting interference peaks on GC.

11.7.4. Refer to the Agilent Technologies "Troubleshooting 7683 Autosampler Errors" guide for a list of 7683 ALS faults and error messages, probable causes, and suggested actions.

11.8. Analyze the DDT, DDD, and DDE mixture with each Retention Time study to determine whether there is interference with any of the major Aroclor peaks. For example, DDT may interfere with the last major peak in Aroclor 1254. If interference with a major peak is observed, select an alternate peak for quantitation of the aroclor.

11.9. One time procedural variations are allowed only if deemed necessary in the professional judgment of supervision to accommodate variation in sample matrix, radioactivity, chemistry, sample size, or other parameters. Any variation in procedure, except those specified by project specific instructions, shall be completely documented using a Nonconformance Memo and approved by a Technical Specialist, Project Manager and QA Manager. If contractually required, the client shall be notified.

11.10. Any unauthorized deviations from this procedure must also be documented as a nonconformance, with a cause and corrective action described.

11.11. Refer to TestAmerica Knoxville SOP KNOX-IT-0001, current revision, for requirements for computer hardware and software.

12. Data Analysis and Calculations

12.1. Identification of Aroclors

12.1.1. Retention time windows are used for identification of Aroclors, but the "fingerprint" produced by major peaks of those analytes in the standard is used in tandem with the retention times for identification. The ratios of the areas or peak heights of the major peaks are also taken into consideration. Identification may be made if, in the analyst's judgment, the fingerprint (retention time and peak ratios) resembles the standard chromatogram.

12.2. Quantitation of Aroclors

12.2.1. Typically 5 peaks (and a minimum of 3 peaks) are used for each Aroclor to quantitate Aroclors 1016 and 1260. A minimum of 3 peaks each are used to quantitate all other Aroclors.

12.2.2. If the analyst believes that a combination of Aroclor 1254 and 1260, 1260 and 1262, or a combination of 1242, 1016 and 1232 is present, then the predominant Aroclor is quantitated. In these cases, the 3-5 peak patterns do not match for the non-predominant Aroclor. The reporting limit for the other Aroclor may be elevated and/or the results are qualified. The suspicion of multiple Aroclors is discussed in the narrative. If well separated Aroclor patterns are present that match the 3-5 peak pattern used for quantitation, then both Aroclors are quantitated and reported.

12.3. Second column confirmation of Aroclors is required when specified by the client. Also, second column confirmation is required for regulatory compliance samples for reporting to South Carolina DHEC. This includes any samples required by or which will be officially submitted to South Carolina DHEC. When samples are analyzed from a source known to contain specific Aroclors, the results from a single-column analysis may be confirmed on the basis of a clearly recognizable Aroclor pattern. This approach should not be attempted for samples from unknown or unfamiliar sources or for samples that appear to contain mixtures of Aroclors. For samples from South Carolina, if second column confirmation is not employed, the analyst must document: 1) the peaks that were evaluated when comparing the sample chromatogram and the Aroclor Standard, 2) The absence of major peaks representing any other Aroclor. 3) The source-specific information indicating that Aroclors are anticipated in the sample (e.g., historical data, generator knowledge, etc.).

12.3.1. If second column confirmation is required, the data from the confirmation column will only be evaluated when analytes are detected on the primary column. The same calibration criteria used for the primary column will be used for the confirmation column. If the RT criteria are met on the confirmation column calibration, but the %Drift criterion is not met, results from the primary column may still be reported. Any failure to meet the continuing calibration verification %Drift criterion on the confirmation column must be noted on the calibration data review checklist.

12.3.2. If there is no evidence of chromatographic problems, report the lower result. If there are overlapping peaks causing erroneously high results, then report the non-effected result and document in the case narrative. Results between primary and second column should have an RPD $\leq$40%. Qualify the result with a “COL” flag if the RPD >40%, and report the lower result.

12.4. Surrogate recovery results are calculated and reported as described in Section 9.4.

12.5. Calibration Range: If concentrations of any analytes exceed the working range as defined by the calibration standards, then the sample must be diluted and reanalyzed. Dilutions should target the most concentrated analyte in the upper half (over 50% of the high level standard) of the calibration range. It may be necessary to dilute samples due to matrix interferences.

12.6. Dilutions: Samples may be screened to determine the appropriate dilution for the initial run. If the initial diluted run has no hits above 20% of the calibration range and the matrix allows for analysis at a lesser dilution, then the sample should be reanalyzed at a dilution targeted to bring the largest hit into the upper half of the calibration range.

12.6.1. Guidance for Dilutions Due to Matrix: If the sample is initially run at a dilution and only minor matrix peaks are present, then the sample should be reanalyzed at a more concentrated dilution. Analyst judgment is required to determine the most concentrated dilution that will not result in instrument contamination.

12.6.2. Reporting Dilutions: The most concentrated dilution with no target compounds above the calibration range will be reported. Other dilutions will only be reported at client request.

12.7. Interferences: If peak detection is prevented by interferences, further cleanup should be attempted. If no further cleanup is reasonable, then elevation of reporting levels and/or lack of positive identification must be addressed in the case narrative.

12.8. Calculations

12.8.1. External Standard Calculations

12.8.1.1. Aqueous samples

$$\text{Concentration}\,(ug/L) = \frac{(H_x \text{ x } V_t \text{ x } D_f)}{CF \text{ x } V_s}$$

Where:
H_x = Height for the analyte in the sample
V_t = Volume of total extract, mL
D_f = Dilution factor
CF = Calibration factor, height/(ug/L)
V_s = Volume of sample extracted, mL

12.8.1.2. Solid Samples

$$\text{Concentration (ug/kg)} = \frac{(H_x \text{ x } V_t \text{ x } D_f)}{CF \text{ x } W \text{ x } D}$$

Where:
W = Weight of sample extracted, g
H_x = Height for the analyte in the sample
V_t = Volume of total extract, mL
D_f = Dilution factor
CF = Calibration factor, height/(ug/L)

$$D = \frac{100 - \%\ \text{Moisture}}{100}$$

12.8.1.3. Air samples

$$\text{Concentration (ug)} = \frac{(H_x \text{ x } V_f \text{ x } D_f)}{CF \text{ x } V_s}$$

Where:
H_x = Height for the analyte in the sample
V_f = Final volume of extract, L
D_f = Dilution factor
CF = Calibration factor, height/(ug/L)
V_s = Volume of sample extracted (1 PUF)

12.8.2. Surrogate Recovery: Concentrations of surrogate compounds are calculated using the same equations as for the target compounds. The response factor from the initial calibration is used. Surrogate recovery is calculated using the following equation:

$$\%\text{Recovery} = \frac{\text{Concentration (or amount) found}}{\text{Concentration (or amount) spiked}} \text{X100}$$

12.9. Refer to Appendix II for an example data review checklists used to perform and document the review of the data. Using the data review checklist, the analyst also creates a narrative which includes any qualifications of the sample data.

13. Method Performance

13.1. Method Detection Limit (MDL) - An MDL must be determined for each Aroclor in each routine matrix prior to the analysis of any samples. Method Detection limits are determined and verified as specified in the current revision of SOP CA-Q-S-006 (and attachment) based on 40 CFR Part 136 Appendix B. The result of the MDL determination must support the reporting limit.

13.2. Initial Demonstration of Capability – Each analyst must perform an initial demonstration of capability (IDOC) for Aroclors 1016 and 1260 prior to performing the analysis independently. The IDOC is determined by analyzing four replicate spikes (e.g., LCSs) as detailed in SOP KNOX-QA-0009.

13.3. Training Qualification: The group/team leader has the responsibility to ensure that this procedure is performed by an associate who has been properly trained in its use and has the required experience. Refer to SOP KNOX-QA-0009 current revision for further requirements for performing and documenting initial and on-going demonstrations of capability.

14. Pollution Prevention

14.1. This method does not contain any specific modifications that serve to minimize or prevent pollution.

15. Waste Management

15.1. All waste will be disposed of in accordance with federal, state and local regulations. Where reasonably feasible, technological changes have been implemented to minimize the potential for pollution of the environment. Employees will abide by this method and the policies in section 13 of the TestAmerica Environmental Health and Safety Manual for "Waste Management and Pollution Prevention."

15.2. The following waste streams are produced when this method is carried out.

- Expired primary and working PCB standards are stored in metal closed-top containers.
- Vials containing sample extracts are stored in plastic or metal containers resistant to solvents.
- Contaminated mercury used during the extract cleanup shall be placed in vials and lab-packed.

16. References

16.1. SW-846 Method 8000B, "Determinative Chromatographic Separations", Final Update III, December 1996.

16.2. SW-846 Method 8082, "Polychlorinated Biphenyls (PCBs) by Gas Chromatography", Final Update III, December 1996.

16.3. SW846, Method 8082A, "Polychlorinated Biphenyls (PCBs) by Gas Chromatography, Final Update IV, February 2007.

16.4. EPA/625/R-96/010b, Compendium of Methods for the Determination of Toxic Organic Compounds in Ambient Air, Second Edition, Compendium Method TO-4A, Determination of Pesticides and Polychlorinated Biphenyls in Ambient Air Using High Volume Polyurethane Foam (PUF) Sampling Followed by Gas Chromatographic/Multi-Detector Detection (GC/MD), U.S. Environmental Protection Agency, January 1999.

16.5. EPA/625/R-96/010b, Compendium of Methods for the Determination of Toxic Organic Compounds in Ambient Air, Second Edition, Compendium Method TO-10A, Determination of Pesticides and Polychlorinated Biphenyls in Ambient Air Using Low Volume Polyurethane Foam (PUF) Sampling Followed by Gas Chromatographic/Multi-Detector Detection (GC/MD), U.S. Environmental Protection Agency, January 1999.

16.6. TestAmerica Knoxville Quality Assurance Manual (QAM), current revision.

16.7. CA-Q-S-002, Acceptable Manual Integration Practices and the TestAmerica Knoxville Attachment, current revision.

17. Miscellaneous

17.1. Modifications from Reference Methods.

17.1.1. Method TO-4A Section 13.1 and Method TO-10A Section 12.1 provides an “appropriate method” for the analysis of PCBs in air. The method allows for modifications to be made, therefore, analysis is performed in accordance with SW-846 Method 8082A, as described in this SOP.

17.1.2. SW-846 Methods 8000B, 8082 and 8082A do not contain requirements for the analysis of a second source calibration verification standard (ICV). These requirements were adopted based on the criteria listed in the DOD QSM, Final Version 3.

17.2. Appendices

17.2.1. Appendix I: Tables

17.2.2. Appendix II: Example Data Review Checklists

Appendix I: Tables

Table 1 - Standard Analyte list and Reporting Limits

Compound	Water RL (µg/L)	Low-Level Water RL (µg/L)	Solid RL (ug/kg)	Low-Level Solid RL (µg/L)	Waste RL (µg/kg)	Air RL (µg)	Tissue RL (µg/kg)
Aroclor-1016	1.0	0.05	33	2.5	10,000	1.0	10
Aroclor-1221	1.0	0.05	33	2.5	10,000	1.0	10
Aroclor-1232	1.0	0.05	33	2.5	10,000	1.0	10
Aroclor 1242	1.0	0.05	33	2.5	10,000	1.0	10
Aroclor-1248	1.0	0.05	33	2.5	10,000	1.0	10
Aroclor-1254	1.0	0.05	33	2.5	10,000	1.0	10
Aroclor-1260	1.0	0.05	33	2.5	10,000	1.0	10
Aroclor-1262	1.0	0.05	33	2.5	10,000	1.0	10
Aroclor-1268	1.0	0.05	33	2.5	10,000	1.0	10

The following factors are assumed in calculating the Reporting Limits:

Matrix	Sample Amount	Final Extract Volume (mL)	Low Calibration Standard (ng/mL)
Water	1000 mL	10	100
Low-Level Water	1000 mL	1	50
Solid	30 g	10	100
Low-Level Solid	20 g	1	50
Waste	0.1 g	10	100
Air	1 PUF	10	100
Tissue	10 g	1	100

Table 2 – Typical Instrument Conditions

Parameter	Typical Conditions
Injection port temp	160°C
Detector temp	300°C
Temperature program	160°C initial temperature, 12°C/min to 280°C, 11 min hold
Column 1	DB-5 or Rtx-5 30m x 0.32mm id, 0.5µm, or equivalent
Column 2	DB-1701 or Rtx 1701 30m x 0.32 mm id, 0.25µm, or equivalent
Injection	1µL
Carrier gas	Hydrogen
Make up gas	Nitrogen
Y splitter	Restek or J&W or Supelco glass tee

Table 3 - Calibration Levels (ng/mL)

Compound	Level 1	Level 2	Level 3	Level 4	Level 5
Aroclor 1016/1260	50	100	200	500	1000
Aroclor 1242[1]				500	
Aroclor 1221 +1254[1]				500	
Aroclor 1232[1]				500	
Aroclor 1248[1]				500	
Aroclor 1262[1]				500	
Aroclor 1268[1]				500	
Surrogates are included with all the calibration mixes at the following levels:					
Tetrachloro-m-xylene (TCMX)	2.5	5	10	25	50
Decachlorobiphenyl (DCB)	2.5	5	10	25	50

[1] Aroclors may be quantitated within the range 50 to 1000 ng/mL. If the Aroclor is more concentrated, it must be reanalyzed at a dilution. All above standards are prepared in hexane.

Table 4 - LCS/Matrix Spike and Surrogate Spike levels for Aroclor analysis with Acid Cleanup

Compound	Water (µg/L)	Low-Level Water (µg/L)	Solid (µg/kg)	Low-Level Solid (µg/kg)	Waste (µg/kg)	Air (µg)	Tissue (µg/kg)
Aroclor 1016/1260	5/5	0.5/0.5	167/167	25/25	50,000/50,000	5/5	50
TCMX (Surrogate)	0.20	0.02	6.67	1.0	2000	0.2	2.0
DCB (Surrogate)	0.20	0.02	6.67	1.0	2000	0.2	2.0

LCS/Matrix Spike and Surrogate Spike standards are prepared in methanol.

Table 5 - Suggested Analytical Sequence

Solvent blank (optional)
Aroclor 1232 - Level 4
Aroclor 1242 - Level 4
Aroclor 1248 - Level 4
Aroclor 1221/1254 - Level 4
Aroclor 1262 - Level 4
Aroclor 1268 - Level 4
Aroclor 1016/1260 - Level 1
Aroclor 1016/1260 - Level 2
Aroclor 1016/1260 - Level 3
Aroclor 1016/1260 - Level 4
Aroclor 1016/1260 - Level 5
2nd Source 1016/1260 - Level 4
Solvent blank
Samples 1-20 (or as many samples up to 20 as can be analyzed in 12 hours)
Solvent blank (optional)
Aroclor 1016/1260 - Level 3

Appendix II: Example Data Review Checklist

TestAmerica Knoxville GC PCBs Initial Calibration Data Review / Narrative Checklist
Method 8082, 8082A and TO-4A, TO-10A, SOP KNOX -GC-0015, Rev. 14
Page 1 of 1

Analysis Date:		**Instrument/File ID:**	
2nd Source Verification Filename:			

Review Items **A. Initial Calibration**	**Yes**	**No**	**N/A**	**2nd Level**	**If No, why is data reportable?**
1. Were at least **5-levels** of the Aroclor analyzed?					
2. Was at least one single point, **mid (8082) level standard** analyzed for each Aroclor?					
3. Were **all ICAL standards used** for calibration?					
4. Is **low** level standard concentration **≤ RL**?					
5. Are all **%RSDs ≤ 20%**?					
6. Was each run checked for **saturation**?					
7. Is **integration** acceptable and are all manual integrations clearly identified, initialed, dated and reason given?					Reasons: 1) Corrected split peak; 2) Unresolved peak; 3) Tailing; 4) RT shift; 5) Wrong peak selected; 6) Other
8. Was ICAL method file processed using the **correct result files**? (Compare peak heights-areas in method file to heights-areas of calibration standards)					
9. Is the 2nd source standard within +/- 20% of the expected value?					

Analyst: _____ **Date:** _____
Comments:

2nd Level Reviewer : _____ **Date:** _____
Comments:

GC028R14.DOC, 072710

Appendix II: Example Data Review Checklist, continued

TestAmerica Knoxville GC PCBs Data Review / Narrative Checklist **LOT#_____**

Methods: 8082, 8082A, TO-4A, TO-10A; SOPs: KNOX-GC-0014 r8 and KNOX-GC-0015 r14 **Page 1 of 1**

Sequence No.:						
Scanned File:						

Review Items	Yes	No	N/A	2nd √	**If No, why is data reportable?**
1. **CCAL Checklist** completed for each analytical batch?					
2. Were all **special project requirements** met?					
3. Were **Turbochrom** sample IDs, DFs, prep **factors verified**?					
4. Sample analyses done within preparation and analytical **holding time** (HT)? *If no, list samples and NCM#:*					☐ *[ht1] HT expired upon receipt.* ☐ *[ht2] Client requested analysis after HT expired.** ☐ **Re-extraction done after HT expired.**
5. Same **process file** used for samples and ICAL? (2nd Level - Check 1-2 compounds for batch by manually calculating concentration using the ICAL avg. RF or curve.)					
6. Are **sample and MS/MSD surrogates** within QC limits?					☐ [sur1] MS/MSD surr.%R showed same effect. ☐ [sur2] Re-extraction demonstrated same effect. ☐ **[sur3] Not enough sample for re-extraction.** ☐ [sur7] Obvious matrix interference. ☐ **[sur12] Surr.%R high and all targets ND.** ☐ [sur16] 1 Surr. out, but blank & LCS surrogates in control - matrix effect.
7. Are internal standards within 50-150% of ICAL?					
8. Do positive hits meet identification criteria? (**RT and 2nd column confirmation** for single peak analytes; **fingerprint** for Toxaphene, Technical Chlordane and Aroclors)					
9. Are positive results **within calibration range**?					
10. Were peaks checked for **saturation**?					
11. Is **integration** acceptable and are all manual integrations clearly identified, initaled, dated and reason given?					Reasons: 1) Corrected split peak; 2) Unresolved peak; 3) Tailing; 4) RT shift; 5) Wrong peak selected; 6) Other
12. Is largest analyte **diluted to 20-100%** of the calibration range?					☐ [dil1] Dilution required to prevent contamination of instrument due to non-target compounds.
13. Were runs checked for **carryover**?					
14. Final **report acceptable**? (Results correct, RLs calculated correctly, units correct, surrogate %R correct, appropriate flags used, deviations noted in narrative, dilution factor correct, and extraction/ analysis dates correct.)					
15. **LCS** done per prep batch and all analytes and surrogates within laboratory established QC limits?					☐ **[lcs2] Insufficient sample for reanalysis.*** ☐ **[lcs3] LCS %R high and all analyte(s) were <RL in associated samples.**
16. **Method blank** done per prep batch, method blank or instrument blank run with each sequence, and all analytes <RL? (< ½ RL for DOD QSM)					☐ [mb3] No analyte > RL in associated sample.* ☐ [mb4] Sample results > 20x higher than blank. ☐ **[mb5] Insufficient sample for reanalysis.***
17. **Method blank surrogate recoveries** within QC limits?					☐ **[mb1] Sample surrogates OK and there is no analyte >RL in samples associated with blank.***
18. **MS/MSD** done per batch?					☐ [lcsd] Insufficient sample. LCS/LCSD analyzed.
19. **MS/MSD** recoveries and RPDs within laboratory generated control limits?					☐ [ms1] LCS acceptable - sample matrix effects. ☐ [ms2] LCS acceptable. High native analyte concentration relative to spike level. ☐ [ms3] Spikes diluted out. LCS acceptable. ☐ [rpd] LCS acceptable. RPD out due to lack of sample homogeneity.
20. Were MS run #'s assigned correctly?					
21. Are all **nonconformances** documented appropriately?					

Analyst:	**Date:**	**2nd Level Reviewer:**	**Date:**
Comments:		**Comments:**	

* Such action must be taken in consultation with client. GC027R25.DOC, 072710

Appendix II: Example Data Review Checklist, continued

TestAmerica Knoxville GC PCB's Continuing Calibration Data Review Checklist
Methods 8082 and 8082A, SOP KNOX-GC-0015, Rev. 14

Sequence ID: _____ **Date:** _____

Analyst Init/Date																						
Review Init/Date																						
ICAL File ID																						
CCV #:																						
Analyte %D																						
	ChanA	ChanB	ChanA	ChanB	ChanA	ChanB	ChanA	ChanB	ChanA	ChanB	ChanA	ChanB	ChanA	ChanB	ChanA	ChanB	ChanA	ChanB	ChanA	ChanB	ChanA	ChanB
AR1016-1																						
AR1016-2																						
AR1016-3																						
AR1016-4																						
AR1016-5																						
AR1016-6																						
AR1016-7																						
AR1260-1																						
AR1260-2																						
AR1260-3																						
AR1260-4																						
AR1260-5																						
AR1260-6																						
AR1260-7																						

Other Aroclors

Analyst Init/Date											
Review Init/Date											
ICAL File ID											
Aroclor/CCV#											
%D:											

By signing above, the analyst and reviewer verify that the following items have been reviewed:

Review Items:
1. Correct ICAL used for quantitation.
2. Same process file used for the CCAL as for the ICAL.
3. CCAL standards run at proper frequency (before all samples and after no more than 20 samples/12 hrs. of sample analysis) (every 10 samples for DOD QSM)
4. CCAL % D <= 20% for 8082A and TO-4A; <=15% for 8082
5. All RTs within RT windows (+/- 0.05 min.)
6. Integration acceptable and all manual integrations are clearly identified, initialed, dated and reason given.
   Reasons: 1) corrected split peak; 2) unresolved peak; 3) tailing; 4) RT shift; 5) wrong peak selected; 6) other.

Comments: LOD Analyzed
Mid-Pt Analyzed

GC030R13.XLS, 072710

Controlled Copy
Copy No. UNC
Implementation Date: 11/15/12

SOP No.: KNOX-ID-0004
Revision No.: 12
Revision Date: 11/09/12
Page 1 of 62

TESTAMERICA KNOXVILLE

STANDARD OPERATING PROCEDURE

TITLE: Analysis of Polychlorinated Dioxins/Furans by High Resolution Gas Chromatography/High Resolution Mass Spectrometry (HRGC/HRMS) Based on Methods 8290, 8290A, 1613B, 23, 0023A, and TO-9A

(SUPERSEDES: KNOX-ID-0004, Rev. ~~10~~ 11) KEM 1/15/13

Prepared By: Melissa S Demoden 11/14/12

Reviewed By: Bruce Wagner 11/14/12
Technical Specialist

Approved By: Kevin McAdee 11/14/12
Quality Assurance Manager

Approved By: Barry [illegible] 11-14-12
Environmental, Health and Safety Coordinator

Approved By: Christopher White Rigell 11/14/12
Laboratory Director

Copyright Information:

This documentation has been prepared by TestAmerica Laboratories, Inc. and its affiliates ("TestAmerica"), solely for their own use and the use of their customers in evaluating their qualifications and capabilities in connection with a particular project. The user of this document agrees by its acceptance to return it to TestAmerica upon request and not to reproduce, copy, lend, or otherwise disclose its contents, directly or indirectly, and not to use it for any other purpose other than that for which it was specifically provided. The user also agrees that where consultants or other outside parties are involved in the evaluation process, access to these documents shall not be given to said parties unless those parties also specifically agree to these conditions.

THIS DOCUMENT CONTAINS VALUABLE CONFIDENTIAL AND PROPRIETARY INFORMATION. DISCLOSURE, USE OR REPRODUCTION OF THESE MATERIALS WITHOUT THE WRITTEN AUTHORIZATION OF TESTAMERICA IS STRICTLY PROHIBITED. THIS UNPUBLISHED WORK BY TESTAMERICA IS PROTECTED BY STATE AND FEDERAL LAW OF THE UNITED STATES. IF PUBLICATION OF THIS WORK SHOULD OCCUR THE FOLLOWING NOTICE SHALL APPLY: @COPYRIGHT 2012 TESTAMERICA LABORATORIES, INC. ALL RIGHTS RESERVED.

1. Scope and Application

1.1 This procedure is used for the determination of tetra- through octa- chlorinated dibenzo-p-dioxins (PCDDs) and dibenzofurans (PCDFs) in water, soils, solids, sediments, wipes, biological samples, fly ash, XAD resin, filters, still bottoms, waste oils, and other sample matrices by high resolution gas chromatography/high resolution mass spectrometry (HRGC/HRMS). This procedure is designed to meet analytical program requirements where US EPA Method 8290, 8290A, 1613B, 23, 0023A, or TO-9A is specified.

1.2 The seventeen 2,3,7,8-substituted and total Tetra-Hepta PCDDs/PCDFs listed in Table 1 can be determined by this procedure. Specifications are also provided for separate determination of 2,3,7,8-tetrachlorodibenzo-p-dioxin (2,3,7,8-TCDD) and 2,3,7,8-tetrachlorodibenzofuran (2,3,7,8-TCDF). In addition, total homologs (i.e., Total TCDD, Total TCDF, etc.) can be identified by this method.

1.3 The detection limits and quantitation levels in this method are usually dependent on the level of interferences rather than instrumental limitations. The minimum levels (MLs) in Table 2 are the levels at which the PCDDs/PCDFs can be quantitated with no interferences present.

1.4 This procedure is designed for use by analysts who are experienced with residue analysis and skilled in HRGC/HRMS. Each analyst must demonstrate the ability to generate acceptable results with this method.

1.5 Because of the extreme toxicity of many of these compounds, the analyst must take the necessary precautions to prevent exposure to materials known or believed to contain PCDDs or PCDFs. It is the responsibility of the laboratory personnel to ensure that safe handling procedures are employed. Section 5 of this procedure discusses safety procedures.

2. Summary of Method

2.1 This procedure uses high resolution capillary column gas chromatography/high resolution mass spectrometry (HRGC/HRMS) techniques. Refer to SOPs KNOX-OP-0001, current revision and KNOX-ID-0012, current revision for the procedures used for sample extraction and cleanup.

2.2 Samples are spiked with a solution of known amounts of the isotopically labeled internal standards listed in Table 13 and Table 15. The samples are then extracted using matrix specific extraction procedures.

2.2.1 Water samples are extracted using separatory funnel techniques with methylene chloride as the extraction solvent.

2.2.2 Solid samples are extracted by Soxhlet extraction or microwave extraction with the appropriate solvent.

2.2.3 Organic liquid waste samples are diluted in solvent.

2.3 After extraction, the sample is concentrated and solvent exchanged to hexane. The extract is then subjected to one or more optional cleanup steps to remove the sample of interferences. The final extract is prepared by adding a known amount of the labeled recovery standards ($^{13}C_{12}$-1,2,3,4-TCDD and $^{13}C_{12}$-1,2,3,7,8,9-HxCDD) and concentrating to the final volume.

2.4 The acid-base cleanup of the sample is used before column chromatography for samples that contain large amounts of basic and acidic coextractable compounds. If such interferences are not removed before column chromatography, they can cause a shift in the predicted elution pattern. Conditions which can indicate the need for this procedure are as follows: Samples which are highly colored, samples which contain lipids or other oxidizable compounds or samples which contain known large amounts of polar organics.

2.5 Dual Column Cleanup: Silica gel is effective in removing chlorophenoxy herbicide residues, while alumina partitions PCBs, 2,4,5-trichlorophenol and hexachlorophene.

2.6 When the above cleanup techniques do not completely remove interferences, an activated carbon cleanup is used to remove interferences.

2.7 An aliquot of the extract is injected into the gas chromatograph. The analytes are separated by the GC and detected by a high resolution ($\geq$10,000 resolution) mass spectrometer (HRMS). Two exact m/z's are monitored for each analyte.

2.8 The identification of the target 2,3,7,8 substituted isomers is based on their retention time relative to the labeled internal standards as established during routine calibration and the simultaneous detection of the two most abundant ions in the molecular ion region. All other PCDD/PCDF congeners are identified by their retention times falling within retention time windows as established during routine calibration, and the simultaneous detection of the two most abundant ions in the molecular ion region. Confirmation of identification is based on comparing the calculated ion ratios with the theoretical ion abundances. The identification of 2,3,7,8-TCDF is confirmed on an isomer specific (DB-225) GC column.

2.9 Quantitation of the 2,3,7,8-substituted PCDD/PCDF isomers, total PCDDs, and total PCDFs is based on their relative response to the internal standards. A multipoint calibration is performed to establish mean response factors for the target analytes. The instrument performance is routinely checked by the analysis of continuing calibration standards. Method performance is demonstrated by the analysis of method blanks, initial precision and recovery samples, and ongoing precision and recovery samples.

3. Definitions

3.1 Analyte: A PCDD or PCDF tested for by this method. The analytes are listed in Table 1.

3.2 Calibration Standard: A solution prepared from a secondary standard and/or stock solution and used to calibrate the response of the instrument with respect to analyte concentration.

3.3 Calibration Verification Standard (VER): The mid-point calibration standard (CS3) that is used to verify calibration. See Table 5 and Table 6.

3.4 Cleanup Standard: Solution containing $^{37}Cl_4$-2,3,7,8-TCDD that is added to the calibration solutions and to every 1613B sample, blank, and quality control spike sample. It is added after extraction but prior to extract cleanup, and the analysis results are used to judge the efficiency of the cleanup procedures.

3.5 Column Performance Solution Mixture (CPSM): A mixture of TCDD or TCDF isomers (including the 2,3,7,8-TCDD or 2,3,7,8-TCDF isomer) known to elute close to the retention time of 2,3,7,8-TCDD or 2,3,7,8-TCDF on the analytical column being used. It is used to demonstrate acceptable resolution between the 2,3,7,8-TCDD or 2,3,7,8-TCDF isomer and all other TCDD or TCDF isomers on analytical column (percent valley ≤ 25).

3.6 Congener: Any member of a particular homologous series, for example, 1,2,3,7,8-pentachlorodibenzofuran.

3.7 CS1, CS2, CS3, CS4, CS5: See Calibration Standard and Table 5 and Table 6.

3.8 Estimated Detection Limit (EDL): The sample specific estimated detection limit (EDL) is the concentration of a given analyte required to produce a signal with a peak height of at least 2.5 times the background signal level.

3.9 Estimated Maximum Possible Concentration (EMPC): The calculated concentration of a signal in the same retention time region as a target analyte but which does not meet the other qualitative identification criteria defined in the procedure.

3.10 GC: Gas chromatograph or gas chromatography

3.11 Homologous Series: A series of compounds in which each member differs from the next member by a constant amount. The members of the series are called homologs.

3.12 HRGC: High resolution GC

3.13 HRMS: High resolution MS

3.14 ICV: Initial Calibration Verification Standard. A calibration standard from a second source, traceable to a national standard if possible. The ICV is analyzed after the initial calibration to verify the concentration of the Initial Calibration Standards.

3.15 Internal Standards: Isotopically labeled analogs of the target analytes that are added to every sample, blank, quality control spike sample, and calibration solution. They are added to the sample before extraction and are used to calculate the concentration of the target analytes or detection limits.

3.16 Initial Precision and Recovery (IPR): See Initial Demonstration of Capability in Sections 9.1 and 13.2.

3.17 Isomer: Chemical compounds that contain the same number of atoms of the same elements, but differ in structural arrangement and properties. For example, 1,2,3,4-TCDD and 2,3,7,8-TCDD are structural isomers.

3.18 Laboratory Blank: See Method Blank.

3.19 Laboratory Control Sample (LCS): A laboratory blank spiked with known quantities of analytes. The LCS is analyzed exactly like a sample. Its purpose is to assure that the results produced by the laboratory remain within the limits specified in this method for precision and recovery..

3.20 Maximum Level (MaxL): The concentration or mass of analyte in the sample that corresponds to the highest calibration level in the initial calibration. Also referred to as the upper method calibration limit (UMCL). It is equivalent to the concentration of the highest calibration standard, assuming that all method-specified sample weights, volumes, and cleanup procedures have been employed.

3.21 Method Blank: An aliquot of reagent water, sand, sodium sulfate, or other representative matrix, free of the targets of interest and interferences, that is extracted and analyzed along with the samples to monitor for laboratory contamination.

3.22 Minimum Level (MinL): The level at which the entire analytical system must give a recognizable signal and acceptable calibration point for the analyte. Also referred to as the lower method calibration limit (LMCL). It is equivalent to the concentration of the lowest calibration standard assuming that all method-specified sample weights, volumes, and cleanup procedures have been employed.

3.23 MS: Mass spectrometer or mass spectrometry.

3.24 Multiple Ion Detection (MID): A MS operational mode in which only selected ions are monitored rather than scanning the instrument to obtain a complete mass spectrum.

3.25 Ongoing precision and recovery standard (OPR): See Laboratory Control Sample.

3.26 PCDD: Polychlorinated dibenzo-p-dioxins.

3.27 PCDF: Polychlorinated dibenzofurans.

3.28 PFK: Perfluorokerosene; the mixture of compounds used to calibrate the exact m/z scale in the HRMS.

3.29 FC-43 (PFTBA): Perfluorotributylamine; used to calibrate the extract m/z scale in the HRMS.

3.30 Recovery Standard: Solution containing $^{13}C_{12}$-1,2,3,4-TCDD and $^{13}C_{12}$-1,2,3,7,8,9-HxCDD that is added to every sample, blank, and quality control spike sample extract prior to analysis. The results are used to measure the recovery of the internal standards and the cleanup standard.

3.31 Percent Difference (%D): A measure of the difference between two values normalized to one of the values. It is used to determine the accuracy of the concentration measurements of second source verification standards.

3.32 Relative Response Factor (RRF): The ratio of the response of the mass spectrometer to a known amount of a compound relative to that of a known amount of a reference standard as measured in the initial and continuing calibrations. It is used to determine instrument performance and it is used to calculate the concentration of target analytes, internal standard recoveries, or detection limits in samples, blanks, and quality control samples.

3.33 Signal to Noise Ratio: The ratio of the mass spectrometer response of a GC peak to the background noise signal.

3.34 Split Ratio (S): The decimal expression of the proportion of extract used from splits taken after the addition of internal standards and before the addition of recovery standards.

3.35 Window Defining Mix: A solution which contains the first and last eluting isomers of each homologue group and is used to verify that the switching times between the MID descriptors have been appropriately set.

3.36 Additional definitions can be found in the Test America Knoxville QAM.

4. Interferences

4.1 Solvents, reagents, glassware and other sample processing hardware can yield discrete artifacts or elevated baselines that can cause misinterpretation of the chromatographic data. All of these materials must be demonstrated to be free from interferences under the conditions of analysis by performing laboratory method blanks. Analysts must not use PVC gloves, powdered gloves, or gloves with levels of phthalates which cause interference.

4.2 The use of high purity reagents and solvents (pesticide grade) helps minimize interference problems. Where necessary, reagents are cleaned by extraction or solvent rinse.

4.3 Interferences coextracted from the samples can vary considerably from matrix to matrix. PCDDs and PCDFs are often associated with other interfering chlorinated substances such as polychlorinated biphenyls (PCBs), polychlorinated diphenyl ethers (PCDPEs), polychlorinated naphthalenes, and polychlorinated alkyldibenzofurans that can be found at concentrations several orders of magnitude higher than the analytes of interest. Retention times of target analytes must be verified using reference standards. While certain cleanup techniques are provided as part of this method, unique samples can require additional cleanup steps to achieve lower detection limits.

5. Safety

5.1 Employees must abide by the policies and procedures in the Corporate Safety Manual, Radiation Safety Manual and this document.

5.2 Eye protection that satisfies ANSI Z87.1 (as per the Corporate Safety Manual), laboratory coat and appropriate gloves must be worn while samples, standards, solvents and reagents are being handled. Disposable gloves that have become contaminated must be removed and discarded, other gloves must be cleaned immediately.

5.2.1 Latex and vinyl gloves provide no protection against most of the organic solvents used in this method. For the operations described herein, Nitrile gloves are to be worn. For operations using solvents that may splash, SilverShield® gloves are recommended. SilverShield® gloves protect against breakthrough for most of the solvents used in this procedure.

5.3 The effluents of sample splitters for the gas chromatograph and roughing pumps on the mass spectrometer must be vented to the laboratory hood exhaust system or must pass through an activated charcoal filter.

5.4 The gas chromatograph and mass spectrometer contain zones that have elevated temperatures. The analyst needs to be aware of the locations of those zones, and must cool them to room temperature prior to working on them or use thermal protection when working on them while they are above room temperature.

5.5 The mass spectrometer is under high vacuum. The mass spectrometer must be brought to atmospheric pressure prior to working on the source. Alternatively, the source can be removed from the vacuum manifold through a vacuum interlock.

5.6 There are areas of high voltage in both the gas chromatograph and the mass spectrometer. Depending on the type of work involved, either turn the power to the instrument off, or disconnect it from its source of power. If the work involved requires measurement of voltage supplies, the instrument can be left on.

5.7 Primary Materials Used: The following is a list of the materials used in this method, which have a serious or significant hazard rating. **NOTE: This list does not include all materials used in the method. The table contains a summary of the primary hazards listed in the MSDS for each of the materials listed in the table.** A complete list of materials used in the method can be found in the reagents and materials section. Employees must review the information in the MSDS for each material before using it for the first time or when there are major changes to the MSDS.

Material	**Hazards**	**Exposure Limit (2)**	**Signs and symptoms of exposure**
Methylene chloride	Carcinogen, Irritant	25 ppm-TWA, 125 ppm-STEL	Causes irritation to respiratory tract. Has a strong narcotic effect with symptoms of mental confusion, light-headedness, fatigue, nausea, vomiting and headache. Causes irritation, redness and pain to the skin and eyes. Prolonged contact can cause burns. Liquid degreases the skin. Can be absorbed through skin.
Hexane	Flammable, Irritant	500 ppm-TWA	Inhalation of vapors irritates the respiratory tract. Overexposure can cause lightheadedness, nausea, headache, and blurred vision. Vapors can cause irritation to the skin and eyes.

Material	Hazards	Exposure Limit (2)	Signs and symptoms of exposure
Methanol	Flammable, Poison, Irritant	200 ppm-TWA	A slight irritant to the mucous membranes. Toxic effects exerted upon nervous system, particularly the optic nerve. Symptoms of overexposure can include headache, drowsiness and dizziness. Methyl alcohol is a defatting agent and can cause skin to become dry and cracked. Skin absorption can occur; symptoms can parallel inhalation exposure. Irritant to the eyes.
Toluene	Flammable, Poison, Irritant	200 ppm-TWA 300 ppm-Ceiling	Inhalation can cause irritation of the upper respiratory tract. Symptoms of overexposure can include fatigue, confusion, headache, dizziness and drowsiness. Peculiar skin sensations (e. g. pins and needles) or numbness can be produced. Causes severe eye and skin irritation with redness and pain. Can be absorbed through the skin.
Acetone	Flammable	1000 ppm-TWA	Inhalation of vapors irritates the respiratory tract. Can cause coughing, dizziness, dullness, and headache.
Cyclohexane	Flammable, Irritant	300 ppm TWA	Inhalation of vapors causes irritation to the respiratory tract. Symptoms can include coughing, shortness of breath. High concentrations have a narcotic effect.
Tetradecane	Irritant	None established	Inhalation of vapors can cause difficulty breathing, headache, intoxication and central nervous system damage.
Benzene	Flammable, Toxic, Carcinogen	PEL: 1 ppm TWA ; 5 ppm, 15 min. STEL	Causes skin irritation. Toxic if absorbed through skin. Causes severe eye irritation. Toxic if inhaled. Vapor or mist causes irritation to mucous membranes and upper respiratory tract. Exposure can cause narcotic effect. Inhalation at high concentrations can have an initial stimulatory effect on the central nervous system characterized by exhilaration, nervous excitation and/or giddiness, depression, drowsiness or fatigue. Victim can experience tightness in the chest, breathlessness, and loss of consciousness.
Nonane	Flammable	None established	Harmful if inhaled/swallowed. Vapor/mist is irritating to eyes, mucous membranes and upper respiratory tract. Causes skin irritation.
1 – Always add acid to water to prevent violent reactions.			
2 – Exposure limit refers to the OSHA regulatory exposure limit.			

5.7.1 Chemicals that have been classified as carcinogens, or potential carcinogens, under OSHA regulations include benzene and methylene chloride, 2,3,7,8-TCDD and all other 2,3,7,8- substituted PCDD or PCDF isomers.

NOTE: The 2,3,7,8-TCDD isomer has been found to be acnegenic, carcinogenic, and teratogenic in laboratory animal studies. Other PCDDs and PCDFs containing chlorine atoms in positions 2,3,7,8 are known to have toxicities comparable to that of 2,3,7,8-TCDD. The toxicity or carcinogenicity of each reagent used in this method is not precisely defined; however, each chemical compound must be treated as a potential health

hazard. From this viewpoint, exposure to these chemicals must be kept to a minimum.

5.8 Exposure to chemicals must be maintained as low as reasonably achievable; therefore, unless they are known to be non-hazardous, all samples must be opened, transferred and prepared in a fume hood, or under other means of mechanical ventilation. Solvent and waste containers must be kept closed unless transfers are being made.

5.9 All procedures that involve solvents such as acetone, toluene, methylene chloride, and hexane (e.g., glassware cleaning and the preparation of standards and reagents) must be conducted in a fume hood with the sash closed as far as the operations permit.

5.10 Personal Hygiene: Thorough washing of hands and forearms is recommended after each manipulation and before breaks (coffee, lunch, and shifts).

5.11 All work must be stopped in the event of a known or potential compromise to the health or safety of an associate. The situation must be reported immediately to a laboratory supervisor.

6. Equipment and Supplies

6.1 Sample Analysis Equipment.

6.1.1 Gas Chromatograph – Must have splitless or on-column injection port for capillary column, temperature program with isothermal hold, and must meet all of the performance specification in Section 10.

6.1.1.1 GC column for PCDDs/PCDFs and for isomer specificity for 2,3,7,8-TCDD – 60m x 0.32mm ID x 0.25µm film thickness DB-5 or RTX-5 fused silica capillary column (J&W No. 123-5062, Restek No.10227 or 10227-125 IntegraGuard) or equivalent is required.

6.1.1.2 GC column for isomer specificity for 2,3,7,8-TCDF – 30m x 0.32mm ID x 0.25µm film thickness DB-225 or RTX-225 fused silica capillary column (J&W No. 123-2232 or Restek No.14024) or equivalent is required.

6.1.2 Mass Spectrometer – Electron impact ionization with the filament electron volts (eV) optimized for best instrument sensitivity, stability and signal to noise ratio. Must be capable of repetitively selectively monitoring 12 exact m/z's minimum at high resolution (≥10,000) during a period of approximately 1 second and must meet all of the performance specifications in Section 10.

6.1.3 GC/MS Interface – The mass spectrometer (MS) must be interfaced to the GC such that the end of the capillary column terminates within 1 cm of the ion source but does not intercept the electron or ion beam.

6.1.4 Data System – Capable of collecting, recording, and storing MS data.

7. Reagents and Standards

7.1 Standards and Calibration Solutions: Certified Reference Standards purchased from Cambridge Isotope Laboratories (CIL, Andover Massachusetts), and Wellington Laboratories (Guelph, Ontario, Canada). If the chemical purity is 98% or greater, the weight can be used without correction to compute the concentration of the standard. When not being used, standards are stored in the dark at room temperature in screw-capped vials with PTFE-lined caps. Standards are used as received after being sonicated and transferred to 2.0 mL amber glass vials with PTFE lined caps.

7.1.1 Stability of Solutions: Standards have an expiration of ten (10) years from date of receipt unless otherwise specified by the manufacturer. Standard solutions used for quantitative purposes must be analyzed periodically, and must be assayed against reference standards before use.

7.2 Initial Calibration Standards:

7.2.1 1613B/8290/8290A: CS1-CS5. CIL Catalog No. EDF-9999. (See Table 5).

7.2.2 23/0023A/TO-9A: CS1-CS5. Wellington Catalog No. EPA-23 CS1-5. (See Table 6).

7.3 Initial Calibration Verification Standards:

7.3.1 1613B/8290/8290A: Wellington Catalog No. EPA-1613-CS3.

7.3.2 23/0023A/TO-9A: CS3. CIL Catalog No. EDF-4052-3.

7.4 Daily Calibration Verification Standards

7.4.1 1613B/8290/8290A: CS3. CIL Catalog No. EDF-9999-3. (See Table 7).

7.4.2 1613B/8290/8290A: CS3. CIL Catalog No. EDF-4141. (See Table 7).

NOTE: This standard can be used as both the Continuing Calibration Standard and the DB/Rtx-5 GC Window Defining Mix/Column Performance Check Solution.

7.4.3 23/0023A/TO-9A: CS3. Wellington Catalog No. EPA-23-CS3. (See Table 8).

7.5 Native Standards

7.5.1 Native Standard Stock Solution: CIL Catalog No. EDF-7999-10x, 400-4000 ng/mL in nonane, 1.2 mL.

7.5.2 Native Standard Working Stock Solution: Dilute 0.300 mL of the native standard stock solution to 3.0 mL in a volumetric flask with nonane for a final concentration of 40-400 ng/mL.

7.5.3 Native LCS Spiking Solution: Dilute 500 µL of the native standard working stock solution to 100 mL in a 125 mL amber bottle with a PTFE lined cap

with iso-octane to a final concentration of 0.2-2.0 ng/mL. 1.0 mL of this solution is added to each LCS, LCSD or MS/MSD sample. See Table 11 for a complete list of compounds and their concentrations.

7.6 1613B/8290/8290A Internal Standards

7.6.1 1613B/8290/8290A Internal Standard Stock Solution: CIL Catalog No. EDF-8999, 100 ng/mL ($^{13}C_{12}$-OCDD 200 ng/mL) in nonane, 500 µL.

7.6.2 1613B/8290/8290A Internal Standard Spiking Solution: Dilute 2000 µL of the internal standard stock solution to 200 mL in a 250 mL amber bottle with a PTFE lined cap with iso-octane to a final concentration of 1.0 ng/mL ($^{13}C_{12}$-OCDD 2.0 ng/mL). 1.0 mL of this solution is added to each sample, method blank and QC sample. See Table 12 for a complete list of compounds and their concentrations.

7.7 2,3,7,8-TCDD/2,3,7,8-TCDF Internal Standards

7.7.1 $^{13}C_{12}$-2,3,7,8-TCDD Internal Standard Stock Solution: CIL Catalog No. ED-900, 50 µg/mL in nonane, 1.2 mL

7.7.2 $^{13}C_{12}$-2,3,7,8-TCDF Internal Standard Stock Solution: CIL Catalog No. EF-904, 50 µg/mL in nonane, 1.2 mL

7.7.3 $^{13}C_{12}$-TCDD/$^{13}C_{12}$-TCDF Internal Standard Secondary Stock Solution: Dilute 0.100 mL of the stock solutions above to 5 mL in a volumetric flask with nonane to a final concentration of 1000 ng/mL.

7.7.4 $^{13}C_{12}$-TCDD/$^{13}C_{12}$-TCDF Internal Standard Spiking Solution: Dilute 200 µL of the internal standard secondary stock solution to 200 mL in a 250 mL amber bottle with a PTFE lined cap with iso-octane to a final concentration of 1.0 ng/mL. 1.0 mL of this solution is added to each sample, method blank and QC sample extract that is extracted for TCDD and/or TCDF analysis only. See Table 2 for a complete list of compounds and their concentrations.

7.8 23/0023A/TO-9A Internal Standards

7.8.1 23/0023A/TO-9A Internal Standard Stock Solution: Wellington Catalog No. EPA-23ISS, 1000 ng/mL ($^{13}C_{12}$-OCDD 2000 ng/mL) in nonane/toluene (80:20 v:v), 1.2 mL.

7.8.2 23/0023A/TO-9A Internal Standard Spiking Solution: Dilute 200 µL of the internal standard stock solution to 200 mL in a 250 mL amber bottle with a PTFE lined cap with iso-octane to a final concentration of 1.0 ng/mL ($^{13}C_{12}$-OCDD 2.0 ng/mL). 1.0 mL of this solution is added to each sample, method blank, and QC sample. See Table 15 for a complete list of compounds and their concentrations.

7.9 Recovery Standards

7.9.1 $^{13}C_{12}$-1,2,3,4-TCDD Recovery Standard Stock Solution: CIL Catalog No. ED-911, 50 µg/mL in nonane, 1.2 mL

7.9.2 $^{13}C_{12}$-1,2,3,7,8,9-HxCDD Recovery Standard Stock Solution: CIL Catalog No. ED-996, 50 µg/mL in nonane, 1.2 mL

7.9.3 Recovery Standard Secondary Stock Solution: Dilute 1.0 mL of the stock solutions above to 10 mL in a volumetric flask with nonane to a final concentration of 5.0 µg/mL.

7.9.4 Recovery Standard Spiking Solution: Add 10 mL of nonane to a 12 mL amber vial with a Class A glass pipette. With a syringe, remove 200 µL of nonane from the vial and add 200 µL of the recovery standard secondary stock solution to a final concentration of 0.1 µg/mL. 20 µL of this solution is added to each sample, method blank and QC sample extract. See Table 2 for a complete list of compounds and their concentrations.

7.10 1613B Cleanup Standards

7.10.1 Cleanup Standard Stock Solution: CIL Catalog No. ED-907, 50 µg/mL in nonane, 1.2 mL

7.10.2 Cleanup Standard Secondary Stock Solution: Dilute 0.100 mL of the 50 µg/mL cleanup standard stock solution to 1.0 mL in a volumetric flask with nonane to a final concentration of 5.0 µg/mL.

7.10.3 Cleanup Standard Working Stock Solution: Dilute 0.120 mL of the 5.0 µg/mL cleanup standard secondary stock solution to 3.0 mL in a volumetric flask with nonane to a final concentration of 200 ng/mL.

7.10.4 Cleanup Standard Spiking Solution: Dilute 200 µL of the 200 ng/mL working stock solution to 200 mL in a 250 mL amber bottle with a PTFE lined cap with hexane to a final concentration of 0.20 ng/mL. 1.0 mL of this solution is added to each 1613B sample, method blank and QC sample extract prior to cleanup. See Table 17 for a complete list of compounds and their concentrations.

7.11 23/0023A/TO-9A Surrogate Standards

7.11.1 23/0023A/TO-9A Surrogate Standard Stock Solution: Wellington Catalog No. EPA-23SSS, 1000 ng/mL in nonane/toluene (95:5 v:v), 1.2 mL.

7.11.2 23/0023A/TO-9A Surrogate Standard Spiking Solution: Dilute 500 µL of the surrogate standard stock solution to 25 mL in a graduated cylinder with nonane to a final concentration of 20 ng/mL. 100 µL of this solution is added

to each sample train components before sampling. See Table 16 for a complete list of compounds and their concentrations.

7.12 PCDD/PCDF Window Defining and Isomer Specificity Standard

7.12.1 PCDD/PCDF Window Defining and Isomer Specificity Mixture: CIL Catalog No. EDF-4141. This standard contains the daily standard, window defining mix and the isomer specificity mix.

7.13 Perfluorokerosene (PFK) is used in neat form to tune and calibrate the mass spectrometer. Fluka (Catalog No. - 77275) has been found to be superior to other sources of PFK.

7.14 FC-43 (PFTBA) is used in neat form to tune and calibrate the mass spectrometer. (Scientific Instrument Services Catalog No. FC-43-35).

8. Sample Collection, Preservation and Storage

8.1 Sampling is not performed for this method by TestAmerica Knoxville. For information regarding sample shipping, refer to SOP KNOX-SC-0003, "Sample Receipt and Log In", current revision. Sample container and preservation recommendations are listed in the table below.

Note: All sample extracts for samples from South Carolina must be stored at less than or equal to 6 ˚C.

Method:	**1613B**	**8290/8290A[1]**	**23**	**0023A[1]**	**TO-9A**
Holding Times	Samples – 1 year from collection to extraction Extracts – 1 year from extraction to analysis	Samples – 30 days from collection to extraction Extracts – 45 days from extraction to analysis Tissue Extracts –45 days from collection to analysis	Samples – 30 days from collection to extraction Extracts – 45 days from extraction to analysis	Samples – 30 days from collection to extraction Extracts – 45 days from extraction to analysis	Samples – 7 days from collection to extraction Extracts – 40 days from extraction to analysis
Containers	Amber Glass	Amber Glass	See KNOX-ID-0012	See KNOX-ID-0012	See KNOX-ID-0012
Preservation:					
Aqueous Samples	≤6 °C in the dark If residual chlorine is present, add 80 mg/L sodium thiosulfate. If pH > 9, adjust to pH 7-9 with sulfuric acid	≤6 °C in the dark If residual chlorine is present, add 80 mg/L sodium thiosulfate.	N/A	N/A	N/A
Solid Samples	<-10 °C in the dark	≤6 °C in the dark	N/A	N/A	N/A
Tissue Samples	<-10 °C in the dark	<-20 °C in the dark[2]	N/A	N/A	N/A

Method:	**1613B**	**8290/8290A[1]**	**23**	**0023A[1]**	**TO-9A**
Air Samples	N/A	≤6 °C in the dark	≤6 °C in the dark	≤6 °C in the dark	≤6 °C in the dark

1 If the freezer used to store samples is not capable of reaching a temperature of <-20 °C when the temperature control is set to its maximum limit, a storage higher temperature is acceptable as long as it is <-10 °C.

9. Quality Control

9.1 The Initial Demonstration of Capability (IDOC) studies described in Section 13 must be completed with acceptable results before analysis of samples can begin.

9.2 The Method Detection Limit (MDL) study described in Section 13 must be completed with acceptable results before analysis of samples can begin.

9.3 A laboratory method blank must be run along with each analytical batch of 20 (10, including field blank if provided, for TO-9A) or fewer samples. The method blank is normally analyzed immediately after the calibration standards. The method blank must meet the following acceptance criteria:

9.3.1 The concentration of target analytes in the method blank must be less than the minimum level (ML) and "B" qualifiers are added to all associated samples with analytes detected in the method blank above the estimated detection limit (EDL).

9.3.2 If the concentration of target analytes in the method blank is greater than the minimum level (ML) but less than 5% of the concentration in the associated samples, corrective action is required but the associated data can be reported. At minimum, corrective action includes the addition of "B" qualifiers to all associated samples with analytes detected in the method blank and documentation of the blank contamination in the narrative. Section 9.3.1 requires that "B" qualifiers are added to all associated samples with analytes detected in the method blank above the estimated detection limit (EDL).

9.3.3 If the method blank sample fails to meet the acceptance criteria, the Project Manager is notified and the entire sample batch is re-extracted. If there is insufficient sample volume remaining for re-extraction, the client is contacted for information about the availability of additional sample volume. If there is no additional sample available, the original sample data is flagged and reported. A nonconformance memo is initiated describing the problem and corrective action. The problem and corrective action is documented in the project narrative.

9.3.4 If there is no target analyte greater than the minimum levels (ML) in the samples associated with an unacceptable method blank, the data can be reported with qualifiers. Such action must be done in consultation with the client.

9.3.5 The method blank internal standard recoveries must be within established control limits. In the situation where method blank internal standard

recoveries are below acceptance limits, method blank results can be used if the following criteria are met:

- All internal standards peaks must exhibit a 10:1 signal to noise ratio or greater
- The estimated detection limit (EDL) is at or above the minimum level (ML)

9.3.5.1 The application of the above criteria must be noted in the case narrative.

9.3.6 Refer to the QC Program document (QA-003) for further details of the corrective actions.

9.4 Instrument Blank

9.4.1 Instruments must be evaluated for contamination during each 12 hour analytical sequence. If the method blank has already been analyzed and there are no other method blanks needing to be run on the analytical shift, an instrument blank may be used to demonstrate the instrument is free from contamination. An instrument blank consists of solvent with the internal standards and recovery standards added. It is evaluated in the same way as the method blank.

9.5 Laboratory Control Sample

An LCS is analyzed along with each analytical batch of 20 (10, including field blank if provided, for TO-9A) or fewer samples. The LCS consists of reagent water for aqueous samples, and a clean solid matrix (sodium sulfate) for solid samples. The LCS extract must be subject to the same clean up procedures as the associated sample extracts. LCS spike components, concentrations, and control limits are given in Table 11.

9.5.1 If any analyte in the LCS is outside the control limits, corrective action must occur. Corrective action includes:

9.5.1.1 If the LCS fails to meet the acceptance criteria, the Project Manager is notified and the entire sample batch is re-extracted. If there is insufficient sample volume remaining for re-extraction, the client is contacted for information about the availability of additional sample volume. If there is no additional sample available, the original sample data is flagged and reported. A nonconformance memo is initiated describing the problem and corrective action. The problem and corrective action is documented in the project narrative.

9.5.1.2 If the batch is not re-extracted and reanalyzed, an NCM must be initiated and the reasons for accepting the batch must be clearly presented in the project records and the report. (An example of an

acceptable reason for not reanalyzing might be that the matrix spike and matrix spike duplicate recoveries are within control limits, the method blank and sample internal standard recoveries are within limits, and the data clearly demonstrates that the problem was confined to the LCS). Sample results associated with a failing LCS must be qualified. When data associated with a failed LCS is reported the failure must be noted in the narrative. LCS acceptance limits must be no greater than 70-130% recovery for samples from South Carolina.

9.5.1.3 For method TO-9A calculate the precision (%D) from the LCS/LCSD. The precision must be within ± 30%.

9.5.2 Ongoing monitoring of the LCS provides evidence that the laboratory is performing the method within accepted QC guidelines for accuracy and precision.

9.6 Internal Standards

Internal standards are spiked into all samples, blanks, and laboratory control samples to assess method performance on the sample matrix. The recovery of each labeled internal standard must be within the limits in Table 13 for methods 1613B, 8290 and 8290A or in Table 15 for methods 23, 0023A, and TO-9A.

9.6.1 If the recovery is outside these limits the following corrective action must be taken:

9.6.1.1 Check all calculations for error.

9.6.1.2 Ensure that instrument performance is acceptable.

9.6.1.3 Recalculate the data and/or reanalyze if either of the above checks reveal a problem.

9.6.1.4 If the recovery of any internal standard is less than the lower control limit, calculate the S/N ratio of the internal standard. If the S/N is > 10 and the estimated detection limits (EDLs) are less than the minimum levels (MLs), report the data as is with qualifiers in the report and a discussion in the case narrative. If the S/N is < 10 or the estimated detection limits (EDLs) are greater than the minimum levels (MLs), re-extract and re-analyze the sample. If the poor internal standard recovery is judged to be a result of sample matrix, a reduced portion of the sample can be re-extracted or additional clean-ups can be employed. The decision to reanalyze or flag the data is made in consultation with the client.

9.7 Matrix Spike/Matrix Spike Duplicate (MS/MSD) – Method 8290 only.

When method 8290 is performed a matrix spike/matrix spike duplicate (MS/MSD) is prepared and analyzed with every 20 samples of a given matrix. **Note that a MS/MSD is not required for Method 8290A**. The MS/MSD is spiked with the same subset of analytes as the LCS (See Table 12). Compare the percent recovery and relative percent difference (RPD) to that in the laboratory specific historically generated limits.

9.7.1 If any individual recovery or RPD falls outside the acceptable range, corrective action must occur. The initial corrective action is to check the recovery of that analyte in the Laboratory Control Sample (LCS). Generally, if the recovery of the analyte in the LCS is within limits, then the laboratory operation is in control and analysis can proceed. The reasons for accepting the batch must be documented in the report narrative.

9.7.2 If the recovery for any component is outside QC limits for both the MS/MSD and the LCS, the analysis is out of control and corrective action must be taken. Corrective action normally includes repreparation and reanalysis of the batch.

9.7.3 If a MS/MSD is not possible due to limited sample, then a LCSD must be analyzed. The LCSD is evaluated using the same acceptance criteria as the LCS. The RPD of the LCS and LCSD are compared to the acceptance limits in Table 12.

9.7.4 The MS/MSD must be analyzed at the same dilution as the unspiked sample, even if the matrix spike compounds are diluted out.

9.8 Surrogate Standards – Methods 23, 0023A, TO-9A

Field surrogate standards are added to the collection media prior to sample collection when performing methods 23, 0023A, or TO-9A. The surrogate recoveries are calculated relative to the internal standards and are a measure of sampling efficiency. The recovery of the surrogate standards must be within the limits specified in Table 16. Poor recoveries of the surrogate standards can indicate breakthrough in the sampling train.

9.8.1 If the recovery is outside these limits the following corrective action must be taken:

9.8.1.1 Check all calculations for error.

9.8.1.2 Ensure that instrument performance is acceptable.

9.8.1.3 Recalculate the data and/or reanalyze if either of the above checks reveal a problem.

9.8.1.4 Flag the results that are outside control limits and notify the Project Manager. The client must be notified and consulted for additional corrective action.

10. Calibration and Standardization

10.1 Two types of calibration procedures are required. One type, initial calibration, is required before any samples are analyzed and is required intermittently throughout sample analyses as dictated by the results of continuing calibration procedures described below. The other type, continuing calibration, consists of analyzing the column performance check solution and a calibration solution (CS3). No samples are to be analyzed until acceptable calibration as described in sections 10.2 and 10.2.9.1 is demonstrated and documented. A 2uL injection volume is specified for all extracts, blanks, calibration solutions and performance check samples. A 1uL injection volume can be used; however, the laboratory must keep the injection volume the same throughout calibration and analysis.

10.2 Initial Calibration

10.2.1 Prepare multi-level calibration standards containing the compounds and concentrations as specified in Table 5 for methods 1613B and 8290/8290A or in Table 6 for methods 23, 0023A, or TO-9A. Store calibration standards at room temperature in the dark. Calibration standard solutions have an expiration date of ten (10) years from date of receipt unless otherwise specified by the manufacturer/supplier.

If a microwave extraction is used, a 6-point ICAL will be used to calculate samples to meet reporting limits in Table 2.

10.2.2 Establish operating parameters for the GC/MS system (suggested operating conditions are displayed in Figure 1 and Figure 2). For method 1613B adjust the GC conditions to meet the relative retention times for the PCDDs/PCDFs listed in Table 3. The cycle time for MID descriptors must be ≤ 1 sec.

10.2.3 By using a PFK or FC-43 molecular leak, tune the instrument to meet the minimum resolving power of 10,000 (10 percent valley) at m/z 304.9824 (PFK) or 313.9838 (FC-43) or any other reference signal close to the m/z 303.9016 (from TCDF).

10.2.4 By using peak matching conditions and the aforementioned either PFK or FC-43 reference peak, verify that the exact mass of m/z 380.9760 (PFK) or m/z 363.9807 (FC-43) is within 5 ppm of the required value. Document that the resolving power at reduced accelerating voltage of m/z 380.9760 (PFK) or m/z 363.9807 (FC-43) is greater than 10,000 (10 percent valley).

10.2.5 Analyze 1µL (2µL for MAT95s) of the Window Defining Mixture and set the switchpoints for the MID descriptors. The switchpoints must be set to encompass the retention time window of each congener group.

10.2.6 If the initial calibration is being performed on the DB-5 or RTX-5 column, analyze 1µL (2µL for MAT95s) of the Column Performance solution. The chromatographic peak separation between 2,3,7,8-TCDD and the closest

eluting non-2,3,7,8-TCDD isomer must be resolved with a % Valley of ≤ 25, where

$$\%\ \text{Valley} = \frac{\text{baseline to valley height of closest eluting isomer}}{\text{peak height of 2,3,7,8-TCDD}} \times 100$$

If the initial calibration is being performed on the DB-225 or RTX-225 column, analyze 1µL (2µL for MAT95s) of the TCDF Column Performance solution. The chromatographic peak separation between 2,3,7,8-TCDF and the closest eluting non-2,3,7,8-TCDF isomer must be resolved with a % Valley of ≤ 25, where

$$\%\ \text{Valley} = \frac{\text{baseline to valley height of closest eluting isomer}}{\text{peak height of 2,3,7,8-TCDF}} \times 100$$

10.2.7 Analyze 1µL (2µL for MAT95s) of each of the five calibration standards and calculate the RRF of each analyte vs. the appropriate internal standard listed in Table 3 for methods 1613B, 8290/8290A or in Table 4 for methods 23, 0023A, and TO-9A using the following equation;

$$\text{RRF} = \frac{\text{As} \times \text{Cis}}{\text{Ais} \times \text{Cs}}$$

where:

As = sum of the areas of the quantitation ions of the compound of interest
Ais = sum of the areas of the quantitation ions of the appropriate internal standard
Cis = concentration of the appropriate internal standard
Cs = concentration of the compound of interest

10.2.7.1 Calculate the mean relative response factor (mean RRF) and the percent relative standard deviation (RSD) of the relative response factors for each compound of interest in the five calibration standard solutions using the following equations;

$$\overline{\text{RRF}}_{n=5} = \frac{1}{n} \times \sum_{i=1}^{n} \text{RF}_i$$

$$\text{RSD}_{n=5} = \sqrt{\frac{\sum_{i=1}^{n} \left(\text{RF}_i - \overline{\text{RF}}\right)^2}{n-1}} \times \frac{100}{\overline{\text{RRF}}}$$

10.2.8 Criteria for Acceptable Calibration - The criteria listed below for acceptable calibration must be met for each initial calibration standard before sample analyses are performed. If acceptable initial calibration is not achieved,

identify the root cause, perform corrective action, and repeat the initial calibration. If the root cause can be traced to problems with an individual analysis within the calibration series, follow the procedure in Test America Policy CA-T-P-002 Selection of Calibration Points, current revision (see reference section 16.10).

10.2.8.1 The percent relative standard deviation (RSD) for the mean relative response factors must be within the acceptance criteria listed in Table 5 for methods 1613B, 8290/8290A or in Table 6 for methods 23, 0023A, and TO-9A.

10.2.8.2 The peaks representing the PCDDs/PCDFs and labeled compounds in the calibration standards must have signal-to-noise ratios (S/N) ≥ 10.

10.2.8.3 The ion abundance ratios must be within the specified control limits in Table 22.

10.2.8.4 For method 1613B the absolute retention time of $^{13}C_{12}$-1234-TCDD must exceed 25.0 minutes on the DB/Rtx-5 column and 15.0 minutes on the DB/Rtx-225 column.

10.2.8.5 Corrective action can include replacing the injector port liner, replacing the injector port septum, removal of a small portion of the front of the analytical column, replacing the autosampler syringes and rinse solvent, adjusting the instrument tuning, cleaning the ion volume or ion source, installing a new analytical column and replacing the calibration standard solutions.

10.2.9 Analyze 1µL (2µL for MAT95s) of the Initial Calibration Verification (ICV) Standard in section 7.3 after the completion of the initial calibration prior to sample analysis. Calculate the concentration of the ICV using the RRFs from the CS3 standard analyzed in section 10.2.7 and the formula in section 12.3.4. Calculate the percent difference (%D) between the expected and the calculated ICV concentration using the following formula.

$$\%D = \frac{(C_{Exp} - C_{Calc})}{C_{Exp}} \times 100$$

Where:
C_{Exp} = The expected concentration of the Standard.
C_{Calc} = The calculated concentration of the Standard.

10.2.9.1 The general criteria for percent difference acceptance limits is ±25% for all native compounds. The warning limits for percent difference is ±25% to ±35%.

10.2.9.2 All data associated with compounds with percent differences in the warning limits must be reviewed before acceptance.

10.2.9.3 All data associated with compounds with percent differences outside the warning limits must be documented as an NCM. Corrective action must be taken and can include the following:

- Reanalyze the ICV Standard
- Replace and reanalyze the ICV Standard
- Evaluate the instrument performance
- Evaluate the Initial Calibration Standards

10.3 Continuing Calibration

10.3.1 Continuing calibration is performed at the beginning of a 12 hour period after successful mass resolution and GC resolution performance checks. A calibration check is also required at the end of a 12 hour period when performing method 8290/8290A or 0023A.

10.3.2 Document the mass resolution performance as specified in sections 10.2.3 and 10.2.4. The mass resolution checks must be performed at the beginning and at the end of each 12-hour shift.

10.3.3 Analyze 1µL (2µL for MAT95s) of the Window Defining Mixture and/or Column Performance Solution Mixture under the same instrument conditions used to perform the initial calibration. Determine and document acceptable column performance as described in section 10.2.5 and 10.2.6.

10.3.4 Analyze 1µL (2µL for MAT95s) of the Daily Calibration Standard Solution (CS3). Calculate the concentrations and percent difference of the standard using the formulas in sections 12.3.4 and 10.2.9.

NOTE: The combined Continuing Calibration Standard/Window Defining Mix/Column Performance Solution specified in section 7.4.2 can be used in section 10.3.2, 10.3.4, and 10.3.6.

10.3.5 Criteria for Acceptable Calibration - The criteria listed below for acceptable calibration must be met at the beginning of each 12 hour period that samples are analyzed. If acceptable beginning continuing calibration criteria is not met, identify the root cause, perform corrective action and repeat the continuing calibration. If the second consecutive beginning continuing calibration does not meet acceptance criteria, additional corrective action must be performed. Acceptable performance must be demonstrated after two consecutive failing beginning continuing calibrations by the analysis of two consecutive acceptable beginning continuing calibrations or by analysis of a new initial calibration.

10.3.5.1 The measured concentration or percent difference for each compound must be within the acceptance criteria limits in Table 7 for method 1613B, 8290/8290A or in Table 8 for methods 23, 00231A and TO-9A.

10.3.5.2 For method 1613B the relative retention times of PCDDs/PCDFs and labeled compounds in the standard must be within the limits in Table 3.

10.3.5.3 The peaks representing the PCDDs/PCDFs and labeled compounds in the calibration standard must have signal-to-noise ratios (S/N) $\geq$ 10.

10.3.5.4 The ion abundance ratios must be within the specified control limits in Table 22.

10.3.5.5 Corrective action can include all of the items specified in section 10.2.8.5.

10.3.5.6 When performing method 8290/8290A or 0023A, if the continuing calibration fails at the beginning of a 12-hour shift, the instructions in section 10.3.5 must be followed. If the continuing calibration check performed at the end of a 12 hour period fails by no more than ±25 %D for unlabeled native analytes and ±35 %D for labeled standards, the closing standard must not be used as a beginning calibration standard for the next 12-hour shift and the requirements in section 10.3.5 must be met before analysis can continue. Use the mean RRF from the two daily continuing calibration runs to compute the analyte concentrations instead of the RRFs obtained from the initial calibration. If the continuing calibration check performed at the end of a 12 hour period fails by more than ±25 %D for unlabeled native analytes and ±35 %RPD for labeled standards initiate corrective action and reanalyze all sample extracts analyzed during the 12 hour period encompassing the failed end of shift calibration check.

It is realized that it might not always be possible to achieve all RF criteria. For example, the RF criteria for $^{13}C_{12}$-HpCDD and $^{13}C_{12}$-OCDD were not met, however the RF values for the corresponding unlabeled compounds were within the criteria established in this procedure. The data quality for the unlabeled HpCDD and OCDD values were not compromised as a result of the calibration event. In these situations, the analyst must consult with the group

manager and the project manager to assess the impact on the data quality objectives on the affected samples. Corrective action must be taken and any decision to report sample data in this situation must be made in conjunction with the client. An NCM must be initiated if the data is to be reported. If any sample data is reported for samples bracketed by CCVs not meeting the acceptance criteria, this must also be documented in the project narrative.

10.3.6 Daily calibration must be performed every 12 hours of instrument operation. The 12 hour shift begins with the documentation of the mass resolution followed by the injection of the Window Defining Mixture or Column Performance Solution Mixture and the Daily Calibration Standard.

10.3.6.1 For methods 1613B, 23, TO-9A- The mass resolution documentation must also be performed at the end of the 12 hour shift. If the lab is operating consecutive 12 hour shifts, the mass resolution check from the end of the previous period can be used for the beginning of the next period.

10.3.6.2 For method 8290/8290A or 0023A - The Continuing Calibration Standard check and mass resolution documentation must also be performed at the end of the 12 hour shift. If the lab is operating consecutive 12-hour shifts, the Window Defining Mixture and/or Column Performance Solution Mixture must be analyzed at the beginning of each 12-hour period. The mass resolution and continuing calibration checks from the previous period can be used for the beginning of the next period.

11. Procedure

11.1 One time procedural variations are allowed only if deemed necessary in the professional judgment of supervision to accommodate variations in sample matrix, radioactivity, chemistry, sample size or other parameters. Any variations in the procedure, except those specified by project specific instructions, must be completely documented using a Nonconformance Memo and approved by a Technical Specialist, Project Manager and QA Manager. If contractually required the client must be notified. Procedural variations are not acceptable for South Carolina samples without prior approval by the South Carolina Department of Health and Environmental Control.

11.2 Any unauthorized deviations from this procedure must also be documented as a nonconformance with a cause and corrective action described.

11.3 Sample Extract Analysis

11.3.1 Analyze the sample extracts under the same instrument operating conditions used to perform the instrument calibrations. Inject 1µL (2µL for MAT95s) into the GC/MS and acquire data until OCDF has eluted from the column.

11.3.2 Record analysis information in the instrument logbook. The following information is required:

Date of analysis
Time of analysis
Instrument data system filename
Analyst
Lab sample identification

Additional information can be recorded in the logbook if necessary.

11.3.3 Generate ion chromatograms for the masses listed in Table 21 that encompass the expected retention windows of the PCDD and PCDF homologous series.

11.4 Refer to the TestAmerica Knoxville Quality Assurance Manual, current revision for the GC/MS instrument equipment maintenance table.

11.5 Refer to TestAmerica Knoxville SOP KNOX-IT-0001, current revision for requirements for computer hardware and software.

12. Data Analysis and Calculations

12.1 Refer to Figure 3 for an example data review checklists used to perform and document the review of the data. Using the data review checklist, the analyst also creates a narrative which includes any qualifications of the sample data.

12.2 Qualitative identification criteria for PCDDs and PCDFs. For a gas chromatographic peak to be identified as a PCDD or PCDF, it must meet all of the following criteria:

12.2.1 The ion current response for both ions used for quantitative purposes must reach maximum simultaneously (± 2 seconds).

12.2.2 The signal-to-noise ratio (S/N) for each GC peak at each exact m/z must be ≥ 2.5 for positive identification of a PCDD/PCDF compound.

12.2.3 The ratio of the integrated areas of the two exact m/z's specified in Table 21 must be within the limits specified in Table 22, or alternatively when performing method 1613B, within ±10 percent of the ratio in the midpoint (CS3) calibration or the calibration verification (VER), whichever is most recent.

12.2.4 Method 1613B only - The relative retention time of the peak for a 2,3,7,8-substituted PCDD or PCDF must be within the limits in Table 3.

12.2.5 Method 8290, 8290A and 0023A only - For 2,3,7,8-substituted isomers, which have an isotopically labeled internal standard or recovery standard present in the sample extract, the retention time of the two ions used for quantitation purposes must be within -1 to +3 seconds of the isotopically labeled standard.

12.2.6 Method 23 and TO-9A only - For 2,3,7,8-substituted isomers, which have an isotopically labeled internal standard or recovery standard present in the sample extract, the retention time of the two ions used for quantitation purposes must be within ±3 seconds of the isotopically labeled standard.

12.2.7 Method 8290, 8290A, 23, 0023A, and TO-9A only - For 2,3,7,8-substituted isomers, which do not have an isotopically labeled internal standard present in the sample extract, the retention time must fall within 0.005 retention time units of the relative retention times measured in the routine calibration.

12.2.8 The retention time of peaks representing non-2,3,7,8-substituted PCDDs/PCDFs must be within the retention time windows established in section 10.2.5.

12.2.9 No peaks detected in the polychlorinated diphenyl-ether (PCDPE) mass channel in the same retention time region (± 2 sec for method 8290, 8290A & 0023A) as a PCDF peak.

12.3 Quantitation for PCDDs and PCDFs.

12.3.1 Calculate the Internal Standard and Cleanup Standard Recoveries (Ris) relative to the Recovery Standard according to the following equation:

$$\text{Ris} = \frac{\text{Ais} \times \text{Qrs}}{\text{Ars} \times \text{RRFis} \times \text{Qis}} \times 100\%$$

Where:

Ais = sum of the areas of the quantitation ions of the appropriate internal standard (cleanup standard is single ion)
Ars = sum of the areas of the quantitation ions of the recovery standard
Qrs = ng of recovery standard added to extract
Qis = ng of internal standard or cleanup standard added to sample
RRFis = mean relative response factor of internal standard obtained during initial calibration

NOTE: In some situations, such as high-volume water sampling or air train samples, the extract is split for multiple analyses. In this case, Qrs must be correctly calculated to account for the splitting of extracts before the recovery standard was added.

$$\text{Q}rs = \frac{Crs \times Vrs}{\text{S}}$$

Where:
Qrs = ng of recovery standard added to extract
Crs = concentration of recovery standard added to the split portion of the extract

Vrs= volume of recovery standard added to the split portion of the extract
S = split ratio of the extract (decimal fraction of the extract used)

12.3.2 The split ratio represents the proportion of extract used from splits taken after the addition of internal standards and before the addition of recovery standards. The split ratio is calculated as the product of all split ratios generated between these steps:

$$S = Spis \times Spcs \times Spfc$$

Where:

Spis = the decimal fraction of extract used from split taken once the internal standard has been added and the extraction is performed.

Spcs = the decimal fraction of extract used from split taken once the cleanup standard (if used) has been added.

Spfc = the decimal fraction of extract used from split taken once the cleanup fractionation column has been run.

12.3.3 When properly applied, isotope dilution techniques produce results that are independent of recovery. The recovery of each internal standard must be within the limits specified in Table 13 for method 1613B, 8290 or 8290A or in Table 15 for method 23, 0023A, or TO-9A. If the recovery of any internal standard is not within the specified limits, calculate the S/N ratio of the internal standard. If the S/N is ≥ 10 and the method minimum levels are met, report the data as is with qualifiers in the report and a discussion in the case narrative. If the S/N is < 10 or the minimum levels are not achieved, re-extract and re-analyze the sample. If the poor internal standard recovery is judged to be a result of sample matrix, a reduced portion of the sample can be re-extracted or additional clean-ups can be employed.

12.3.4 Calculate the concentration of the 2,3,7,8 isomers according to the following equation:

$$C_{2,3,7,8\,\text{isomers}} = \frac{\text{Ata} \times \text{Qis}}{\text{Ais} \times \text{RRF} \times \text{Ws}}$$

Where:
C = Concentration of 2,3,7,8 isomers
Ata = sum of the areas of the quantitation ions of the target analyte
Ais = sum of the areas of the quantitation ions of the appropriate internal standard
Qis = ng of internal standard added to sample
RRF = mean relative response factor from initial calibration.
Ws = amount of sample spiked and extracted (grams or liters)

12.3.5 The concentrations of non-2,3,7,8-isomers are calculated using the RRF for the corresponding 2,3,7,8-isomer. If more than one 2,3,7,8-isomer exist for a particular level of chlorination, the average of the individual 2,3,7,8-isomer RRFs is used in the calculation.

$$C_{\text{non 2,3,7,8 isomer}} = \frac{\text{Ata} \times \text{Qis}}{\text{Ais} \times \text{RRF} \times \text{Ws}}$$

Where:
Ata = sum of the areas of the quantitation ions of the non-2,3,7,8 isomer
Ais = sum of the areas of the quantitation ions of the appropriate internal standard
Qis = ng of internal standard added to sample
RRF = mean relative response factor from initial calibration for the corresponding 2,3,7,8 isomer.
Ws = amount of sample spiked and extracted (grams or liters)

12.3.6 Calculate the total concentration of all isomers within each homologous series of PCDDs and PCDFs by summing the concentrations of the individual PCDD or PCDF 2,3,7,8 and non-2,3,7,8 isomers.

$$C_{\text{Total}} = \sum C_{\text{2,3,7,8 isomers}} + \sum C_{\text{non 2,3,7,8 isomers}}$$

12.3.7 If solid samples are to be reported on a dry weight basis, the laboratory LIMS system performs the following calculation:

$$\text{Concentration (Dry Weight)} = \frac{\text{C}}{\text{\%Solids} \div 100}$$

Where:
C= Concentration of the target analyte
%Solids = the sample percent solids determined by moisture analysis

12.3.8 If no peaks are present in the region of the ion chromatogram where the compounds of interest are expected to elute, calculate the estimated detection limit (EDL) for that compound according to the following equation:

$$\text{EDL} = \frac{\text{N} \times 2.5 \times \text{Qis}}{\text{His} \times \text{RRFs} \times \text{Ws} \times \text{Ssl}}$$

Where:
N= Sum of the average peak noise heights for each native quantitation ion signal in the region of the ion chromatogram where the compounds of interest are expected to elute.
His = Sum of peak heights of the quantitation ions for appropriate internal standard
Qis = ng of internal standard added to sample
RRFs = mean relative response factor of compound from initial calibration

W = amount of sample spiked and extracted (grams or liters)
Ssl = decimal expression of percent solids (optional, if results are requested to be reported on dry weight basis)

NOTE: The percent solids calculation is performed by the laboratory LIMS system prior to final reporting.

12.3.9 If peaks are present in the region of the ion chromatogram which do not meet the qualitative criteria listed in section 12.2, calculate an Estimated Maximum Possible Concentration (EMPC). Two different calculation formulas can be used depending upon specific client requirements.

12.3.9.1 When performing methods 8290 and 1613B for EPA regulated analyses where the currently promulgated method is required by law (e.g. Trial Burns) and for all other analyses unless the client has specified otherwise, use the equation in section 12.3.4, except that Ata represents the sum of the area under the one peak and of the other peak area calculated using the theoretical chlorine isotope ratio. The peak selected to calculate the theoretical area is the one which gives the lower of the two possible results (i.e. the EMPC is lower than the result calculated from the uncorrected areas).

12.3.9.2 For method 8290A, use the equation in section 12.3.4 without correcting the areas. This method gives an EMPC which is always higher than the method above and would be considered the worst case.

12.3.10 If peaks are present in the diphenyl ether mass channel at the same retention time as a PCDF peak, the peak cannot be identified as a PCDF. Calculate the concentration of the peak using the equation in section 12.3.4 but report the concentration as an Estimated Maximum Possible Concentration.

12.3.11 If the concentration in the final extract of any 2,3,7,8-substituted PCDD/PCDF isomer (except OCDD or OCDF) exceeds the upper method calibration limits, a dilution of the extract or a re-extraction of a smaller portion of the sample must be performed. For OCDD and OCDF, report the measured concentration and indicate that the value exceeds the calibration limit by flagging the results with “E”. Dilutions of up to 1/10 can be performed on the extract. If the compounds that exceed the calibration range cannot be brought within the calibration range by a 1/10 dilution, extraction of a smaller aliquot of sample can be performed or the sample can be analyzed by a more appropriate analytical technique such as HRGC/LRMS. Consultation with the client must occur before any re-extraction is performed.

12.3.12 Evaluate the ion chromatograms of the PFK or FC-43 lock mass and calibration mass for each MID group. The PFK or FC-43 mass intensity must be consistent throughout the retention time of the target compounds. Negative

excursions or variations in the PFK or FC-43 mass intensity indicate the elution of interferences from the GC column that are causing suppression in the ion source of the mass spectrometer. This ion suppression can reduce the instrument sensitivity and quantitative result of any peaks that elute at the same retention time. Either additional extract cleanup or dilutions can reduce ion suppression. The quantitative results must be carefully evaluated when there is evidence of ion suppression present in the PFK or FC-43 mass traces.

12.4 The DB-5 (RTX-5) column does not provide for isomer specificity of 2,3,7,8-TCDF using the operating condition required for this method. If a peak is determined to be present at the expected retention time of 2,3,7,8-TCDF and its calculated concentration is above the MinL, the sample extract must be analyzed on the DB-225 (RTX-225) column.

12.5 The Minimum Level (MinL) is defined as the level at which the instrument gives acceptable calibration assuming a sample is extracted at the recommended weight or volume and is carried through all normal extraction and analysis procedures. Deviation from the extraction amounts or final volumes listed Table 2 changes the MinL. The MinL is calculated as shown in the following equation:

$$\mathrm{MinL} = \frac{C\,\mathrm{min} \times Vfe}{W\mathrm{s}}$$

Where:

Cmin = the concentration the analyte in the lowest calibration standard
Ws = amount of sample spiked and extracted (grams or liters)
Vfe = the final volume of the extract, corrected for all splits and dilutions

$$\mathrm{V}fe = \frac{Vdel \times DFpr}{Spr \times S}$$

Where:

Vdel = the volume of extract delivered to the analysis
DFpr = the dilution factor for dilutions performed to the final extract
Spr = the split ratio for any post-recovery standard splits
S = the split ratio for any post-internal standard and post-cleanup standard splits

12.6 The Maximum Level (MaxL) is defined as the concentration or mass of analyte in the sample that corresponds to the highest calibration level in the initial calibration. It is equivalent to the concentration of the highest calibration standard, assuming that all method-specified sample weights, volumes, and cleanup procedures have been employed. The MaxL is calculated as shown in the following equation:

$$\mathrm{M}axL = \frac{C\,\mathrm{max} \times Vfe}{W\mathrm{s}}$$

Where:

Cmax = the concentration the analyte in the highest calibration standard Vfe and Ws are defined in Section 12.5.

12.7 Flag all compound results in the sample that were detected in the method blank with a “B” qualifier.

12.8 Flag all compound results in the sample that are below the minimum level with a “J” qualifier.

12.9 Flag all compound results in the sample that are above the upper calibration limit with an “E” qualifier.

12.10 Flag all compound results in the sample that are “Estimated Maximum Possible Concentrations” with a “Q” qualifier.

12.11 Flag compound results in the sample that exhibit chromatographic evidence of co-eluting compounds with a “C” qualifier.

12.12 Flag compound results in the sample that are affected by ion suppression with a “S” qualifier.

12.13 Data Review

12.13.1 The analyst who performs the initial data calculations must initial and date the front chromatogram of the raw data package to document that they have performed the qualitative and quantitative analysis on the sample data.

12.13.2 A second analyst must verify all qualitative peak identifications. If discrepancies are found, the data must be returned to the analyst who performed the initial peak identification for resolution.

12.13.3 A second analyst must check all hand calculation and data entry into calculation programs, databases, or spreadsheets at a frequency of 100 percent. If discrepancies are found, the data must be returned to the analyst who performed the initial calculation for resolution.

12.13.4 The reviewing analyst must initial and date the front chromatogram of the raw data package to document that they have performed the second level review on the sample data.

12.13.5 All items listed on the data review check list must be checked by both the analyst who performed the initial qualitative and quantitative analysis and the analyst who performed the second level review. Using the data review checklist, the analyst also creates a narrative which includes any qualifications of the sample data. An example data review check list is shown in Figure 3.

13. Method Performance

13.1 Method Detection Limit (MDL): An MDL must be determined for each analyte in each routine matrix prior to the analysis of any samples. The procedure for determination of the

method detection limit is given in the SOP CA-Q-S-006, current revision, based on 40 CFR Part 136 Appendix B. The result of the MDL determination must support the reporting limit.

13.2 Initial Demonstration of Capability: Each analyst must perform an initial demonstration of capability (IDOC) for each target analyte prior to performing the analysis independently. The IDOC is determined by analyzing four replicate spikes (e.g., LCSs) as detailed in Test America Knoxville SOP KNOX-QA-0009, current revision. Demonstration for both aqueous and solid matrices is required.

13.2.1 For aqueous samples, extract, concentrate, and analyze four 1-L aliquots of reagent water spiked with labeled internal standards and native analytes according to the procedures in section 11. For non-aqueous samples, extract, concentrate, and analyze four aliquots of sodium sulfate spiked with labeled internal standards and native analytes according to the procedures in section 11. It is recommended that a method blank be prepared with the IDOC samples. Extracts must be stored in the dark at room temperature in amber or clear glass vials prior to analysis.

13.2.2 Using the results of the set of four analyses, compute the average concentration (X) of the extracts in ng/mL and the standard deviation (S) of the concentration in ng/mL for each compound.

13.2.3 For each compound, compare S and X with the corresponding limits for initial precision and recovery in Table 9 for method 1613B and Table 10 for methods 8290, 8290A 23, 0023A, and TO-9A. If S and X for all compounds meet the acceptance criteria, system performance is acceptable and analysis of blanks and samples can begin. If, however, any individual S exceeds the precision limit or any individual X falls outside the range for accuracy, system performance is unacceptable for that compound. Correct the problem and repeat the test.

13.3 Training Qualification: The group/team leader has the responsibility to ensure that this procedure is performed by an associate who has been properly trained in its use and has the required experience. Refer to SOP KNOX-QA-0009, current revision for further requirements for performing and documenting initial and on-going demonstrations of capability.

14. Pollution Prevention

14.1 All attempts will be made to minimize, as far as practical, the use of solvents and standard materials.

15. Waste Management

15.1 All waste will be disposed of in accordance with Federal, State and Local regulations. Where reasonably feasible, technological changes have been implemented to minimize the potential for pollution of the environment. Employees will abide by this method and the

policies in section 13 of the Corporate Safety Manual for "Waste Management and Pollution Prevention."

15.2 See the current revision of SOP KNOX-HS-0002 for specific waste handling guidelines.

15.3 The following waste streams are produced when this method is carried out.

15.3.1 Waste solvents must be placed in the flammable waste stream, contained in a steel satellite accumulation container or flammable solvent container.

15.3.2 Miscellaneous disposable glassware, chemical resistant gloves, bench paper and similar materials that may or may not be contaminated/hazardous must be placed in the incinerable laboratory waste stream, contained in a HDPE satellite accumulation container.

16. References

16.1 TestAmerica Knoxville Quality Assurance Manual (QAM), current revision.

16.2 EPA Method 1613: Tetra- Through Octa- Chlorinated Dioxins and Furans by Isotope Dilutions HRGC/HRMS, Revision B, October 1994.

16.3 SW-846 Method 8290, Polychlorinated Dibenzodioxins (PCDDs) and Polychlorinated Dibenzofurans (PCDFs) by High-Resolution Gas Chromatography/High-Resolution Mass Spectrometry (HRGC/HRMS), Revision 0, September 1994.

16.4 SW-846 Method 8290A, Polychlorinated Dibenzodioxins (PCDDs) and Polychlorinated Dibenzofurans (PCDFs) by High-Resolution Gas Chromatography/High-Resolution Mass Spectrometry (HRGC/HRMS), Revision 1, February 2007.

16.5 SW-846 Method 0023A, Sampling Method for Polychlorinated Dibenzo-p-Dioxins and Polychlorinated Dibenzofuran Emissions from Stationary Sources, Revision 1, December 1996.

16.6 USEPA Method 23 – Determination of Polychlorinated Dibenzo-p-dioxins and Polychlorinated Dibenzofurans from Municipal Waste Combustors. 40 CFR Part 60 Appendix A.

16.7 Method TO-9A: Compendium of Methods for the Determination of Toxic Organic Compounds in Ambient Air, Second Edition EPA/625/R-96/010b.

16.8 TestAmerica Knoxville SOP KNOX-ID-0012, "Method 0023A and Method 0010 Sampling Train Pre-Sampling Preparation and Sample Extraction Procedure (Includes TO-9A Sampling Components)", current revision.

16.9 TestAmerica Knoxville SOP KNOX-OP-0001, "Extraction of Polychlorinated Dioxins/Furans for Analysis by HRGC/HRMS Based on Methods 8290, 8290A and 1613B", current revision.

16.10 TestAmerica Policy, CA-T-P-002, Selection of Calibration Points, current revision.

17. Miscellaneous

17.1 Deviations from Reference Methods.

17.1.1 Spiking levels have been reduced to minimize the amount of dioxin contaminated waste generated by this procedure. It has been demonstrated that the performance criteria specified in the method are not affected by this modification.

17.1.2 The absolute retention time requirements in Method 1613 section 15.4.1.1 is not required in this procedure. The routine maintenance required of GC columns when analyzing samples from hazardous waste sites makes this requirement virtually impossible to meet in a commercial laboratory environment. This requirement provides no additional quality assurance purpose beyond those already provided by the use of labeled internal standards and required relative retention time limits.

17.1.3 This procedure provides for additional calculation and reporting of sample specific detection limits and estimated maximum possible concentrations not required by Method 1613. These reporting conventions are similar to those required by EPA SW-846 Method 8290 and expected by data users familiar with EPA Office of Solid Waste program requirements.

17.1.4 Methods 8290/8290A do not require dilution and reanalysis of samples for which OCDD/OCDF and non-2378s exceed the calibration range. Although this allowance is not made by method 1613B, this procedure does not require dilution for OCDD/OCDF and non-2378s on samples analyzed by that method.

17.1.5 The calibration standards specified in method 23 are used for method 0023A and TO-9A.

17.1.6 Extracts are stored at room temperature rather than at <10 °C as specified in method 1613B. Methods 8290 and 8290A allow for the storage of extracts at room temperature in the dark. All of the reference methods require that standards be stored at room temperature. Recovery studies performed by Cambridge Isotopes Laboratories (CIL) indicate freezing or refrigeration of standards causes problems with precipitation and irreversible adsorption to the inside surface of the vial. CIL recommends the storage of standards and extracts at room temperature as long as they are protected from exposure to UV and evaporative losses.

17.1.7 This procedure allows for the use of perfluorotributylamine (FC43) for mass calibration and resolution instead of the method recommended reference compound, Perfluorokerosene (PFK). FC43 is used on the newest HRMS instrument in the laboratory based on the manufacturer's recommendation. The use of another mass reference substance is noted in both reference

methods 1613B and 8290A. FC43 provides for less noise and less ion source contamination than the method recommended PFK.

17.1.8 The percent valley column resolution criteria is ≤ 25% for this SOP. Among the reference methods both ≤ 25% and < 25% are represented.

17.1.9 A six point ICAL is used to meet the required MLs listed in Table 2 when the microwave extraction is used and the extracts are split.

17.2 List of tables and figures referenced in the body of the SOP.

17.2.1 Table 1 – Polychlorinated Dibenzodioxins and Furans Determined by Isotope Dilution and Internal Standard High Resolution Gas Chromatography /High Resolution Mass Spectrometry (HRGC/HRMS)

17.2.2 Table 2 – Methods – All, Minimum Levels by Matrix

17.2.3 Table 3 – Methods – 1613B and 8290/8290A, Retention Time References, Quantitation References, and Relative Retention Times

17.2.4 Table 4 – Methods – 23, 0023A, and TO-9A, Retention Time References and Quantitation References

17.2.5 Table 5 – Methods – 1613B and 8290/8290A, Initial Calibration Standard Concentrations and Acceptance Criteria

17.2.6 Table 6 – Methods – 23, 0023A, and TO-9A, Initial Calibration Standard Concentrations and Acceptance Criteria

17.2.7 Table 7 – Methods – 1613B and 8290/8290A, Daily Verification Standard (VER) Concentrations and Acceptance Criteria

17.2.8 Table 8 – Methods – 23, 0023A, and TO-9A, Daily Verification Standard (VER) Concentrations and Acceptance Criteria

17.2.9 Table 9 – Method – 1613B, Initial Demonstration of Capability (IDOC) Acceptance Criteria

17.2.10 Table 10 – Methods – 8290/8290A, 23, 0023A, and TO-9A, Initial Demonstration of Capability (IDOC) Acceptance Criteria

17.2.11 Table 11 – Laboratory Control Sample (LCS) Spiking Solution Component Concentrations and Acceptance Limits

17.2.12 Table 12 – Method – 8290/8290A. Matrix Spike and Matrix Spike Duplicate Sample (MS/MSD) Spiking Solution Component Concentrations and Acceptance Limits

17.2.13 Table 13 - Methods – 1613B and 8290/8290A, Internal Standard Spiking Solution Component Concentrations and Acceptance Limits

17.2.14 Table 14 – Method – 1613B, Cleanup Standard Spiking Solution Component Concentrations and Acceptance Limits

17.2.15 Table 15 – Methods – 23, 0023A, and TO-9A, Internal Standard Spiking Solution Component Concentrations and Acceptance Limits

17.2.16 Table 16 – Methods – 23, 0023A, and TO-9A, Surrogate Standard Spiking Solution Component Concentrations and Acceptance Limits

17.2.17 Table 17 – Methods – All, Recovery Standard Spiking Solution Component Concentrations

17.2.18 Table 18 – Rtx-5/DB-5 Column Window Defining Standard Mixture Components. – Rtx-5 (DB-5) Column Performance Standard Mixture Components

17.2.19 Table 19 – Rtx-5/DB-5 Column Performance Standard Mixture Components

17.2.20 Table 20 – Rtx-225/DB-225 Column Performance Standard Mixture Components

17.2.21 Table 21 – DB-225 (Rtx-225) Column Performance Standard Mixture Components

17.2.22 Table 21 – Ions Monitored for HRGC/HRMS Analysis of PCDDs and PCDFs

17.2.23 Table 22 – Theoretical Ion Abundance Ratios and Their Control Limits for PCDDs and PCDFs

17.2.24 Figure 1 – Recommended GC Operating Conditions

17.2.25 Figure 2 – Recommended MID Descriptors

17.2.26 Figure 3 – Example Data Review Checklist

17.2.27 Figure 4 – Analysis of PCDDs and PCDFs by HRGC/HRMS Flowchart

Table 1

Polychlorinated Dibenzo-p-dioxins/Dibenzofurans Determined by Isotope Dilution and Internal Standard High Resolution Gas Chromatography/High Resolution Mass Spectrometry (HRGC/HRMS)

PCDDs/PCDFs [1] Isomer/Congener	CAS Registry	Labeled Analog	CAS Registry
2,3,7,8-TCDD	1746-01-6	$^{13}C_{12}$-2,3,7,8-TCDD $^{37}Cl_4$-2,3,7,8-TCDD	76523-40-5 85508-50-5
Total TCDD	41903-57-5		
2,3,7,8-TCDF	51207-31-9	$^{13}C_{12}$-2,3,7,8-TCDF	89059-46-1
Total TCDF	55722-27-5		
1,2,3,7,8-PeCDD	40321-76-4	$^{13}C_{12}$-1,2,3,7,8-PeCDD	109719-79-1
Total PeCDD	36088-22-9		
1,2,3,7,8-PeCDF	57117-41-6	$^{13}C_{12}$-1,2,3,7,8-PeCDF	109719-77-9
2,3,4,7,8-PeCDF	57117-31-4	$^{13}C_{12}$-2,3,4,7,8-PeCDF	116843-02-8
Total PeCDF	30402-15-4		
1,2,3,4,7,8-HxCDD	39227-28-6	$^{13}C_{12}$-1,2,3,4,7,8-HxCDD	109719-80-4
1,2,3,6,7,8-HxCDD	57653-85-7	$^{13}C_{12}$-1,2,3,6,7,8-HxCDD	109719-81-5
1,2,3,7,8,9-HxCDD	19408-74-3	$^{13}C_{12}$-1,2,3,7,8,9-HxCDD	109719-82-6
Total HxCDD	34465-46-8		
1,2,3,4,7,8-HxCDF	70648-26-9	$^{13}C_{12}$-1,2,3,4,7,8-HxCDF	114423-98-2
1,2,3,6,7,8-HxCDF	57117-44-9	$^{13}C_{12}$-1,2,3,6,7,8-HxCDF	116843-03-9
2,3,4,6,7,8-HxCDF	60851-34-5	$^{13}C_{12}$-2,3,4,6,7,8-HxCDF	116843-05-1
1,2,3,7,8,9-HxCDF	72918-21-9	$^{13}C_{12}$-1,2,3,7,8,9-HxCDF	116843-04-0
Total HxCDF	55684-94-1		
1,2,3,4,6,7,8-HpCDD	35822-46-9	$^{13}C_{12}$-1,2,3,4,6,7,8-HpCDD	109719-83-7
Total HpCDD	37871-00-4		
1,2,3,4,6,7,8-HpCDF	67562-39-4	$^{13}C_{12}$-1,2,3,4,6,7,8-HpCDF	109719-84-8
1,2,3,4,7,8,9-HpCDF	55673-89-7	$^{13}C_{12}$-1,2,3,4,7,8,9-HpCDF	109719-94-0
Total HpCDF	38998-75-3		
OCDD	3268-87-9	$^{13}C_{12}$-OCDD	114423-97-1
OCDF	39001-02-0	none	

Notes:

1. Polychlorinated dioxins and furans

TCDD	= Tetrachlorodibenzo-p-dioxin	TCDF	= Tetrachlorodibenzofuran
PeCDD	= Pentachlorodibenzo-p-dioxin	PeCDF	= Pentachlorodibenzofuran
HxCDD	= Hexachlorodibenzo-p-dioxin	HxCDF	= Hexachlorodibenzofuran
HpCDD	= Heptachlorodibenzo-p-dioxin	HpCDF	= Heptachlorodibenzofuran
OCDD	= Octachlorodibenzo-p-dioxin	OCDF	= Octachlorodibenzofuran

Table 2

Methods – All
Minimum Levels by Matrix

Analyte	Extract (ng/mL) [1]	Water (pg/L) [2]	Solids (pg/g) [3]	Biological Tissue (pg/g) [3]	Waste (pg/g) [4]	Air/Wipe (pg) [5]
2,3,7,8-TCDD	0.5	10	1	1	10	10
2,3,7,8-TCDF	0.5	10	1	1	10	10
1,2,3,7,8-PeCDD	2.5	50	5	5	50	50
1,2,3,7,8-PeCDF	2.5	50	5	5	50	50
2,3,4,7,8-PeCDF	2.5	50	5	5	50	50
1,2,3,4,7,8-HxCDD	2.5	50	5	5	50	50
1,2,3,6,7,8-HxCDD	2.5	50	5	5	50	50
1,2,3,7,8,9-HxCDD	2.5	50	5	5	50	50
1,2,3,4,7,8-HxCDF	2.5	50	5	5	50	50
1,2,3,6,7,8-HxCDF	2.5	50	5	5	50	50
2,3,4,6,7,8-HxCDF	2.5	50	5	5	50	50
1,2,3,7,8,9-HxCDF	2.5	50	5	5	50	50
1,2,3,4,6,7,8-HpCDD	2.5	50	5	5	50	50
1,2,3,4,6,7,8-HpCDF	2.5	50	5	5	50	50
1,2,3,4,7,8,9-HpCDF	2.5	50	5	5	50	50
OCDD	5.0	100	10	10	100	100
OCDF	5.0	100	10	10	100	100

Notes:
1 Concentration in the extract assuming a 20 µL volume.
2 Based on a sample volume of 1.0 L.
3 Based on a sample weight of 10.0 g.
4 Based on a sample weight of 1.0 g.
5 Based on extraction of the entire sample.

Table 3

Methods – 1613B and 8290/8290A
Retention Time References, Quantitation References and Relative Retention Times

Analyte	Retention Time and Quantitation Reference	Relative Retention Time
Compounds using $^{13}C_{12}$-1,2,3,4-TCDD as the recovery standard		
2,3,7,8-TCDD	$^{13}C_{12}$-2,3,7,8-TCDD	0.999-1.002
2,3,7,8-TCDF	$^{13}C_{12}$-2,3,7,8-TCDF	0.999-1.003
1,2,3,7,8-PeCDD	$^{13}C_{12}$-1,2,3,7,8-PeCDD	0.999-1.002
1,2,3,7,8-PeCDF	$^{13}C_{12}$-1,2,3,7,8-PeCDF	0.999-1.002
2,3,4,7,8-PeCDF	$^{13}C_{12}$-2,3,4,7,8-PeCDF	0.999-1.002
$^{13}C_{12}$-2,3,7,8-TCDD	$^{13}C_{12}$-1,2,3,4-TCDD	0.976-1.043
$^{37}Cl_4$-2,3,7,8-TCDD	$^{13}C_{12}$-1,2,3,4-TCDD	0.989-1.052
$^{13}C_{12}$-2,3,7,8-TCDF	$^{13}C_{12}$-1,2,3,4-TCDD	0.923-1.103
$^{13}C_{12}$-1,2,3,7,8-PeCDD	$^{13}C_{12}$-1,2,3,4-TCDD	1.000-1.567
$^{13}C_{12}$-1,2,3,7,8-PeCDF	$^{13}C_{12}$-1,2,3,4-TCDD	1.000-1.425
$^{13}C_{12}$-2,3,4,7,8-PeCDF	$^{13}C_{12}$-1,2,3,4-TCDD	1.011-1.526
Compounds using $^{13}C_{12}$-1,2,3,7,8,9-HxCDD as the recovery standard		
1,2,3,4,7,8-HxCDD	$^{13}C_{12}$-1,2,3,4,7,8-HxCDD	0.999-1.001
1,2,3,6,7,8-HxCDD	$^{13}C_{12}$-1,2,3,6,7,8-HxCDD	0.998-1.004
1,2,3,7,8,9-HxCDD	--[1]	1.000-1.019
1,2,3,4,7,8-HxCDF	$^{13}C_{12}$-1,2,3,4,7,8-HxCDF	0.999-1.001
1,2,3,6,7,8-HxCDF	$^{13}C_{12}$-1,2,3,6,7,8-HxCDF	0.997-1.005
2,3,4,6,7,8-HxCDF	$^{13}C_{12}$-2,3,4,6,7,8-HxCDF	0.999-1.001
1,2,3,7,8,9-HxCDF	$^{13}C_{12}$-1,2,3,7,8,9-HxCDF	0.999-1.001
1,2,3,4,6,7,8-HpCDD	$^{13}C_{12}$-1,2,3,4,6,7,8-HpCDD	0.999-1.001
1,2,3,4,6,7,8-HpCDF	$^{13}C_{12}$-1,2,3,4,6,7,8-HpCDF	0.999-1.001
1,2,3,4,7,8,9-HpCDF	$^{13}C_{12}$-1,2,3,4,7,8,9-HpCDF	0.999-1.001
OCDD	$^{13}C_{12}$-OCDD	0.999-1.001
OCDF	$^{13}C_{12}$-OCDD	0.999-1.008
$^{13}C_{12}$-1,2,3,4,7,8-HxCDD	$^{13}C_{12}$-1,2,3,7,8,9-HxCDD	0.977-1.000
$^{13}C_{12}$-1,2,3,6,7,8-HxCDD	$^{13}C_{12}$-1,2,3,7,8,9-HxCDD	0.981-1.003
$^{13}C_{12}$-1,2,3,4,7,8-HxCDF	$^{13}C_{12}$-1,2,3,7,8,9-HxCDD	0.944-0.970
$^{13}C_{12}$-1,2,3,6,7,8-HxCDF	$^{13}C_{12}$-1,2,3,7,8,9-HxCDD	0.949-0.975
$^{13}C_{12}$-2,3,4,6,7,8-HxCDF	$^{13}C_{12}$-1,2,3,7,8,9-HxCDD	0.959-1.021
$^{13}C_{12}$-1,2,3,7,8,9-HxCDF	$^{13}C_{12}$-1,2,3,7,8,9-HxCDD	0.977-1.047
$^{13}C_{12}$-1,2,3,4,6,7,8-HpCDD	$^{13}C_{12}$-1,2,3,7,8,9-HxCDD	1.086-1.110
$^{13}C_{12}$-1,2,3,4,6,7,8-HpCDF	$^{13}C_{12}$-1,2,3,7,8,9-HxCDD	1.043-1.085
$^{13}C_{12}$-1,2,3,4,7,8,9-HpCDF	$^{13}C_{12}$-1,2,3,7,8,9-HxCDD	1.057-1.151
$^{13}C_{12}$-OCDD	$^{13}C_{12}$-1,2,3,7,8,9-HxCDD	1.032-1.311

Notes:

1 The retention time reference for 1,2,3,7,8,9-HxCDD is $^{13}C_{12}$-1,2,3,6,7,8-HxCDD. 1,2,3,7,8,9-HxCDD is quantified using the averaged responses for $^{13}C_{12}$-1,2,3,4,7,8-HxCDD and $^{13}C_{12}$-1,2,3,6,7,8-HxCDD.

Table 4

Methods – 23, 0023A and TO-9A
Retention Time References and Quantitation References

Analyte	Retention Time and Quantitation Reference
Compounds using $^{13}C_{12}$-1,2,3,4-TCDD as the recovery standard	
2,3,7,8-TCDD	$^{13}C_{12}$-2,3,7,8-TCDD
2,3,7,8-TCDF	$^{13}C_{12}$-2,3,7,8-TCDF
1,2,3,7,8-PeCDD	$^{13}C_{12}$-1,2,3,7,8-PeCDD
1,2,3,7,8-PeCDF	$^{13}C_{12}$-1,2,3,7,8-PeCDF
2,3,4,7,8-PeCDF	$^{13}C_{12}$-1,2,3,7,8-PeCDF
$^{13}C_{12}$-2,3,7,8-TCDD	$^{13}C_{12}$-1,2,3,4-TCDD
$^{37}Cl_4$-2,3,7,8-TCDD	$^{13}C_{12}$-2,3,7,8-TCDD
$^{13}C_{12}$-2,3,7,8-TCDF	$^{13}C_{12}$-1,2,3,4-TCDD
$^{13}C_{12}$-1,2,3,7,8-PeCDD	$^{13}C_{12}$-1,2,3,4-TCDD
$^{13}C_{12}$-1,2,3,7,8-PeCDF	$^{13}C_{12}$-1,2,3,4-TCDD
$^{13}C_{12}$-2,3,4,7,8-PeCDF	$^{13}C_{12}$-1,2,3,7,8-PeCDF
Compounds using $^{13}C_{12}$-1,2,3,7,8,9-HxCDD as the recovery standard	
1,2,3,4,7,8-HxCDD	$^{13}C_{12}$-1,2,3,6,7,8-HxCDD
1,2,3,6,7,8-HxCDD	$^{13}C_{12}$-1,2,3,6,7,8-HxCDD
1,2,3,7,8,9-HxCDD	$^{13}C_{12}$-1,2,3,6,7,8-HxCDD
1,2,3,4,7,8-HxCDF	$^{13}C_{12}$-1,2,3,6,7,8-HxCDF
1,2,3,6,7,8-HxCDF	$^{13}C_{12}$-1,2,3,6,7,8-HxCDF
2,3,4,6,7,8-HxCDF	$^{13}C_{12}$-1,2,3,6,7,8-HxCDF
1,2,3,7,8,9-HxCDF	$^{13}C_{12}$-1,2,3,6,7,8-HxCDF
1,2,3,4,6,7,8-HpCDD	$^{13}C_{12}$-1,2,3,4,6,7,8-HpCDD
1,2,3,4,6,7,8-HpCDF	$^{13}C_{12}$-1,2,3,4,6,7,8-HpCDF
1,2,3,4,7,8,9-HpCDF	$^{13}C_{12}$-1,2,3,4,6,7,8-HpCDF
OCDD	$^{13}C_{12}$-OCDD
OCDF	$^{13}C_{12}$-OCDD
$^{13}C_{12}$-1,2,3,4,7,8-HxCDD	$^{13}C_{12}$-1,2,3,6,7,8-HxCDD
$^{13}C_{12}$-1,2,3,6,7,8-HxCDD	$^{13}C_{12}$-1,2,3,7,8,9-HxCDD
$^{13}C_{12}$-1,2,3,4,7,8-HxCDF	$^{13}C_{12}$-1,2,3,6,7,8-HxCDF
$^{13}C_{12}$-1,2,3,6,7,8-HxCDF	$^{13}C_{12}$-1,2,3,7,8,9-HxCDD
$^{13}C_{12}$-1,2,3,4,6,7,8-HpCDD	$^{13}C_{12}$-1,2,3,7,8,9-HxCDD
$^{13}C_{12}$-1,2,3,4,6,7,8-HpCDF	$^{13}C_{12}$-1,2,3,7,8,9-HxCDD
$^{13}C_{12}$-1,2,3,4,7,8,9-HpCDF	$^{13}C_{12}$-1,2,3,4,6,7,8-HpCDF
$^{13}C_{12}$-OCDD	$^{13}C_{12}$-1,2,3,7,8,9-HxCDD

Table 5

Methods – 1613B and 8290/8290A
Initial Calibration Standard Concentrations and Acceptance Criteria

	CS0.5	CS1	CS2	CS3	CS4	CS5	1613B	8290	8290A
Analyte	**(ng/mL)**	**(ng/mL)**	**(ng/mL)**	**(ng/mL)**	**(ng/mL)**	**(ng/mL)**	**%RSD**	**%RSD**	**%RSD**
Native PCDD's and PCDF's									
2,3,7,8-TCDD	0.25	0.5	2.0	10	40	200	±20	±20	±20
2,3,7,8-TCDF	0.25	0.5	2.0	10	40	200	±20	±20	±20
1,2,3,7,8-PeCDD	1.25	2.5	10	50	200	1000	±20	±20	±20
1,2,3,7,8-PeCDF	1.25	2.5	10	50	200	1000	±20	±20	±20
2,3,4,7,8-PeCDF	1.25	2.5	10	50	200	1000	±20	±20	±20
1,2,3,4,7,8-HxCDD	1.25	2.5	10	50	200	1000	±20	±20	±20
1,2,3,6,7,8-HxCDD	1.25	2.5	10	50	200	1000	±20	±20	±20
1,2,3,7,8,9-HxCDD	1.25	2.5	10	50	200	1000	±35	±20	±20
1,2,3,4,7,8-HxCDF	1.25	2.5	10	50	200	1000	±20	±20	±20
1,2,3,6,7,8-HxCDF	1.25	2.5	10	50	200	1000	±20	±20	±20
2,3,4,6,7,8-HxCDF	1.25	2.5	10	50	200	1000	±20	±20	±20
1,2,3,7,8,9-HxCDF	1.25	2.5	10	50	200	1000	±20	±20	±20
1,2,3,4,6,7,8-HpCDD	1.25	2.5	10	50	200	1000	±20	±20	±20
1,2,3,4,6,7,8-HpCDF	1.25	2.5	10	50	200	1000	±20	±20	±20
1,2,3,4,7,8,9-HpCDF	1.25	2.5	10	50	200	1000	±20	±20	±20
OCDD	2.5	5.0	20	100	400	2000	±20	±20	±20
OCDF	2.5	5.0	20	100	400	2000	±35	±20	±20
Labeled Internal Standards									
$^{13}C_{12}$-2,3,7,8-TCDD	100	100	100	100	100	100	±35	±30	±20
$^{13}C_{12}$-2,3,7,8-TCDF	100	100	100	100	100	100	±35	±30	±20
$^{13}C_{12}$-1,2,3,7,8-PeCDD	100	100	100	100	100	100	±35	±30	±20
$^{13}C_{12}$-1,2,3,7,8-PeCDF	100	100	100	100	100	100	±35	±30	±20
$^{13}C_{12}$-2,3,4,7,8-PeCDF	100	100	100	100	100	100	±35	±30	±20
$^{13}C_{12}$-1,2,3,4,7,8-HxCDD	100	100	100	100	100	100	±35	±30	±20
$^{13}C_{12}$-1,2,3,6,7,8-HxCDD	100	100	100	100	100	100	±35	±30	±20
$^{13}C_{12}$-1,2,3,4,7,8-HxCDF	100	100	100	100	100	100	±35	±30	±20
$^{13}C_{12}$-1,2,3,6,7,8-HxCDF	100	100	100	100	100	100	±35	±30	±20
$^{13}C_{12}$-2,3,4,6,7,8-HxCDF	100	100	100	100	100	100	±35	±30	±20
$^{13}C_{12}$-1,2,3,7,8,9-HxCDF	100	100	100	100	100	100	±35	±30	±20
$^{13}C_{12}$-1,2,3,4,6,7,8-HpCDD	100	100	100	100	100	100	±35	±30	±20
$^{13}C_{12}$-1,2,3,4,6,7,8-HpCDF	100	100	100	100	100	100	±35	±30	±20
$^{13}C_{12}$-1,2,3,4,7,8,9-HpCDF	100	100	100	100	100	100	±35	±30	±20
$^{13}C_{12}$-OCDD	200	200	200	200	200	200	±35	±30	±20
Labeled Cleanup Standard									
$^{37}Cl_4$-2,3,7,8-TCDD	0.25	0.5	2.0	10	40	200	±35	-	-
Labeled Recovery Standard									
$^{13}C_{12}$-1,2,3,4-TCDD	100	100	100	100	100	100	-	-	-
$^{13}C_{12}$-1,2,3,7,8,9-HxCDD	100	100	100	100	100	100	-	-	-

Table 6

Methods – 23, 0023A and TO-9A
Initial Calibration Standard Concentrations and Acceptance Criteria

	CS1	CS2	CS3	CS4	CS5	23 / TO-9A	0023A
Analyte	**(ng/mL)**	**(ng/mL)**	**(ng/mL)**	**(ng/mL)**	**(ng/mL)**	**%RSD**	**%RSD**
Native PCDDs and PCDFs							
2,3,7,8-TCDD	0.5	1.0	5	50	100	±25	±20
2,3,7,8-TCDF	0.5	1.0	5	50	100	±25	±20
1,2,3,7,8-PeCDD	2.5	5	25	250	500	±25	±20
1,2,3,7,8-PeCDF	2.5	5	25	250	500	±25	±20
2,3,4,7,8-PeCDF	2.5	5	25	250	500	±25	±20
1,2,3,4,7,8-HxCDD	2.5	5	25	250	500	±25	±20
1,2,3,6,7,8-HxCDD	2.5	5	25	250	500	±25	±20
1,2,3,7,8,9-HxCDD	2.5	5	25	250	500	±25	±20
1,2,3,4,7,8-HxCDF	2.5	5	25	250	500	±25	±20
1,2,3,6,7,8-HxCDF	2.5	5	25	250	500	±25	±20
2,3,4,6,7,8-HxCDF	2.5	5	25	250	500	±25	±20
1,2,3,7,8,9-HxCDF	2.5	5	25	250	500	±25	±20
1,2,3,4,6,7,8-HpCDD	2.5	5	25	250	500	±25	±20
1,2,3,4,6,7,8-HpCDF	2.5	5	25	250	500	±25	±20
1,2,3,4,7,8,9-HpCDF	2.5	5	25	250	500	±25	±20
OCDD	5.0	10	50	500	1000	±25	±20
OCDF	5.0	10	50	500	1000	±30	±20
Labeled Internal Standards							
$^{13}C_{12}$-2,3,7,8-TCDD	100	100	100	100	100	±25	±30
$^{13}C_{12}$-2,3,7,8-TCDF	100	100	100	100	100	±30	±30
$^{13}C_{12}$-1,2,3,7,8-PeCDD	100	100	100	100	100	±30	±30
$^{13}C_{12}$-1,2,3,7,8-PeCDF	100	100	100	100	100	±30	±30
$^{13}C_{12}$-1,2,3,6,7,8-HxCDD	100	100	100	100	100	±25	±30
$^{13}C_{12}$-1,2,3,6,7,8-HxCDF	100	100	100	100	100	±30	±30
$^{13}C_{12}$-1,2,3,4,6,7,8-HpCDD	100	100	100	100	100	±30	±30
$^{13}C_{12}$-1,2,3,4,6,7,8-HpCDF	100	100	100	100	100	±30	±30
$^{13}C_{12}$-OCDD	200	200	200	200	200	±30	±30
Surrogate Standards							
$^{37}Cl_4$-2,3,7,8-TCDD	0.5	1.0	5	50	100	±25	±30
$^{13}C_{12}$-2,3,4,7,8-PeCDF	2.5	5	25	250	500	±25	±30
$^{13}C_{12}$-1,2,3,4,7,8-HxCDD	2.5	5	25	250	500	±25	±30
$^{13}C_{12}$-1,2,3,4,7,8-HxCDF	2.5	5	25	250	500	±25	±30
$^{13}C_{12}$-1,2,3,4,7,8,9-HpCDF	2.5	5	25	250	500	±25	±30
Labeled Recovery Standard							
$^{13}C_{12}$-1,2,3,4-TCDD	100	100	100	100	100	-	-
$^{13}C_{12}$-1,2,3,7,8,9-HxCDD	100	100	100	100	100	-	-

Table 7

Methods – 1613B and 8290/8290A
Daily Verification Standard (VER) Concentrations and Acceptance Criteria

		1613B			8290/8290A	
Analyte	**VER (ng/mL)**	**All Isomers (ng/mL)**	**Tetra only (ng/mL)**		**Shift Open %D**	**Shift Close[1] %D**
Native PCDDs and PCDFs						
2,3,7,8-TCDD	10	7.8-12.9	8.2-12.3		±20	±25
2,3,7,8-TCDF	10	8.4-12.0	8.6-11.6		±20	±25
1,2,3,7,8-PeCDD	50	39-65	-		±20	±25
1,2,3,7,8-PeCDF	50	41-60	-		±20	±25
2,3,4,7,8-PeCDF	50	41-61	-		±20	±25
1,2,3,4,7,8-HxCDD	50	39-64	-		±20	±25
1,2,3,6,7,8-HxCDD	50	39-64	-		±20	±25
1,2,3,7,8,9-HxCDD	50	41-61	-		±20	±25
1,2,3,4,7,8-HxCDF	50	45-56	-		±20	±25
1,2,3,6,7,8-HxCDF	50	44-57	-		±20	±25
2,3,4,6,7,8-HxCDF	50	44-57	-		±20	±25
1,2,3,7,8,9-HxCDF	50	45-56	-		±20	±25
1,2,3,4,6,7,8-HpCDD	50	43-58	-		±20	±25
1,2,3,4,6,7,8-HpCDF	50	45-55	-		±20	±25
1,2,3,4,7,8,9-HpCDF	50	43-58	-		±20	±25
OCDD	100	79-126	-		±20	±25
OCDF	100	63-159	-		±20	±25
Labeled Internal Standards						
$^{13}C_{12}$-2,3,7,8-TCDD	100	82-121	85-117		±30	±35
$^{13}C_{12}$-2,3,7,8-TCDF	100	71-140	76-131		±30	±35
$^{13}C_{12}$-1,2,3,7,8-PeCDD	100	62-160	-		±30	±35
$^{13}C_{12}$-1,2,3,7,8-PeCDF	100	76-130	-		±30	±35
$^{13}C_{12}$-2,3,4,7,8-PeCDF	100	77-130	-		±30	±35
$^{13}C_{12}$-1,2,3,4,7,8-HxCDD	100	85-117	-		±30	±35
$^{13}C_{12}$-1,2,3,6,7,8-HxCDD	100	85-118	-		±30	±35
$^{13}C_{12}$-1,2,3,4,7,8-HxCDF	100	76-131	-		±30	±35
$^{13}C_{12}$-1,2,3,6,7,8-HxCDF	100	70-143	-		±30	±35
$^{13}C_{12}$-2,3,4,6,7,8-HxCDF	100	73-137	-		±30	±35
$^{13}C_{12}$-1,2,3,7,8,9-HxCDF	100	74-135	-		±30	±35
$^{13}C_{12}$-1,2,3,4,6,7,8-HpCDD	100	72-138	-		±30	±35
$^{13}C_{12}$-1,2,3,4,6,7,8-HpCDF	100	78-129	-		±30	±35
$^{13}C_{12}$-1,2,3,4,7,8,9-HpCDF	100	77-129	-		±30	±35
$^{13}C_{12}$-OCDD	200	96-415	-		±30	±35
Labeled Cleanup Standard						
$^{37}Cl_4$-2,3,7,8-TCDD	10	7.9-12.7	8.3-12.1		-	-
Labeled Recovery Standard						
$^{13}C_{12}$-1,2,3,4-TCDD	100	-	-		-	-
$^{13}C_{12}$-1,2,3,7,8,9-HxCDD	100	-	-		-	-

Notes:

1 If the closing standard %D exceeds the opening %D criteria, the average of the Opening and Closing RF is used instead of the Initial Calibration RF to calculate sample concentrations.

Table 8

Methods – 23, 0023A and TO-9A
Daily Verification Standard (VER) Concentrations and Acceptance Criteria

			0023A	
	VER	23 and TO-9A	Shift Open	Shift Close[1]
Analyte	**(ng/mL)**	**%D**	**%D**	**%D**
Native PCDDs and PCDFs				
2,3,7,8-TCDD	5	±25	±20	±25
2,3,7,8-TCDF	5	±25	±20	±25
1,2,3,7,8-PeCDD	25	±25	±20	±25
1,2,3,7,8-PeCDF	25	±25	±20	±25
2,3,4,7,8-PeCDF	25	±25	±20	±25
1,2,3,4,7,8-HxCDD	25	±25	±20	±25
1,2,3,6,7,8-HxCDD	25	±25	±20	±25
1,2,3,7,8,9-HxCDD	25	±25	±20	±25
1,2,3,4,7,8-HxCDF	25	±25	±20	±25
1,2,3,6,7,8-HxCDF	25	±25	±20	±25
2,3,4,6,7,8-HxCDF	25	±25	±20	±25
1,2,3,7,8,9-HxCDF	25	±25	±20	±25
1,2,3,4,6,7,8-HpCDD	25	±25	±20	±25
1,2,3,4,6,7,8-HpCDF	25	±25	±20	±25
1,2,3,4,7,8,9-HpCDF	25	±25	±20	±25
OCDD	50	±25	±20	±25
OCDF	50	±30	±20	±25
Labeled Internal Standards				
$^{13}C_{12}$-2,3,7,8-TCDD	100	±25	±30	±35
$^{13}C_{12}$-2,3,7,8-TCDF	100	±30	±30	±35
$^{13}C_{12}$-1,2,3,7,8-PeCDD	100	±30	±30	±35
$^{13}C_{12}$-1,2,3,7,8-PeCDF	100	±30	±30	±35
$^{13}C_{12}$-1,2,3,6,7,8-HxCDD	100	±25	±30	±35
$^{13}C_{12}$-1,2,3,6,7,8-HxCDF	100	±30	±30	±35
$^{13}C_{12}$-1,2,3,4,6,7,8-HpCDD	100	±30	±30	±35
$^{13}C_{12}$-1,2,3,4,6,7,8-HpCDF	100	±30	±30	±35
$^{13}C_{12}$-OCDD	200	±30	±30	±35
Surrogate Standards				
$^{37}Cl_4$-2,3,7,8-TCDD	5	±25	±30	±35
$^{13}C_{12}$-2,3,4,7,8-PeCDF	25	±25	±30	±35
$^{13}C_{12}$-1,2,3,4,7,8-HxCDD	25	±25	±30	±35
$^{13}C_{12}$-1,2,3,4,7,8-HxCDF	25	±25	±30	±35
$^{13}C_{12}$-1,2,3,4,7,8,9-HpCDF	25	±25	±30	±35
Labeled Recovery Standard				
$^{13}C_{12}$-1,2,3,4-TCDD	100	-	-	
$^{13}C_{12}$-1,2,3,7,8,9-HxCDD	100	-	-	

Notes:

1 If the closing standard %D exceeds the opening %D criteria, the average of the Opening and Closing RF is used instead of the Initial Calibration RF to calculate sample concentrations.

Table 9

Method – 1613B
Initial Demonstration of Capability (IDOC) Acceptance Criteria

	Test	1613B			1613B Tetra Only	
Analyte	**Conc. (ng/mL) [1]**	**s[2] (ng/mL) [1]**	**X[3] (ng/ml) [1]**		**s[2] (ng/mL) [1]**	**X[3] (ng/ml) [1]**
Native PCDDs and PCDFs						
2,3,7,8-TCDD	10	2.8	8.3-12.9		2.7	8.7-12.4
2,3,7,8-TCDF	10	2.0	8.7-13.7		2.0	9.1-13.1
1,2,3,7,8-PeCDD	50	7.5	38-66		-	-
1,2,3,7,8-PeCDF	50	7.5	43-62		-	-
2,3,4,7,8-PeCDF	50	8.6	36-75		-	-
1,2,3,4,7,8-HxCDD	50	9.4	39-76		-	-
1,2,3,6,7,8-HxCDD	50	7.7	42-62		-	-
1,2,3,7,8,9-HxCDD	50	11.1	37-71		-	-
1,2,3,4,7,8-HxCDF	50	8.7	41-59		-	-
1,2,3,6,7,8-HxCDF	50	6.7	46-60		-	-
2,3,4,6,7,8-HxCDF	50	7.4	37-74		-	-
1,2,3,7,8,9-HxCDF	50	6.4	42-61		-	-
1,2,3,4,6,7,8-HpCDD	50	7.7	38-65		-	-
1,2,3,4,6,7,8-HpCDF	50	6.3	45-56		-	-
1,2,3,4,7,8,9-HpCDF	50	8.1	43-63		-	-
OCDD	100	19	89-127		-	-
OCDF	100	27	74-146		-	-
Labeled Internal Standards						
$^{13}C_{12}$-2,3,7,8-TCDD	50	18.5	14-67		17.5	16-57.5
$^{13}C_{12}$-2,3,7,8-TCDF	50	17.5	15.5-56.5		17	17.5-49.5
$^{13}C_{12}$-1,2,3,7,8-PeCDD	50	19.5	13.5-92		-	-
$^{13}C_{12}$-1,2,3,7,8-PeCDF	50	17.0	13.5-78		-	-
$^{13}C_{12}$-2,3,4,7,8-PeCDF	50	19.0	8-139.5		-	-
$^{13}C_{12}$-1,2,3,4,7,8-HxCDD	50	20.5	14.5-73.5		-	-
$^{13}C_{12}$-1,2,3,6,7,8-HxCDD	50	19.0	17-61		-	-
$^{13}C_{12}$-1,2,3,4,7,8-HxCDF	50	21.5	13.5-76		-	-
$^{13}C_{12}$-1,2,3,6,7,8-HxCDF	50	17.5	15-61		-	-
$^{13}C_{12}$-2,3,4,6,7,8-HxCDF	50	18.5	14.5-68		-	-
$^{13}C_{12}$-1,2,3,7,8,9-HxCDF	50	20.0	12-78.5		-	-
$^{13}C_{12}$-1,2,3,4,6,7,8-HpCDD	50	17.5	17-64.5		-	-
$^{13}C_{12}$-1,2,3,4,6,7,8-HpCDF	50	20.5	16-55		-	-
$^{13}C_{12}$-1,2,3,4,7,8,9-HpCDF	50	20.0	14-70.5		-	-
$^{13}C_{12}$-OCDD	100	47.5	20.5-138		-	-
Labeled Cleanup Standard						
$^{37}Cl_4$-2,3,7,8-TCDD	10	3.6	3.9-15.4		3.4	4.5-13.4

Notes:

1 All specifications are given as concentration in the final extract, assuming a 20-µL volume.

2 s = standard deviation of the concentration

3 X = average concentration. The acceptance range for average recovery can be normalized (shifted to center on 100% recovery) to compensate for the bias in the collaborative study used to develop the acceptance criteria.

Table 10

Methods – 8290/8290A, 23, 0023A and TO-9A
Initial Demonstration of Capability (IDOC) Acceptance Criteria

Analyte	Test Conc (ng/mL) [1]	s[2] (%Rec)	X[3] (%Rec)
Native PCDDs and PCDFs			
2,3,7,8-TCDD	10	15[4]	70-130[4]
2,3,7,8-TCDF	10	15[4]	70-130[4]
1,2,3,7,8-PeCDD	50	15[4]	70-130[4]
1,2,3,7,8-PeCDF	50	15[4]	70-130[4]
2,3,4,7,8-PeCDF	50	15[4]	70-130[4]
1,2,3,4,7,8-HxCDD	50	15[4]	70-130[4]
1,2,3,6,7,8-HxCDD	50	15[4]	70-130[4]
1,2,3,7,8,9-HxCDD	50	15[4]	70-130[4]
1,2,3,4,7,8-HxCDF	50	15[4]	70-130[4]
1,2,3,6,7,8-HxCDF	50	15[4]	70-130[4]
2,3,4,6,7,8-HxCDF	50	15[4]	70-130[4]
1,2,3,7,8,9-HxCDF	50	15[4]	70-130[4]
1,2,3,4,6,7,8-HpCDD	50	15[4]	70-130[4]
1,2,3,4,6,7,8-HpCDF	50	15[4]	70-130[4]
1,2,3,4,7,8,9-HpCDF	50	15[4]	70-130[4]
OCDD	100	15[4]	70-130[4]
OCDF	100	15[4]	70-130[4]

Notes:
1 All specifications are given as concentration in the final extract, assuming a 20 µL volume.
2 s = standard deviation of the percent recovery
3 X = average percent recovery
4 Inhouse generated historical control limits can be used in place of the specified limit.

Table 11

Laboratory Control Sample (LCS) Spiking Solution Component Concentrations and Acceptance Limits

Analyte	LCS Solution Conc. (ng/mL)[1]	Final Extract Conc (ng/mL)[2]	1613B LCS Conc (ng/mL)[2]	8290/8290A, 23, 0023A, TO-9A Recovery (%Rec)
2,3,7,8-TCDD	0.2	10	6.7-15.8	70-130[4]
2,3,7,8-TCDF	0.2	10	7.5-15.8	70-130[4]
1,2,3,7,8-PeCDD	1.0	50	35-71	70-130[4]
1,2,3,7,8-PeCDF	1.0	50	40-67	70-130[4]
2,3,4,7,8-PeCDF	1.0	50	34-80	70-130[4]
1,2,3,4,7,8-HxCDD	1.0	50	35-82	70-130[4]
1,2,3,6,7,8-HxCDD	1.0	50	38-67	70-130[4]
1,2,3,7,8,9-HxCDD	1.0	50	32-81	70-130[4]
1,2,3,4,7,8-HxCDF	1.0	50	36-67	70-130[4]
1,2,3,6,7,8-HxCDF	1.0	50	42-65	70-130[4]
2,3,4,6,7,8-HxCDF	1.0	50	35-78	70-130[4]
1,2,3,7,8,9-HxCDF	1.0	50	39-65	70-130[4]
1,2,3,4,6,7,8-HpCDD	1.0	50	35-70	70-130[4]
1,2,3,4,6,7,8-HpCDF	1.0	50	41-61	70-130[4]
1,2,3,4,7,8,9-HpCDF	1.0	50	39-69	70-130[4]
OCDD	2.0	100	78-144	70-130[4]
OCDF	2.0	100	63-170	70-130[4]
Tetras Only				
2,3,7,8-TCDD	0.2	10	7.3-14.6	70-130[4]
2,3,7,8-TCDF	0.2	10	8.0-14.7	70-130[4]

Notes:

1 1.0 mL of this solution is added to the LCS before extraction (see section 7.11.2).

2 The final extract concentration is based on an extract volume of 20 µL.

3 Spike concentrations are based on a 1.0 L extraction for water, 10.0g extraction for solids, and entire sample extraction for air/wipe samples.

4 Inhouse generated historical control limits can be used in place of the specified limit.

Table 12

Method – 8290/8290A
Matrix Spike and Matrix Spike Duplicate Sample (MS/MSD) Spiking Solution Component Concentrations and Acceptance Limits[1]

Analyte	LCS Solution Conc. (ng/mL)[2]	Final Extract Conc (ng/mL)[3]	8290 Recovery (%Rec)	8290 Precision (RPD)
2,3,7,8-TCDD	0.2	10	70-130[4]	±15[4]
2,3,7,8-TCDF	0.2	10	70-130[4]	±15[4]
1,2,3,7,8-PeCDD	1.0	50	70-130[4]	±15[4]
1,2,3,7,8-PeCDF	1.0	50	70-130[4]	±15[4]
2,3,4,7,8-PeCDF	1.0	50	70-130[4]	±15[4]
1,2,3,4,7,8-HxCDD	1.0	50	70-130[4]	±15[4]
1,2,3,6,7,8-HxCDD	1.0	50	70-130[4]	±15[4]
1,2,3,7,8,9-HxCDD	1.0	50	70-130[4]	±15[4]
1,2,3,4,7,8-HxCDF	1.0	50	70-130[4]	±15[4]
1,2,3,6,7,8-HxCDF	1.0	50	70-130[4]	±15[4]
2,3,4,6,7,8-HxCDF	1.0	50	70-130[4]	±15[4]
1,2,3,7,8,9-HxCDF	1.0	50	70-130[4]	±15[4]
1,2,3,4,6,7,8-HpCDD	1.0	50	70-130[4]	±15[4]
1,2,3,4,6,7,8-HpCDF	1.0	50	70-130[4]	±15[4]
1,2,3,4,7,8,9-HpCDF	1.0	50	70-130[4]	±15[4]
OCDD	2.0	100	70-130[4]	±15[4]
OCDF	2.0	100	70-130[4]	±15[4]

Notes:
1 If insufficient sample exists for MS/MSD analysis, these limits apply to LCS/LCSD samples.
2 1.0 mL of this solution is added to the LCS before extraction (see section **Error! Reference source not found.**).
3 The final extract concentration is based on an extract volume of 20 µL.
4 Inhouse generated historical control limits can be used in place of the specified limit.

Table 13

Methods – 1613B and 8290/8290A
Internal Standard Spiking Solution Component Concentrations and Acceptance Limits

Labeled Analyte	Solution Conc (ng/mL)[1]	Test Conc. (ng/mL)[2]	1613B LCS Conc (ng/mL)[2]	1613B Sample Conc (ng/mL)[2]	8290 Recovery (%Rec)
$^{13}C_{12}$-2,3,7,8-TCDD	1.0	50	10.0-87.5	12.5-82.0	40-135
$^{13}C_{12}$-2,3,7,8-TCDF	1.0	50	11.0-76.0	12.0-84.5	40-135
$^{13}C_{12}$-1,2,3,7,8-PeCDD	1.0	50	10.5-113.5	12.5-90.5	40-135
$^{13}C_{12}$-1,2,3,7,8-PeCDF	1.0	50	10.5-96.0	12.0-92.5	40-135
$^{13}C_{12}$-2,3,4,7,8-PeCDF	1.0	50	6.5-164.0	10.5-89.0	40-135
$^{13}C_{12}$-1,2,3,4,7,8-HxCDD	1.0	50	10.5-96.5	16.0-70.5	40-135
$^{13}C_{12}$-1,2,3,6,7,8-HxCDD	1.0	50	12.5-81.5	14.0-65.0	40-135
$^{13}C_{12}$-1,2,3,4,7,8-HxCDF	1.0	50	9.5-101.0	13.0-76.0	40-135
$^{13}C_{12}$-1,2,3,6,7,8-HxCDF	1.0	50	10.5-79.5	13.0-61.5	40-135
$^{13}C_{12}$-2,3,4,6,7,8-HxCDF	1.0	50	11.0-88.0	14.0-68.0	40-135
$^{13}C_{12}$-1,2,3,7,8,9-HxCDF	1.0	50	8.5-102.5	14.5-73.5	40-135
$^{13}C_{12}$-1,2,3,4,6,7,8-HpCDD	1.0	50	13.0-83.0	11.5-70.0	40-135
$^{13}C_{12}$-1,2,3,4,6,7,8-HpCDF	1.0	50	10.5-79.0	14.0-71.5	40-135
$^{13}C_{12}$-1,2,3,4,7,8,9-HpCDF	1.0	50	10.0-93.0	13.0-69.0	40-135
$^{13}C_{12}$-OCDD	2.0	100	13.0-198.5	17.0-157	40-135
Tetras Only					
$^{13}C_{12}$-2,3,7,8-TCDD	1.0	50	12.5-70.5	15.5-68.5	40-135
$^{13}C_{12}$-2,3,7,8-TCDF	1.0	50	13.0-63.0	14.5-70.0	40-135

Notes:

1 1.0 mL of the Internal Standard Spiking Solution is added to each sample, method blank and LCS prior to extraction (see section **Error! Reference source not found.**).

2 Specifications given as concentration in the final extract, assuming a 20 µL volume

Table 14

Method – 1613B
Cleanup Standard Spiking Solution Component Concentrations and Acceptance Limits

Labeled Analyte	Solution Conc (ng/mL)[1]	Test Conc. (ng/mL)[2]	1613B LCS Conc (ng/mL)[2]	1613B Sample Conc (ng/mL)[2]	1613B LCS Tetra Only Conc (ng/mL)[2]	1613B Sample Tetra Only Conc (ng/mL)[2]
$^{37}Cl_4$-2,3,7,8-TCDD	0.2	10	3.1-19.1	3.5-19.7	3.7-15.8	4.2-16.4

Notes:

1 1.0 mL of the Cleanup Standard Spiking Solution is added to each sample, method blank and LCS prior to cleanup (see section 7.11.6).

2 Specifications given as concentration in the final extract, assuming a 20 µL volume

Table 15

Methods – 23, 0023A and TO-9A
Internal Standard Spiking Solution Component Concentrations and Acceptance Limits

Labeled Analyte	Solution Conc (ng/mL)[1]	Test Conc. (ng/mL)[2]	23 Recovery (%Rec)	0023A Recovery (%Rec)	TO-9A Recovery (%Rec)
$^{13}C_{12}$-2,3,7,8-TCDD	1.0	50	40-130	40-135	50-120
$^{13}C_{12}$-2,3,7,8-TCDF	1.0	50	40-130	40-135	50-120
$^{13}C_{12}$-1,2,3,7,8-PeCDD	1.0	50	40-130	40-135	50-120
$^{13}C_{12}$-1,2,3,7,8-PeCDF	1.0	50	40-130	40-135	50-120
$^{13}C_{12}$-1,2,3,6,7,8-HxCDD	1.0	50	40-130	40-135	50-120
$^{13}C_{12}$-1,2,3,6,7,8-HxCDF	1.0	50	40-130	40-135	50-120
$^{13}C_{12}$-1,2,3,4,6,7,8-HpCDD	1.0	50	25-130	40-135	40-120
$^{13}C_{12}$-1,2,3,4,6,7,8-HpCDF	1.0	50	25-130	40-135	40-120
$^{13}C_{12}$-OCDD	2.0	100	25-130	40-135	40-120

Notes:

1 1.0 mL of the Internal Standard Spiking Solution is added to each sample, method blank and LCS prior to extraction (see section 7.11.4).
2 Specifications given as concentration in the final extract, assuming a 20 µL volume

Table 16

Methods – 23, 0023A, and TO-9A
Surrogate Standard Spiking Solution Component Concentrations and Acceptance Limits

Labeled Analyte	Solution Conc (ng/mL)[1]	Test Conc. (ng/mL)[2]	23 Recovery (%Rec)	0023A Recovery (%Rec)	TO-9A Recovery (%Rec)
$^{37}Cl_4$-2,3,7,8-TCDD	20	100	70-130	70-130	50-120
$^{13}C_{12}$-2,3,4,7,8-PeCDF	20	100	70-130	70-130	50-120
$^{13}C_{12}$-1,2,3,4,7,8-HxCDD	20	100	70-130	70-130	50-120
$^{13}C_{12}$-1,2,3,4,7,8-HxCDF	20	100	70-130	70-130	50-120
$^{13}C_{12}$-1,2,3,4,7,8,9-HpCDF	20	100	70-130	70-130	40-120

Notes:
1 100 µL of the Surrogate Standard Spiking Solution is added to each sample train prior to sampling (see section **Error! Reference source not found.**).
2 Specifications given as concentration in the final extract, assuming a 20 µL volume

Table 17

Methods – All
Recovery Standard Spiking Solution Component Concentrations

Labeled Analyte	Solution Conc (µg/mL)[1]	Test Conc. (ng/mL)[2]
$^{13}C_{12}$-1,2,3,4-TCDD	0.1	100
$^{13}C_{12}$-1,2,3,7,8,9-HxCDD	0.1	100

Notes:

1 20 µL of the Recovery Standard Spiking Solution is added to each sample, method blank and LCS prior to analysis (see section **Error! Reference source not found.**).

2 Specifications given as concentration in the final extract, assuming a 20 µL volume

Table 18

Rtx-5/DB-5 Column Window Defining Standard Mixture Components

Congener	First Eluted	Last Eluted
TCDF	1,3,6,8-	1,2,8,9-
TCDD	1,3,6,8-	1,2,8,9-
PeCDF	1,3,4,6,8-	1,2,3,8,9-
PeCDD	1,2,4,6,8-/1,2,4,7,9-	1,2,3,8,9-
HxCDF	1,2,3,4,6,8-	1,2,3,4,8,9-
HxCDD	1,2,4,6,7,9-/1,2,4,6,8,9-	1,2,3,4,6,7-
HpCDF	1,2,3,4,6,7,8-	1,2,3,4,7,8,9-
HpCDD	1,2,3,4,6,7,9-	1,2,3,4,6,7,8-

Table 19

Rtx-5 (DB-5) Column Performance Standard Mixture Components

Isomer
1,2,3,7/1,2,3,8-TCDD
1,2,3,9-TCDD
2,3,7,8-TCDD

Table 20

DB-225 (Rtx-225) Column Performance Standard Mixture Components

Isomer
2,3,4,7-TCDF
2,3,7,8-TCDF
1,2,3,9-TCDF

Table 21

Ions Monitored for HRGC/HRMS Analysis of PCDDs and PCDFs

Descriptor	Accurate Mass[1]	Ion ID	Elemental Composition	Analyte
1	292.9825 (313.9834)	LOCK	C_7F_{11} ($C_6NF_{12}^+$)	PFK (FC43)
	303.9016	M	$C_{12}H_4{}^{35}Cl_4O$	TCDF
	305.8987	M+2	$C_{12}H_4{}^{35}Cl_3{}^{37}ClO$	TCDF
	315.9419	M	$^{13}C_{12}H_4{}^{35}Cl_4O$	TCDF (S)
	317.9389	M+2	$^{13}C_{12}H_4{}^{35}Cl_3{}^{37}ClO$	TCDF (S)
	319.8965	M	$C_{12}H_4{}^{35}Cl_4O_2$	TCDD
	321.8936	M+2	$C_{12}H_4{}^{35}Cl_3{}^{37}ClO_2$	TCDD
	327.8847	M	$C_{12}H_4{}^{37}Cl_4O_2$	TCDD
	331.9368	M	$^{13}C_{12}H_4{}^{35}Cl_4O_2$	TCDD (S)
	333.9338	M+2	$^{13}C_{12}H_4{}^{35}Cl_3{}^{37}ClO_2$	TCDD (S)
	342.9792 (363.9802)	QC	C_8F_{13} ($C_7NF_{14}^+$)	PFK (FC43)
	375.8364	M+2	$C_{12}H_4{}^{35}Cl_5{}^{37}ClO$	HxCDPE
2	330.9792 (313.9834)	LOCK	C_7F_{13} ($C_6NF_{12}^+$)	PFK (FC43)
	339.8597	M+2	$C_{12}H_3{}^{35}Cl_4{}^{37}ClO$	PeCDF
	341.8567	M+4	$C_{12}H_3{}^{35}Cl_3{}^{37}Cl_2O$	PeCDF
	351.9000	M+2	$^{13}C_{12}H_3{}^{35}Cl_4{}^{37}ClO$	PeCDF (S)
	353.8970	M+4	$^{13}C_{12}H_3{}^{35}Cl_3{}^{37}Cl_2O$	PeCDF (S)
	355.8546	M+2	$C_{12}H_3{}^{35}Cl_4{}^{37}ClO_2$	PeCDD
	357.8516	M+4	$C_{12}H_3{}^{35}Cl_3{}^{37}Cl_2O_2$	PeCDD
	367.8949	M+2	$^{13}C_{12}H_3{}^{35}Cl_4{}^{37}ClO_2$	PeCDD (S)
	369.8919	M+4	$^{13}C_{12}H_3{}^{35}Cl_3{}^{37}Cl_2O_2$	PeCDD (S)
	380.9760 (375.9802)	QC	C_8F_{15} ($C_8NF_{14}^+$)	PFK (FC43)
	409.7974	M+2	$C_{12}H_3{}^{35}Cl_6{}^{37}ClO$	HpCDPE
3	373.8208	M+2	$C_{12}H_2{}^{35}Cl_5{}^{37}ClO$	HxCDF
	375.8178	M+4	$C_{12}H_2{}^{35}Cl_4{}^{37}Cl_2O$	HxCDF
	380.9760 (375.9802)	LOCK	C_8F_{15} ($C_8NF_{14}^+$)	PFK (FC43)
	383.8639	M	$^{13}C_{12}H_2{}^{35}Cl_6O$	HxCDF (S)
	385.8610	M+2	$^{13}C_{12}H_2{}^{35}Cl_5{}^{37}ClO$	HxCDF (S)
	389.8156	M+2	$C_{12}H_2{}^{35}Cl_5{}^{37}ClO_2$	HxCDD
	391.8127	M+4	$C_{12}H_2{}^{35}Cl_4{}^{37}Cl_2O_2$	HxCDD
	401.8559	M+2	$^{13}C_{12}H_2{}^{35}Cl_5{}^{37}ClO_2$	HxCDD (S)
	403.8529	M+4	$^{13}C_{12}H_2{}^{35}Cl_4{}^{37}Cl_2O_2$	HxCDD (S)
	404.9760 (413.9770)	QC	$C_{10}F_{15}$ ($C_8NF_{16}^+$)	PFK (FC43)
	445.7555	M+4	$C_{12}H_2{}^{35}Cl_6{}^{37}Cl_2O$	OCDPE

Table 21 (Continued)

Ions Monitored for HRGC/HRMS Analysis of PCDDs and PCDFs

Descriptor	Accurate Mass[1]	Ion ID	Elemental Composition	Analyte
4	404.9760 (413.9770)	LOCK	$C_{10}F_{15}(C_8NF_{16}^+)$	PFK (FC43)
	407.7818	M+2	$C_{12}H\,^{35}Cl_6\,^{37}Cl\,0$	HpCDF
	409.7788	M+4	$C_{12}H\,^{35}Cl_5\,^{37}Cl_2\,0$	HpCDF
	417.8250	M	$^{13}C_{12}H\,^{35}Cl_7\,0$	HpCDF (S)
	419.8220	M+2	$^{13}C_{12}H\,^{35}Cl_6\,^{37}Cl\,0$	HpCDF (S)
	423.7767	M+2	$C_{12}H\,^{35}Cl_6\,^{37}Cl\,0_2$	HpCDD
	425.7737	M+4	$C_{12}H\,^{35}Cl_5\,^{37}Cl_2\,0_2$	HpCDD
	435.8169	M+2	$^{13}C_{12}H\,^{35}Cl_6\,^{37}Cl\,0_2$	HpCDD (S)
	437.8140	M+4	$^{13}C_{12}H\,^{35}Cl_5\,^{37}Cl_2\,0_2$	HpCDD (S)
	442.9728 (463.9738)	QC	$C_{10}F_{17}(C_9NF_{18}^+)$	PFK (FC43)
	479.7165	M+4	$C_{12}H\,^{35}Cl_7\,^{37}Cl_2\,0$	NCDPE
5	430.9728 (425.9770)	LOCK	$C_9F_{17}(C_9NF_{16}^+)$	PFK (FC43)
	441.7428	M+2	$C_{12}\,^{35}Cl_7\,^{37}Cl\,0$	OCDF
	443.7399	M+4	$C_{12}\,^{35}Cl_6\,^{37}Cl_2\,0$	OCDF
	457.7377	M+2	$C_{12}\,^{35}Cl_7\,^{37}Cl\,0_2$	OCDD
	459.7348	M+4	$C_{12}\,^{35}Cl_6\,^{37}Cl_2\,0_2$	OCDD
	469.7780	M+2	$^{13}C_{12}\,^{35}Cl_7\,^{37}Cl\,0_2$	OCDD (S)
	471.7750	M+4	$^{13}C_{12}\,^{35}Cl_6\,^{37}Cl_2\,0_2$	OCDD (S)
	480.9696 (501.9706)	QC	$C_{10}F_{19}(C_9NF_{20}^+)$	PFK (FC43)
	513.6775	M+4	$C_{12}\,^{35}Cl_8\,^{37}Cl_2\,0$	DCDPE

Notes:

1 Nuclidic masses used:

H = 1.007825	C = 12.00000	^{13}C = 13.003355	F = 18.9984
O = 15.994915	^{35}Cl = 34.968853	^{37}Cl = 36.965903	

Table 22

Theoretical Ion Abundance Ratios and Their Control Limits for PCDDs and PCDFs

Number of Chlorine Atoms	Ion Type	Theoretical Ratio	Control Limits Lower	Control Limits Upper
4	M/M+2	0.77	0.65	0.89
5	M+2/M+4	1.55	1.32	1.78
6	M+2/M+4	1.24	1.05	1.43
6 [1]	M/M+2	0.51	0.43	0.59
7	M+2/M+4	1.04/1.05[3]	0.88	1.20
7 [2]	M/M+2	0.44	0.37	0.51
8	M+2/M+4	0.89	0.76	1.02

Notes:

1 Used for ^{13}C-HxCDF (IS).
2 Used for ^{13}C-HpCDF (IS).
3 Method 1613B Theoretical Ratio

Figure 1

Rtx-5 Recommended GC Operating Conditions

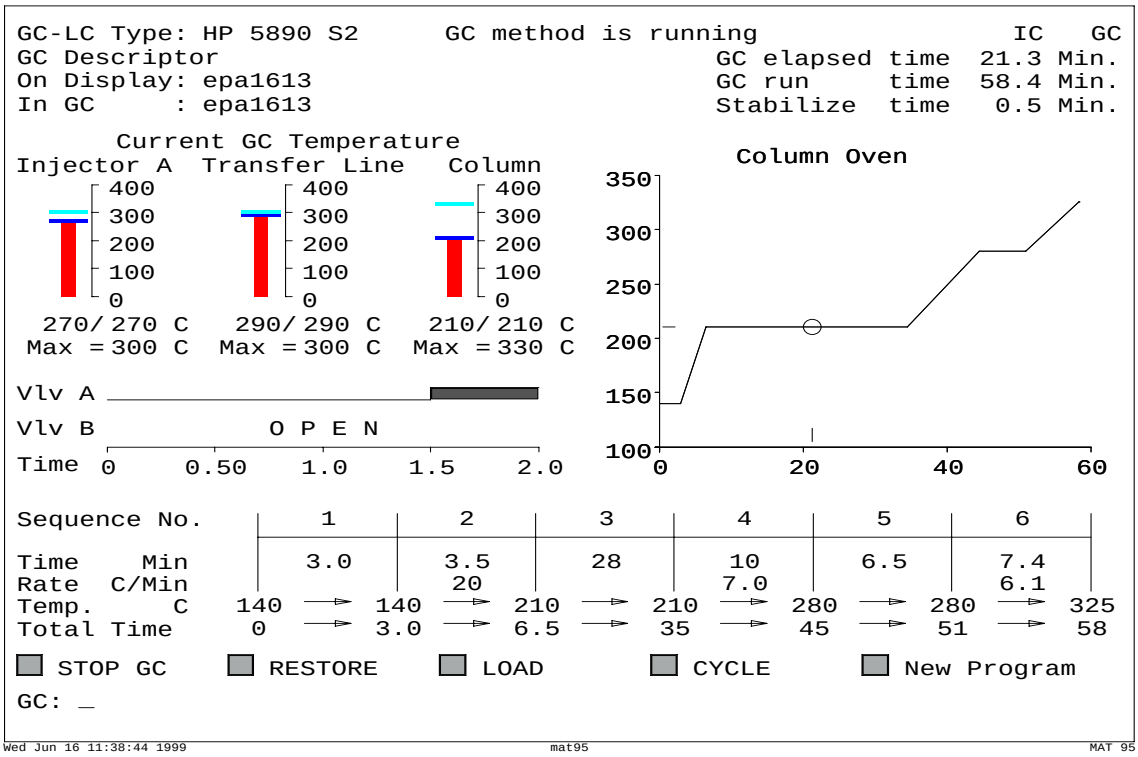

DB-225 Recommended GC Operating Conditions

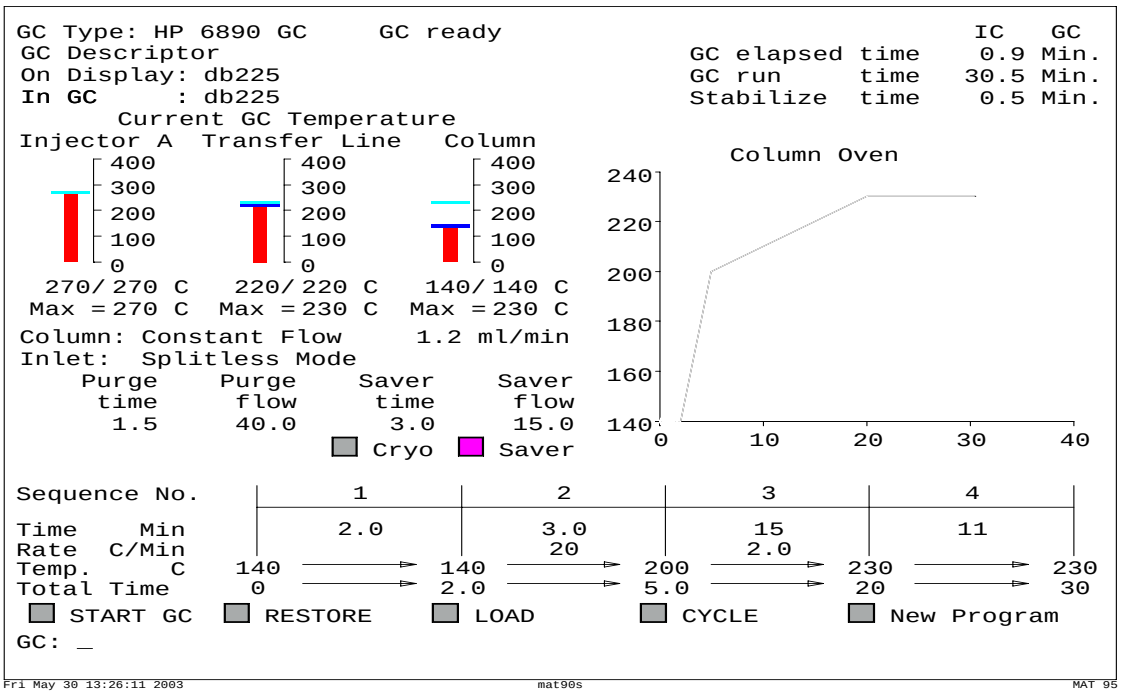

Figure 2

Rtx-5 Recommended MID Descriptors

```
MID Set Up Parameters
 MID File                      epa1613
 Measure/lock ratio (X)            1
 Set Damping relay  (T)        FALSE
 Width first lock   (A)         0.20 amu
 Electric jump time (E)           10 ms
 Magnetic jump time (D)           60 ms
 Offset             (O)          100 cts
 Electric range     (R)          300 %
 Sweep peak width   (W)         3.00
 Acq mode         (C|P)         Cent mode
 MID mode     (J|M|L|N)         Lock mode

MID  Time Windows
 #  Start  Measure  End      Cycletime
 1   8:00  28:12  36:12 min  1.00 sec
 2  36:12   7:28  43:40 min  1.00 sec
 3  43:40   5:49  49:30 min  1.00 sec
 4  49:30   5:00  54:30 min  1.00 sec
 5  54:30   3:50  58:20 min  1.00 sec
 6
 7
 8
 9

 Clear Menu      Clear Times      Clear Masses
 Stop MID        SAVE             Main

MID: _

MID Masses for Time Window  1
#      mass    F int  gr time(ms)
1    292.9825 l  10   1     8.19
2    303.9016     1   1    81.92
3    305.8987     1   1    81.92
4    315.9419     1   1    81.92
5    317.9389     1   1    81.92
6    319.8965     1   1    81.92
7    321.8936     1   1    81.92
8    327.8847     1   1    81.92
9    331.9368     1   1    81.92
10   333.9338     1   1    81.92
11   342.9792 c  10   1     8.19
12   375.8364     1   1    81.92
13
14
15
16
17
18
19
20
21
22
23
24

 Lock Mass   Cali Mass

Wed Jun 16 11:39:22 1999          mat95          MAT 95
```

```
MID Set Up Parameters
 MID File                      epa1613
 Measure/lock ratio (X)            1
 Set Damping relay  (T)        FALSE
 Width first lock   (A)         0.20 amu
 Electric jump time (E)           10 ms
 Magnetic jump time (D)           60 ms
 Offset             (O)          100 cts
 Electric range     (R)          300 %
 Sweep peak width   (W)         3.00
 Acq mode         (C|P)         Cent mode
 MID mode     (J|M|L|N)         Lock mode

MID  Time Windows
 #  Start  Measure  End      Cycletime
 1   8:00  28:12  36:12 min  1.00 sec
 2  36:12   7:28  43:40 min  1.00 sec
 3  43:40   5:49  49:30 min  1.00 sec
 4  49:30   5:00  54:30 min  1.00 sec
 5  54:30   3:50  58:20 min  1.00 sec
 6
 7
 8
 9

 Clear Menu      Clear Times      Clear Masses
 Stop MID        SAVE             Main

MID: _

MID Masses for Time Window  2
#      mass    F int  gr time(ms)
1    330.9792 l  10   1     8.19
2    339.8597     1   1    91.48
3    341.8567     1   1    91.48
4    351.9000     1   1    91.48
5    353.8970     1   1    91.48
6    355.8546     1   1    91.48
7    357.8516     1   1    91.48
8    367.8949     1   1    91.48
9    369.8919     1   1    91.48
10   380.9760 c  10   1     8.19
11   409.7974     1   1    91.48
12
13
14
15
16
17
18
19
20
21
22
23
24

 Lock Mass   Cali Mass

Wed Jun 16 11:39:27 1999          mat95          MAT 95
```

Figure 2 (Continued)

Rtx-5 Recommended MID Descriptors

```
MID Set Up Parameters
 MID File                    epa1613
 Measure/lock ratio (X)          1
 Set Damping relay  (T)      FALSE
 Width first lock   (A)       0.20 amu
 Electric jump time (E)         10 ms
 Magnetic jump time (D)         60 ms
 Offset             (O)        100 cts
 Electric range     (R)        300 %
 Sweep peak width   (W)       3.00
 Acq mode          (C|P)      Cent mode
 MID mode      (J|M|L|N)      Lock mode

 MID  Time Windows
 #  Start  Measure  End      Cycletime
 1   8:00  28:12  36:12 min   1.00 sec
 2  36:12   7:28  43:40 min   1.00 sec
 3  43:40   5:49  49:30 min   1.00 sec
 4  49:30   5:00  54:30 min   1.00 sec
 5  54:30   3:50  58:20 min   1.00 sec
 6
 7
 8
 9

 Clear Menu      Clear Times      Clear Masses
 Stop MID        SAVE             Main

MID: _
```

```
 MID Masses for Time Window   3
 #      mass    F int  gr time(ms)
 1    373.8208     1   1    91.48
 2    375.8178     1   1    91.48
 3    380.9760 l  10   1     8.19
 4    383.8639     1   1    91.48
 5    385.8610     1   1    91.48
 6    389.8156     1   1    91.48
 7    391.8127     1   1    91.48
 8    401.8559     1   1    91.48
 9    403.8529     1   1    91.48
10    404.9760 c  10   1     8.19
11    445.7555     1   1    91.48
12
13
14
15
16
17
18
19
20
21
22
23
24

 Lock Mass   Cali Mass
```

Wed Jun 16 11:39:32 1999 mat95 MAT 95

```
MID Set Up Parameters
 MID File                    epa1613
 Measure/lock ratio (X)          1
 Set Damping relay  (T)      FALSE
 Width first lock   (A)       0.20 amu
 Electric jump time (E)         10 ms
 Magnetic jump time (D)         60 ms
 Offset             (O)        100 cts
 Electric range     (R)        300 %
 Sweep peak width   (W)       3.00
 Acq mode          (C|P)      Cent mode
 MID mode      (J|M|L|N)      Lock mode

 MID  Time Windows
 #  Start  Measure  End      Cycletime
 1   8:00  28:12  36:12 min   1.00 sec
 2  36:12   7:28  43:40 min   1.00 sec
 3  43:40   5:49  49:30 min   1.00 sec
 4  49:30   5:00  54:30 min   1.00 sec
 5  54:30   3:50  58:20 min   1.00 sec
 6
 7
 8
 9

 Clear Menu      Clear Times      Clear Masses
 Stop MID        SAVE             Main

MID: _
```

```
 MID Masses for Time Window   4
 #      mass    F int  gr time(ms)
 1    404.9760 l  10   1     8.19
 2    407.7818     1   1    91.48
 3    409.7788     1   1    91.48
 4    417.8250     1   1    91.48
 5    419.8220     1   1    91.48
 6    423.7767     1   1    91.48
 7    425.7737     1   1    91.48
 8    435.8169     1   1    91.48
 9    437.8140     1   1    91.48
10    442.9728 c  10   1     8.19
11    479.7165     1   1    91.48
12
13
14
15
16
17
18
19
20
21
22
23
24

 Lock Mass   Cali Mass
```

Wed Jun 16 11:39:37 1999 mat95 MAT 95

Figure 2 (Continued)

Rtx-5 Recommended MID Descriptors

```
MID Set Up Parameters
 MID File                      epa1613
 Measure/lock ratio (X)            1
 Set Damping relay  (T)        FALSE
 Width first lock   (A)        0.20 amu
 Electric jump time (E)          10 ms
 Magnetic jump time (D)          60 ms
 Offset             (O)         100 cts
 Electric range     (R)         300 %
 Sweep peak width   (W)        3.00
 Acq mode         (C|P)        Cent mode
 MID mode     (J|M|L|N)        Lock mode

MID  Time Windows
 #  Start  Measure  End      Cycletime
 1   8:00  28:12  36:12 min   1.00 sec
 2  36:12   7:28  43:40 min   1.00 sec
 3  43:40   5:49  49:30 min   1.00 sec
 4  49:30   5:00  54:30 min   1.00 sec
 5  54:30   3:50  58:20 min   1.00 sec
 6
 7
 8
 9

Clear Menu     Clear Times     Clear Masses
Stop MID       SAVE            Main
MID: _

MID Masses for Time Window   5
#      mass    F int  gr time(ms)
1    430.9728 l  10   1    10.92
2    441.7428     1   1   120.15
3    443.7399     1   1   120.15
4    457.7377     1   1   120.15
5    459.7348     1   1   120.15
6    469.7780     1   1   120.15
7    471.7750     1   1   120.15
8    480.9696 c  10   1    10.92
9    513.6775     1   1   120.15
10
11
12
13
14
15
16
17
18
19
20
21
22
23
24
Lock Mass   Cali Mass

Wed Jun 16 11:39:43 1999        mat95        MAT 95
```

DB-225 Recommended MID Descriptor

```
MID Set Up Parameters
 MID File                       db225
 Measure/lock ratio (X)            1
 Set Damping relay  (T)        TRUE
 Width first lock   (A)        0.20 amu
 Electric jump time (E)          10 ms
 Magnetic jump time (D)          60 ms
 Offset             (O)         100 cts
 Electric range     (R)         300 %
 Sweep peak width   (W)        3.00
 Acq mode         (C|P)        Cent mode
 MID mode     (J|M|L|N)        Lock mode

MID  Time Windows
 #  Start  Measure  End      Cycletime
 1   8:00  22:30  30:30 min   1.00 sec
 2
 3
 4
 5
 6
 7
 8
 9

Clear Menu     Clear Times     Clear Masses
Start MID      RESTORE         Main
MID: _

MID Masses for Time Window   1
#      mass    F int  gr time(ms)
1    292.9825 l  10   1     8.19
2    303.9016     1   1    81.92
3    305.8987     1   1    81.92
4    315.9419     1   1    81.92
5    317.9389     1   1    81.92
6    319.8965     1   1    81.92
7    321.8936     1   1    81.92
8    327.8847     1   1    81.92
9    331.9368     1   1    81.92
10   333.9338     1   1    81.92
11   342.9792 c  10   1     8.19
12   375.8364     1   1    81.92
13
14
15
16
17
18
19
20
21
22
23
24
Lock Mass   Cali Mass

Fri May 30 13:22:09 2003        mat90s        MAT 95
```

Figure 3: Example Sample Data Review Checklist

TestAmerica Knoxville Dioxin GC/MS Initial Calibration Data Review / Narrative Checklist
Method: 8290/8290A - KNOX-ID-0004-R12

Mass Res. ✓ Date/Time:		Inst:		Win Filename:		Col Perf Filename:	

CS0.5 Filename	CS1 Filename	CS2 Filename	CS3 Filename	CS4 Filename	CS5 Filename

Review Items	N/A	Yes	No	If No, why is data reportable?	2nd Level
1. Was the mass resolution documented before beginning the initial calibration?					
2. Was the instrument resolution >10,000 (<100 ppm) on PFK m/z 304.9824 and m/z 380.9760 or FC43 m/z 313.9838 and m/z 363.9807?					
3. Was the measured exact mass of m/z 380.9760 (PFK) or 363.9807 (FC43) within 5 ppm at reduced accelerating voltage?					
4. Was the Window Defining Mixture analyzed and the MID switchpoints set to encompass the retention time windows of each congener group?					
5. Was the Column Performance solution analyzed and the %Valley ≤25 for separation between 2378-TCDD/F and the closest eluting non-2378 isomer?					
6. Were the five calibration standard solutions, at the concentrations specified in Table 5 of the SOP, analyzed?					
7. Was date/time of analysis verified between analysis header and logbook as correct?					
8. Were the response factors calculated for each labeled standard and unlabeled native analyte using the SOP specified reference compound (Table 5), quantitation ions (Table 22), and formula (Section 10.2.6)?					
9. Are the relative retention times of all PCDDs/PCDFs and all labeled compounds within the limits specified in Table 3?					
10. Are %RSD ≤20% for all unlabeled native analytes?					
11. **8290**, are %RSD ≤30% for all labeled internal standards?					
12. **8090A**, are %RSD ≤20% for all labeled internal standards?					
13. Are all S/N ratios ≥10 for the GC signals in each EICP (extracted ion chromatographic profile) including internal standards?					
14. Are the ion abundance ratios for all labeled and unlabeled analytes within the control limits specified in Table 22 of the SOP?					
15. Was the second source (Wellington) ICV standard analyzed, and the %D calculated and within the acceptance criteria of < ±35%?					
16. If manual integrations were performed, are they clearly identified, initialed and dated?					
17. Were before/after chromatograms reviewed to determine whether the software and manual integrations were appropriate?.					
18. Were manual integrations performed properly?.					
19. If criteria were not met, was a NCM generated, approved by supervisor, and copy included in folder?					
20. Does the ICAL folder contain **complete** data in the following order? Data review checklist, a **complete** runlog, Avg. %RSD summary, Ratio summary, Calculation summary, PFK resolution/peak match documentation; Total RIC, EICP's and manual integration - for window and all standards, in order from low to high standard, ICV Summary Table, Calculation Summary, and chromatograms?					

Analyst:	Date:	2nd Level Reviewer :	Date:
Comments:		Comments:	

Figure 3: Example Sample Data Review Checklist (Continued)

TestAmerica Knoxville Dioxin GC/MS Continuing Calibration Review / Narrative Checklist
Method: 8290/8290A - KNOX-ID-0004-R12

Start Mass Res. ✓:		**Ver Filename:**		**Inst:**	
End Mass Res. ✓:		**Win Filename:**		**ICAL Date:**	
		Col Perf Filename:			
		End Ver Filename:			

Review Items	**N/A**	**Yes**	**No**	**If No, why is data reportable?**	**2nd Level**
1. Was the mass resolution documented at both the beginning and end of the 12 hour shift?					
2. Was the instrument resolution >10,000 (<100 ppm) on PFK m/z 304.9824 and m/z 380.9760 or FC43 m/z 313.9838 and m/z 363.9807?					
3. Was the measured exact mass of m/z 380.9760 (PFK) or 363.9807 (FC43) within 5 ppm at reduced accelerating voltage?					
4. Was date/time of analysis verified between analysis header and logbook as correct?					
5. Was the Window Defining Mixture analyzed and the MID switchpoints set to encompass the retention time windows of each congener group?					
6. Was the Column Performance solution analyzed and the %Valley ≤25 for separation between 2378-TCDD/F and the closest eluting non-2378 isomer?					
7. Were continuing calibrations performed at the beginning and end of the 12-hour period, with successful mass resolution and GC resolution performance checks?					
8. Were the response factors calculated for each labeled standard and unlabeled native analyte using the SOP specified reference compound (Table 3), quantitation ions (Table 22), and formula (Section 10.2.6)?					
9. Are the measured RRFs for each compound within the specified control limits in Table 7 for all PCDDs/PCDFs?					
10. Are the relative retention times of all PCDDs/PCDFs and all labeled compounds within the limits specified in Table 3?					
11. Are all S/N ratios ≥10 for the GC signals in each EICP (extracted ion chromatographic profile) including internal standards?					
12. Are the ion abundance ratios for all labeled and unlabeled analytes within the control limits specified in Table 22 of the SOP?					
13. If manual integrations were performed, are they clearly identified, initialed and dated?					
14. Were before/after chromatograms reviewed to determine whether the software and manual integrations were appropriate?.					
15. Were manual integrations performed properly?.					
16. If criteria were not met, was a NCM generated, approved by supervisor, and copy included in folder?					
17. Does the CCAL folder contain **complete** data in the following order: Data review checklist, a **complete** runlog, CCAL summary, Ratio summary, Calculation summary, PFK resolution/peak match documentation; Total RIC, EICP's and manual integration - for window and all standards?					

Analyst:	**Date:**	**2nd Level Reviewer :**	**Date:**
Comments:		**Comments:**	

ID022R17.doc, 100912

Figure 3: Example Sample Data Review Checklist (Continued)

TestAmerica Knoxville Dioxin GC/MS Data Review / Narrative Checklist LOT #_____
Method: 8290/8290A- KNOX-ID-0004-R12 Page 1 of 1 Batch#_____

Review Items A. Initial Calibration	N/A	Yes	No	Why is data reportable?	2nd Level
1. Was the correct ICAL used for quantitation? (Check 1-2 compounds for batch by manually calculating concentration using the ICAL avg. RF.)					
B. Continuing Calibration	N/A	Yes	No		2nd
1. Has a Continuing Calibration Checklist been completed for each analytical batch?					
C. Client Sample AND QC Sample Results	N/A	Yes	No		2nd
1. Were all special project requirements met?					
2. Were the header information, prep factors, and dilution factors verified?					
3. Is logbook date/time of analysis correct?					
4. Sample analyses done within preparation and analytical holding time (HT)? *If no, list samples:* _____				☐ HT expired upon receipt. ☐* Client requested analysis after HT expired. ☐ Re-extraction done after HT expired.	
5. Are internal standards within QC limits specified in Table 13? *If no, list samples and reason (e.g., surr):* Sample Reason Sample Reason ____ ____ ____ ____ ____ ____ ____ ____ ____ ____ ____ ____ ____ ____ ____ ____				☐* [sup] Ion suppression due to matrix. ☐* [low] Low recovery. S/N >10 and EDL<ML. ☐ [sam] Not enough sample to re-extract. ☐ [dil] Dilution showed acceptable %R. ☐ [mtx] Obvious matrix interference. Further cleanup not possible. ☐* [unk] At client's request, data was flagged as estimated and released without further investigation.	
6. Were reported PCDD/Fs which did not meet the criteria below, properly calculated and reported as EMPCs?: • RT of 2378 isomers within -1 to +3 seconds of associated labeled isomer. • RT of non-2378 isomers within established first/last windows. • Both native ions maximized within ±2 seconds. • Ion abundance ratios within the control limits specified in Table 22. • No corresponding peak at PCDPE mass.					
7. Were all 2378-TCDF hits ≥ ML confirmed by analysis on DB-225?					
8. Are positive results > ML within calibration range? *If no, list samples:*				☐ OCDD/F or non-2378 exceeded calibration range ☐ Sample extracted at lowest possible volume	
9. Are all manual integrations performed properly and clearly identified and approved?					
10. Were before/after chromatograms reviewed to determine whether the software and manual integrations were appropriate?.					
11. Final report acceptable? (Results correct, DLs calculated correctly, units correct, IS %R correct, appropriate flags used, dilution factor correct, and extraction/ analysis dates correct.)					
12. Was a narrative prepared and all deviations noted?					
D. Preparation/Matrix QC	N/A	Yes	No	Why is data reportable?	2nd
1. LCS/LCSD done per prep batch and all analytes within the limits specified in QuantIMS reference data?				☐* Reanalysis not possible-insufficient sample. ☐LCS/LCSD %R high and affected analyte(s) were <ML in associated samples. ☐ See comment/narrative	
2. Method blank done per prep batch, method/instrument blank analyzed with each sequence and analytes present in the method blank ≤ ML? *If no, list blank ID:* _____				☐ Sample results are > 10x higher than blank. ☐* There is no analyte > RL in the samples associated with method blank. ☐* Reanalysis not possible-insufficient sample	
3. MS/MSD recoveries and RPDs within laboratory generated QC limits? *If no, list MS/MSD* _____				☐ LCS acceptable, indicating sample matrix effects. ☐ LCS acceptable, high analyte concentration. ☐ LCS acceptable, lack of sample homogeneity.	
E. Other	N/A	Yes	No		2nd
1. Are all nonconformances documented appropriately and copy included with deliverable?					

Analyst:	Date:	Analyst:	Date:
Comments:		Comments:	

* Such action must be taken in consultation with client.

ID022R17.doc, 100912

Figure 4

Analysis of PCDDs and PCDFs by HRGC/HRMS

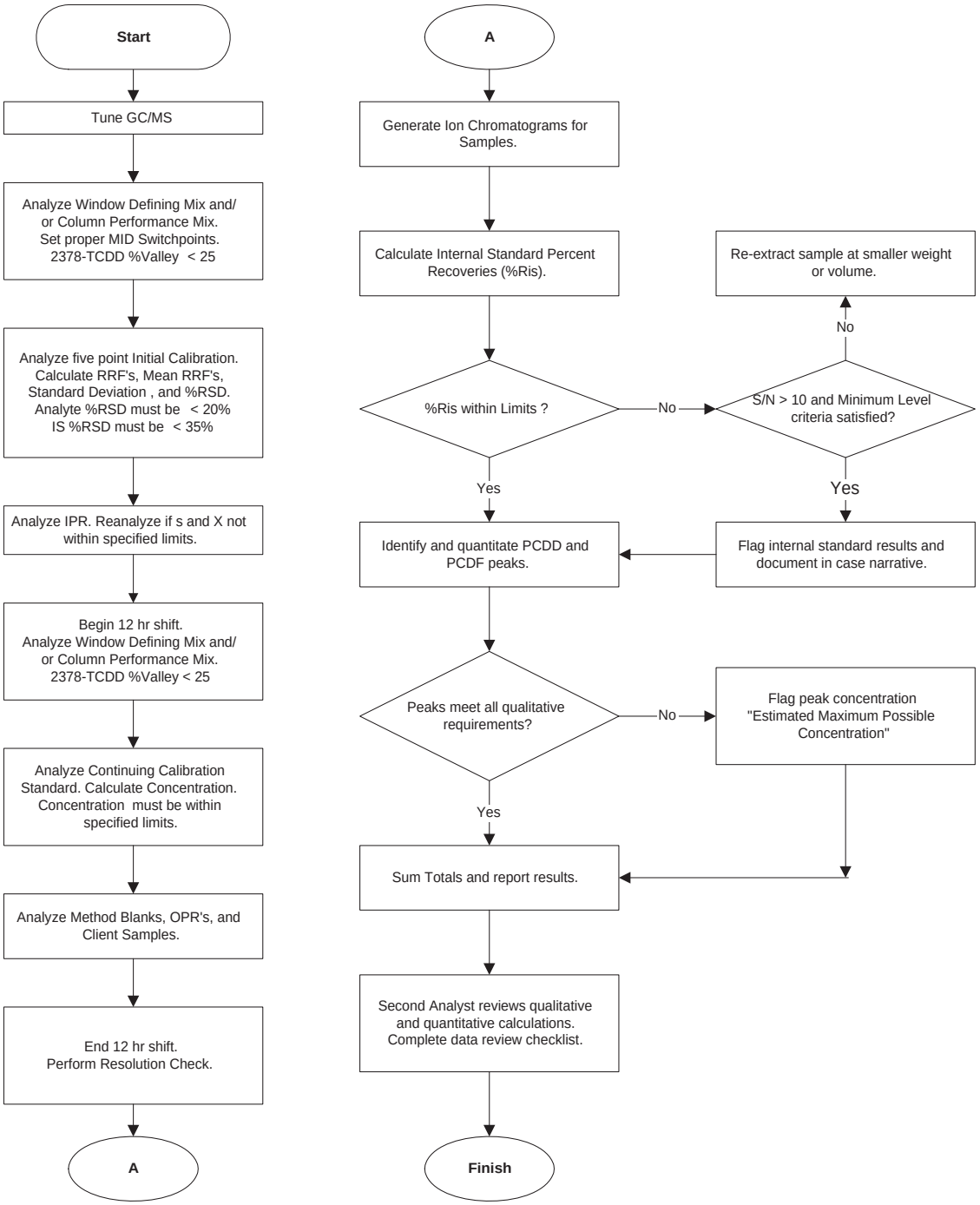

THIS PAGE INTENTIONALLY LEFT BLANK

TESTAMERICA KNOXVILLE

STANDARD OPERATING PROCEDURE

TITLE: Determination of Particulate Matter as PM_{10} and Total Suspended Particulate Matter (TSP) in Hi-Vol Filters, and Nuisance Dust by NIOSH Method 0500

(SUPERSEDES: KNOX-WC-0028, Revision 7)

Prepared By: _____

Reviewed By: _____ 10-1-2010
Technical Specialist

Approved By: _____ 10/01/10
Quality Assurance Manager

Approved By: _____ 10-2-10
Environmental, Health and Safety Coordinator

Approved By: _____ 10-1-2010
Laboratory Director

Proprietary Information Statement:
This documentation has been prepared by TestAmerica Laboratories solely for TestAmerica's own use and the use of TestAmerica's customers in evaluating its qualifications and capabilities in connection with a particular project. The user of this document agrees by its acceptance to return it to TestAmerica Laboratories upon request and not to reproduce, copy, lend, or otherwise disclose its contents, directly or indirectly, and not to use if for any other purpose other than that for which it was specifically provided. The user also agrees that where consultants or other outside parties are involved in the evaluation process, access to these documents shall not be given to said parties unless those parties also specifically agree to these conditions.
THIS DOCUMENT CONTAINS VALUABLE CONFIDENTIAL AND PROPRIETARY INFORMATION. DISCLOSURE, USE OR REPRODUCTION OF THESE MATERIALS WITHOUT THE WRITTEN AUTHORIZATION OF TESTAMERICA LABORATORIES IS STRICTLY PROHIBITED. THIS UNPUBLISHED WORK BY TESTAMERICA LABORATORIES IS PROTECTED BY STATE AND FEDERAL LAW OF THE UNITED STATES. IF PUBLICATION OF THIS WORK SHOULD OCCUR THE FOLLOWING NOTICE SHALL APPLY:
©COPYRIGHT 2008 TESTAMERICA LABORATORIES, INC. ALL RIGHTS RESERVED.

1. Scope and Application

1.1. The purpose of this procedure is to describe the preparation and analysis of high volume (Hi-Vol) filters for particulate matter.

1.2. This procedure provides for the measurement of the mass concentration of particulate matter with an aerodynamic diameter less than or equal to 10 micrometers (PM_{10}). It also provides for the measurement of the mass concentration of total suspended particulate matter (TSP) up to 25-50 um.

1.3. The reporting limit for the analysis is 5 mg for PM_{10} or TSP.

1.4. Nuisance dust, or particulates not otherwise regulated may be determined by weight or concentration using the general procedures described in NIOSH Method 0500. The reporting limit for this analysis is 100 µg, or 10 $\mu g/m^3$, based upon a 10 m^3 standard sample volume.

2. Summary of Method

2.1. Microfiber filters are carefully inspected and tare weighed by the laboratory prior to shipment to the client for use in air sampling. Particles are collected on the filters during a specified 24-hour sampling period. After sample collection, the filters are returned to the laboratory where they are carefully reweighed to determine the amount of particulate matter collected on the filters.

2.2. Cassettes containing pre-tared filters are purchased for sampling nuisance dust. Upon return to the laboratory, the filters are removed and dried in a dessicator overnight. The filters are weighed to constant weight to determine the gross weight, and then the nuisance dust residue weight is determined by difference. The data may be reported in units of concentration if the client provides the sample volume.

3. Definitions

3.1. PM_{10} - particles with aerodynamic diameters less than or equal to 10 micrometers.

3.2. TSP – total suspended particulate matter with aerodynamic diameters up to 25-50 micrometers.

3.3. Additional definitions can be found in the TestAmerica Knoxville Quality Assurance Manual (QAM).

4. Interferences

4.1. Handling the filters by hand will affect the weight of the filter. When handling filters, gloves must be worn and touching should be limited to the edges.

4.2. If the filters are damaged in shipment or when sampling, the client is notified in the case narrative.

5. Safety

5.1. Employees must abide by the policies and procedures in the TestAmerica Environmental Health and Safety Manual and this document.

5.2. Specific Safety Concerns or Requirements: None

5.3. Primary Materials Used: There are no materials used in this method that have a serious or significant hazard rating.

6. Equipment and Supplies

6.1. Analytical balance capable of weighing to the nearest 0.0001 g. The Mettler HL32 contains a lower chamber that was specifically developed for Hi-Vol filter weighing.

6.2. The weighing of NIOSH 0500 specifed filters (37 mm PVC disks) requires an analytical balance capable of weighing to the nearest 0.00001 g.

6.3. Microquartz fiber filters, 8 x 10 in., Whatman QMA Quartz, or equivalent, should be used, especially if subsequent metals analyses are required. Glass fiber filters, 8 x 10 in., Environmental Express Catalog #FG858X10, or equivalent, may be used upon client request.

6.4. Sampling cassettes, pre-tared, containing 37 mm PVC disks having a nominal pore size of 5 microns (SKC, Inc., Catalogue Number 225-8204, or equivalent.

6.5. Class S-traceable weights, 0.01, 1, 5 and 10 grams.

6.6. Gloves, disposable PVC.

6.7. Relative Humidity (RH) and temperature indicator.

7. Reagents and Standards

7.1. None.

8. Sample Collection, Preservation and Storage

8.1. Sampling is not performed for this method by TestAmerica Knoxville. For information regarding sample shipping, refer to SOP KNOX-SC-0003, "Sample Receipt and Log In", current revision.

8.2. Filters should be reweighed as soon as practical after collection to minimize loss of volatile particles.

9. Quality Control

9.1. At the beginning of each weighing session, after every 15 filter weight determinations, and again at the end of each weighing session, check and record the balance calibration with the 1, 5 and 10 gram weights. If the values fall outside ±1 mg, determine and correct the problem and reweigh all filters since the last acceptable check weight group.

9.2. Check and record the balance zero after every 10 weighings. The balance zero can be checked and re-zeroed more frequently, if needed. If the zero check is not within ±0.5 mg of true zero, all previously weighed filters must be rechecked. Adjust the balance, if necessary, prior to the next weighings.

9.3. Reweigh 10% of the unexposed filters on each day of operation. QC tare weights must agree within 2.8 mg; if not, troubleshooting and reweighing are in order.

9.4. Reweigh 10% of the exposed filters on each day of operation. QC gross weights should agree within 5.0 mg. However, due to the loss of volatile components, no definitive limits have been set for exposed filters.

10. Calibration and Standardization

10.1. Make sure that the balance has been calibrated (at least annually) and maintained according to manufacturer's recommendations.

10.2. Before each weighing session, after each group of no more than 15 filters and at the end of each weighing session, check the balance using 1, 5, and 10 gram weights. All weights must be within 1 mg of the true value, i.e., 1 g ±0.0010 g, 5 g ±0.0010 g and 10 g ±0.0010 g. Tare the balance before each weight is measured.

10.2.1. For weighing 37 mm PVC disks (NIOSH 0500), check the calibration of the five-place analytical balance with a known weight of 0.010 gram 10 mg). This weight must be within 0.02 mg of the true value, i.e., 0.010 g ±0.00002 g.

10.3. The digital hygrothermograph (relative humidity meter) must have the calibration verified every six months. The relative humidity indicator reading should be equal to a wet/dry psychrometer reading within 6% relative humidity. This may also be accomplished by a semiannual purchase of a new traceable calibrated hygrothermograph with the calibration verification provided by the vendor.

11. Procedure

11.1. Filter Preparation and Tare Weight Determination

11.1.1. All filters must be visually inspected for defects before the initial weight is determined. Defective filters must be rejected if any are found. Batches of filters containing numerous defects should be returned to the supplier. Specific defects to look for are:

- tears and pinholes
- loose material - any extra loose material or dirt particles on the filter that require removal by brushing prior to weighing
- discoloration - any obvious visible discoloration that might be evidence of a contaminant.

11.1.2. If filters are not prenumbered, they must be stamped with a unique identification. Stamp the filters that pass inspection on two diagonally opposite corners - one stamp on each side of the filter.

11.1.3. Place the numbered filters in racks and set in the temperature and humidity-controlled balance room for at least 24 hours. Do not fold or crease the filters.

11.1.3.1. Required environmental conditions are:

Temperature range: 15 - 30° C
Humidity range: 20 - 45% relative humidity

Note: Low humidity causes static electricity to interfere with the weighings.

11.1.3.2. The temperature and relative humidity must be checked and recorded on equilibration days.

11.1.4. After 24 hours, weigh the unexposed filters.

11.1.4.1. Zero the balance according to manufacturer's instructions.

11.1.4.2. Check the balance using 1, 5, and 10 gram weights before weighing any filters and after each group of no more than 15 filters. Refer to section 9.

11.1.4.3. Weigh the filters to the nearest 0.1 mg. Record this as the filter tare weight.

11.1.4.4. Reweigh 10% of the filters. The second weight must be within 2.8 mg of the first weight or all filters since the last acceptable check weight must be reweighed.

11.1.4.5. Check and record the balance zero after every 10 weighings and/or after the final filter weighing. Refer to section 9.2.

11.1.5. Pack the weighed, numbered filters in a box. Separate each filter with a sample identification card. The filters are ready to be shipped and used for sample collection.

11.2. Exposed Filter Inspection and Gross Weight Determination

11.2.1. Examine the field data sheet to determine whether all data needed to verify sample validity and to calculate mass concentration are provided. Compare the filter ID number that is stamped on the filter to all client documentation. Correct any clerical errors to reflect the filter ID number that is stamped on the filter. Use the stamped ID number when identifying the filter in the filter weighing software.

11.2.2. Remove the filter from its protective envelope and examine the shipping envelope. If sample material has been dislodged from a filter, recover as much as possible by brushing it from the envelope onto the filter with a soft brush.

11.2.3. Place the exposed, gross weight filters in the sample ID cards in the racks and set in the temperature and humidity-controlled balance room for at least 24 hours.

11.2.3.1. Required environmental conditions are:

- The gross weight temperature must be ±3° C from the tare weight temperature.
- The gross weight humidity must be ±5 relative humidity units from the tare weight humidity.

Note that filters may be from different tare weight/humidity batches. Use the filter ID to identify the tare weight/humidity batch.

11.2.4. After 24 hours, weigh the exposed filter samples.

11.2.4.1. Zero the balance according to manufacturer's instructions.

11.2.4.2. Check the balance using 1, 5, and 10 gram weights before weighing any filters and after each group of no more than 15 filters. Refer to section 9.

11.2.4.3. Weigh the filters to the nearest 0.1 mg. Record this as the filter gross weight.

11.2.4.4. Reweigh 10% of the filter samples. The second weight should be within 5.0 mg of the first weight.

11.2.4.5. Check and record the balance zero after every 10 weighings and/or after the final filter weighing. Refer to section 9.2.

11.3. NIOSH 0500 Filters—Weighing nuisance dust residue collected on PVC filters is conducted on a balance that is precise to 0.00001 g, or 0.01 mg. The balance calibration must adhere to the requirements of Section 10.2.1.

11.3.1. The filters are pre-tared to 0.01 mg by the manufacturer. Upon receipt of the filter cassettes, record the tare weights in the Method 5 tare weight log. Apply unique numbers to the filter cassettes before issuing them to a client, in order to maintain rigorous traceability of the filter cassettes.

11.3.2. When the exposed filters are returned, open each cassette by cutting the tape that connects the two parts of the cassette, and twisting to remove the top part. Place the cassettes in a dessicator over anhydrous drierite (Ca SO_4), with the top part of the cassette loosly covering the filter. The cassette should be open enogh to allow any captured moisture to escape without allowing dust particles to settle on the filter.

11.3.3. After 24 hours, weigh the filters and record the weight to 0.01 mg in the Method 5 particulate weight data log. Tare the balance before each weighing. Include the tare weight, date and time of each weighing. Make a note of the required calibration checks, including the 10 mg weight test.

11.3.4. Calculate the nuisance dust residue weights by difference. If the sample volume is available, calculate the results in $\mu g/m^3$.

11.4. One time procedural variations are allowed only if deemed necessary in the professional judgment of supervision to accommodate variation in sample matrix, radioactivity, chemistry, sample size, or other parameters. Any variation in procedure, except those specified by project specific instructions, shall be completely documented using a Nonconformance Memo and approved by a Technical Specialist, Project Manager and QA Manager. If contractually required, the client shall be notified.

11.5. Any unauthorized deviations from this procedure must also be documented as a nonconformance, with a cause and corrective action described.

12. Data Analysis and Calculations

12.1. Refer to Appendix I for an example data review checklists used to perform and document the review of the data. Using the data review checklist, the analyst also creates a narrative which includes any qualifications of the sample data.

12.2. PM_{10} (or TSP) Mass Concentration in $ug/m^3 = \frac{(W_g - W_t)}{V_a} 10^6$

where: Wg = gross weight of PM_{10} filter, g
Wt = tare weight of PM_{10} filter, g
Va = total sample volume, m^3
10^6 = conversion factor, ug/g

12.2.1. For PM_{10} (or TSP) mass concentration determination, use a standard volume of 1000 m^3 for method blanks if the volume of air sampled for the samples has been provided.

12.2.2. For NIOSH 0500 mass concentration determination, use a standard volume of 10 m^3 for method blanks if the volume of air sampled for the samples has been provided. Apply a Dilution Factor of (10/Va) to the reference data in QuantIMS to correct the final reference data reported for the actual sample volume.

12.3. If the volume of air sampled was not provided by the client, report the results in total ug:

PM_{10} (or TSP), ug = $(W_g - W_t)\ 10^6$

13. Method Performance

13.1. Training Qualification: The group/team leader has the responsibility to ensure that this procedure is performed by an associate who has been properly trained in its use and has the required experience. Refer to SOP KNOX-QA-0009 current revision for further requirements for performing and documenting initial and on-going demonstrations of capability.

14. Pollution Prevention

14.1. Not applicable.

15. Waste Management

15.1. All waste will be disposed of in accordance with Federal, State and Local regulations. Where reasonably feasible, technological changes have been implemented to minimize the potential for pollution of the environment. Employees will abide by this method and the policies in section 13 of the TestAmerica Environmental Health and Safety Manual for "Waste Management and Pollution Prevention."

15.2. No waste streams are produced when this procedure is carried out.

16. References

16.1. CFR 40, Part 50, Appendix J, "Reference Method for the Determination of Particulate Matter as PM_{10} in the Atmosphere".

16.2. CFR 40, Part 50, Appendix B, "Reference Method for the Determination of Suspended Particulate Matter in the Atmosphere (High Volume Method)."

16.3. Quality Assurance Handbook for Air Pollution Measurements, Vol. II, Part II, Section 2.11 - PM_{10} High Volume, September 1997.

16.4. NIOSH Method 0500, "Particulates Not Otherwise Regulated, Total", NIOSH Manual of Analytical Methods (NMAM), Fourth Edition, 8/15/94.

16.5. TestAmerica Knoxville Quality Assurance Manual (QAM), current revision.

17. Miscellaneous

17.1. Modifications from Reference Methods

17.1.1. NISOH 0500

17.1.1.1. This SOP uses a balance with 0.01 mg readability providing sufficient sensitivity as stated in this SOP. The NIOSH method specifies a balance with 0.001 mg sensitivity.

17.2. PM10 / TSP Deliverable:

Narrative

- Description of any anomalies or observations about samples/QC found during analysis
- Copy of nonconformance memo(s).

Sample Data Summary *(in QuantIMS order)*

- QuantIMS (Q) Sample Result Report(s)

Sample Results (in QuantIMS order)

- QuantIMS (Q) Sample Result Report(s)

Raw Data (in run order)

- Gross Weight Data Review Checklist
- Final Report by Batch Number
- Gross Weight Batch Data Report
- QC Weight Data by Batch - Gross Report
- Tare Weight Data Review Checklist
- Tare Weight Batch Data Report
- QC Weight Data by Batch - Tare Report

Purge File

- Lot Summary
- PM Checklists
- F6 Report
- Upload Report
- Unused data

(Note: Do not keep QuantIMS worksheets.)

17.3. Appendices

17.3.1. Appendix I: Example Data Review Checklist

17.3.2. Appendix II: Flow Chart

17.3.3. Appendix III: FilterTrac II Procedure-Tare Weight

17.3.4. Appendix IV: FilterTrac II Procedure-Gross Weight

17.3.5. Appendix V: Example Particulate Data Worksheet for NISOH 0500

Appendix I: Example Data Review Checklist

Filter Track II

PM-10 or TSP Tare Weight Data Review Checklist

Batch Number(s):	2952
SOP Number:	KNOX-WC-0028,rev 6

Review Items	Yes	No
A. Balance Calibration and Zero Checks		
1. Was the balance calibration checked initially, after every 15 Filters and at end of each weighing session?	☑	☐
2. Were the calibration checks within acceptance limits? (+/- 0.0010)	☑	☐
3. Was the balance zero checked after every 10 weighings and results within +/- 0.5mg of true zero?	☑	☐
B. QC Samples		
1. Were 10% of the exposed filters weighed a second time (Tare weight)?	☑	☐
2. Was the second weight within +/- 2.8 mg of the first Tare weight?	☑	☐
C. Environmental Conditions		
1. Temperature and humidity within acceptance limits for each weighing session? (15 -30 deg. C and 20-45% relative humidity)	☑	☐
D. Other	**1st**	**2nd**
1. Are all required forms filled out?	Yes	
2. Did the analyst sign and date the front page of the analytical run?	Yes	
3. Are all nonconformances included and noted?	N/A	

1st Level Review Comments:		2nd Level Review Comments:	

Analyst:		2nd Level Reviewer:	
Date:	7/14/2008	Date:	

printed on 10/8/2008
Page 1 of 1

FilterBatch_rev7_3.mdb 7/10/2007
RptTwCheckList_w_o_2ndStd

Appendix I: Example Data Review Checklist, continued

Filter Track II

PM-10 or TSP Gross Weight Data Review Checklist

Lot Number(s):	H8G310111
Assoc. Tare Wgt Batches:	2952
SOP Number:	KNOX-WC-0028,rev. 5

Review Items	Yes	No
A. Balance Calibration and Zero Checks		
1. Was the balance calibration checked initially, after every 15 Filters and at end of each weighing session?	☑	☐
2. Were the calibration checks within acceptance limits? (+/- 0.0010)	☑	☐
3. Was the balance zero checked after every 10 weighings and results within +/- 0.5mg of true zero?	☑	☐
B. QC Samples		
1. Were 10% of the exposed filters weighed a second time (Gross weight)?	☑	☐
2. Was the second weight within +/- 5.0 mg of the first gross weight?	☑	☐
C. Environmental Conditions		
1. Temperature and humidity within acceptance limits for each weighing session?: (15 -30 deg. C and 20-45% relative humidity)	☑	☐
2. Was the gross weight temperature +/- 3 deg. C of the Tare weight temperature?	☑	☐
3. Was the gross weight humidity +/- 5 relative humidity units of the tare weight humidity?	☑	☐
D. Other	1st	2nd
1. Were IDs on the filter envelope and folder verified?	Yes	
2. Were the air volumes verified?	N/A	
3. All forms included in the data package(tare weights, tare QC, gross weights, gross QC, lab summary cross reference information, and final report)?	Yes	
4. Are all required foms filled out?	Yes	
5. Transcriptions checked?	Yes	
6. Was one calculation verified for each batch of samples?	Yes	
7. Did the analyst sign and date the front page of the analytical run?	Yes	
8. Units and reporting limits checked?	Yes	
9. Are all nonconformances included and noted?	N/A	

Level 1 Review Comments:		Level 2 Review Comments:	

Analyst:		2nd Level Reviewer:	
Date:	8/5/2008	Date:	

Printed on 10/8/2008
Page 1 of 1

FilterBatch_rev7_3.mdb 7/11/2007
rptGWCheckList_w_o_2ndStd

Appendix II: Flow Chart

Inspect the filters for tears, holes and defects.
↓
Stamp the filters with unique identifiers, if necessary.
↓
Place the filters in the temperature and humidity controlled balance room for 24 hours.
↓
After 24 hours, weigh the filters.
↓
Reweigh 10% of the filters for QC.
↓
Package the filters and send to the client.
↓
After sampling, place the exposed filters in the temperature and humidity controlled balance room for 24 hours.
↓
After 24 hours, weigh the exposed filters.
↓
Reweigh 10% of the exposed filters for QC.

Appendix III: FilterTrac II Procedure-Tare Weight

1) Click on the clock in the system tray prior to opening FilterTrac II. Note: Allow the balance to stabilize before recording the time.
2) Double Click on FilterTrac II Icon.
3) Click on the "FilterTrac II – Weight Program" button.
4) Click on the appropriate button, i.e., "Tare Weights", if you are doing Tare Weights.

Tare Weights

1) From the FilterTrac II main menu, select "Tare Weights".
2) The tare weights form will appear.
3) Enter the filter lot number.
4) Choose from the drop-down list the appropriate manufacturer/type.
5) Press Tab. Note. Use the tab key whenever possible to move between fields.
6) Press Tab.

Note: These last two fields are already populated with the data type and sequence number. Reference weight and reference standard 1.0000, respectively.

7) Enter the tare weight by clicking on the "Get Weight" button.
8) Press Tab.
9) Enter the current temperature for the room in which you are weighing filters.
10) Press Tab.
11) Enter the humidity as displayed on the hygrometer in the lab.
12) Press Tab.
13) A message box will appear. It reads. "Is all the information correct?" Look at all the information and click "Yes" if all of the information is correct and "No" if changes are required. Make all required changes and Tab through the humidity field and re-answer the question with a "Yes". Another message box will come up asking if "You are ready to close the batch?" The default is "No". Because you have not added any filter records yet, it is wise to go with the default.
14) When you click "No" the program will move to the next new record which should be reference weight, reference standard 5.0000. This will leave the cursor on the tare weight field.

Note: All other fields should be populated with the information from the previous filter.

15) Enter the tare weight and tab through until you receive the message boxes. Answer appropriately, and then your next tare weight should be reference weight, reference standard 10.0000.
16) Repeat the previous steps and advance to the next sample.
17) This sample will be your first tare filter weight. The cursor will be placed in the sequence field.
18) Enter the filter ID of the filter as it is stamped on the filter.
19) Press Tab.
20) Click on the "Get Weight" button.
21) Press Tab.
22) Press Tab.
23) Press Tab.
24) Message box.
25) Message box.
26) Repeat until all tare weights are done.

Note: Zero checks every 10 filter weights and reference standards every 15 filter weights are automatically asked for. Before placing the filter on the balance, make sure that a zero check or reference standard has not been requested.

27) After you enter the last filter in the batch, answer "Yes" to the message box, "Are you ready to close this batch?" This will start the closing standards. After you enter the last closing standard, a message box will appear telling you that this batch is closed. Click OK and then print your reports. Once you print your reports, close the tare weight form.
28) It is very important to run the report while the form is still open. The report uses the batch number from the form to query the database. If you run into any problems, call the application support person.

QC Weights – Tare

1) After every tare weight batch, a QC batch must be weighed. Select "QC Weights – Tare" from the FilterTrac II main menu.
2) Do steps 7 – 16 from the tare weights procedure.
3) Then enter your first QC filter. Note: This is a filter chosen at random by the analyst to be weighed again to validate the test. There should be 1 QC filter per 10 filters weighed in the original tare weight batch.
4) Do steps 19 – 28 for each QC filter.
5) Print the reports after the last standard reference has been committed.

Tare Weight Data Review Checklist

1) Select "Data Review Checklist" from the FilterTrac II main menu.
2) Select "Tare Weight – 1st Level Review" from the "Data Review Checklist Menu".
3) Enter the batch number.
4) When the data review checklist appears, select the appropriate buttons and print out checklist.
5) Give all paperwork to the appropriate 2nd level reviewer.

Appendix IV: FilterTrac II Procedure-Gross Weight

1) Click on the clock in the system tray prior to opening FilterTrac II. Note: Allow the balance to stabilize before recording the time.
2) Double click on FilterTrac II icon.
3) Click on the "FilterTrac II – Weight Program" button.
4) Click on the appropriate button. i.e. "Gross Weights" if you are doing gross weights.

Gross Weights

1) From the FilterTrac II main menu select "Gross Weights".
2) The gross weights form will appear.

Note: These last two fields are already populated with the data type and sequence Number, i.e., reference weight and reference standard 1.0000, respectively.

3) Click on the "Get Weight" button.
4) Press Tab. Leave the air volume field at 0 for standards and zero checks.
5) Press Tab and enter the QuantIMS lot number, e.g., H5C020184.
6) Press Tab. Leave the workorder number empty for standards and zero checks.
7) Press Tab and enter the temperature of the balance room.
8) Press Tab and enter the humidity of the balance room.
9) Press Tab.
10) A message box will appear. It reads, "Is all the information correct?" Look at all the information and click "Yes" if all of the information is correct and "No" if changes are required. Make all required changes and Tab through the humidity field and reanswer the question with a "Yes". Another message box will come up asking if "You are ready to close the batch?" The default is "No". Because you have not added any filter records yet, it is wise to go with the default.
11) When you click "No" the program will move to the next new record which should be reference weight, reference standard 5.0000. This will leave the cursor on the gross weight field.

Note: All other fields should be populated with the information from the previous filter.

12) Enter the gross weight and tab through until you receive the message boxes. Answer appropriately, and then your next gross weight should be reference weight, reference standard 10.0000.
13) Repeat the previous steps and advance to the next sample.
14) This sample will be your first gross filter weight. The cursor will be placed in the sequence field. Enter the filter number.
15) Press Tab and click on the "Get Weight" button.
16) Press Tab and enter the air volume of the sample, if applicable and known.
17) Press Tab twice and select the correct workorder number from the drop-down list.
18) Press Tab 3 times and answer the message boxes appropriately.
19) Repeat steps 14-18 until all gross weights are done.

Note: Zero checks every 10 filter weights and reference standards every 15 filter weights are automatically asked for. Before placing the filter on the balance, make sure that a zero check or reference standard has not been requested.

20) After you enter the last filter in the batch, answer "Yes" to the message box "Are you ready to close this batch?" This will start the closing standards. After you enter the last closing standard, a message box will appear telling you that this batch is closed. Click OK.
21) Print your reports. First click on the button with the printer icon and then click on the "Print Results" button. Once you print your reports, close the gross weight form.

22) It is very important to run the report while the form is still open. The report uses the batch number from the form to query the database. If you run into any problems, call the application support person.

QC Weights – Gross

1) After every gross weight batch, a QC batch must be weighed. Select "QC Weights – Gross" from the FilterTrac II main menu.
2) Do steps 3-13 from the Gross Weights procedure.
3) Then enter your first QC filter. Note: This is a filter chosen at random by the analyst to be weighed again to validate the test. There should be 1 QC filter per 10 filters weighed in the original gross weight batch.
4) Do steps 14-22 for each QC filter.
5) Print the reports after the last standard reference has been committed.

Gross Weight Data Review Checklist

1) Select "Data Review Checklist" from the FilterTrac II main menu.
2) Select "Gross Weight – 1st Level Review" from the "Data Review Checklist Menu".
3) Enter the QuantIMS lot number when prompted.
4) When the data review checklist appears, select the appropriate buttons and print out checklist.
5) Give all paperwork to the appropriate 2nd level reviewer.

Transferring Data to QuantIMS

1) Enter the gross weight number by entering the data date, e.g., 040605. Note: If there is more than one gross weight batch in the same day, add a letter to the end of the date e.g., 040605A, 040605B. etc.
2) Enter the gross weight batch number, e.g., 2561, 2802, etc. Data will then transfer to be uploaded.

Appendix V: Example Particulate Data Worksheet for NISOH 0500

TestAmerica Knoxville
SOP KNOX-WC-0006
Particulate Data Worksheet

Batch Number:
Prep Date:
Comp Date:

Analyst: _____ Reviewed by: _____ Date: _____

Lot Number	Lot Sample Number	Suffix	Method Code	Client ID	WO #	*Tare Weight (g)*	Final Weight 1	Final Weight 2	*Final Weight Average (g)*	*Particulate Weight (mg)*	*Sample Volume (L)*	*Conc. (ug/m^3)*	*Quantims DF*	*Analytical Date (mmddyy)*

Filter initial weights provided by SKC

NIOSH 0500 Rev 0.xlt WC0010R0, 9/16/03

TESTAMERICA KNOXVILLE

STANDARD OPERATING PROCEDURE

TITLE: Digestion of Total Metals in Filters

(SUPERSEDES: KNOX-IP-0003, Rev. 5)

Prepared By: _____

Reviewed By: _____ 10/7/11
Technical Specialist

Approved By: _____ 10/12/11
Quality Assurance Manager

Approved By: _____ 10-12-11
Environmental, Health and Safety Coordinator

Approved By: _____ 10-12-11
Laboratory Director

Copyright Information:
This documentation has been prepared by TestAmerica Laboratories, Inc. and its affiliates ("TestAmerica"), solely for their own use and the use of their customers in evaluating their qualifications and capabilities in connection with a particular project. The user of this document agrees by its acceptance to return it to TestAmerica upon request and not to reproduce, copy, lend, or otherwise disclose its contents, directly or indirectly, and not to use it for any other purpose other than that for which it was specifically provided. The user also agrees that where consultants or other outside parties are involved in the evaluation process, access to these documents shall not be given to said parties unless those parties also specifically agree to these conditions.
THIS DOCUMENT CONTAINS VALUABLE CONFIDENTIAL AND PROPRIETARY INFORMATION. DISCLOSURE, USE OR REPRODUCTION OF THESE MATERIALS WITHOUT THE WRITTEN AUTHORIZATION OF TESTAMERICA IS STRICTLY PROHIBITED. THIS UNPUBLISHED WORK BY TESTAMERICA IS PROTECTED BY STATE AND FEDERAL LAW OF THE UNITED STATES. IF PUBLICATION OF THIS WORK SHOULD OCCUR THE FOLLOWING NOTICE SHALL APPLY: @COPYRIGHT 2011 TESTAMERICA LABORATORIES, INC. ALL RIGHTS RESERVED.

1. Scope and Application

1.1 The purpose of this procedure is to describe the digestion of micro-fiber filters for total metals analysis.

2. Summary of Method

2.1 Two 1” x 8” strips are cut from an 8” x 10” filter. Metals are extracted from the filter strips by a heated HNO_3/HCl acid solution.

3. Definitions

3.1 Definitions can be found in the TestAmerica Knoxville Quality Assurance Manual (QAM), current revision.

4. Interferences

4.1 There are numerous routes by which samples may become contaminated. Potential sources of trace metals contamination include metallic or metal-containing labware (e.g., talc gloves which contain high levels of zinc), containers, impure reagents, dirty glassware, improper sample transfers, dirty work areas, atmospheric inputs such as dirt and dust, etc. Be aware of potential sources of contamination and take appropriate measures to minimize or avoid them.

4.2 The entire work area, including the bench top and fume hood, should be thoroughly cleaned routinely in order to minimize the potential for environmental contamination.

4.3 Physical interference effects may contribute to inaccuracies in the determinations of trace elements. If physical interferences are present, they should be documented.

4.4 Visual interferences or anomalies (such as foaming, emulsions, precipitates, etc.) must be documented.

4.5 Allowing samples to boil or go dry during digestion may result in the loss of volatile metals. If either of these occur, the sample must be reprepared.

4.6 Specific analytical interferences are discussed in each of the determinative methods.

5. Safety

5.1 Employees must abide by the policies and procedures in the Corporate Environmental Health and Safety Manual, Radiation Safety Manual and this document.

5.2 Specific Safety Concerns or Requirements

5.2.1 All sample digestions, including cooling of digestates, must be carried out in a fume hood.

5.2.2 Samples that contain high concentrations of carbonates or organic material or samples with an elevated pH can react violently when acids are added.

5.2.3 The acidification of samples containing reactive materials may result in a vigorous reaction and/or the release of toxic gases, such as cyanides or sulfides. Acidification of samples should be done in a fume hood.

5.2.4 Always carry bulk concentrated acid bottles in appropriate impact proof containers.

5.2.5 Acid spills must be neutralized immediately, flushed with water and cleaned up using appropriate spill kits.

5.2.6 Discard chipped or broken beakers to prevent injury. Chipped glassware may be fire polished as an alternative to disposal.

5.3 Primary Materials Used: The following is a list of the materials used in this method, which have a serious or significant hazard rating. **Note**: This list does not include all materials used in the method. The table contains a summary of the primary hazards listed in the MSDS for each of the materials listed in the table. A complete list of materials used in the method can be found in the reagents and materials section. Employees must review the information in the MSDS for each material before using it for the first time or when there are major changes to the MSDS.

Material (1)	Hazards	Exposure Limit (2)	Signs and symptoms of exposure
Hydrochloric Acid	Corrosive Poison	5 ppm-Ceiling	Inhalation of vapors can cause coughing, choking, inflammation of the nose, throat, and upper respiratory tract, and in severe cases, pulmonary edema, circulatory failure, and death. Can cause redness, pain, and severe skin burns. Vapors are irritating and may cause damage to the eyes. Contact may cause severe burns and permanent eye damage.

Nitric Acid	Corrosive Oxidizer Poison	2 ppm-TWA 4 ppm-STEL	Nitric acid is extremely hazardous; it is corrosive, reactive, an oxidizer, and a poison. Inhalation of vapors can cause breathing difficulties and lead to pneumonia and pulmonary edema, which may be fatal. Other symptoms may include coughing, choking, and irritation of the nose, throat, and respiratory tract. Can cause redness, pain, and severe skin burns. Concentrated solutions cause deep ulcers and stain skin a yellow or yellow-brown color. Vapors are irritating and may cause damage to the eyes. Contact may cause severe burns and permanent eye damage.
1 – Always add acid to water to prevent violent reactions.			
2 – Exposure limit refers to the OSHA regulatory exposure limit.			

5.4 All work must be stopped in the event of a known or potential compromise to the health and safety of an associate. The situation must be reported **immediately** to a laboratory supervisor.

6. Equipment and Supplies

6.1 Template and knife; used to cut filters.

6.2 Hot plate, digestion block (hereafter referred to as “hot block”) or other adjustable heating source capable of maintaining a temperature of 90 - 95°C.

6.3 NIST traceable thermometer.

6.4 Griffin beakers of assorted sizes or polypropylene vessels for hot block.

6.5 Watch glasses, ribbed or equivalent.

6.6 Graduated cylinder or equivalent capable of measuring 100 mL.

6.7 Repipetters or suitable reagent dispensers.

6.8 Calibrated automatic pipettes with corresponding pipet tips or Class A glass volumetric pipettes.

6.9 Class A volumetric flasks.

6.10 Plastic 120 mL specimen cups or equivalent.

6.11 Environmental Express, 8” x 10” quartz microfiber filters (or equivalent), for use as a control sample when not provided by the client. The filters should be analyzed for background analyte concentrations before use.

6.12 Syringe filters, 0.45 um or 1 um.

7. Reagents and Standards

7.1 Reagent water must be produced by a Millipore DI system or equivalent. Reagent water must be free of the analytes of interest as demonstrated through the analysis of method blanks as defined in the determinative SOPs.

7.2 Laboratory Control Sample (LCS) solutions are purchased as custom solutions. All standards must be stored in FEP fluorocarbon or previously unused polyethylene or polypropylene bottles. Stock standard solutions must be replaced prior to the expiration date provided by the manufacturer. If no expiration date is provided, the stock solutions may be used for up to one year and must be replaced sooner if verification from an independent source indicates a problem.

7.3 Working ICP LCS spike solution: The ICP LCS working spike solution is provided directly by the vendor. No further standard preparation is necessary.

7.4 Working Hg LCS spike solution: Prepared by diluting vendor's 1000 ppm stock 1/100 in 2% HNO_3 in a 100 mL volumetric (final concentration 10 ppm).

7.5 Nitric acid (HNO_3), concentrated, trace metal grade or better.

7.6 Hydrochloric Acid (HCl), concentrated, trace metal grade or better.

7.7 5.6% HNO_3/16.8% HCl (extracting acid), 55.5 mL HNO_3/167.5 mL HCl per liter.

Note: When preparing diluted acids, always add acid to water. If the water is added to the acid, a violent reaction may occur.

8. Sample Collection, Preservation and Storage

8.1 Sampling is not performed for this method by TestAmerica Knoxville. For information regarding sample shipping, refer to SOP KNOX-SC-0003, "Receipt and Log In", current revision.

8.2 The samples must be digested and analyzed within six months of collection for ICP metals and within 28 days of collection for Hg.

9. Quality Control

9.1 Preparation Batch - A group of up to 20 samples that are of the same matrix and are processed together using the same procedures and reagents. The preparation batch must contain a method blank, matrix spike (MS), sample duplicate (DUP) and an LCS. If not enough sample is available for an MS/DUP pair, the batch

must contain a method blank and an LCS/LCSD pair. An MS/MSD pair may be substituted for the MS/DUP if requested by the client.

9.2 Sample Count - Laboratory generated QC samples (method blanks, LCS, LCSD, MS, MSD and DUP) are not included in the sample count for determining the size of a preparation batch.

9.3 Method Blank (MB) – One method blank must be processed with each preparation batch. A method blank is a control sample that contains reagent water and all reagents specific to the method. It is carried through the entire analytical procedure, including preparation and analysis. The method blank is used to identify any system and process interferences, or contamination of the analytical system that may lead to the reporting of elevated analyte concentrations or false positive data. The method blank should not contain the analytes of interest at or above the reporting limit. Alternatively, analytes in the method blank should not occur at or above 10% of the measured concentration of that analyte in associated samples, (i.e., sample result must be a minimum of ten times higher than the blank contamination level). Corrective actions must be documented and implemented when the method blank is determined to be unacceptable. Please refer to SOP KNOX-MT-0007 (current revision) for SW-846 Method 6010B guidance, SOP KNOX-MT-0009 (current revision) for SW-846 Method 7470A guidance and Policy QA-003, Quality Control Program (current revision) for specific acceptance criteria of method blanks.

9.3.1 If the filter lot has not previously been analyzed for background analyte concentrations, an additional filter blank containing the specified number of blank filter strips as described in section 11.2 is also prepared and analyzed. The filter blank provides the native background levels of target elements.

9.4 Laboratory Control Sample (LCS) - One LCS must be processed with each preparation batch. The LCS must contain all analytes of interest and must be carried through the entire analytical procedure. The LCS is used to monitor the accuracy of the analytical process. On-going monitoring of the LCS results provides evidence that the laboratory is performing the method within acceptable accuracy and precision guidelines. Criteria for the acceptance of the LCS results are contained within the individual analytical method SOPs. Corrective action when the LCS results fail to meet control limits will be repreparation and reanalysis of the batch. Refer to Section 7.3 for information on the aqueous LCS spike solution.

9.4.1 It is recommended that the client supply a blank filter to be spiked and analyzed as the LCS. If one is not provided, the analyst should spike a blank filter as described in section 11.

9.5 Matrix Spike (MS)- One matrix spike should be processed for each prep batch. A

matrix spike is a client-supplied sample filter to which known concentrations of target analytes have been added prior to digestion. The matrix spike results are used to determine the effect of a matrix on the accuracy of the analytical process. Criteria for the acceptance of matrix spikes are contained within the individual analytical method SOPs. Corrective action when MS results fail to meet control limits does not include repreparation of samples unless the results indicate that a spiking error may have occurred.

9.5.1 If sufficient filter does not exist for a matrix spike sample, the laboratory should prepare an LCS/LCS duplicate (LCSD).

9.6 Duplicate (DU)- One duplicate of a client-supplied sample filter must be processed for each prep batch. The duplicate results are used to determine the effect of a matrix on the precision of the analytical process. Criteria for the acceptance of duplicates are contained within the individual analytical method SOPs. Corrective action when DU results fail to meet control limits does not include repreparation of samples unless the results indicate that a preparation error may have occurred.

9.6.1 If sufficient filter does not exist for a duplicate, the laboratory should prepare an LCS/LCSD.

10. Calibration and Standardization

10.1 The temperature of each hot plate/block digestor must be verified daily when used and must be recorded on either the metals preparation log or in a hot plate/block digestor temperature logbook. The temperature is verified by measuring the temperature of 50-100 mL reagent water in a covered beaker (hot plate) or 25-50 mL reagent water in a digestion cup (block digestor).

11. Procedure

11.1 Fold the 8” x 10” filter in half lengthwise with the sample side in. Place the 4” x 10” folded filter in the template.

11.2 Cut two 1” x 8” strips from the folded filter. Wipe the template with a Kim-wipe® (or equivalent) after each filter is cut.

11.3 For the LCS and LCSD (if needed), cut two 1” x 8” filter strips from the specified filter lot used to generate the client’s samples. If the filter lot information is not available, use a previously analyzed lot of quartz fiber filters.

11.4 Using vinyl gloves, tear the strips into approximately 1.5 cm x 1.5 cm pieces and place the pieces in a labeled 250 mL beaker (hot plate) or 50 mL digestion cup (hot block). Set the filter pieces down into the lower portion of the container to

ensure acid volume will cover the entire sample.

11.5 Prepare a digestion vessel containing 10-15 mL deionized water and label it as the blank. If the filter lot being used for the LCS and LCSD (if needed) has not been previously analyzed for background analyte levels, prepare another blank containing filter strips only, as described in sections 11.3 and 11.4. If two blanks are created, the blank containing the reagent water will be the reagent blank and the blank containing the filter strips will be the batch blank.

11.6 Spike the LCS and LCSD (if needed) with 500 uL of the ICP working spike solution (section 7.3) and 250 uL of the Hg working spike solution (section 7.4). Spike the MS with 500 uL ICP working spike solution and 50 uL of the Hg working spike solution. The filters should be dry prior to spiking, then add the extracting acids.

11.7 Add 25 mL of the extracting acid, 5.6% HNO3/16.8% HCL, to each digestion vessel. The acid should cover the filter strips completely.

11.8 Place the beakers on the hot plate or digestion cups in the hotblock at a temperature of 90 to 95ºC and reflux gently while covered with watch glasses for 30 minutes. Do not allow the samples to go dry. Remove the containers from the heat and allow to cool.

11.9 Transfer the extraction fluid in the containers to individual graduated containers (either specimen cups or hotblock digestion cups).

11.10 Rinse the container walls and wash with deionized water, adding approximately 25 mL deionized water (or enough to cover the filters) to the remaining filter material in each of the containers. Allow to set for at least 30 minutes while the acid from the filter diffuses into the rinse. Rinse each original digestion vessel and any remaining solid material with deionized water and add the rinses to the storage container. Dilute to 50 mL with deionized water and shake.

11.11 ICP Analysis

11.11.1 Using a syringe, pull up a volume of sample from the container. Place a disc filter on the syringe and dispense into a prelabeled 15 mL container. Continue until the container contains 10 mL of filtered digestate.

11.11.2 The final extraction solution concentration is at least 2.8% HNO_3/8.4% HCl. The filtered sample is now ready for analysis.

11.12 Mercury Analysis

11.12.1 5 mL of ICP digestate will be analyzed for mercury analysis. Refer to SOP KNOX-MT-0009, current revision.

11.13 One time procedural variations are allowed only if deemed necessary in the professional judgment of supervision to accommodate variation in sample matrix, radioactivity, chemistry, sample size, or other parameters. Any variation in procedure, except those specified by project specific instructions, shall be completely documented using a Nonconformance Memo and approved by a Technical Specialist, Project Manager and QA Manager. If contractually required, the client shall be notified.

11.14 Any unauthorized deviations from this procedure must also be documented as a nonconformance, with a cause and corrective action described.

12. Data Analysis and Calculations

12.1 ICP Analysis and Calculations

$$\text{Result (ug)} = \{\text{Raw Result (in ug/L)}\} \text{ x } 0.050\,\text{L x } \frac{9''}{2''}$$

Where:
0.050 L = the final ICP digestate volume
9”/2” = the 2 x 1” of the 9” exposed portion of the 8” x 10” filter

NOTE: The upload factor is 0.050 L x 9”/2” = 0.225.

12.2 Mercury Analysis and Calculations

$$\text{Result (ug)} = \{\text{Raw Result (in ug/L)}\} \text{ x } 0.050\text{L x } \frac{50\,\text{mL}}{5\,\text{mL}} \text{ x } \frac{9''}{2''}$$

Where
0.050 L = the final ICP digestate volume
50 mL/5 mL = 50 mL final Hg digestate volume/5 mL of the ICP digestate used for the Hg prep (section 11.12.1).
9”/2” = the 2 x 1” of the 9” exposed portion of the 8” x 10” filter.

NOTE: The upload factor is 0.050L x 50 mL/5 mL x 9”/2” = 2.25.

13. Method Performance

13.1 Method Detection Limit (MDL) - An MDL must be determined for each analyte in each routine matrix prior to the analysis of any samples. Method Detection limits are determined and verified as specified in the current revision of SOP CA-Q-S-006 based on 40 CFR Part 136 Appendix B. The result of the MDL determination must support the reporting limit. MDL summaries are stored on the local area network.

13.2 Initial Demonstration of Capability – Each analyst must perform an initial demonstration of capability (IDOC) for each target analyte prior to performing the analysis independently. The IDOC is determined by analyzing four replicate spikes (e.g., LCSs) as detailed in TestAmerica Knoxville SOP KNOX-QA-0009.

13.3 Training Qualification: The group/team leader has the responsibility to ensure that this procedure is performed by an associate who has been properly trained in its use and has the required experience. Refer to SOP KNOX-QA-0009 current revision for further requirements for performing and documenting initial and on-going demonstrations of capability.

14. Pollution Prevention

14.1 All procedures shall be conducted in a manner to minimize, as far as practical, the use of reagents and other chemicals.

15. Waste Management

15.1 All waste will be disposed of in accordance with Federal, State and Local regulations. Where reasonably feasible, technological changes have been implemented to minimize the potential for pollution of the environment. Employees will abide by this method and the policies in section 13 of the Corporate Safety Manual for "Waste Management and Pollution Prevention."

15.2 Waste Streams Produced by the Procedure: The following waste streams are produced when this method is carried out.

- Acidic waste containing nitric acid generated by the digestion will be collected and placed in the acidic waste stream 55 gallon poly drum. Never use metal containers for acidic waste.
- Contaminated disposable materials utilized for the analysis will be collected and placed in the acidic waste stream 55 gallon poly drum.

16. References

16.1 Compendium Method IO-3.1, "Selection, Preparation and Extraction of Filter Material", from the Compendium of Methods for the Determination of Inorganic Compounds in Ambient Air, U.S. EPA, 06/99.

16.2 TestAmerica Knoxville Quality Assurance Manual (QAM), current revision.

17. Miscellaneous

17.1 Appendices

17.1.1 Appendix I: Figure 1 – Example of the cut filter

17.1.2 Appendix II: Flow Chart

17.1.3 Appendix III: Reporting Limits

Appendix I: Figure 1 – Example of the cut filter

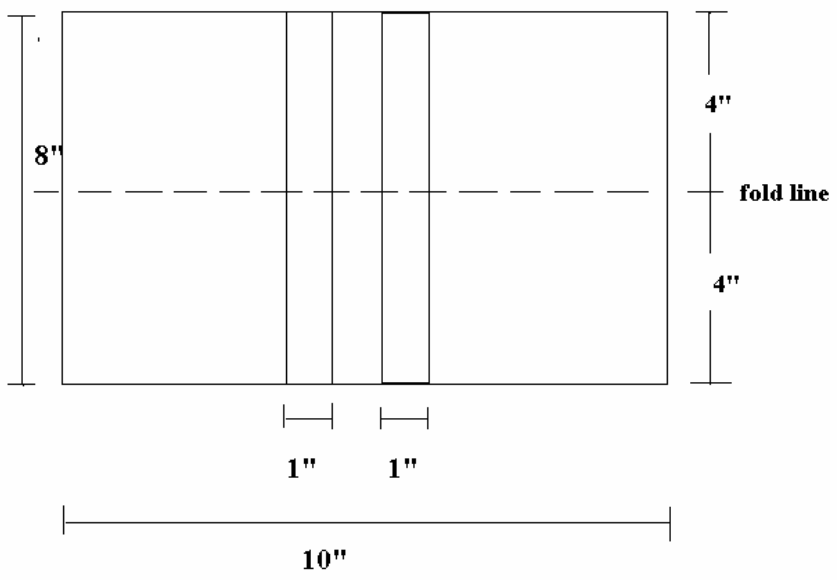

Appendix II: Flowchart for Method IO-3.1, Total Metals Preparation of 8” x 10” Filters

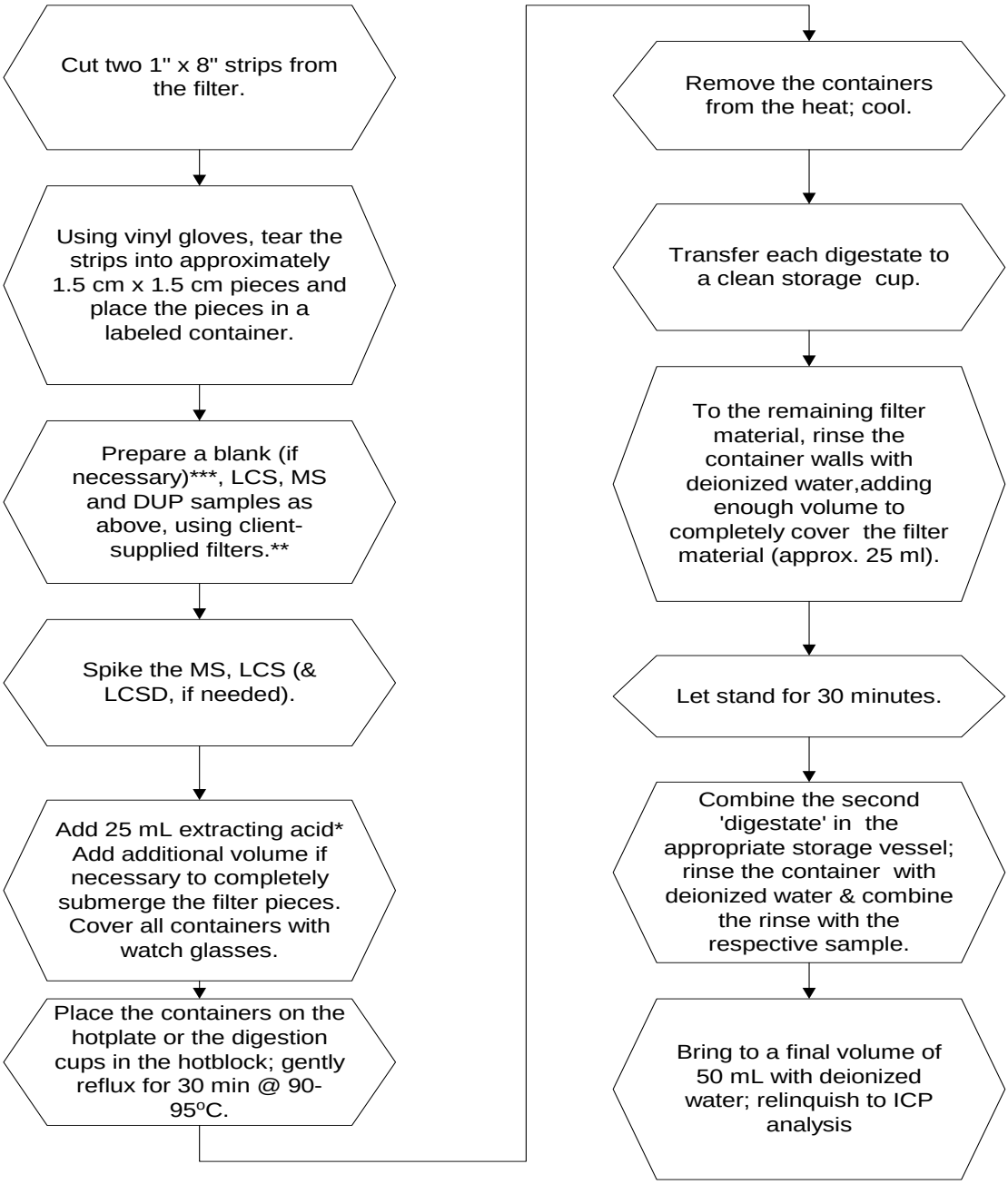

* 55.5 mL HNO_3/167.5 mL HCl per liter

** If the client does not include a blank filter with the project, prepare the LCS using filter strips from a filter lot that has been analyzed for background concentrations. If sufficient filter does not exist for MS and DUP, prepare an LCS/LCSD.

*** If the client’s filter lot has been previously tested for background analyte concentrations, create only a reagent blank.

Appendix III: Reporting Limits

Compound	Reporting Limit (ug)
Aluminum	90.0
Antimony	13.5
Arsenic	2.3
Barium	45.0
Beryllium	1.1
Boron	180
Cadmium	1.1
Calcium	2250
Chromium	9.0
Cobalt	11.3
Copper	5.6
Iron	180
Lead	2.3
Magnesium	1130
Manganese	3.4
Nickel	9.0
Phosphorus	540
Potassium	1130
Selenium	2.3
Silver	4.5
Sodium	4500
Thallium	4.5
Tin	90.0
Vanadium	18.0
Zinc	18.0
Mercury	0.45

TESTAMERICA KNOXVILLE

STANDARD OPERATING PROCEDURE

TITLE: PREPARATION AND ANALYSIS OF MERCURY IN AQUEOUS SAMPLES BY COLD VAPOR ATOMIC ABSORPTION, SW846 7470A AND EPA 245.1

(SUPERSEDES: KNOX-MT-0009, Rev. 10)

Prepared By: Monica K. Wilburn

Reviewed By: 2/12/13
Technical Specialist

Approved By: Kevin McGee 2/12/13
Quality Assurance Manager

Approved By: 2-12-13
Environmental, Health and Safety Coordinator

Approved By: Christopher White Rigell 02/12/13
Laboratory Director

Copyright Information:
This documentation has been prepared by TestAmerica Laboratories, Inc. and its affiliates ("TestAmerica"), solely for their own use and the use of their customers in evaluating their qualifications and capabilities in connection with a particular project. The user of this document agrees by its acceptance to return it to TestAmerica upon request and not to reproduce, copy, lend, or otherwise disclose its contents, directly or indirectly, and not to use it for any other purpose other than that for which it was specifically provided. The user also agrees that where consultants or other outside parties are involved in the evaluation process, access to these documents shall not be given to said parties unless those parties also specifically agree to these conditions.
THIS DOCUMENT CONTAINS VALUABLE CONFIDENTIAL AND PROPRIETARY INFORMATION. DISCLOSURE, USE OR REPRODUCTION OF THESE MATERIALS WITHOUT THE WRITTEN AUTHORIZATION OF TESTAMERICA IS STRICTLY PROHIBITED. THIS UNPUBLISHED WORK BY TESTAMERICA IS PROTECTED BY STATE AND FEDERAL LAW OF THE UNITED STATES. IF PUBLICATION OF THIS WORK SHOULD OCCUR THE FOLLOWING NOTICE SHALL APPLY:
@COPYRIGHT 2011 TESTAMERICA LABORATORIES, INC. ALL RIGHTS RESERVED.

1. SCOPE AND APPLICATION

1.1. This procedure describes the preparation and analysis of mercury (Hg, CAS # 7439-97-6) by Cold Vapor Atomic Absorption Spectroscopy (CVAA) using SW-846 Method 7470A and MCAWW Method 245.1.

1.2. CVAA analysis provides for the determination of total mercury (organic and inorganic). The combination of the oxidants, potassium permanganate and potassium persulfate, has been found to give 100% recovery with both types of compounds.

1.3. Method 7470A is applicable to the preparation and analysis of mercury in ground water, aqueous samples, wastes, wipes, and other leachates/extracts. It is also applicable to the analysis of air samples collected and prepared using Methods 29, D6784-02 and 0060. Certain solid and sludge type wastes may also be analyzed, however Methods 7471A and 7471B are usually the methods of choice (refer to KNOX-MT-0010, current revision). All matrices require sample preparation prior to analysis.

1.4. Method 245.1 is applicable to the determination of mercury in drinking, surface and saline waters, domestic and industrial wastes. All matrices require sample preparation prior to analysis.

1.5. The reporting limit for mercury in aqueous matrices is 0.2 ug/L.

2. SUMMARY OF METHOD

2.1. This SOP describes a technique for the determination of mercury in solution. The procedure is a physical method based on the absorption of radiation at 253.7 nm by mercury vapor. A representative portion of the sample is digested in sulfuric and nitric acids. Organic mercury compounds are oxidized with potassium permanganate and potassium persulfate, and the mercury reduced to its elemental state with stannous chloride is aerated from solution in a closed system. The mercury vapor passes through a cell positioned in the light path of an atomic absorption spectrophotometer. Absorbance is measured as a function of mercury concentration. Concentration of the analyte in the sample is determined by comparison of the sample absorbance to the calibration curve (absorbance vs. concentration).

3. DEFINITIONS

3.1. Dissolved Metals: Those elements which pass through a 0.45 um membrane. The sample is acidified after filtration.

3.2. Suspended Metals: Those elements which are retained by a 0.45 um membrane.

3.3. Total Metals: The concentration determined on an unfiltered sample following digestion.

3.4. Additional definitions can be found in the TestAmerica Knoxville Quality Assurance Manual (QAM), current revision.

4. INTERFERENCES

4.1. Chemical and physical interferences may be encountered when analyzing samples using this method.

4.2. Potassium permanganate, which is used to break down organic mercury compounds, also eliminates possible interferences from sulfide. Concentrations as high as 20 mg/L of sulfide as sodium sulfide do not interfere with the recovery of inorganic mercury from reagent water.

4.3. Copper has also been reported to interfere; however, copper concentrations as high as 10 mg/L had no effect on the recovery of mercury from spiked samples.

4.4. Chlorides can cause a positive interference. Seawaters, brines and industrial effluents high in chlorides require additional permanganate (as much as 25 mL) because, during the oxidation step, chlorides are converted to free chlorine, which also absorbs radiation at 253.7 nm. Care must be taken to ensure that free chlorine is absent before the mercury is reduced and swept into the cell. This is accomplished by adding excess hydroxylamine reagent (25 mL) and purging the sample headspace before stannous chloride is added. Both inorganic and organic mercury spikes have been quantitatively recovered from seawater using this technique.

NOTE: Sufficient addition of permanganate is apparent when the purple color persists at least 15 minutes. Some samples may require dilution prior to digestion due to extremely high concentrations of chloride.

4.5. Interference from certain volatile organic materials that absorb at this wavelength may also occur. If suspected, a preliminary run without stannous chloride can determine if this type of interference is present. While the possibility of absorption from certain organic substances present in the sample does exist, this problem is not routinely encountered. This is mentioned only to caution the analyst of the possibility. If this condition is found to exist, the mercury concentration in the sample can be determined by subtracting the result of the sample run without the reducing reagent (stannous chloride) from that obtained with the reducing reagent.

4.6. Samples containing high concentrations of oxidizable organic materials, as evidenced by high COD levels, may not be completely oxidized by this procedure. When this occurs, the recovery of mercury will be low. The problem can be eliminated by reducing the volume of original sample used.

4.7. The most common interference is laboratory contamination that may arise from impure reagents, dirty glassware, improper sample transfers, dirty work areas, etc. Be aware of potential sources of contamination and take appropriate measures to minimize or avoid them.

5. SAFETY

5.1. Employees must abide by the policies and procedures in the Corporate Safety Manual and this document.

5.2. Specific Safety Concerns or Requirements

5.2.1. Samples that contain high concentrations of carbonates or organic material or samples that are at elevated pH can react violently when acids are added.

5.2.2. When using the snap cap vials for Hg analysis, care should be taken not to close or invert the vials when the samples are still warm as they may quickly build pressure and become volatile. Samples should be handled in a fume hood with the sash closed as far as operations will permit, as necessary, and samples should be opened with the container pointing away from the analyst.

5.2.3. Mercury is a highly toxic element that must be handled with care. The analyst must be aware of the handling and cleanup techniques before working with mercury. Since mercury vapor is toxic, precautions must be taken to avoid its inhalation, ingestion or absorption through skin. All lines should be checked for leakage and the mercury vapor must be vented into a hood or passed through a mercury absorbing media such as equal volumes of 0.1 M KMnO4 and 10% H2SO4 or 0.25% iodine in a 3% KI solution.

5.2.4. Do not look directly into the beam of the Hg lamp. The UV light that these lamps radiate is harmful to the eyes.

5.2.5. Cylinders of compressed gas must be handled with caution in accordance with local regulations. It is recommended that, wherever possible, cylinders be located outside the laboratory and the gas led to the instrument through approved lines.

5.2.6. The CVAA apparatus must be properly vented to remove potentially harmful fumes generated during sample analysis.

5.3. Primary Materials Used: The following is a list of the materials used in this method, which have a serious or significant hazard rating. **NOTE: This list does not include all materials used in the method. The table contains a summary of the primary hazards listed in the MSDS for each of the materials listed in the table.** A complete list of materials used in the method can be found in the reagents and materials section. Employees must review the information in the MSDS for each material before using it for the first time or when there are major changes to the MSDS.

Material (1)	**Hazards**	**Exposure Limit (2)**	**Signs and symptoms of exposure**
Mercury, 1,000 ppm stock std.	Oxidizer Corrosive Poison	0.1 mg/m^3 Ceiling (Mercury Compounds)	Extremely toxic. Causes irritation to the respiratory tract. Causes irritation. Symptoms include redness and pain. May cause burns. May cause sensitization. Can be absorbed through the skin with symptoms to parallel ingestion. May affect the central nervous system. Causes irritation and burns to eyes. Symptoms include redness, pain, and blurred vision; may cause serious and permanent eye damage.
Sulfuric Acid	Corrosive Oxidizer Dehydrator Poison	1 mg/m^3-TWA	Inhalation produces damaging effects on the mucous membranes and upper respiratory tract. Symptoms may include irritation of the nose and throat, and labored breathing. Symptoms of redness, pain, and severe burn can occur. Contact can cause blurred vision, redness, pain and severe tissue burns. Can cause blindness.
Nitric Acid	Corrosive Oxidizer Poison	2 ppm-TWA 4 ppm-STEL	Nitric acid is extremely hazardous; it is corrosive, reactive, an oxidizer, and a poison. Inhalation of vapors can cause breathing difficulties and lead to pneumonia and pulmonary edema, which may be fatal. Other symptoms may include coughing, choking, and irritation of the nose, throat, and respiratory tract. Can cause redness, pain, and severe skin burns. Concentrated solutions cause deep ulcers and stain skin a yellow or yellow-brown color. Vapors are irritating and may cause damage to the eyes. Contact may cause severe burns and permanent eye damage.
Hydrochloric Acid	Corrosive Poison	5 ppm-Ceiling	Inhalation of vapors can cause coughing, choking, inflammation of the nose, throat, and upper respiratory tract, and in severe cases, pulmonary edema, circulatory failure, and death. Can cause redness, pain, and severe skin burns. Vapors are irritating and may cause damage to the eyes. Contact may cause severe burns and permanent eye damage.
Potassium Permanganate	Oxidizer	5 mg/m^3 for Mn Compounds	Causes irritation to the respiratory tract. Symptoms may include coughing, shortness of breath. Dry crystals and concentrated solutions are caustic causing redness, pain, severe burns, brown stains in the contact area and possible hardening of outer skin layer. Diluted solutions are only mildly irritating to the skin. Eye contact with crystals (dusts) and concentrated solutions causes severe irritation, redness, and blurred vision and can cause severe damage, possibly permanent.
Potassium Persulfate	Oxidizer	None	Causes irritation to the respiratory tract. Symptoms may include coughing, shortness of breath. Causes irritation to skin and eyes. Symptoms include redness, itching, and pain. May cause dermatitis, burns, and moderate skin necrosis.
1 – Always add acid to water to prevent violent reactions.			
2 – Exposure limit refers to the OSHA regulatory exposure limit.			

5.4. All work must be stopped in the event of a known or potential compromise to the health and safety of an associate. The situation must be reported **immediately** to a laboratory supervisor.

6. EQUIPMENT AND SUPPLIES

6.1. Temperature controlled water bath or block digestor, capable of maintaining a temperature of 90-95 °C

6.2. Leeman Hydra AA (or equivalent) Atomic Absorption Spectrophotometer equipped with:

6.2.1. Absorption Cell with quartz end windows perpendicular to the longitudinal axis. Dimensions of the cell must result in sufficient sensitivity to meet the SOP defined reporting limit. The quartz windows must be maintained to provide accurate measurements. Any scratches or fingerprints can alter the absorption of UV radiation.

6.2.2. Mercury specific hollow cathode lamp (HCL) or electrodeless discharge lamp (EDL)

6.2.3. Peristaltic pump that can deliver 1 L/min air

6.2.4. Flowmeter capable of measuring an airflow of 1 L/min

6.2.5. Printer

6.2.6. Aeration Tubing: A straight glass frit having a course porosity and Tygon tubing is used for the transfer of mercury vapor from the sample bottle to the absorption cell and return.

6.2.7. Drying device (Leeman Hydra AA drying tube) to prevent condensation in cell. The lamp is positioned to shine on the absorption cell maintaining the air temperature in the cell about 10 °C above room temperature. Other drying devices that achieve the same purpose are also acceptable (e.g., Gore-Tex filter).

6.3. Polypropylene or equivalent digestion vessels with ribbed watch glasses, or equivalent

6.4. Nitrogen or argon gas supply, welding grade or equivalent

6.5. Calibrated automatic pipettes or Class A glass volumetric pipettes

6.6. Class A volumetric flasks

6.7. Thermometer (capable of accurate readings at 95 °C)

6.8. Disposable cups or tubes

7. REAGENTS AND STANDARDS

7.1. Reagent water must be produced by a Millipore DI system or equivalent. Reagent water must be free of the analytes of interest as demonstrated through the analysis of method blanks.

7.2. Stock mercury standards (1000 ppm in 10% HNO_3) are purchased as custom solutions. All standards must be stored in FEP fluorocarbon or previously unused polyethylene or polypropylene bottles. Stock standard solutions must be replaced prior to the expiration date provided by the manufacturer. If no expiration date is provided, the stock solutions may be used for up to one year and must be replaced sooner if verification from an independent source indicates a problem.

7.3. Intermediate mercury standard (10 ppm): Take 1 mL of the 1000 ppm stock mercury standard (section 7.2) and dilute to 100 mL with reagent water. The intermediate standard must be made monthly and must be prepared in a matrix of 2% HNO_3 . The acid (2 mL of concentrated HNO_3) must be added to the flask/bottle before the addition of the stock standard aliquot.

7.4. Working mercury standard (0.1 ppm): Take 1 mL of the 10 ppm intermediate mercury standard (section 7.3) and dilute to 100 mL with reagent water. The working mercury standard must be made daily and must be prepared in a matrix of 0.15% HNO_3. The acid (150 uL of concentrated HNO_3) must be added to the flask/bottle before the addition of the stock standard aliquot.

7.5. The calibration and verification standards listed in Table I must be prepared fresh daily from the working standard (section 7.4) as described in section 11.1.

NOTE: Alternate approaches to standard preparation may be taken and alternate volumes of standard may be prepared as long as the accuracy and final standard concentrations as detailed in Table I are maintained.

7.6. The initial calibration verification standard must be made from a different stock solution than that of the calibration standards. The calibration standard source is typically Spex, catalog number PLHG4-2Y. The verification standard source is typically Ultra Scientific, catalog number ICP-080.

7.7. Refer to Table I (Appendix A) for details regarding the working standard concentrations for calibration, calibration verification and spiking solutions. All standards must be processed through the entire analytical procedure including sample preparation.

7.8. Nitric acid (HNO_3), concentrated, trace metal grade or better

7.9. Sulfuric acid (H_2SO_4), concentrated, trace metal grade or better

7.10. Hydrochloric Acid (HCl), concentrated, trace metal grade or better

7.11. Stannous chloride solution: Add 50 grams of stannous chloride dihydrate to 500 mL reagent water containing 50 mL of concentrated hydrochloric acid. This solution should be made fresh daily.

7.12. Sodium chloride-hydroxylamine hydrochloride solution: Add 12 g of sodium chloride and 12 g of hydroxylamine hydrochloride to every 100 mL of reagent water.

NOTE: Hydroxylamine sulfate may be used in place of hydroxylamine hydrochloride.

7.13. Potassium permanganate, 5% solution (w/v): Dissolve 5 g of potassium permanganate for every 100 mL of reagent water.

7.14. Potassium persulfate, 5% solution (w/v): Dissolve 5 g of potassium persulfate for every 100 mL of reagent water.

8. SAMPLE COLLECTION, PRESERVATION AND STORAGE

8.1. Sampling is not performed for this method by TestAmerica Knoxville. For information regarding sample shipping, refer to SOP KNOX-SC-0003, “Sample Receipt and Log In”, current revision.

8.2. The sample holding time for mercury is 28 days from the date of collection to the date of analysis.

8.3. Aqueous samples are preserved with nitric acid to a pH of <2 and may be stored in either plastic or glass. Refrigeration is not required. Preservation must be verified prior to processing.

9. QUALITY CONTROL

9.1. Table II provides a summary of quality control requirements including type, frequency, acceptance criteria and corrective action.

9.2. Linear Range Verification (LR) - The linear range is the concentration above which results cannot be reported without dilution of the sample.

9.2.1. For the initial determination of the upper limit of the linear dynamic range (LDR), determine the signal responses from a minimum of three to five different concentration standards across the estimated range. One standard is near the upper limit of the estimated range. The concentration measured at the LDR must be no more than 10% less than the expected level extrapolated from lower standards.

9.3. Preparation Batch - A group of up to 20 samples that are of the same matrix and are processed together using the same procedures and reagents. The preparation batch must contain a method blank, a laboratory control sample (LCS) and a matrix spike/matrix spike duplicate (MS/MSD). In some cases, at client request, it may be appropriate to process a matrix spike and sample duplicate in place of the MS/MSD. If clients specify samples for MS/MSD, the batch may contain multiple MS/MSD pairs.

9.4. Sample Count - Laboratory generated QC samples (method blanks, LCS and MS/MSDs) are not included in the sample count for determining the size of a preparation batch.

9.5. Method Blank - One method blank must be processed with each preparation batch. The method blank consists of reagent water and all reagents specific to the method; it is carried through the entire analytical procedure, including preparation and analysis. The

method blank is used to identify any system and process interferences or contamination of the analytical system that may lead to the reporting of elevated analyte concentrations or false positive data. The method blank for aqueous samples should not contain mercury at or above one-half the reporting limit. Method blanks for air train, SEP, PM10, and low level waste samples should not contain mercury at or above the reporting limit.

- If the method blank does not meet the acceptance criteria, reanalyze the method blank. If the method blank meets the acceptance criteria after reanalysis, reanalyze all samples associated with the failed original method blank analysis. If the method blank is still outside acceptance limits, repreparation and reanalysis of all samples associated with the unacceptable method blank is required when reportable concentrations are determined in the samples (see exceptions noted below).
- If the method blank result is less then 10% of the sample concentration, the data may be reported. **Such action must be addressed in the project narrative**.
- If there is no mercury in the samples associated with an unacceptable method blank, the data may be reported with qualifiers. **Such action must be addressed in the project narrative**.
- If the above criteria are not met and reanalysis is not possible, then the sample data must be qualified. **This anomaly must be addressed in the project narrative and the client must be notified.**

9.6. Laboratory Control Sample (LCS) - One aqueous LCS must be processed with each preparation batch. The LCS is a blank aqueous matrix (deionized water) to which a known concentration of mercury is added. The LCS is used to monitor the accuracy of the analytical process. Ongoing monitoring of the LCS results provides evidence that the laboratory is performing the method within acceptable accuracy and precision guidelines. The LCS must be carried through the entire analytical procedure.

- If the LCS does not meet the acceptance criteria, reanalyze the LCS. If the LCS meets the acceptance criteria after reanalysis, reanalyze all samples associated with the failed original LCS analysis. If the LCS is still outside established control limits, the system is out of control and corrective action must occur. Corrective action will be repreparation and reanalysis of the batch unless the client agrees that other corrective action is acceptable. A control limit of 90 - 110% recovery must be applied to aqueous samples. The LCS control limits for air train, PM10 and low level waste samples are 80-120% recovery, whereas, the LCS control limits for SEP samples are 75-125% recovery.
- In the instance where the LCS recovery is > 110% and the sample results are < RL, the data may be reported with qualifiers. **Such action must be addressed in the case narrative.**

9.7. Matrix Spike/Matrix Spike Duplicate (MS/MSD) - One MS/MSD pair must be processed for each preparation batch. A matrix spike is a field sample to which known

concentrations of target analytes have been added. A matrix spike duplicate is a second aliquot of the same sample (spiked identically to the MS) prepared and analyzed along with the sample and matrix spike. Some client specific data quality objectives (DQO's) may require the use of sample duplicates in place of or in addition to MSDs. The MS/MSD results are used to determine the effect of a matrix on the precision and accuracy of the analytical process. Due to the potential variability of the matrix of each sample, these results may have immediate bearing only on the specific sample spiked. Samples identified as field blanks cannot be used for MS/MSD analysis. Spiking levels are provided in Table I.

- If the recovery or RPD falls outside the acceptance range, the recovery must be in control for the LCS. Control limits of 85-115 % recovery and 20 RPD must be applied to the MS/MSD for aqueous samples. The MS/MSD control limits for air train and PM10 samples are 80-120% recovery and 20% RPD and the MS/MSD control limits for low level waste samples are 75-125% recovery and 20 RPD. If the LCS recovery is within limits, then the laboratory operation is in control and the results may be accepted. If the recovery of the LCS is outside limits, corrective action must be taken. Corrective action will include repreparation and reanalysis of the batch. MS/MSD results that fall outside the control limits must be addressed in the narrative.
- If the native analyte concentration in the MS/MSD exceeds 4 times the spike level, the recovery data are reported as NC (i.e., not calculated) and MSB (i.e., the recovery and RPD were not calculated because the sample amount was greater than four times the spike amount).
- If the concentration in the original sample digestate exceeds the calibration range and is > 50 ppb (raw value), the original sample digestate will be diluted and reanalyzed. However, the MS/MSD digestates do not need reanalysis at a dilution because the native analyte exceeds the spike amount by a factor much greater than 4x. Report the MS/MSD with the NC, MSB qualifiers described above.
- If an MS/MSD is not possible due to limited sample volume, then a laboratory control sample duplicate (LCSD) should be analyzed.

9.8. Duplicate - One duplicate may be processed with the preparation batch instead of the matrix spike duplicate, at the request of the client. Samples identified as field blanks cannot be used for duplicate sample analysis.

9.9. If the sample results are greater than or equal to five times the RL, the control limit is ± 20 RPD for aqueous samples and ± 30 RPD for SEP samples.

- If either the sample or sample duplicate value is less than five times the RL, the control limit is ± the RL.
- If both the sample and sample duplicate results are below the MDL, the RPD is not calculated and no control criteria apply.

9.10. Initial Calibration Verification and Blank (ICV/ICB) - Calibration accuracy is verified by analyzing a second source standard (ICV). The ICV result must fall within 10% of the true value for 7470A and within 5% of the true value for 245.1. An initial calibration blank (ICB) is analyzed immediately following the ICV to monitor low level accuracy and system cleanliness. The ICB result must fall below the MDL for aqueous samples and below the RL for air train, SEP, PM10 and low level waste samples. If either the ICV or ICB fail to meet criteria, the analysis should be terminated, the problem corrected and the instrument recalibrated. (See Section 11.2.7 for required run sequence.) If the cause of the ICV or ICB failure was not directly instrument related, the corrective action would include repreparation of the associated samples.

9.10.1. The ICB is a digested method blank.

9.11. Continuing Calibration Verification and Blank (CCV/CCB) - Calibration accuracy is monitored throughout the analytical run through the analysis of a known standard after every 10 samples. The CCV must be a mid-range standard at a concentration other than that of the ICV. The CCV result must fall within 10% of the true value for method 245.1 and within 20% of the true value for method 7470A. A continuing calibration blank (CCB) is analyzed immediately following each CCV. (See Section 11.2.7 for required run sequence). The CCB result must fall below the MDL for aqueous samples and below the RL for air train, SEP, PM10 and low level waste samples. Each CCV and CCB analyzed must reflect the conditions of analysis of all associated samples. Sample results may only be reported when bracketed by valid CCV/CCB pairs. If a mid-run CCV or CCB fails, reanalyze the failing CCV/ CCB. If the CCV/CCB still fails, the analysis must be terminated, the problem corrected (e.g., re-pour standard digestates into clean autosampler cups), the instrument recalibrated, the calibration verified and the affected samples reanalyzed. If the cause of the CCV or CCB failure was not directly instrument-related or due to cross-contamination during autosampler tube preparation, the corrective action will include repreparation of the associated samples.

9.11.1. The CCB is a digested method blank.

9.12. Method of Standard Addition (MSA) -This technique involves adding known amounts of standard to one or more aliquots of the sample prior to preparation. This technique compensates for a sample interferent that may enhance or depress the analyte signal, thus producing a different slope from that of the calibration standards. It will not correct for additive interferences that cause a baseline shift. Refer to Appendix D for specific MSA requirements.

9.13. Reporting Limit Check Standard (CRA) - A CRA standard is run at the beginning of each sequence, after the ICV and ICB. The CRA standard contains mercury at 0.2 ug/L. The CRA result must fall within 30% of the true value. If the CRA does not meet the acceptance criteria, reanalyze the CRA. If it is still outside acceptance limits, the analysis is terminated, the problem corrected and the instrument recalibrated.

10. CALIBRATION AND STANDARDIZATION

10.1. Calibration standards must be processed through the preparation procedure as described in Section 11.1.

10.2. Due to the differences in preparation protocols, separate calibration and calibration verification standards must be prepared for aqueous and solid matrices.

10.3. Calibration must be performed daily (every 24 hours) and each time the instrument is set up . The instrument calibration date and time must be included in the raw data.

10.4. Set up the mercury analyzer using the operating parameters recommended by the manufacturer. For the Leeman Hydra AA system, the operating parameters are entered under the protocol 'Test' in the WinHg Database (DB) and are described below.

Gas flow rate:	0.40 LPM (Argon feed pressure of 75 psi, no entry for this in the protocol)
Pump rate:	5 mL/minute
Rinse time:	40 seconds
Uptake time:	18 seconds
Replicates:	1
Full Scale:	20
Integration:	15 seconds

Refer to the CVAA manual of the instrument in use for detailed setup and operation procedures. Whenever it is necessary to change the setup/operating parameters or to change instruments (e.g., acquiring a rental while one instrument is being serviced), new parameters/instruments should be validated by performing an IDL/MDL check or MDL study.

10.5. Calibrate the instrument using a minimum of five standards and a blank; typically, six standards are used. One standard must be at the reporting limit. Analyze standards in ascending order beginning with the blank. Refer to Section 7.5 and Table I for additional information on preparing calibration standards and calibration levels.

For the Leeman Hydra AA instrument, calibration standard and check standard concentrations and acceptable recovery ranges are entered under 'Line Info' in the WinHg database. The type of calibration curve, Linear, may be selected under 'Cal Curve' in the WinHg database. A calibration curve is generated by the 'Stnd Auto' method under 'Standard' in WinHg runner after selecting S1 through S6 (calibration standards), selecting 'Rep 1' (one replicate), selecting at least C1 through C3 (check standards CCB, ICV and CCV) along with their respective active cups, and selecting 'New Cal Reset' (resetting current calibration data).

10.6. The calibration curve must have a correlation coefficient of ≥0.995 or the instrument shall be stopped and recalibrated prior to running samples. Sample results cannot be reported from a curve with an unacceptable correlation coefficient.

For the Leeman Hydra AA, the correlation coefficient is automatically calculated by the instrument software and may be viewed along with the graph of relative absorbance vs. concentration under 'Cal Curve' in the WinHg Database. The curve should be accepted by hitting 'Accept', which will automatically result in the 'Calibrated'/'Accepted' boxes being checked. This data window should be printed and included with the completed run report.

10.7. Refer to Section 9 for calibration verification procedures, acceptance criteria and corrective actions.

11. PROCEDURE

11.1. Standard and Sample Preparation:

11.1.1. All calibration and calibration verification standards (ICV, ICB, CCV, CCB) are processed through the digestion procedure along with the field samples.

11.1.2. Transfer 50 mL of well mixed sample or reagent water to clean sample digestion vessels. Record the sample volume on the sample preparation worksheet (Appendix I).

NOTE: Reduced sample volumes can be used as long as a representative sample can be obtained and the reagent levels are adjusted to maintain the same sample to reagent ratio. All samples and standards must be processed similarly.

11.1.3. From the containers with reagent water, remove the following volumes, respectively: 0 mL, 50 uL, 100 uL, 250 uL, 500 uL, 2.5 mL, 5.0 mL (for the calibration standards) and 1.25 mL (ICV), 0 mL (ICB), 2.5 mL (CCV), 0 mL (CCB) and 100 uL (CRA). Volumes removed above will be replaced with the appropriate working standard solution (section 7.4) AFTER initial acid addition.

11.1.4. Add 2.5 mL of concentrated H_2SO_4, 1.25 mL of concentrated HNO_3, and 2.0 mL concentrated HCl (mixing after each addition).

11.1.5. Add the appropriate working standard solutions (section 7.4) to the calibration and calibration verification containers and spike sample QC, if applicable.

11.1.6. Add 7.5 mL of potassium permanganate solution. For samples high in organic materials or chlorides, additional permanganate may be added. Shake and add additional portions of permanganate solution until a purple color persists for at least 15 minutes. If after the addition of up to 12.5 mL additional permanganate the color does not persist, sample dilution prior to reanalysis may be required.

11.1.7. Add 4.0 mL of potassium persulfate solution and heat for two hours in a water bath or block digestor at 90 - 95 °C.

11.1.8. Cool samples briefly. Warm samples decolorize (section 11.1.9) more completely and at a faster rate than samples at room temperature.

CAUTION: When using the snap cap vials for Hg analysis, care should be taken not to close or invert the vials when the samples are still warm as they may quickly build pressure and become volatile. Samples should be handled in a fume hood with the sash closed as far as operations will permit, as necessary, and samples should be opened with the container pointing away from the analyst.

11.1.9. Add 3.0 mL of sodium chloride-hydroxylamine hydrochloride solution to the samples to reduce the excess permanganate. (The permanganate has been reduced when no purple color remains.) Add this solution in 3.0 mL increments until the permanganate is completely reduced.

11.1.10. After decoloring samples, allow them to cool to room temperature. Bring all samples to a final volume of 70 mL using reagent water.

11.1.10.1. **NOTE**: If due to the addition of extra reagents, the final volume is greater than 70 mL, after the digestion is finished, adjust the final volume upward to a known final volume with reagent water. This is addressed through mathematical correction of the results to account for the resultant dilution effect. An example is provided in Section 12.

11.2. Analysis:

11.2.1. Detailed operating instructions are provided in Appendix H.

11.2.2. The samples must be allowed to cool to room temperature prior to analysis or a decrease in the response signal can occur.

11.2.3. Automated determination: Follow instructions provided by instrument manufacturer, as described in section 10 for the Leeman Hydra AA.

11.2.4. Perform a linear regression analysis of the calibration standards by plotting maximum response of the standards vs. concentration of mercury. Refer to section 10.6 for the calibration criteria. Determine the mercury concentration in the samples from the linear regression fit of the calibration curve. Calibration using computer or calculation based regression curve fitting techniques on concentration/response data is acceptable. Refer to section 10.5 for Leeman Hydra AA computer-automated calibration instructions.

11.2.5. All measurements must fall within the defined calibration range to be valid. Dilute and reanalyze all samples that exceed the highest calibration standard.

11.2.6. If the sample results are negative and the absolute value of the negative result is greater than the reporting limit, the sample must be diluted and reanalyzed.

11.2.7. The following run sequence is consistent with methods 7470A and 245.1.

Instrument Calibration

ICV
ICB
CRA
CCV
CCB
10 samples
CCV
CCB
Repeat sequence of 10 samples between CCV/CCB pairs as required to complete run.
CCV
CCB

NOTE: Samples include the method blank, LCS, MS, MSD, duplicate, PDS (if applicable) field samples and sample dilutions.

11.3. Guidelines are provided in the appendices on procedures to minimize contamination of samples and standards, preventive maintenance and troubleshooting.

11.4. One time procedural variations are allowed only if deemed necessary in the professional judgment of supervision to accommodate variation in sample matrix, radioactivity, chemistry, sample size, or other parameters. Any variation in procedure, except those specified by project specific instructions, shall be completely documented using a nonconformance memo and approved by a Technical Specialist, Project Manager and QA Manager. If contractually required, the client shall be notified.

11.5. Any unauthorized deviations from this procedure must also be documented as a nonconformance, with a cause and corrective action described.

11.6. Refer to TestAmerica Knoxville SOP KNOX-IT-0001, current revision for requirements for computer hardware and software.

12. DATA ANALYSIS AND CALCULATIONS

12.1. ICV percent recoveries are calculated according to the equation:

$$\%R = 100\left(\frac{\text{Found(ICV)}}{\text{True(ICV)}}\right)$$

12.2. CCV percent recoveries are calculated according to the equation:

$$\%R = 100\left(\frac{\text{Found(CCV)}}{\text{True(CCV)}}\right)$$

12.3. Matrix spike recoveries are calculated according to the following equation:

$$\%R = 100\left(\frac{SSR - SR}{SA}\right)$$

Where:
SSR = Spike Sample Result
SR = Sample Result
SA = Spike Added

12.4. The relative percent difference (RPD) of matrix spike/matrix spike duplicates or sample duplicates are calculated according to the following equations:

$$\mathrm{RPD} = 100\left[\frac{|\mathrm{MSD}-\mathrm{MS}|}{\left(\frac{\mathrm{MSD}+\mathrm{MS}}{2}\right)}\right]$$

Where:
MS = determined spiked sample concentration
MSD = determined matrix spike duplicate concentration

$$\mathrm{RPD} = 100\left[\frac{|\mathrm{DU1}-\mathrm{DU2}|}{\left(\frac{\mathrm{DU1}+\mathrm{DU2}}{2}\right)}\right]$$

Where:
DU1 = Sample result
DU2 = Sample duplicate result

12.5. The final concentration for an aqueous sample is calculated as follows:

Sample Concentration (µg/L) = C x D x E

Where:
C = Concentration (µg/L) from instrument readout
D = Instrument dilution factor, i.e., the dilution necessary to generate an instrument readout concentration within the calibration curve
E = Prep dilution factor: The prep dilution factor is used when the sample digestate must be brought to a final volume greater than the nominal final volume of 70 mL. (Refer to section 11.1.10.) Example: For a digestate with a final volume of 80 mL, the prep dilution factor = 80 mL/70 mL.

12.6. The LCS percent recovery is calculated according to the following equation:

$$\%R = 100\left(\frac{Found(LCS)}{True(LCS)}\right)$$

12.7. Sample results are reported with two significant figures for values <10 and three significant figures for values $\geq$ 10.

12.8. Refer to Appendix C for an example data review checklists used to perform and document the review of the data. Using the data review checklist, the analyst also creates a narrative which includes any qualifications of the sample data.

13. METHOD PERFORMANCE

13.1. Method Detection Limit (MDL) - An MDL must be determined for each analyte in each routine matrix prior to the analysis of any samples. Method Detection limits are determined and verified as specified in the current revision of SOP CA-Q-S-006 (and attachment) based on 40 CFR Part 136 Appendix B. The result of the MDL determination must support the reporting limit.

13.2. Initial Demonstration of Capability – Each analyst must perform an initial demonstration of capability (IDOC) for each target analyte prior to performing the analysis independently. The IDOC is determined by analyzing four replicate spikes (e.g., LCSs) as detailed in TestAmerica Knoxville SOP KNOX-QA-0009, current revision.

13.3. Training Qualification: The group/team leader has the responsibility to ensure that this procedure is performed by an associate who has been properly trained in its use and has the required experience.

14. POLLUTION PREVENTION

14.1. This method allows for the proportional reduction of sample and reagent volumes to decrease waste generation.

15. WASTE MANAGEMENT

15.1. All waste will be disposed of in accordance with Federal, State and Local regulations. Where reasonably feasible, technological changes have been implemented to minimize the potential for pollution of the environment. Employees will abide by this method and the policies in section 13 of the Corporate Safety Manual for “Waste Management and Pollution Prevention.”

15.2. Acid waste consisting of sample and rinse solution will be collected and placed in the acidic waste stream 55 gallon HDPE drum. Never use metal containers for acidic waste.

16. REFERENCES

16.1. SW-846 Method 7470A, “Mercury in Liquid Waste (Manual Cold-Vapor Technique”, Revision 1, September 1994.

16.2. “Methods for the Chemical Analysis of Water and Wastes”, EPA-600/4-79-020, U.S.EPA, August 1983, Method 245.1.

16.3. ASTM Method D6784-02, Standard Test Method for Elemental, Oxidized, Particle-Bound and Total Mercury in Flue Gas Generated from Coal-Fired Stationary Sources (Ontario Hydro Method).

16.4. Method 29, "Determination of Metals Emissions from Stationary Sources".

16.5. SW-846 Method 0060, “Determination of Metals in Stack Emissions”, Revision 0, December 1996.

16.6. Policy “QA-003”, QC Program, current revision.

16.7. Leeman Hydra AA Operation Manual

16.8. TestAmerica Knoxville Quality Assurance Manual (QAM), current revision.

17. MISCELLANEOUS

17.1. Modifications/Interpretations from reference method.

17.1.1. Modifications from both 7470A and 245.1.

17.1.1.1. The 200 series methods and Chapter 1 of SW-846 specify the use of reagent water with a purity equivalent to ASTM Type II water. This SOP specifies the use of a Millipore DI system or equivalent to produce reagent water.

17.1.1.2. This SOP allows for the use of reduced sample volumes to decrease waste generation. Reagent levels are adjusted to maintain the same ratios as stated in the source methods. According to a letter from Robert Booth of EPA EMSL-Cinn to David Payne of EPA Region V, “Reduction in sample size and appropriate corresponding reduction in sample volume is not considered a significant change in the methodology.”

17.1.1.3. The alternate run sequence presented in Section 11.2.7 is consistent with method requirements. An additional QC analysis for the detection limit standard (CRA) was added.

17.1.2. Modifications from Method 7470A

17.1.2.1. Chapter 1 of SW-846 states that the method blank should not contain any analyte of interest at or above the MDL. This SOP states that the method blank must not contain any analyte of interest at or above ½ the reporting limit.

17.1.2.2. The addition of HCl to sample and standard preparation is necessary to achieve lower instrument detection limits as demonstrated by the mercury analyzer manufacturer’s quality assurance tests (Leeman Labs, Inc.).

17.1.3. Modifications from 245.1

17.1.3.1. Method 245.1 Section 9.3 states concentrations should be reported as follows: Between 1 and 10 ug/L, one decimal; above 10 ug/L, to the nearest whole number. The laboratory reports all Hg results under this SOP to two significant figures for values <10 and to three significant figures for values ≥ 10.

17.1.3.2. The addition of HCl to sample and standard preparation is necessary to achieve lower instrument detection limits as demonstrated by the mercury analyzer manufacturer's quality assurance tests (Leeman Labs, Inc.).

17.2. List of Appendices

17.2.1. Appendix A, Figure 1: Flow Chart for Aqueous Sample Preparation for Mercury

17.2.2. Appendix A, Figure 2: Flow Chart for CVAA Mercury Analysis

17.2.3. Appendix B, Table I: Mercury Reporting Limits, Calibration Standard QC Standard and Spiking Levels

17.2.4. Appendix B, Table II: Summary of Quality Control Requirements

17.2.5. Appendix C: Example Hg Data Review Checklist

17.2.6. Appendix D: MSA Guidance

17.2.7. Appendix E: Troubleshooting Guide

17.2.8. Appendix F: Contamination Control Guidelines

17.2.9. Appendix G: Preventative Maintenance

17.2.10. Appendix H: Leeman HydraAA Operation Instructions

17.2.11. Appendix I: Example Sample Preparation Worksheet

APPENDIX A, Figure 1. Aqueous Sample Preparation - Mercury

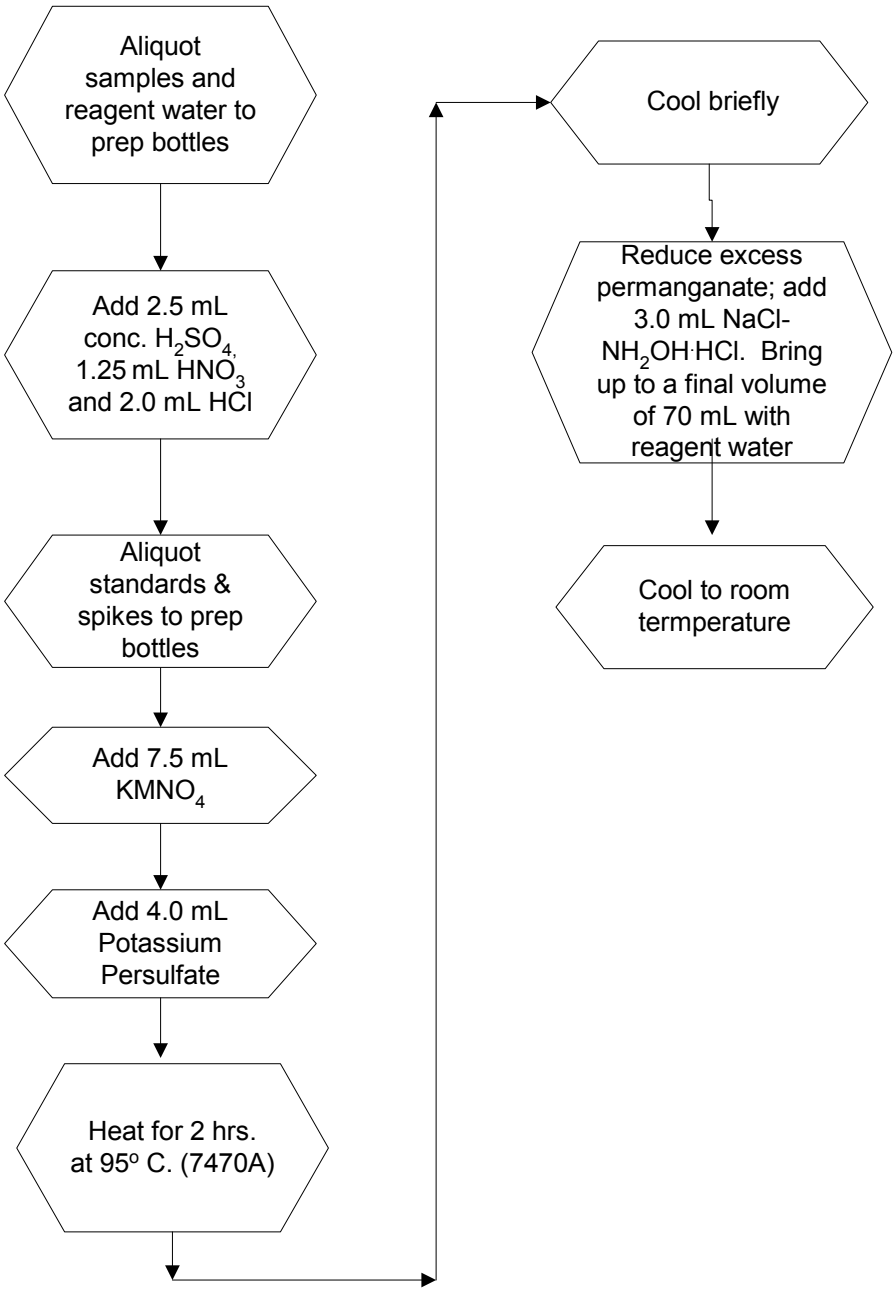
Aliquot samples and reagent water to prep bottles
Add 2.5 mL conc. H_2SO_4, 1.25 mL HNO_3 and 2.0 mL HCl
Aliquot standards & spikes to prep bottles
Add 7.5 mL $KMNO_4$
Add 4.0 mL Potassium Persulfate
Heat for 2 hrs. at 95° C. (7470A)
Cool briefly
Reduce excess permanganate; add 3.0 mL NaCl-$NH_2OH \cdot HCl$. Bring up to a final volume of 70 mL with reagent water
Cool to room termperature

APPENDIX A, Figure 2. CVAA Mercury Analysis

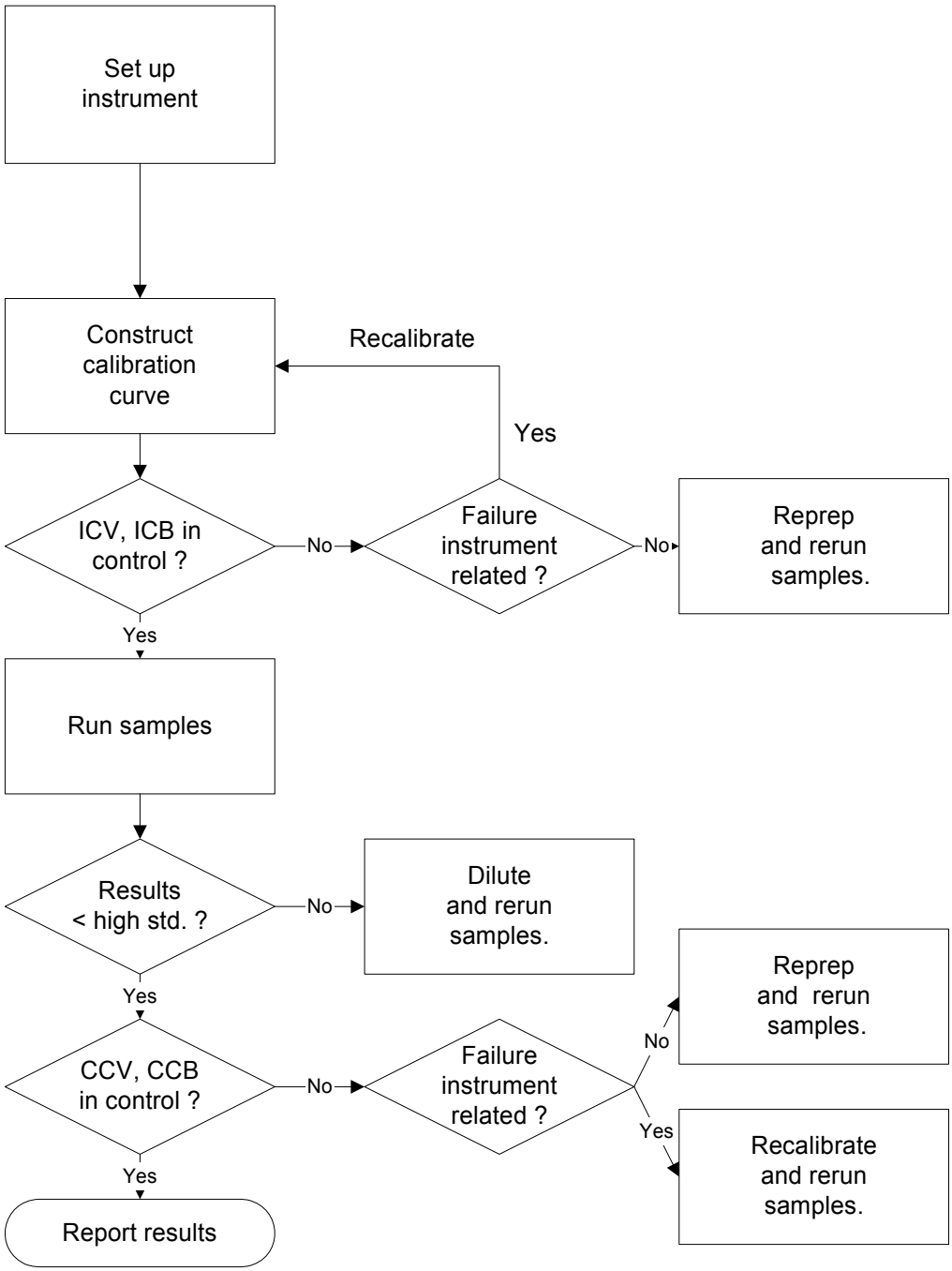

APPENDIX B, TABLE I: Mercury Reporting Limits, Calibration Standard[1], QC Standard and Spiking Levels

Standard	**Concentration (ug/L)**
Standard Aqueous RL	0.2
Std 0	0
Std 1[2]	0.1
Std 2	0.2
Std 3	0.5
Std 4	1.0
Std 5	5.0
Std 6	10.0
ICV	2.5[3]
LCS/CCV	5.0[3]
Aqueous MS	1.0
Aqueous PDS, if applicable	1.0
CRA	0.2

1 SOP specified calibration levels must be used unless prevented by the instrument configuration or client specific requirements. Deviations from specified calibration levels must be approved by a facility Technical Specialist and Quality Assurance Manager prior to the preparation of client samples.

2 Only six points (including zero) are required for a standard curve. The 0.1 ug/L standard was introduced into the curve sequence in order to match the lowest RL criteria across all aqueous mercury SOPs at TestAmerica Knoxville.

3 Concentration level dependent on high calibration standard used. CCV must be 50% of the high standard concentration and ICV must be 20-25% of high standard concentration.

APPENDIX B, Table II: Summary of Quality Control Requirements

Parameter/Method	QC Check	Frequency	Target Criteria	Corrective Action
Mercury by CVAA for water, soil and waste samples (Methods7470A & 245.1)	Initial Calibration Verification (ICV/ICB)	Beginning of analysis sequence	ICV • 95 - 105% recovery: Method 245.1 • 90 - 110% recovery: Method 7470A ICB • Concentration <MDL: Aqueous samples • Concentration < RL: Air train & SEP samples	1. Make necessary adjustments. 2. Repeat calibration.
	Continuing Calibration Verification (CCV/CCB)	After every 10 samples and at the end of the run	CCV • 90 - 110% recovery: Method 245.1 • 80 - 120 % recovery: Method 7470A CCB • Concentration <MDL: Aqueous samples • Concentration < RL: Air train & SEP samples	1. Repeat CCV/CCB. 2. If 1. fails, make adjustments and repeat calibration and reanalyze affected samples.
	Reporting Limit (RL) Check Standard (CRA)	One per analytical run	• 70 - 130% recovery	1. Repeat RL check standard. 2. If 1. fails, make adjustments and repeat calibration and reanalyze affected samples.
	Laboratory Method Blanks	Once per digestion batch (maximum 20 samples)	Target analyte concentrations • <½RL : Aqueous samples • < RL: Air train & SEP samples	1. Reanalyze method blank. 2. If 1. fails, reprepare and reanalyze samples associated with unacceptable blank. 3. Report results if sample results >10x blank result or sample results ND. See Section 9.4.
	Laboratory Control Sample/Laboratory Control Sample Duplicate (LCS/LCSD)	Once per digestion batch (maximum 20 samples) LCSD not required if MS/MSD or MS/DUP performed	Accuracy • 90 - 110% recovery: aqueous samples • 80 - 120% recovery: air train & SEP samples Precision (if applicable) • ≤ 20% RPD	1. Reanalyze LCS/LCSD. 2. If 1. fails, reprepare and reanalyze samples associated with unacceptable LCS/LCSD. 3. Report results if LCS results > control limit and samples are ND. See Section 9.5.
	Matrix Spike/Matrix Spike Duplicate (MS/MSD)	Once per digestion batch (maximum 20 samples)	Accuracy • 85 - 115% recovery for aqueous samples • 80 - 120% recovery for air train & SEP samples Precision • ≤ 20% RPD	1. Flag the data; no flag required if the sample level is > 4x the spike added (see Section 9.6). 2. For TCLP see Section 11.2.8

APPENDIX C: EXAMPLE DATA REVIEW CHECKLISTS

TestAmerica Knoxville Mercury Data Review Checklist

Method: SW-846 7470A/7471A/0.2 RL

Analyst:	KND			**Instrument:**	Leeman Hydra AA Mercury Analyzer		
Run Date:	Sep-30-08	**Calibration Number:**	1	**Chart Name:**	m093008.prn	**Element:**	Hg

A. Calibration/Instrument Run QC	**N/A**	**Yes**	**No**	**Comments**
1. Instrument calibrated every 24 hours?		X		Calibration was 2 hours and 12 minutes long
2. Instrument calibrated using a minimum of a blank and 5 standards?		X		
3. Do standard absorbances increase as standard concentrations increase?		X		
4. Instrument calibrated with standards at the SOP levels?		X		
5. Correlation coefficient greater than or equal to 0.995?		X		Correlation coefficient was 0.9999
6. ICV analyzed directly after calibration?		X		
7. ICV within specified control limits?		X		
8. ICB analyzed immediately after ICV?		X		
9. ICB within acceptable range?		X		
10. CRA analyzed at the beginning of the run?		X		
11. CRA results within acceptable range?		X		
12. All CCV's within specified control limits?		X		
13. All CCB's within acceptable range?		X		
14. All CCB's analyzed immediately after CCV's?		X		
B. Client Sample and QC Sample Results				
1. Were all sample results within the linear range of the instrument ?		X		
2. Were there any samples with results more negative than Report Limit?			X	
3. Were samples analyzed within the holding time?				
C. Preparation/Matrix QC				
1. Was one method blank prepared for each batch?				
2. Were all method blanks less than the specified level?		X		
3. Was an LCS prepared for each batch?				
4. Were all LCS recoveries within QC limits?		X		
5. Were matrix spikes, sample duplicates and/or post-digestion spikes run at required frequency?				
6. Were all matrix spike recoveries within QC limits?			X	See Comments on Next Page
7. Were post-digestion spike recoveries within QC limits?				
8. Were duplicate RPDs within QC limits?		X		
D. Other				
1. Current IDL data on file?		X		
2. Current MDL data on file?				
3. Are all nonconformances documented appropriately?				
4. Were all project specific instructions followed?				NCM#:

Question Number:	Problem(s) Found:
C6	Matrix spike sample KW80KS at 9/30/2008 1:56:49 PM had 73.7% recovery.
C6	Matrix spike sample KW80KD at 9/30/2008 1:58:47 PM had 65.9% recovery.

Analyst: _____ **Date:** _____

Analyst Comments: _____

Version 2.1 Report MT078R1, 4/14/04

APPENDIX C: EXAMPLE DATA REVIEW CHECKLISTS, continued

TestAmerica Knoxville Mercury Data Review / Narrative Checklist
Methods 7470A/7471A/7471B and 245.1/245.5 - KNOX-MT-0009, Rev 11 and KNOX-MT-0010, Rev 10 Page 1 of 1

Lot / SDG #:	

A. Review of Final Results	NA	Yes	No	Why is data reportable?
1. Were QuantIMS L40 reports, Lot Summary and any applicable QAS reviewed?				
2. Were all prep sheets and any existing NCMs reviewed?				
3. Were results, RLs, flags, units, DFs, prep/analysis dates verified for each sample/QC sample?				
4. Were samples with negative results >RL reanalyzed at a dilution?				
5. Were spike amounts verified and documented for each non-routine LCS/MS?				
6. Were method blank results ≤1/2 RL for water/solid samples or <RL for air and LL waste samples?				☐ [mb3] No analyte >QC limit in associated samples. ☐ [mb5] Insufficient sample for reanalysis.* ☐ [mb7] Samples >10x blank
7. LCS or LCS/LCSD within QC limits?				☐ [lcs2] Insufficient sample for reanalysis. ☐ [lcs3] LCS%R >QC limits & sample results < RL.*
8. MS/MSD or MS/DUP run at required frequency?				☐ [lcsd] Insufficient sample – lcs/lcsd analyzed.
9. MS %R or MS/MSD %R & RPD within QC limits?				☐ [ms1] ☐ [msd1] LCS acceptable - matrix effects. ☐ [ms2] ☐ [msd2] Native analyte > 4x spike level. ☐ [ms3] ☐ [msd3] Matrix effects & native >4x spike. ☐ [batch] Batch QC on client's sample outside limits.
10. DUP RPD within limits? (0-20 RPD for results ≥5xRL; +RL if result <5xRL) **Notes:** 1) Add J flags to DUP as needed; 2) Assure that DUP RPD=0 for 2 NDs & RPD=200 for ND & positive result.				☐ [rpd] LCS acceptable. Results indicate sample heterogeneity.
11. Were the samples analyzed within the holding time?				☐ [ht1] HT expired upon receipt ☐ *[ht2] Analysis requested after HT expired.* ☐ See comments section below.

B. Review of QC Summary Forms **Note:** Y=Yes, N=No, NA=Not Applicable	Chart #	Chart #	Chart #	Chart #	Why is data reportable?
1. ICV within limits? (7470/7471=90-110%R; 245.1/245.5=95-105%R)					
2. CCV within limits? (7470/7471=80-120%R; 245.1/245.5=90-110%R)					If no, list details: _____ ☐ CCV reanalyzed one time; reanalysis within limits.
3. ICB/CCB within limits? (<MDL for water & solid samples; <RL for air & LL waste samples)					If no, list details: _____ ☐ CCB reanalyzed one time; reanalysis within limits.
4. CRA within limits? (±30%)					
5. PDS or PDS/PDSD run at required frequency?					
6. PDS/PDSD within limits? (75-125%R) **Reminder:** Place copy of PDS results in Sample Data Summary and QC Summary.					☐ [pds1] ☐ [pdsd1] LCS acceptable - matrix effects. ☐ [pds2] ☐ [pdsd2] Native analyte > 4x spike level. ☐ [pds3] ☐ [pdsd3] Matrix effects & native >4x spike.

Data Reviewer:	Date:
Comments:	

*Such action must be taken in consultation with client. MT079R17doc, 02/12/13
NOTE: Nonconformance memos are required for **bold** and *italicized* [autotext] statements: **Bold** = deficiency, *italicized* = anomoly.

APPENDIX D: MSA GUIDANCE

Method of Standard Addition

Four equal volume aliquots of sample are measured and known amounts of standards are added to three aliquots. The fourth aliquot is the unknown and no standard is added to it. The concentration of standard added to the first aliquot should be 50% of the expected concentration. The concentration of standard added to the second aliquot should be 100% of the expected concentration and the concentration of standard added to the third aliquot should be 150% of the expected concentration. The volume of the unspiked and spiked aliquots should be the same (i.e., the volume of the spike added should be negligible in relation to the volume of sample).

To determine the concentration of analyte in the sample, the absorbance (or response) of each solution is determined and a linear regression performed. On the vertical axis the absorbance (or response) is plotted versus the concentrations of the standards on the horizontal axis using 0 as the concentration of the unspiked aliquot. An example plot is shown in Figure 1. When the resulting line is extrapolated back to zero absorbance, the point of interception of the horizontal axis is the concentration of the unknown. Calculate the correlation coefficient (r) and the x-intercept (where y=0) of the curve. The concentration in the digestate is equal to the negative x-intercept.

Figure 1

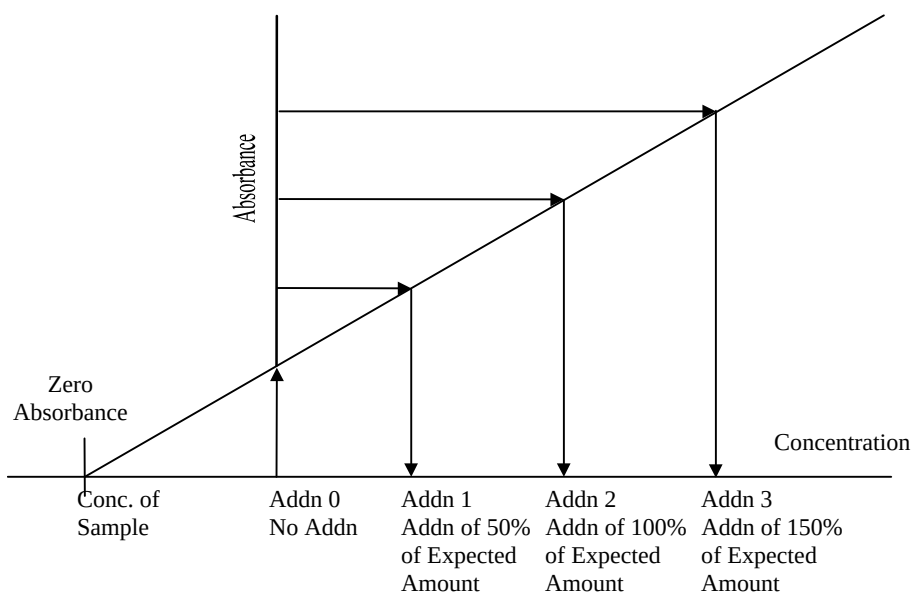

- For the method of standard additions to be correctly applied, the following limitations must be taken into consideration.
- The plot of the sample and standards must be linear over the concentration range of concern. For best results, the slope of the curve should be similar to that of a plot of the aqueous standard curve.
- The effect of the interference should not vary as the ratio of the standard added to the sample matrix changes.

APPENDIX E: TROUBLESHOOTING GUIDE

Problem	**Possible Cause**
Poor or no absorbance or sensitivity check failed	Incorrect wavelength Dirty windows Window loose Etched or dirty optics Wrong lamp Bad lamp Not enough or no sample introduced Clogged reductant line Empty sample cup Incorrectly made standards Gas leak EDL power supply set on “Continuous”
Erratic readings	Source lamp not aligned properly Lamp not prewarmed Injection tip partially clogged Contaminated reagents Contaminated glassware/digestion vessels Drying tube saturated Bad lamp Injection tip hitting outside of tube Injection tip coated or not set properly Leak in sample tubing Power fluctuations Air bubbles in tubing
EDL won’t light	Lamp cable not plugged in Lamp power set at 0 Lamp is dead Power supply fuse is blown Short in cord
Standards reading twice or half normal absorbance or concentration	Incorrect standard used Incorrect dilution performed Dirty cell

APPENDIX F: CONTAMINATION CONTROL GUIDELINES

The following procedures are strongly recommended to prevent contamination:

All work areas used to prepare standards and spikes should be cleaned before and after each use.

All non-disposable labware that comes in contact with samples should be washed with detergent and tap water and rinsed with 1:3 nitric acid followed by deionized water.

Proper laboratory housekeeping is essential in the reduction of contamination in the metals laboratory. All work areas must be kept scrupulously clean.

Powdered or latex Gloves must not be used in the metals laboratory since the powder contains silica and zinc, as well as other metallic analytes. Only vinyl or nitrile gloves should be used in the metals laboratory.

Samples/standards in process should be covered whenever possible to reduce the contamination from laboratory dust particles.

The following are helpful hints in the identification of the source of contaminants:

Reagents or standards can contain contaminants or be contaminated with the improper use of a pipette.

Analyst should be careful not to touch samples poured into autosampler racks with gloves and inadvertently carry-over “contamination” to subsequent sample cups.

APPENDIX G: PREVENTIVE MAINTENANCE

A maintenance log is used to record when maintenance is performed on instruments. When an instrument problem occurs indicate the date and instrument ID number, then identify the problem and corrective action in the maintenance log.

The following procedures are required to ensure that that the instrument is fully operational.

Instrument Maintenance Schedule*

Cold Vapor Atomic Absorption (Leeman Hydra AA)

Daily Maintenance	As Needed Maintenance
Check tubing.	Adjust/change Hg lamp.
Check maintenance schedule flags.	Clean or replace optical cell.
	Lubricate pump and autosampler arm.
	Change the drying tube.

*Leeman has incorporated an automated maintenance schedule in its Hg software that flags the user when instrument maintenance is required. These flags or messages appear in the upper right hand corner of the main user window (refer to manual).

APPENDIX H: LEEMAN HYDRAAA OPERATION INSTRUCTIONS

NOTE: Refer to the instrument manual for instructions re. detailed method setup, such as entering standard curve concentration values and check standard values, troubleshooting operations. Refer to the appropriate mercury prep SOP for instrument operating parameters and required run sequences.

- Turn off computer screensaver and log off the network, if applicable.
- Click 'WinHg' icon on desktop.
- Drop-down 'Protocol', beneath the toolbar, to select the appropriate method to analyze samples (e.g. '7ptcurve' refers to the method used to run a file with a seven-point calibration curve; 'ontariohydro' is used to analyze only Ontario Hydro samples; and 'test' is used to analyze samples with a six-point calibration curve).
- Click 'File' in the toolbar, then drop-down to 'new dataset'.
  - Enter file name (lower-case 'h' followed by month, day, year –hmmddyy-).
  - Another window will pop up requesting a batch name; hit 'cancel', since this refers to the automated prep system we don't use.
- Select the new file just created from the 'Dataset' list beneath 'Protocol' to ensure the new file name will print out with the raw data; otherwise the raw data will be labeled with the file name of the previous run.
- Place all tubing in the appropriate containers; secure pump tubing to pump (tension is released on the clips during shutdown from the previous run). 10% stannous chloride continuously runs through the instrument, but sample and stannous chloride are delivered simultaneously at a 1:5 rate of reductant to sample (e.g., as 3.4 mL of sample are delivered, only 0.650 uL reductant are delivered at the same time). They are mixed at the mixing tee prior to entering the liquid-gas separator where argon releases elemental mercury to the drying tube, prior to being measured at the optics.
- Click 'Control' tab, click 'On' under 'lamp', 'gas', and 'pump'.
- Click 'Standard' tab; depress buttons 'S1' through 'S6' if using a six-point standard curve or 'S1' through 'S7' if using a seven-point curve. These standards are placed in the first (back) row of a separate autosampler rack, in order from right to left.
  - Depress 'Rep 1' button if only one injection is desired per standard analysis (depress both 'Rep1' and 'Rep2' if standards analyzed in duplicate, etc.).
  - Depress 'New Cal Reset' button, which clears the previous calibration curve.
  - Depress buttons 'C1' through 'C3' under the 'check standards' section, representing the CCB, ICV, and CCV. These standards are placed in the second (front) row of the standard curve rack mentioned above, in order from right to left.
- Click the rack editor icon in the WinHg toolbar. The icon looks like the top view of an autosampler rack.
  - Drop-down 'File' in the rack editor window toolbar, then select the rack to be edited (e.g. 'rack1').
  - In the far-left column of the rack spreadsheet, enter the appropriate check standard ID's and work order ID's in the order that they should be injected. The first two entries of the first rack to be analyzed should include 'ICB' and 'CRA', respectively.
  - In the far-right column of the rack spreadsheets, the sequence 'C3 C1' should be entered in the same row as the 'CRA' entry (when applicable) and in the same row as every 10th work order ID. This sequence directs the instrument to inject a CCV (C3), then a CCB (C1) after the CRA and every 10th sample. The sequence 'C2 cp' should be entered in the same row as the ICB entry (when applicable), to direct the instrument to inject an ICV (C2) before (cp) it injects the ICB.
  - The following suffixes should be applied to a work order ID associated with batch QC or dilutions:
    - Blank: B (also type the batch number in the second column, 'extended ID', of the row containing a blank entry)
    - LCS: C
    - LCSD: L
    - MS: S
    - MSD: D
    - Duplicate: X
    - PDS: A
    - PDSD: AX
    - Dilution: Z, then dilution value: e.g. 1:10 dilution, Z10
    - Diluted MS/MSD (spike applied to diluted sample at prep): e.g. Z10S/Z10D

APPENDIX H: LEEMAN HYDRAAA OPERATION INSTRUCTIONS, continued

- Diluted MS/MSD (spike applied to undiluted sample at prep, diluted at analysis): e.g. SZ10/DZ10
- Diluted MS/MSD (mercury spike applied to undiluted ICP sample, ICP sample diluted at mercury prep): e.g. SZ10/DZ10
- Filtered batch QC/sample: F

- Click 'Sample' tab; this window allows the operator to enter the order in which multiple racks should be analyzed and which samples in each rack should be analyzed.
  - Drop-down the first 'rack' field and select the appropriate rack name; drop-down the first number of the sample cup to be injected within the rack selected, then drop-down and select the last sample cup# to be injected.
  - Follow the same instructions for the second rack to be analyzed. If a second rack is not required, make sure the fields are blank (drop-down and select the blank space).
  - If a third or fourth rack must be analyzed in the same dataset, these racks may not be entered until the instrument completes analysis of the first two racks. At that time, the instrument will be 'idle' and the operator may enter the next rack(s) as above.
  - If samples are to be analyzed in duplicate, click the database icon ('DB') in the Win Hg toolbar, then the 'Protocol' tab, then use the scroll arrows under 'Data Collection/Replicates' to change '1' to '2'.
- Pour up sample digestates, placing them in the appropriate sequence in racks loaded from right to left, back to front.
- When the operator is ready to begin collecting data, click 'Standard' tab, then 'Std Auto' button (referring to the automatic injection of the standard curve series). The WinHg window will indicate the instrument is 'busy'.
  - When the standard curve analysis is complete, click the 'DB' icon, then the 'Calibration Curve' tab. Depress the 'Accept' button if the linear regression coefficient (r) is greater than 0.995. Print the window (be sure all the raw data are included in the printout).
- With the calibration curve established and all racks loaded, click 'Sample' tab, then 'Run Auto' button. Monitor the collection of data to ensure all values are within SOP control limits. Re-run samples, if necessary, by stopping the instrument ('STOP' icon in WinHg toolbar), then re-starting ('Run Auto' under 'Sample' tab) when new samples are loaded and rack entries are adjusted.
- Report a dataset as follows:
  - Click 'Main' tab, depress the 'Form Feed' button under 'printer control' to print any remaining data stored in the file (If the number '0' is next to the button, this isn't necessary. The number represents the number of data points still stored in the printer's memory).
  - Click 'DB' icon, then 'Report' tab, then 'All' button. At this point, all data will be associated with a checked box. If a data point is not to be reported, remove the check from the box, then proceed.
  - Click 'Generate Report' button. A window will open. Select '.prn' for file type.* Enter the correct target drive/file name in which to store the report (e.g. C:/upload/h061402). Click 'Generate' button. Close window. Open 'My Computer' icon on desktop, then storage file, then select report file. Transfer the report file to data and upload drives on the network (this will require logging on), or to a floppy disk that can be transferred to another computer for this purpose.
    - *If 'printer' is selected for file type, the 'Generate' button will provide a post-run printout of raw data (as opposed to the real-time printout of data indicated in the method). The latter scenario may be used when the printer malfunctions during data collection.

    When a report has been generated, transfer the stannous chloride line to water and allow the instrument to flush while data is being validated/uploaded. The instrument will automatically stop pumping after one hour.

Leeman HydraAA Instrument Shutdown:

- After rinsing the system with water, remove all tubing and sample tip from liquid containers and pump to dryness. The sample tip is removed to air by clicking the 'Sample' tab, then the 'To Air' button on the right-hand side of the resulting window.
- When tubing is dry, click 'Control' tab; then click 'Off' under 'lamp', 'pump', and 'gas'.
- Under the 'Sample' tab, return the sample tip 'To Rinse'.
- Release tension clips on the pump tubing.
- Close all windows on desktop.
- Turn off monitor. The computer may also be shutdown at this point if desired, esp. if the instrument will not be used for an extended time.

APPENDIX I: EXAMPLE SAMPLE PREPARATION WORKSHEET

TestAmerica Knoxville
Mercury Aqueous Sample Preparation Worksheet
SOP KNOX-MT-0009

Page 1 of 2

Batch Number:
Prep Date:
Comp Date:

Mercury Prep Analyst: _____ Prep Date: _____
2nd Level Review by: _____ Review Date: _____

Lot Number	Lot Sample Number	Suffix	Method Code	Client ID	WO #	Initial Sample Volume (mL)	Final Sample Volume (mL)	Hg Bench Dilution Factor	QuantIMS Upload Dilution Factor	QuantIMS Upload Multiplier

Digestion Vial ID: _____

Comments: _____

QuantIMS Upload Dilution Factor and Multiplier = Final Digestate Volume (mL)/Initial Sample Volume (mL) x 50 mL/50 mL x Hg Bench Dilution Factor

Mercury Aqueous Prep Rev 2a1 Mercury Aqueous Prep Rev 2a.xlt Printed 2/18/2011 10:35 AM

APPENDIX I: EXAMPLE SAMPLE PREPARATION WORKSHEET, continued

TestAmerica Knoxville
Mercury Aqueous Sample Preparation Worksheet
SOP KNOX-MT-0009

Page 2 of 2

Batch Number: _____ Time In: _____ Bath A Temp: _____ °C
Analyst: _____ Time Out: _____ Bath B Temp: _____ °C
Prep Date: _____ LCS Pipet ID: _____ Thermometer ID: MT-2
MS Pipet ID: _____ (Acceptance range 90° – 95°C)

Standard Type	Standard ID	Working Standard		Volume Used (mL)	Final Volume (mL)	Final Concentration (ug/L)
		Source	Conc.(ug/L)			
Calibration Std 1	N/A	N/A	N/A	N/A	50	Blank
Calibration Std 2	I-CAL-	SPEX	100	0.05	50	0.1
Calibration Std 3	I-CAL-	SPEX	100	0.1	50	0.2
Calibration Std 4	I-CAL-	SPEX	100	0.25	50	0.5
Calibration Std 5	I-CAL-	SPEX	100	0.5	50	1
Calibration Std 6	I-CAL-	SPEX	100	2.5	50	5
Calibration Std 7	I-CAL-	SPEX	100	5	50	10

Standard Type	Standard ID	Working Standard		Volume Used (mL)	Final Volume/ Weight	Final Concentration
		Source	Conc.(ug/L)			
ICV	I-VER-	ULTRA	100	1.25	50 mL	2.5 ug/L
CCV	I-CAL-	SPEX	100	2.5	50 mL	5.0 ug/L
CRA	I-CAL-	SPEX	100	0.1	50 mL	0.2 ug/L
Aqueous LCS	I-CAL-	SPEX	100	2.5	50 mL	5.0 ug/L
Aqueous MS	I-CAL-	SPEX	100	0.5	50 mL	1.0 ug/L
Soil LCS	I-CAL-	SPEX	100	2.5	0.3 g	0.83 mg/kg
Soil MS	I-CAL-	SPEX	100	0.5	0.3 g	0.17 mg/kg
TCLP MS	I-CAL-	SPEX	100	2.5	50 mL	5.0 ug/L

REAGENTS			
Conc. H_2SO_4 Lot #:		5% $KMnO_4$ ID #:	
Conc. HNO_3 Lot #:		5% $K_2S_2O_8$ ID #:	
Conc. HCL Lot #:		$SnCl_2$ Solution ID #:	
12% NaCl NH_2OH HCL ID #:		Aqua Regia ID #:	

Mercury Aqueous Prep Rev 2a1 Mercury Aqueous Prep rev 2.xlt Printed 2/18/2011 10:35 AM