IMPOUNDMENT #2 PILOT-SCALE DEMONSTRATION WYETH HOLDINGS CORPORATION AMERICAN CYANAMID SUPERFUND SITE BRIDGEWATER, NJ

CH2M HILL DRAWING INDEX

SHEET NUMBER	DRAWING NUMBER	TITLE
GENERAL		
1	G-0001	COVER SHEET
2	G-0002	GENERAL NOTES, ABBREVIATIONS, AND LEGEND
3	G-0003	SITE SOIL/SEDIMENT EROSION CONTROL NOTES
CIVIL		
4	C-2001	SITE GENERAL ARRANGEMENT
5	C-2002	MOORING LINE LAYOUT
6	C-2101	SITE SOIL/SEDIMENT EROSION CONTROL PLAN
7	C-2801	CROSS-FLOW PIPE UTILITY PLAN AND SECTION
8	C-3001	SECTIONS
9	C-5002	FLEXIFLOAT DRILL BARGE ASSEMBLY
10	C-5003	FLEXIFLOAT DRILL BARGE ASSEMBLY
11	C-5004	EQUIPMENT BENCH, GABION BASKET, AND SAFETY RAIL DETAILS
12	C-5005	CIVIL DETAILS
13	C-5101	SITE SOIL/SEDIMENT EROSION CONTROL DETAILS
STRUCTURAL		
14	S-2001	OVERALL CAISSON PLAN
15	S-2002	CAISSON SHROUD COVER - ISS PLAN AND ISOMETRIC VIEW
16	S-2003	CAISSON SHROUD COVER - BLANK PLAN AND ISOMETRIC VIEW
17	S-2004	CAISSON SHROUD COVER - ISTD PLAN, SECTION, ISOMETRIC VIEW AND SCHEDULE
18	S-3001	CAISSON ELEVATION, SECTIONS, AND ISOMETRIC
19	S-3002	LIFTING ELEVATION
20	S-5001	CAISSON DETAILS
21	S-5002	CAISSON DETAILS
22	S-5003	CAISSON DETAILS
23	S-5004	WOODEN STAIRS DETAILS
24	S-5005	GANGWAY
ELECTRICAL		
25	E-0001	GENERAL NOTES AND ABBREVIATIONS
26	E-2001	SITE POWER PLAN
27	E-2002	GROUNDING & POWER DISTRIBUTION
28	E-5001	DETAILS
WOODARD & CURRAN		
1	Fig. 1	WWTP PLATFORM EXTENSION

1

TERRATHERM DRAWING INDEX

TITLE SHEET	DRAWING NUMBER	TITLE
CIVIL		
T1	C101	SITE PLAN
T2	C102	CAISSON LAYOUT (1 OF 2)
T3	C102	CAISSON LAYOUT PROFILE (2 OF 2)
ELECTRICAL		
T4	E100	ELECTRICAL LEGEND
T5	E101	ONE LINE ELECTRICAL (1 OF 3)
T6	E101	ONE LINE ELECTRICAL (2 OF 3)
T7	E101	ONE LINE ELECTRICAL (3 OF 3)
T8	E104	SWBD GROUNDING / NEUTRAL DETAIL (1 OF 2)
T9	E104	GROUNDING DETAIL (2 OF 2)
MECHANICAL		
T10	M101	MECHANICAL LAYOUT
PROCESS		
T11	P101	PROCESS FLOW DIAGRAM (1 OF 2)
T12	P101	MASS AND ENERGY BALANCE (2 OF 2)
T13	P&ID	P&ID LEGEND SHT 1 (1 OF 4)
T14	P&ID	P&ID LEGEND SHT 2 (2 OF 4)
T15	P&ID	P&ID LEGEND SHT 3 (3 OF 4)
T16	P&ID	P&ID LEGEND SHT 4 (4 OF 4)
T17	P102	P&ID, CAISSON EQUIPMENT (1 OF 6)
T18	P102	P&ID, THERMAL OXIDIZER SYSTEM (2 OF 6)
T19	P102	P&ID, SCRUBBER PACKAGE (3 OF 6)
T20	P102	P&ID, LIQUID TREATMENT SYSTEM (4 OF 6)
T21	P102	P&ID, ALTERNATE BYPASS SYSTEM (5 OF6)
T22	P102	P&ID, UTILITIES (6 OF 6)

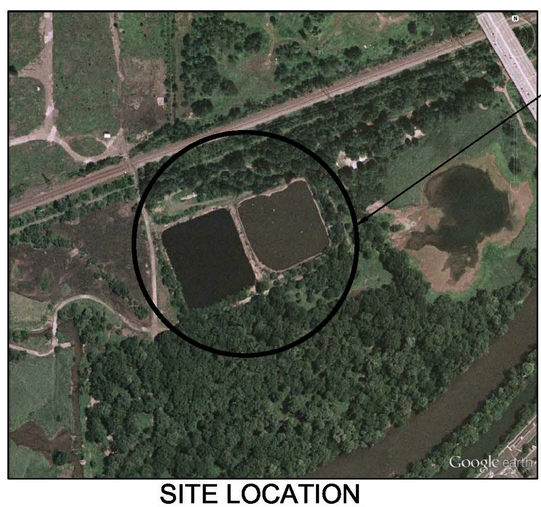

SITE LOCATION

1

RICHARD P. TRAVER'S PE STAMP ON THIS DRAWING ONLY APPLIES TO SHEETS NUMBERED 1-24. Woodward & Curran AND TerraTherm DRAWINGS WERE PREPARED WITH DIFFERENT INDIVIDUALS IN RESPONSIBLE CHARGE AND THOSE DRAWINGS SHOULD BE REVIEWED DIRECTLY FOR ADDITIONAL INFORMATION.

255540

VICINITY MAP

RICHARD P. TRAVER
NJ. PROFESSIONAL ENGINEER NO. 28300

NO.	DATE	REVISION	BY	APVD
1	2013/10/25	REVISION #1	RT	Y
0	2013/09/29	ISSUED FOR CONSTRUCTION	RT	Y

DSGN R. TRAVER | DR R. TRAVER | CHK S. EMEREUWA | APVD R. TRAVER

1717 ARCH ST., SUITE 4400
PHILADELPHIA, PA 19103
PH (215) 563-4220 FAX (215) 563-3828
EB 0000072 AA 001992

IMPOUNDMENTS 1 AND 2
PILOT DEMONSTRATION STUDY
WYETH HOLDINGS CORPORATION
AMERICAN CYANAMID SUPERFUND SITE
CYANAMID AVE
BRIDGEWATER, NJ

CH2MHILL

GENERAL
COVER SHEET

REUSE OF DOCUMENTS: THIS DOCUMENT, AND THE IDEAS AND DESIGNS INCORPORATED HEREIN, AS AN INSTRUMENT OF PROFESSIONAL SERVICE, IS THE PROPERTY OF CH2M HILL AND IS NOT TO BE USED, IN WHOLE OR IN PART, FOR ANY OTHER PROJECT WITHOUT THE WRITTEN AUTHORIZATION OF CH2MHILL.
©CH2M HILL 2010. ALL RIGHTS RESERVED.

VERIFY SCALE
BAR IS ONE INCH ON ORIGINAL DRAWING.
0 1*

DATE	2013/08/29
PROJ	472109
DWG	G-0001
SHEET	1

GENERAL INFORMATION

1. FOR ABBREVIATIONS NOT LISTED, SEE ASME Y14.38 "ABBREVIATIONS AND ACRONYMS: PUBLICATION AS DISTRIBUTED BY THE AMERICAN SOCIETY OF MECHANICAL ENGINEERS (ASME).
2. STRUCTURAL OBSERVATION SHALL BE PERFORMED ON THE CAISSONS AFTER FABRICATION AND PRIOR TO SHIPPING.
3. THE CONTRACTOR SHALL SCHEDULE THE OBSERVATION VISITS, PROVIDE 7 DAYS NOTICE TO THE OBSERVER, AND PROVIDE SAFE ACCESS TO ITEMS TO BE OBSERVED. OBSERVATION SHALL BE CONDUCTED BY THE ENGINEER OF RECORD OR QUALIFIED DESIGNEE. THE ENGINEER OF RECORD OR QUALIFIED DESIGNEE SHALL VISIT THE SITE.
4. A WRITTEN REPORT DETAILING PORTIONS OF WORK OBSERVED AND IDENTIFYING ANY DEFICIENT PORTIONS OF WORK, THAT TO THE BEST OF THE STRUCTURAL OBSERVER'S KNOWLEDGE, HAVE NOT BEEN RESOLVED WILL BE DELIVERED TO THE CONTRACTOR, AND OWNER WITHIN ONE WEEK OF THE OBSERVATION. THE REPORT REQUIRED TO DOCUMENT STRUCTURAL OBSERVATION SHALL REFERENCE PERTINENT DRAWING NUMBERS, BUILDING GRIDS, DETAIL NUMBERS, AND SPECIFICATION SECTIONS. THE CONTRACTOR WILL BE NOTIFIED WITHIN 24 HOURS UPON FINDING DEFICIENCES.
5. ALL DIMENSIONS ARE IN FEET AND INCHES UNLESS OTHERWISE NOTED.
6. SOURCE OF THE TOPOGRAPHY SHOWN IN THE PLANS ARE BASE MAPS PROVIDED BY PFIZER FROM SURVEY CONDUCTED BY VARGO ASSOCIATES IN 2010.

   HORIZONTAL DATUM IS IN NEW JERSEY STATE PLANE COORDINATE SYSTEM, NAD 1983_HARN AFTER CONVERSION BY CH2M HILL FROM NEW JERSEY STATE PLANE COORDINATE SYSTEM, NAD 1927. CONVERSION WAS PERFORMED USING AUTODESK CIVIL3D VER. 2012. SPECIFIC POINTS WERE DOUBLE CHECKED USING USACE PROGRAM "CORPSCON" VER. 6 TO CONFIRM PROPER TRANSLATION.

   VERTICAL DATUM IS IN NAVD 1988 AFTER CONVERSION BY CH2M HILL. THE VERTICAL ELEMENTS WERE PROVIDED IN A LOCAL DATUM THAT WAS EQUAL TO NGVD 1929 PLUS 69.29 FT. THE PUBLISHED NGS DATASHEET FOR BENCHMARK L 26 (PID KV1174) SHOWS THE NAVD 88 ELEVATION OF THE POINT TO BE 36.63 FT. THE SHEET ALSO SHOWS THE SUPERCEDED NGVD 29 ELEVATION TO BE 37.53 FT.

   TO GO FROM LOCAL ELEVATION TO NAVD 88 ELEVATION, THE FILES WERE MOVED DOWN IN ELEVATION 70.19 FT. (LOCAL ELEVATION MINUS 69.29 FT TO NGVD 29 ELEVATION MINUS 0.90 FT TO NAVD 88 ELEVATION).
7. RAILROAD FLAGMAN COVERAGE IS NOT ANTICIPATED DUE TO EXISTING AGREEMENT BETWEEN PFIZER AND CONRAIL. COORDINATE ACTIVITIES WITH CONRAIL AS NEEDED.
8. EXISTING TOPOGRAPHSY, STRUCTURES, AND SITE FEATURES ARE SHOWN SCREENED AND/OR LIGHT-LINED. NEW FINISH GRADE, STRUCTURES, AND SITE FEATURES ARE SHOWN HEAVY-LINED.
9. MAINTAIN, RELOCATE, OR REPLACE EXISITNG SURVEY MONUMENTS, CONTROL POINTS, AND STAKES WHICH ARE DISTURBED OR DESTROYED. PERFORM THE WORK TO PRODUCE THE SAME LEVEL OF ACCURACTY AS THE ORIGINAL MONUMENT (S) IN A TEIMELY MANNER, AND AT THE SUBCONTRACTOR'S EXPENSE.
10. LAYDOWN AREA SHALL BE FOR SUBCONTRACTOR'S EMPLOYEE PARKING, SUBCONTRACTOR'S TRAILERS AND ON-SITE STORAGE OF MATERIALS.
11. ELEVATIONS GIVEN ARE TO FINISH GRADE UNLESS OTHERWISE SHOWN.
12. SLOPE UNIFORMLY BETWEEN CONTROUS AND SPOT ELEVATIONS SHOWN.
13. POWER IS NOT AVAILABLE ON SITE. PROVIDING ELECTRICAL POWER NEEDED IS THE REPONSIBILITY OF THE SUBCONTRACTOR.
14. SUBCONTRACTOR IS RESPONSIBLE FOR ARRANGING ANY WATER METER/TAPPING OF EXISTING WATER MAIN ON SITE.
15. UTILITIES MAY BE PRESENT BUT NOT IDENTIFIED. PROTECT ALL EXISITNG UTILITIES DURING CONSTRUCTION. UTILITY MARK OUT BY THIRD PARTY REQUIRED AS WELL AS FOLLOWING NEW JERSEY STATE LAW, CALL NEW JERSEY UTILTIES ASSOCIATION BEFORE YOU DIG. DIAL 8-1-1 OR 1-800-272-1000.

SHORING AND BRACING

1. STRUCTURES SHOWN ON THE DRAWINGS HAVE BEEN DESIGNED FOR STABILITY UNDER FINAL CONDITIONS ONLY. DESIGN SHOWN DOES NOT INCLUDE NECESSARY COMPONENTS OR EQUIPMENT FOR STABILITY OF THE STRUCTURES DURING CONSTRUCTION. CONTRACTOR IS RESPONSIBLE FOR WORK RELATING TO CONSTRUCTION ERECTION METHODS, BRACING, SHORING, RIGGING, GUYS, SCAFFOLDING, FORMWORK, AND OTHER WORK AIDS REQUIRED TO SAFELY PERFORM THE WORK SHOWN.

CAST IN PLACE CONCRETE

1. 28-DAY COMPRESSIVE STRENGTHS:
   ALL STRUCTURES: 4000 PSI
2. DESIGN STRENGTHS ARE SAME AS 28-DAY COMPRESSIVE STRENGTHS.
3. COORDINATE PLACEMENT OF OPENINGS, CURBS, DOWELS, SLEEVES, CONDUITS, BOLTS, AND INSERTS PRIOR TO PLACEMENT OF CONCRETE.
4. NO ALUMINUM CONDUIT OR PRODUCTS CONTAINING ALUMINUM OR ANY OTHER MATERIAL INJURIOUS TO THE CONCRETE SHALL BE EMBEDDED IN THE CONCRETE.

WELDING

1. WELDS SHALL CONFORM TO AMERICAN WELDING SOCIETY (AWS):
   D1.1, STRUCTURAL WELDING CODE - STEEL
   D1.3, STRUCTURAL WELDING CODE - SHEET METAL
2. REPAIR WELDS FOUND DEFECTIVE IN ACCORDANCE WITH AWS D1.1 SECTION 5.26.
3. BUTT JOINT WELDS SHALL BE COMPLETE JOINT PENETRATION (CJP) UNLESS INDICATED OTHERWISE.
4. HOT WORK PERMITS SHALL BE SUBMITTED TO THE ENGINEER OF RECORD OR DESIGNEE PRIOR TO THE INITIATION OF WORK.

STRUCTURAL STEEL AND METAL FABRICATIONS

1. STRUCTURAL STEEL SHALL CONFORM TO THE FOLLOWING ASTM STANDARDS:

W- SHAPES	A992
MISCELLANEOUS SHAPES INCLUDING ANGLES, CHANNELS, PLATES, ETC.	A36
HOLLOW STRUCTURAL SECTIONS (HSS)	A500
GRADE B STEEL PIPE	A53
GRADE B STAINLESS STEEL SHAPES	A276
CAISSONS	A36 OR A572 GRADE 50

2. STRUCTURAL STEEL SHALL BE FABRICATED AND ERECTED IN CONFORMANCE WITH THE AISC MANUAL OF STEEL CONSTRUCTION, CURRENT EDITION, AND CURRENT OSHA STANDARDS.
3. FASTENERS SHALL BE HIGH STRENGTH BOLTS CONFORMING TO THE FOLLOWING ASTM STANDARDS EXCEPT WHERE SPECIFICALLY INDICATED OTHERWISE:
   UNLESS SHOWN OTHERWISE A325-N
   THREADED ROD F1554, GRADE 55
4. ITEMS TO BE EMBEDDED IN CONCRETE SHALL BE CLEAN AND FREE OF OIL, DIRT, AND PAINT.
5. NO HOLES OTHER THAN THOSE SPECIFICALLY DETAILED SHALL BE ALLOWED THROUGH STRUCTURAL STEEL MEMBERS. NO CUTTING OR BURNING OF STRUCTURAL STEEL IS PERMITTED WITHOUT THE APPROVAL OF THE ENGINEER.

1

STRUCTURAL ABBREVIATIONS

@	AT
AB	ANCHOR BOLT
ACI	AMERICAN CONCRETE INSTITUTION
ADDL	ADDITIONAL
ADJ	ADJACENT
AFF	ABOVE FINISH FLOOR
AHR	ANCHOR
AISC	AMERICAN INSTITUTE OF STEEL CONSTRUCTION
AL	ALUMINUM
ALLOW	ALLOWABLE
ALTN	ALTERNATE
ANSI	AMERICAN NATIONAL STANDARDS INSTITUTE
APPROX	APPROXIMATE
APVD	APPROVED
ARCH.	ARCHITECTURAL
ASTM	AMERICAN SOCIETY FOR TESTING AND MATERIALS
AWS	AMERICAN WELDING SOCIETY
BETW	BETWEEN
BF	BOTTOM FACE
BLDG	BUILDING
BM	BEAM
BO	BOTTOM OF
BOT	BOTTOM
BRG	BEARING
C	CHANNEL OR C-SHAPE
C TO C	CENTER TO CENTER
CHKD PL	CHECKERED PLATE
CIPC	CAST-IN-PLACE CONCRETE
CJ	CONSTRUCTION JOINT
CJP	COMPLETE JOINT PENETRATION (WELD)
CL	CENTERLINE
CLR	CLEARANCE, CLEAR
CMU	CONCRETE MASONRY UNIT
COL	COLUMN
CONC	CONCRETE
CONN	CONNECTION
CONSTR	CONSTRUCTION
CONT	CONTINUOUS
COORD	COORDINATE
CRSI	CONCERTE REINFORCING STEEL INSTITUTE
CTLJ	CONTROL JOINT
CTR	CENTER
CTRD	CENTERED
CU	CUBIC
d	PENNY (NAIL SIZE)
DBA	DEFORMED BAR ANCHOR
DBL	DOUBLE
DEG	DEGREE
DET	DETAIL
DF	DOUGLAS FIR
DIA	DIAMETER
DIAG	DIAGONAL
DIM.	DIMENSION
DIR	DIRECTION
DL	DEAD LOAD
DO	DITTO
DTI	DIRECT TENSION INDICATOR
DWG	DRAWING
DWL	DOWEL
EA	EACH
EF	EACH FACE
EJ	EXPANSION JOINT
EL	ELEVATION
ELEC	ELECTRICAL
ELEV	ELEVATOR
EMBED	EMBEDMENT, EMBED
ENGR	ENGINEER
EQL	EQUAL
EQL SP	EQUALLY SPACED
EQPT	EQUIPMENT
EQUIV	EQUIVALENT
EW	EACH WAY
EXP JT	EXPANSION JOINT
EXST	EXISTING
EXT	EXTERIOR
FAB	FABRICATE, FABRICATION
FB	FLAT BAR
FD	FLOOR DRAIN
FDN	FDN
FF	FINISH FLOOR
FG	FINISH GRADE
FL	FLOOR
FRP	FIBERGLASS REINFORCED PLASTIC
FT	FEET, FOOT
FTG	FOOTING
FV	FIELD VERIFY
GA	GAUGE, GAGE
GALV	GALVANIZED (HOT DIP)
GLB	GLUE LAMINATED BEAM
GRTG	GRATING
GVL	GRAVEL
H.A.S.	HEADED ANCHOR STUD
HDR	HEADER
HORIZ	HORIZONTAL
HPT	HIGH POINT
HSS	HOLLOW STRUCTURAL SECTION
HVAC	HEATING , VENTILATION, AND AIR CONDITIONING
IBC	INTERNATIONAL BUILDING CODE
ID	INSIDE DIAMETER
I.F.	INSIDE FACE
IN.	INCH(ES)
INSUL	INSULATION
INTMD	INTERMEDIATE
INTR	INTERIOR
J	JOIST
JB	JOIST BEARING
JT	JOINT
KIP(S)	THOUSAND POUNDS
KSF	KIPS PER SQUARE FOOT
KSI	KIPS PER SQUARE INCH
L	ANGLE OR L-SHAPE
LB(S)	POUND(S) FORCE
LF	LINEAR FEET
LIW	LOAD INDICATING WASHER
LL	LIVE LOAD
LLH	LONG LEG HORIZONTAL
LLV	LONG LEG VERTICAL
LNTL	LINTEL
LONG.	LONGITUDINAL
LPT	LOW POINT
LSL	LONG SLOTTED HOLE
MATL	MATERIAL
MAX	MAXIMUM
MB	MACHINE BOLT
MECH	MECHANICAL
MET.	METAL
MFD	MANUFACTURED
MFR(S)	MANUFACTURER (MANUFACTURER'S)
MIN	MINIMUM
MISC	MISCELLANEOUS
MO	MASONRY OPENING
NA	NOT APPLICABLE
NIC	NOT IN CONTRACT
NO.	NUMBER
NTS	NOT TO SCALE
O TO O	OUT TO OUT
OC	ON CENTER
OD	OUTSIDE DIAMETER
O.F.	OUTSIDE FACE
OPNG(S)	OPENING(S)
OPP	OPPOSITE
P	PILASTER
PERIM	PERIMETER
PJF	PREMOLDED JOINT FILLER
PJP	PARTIAL JOINT PENETRATION (WELD)
PKG	PACKAGE
PL	PLATE
PLCS	PLACES
PLF	POUNDS FORCE PER LINEAR FOOT
PLYWD	PLYWOOD
PNL	PANEL
PRCST	PRECAST
PREFAB	PREFABRICATE(D)
PRELIM	PRELIMINARY
PRI	PRIMARY
PSF	POUNDS FORCE PER SQUARE FOOT
PSI	OPUNDS FORCE PER SQUARE INCH
PT	PRESSURE TREATED
PVC	POLYVINYL CHLORIDE
R	RADIUS, RISER
RAD	RADIUS
RC	REINFORCED CONCRETE
RDAA	REBAR DOWEL ADHESIVE ANCHOR
RDW	REDWOOD
RECT	RECTANGULAR, RECTANGLE
REF	REFERENCE
REINF	REINFORCE, REINFORCING
REQD	REQUIRED
RST	REINFORCING STEEL
S	I-BEAM
SC	SLIP CRITICAL (BOLTS)
SCHED	SCHEDULE
SECT.	SECTION
SH	SHEET
SIM	SIMILAR
SOG	SLAB ON GRADE
SP	SPACE
SPEC(S)	SPECIFICATION(S)
SPECD	SPECIFIED
SPG	SPACING
SQ	SQUARE
SSL	SHORT SLOTTED HOLE
SST	STAINLESS STEEL
STD	STANDARD
STIF	STIFFENER
STIR.	STIRRUP
STL	STEEL
STR	STRAIGHT
STRL	STRUCTURAL
STRUCT	STRUCTURE
SYMM	SYMMETRICAL
T	TREAD
T&B	TOP AND BOTTOM
TAS	THREADED ANCHOR STUD
TC	TOP OF CONCRETE, TOP OF CURB
TEMP	TEMPERATURE
TF	TOP OF FOOTING, TOP FACE
THK	THICK
THKNS	THICKNESS
THRU	THROUGH
TM	TOP OF MASONRY
T.O.	TOP OF
TRANSV	TRANSVERSE
TST	TOP OF STEEL
TW	TOP OF WALL
TYP	TYPICAL
UBC	UNIFORM BUILDING CODE
UNIF	UNIFORM, UNIFORMLY
UON	UNLESS OTHERWISE NOTED
VERT	VERTICAL
W	WIDE FLANGE BEAM
W/	WITH
W/O	WITHOUT
WD	WOOD
WP	WORKING POINT
WS	WATERSTOP, WATER SURFACE
WT	WEIGHT
WWF	WELDED WIRE FABRIC

SECTION / DETAIL DESIGNATIONS

SECTION (LETTER) OR DETAIL (NUMERAL) DESIGNATION

A

DRAWING NUMBER (REPLACED WITH A LINE IF TAKEN AND SHOWN ON SAME SHEET)

1
C-0001

ON DRAWING WHERE SECTION OR DETAIL IS TAKEN:

DRAWING NUMBER WHERE SHOWN

B SECTION
SCALE
S-3001

ON DRAWING WHERE SECTION IS SHOWN:

DRAWING NUMBER(S) WHERE TAKEN

2 DETAIL
SCALE
S-3001

ON DRAWING WHERE DETAIL IS SHOWN:

DRAWING NUMBER(S) WHERE TAKEN

DRAWING TITLE
SCALE

ON DRAWING WHERE ONLY A TITLE IS REQUIRED WITH NO REFERENCE (eg: ELEVATIONS)

B

SECTION CALLOUT WHERE SECTION IS ON THE SAME SHEET AND CUT EXTENDS TO A FIXED LIMIT

B S-3001 B S-3001

SECTION CALLOUT WHERE SECTION IS ON ANOTHER SHEET AND CUT EXTENDS THROUGHOUT ENTIRE SHEET

1

KEYNOTE NUMBER

1

REVISION / ADDENDA NUMBER

N

NORTH ARROW

RICHARD P. TRAVER
N.J. PROFESSIONAL ENGINEER NO. 26300

NO.	DATE	REVISION	BY	APVD
1	2013/10/25	REVISION #1	RT	Y
0	2013/08/29	ISSUED FOR CONSTRUCTION	RT	Y

DSGN H. JOCHIMSEN | DR R. FOREST | CHK W. BENNETT | APVD R. TRAVER

©CH2M HILL 2011. ALL RIGHTS RESERVED.

1717 ARCH ST., SUITE 4400
PHILADELPHIA, PA 19103
PH (215) 563-4220 FAX (215) 563-3828

IMPOUNDMENTS 1 AND 2
PILOT DEMONSTRATION STUDY
WYETH HOLDINGS CORPORATION
AMERICAN CYANAMID GROUND SITE
20 POLHEMUS LANE
BRIDGEWATER, NJ

CH2MHILL®

GENERAL

GENERAL STRUCTURAL NOTES, ABBREVIATIONS, AND LEGEND

REUSE OF DOCUMENTS: THIS DOCUMENT, AND THE IDEAS AND DESIGNS INCORPORATED HEREIN, AS AN INSTRUMENT OF PROFESSIONAL SERVICE, IS THE PROPERTY OF CH2M HILL AND IS NOT TO BE USED, IN WHOLE OR IN PART, FOR ANY OTHER PROJECT WITHOUT THE WRITTEN AUTHORIZATION OF CH2M HILL.

VERIFY SCALE
BAR IS ONE INCH ON ORIGINAL DRAWING.
0 1"

DATE	2013/08/29
PROJ	472109
DWG	G-0002
SHEET	2

SOIL EROSION AND SEDIMENT CONTROL NOTES:

1. THE SUBCONTRACTOR SHALL BE RESPONSIBLE FOR IMPLEMENTING AND MAINTAINING EROSION CONTROL DEVICES DURING CONSTRUCTION.

2. SUBCONTRACTOR SHALL TAKE ALL OTHER MEASURES TO POSITIVELY PRECLUDE EROSION MATERIALS FROM LEAVING THE SITE.

3. THE SUBCONTRACTOR MUST NOTIFY SOMERSET-UNIONSOIL CONSERVATION DISTRICT (SCD) IN WRITING AND BY TELEPHONE AT THE FOLLOWING POINTS:
   3.1. THE REQUIRED PRE-CONSTRUCTION MEETING

4. INSTALL SEDIMENT BARRIERS AROUND ANY STOCKPILE AREAS.

5. ALL SOIL EROSION AND SEDIMENT CONTROL PRACTICES WILL BE INSTALLED IN ACCORDANCE WITH THE STANDARDS FOR SOIL EROSION AND SEDIMENT CONTROL IN NEW JERSEY (NJ STANDARDS), AND WILL BE INSTALLED IN PROPER SEQUENCE AND MAINTAINED UNTIL PERMANENT STABILIZATION IS ESTABLISHED.

6. THE SUBCONTRACTOR SHALL CONSTRUCT ALL EROSION AND SEDIMENT CONTROL MEASURES PER THE APPROVED PLAN AND CONSTRUCTION SEQUENCE. THE SUBCONTRACTOR SHALL ENSURE THAT ALL RUNOFF FROM DISTURBED AREAS IS DIRECTED TO THE SEDIMENT CONTROL DEVISES.

5. THE SUBCONTRACTOR SHALL PROTECT ALL POINTS OF CONSTRUCTION INGRESS AND EGRESS TO PREVENT THE DEPOSITION OF MATERIALS ONTO SITE ROADWAYS. THE SUBCONTRACTOR SHALL INSTALL A MAT TO BE COMPOSED OF NJDOT NO. 2 CRUSHED STONE, 6" THICK, WILL BE AT LEAST 30' X 100' AND SHOULD BE UNDERLAIN WITH A SUITABLE SYNTHETIC SEDIMENT FILTER FABRIC AND MAINTAINED. ALL MATERIALS DEPOSITED ONTO SITE ROADS SHALL BE REMOVED IMMEDIATELY.

6. ALL SOIL WASHED, DROPPED, SPILLED, OR TRACKED OUTSIDE OTHER LIMIT OF DISTURBANCE OR ONTO PUBLIC RIGHT-OF-WAYS WILL BE REMOVED IMMEDIATELY. PAVED ROADWAYS MUST BE KEPT CLEAN AT ALL TIMES.

7. SOIL EROSION AND SEDIMENT CONTROL MEASURES WILL BE INSPECTED AND MAINTAINED ON A REGULAR BASIS, INCLUDING AFTER EVERY STORM EVENT.

8. ANY SURFACE WITH A SLOPE EXCEEDING 3:1 SHALL BE PROTECTED UTILIZING A SOIL EROSION CONTROL MATERIAL SUCH AS COCONUT JUTE.

9. ANY DISTURBED AREA THAT WILL BE LEFT EXPOSED FOR MORE THAN THIRTY (30) DAYS AND NOT SUBJECT TO CONSTRUCTION TRAFFIC SHALL IMMEDIATELY RECEIVE A TEMPORARY SEEDING AND MULCHING. IF THE SEASON PROHIBITS TEMPORARY SEEDING, THE DISTURBED AREA WILL BE MULCHED WITH SALT HAY OR EQUIVALENT AND BOUND IN ACCORDANCE WITH THE NJDOT STANDARDS (I.E. PEG AND TWINE, MULCH NETTING, OR LIQUID MULCH BINDER)

10. IMMEDIATELY FOLLOWING INITIAL DISTURBANCE OR ROUGH GRADING ALL CRITICAL AREAS SUBJECT TO EROSION WILL RECEIVE A TEMPORARY SEEDING IN COMBINATION WITH STRAW MULCH OR A SUITABLE EQUIVALENT, AT A RATE OF 2 TONS PER ACRE, ACCORDING TO THE NJ STANDARDS.

11. PRIOR TO REMOVAL OF SEDIMENT CONTROL MEASURES, THE SUBCONTRACTOR SHALL STABILIZE AND HAVE ESTABLISHED PERMANENT STABILIZATION FOR ALL CONTRIBUTORY DISTURBED AREAS USING SOD OR AN APPROVED PERMANENT SEED MIXTURE WITH REQUIRED SOIL AMENDMENTS AND AN APPROVED ANCHORED MULCH:
    - -LIME - 90 LBS./1,000 SF GROUND LIMESTONE; FERTILIZER - 11 LBS./1,000 SF, 10-20-10 OR EQUIVALENT WORKED INTO THE SOIL A MINIMUM OF 4"
    - -SEED - TYPE W WETLAND GRASS SEED MIXTURE; PLANT BETWEEN MARCH 15 AND NOV. 15
    - -MULCH - SALT HAY OR SMALL GRAIN STRAW AT A RATE OF 70 TO 90 LBS./1,000 SF TO BE APPLIED ACCORDING TO THE NJ STANDARDS. MULCH SHALL BE SECURED BY APPROVED METHODS (I.E. PEG AND TWINE, MULCH NETTING, OR LIQUID MULCH BINDER).

12. WHEN PROPERTY IS BROUGHT TO FINISHED GRADE AND PERMANENT STABILIZATION IS FOUND TO BE IMPRACTICAL, TEMPORARY SEED AND MULCH SHALL BE APPLIED:
    - -LIME - 90 LBS./1,000 SF GROUND LIMESTONE; FERTILIZER - 11 LBS./1,000 SF, 10-20-10 OR EQUIVALENT WORKED INTO THE SOIL A MINIMUM OF 4"
    - -SEED - TYPE W WETLAND GRASS SEED MIXTURE; PLANT BETWEEN MARCH 15 AND NOV. 15
    - -MULCH - SALT HAY OR SMALL GRAIN STRAW AT A RATE OF 70 TO 90 LBS./1,000 SF TO BE APPLIED ACCORDING TO THE NJ STANDARDS. MULCH SHALL BE SECURED BY APPROVED METHODS (I.E. PEG AND TWINE, MULCH NETTING, OR LIQUID MULCH BINDER)

    THE SITE SHALL AT ALL TIMES BE GRADED AND MAINTAINED SUCH THAT ALL STORMWATER RUN-OFF IS DIVERTED TO SOIL EROSION AND SEDIMENT CONTROL FACILITIES.

13. PERMANENT SWALES OR OTHER POINTS OF CONCENTRATED WATER FLOW SHALL BE STABILIZED WITH SOD OR SEED WITH AN APPROVED EROSION CONTROL MATTING, RIP-RAP OR BY OTHER APPROVED STABILIZATION MEASURES.

14. INTERIM STOCKPILES ARE NOT TO BE LOCATED WITHIN 50' OF A FLOODPLAIN, SLOPE, ROADWAY OR DRAINAGE FACILITY. THE BASE OF ALL STOCKPILES SHALL BE CONTAINED BY A HAYBALE SEDIMENT BARRIER OR SILT FENCE.

15. CATCH BASIN INLETS WILL BE PROTECTED WITH AN INLET FILTER DESIGNED IN ACCORDANCE WITH SECTION 30-1 OF THE NJ STANDARDS.

16. STORM DRAINAGE OUTLETS WILL BE STABILIZED, AS REQUIRED, BEFORE THE DISCHARGE POINTS BECOME OPERATIONAL.

17. SURFACE DRAINAGE FLOWS OVER UNSTABILIZED CUT AND FILL SLOPES SHALL BE CONTROLLED BY EITHER PREVENTING DRAINAGE FLOWS FROM TRAVERSING THE SLOPES OR BY INSTALLING PROTECTIVE DEVICES TO LOWER THE WATER DOWNSLOPE WITHOUT CAUSING EROSION. DIKES SHALL BE INSTALLED AND MAINTAINED AT THE TOP OF CUT OR FILL SLOPES UNTIL THE SLOPE AND DRAINAGE AREA TO IT ARE FULLY STABILIZED, AT WHICH TIME THEY MUST BE REMOVED AND FINAL GRADING DONE TO PROMOTE SHEET FLOW DRAINAGE. PROTECTIVE METHODS MUST BE PROVIDED AT POINTS OF CONCENTRATED FLOW WHERE EROSION IS LIKELY TO OCCUR.

18. DUST SHALL BE CONTROLLED VIA THE APPLICATION OF WATER, CALCIUM CHLORIDE OR OTHER APPROVED METHOD IN ACCORDANCE WITH SECTION 16-1 OF THE NJ STANDARDS.

19. SEDIMENT TRAPS OR BASINS ARE NOT PERMITTED WITHIN 20 FEET OF A FOUNDATION THAT EXISTS OR IS UNDER CONSTRUCTION. NO STRUCTURE MAY BE CONSTRUCTED WITHIN 20 FEET OF AN ACTIVE SEDIMENT TRAP OR BASIN.

20. ALL TRAP DEPTH DIMENSIONS ARE RELATIVE TO THE OUTLET ELEVATION. ALL TRAPS MUST HAVE A STABLE OUTFALL. ALL TRAPS AND BASINS SHALL HAVE STABLE INFLOW POINTS.

21. SEDIMENT SHALL BE REMOVED AND THE TRAP OR BASIN RESTORED TO ITS ORIGINAL DIMENSIONS WHEN THE SEDIMENT HAS ACCUMULATED TO ONE QUARTER OF THE TOTAL DEPTH OF THE TRAP OR BASIN. TOTAL DEPTH SHALL BE MEASURED FROM THE TRAP OR BASIN BOTTOM TO THE CREST OF THE OUTLET. SEDIMENT REMOVED FROM SEDIMENT TRAPS AND BASINS, WHEEL WASH, AND OTHER STRUCTURES SHALL BE ADDED TO THE SEDIMENT IN THE TEMPORARY STAGING AND STOCKPILING AREA.

22. SEDIMENT REMOVED FROM TRAPS AND BASINS SHALL BE PLACED AND STABILIZED IN APPROVED AREAS, BUT NOT WITHIN A FLOODPLAIN, WETLAND, OR TREE-SAVE AREA. WHEN PUMPING SEDIMENT LADEN WATER, THE DISCHARGE MUST BE DIRECTED TO A SEDIMENT TRAPPING DEVICE PRIOR TO RELEASE FROM THE SITE. A SUMP PIT OR PORTABLE SEDIMENT TANK MAY BE USED IF SEDIMENT TRAPS THEMSELVES ARE BEING PUMPED OUT.

23. WHERE DEEMED APPROPRIATE BY THE ENGINEER OR INSPECTOR, SEDIMENT BASINS AND TRAPS MAY NEED TO BE SURROUNDED WITH AN APPROVED SAFETY FENCE. THE FENCE MUST CONFORM TO LOCAL ORDINANCES AND REGULATIONS. THE DEVELOPER OR OWNER SHALL CHECK WITH LOCAL BUILDING OFFICIALS ON APPLICABLE SAFETY REQUIREMENT. WHERE SAFETY FENCE IS DEEMED APPROPRIATE AND ORDINANCES DO NOT SPECIFY FENCING SIZES AND TYPES, THE FOLLOWING SHALL BE USED AS A MINIMUM STANDARD: THE SAFETY FENCE MUST BE MADE OF WELDED WIRE AND AT LEAST 42 INCHES HIGH, HAVE POSTS SPACED NO FARTHER APART THAN 8 FEET, HAVE MESH OPENINGS NO GREATER THAN 2 INCHES IN WIDTH AND 4 INCHES IN HEIGHT WITH A MINIMUM OF 14 GAUGE WIRE. SAFETY FENCE MUST BE MAINTAINED IN GOOD CONDITION AT ALL TIMES.

24. OFF-SITE SPOIL OR BORROW AREAS ON STATE OR FEDERAL PROPERTY MUST HAVE PRIOR APPROVAL BY SOMERSET-UNION COUNTY SCD AND OTHER APPLICABLE STATE, FEDERAL, AND LOCAL AGENCIES; OTHERWISE APPROVAL MUST BE GRANTED BY THE LOCAL AUTHORITIES. ALL WASTE AND BORROW AREAS OFF-SITE MUST BE PROTECTED BY SEDIMENT CONTROL MEASURES AND STABILIZED.

25. SITES WHERE INFILTRATION DEVICES ARE USED FOR THE CONTROL OF STORMWATER, EXTREME CARE MUST BE TAKEN TO PREVENT RUNOFF FROM UNSTABILIZED AREAS ENTERING THE EXCAVATION AREA DURING CONSTRUCTION. SEDIMENT CONTROL DEVICES PLACED IN INFILTRATION AREAS MUST HAVE BOTTOM ELEVATIONS AT LEAST TWO (2) FEET HIGHER THAN THE FINISH GRADE BOTTOM ELEVATION OF THE INFILTRATION PRACTICE. WHEN CONVERTING A SEDIMENT TRAP TO AN INFILTRATION DEVICE, ALL ACCUMULATED SEDIMENT MUST BE REMOVED AND DISPOSED OF PRIOR TO FINAL GRADING OF INFILTRATION DEVICE.

26. THE SUBCONTRACTOR SHALL BE RESPONSIBLE FOR ANY EROSION OR SEDIMENTATION THAT MAY OCCUR BELOW STORMWATER OUTFALLS OR OFF-SITE AS A RESULT OF CONSTRUCTION OF THE PROJECT.

27. ANY REVISION TO THE CERTIFIED SOIL EROSION AND SEDIMENT CONTROL PLAN MUST BE SUBMITTED TO SOMERSET-UNION COUNTY SCD FOR REVIEW AND APPROVAL PRIOR TO IMPLEMENTATION IN THE FIELD.

28. THE SOMERSET-UNION COUNTY SOIL CONSERVATION DISTRICT MUST BE NOTIFIED, IN WRITING, AT LEAST 48 HOURS PRIOR TO ANY LAND DISTURBANCE: SOMERSET-UNION SCD, SOMERSET COUNTY 4-H CENTER, 308 MILLTOWN ROAD, BRIDGEWATER, NJ 08807; TEL: 908-526-2701; FAX: 908-526-7017

29. THE OWNER MUST OBTAIN A DISTRICT ISSUED REPORT OF COMPLIANCE PRIOR TO THE ISSUANCE OF ANY CERTIFICATE OF OCCUPANCY. SOMERSET-UNION COUNTY SCD REQUIRES AT LEAST ONE WEEK'S NOTICE TO FACILITATE THE SCHEDULING OF ALL REPORT OF COMPLIANCE INSPECTIONS. ALL SITE WORK MUST BE COMPLETED, INCLUDING TEMPORARY/PERMANENT STABILIZATION OF ALL EXPOSED AREAS, PRIOR TO THE ISSUANCE OF A REPORT OF COMPLIANCE BY BERGEN COUNTY.

30. SOMERSET-UNION COUNTY SCD INSPECTOR HAS THE OPTION OF REQUIRING ADDITIONAL SAFETY OR SEDIMENT CONTROL MEASURES, IF DEEMED NECESSARY.

31. THE SITE'S APPROVAL LETTER, APPROVED EROSION AND SEDIMENT CONTROL PLANS, DAILY LOG BOOKS, AND TEST REPORTS SHALL BE AVAILABLE AT THE PROJECT SITE THROUGHOUT CONSTRUCTION.

32. SITE INFORMATION

A. TOTAL AREA OF SITE	APPROXIMATELY 4	ACRES
B. AREA DISTURBED	0.28	ACRES
C. TOTAL CUT	0	CUBIC YARDS
D. TOTAL FILL	450	CUBIC YARDS

PROJECT SAMPLING REQUIREMENTS:

1. SAMPLING OF SOIL WILL BE PERFORMED BY ENGINEER AND IS OUTSIDE THE SCOPE OF SERVICES FOR THE SUBCONTRACTOR.

2. SUBCONTRACTOR IS RESPONSIBLE FOR ALL DECONTAMINATION SAMPLING AND WIPE SAMPLING WHEN MOVING TO AN UNCONTAMINATED AREA.

RICHARD P. TRAVER
N.J. PROFESSIONAL ENGINEER NO. 26300

©CH2M HILL 2010. ALL RIGHTS RESERVED.

NO.	DATE	REVISION	BY	APVD
0	2013/08/29	ISSUED FOR CONSTRUCTION	RT	Y

DSGN R. TRAVER | DR A. BROWN | CHK R. TRAVER | APVD R. TRAVER

REUSE OF DOCUMENTS: THIS DOCUMENT, AND THE IDEAS AND DESIGNS INCORPORATED HEREIN, AS AN INSTRUMENT OF PROFESSIONAL SERVICE, IS THE PROPERTY OF CH2M HILL AND IS NOT TO BE USED, IN WHOLE OR IN PART, FOR ANY OTHER PROJECT WITHOUT THE WRITTEN AUTHORIZATION OF CH2MHILL.

1717 ARCH ST., SUITE 4400
PHILADELPHIA, PA 19103
PH (215) 563-4220 FAX (215) 563-3828
EB 0000072 AA 001992

IMPOUNDMENTS 1 AND 2
PILOT DEMONSTRATION STUDY
WYETH HOLDINGS CORPORATION
AMERICAN CYANAMID SUPERFUND SITE
20 POLHEMUS LANE
BRIDGEWATER, NJ

CH2MHILL

CIVIL
SITE SOIL/SEDIMENT EROSION CONTROL NOTES

VERIFY SCALE
BAR IS ONE INCH ON ORIGINAL DRAWING.
0 1"

DATE	2013/08/29
PROJ	472109
DWG	G-0003
SHEET	3

FILE NAME: 472109-000-G-0003.dwg PLOT DATE: 10/23/2013 2:03 PM

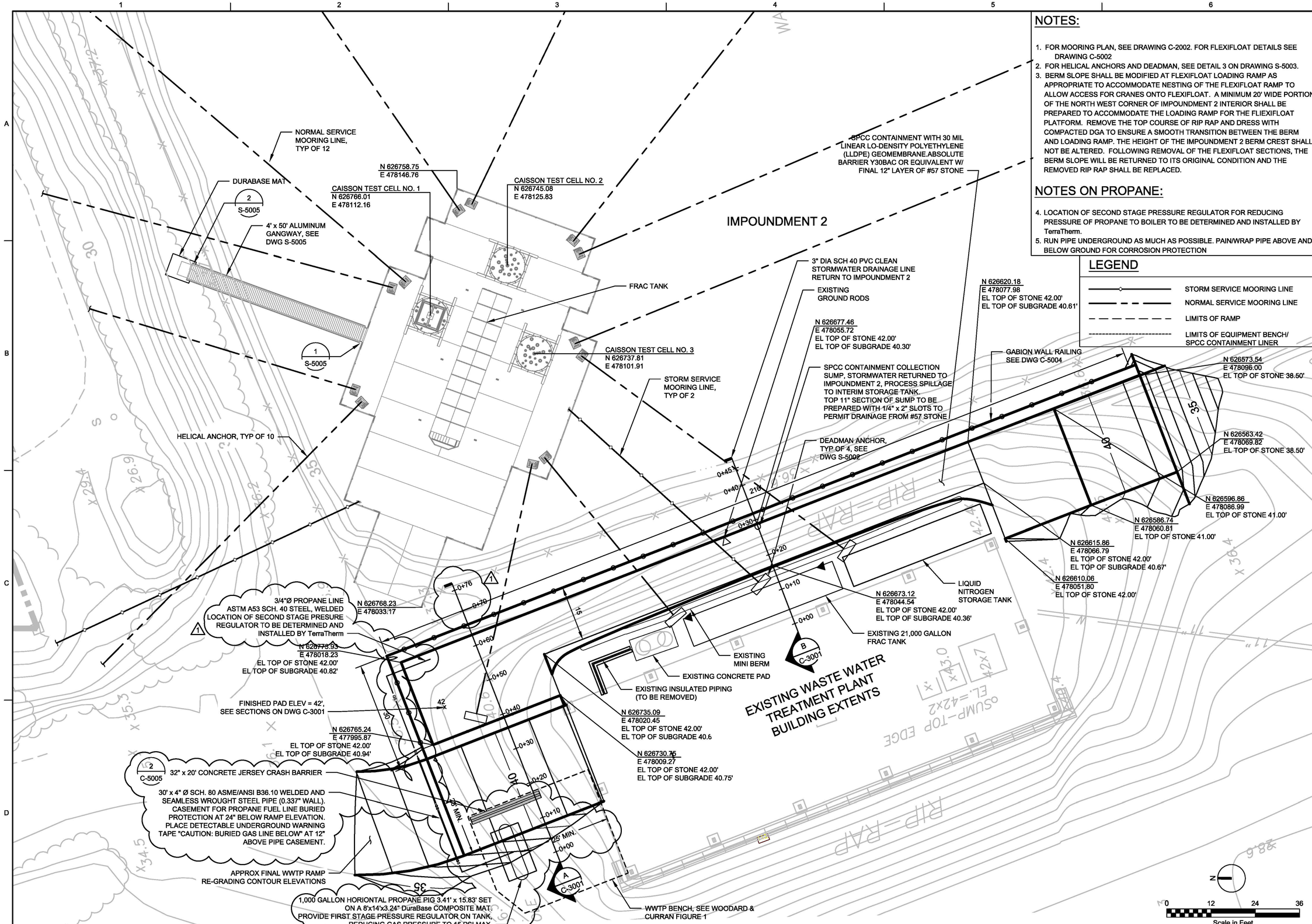

NOTES:

1. FOR MOORING PLAN, SEE DRAWING C-2002. FOR FLEXIFLOAT DETAILS SEE DRAWING C-5002
2. FOR HELICAL ANCHORS AND DEADMAN, SEE DETAIL 3 ON DRAWING S-5003.
3. BERM SLOPE SHALL BE MODIFIED AT FLEXIFLOAT LOADING RAMP AS APPROPRIATE TO ACCOMMODATE NESTING OF THE FLEXIFLOAT RAMP TO ALLOW ACCESS FOR CRANES ONTO FLEXIFLOAT. A MINIMUM 20' WIDE PORTION OF THE NORTH WEST CORNER OF IMPOUNDMENT 2 INTERIOR SHALL BE PREPARED TO ACCOMMODATE THE LOADING RAMP FOR THE FLIEXIFLOAT PLATFORM. REMOVE THE TOP COURSE OF RIP RAP AND DRESS WITH COMPACTED DGA TO ENSURE A SMOOTH TRANSITION BETWEEN THE BERM AND LOADING RAMP. THE HEIGHT OF THE IMPOUNDMENT 2 BERM CREST SHALL NOT BE ALTERED. FOLLOWING REMOVAL OF THE FLEXIFLOAT SECTIONS, THE BERM SLOPE WILL BE RETURNED TO ITS ORIGINAL CONDITION AND THE REMOVED RIP RAP SHALL BE REPLACED.

NOTES ON PROPANE:

4. LOCATION OF SECOND STAGE PRESSURE REGULATOR FOR REDUCING PRESSURE OF PROPANE TO BOILER TO BE DETERMINED AND INSTALLED BY TerraTherm.
5. RUN PIPE UNDERGROUND AS MUCH AS POSSIBLE. PAIN/WRAP PIPE ABOVE AND BELOW GROUND FOR CORROSION PROTECTION

LEGEND

- STORM SERVICE MOORING LINE
- NORMAL SERVICE MOORING LINE
- LIMITS OF RAMP
- LIMITS OF EQUIPMENT BENCH/ SPCC CONTAINMENT LINER

RICHARD P. TRAVER
STATE OF NEW JERSEY
N.J. PROFESSIONAL ENGINEER NO. 26300

NO.	DATE	REVISION	DR	CHK	APVD
1	2013/10/25	REVISION #1	RT	RT	Y
0	2013/08/29	ISSUED FOR CONSTRUCTION	RT	RT	Y
DSGN			S. EMEREUWA	R. TRAVER	R. TRAVER
			R. TRAVER	R. TRAVER	BY

1717 ARCH ST., SUITE 4400
PHILADELPHIA, PA 19103
PH (215) 563-4220 FAX (215) 563-3828
EB 0000072 AA 001992

IMPOUNDMENTS 1 AND 2
PILOT DEMONSTRATION STUDY
WYETH HOLDINGS CORPORATION
AMERICAN CYANAMID SUPERFUND SITE
DANIELSON AVENUE
BRIDGEWATER, NJ

CH2MHILL

CIVIL

SITE GENERAL ARRANGEMENT

VERIFY SCALE
BAR IS ONE INCH ON ORIGINAL DRAWING.
0 1"

DATE	2013/08/29
PROJ	472109
DWG	C-2001
SHEET	4

REUSE OF DOCUMENTS: THIS DOCUMENT, AND THE IDEAS AND DESIGNS INCORPORATED HEREIN, AS AN INSTRUMENT OF PROFESSIONAL SERVICE, IS THE PROPERTY OF CH2M HILL AND IS NOT TO BE USED, IN WHOLE OR IN PART, FOR ANY OTHER PROJECT WITHOUT THE WRITTEN AUTHORIZATION OF CH2M HILL.
©CH2M HILL 2010. ALL RIGHTS RESERVED.

FILE NAME: 472109-001-C-2001.dwg PLOT DATE: 10/24/2013 9:08 AM

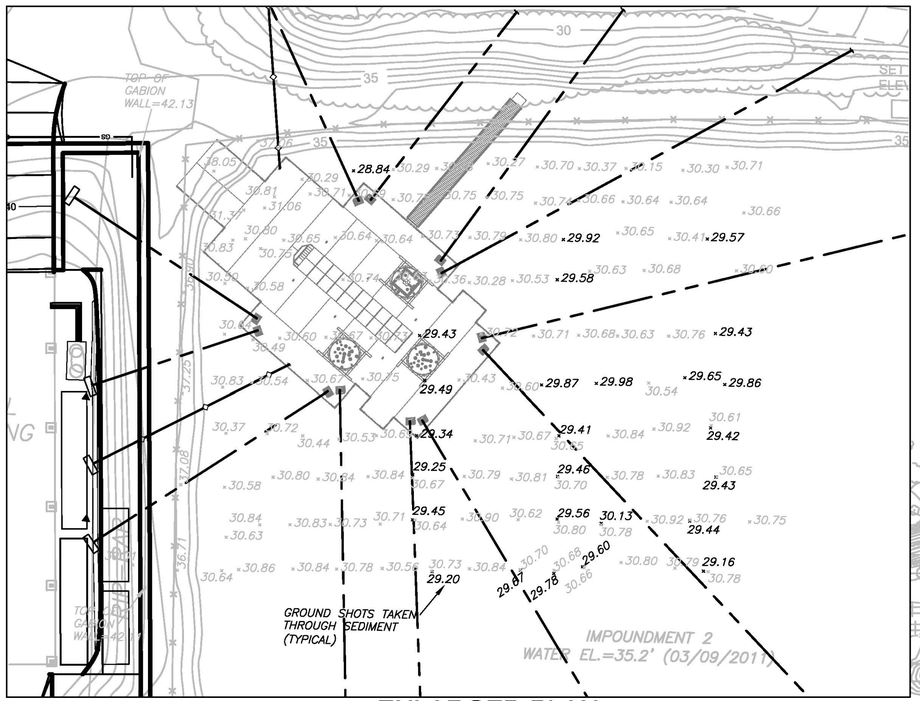

ENLARGED PLAN

½"=1'-0"

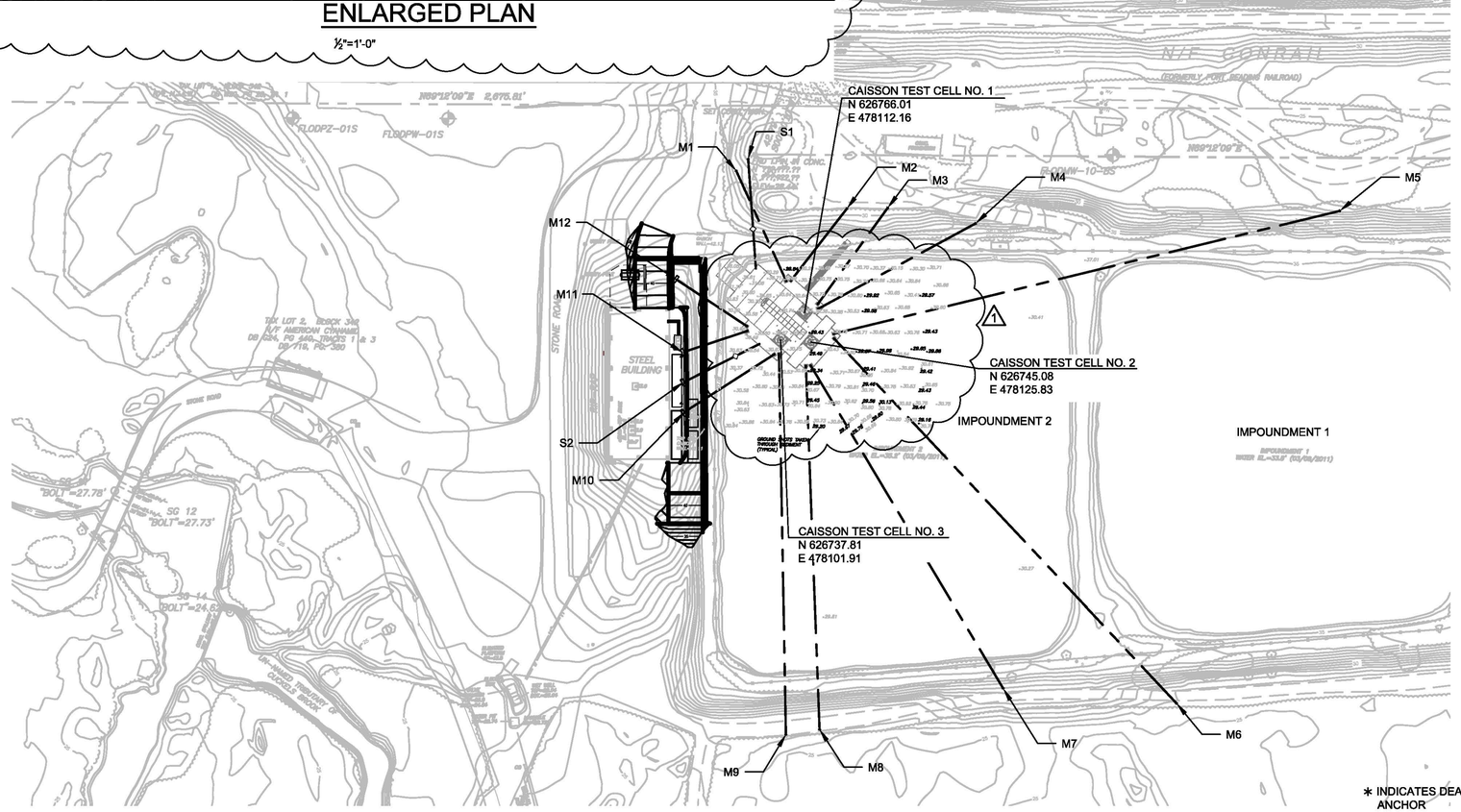

NOTES:

1. FOR FLEXIFLOAT LOCATION, ORIENTATION, AND MOORING LINE LAYOUT SEE DRAWINGS C-2001, C-5002, AND S-2001.
2. MOORING LINE SHALL BE 3/4" ULTRA HIGH MOLECULAR WEIGHT POLYETHYLENE DYNEEMA FIBER LINE WITH A 52,500 LB MINIMUM BREAKING STRENGTH. AMSTEEL BLUE BY SAMSON ROPE OR EQUAL.
3. MOORING LINES SHALL BE TAUT AND SHALL BE INSPECTED THREE TIMES PER WEEK FOR TAUTNESS BY THE CH2M HILL SITE SUPERINTENDENT.
4. PROVIDE ALL REQUIRED MOORING LINE FASTENING HARDWARE.
5. FOR GROUND ANCHORS SEE (-/S-5003).
6. INSTALL GROUND ANCHORS FOR NORMAL SERVICE AND STORM SERVICE PRIOR TO FLEXIFLOAT PLACEMENT.
7. PAINT THE ABOVE GROUND PORTION OF HELICAL ANCHORS BRIGHT ORANGE.
8. MOORING CLEATS SHALL BE THE STANDARD FLEXIFLOAT MOORING CLEATS. INSTALL CLEATS FOR STORM SERVICE MOORING DURING INITIAL FLEXIFLOAT PLACEMENT.
9.. FOR MOORING WINCHES SEE (4/S-5002).
10. SUFFICIENT MOORING LINE SHALL BE KEPT ON SITE TO ATTACH ALL NORMAL SERVICE AND STORM SERVICE MOORING LINES.
11. INSTALL STORM SERVICE MOORING LINES AND LOOSEN ALL MOORING LINES SUFFICIENTLY TO ALLOW FLEXIFLOATS TO RISE 8'-0" ABOVE THE NORMAL SERVICE POND ELEVATION WHEN THE NATIONAL OCEANIC AND ATMOSPHERIC ADMINISTRATION ISSUES AN IMMINENT HURRICANE WARNING FOR THE BOUND BROOK, NEW JERSEY AREA. LOOSEN MOORING LINES THE AMOUNT SHOWN IN ANCHOR TABLE BELOW.
12. ANCHOR LOCATIONS AND ALIGNMENT SHALL FOLLOW MOORING LINE ALIGNMENT AS SHOWN.
13. THE STORM SERVICE MOORING HAS BEEN DESIGNED FOR A FLOW RATE OF 6 FPS PAST THE FLEXIFLOAT BARGE AND A WIND SPEED OF 110 MILES PER HOUR. STORMS THAT CAUSE HIGHER FLOW SPEEDS AND HIGHER WIND SPEEDS MAY EXCEED THE DESIGN CAPACITY OF THE MOORING.
14. GROUND ANCHOR LOCATIONS SHOWN REPRESENT THE ATTACHMENT POINT BETWEEN THE GROUND ANCHOR AND MOORING LINE.
15. DEADMAN ANCHOR LOCATIONS SHOWN REPRESENT THE INTERSECTION BETWEEN THE MOORING LINE AND THE FACE OF DEADMAN.
16. MOORING LINES S1 AND S2 ARE STORM MOORING LOCATIONS.
17. MOORING LINES SHALL HAVE FACTORY FABRICATED SPLICED EYES WITH THIMBLES ON ONE END. THIMBLE EYE SPLICE SHALL NOT REDUCE MOORING LINE STRENGTH.
18. MOORING LINES SHALL BE FREE OF KNOTS WHICH REDUCE MOORING LINE STRENGTH
19. PRIOR TO INSTALLING STORM MOORING LINES, REMOVE ALUMINUM GANGWAY.

N

0 60 120 180

Scale in Feet

ANCHOR TABLE

ANCHOR	GROUND ANCHOR LOCATIONS		WINCH LOCATIONS		APPROX LINE LENGTH	DISTANCE TO LENGTHEN AT STORM WARNING (FT)
	NORTHING	EASTING	NORTHING	EASTING		
M1	626854.82	478017.71	626784.72	478088.79	140	1.60
M2	626858.43	478114.07	626786.38	478092.22	90	1.60
M3	626871.17	478145.31	626776.34	478119.86	115	1.30
M4	626885.12	478217.53	626772.74	478121.47	190	0.50
M5	627002.17	478493.92	626758.13	478140.77	465	0.30
M6	626575.39	478513.76	626754.70	478142.45	430	0.30
M7	626535.76	478375.80	626727.12	478132.44	370	0.40
M8	626450.02	478246.68	626725.47	478128.87	325	0.50
M9	626436.08	478222.35	626726.66	478104.66	335	0.50
M10×	626653.87	478049.08	626724.93	478101.22	95	0.50
M11×	626700.10	478031.12	626734.94	478073.63	55	0.70
M12×	626753.45	478004.31	626738.41	478071.97	85	0.70
	GROUND ANCHOR LOCATIONS		DECK CLEAT LOCATIONS			
S1	626867.37	478023.46	626785.40	478061.75	140	-
S2∗	626677.04	478040.08	626728.42	478086.79	85	-

∗ INDICATES DEADMAN ANCHOR

RICHARD P. TRAVER

N.J. PROFESSIONAL ENGINEER NO. 26300

NO.	DATE	REVISION	DR	CHK	APVD
1	2013/10/25	REVISION #1	RT	Y	
0	2013/08/29	ISSUED FOR PERMITTING	RT	Y	
DSGN	R. TRAVER	S. EMEREUWA	R. TRAVER	R. TRAVER	

REUSE OF DOCUMENTS: THIS DOCUMENT, AND THE IDEAS AND DESIGNS INCORPORATED HEREIN, AS AN INSTRUMENT OF PROFESSIONAL SERVICE, IS THE PROPERTY OF CH2M HILL AND IS NOT TO BE USED, IN WHOLE OR IN PART, FOR ANY OTHER PROJECT WITHOUT THE WRITTEN AUTHORIZATION OF CH2M HILL.
©CH2M HILL 2010. ALL RIGHTS RESERVED.

1717 ARCH ST., SUITE 4400
PHILADELPHIA, PA 19103
PH (215) 563-4220 FAX (215) 983-3828
EB 0000072 AA 001992

IMPOUNDMENTS 1 AND 2
PILOT DEMONSTRATION STUDY
WYETH HOLDINGS CORPORATION
AMERICAN CYANAMID SUPERFUND SITE
20 COMMERCE AVE
BRIDGEWATER, NJ

CH2MHILL

CIVIL

MOORING LINE LAYOUT

VERIFY SCALE
BAR IS ONE INCH ON ORIGINAL DRAWING.
0 1"

DATE	2013/08/29
PROJ	472109
DWG	C-2002
SHEET	5

FILE NAME: 472109-001-C-2002.dwg PLOT DATE: 10/23/2013 2:15 PM

SEQUENCE OF CONSTRUCTION

1. INSTALLATION OF SILT FENCE TO THE NORTH AND EAST SIDE OF PROPOSED 100' X 100' EQUIPMENT LAYDOWN PAD. WEST AND SOUTH SIDES OF AREA ARE BOUNDED BY THE ELEVATED IMPOUNDMENT #2 BERM AND THE ELEVATED ACCESS RAMP TO THE GWTP;
2. CLEARING & GRUBBING OF SCRUB VEGETATION
3. REMOVAL/DISPOSAL OF OLD EQUIPMENT DECONTAMINATION CONTAINMENT SUMP LINER
4. ROUGH GRADING OF 100' X 100' EQUIPMENT LAYDOWN PAD AREA USING EXISTING STONE BASE
5. LAYDOWN OF 8 OZ NON-WOVEN POLYPROPYLENE OR POLYESTER GEOTEXTILE
6. PLACEMENT & COMPACTION OF 12" LIFT OF DGA

N

0 60 120 180
Scale in Feet

RICHARD P. TRAVER

N.J. PROFESSIONAL ENGINEER NO. 26300

NO.	DATE	REVISION	CHK	APVD
0	2013/08/29	ISSUED FOR CONSTRUCTION	RT	Y

DSGN	DR	CHK	APVD
R. TRAVER	A. BROWN	R. TRAVER	R. TRAVER

BY
R. TRAVER

CH2MHILL
1717 ARCH ST., SUITE 4400
PHILADELPHIA, PA 19103
PH (215) 563-4220 FAX (215) 563-3828
EB 0000072 AA 001992

IMPOUNDMENTS 1 AND 2
PILOT DEMONSTRATION STUDY
WYETH HOLDINGS CORPORATION
AMERICAN CYANAMID SUPERFUND SITE
2401 CHERRY LAWN AVE
BRIDGEWATER, NJ

CIVIL
SITE SOIL/SEDIMENT EROSION CONTROL PLAN

VERIFY SCALE
BAR IS ONE INCH ON ORIGINAL DRAWING.
0 1"

DATE	2013/08/29
PROJ	472109
DWG	C-2101
SHEET	6

REUSE OF DOCUMENTS: THIS DOCUMENT, AND THE IDEAS AND DESIGNS INCORPORATED HEREIN, AS AN INSTRUMENT OF PROFESSIONAL SERVICE, IS THE PROPERTY OF CH2M HILL AND IS NOT TO BE USED, IN WHOLE OR IN PART, FOR ANY OTHER PROJECT WITHOUT THE WRITTEN AUTHORIZATION OF CH2M HILL.
©CH2M HILL 2010. ALL RIGHTS RESERVED.

FILE NAME: 472109-001-C-2101.dwg PLOT DATE: 10/23/2013 2:39 PM

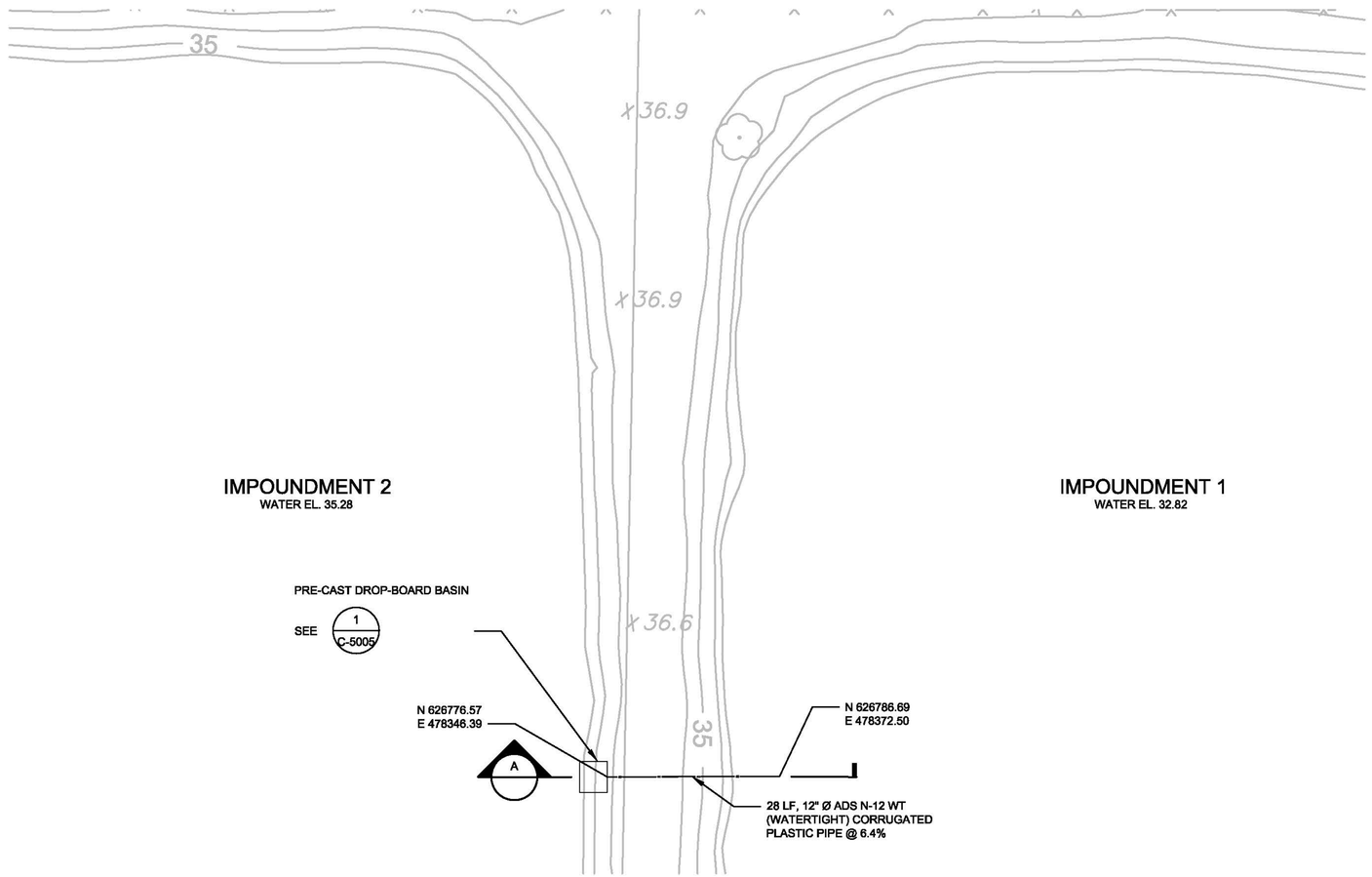

PLAN

1"=1'-0"

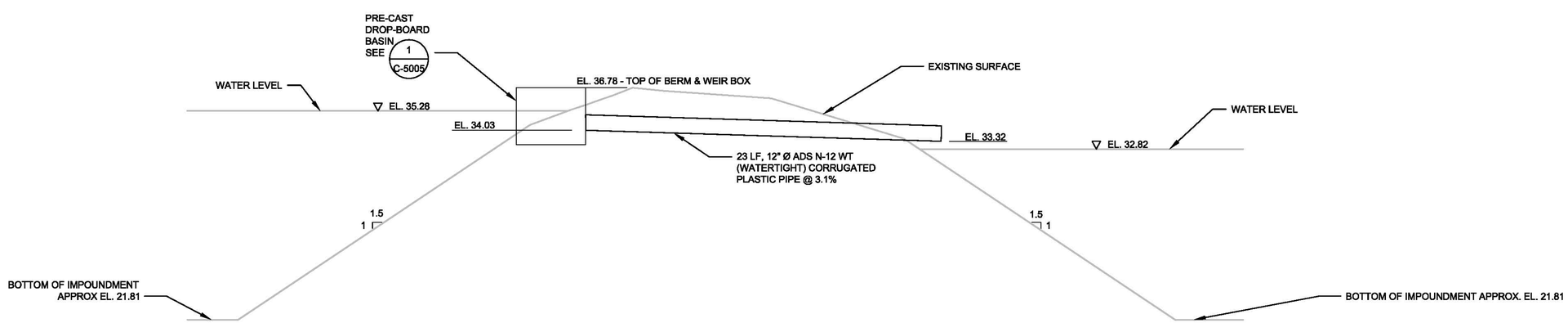

A SECTION

1" = 4'-0"

RICHARD P. TRAVER

N.J. PROFESSIONAL ENGINEER
NO. 28300

©CH2M HILL 2010. ALL RIGHTS RESERVED.

NO.	DATE	REVISION	BY	APVD
0	2013/08/29	ISSUED FOR CONSTRUCTION	RT	Y

DSGN R. TRAVER | DR E. KITZMILLER | CHK R. TRAVER | APVD R. TRAVER

REUSE OF DOCUMENTS: THIS DOCUMENT, AND THE IDEAS AND DESIGNS INCORPORATED HEREIN, AS AN INSTRUMENT OF PROFESSIONAL SERVICE, IS THE PROPERTY OF CH2M HILL AND IS NOT TO BE USED, IN WHOLE OR IN PART, FOR ANY OTHER PROJECT WITHOUT THE WRITTEN AUTHORIZATION OF CH2MHILL.

1717 ARCH ST., SUITE 4400
PHILADELPHIA, PA 19103
PH (215) 563-4220 FAX (215) 563-3828
EB 0000072 AA 001992

IMPOUNDMENTS 1 AND 2
PILOT DEMONSTRATION STUDY
WYETH HOLDINGS CORPORATION
AMERICAN CYANAMID SUPERFUND SITE
OTTO KIRCHHOFF PLACE
BRIDGEWATER, NJ

CH2MHILL

CIVIL
CROSS-FLOW PIPE UTILITY PLAN AND SECTION

VERIFY SCALE
BAR IS ONE INCH ON ORIGINAL DRAWING.
0 1"

DATE	2013/08/29
PROJ	472109
DWG	C-2801
SHEET	7

FILE NAME: 472109-001-C-2801.dwg PLOT DATE: 10/23/2013 2:48 PM

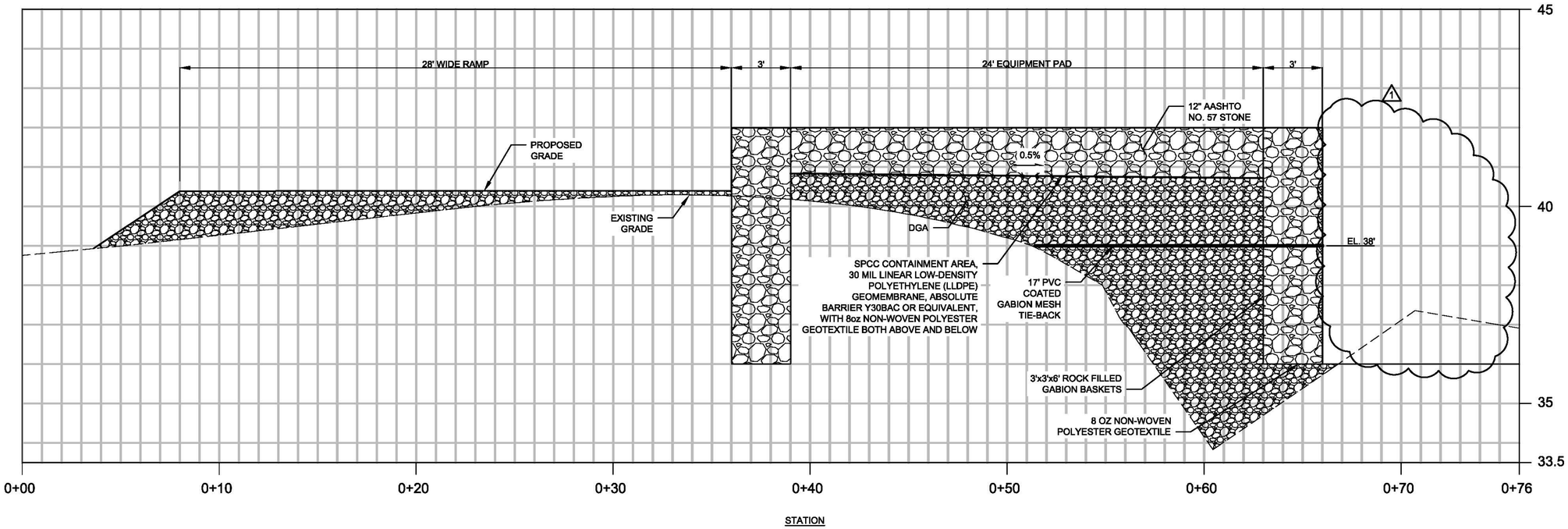

A C-2001 **SECTION**
HORIZONTAL: 1"=3'
VERTICAL: 1"=1.5'

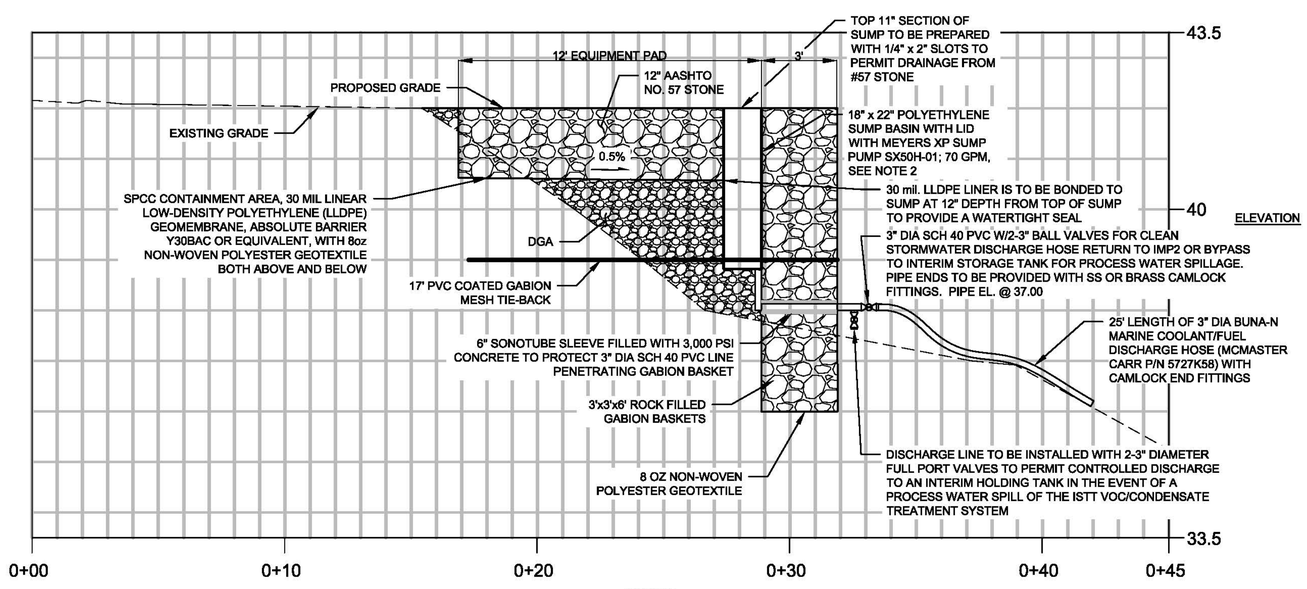

B C-2001 **SECTION**
HORIZONTAL: 1"=3'
VERTICAL: 1"=1.5'

GENERAL NOTES

1. CALCULATED DEPRESSION STORAGE AREA ABOVE SPCC LINER = 8,976 GALLONS.
2. CH2M HILL IS RESPONSIBLE FOR THE SPCC CONTAINMENT AND SPILL MANAGEMENT. PUMP WILL BE SPECIFIED AND PROVIDED BY CH2M HILL'S BENCH CONSTRUCTION SUBCONTRACTOR. TERRATHERM WILL BE REQUIRED TO PROVIDE AN APPROPRIATE ELECTRICAL LINE CONNECTION TO THE PUMP DISCONNECT BOX.
3. THE 500-YEAR FLOOD WATER SURFACE ELEVATION IS 41.71' NAVD 88

NO.	DATE	DSGN	DR	CHK	APVD	BY	REVISION
1	2013/10/23	R. TRAVER	A. BROWN	M. HOLMQUIST	APVD	RT	REVISION #1
0	2013/10/23					RT	ISSUED FOR CONSTRUCTION

RICHARD P. TRAVER
N.J. PROFESSIONAL ENGINEER NO. 28300

©CH2M HILL 2010. ALL RIGHTS RESERVED.

1717 ARCH ST., SUITE 4400
PHILADELPHIA, PA 19103
PH (215) 563-4220 FAX (215) 563-3828
EB 0000072 AA 001992

IMPOUNDMENTS 1 AND 2
PILOT DEMONSTRATION STUDY
WYETH HOLDINGS CORPORATION
AMERICAN CYANAMID SUPERFUND SITE
2 DOUGLAS AVENUE
BRIDGEWATER, NJ

CH2MHILL

CIVIL
SECTIONS

REUSE OF DOCUMENTS: THIS DOCUMENT, AND THE IDEAS AND DESIGNS INCORPORATED HEREIN, AS AN INSTRUMENT OF PROFESSIONAL SERVICE, IS THE PROPERTY OF CH2M HILL AND IS NOT TO BE USED, IN WHOLE OR IN PART, FOR ANY OTHER PROJECT WITHOUT THE WRITTEN AUTHORIZATION OF CH2MHILL.

AS SHOWN
VERIFY SCALE
BAR IS ONE INCH ON ORIGINAL DRAWING.
0 1"

DATE	2013/08/29
PROJ	472109
DWG	C-3001
SHEET	8

FILE NAME: 472109-001-C-3001.dwg PLOT DATE: 10/24/2013 10:57 AM

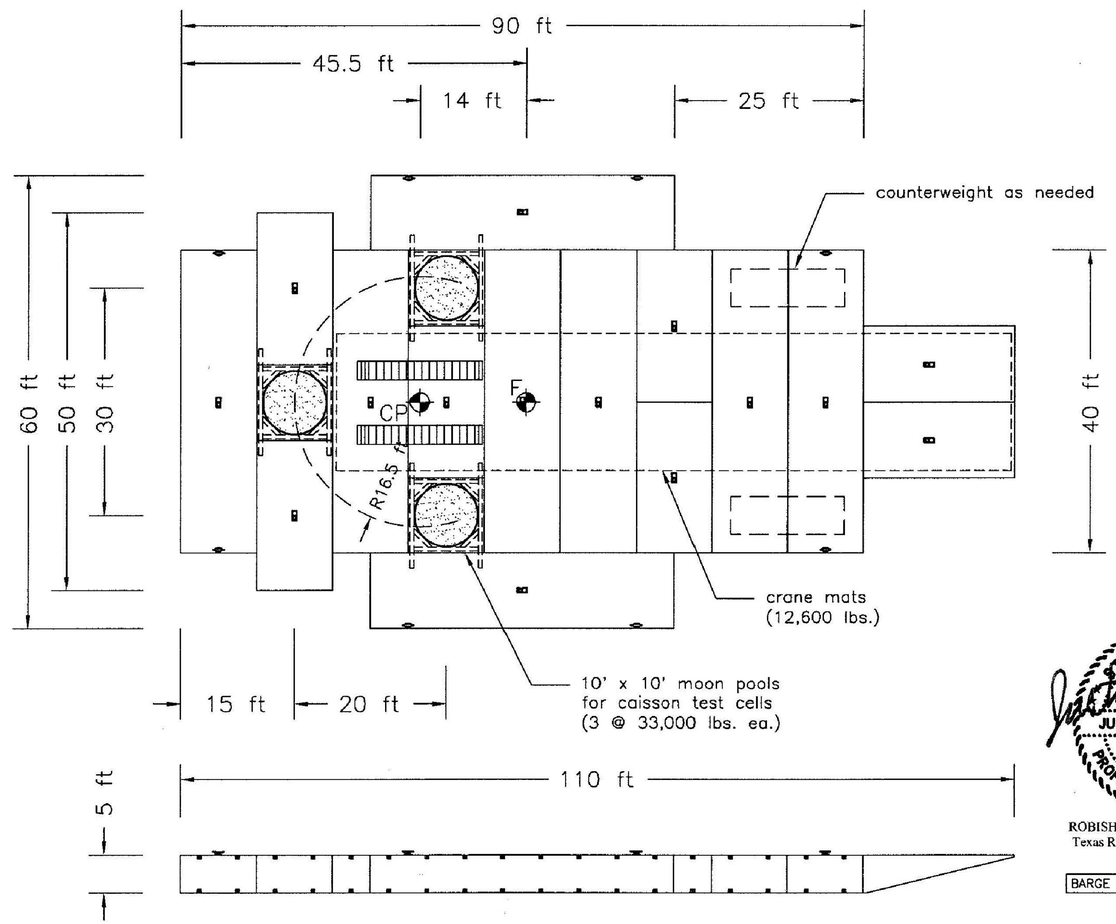

STATE OF TEXAS
JUSTIN R. WARREN
113377
LICENSED
PROFESSIONAL ENGINEER
5/20/13

ROBISHAW ENGINEERING, INC.
Texas Registered Engineering Firm
F-1560

BARGE STATIC STABILITY ONLY

Series S–50 Equipment
8 Quadrafloats, 40' x 10' x 5'
5 Duofloats, 20' x 10' x 5'
2 Loading Ramps, 20' x 10'
8 Deck Cleats

PROPERTY OF ROBISHAW ENGINEERING, INC.

This drawing is confidential and contains trade secrets and other information proprietary to us. Disclosure to you is expressly conditioned upon your assent that it is not to be copied, reproduced or exhibited to other parties, without consent, but is to be used only with reference to contracts or proposals of this company. It or any copies thereof shall be returned promptly upon request.

Robishaw Engineering, Inc.
Houston, Texas

Flexifloat Drill Barge Assembly
CH2M HILL Pilot Demonstration Test Cell
Bridgewater, New Jersey

DRAWN: SS	DATE: 03/22/13	SKETCH NO: PDH–5361A

1 FLEXIFLOAT DRILL BARGE ASSEMBLY

1" = 10'-0"

C-2001

RICHARD P. TRAVER
STATE OF NEW JERSEY
N.J. PROFESSIONAL ENGINEER
NO. 26300

NO.	DATE	DSGN	DR	CHK	APVD	REVISION
0	2013/08/29	R. TRAVER	S. EMEREUWA	R. TRAVER	R. TRAVER	ISSUED FOR CONSTRUCTION
					BY	RT
					APVD	Y

©CH2M HILL 2010. ALL RIGHTS RESERVED.

1717 ARCH ST - SUITE 4400
PHILADELPHIA, PA 19103
PH (215) 563-4220 FAX (215) 563-3828
EB 0000072 AA 001992

IMPOUNDMENTS 1 AND 2
PILOT DEMONSTRATION STUDY
WYETH HOLDINGS CORPORATION
AMERICAN CYANAMID SUPERFUND SITE
PROPULSION LANE
BRIDGEWATER, NJ

CH2MHILL

CIVIL
FLEXIFLOAT DRILL BARGE ASSEMBLY

REUSE OF DOCUMENTS: THIS DOCUMENT, AND THE IDEAS AND DESIGNS INCORPORATED HEREIN, AS AN INSTRUMENT OF PROFESSIONAL SERVICE, IS THE PROPERTY OF CH2M HILL AND IS NOT TO BE USED, IN WHOLE OR IN PART, FOR ANY OTHER PROJECT WITHOUT THE WRITTEN AUTHORIZATION OF CH2MHILL.

1"=20'
VERIFY SCALE
BAR IS ONE INCH ON ORIGINAL DRAWING.
0 1"

DATE	2013/08/29
PROJ	472109
DWG	C-5002
SHEET	9

0 10 20 30
1"=10"

FILE NAME: 472109-001-C-5002.dwg PLOT DATE: 10/23/2013 3:07 PM

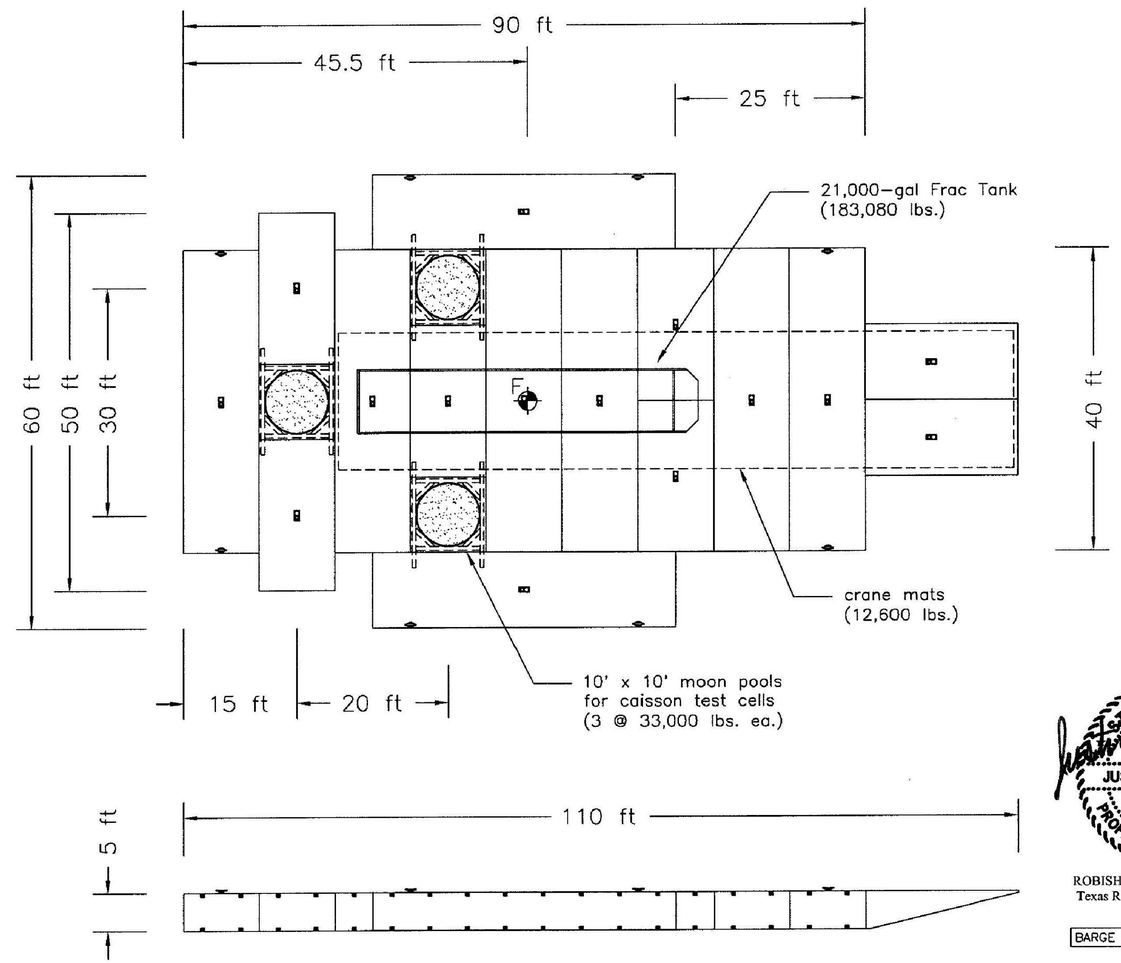

STATE OF TEXAS
JUSTIN R. WARREN
113377
LICENSED
PROFESSIONAL ENGINEER
5/20/13

ROBISHAW ENGINEERING, INC.
Texas Registered Engineering Firm
F-1560

BARGE STATIC STABILITY ONLY

Series S-50 Equipment
8 Quadrafloats, 40' x 10' x 5'
5 Duofloats, 20' x 10' x 5'
2 Loading Ramps, 20' x 10'
8 Deck Cleats

F – Center of Flotation

PROPERTY OF ROBISHAW ENGINEERING, INC.

This drawing is confidential and contains trade secrets and other information proprietary to us. Disclosure to you is expressly conditioned upon your assent that it is not to be copied, reproduced or exhibited to other parties, without consent, but is to be used only with reference to contracts or proposals of this company. It or any copies thereof shall be returned promptly upon request.

Robishaw Engineering, Inc.
Houston, Texas

Flexifloat Drill Barge Assembly
CH2M HILL Pilot Demonstration Test Cell
Bridgewater, New Jersey

DRAWN: SS | DATE: 05/17/13 | SKETCH NO: PDH-5361B

1 FLEXIFLOAT DRILL BARGE ASSEMBLY
1" = 10'-0"
C-2001

0 10 20 30
1"=10"

RICHARD P. TRAVER
STATE OF NEW JERSEY
N.J. PROFESSIONAL ENGINEER
NO. 26300

NO.	DATE	REVISION	BY	APVD
0	2013/08/29	ISSUED FOR CONSTRUCTION	RT	Y

DSGN R. TRAVER | DR S. EMEREUWA | CHK R. TRAVER | APVD R. TRAVER

©CH2M HILL 2010. ALL RIGHTS RESERVED.

1717 ARCH ST., SUITE 4400
PHILADELPHIA, PA 19103
PH (215) 563-4220 FAX (215) 563-3828
EB 0000072 AA 001992

IMPOUNDMENTS 1 AND 2
PILOT DEMONSTRATION STUDY
WYETH HOLDINGS CORPORATION
AMERICAN CYANAMID SUPERFUND SITE
2201 HIGHWAY 202/206
BRIDGEWATER, NJ

CH2MHILL

CIVIL
FLEXIFLOAT DRILL BARGE ASSEMBLY

REUSE OF DOCUMENTS: THIS DOCUMENT, AND THE IDEAS AND DESIGNS INCORPORATED HEREIN, AS AN INSTRUMENT OF PROFESSIONAL SERVICE, IS THE PROPERTY OF CH2M HILL AND IS NOT TO BE USED, IN WHOLE OR IN PART, FOR ANY OTHER PROJECT WITHOUT THE WRITTEN AUTHORIZATION OF CH2MHILL.

VERIFY SCALE
BAR IS ONE INCH ON ORIGINAL DRAWING.
0 1"

DATE	2013/08/29
PROJ	472109
DWG	C-5003
SHEET	10

FILE NAME: 472109-001-C-5003.dwg PLOT DATE: 10/23/2013 3:10 PM

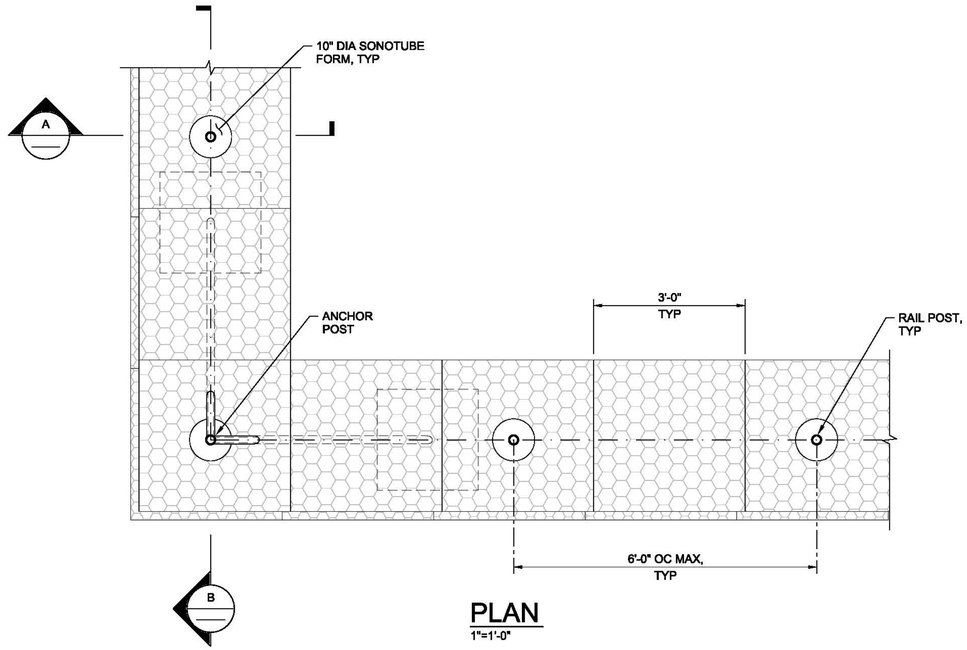

PLAN
1"=1'-0"

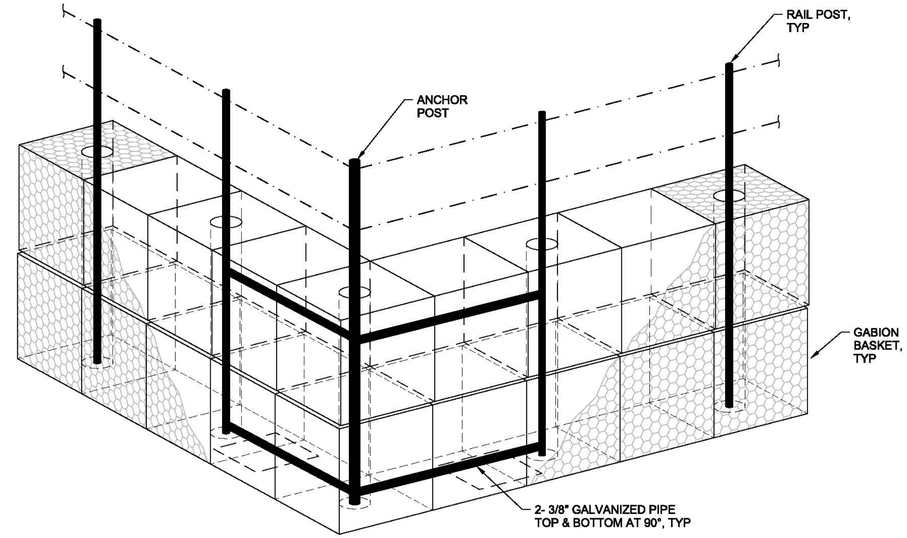

ISOMETRIC VIEW
NTS

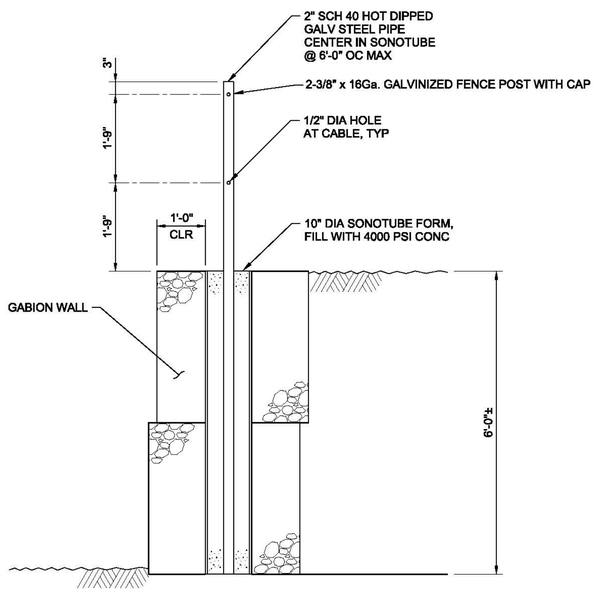

NOTES:
1. RAILING SHALL BE PRE-TENSIONED TO 1,200 POUNDS.
2. PROVIDE ALL REQUIRED TURNBUCKLES, EYES, AND OTHER FITTINGS. FITTINGS, ATTACHMENTS AND SPLICES SHALL BE CAPABLE OF DEVELOPING THE FULL CABLE BREAK STRENGTH.
3. PLACE POST PRIOR TO FILLING GABIONS WITH RIP-RAP

A GABION WALL RAILING
1 1/2"=1'-0"

C-2001

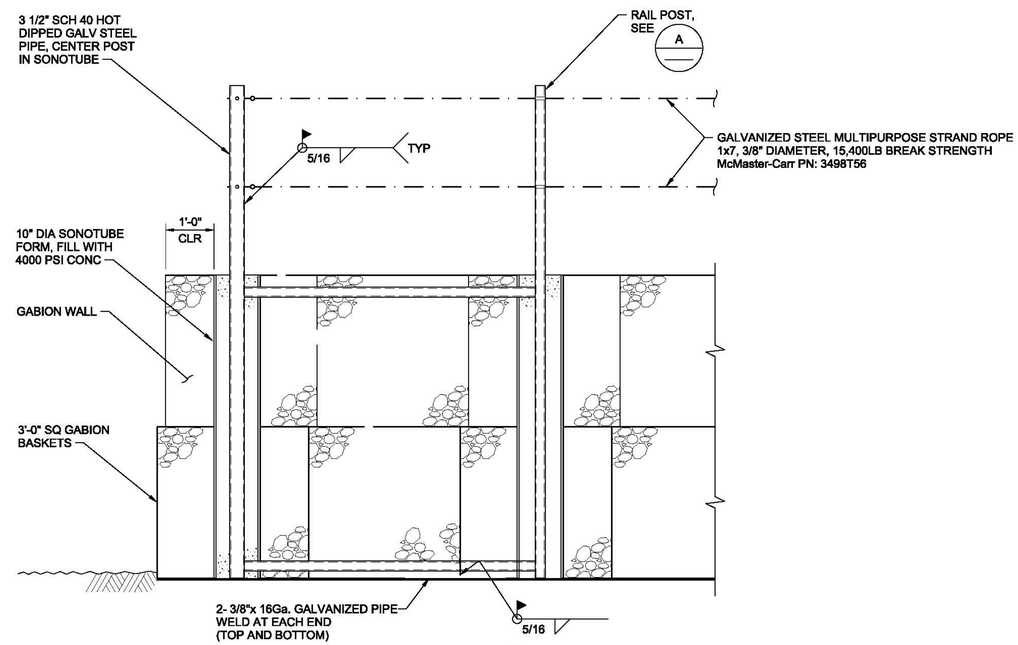

NOTES:
1. FOR INFORMATION NOT SHOWN, SEE A
2. TRIM PIPE BRACE TO FIT IN FIELD.
3. PROVIDE ANCHOR AT ENDS OF RAILING AND EACH SIDE OF OPENINGS IN RAILING.

B GABION WALL RAILING ANCHOR
1 1/2"=1'-0"

C-2001

NO.	DATE	DSGN	DR	CHK	APVD	BY	APVD	REVISION
1	2013/10/25	R. TRAVER	J. HOLMQUIST	M. HOLMQUIST	R. TRAVER	RT	Y	REVISION #1
0	2013/08/29					RT	Y	ISSUED FOR CONSTRUCTION

RICHARD P. TRAVER
N.J. PROFESSIONAL ENGINEER NO. 26300

©CH2M HILL 2011. ALL RIGHTS RESERVED.

1717 ARCH ST., SUITE 4400
PHILADELPHIA, PA 19103
PH (215) 563-4220 FAX (215) 563-3828

IMPOUNDMENTS 1 AND 2
PILOT DEMONSTRATION STUDY
WYETH HOLDINGS CORPORATION
AMERICAN CYANAMID CORPORATION GROUND SITE
20 POLHEMUS LANE
BRIDGEWATER, NJ

CH2MHILL®

CIVIL
EQUIPMENT BENCH
GABION BASKET AND
SAFETY RAIL DETAILS

REUSE OF DOCUMENTS: THIS DOCUMENT, AND THE IDEAS AND DESIGNS INCORPORATED HEREIN, AS AN INSTRUMENT OF PROFESSIONAL SERVICE, IS THE PROPERTY OF CH2M HILL AND IS NOT TO BE USED, IN WHOLE OR IN PART, FOR ANY OTHER PROJECT WITHOUT THE WRITTEN AUTHORIZATION OF CH2M HILL.

AS SHOWN
VERIFY SCALE
BAR IS ONE INCH ON ORIGINAL DRAWING.
0 1"

DATE	2013/08/29
PROJ	472109
DWG	C-5004
SHEET	11

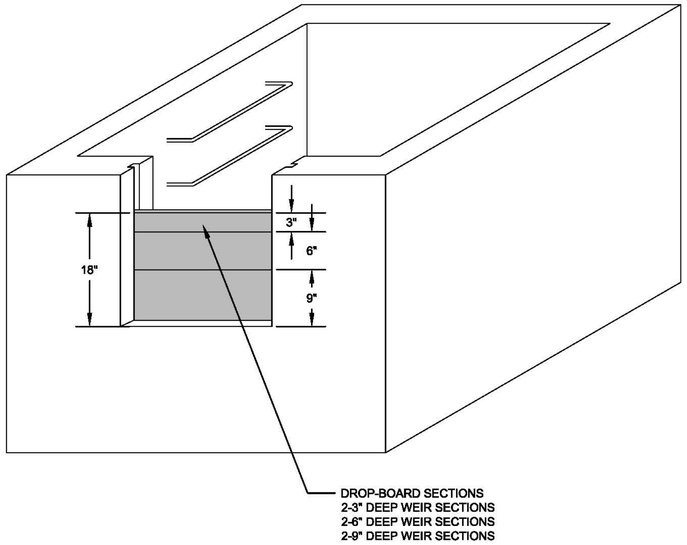

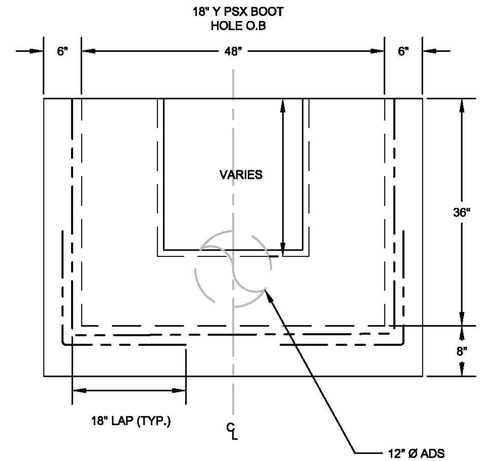

SECTION

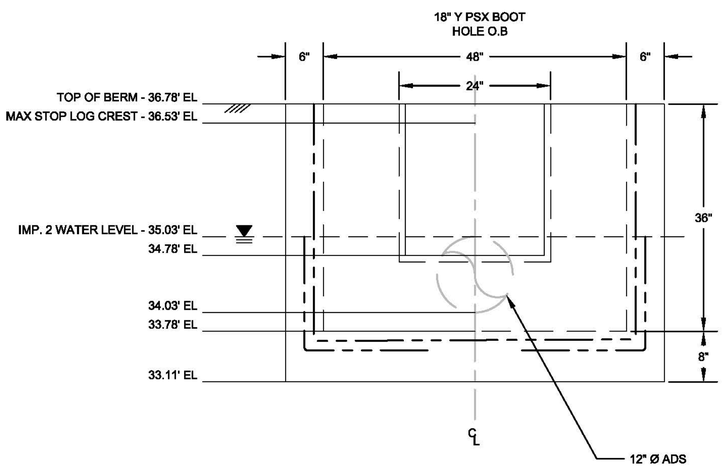

ELEVATIONS

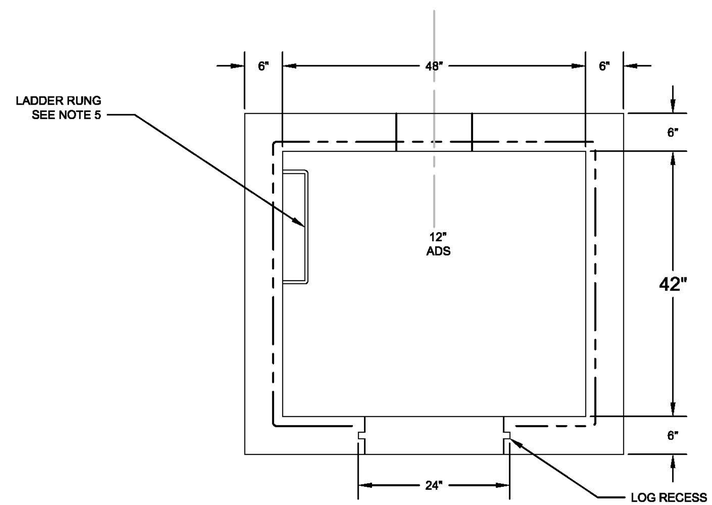

PLAN VIEW

1 42" x 48" PRE-CAST DROP-BOARD BASIN
1" = 1'-0"
C-2801

NOTES:

1. CONCRETE: 4,500 PSI @ 28 DAYS.
2. REINFORCING: AS SPECIFIED, GRADE 60 REBAR.
3. STEPS: DOT APPROVED, STEEL REINFORCED POLYPROPLENE COATED.
4. SEE DRAWING C-2801 FOR DETAILS NOT SHOWN.
5. LADDER RUNGS: DOT APPROVED, STEEL REINFORCED COPOLYMER PROPOYLENE, 1/2" Ø REINFORCEMENT STEEL BAR AS PER ASTM A 615, GRADE 60, WITH POLYPROPYLENE COATING (CLASSIFICATION PP0344B33534Z02) AS PER ASTM D 4101

GROUND FLOOR GWTP: 42.76-FT
NW CORNER IMPOUNDMENT #2: 37.11-FT
ELEVATION NORTH LAYDOWN AREA: 28.13-FT
CENTER BERM WHERE EQUALIZATION PIPE IS LOCATED: 36.78-FT
TOP OF CROSS CONNECT PIPE:
IMPOUNDMENT #1 SIDE: 35.93-FT
IMPOUNDMENT #2 SIDE: 35.28-FT
TOP OF H2O IMPOUNDMENT #1: 32.82-FT
TOP OF H2O IMPOUNDMENT #2: 35.03-FT

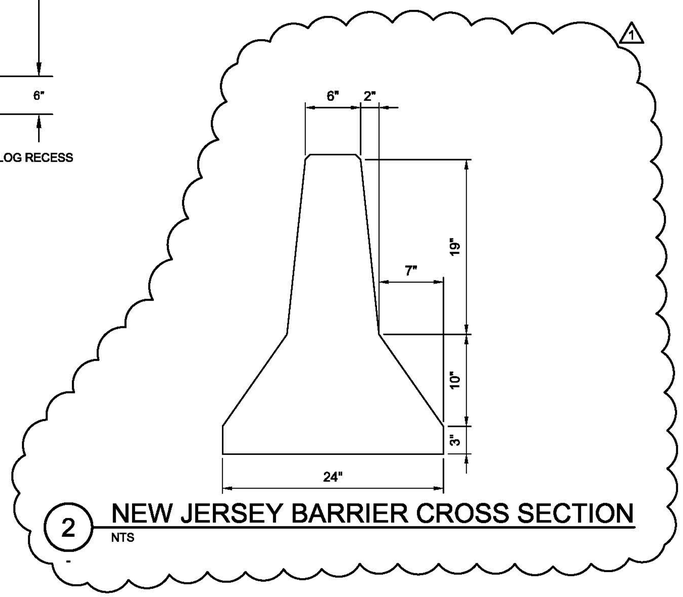

2 NEW JERSEY BARRIER CROSS SECTION
NTS

0 1 2 3
1"=1'-0"

RICHARD P. TRAVER
N.J. PROFESSIONAL ENGINEER
NO. 28300

NO.	DATE	DSGN	DR	CHK	APVD	BY	REVISION
1	2013/10/23	R. TRAVER	E. KITZMILLER	R. TRAVER	R. TRAVER	RT	REVISION #1
0	2013/08/29					RT	ISSUED FOR CONSTRUCTION

APVD BY Y
RT Y

1717 ARCH ST., SUITE 4400
PHILADELPHIA, PA 19103
PH (215) 563-4220 FAX (215) 563-3828
EB 0000072 AA 001992

IMPOUNDMENTS 1 AND 2
PILOT DEMONSTRATION STUDY
WYETH HOLDINGS CORPORATION
AMERICAN CYANAMID SUPERFUND SITE
2401 CONCHES LANE
BRIDGEWATER, NJ

CH2MHILL

CIVIL
CIVIL DETAILS

REUSE OF DOCUMENTS: THIS DOCUMENT, AND THE DEAS AND DESIGNS INCORPORATED HEREIN, AS AN INSTRUMENT OF PROFESSIONAL SERVICE, IS THE PROPERTY OF CH2M HILL AND IS NOT TO BE USED, IN WHOLE OR IN PART, FOR ANY OTHER PROJECT WITHOUT THE WRITTEN AUTHORIZATION OF CH2MHILL.
©CH2M HILL 2010. ALL RIGHTS RESERVED.

VERIFY SCALE
BAR IS ONE INCH ON ORIGINAL DRAWING.
0 1"

DATE	2013/08/29
PROJ	472109
DWG	C-5005
SHEET	12

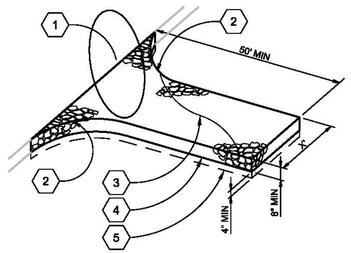

1. EXISTING PAVEMENT OR APPROVED ACCESS POINT.
2. 25' R, MIN.
3. CLEAN PIT RUN OR NJ DOT STANDARD NO. 2 STONE.
4. FREE DRAINING EXCAVATED MATERIAL.
5. GEOTEXTILE

NOTES:

A. ADDITION GRAVEL SHALL BE ADDED PERIODICALLY TO MAINTAIN PROPER FUNCTION OF THE PAD.

B. REMOVE GRAVEL ENTRANCE AND REPLACE WITH NEW BASE COURSE PRIOR TO COMPLETION OF ACCESS ROAD.

1 GRAVEL CONSTRUCTION ENTRANCE

NTS

C-2101

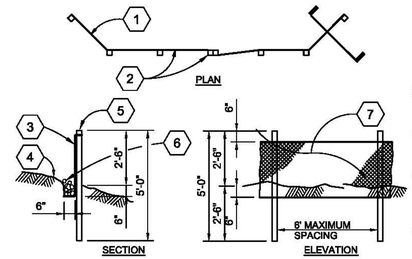

1. ANGLE BOTH ENDS OF FILTER FABRIC FENCE TO ASSURE SOIL IS TRAPPED
2. INTERLOCKED 2"x4" POSTS AND ATTACH
3. FILTER FABRIC MATERIAL
4. NEWLY GRADED OR DISTURBED SLOPE
5. USE STITCHED LOOPS OVER 2"x4" POSTS
6. PROVIDE BASE COURSE BACKFILL IN TRENCH
7. FILTER FABRIC MATERIAL, 36" WIDE ROLLS

NOTES:

A. BURY BOTTOM OF FILTER FABRIC 6" VERTICALLY BELOW FINISHED GRADE.

B. 2"x4" DOUGLAS FIR OR STEEL FENCE POSTS.

C. STITCHED LOOPS TO BE INSTALLED DOWNHILL SIDE OF SLOPE.

D. COMPACT ALL AREAS OF FILTER FABRIC TRENCH.

2 SILT FENCE

NTS

C-2101

RICHARD P. TRAVER

NJ. PROFESSIONAL ENGINEER NO. 28300

NO.	DATE	DR	CHK	APVD	BY	APVD
0	2013/08/29	A. BROWN	R. TRAVER	R. TRAVER	RT	Y
		REVISION				
		ISSUED FOR CONSTRUCTION				

DSGN R. TRAVER

1717 ARCH ST. - SUITE 4400
PHILADELPHIA, PA 19103
PH (215) 963-4220 FAX (215) 563-3828
EB 0000072 AA 001992

IMPOUNDMENTS 1 AND 2
PILOT DEMONSTRATION STUDY
WYETH HOLDINGS CORPORATION
AMERICAN CYANAMID SUPERFUND SITE
470 MOUNTAIN AVE
BRIDGEWATER, NJ

CH2MHILL

CIVIL

SITE SOIL/SEDIMENT EROSION CONTROL DETAILS

1"=20'

VERIFY SCALE

BAR IS ONE INCH ON ORIGINAL DRAWING.
0 1"

DATE	2013/08/29
PROJ	472109
DWG	C-5101
SHEET	13

REUSE OF DOCUMENTS: THIS DOCUMENT, AND THE IDEAS AND DESIGNS INCORPORATED HEREIN, AS AN INSTRUMENT OF PROFESSIONAL SERVICE, IS THE PROPERTY OF CH2M HILL AND IS NOT TO BE USED, IN WHOLE OR IN PART, FOR ANY OTHER PROJECT WITHOUT THE WRITTEN AUTHORIZATION OF CH2MHILL.

©CH2M HILL 2010. ALL RIGHTS RESERVED.

FILE NAME: 472109-001-C-5101.dwg PLOT DATE: 10/23/2013 3:23 PM

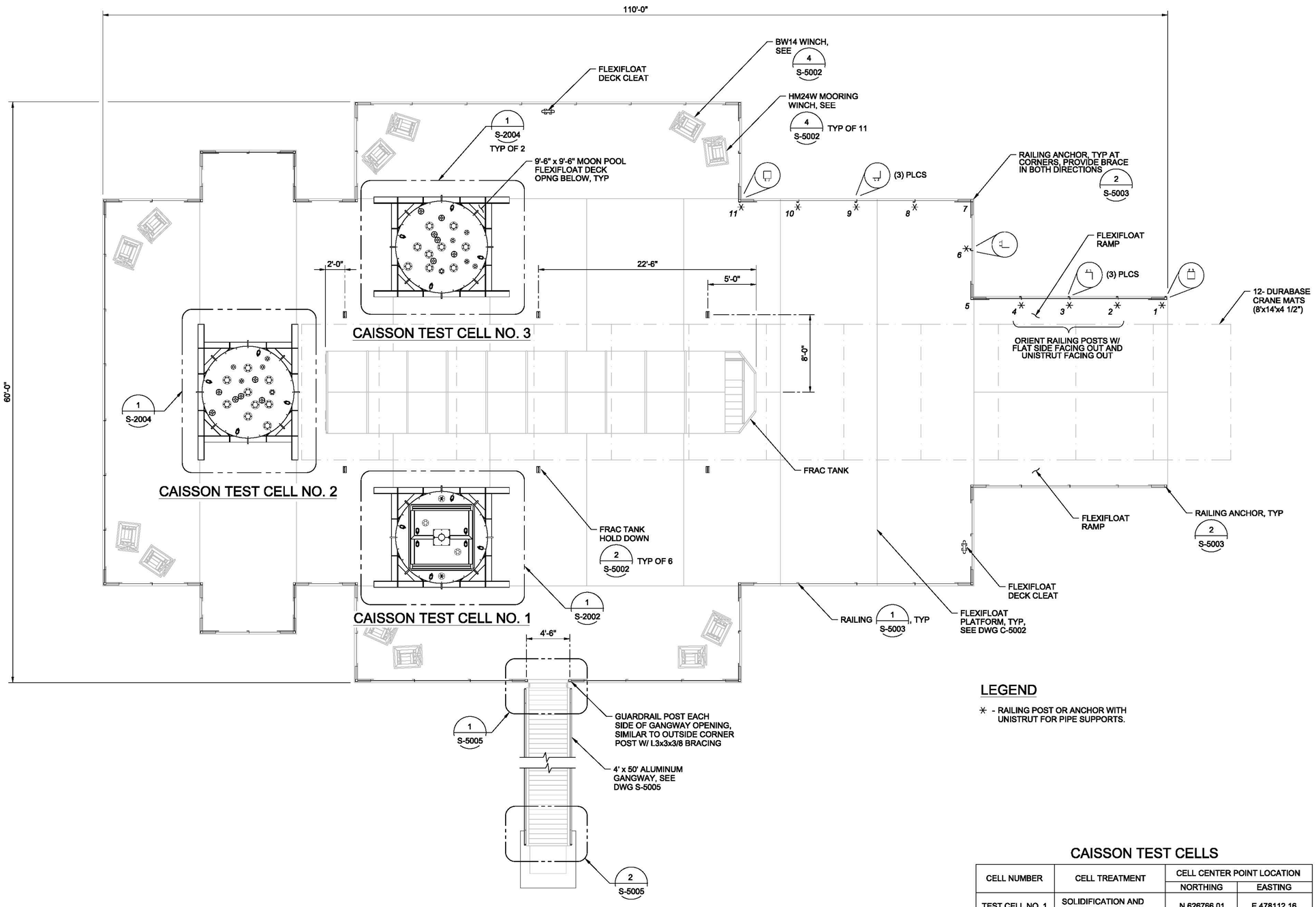

LEGEND

✳ - RAILING POST OR ANCHOR WITH UNISTRUT FOR PIPE SUPPORTS.

NOTES:
1. PAINT ALL TRIPPING HAZARDS BRIGHT ORANGE.
2. RELOCATE SUPPLIED DECK CLEATS AS NECESSARY FOR PLACEMENT OF STORM MOORING LINES.

OVERALL CAISSON PLAN

3/16"=1'-0"

CAISSON TEST CELLS

CELL NUMBER	CELL TREATMENT	CELL CENTER POINT LOCATION	
		NORTHING	EASTING
TEST CELL NO. 1	SOLIDIFICATION AND STABLIZATION ONLY	N 626766.01	E 478112.16
TEST CELL NO. 2	THERMAL TREATMENT WITH HOMOGENIZATION ONLY	N 626745.08	E 478125.83
TEST CELL NO. 3	THERMAL TREATMENT WITH SOLIDIFICATION AND STABILIZATION	N 626737.81	E 478101.91

RICHARD P. TRAVER
N.J. PROFESSIONAL ENGINEER NO. 26300

NO.	DATE	DSGN	DR	CHK	APVD
0	2013/08/29	H. JOCHIMSEN	R. FOREST	W. BENNETT	R. TRAVER

REVISION: ISSUED FOR CONSTRUCTION

CH2MHILL®
1717 ARCH ST., SUITE 4400
PHILADELPHIA, PA 19103
PH (215) 563-2220 FAX (215) 563-3828

IMPOUNDMENTS 1 AND 2
PILOT DEMONSTRATION STUDY
WYETH HOLDINGS CORPORATION
AMERICAN CYANAMID SUPERFUND SITE
20 POLHEMUS LANE
BRIDGEWATER, NJ

STRUCTURAL
OVERALL CAISSON PLAN

3/16" = 1'-0"
VERIFY SCALE
BAR IS ONE INCH ON ORIGINAL DRAWING.
0 1"

DATE	2013/08/29
PROJ	472109
DWG	S-2001
SHEET	14

REUSE OF DOCUMENTS: THIS DOCUMENT, AND THE IDEAS AND DESIGNS INCORPORATED HEREIN, AS AN INSTRUMENT OF PROFESSIONAL SERVICE, IS THE PROPERTY OF CH2M HILL AND IS NOT TO BE USED, IN WHOLE OR IN PART, FOR ANY OTHER PROJECT WITHOUT THE WRITTEN AUTHORIZATION OF CH2M HILL.
©CH2M HILL 2011. ALL RIGHTS RESERVED.

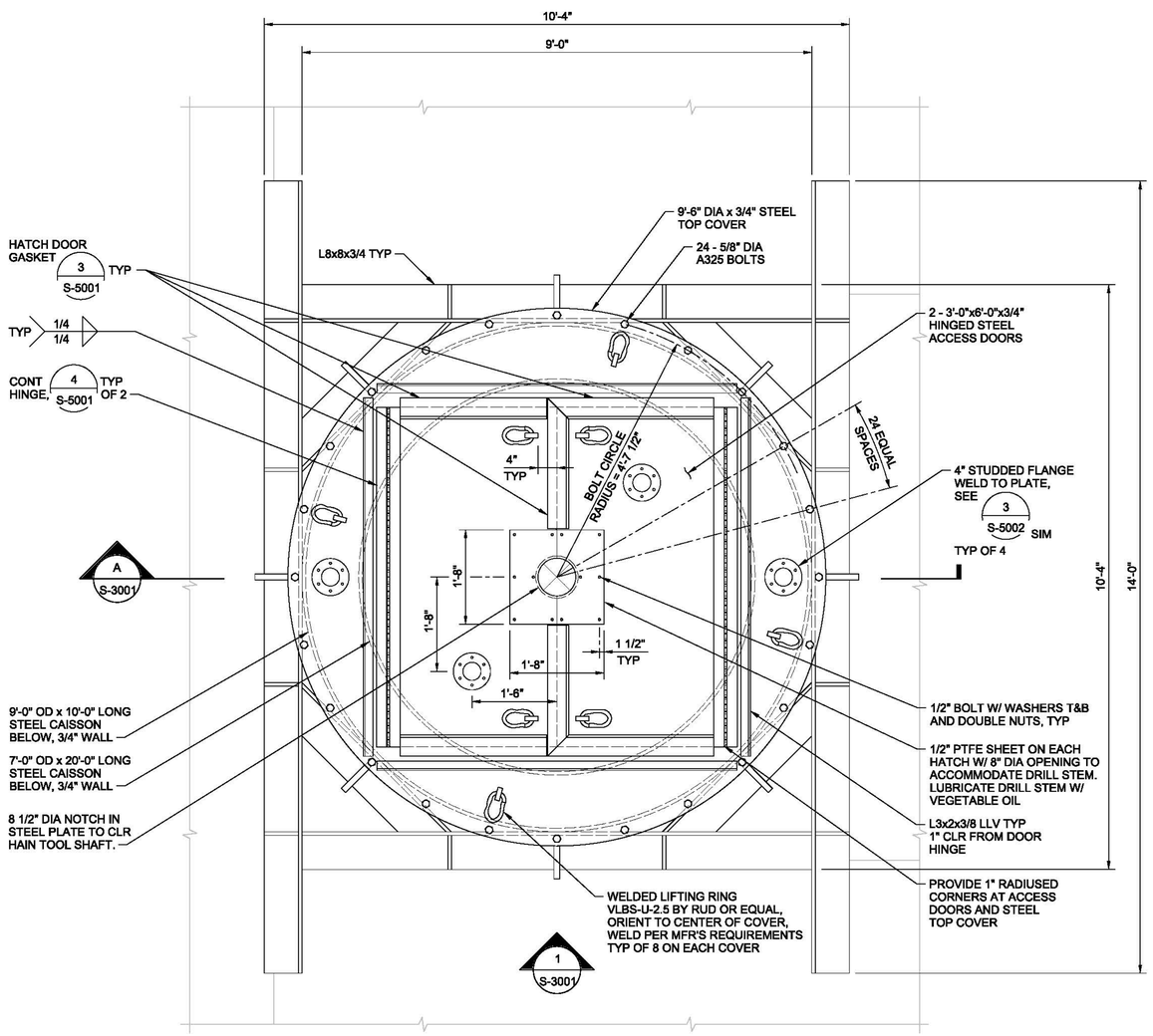

NOTES;

1. 9'-6" DIAMETER x 3/4" STEEL TOP COVER SHALL BE A572 GRADE 50 PLATE.
2. DIMENSIONS ARE NOMINAL UNLESS NOTED OTHERWISE.
3. FABRICATOR SHALL PROVIDE MOUNTING STUDS, NUTS, WASHERS AND 150LB BLIND FLANGES WITH VITON GASKETS FOR ALL STUDDING FLANGES.

1 ISS CAISSON SHROUD COVER - TYPE 1 (2 REQUIRED)

3/4"=1'-0"

S-2001

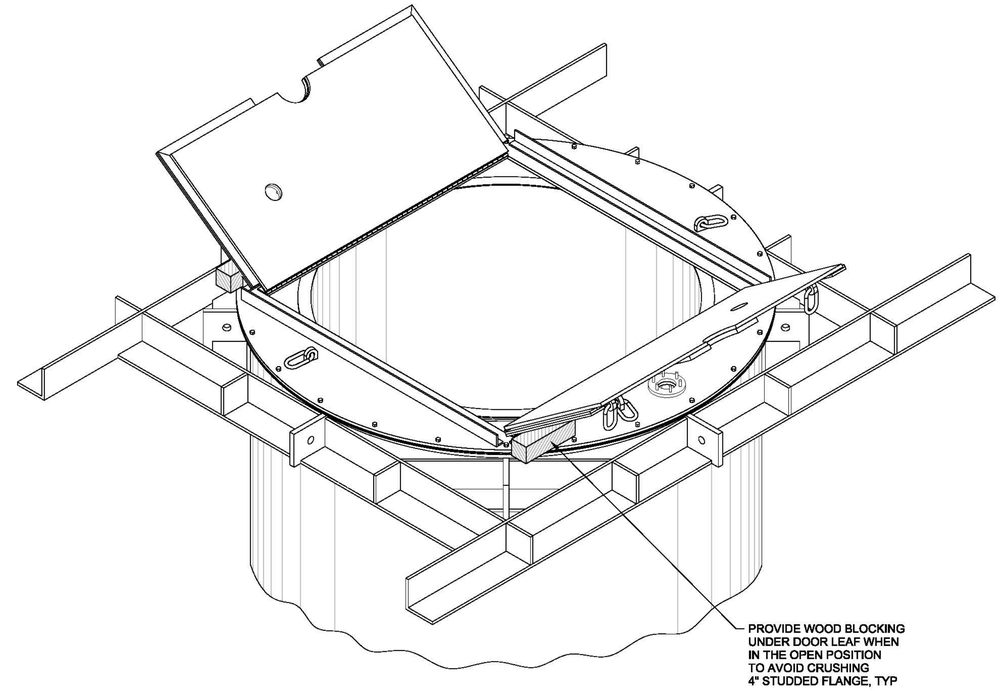

DOORS OPEN

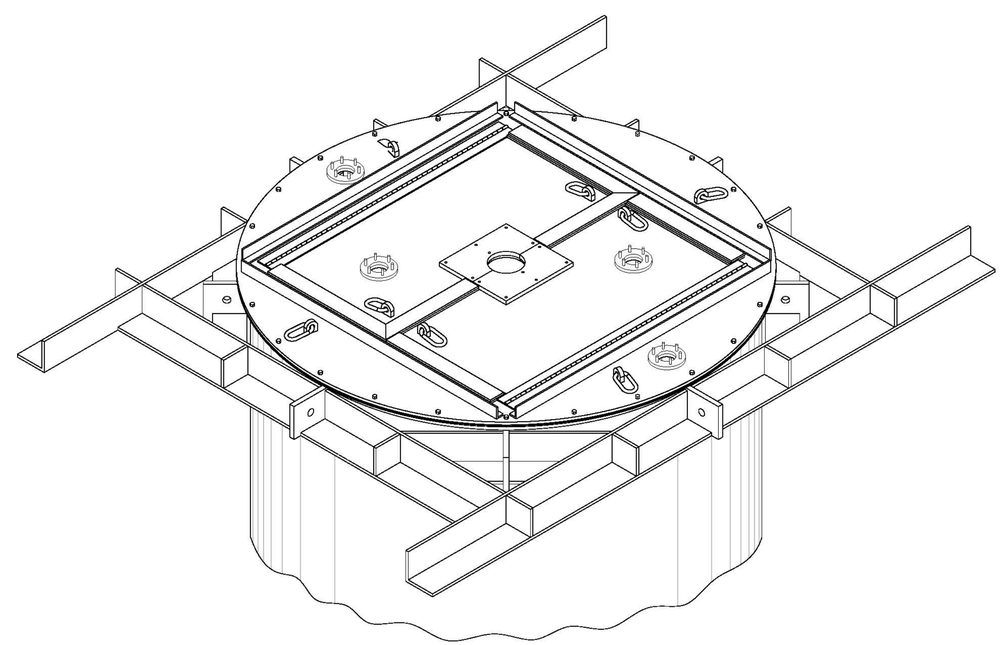

DOORS CLOSED

ISOMETRIC VIEW

3/4"=1'-0"

RICHARD P. TRAVER

N.J. PROFESSIONAL ENGINEER NO. 26300

NO.	DATE	REVISION	BY	APVD
0	2013/08/29	ISSUED FOR CONSTRUCTION	RT	Y

DSGN R. FORREST | DR H. JOCHIMSEN | CHK W. BENNETT | APVD R. TRAVER

1717 ARCH ST - SUITE 4400
PHILADELPHIA, PA 19103
PH (215) 563-4220 FAX (215) 563-3828

IMPOUNDMENTS 1 AND 2
PILOT DEMONSTRATION STUDY
WYETH HOLDINGS CORPORATION
AMERICAN CYANAMID GROUND SITE
20 POLHEMUS LANE
BRIDGEWATER, NJ

CH2MHILL®

STRUCTURAL

CAISSON SHROUD COVER - ISS
PLAN AND ISOMETRIC VIEW

3/4" = 1'-0"

VERIFY SCALE

BAR IS ONE INCH ON ORIGINAL DRAWING.
0 1"

DATE	2013/06/05
PROJ	465352
DWG	S-2002
SHEET	15

REUSE OF DOCUMENTS: THIS DOCUMENT, AND THE IDEAS AND DESIGNS INCORPORATED HEREIN, AS AN INSTRUMENT OF PROFESSIONAL SERVICE, IS THE PROPERTY OF CH2M HILL AND IS NOT TO BE USED, IN WHOLE OR IN PART, FOR ANY OTHER PROJECT WITHOUT THE WRITTEN AUTHORIZATION OF CH2M HILL.
©CH2M HILL 2011. ALL RIGHTS RESERVED.

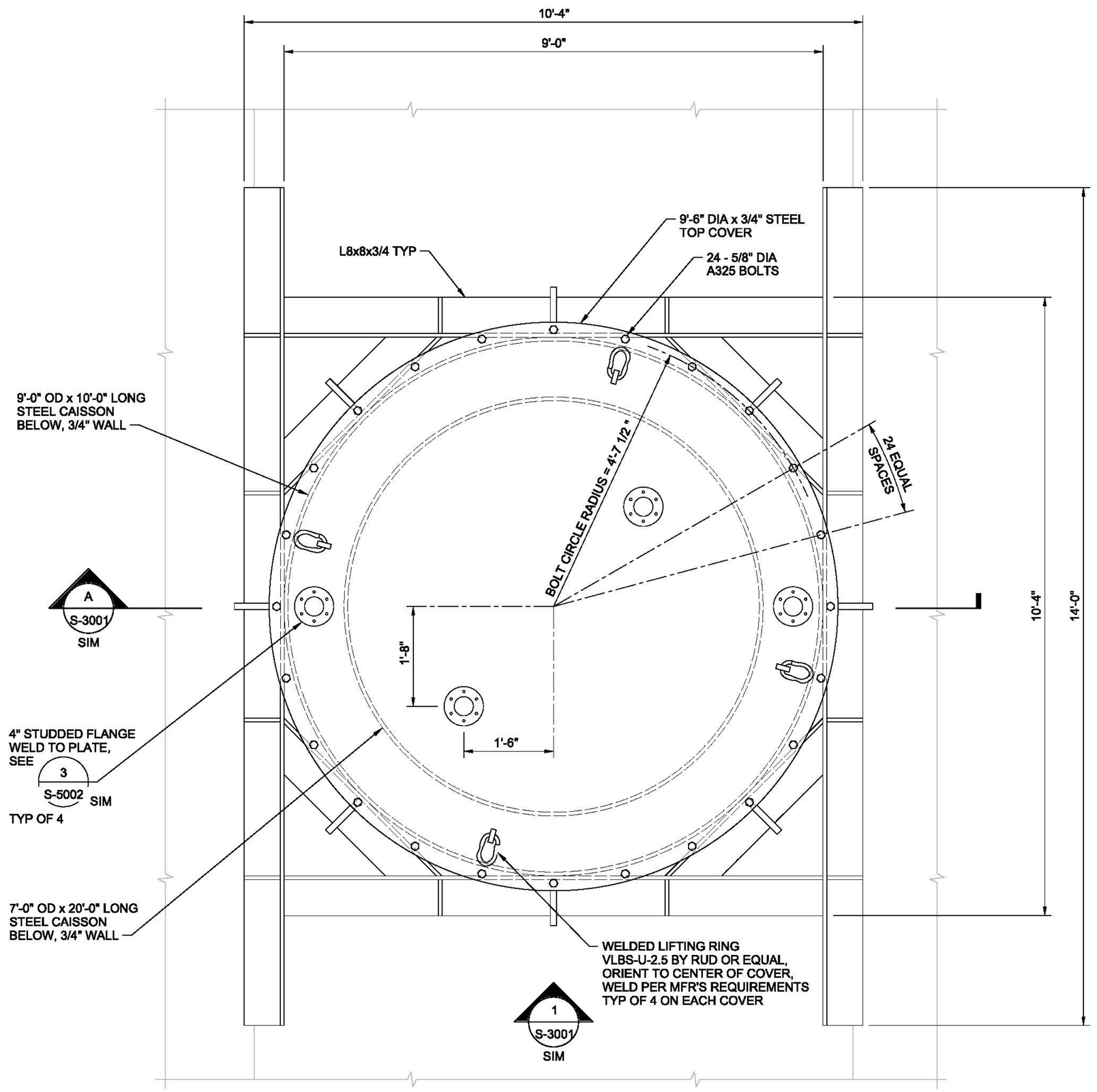

NOTES:

1. 9'-6" DIAMETER x 3/4" STEEL TOP COVER SHALL BE A572 GRADE 50 PLATE.
2. DIMENSIONS ARE NOMINAL UNLESS NOTED OTHERWISE.
3. FABRICATOR SHALL PROVIDE MOUNTING STUDS, NUTS, WASHERS AND 150LB BLIND FLANGES WITH VITON GASKETS FOR ALL STUDDING FLANGES.

1 BLANK CAISSON SHROUD COVER - TYPE 2 (1 REQUIRED)

3/4"=1'-0"

S-2001

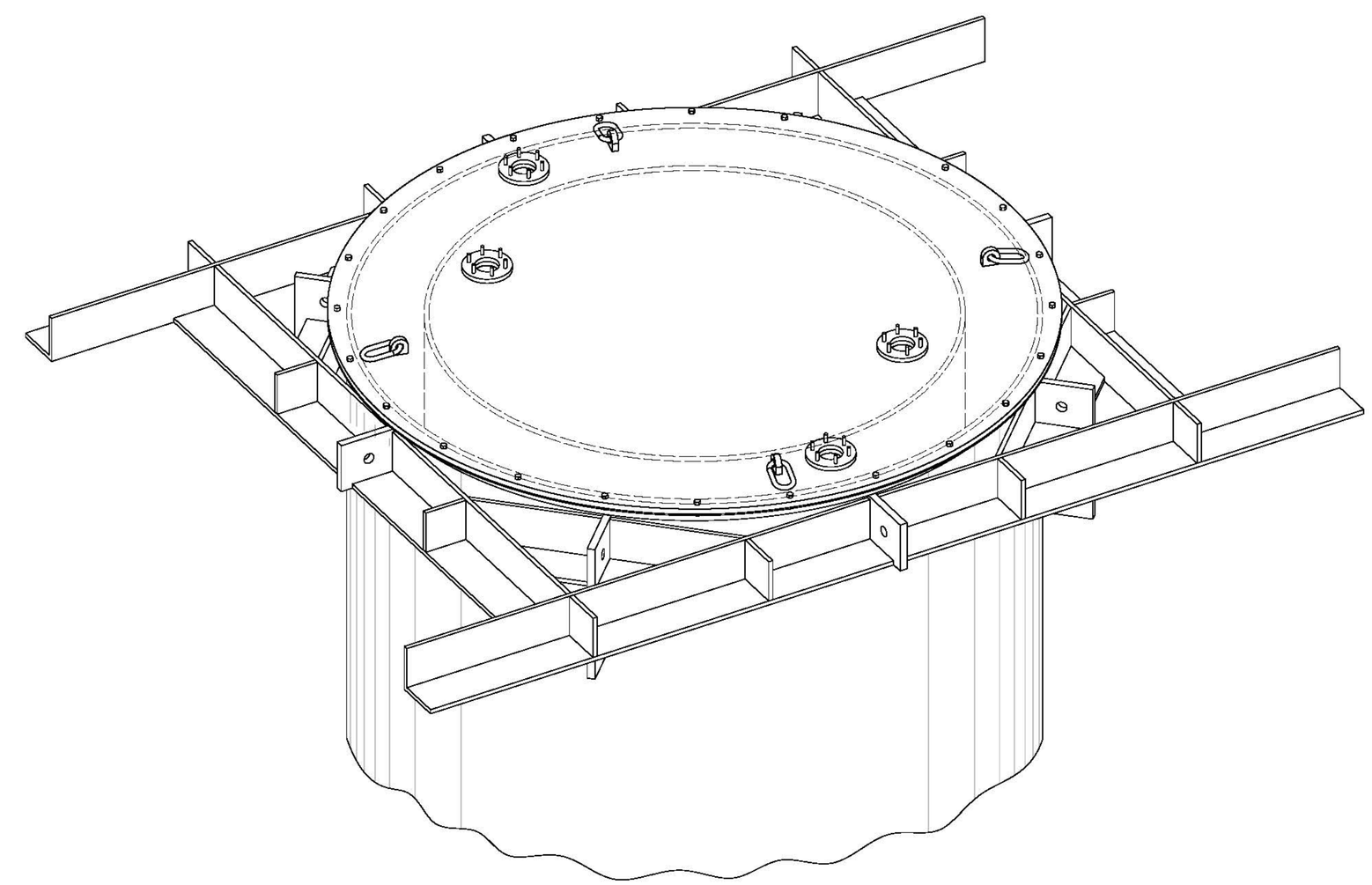

ISOMETRIC VIEW

3/4"=1'-0"

RICHARD P. TRAVER

N.J. PROFESSIONAL ENGINEER NO. 26300

NO.	DATE	REVISION	BY	APVD
0	2013/08/29	ISSUED FOR CONSTRUCTION	RT	Y

DSGN R. FORREST | DR H. JOCHIMSEN | CHK W. BENNETT | APVD R. TRAVER

REUSE OF DOCUMENTS: THIS DOCUMENT, AND THE IDEAS AND DESIGNS INCORPORATED HEREIN, AS AN INSTRUMENT OF PROFESSIONAL SERVICE, IS THE PROPERTY OF CH2M HILL AND IS NOT TO BE USED, IN WHOLE OR IN PART, FOR ANY OTHER PROJECT WITHOUT THE WRITTEN AUTHORIZATION OF CH2M HILL.

©CH2M HILL 2011. ALL RIGHTS RESERVED.

1717 ARCH ST. - SUITE 4400
PHILADELPHIA, PA 19103
PH (215) 563-4220 FAX (215) 563-3828

IMPOUNDMENTS 1 AND 2
PILOT DEMONSTRATION STUDY
WYETH HOLDINGS CORPORATION
AMERICAN CYANAMID SUPERFUND SITE
20 POLHEMUS LANE
BRIDGEWATER, NJ

CH2MHILL®

STRUCTURAL

CAISSON SHROUD COVER - BLANK PLAN AND ISOMETRIC VIEW

3/4" = 1'-0"

VERIFY SCALE

BAR IS ONE INCH ON ORIGINAL DRAWING.
0 1"

DATE	2013/08/29
PROJ	465352
DWG	S-2003
SHEET	16

FILENAME: 472109-001-S-2003.dgn PLOT DATE: 10/23/2013 PLOT TIME: 3:35:17 PM

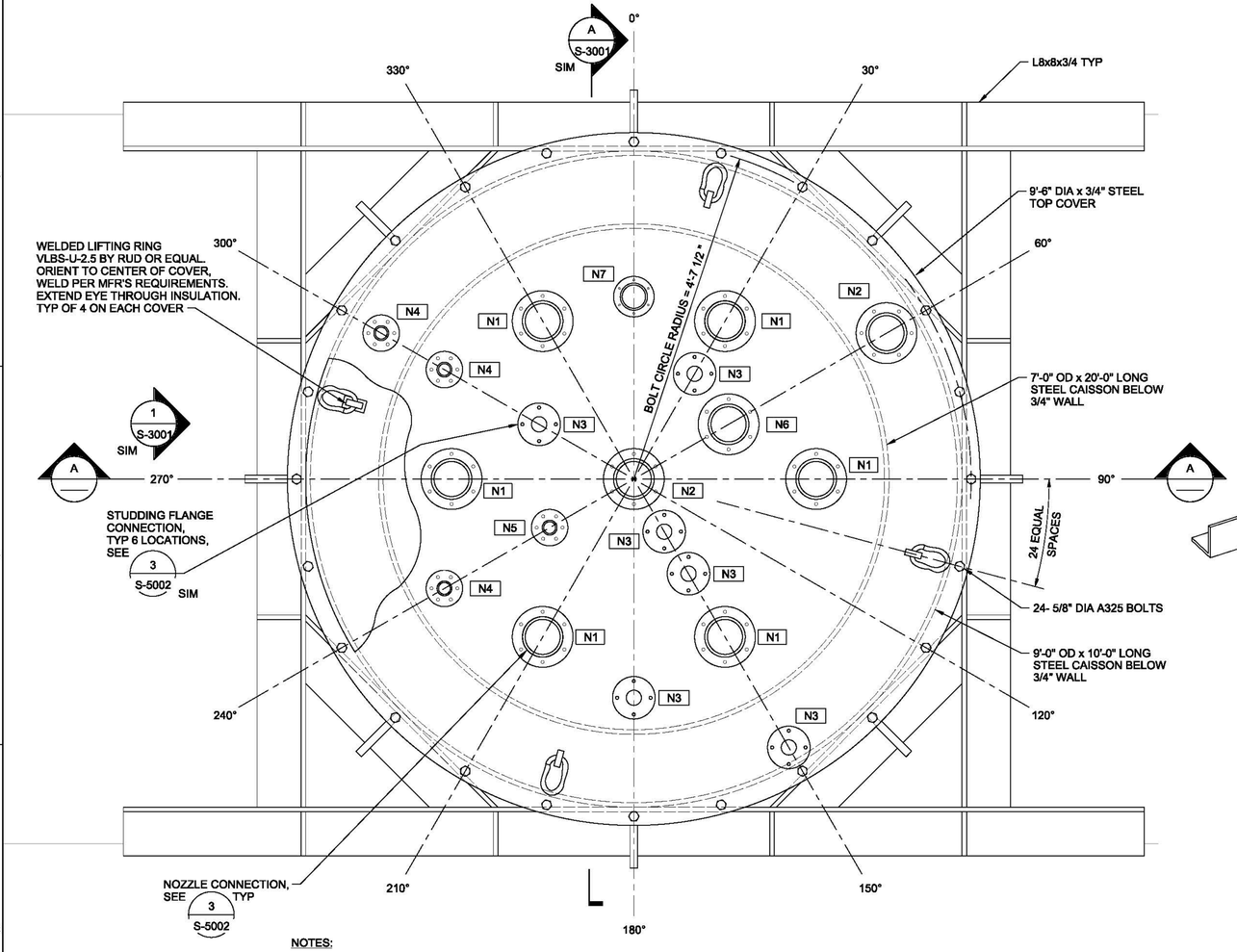

NOTE:
CAISSON THERMAL EXPANSION - BASED UPON THE ANTICIPATED INNER CAISSON WALL TEMPERATURE REACHING ≈100°C (212°F) DURING THE ISTD OPERATIONS, THE THERMAL EXPANSION CALCULATION OF THE CAISSON WITH AN ORIGINAL TEMPERATURE OF ≈10°C (50°F), RESULTING IN A DELTA T ≈72°C (162°F), WILL EXPAND THE 7'-0" OD CAISSON DIAMETER BY 0.12 INCHES. THE 9'-0" OD OUTER SHROUD WILL EXPAND BY 0.12 INCHES. THIS DIMENSIONAL INCREASE WILL NOT SIGNIFICANTLY AFFECT THE CLEARANCE BETWEEN THE INNER CAISSON AND OUTER SHROUD.

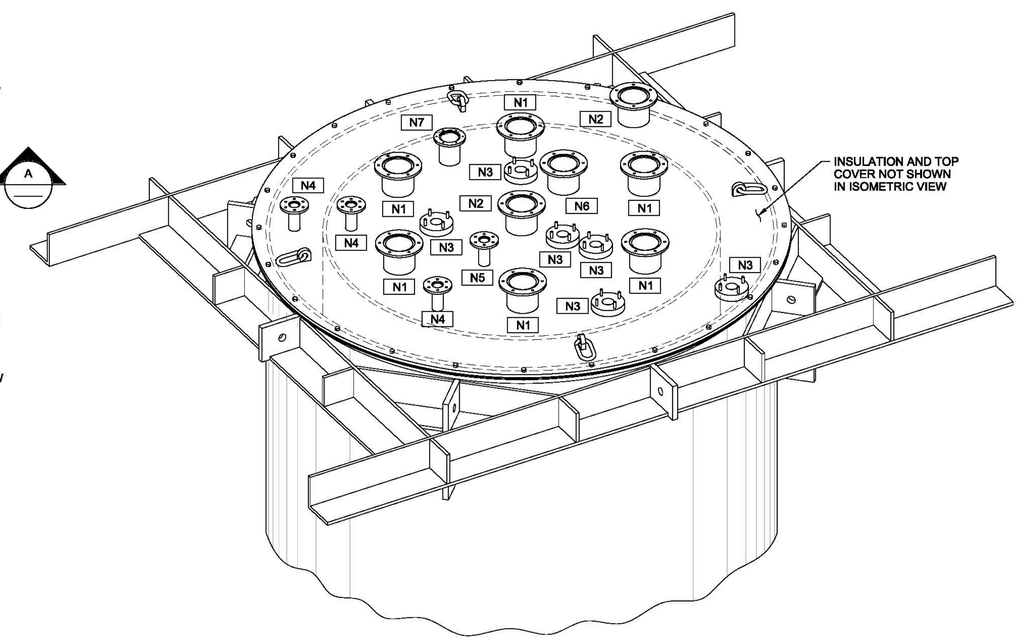

ISOMETRIC VIEW

3/4"=1'-0"

NOTES:

1. FOR ADDITIONAL INFORMATION SEE DRAWING S-3001.
2. FOR L8x8x3/4 DIMENSIONS, SEE 1 S-2002
3. DIMENSIONS ARE NOMINAL UNLESS OTHERWISE NOTED.
4. 9'-6" DIAMETER 3/4" STEEL TOP COVER SHALL BE A572 GRADE 50 PLATE.
5. FABRICATOR SHALL PROVIDE MOUNTING STUDS, NUTS, WASHERS, AND 150LB BLIND FLANGES WITH VITON GASKETS FOR ALL STUDDING FLANGES.

1 ISTD CAISSON SHROUD COVER - TYPE 3 (2 REQUIRED)

S-2001

3/4"=1'-0"

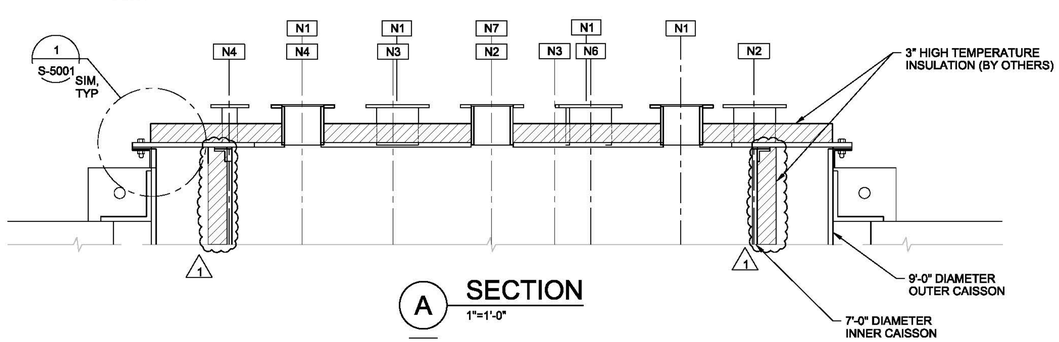

A SECTION

1"=1'-0"

NOZZLE SCHEDULE

NOZZLES	MARK	QUANTITY	SIZE	LOCATION	CL RADIUS	LENGTH	NOTES
HEATERS	N1	6	6"	30° 90° 150° 210° 270° 330°	2'-6" 2'-6" 2'-6" 2'-6" 2'-6" 2'-6"	6" 6" 6" 6" 6" 6"	SET TOP OF NOZZLE FLANGE 6" ABOVE TOP PLATE TO ALLOW ACCESS TO BOLTS ABOVE INSULATION BOARD.
EXTRACTION	N2	2	6"	0° 60°	CENTER 4'-0"	6" 6"	SET TOP OF NOZZLE FLANGE 6" ABOVE TOP PLATE TO ALLOW ACCESS TO BOLTS ABOVE INSULATION BOARD.
TEMPERATURE SENSOR	N3	6	2 1/2"	30° 150° 150° 150° 180° 300°	1'-8" 0'-10" 1'-6" 4'-3" 3'-0" 1'-6"	FLUSH FLUSH FLUSH FLUSH FLUSH FLUSH	STUDDING OUTLET FLANGE WELDED TO TOP PLATE.
INTAKE-NITROGEN	N4	3	2 1/2" (1)	240° 300° 300°	3'-0" 4'-0"	6" 6"	SET TOP OF NOZZLE FLANGE 6" ABOVE TOP PLATE TO ALLOW ACCESS TO BOLTS ABOVE INSULATION BOARD.
STEAM INJECTION	N5	1	2 1/2"	240°	1'-4"	6"	SET TOP OF NOZZLE FLANGE 6" ABOVE TOP PLATE TO ALLOW ACCESS TO BOLTS ABOVE INSULATION BOARD.
VAPOR EXTRACTION	N6	1	6"	60°	1'-6"	6"	SET TOP OF NOZZLE FLANGE 6" ABOVE TOP PLATE TO ALLOW ACCESS TO BOLTS ABOVE INSULATION BOARD.
ACCESS PORT	N7	1	4"	0°	2'-6"	6"	SET TOP OF NOZZLE FLANGE 6" ABOVE TOP PLATE TO ALLOW ACCESS TO BOLTS ABOVE INSULATION BOARD.

NO.	DATE	REVISION	BY	APVD
1	2013/10/25	REVISION #1	RT	Y
0	2013/08/29	ISSUED FOR CONSTRUCTION	RT	Y

DSGN R. FOREST / J. COLE | DR H. JOCHIMSEN/ D. KIERZEK | CHK W. BENNETT | APVD R. TRAVER

RICHARD P. TRAVER
N.J. PROFESSIONAL ENGINEER NO. 26300

CH2MHILL®
1717 ARCH ST., SUITE 4400
PHILADELPHIA, PA 19103
PH (215) 563-4220 FAX (215) 563-3828

IMPOUNDMENTS 1 AND 2
PILOT DEMONSTRATION STUDY
WYETH HOLDINGS CORPORATION
AMERICAN CYANAMID SITE
20 POLHEMUS LANE
BRIDGEWATER, NJ

STRUCTURAL
CAISSON SHROUD COVER - ISTD
PLAN, SECTION, ISOMETRIC
VIEW AND SCHEDULE

REUSE OF DOCUMENTS: THIS DOCUMENT, AND THE IDEAS AND DESIGNS INCORPORATED HEREIN, AS AN INSTRUMENT OF PROFESSIONAL SERVICE, IS THE PROPERTY OF CH2M HILL AND IS NOT TO BE USED, IN WHOLE OR IN PART, FOR ANY OTHER PROJECT WITHOUT THE WRITTEN AUTHORIZATION OF CH2M HILL.
©CH2M HILL 2011. ALL RIGHTS RESERVED.

VERIFY SCALE
BAR IS ONE INCH ON ORIGINAL DRAWING.
0 1"

DATE	2013/08/29
PROJ	465352
DWG	S-2004
SHEET	17

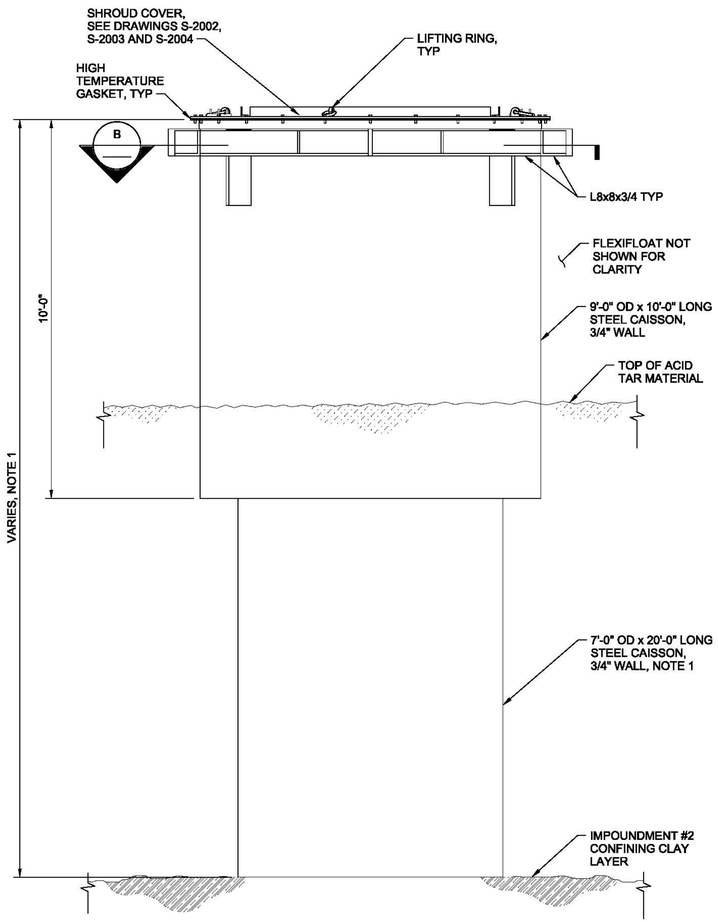

NOTES:

1. 7'-0" OD x 20'-0" STEEL CAISSON IS SHOWN LONGER THAN THE REQUIRED FINAL LENGTH. THE STEEL FABRICATOR WILL BE PROVIDED THE FINAL FABRICATED LENGTH FOR FOR EACH INDIVIDUAL CAISSON A MINIMUM OF 14 DAYS PRIOR TO THE REQUIRED DELIVERY DATE.
2. STENCIL TEST CELL NUMBER ON OUTSIDE OF EACH CAISSON FOR TRACKING OF CAISSON LENGTHS.
3. TYPE 1 COVER SHOWN.

1 ELEVATION
1/2"=1'-0"
S-2002
S-2003
S-2004

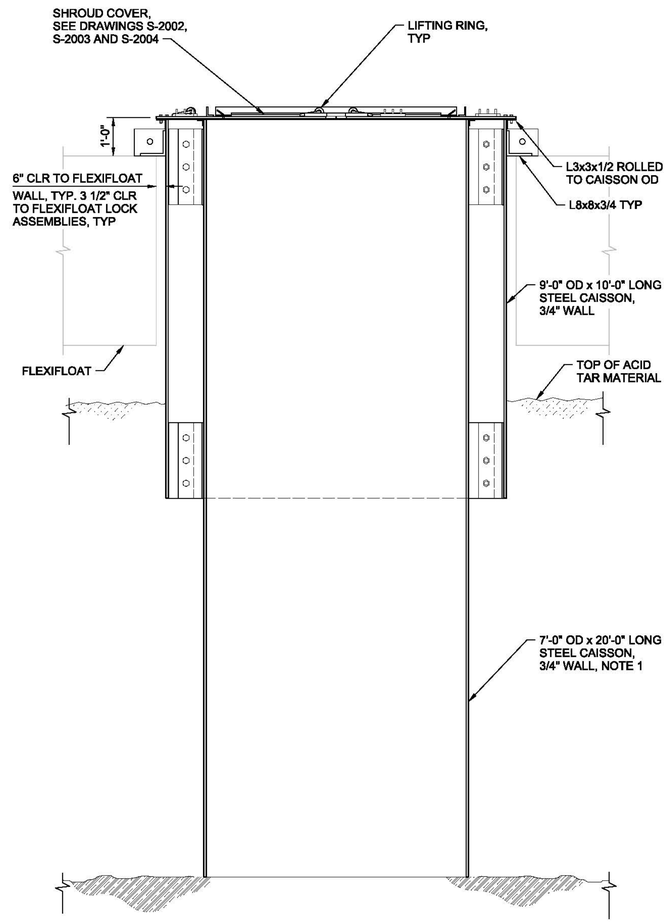

A SECTION
1/2"=1'-0"
S-2002
S-2003

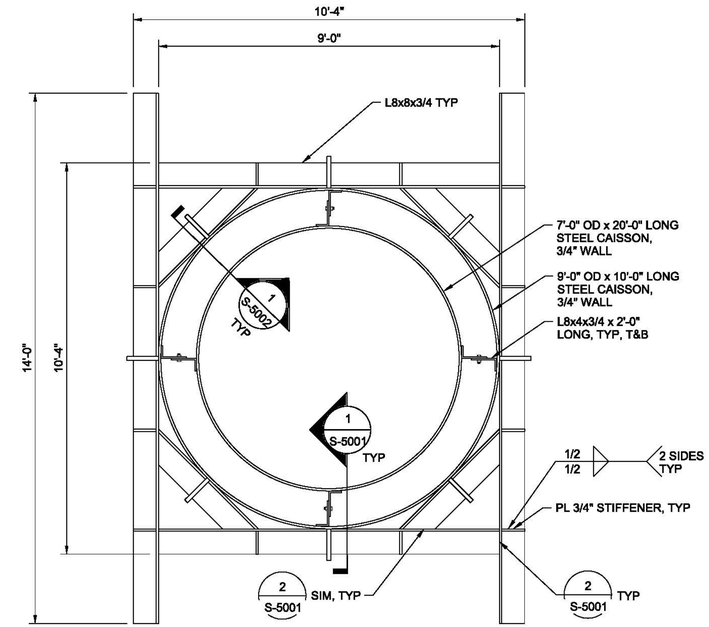

NOTE:
COVER NOT SHOWN FOR CLARITY.

B SECTION
1/2"=1'-0"

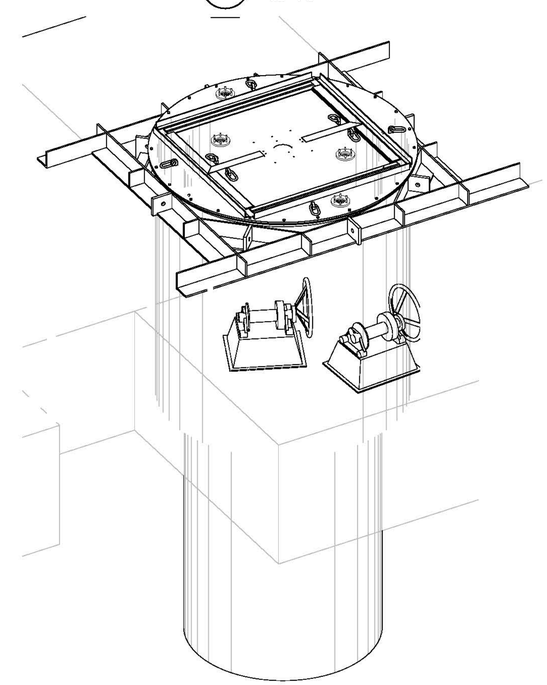

CAISSON SHROUD ISOMETRIC
NTS

RICHARD P. TRAVER
N.J. PROFESSIONAL ENGINEER NO. 26300

NO.	DATE	DSGN	DR	CHK	APVD	BY	APVD
0	2013/08/29	R. FOREST	H. JOCHIMSEN	W. BENNETT	R. TRAVER	RT	Y

REVISION: ISSUED FOR CONSTRUCTION

CH2MHILL®
1717 ARCH ST., SUITE 4400
PHILADELPHIA, PA 19103
PH (215) 563-4220 FAX (215) 563-3828

IMPOUNDMENTS 1 AND 2
PILOT DEMONSTRATION STUDY
WYETH HOLDINGS CORPORATION
AMERICAN CYANAMID SUPERFUND SITE
20 POLHEMUS LANE
BRIDGEWATER, NJ

STRUCTURAL
CAISSON ELEVATION, SECTIONS AND ISOMETRIC

AS SHOWN
VERIFY SCALE
BAR IS ONE INCH ON ORIGINAL DRAWING.
0 1"

DATE	2013/08/29
PROJ	472109
DWG	S-3001
SHEET	18

REUSE OF DOCUMENTS: THIS DOCUMENT, AND THE IDEAS AND DESIGNS INCORPORATED HEREIN, AS AN INSTRUMENT OF PROFESSIONAL SERVICE, IS THE PROPERTY OF CH2M HILL AND IS NOT TO BE USED, IN WHOLE OR IN PART, FOR ANY OTHER PROJECT WITHOUT THE WRITTEN AUTHORIZATION OF CH2M HILL.
©CH2M HILL 2011. ALL RIGHTS RESERVED.

FILENAME: 472109-001-S-3001.dgn PLOT DATE: 10/23/2013 PLOT TIME: 4:03:26 PM

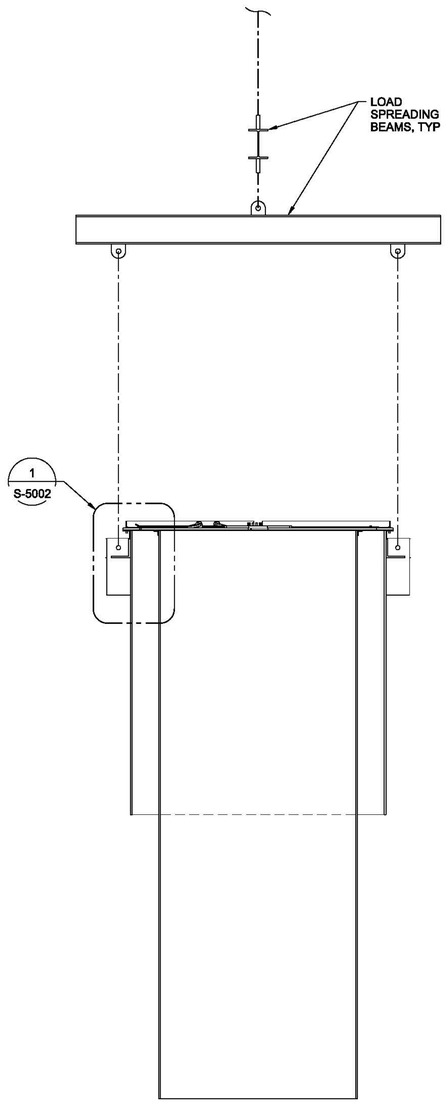

NOTES:

1. CAISSON SHROUD COVER TYPE 2 SHALL BE IN PLACE DURING LIFTING OPERATIONS.
2. MAXIMUM LIFTED LOAD = 49,590 LBS
3. LIFTED LOAD SHALL BE CONTINUOUSLY MONITORED DURING LIFITNG OPERATIONS.
4. IF MAXIMUM LIFTED LOAD IS EXCEEDED THE CONTRACTOR SHALL USE A VIBRATORY HAMMER TO HELP CAISSON.
5. CONTRACTOR SHALL PROVIDE LOAD SPREADING BEAMS, SHACKLES, SLINGS, AND ALL OTHER REQUIRED RIGGING WITH SUFFICIENT WORKING LOAD LIMITS (WLL) TO LIFT THE INDICATED MAXIMUM LIFTED LOAD.
6. LOAD SPREADING BEAMS SHALL DISTRIBUTE LOAD EQUALLY TO 4 LIFITNG EYES, SEE 1 / S-5001

LIFTING PLAN

3/8"=1'-0"

RICHARD P. TRAVER

N.J. PROFESSIONAL ENGINEER NO. 26300

NO.	DATE	REVISION	BY	APVD
0	2013/08/29	ISSUED FOR CONSTRUCTION	RT	Y

DSGN R. FORREST DR H. JOCHIMSEN CHK W. BENNETT APVD R. TRAVER

©CH2M HILL 2011. ALL RIGHTS RESERVED.

1717 ARCH ST., SUITE 4400
PHILADELPHIA, PA 19103
PH (215) 563-4220 FAX (215) 563-3828

IMPOUNDMENTS 1 AND 2
PILOT DEMONSTRATION STUDY
WYETH HOLDINGS CORPORATION
AMERICAN CYANAMID SUPERFUND SITE
20 POLHEMUS LANE
BRIDGEWATER, NJ

STRUCTURAL
LIFTING ELEVATION

REUSE OF DOCUMENTS: THIS DOCUMENT, AND THE IDEAS AND DESIGNS INCORPORATED HEREIN, AS AN INSTRUMENT OF PROFESSIONAL SERVICE, IS THE PROPERTY OF CH2M HILL AND IS NOT TO BE USED, IN WHOLE OR IN PART, FOR ANY OTHER PROJECT WITHOUT THE WRITTEN AUTHORIZATION OF CH2M HILL.

AS SHOWN
VERIFY SCALE
BAR IS ONE INCH ON ORIGINAL DRAWING.
0 1"

DATE	2013/08/29
PROJ	472109
DWG	S-3002
SHEET	19

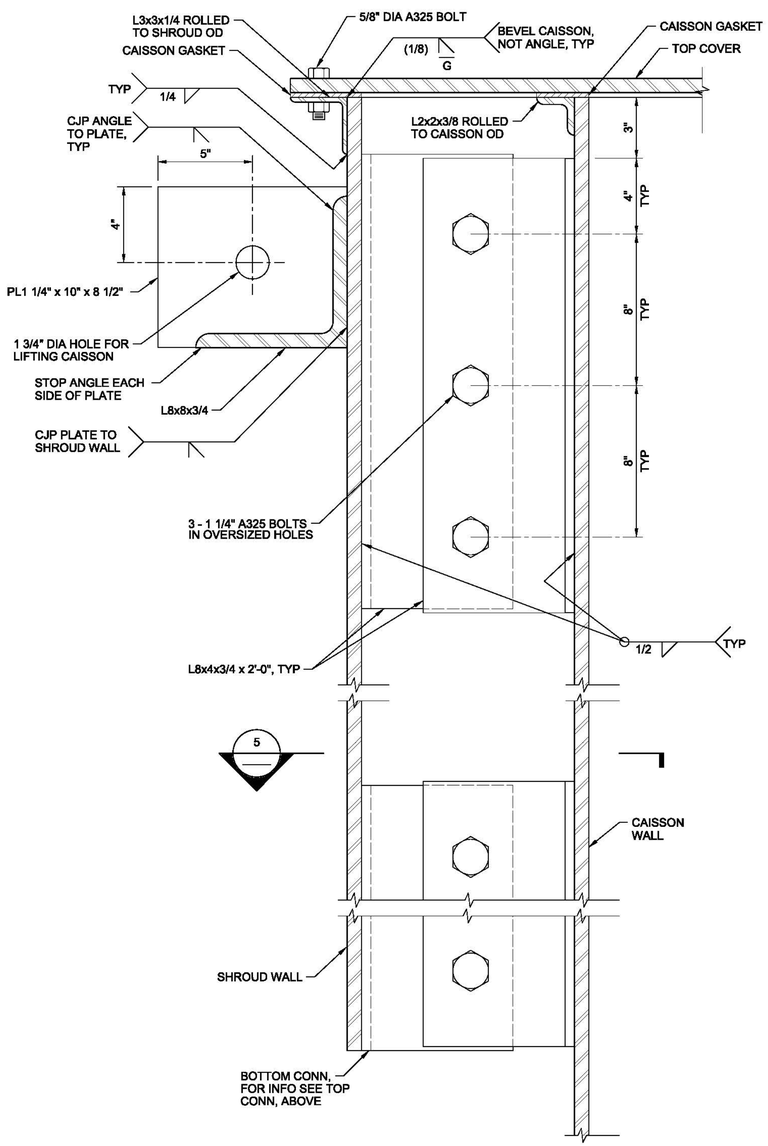

SECTION

NOTES:
1. CAISSON AND ACCESS COVER GASKETS SHALL BE 3/4" WIDE GORE© JOINT SEALANT (OR EQUIVALENT SELF ADHEREING EXPANDED PTFE GASKET TAPE).
2. PREPARE GASKET SURFACES IN ACCORDANCE WITH MANUFACTURER'S RECCOMENDATIONS.
3. INSTALL GASKET TAPE AND SPLICE ENDS IN ACCORDANCE WITH MANUFACTURER'S GUIDELINES FOR SEALING LARGE FLANGES.
4. ALL GASKETS SHALL BE FIELD INSTALLED.
5. PROVIDE SUFFICIENT GASKET MATERIAL FOR THREE COMPLETE GASKET SETS FOR EACH CAISSON.
6. CONTRACTOR SHALL PROPOSE METHOD FOR FITUP BETWEEN CAISSON AND SHROUD TO ENSURE PROPER ALIGNMENT OF BOLT HOLES. DEMONSTRATE PROPER FITUP IN SHOP PRIOR TO SHIPMENT.
7. ALL L8x8 ANGLES SHALL HAVE CONTINUOUS BEARING ALONG THE FULL LENGTH AND WIDTH OF THE ANGLE, EXCEPT WHERE THE ANGLES OVERHANG THE MOON POOL. PROVIDE SHIMS AS NECESSARY TO ACHIEVE CONTINUOUS BEARING.
8. CAISSON WALL INSULATION NOT SHOWN FOR CLARITY. 1

1 CAISSON DETAIL
3"=1'-0"
S-3001

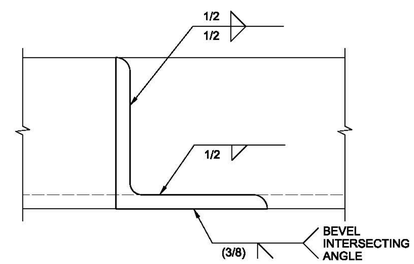

2 ANGLE CONNECTION
3"=1'-0"
S-3001

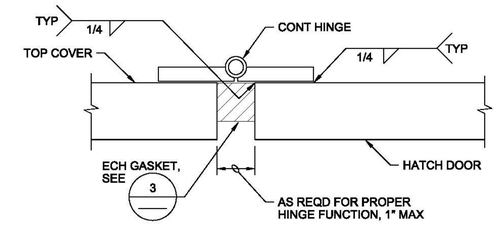

NOTE:
CONTINUOUS HINGE SHALL BE 1/4" THICK BY 5" WIDE WITH 5/8" DIAMETER PIN, MCMASTER-CARR PN 15665A535 OR EQUAL.

4 CONTINUOUS HINGE
1"=1"
S-3001

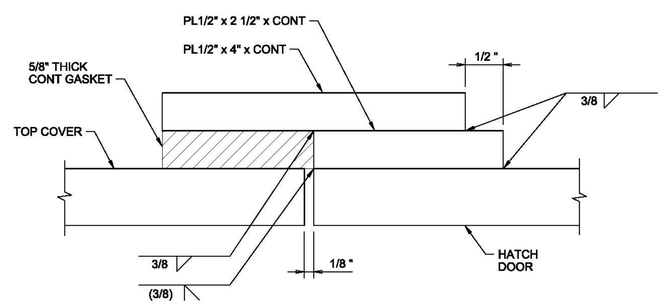

NOTES:
1. GASKET SHALL BE EPICHLOROHYDRIN (ECH) CLOSED CELL SPONGE.
2. GASKET SHALL BE CONTINUOUS AROUND HATCH PERIMETER. BOND SPLICES IN GASKET AS REQUIRED TO MATCH THE TEMPERATURE AND CHEMICAL RESISTANCE OF THE ECH GASKET.
3. CONTRACTOR SHALL PROVIDED ADDITIONAL GASKET MATERIAL OR HIGH TEMPERATURE CAULKING AS REQUIRED TO MAINTAIN VAPOR SEAL.
4. CONTRACTOR MAY ADD ADDITIONAL FASTENERS AS REQUIRED TO MAINTAIN VAPOR SEAL.
5. ADHERE ECH GASKET TO STEEL WITH ADHESIVE AS REQUIRED TO MATCH TEMPERATURE AND CHEMICAL RESISTANCE OF ECH GASKET.

3 HATCH DOOR GASKET
1"=1"
S-3001

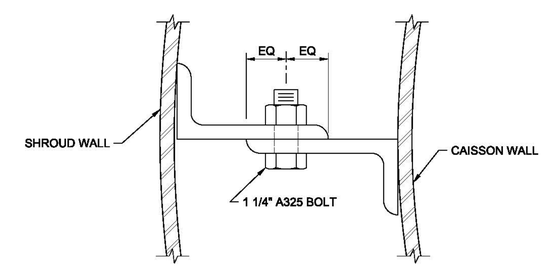

NOTE:
CAISSON WALL INSULATION NOT SHOWN FOR CLARITY. 1

5 SHROUD CONNECTION
3"=1'-0"

RICHARD P. TRAVER
N.J. PROFESSIONAL ENGINEER NO. 26300

NO.	DATE	REVISION	BY	APVD
1	2013/10/25	REVISION #1	RT	Y
0	2013/08/29	ISSUED FOR CONSTRUCTION	RT	Y

DSGN	DR	CHK	APVD
R. FORREST	H. JOCHIMSEN	W. BENNETT	R. TRAVER

©CH2M HILL 2011. ALL RIGHTS RESERVED.

1717 ARCH ST., SUITE 4400
PHILADELPHIA, PA 19103
PH (215) 563-4220 FAX (215) 563-3828

IMPOUNDMENTS 1 AND 2
PILOT DEMONSTRATION STUDY
WYETH HOLDINGS CORPORATION
AMERICAN CYANAMID CORPORATION SITE
20 POLHEMUS LANE
BRIDGEWATER, NJ

STRUCTURAL
CAISSON DETAILS

REUSE OF DOCUMENTS: THIS DOCUMENT, AND THE IDEAS AND DESIGNS INCORPORATED HEREIN, AS AN INSTRUMENT OF PROFESSIONAL SERVICE, IS THE PROPERTY OF CH2M HILL AND IS NOT TO BE USED, IN WHOLE OR IN PART, FOR ANY OTHER PROJECT WITHOUT THE WRITTEN AUTHORIZATION OF CH2M HILL.

AS SHOWN
VERIFY SCALE
BAR IS ONE INCH ON ORIGINAL DRAWING.
0 1"

DATE	2013/08/29
PROJ	472109
DWG	S-5001
SHEET	20

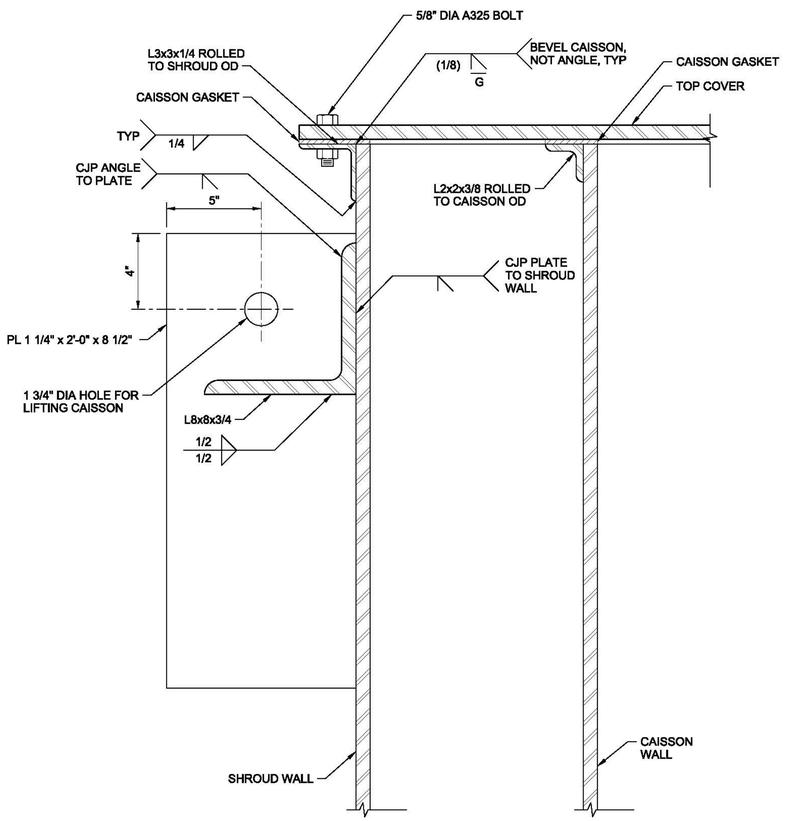

SECTION

NOTES:
1. FOR ADDITIONAL INFORMATION, SEE 1 / S-5001
2. CAISSON WALL INSULATION NOT SHOWN FOR CLARITY. 1

1 CAISSON DETAIL
3"=1'-0"
S-3001
S-3002

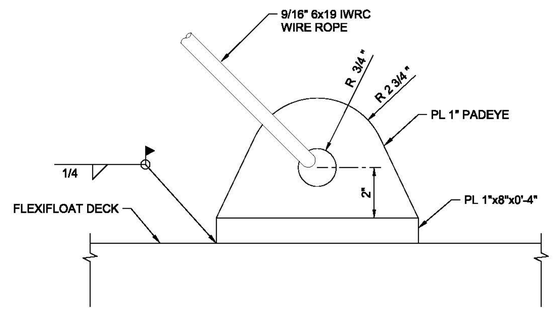

NOTES:
1. CONTRACTOR SHALL PROVIDE ALL HOOKS, TURNBUCKLES, THIMBLE EYES, CLIPS, AND OTHER HARDWARE AS REQUIRED TO HOLD DOWN FRAC TANK.
2. PAINT HOLD DOWN BRIGHT ORANGE.
3. FRAC TANK PROVIDER SHALL PROVIDE HOLD DOWN EYES AT LOCATIONS ON FRAC TANK THAT MATCH HOLD DOWNS ON DECK. HOLD DOWN SHALL HAVE 4,650 LB HORIZONTAL AND 6,650 LB VERTICAL CAPACITY.

2 FRAC TANK HOLD DOWN
NTS
S-2001

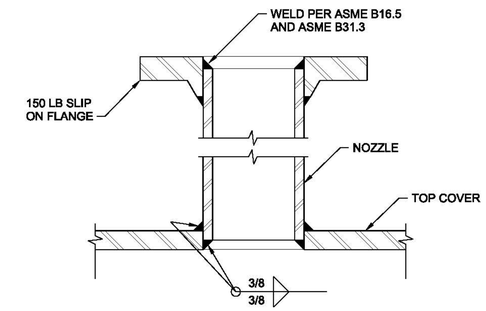

3 TYPICAL NOZZLE CONNECTION
NTS
S-2002
S-2004

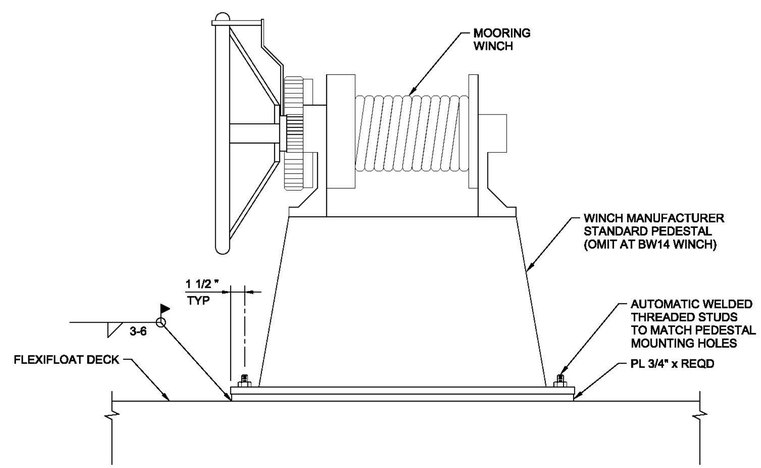

NOTES:
1. MOORING WINCH SHALL BE HM24W WINCH BY WINTECH WINCHES, SHREVEPORT LA OR EQUAL.
2. WINCH FOR MOORING LINE M11 SHALL BE BW14 WINCH BY WINTECH WINCHES, SHREVEPORT LA OR EQUAL.
3. ORIENT MOORING WINCH DIRECTLY AT MOORING LINE.
4. REMOVE WINCHES AFTER TESTING COMPLETION. GRIND WELDS SMOOTH AND PAINT WITH AMERICAN COATINGS EM8301 HIGH BUILD EPOXY PRIMER. DO NOT DAMAGE FLEXIFLOAT WALL.

4 MOORING WINCH
NTS
C-2002
S-2001

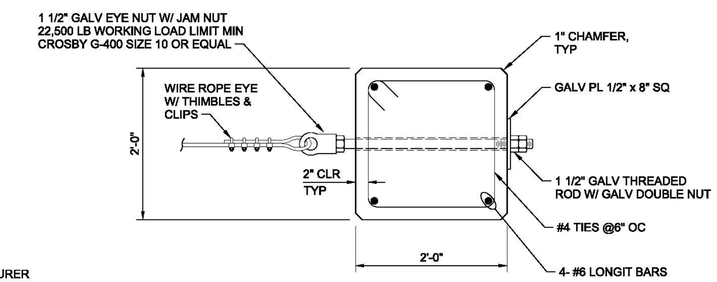

SECTION

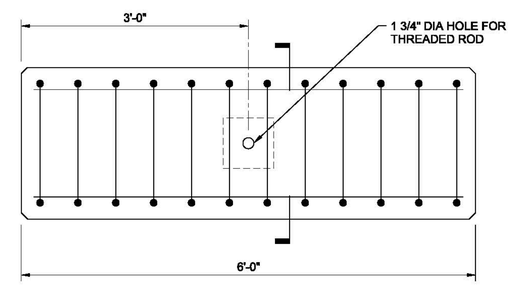

ELEVATION

5 DEADMAN
1"=1'-0"
C-3001
S-5003

NO.	DATE	DSGN	DR	CHK	APVD	BY	APVD
1	2013/10/25	R. FORREST	H. JOCHIMSEN	W. BENNETT		RT	Y
0	2013/08/29					RT	Y

REVISION #1
ISSUED FOR CONSTRUCTION
REVISION

RICHARD P. TRAVER
N.J. PROFESSIONAL ENGINEER NO. 26300
R. TRAVER

1717 ARCH ST., SUITE 4400
PHILADELPHIA, PA 19103
PH (215) 563-4220 FAX (215) 563-3828

IMPOUNDMENTS 1 AND 2
PILOT DEMONSTRATION STUDY
WYETH HOLDINGS CORPORATION
AMERICAN CYANAMID SUPERFUND SITE
20 POLHEMUS LANE
BRIDGEWATER, NJ

CH2MHILL®

STRUCTURAL
CAISSON DETAILS

AS SHOWN
VERIFY SCALE
BAR IS ONE INCH ON ORIGINAL DRAWING.
0 1"

DATE	2013/08/29
PROJ	472109
DWG	S-5002
SHEET	21

REUSE OF DOCUMENTS: THIS DOCUMENT, AND THE IDEAS AND DESIGNS INCORPORATED HEREIN, AS AN INSTRUMENT OF PROFESSIONAL SERVICE, IS THE PROPERTY OF CH2M HILL AND IS NOT TO BE USED, IN WHOLE OR IN PART, FOR ANY OTHER PROJECT WITHOUT THE WRITTEN AUTHORIZATION OF CH2M HILL.
©CH2M HILL 2011. ALL RIGHTS RESERVED.

FILENAME: 472109-001-S-5002.dgn PLOT DATE: 10/23/2013 PLOT TIME: 4:32:30 PM

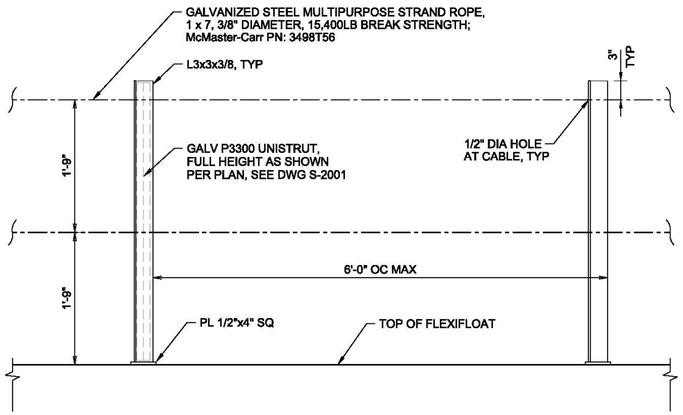

(OUTSIDE SHOWN)

ELEVATION

1"=1'-0"

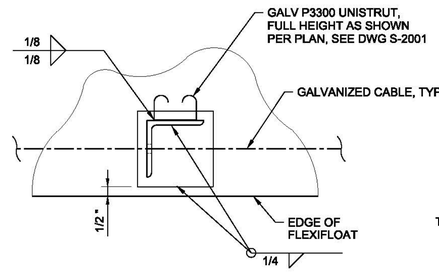

PLAN

3"=1'-0"

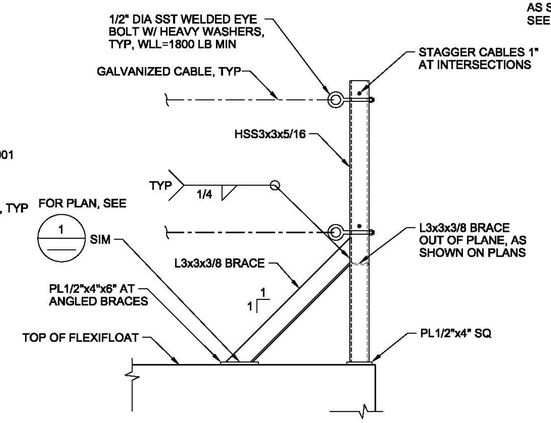

(OUTSIDE CORNER SHOWN)

ELEVATION

1"=1'-0"

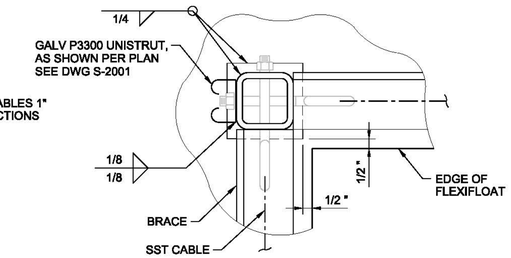

(INSIDE CORNER)

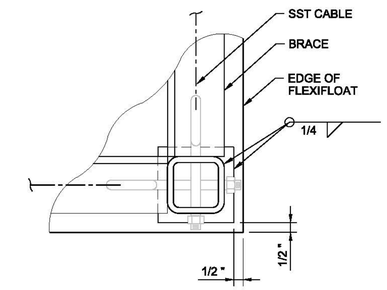

(OUTSIDE CORNER)

PLAN

3"=1'-0"

NOTES:
1. RAILING SHALL BE PRE-TENSIONED TO 1200 LBS.
2. PROVIDE ALL REQUIRED TURNBUCKLES, EYES, AND OTHER FITTINGS. FITTINGS, ATTACHMENTS, AND SPLICES SHALL BE CAPABLE OF DEVELOPING THE FULL CABLE BREAKING STRENGTH.
3. REMOVE RAILING AND POSTS AFTER TESTING COMPLETION. GRIND WELDS SMOOTH AND PAINT DAMAGED COATINGS WITH AMERICAN COATINGS EM8301 HIGH BUILD EPOXY PRIMER. DO NOT DAMAGE FLEXIFLOAT WALL.
4. SEE MECHANICAL FOR PIPE SUPPORT REQUIREMENTS.

NOTE:
FOR INFORMATION NOT SHOWN, SEE 1

1 TYPICAL RAILING

AS SHOWN

S-2001

2 RAILING ANCHOR

AS SHOWN

S-2001

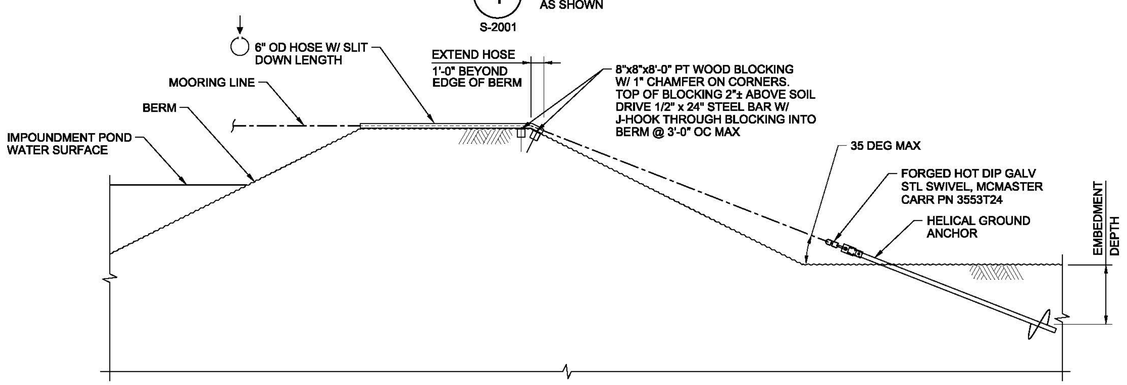

ANCHOR AT NORTH BERM

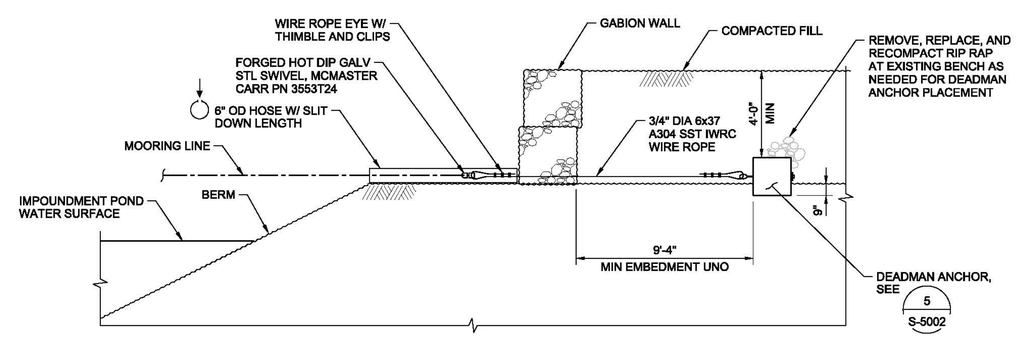

ANCHOR AT WEST BERM

NOTES:
1. GROUND ANCHOR SHALL BE 1 1/2" SQUARE SHAFT SYSTEM SS 5 MINIMUM BY CHANCE CIVIL CONSTRUCTION CENTRALIA, MO OR EQUAL.
2. HELICAL ANCHOR SHALL HAVE A MINIMUM OF A 1-10" DIAMETER AND 1-12" DIAMETER HELICAL PLATE.
3. HELICAL ANCHOR SHALL HAVE 12,000 LB ALLOWABLE (WORKING) CAPACITY.
4. PROVIDE CHAIN SHACKLE ATTACHMENT AT ALL GROUND ANCHORS.
5. INSTALL HELICAL ANCHOR PER MANUFACTURER RECOMMENDATIONS TO 3333 LB-FT MINIMUM TORQUE OR GREATER IF NECESSARY TO PROVIDE REQUIRED ALLOWABLE CAPACITY.
6. PROVIDE 12'-0" MINIMUM EMBEDMENT AT HELICAL ANCHORS.
7. GROUND ANCHORS SHALL BE ORIENTED DIRECTLY AT MOORING POINTS, WITHIN 3 DEGREES OF MOORING LINE ORIENTATION.
8. 6" HOSE SHALL BE TITAN DREDGE SLEEVE BY GOODYEAR RUBBER PRODUCTS OR EQUAL.
9. PAINT ABOVE GROUND PORTION OF ALL GROUND ANCHORS BRIGHT SAFETY ORANGE. ALL TRIPPING HAZARDS SHALL BE CLEARLY IDENTIFIED WITH HIGH VISIBILITY MARKINGS OR SIGNAGE.
10. GROUND ANCHOR EMBEDMENT DEPTH SHALL BE MEASURED FROM THE BOTTOM HELIX TO THE SOIL SURFACE, PERPENDICULAR TO THE SOIL SURFACE.
11. SEE SPECIFICATION 31 63 12 FOR HELICAL ANCHOR TEST AND INSTALLATION REQUIREMENTS.
12. GROUND ANCHOR TEST SHALL UTILIZE A SPREADER BEAM WITH SUPPORTS THAT SPREAD THE LOAD OUT TO 7'-0" MINIMUM EACH SIDE OF GROUND ANCHOR TO AVOID APPLYING PRESSURE TO THE IMMEDIATE VICINITY OF THE ANCHOR.
13. SST WIRE ROPE SHALL HAVE SST THIMBLES AND CLIPS AS REQUIRED PER THE MANUFACTURER'S RECOMMENDATION TO DEVELOP THE WIRE ROPE WORKING LOAD.
14. POSITION DEADMAN PERPENDICULAR TO MOORING LINE.

3 GROUND ANCHOR

NTS

C-2001

RICHARD P. TRAVER

N.J. PROFESSIONAL ENGINEER NO. 26300

NO.	DATE	DSGN	DR	CHK	APVD	BY	APVD
0	2013/08/29	R. FORREST	H. JOCHIMSEN	W. BENNETT		R. TRAVER	

REVISION: ISSUED FOR CONSTRUCTION

©CH2M HILL 2011. ALL RIGHTS RESERVED.

1717 ARCH ST., SUITE 4400
PHILADELPHIA, PA 19103
PH (215) 563-4220 FAX (215) 563-3828

IMPOUNDMENTS 1 AND 2
PILOT DEMONSTRATION STUDY
WYETH HOLDINGS CORPORATION
AMERICAN CYANAMID CORPORATION SITE
20 POLHEMUS LANE
BRIDGEWATER, NJ

REUSE OF DOCUMENTS: THIS DOCUMENT, AND THE IDEAS AND DESIGNS INCORPORATED HEREIN, AS AN INSTRUMENT OF PROFESSIONAL SERVICE, IS THE PROPERTY OF CH2M HILL AND IS NOT TO BE USED, IN WHOLE OR IN PART, FOR ANY OTHER PROJECT WITHOUT THE WRITTEN AUTHORIZATION OF CH2M HILL.

CH2MHILL®

STRUCTURAL

CAISSON DETAILS

AS SHOWN

VERIFY SCALE

BAR IS ONE INCH ON ORIGINAL DRAWING.
0 1"

DATE	2013/08/29
PROJ	472109
DWG	S-5003
SHEET	22

NOTES:

1. ALL MATERIALS, WORKMANSHIP, DESIGN, AND CONSTRUCTION RELATED TO THE WOODEN STAIRS SHALL CONFORM TO THE DRAWINGS, SPECIFICATIONS, THE INTERNATIONAL BULDING CODE (2009 EDITION).
2. DESIGN LOADING CRITERIA:
   FLOOR LIVE LOAD (COMMERCIAL) 100 PSF
3. CONTRACTOR SHALL PROVIDE TEMPORARY BRACING FOR THE STRUCTURE AND STRUCTURAL COMPONENTS UNTIL ALL FINAL CONNECTIONS HAVE BEEN COMPLETED IN ACCORDANCE WITH THE PLANS.

WOOD

4. FRAMING LUMBER SHALL BE KILN DRIED OR MC-15, AND GRADED AND MARKED IN CONFORMANCE WITH WCLIB STANDARD GRADING RULES FOR WEST COAST LUMBER NO. 17, LATEST EDITION. FURNISH TO THE FOLLOWING MINIMUM STANDARDS:

   JOISTS: (2X MEMBERS) HEM-FIR NO. 2
   (3X & 4X MEMBERS) DOUGLAS FIR NO. 1 MINIMUM BASE VALUE, FB = 850 PSI
   MINIMUM BASE VALUE, FB = 1000 PSI

   STRUCTURAL LIGHT FRAMING: (INCLUDES 3X & 4X POSTS) DOUGLAS FIR NO. 2 MINIMUM BASE VALUE, FB = 900 PSI

   BEAMS AND STRINGERS: (INCLUDES 6X AND LARGER) DOUGLAS FIR NO. 1 MINIMUM BASE VALUE, FB = 1350 PSI

5. TIMBER CONNECTORS CALLED OUT BY LETTERS AND NUMBERS SHALL BE "STRONG-TIE" BY SIMPSON COMPANY, AS SPECIFIED IN THEIR MOST RECENT CATALOG. EQUIVALENT DEVICES BY OTHER MANUFACTURERS MAY BE SUBSTITUTED, PROVIDED THEY HAVE ICC APPROVAL FOR EQUAL OR GREATER LOAD CAPACITIES. PROVIDE NUMBER AND SIZE OF FASTENERS AS SPECIFIED BY THE MANUFACTURER. CONNECTORS SHALL BE INSTALLED IN ACCORDANCE WITH THE MANUFACTURER'S RECCOMENDATIONS. ALL BOLTS IN WOOD MEMBERS SHALL CONFORM TO ASTM A307. PROVIDE WASHERS UNDER THE HEADS AND NUTS OF ALL BOLTS AND LAG SCREWS BEARING ON WOOD, UNLESS NOTED OTHERWISE. ALL NAILS SHALL BE COMMON. HANGERS IN DIRECT CONTACT WITH PRESERVATIVE- TREATED WOOD SHALL BE EITHER STAINLESS STEEL (SST3000), POST HOT-DIPPED GALVANIZED (HDG), OR GALVANIZED WITH A MINIMUM OF 1.85OZ ZINC PER SQUARE INCH (ZMAX), UNLESS NOTED OTHERWISE. ALL LUMBER JOISTS SHALL BE CONNECTED TO FLUSH BEAMS WITH "LUS" SERIES JOIST HANGERS.
6. WOOD FASTENERS:
   A. NAIL SIZES SPECIFIED ON DRAWINGS ARE BASED ON THE FOLLOWING SPECIFICATIONS:

SIZE	LENGTH	DIAMETER
10d	3"	0.148"
16d	3-1/2"	0.162"

      IF CONTRACTOR PROPOSES THE USE OF ALTERNATE NAILS, THEY SHALL SUBMIT NAIL SPECIFICATIONS TO THE STRUCTURAL ENGINEER (PRIOR TO CONSTRUCTION) FOR REVIEW AND APPROVAL.
7. WOOD FRAMING NOTES:
   THE FOLLOWING APPLY UNLESS OTHERWISE SHOWN:
   A. ALL WOOD FRAMING DETAILS NOT SHOWN OTHERWISE SHALL BE CONSTRUCTED TO THE MINIMUM STANDARDS OF THE INTERNATIONAL BUILDING CODE. MINIMUM NAILING, UNLESS OTHERWISE NOTED, SHALL CONFORM TO TABLE 2304.9.1 OF THE INTERNATIONAL BUILDING CODE. UNLESS NOTED OTHERWISE ALL NAILS SHALL BE COMMON. COORDINATE THE SIZE AND LOCATION OF ALL OPENINGS WITH MECHANICAL AND ARCHITECTURAL DRAWINGS. PROVIDE WASHERS UNDER THE HEADS AND NUTS OF ALL BOLTS AND LAG SCREWS BEARING ON WOOD.
   B. FLOOR AND ROOF FRAMING: PROVIDE SOLID BLOCKING AT ALL BEARING POINTS. TOENAIL JOISTS TO SUPPORTS WITH TWO 16d NAILS. ATTACH TIMBER JOISTS TO FLUSH HEADERS OR BEAMS WITH METAL JOIST HANGERS IN ACCORDANCE WITH TIMBER CONNECTOR NOTE. NAIL ALL MULTI-JOIST BEAMS TOGETHER WITH 16d @ 12" O.C. STAGGERED. TOENAIL BLOCKING TO SUPPORTS WITH 16d @ 12" O.C. UNLESS OTHERWISE NOTED.
8. ALL WOOD FRAMING SHALL BE PRESSURE-TREATED.
9. PROVIDE WASHERS AT ALL LAG SCREWS.
10. PAINT STAIR TREADS WITH MG98-M SERIES NON-SKID EPOXY MARINE GRADE PAINT.

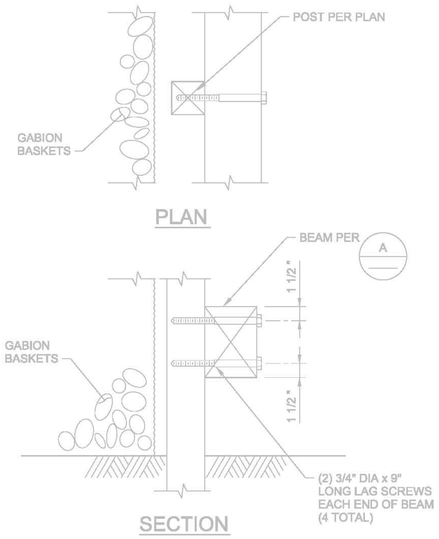

2 DETAIL
1 1/2"=1'-0"

NOTE: STAIRS HAVE BEEN REMOVED FROM DESIGN. FIGURE HAS BEEN DELETED.

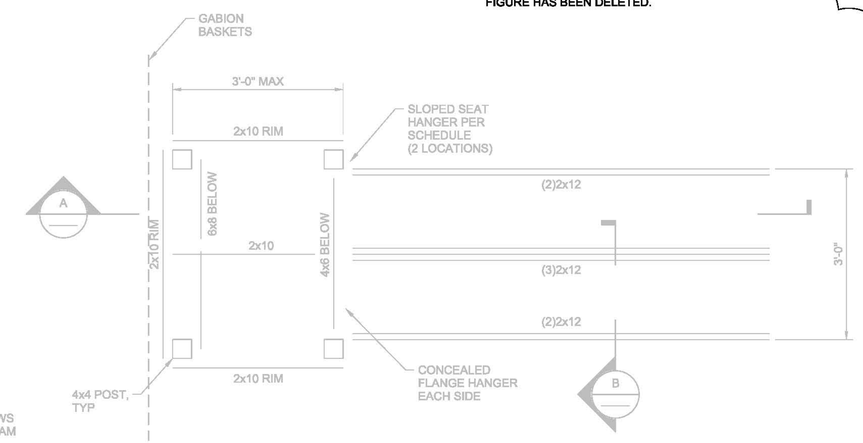

1 STAIRS PLAN
3/4"=1'-0"
C-2001

MEMBER (SLOPED SEAT)	HANGER	FACE NAILING	CAPACITY (Cd = 1.00)
(2)2x12 STRINGER	HUC210-2	10d COMMON	2085 LBS

MEMBER	HANGER	FACE NAILING	CAPACITY (Cd = 1.00)
4x6	HUC46	10d COMMON	1785 LBS
2x10	LUS210	10d COMMON	1275 LBS

CUT STRINGERS TO DIMENSIONS BELOW

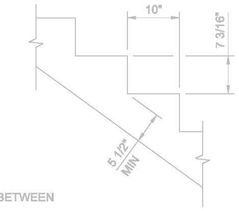

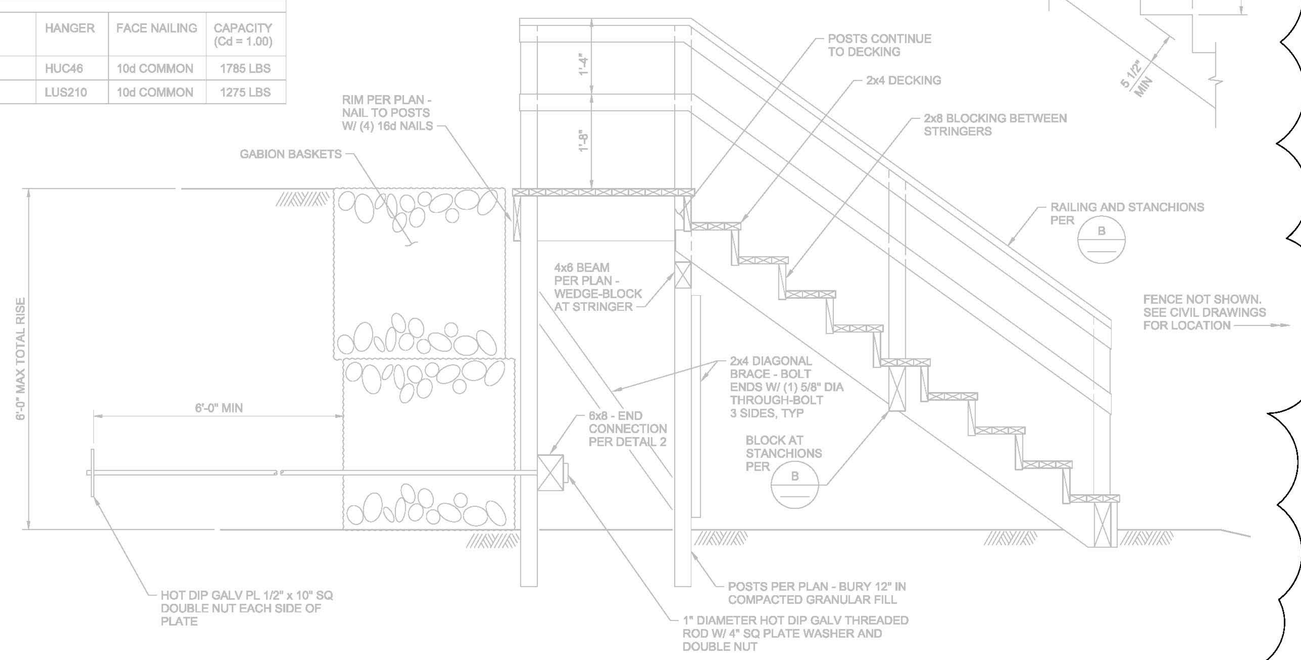

A STAIR SECTION
3/4"=1'-0"

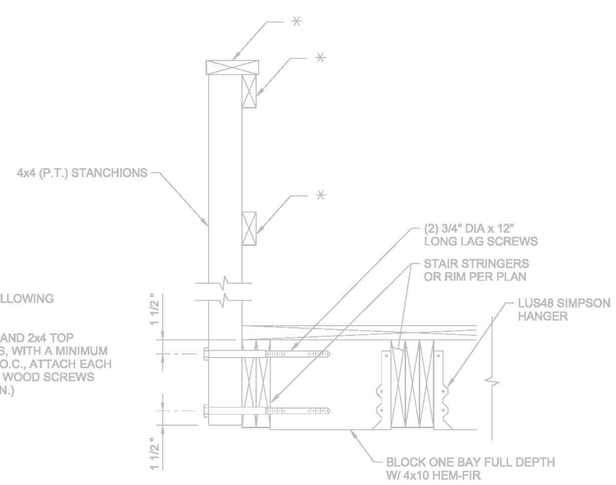

✳ PROVIDE THE FOLLOWING AT A MINIMUM:
2x6 RAIL CAP, AND 2x4 TOP BOTTOM RAILS, WITH A MINIMUM SPAN OF 6'-0" O.C., ATTACH EACH WITH (2) NO. 8 WOOD SCREWS EACH END (MIN.)

B STAIR SECTION
1 1/2"=1'-0"

RICHARD P. TRAVER
N.J. PROFESSIONAL ENGINEER NO. 26300

NO.	DATE	REVISION	BY	APVD
1	2013/10/25	REVISION #1	RT	Y
0	2013/08/29	ISSUED FOR CONSTRUCTION	RT	Y

DSGN R. FORREST | DR K. POPE | CHK W. BENNETT | APVD R. TRAVER

1717 ARCH ST., SUITE 1400
PHILADELPHIA, PA 19103
PH (215) 563-2220 FAX (215) 563-3828

IMPOUNDMENTS 1 AND 2
PILOT DEMONSTRATION STUDY
WYETH HOLDINGS CORPORATION
AMERICAN CYANAMID SUPERFUND SITE
20 POLHEMUS LANE
BRIDGEWATER, NJ

CH2MHILL®

STRUCTURAL
WOODEN STAIRS DETAILS

AS SHOWN
VERIFY SCALE
BAR IS ONE INCH ON ORIGINAL DRAWING.
0 1"

DATE	2013/08/29
PROJ	472109
DWG	S-5004
SHEET	23

REUSE OF DOCUMENTS: THIS DOCUMENT, AND THE IDEAS AND DESIGNS INCORPORATED HEREIN, AS AN INSTRUMENT OF PROFESSIONAL SERVICE, IS THE PROPERTY OF CH2M HILL AND IS NOT TO BE USED, IN WHOLE OR IN PART, FOR ANY OTHER PROJECT WITHOUT THE WRITTEN AUTHORIZATION OF CH2M HILL.
©CH2M HILL 2011. ALL RIGHTS RESERVED.

NOTES:

1. ALUMINUM GANGWAY SHALL BE A 4FT x 50FT PREFABRICATED ALUMINUM GANGWAY AS MANUFACTURED BY DOCK ACCENTS, HARTFORD, VA.
2. GANGWAY DECKING SHALL BE ALUMADOCK ALUMINUM DECKING WITH GRAY POWDERCOAT. DECKING TO BE FACTORY ATTACHED.
3. GUARDRAIL DOES NOT REQUIRE ADA COMPLIANCE.
4. DESIGN GANGWAY FOR 100psf SUPERIMPOSED LIVE LOAD.
5. DESIGN GANGWAY FOR ADDITIONAL PIPING/ MECHANICAL DEAD LOAD OF 20LB/FT.
6. MATERIAL AT BARGE CONNECTION SHALL BE COMPATIBLE AND WELDABLE TO FLEXIFLOAT PLATFORM. ALTERNATE MATERIALS WILL REQUIRE ALUMINUM GANGWAY MANUFACTURER DESIGN.

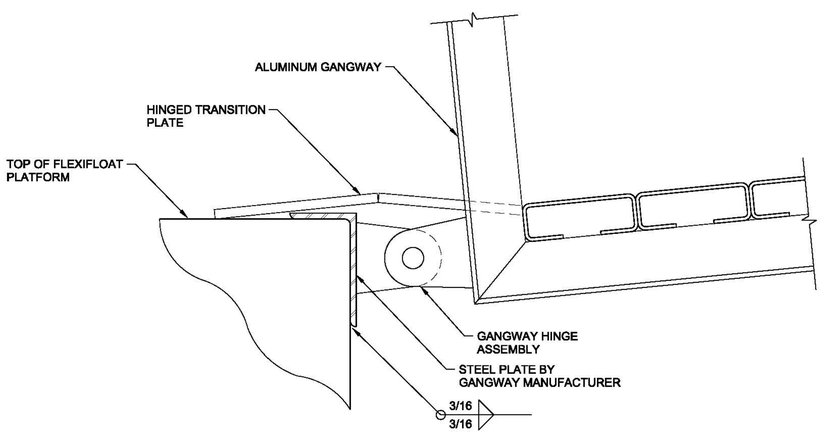

1 BARGE CONNECTION
NTS
C-2001

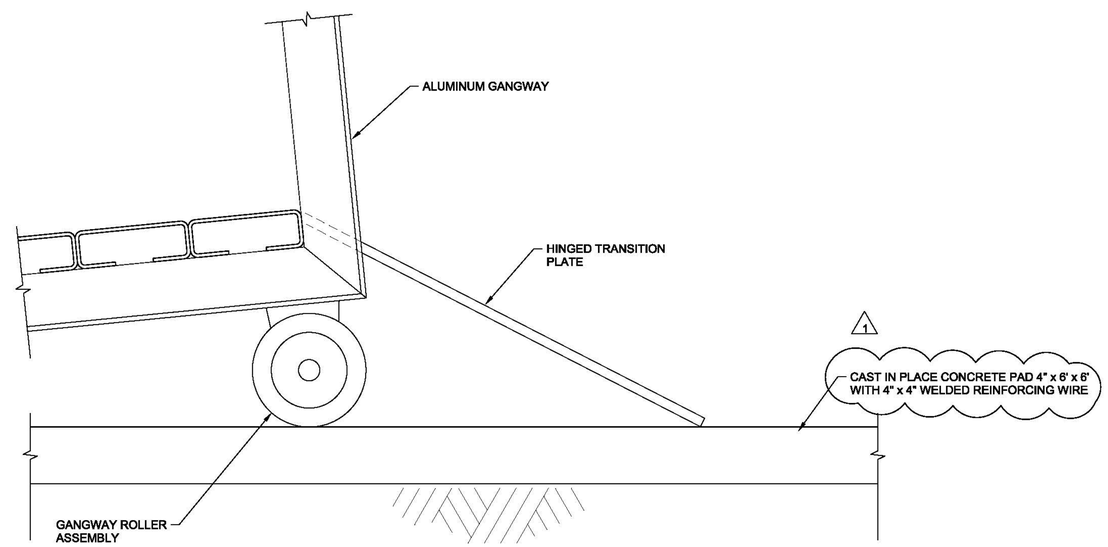

2 LAND CONNECTION
NTS
C-2001

NO.	DATE	DSGN	DR	CHK	APVD	REVISION	BY	APVD
1	2013/10/25	R. FORREST		K. POPE	W. BENNETT	REVISION #1	RT	Y
0	2013/08/29					ISSUED FOR CONSTRUCTION	RT	Y

RICHARD P. TRAVER
N.J. PROFESSIONAL ENGINEER NO. 26300
R. TRAVER

CH2MHILL®
1717 ARCH ST. - SUITE 4400
PHILADELPHIA, PA 19103
PH (215) 563-4220 FAX (215) 563-3828

IMPOUNDMENTS 1 AND 2
PILOT DEMONSTRATION STUDY
WYETH HOLDINGS CORPORATION
AMERICAN CYANAMID SUPERFUND SITE
20 POLHEMUS LANE
BRIDGEWATER, NJ

STRUCTURAL
GANGWAY

AS SHOWN
VERIFY SCALE
BAR IS ONE INCH ON ORIGINAL DRAWING.
0 1"

DATE	2013/08/29
PROJ	472109
DWG	S-5005
SHEET	24

REUSE OF DOCUMENTS: THIS DOCUMENT, AND THE IDEAS AND DESIGNS INCORPORATED HEREIN, AS AN INSTRUMENT OF PROFESSIONAL SERVICE, IS THE PROPERTY OF CH2M HILL AND IS NOT TO BE USED, IN WHOLE OR IN PART, FOR ANY OTHER PROJECT WITHOUT THE WRITTEN AUTHORIZATION OF CH2M HILL.
©CH2M HILL 2011. ALL RIGHTS RESERVED.

FILENAME: 472109-001-S-5005.dgn PLOT DATE: 10/23/2013 PLOT TIME: 4:54:50 PM

GENERAL NOTES:

1. UNDERGROUND CONDUIT SHALL BE SCHEDULE 80 PVC DIRECT BURIED, ALL 600V WIRING SHALL BE RATED "USE–RHH–RHW". UNDERGROUND CONDUIT SHALL BE RUN 3'–0" BELOW FINISHED GRADE U.O.N. CONDUIT SHALL BE AS MANUFACTURED BY ALLIED TUBE AND CONDUIT OR APPROVED EQUAL.
2. FURNISH AND INSTALL ALL REQUIRED 15KV POLE LINE ACCESSORIES NECESSARY TO MAKE THE ELECTRICAL WORK COMPLETE AND READY FOR OPERATION, INCLUDING, BUT NOT LIMITED TO, ALL NECESSARY SUPPORTS AND HARDWARE FOR MOUNTING OF ELECTRICAL EQUIPMENT.
3. COORDINATE ELECTRICAL WORK WITH THE WORK OF OTHER TRADES AND FACILITY OPERATIONS INCLUDING OTHER CONSTRUCTION PROJECTS IN PROGRESS.
4. PERFORM WORK AS PER APPLICABLE CONTRACT SPECIFICATIONS, NATIONAL ELECTRICAL CODE, NATIONAL ELECTRICAL SAFETY CODE AND ALL OTHER APPLICABLE FEDERAL, STATE AND LOCAL REGULATIONS. IN CASE OF CONFLICT, THE MOST RESTRICTIVE SHALL APPLY.
5. ALL MATERIAL AND EQUIPMENT SHALL BE UL, NEMA, ANSI, IEEE, ADA & CBM APPROVED FOR INTENDED SERVICE. MATERIAL AND INSTALLATION SHALL MEET REQUIREMENTS OF NATIONAL, STATE AND LOCAL ELECTRICAL CODES.IN CASE OF CONFLICT THE MOST RESTRICTIVE SHALL APPLY.
6. MAINTAIN RECORD DRAWINGS ON SITE. RECORD SET MUST BE COMPLETE, CURRENT AND AVAILABLE FOR INSPECTION.
7. DRAWINGS ARE DIAGRAMMATIC AND ARE NOT INTENDED TO SHOW ALL DETAILS OF CONSTRUCTION MOUNTING AND WIRING. THE EXACT LOCATION OF EQUIPMENT AND DEVICES SHALL BE DETERMINED IN THE FIELD AND APPROVED BY THE ENGINEER.
8. TEMPORARY LIGHT AND POWER SHALL BE PROVIDED BY THE CONTRACTOR.
9. IMMEDIATELY NOTIFY THE ENGINEER OF ANY DISCREPANCY BETWEEN THE CONTRACT DRAWINGS AND THE EXISTING FIELD CONDITIONS, PRIOR TO INSTALLATION OF ELECTRICAL EQUIPMENT.
10. ALL EQUIPMENT SHALL BE INSTALLED IN A NEAT AND WORKMANLIKE MANNER, RECTILINEAR TO THE STRUCTURE.
11. ALL EQUIPMENT SHALL BE INSTALLED AND ADJUSTED IN ACCORDANCE WITH THE MANUFACTURER'S RECOMMENDATIONS AND AS APPROVED BY THE ENGINEER.
12. THE CONTRACTOR SHALL ABIDE BY ALL SAFETY MEASURES INCLUDING DISCHARGING OF CABLE CAPACITANCE AND GROUNDING TO PROTECT PERSONNEL AGAINST ANY ELECTRICAL SHOCK.
13. UPON AWARD OF CONTRACT, SUBMIT A DETAILED WORK STAGING PLAN TO THE ENGINEER FOR APPROVAL PRIOR TO START OF WORK.
14. ALL WORK ASSOCIATED WITH POWER OUTAGES SHALL BE PERFORMED ON A CONTINUOS BASIS (24 HOURS).
15. FOR HIGH VOLTAGE FEEDERS ONLY, PSE & G PERSONNEL SHALL PERFORM ALL SWITCHING OPERATIONS INCLUDING THE CLOSING OF GROUND SWITCHES, SHUTDOWN OF FEEDERS, RE–ENERGIZING FEEDERS AND TRANSFERRING OF LOADS.
16. VERIFY NECESSARY FEEDERS ARE DE–ENERGIZED AND NECESSARY SWITCHES HAVE BEEN LOCKED OPEN AND TAGGED–OUT PRIOR TO COMMENCING WORK ON THE PORTION OF THE SYSTEM REQUIRED.
17. CABLE ENDS NOT YET SPLICED, SHALL BE PROPERLY SECURED TO AVOID ABSORPTION OF HUMIDITY. MANUFACTURER'S ORIGINAL ENDCAPS SHALL BE MAINTAINED UNTIL SPLICING. IF MANUFACTURER END CAPS ARE UNAVAILABLE, PROVIDE APPROVED MEANS AND METHODS TO PREVENT CABLE MOISTURE ABSORBTION.
18. ALL ELECTRICAL SYSTEM EQUIPMENT, COMPONENTS AND THE MEANS OF THEIR ATTACHMENTS AND SUPPORT SHALL BE INSTALLED IN A MANNER TO RESIST THE EFFECTS OF EARTHQUAKE MOTION AS DETERMINED IN ACCORDANCE WITH THE NEW JERSEY UNIFORM CONSTRUCTION CODE AS AMENDED TO DATE.
19. ALL ELECTRICAL MATERIAL AND EQUIPMENT NECESSARY TO PERFORM ELECTRICAL WORK SHALL BE AVAILABLE ON SITE PRIOR TO START OF WORK.
20. FURNISH AND INSTALL 15KV PRE–FORMED STRESS CONE KITS AS MANUFACTURED BY RAYCHEM, 3M OR APPROVED EQUAL.
21. MEDIUL VOLTAGE COMMISSIONING TESTS SHALL BE PERFORMED BY A THIRD PARTY COMPANY AS INDICATED:
    a. HIGH ENERGY TESTING
    b. EASTERN HIGH VOLTAGE, ROBBINSVILLE, N.J.
    c. SCOTT TESTING INC., TRENTON, N.J.
    d. AMERICAN ELECTRICAL TESTING HAUPPAUQE, N.Y.

    TESTING SHALL CONSIST OF NETA HI–POT CABLE TESTING.

ABBREVIATIONS

AMP	AMPERES
AWG	AMERICAN WIRE GAUGE
C	CONDUIT
CAT.	CATALOG
CKT.	CIRCUIT
DWG.	DRAWING
E	EXISTING
FS	FUSED SWITCH
FT	FOOT, FEET
GFCI	GROUND FAULT CIRCUIT INTERRUPTER
G, GND	GROUND
J, JB	JUNCTION BOX
KVA	KILOVOLT AMPERE
KWA	KILOWATT AMPERE
MTG	MOUNTING
N.I.C.	NOT IN CONTRACT
No., #	NUMBER
PH	PHASE
PNL	PANEL
PR.	PAIR
PWR	POWER
QTY.	QUANTITY
T	TRANSFORMER
T/O	TELECOMMUNICATION OUTLET
TYP	TYPICAL
U.O.N.	UNLESS OTHERWISE NOTED
VAC	VOLT ALTERNATE CURRENT
V	VOLT
WP	ITEM IN WEATHERPROOF ENCLOSURE OR OF WEATHERPROOF CONSTRUCTION
XFMR	TRANSFORMER

PETER J. SOKOLOW

N.J. PROFESSIONAL ENGINEER NO. 24405

NO.	DATE	REVISION	BY	APV'D
0	2013/09/23	ISSUED FOR CONSTRUCTION	PJS	Y
A	2013/08/16	95% REVIEW	PJS	Y

DSGN	DR	CHK	APV'D
N.KANTOR	N. KANTOR	P.J. SOKOLOW	P.J. SOKOLOW

©CH2M HILL 2010. ALL RIGHTS RESERVED.

1717 ARCH ST. - SUITE 4400
PHILADELPHIA, PA 19103
PH (215)563-4220 FAX (215)563-3828
EB 0000072 AA 001992

IMPOUNDMENTS 1 AND 2
PILOT FEASIBILITY COST STUDY
WYETH HOLDINGS CORPORATION
AMERICAN CYANAMID SUPERFUND SITE
20 POLHEMUS LANE
BRIDGEWATER, NJ

CH2MHILL

ELECTRICAL

GENERAL NOTES AND ABBREVIATIONS

N/A

VERIFY SCALE

BAR IS ONE INCH ON ORIGINAL DRAWING.
0 1"

DATE	2013/08/16
PROJ	472109
DWG	E-0001
SHEET	25

REUSE OF DOCUMENTS: THIS DOCUMENT, AND THE IDEAS AND DESIGNS INCORPORATED HEREIN, AS AN INSTRUMENT OF PROFESSIONAL SERVICE, IS THE PROPERTY OF CH2M HILL AND IS NOT TO BE USED, IN WHOLE OR IN PART, FOR ANY OTHER PROJECT WITHOUT THE WRITTEN AUTHORIZATION OF CH2MHILL.

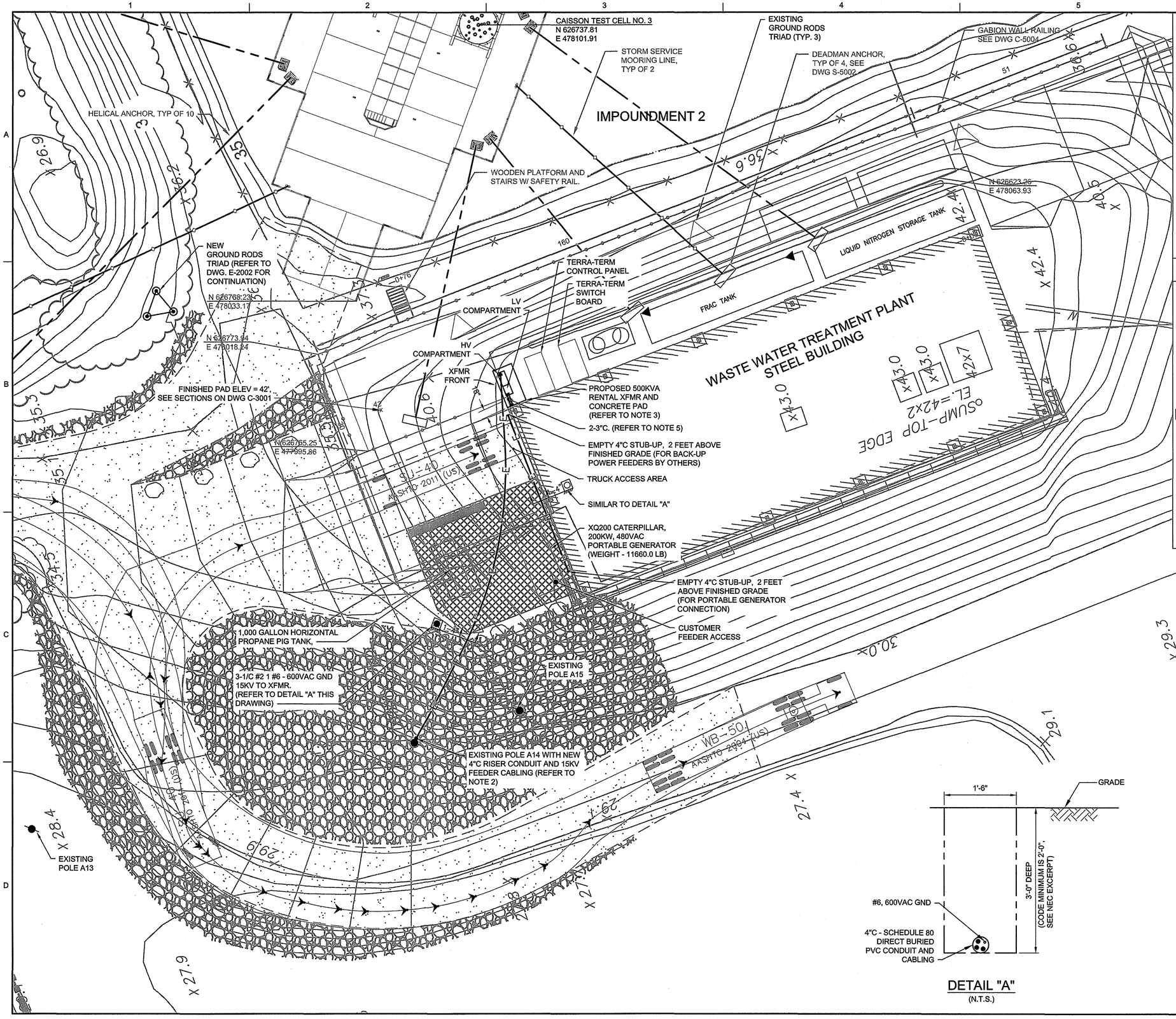

NOTES:

1. FOR GENERAL NOTES AND ABBREVIATIONS REFER DWG. E-0001.
2. FOR POLE DETAILS REFER TO DWG. E-5001.
3. FOR TRANSFORMER PAD DETAILS REFER TO DWG. E-5001.
4. FOR PAVEMENT TYPE REFER TO CIVIL DRAWINGS.
5. TWO (3) INCH, RGS CAPPED EMPTY CONDUIT STUB-UPS FOR TERRA-THERM 480VAC FEEDERS.

LEGEND

- STORM SERVICE MOORING LINE
- NORMAL SERVICE MOORING LINE
- LIMITS OF RAMP
- LIMITS OF EQUIPMENT BENCH/ SPCC CONTAINMENT LINER
- E — E — NEW UNDERGROUND DIRECT BURIED CONDUIT DUCT WITH FEEDER CABLING, AS NOTED.
- 1-4" / 1-4" — UNDERGROUND DUCT BANK CONFIGURATION
  - DENOTES CONDUIT SIZE
  - DENOTES QUANTITY OF CONDUITS
  - DENOTES CONDUIT FILL
  - DENOTES CONDUIT EMPTY
- EXISTING UTILITY POLE

NO.	DATE	DSGN	DR	CHK	APVD	BY	APVD	REVISION
0	2013/08/29	N. KANTOR	N. KANTOR	P.J. SOKOLOW	P.J. SOKOLOW	PJS	Y	ISSUED FOR CONSTRUCTION
A	2013/08/16					PJS	Y	95% REVIEW

PETER J. SOKOLOW
N.J. PROFESSIONAL ENGINEER NO. 24408
10/24/13

1717 ARCH ST - SUITE 4400
PHILADELPHIA, PA 19103
PH (215) 563-4220 FAX (215) 563-3828
EB 0000072 AA 001992

IMPOUNDMENTS 1 AND 2
PILOT DEMONSTRATION STUDY
WYETH HOLDINGS CORPORATION
AMERICAN CYANAMID SUPERFUND SITE
20 POLHEMUS LANE
BRIDGEWATER, NJ

CH2MHILL

ELECTRICAL
SITE POWER PLAN

REUSE OF DOCUMENTS: THIS DOCUMENT, AND THE IDEAS AND DESIGNS INCORPORATED HEREIN, AS AN INSTRUMENT OF PROFESSIONAL SERVICE, IS THE PROPERTY OF CH2M HILL AND IS NOT TO BE USED, IN WHOLE OR IN PART, FOR ANY OTHER PROJECT WITHOUT THE WRITTEN AUTHORIZATION OF CH2MHILL.
©CH2M HILL 2010. ALL RIGHTS RESERVED.

VERIFY SCALE
BAR IS ONE INCH ON ORIGINAL DRAWING.
0 1"

DATE	2013/08/16
PROJ	472109
DWG	E-2001
SHEET	26

FILE NAME: 472109-001-E-2001.dwg PLOT DATE: 10/24/2013 8:39 AM

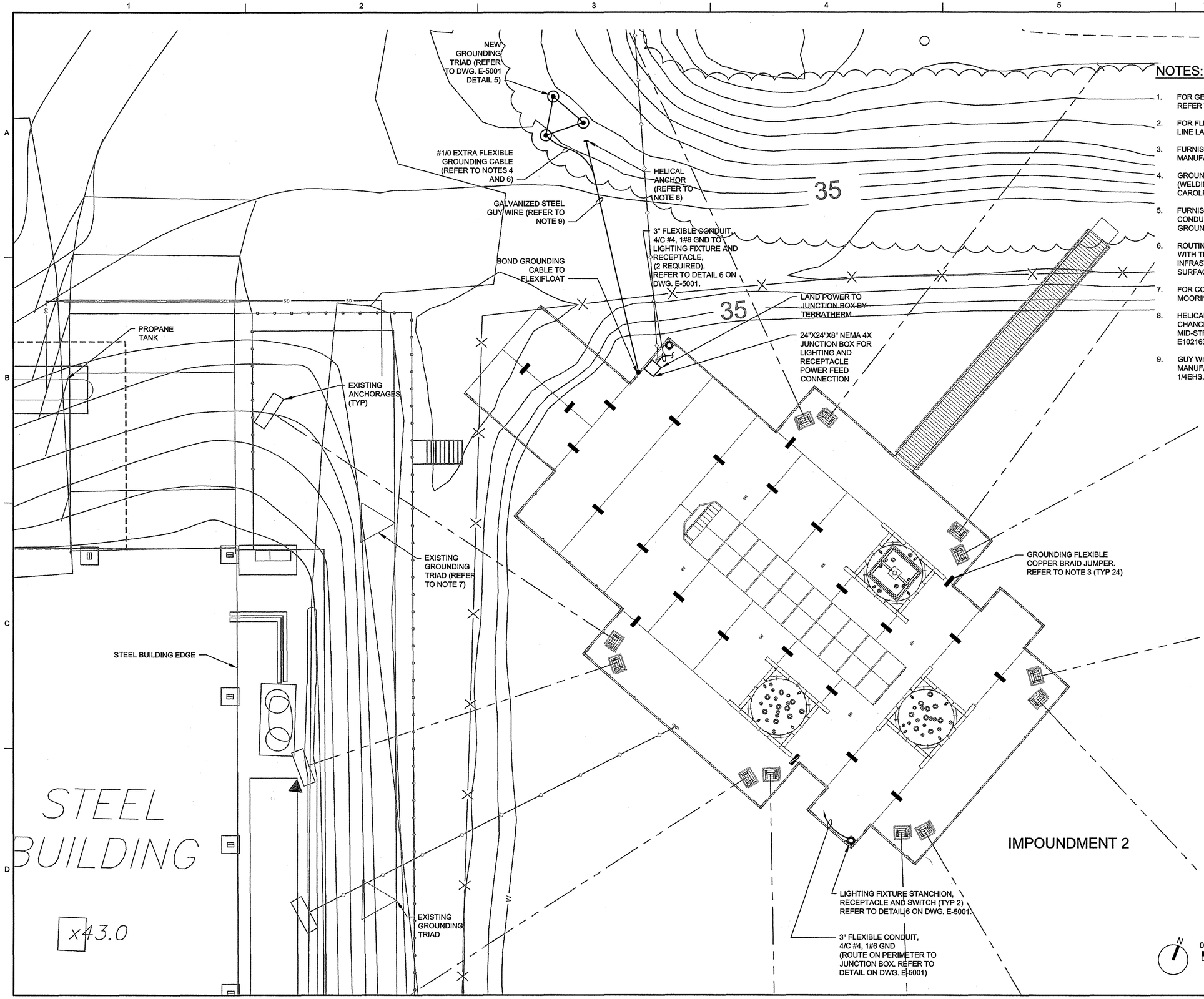

NOTES:

1. FOR GENERAL NOTES, SYMBOLS AND ABBREVIATIONS REFER TO DWG. E-0001.
2. FOR FLEXIFLOAT LOCATION, ORIENTATION, AND MOORING LINE LAYOUT SEE DRAWINGS C-2001, C-5002, AND S-2001.
3. FURNISH AND INSTALL GROUNDING JUMPERS AS MANUFACTURED BY BURNDY, CAT. NO. BF12.
4. GROUNDING CABLES SHALL BE EXTRA FLEXIBLE, 105°C (WELDING TYPE) AS MANUFACTURED BY GENERAL CABLE, CAROLPRENE CAT. NO. 01754.
5. FURNISH AND INSTALL 3" LIQUID TIGHT FLEXIBLE METAL CONDUIT TO PERIMETER HANDRAIL AND ROUTE 4/C #4, 1 #6 GROUND FOR LIGHTING AND RECEPTACLE 120VAC POWER.
6. ROUTING OF GROUNDING CABLES TO BE COORDINATED WITH TERRA-THERM TO SHARE SUPPORTING INFRASTRUCTURE BETWEEN FLEXIFLOAT AND LAND SURFACE SURROUNDING IMPOUNDMENT 2.
7. FOR COORDINATE LOCATIONS (GROUNDING TRIAD, MOORING LINES, ETC.) REFER TO CIVIL DRAWINGS.
8. HELICAL ANCHOR SHALL BE AS MANUFACTURED BY AB CHANCE CO. (HUBBELL ELECTRIC) TYPE PISA TWIN HELIX, MID-STRENGTH SERIES, 1" DIAMETER ROD, CAT. NO. E1021635, 7 FEET ROD AND THIMBLE EYE, CAT. NO. 12334P.
9. GUY WIRE SHALL BE GALVANIZED STEEL 1/4" DIAMETER, AS MANUFACTURED BY ROHN PRODUCTS LLC, CAT. NO. 1/4EHS. GUY WIRE CLAMP SHALL BE ROHN CAT. NO. 14001.

PETER J. SOKOLOW
N.J. PROFESSIONAL ENGINEER NO. 24409
10/24/13

NO.	DATE	DSGN	DR	CHK	APVD
0	2013/08/28	P. DANIELL	N. KANTOR	P. J. SOKOLOW	P. J. SOKOLOW
A	2013/09/16				

REVISION	BY	APVD
95% REVIEW	PJS	Y
ISSUED FOR CONSTRUCTION	PJS	Y

CH2MHILL
1717 ARCH ST. - SUITE 4400
PHILADELPHIA, PA 19103
PH (215) 563-4220 FAX (215) 563-3828
EB 00000072 AA 001992

IMPOUNDMENTS 1 AND 2
PILOT DEMONSTRATION STUDY
WYETH HOLDINGS CORPORATION
AMERICAN CYANAMID SUPERFUND SITE
2 DOUGLAS LANE
BRIDGEWATER, NJ

ELECTRICAL
GROUNDING & POWER DISTRIBUTION FLEXIFLOAT ENLARGED LAYOUT

VERIFY SCALE
BAR IS ONE INCH ON ORIGINAL DRAWING.
0 1"

DATE	2013/08/16
PROJ	472109
DWG	E-2002
SHEET	27

REUSE OF DOCUMENTS: THIS DOCUMENT, AND THE IDEAS AND DESIGNS INCORPORATED HEREIN, AS AN INSTRUMENT OF PROFESSIONAL SERVICE, IS THE PROPERTY OF CH2M HILL AND IS NOT TO BE USED, IN WHOLE OR IN PART, FOR ANY OTHER PROJECT WITHOUT THE WRITTEN AUTHORIZATION OF CH2MHILL.
©CH2M HILL 2010. ALL RIGHTS RESERVED.

FILE NAME: 472109-001-E-2002.dwg PLOT DATE: 10/24/2013 9:34 AM

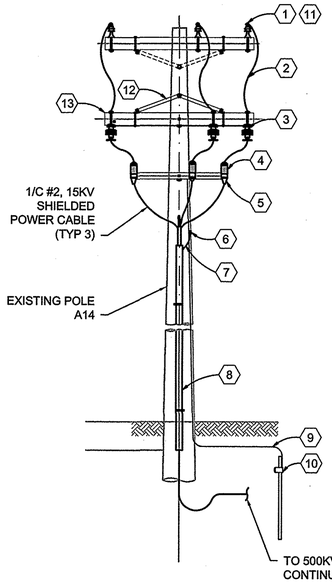

1 EXISTING #2/0 ACSR (TYP 3)
2 #2, 15KV INSULATED CABLE
3 15KV LOAD BREAK FUSED CUT-OUT
4 7.2KV LIGHTNING ARRESTORS (TYP 3)
5 PREFABRICATED STRESS CONES (TYP 3)
6 5KV CABLE SHIELDS GROUNDING
7 RISER CONDUIT GROUNDING
8 4" PVC COATED RGS CONDUIT
9 BARE COPPER #4 GROUND WIRE
10 10 FT. GROUND ROD WITH CADWELD CONNECTION.
11 HOT LINE CLAMP CONNECTOR
12 GALVANIZED METAL SUPPORT
13 8'-0" TREATED CROSS ARM
14 RENTAL TRANSFORMER, PAD MOUNTED, THREE PHASE WITH ONE LOAD BREAK BUSHING PER PHASE AND INTERNAL FUSES.
15 SIGNS, "DANGER" AND "WARNING".
16 EQUIPMENT GROUND CONNECTOR.
17 GROUND ROD - 3/4"Ø X 10'-0' COPPER WELD.
18 FUSED LOAD BREAK ELBOW, COOPER CAT. NO. LFEP125TFEC-AT.
19 6" MIN, TYP UNO.
20 TRANSFORMER EQUIPMENT.
21 CONCRETE ANCHOR, TYP PER TRANSFORMER MANUFACTURER REQUIREMENTS.
22 FINISH GRADE OR PAVEMENT.
23 2-#5 CONT AROUND PERIMETER.
24 PROVIDE 12" COMPACTED GRANDULAR FILL.
25 #5 @ 12" EW, T&B.
26 3" RGS CONDUIT STUB-UPS, (2'-0") FOR TERRA-THERM 480VAC, 600A POWER FEEDERS BY OTHERS.
27 3/4" CHAMFER, TYP.

1 RISER FEEDER POLE WITH FUSED LOAD BREAK CUT-OUT
NTS
E-2001

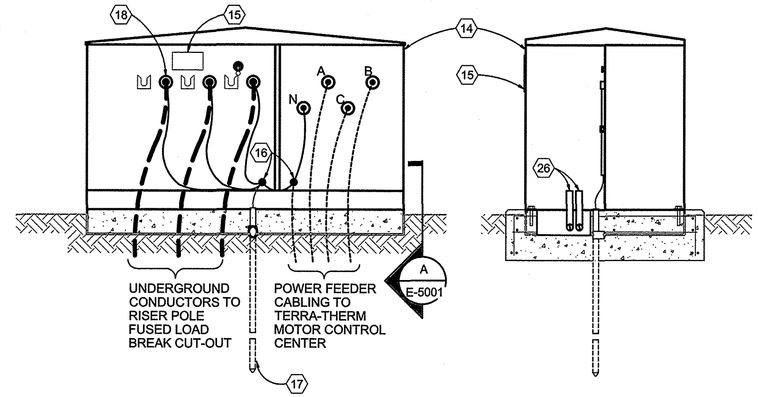

2 THREE PHASE PAD MOUNTED TRANSFORMER
NTS
E-2001

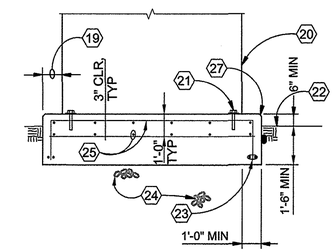

A SECTION
NTS
E-2001

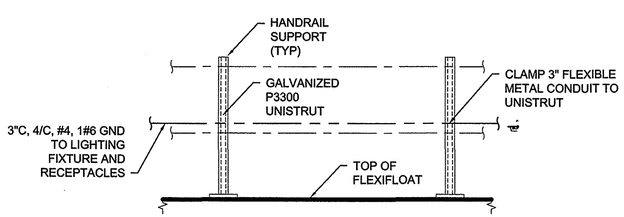

3 TYPICAL FLEXIBLE METAL CONDUIT ATTACHMENT TO FLEXIFLOAT
NTS
E-2002

(FOR TYPICAL RAILING STRUCTURAL DETAILS REFER TO DRAWING S-5003, DETAILS 1 AND 2)

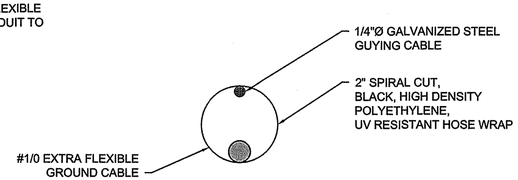

4 GROUND CABLE ATTACHMENT
NTS
E-2002

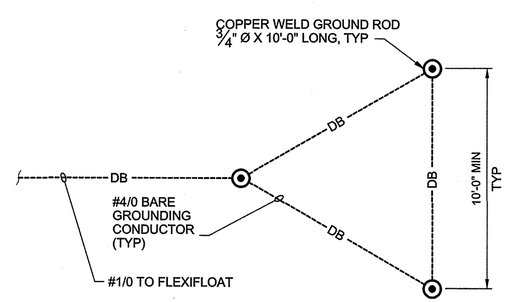

5 GROUND ROD TRIAD
NTS
E-2002

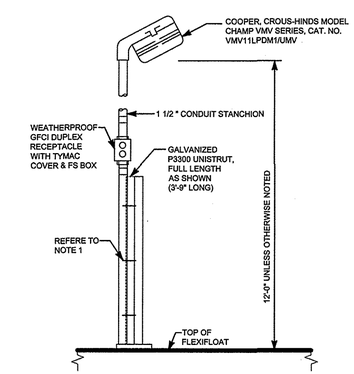

RAILING MOUNTED

NOTES:
1. CLAMP CONDUIT TO UNISTRUT HANDRAIL IN 3 PLACES

6 LIGHTING STANCHION
NTS
E-2002

NO.	DATE	DSGN	DR	CHK	APVD	BY	APVD
0	2013/08/29					PJS	Y
A	2013/08/16					PJS	Y

ISSUED FOR CONSTRUCTION
95% REVIEW
REVISION

N. KANTOR | N. KANTOR | P.J. SOKOLOW | P.J. SOKOLOW

PETER J. SOKOLOW
N.J. PROFESSIONAL ENGINEER NO. 24408
10/24/13

©CH2M HILL 2010. ALL RIGHTS RESERVED.

1717 ARCH ST., SUITE 4400
PHILADELPHIA, PA 19103
PH (215) 563-4220 FAX (215) 563-3828
EB 00000072 AA 001992

IMPOUNDMENTS 1 AND 2
PILOT DEMONSTRATION STUDY
WYETH HOLDINGS CORPORATION
AMERICAN CYANAMID SUPERFUND SITE
20 CONTINENTAL AVE
BRIDGEWATER, NJ

CH2MHILL

ELECTRICAL
DETAILS

REUSE OF DOCUMENTS: THIS DOCUMENT, AND THE IDEAS AND DESIGNS INCORPORATED HEREIN, AS AN INSTRUMENT OF PROFESSIONAL SERVICE, IS THE PROPERTY OF CH2M HILL AND IS NOT TO BE USED, IN WHOLE OR IN PART, FOR ANY OTHER PROJECT WITHOUT THE WRITTEN AUTHORIZATION OF CH2MHILL.

AS NOTED
VERIFY SCALE
BAR IS ONE INCH ON ORIGINAL DRAWING.
0 1"

DATE	2013/08/16
PROJ	472109
DWG	E-5001
SHEET	28

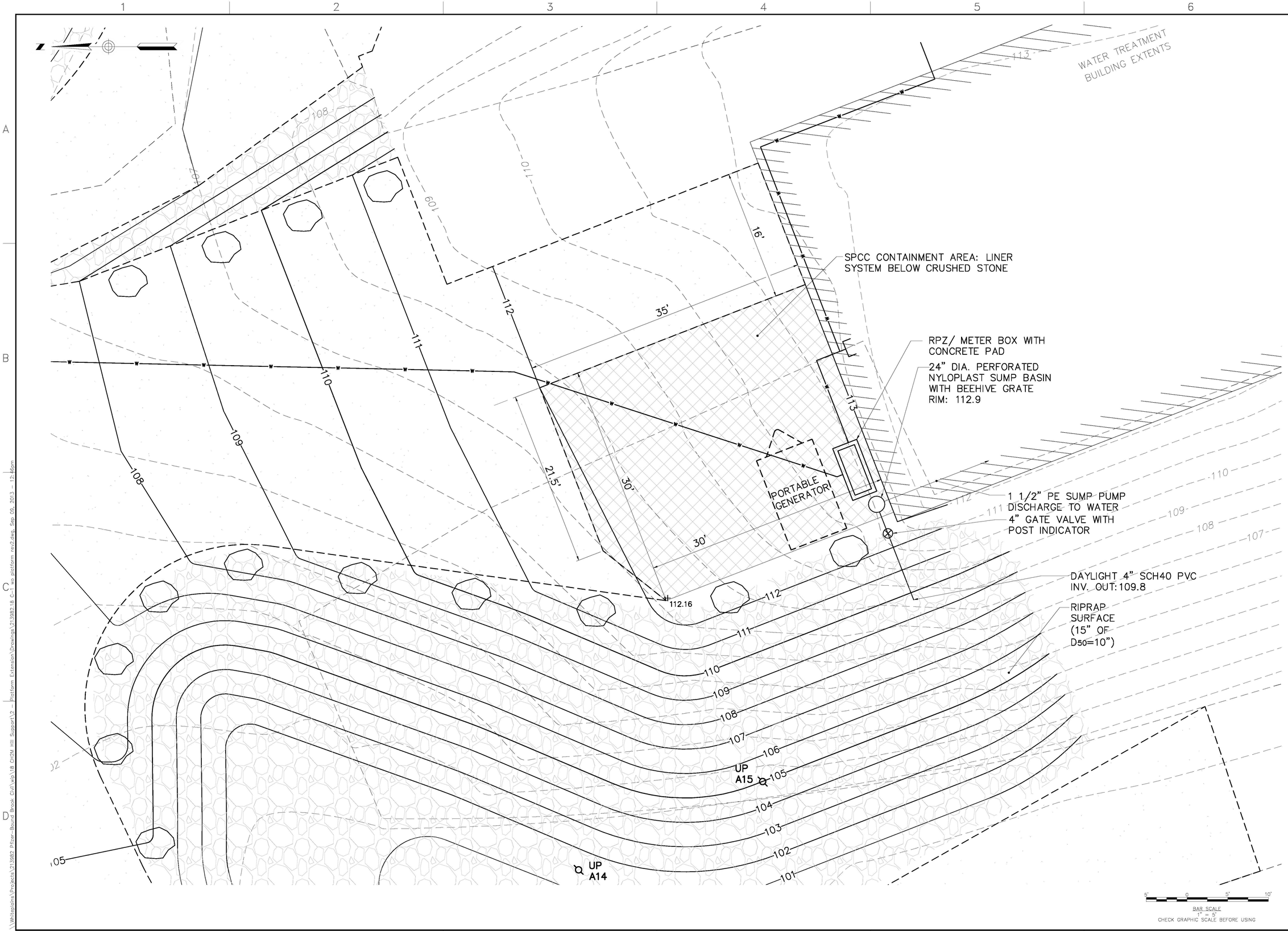

50 Millstone Road, Building 300
East Windsor, New Jersey 08520
877.786.8881 | www.woodardcurran.com

WOODARD & CURRAN

COMMITMENT & INTEGRITY DRIVE RESULTS

THIS DOCUMENT IS THE PROPERTY OF WOODARD & CURRAN INC. AND ITS CLIENT. REPRODUCTION OR MODIFICATION WITHOUT WRITTEN PERMISSION IS PROHIBITED.

REV	DESCRIPTION	DATE
1		

DESIGNED BY: DAS
DRAWN BY: BCM
CHECKED BY: DAS
213982.18 C-1 WQ PLATFORM.dwg

WWTP BENCH EXTENSION LAYOUT

WYETH HOLDINGS CORPORATION
AMERICAN CYANAMID SUPERFUND SITE
2201 CHERRY HILL LANE
BRIDGEWATER, NJ

WWTP PLATFORM EXTENSION

JOB NO.: 213982.18
DATE: SEPT. 2013
SCALE: 1"=5'
SHEET: 1 OF 1

Fig. 1

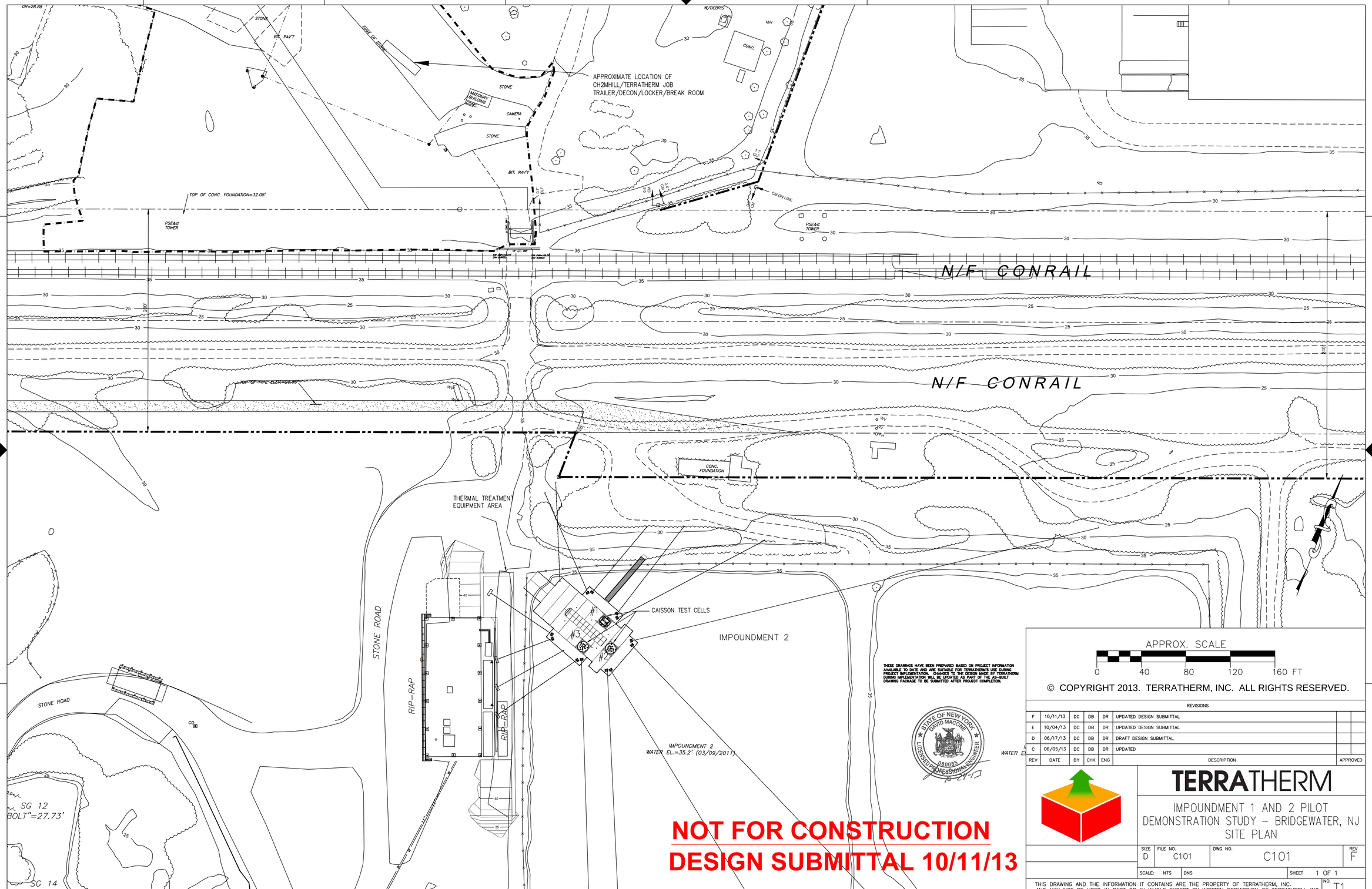

THESE DRAWINGS HAVE BEEN PREPARED BASED ON PROJECT INFORMATION AVAILABLE TO DATE AND ARE SUITABLE FOR TERRATHERM'S USE DURING PROJECT IMPLEMENTATION. CHANGES TO THE DESIGN MADE BY TERRATHERM DURING IMPLEMENTATION WILL BE UPDATED AS PART OF THE AS-BUILT DRAWING PACKAGE TO BE SUBMITTED AFTER PROJECT COMPLETION.

STATE OF NEW YORK
DAVID MACINE
080095
LICENSED PROFESSIONAL ENGINEER
10-24-13

APPROX. SCALE

0 40 80 120 160 FT

© COPYRIGHT 2013. TERRATHERM, INC. ALL RIGHTS RESERVED.

REVISIONS

REV	DATE	BY	CHK	ENG	DESCRIPTION	APPROVED
F	10/11/13	DC	DB	DR	UPDATED DESIGN SUBMITTAL	
E	10/04/13	DC	DB	DR	UPDATED DESIGN SUBMITTAL	
D	06/17/13	DC	DB	DR	DRAFT DESIGN SUBMITTAL	
C	06/05/13	DC	DB	DR	UPDATED	

TERRATHERM

IMPOUNDMENT 1 AND 2 PILOT
DEMONSTRATION STUDY – BRIDGEWATER, NJ
SITE PLAN

SIZE	FILE NO.	DWG NO.	REV
D	C101	C101	F

SCALE: NTS | DNS | SHEET 1 OF 1

THIS DRAWING AND THE INFORMATION IT CONTAINS ARE THE PROPERTY OF TERRATHERM, INC. AND MAY NOT BE USED IN PART OR IN WHOLE EXCEPT BY WRITTEN PERMISSION OF TERRATHERM, INC.

NO. T1

NOT FOR CONSTRUCTION
DESIGN SUBMITTAL 10/11/13

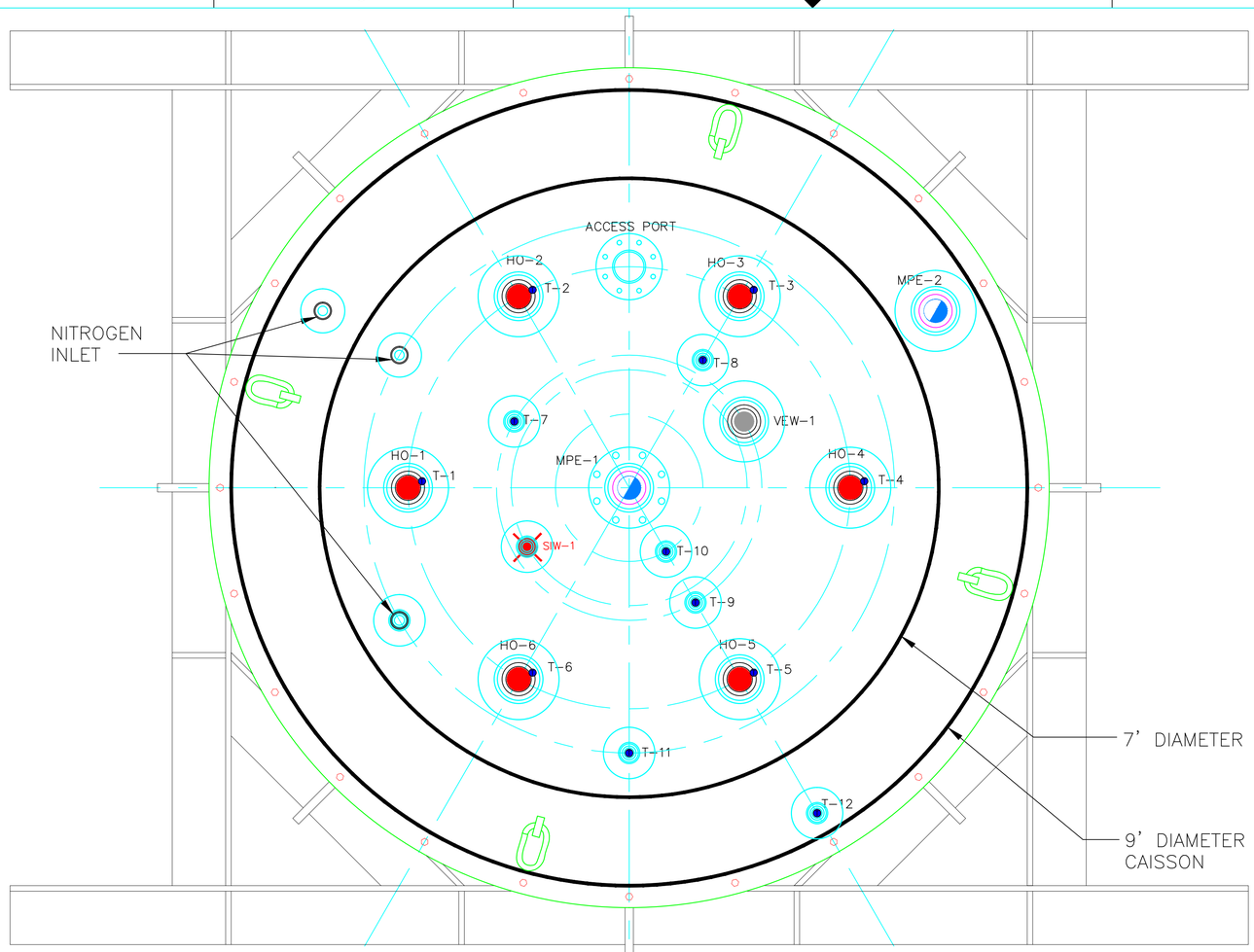

LEGEND

- HEATER WELL W/ CO-LOCATED THERMOCOUPLE
- MULTIPHASE EXTRACTION WELL
- TEMPERATURE MONITORING POINT
- VAPOR EXTRACTION WELL
- STEAM INJECTION WELL
- THERMOCOUPLE
- NITROGEN INLET

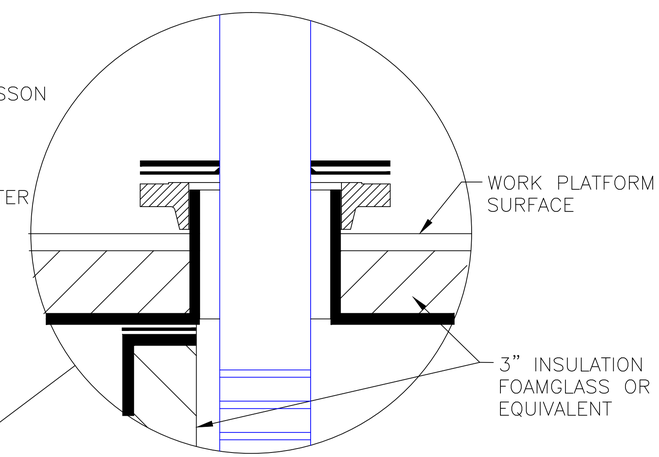

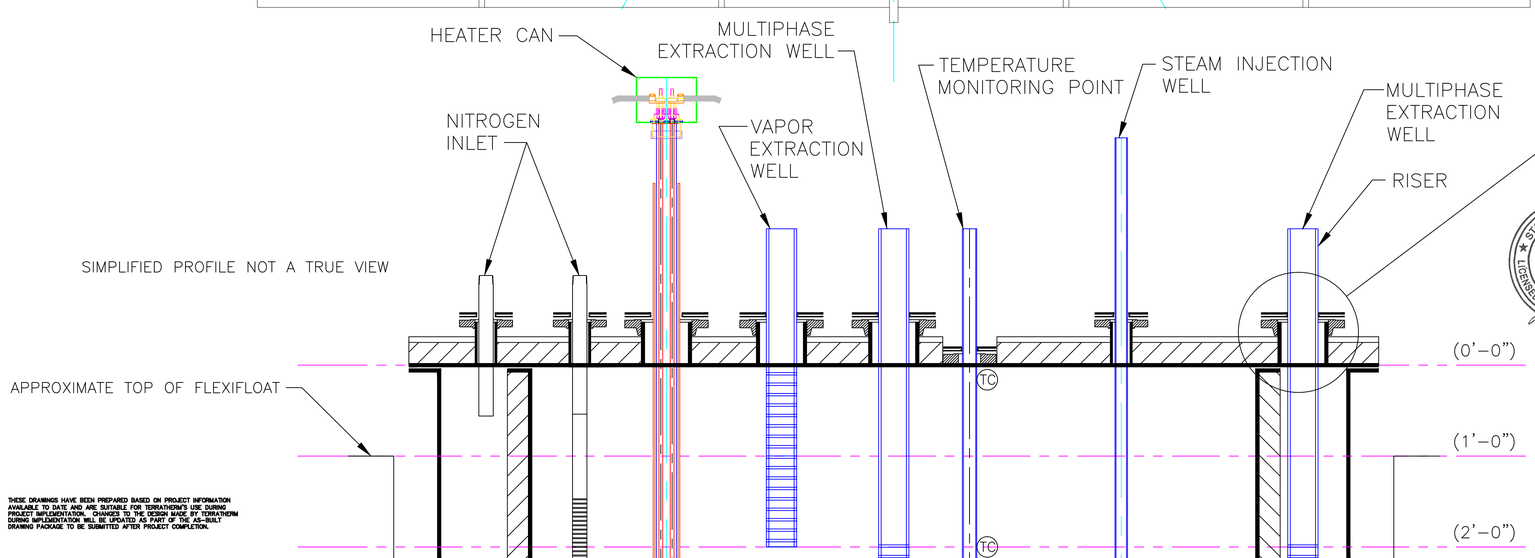

THESE DRAWINGS HAVE BEEN PREPARED BASED ON PROJECT INFORMATION AVAILABLE TO DATE AND ARE SUITABLE FOR TERRATHERM'S USE DURING PROJECT IMPLEMENTATION. CHANGES TO THE DESIGN MADE BY TERRATHERM DURING IMPLEMENTATION WILL BE UPDATED AS PART OF THE AS-BUILT DRAWING PACKAGE TO BE SUBMITTED AFTER PROJECT COMPLETION.

STATE OF NEW YORK · DAVID MACONE · 080085 · LICENSED PROFESSIONAL ENGINEER · 10-27-13

© COPYRIGHT 2013. TERRATHERM, INC. ALL RIGHTS RESERVED.

REVISIONS

REV	DATE	BY	CHK	ENG	DESCRIPTION	APPROVED
E	10/11/13	TM	DB	DR	UPDATED DESIGN SUBMITTAL	
D	06/17/13	DC	DB	DR	DRAFT DESIGN SUBMITTAL	
C	06/05/13	DC	DB	DR	UPDATED	

TERRATHERM

IMPOUNDMENT 1 AND 2 PILOT DEMONSTRATION STUDY – BRIDGEWATER, NJ
CAISSON LAYOUT

SIZE	FILE NO.	DWG NO.	REV
D	C102	C102	E

SCALE: NTS | DNS | SHEET 1 OF 2

THIS DRAWING AND THE INFORMATION IT CONTAINS ARE THE PROPERTY OF TERRATHERM, INC. AND MAY NOT BE USED IN PART OR IN WHOLE EXCEPT BY WRITTEN PERMISSION OF TERRATHERM, INC.

NO. T2

HEATER CAN TYPICAL DETAIL
QTY (6) PER CAISSON – FINAL DEPTH TO BE DETERMINED
2 5/8" OD X 0.065 WALL, 304SS LINER
INSTALLED WITHIN A 4" SCH 160, C.S. HEATER CAN
*THERMOCOUPLE TO BE INSERTED AT EACH HEATER

NITROGEN INLET (ANNULUS) WELL TYPICAL DETAIL
QTY (1) PER CAISSON
2'L, MNPT X PLAIN END (BELOW SURFACE)
1 1/2" SCH 160 C.S. PIPE

NITROGEN INLET (INTERIOR) WELL TYPICAL DETAIL
QTY (2) PER CAISSON
6'L X 1 1/2" WELL SCREEN, 0.020 SLOT, HASTELLOY W/PLATE BOTTOM
WITH A WELDED 30"L X 1 1/2" SCH 160 C.S. RISER W/THREADED END

VAPOR EXTRACTION WELL TYPICAL DETAIL
QTY (1) PER CAISSON
2'L X 4" WELL SCREEN, 0.020 SLOT, HASTELLOY W/PLATE BOTTOM
4" X 18" SCH 160 C.S. RISER W/THREADED END

MULTI-PHASE EXTRACTION (INTERIOR) WELL TYPICAL DETAIL
QTY (1) PER CAISSON – FINAL DEPTH TO BE DETERMINED
6'L X 4" WELL SCREEN, 0.020 SLOT, HASTELLOY
4" SCH 160 C.S. RISER X 42" W/THREADED END
4" SCH 160 C.S. SUMP X 36"L

TEMPERATURE MONITORING POINT DETAIL
QTY (6) PER CAISSON– FINAL DEPTH TO BE DETERMINED
1 1/2" SCH 160, C.S. PIPE WITH WELDED CAP

STEAM INJECTION WELL TYPICAL DETAIL
QTY (1) PER CAISSON– FINAL DEPTH TO BE DETERMINED
2'L X 1 1/2" WELL SCREEN, 0.020 SLOT,
1 1/2" SCH 160 C.S. RISER WELDED JOINT
W/NPT THREADED END

MULTI-PHASE EXTRACTION (ANNULUS) WELL TYPICAL DETAIL
QTY (1) PER CAISSON – FINAL DEPTH TO BE DETERMINED
6'L X 4" WELL SCREEN, 0.020 SLOT, 316SS
4" SCH 160 C.S. RISER X 42" W/THREADED END

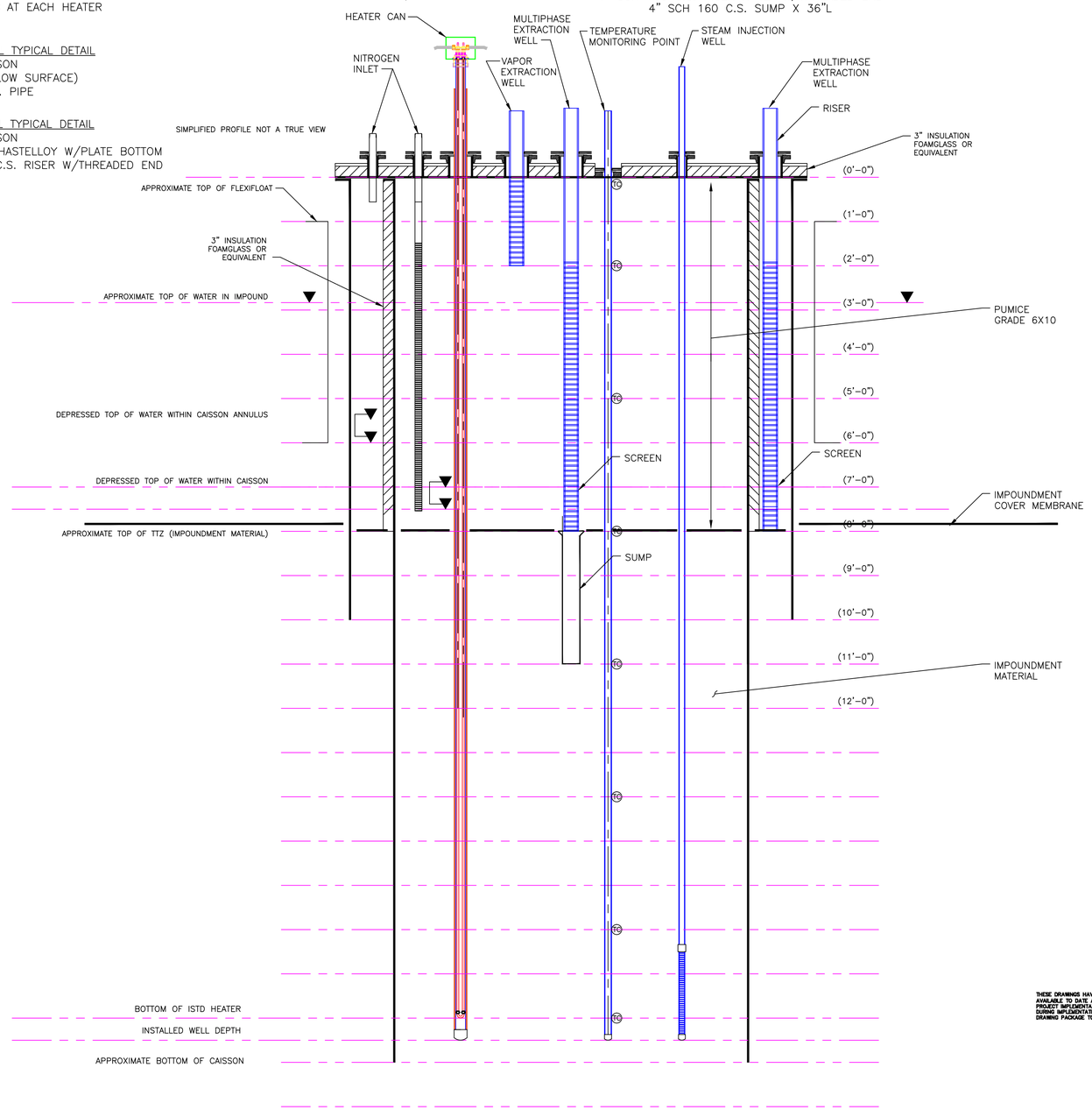

NOT FOR CONSTRUCTION
DESIGN SUBMITTAL 10/11/13

LEGEND

TC THERMOCOUPLE

NOTES:
1. CAISSON VIEW IS SIMPLIFIED, SEE CH2MHILL DWG. S-3001 AND SUPPORTING SHEETS FOR DETAIL.
2. PUMICE TO BE PLACED FROM CAISSON COVER TO TOP OF IMPOUNDMENT MATERIAL.
3. ACTUAL CAISSON LENGTH TO BE DETERMINED BASED ON RESULTS OF CLAY LAYER INVESTIGATION PERFORMED BY CH2MHILL PRIOR TO CONSTRUCTION.

WELL INSTALLATION

INSTALLED
THRU CAISSON COVER CLEARANCE HOLE
TO INSTALLED DEPTH
NOTE: DEPTHS ARE ASSUMED UNTIL A PREDETERMINED
DEPTH TO CLAY IS ESTABLISHED
AND AN ACCEPTED DEPTH ENTRY INTO THE CLAY IS AGREED UPON.

© COPYRIGHT 2013. TERRATHERM, INC. ALL RIGHTS RESERVED.

THESE DRAWINGS HAVE BEEN PREPARED BASED ON PROJECT INFORMATION AVAILABLE TO DATE AND ARE SUITABLE FOR TERRATHERM'S USE DURING PROJECT IMPLEMENTATION. CHANGES TO THE DESIGN MADE BY TERRATHERM DURING IMPLEMENTATION WILL BE UPDATED AS PART OF THE AS-BUILT DRAWING PACKAGE TO BE SUBMITTED AFTER PROJECT COMPLETION.

STATE OF NEW YORK · DAVID MACOLE · 080095 · LICENSED PROFESSIONAL ENGINEER
10-24-13

REVISIONS

REV	DATE	BY	CHK	ENG	DESCRIPTION	APPROVED
E	10/11/13	TM	DB	DR	UPDATED DESIGN SUBMITTAL	
D	06/17/13	DC	DB	DR	DRAFT DESIGN SUBMITTAL	
C	06/05/13	DC	DB	DR	UPDATED	

TERRATHERM

IMPOUNDMENT 1 AND 2 PILOT
DEMONSTRATION STUDY – BRIDGEWATER, NJ
CAISSON LAYOUT PROFILE

SIZE	FILE NO.	DWG NO.	REV
D	C102	C102	E

SCALE: NTS | DNS | SHEET 2 OF 2

THIS DRAWING AND THE INFORMATION IT CONTAINS ARE THE PROPERTY OF TERRATHERM, INC. AND MAY NOT BE USED IN PART OR IN WHOLE EXCEPT BY WRITTEN PERMISSION OF TERRATHERM, INC.

NO. T3

ELECTRICAL ONELINE LEGEND (SMART SYMBOL)

TERRATHERM FREQUENTLY USED TERMS AND SYMBOLS

A	– AMPERE
AMP	– AMPERE
ATS	– AUTOMATIC TRANSFER SWITCH
C.S.	– CARBON STEEL
DP	– DISTRIBUTION PANEL
FLA	– FULL LOAD AMPS. MOTOR FLA ARE SPECIFIED PER NEC 430.250
GFCI	– GROUND FAULT CIRCUIT INTERRUPTER
KVA	– KILOVOLT–AMPERE
KW	– KILOWATTS
KWHR	– KILOWATT–HOUR
LC	– LOAD CENTER
LCP	– LOCAL CONTROL PANEL
MSWB	– MAIN SWITCHBOARD
OWS	– OIL WATER SEPARATOR
SCR	– SILICON CONTROLLED RECTIFIER
T(XXX)	– TERRATHERM EQUIPMENT IDENTIFICATION NUMBER
V	– VOLTS
VFD	– VARIABLE FREQUENCY DRIVE
XX/XXX	– PLACE HOLDER – INFORMATION TO BE ADDED FOR SPECIFIC PROJECT

- WIRE TERMINATION / CONNECTION POINT
- ELECTRICAL CONDUCTOR / WIRE
- SEMI–CONDUCTOR FUSE
- HEATER ELEMENT AS REPRESENTED IN ONELINE. LETTER IN HEXAGON DENOTES HEATER TYPE.
- HEAT TRACE FOR PIPING
- VFD — XX HP — VARIABLE FREQUENCY DRIVE(VFD) WITH DISCONNECT SWITCH AT PANEL. VFD RATING AS NOTED
- XX — FLA XXX — MOTOR. HORSEPOWER AS INDICATED IN CIRCLE. FULL LOAD AMPS (FLA) AS NOTED PER APPLICABLE NEC TABLE.
- XX KW — STANDBY GENERATOR. KW RATING AS NOTED.
- XXX : XXX V — VOLTAGE TRANSFORMER, TYPICALLY USED FOR METERING. VOLTAGE RATIO AS NOTED.
- XXX : 5 A — CURRENT TRANSFORMER, TYPICALLY USED FOR METERING. CURRENT TRANSFORMER RATIO AND POLARITY AS NOTED.
- M — ENERGY METER (KWHR) MODEL AS NOTED
- KVA, PRI_VOLT:480/277V, %z — POWER TRANSFORMER WITH PRIMARY VOLTS, SECONDARY VOLTS, KVA RATINGS, AND % IMPEDANCE AS NOTED
- EQUIPMENT SKID BOUNDARY
- ATS–1, XXX A, N, E, L — AUTOMATIC TRANSFER SWITCH. SWITCH AMP RATING AS NOTED
- RATED HP @460V, FLA X – X, XX AMPS MAX — UL COMBINATION STARTER TYPE E, SELF–PROTECTED OR TYPE F. FULL LOAD AMP RATING ADJUSTABLE IN SPECIFIED RANGE.

ELECTRICAL ONELINE LEGEND (SMART SYMBOL – INTEGRATED EQUIPMENT)

- CB #, AMP, 3 POLES — LOW VOLTAGE AIR CIRCUIT BREAKER WITH RATING AND NUMBER OF POLES AS NOTED. NON–ADJUSTABLE TYPE.
- CB #, XX AT, XX AF, 3 POLES — LOW VOLTAGE AIR CIRCUIT BREAKER WITH RATING AND NUMBER OF POLES AS NOTED. TRIP RATING ADJUSTABLE TYPE.
- CB #, XX AT, XX AF, 3 POLES, LSIG — LOW VOLTAGE AIR CIRCUIT BREAKER WITH RATING AND NUMBER OF POLES AS NOTED. TRIP RATING ADJUSTABLE TYPE. PROTECTION TO BE SPECIFIED AS REQUIRED.
- CB #, XX AT, XX AF, 3 POLES, LSIG — LOW VOLTAGE AIR CIRCUIT BREAKER WITH RATING AND NUMBER OF POLES AS NOTED. TRIP RATING ADJUSTABLE TYPE. PROTECTION TO BE SPECIFIED AS REQUIRED. DRAWOUT TYPE.
- CB #, XX AT, XX AF, 3 POLES, LSIG — MEDIUM VOLTAGE VACUUM CIRCUIT BREAKER WITH RATING AND NUMBER OF POLES AS NOTED. TRIP RATING ADJUSTABLE. PROTECTION TO BE SPECIFIED AS REQUIRED. DRAWOUT TYPE.
- XXX AMP FUSE TYPE — FUSE RATING AND TYPE AS NOTED.
- XXX A – SWITCH, XXX AMP FUSE FUSE_TYPE — FUSED DISCONNECT SWITCH WITH SWITCH RATING, FUSE RATING AND TYPE AS NOTED.

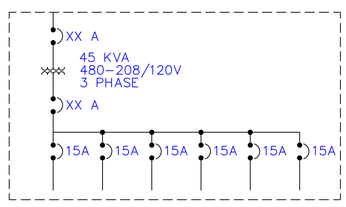

INTEGRATED PANEL WITH TRANSFORMER ASSEMBLY. PRIMARY AND SECONDARY BREAKERS AS NOTED. DISTRIBUTION PANEL CONTAINS BREAKERS AS NOTED.

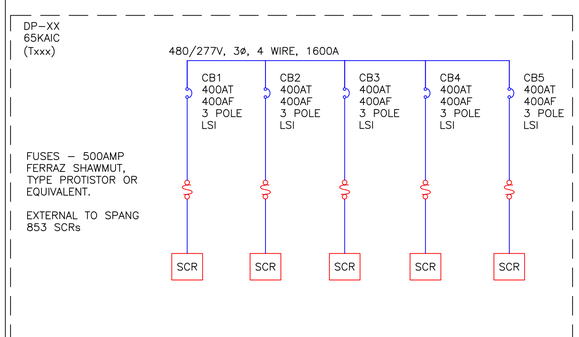

INTEGRATED DISTRIBUTION PANEL WITH BUILT–IN SCR CABINETS / ZONES. EACH ZONE HAS CUSTOMIZABLE PROTECTION FOR THE HEATER CIRCUIT AND THE SCR.

- GFCI WP — GROUND FAULT CIRCUIT INTERRUPTER DUPLEX OUTLET WITH WEATHERPROOF COVER.
- EMERGENCY STOP – PUSHBUTTON STATION
- LIGHT POLE WITH GFCI DUPLEX RECEPTACLE

SCR POWER WIRING SCHEMATICS

HEATER CIRCUIT – WYE CONFIGURED, 277V

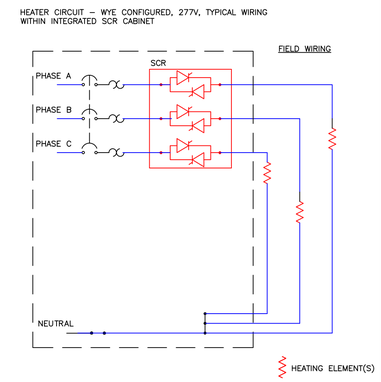

HEATER CIRCUIT – INSIDE DELTA CONFIGURED, 480V

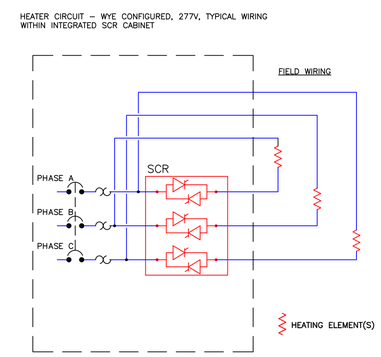

GENERAL NOTES

THE FOLLOWING NOTES ARE APPLICABLE TO ALL ELECTRICAL DRAWINGS, OR E–SERIES, UNLESS SPECIFICALLY STATED OTHERWISE ON THE SPECIFIC DRAWING. THE FOLLOWING IS NOT AN ALL–INCLUSIVE LIST OF RELEVANT CODE APPLICABLE TO THIS PROJECT BUT IS INTENDED TO HIGHLIGHT THE MAJOR SECTIONS ONLY.

GENERAL NOTES:

1. TERRATHERM WILL PROVIDE ALL FLEXIBLE CORDS AND CONNECTORS FOR EQUIPMENT SHOWN ON DRAWING. CONTRACTOR MAY BE REQUESTED TO PROVIDE ADDITIONAL MATERIAL ON A T&M BASIS AS SITE CONDITION CHANGES.
2. TERRATHERM'S ELECTRICAL DESIGNS ARE BASED ON ARTICLE 590, TEMPORARY INSTALLATION, OF THE NATIONAL ELECTRIC CODE, 2011. ALL TEMPORARY WIRING AND EQUIPMENT WILL BE REMOVED AT THE CONCLUSION OF THE PROJECT. ALL CABLE SHALL BE LISTED FOR HARD OR EXTRA–HARD USAGE PER ARTICLE REQUIREMENT.
3. TYPE "W" AND TYPE "G–GC" ARE CLASSIFIED FOR EXTRA HARD USAGE PER NEC TABLE 400–4. TYPE "W" AND TYPE "G–GC" CABLE AMPACITY ARE SPECIFIED PER NEC ARTICLE 400–5(A)(2) USING 75 DEGREE C COLUMN F3 FOR THREE–CONDUCTOR (3/C) CABLES. COLUMN D1 IS USED FOR SINGLE–CONDUCTOR (1/C) WHERE THE CONDUCTOR IS NOT IN PHYSICAL CONTACT WITH EACH OTHER.
4. ALL CABLE SHALL BE BOTTOM ENTRY WHEREVER PRACTICAL. PER NEC 110.14, ALL TERMINALS OF EQUIPMENT >100A ARE ASSUMED TO BE 75C RATED UNLESS OTHERWISE NOTED.
5. GROUNDING SHALL BE INSTALLED PER NEC ARTICLE 250 – "GROUNDING AND BONDING FOR ALL EQUIPMENT". ROUTE ALL HEATER CIRCUIT EQUIPMENT GROUNDS WITH THE HEATER CIRCUIT CONDUCTORS TO EACH WELLHEAD. REFERENCE TYPICAL GROUNDING DETAILS FOR ADDITIONAL INFORMATION.
6. THE GROUNDING ELECTRODE CONDUCTOR FOR A SEPARATELY DERIVED SYSTEM (TRANSFORMER) SHALL BE INSTALLED AT THE FIRST DISCONNECTING MEAN PER NEC ARTICLE 250.30.
7. GENERATOR SHALL BE WIRED PER NEC ARTICLE 702, OPTIONAL STANDBY SYSTEMS. THE GENERATOR WILL BE WIRED TO A THREE (3) POLE TYPE AUTOMATIC TRANSFER SWITCH (ATS) AND SHOULD BE WIRED AS A NON–SEPARATELY DERIVED SYSTEM, I.E. DO NOT BOND NEUTRAL AT GENERATOR. WIRE EMERGENCY STOP SIGNAL TO PREVENT GENERATOR START DURING AN EMERGENCY. EMERGENCY STOP SIGNAL SHALL ALSO BE WIRED TO SHUNT TRIP THE MAIN BREAKER(S).
8. MAINTAIN WORKING CLEARANCE PER NEC ARTICLE 110.26 – "SPACES ABOUT ELECTRICAL EQUIPMENT".
9. ALL POWER DISTRIBUTION EQUIPMENT SHALL BE UL LISTED OR CERTIFIED BY A 3RD PARTY NRTL.
10. ALL PROCESS EQUIPMENT CONTROL PANELS SHALL BE BUILT TO APPLICABLE UL STANDARDS SUCH AS UL 508, UL 698. EQUIPMENT MAY BE FIELD EVALUATED BY A NRTL IF THE ABOVE STANDARD IS NOT AVAILABLE.
11. EQUIPMENT WITH "A" AND "B" TAG SUCH AS P–101A AND P–101B ARE NON–COINCIDENTAL LOADS.
12. USE THE FOLLOWING COLOR CODES FOR CONDUCTOR IDENTIFICATION:

	208Y / 120 VOLT	480 / 277 VOLT
PHASE A	BLACK	BROWN
PHASE B	RED	ORANGE
PHASE C	BLUE	YELLOW
NEUTRAL	WHITE	GRAY

13. ALL WORK SHALL CONFORM TO THE LATEST LOCAL, STATE AND FEDERAL REQUIREMENTS AS INTERPRETED BY THE AUTHORITY HAVING JURISDICTION

SITE SPECIFIC NOTES:

1. AMPACITIES OF CABLE ARE CORRECTED FOR AN MAX AMBIENT TEMPERATURE OF 91 DEGREE F
2. THE AVAILABLE FAULT CURRENT IS ASSUMED TO BE < 65KA.

© COPYRIGHT 2013. TERRATHERM, INC. ALL RIGHTS RESERVED.

THESE DRAWINGS HAVE BEEN PREPARED BASED ON PROJECT INFORMATION AVAILABLE TO DATE AND ARE SUITABLE FOR TERRATHERM'S USE DURING PROJECT IMPLEMENTATION. CHANGES TO THE DESIGN MADE BY TERRATHERM DURING IMPLEMENTATION WILL BE UPDATED AS PART OF THE AS–BUILT DRAWING PACKAGE TO BE SUBMITTED AFTER PROJECT COMPLETION.

COMMONWEALTH OF MASSACHUSETTS — WILLEY W. LEUNG — ELECTRICAL — No. 50619 — REGISTERED PROFESSIONAL ENGINEER — 10/24/13

CONFIDENTIAL

REVISIONS

REV	DATE	BY	CHK	ENG	DESCRIPTION	APPROVED
D	06/18/13	WL		WL	DRAFT DESIGN SUBMITTAL	
C	05/03/13	WL	DB	WL	REVISED PER CUSTOMER COMMENT / NEW VENDOR INFO	
B	04/29/13	WL			PROGRESS DRAFT 4–30–13	

TERRATHERM

THERMAL TREATMENT PILOT TEST
IMPOUNDMENT NO. 2 – BRIDGEWATER, NJ
ELECTRICAL LEGEND

SIZE	FILE NO.	DWG NO.	REV
D	E100	E100	D

SCALE: NTS | DNS | SHEET 1 OF 1

THIS DRAWING AND THE INFORMATION IT CONTAINS ARE THE PROPERTY OF TERRATHERM, INC. AND MAY NOT BE USED IN PART OR IN WHOLE EXCEPT BY WRITTEN PERMISSION OF TERRATHERM, INC.

NO. T4

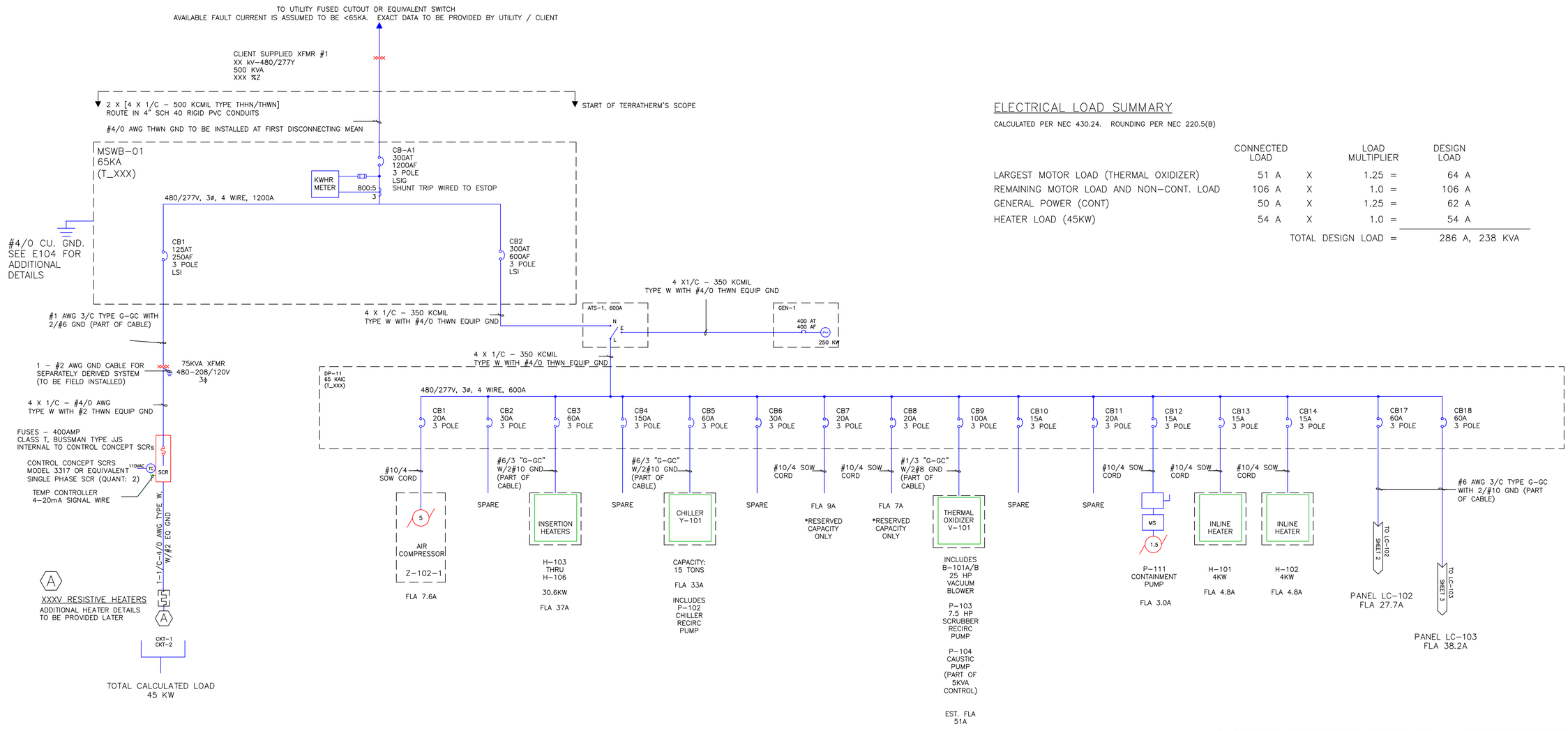

ELECTRICAL LOAD SUMMARY

CALCULATED PER NEC 430.24. ROUNDING PER NEC 220.5(B)

	CONNECTED LOAD		LOAD MULTIPLIER		DESIGN LOAD
LARGEST MOTOR LOAD (THERMAL OXIDIZER)	51 A	X	1.25	=	64 A
REMAINING MOTOR LOAD AND NON–CONT. LOAD	106 A	X	1.0	=	106 A
GENERAL POWER (CONT)	50 A	X	1.25	=	62 A
HEATER LOAD (45KW)	54 A	X	1.0	=	54 A
			TOTAL DESIGN LOAD	=	286 A, 238 KVA

© COPYRIGHT 2013. TERRATHERM, INC. ALL RIGHTS RESERVED.

REVISIONS

REV	DATE	BY	CHK	ENG	DESCRIPTION	APPROVED
F	10/04/13	DC	DB	WL	UPDATED DESIGN SUBMITTAL	
E	06/18/13	WL	DB	WL	DRAFT DESIGN SUBMITTAL	
D	06/05/13	WL	DB	WL	REDUCED CHILLER FROM 60 TON TO 15 TON, GENERAL REVISION	

THESE DRAWINGS HAVE BEEN PREPARED BASED ON PROJECT INFORMATION AVAILABLE TO DATE AND ARE SUITABLE FOR TERRATHERM'S USE DURING PROJECT IMPLEMENTATION. CHANGES TO THE DESIGN MADE BY TERRATHERM DURING IMPLEMENTATION WILL BE UPDATED AS PART OF THE AS–BUILT DRAWING PACKAGE TO BE SUBMITTED AFTER PROJECT COMPLETION.

COMMONWEALTH OF MASSACHUSETTS
WILLEY W. LEUNG
ELECTRICAL
No. 50619
REGISTERED PROFESSIONAL ENGINEER
10/24/13

NOT FOR CONSTRUCTION
DESIGN SUBMITTAL 10/11/13

TERRATHERM

IMPOUNDMENT 1 AND 2 PILOT
DEMONSTRATION STUDY – BRIDGEWATER, NJ
ONE LINE ELECTRICAL

SIZE	FILE NO.	DWG NO.	REV
D	E101	E101	F

SCALE: NTS | DNS | DSN | SHEET 1 OF 3

THIS DRAWING AND THE INFORMATION IT CONTAINS ARE THE PROPERTY OF TERRATHERM, INC. AND MAY NOT BE USED IN PART OR IN WHOLE EXCEPT BY WRITTEN PERMISSION OF TERRATHERM, INC.

NO. T5

PANEL LC–102

TYPE: NEMA 3R
SERVICE: 208/120 V, 3 Ph, 4 W
MFR: SQUARE D, QO

MAIN CB 100 A
LOCATION: BOTTOM
BUS RATING: 100 A

PANEL LOCATION: LC–102
SOURCE: DP–11
FEEDER: CB–17

DESCRIPTION	CKT NO	TRIP		LOADS (W) A	LOADS (W) B	LOADS (W) C		TRIP	CKT NO	DESCRIPTION
PROCESS GFCI #1	1	20		180 180				20	2	PROCESS GFCI #2
PROCESS GFCI #3	3	20			180 180			20	4	PROCESS GFCI #4
PROCESS GFCI #5	5	20				180 180		20	6	MONITORING PACKAGE
SPARE	7	20						20	8	SPARE
SPARE	9	20						20	10	SPARE
TMP REPEATER BOX	11	20				240 1200		20	12	OUTDOOR LIGHTING
CONTROL ROOM	13	60		6600				20	14	SPARE
	15	60			6600			20	16	SPARE
	17	60				6600		20	18	SPARE
WELLFIELD GFCI #1	19	20		180				20	20	SPARE
WELLFIELD GFCI #2	21	20			180			20	22	SPARE
WELLFIELD GFCI #3	23	20				180		20	24	SPARE
SPARE	25	20						20	26	SPARE
SPARE	27	20						20	28	SPARE
SPARE	29	20					180	20	30	LCP–102 SKID GFCI
TOTALS				7140	7140	8760		* HANDLE LOCK–ON DEVICE		

PANEL LC–102
CALCULATED LOAD: 27.7A @480V

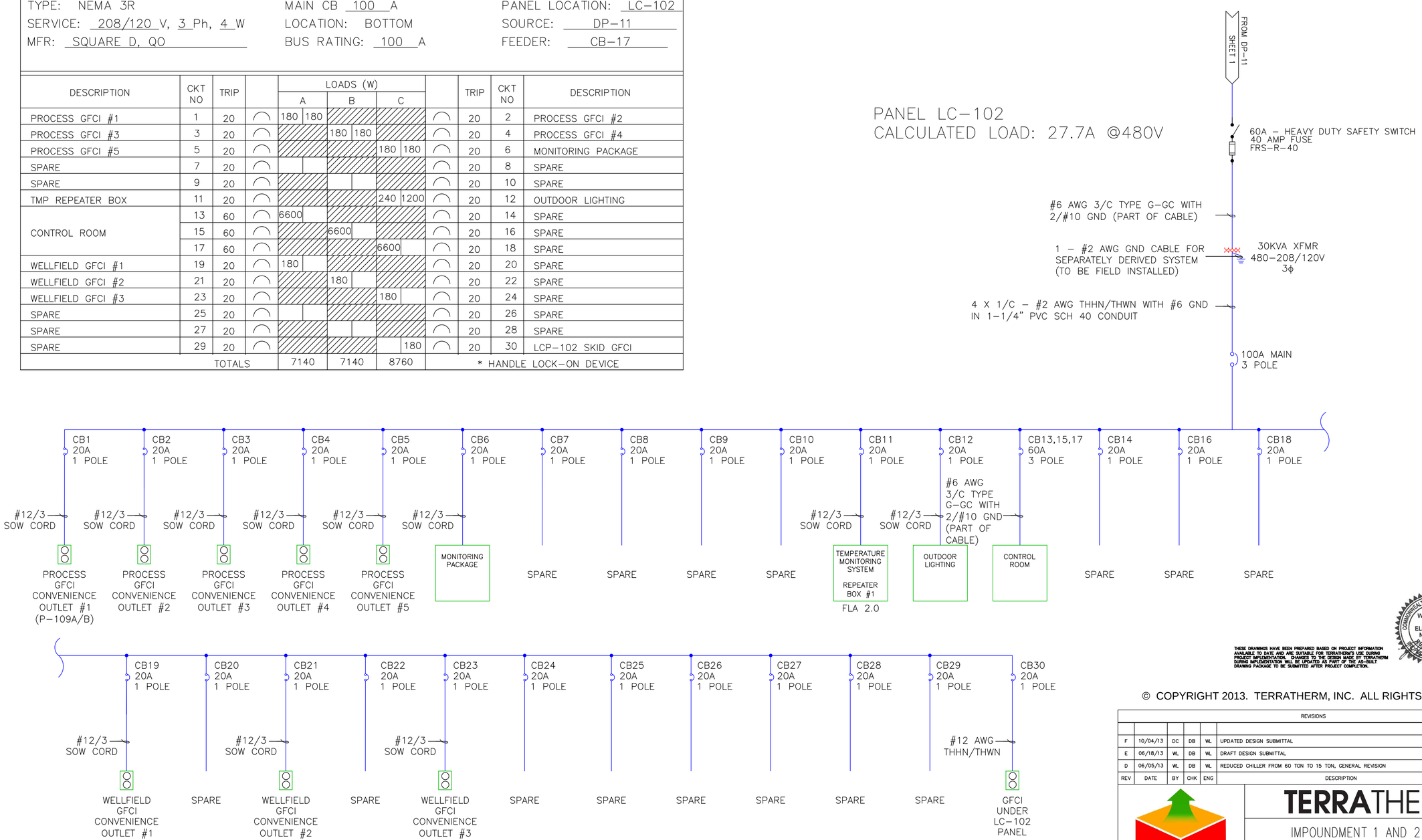

NOT FOR CONSTRUCTION
DESIGN SUBMITTAL 10/11/13

THESE DRAWINGS HAVE BEEN PREPARED BASED ON PROJECT INFORMATION AVAILABLE TO DATE AND ARE SUITABLE FOR TERRATHERM'S USE DURING PROJECT IMPLEMENTATION. CHANGES TO THE DESIGN MADE BY TERRATHERM DURING IMPLEMENTATION WILL BE UPDATED AS PART OF THE AS–BUILT DRAWING PACKAGE TO BE SUBMITTED AFTER PROJECT COMPLETION.

COMMONWEALTH OF MASSACHUSETTS
WILLEY W. LEUNG
ELECTRICAL
No. 50619
REGISTERED PROFESSIONAL ENGINEER
10/24/13

© COPYRIGHT 2013. TERRATHERM, INC. ALL RIGHTS RESERVED.

REVISIONS

REV	DATE	BY	CHK	ENG	DESCRIPTION	APPROVED
F	10/04/13	DC	DB	WL	UPDATED DESIGN SUBMITTAL	
E	06/18/13	WL	DB	WL	DRAFT DESIGN SUBMITTAL	
D	06/05/13	WL	DB	WL	REDUCED CHILLER FROM 60 TON TO 15 TON, GENERAL REVISION	

TERRATHERM

IMPOUNDMENT 1 AND 2 PILOT
DEMONSTRATION STUDY – BRIDGEWATER, NJ
ONE LINE ELECTRICAL

SIZE	FILE NO.	DWG NO.	REV
D	E101	E101	F

SCALE: NTS | DNS | DSN | SHEET 2 OF 3

THIS DRAWING AND THE INFORMATION IT CONTAINS ARE THE PROPERTY OF TERRATHERM, INC. AND MAY NOT BE USED IN PART OR IN WHOLE EXCEPT BY WRITTEN PERMISSION OF TERRATHERM, INC.

NO. T6

PANEL LC–103

TYPE: NEMA 3R
SERVICE: 240/120 V, 1 Ph, 3 W
MFR: SQUARE D, QO–EPD BREAKERS
(EQUIPMENT GROUND FAULT PROTECTION AT 30 MILLIAMP)

MAIN CB 100 A
LOCATION: BOTTOM
BUS RATING: 100 A

PANEL LOCATION: LC–103
SOURCE: DP–11
FEEDER: CB–18

DESCRIPTION	CKT NO	TRIP		LOADS (W) A	LOADS (W) B	LOADS (W) C		TRIP	CKT NO	DESCRIPTION
HEAT TRACE #1	1	20						20	2	HEAT TRACE #2
HEAT TRACE #3	3	20						20	4	HEAT TRACE #4
HEAT TRACE #5	5	20						20	6	HEAT TRACE #6
HEAT TRACE #7	7	20						15	8	P–108 BOOSTER PUMP
AIR COMPRESSOR Z–102–2	9	30						15	10	
	11	30						20	12	HEAT TRACE #8
	13	20						20	14	
	15	70						20	16	
	17	70						20	18	
	19	20						20	20	
	21	20						20	22	
	23	20						30	24	
	25	15						30	26	
	27	15						30	28	
	29	20						30	30	
TOTALS				13832	14732			* HANDLE LOCK–ON DEVICE		

PANEL LC–103
CALCULATED LOAD: 38.2A @480V

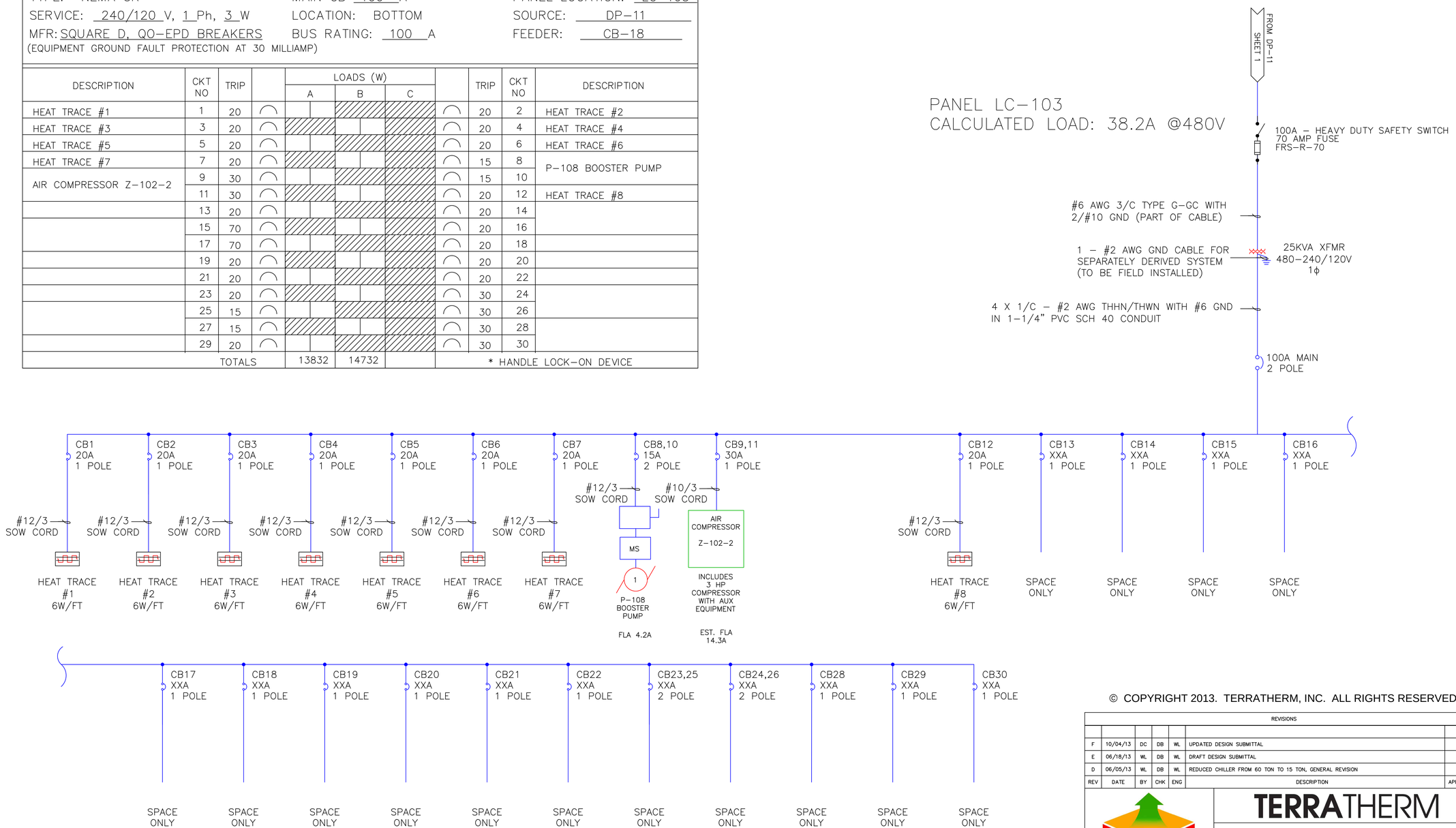

© COPYRIGHT 2013. TERRATHERM, INC. ALL RIGHTS RESERVED.

REVISIONS

REV	DATE	BY	CHK	ENG	DESCRIPTION	APPROVED
F	10/04/13	DC	DB	WL	UPDATED DESIGN SUBMITTAL	
E	06/18/13	WL	DB	WL	DRAFT DESIGN SUBMITTAL	
D	06/05/13	WL	DB	WL	REDUCED CHILLER FROM 60 TON TO 15 TON, GENERAL REVISION	

TERRATHERM

IMPOUNDMENT 1 AND 2 PILOT DEMONSTRATION STUDY – BRIDGEWATER, NJ
ONE LINE ELECTRICAL

SIZE D | FILE NO. E101 | DWG NO. E101 | REV F
SCALE: NTS | DNS | DSN | SHEET 3 OF 3

THIS DRAWING AND THE INFORMATION IT CONTAINS ARE THE PROPERTY OF TERRATHERM, INC. AND MAY NOT BE USED IN PART OR IN WHOLE EXCEPT BY WRITTEN PERMISSION OF TERRATHERM, INC.

NO. T7

THESE DRAWINGS HAVE BEEN PREPARED BASED ON PROJECT INFORMATION AVAILABLE TO DATE AND ARE SUITABLE FOR TERRATHERM'S USE DURING PROJECT IMPLEMENTATION. CHANGES TO THE DRAWINGS MADE BY TERRATHERM DURING IMPLEMENTATION WILL BE UPDATED AS PART OF THE AS-BUILT DRAWING PACKAGE TO BE SUBMITTED AFTER PROJECT COMPLETION.

COMMONWEALTH OF MASSACHUSETTS
WILLEY W. LEUNG
ELECTRICAL
No. 50619
REGISTERED PROFESSIONAL ENGINEER
10/24/13

NOT FOR CONSTRUCTION
DESIGN SUBMITTAL 10/11/13

TYPICAL GROUNDING DETAILS (1)

NOT TO SCALE

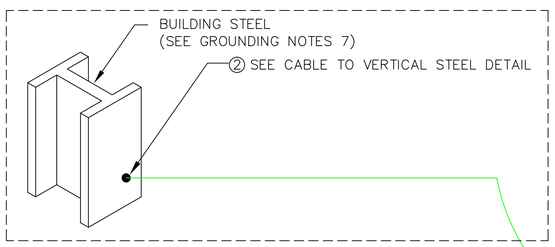

CHOOSE ONE ONLY!

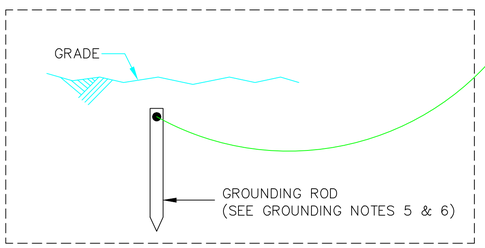

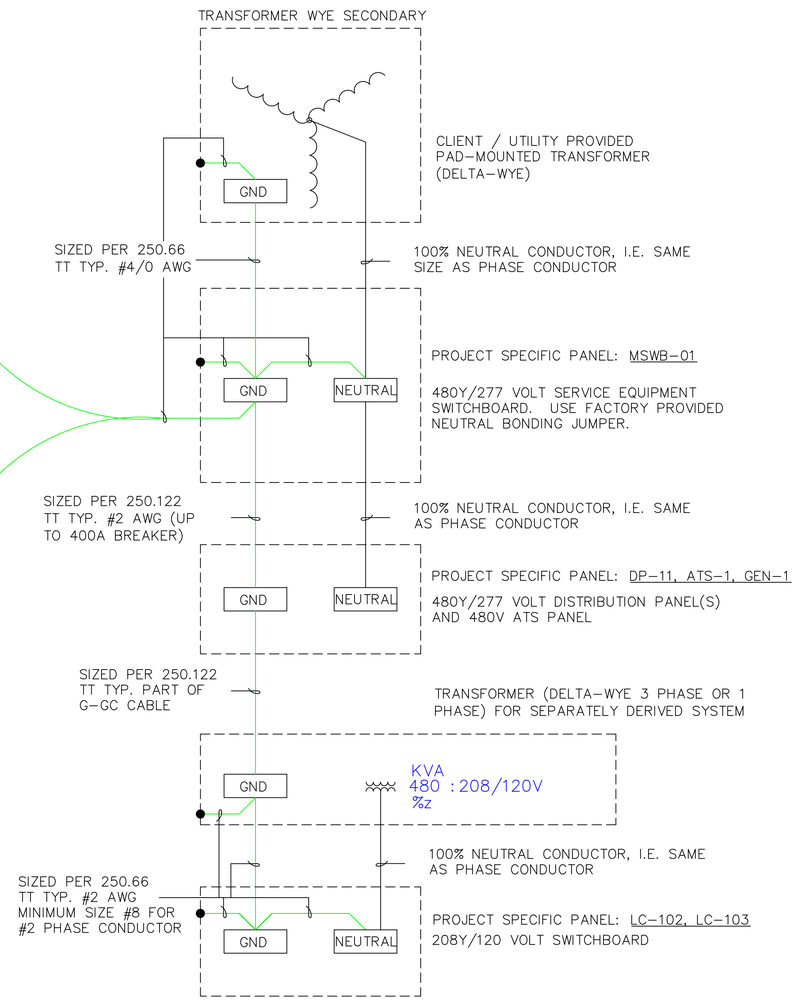

GROUNDING NOTES

1. ALL NON-CURRENT METALLIC PARTS OF EQUIPMENT SHALL BE BONDED TOGETHER AND MADE ELECTRICALLY CONTINUOUS.
2. ALL GROUNDING SHALL BE SIZED IN ACCORDANCE WITH NFPA 70 (NEC).
3. ALL GROUND SPLICE CONNECTIONS SHALL BE THERMOWELD UNLESS INDICATED IN DRAWING.
4. GROUND CONNECTIONS TO ELECTRICAL EQUIPMENT ENCLOSURES, TRANSFORMERS AND SWITCHES SHALL BE MADE WITH DESIGNATED APPROVED GROUNDING CONNECTIONS IN TWO PLACES MINIMUM.
5. GROUNDING ELECTRODES SHALL BE INSTALLED SUCH THAT AT LEAST 8 FEET OF LENGTH IS IN CONTACT WITH THE SOIL AND INSTALLED IN ACCORDANCE WITH NFPA 70. (NEC).
6. GROUND ROD SHALL BE COPPER-CLAD STEEL RODS NOT LESS THAN3/4" IN DIAMETER AND 10 FEET IN LENGTH. SUPPLEMENTAL GROUND ROD MAY BE REQUIRED ACCORDING TO SITE CONDITION. REFERENCE NEC ARTICLE 250.53.
7. IF BUILDING STEEL IS TO BE USED AS THE MAIN GROUNDING ELECTRODE, THE CONDITION OF THE GROUND GRID SHALL BE VERIFIED AND CONFIRMED TO BE SUITABLE FOR THE DESIGNED LOAD

CABLE TO VERTICAL STEEL DETAIL (2)

NOT TO SCALE

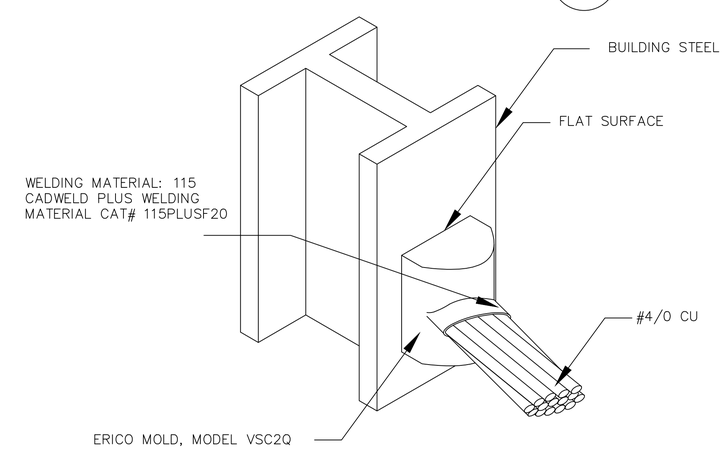

SITE SPECIFIC NOTES

1. ALL EQUIPMENT (METAL CASING) LOCATED ON THE FLEXI-FLOAT SHALL BE GROUNDED IN ACCORDANCE WITH NEC 555.15. ALL GROUNDING CABLE SHALL HAVE A MINIMUM INSULATION OF 600V AND SHOULD HAVE A CONTINUOUS OUTER FINISH THAT IS GREEN OR GREEN WITH ONE OR MORE YELLOW STRIPE.

© COPYRIGHT 2013. TERRATHERM, INC. ALL RIGHTS RESERVED.

THESE DRAWINGS HAVE BEEN PREPARED BASED ON PROJECT INFORMATION AVAILABLE TO DATE AND ARE SUITABLE FOR TERRATHERM'S USE DURING PROJECT IMPLEMENTATION. CHANGES TO THE DESIGN MADE BY TERRATHERM DURING IMPLEMENTATION WILL BE UPDATED AS PART OF THE AS-BUILT DRAWING PACKAGE TO BE SUBMITTED AFTER PROJECT COMPLETION.

COMMONWEALTH OF MASSACHUSETTS
WILLEY W. LEUNG
ELECTRICAL
No. 50619
REGISTERED PROFESSIONAL ENGINEER
10/24/13

FOR REFERENCE ONLY

REVISIONS

REV	DATE	BY	CHK	ENG	DESCRIPTION	APPROVED
B	06/05/13	WL	DB	WL	UPDATED PER COMMENTS	

TERRATHERM

IMPOUNDMENT 1 AND 2 PILOT
DEMONSTRATION STUDY – BRIDGEWATER, NJ
SWBD GROUNDING / NEUTRAL DETAIL

SIZE	FILE NO.	DWG NO.	REV
D	E104	E104	B

SCALE: AS SHOWN | DNS | SHEET 1 OF 2

THIS DRAWING AND THE INFORMATION IT CONTAINS ARE THE PROPERTY OF TERRATHERM, INC. AND MAY NOT BE USED IN PART OR IN WHOLE EXCEPT BY WRITTEN PERMISSION OF TERRATHERM, INC.

NO. T8

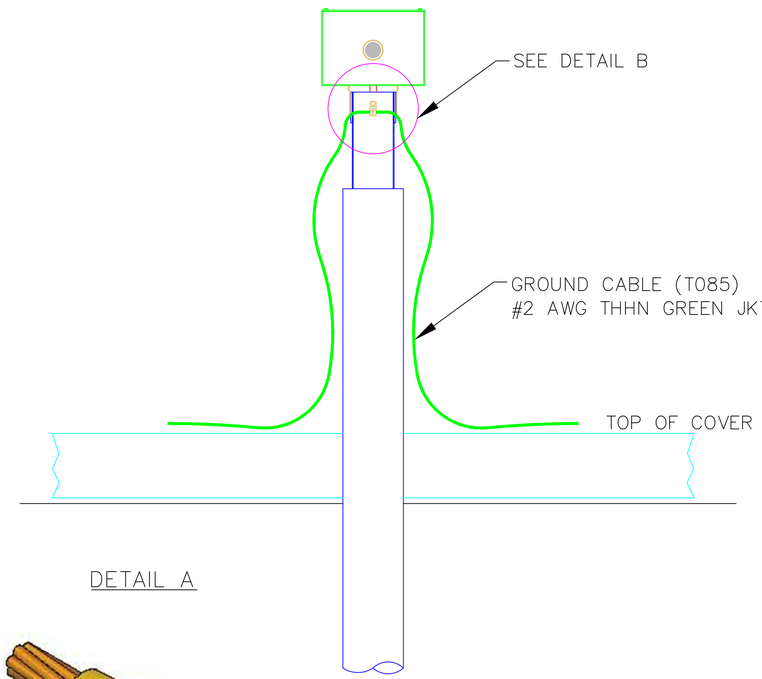

DETAIL A

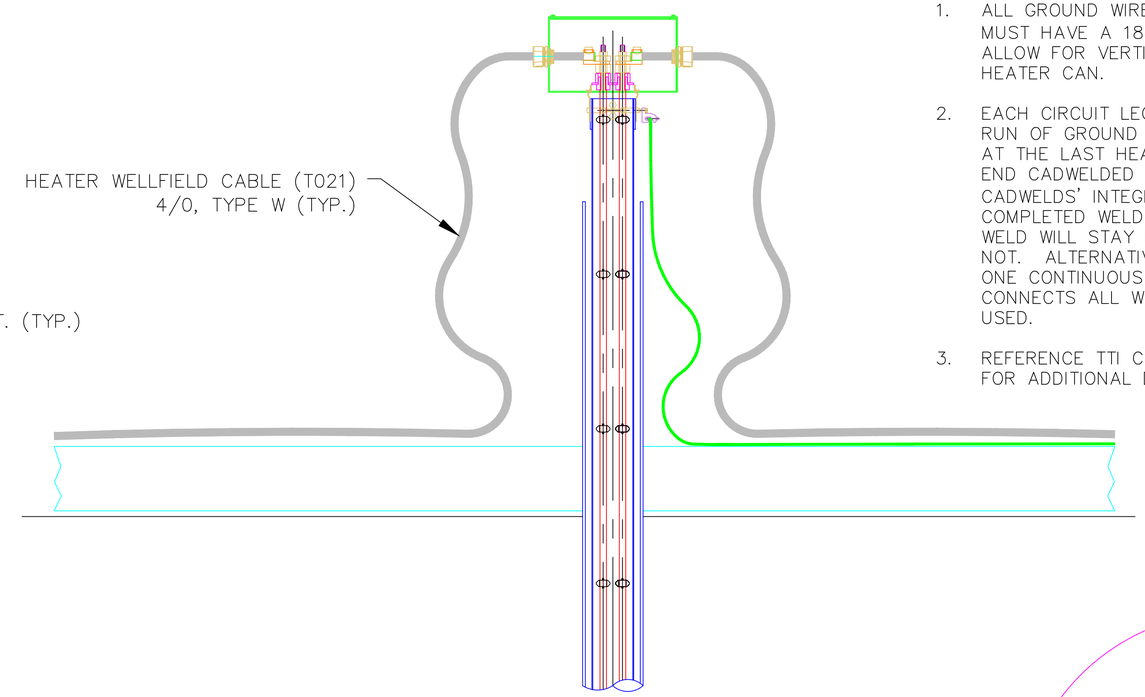

HEATER GROUNDING NOTES:

1. ALL GROUND WIRE AND HEATER WELLFIELD CABLE MUST HAVE A 18" MINIMUM AMOUNT OF SLACK TO ALLOW FOR VERTICAL THERMAL EXPANSION OF THE HEATER CAN.
2. EACH CIRCUIT LEG SHALL UTILIZE A CONTINUOUS RUN OF GROUND CABLE WITH ONE END TERMINATED AT THE LAST HEATER GROUND LUG AND THE OTHER END CADWELDED TO THE HOMERUN. VERIFY ALL CADWELDS' INTEGRITY BY TAPPING ON THE COMPLETED WELD WITH A HAMMER. A SUCCESSFUL WELD WILL STAY INTACT WHILE A FAILED WELD WILL NOT. ALTERNATIVELY, IF SITE CONDITION PERMITS, ONE CONTINUOUS GROUNDING CABLE THAT CONNECTS ALL WELLS OF ONE CIRCUIT MAY BE USED.
3. REFERENCE TTI CADWELD OPERATING INSTRUCTION FOR ADDITIONAL DETAIL.

DETAIL B

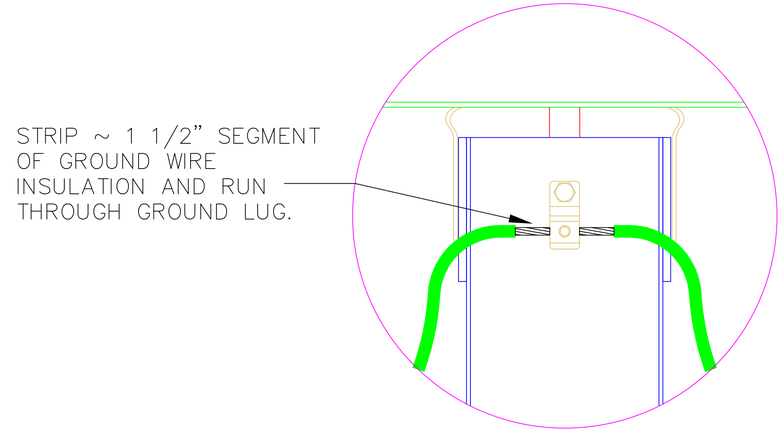

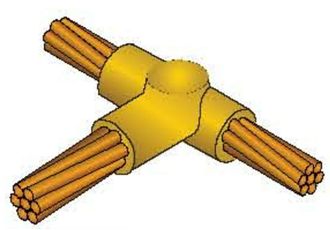

A

B

C

D

E

TYPICAL HEATER GROUND CABLE SCHEMATIC

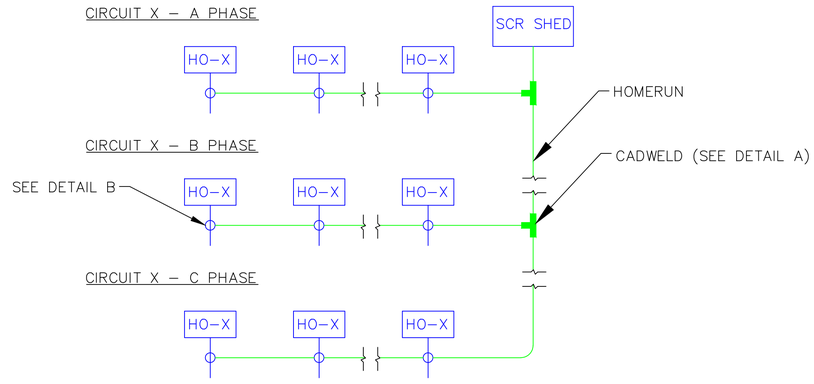

ID	DESCRIPTION	ITEM #
A	CADWELD - CABLE TO CABLE - TYPE TA2 - ERICO PROD	TAC1V1V
B	CADWELD PLUS CONTROL UNIT (Ignitor)WITH 15FT LEAD	PLUSCU15L
C	CADWELD - E-Z HANDLE CLAMP	L160
D	CADWELD - PLUS WELD METAL	45PLUSF20
E	MOLD CLEANING BRUSH	T394

THESE DRAWINGS HAVE BEEN PREPARED BASED ON PROJECT INFORMATION AVAILABLE TO DATE AND ARE SUITABLE FOR TERRATHERM'S USE DURING PROJECT IMPLEMENTATION. CHANGES TO THE DESIGN MADE BY TERRATHERM DURING IMPLEMENTATION WILL BE UPDATED AS PART OF THE AS-BUILT DRAWING PACKAGE TO BE SUBMITTED AFTER PROJECT COMPLETION.

COMMONWEALTH OF MASSACHUSETTS
WILLEY W. LEUNG
ELECTRICAL
No. 50619
REGISTERED PROFESSIONAL ENGINEER
10/24/13

FOR REFERENCE ONLY

© COPYRIGHT 2013. TERRATHERM, INC. ALL RIGHTS RESERVED.

REVISIONS

REV	DATE	BY	CHK	ENG	DESCRIPTION	APPROVED
B	06/05/13	WL	DB	WL	UPDATED PER COMMENTS	

TERRATHERM

IMPOUNDMENT 1 AND 2 PILOT DEMONSTRATION STUDY – BRIDGEWATER, NJ
GROUNDING DETAIL

SIZE	FILE NO.	DWG NO.	REV
D	E104	E104	B

SCALE: AS SHOWN | DNS | SHEET 2 OF 2

THIS DRAWING AND THE INFORMATION IT CONTAINS ARE THE PROPERTY OF TERRATHERM, INC. AND MAY NOT BE USED IN PART OR IN WHOLE EXCEPT BY WRITTEN PERMISSION OF TERRATHERM, INC.

NO. T9

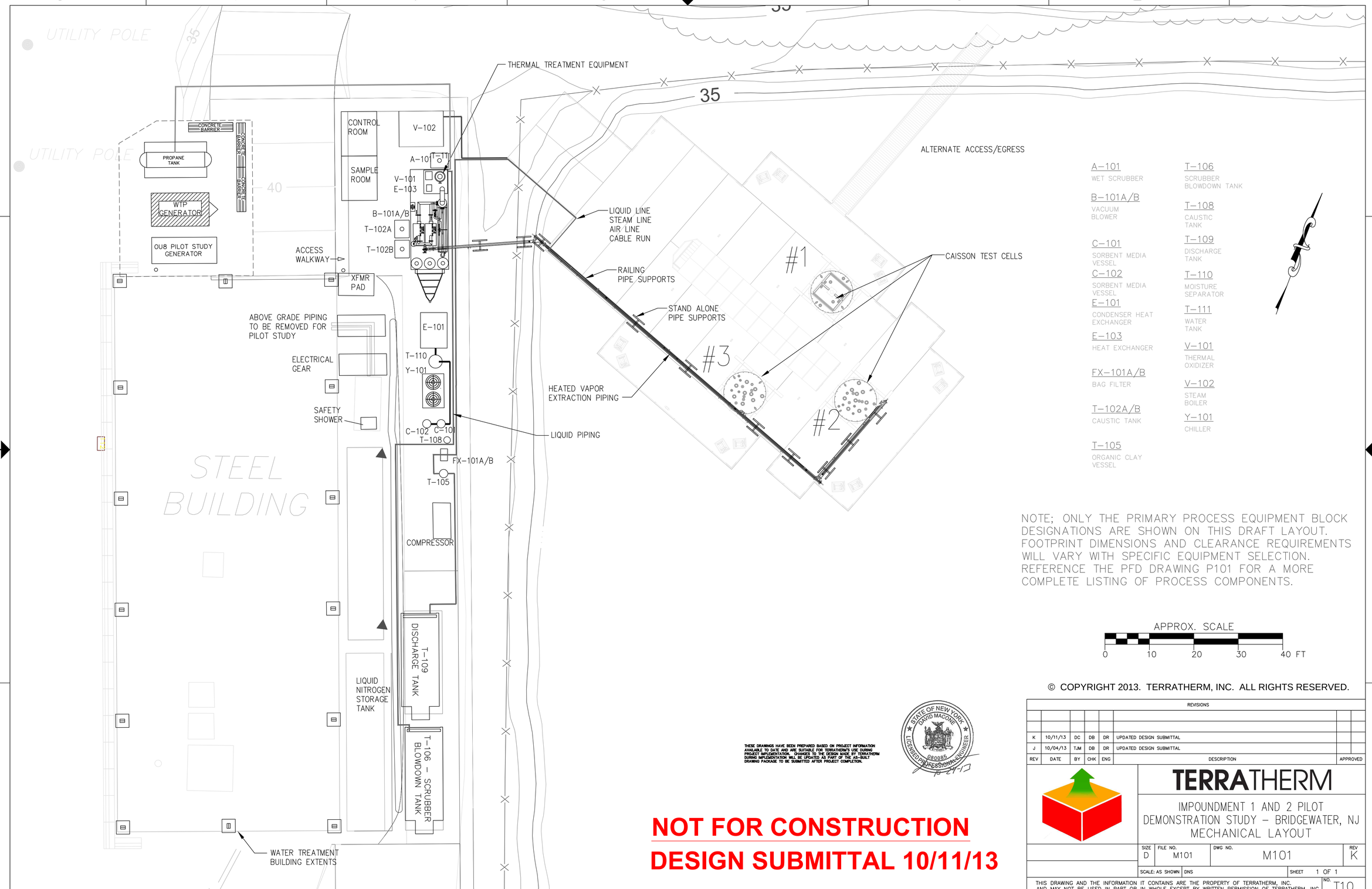

A–101
WET SCRUBBER

B–101A/B
VACUUM BLOWER

C–101
SORBENT MEDIA VESSEL

C–102
SORBENT MEDIA VESSEL

E–101
CONDENSER HEAT EXCHANGER

E–103
HEAT EXCHANGER

FX–101A/B
BAG FILTER

T–102A/B
CAUSTIC TANK

T–105
ORGANIC CLAY VESSEL

T–106
SCRUBBER BLOWDOWN TANK

T–108
CAUSTIC TANK

T–109
DISCHARGE TANK

T–110
MOISTURE SEPARATOR

T–111
WATER TANK

V–101
THERMAL OXIDIZER

V–102
STEAM BOILER

Y–101
CHILLER

NOTE; ONLY THE PRIMARY PROCESS EQUIPMENT BLOCK DESIGNATIONS ARE SHOWN ON THIS DRAFT LAYOUT. FOOTPRINT DIMENSIONS AND CLEARANCE REQUIREMENTS WILL VARY WITH SPECIFIC EQUIPMENT SELECTION. REFERENCE THE PFD DRAWING P101 FOR A MORE COMPLETE LISTING OF PROCESS COMPONENTS.

APPROX. SCALE
0 10 20 30 40 FT

© COPYRIGHT 2013. TERRATHERM, INC. ALL RIGHTS RESERVED.

THESE DRAWINGS HAVE BEEN PREPARED BASED ON PROJECT INFORMATION AVAILABLE TO DATE AND ARE SUITABLE FOR TERRATHERM'S USE DURING PROJECT IMPLEMENTATION. CHANGES TO THE DESIGN MADE BY TERRATHERM DURING IMPLEMENTATION WILL BE UPDATED AS PART OF THE AS-BUILT DRAWING PACKAGE TO BE SUBMITTED AFTER PROJECT COMPLETION.

STATE OF NEW YORK · DAVID MACOME · 080095 · LICENSED PROFESSIONAL ENGINEER · 10-27-13

NOT FOR CONSTRUCTION
DESIGN SUBMITTAL 10/11/13

REVISIONS

REV	DATE	BY	CHK	ENG	DESCRIPTION	APPROVED
K	10/11/13	DC	DB	DR	UPDATED DESIGN SUBMITTAL	
J	10/04/13	TJM	DB	DR	UPDATED DESIGN SUBMITTAL	

TERRATHERM

IMPOUNDMENT 1 AND 2 PILOT DEMONSTRATION STUDY – BRIDGEWATER, NJ
MECHANICAL LAYOUT

SIZE	FILE NO.	DWG NO.	REV
D	M101	M101	K

SCALE: AS SHOWN | DNS | SHEET 1 OF 1

THIS DRAWING AND THE INFORMATION IT CONTAINS ARE THE PROPERTY OF TERRATHERM, INC. AND MAY NOT BE USED IN PART OR IN WHOLE EXCEPT BY WRITTEN PERMISSION OF TERRATHERM, INC.

NO. T10

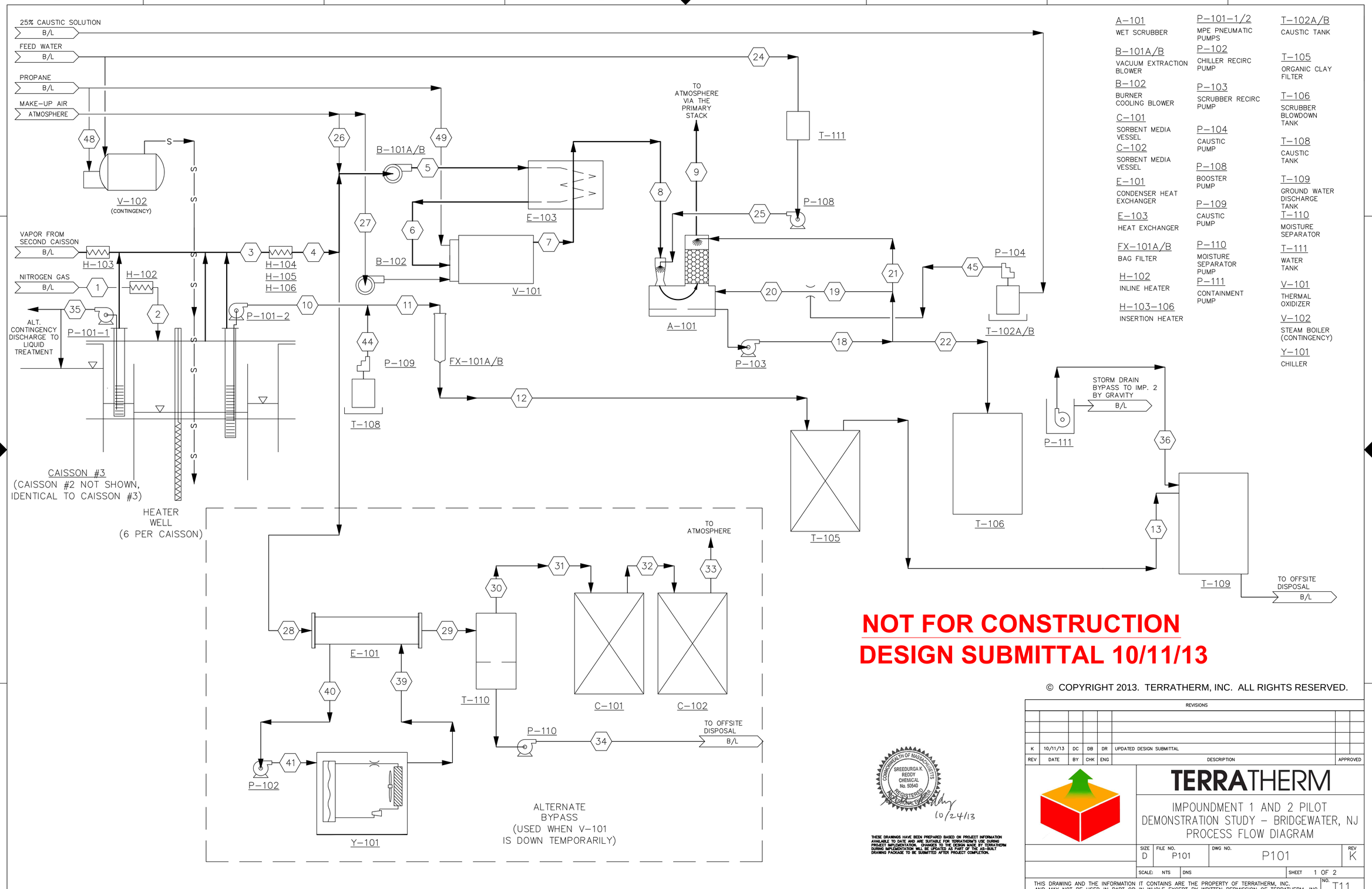

A-101
WET SCRUBBER

B-101A/B
VACUUM EXTRACTION BLOWER

B-102
BURNER COOLING BLOWER

C-101
SORBENT MEDIA VESSEL

C-102
SORBENT MEDIA VESSEL

E-101
CONDENSER HEAT EXCHANGER

E-103
HEAT EXCHANGER

FX-101A/B
BAG FILTER

H-102
INLINE HEATER

H-103-106
INSERTION HEATER

P-101-1/2
MPE PNEUMATIC PUMPS

P-102
CHILLER RECIRC PUMP

P-103
SCRUBBER RECIRC PUMP

P-104
CAUSTIC PUMP

P-108
BOOSTER PUMP

P-109
CAUSTIC PUMP

P-110
MOISTURE SEPARATOR PUMP

P-111
CONTAINMENT PUMP

T-102A/B
CAUSTIC TANK

T-105
ORGANIC CLAY FILTER

T-106
SCRUBBER BLOWDOWN TANK

T-108
CAUSTIC TANK

T-109
GROUND WATER DISCHARGE TANK

T-110
MOISTURE SEPARATOR

T-111
WATER TANK

V-101
THERMAL OXIDIZER

V-102
STEAM BOILER (CONTINGENCY)

Y-101
CHILLER

NOT FOR CONSTRUCTION
DESIGN SUBMITTAL 10/11/13

© COPYRIGHT 2013. TERRATHERM, INC. ALL RIGHTS RESERVED.

COMMONWEALTH OF MASSACHUSETTS
SREEDURGA K. REDDY
CHEMICAL
No. 50540
REGISTERED PROFESSIONAL ENGINEER
10/24/13

THESE DRAWINGS HAVE BEEN PREPARED BASED ON PROJECT INFORMATION AVAILABLE TO DATE AND ARE SUITABLE FOR TERRATHERM'S USE DURING PROJECT IMPLEMENTATION. CHANGES TO THE DESIGN MADE BY TERRATHERM DURING IMPLEMENTATION WILL BE UPDATED AS PART OF THE AS-BUILT DRAWING PACKAGE TO BE SUBMITTED AFTER PROJECT COMPLETION.

REVISIONS

REV	DATE	BY	CHK	ENG	DESCRIPTION	APPROVED
K	10/11/13	DC	DB	DR	UPDATED DESIGN SUBMITTAL	

TERRATHERM

IMPOUNDMENT 1 AND 2 PILOT DEMONSTRATION STUDY – BRIDGEWATER, NJ
PROCESS FLOW DIAGRAM

SIZE	FILE NO.	DWG NO.	REV
D	P101	P101	K

SCALE: NTS | DNS | SHEET 1 OF 2

THIS DRAWING AND THE INFORMATION IT CONTAINS ARE THE PROPERTY OF TERRATHERM, INC. AND MAY NOT BE USED IN PART OR IN WHOLE EXCEPT BY WRITTEN PERMISSION OF TERRATHERM, INC.

NO. T11

SYMBOL	IDENTIFICATION LETTERS					TYPICAL LETTER COMBINATIONS																	
	FIRST–LETTER		SUCCEEDING–LETTERS			CONTROLLERS																	
	MEASURED VARIABLE (8)	VARIABLE MODIFIER (9)	READOUT/PASSIVE FUNCTION (10)	OUTPUT/ACTIVE FUNCTION (10)	FUNCTION MODIFIER (11)	RECORDING	INDICATING	BLIND	SELF–ACTUATED CONTROL VALVES	READOUT DEVICES RECORDING	INDICATING	SWITCHES AND ALARM DEVICES HIGH	LOW	COMB	TRANSMITTERS RECORDING	INDICATING	BLIND	SOLENOIDS, RELAYS, COMPUTING DEVICES	PRIMARY ELEMENT	TEST POINT	WELL OR PROBE	VIEWING DEVICE, GLASS	SAFETY DEVICE	FINAL ELEMENT
A	ANALYSIS (3)		ALARM			ARC	AIC	AC		AR	AI	ASH	ASL	ASHL	ART	AIT	AT	AY	AE	AP	AW			AV
B	BURNER, COMBUSTION					BRC	BIC	BC		BR	BI	BSH	BSL	BSHL	BRT	BIT	BT	BY	BE		BW	BG		BZ
C	CONDUCTIVITY (1)			CONTROL	CLOSE (3)																			
D	DENSITY (1)	DIFFERENTIAL			DEVIATION (3)																			
E	VOLTAGE		ELEMENT			ERC	EIC	EC		ER	EI	ESH	ESL	ESHL	ERT	EIT	ET	EY	EE					EZ
F	FLOW	RATIO				FRC FQRC FFRC	FIC FQIC FFIC	FC FQC FFC	FCV, FICV	FR FQR FFR	FI FQI FFI	FSH FCSH FFSH	FSL FQSL FFSL	FSHL	FRT	FIT FQIT	FT FQT	FY FQY	FE FCE FFE	FP		FG		FV FQV FFV
G	PH (2)		GAUGE (5)			GRC	GIC	GC		GR	GI	GSH	GSL	GSHL	GRT	GIT	GT		GE					
H	HAND				HIGH		HIC	HC						HS										HV
I	CURRENT		INDICATE (5)		MIDDLE	IRC	IIC			IR	II	ISH	ISL	ISHL	IRT	IIT	IT	IY	IE					IZ
J	POWER		SCAN (3)			JRC	JIC			JR	JI	JSH	JSL	JSHL	JRT	JIT	JT	JY	JE					JV
K	TIME	DERIVATIVE with time		CONTROL STATION (3)		KRC	KIC	KC	KCV	KR	KI	KSH	KSL	KSHL	KRT	KIT	KT	KY	KE					KV
L	LEVEL		LIGHT		LOW	LRC	LIC	LC	LCV	LR	LI	LSH	LSL	LSHL	LRT	LIT	LT	LY	LE		LW	LG		LV
M	MOISTURE (1)					MRC	MIC	MC		MR	MI	MSH	MSL	MSHL	MRT	MIT	MT		ME					
N	LEL (2)					NRC	NIC	NC		NR	NI	NSH	NSL	NSHL	NRT	NIT	NT		NE					
O			RESTRICTION		OPEN (3)																			
P	PRESSURE		POINT (TEST CONNECTION)			PRC PDRC	PIC PDIC	PC PDIC	PCV PDCV	PR PDR	PI PDI	PSH PDSH	PSL PDSL	PSHL	PRT PDRT	PIT PDIT	PT PDT	PY PDY	PE PE	PP PP			PSV PSE	PV PDV
Q	QUANTITY	INTEGRAL, TOTALIZE	INTEGRAL, TOTALIZE			QRC	QIC			QR	QI	QSH	QSL	QSHL	QRT	QIT	QT	QY	QE					QZ
R	RADIATION (3)		RECORD		RUN (3)	RRC	RIC	RC		RR	RI	RSH	RSL	RSHL	RRT	RIT	RT	RY	RE		RW			RZ
S	SPEED, FREQUENCY	SAFETY (7)		SWITCH	STOP (3)	SRC	SIC	SC	SCV	SR	SI	SSH	SSL	SSHL	SRT	SIT	ST	SY	SE					SV
T	TEMPERATURE			TRANSMIT, TRANSMITTER		TRC TDRC	TIC TDIC	TC TDC	TCV TDCV	TR TDR	TI TDI	TSH TDSH	TSL TDSL	TSHL	TRT TDRT	TIT TDIT	TT TDT	TY TDY	TE TE	TP TP	TW TW		TSE	TV TDV
U	MULTIVARIABLE		MULTIFUNCTION	MULTIFUNCTION						UR	UI							UY						UV
V	VIBRATION (3)			VALVE, DAMPER, LOUVER						VR	VI	VSH	VSL	VSHL	VRT	VIT	VT	VY	VE					VZ
W	WEIGHT (3)		WELL, PROBE			WRC WDRC	WIC WDIC	WC WDC	WCV WDCV	WR WDR	WI WDI	WSH WDSH	WSL WDSL	WSHL	WRT WDRT	WIT WDIT	WT WDT	WY WDY	WE WE					WZ WDZ
X	DRAWING SPECIFIC (4)	DRAWING SPECIFIC (4), X–AXIS (3)		DRAWING SPECIFIC (4)	DRAWING SPECIFIC (4)																			
Y	EVENT, STATE	Y–AXIS (3)		AUXILIARY DEVICES			YIC	YC		YR	YI	YSH	YSL				YT	YY	YE					YZ
Z	POSITION	SAFETY INSTRUMENTED SYSTEM (7)				ZRC ZDRC	ZIC ZDIC	ZC ZDC	ZCV ZDCV	ZR ZDR	ZI ZDI	ZSH ZDSH	ZSL ZDSL	ZSHL	ZRT ZDRT	ZIT ZDIT	ZT ZDT	ZY ZDY	ZE ZDE					ZV ZDV

INSTRUMENT IDENTIFICATION

THIS INFORMATION IS BASED UPON ANSI/ISA–5.1–2009 INSTRUMENTATION SYMBOLS AND INDENTIFICATION" AND ISA–5.3–1983 "GRAPHIC SYMBOLS FOR DISTRIBUTED CONTROL/SHARED DISPLAY INSTRUMENTATION, LOGIC AND COMPUTER SYSTEM. BOTH PUBLICATIONS ARE STANDARD OF ISA, INTERNATIONAL SOCIETY OF AUTOMATION.

EXPLANATORY NOTES FOR TABLE

1. TERRATHERM HAS CHOSEN THE SPECIFIC RECOMMENDED FIRST–LETTER LABELS FOR [C], [D] AND [M] PER THE STANDARD.
2. TERRATHERM HAS CHOSEN THE SPECIFIC LABEL FOR THE FIRST–LETTER [G] AS pH, AND [N] AS LEL.
3. LABELS ARE GIVEN PER THE STANDARD, BUT ARE UNCOMMON FOR TERRATHERM'S APPLICATIONS. THEIR USE SHOULD BE AVOIDED AND NO SUBSTITUTION FOR THEIR MEANINGS IS ALLOWED.
4. FIRST–LETTER OR SUCCEEDING–LETTER [X] IS USED AS "DRAWING SPECIFIC" AND IS TO BE DEFINED BY A NOTE ON THE DRAWING.
5. READOUT/PASSIVE FUNCTION LETTERS [G] AND [I] ARE DIFFERENTIATED BY A GAUGE READOUT HAVING ITS ELEMENT INTEGRAL TO THE INSTRUMENT AND AN INDICATION READOUT BEING SEPARATE FROM ITS ELEMENT.
6. READOUT/PASSIVE FUNCTION LETTER [L] INDICATED A LIGHT THAT IS INTENDED TO INDICATE OPERATING STATUS AND IS NOT INTENDED FOR ALARM INDICATION.
7. VARIABLE MODIFIER LETTERS [S] AND [Z] ARE DIFFERENTIATED RESPECTIVELY AS SAFETY VALVES WITH THE VARIABLE LETTERS [F] FLOW, [P] PRESSURE OR [T] TEMPERATURE; AND AS COMPONENTS OF A SAFETY INSTRUMENTED SYSTEM.
8. ALL INSTRUMENT LABELS MUST BEGIN WITH A LETTER FROM THE "MEASURED VARIABLE" COLUMN. NO OTHER LETTERS NOR MEANINGS ARE ALLOWED.
9. "VARIABLE MODIFIER" IS USED AS REQUIRED AS IN THE CASE OF A [DPS] DIFFERENTIAL PRESSURE SWITCH OF AS A [PSV] PRESSURE SAFETY VALVE.
10. "READOUT/PASSIVE FUNCTION" AND OUTPUT/ACTIVE FUNCTION" CAN BE USED CONSECUTIVELY, AS IN THE CASE OF A [PDIS] DIFFERENTIAL PRESSURE INDICATION SWITCH OR A [LIT] LEVEL INDICATION TRANSMITTER.
11. "FUNCTION MODIFIER" ARE USED TO DIFFERENTIATE THE RELATIVE POSITION OF SWITCHES AND ALARMS. THE COMBINATION OF [HH] HIGH–HIGH IS AN ACCEPTABLE PRACTICE.

HAND SWITCH DESIGNATIONS

E –EMERGENCY STOP

J –JOG

2PBL –2 PUSH BUTTONS (ON–OFF) MOMENTARY WITH BACK LIGHT(S)

2PB –2 MOMENTARY PUSH BUTTONS (ON–OFF)

JSR –JOG, STOP, RUN

HOA –HAND, OFF, AUTO

SS –START, STOP

OC –OPEN, CLOSE

OCA –OPEN, CLOSE, AUTO

MR –MANUAL, REMOTE

FOR –FORWARD, OFF, REVERSE

CONFIDENTIAL

© COPYRIGHT 2013. TERRATHERM, INC. ALL RIGHTS RESERVED.

STATE OF NEW YORK · DAVID MACORE · 080085 · LICENSED PROFESSIONAL ENGINEER

7-27-13

THESE DRAWINGS HAVE BEEN PREPARED BASED ON PROJECT INFORMATION AVAILABLE TO DATE AND ARE SUITABLE FOR TERRATHERM'S USE DURING PROJECT IMPLEMENTATION. CHANGES TO THE DESIGN MADE BY TERRATHERM DURING IMPLEMENTATION WILL BE UPDATED AS PART OF THE AS–BUILT DRAWING PACKAGE TO BE SUBMITTED AFTER PROJECT COMPLETION.

REV	DATE	BY	CHK	ENG	DESCRIPTION	APPROVED
A	1/07/11	BC	DB	DR	PRELIMINARY SUBMITTAL TO CLIENT.	PA

REVISIONS

TERRATHERM

PIPING AND INSTRUMENTATION DIAGRAM
LEGEND SHEET

SIZE	FILE NO.	DWG NO.	REV
D	P100	P100	A

SCALE: AS SHOWN | DNS | SHEET 1 OF 4

THIS DRAWING AND THE INFORMATION IT CONTAINS ARE THE PROPERTY OF TERRATHERM, INC. AND MAY NOT BE USED IN PART OR IN WHOLE EXCEPT BY WRITTEN PERMISSION OF TERRATHERM, INC.

NO. T13

GENERAL INSTRUMENTS

INSTRUMENT ATTRIBUTES

- INSTRUMENT FOR SINGLE MEASURED VARIABLE AND ANY NUMBER OF FUNCTIONS. INSTRUMENT IS FIELD MOUNTED.
- INSTRUMENT IS MOUNTED ON FRONT OF CENTRAL PANEL.
- INSTRUMENT IS MOUNTED IN REAR OF CENTRAL PANEL.
- INSTRUMENT IS MOUNTED ON FRONT OF LOCAL PANEL.
- INSTRUMENT IS MOUNTED ON REAR OF LOCAL PANEL.
- ADDITIONAL BLOCK ANY OF THE SYMBOLS ABOVE FOR REPRESENTATION OF SHARED DISPLAY OR CONTROL.

COMPUTER FUNCTION

- COMPUTER FUNCTION NOT NORMALLY ACCESSIBLE TO OPERATOR
- INDICATOR/CONTROLLER/RECORDER OR ALARM POINT NORMALLY ACCESSIBLE TO OPERATOR ON HMI SCREEN

LOGIC AND SEQUENTIAL CONTROL SYMBOLS

- XXXX — COMPLEX INTERCONNECTION LOGIC (INTERLOCK) WITH DETAIL REFERENCE
- PLC LOGIC CONTROLS, NOT NORMALLY ACCESSIBLE BY THE OPERATOR
- PLC LOGIC CONTROLS, ACCESSIBLE BY THE OPERATOR

ALARM & CONTROL STATION DESIGNATIONS

(X) MEASURED INPUT TO CONTROLLER

(Y) OUTPUT FROM CONTROLLER

XAH — XAH / XAL — XP/dt — X()C 101 — YAH / YAL — YP/dt — YAH

XAH YAH – HIGH ALARM
XAL YAL – LOW ALARM
dX/dt – VARIABLE RATE CHANGE (DERIVATIVE)

SHARED HOUSING

- INSTRUMENTS SHARING A COMMON FIELD MOUNTED ENCLOSURE
- INSTRUMENTS SHARING A COMMON LOCAL ENCLOSURE
- ALTERATIVE FOR SHARE DISPLAY OR CONTROL

CONFIDENTIAL

THESE DRAWINGS HAVE BEEN PREPARED BASED ON PROJECT INFORMATION AVAILABLE TO DATE AND ARE SUITABLE FOR TERRATHERM'S USE DURING PROJECT IMPLEMENTATION. CHANGES TO THE DESIGN MADE BY TERRATHERM DURING IMPLEMENTATION WILL BE UPDATED AS PART OF THE AS-BUILT DRAWING PACKAGE TO BE SUBMITTED AFTER PROJECT COMPLETION.

ANSI/ISA – 5.1 – 2009

SIGNALS AND LINES

- SOLIDS FLOW
- CONNECTION TO PROCESS OR INSTRUMENT INPUT
- MAIN PROCESS LINE
- PNEUMATIC SIGNAL
- ELECTRICAL SIGNAL OR INTERNAL SYSTEM LINK
- INTERNAL SYSTEM LINK (SOFTWARE OR DATA LINK)
- CAPILLARY TUBING (FILLED SYSTEM)
- STEAM LINE
- ELECTRICAL LINE (POWER)
- HYDRAULIC LINE
- MECHANICAL LINK

TYPICAL CONNECTION ANY VARIABLE

- IN LINE DEVICE
- DIRECT CONNECTION PROCESS BLOCK VALVE SYMBOL OPTIONAL
- ELECTRICAL CONNECTION
- FILLED SYSTEM DIRECT CONNECTION

SENSORS – PRESSURE

- P( ) — DIRECT CONNECTED
- P( ) — WITH DIAPHRAGM SEAL PIPE MOUNTED
- P( ) — WITH DIAPHRAGM SEAL LINE MOUNTED (FLANGED)

PG – PRESSURE GAUGE
PE – PRESSURE ELEMENT (TRANSDUCER)
PT – PRESSURE TRANSMITTER
PS – PRESSURE SWITCH

TERATHERM INSTRUMENTATION NUMBERING PLAN

000– WELLFIELD VAPOR
100– VAPOR AFTER BLOCK VALVE
200– CONDENSATE PUMPING
300– LIQUID TREATMENT SYSTEM
400– COOLING WATER
500– COMPRESSED AIR
600– POTABLE WATER UTILITY
700 – GAS/ OIL/ FUEL LINES
800– AMBIENT AIR (COMBUSTION, DILUTION, COOLING AIR)
900– BRINE LIQUOR (SCRUBBER)
1000– BOILER STEAM SYSTEM

SENSORS – FLOW (NOTE 2)

- FE — FE – ORIFICE PLATE
- FE — VENTURI TUBE OR FLOW NOZZLE
- FE — PITOT TUBE
- FE — AVERAGING PITOT TUBE
- FE — SONIC FLOWMETER
- FE — VARIABLE AREA FLOWMETER
- FE — TURBINE
- FE — M — MAGNETIC FLOW METER
- FE — IN LINE INSTRUMENT (NOTE 3)
- FE — POSITIVE DISPLACEMENT FLOWMETER
- FE — VORTEX SENSOR
- FE — SINGLE ELEMENT SENSING PROBE
- FE — DUAL ELEMENT SENSING PROBE

SENSORS – TEMPERATURE (NOTE 4)

- T( ) — TG – THERMOMETER; TW – THERMOWELL; TE – ELEMENT, SUCH AS THERMOCOUPE OR CAPILLARY BULB
- T( ) T( ) — DUAL SENSORS IN SINGLE WELL
- T( ) — FILLED SYSTEM WITH CAPILLARY (REMOTE MOUNTED INSTRUMENT)

VALVE NOTATION

MOTOR ACTUATED VALVES (TYPICAL)

HV, M, NO, FC

NORMAL MODE (SEE NOTE BELOW)
FAILURE MODE – FO,FC,FL,FI

DIAPHRAGM ACTUATED VALVES (TYPICAL)

HV, NO, FC

NORMAL MODE
FAILURE MODE – FO,FC,FL,FI

- FAIL TO OPEN POSITION
- FAIL TO CLOSED POSITION
- FAIL TO LOCK IN LAST POSITION
- FAIL AT LAST POSITION
- FAIL AT LAST POSITION

NOTE:

FAIL POSITIONS ALL BODY STYLES
FO–INDICATES FAIL OPEN
FC–INDICATES FAIL CLOSED
FL–INDICATES FAIL LOCKED
FI–INDICATES FAIL INDETERMINATE

NORMAL MODE IDENTIFICATION (I.E. NO. NC.) SHOULD ONLY BE USED FOR ON–OFF TYPE VALVES WHOSE POSITION CANNOT BE SHOWN BY SHADING THE VALVE BODY.

- THREE WAY (NOTE 1) (ARROW SHOWS DE–ENERGIZED PATH)
- FOUR WAY (NOTE 1) (ARROW SHOWS DE–ENERGIZED PATH)

CONTROL VALVE BODIES (NOTE 1)

OPEN / CLOSED

- GATE (GA)
- GLOBE (GL)
- BALL (BA)
- PLUG (PL)
- NEEDLE (NE)
- BUTTERFLY (BF)
- KNIFE GATE (KI)
- DIAPHRAGM (DP)
- FLAPPER VALVE (FL)
- CHECK (CK)
- STRAINER (STR–1)
- DUPLEX STRAINER (STR–2)
- WYE STRAINER (STR)

- D — DRAIN
- S — SAMPLE PORT
- T — HAND OR HAND WHEEL
- S — SINGLE SOLENOID
- S R — MANUAL RESET AFTER LATCH (OPTIONAL)
- A/S — PNEUMATIC DIAPHRAGM WITH POSITIONER

VALVE NOTATION (CONT'D)

- ( )Y I/P — ELECTRIC ANALOG SIGNAL TO PNEUMATIC VALVE WITH /P CONVERTER AND NO POSITIONER
- M — ROTARY MOTOR (SHOWN TYPICALLY WITH ELECTRIC SIGNAL)
- SINGLE–ACTING / DOUBLE–ACTING — PNEUMATIC CYLINDER (PNEUMATIC ANALOG INPUT)

SELF–ACTIVATED DEVICES–PRESSURE

- PCV — BACK PRESSURE REGULATOR SELF–CONTAINED
- PRV — PRESSURE RELIEF VALVE
- VRV — VACUUM RELIEF VALVE
- PSV A/S — PRESSURE/VACUUM RELIEF VALVE WITH FLAME ARRESTER.

SELF–ACTIVATED DEVICES–PRESSURE (CONT'D)

- PSE — RUPTURE DISK OR SAFETY HEAD FOR PRESSURE RELIEF
- PSE — RUPTURE DISK OR SAFETY HEAD FOR VACUUM RELIEF
- PCV H — SPEED CONTROL VALVE
- PCV — PRESSURE REDUCING REGULATOR WITH EXTERNAL PRESSURE TAP
- PCV — BACK PRESSURE REGULATOR WITH EXTERNAL PRESSURE TAP.
- PDCV — DIFFERENTIAL PRESSURE REDUCING REGULATOR WITH INTERNAL AND EXTERNAL PRESSURE TAPS
- PCV — PRESSURE REDUCING REGULATOR. SELF CONTAINED.
- PCV — BACKPRESSURE REGULATOR. EXTERNAL PRESSURE TAP.

THIS INFORMATION IS BASED UPON ANSI/ISA–5.1–2009 INSTRUMENTATION SYMBOLS AND IDENTIFICATION" AND ISA–5.3–1983 "GRAPHIC SYMBOLS FOR DISTRIBUTED CONTROL/SHARED DISPLAY INSTRUMENTATION, LOGIC AND COMPUTER SYSTEM. BOTH PUBLICATIONS ARE STANDARDS OF ISA, INTERNATIONAL SOCIETY OF AUTOMATION.

NOTES:

1. VALVE–BODY PORTS THAT ARE CLOSED IN NORMAL OPERATION ARE BLACKENED. THE OPERATING CONDITION SHOWN FOR MAIN VALVE BODIES CORRESPONDS TO FULL–LOAD OR NORMAL OPERATION REGARDLESS OF THE TYPE OF ACTUATOR SOLENOID PILOT VALVE SHALL BE SHOWN IN THEIR DEENERGIZE POSITION.
2. IDENTIFY BOTH THE ACTUAL ELEMENT WHICH IS PLACED IN THE LINE AND THE INSTRUMENT UNLESS THE DEVICE IS ONE UNIT:
   FE ORIFICE PLATE: FT TRANSMITTER
   FT MAGNETIC FLOWMETER WITH INTEGRAL TRANSMITTER
3. THE TYPE OF FLOW INSTRUMENT IS USUALLY NAMED OUTSIDE THE INSTRUMENT CIRCLE E.G. MAGNETIC FLOWMETER, DISPLACEMENT METER, MASS FLOWMETER.
4. TAG THE THERMOWELL SEPARATELY IF IT IS REMOTE MOUNTED FROM THE INSTRUMENT:
   TW, TIC REMOTE CAPILLARY
   TI DIAL THERMOMETER
   TE, TT THERMOCOUPLE AND TRANSMITTER

© COPYRIGHT 2013. TERRATHERM, INC. ALL RIGHTS RESERVED.

STATE OF NEW YORK — DAVID MACONE — 080085 — LICENSED PROFESSIONAL ENGINEER — 10-24-13

REVISIONS

REV	DATE	BY	CHK	ENG	DESCRIPTION	APPROVED
B	10/24/11	DC			ADDED INSTRUMENTATION NUMBERING SYSTEM	
A	1/18/11	BC	DB	DR	PRELIMINARY SUBMITTAL TO CLIENT.	PA

TERRATHERM

PIPING AND INSTRUMENTATION DIAGRAM
LEGEND SHEET

SIZE	FILE NO.	DWG NO.	REV
D	P100	P100	B

SCALE: AS SHOWN | DNS | SHEET 2 OF 4

THIS DRAWING AND THE INFORMATION IT CONTAINS ARE THE PROPERTY OF TERRATHERM, INC. AND MAY NOT BE USED IN PART OR IN WHOLE EXCEPT BY WRITTEN PERMISSION OF TERRATHERM, INC.

NO. T14

FUNCTION SYMBOLS

- Σ — SUMMATION
- Σ/n — AVERAGE
- Δ — DIFFERENCE
- K — PROPORTION CONTROL ACTION
- 1:1 — PROPORTIONAL
- 2:1
- ∫ — INTEGRAL
- d/dt — DERIVATIVE
- X — MULTIPLICATION
- ÷ — DIVISION
- n/√ — ROOT EXTRACTION
- x^n — EXPONENTIAL
- f(x) — NONLINEAR OR UNSPECIFIED FUNCTION
- f(t) — TIME FUNCTION
- HIGH SELECTING
- LOW SELECTING
- HIGH LIMITING
- LOW LIMITING
- VELOCITY LIMITER
- + — POSITIVE BIAS
- − — NEGATIVE BIAS
- */▲ — CONVERSION
- I/P — ELECTRIC/NEUMATIC
- M — MIDDLE SIGNAL SELECT
- H — HIGH SIGNAL SELECT
- L — LOW SIGNAL SELECT

EXAMPLES

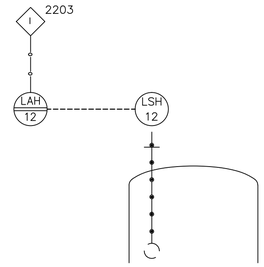

LEVEL ALARM USING A FLANGE MOUNTED FLOAT SWITCH. CONNECTED TO LOCAL CONTROL PANEL WITH OPERATOR ACCESS AND A SOFTWARE INTERLOCK TO A CENTRAL SYSTEM, AS TO NOT TO ALLOW PUMPING TO THIS TANK.

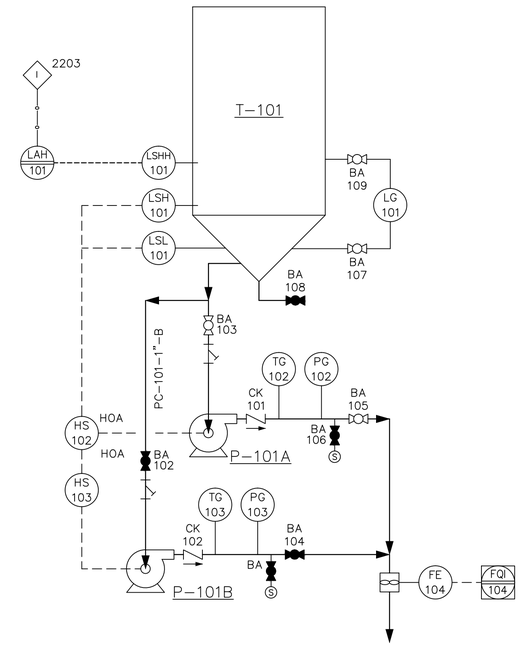

MOISTURE SEPARATOR LEVEL CONTROL: FIELD MOUNTED LEVEL (LG) TEMPERATURE (TG) AND PRESSURE (PG) GUAGES PROVIDE OPERATOR INFORMATION. THE PUMPS ARE USED IN A MANUAL DUPLEX OPERATION. A LOCAL HAND SWITCH (HS) PROVIDES HAND-OFF-AUTO CONTROL FOR THE PUMPS.

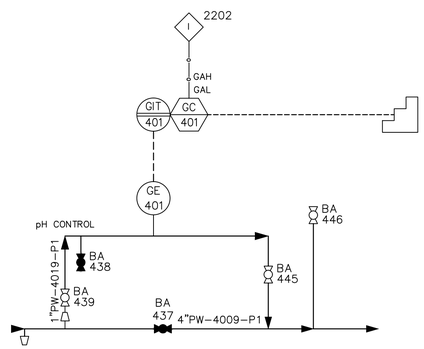

SCRUBBER pH CONTROL USING A pH SENSOR (ELEMENT), A pH INDICATING TRANSMITTER (GIT) AND A PLC FUNCTION (GC) FOR CLOSED LOOP CONTROL TO A CAUSTIC INJECTION PUMP AND HIGH-LOW ALARM LIMITS (GAH & GAL).

CONFIDENTIAL

© COPYRIGHT 2013. TERRATHERM, INC. ALL RIGHTS RESERVED.

REVISIONS

REV	DATE	BY	CHK	ENG	DESCRIPTION	APPROVED
A	1/07/11	BC	DB	DR	PRELIMINARY SUBMITTAL TO CLIENT.	PA

STATE OF NEW YORK · DAVID MACONE · 080085 · LICENSED PROFESSIONAL ENGINEER

12-21-13

THESE DRAWINGS HAVE BEEN PREPARED BASED ON PROJECT INFORMATION AVAILABLE TO DATE AND ARE SUITABLE FOR TERRATHERM'S USE DURING PROJECT IMPLEMENTATION. CHANGES TO THE DESIGN MADE BY TERRATHERM DURING IMPLEMENTATION WILL BE UPDATED AS PART OF THE AS-BUILT DRAWING PACKAGE TO BE SUBMITTED AFTER PROJECT COMPLETION.

TERRATHERM

PIPING AND INSTRUMENTATION DIAGRAM
LEGEND SHEET

SIZE	FILE NO.	DWG NO.	REV
D	P100	P100	A

SCALE: AS SHOWN | DNS | SHEET 3 OF 4

THIS DRAWING AND THE INFORMATION IT CONTAINS ARE THE PROPERTY OF TERRATHERM, INC. AND MAY NOT BE USED IN PART OR IN WHOLE EXCEPT BY WRITTEN PERMISSION OF TERRATHERM, INC.

NO. T15

GENERAL EQUIPMENT

- GEAR PUMP
- DIAPHRAGM PUMP
- CENTRIFUGAL PUMP
- SUMP PUMP
- SUBMERSIBLE PUMP
- VERTICAL PUMP
- POSITIVE DISPLACEMENT PUMP
- PROGRESSIVE CAVITY PUMP
- AGITATOR
- STATIC MIXER
- PRESSURE VESSEL
- HEAD TANK/OPEN TANK
- CENTRIFUGAL FAN
- ROTARY VANE BLOWER
- ROTARY LOBE BLOWER
- VENTURI (EDUCTOR)
- GOARATOR PUMP

GENERAL EQUIPMENT (CONT'D)

- CONTINUOUS CENTRIFUGES
- BATCH CENTRIFUGES
- ROTARY VACUUM FILTERS
- AIR TREATMENT/HANDLING (EG. WET ELECTROSTATIC PRECIPITATOR)
- CARTRIDGE FILTER
- STRAINER
- CONVEYOR
- ROTARY, CENTRIFUGAL & WATER SEALED COMPRESSORS & VACUUM PUMPS
- TURBINES & EXPANDERS
- SCREW CONVEYOR
- TRAY, DISC & DONUT, CASCADE
- PACKED DISTILLATION, ABSORBERS, ADSORBERS
- ONE SHELL PASS ODD NUMBER OF TUBES
- TANK W/CONE ROOF

GENERAL EQUIPMENT (CONT'D)

- PLATE & FRAME
- PARTIAL CONDENSERS, TUBE SIDE
- PARTIAL CONDENSERS, SHELL SIDE
- DUST COLLECTORS, PRECIPITATORS
- CLARIFIERS, THICKENERS
- KILNS/DRYERS
- FIRED HEATERS
- VIDEO CAMERA
- SUMP PUMP WITH MECHANICAL FLOAT SWITCH
- CONE BOTTOM TANK

GENERAL PIPING

- PRIMARY PROCESS FLOW
- SOLIDS FLOW
- SECONDARY PROCESS OR UTILITY FLOW
- DIRECTION OF FLOW
- CONCENTRIC REDUCER OR INCREASER
- ECCENTRIC REDUCER
- EXPANSION JOINT
- FLEXIBLE CONNECTION
- SCREWED CAP
- HOSE CONNECTION
- ATMOSPHERIC VENT
- QUICK CONNECT/DISCONNECT COUPLINGS W/FLEXIBLE HOSE
- WELDED CAP
- FLANGED JOINT
- PLUG
- DRAIN
- INSULATED LINE
- INSULATED LINE WITH HEAT TRACING
- VENT FLAME ARRESTOR
- SIGHT GLASS
- UNION JOINT
- BLIND FLANGED LINE OR VALVE
- TRAP
- LINE FILTER
- SPRAY NOZZLE

VALVE NOTATION

- ROTARY VALVE
- KNIFE GATE VALVE

MISCELLANEOUS

- ALARM HORN
- 1ST DWG.# — LINE BREAK OR RESUMPTION POINT
- B/L — BATTERY LIMITS
- FILLED LINE
- PUMP W/LIQUID SEAL FLUSH
- STEAM TRAP SHOWN THIS WAY
- REPRESENTS THIS CONFIGURATION
- PUMP W/INTERNAL SAFETY RELIEF
- SPECIALTY ITEM
- SPRAY NOZZLE OR SPARGER
- PACKAGE SYSTEM (DETAILS UNKNOWN)

EQUIPMENT NUMBER IDENTIFICATION

T – 101 A

- A — DUPLICATE OR SPARE
- 101 — SEQUENCE NUMBER
- T — EQUIPMENT LETTER (SEE BELOW)

A – AGITATOR
B – BLOWER
CP– CONTROL PANEL
C – COLUMN
D – DRIVE
E – HEAT EXCHANGER
F – FIRED EQUIPMENT
FX– FILTER
G – FLUID MIXING NOZZLE
H – SOLIDS HANDLING EQUIPMENT
M – MIXER, BLENDER
P – PUMP
PX– VENDOR PACKAGE SYSTEM
S – SEPARATOR
T – TANK
U – LUBRICATION PACKAGE
V – VESSEL
W – COOLING TOWER
WX– WEIRS
X – VENT STACKS
Y – MISCELLANEOUS
Z – MISCELLANEOUS EQUIPMENT
ZX– PIPING EXPANSION JOINT

LINE IDENTIFICATION

6"–CS–N–CW–101

- 101 — LINE NUMBER
- CW — FLUID TYPE
- N — PIPE INSULATION
- CS — PIPE MATERIAL
- 6" — NOMINAL PIPE DIAMETER

LINE SERVICE DESIGNATION

MATERIAL

ABS: ACRYLONITRILE BUTADIENE STYRENE
CA: CHEMAIRE TYPE ABS
CPVC: CHLORINATED POLYVINYL CHLORIDE
CS: CARBON STEEL
FRP: FIBERGLASS–REINFORCED PLASTIC
NT: NYLON TUBING
PH: PETROLEUM HOSE
PVC: RIGID POLY–VINYL–CHLORIDE
RH: RUBBER HOSE
SS: STAINLESS STEEL
TT: TEFLON TUBING
CU: COPPER

INSULATION TYPE

C: INSULATION COLD
E: ELECTRIC TRACING
I: INSULATION HOT
N: NONE
T: STEAM TRACING

FLUID TYPE

AA: AMBIENT AIR
AS: COMPRESSED AIR
AS: CHEMICAL FEED
CW: COOLING WATER
IA: INSTRUMENT AIR
NG: NATURAL GAS
PG: PROCESS GAS
PL: PROCESS LIQUID
PW: POTABLE WATER
SL: SLUDGE
ST: STEAM
VE: VAPOR EXTRACTION
VG: VENT GAS (OFFGAS)
PV: PROCESS VAPOR
UW: UTILITY WATER

PIPE RATING

FF: FLAT FACE FLANGE
RF: RAISED FACE FLANGE
T: THREADED

STATE OF NEW YORK — DAVID MACONE — 080085 — LICENSED PROFESSIONAL ENGINEER — 12/2/13

© COPYRIGHT 2011. TERRATHERM, INC. ALL RIGHTS RESERVED.

REVISIONS

REV	DATE	BY	CHK	ENG	DESCRIPTION	APPROVED
C	05/13/13	DC				
B	1/13/11	BC	DB	DR	MODIFIED LINE SERVICE DESIGNATION PER MARKUPS BY DB/PA	PA
A	1/07/11	BC	DB	DR	PRELIMINARY SUBMITTAL TO CLIENT.	PA

TERRATHERM

PIPING AND INSTRUMENTATION DIAGRAM
LEGEND SHEET

SIZE	FILE NO.	DWG NO.	REV
D	P100	P100	C

SCALE: AS SHOWN | DNS | SHEET 4 OF 4

THIS DRAWING AND THE INFORMATION IT CONTAINS ARE THE PROPERTY OF TERRATHERM, INC. AND MAY NOT BE USED IN PART OR IN WHOLE EXCEPT BY WRITTEN PERMISSION OF TERRATHERM, INC.

NO. T16

THESE DRAWINGS HAVE BEEN PREPARED BASED ON PROJECT INFORMATION AVAILABLE TO DATE AND ARE SUITABLE FOR TERRATHERM'S USE DURING PROJECT IMPLEMENTATION. CHANGES TO THE DESIGN MADE BY TERRATHERM DURING IMPLEMENTATION WILL BE UPDATED AS PART OF THE AS-BUILT DRAWING PACKAGE TO BE SUBMITTED AFTER PROJECT COMPLETION.

CONFIDENTIAL

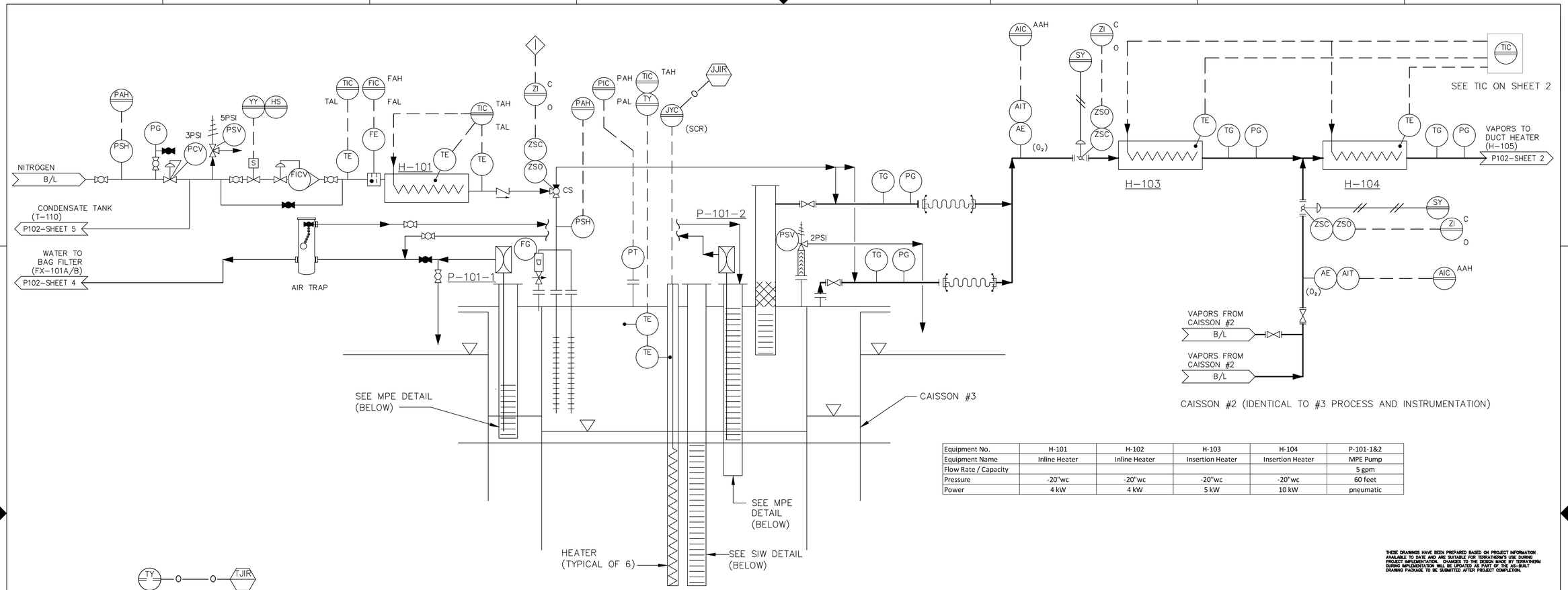

Equipment No.	H-101	H-102	H-103	H-104	P-101-1&2
Equipment Name	Inline Heater	Inline Heater	Insertion Heater	Insertion Heater	MPE Pump
Flow Rate / Capacity					5 gpm
Pressure	-20"wc	-20"wc	-20"wc	-20"wc	60 feet
Power	4 kW	4 kW	5 kW	10 kW	pneumatic

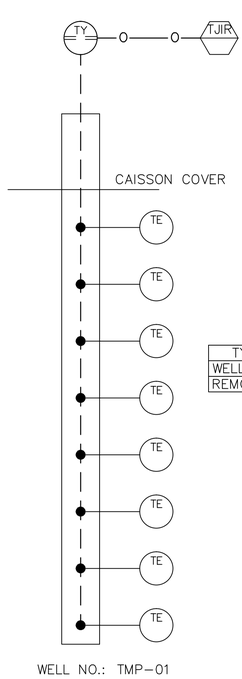

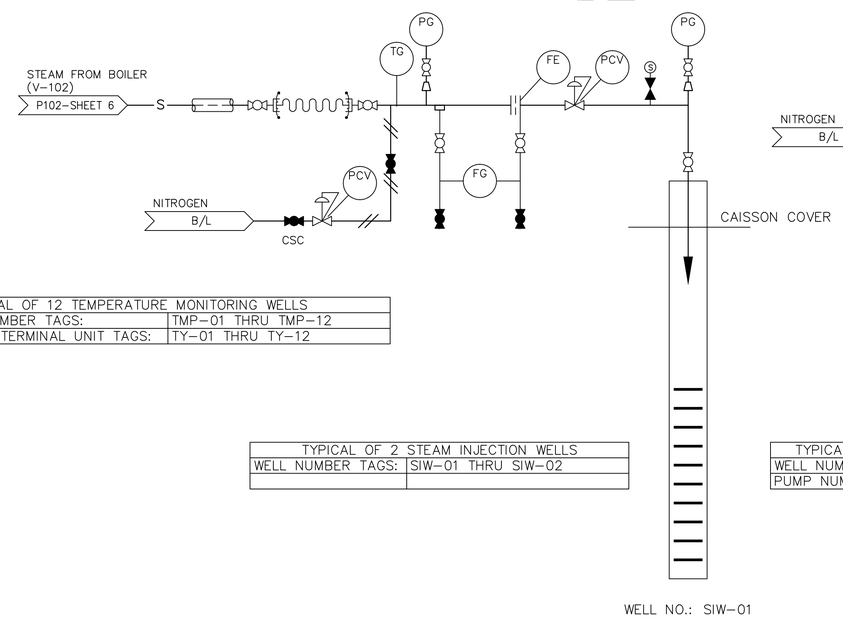

TYPICAL OF 12 TEMPERATURE MONITORING WELLS	
WELL NUMBER TAGS:	TMP-01 THRU TMP-12
REMOTE TERMINAL UNIT TAGS:	TY-01 THRU TY-12

TYPICAL OF 2 STEAM INJECTION WELLS	
WELL NUMBER TAGS:	SIW-01 THRU SIW-02

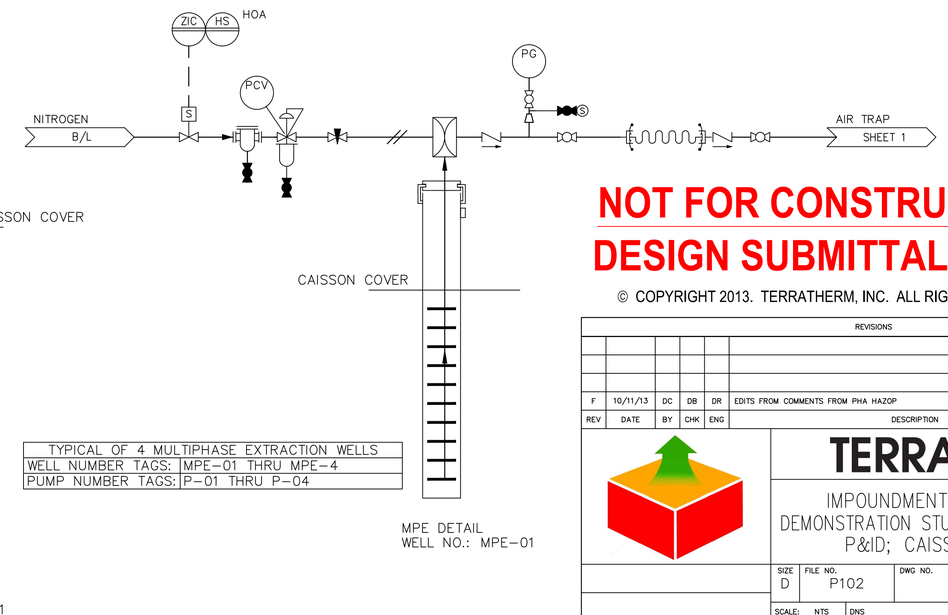

TYPICAL OF 4 MULTIPHASE EXTRACTION WELLS	
WELL NUMBER TAGS:	MPE-01 THRU MPE-4
PUMP NUMBER TAGS:	P-01 THRU P-04

THESE DRAWINGS HAVE BEEN PREPARED BASED ON PROJECT INFORMATION AVAILABLE TO DATE AND ARE SUITABLE FOR TERRATHERM'S USE DURING PROJECT IMPLEMENTATION. CHANGES TO THE DESIGN MADE BY TERRATHERM DURING IMPLEMENTATION WILL BE UPDATED AS PART OF THE AS-BUILT DRAWING PACKAGE TO BE SUBMITTED AFTER PROJECT COMPLETION.

STATE OF NEW YORK · DAVID MACOMBER · 080985 · LICENSED PROFESSIONAL ENGINEER · 10-24-13

NOT FOR CONSTRUCTION
DESIGN SUBMITTAL 10/11/13

© COPYRIGHT 2013. TERRATHERM, INC. ALL RIGHTS RESERVED.

REVISIONS

REV	DATE	BY	CHK	ENG	DESCRIPTION	APPROVED
F	10/11/13	DC	DB	DR	EDITS FROM COMMENTS FROM PHA HAZOP	

TERRATHERM

IMPOUNDMENTS 1 AND 2 PILOT DEMONSTRATION STUDY – BRIDGEWATER, NJ
P&ID; CAISSON EQUIPMENT

SIZE	FILE NO.	DWG NO.	REV
D	P102	P102	F

SCALE: NTS | DNS | SHEET 1 OF 6

THIS DRAWING AND THE INFORMATION IT CONTAINS ARE THE PROPERTY OF TERRATHERM, INC. AND MAY NOT BE USED IN PART OR IN WHOLE EXCEPT BY WRITTEN PERMISSION OF TERRATHERM, INC.

NO. T17

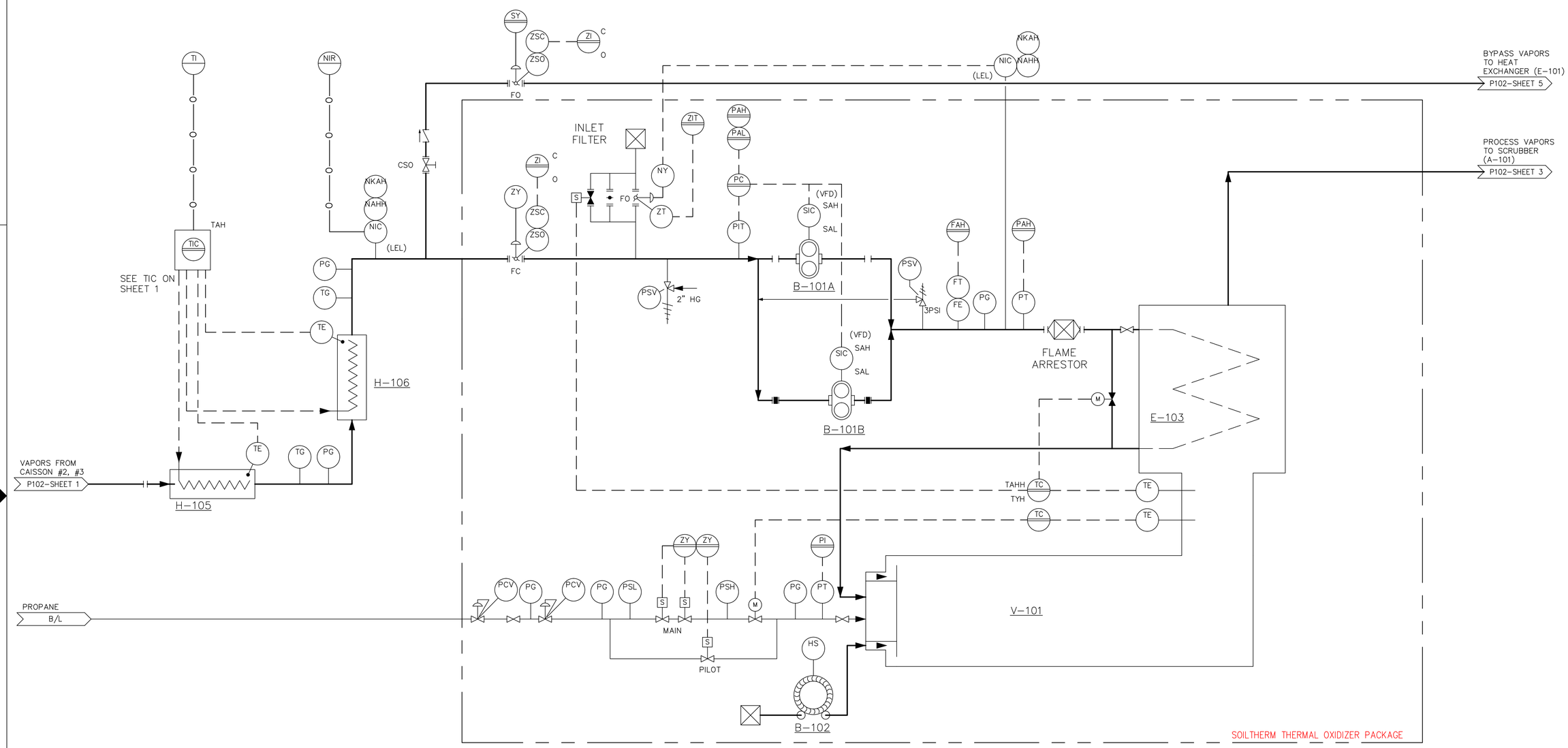

© COPYRIGHT 2013. TERRATHERM, INC. ALL RIGHTS RESERVED.

Equipment No.	H-105	H-106	B-101A/B	E-103	V-101
Equipment Name	Insertion Heater	Insertion Heater	Vacuum Blowers	Oxidizer Heat Exc	Thermal Oxidizer
Flow Rate / Capacity			1000 scfm	1000 scfm	1000 scfm
Pressure	-20"wc	-20"wc	70/-20"wc Eff/Inf	60"wc	100"wc
Power	10 kW	5 kW	40 HP	x	x

THESE DRAWINGS HAVE BEEN PREPARED BASED ON PROJECT INFORMATION AVAILABLE TO DATE AND ARE SUITABLE FOR TERRATHERM'S USE DURING PROJECT IMPLEMENTATION. CHANGES TO THE DESIGN MADE BY TERRATHERM DURING IMPLEMENTATION WILL BE UPDATED AS PART OF THE AS-BUILT DRAWING PACKAGE TO BE SUBMITTED AFTER PROJECT COMPLETION.

STATE OF NEW YORK · DAVID MACORE · 080095 · LICENSED PROFESSIONAL ENGINEER · 10-27-13

NOT FOR CONSTRUCTION
DESIGN SUBMITTAL 10/11/13

REVISIONS

REV	DATE	BY	CHK	ENG	DESCRIPTION	APPROVED
F	10/11/13	DC	DB	DR	EDITS FROM COMMENTS FROM PHA HAZOP	

TERRATHERM

IMPOUNDMENT 1 AND 2 PILOT DEMONSTRATION STUDY – BRIDGEWATER, NJ
P&ID; THERMAL OXIDIZER SYSTEM

SIZE D | FILE NO. P102 | DWG NO. P102 | REV F
SCALE: NTS | DNS | SHEET 2 OF 6

THIS DRAWING AND THE INFORMATION IT CONTAINS ARE THE PROPERTY OF TERRATHERM, INC. AND MAY NOT BE USED IN PART OR IN WHOLE EXCEPT BY WRITTEN PERMISSION OF TERRATHERM, INC.

NO. T18

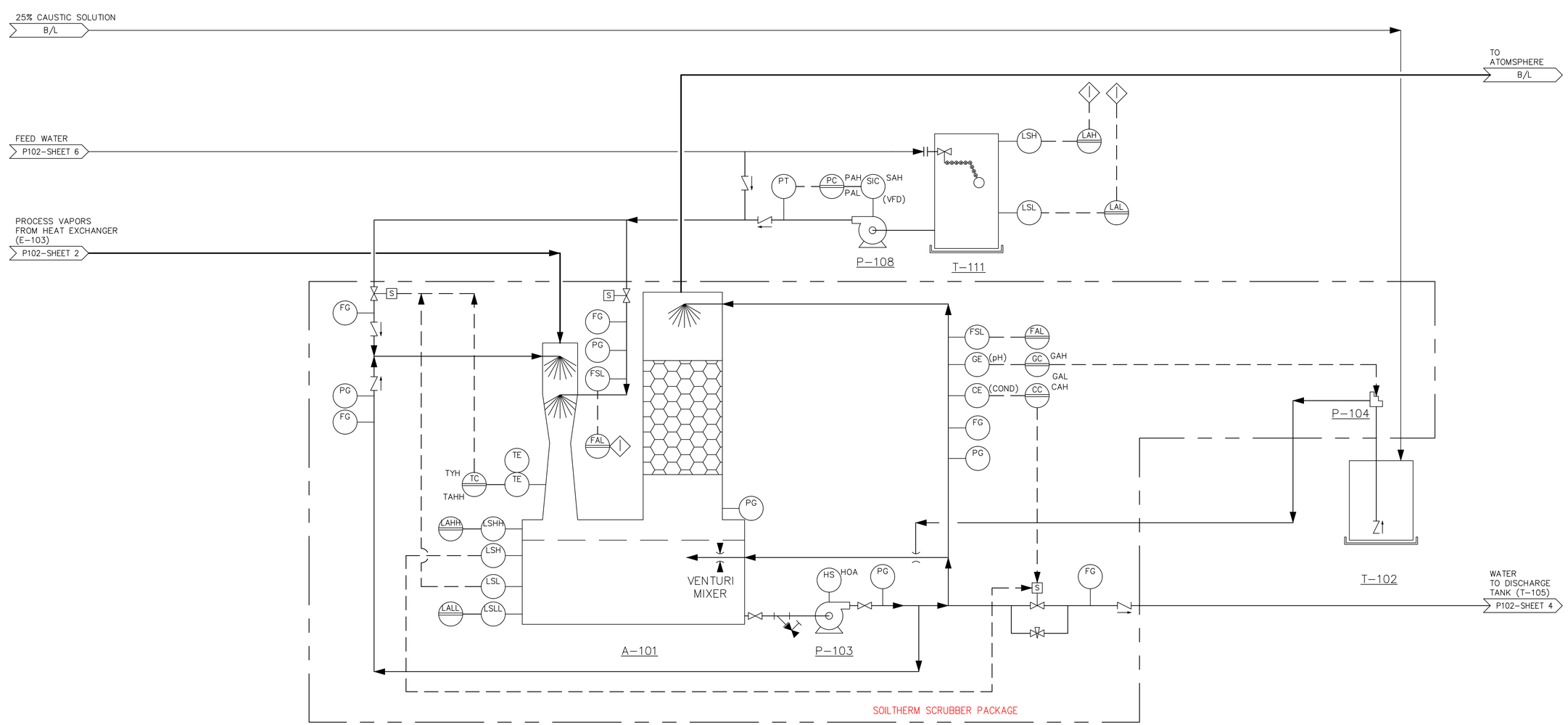

© COPYRIGHT 2013. TERRATHERM, INC. ALL RIGHTS RESERVED.

Equipment No.	A-101	P-103	P-108	T-111	T-102	P-104
Equipment Name	Scrubber	Scrubber Pump	Potable Water Pump	Potable Water Tank	Caustic Tank	Caustic Pump
Flow Rate / Capacity	1200 scfm	50 gpm	5 gpm			
Pressure	x	150 feet	100 feet			
Power						

THESE DRAWINGS HAVE BEEN PREPARED BASED ON PROJECT INFORMATION AVAILABLE TO DATE AND ARE SUITABLE FOR TERRATHERM'S USE DURING PROJECT IMPLEMENTATION. CHANGES TO THE DESIGN MADE BY TERRATHERM DURING IMPLEMENTATION WILL BE UPDATED AS PART OF THE AS-BUILT DRAWING PACKAGE TO BE SUBMITTED AFTER PROJECT COMPLETION.

STATE OF NEW YORK · DAVID MACONE · 080085 · LICENSED PROFESSIONAL ENGINEER · 10-21-13

NOT FOR CONSTRUCTION
DESIGN SUBMITTAL 10/11/13

REVISIONS

REV	DATE	BY	CHK	ENG	DESCRIPTION	APPROVED
F	10/11/13	DC	DB	DR	EDITS FROM COMMENTS FROM PHA HAZOP	

TERRATHERM

IMPOUNDMENTS 1 AND 2 PILOT DEMONSTRATION STUDY – BRIDGEWATER, NJ
P&ID; SCRUBBER PACKAGE

SIZE	FILE NO.	DWG NO.	REV
D	P102	P102	F

SCALE: NTS | DNS | SHEET 3 OF 6

THIS DRAWING AND THE INFORMATION IT CONTAINS ARE THE PROPERTY OF TERRATHERM, INC. AND MAY NOT BE USED IN PART OR IN WHOLE EXCEPT BY WRITTEN PERMISSION OF TERRATHERM, INC.

NO. T19

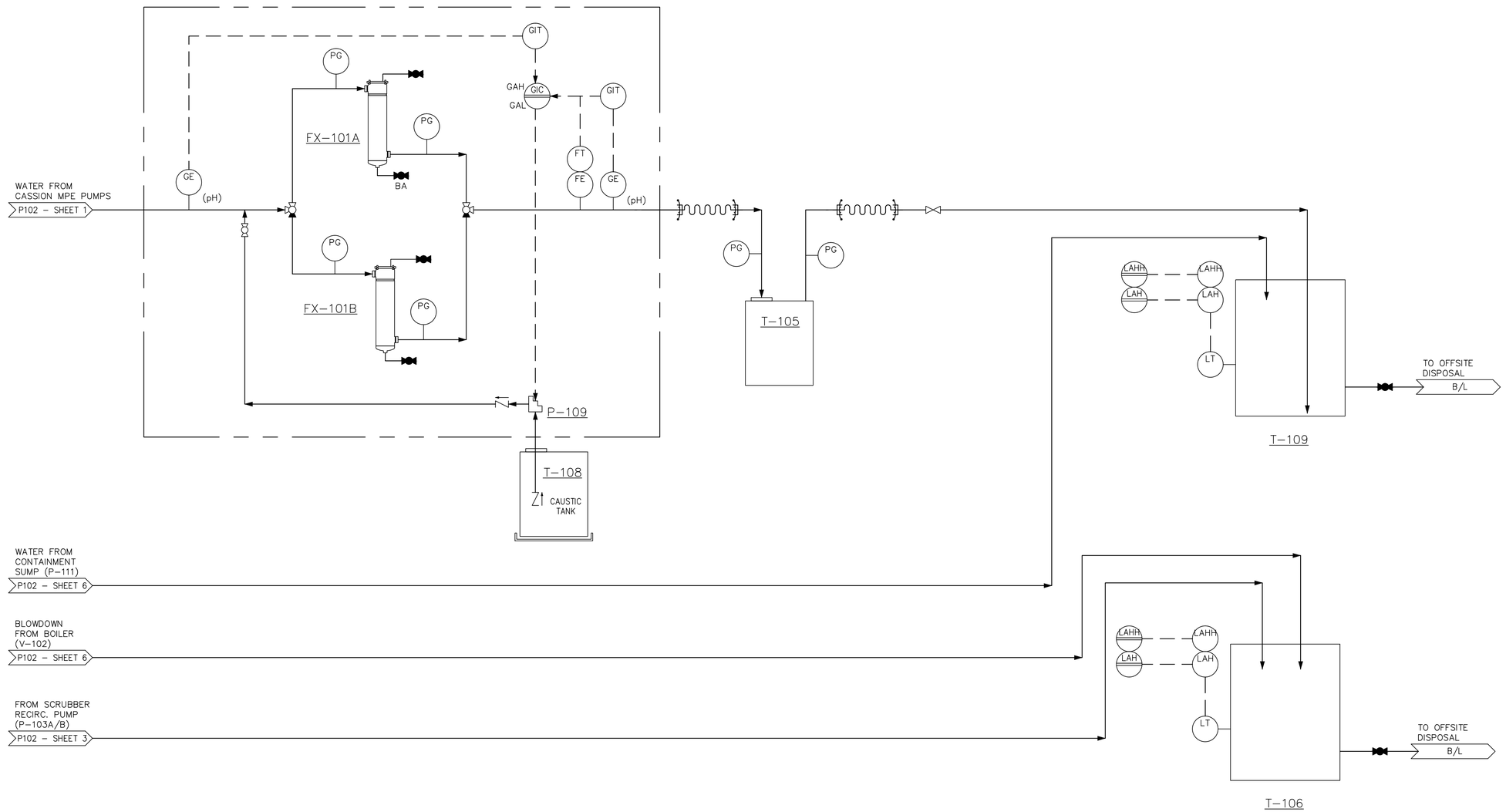

NOTE: SECONDARY CONTAINMENT PROVIDED BY CONTAINMENT LINER UNLESS OTHERWISE NOTED.

© COPYRIGHT 2013. TERRATHERM, INC. ALL RIGHTS RESERVED.

Equipment No.	C-103	FX-101A/B	T-104	T-106	T-109
Equipment Name	Organic Clay	Bag Filters	Caustic Tank	Discharge Tank	Discharge Tank
Flow Rate / Capacity	55 gallons	5 gpm	30 gallons	10,000 gallons	10,000 gallons
Pressure	x	150 feet	x	x	x
Power	x	x	x	x	x

THESE DRAWINGS HAVE BEEN PREPARED BASED ON PROJECT INFORMATION AVAILABLE TO DATE AND ARE SUITABLE FOR TERRATHERM'S USE DURING PROJECT IMPLEMENTATION. CHANGES TO THE DESIGN MADE BY TERRATHERM DURING IMPLEMENTATION WILL BE UPDATED AS PART OF THE AS–BUILT DRAWING PACKAGE TO BE SUBMITTED AFTER PROJECT COMPLETION.

STATE OF NEW YORK · DAVID MACONE · 080085 · LICENSED PROFESSIONAL ENGINEER
10-29-13

NOT FOR CONSTRUCTION
DESIGN SUBMITTAL 10/11/13

REVISIONS

REV	DATE	BY	CHK	ENG	DESCRIPTION	APPROVED
F	10/11/13	DC	DB	DR	EDITS FROM COMMENTS FROM PHA HAZOP	

TERRATHERM

IMPOUNDMENTS 1 AND 2 PILOT DEMONSTRATION STUDY – BRIDGEWATER, NJ
P&ID; LIQUID TREATMENT SYSTEM

SIZE	FILE NO.	DWG NO.	REV
D	P102	P102	F

SCALE: NTS | DNS | SHEET 4 OF 6

THIS DRAWING AND THE INFORMATION IT CONTAINS ARE THE PROPERTY OF TERRATHERM, INC. AND MAY NOT BE USED IN PART OR IN WHOLE EXCEPT BY WRITTEN PERMISSION OF TERRATHERM, INC.

NO. T20

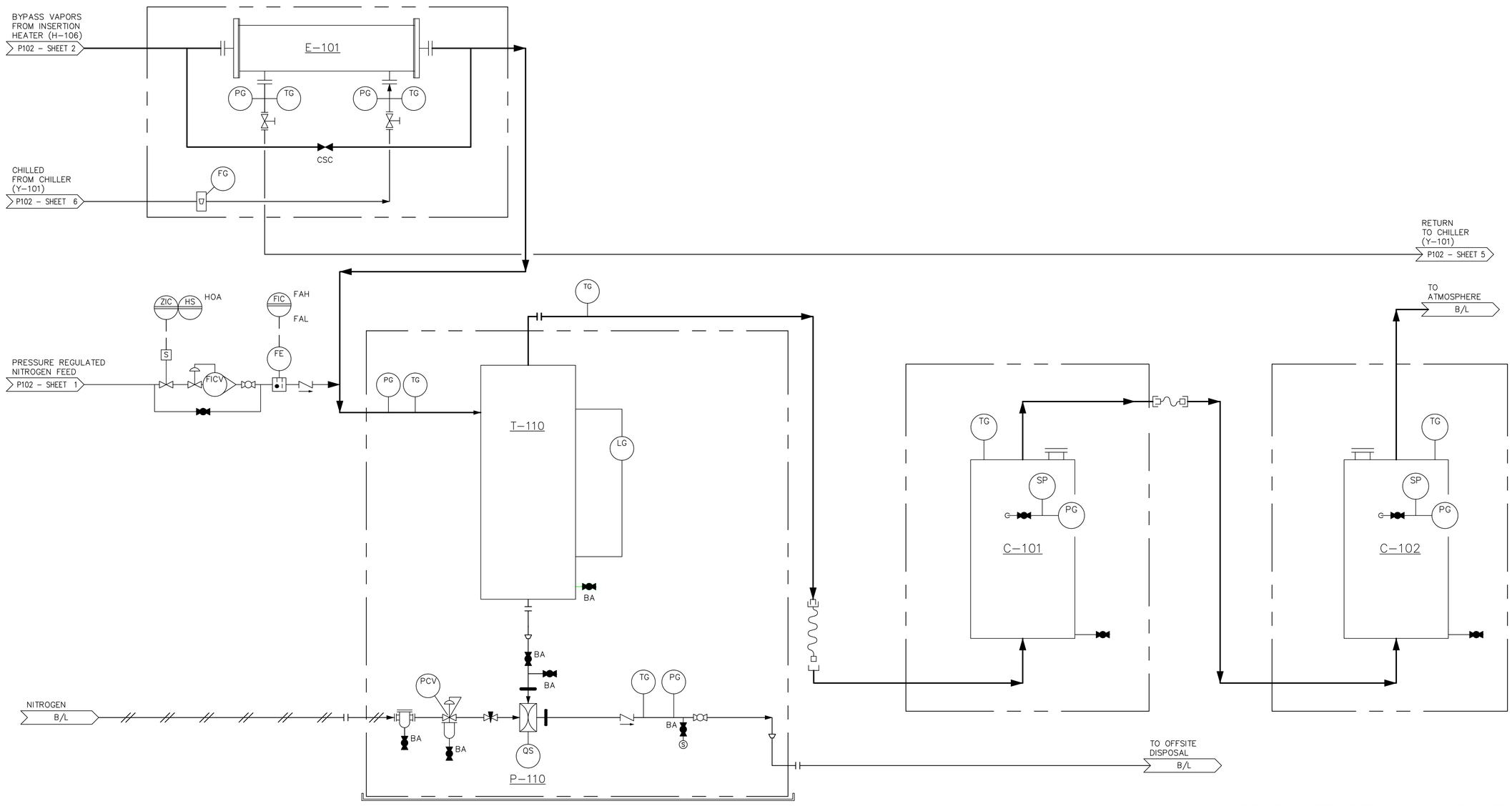

© COPYRIGHT 2013. TERRATHERM, INC. ALL RIGHTS RESERVED.

Equipment No.	E-101	T-110	C-101	C-102	P-110
Equipment Name	Condenser Heat Exchanger	Condensate Tank	Sorbent Media Vessels	Sorbent Media Vessels	Condensate Pump
Flow Rate / Capacity			100 SCFM	100 SCFM	5 gpm
Pressure	5 PSIG	+/- 2 PSIG	5 PSIG	5 PSIG	60 feet
Power			X	X	Pneumatic

THESE DRAWINGS HAVE BEEN PREPARED BASED ON PROJECT INFORMATION AVAILABLE TO DATE AND ARE SUITABLE FOR TERRATHERM'S USE DURING PROJECT IMPLEMENTATION. CHANGES TO THE DESIGN MADE BY TERRATHERM DURING IMPLEMENTATION WILL BE UPDATED AS PART OF THE AS-BUILT DRAWING PACKAGE TO BE SUBMITTED AFTER PROJECT COMPLETION.

STATE OF NEW YORK
DAVID MACONE
080085
LICENSED PROFESSIONAL ENGINEER
10-21-13

NOT FOR CONSTRUCTION
DESIGN SUBMITTAL 10/11/13

REVISIONS

REV	DATE	BY	CHK	ENG	DESCRIPTION	APPROVED
F	10/11/13	DC	DB	DR	EDITS FROM COMMENTS FROM PHA HAZOP	

TERRATHERM

IMPOUNDMENTS 1 AND 2 PILOT DEMONSTRATION STUDY – BRIDGEWATER, NJ
P&ID; ALTERNATE BYPASS SYSTEM

SIZE	FILE NO.	DWG NO.	REV
D	P102	P102	F

SCALE: NTS DNS SHEET 5 OF 6

THIS DRAWING AND THE INFORMATION IT CONTAINS ARE THE PROPERTY OF TERRATHERM, INC. AND MAY NOT BE USED IN PART OR IN WHOLE EXCEPT BY WRITTEN PERMISSION OF TERRATHERM, INC.

NO. T21

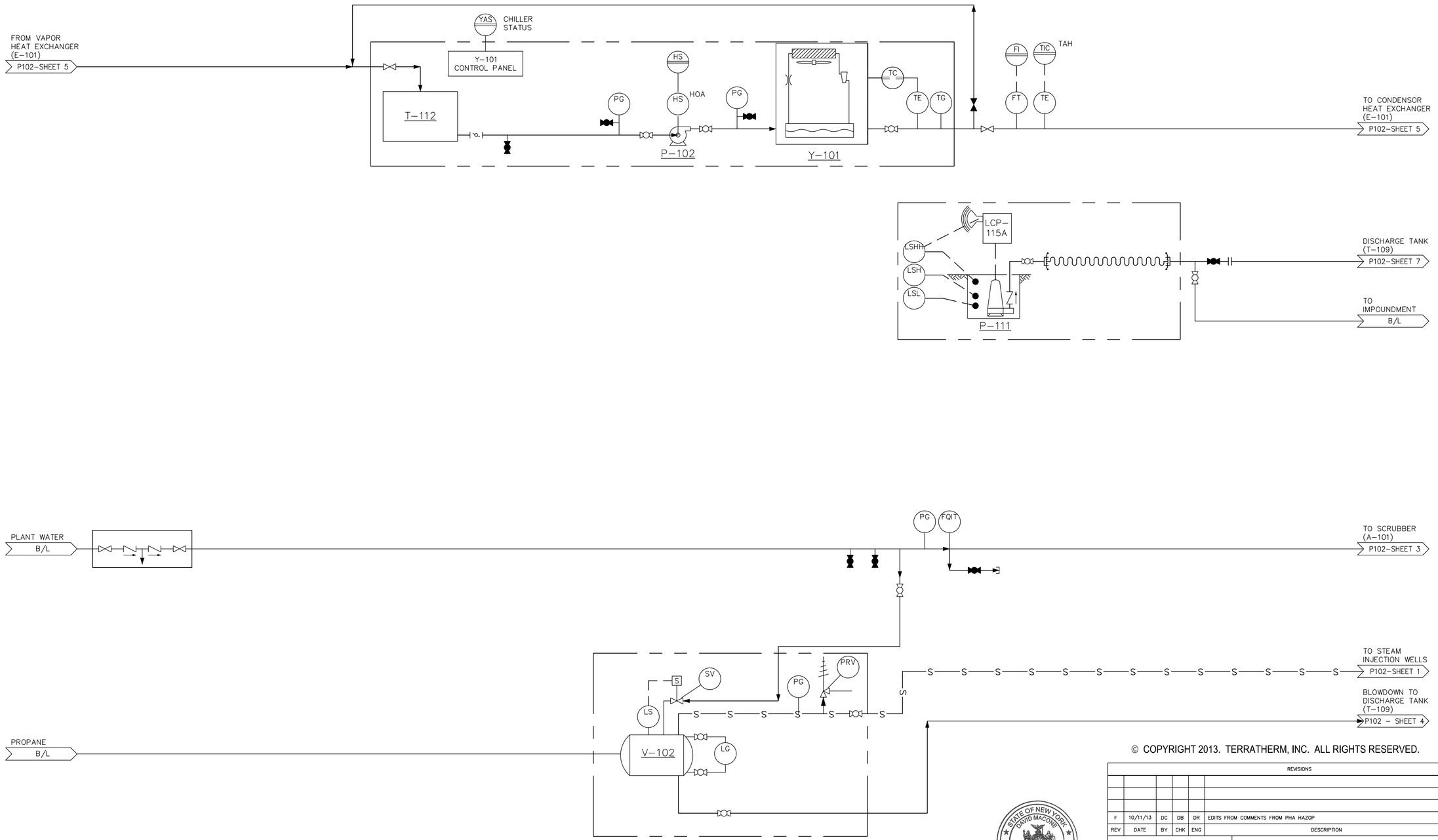

Equipment No.	T-112	Y-101	V-102	P-102	P-111
Equipment Name	Chiller Water Tank	Chiller	Steam Boiler	Chiller Recirc. Pump	Containment Pump
Flow Rate / Capacity		15 TON		40 gpm	25 gpm
Pressure				120 feet	60 feet
Power					

THESE DRAWINGS HAVE BEEN PREPARED BASED ON PROJECT INFORMATION AVAILABLE TO DATE AND ARE SUITABLE FOR TERRATHERM'S USE DURING PROJECT IMPLEMENTATION. CHANGES TO THE DESIGN MADE BY TERRATHERM DURING IMPLEMENTATION WILL BE UPDATED AS PART OF THE AS-BUILT DRAWING PACKAGE TO BE SUBMITTED AFTER PROJECT COMPLETION.

STATE OF NEW YORK
DAVID MACONE
080085
LICENSED PROFESSIONAL ENGINEER
10-24-13

NOT FOR CONSTRUCTION
DESIGN SUBMITTAL 10/11/13

© COPYRIGHT 2013. TERRATHERM, INC. ALL RIGHTS RESERVED.

REVISIONS

REV	DATE	BY	CHK	ENG	DESCRIPTION	APPROVED
F	10/11/13	DC	DB	DR	EDITS FROM COMMENTS FROM PHA HAZOP	

TERRATHERM

IMPOUNDMENTS 1 AND 2 PILOT DEMONSTRATION STUDY – BRIDGEWATER, NJ
P&ID; UTILITIES

SIZE D | FILE NO. P102 | DWG NO. P102 | REV F

SCALE: NTS | DNS | SHEET 6 OF 6

THIS DRAWING AND THE INFORMATION IT CONTAINS ARE THE PROPERTY OF TERRATHERM, INC. AND MAY NOT BE USED IN PART OR IN WHOLE EXCEPT BY WRITTEN PERMISSION OF TERRATHERM, INC.

NO. T22