100 Percent Design of Pilot Study for Operable Unit 8

American Cyanamid Superfund Site

Prepared for

Pfizer Inc. on behalf of Wyeth Holdings Corporation

October 25, 2013

CH2MHILL®

255539

Contents

Section **Page**

1 Introduction ... 1-1
1.1 Project Description ... 1-1
1.1.1 Project Purpose ... 1-1
1.1.2 Project Status ... 1-1
1.1.3 Supporting Plans and Project Documentation ... 1-2
1.2 Document Organization ... 1-2
1.3 Document Revision History ... 1-3
1.4 Intellectual Property ... 1-3

2 Site Description ... 2-1
2.1 Site History ... 2-1
2.2 Impoundments 1 and 2 ... 2-1
2.2.1 Impoundment 1 Construction and Features ... 2-1
2.2.2 Impoundment 2 Construction and Features ... 2-2

3 Project Approach and Objectives ... 3-3
3.1 In-situ Thermal Treatment ... 3-3
3.1.1 Heating Technology Selection ... 3-3
3.1.2 Overview of Thermal Remediation Plan ... 3-4
3.1.3 Remediation Mechanisms ... 3-5
3.1.4 Laboratory Testing Summary ... 3-6
3.2 In-situ Solidification and Stabilization ... 3-7
3.2.1 Remediation Mechanisms ... 3-7
3.2.2 Laboratory Testing Summary ... 3-8
3.3 Pilot Study Objectives ... 3-9
3.3.1 Technology Specific Study Objectives ... 3-9
3.3.2 Verification Approach ... 3-9
3.4 Pilot Study Overview ... 3-15
3.4.1 Test Cell Description ... 3-15
3.4.2 Pilot study Sequence ... 3-18
3.5 Assumptions and Uncertainties ... 3-19

4 Ancillary Systems Design ... 4-1
4.1 Required Site Infrastructure ... 4-2
4.1.1 Bench Design and Construction ... 4-2
4.1.2 Impoundment 2 Overflow Control ... 4-3
4.1.3 Decontamination Pad Construction ... 4-3
4.2 Caissons ... 4-3
4.2.1 Structural Design of Caissons ... 4-4
4.2.2 Codes and Design Criteria ... 4-5
4.3 Flexifloats ... 4-6
4.3.1 Flexifloat Design ... 4-6
4.3.2 Flexifloat Elevation ... 4-7
4.3.3 Anchorage ... 4-8
4.4 Assumptions and Uncertainties ... 4-9

5 Thermal Treatment System Design ... 5-11
5.2 Numerical Calculations of Heating and Sensitivity Study ... 5-12
5.2.1 Area, Volume, and Energy Demand ... 5-12
5.2.2 Operational Durations and Subsurface Temperature Progressions ... 5-12

5.3 Material Selection 5-14
5.4 Wellfield Design 5-14
5.4.1 Well Installation Methods 5-15
5.4.2 Liners and Heaters 5-15
5.4.3 Multi-Phase Extraction Wells 5-16
5.4.4 Vapor Extraction Well 5-17
5.4.5 Steam Injection Well 5-17
5.4.6 Temperature Monitoring Points 5-17
5.4.7 ISTT Caisson Covers 5-17
5.4.8 Caisson Fill and Insulation 5-17
5.5 Piping, Mechanical, and Electrical Design 5-18
5.5.1 Vapor Collection Piping 5-18
5.5.2 Insertion Heaters 5-18
5.5.3 Groundwater Collection Piping 5-18
5.5.4 Electrical 5-18
5.6 Hydraulic and Pneumatic Control 5-19
5.7 Process Flow Diagram 5-20
5.7.1 Vapor Treatment System Summary 5-20
5.8 Piping and Instrumentation Diagram 5-21
5.9 Primary Vapor Treatment System 5-21
5.9.1 Nitrogen Inerting System 5-22
5.9.2 Vacuum Blowers (B-101 A/B) 5-22
5.9.3 Thermal Oxidizer and Exhaust Gas Heat Exchanger (V-101 and E-103) 5-22
5.9.4 Wet Scrubber (A-101) 5-23
5.10 Water Collection and Treatment System 5-23
5.10.1 Pneumatic Pumps 5-23
5.10.2 Bag Filters (FX-101A/B) 5-24
5.10.3 Chiller Package (Y-101) 5-24
5.10.4 Organo Clay Filtration (T-105) 5-24
5.10.5 Caustic Injection System (T-108) 5-24
5.10.6 Liquid Discharge Tanks (T-106 and T-109) 5-24
5.10.7 Steam Boiler (V-102) 5-24
5.11 Expected Water Production Rates 5-25
5.12 Contingency Vapor Treatment System Components 5-25
5.12.1 Condenser Heat Exchanger (E-101) 5-26
5.12.2 Moisture Separator (T-110) 5-26
5.12.3 Sorbent Media Vessels (C-101/102) 5-26
5.13 Control Systems 5-26

6 Solidification and Stabilization Design 6-1
6.1 Technical Approach 6-1
6.1.1 Mixing Equipment 6-1
6.1.2 Test Cell 1 Solidification and Stabilization Only 6-1
6.1.3 Test Cell 2 Thermal Treatment Followed by Homogenization Only 6-4
6.1.4 Test Cell 3 Thermal Treatment Followed by Solidification and Stabilization 6-5
6.2 Design Assumptions and Uncertainties 6-6

7 Regulatory Framework 7-1
7.1 Regulatory and Stakeholder Group Interface 7-1
7.2 Permits 7-1
7.2.1 Air Permit Equivalency 7-1
7.2.2 Flood Hazard Permitting Equivalency 7-2

7.2.3 Wetlands Permit Equivalency 7-2
7.2.4 Local Permit Equivalency 7-3
7.3 Liquid Handling 7-3
7.4 Waste Management 7-3

8 Health and Safety 8-1
8.1 Activity Hazard Analyses 8-1
8.2 Thermal Treatment Operations 8-1
8.3 Solidification and Stabilization Operations 8-1

9 Pilot Study Operations 9-1
9.1 Readiness Review 9-1
9.2 Caissons and Flexifloat Platform 9-1
9.2.1 Commissioning 9-1
9.2.2 Operation 9-2
9.3 Thermal Treatment Operations 9-2
9.3.1 Operational Sequence 9-2
9.3.2 Thermal System Construction and Start-up 9-3
9.3.3 Operations 9-3
9.3.4 Shut Down 9-4
9.4 In-situ Solidification and Stabilization 9-4
9.4.1 Commissioning 9-4
9.4.2 Operation 9-4
9.4.3 Operational Sequence 9-5
9.5 Decommissioning and Demobilization 9-5
9.5.1 Caissons and Flexifloat Platform 9-5
9.5.2 Thermal Treatment Systems 9-5
9.5.3 Stabilization and Solidification 9-5
9.5.4 Site Restoration 9-5

10 Performance Evaluation and System Monitoring 10-1
10.1 Principles of Monitoring and Sampling 10-1
10.2 ISTT Operational Monitoring 10-1
10.2.1 Remote Monitoring 10-2
10.2.2 Flammability Analyzer 10-2
10.2.3 Oxygen Analyzer 10-2
10.2.4 Manual Process Data Collection 10-2
10.2.5 In-situ Temperature Monitoring System 10-2
10.3 Chemical Mass Removal and System Performance Monitoring 10-3
10.3.1 Process Vapor Flow Monitoring 10-3
10.3.2 Vapor and Liquid Treatment System Samples 10-3
10.3.3 Energy Balance Calculations 10-3
10.4 Air Emissions Monitoring – EIPT Permit-Equivalent Requirements 10-4
10.5 Ambient Air Monitoring 10-4
10.6 Post ISS Treatment Sampling 10-4
10.7 Reporting 10-4
10.7.1 Data Evaluation for Full-Scale Design 10-5

11 Schedule 11-1

12 References 12-1

Tables

1-1 Document Revision History 1-3
3-1 In-situ Thermal Treatment Technologies 3-3
3-2 Thermal Treatment Study Objectives 3-11
3-3 Solidification and Stabilization Study Objectives 3-12
3-4 Verification Parameters for Pilot Study Objectives 3-13
4-1 Design Drawings for Ancillary Systems 4-1
4-2 Structural Steel Materials 4-4
4-3 Design Details for the Flexifloat Platform 4-7
5-1 Design Drawings for Thermal Treatment Systems 5-11
5-2 Preliminary Dimensions and Heat Capacity for One Pilot Study Caisson 5-12
5-3 Preliminary Energy Balance Calculations and Operational Duration Estimates (One Caisson) 5-13
5-4 Projected Nominal and System Design Flow Rates 5-25
6-1 Tier IV Stabilization and Solidification Study Reagent BASE Recipes 6-2
6-2 Core Sampling Approach 6-3

Figures

3-1 Generic Sketch of Thermal Conduction Heating System (not specific to the Site) 3-4
3-2 Flexifloat and Caisson Configuration 3-15
3-3 Proposed Steel Caisson Cover and Shroud Support Frame for In-situ Stabilization and Solidification Operations 3-17
3-4 Conceptual Sequence of In-situ Stabilization and Solidification Operations 3-17
5-1 Simplified Heating Progression 5-14
5-2 Proposed Caisson Layout for ISTT Test Cells 5-16
5-3 ISTT Pilot Study Simplified Caisson Cover Cross-Section 5-20
7-1 Flood Insurance Rate Map 7-2

Appendixes

A Design Drawings
B Project Schedule

Acronyms and Abbreviations

%LFL	percent of the lower flammability limit
°C	degrees Celsius
°F	degrees Fahrenheit
AHA	Activity Hazard Analysis
ATS	automatic transfer switch
bgs	below ground surface
BTU/F	British thermal units per degree Fahrenheit
BTX	benzene, toluene, xylenes
CA	coal aggregate
CERCLA	Comprehensive Environmental Response, Compensation, and Liability Act
cfm	cubic feet per minute
CL	clay-like
COC	contaminant of concern
DGA	dense-graded aggregate
DNAPL	dense nonaqueous phase liquid
DPT	direct push technology
DRE	destruction removal efficiency
ECH	epichlorohydrin
EIPT	environmental improvement pilot test
ERH	electrical resistance heating
ESD	emergency shutdown
FBC	fluidized bed combustion ash
FEMA	Federal Emergency Management Agency
FFS	focused feasibility study
FHA	Flood Hazard Area
Focus	Focus Environmental, Inc.
ft/sec	feet per second
gpm	gallons per minute
HASP	Health and Safety Plan
HAZOP	Hazard and Operability
HC	hard crumbly
HiCal LKD	high calcium lime kiln dust
IR	infrared

ISS	in-situ solidification and stabilization
ISTD	in-situ thermal desorption
ISTR	in-situ thermal remediation
ISTT	in-situ thermal treatment
IW	injection well
ksi	kips per square inch
kVA	kilovolt-amps
kW	kilowatt
kWh	kilowatt hours
lbs/ft^2	pounds per square foot
LEL	lower explosive limit
LKD	lime kiln dust
LLDPE	linear low-density polyethylene
LN	LaFarge NewCem
LNAPL	light nonaqueous phase liquid
LOS	light oily sludge
LPC	LaFarge Portland cement
MPE	multi-phase extraction
NaOH	sodium hydroxide
NAPL	nonaqueous phase liquid
NAVD88	North American Vertical Datum of 1988
NCP	National Contingency Plan
NFPA	National Fire Protection Association
NJAC	New Jersey Administrative Code
NJDEP	New Jersey Department of Environmental Protection
OBG	O'Brien & Gere
OSHA	Occupational Safety and Health Administration
OU 8	Operable Unit 8
P&ID	piping and instrumentation diagram
PAMP	Perimeter Air Monitoring Plan
PFD	process flow diagram
Pfizer	Pfizer Inc.
PFM	Pumice Filtration Media
PLC	programmable logic controller
psf	pounds per square foot
psi	pounds per square inch

PVC	polyvinyl chloride
QAPP	Quality Assurance Project Plan
RECON	Remedial Construction Services, LP
RPM	revolution per minute
SAP	Sampling and Analysis Plan
SCR	silicon controlled rectifier
SEE	steam-enhanced extraction
Site	American Cyanamid Superfund Site in Bridgewater, New Jersey
SPLP	synthetic precipitation leaching procedure
SSL	sand and silt-like
SU	standard units
SVOC	semivolatile organic compound
TC	thermocouple
TCH	thermal conduction heating
TCLP	toxicity characteristic leaching procedure
TerraTherm	TerraTherm, Inc.
TMP	temperature monitoring point
TSDF	treatment, storage, and disposal facilities
TTZ	target treatment zone
UCS	unconfined compressive strength
USEPA	United States Environmental Protection Agency
VEW	vapor extraction well
VFD	variable frequency drive
VOC	volatile organic compound
VR	viscous rubbery
VTS	vapor treatment system
wc	water column
WHC	Wyeth Holdings Corporation
WMP	Waste Management Plan
WWTP	wastewater treatment plant
yd^3	cubic yards

SECTION 1

Introduction

1.1 Project Description

CH2M HILL prepared this 100 percent design document for Pfizer Inc. (Pfizer) to describe the technical approach and design criteria for implementing an in-situ field-scale pilot study to evaluate the feasibility and efficacy of treating materials contained within Impoundments 1 and 2 at Operable Unit 8 (OU 8) of the American Cyanamid Superfund Site in Bridgewater, New Jersey (Site). Pilot study results are intended to support both screening and detailed analysis of treatment technologies contemplated for Impoundments 1 and 2. Specifically, field testing will be completed to evaluate the effectiveness of the following technologies:

- In-situ thermal treatment (ISTT)
- In-situ solidification and stabilization (ISS), and includes homogenization, pH adjustment, and pozzolan addition

Technologies (ISTT and ISS) will be tested independently and in combination with each other to evaluate their ability to achieve anticipated remedial action objectives for Impoundments 1 and 2.

This document presents a summary of the key features of the final design of the pilot study and includes overall study objectives, summary of the primary components for each of the technologies, applicable permits (or their equivalents), and the project schedule.

1.1.1 Project Purpose

Proposed work is being completed in support of the Statement of Work for developing an OU 8 focused feasibility study (FFS) under the March 18, 2013, *Administrative Settlement Agreement and Order of Consent for Remedial Design, Operable Unit 4 and Focused Feasibility Study, Operable Unit 8* (United States Environmental Protection Agency [USEPA] 2013). The proposed pilot study will be completed in Impoundment 2 only. Impoundment 2 was chosen for the pilot study as it contains the highest proportion of viscous rubbery (VR) and hard crumbly (HC) materials. Given the chemical and physical properties of VR and HC, these materials are considered the most challenging to treat. Data collected during the pilot study will support detailed analysis of each technology as a candidate remedy for full-scale implementation and subsequent development of conceptual designs for full-scale treatment of materials found in Impoundments 1 and 2.

The pilot study is being conducted to further evaluate the feasibility of using the technologies assessed during the laboratory treatability study completed in 2012 (CH2M HILL 2012a) in a field-scale application. The three basic goals of the pilot study are as follows:

- Determine if ISTT can be effectively implemented to treat the impoundment materials
- Determine if homogenization, pH adjustment, and ISS can be effectively implemented to treat the impoundment materials
- Determine if a combination of ISTT and ISS can be effectively implemented for treatment of the impoundment materials

Detailed objectives that support these basic goals are described in subsequent sections of this report.

1.1.2 Project Status

CH2M HILL prepared a *Technology Evaluation Work Plan* (CH2M HILL 2012b) that outlined potential treatment technologies for the materials in Impoundments 1 and 2. Two technologies identified in the work plan warranted supplemental evaluation, which initiated the laboratory treatability studies. In early 2012, samples of materials from Impoundments 1 and 2 were collected to support laboratory treatability studies. Laboratory testing completed in summer 2012 indicated that ISTT and ISS processes were capable of significantly reducing the mass and mobility of volatile compounds present in the impoundment materials; measureable improvements in

physical properties such as compressive strength were also observed following treatment (CH2M HILL 2012a). In light of laboratory observations, a field-scale pilot study was commissioned to evaluate ISTT and ISS for the impoundment materials.

1.1.3 Supporting Plans and Project Documentation

A chronologic list of the documents that have been prepared and submitted to USEPA in support of the FFS for OU 8 process include:

- *Work Plan Technology Evaluation for Impoundments 1 and 2, American Cyanamid Superfund Site* (CH2M HILL 2012b)
- *Material Collection Work Plan for Impoundments 1 and 2, American Cyanamid Superfund Site* (CH2M HILL 2012c)
- *Work Plan Laboratory Studies for Impoundments 1 and 2 Material, American Cyanamid Superfund Site* (CH2M HILL 2012d)
- *Quality Assurance Project Plan Impoundments 1 and 2 Laboratory Treatability Study, American Cyanamid Superfund Site* (CH2M HILL 2012e)
- *Work Plan Focused Feasibility Study for Impoundments 1 and 2, American Cyanamid Superfund Site* (CH2M HILL 2012f)
- *Impoundments 1 and 2 Treatability Study Results Report, American Cyanamid Superfund Site* (CH2M HILL 2012a)
- *Technical Memorandum on American Cyanamid Superfund Site, Impoundments 1 and 2 Pilot Study 30% Design Summary* (CH2M HILL 2013a)
- *Technical Memorandum on American Cyanamid Superfund Site—Impoundments 1 and 2 Pilot Study 60 Percent Design Summary* (CH2M HILL 2013b)

The following plans are currently being developed to support the Pilot Study: Emergency Preparedness and Contingency Plan, Health and Safety plan (HASP), Sampling and Analysis Plan (SAP), Quality Assurance Project Plan (QAPP) for pilot study, Waste Management Plan (WMP), and Perimeter Air Monitoring Plan (PAMP).

1.2 Document Organization

The report is organized as follows:

- Section 1 – Introduction: Provides a brief description of the project, identifies the overall objectives of the pilot study, and summarizes the project status.
- Section 2 – Site Description: Describes the Site and functional history of Impoundments 1 and 2, and provides a physical description of the impoundments and their contents.
- Section 3 - Project Approach and Objectives: Presents an overview of the technologies selected for the pilot study, lists the required Site improvements, synopsis of the pilot study, objectives of the pilot study, and associated assumptions and uncertainties.
- Section 4 - Ancillary Systems Design: Provides the design details for pilot study components
- Section 5 - Thermal Treatment System Design: Provides the design details for installation of thermal treatment system.
- Section 6 - Solidification and Stabilization Design: Provides the design details for ISS system.
- Section 7 - Regulatory Framework: Discusses the regulatory requirements to address potential environmental concerns (such as, air monitoring, byproduct generation, waste disposal) associated with implementing the pilot study.

- Section 8 - Health and Safety: Discusses the risk control protocols and performance expectations for managing potential risks associated with implementing the pilot study.
- Section 9 - Pilot Study Operation: Summarizes the operational and field implementation of the pilot study components.
- Section 10 - Performance Evaluation and System Monitoring: Describes the proposed monitoring plan.
- Section 11 – Schedule: Presents the project schedule.
- Section 12 - References: Provides the references cited in this report.

1.3 Document Revision History

Table 1-1 presents a summary of the progression of the design of the pilot study.

TABLE 1-1
Document Revision History
100 Percent Design of Pilot Study for OU 8

Document Number	Completion Date	Design Phase	Document Description	Reference
1	10/04/2012	Concept	Conceptual Design Presentation to EPA	
2	02/20/2013	30% Design	Technical Memorandum on American Cyanamid Superfund Site, Impoundments 1 and 2 Pilot Study 30% Design Summary	CH2M HILL 2013a
3	05/17/2013	60% Design	Technical Memorandum on American Cyanamid Superfund Site—Impoundments 1 and 2 Pilot Study 60 Percent Design Summary	CH2M HILL 2013b
4	06/18/2013	100% Design	Draft 100 Percent Design of Pilot Study for Operable Unit 8	Draft version of the present document
5	10/25/2013	100% Design	100 Percent Design of Pilot Study for Operable Unit 8	Present document (after addressing USEPA comments via their letter dated September 12, 2013)

Notes:
Design completion date will be dictated by written approval from the U.S. Environmental Protection Agency and New Jersey Department of Environmental Protection.

1.4 Intellectual Property

Given the wide variety of specialty skills and services required to implement the field pilot study, CH2M HILL has developed a multi-disciplinary approach to design delivery. Roles and responsibilities for the pilot design are defined below.

- **CH2M HILL** – This team will lead the overall planning and delivery of the pilot study design and implementation. In addition to providing direction for subcontractors, CH2M HILL engineers will prepare the structural design, specifications, and detailed drawings for the caisson test cells required for the pilot study.
- **TerraTherm** – This project team member will provide detailed design, construction, and operation services for the in-situ heating system and effluent treatment system installed for this pilot study. TerraTherm will supply mechanical, electrical, process, instrumentation, and controls engineering services to support design, implementation, and operation of equipment and infrastructure for the thermal treatment described herein.
- **Remedial Construction Services, LP (RECON)** – This project team member has provided detailed design services for the in-situ stabilization and solidification operations.

TerraTherm's process will be covered by one or more of the following: U.S. Patent Nos. 5,553,189; 5,656,239; 5,660,500; 5,997,214; 6,102,622; 6,419,423; 6,485,232; 6,543,539; 6,632,047; 6,824,328; 6,854,929; 6,881,009; 6,945,734; 6,951,436; 6,962,466; 7,004,678; 7,121,341; 7,481,274; 7,490,665; 7,534,926; 7,559,367; 8,200,072; 8,224,163; 8,224,164; 8,224,165; 8,238,730; 8,348,551 and 8,355,623; and Pending.

RECON's process will be covered by one or more of the following: U.S. Patent Nos.: 5,584,792; 7,897,831; 8,193,115 B2; 5,645,377; 5,860,907; and 5,794,727.

SECTION 2

Site Description

The Site was used from 1915 through 1999 to manufacture a range of products including rubber-based chemicals, dyes, pigments, chemical intermediates, petroleum-based products, and pharmaceuticals. Historically, 27 impoundments were used to store liquid streams generated from the onsite processes, as well as river water for firefighting purposes. The Site is in the southeastern section of Bridgewater Township, Somerset County, in the north-central portion of New Jersey. The Site is bounded by the New Jersey Transit Railroad to the north, the Raritan River to the south and west, and Somerset Tire Service and Interstate Highway 287 to the east. The Site is divided into five main portions: the North, East, West, and South Areas and the Impoundment 8 Facility. The North Area refers to the portion of the Site within the flood control dike; the East Area is east of I-287; the West Area is west of Bufflehead Road; and the South Area is south of the flood control dike and between I-287 and Bufflehead Road.

Impoundments 1 and 2 in OU 8 are within the South Area of the Site. Both Impoundments 1 and 2 are located approximately 700 feet north of the Raritan River. Interstate Highway 287 is approximately 850 feet east of Impoundment 1, and Somerset Tire Service is approximately 400 feet north of the impoundments. The nearest residential areas are approximately 2,200 feet northeast and 1,800 feet east of Impoundments 1 and 2.

2.1 Site History

The Calco Chemical Company, which started operations in 1915 manufacturing chemical intermediates and dyes, originally owned the Site. In 1929, American Cyanamid Company purchased the Site and began producing pharmaceuticals and chemicals in the 1930s. In November 1994, the American Cyanamid Company was acquired by the American Home Products Corporation, which changed its name to Wyeth in 2002. Manufacturing ceased in 1999 and most of the manufacturing buildings were demolished shortly thereafter. In October 2009, Pfizer acquired Wyeth, including its subsidiary WHC. The Site is owned by WHC, which is now a subsidiary of Pfizer.

2.2 Impoundments 1 and 2

Between 1947 and 1965, the American Cyanamid facility produced benzene, toluene, and xylenes (BTX) from coal light oil and naphthalene during the production of beta-naphthol and stored the acid tar, a residual byproduct of refining coal light oil, in Impoundments 1 and 2. Construction of these impoundments is similar to each other although depth, storage volume and spatial distribution differ. The acidic solid and semi-solid materials generated by light oil refining are separated into three distinct layers: a light oily sludge (LOS) layer on the top, a VR tar layer in the middle, and a HC tar layer at the bottom. Approximately 3 million gallons of the uppermost LOS layer was previously removed from each impoundment and transported offsite for energy recovery. Currently, Impoundment 2 has two primary layers (VR and HC) with some mixture between the two, while Impoundment 1 has more variability. Brief descriptions of the contents of each impoundment are provided below.

A water cap is maintained over the impoundments for odor control, and a synthetic liner is located below the water and above the impoundment materials. The depth of the water cap on top of the impoundment materials fluctuates but is generally maintained at 2 feet or greater in depth.

2.2.1 Impoundment 1 Construction and Features

Impoundment 1 was constructed in 1956, is approximately 2.1 acres in size, and was used until 1965 to store waste from a coal light-oil refining process (O'Brien & Gere [OBG] 2010). Impoundment 1 is approximately 16 feet deep from the top of the impoundment berm and was constructed by excavating approximately 6 feet below the existing grade. The impoundment berms were constructed using the excavated materials, and the berms rise to approximately 10 feet above the surrounding topography. Soil borings completed within the berms indicate they are constructed of sand, silt, and fine gravel. A 1-foot layer of clay and silt was reportedly placed at the bottom of the impoundment (OBG 1982).

The contents of Impoundment 1 were assessed in 2010 (OBG 2010) and were determined to contain:

- An upper layer of VR tar (900 cubic yards [yd^3])
- A lower layer of HC tar (13,700 yd^3)

Additional materials mixed into the VR and HC layers include (Focus Environmental, Inc. [Focus] 2011):

- Clay-like (CL) material (2,700 yd^3)
- Sand and silt-like (SSL) material (1,900 yd^3)
- Coal aggregate (CA) (5,000 yd^3)

The total volume of material in Impoundment 1 is approximately 24,200 yd^3. The material in Impoundment 1 is characterized by a low pH (average of 3.3 standard units [SU]) and high concentrations of volatile organic compounds (VOCs) and semivolatile organic compounds (SVOCs), including BTX, naphthalene, and a high degree of residual acidity (Focus 2011).

2.2.2 Impoundment 2 Construction and Features

Impoundment 2 was constructed in 1947, is approximately 2.3 acres in size, and was used until 1956 to store waste from the same coal light-oil refining process (OBG 2010). The depth of Impoundment 2 is approximately 13 feet from the top of the impoundment berms. The berms of Impoundment 2 also are constructed of sand, silt, and fine gravel and a 1-foot layer of clay and silt reportedly was placed at the bottom of the impoundment (OBG 1982).

Based on the most recent characterization (OBG 2010), Impoundment 2 contains:

- An upper layer of VR tar (10,900 yd^3)
- A lower layer of HC tar (12,900 yd^3)
- A mixed VR and HC layer (6,500 yd^3), which is observed between the two distinct layers (Focus 2011)

The total material volume of Impoundment 2 is 30,300 yd^3, and added materials such as CA or CL appear to be absent in Impoundment 2. Like Impoundment 1, the material in Impoundment 2 is characterized by a low pH (average of 1.5 SU) and high concentrations of VOCs and SVOCs (including BTX and naphthalene), as well as residual acidity (Focus 2011).

SECTION 3

Project Approach and Objectives

This section presents an overview of ISTT and ISS, along with the rationale for selection of these technologies and a general overview for field implementation. Technologies will be tested independently and in combination with each other to evaluate their implementability and effectiveness.

3.1 In-situ Thermal Treatment

Thermal treatment for preferential removal of volatile and malodorous compounds may play a significant role in the remediation of impoundment materials. In general, heat will promote the removal of organic compounds through volatilization processes; heat also will promote removal of malodorous compounds because most are highly volatile. The data from the treatability studies indicate that upon heating, the impoundment material will lose significant amounts of volatile compounds, and this will result in significant physical and chemical changes to the impoundment materials.

3.1.1 Heating Technology Selection

ISTT technologies have been proven to be effective in the remediation of different organic contaminants such as chlorinated solvents, fuels, and heavy organic materials including tar and creosote in diverse subsurface conditions. Three primary thermal technologies are available in the market: thermal conduction heating (TCH) in the form of the patented in-situ thermal desorption (ISTD), steam-enhanced extraction (SEE), and electrical resistance heating (ERH), of which several proprietary forms are available. An overview of commercially available heating technologies is presented in Table 3-1.

TABLE 3-1
In-situ Thermal Treatment Technologies
100 Percent Design of Pilot Study for OU 8

Description	Illustration
TCH or ISTD	TCH involves simultaneous application of heat and vacuum to subsurface soils with an array of vertical heater/vacuum wells or, much less commonly, with surface blanket heaters and a vacuum insulated shroud. In both of these configurations, heat originates from a heating element and is transferred to the subsurface largely via thermal conduction and radiant heat transport, which dominates near the heat sources. There also is a contribution through convective heat transfer that occurs during the formation of steam from pore water. Because this technology can achieve elevated soil temperatures (in excess of 500 degrees Celsius), a significant portion (reported up to 99 percent at some sites) of organic contaminants either oxidize (if sufficient air is present) or pyrolize once high soil temperatures are achieved (USEPA 2004).
ERH	ERH involves the application of electrical current through the subsurface, resulting in the generation of heat. ERH uses the natural electrical resistance within the subsurface where energy is dissipated through ohmic, or resistive, losses. This manner of *in-situ* heating allows energy to be focused into a specific source zone. When the subsurface temperature is increased to the boiling point of the pore water or the saturated media in the treatment zone, steam is generated. The steam strips contaminants from the soils and enables them to be extracted from the subsurface. In addition, contaminants are directly volatilized from unsaturated soil (USEPA 2004).
SEE	SEE initially was used by the petroleum industry for the enhanced recovery of oil during production operations by lowering the viscosity of heavy oils and increasing the volatility of light oils, facilitating the production from deep formations. SEE takes advantage of the relatively large heating capacity of steam, which provides a greater heat input to the subsurface than injecting hot air. In remedial applications, SEE typically involves the injection of steam into the subsurface to dissolve, vaporize, and mobilize contaminants that are then recovered. Mobilized contaminants are extracted from the subsurface using vapor and liquid extraction equipment. Extracted vapors and liquids are treated using conventional aboveground treatment technologies, such as condensation, air stripping, carbon adsorption, and thermal oxidation (USEPA 2004).

As outlined in Table 3-1, each of the three commercially available heating technologies offer different attributes. Considering the thermal treatment processes for material contained in Impoundment 2, multiple heating technologies were evaluated for use in the field pilot study. Screening of available heating methods revealed:

- TCH – This technology relies on the direct contact of the impoundment material with a heated steel well casing. Heat from an electrically powered element inside a sealed steel casing is transferred to the subsurface by thermal conduction; this heat transfer mechanism is minimally affected by the physical or chemical characteristics of the solid matrix to be heated. In light of the impoundment material properties and distribution within Impoundment 2, TCH offered by TerraTherm, Inc. (TerraTherm) was deemed the most appropriate technology for the pilot study.
- ERH – Heating by this technology relies on the subsurface movement of current between buried electrodes. As ohm's law governs heating system operation, performance and system output is directly related to the electrical resistance posed by the subsurface materials. Given the high concentration of sodium- and sulfur-bearing salts present within the impoundment material, the efficacy of heating with this technology was deemed low. Therefore, ERH was eliminated from further consideration for application in the pilot study.
- SEE – This technology relies on steam flow and if fluids cannot be efficiently injected into the tar matrix and extracted using multi-phase extraction (MPE) wells, it may not be applicable. Permeability within the HC layer may be suitable for steam injection; additionally steam injection may be helpful in developing a pressure/thermal barrier to minimize the influx of cold water or acid tar into the target treatment zone (TTZ). Therefore, this technology was retained for potential supplemental heating to the TCH technology which was selected as the primary heating process for the pilot study.

3.1.2 Overview of Thermal Remediation Plan

CH2M HILL has partnered with TerraTherm to conduct an in-situ thermal treatment pilot study using ISTD also called TCH within two caissons in Impoundment 2 at the Site. Using a series of electrically powered heaters placed inside steel wells, TCH is a robust remedial approach to deliver heat to the subsurface by thermal conduction. The heating process greatly increases the vapor pressure of the VOCs causing them to volatize so they may be captured using conventional vapor extraction techniques. Figure 3-1 shows a generic sketch of a TCH remediation system.

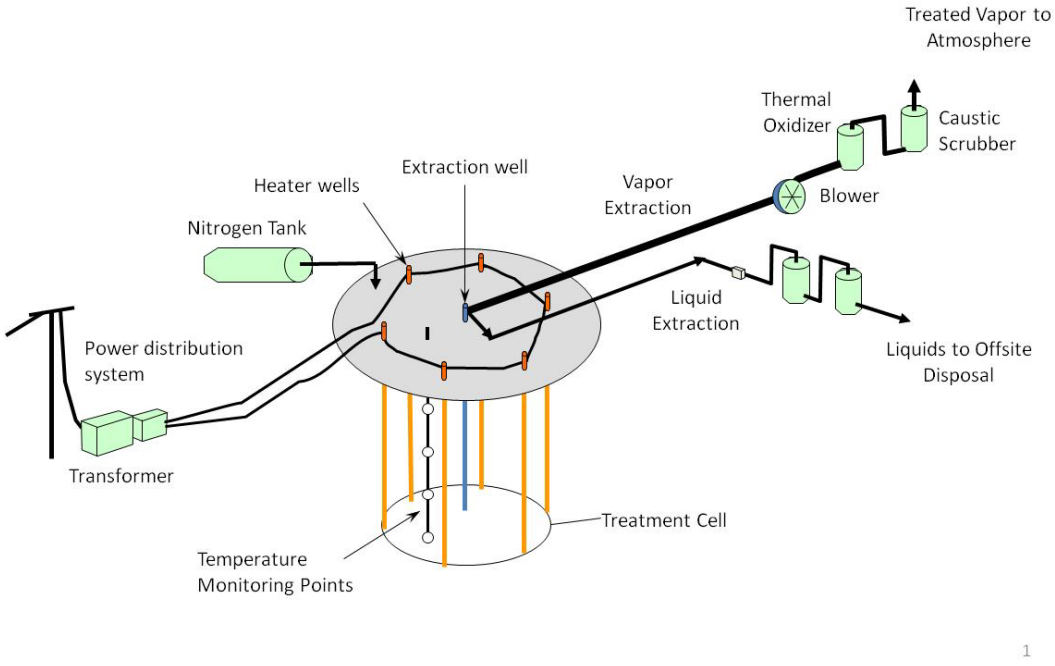

FIGURE 3-1
Generic Sketch of Thermal Conduction Heating System (not specific to the Site)

As shown on Figure 3-1, the major TCH system components include:

- A transformer delivering power to the electrical circuits
- A power distribution system with switches, meters, and controllers
- Cables and wiring for the ISTT heaters, which are located in vertical borings (heater borings)
- Heating, extraction and monitoring infrastructure:
  - Heater wells (also known as heater cans)
  - Fluid recovery wells
  - In-situ monitoring points (including temperature, pressure and level)
- Manifold and conveyance piping for extracted fluids
- Treatment system for extracted fluids (vapor and liquids, as required)

Typically, an office trailer is used for housing data management computers and other monitoring equipment. The subsurface process is monitored using temperature sensors and sampling and analysis of subsurface fluids. The majority of the heating, extraction, treatment and monitoring process are automated. Operations personnel are normally integrated to oversee and maintain the system and for collection of process data and samples as required.

3.1.3 Remediation Mechanisms

ISTT has demonstrated capability for remediating the full range of VOCs and SVOCs to levels at or below typical regulatory agency cleanup standards. During the ISTT process, the impoundment materials will be heated and treated in the following manner:

- Thermal energy provided by vertical heater borings will heat the impoundment materials, water, and contaminants. The heating progresses by thermal conduction as the heater wells are heated to temperatures around 1,000 to 1,500 degrees Fahrenheit (°F) (500 to 800 degrees Celsius [°C]), creating significant temperature gradients in the formation around each heater. Thermal conductivity of impoundment materials varies over a narrow range – only by a factor of about three; therefore, TCH is precise and predictable regardless of the permeability of the impoundment materials or their degree of heterogeneity. Heat propagation within the solid impoundment materials is believed to be analogous.

- The heat front moves away from the heaters through the impoundment materials by thermal conduction and convection, and the superposition of heat from the several heaters results in a temperature rise throughout the TTZ.

- As temperatures of the impoundment material increase, contaminants and water contained in the impoundment materials are vaporized. While locations close to heaters may achieve temperatures well above the boiling point of water, 212°F (100°C), locations between heaters need only achieve the boiling point of water to accomplish steam distillation for effective removal of VOCs. Boiling and removal of all the impoundment water is not always necessary to achieve effective treatment.

- The vacuum applied to the extraction wells from the process system will draw the vapors through the impoundment materials and into the extraction well network for subsequent treatment.

The effectiveness of ISTT relates to changes in the thermodynamic conditions in the subsurface during heating. The primary characteristic leading to effective thermal treatment is contaminant vaporization where a reduced boiling point is observed for contaminants in-situ. Boiling point reduction is a physical and chemical phenomena controlled by pressure and temperature conditions; it is frequently observed when contaminants present in highly concentrated forms (e.g., acid tar and nonaqueous phase liquid [NAPL]) are heated within the TTZ. Regardless of the specific method of ISTT considered, heat applied to the subsurface will have similar effects on physicochemical properties such as vapor pressure, viscosity and aqueous solubility of organic contaminants. Enhancement of these physical properties by heating accelerates both the rate and degree of contaminant mass recovery from the TTZ. Thermal treatment can also catalyze in-situ destruction, such as pyrolysis, which can occur along the heater assemblies used in TCH in the absence of air (as discussed previously, ISTT heaters typically operate in the 1,000 to 1,500°F range).

For VOCs such as those in the material within Impoundments 1 and 2, the major mechanism of thermal treatment is expected to be vaporization and extraction of the contaminants of concern (COCs) in the vapor phase. For the SVOCs such as naphthalene, partial removal is anticipated (and was observed during the treatability study) but not to the extent to which removal of BTX may occur given the significant difference in vapor pressure among these representative compounds. Similarly, significant removal of large molecular weight hydrocarbons by volatilization is not expected. However, these materials may be subject to pyrolysis, cracking, or other forms of thermal decomposition, which may result in the production of low molecular weight hydrocarbons such as methane, ethane, or propane. Currently, the extent to which organic materials in the tar will decompose to low molecular weight hydrocarbons is unknown but the vapor treatment system is being designed to accommodate the production of such compounds. The result of the heating is removal of the more volatile and mobile constituents, which renders the leaching potential of the residuals material very low. This was demonstrated in the laboratory treatability study.

3.1.4 Laboratory Testing Summary

To explore the effects of heat on impoundment material and assess the potential benefits of thermal processes for impoundment materials, a comprehensive laboratory evaluation was performed. From June to August 2012, laboratory testing was completed to determine the effect of heating on the chemical composition, leaching effects, and the physical properties of VR and HC from Impoundment 2. An extensive array of physical and chemical testing was completed in the laboratory, and detailed results are presented in the *Impoundments 1 and 2 Treatability Study Results Report* (CH2M HILL 2012a). Before initiating the thermal laboratory studies, samples of untreated VR and HC from Impoundment 2 were analyzed for chemical characterization. Consistent with prior characterization efforts, benzene was present at percent level concentrations. Naphthalene, toluene, xylenes, 1,2-dichlorobenzene, and fluorene also were detected but at lower concentrations.

The thermal treatability testing consisted of heating a known mass of sample (VR or HC) in a sealed reactor installed within a temperature-controlled oven. Vapors produced during heating were directed to a chilled surface condenser where organic liquids and water vapor were condensed from the gas stream. Samples were heated to 90°C and 100°C to emulate treatment above and below the boiling point of water; liquid and vapor effluents produced during heating were monitored and chemically characterized during heating operations.

In general, treatability testing showed that heating of VR and HC test samples significantly reduced VOCs and SVOCs concentrations. A suite of malodorous compounds including hydrogen sulfide, mercaptan, and carbon disulfide also were liberated from the impoundment materials upon heating. In addition to the VOCs and malodorous compounds, the vapor effluent from the heated reaction cell was highly acidic. Heating of impoundment material caused significant corrosion within the steel reaction cell, the aluminum lining, and stainless steel thermocouples used during the thermal treatment.

Despite heating the reaction cell to 100°C for 14 days, laboratory-scale thermal treatment did not completely remove water from the HC tar; this was possibly because of the formation of an “impermeable skin” that prevented the escape of water vapor from the bulk matrix. In addition to chemical property measurements, several physical properties were tested in the laboratory before and after heating. Testing confirmed that VR liquefied upon heating; furthermore, VR liquefaction was reversible. Even after thermal treatment, reheated VR material exhibits liquid behavior as temperatures approached 65°C. Testing also revealed that VR material, when heated, undergoes significant volume expansion in an unconfined system. Confined heating of VR was not evaluated in the laboratory but it is expected that under field conditions, the overall volume expansion will be limited by: 1) VR and HC materials are stratified and overburden pressure is therefore present to restrain expansion in the caisson, 2) pumice filter media will be placed above impoundment materials which will provide an incompressible medium, disruption to thermal expansion and rupture surfaces for vapor bubbles formed during VR heating, and 3) VR will not be heated in open air (like the laboratory test) and the presence of even a residual water column over the impoundment material is capable of providing measurable static pressure to also limit VR expansion. Conversely, HC material does not show signs of liquefaction even when heated to temperatures of 100°C; moderate HC expansion was observed upon heating. Overall, the results of the laboratory study indicated the following:

- Significant reduction in VOC concentration occurred between pre- and post-treatment samples, suggesting thermal treatment promoted removal of VOC and malodorous compounds from material contained in Impoundment 2.
- A significant increase in the compressive strength of HC occurred following thermal treatment.
- Increases in VR compressive strength was minimal with test results falling significantly below the 42 pounds per square inch (psi) target in all samples.
- Toxicity characteristic leaching procedure (TCLP) testing for treated VR and HC materials indicated thermal treatment can reduce VOCs to the extent that the residual post-treatment material passes TCLP.

3.2 In-situ Solidification and Stabilization

Solidification and stabilization processes have been used extensively to reduce the leachability of metals and the mobility of organic compounds in soils and tarry materials. Solidification is an encapsulation process that will transform the impoundment materials into a solid material to reduce contaminant migration by decreasing the surface area exposed to leaching. Solidification is implemented by mechanical processes or by a chemical reaction between the impoundment materials and binding reagents (pozzolans) and bulking agents. The resultant material usually shows an increase in compressive strength, a decrease of permeability, and encapsulation of hazardous constituents.

Stabilization is a process that involves chemical reactions that reduce solubility or leachability of contaminants. Stabilization typically chemically immobilizes the contaminants, and such reactions may or may not change the physical nature of the materials treated. The following are the key definition points of solidification and stabilization:

Solidification

- Immobilize contaminants within a solid matrix
- Results in coating of contaminants
- Organics are generally immobilized because of reduced hydraulic conductivity

Stabilization

- Bind or complex contaminants
- Promote chemical transformation or fixation
- Precipitate or enhance chemical bonding sites for reactive or metallic contaminants

When combined, solidification and stabilization treatment processes typically accomplish:

- Reduced contaminant solubility by formation of sorbed species or insoluble precipitates
- Improved physical strength and handling characteristics of the material
- Decreased exposed surface area across which mass transfer of contaminants may occur
- Lessened contact between transport fluids and contaminants by reducing the permeability of the material

In-situ homogenization (mixing) and pH adjustment will precede ISS. The pH of the impoundment materials will be adjusted and raised to approximately 8 to 11 SU, which is ideal for the range of pozzolans proposed for this pilot study. In-situ homogenization will be used to mix the heterogeneous impoundment materials into a homogenous mixture with similar physical and chemical properties throughout the treatment area. Such homogenization will allow for better distribution and more complete reaction of the added pH adjustment agents and pozzolans.

3.2.1 Remediation Mechanisms

Except in special applications, solidification and stabilization does not destroy the contaminants; rather, it encapsulates them (solidifies and immobilizes them). Mixing of reagents may create an exothermic reaction that will generate some heat that may result in the vaporization of some of the volatile compounds present in the impoundment material. Air collection and treatment devices are usually recommended to capture these vaporized compounds and will be used during the pilot ISS operations.

The solidification process involves adding binders to absorb free pore water/liquids and increase the bearing capacity strength of the impoundment material. The stabilization process involves adding chemicals to react with the impoundment material constituents to form a crystalline “mineral” structure that results in less soluble and

less mobile compounds. Stabilization reactions are expected to convert COCs within the impoundment material into a less soluble, less mobile, or less toxic form.

3.2.2 Laboratory Testing Summary

Homogenization, pH adjustment, and solidification and stabilization treatability studies were performed to evaluate different mixing methodologies and the ratios of several different alkaline pH adjustment materials and pozzolan recipes for ISS. Both raw impoundment materials and thermally treated materials were used for the study. The basic objectives of this portion of the treatability study were:

- Evaluate impoundment materials for homogenization
- Determine if the pH of the impoundment materials could be raised to at least 5 to 6 SU and ideally to 11 SU
- Evaluate if the impoundment materials could be stabilized and solidified using pozzolan mixtures
- Evaluate temperature rise from exothermic chemical reactions between the impoundment materials and alkaline additives along with emissions produced during the mixing and homogenization and pH adjustment of impoundment materials
- Evaluate changes in the physical and chemical properties of the impoundment materials after treatment

Overall, the solidification and stabilization study confirmed that the materials from Impoundments 1 and 2 could be successfully homogenized, pH adjusted, and solidified and stabilized. The treatability study was conducted by constructing stratified models of the impoundment materials in 5-gallon buckets. Models simulating the distribution of Impoundment 1 and 2 materials were constructed using both raw and thermally treated impoundment materials collected in January and February 2012. After the bench-scale models were constructed, water collected from the impoundments was placed above the impoundment materials from the corresponding impoundment to simulate the water cap. The models were then homogenized, and the materials were used to evaluate the different pH adjusting agents and pozzolans.

The study confirmed that raw Impoundment 1 and 2 materials could be homogenized; however, while the water layer added to the raw Impoundment 1 material became incorporated with the material during homogenization, the water layer on the raw Impoundment 2 material did not become incorporated with the material during homogenization. Homogenized samples of materials from the Impoundments 1 and 2 were successfully pH adjusted to 10 SU or higher by adding Carmeuse hydrated lime or high calcium lime kiln dust (HiCal LKD). The hydrated lime did not provide strength to the raw Impoundment 2 materials when mixed, but the HiCal LKD provided significant strength gains when mixed into the raw impoundment materials. Adding various blends of pozzolans to the homogenized and pH adjusted impoundment material resulted in compressive strength gains ranging from 59.0 psi to greater than 62.5 psi after only 7 days of curing. Tier II pozzolan testing of thermally treated Impoundment 1 and 2 materials indicated that the concentration of benzene in the atmosphere above the mixing vessel was two orders of magnitude lower than the benzene concentration above the raw impoundment materials during mixing. Thermal treatment of the impoundment material resulted in volatilization of volatile compounds, and this resulted in lower benzene concentrations in the headspace.

The homogenization, pH adjustment, and solidification/stabilization study conducted on the raw and thermally treated Impoundment 1 and 2 materials indicated that the physical and chemical properties of these materials can be modified to improve the handling characteristics. The following conclusions can be drawn from this study:

- Blending can be performed for both thermally treated and raw impoundment materials.
  - A de-emulsification of thermally treated materials is necessary because of physical characteristics of material after heating.
- pH adjustment of both raw and thermally treated materials can be completed, but under different processes.
  - Carmeuse hydrated lime is effective for raw materials.

  - De-emulsification with HiCal LKD for thermally treated materials achieved pH adjustment without additional additives.

- The solidification and stabilization process can treat both VR and HC materials for compressive strength.
- Emission of benzene during mixing of thermally treated impoundment materials is approximately two orders of magnitude less than during mixing of raw materials.

Supplemental Tier IV bench-scale treatability studies will be conducted before the pilot study to optimize reagent recipes identified during laboratory testing completed in 2012. Tier IV testing is intended to evaluate performance improvements to reduce permeability, leaching potential, contaminant volatilization, and identify optimum recipes for treating the raw and thermally pretreated impoundment materials. The ISS Tier IV Optimization Treatability report is under preparation and is scheduled for completion mid- to late-October 2013.

3.3 Pilot Study Objectives

Information gained through the pilot study is intended to support development of a draft FFS for Impoundments 1 and 2, which is slated for completion in 2014. In general, performance of each treatment approach will be evaluated quantitatively through the following parameters:

- Contaminant leachability—Leaching characteristics of COCs from treated impoundment materials will be used to establish if residuals are nonhazardous and to explore options for final disposition.
- Corrosivity—The pH of impoundment materials following treatment will also define whether residuals are nonhazardous; corrosivity testing results will be used to aid in determining material handling requirements.
- Compressive strength—Following treatment, the compressive strength of residuals will govern where the impoundment materials can be disposed. For example, current New Jersey Department of Environmental Protection (NJDEP) performance objectives for onsite disposal of material in the Impoundment 8 Facility landfill require treated materials to achieve unconfined compressive strength (UCS) greater than 42 psi. Offsite disposal may be feasible with lower UCS requirements depending on the facility accepting the material.
- Permeability—Determination of permeability following treatment will further aid in evaluating disposal options for impoundment materials.
- Emissions—An air monitoring program will be developed and implemented specifically to evaluate emissions during the pilot study. To further support development of candidate alternatives during the FFS, the possibility of handling the materials without exceeding air emission standards or creating noxious odors also will be evaluated.

In addition to the parameters listed above, each technology considered for Impoundments 1 and 2 will be fully evaluated in the pending draft FFS using the nine criteria established within the National Contingency Plan (NCP).

3.3.1 Technology Specific Study Objectives

Pilot study objectives established for thermal treatment operations are summarized in Table 3-2, and the objectives for solidification and stabilization processes are summarized in Table 3-3.

3.3.2 Verification Approach

The overall process for verification of the pilot study objectives is summarized in Table 3-4. The goal of this approach is to meet the objectives for each of the components that will be monitored during the pilot study application.

TABLE 3-2
Thermal Treatment Study Objectives
100 Percent Design of Pilot Study for OU 8

Objective	Rationale	Approach	Methods	Criterion Applicability[a]
Demonstrate feasibility for in-situ thermal treatment of material in Impoundment 2	Pilot scale proof of concept demonstration for in-situ thermal treatment of impoundment material.	Design, construct, operate and evaluate thermal processes for remediation of material contained in large diameter caissons in Impoundment 2.	Ambient Air Monitoring, Temperature, Treatment Residuals, Treatment System Emissions, Volume	Implementability Effectiveness
Demonstrate efficacy of in-situ thermal treatment processes for impoundment material	Individual and combined evaluation of treatment technologies considered feasible for acid tar at pilot scale; identify if multiple treatment technologies are needed in candidate alternatives assembled for the focused feasibility study.	In-situ thermal conduction heating of 2 discrete test cells constructed within Impoundment 2. One cell will evaluate only thermal treatment; the second cell to evaluate thermal treatment and stabilization effects.	Condensate Generation, Condensate Properties, Treatment Residuals, Vapor Composition, Vapor Flow, Vapor Pressure, Volume	Effectiveness Implementability
Determine what construction materials are practical and can resist corrosion	Identify applicable construction materials; determine corrosion rates for carbon steel and other alloys under field operating conditions.	Evaluate corrosion rates for carbon steel and specialty alloys in caisson and conveyance piping using a variety of sacrificial coupons.	Corrosion coupons	Implementability Cost
Investigate feasible heater and well installation methods	Evaluate the feasibility of direct push technology as a test installation method. Identify construction of support system of gravity heaters and target staging equipment and installing test cell in locations with highest material content.	Install two discrete test cells within Impoundment 2 using Direct Push Technology or a similar well installation method. Test cells will be keyed into the underlying clay layer. Install support system for test cell heaters.		Implementability
Estimate heat losses to untreated impoundment materials at caisson boundary	Estimate heat losses from pilot study and develop data to support evaluation of scenarios for partial treatment of impoundment if thermal processes are contemplated at full scale.	Monitor output of spatially distributed thermocouples located within the test cell, the annulus outside the test cell and within the outer shroud.	Temperature	Implementability Cost
Demonstrate effectiveness for vapor recovery/extraction methods	Evaluate performance characteristics under field conditions for unit operations applied to vapor treatment operations.	Evaluate vapor composition including VOCs, malodorous compounds and acid gasses extracted from test cells and at specific points in the process to monitor performance and recovery characteristics of the vapor treatment system.	Treatment System Emissions, Vapor Composition, Vapor Combustibility, Vapor Flow, Vapor Pressure, Volume	Effectiveness Cost
Demonstrate effectiveness for effluent treatment process and strategies to manage corrosion issues	Evaluate the physical and chemical properties of liquid streams generated during treatment operation to guide disposal analysis and identify corrosion rates for various metals and materials under field operating conditions.	Field and laboratory based chemical and physical analysis of liquid streams collected during system operation; exposure and analysis of acid resistant material samples to field operating conditions.	Condensate Properties, Vapor Composition, Corrosion coupons	Implementability Cost
Evaluate recycling options for nonaqueous phase liquids (NAPL) recovered from vapor treatment equipment	Determine handling of NAPL generated from thermal treatment process based on quantities and analytical data. Identify potential re-use/recycle options or final disposal.	Analyze the physical and chemical characteristics of NAPL produced during operations.	Condensate Generation, Condensate Properties	Cost Project Schedule
Evaluate alternatives for removal and disposal of treated impoundment materials	Identify potential disposal options based on quantities and physical and chemical characteristics of the treated residuals generated from thermal treatment operations.	Analyze chemical and physical characteristics of treated residuals and determine handling, storage and disposal requirements. Remove treated materials for recycling or disposal offsite.	Compressive Strength, Permeability, Treatment Residuals	Cost Project Schedule
Determine if treated impoundment material can be handled in open air in compliance with applicable air statues and without causing nuisance odors or presenting risk to Site workers.	Evaluate post treatment material handling procedures and necessary steps to control air emissions.	Develop and implement an air monitoring program to evaluate emissions during material handling against background ambient conditions.	Ambient Air Monitoring	Implementability Effectiveness Cost
Demonstrate safety of operation	Determine vapor composition and concentration evolved during treatment operations and investigate strategies to manage contaminant mass flow if full-scale treatment is contemplated.	Monitor process gas and perimeter air monitoring during operations. Maintain equipment operation below 25% of the lower explosive limit measured in the vapor stream.	Treatment System Emissions, Vapor Composition, Vapor Combustibility, Volume	Effectiveness

Notes
[a.] Technology selection criteria defined by NCP for pending FFS. Threshold criteria not currently established; effectiveness criteria include balancing factors not shown.

TABLE 3-3
Solidification and Stabilization Study Objectives
100 Percent Design of Pilot Study for OU 8

Objective	Rationale	Approach	Methods	Criterion Applicability [a.]
Demonstrate feasibility for in-situ homogenization, pH adjustment and solidification/stabilization of material in Impoundment 2	Pilot scale proof of concept demonstration for full-scale treatment operations using solidification and stabilization technologies.	Design, construct, and evaluate in-situ homogenization, pH adjustment and solidification/stabilization processes for remediation of acid tar contained in a large diameter caisson under field conditions.	Ambient Air Monitoring, Temperature, Treatment Residuals, Treatment System Emissions, Volume	Implementability Effectiveness
Demonstrate efficacy of in-situ homogenization, pH adjustment and solidification/stabilization treatment processes for impoundment material	Identify if multiple treatment technologies are needed in candidate alternatives assembled for the focused feasibility study.	Evaluate treatment processes in two discrete test cells constructed within Impoundment 2. Compare chemical and physical properties of residuals following treatment operations.	Compressive Strength, Permeability, Treatment Residuals,	Effectiveness Implementability
Determine if treated impoundment material can be handled in open air without violating applicable air statues, causing nuisance odors or presenting risk to Site workers.	Evaluate post treatment material handling procedures and necessary steps to control air emissions.	Develop and implement an air monitoring program to evaluate emissions during material handling against background ambient conditions.	Ambient Air Monitoring	Implementability Effectiveness Cost
Demonstrate the effectiveness for vapor recovery and treatment methods	Determine vapor flow rates required for mixing operations and determine the efficacy of unit operations used in the treatment of extracted vapor.	Evaluate vapor composition including VOCs, malodorous compounds and acid gasses extracted from test cells and at specific points in the process to monitor performance and recovery characteristics of the vapor treatment system.	Treatment Residuals, Vapor Composition, Vapor Flow	Effectiveness Cost
Demonstrate that the thermally treated material can be homogenized without supplemental chemical addition.	Determine if thermally treated materials can be homogenized while hot to potentially eliminate the need for tar liquefaction by addition of reagents with exothermic reaction characteristics.	Homogenize the thermally treated Impoundment 2 materials and collect a core for evaluation of the results.	Temperature	Cost
Evaluate in-situ pH adjustment and solidification/stabilization to reduce the permeability of material in Impoundment 2	Determine if addition of pozzolan and supporting reagents can reduce permeability of treated materials.	Compare pre and post treatment permeability measurements to determine change in physical properties.	Permeability	Effectiveness
Evaluate alternatives for removal and disposal of treated impoundment materials	Identify potential disposal options based on quantities and physical and chemical characteristics of the treated residuals generated from stabilization/solidification operations.	Analyze chemical and physical characteristics of treated residuals and determine handling, storage and disposal requirements. Remove treated materials for recycling or disposal offsite.	Compressive Strength, Permeability, Treatment Residuals, Volume	Cost Project Schedule
Demonstrate safety of operation	Determine vapor composition and concentration evolved during treatment operations and investigate strategies to manage contaminant mass flow if full-scale treatment is contemplated.	Monitor process gas and perimeter air monitoring during operations. Maintain equipment operation below 25% of the LEL measured in the vapor stream.	Treatment System Emissions, Vapor Composition, Vapor Combustibility, Volume	Effectiveness

Notes
[a.] Technology selection criteria defined by NCP for pending FFS. Threshold criteria not currently established; effectiveness criteria include balancing factors not shown.

TABLE 3-4
Verification Parameters for Pilot Study Objectives
100 Percent Design of Pilot Study for OU 8

Parameter	Monitoring Approach	Purpose
Ambient Air Monitoring	Collection and laboratory analysis of vapor samples for VOCs, malodorous compounds and acid gasses.	Monitor VOCs, malodorous compounds and acid gasses present within the work zone and surrounding areas during pilot study operations.
Compressive Strength	Laboratory analysis of physical and chemical properties of residual solids remaining after treatment operations.	During ISS operations, core samples will be collected for material characteristics and unconfined compressive strength at the different stages of treatment to evaluate against regulatory performance objectives.
Condensate Generation	Measure condensate production volume by gravimetric fraction produced during treatment operations.	Assess characteristics and quantities of organic condensate fraction generated during thermal treatment to evaluate potential reuse or final disposal options. Determine the quantity of aqueous condensate generated to support process evaluation of full-scale treatment alternatives
Condensate Properties	Laboratory analysis of physical and chemical properties of liquid streams generated.	Asses the chemical and physical properties of condensate to evaluate recycling, energy reclamation or disposal alternatives in the FFS. Determine the nature and composition of aqueous streams generated to support process evaluation of full-scale treatment alternatives.
Corrosion Coupons	Install sacrificial metal coupons on and within treatment system equipment.	Assess the corrosion rates of various metals and materials under field operating conditions; findings to aid evaluation and requirements for a full-scale thermal remedy if contemplated by the feasibility study
Permeability	Laboratory permeability analysis for residual solids remaining after treatment operations.	Determine if permeability reduction is sufficient to evaluate capping and closed in place options after completion of in-situ treatment operations.
Temperature	Continuous measurement using thermocouples placed inside and outside of treatment zone.	Monitor and record the temperature of impoundment material within the test cell to confirm material has achieved target treatment temperature of 100C. Confirm cell temperatures are suitable for solidification, stabilization, pH adjustment or mixing operations. Measure exothermic temperature during reagent addition and blending operations. Assess the heat loss from the treatment cell to surrounding materials.
Treatment System Emissions	Collection and laboratory analysis of vapor samples for VOCs, malodorous compounds, acid gasses, and noncondensable hydrocarbons.	Determine VOC emissions from treatment system operation and demonstrate compliance with discharge requirements established by regulatory stakeholders. Evaluate efficacy of vapor treatment system for VOC removal and assess the presence or absence of noncondensable hydrocarbons created by thermal cracking of acid tar.
Treatment Residuals	Laboratory analysis of physical and chemical properties of residual solids remaining after treatment operations.	Evaluate chemical and physical properties acid tar residuals to support determination of waste classification for treated impoundment materials.
Vapor Composition	Collection and laboratory analysis of vapor samples for VOCs, malodorous compounds and acid gasses.	Monitor vapor composition to maintain VOC loading below critical operations point such as the lower explosive limit. Evaluate the mass flow and composition of COCs generated by thermal treatment. Estimate the efficacy of unit operations used in the treatment of extracted vapor.
Vapor Combustibility	Continuous measurement of vapor properties (lower explosive limit).	Monitor vapor composition to maintain VOC loading below critical operations point such as the lower explosive limit.
Vapor Flow	Real time measurement of vapor flow rate.	Measure total vapor flow rate from test cells and within treatment system to support development of mass and material balances during operation.
Vapor Pressure	Real time measurement of vapor pressure.	Measure total vapor flow pressure within the test cells and treatment system to support system operations and extraction equipment optimization.
Volume	Installation and monitoring of equipment or instrumentation capable of sensing the tar-air and tar-water contact elevation within the caisson.	Measure elevation of tar surface as a function of treatment approach and with increasing time.

3.4 Pilot Study Overview

Material contained in Impoundment 2 will be treated in pilot scale using ISTT, ISS, and a combination of the two technologies. Pilot studies will be completed within three 7-foot-diameter steel caissons. The approach allows for isolation of a discrete test cell from the surrounding impoundment materials and control of organic vapors and malodorous compounds that will be generated during the ISTT and ISS operations. The method also allows for collecting data in-situ to understand logistic challenges of impoundment material treatment before removal.

The caissons will extend down to the clay layer at the bottom of the impoundment to limit the influx of water and untreated tar into the test cell during treatment operations. The caissons will be supported within the impoundments using floating barges (Flexifloats®) and anchored to the ground outside the footprint of the impoundments containment berms. Three caissons will be installed: Test Cell 1 will be treated with ISS only, Test Cell 2 will be thermally treated only, and Test Cell 3 will be treated with both technologies. Test cell orientation is shown on Figure 3-2.

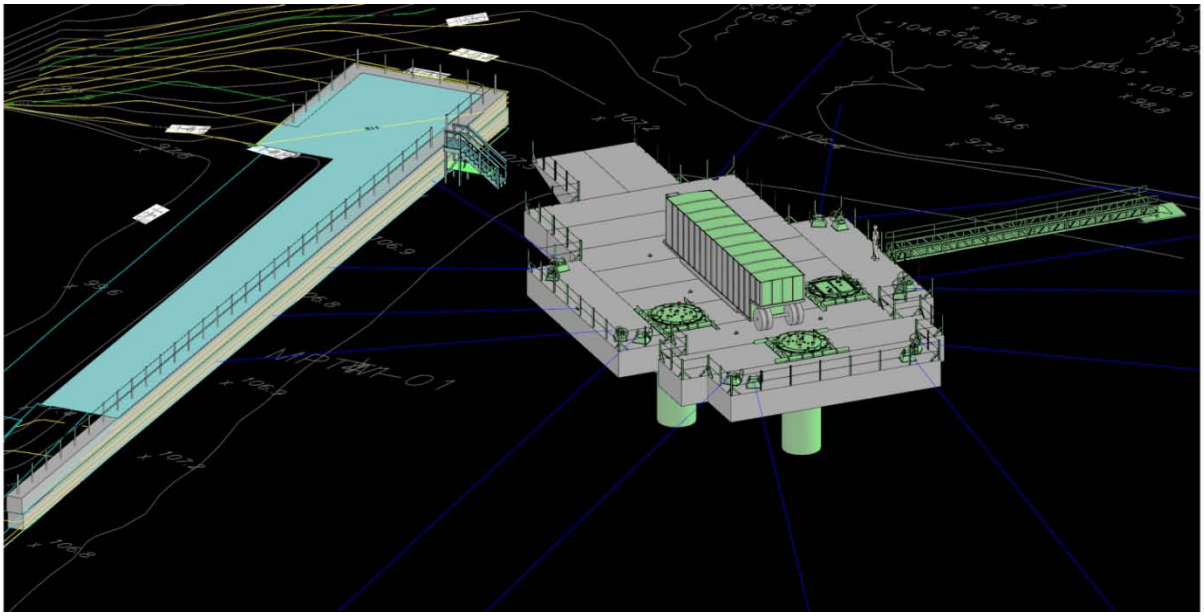

FIGURE 3-2
Flexifloat and Caisson Configuration

The pilot study location was selected based on findings detailed in the *Impoundments 1 and 2 Characterization Program Summary Report* (OBG 2010), which indicated the area lacked historical disturbance (from previous testing efforts) and possessed nearly equal deposition of VR and HC materials over the desired vertical interval for testing. Both materials were evaluated in laboratory treatability testing and represent the most challenging matrices of materials contained within Impoundments 1 and 2.

3.4.1 Test Cell Description

Thermal Test Cells

Thermal treatment will be completed in two caissons (Test Cells 2 and 3). Following thermal treatment, Test Cell 2 will be homogenized though physical auger mixing, and Test Cell 3 will be subjected to an initial pH buffering followed by the stabilization and solidification process. Reagents for the solidification and stabilization process will be established based on the findings of the laboratory treatability study completed in 2012 (CH2M HILL 2012a) and supplemental Tier IV performance optimization evaluations currently underway and scheduled for completion mid to late October 2013.

Each pilot study cell consists of the following:

- A 7-foot-diameter inner caisson with 9-foot-diameter outer shroud
- A vapor-tight cover spanning both inner caisson and outer shroud to provide a rigid surface for attaching nozzles used to support heaters, extraction and injection wells, and associated instrumentation
- Penetrations and flanges in the caisson cover to introduce an inert gas (such as nitrogen) into the caisson headspace to function as a inert agent for recovered headspace vapors
- Heater casings, constructed from Schedule 80 heavy-wall carbon steel pipe, to house the heater assembly
- A vapor extraction well (VEW) to extract vapors from the space above the impoundment materials
- An injection well (IW) for possible integration of steam injection to augment caisson heating
- One MPE well in the inner caisson and a second in the annulus between the inner caisson and outer shroud for dewatering, possible product recovery, and vapor extraction during the operational period
- Thermocouple monitoring wells, at a vertical spacing between 2 and 5 feet

Solidification and Stabilization Test Cells

Solidification and stabilization will be conducted in Test Cells 1 and 3. Figure 3-2 illustrates the configuration of the test cells slated for use in the solidification and stabilization test. The solidification and stabilization test cells will use the inner caisson and outer shroud arrangement described previously; however, a different type of cover will be used to facilitate ISS operations. Upon completion of thermal treatment operations, the ISTT cell cover and heating system components will be removed and replaced with an access hatch cover that spans both inner caisson and outer shroud to support ISS operations. Semicircle cutouts in each door at the caisson center line, as depicted on Figure 3-3, will allow operation of the mixer Kelly bar while both access doors are in the closed position. Figure 3-3 shows the orientation of the doors on the cover. A flexible vapor containment boot installed between the door penetration and the Kelly bar mixer shaft will allow the contents of each test to be mixed while the doors are closed. The cover also will contain nozzles with flanged connections for the provision of diluent or inert gas along with recovering vapors during mixing. Figure 3-4 represents the conceptual mixing sequence.

During treatment, negative pressure provided by the vapor extraction system will be maintained on each caisson. As such, ambient air or inert gas will preferentially flow into the caisson head space rather than escape from the caisson. As an added measure of vapor mitigation, door openings, including the point for Kelly bar insertion, will be sealed with gaskets. Epichlorohydrin (ECH) was chosen for use in the caisson cover doors because of its compatibility with chemicals present in the acid tar (aromatic hydrocarbons, including benzene, toluene, xylene, naphthalene, and chlorinated hydrocarbons and solvents). Specifically, closed cell ECH sponge rubber was selected given its ability to handle continuous temperatures of 300°F. The anticipated maximum temperature at the gasket interfaces is 212°F. Finally, this material excels in outdoor applications and offers excellent aging characteristics, high resiliency, and flexibility. Accounting for the acid tar composition, process conditions, pilot implementation timeframe, and outdoor location, ECH was selected for use on the caisson cover.

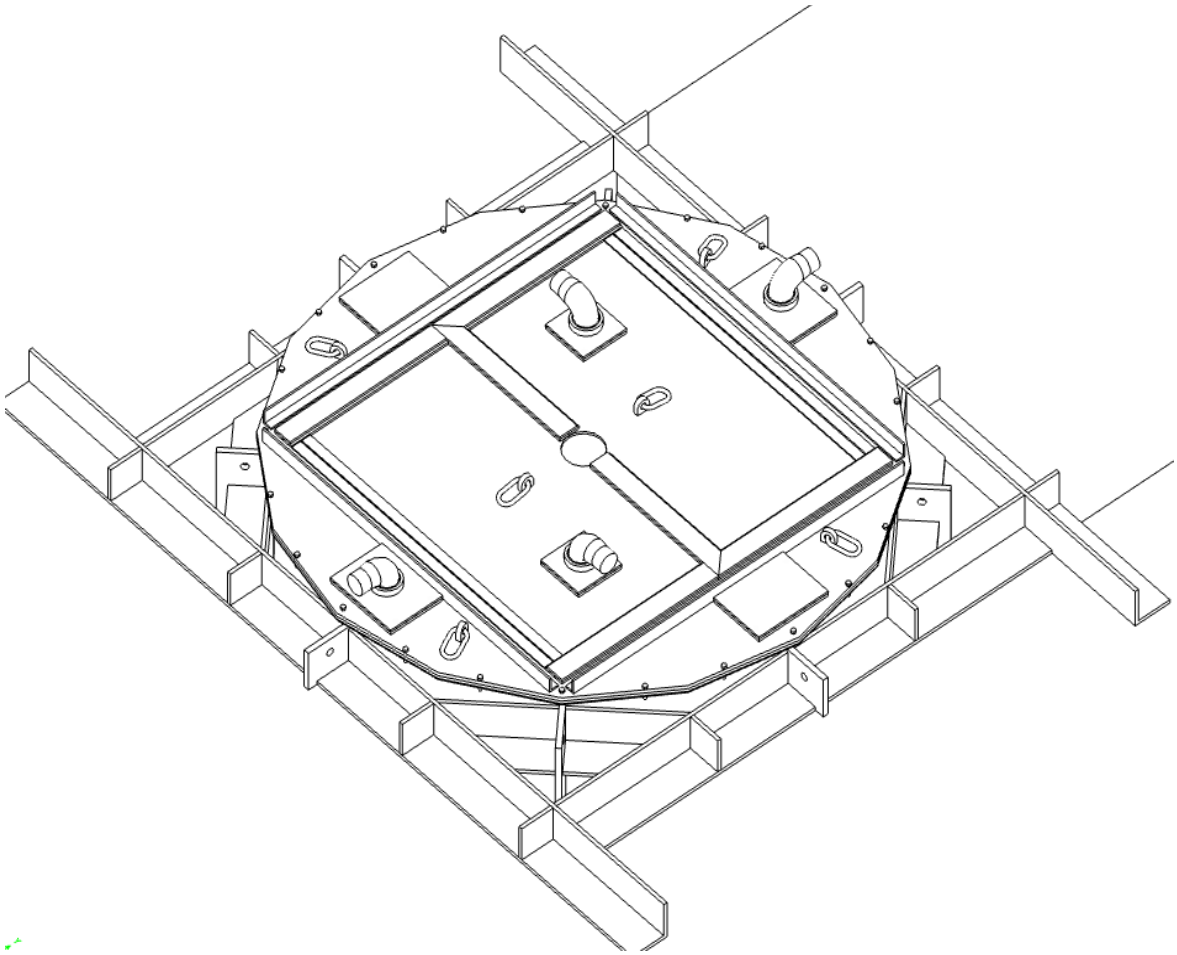

FIGURE 3-3
Proposed Steel Caisson Cover and Shroud Support Frame for In-situ Stabilization and Solidification Operations

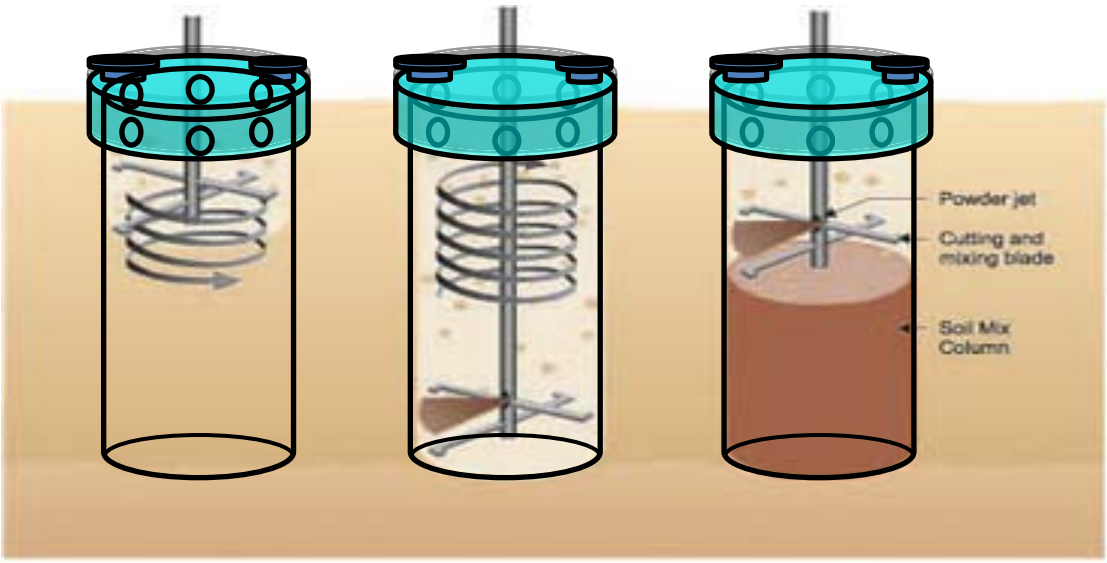

FIGURE 3-4
Conceptual Sequence of In-situ Stabilization and Solidification Operations
Notes:
Step 1 – Homogenize to depth
Step 2 – Reagent Addition
Step 3 – Stabilize Column

3.4.2 Pilot study Sequence

The pilot study operations are detailed in the following sections.

Thermal Treatment System

Upon completion of construction activities, TerraTherm will prepare an Operations and Maintenance Plan describing the thermal treatment system components, the thermal treatment commissioning plan, and operating procedures. During this phase, the system will be pressure/vacuum tested to demonstrate process piping is free from leaks, system instruments, controls and interlocks will be tested to document functionality of equipment safeguards, and all components will be inspected to confirm operational readiness.

Once the system is determined operational, pilot study operations will commence in Test Cell 2 with the following approach:

1. The water cap within the caisson test cells and shroud annuli will be removed and pumped to the process treatment equipment for treatment and storage. MPE wells within and outside the caisson will be operated for the test duration to suppress water levels and promote heating.
2. The vapor space within the caissons and shroud will be purged with nitrogen to suppress the oxygen content in the vapor stream to below 10 percent.
3. The thermal oxidizer will be started and vapor extraction operations will commence.
4. Heater circuits will be activated to initiate heating of the impoundment materials and in-situ temperatures will be monitored.
5. With increasing time, heater output will be increased slowly to drive removal of volatile and malodorous compounds from the impoundment materials. Real-time measurement of vapor concentration will be used to guide energy input during the pilot study.
6. When the mass extraction rate from Test Cell 2 stabilizes, heating of Test Cell 3 will commence under the same procedures described above.
7. After the impoundment materials reach 100°C, heater output will be modulated to maintain the target treatment temperature until the concentration of total volatile reaches asymptotic levels; either condition will signify completion of thermal operations.
8. Following a cooling period, ISS operations will be implemented in the cell targeted for ISS.

During thermal operations, vacuum will be maintained in the caisson headspace to recover steam, contaminant vapors, and prevent vapor leakage to the atmosphere. Vapors will be collected from a combination of VEWs and MPE wells. Nitrogen will be introduced into the caisson in a controlled manner to deplete oxygen concentration below 10 percent to inert the test cell headspace and render the vapor extracted from each caisson inflammable.

Extracted vapor will be conveyed from the test cells to treatment equipment staged on the pilot study bench. Inline duct heaters will be used to keep extracted vapor above dew point to prevent condensation and minimize corrosion in the vapor collection lines. Vapor collection and conveyance piping will be insulated to minimize condensation points and protect Site workers from thermal contact hazards. At the pilot study bench, the inert vapor stream will be blended with supplemental fuel (propane) and ambient air in a ratio suitable for combustion and destruction in the thermal oxidizer.

Solidification and Stabilization

ISS tests will be conducted in Test Cell 1, where the material was not thermally treated, and in Test Cell 3, after the material has been thermally treated. In Test Cell 1, ISS testing will be performed with raw impoundment material for homogenization, pH buffering, and pozzolan addition. In Test Cell 3, the ISTT heating wells will be removed at the end of thermal treatment period, and the treated impoundment material will be permitted to cool to less than 120°F. After cooling of the impoundment material and sampling, the ISTT Type 2 cover plate on Test Cell 3 will be replaced with an ISS Type 1 cover plate, equipped with double-opening access doors. The

exchange will be coordinated to minimize VOC emissions during the caisson cover exchange. Specific instructions for operators will be provided separately following construction of the ISTT system.

3.5 Assumptions and Uncertainties

The following has been assumed for the pilot study design:

- Approximately 10 feet of impoundment materials will be treated in each caisson. This assumption will be verified during a survey of the tar material to be conducted before construction.
- Propagation of heat within the impoundment materials will occur by thermal conduction and similar mechanisms as observed in application of ISTT for treatment of contaminated soil.
- The results from the pilot study in Impoundment 2 can be used to evaluate the applicability of these technologies to the material in Impoundment 1 by using available information on the nature of the materials in these two impoundments.
- Impoundment materials will create a seal against the wall of the caisson and limit the influx of water into the caisson during thermal treatment.
- The shroud will capture the majority of emissions generated as a result of heat transfer to the impoundment materials outside the caisson.
- Water extracted from the annulus between inner caisson and the outer shroud can be discharged to Impoundment 2 if analytical results of samples collected indicate there will be no deterioration in water quality in Impoundment 2.
- The ISTT caissons can be seated into the clay layer at the bottom of the impoundment and the clay will limit water and new impoundment materials from entering the caisson during treatment.

Under ambient conditions, VR and HC materials appear to be immobile. However, laboratory studies have identified that when heated, the VR can be mobilized. Heating also will enhance the mass flux of VOCs from the tar to interstitial water contained within the tar matrix. Since the caisson test cells may not be completely sealed by the clay bottom, there may be some degree of leakage between the bottom of the test cell and the surrounding materials.

SECTION 4

Ancillary Systems Design

This section provides descriptions of ancillary structures and systems that are needed for the implementation of the pilot study in Impoundment 2. This includes Site infrastructure (bench, overflow control), caissons, Flexifloats, and its anchorage. A synopsis of the clay layer investigation that will be conducted to finalize fabrication requirements for the caisson test cells and complementary heating infrastructure also is provided. Design details for ancillary systems are captured on numerous project drawings which are compiled in Appendix A. Table 4-1 identifies drawings specifically referenced in this section.

TABLE 4-1
Design Drawings for Ancillary Systems
100 Percent Design of Pilot Study for OU 8

Description	Drawing Number	Drawing Revision	Drawing Name
Stone Bench Expansion And Improvements	C-2001	1	Site General Arrangement
	C-3001	1	Sections
	C-5004	1	Equipment Bench Gabion Basket and Safety Rail Details
	C-5005	1	Civil Details
	S-5005	1	Gangway
	Fig 1	1	(Woodard & Curran) – WWTP Bench Extension Layout
Flexifloat Platform Mooring Plan	C-2002	1	Mooring Line Layout
Erosion Control Plan	C-2101	0	Site Soil/Sediment Erosion Control Plan
	C-5101	0	Site Soil/Sediment Erosion Control details
Utility	C-2801	0	Cross-Flow Pipe Utility Plan and Section
Caisson Fabrication Details	C-2001	1	Site General Arrangement
	S-2001	0	Overall Caisson Plan
	S-2002	0	Caisson Shroud Cover – ISS Plan and Isometric View
	S-2003	0	Caisson Shroud Cover – Blank Plan and Isometric View
	S-2004	1	Caisson Shroud Cover - ISTD Plan, Section, Isometric View and Schedule
	S-3001	0	Caisson Elevation, Sections and Isometric
	S-3002	0	Lifting Elevation
	S-5001, S-5002, S-5004, S-5005	1	Caisson Details
	S-5003	0	Caisson Details
Test Cell Placement And Flexifloat Arrangement	C-5002	0	Flexifloat Drill Barge Assembly
	C-5003	0	Flexifloat Drill Barge Assembly

TABLE 4-1
Design Drawings for Ancillary Systems
100 Percent Design of Pilot Study for OU 8

Description	Drawing Number	Drawing Revision	Drawing Name
Electrical	E-0001	0	General Notes and Abbreviations
	E-2001	0	Site Power Plan
	E-2002	0	Grounding & Power Distribution
	E-5001	0	Details

4.1 Required Site Infrastructure

Multiple site improvements are needed to implement the pilot study. This section describes required changes to the site pertaining to stone bench where the interim wastewater treatment plant (WWTP), treating groundwater derived from the Removal Action, is currently located, elevation control of the Impoundment 2 water cap and installation of anchors to secure the Flexifloat platform during the pilot study.

4.1.1 Bench Design and Construction

An elevated platform (bench) will be constructed to protect treatment equipment used in the pilot study from potential flooding. While some aspects of the proposed treatment approach can be moved from the floodplain before flood events, the vapor extraction, vapor treatment, and ancillary services such as power distribution, steam generation, and product recovery/storage must be situated in a location that allows for continuous operation once heating commences. The bench will be constructed by expanding the existing WWTP bench. The finished elevation of the bench is projected to be 42.81 feet based on North American Vertical Datum of 1988 (NAVD 88) or 113 feet site datum, which is approximately 1 foot higher than the 500-year flood elevation of 41.71 feet NAVD88 (Woodard and Curran 2012) and higher than maximum flood water elevations observed by all prior recent severe flood events (i.e., Hurricane Floyd in 1999 and Hurricane Irene in 2011).

Construction of the bench will involve the following phases:

- Site preparation—Surveying will be conducted, and erosion and sediment control measures will be installed.
- Regrading—The existing ramp, which provides vehicle access to the top of the WWTP bench, will be realigned and moved west by approximately 40 feet. Surface contours along the northeastern corner of the WWTP bench will be reshaped by adding stone to reduce the grade and yield a 15-foot-wide ramp; the ramp will align with the hi-bay opening in the WWTP structure. Like the current conditions, the ramp will be accessible to all vehicles which support WWTP operations and as needed, vehicles supporting pilot study implementation. Approximately 567 yd^3 of new fill will be necessary for the bench construction.
- Gabion installation—The existing riprap material located on the eastern face of the WWTP berm will be removed and stockpiled for reuse. The Impoundment 2 western berm swale will be prepared with compacted dense-graded aggregate (DGA) to form a competent foundation base. Then, riprap rock gabions will be bedded on 8-ounce non-woven polyester geotextile fabric and placed on three sides of existing bench to expand its perimeter. The gabion baskets will be hand-filled with riprap material from a stockpiled riprap material. The void behind the gabion basket perimeter will be backfilled with DGA compacted stone. Following fill placement, a second gabion courses will be added to build vertical height until it matches the height of the existing bench. Polyvinyl chloride (PVC)-coated gabion mesh tie-back panels will be placed between the first and second gabion basket course. Four 3-feet x 3-feet x 6-feet concrete deadmen will be placed behind the Gabion retention wall and then backfilled with the compacted DGA and #57 stone forming the new ISTT equipment bench.

- Liner placement—After completing base grading activities, an impermeable liner will be placed over the newly expanded area; the liner is intended to provide secondary containment for pilot study treatment equipment installed in the expanded bench areas. A 30-mil linear low-density polyethylene (LLDPE) geomembrane will be used for the application. Liner seams will be sealed by fusion welding or other appropriate methods to yield a watertight membrane. The integrity of all liner seems will be field-tested. An 8-ounce polyester non-woven geofabric material will be placed above and below the liner to prevent potential damage from sharp aggregate material. At the common low point, the liner will be transitioned to a collection sump containing a pipe for gravity drainage of accumulated stormwater back to Impoundment 2; a suitable seal will be integrated to the liner drain to ensure the basin remains watertight. In the event of a process water spill or release, the overflow line to Impoundment 2 will be closed, and fluids collected will be pumped to an interim holding tank for subsequent sampling, waste classification, and offsite, disposal. Following liner placement, the area will be filled with a 12-inch course of #57 stone top dressing to provide a level, working platform for installation of process treatment equipment required for the pilot study.

4.1.2 Impoundment 2 Overflow Control

To facilitate water level elevation adjustment in Impoundment 2, an adjustable overflow weir will be installed in the center berm between Impoundments 1 and 2, and a new 12-inch-diameter pipe will convey water from Impoundment 2 to Impoundment 1. If the water level needs to be raised within Impoundment 2, the weir board will be raised and water will be added using water from the hydrant near Impoundment 2. This improvement is required to facilitate installation of the Flexifloat platform as discussed in Section 4.3.

4.1.3 Decontamination Pad Construction

A decontamination pad will be re-established near the toe of the northern berm of Impoundment 2. The decontamination pad will consist of a containment area with impervious liner to collect decontamination liquids. The decontamination pad will be used to decontaminate process equipment, Flexifloats, and other equipment and materials that have been in contact with impoundment materials. The specific methods for decontaminating the caissons will be provided in the thermal and stabilization/solidification work plans. Specific procedures for handling the decontamination fluids will be provided in the pilot study work plan and WMP.

4.2 Caissons

Caissons were identified as the preferred construction approach to isolate a discrete test cell from the surrounding impoundment materials and facilitate controlling organic vapors and malodorous compounds during pilot treatment operations. Each test cell will consist of a 7-foot-diameter inner caisson and a 9-foot-diameter shroud. The inner caisson will extend down to the clay layer at the bottom of the impoundment to isolate the test cell from infiltrating water and additional impoundment materials during ISTT operations. The outer shroud will be approximately one-half the length of the inner 7-foot-diameter caisson and will extend into the top surface of the impoundment materials. The outer shroud will promote capture of vapor phase contaminants that may be mobilized by heat transfer from materials within the inner caisson to the tar surrounding the caisson outer wall. Additionally, the outer shroud will act as a thermal barrier to the impoundment materials, particularly the water cap, to help minimize heat losses from the inner caisson to the surrounding materials and water cap during heating. Supplemental strategies to manage heat losses from the test cells are discussed in Section 5.3.

The elevation of the clay layer beneath Impoundment 2 will be investigated before installing the three caissons used in the pilot study by completing a 7-foot-diameter inner caisson and a 9-foot-diameter outer shroud through the Impoundment 2 materials to the clay layer. The following objectives will be achieved during this investigation:

- Determine the distribution of VR and HC tar within each caisson location.
- Determine the depth of water in the water cap and the impoundment material/top of clay layer interface at each caisson location. The elevation of the top of the impoundment material and the clay layer will be surveyed into the existing survey for the Site.

- Evaluate the rate of water infiltration entering the drilling casing, which will be keyed into the clay layer during installation of the borings.
- Collect additional impoundment material from Test Cell 1 to be used in a final treatability study to adjust the recipe for ISS as described in the Addendum to the Laboratory Treatability Studies Work Plan, which was approved by USEPA on May 22, 2013.

4.2.1 Structural Design of Caissons

The caisson and the supporting structure will be fabricated from carbon steel. Structural steel materials selected for the caissons are summarized in Table 4-2. Unless indicated otherwise, framing connections will be bolted connections with high-strength bolts. Slip-critical connections will be used where subject to significant vibration.

During test cell design, a desktop evaluation of corrosion potential was performed, and results indicated that for an estimated exposure duration of 7 months, a 0.25-inch corrosion allowance would represent the most aggressive scenario considered (240 mils per year in pH 2 SU sulfuric acid at 100°C). Mil is a unit of length equal to one thousandth (10^{-3}) of an inch (0.0254 millimeter), used, for example, to specify the diameter of wire or the thickness of materials sold in sheets. In light of these findings, a corrosion tolerance of 0.25 inch was assumed for the 7-foot-diameter caisson, the 9-foot-diameter shroud, and the supporting steel structure. To accommodate for the 0.25-inch corrosion allowance, each caisson assembly including both the inner cell and outer shrouds will be fabricated from 0.75-inch-thick A36 steel. In addition, all connections required within the caisson and supporting structural frame were sized for at least 200 percent of the calculated design loads.

TABLE 4-2
Structural Steel Materials
100 Percent Design of Pilot Study for OU 8

Member Type	ASTM Reference	Fy (ksi)
Steel W-Shapes	A992	50
Other Rolled Members, Plates and Rods	A36	36
Steel Pipe	A53, Type E or S, Grade B	35
Steel Tubes	A500, Grade B	46
Bolts for Framing Connections	A325-N	--
Anchor Bolts, Wet Areas	A193, Type 304 or 316 Stainless Steel	--
Anchor Bolts, Dry Areas	F1554, Grade 36, and Galvanized per A153	--
Welding Electrodes	E70XX	

ksi = kips per square inch
ksi is a measure of force per unit area, and 1 ksi is 1,000 psi.
A kip or kilopound is a non-metric unit of force. It is equal to 1,000 pounds-force and used primarily by American architects and engineers to measure engineering loads. 1 kip = 4448.22 newtons. The name kip comes from combining two words: “kilo” and “pound”. It also is called kilopound-force.

The thermal expansion analysis of the caisson and shroud are based on an original temperature of 50°F and an operating temperature of 212°F. The coefficient of thermal expansion is 0.0065 in/in/100°F based on the American Institute of Steel Construction Manual, 14th Edition, Table 17-11. The resulting change in caisson diameter is approximately 0.12 inch and the resulting change in shroud diameter is approximately 0.12 inch. The expected thermal expansion is not expected to have an impact on remediation operations, the integrity of the caisson, and the caisson fasteners.

4.2.2 Codes and Design Criteria

Applicable codes and supplemental criteria adopted for the structural design of the caissons and supporting framework used in the pilot study are presented in the following sections:

- American Society of Civil Engineers 7-05: Minimum Design Loads for Buildings and Other Structures
- American Institute of Steel Construction Steel: Construction Manual, Fourteenth Edition
- American Welding Society D1.1: Structural Welding Code–Steel

Dead Loads

The loads resulting from the weight of all fixed construction, equipment, fixtures, and others, such as the supporting steel angles, the 7-foot-diameter caisson and the 9-foot-diameter shroud are considered to be dead loads. Numerical values used for these loads were determined either by actual known weights of the respective items or by documentation presented in the International Building Code 2009 or other publications. The average weight of each individual caisson structure is 32,450 pounds.

Live Loads

Live loads are the transitory loads that will be applied to the caisson shroud top cover. Live loads account for minor material placement or other incidental loads to be applied to the top cover. The following live loads are accounted for in the design.

- Plate steel cover configured for ISTT system operations: 100 pounds per square foot (psf)
- Hinged access cover for ISS operations
- Distributed load: 100 psf
- Point load from mixing tool shaft: 3,000 pounds vertical or horizontal

The Delmag tool shaft could possibly bind in the seal, which is being designed by Remedial Construction Services, LP (RECON). This binding could result in either a vertical or a horizontal point load. The mixing equipment used for ISS has a torque monitoring system that provides continuous measurement of torque in foot-pounds (ft-lbs) exerted during mixing operations. Torque sensor feedback, coupled with direct visual observation of the mixing shaft seal, will be used to identify mixing issues should they arise.

Caisson Placement Loads

During caisson placement, the caisson may not advance easily through the impoundment material simply by the gravity force of its 16.2-ton weight. If that occurs, the installation contractor may need to use a vibratory hammer to enhance its advancement and placement. The vibratory hammer may induce additional vertical static loads and a dynamic vertical component to the loading.

Caisson Withdrawal Loads

At the conclusion of pilot study evaluations within all three caissons, the treated impoundment material will be removed using a rotary auger bucket for subsequent testing evaluations. During the withdrawal of the empty caissons, the caisson may not withdraw easily because of compaction of surrounding impoundment material. If that occurs, the contractor may have to use a vibratory hammer to facilitate its withdrawal. The vibratory hammer may induce additional vertical static loads and a dynamic vertical component to the loading.

It is likely the caissons will accumulate some buildup of residue on the outside surface. The treated impoundment materials inside the caisson will be augered out before caisson withdrawal, but it is likely that some amount of residue will remain. A buildup allowance of 2 inches of residue on the outside face and 2 inches of residue on the inside face has been added to the vertical load on the caisson.

In addition to buildup loads, it is likely the impoundment material will apply a viscous resistance to the withdrawal of the caisson. An increase factor of 50 percent will be added to the caisson dead load to account for the viscosity.

Safety during the withdrawal operations is paramount. To ensure safe withdrawal, a load cell will be integrated to guide crane operations. The estimated maximum load of a caisson cell (32,451 pounds, assuming no corrosion of steel) with a 1-foot x 7-foot adhered ring layer of raw impoundment material on the outside of the caisson

(10,194 pounds) plus a 1-foot x 7-foot collar of ISS material on the inside of the caisson (9,482 pounds) will be 52,127 pounds. At no time during removal will the applied load exerted by the crane exceed the design maximum allowable tension load of 52,200 pounds. If the load cell registers a pull greater than 95% of the maximum allowable tension load during withdrawal, the use of a vibratory hammer to assist in withdrawal will be required.

Occupancy

The test cell caissons and the supporting structure are not defined as an occupiable structure per the American Society of Civil Engineers' *Minimum Design Loads for Buildings and Other Structures*. Environmental loads applied to the caissons and the supporting structure will be developed per occupancy category III.

Wind Design Criteria

Basic Wind Speed (3-second gust)	92 miles per hour
Storm Condition Wind Speed (3-second gust)	110 miles per hour
Terrain Category:	C
Importance Factor (IW):	1.15

Snow Load

The snow load will apply only to the caisson shroud top cover. The snow load does not apply during caisson placement or withdrawal.

Ground Snow Load:	20 psf (assumed)

4.3 Flexifloats

To provide access for equipment required to complete the project, a Flexifloat platform will be deployed on top of the water surface of Impoundment 2. Flexifloats are portable, interlocking modular barges that are used for inland marine and over water construction applications. The Flexifloat platform will serve two purposes:

- Support the vertical load imparted by the caisson test cells installed in the impoundment
- Provide a working platform over the water cap to support pilot study implementation

Each caisson will be installed through openings in the Flexifloat platform. Since the caisson weight likely would exceed the estimated vertical bearing capacity of the impoundment material and underlying clay, a rigid steel frame is designed to transfer the caisson weight to the Flexifloat platform (design drawings in Appendix A).

4.3.1 Flexifloat Design

Given the estimated weight of three steel pilot caisson test cells (48.7 tons), the soil mixing equipment (89.1 tons), crane mats, winches, safety rail, personnel gangway and supporting life safety equipment, the floating platform must be capable of supporting approximately 151 tons. Preliminary load calculations indicate that 15 Flexifloat units will provide 297 tons of flotation capacity at 65 percent submergence. To provide the required flotation, the Flexifloat system will consist of eight QuadraFloats and five DuoFloats and two loading ramp sections. Individual QuadraFloat and DuoFloat used to construct the Flexifloat platform will perform as an integrated unit. Each float is physically locked to the adjacent float to uniformly distribute load over the entire platform with minimal deflection. When the floats are locked together, change in platform load will correspond directly to change in platform draft.

In addition to the interlocking floats, twelve DuraBase polypropylene crane mats (8 feet x 14 feet x 4.5 inches) will help minimize point loading conditions and provide protection for the deck of the Flexifloat. Protection of the platform deck is needed during placement and removal of the ballast water and during ISS operations when mixing equipment is moved into position for stabilization operations. During the pilot study, activities within Impoundment 2 may initiate sheen on the water cap surrounding the Flexifloats. If sheen is visually identified, a floating ChemTex adsorbent boom will be deployed around the entire Flexifloat platform to mitigate its lateral distribution on the water cap.

Operations personnel must access the caissons during pilot study; therefore, a safety rail system will be installed around the entire perimeter of the Flexifloat platform. The railing height will be set at 42 inches and PVC-coated

316-stainless steel wire rope will serve as the top and mid guardrails. The wire rope rails will comply with OSHA C1926451(a)(5). Basic specifications for the Flexifloats are summarized in Table 4-3.

TABLE 4-3
Design Details for the Flexifloat Platform
100 Percent Design of Pilot Study for OU 8

	QuadraFloats	DuoFloats	Total
Weight (pounds)	27,000[a]	14,700[a]	2,625,000
Length (feet)	40	20	-
Width (feet)	10	10	-
Thickness (feet)	5	5	-
Buoyancy (pounds)	54,000	27,000	5,130,000
ISTT Load Draft (inches)[b]	18.1	18.1	-
ISS Load Draft (inches)[c]	31.5	31.5	-
Deck Bearing Capacity (lbs/ft^2)	5,000	5,000	

Notes:
Water Density of 62.4 lbs/ft^2
[a] Weight is of individual component
[b] Dead load includes the weight of the caisson assembly (approximately 48 tons)
[c] Total load includes weight of the mixing equipment
lbs/ft^2 – pounds per square foot

The Flexifloat sections will be placed in Impoundment 2 using a 175-ton all-terrain hydraulic telescoping crane (Grove GMK54240 or equivalent). The Flexifloat platform will be assembled beginning with the outermost units so the platform is “built-out” into the Impoundment, thereby minimizing the length of each crane pick. Once the assembled Flexifloat platform is assembled, it will be positioned with mooring lines attached to the ten helical screw earth and four concrete deadmen anchors that will be installed before the Flexifloats are deployed. The helical screw anchors will be placed in native soil completely outside the lateral extent of the soil berms that form Impoundment 1 and 2. Each anchor will provide a minimum mooring capacity of 18,000 pounds. Pre-mobilization tensile pull tests were performed in May 2013 for two helical screw anchors embedded in saturated soil conditions. The test results provided confirmation of both anchors’ capability of holding 18,000 pounds of load. The basis of the 18,000 pounds per anchor capacity is predicated upon the results of a Optimoor computer simulation using 110 miles per hour wind speed (Category II hurricane) and a flood flow velocity of 6 feet per second.

The Flexifloat platform will be secured to earthen anchors by 0.75-inch-diameter Dyneema mooring rope with suitable fastening hardware. Anchorage details are provided on Design Drawings C-2001 and C-2002 Rev. 1 (Appendix A). Eleven 5-ton and one 10-ton spur-gear hand winches will be welded to the key Flexifloat deck locations for tensioning the mooring lines. Two additional mooring lines will be added to Flexifloat deck cleats to address platform loads under a “storm condition” as predicted by the National Oceanic and Atmospheric Administration.

4.3.2 Flexifloat Elevation

Before fabrication and installation of the caisson test cells, an investigation will be completed to identify the elevation of the clay layer at the locations of the three test cells. The clay elevation will be surveyed and referenced to NAVD 88 datum. This information will be used to specify the inner caisson length for each test cell for fabrication so it can be seated but not perforate the clay layer beneath the impoundment material. Since the caisson length is fixed, the Flexifloat platform elevation will control the penetration depth into the clay layer.

During implementation of the ISTT and ISS operations, the water elevation in Impoundment 2 will be controlled at a constant elevation, and the elevation of the Flexifloat platform will be monitored and controlled to maintain a

constant, uniform elevation. With the estimated 48.7-ton combined caisson test cell weight, the Flexifloat platform submergence is estimated to be approximately 18 inches during the ISTT phase. With the addition of the 89.1-ton mixing equipment for ISS treatment, Flexifloat platform submergence is estimated to be 27 inches. Therefore, the maximum bearing load on the Flexifloat platform will occur during mixing operations.

To provide the same total weight to the Flexifloat platform during ISTT operations so the same submergence is established permitting the caissons to key into the Impoundment bottom clay layer, the Flexifloats will be loaded with a 21,000-gallon, water-filled ballast frac tank that will be located in the same position as the mixing equipment unit during the subsequent ISS operations. The maximum filled weight of the frac tank is 91.5 tons, which is similar to the weight of the mixing equipment. When ISTT operations are completed, the clean ballast water would be drained from the frac tank, and the tank removal from the Flexifloat will cause the platform to rise approximately 9 inches. The ballast water will be from the site fire hydrant so that the interior of the frac tank would remain “clean” and require no decontamination operations. When the frac tank is to be emptied for removal following the completion of the ISTT operations, the water (21,000 gallons) will be gravity drained into Impoundment 2, subject to USEPA concurrence.

Once the mixing equipment is tracked onto the Flexifloat platform, each caisson bottom would reseat into its original position within the Impoundment clay bottom layer. Supplemental Flexifloat elevation adjustment can be provided by adjusting the elevation of the Impoundment 2 overflow weir. The addition or removal of water from the ballast tank can also be used to adjust the platform elevation at the desired set point.

4.3.3 Anchorage

The Flexifloat platform will be anchored using 10 helical screw anchors installed into the soil just beyond the outer base of the impoundment northern and southern berms. Along the new equipment bench located west of the Impoundment 2 western berm, where screw anchor installation is not feasible, four concrete deadmen anchor blocks will be installed during bench construction. The Flexifloat platform will be connected by high-tensile strength synthetic fiber rope to established anchor points; each mooring line will be tensioned using eleven 5-ton and one 10-ton deck-mounted hand winches to provide horizontal stability. The mooring system for the Flexifloat platform is designed to withstand wind forces created during a Category 2 hurricane, with wind speeds from 92 to 110 miles per hour, and a floodwater velocity up to 6 feet per second (ft/sec). The current configuration of mooring points assumes each anchor will have a tensile capacity of 12,000 pounds with a factor of safety of 1.5 (providing a minimum capacity of 18,000 pounds each). The design of the mooring points aboard the Flexifloat platform, selection of the mooring lines, and landside anchor points were based on the outputs of the Optimoor Mooring Analysis computer modeling program. A flood stage water flow velocity of 6 feet per second was used as an input for the model along with the following wind design criteria:

- Basic wind speed (3-second gust) of 92 miles per hour
- Storm condition wind speed (3-second gust) of 110 miles per hour
- Terrain Category C
- Importance factor (IW) of 1.15

Mooring design conditions are based upon a permissible vessel movement limited to ± 0.5 foot for longitudinal, transverse, and vertical movements, and the design is in accordance with Oil Companies International Marine Forum, Mooring Equipment Guidelines 1 the Safe Working Limit of the mooring ropes is set at 50 percent of the minimum breaking load of the rope.

Helical Soil Anchor Loading

Using the force generation for the number, location, and declination of the Flexifloat mooring points as obtained from the Optimoor simulations, the tensile pull capacities of each of the earth helical screw anchors and concrete deadmen anchors was determined.

The design of the helical screw anchors configuration, number of helixes, diameters, declination, and embedment depths were derived from the application of the Ovesen-Brinch Hansen Method to Account for three-dimensional effects. The size, location, and embedment of the four 2-foot x 2-foot x 6-foot concrete deadmen anchors located

beneath the ISTT equipment bench were determined through the application of the NAVFAC DM 7.02 – Foundations & Earth Structures, Figure 20 (Criteria for Deadman Anchorage).

Wave Loads

For the basis of design, no waves, swell, or harbor seiche/surge were considered in the analysis because the surface area of Impoundment 2 is not great enough to generate these conditions.

Current Loads

The Flexifloat and anchors may experience water flow velocities of up to 6 ft/sec if water were to overtop the impoundment berms during a flood.

Seismic Design Criteria

The floating structure will not be designed for seismic loads. The water under the structure will isolate it from seismic loading.

4.4 Assumptions and Uncertainties

Assumptions and uncertainties pertaining to the design of the bench, Impoundment 2 water cap elevation control, caisson test cells, Flexifloat work platform, and its anchorage are summarized in the following sections.

- Secondary containment of the frac tank (21,000 gallons) will be provided on the WWTP bench.
- The steel caisson and the supporting steel structure will be constructed of standard carbon steel. A corrosion allowance of 0.25 inch will be assumed for the 7-foot-diameter caisson, the 9-foot-diameter shroud, and the supporting steel structure.
- Connections will be sized for at least 200 percent of the calculated design loads.
- Pending the results of the clay layer investigation, caissons will be keyed up to 6 inches into the top of the clay layer at the base of the impoundments. The water elevation of Impoundment 2 will be maintained to within 3 inches of the elevation recorded at the time the caissons were installed.
- Sufficient water level can be maintained in Impoundment 2 to accommodate Flexifloat platform draft when fully loaded.
- Daily monitoring of mooring line tension to ensure less than 6 inches lateral movement of Flexifloat platform under normal operational conditions.
- Helical screw anchors can be embedded to design depth of greater than 21 feet below ground surface (bgs) and develop sufficient torque to meet 18,000 pounds pull load conditions (with 1.5 factor of safety).

SECTION 5

Thermal Treatment System Design

This section provides descriptions of the thermal treatment system design for implementing the pilot study in Impoundment 2. This includes wellfield design; piping, mechanical and electrical design; vapor treatment system design (nitrogen inerting system, vacuum blowers, thermal oxidizer and vapor heat exchanger, wet scrubber); water collection and treatment system design (pneumatic pumps, bag filters, organoclay filtration, caustic injection system, discharge tank, steam boiler); and control systems. Numerical calculations also are presented in this section. The list of design drawings prepared for the thermal treatment system is shown in Table 5-1 and drawings are compiled in Appendix A.

TABLE 5-1
Design Drawings for Thermal Treatment Systems

100 PERCENT DESIGN OF PILOT STUDY FOR OU 8

Description	Relevant Drawings	Revision	Sheets
Site Plan	C101	F	1
Caisson Layout	C102	E	2
Electrical Legend	E100	D	1
One Line Electrical	E101	F	3
Grounding / Neutral Detail	E104	B	2
Mechanical Layout	M101	K	1
Process Flow Diagram and companion material and energy balance	P101	K	2
Piping and Instrumentation Diagram Legend	P100	A	4
P&ID (Caisson Equipment, Thermal Oxidizer System, Scrubber Package, Liquid Treatment System, Alternate Bypass System, Utilities)	P102	F	6

5.1 Thermal Concept and System Design

Thermal Test Cells (i.e., caissons) 2 and 3 will be heated using ISTT equipment as described in Section 3; six vertical heater borings will be used for each caisson. The heaters generate heat by their ohmic resistance to electric power/current. Power is delivered from silicon controlled rectifiers (SCRs), which can be set for the desired power output and controlled as thermostats, based on temperatures monitored along the heaters. Each electric circuit powers several heaters. The estimated starting power needed for thermal pilot operations is 286 amps, 238 kilovolt-amps (kVA) (Appendix A). The following outlines the design parameters for the pilot study:

- ISTT Power Supply — 20-45 kilowatts (kW)
- Treatment System Power Supply — 193 kVA
- Total Power Needed — 238 kVA
- Requested Electrical Service — 500 kVA
- Power Usage Total — 400,000 to 500,000 kilowatt hours (kWh)

As the temperatures of the heaters, liners, and casings increase, thermal gradients will facilitate conduction of heat to the materials inside the inner caisson. The heaters may reach temperatures as high as 1,500°F, but typically operate at temperatures between 212°F (early in the process) and 1,200°F (toward the end of the heating period). The surface temperature of the heater cans will be significantly lower than the temperature of the heater elements themselves. Additionally, heater output will be limited in the zone above the level of the

impoundment materials so as not to overheat in the caissons' headspace. The target temperature for the impoundment materials within the thermal caissons is 212°F (100°C). This temperature was selected based on the results of the laboratory treatability testing (CH2M HILL 2012a).

5.2 Numerical Calculations of Heating and Sensitivity Study

5.2.1 Area, Volume, and Energy Demand

The volume of material that will be heated in each pilot caisson is estimated based on a 7-foot-diameter cylindrical area with a vertical thickness of 10 feet of impoundment materials with an additional 9.5 feet of space above the impoundment materials and below the caisson cover. The total heated thickness is estimated to be 19 feet, which may be altered based on findings of the October 2013 clay layer investigation.

It is expected that the caisson wall will be thoroughly heated to the treatment temperature; therefore, material immediately outside the caisson may reach the target treatment temperatures as well (boiling). For this reason, a shroud approximately 2 feet larger in diameter than the inner caisson will be installed around each caisson. The shroud is designed to capture VOCs and malodorous compounds that may be mobilized from heat transfer outside of the inner caisson test cell. Once the inner caisson has been dewatered, the void space will be filled with pumice filtration media, which is also known as the "fill layer". Preliminary volume and heat capacity are provided in Table 5-2. Including the space above the impoundment materials, the heated volume is estimated to be 28 yd^3, and the total heat capacity per test cell is approximately 26,200 British thermal units per degree Fahrenheit (BTU/F).

TABLE 5-2
Dimensions and Heat Capacity for One Pilot Study Caisson
100 Percent Design of Pilot Study for OU 8

Parameters	Fill Layer	TTZ	Total	Unit
Treatment area	38	38	-	ft^2
Upper depth of treatment	1.0	9.5	-	ft bgs
Lower depth of treatment	9.5	19.5	-	ft bgs
Volume	12	14	26	yd^3
Solids volume	7	9	16	yd^3
Porosity	0.45	0.35	-	-
Porosity volume	5	5	10	yd^3
Initial saturation	50	100	-	percent
Soil weight	11,222	41,349	52,572	lbs soil
Water weight	4,597	8,414	13,011	lbs water
Soil heat capacity	2,806	10,337	13,143	BTU/F
Water heat capacity	4,597	8,414	13,011	BTU/F
Total heat capacity, whole TTZ	7,403	18,751	26,154	BTU/F

Notes:
1. Elevations referenced to caisson cover.

5.2.2 Operational Durations and Subsurface Temperature Progressions

Table 5-3 contains the preliminary data used for energy balance and operational duration estimates. For this estimate, the heat capacity of the fill layer (dry pumice described in Section 5.3.8) was included in the energy loss estimate.

TABLE 5-3
Preliminary Energy Balance Calculations and Operational Duration Estimates (One Caisson)
100 Percent Design of Pilot Study for OU 8

Parameter	Fill Layer	TTZ	Total	Unit
Power input rate	5	12	17	kW
Average extracted water temperature	190	190	-	F
Percent of injected steam extracted as steam	20	30	-	%
Steam extracted, average	3	13	16	lbs/hr
Energy flux into treatment volume	15,658	40,937	56,595	BTU/hr
Energy flux in extracted groundwater	-	15,641	15,641	BTU/hr
Energy flux in extracted steam	3,132	12,281	15,413	BTU/hr
Net energy flux into treatment volume	12,527	13,015	25,542	BTU/hr
Heating per day	40.6	16.7	-	F/day
Start temperature	50	50	-	F
Target temperature	212	212	-	F
Estimated heat loss, worst case	151	147	-	%
Operating Time				
Shake-down	7	7	-	days
Heating to boiling point	10	24	-	days
Boiling and drying	53	48	-	days
Sampling/analysis phase	3	3	-	days
Post treatment vapor extraction	14	14	-	days
Total Operating Time	96		-	days

Each pilot cell will be heated using between 10 and 22 kW (20 to 45 kW for both caissons) delivered to the six heater borings; this energy input is equivalent to a heat input of 100 and 240 watts delivered for each foot of heater on average, including the upper heater section which contacts the pumice fill material. The calculations assume that 30 percent of the energy delivered to the heaters is extracted as steam on average. While this number has been experimentally determined at other sites, it is an estimate with a large uncertainty given the pilot study conditions. This is especially uncertain for heating of the impoundment materials since the treatment volume is occupied by materials that significantly differ in chemical and physical properties from soil.

Similarly, water removal rates and heat losses are estimated based on the treatment cell dimensions; the large surface area compared to test volume creates a substantial heat loss of approximately 151 percent. Therefore, the total energy required exceeds the simple energy demands for heating and treatment of the target volume by a large margin.

As illustrated on Figure 5-1, locations near the heaters will reach target temperature first with the center of the caisson reaching target temperatures last. The temperature progression along the inner caisson wall is subject to the actual heat losses encountered; however, heating experience suggests the caisson wall will reach the boiling point at roughly the same time as the center of the test cell.

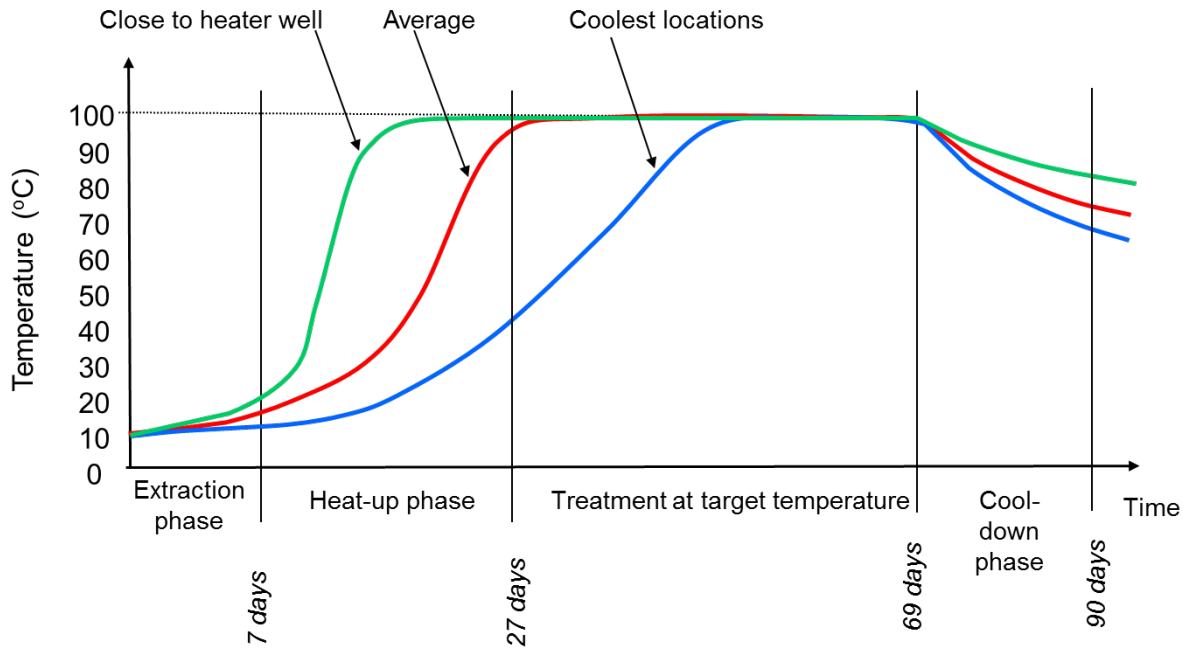

FIGURE 5-1
Simplified Heating Progression

5.3 Material Selection

One of the pilot study objectives will be to determine what construction materials are practical and can resist corrosion. A material corrosion coupon study will be performed during the pilot study and those data will be used to evaluate the corrosion rates for carbon steel and specialty alloys in contact with impoundment materials and Site COCs. For the pilot study equipment design, a conservative approach was taken to address the potential for material corrosion. The approach for materials in direct contact with impoundment materials (e.g., heater cans) will be to upgrade the materials of construction from typical metal grades (Schedule 40 carbon steel and stainless steel) to higher grade steel and alloys (Schedule 80-160 carbon steel and hastelloy). Additionally, for materials in contact with extracted vapors containing Site COCs, the approach will be to prevent condensation of Site COCs in hoses, piping, etc. which could accelerate the corrosion process. Lastly, process equipment that will be exposed to condensed Site COCs will be made of fiberglass.

5.4 Wellfield Design

The TTZ starts at the bottom of the water cap/top of the impoundment materials and extends approximately 10 feet to the top of the impoundment clay layer. As previously described, additional delineation to determine the TTZ base elevation will be performed before well and caisson installation. Therefore, well length and actual volume treated may be adjusted based on field observations. The wells or cans which house the ISTT heaters will extend from approximately 18 inches above the Flexifloat deck to approximately 20.5 feet bgs (assuming the caisson cover is at ground surface). The MPE wells will be installed to a depth of approximately 12.5 feet bgs including a 3-foot sump. A screened interval to promote liquid and vapor extraction will be installed from 0.5 to 9.5 feet bgs. A steam injection well also will be installed to the bottom of the TTZ with a screen injection interval located at approximately 18.5 to 20.5 feet bgs. Finally, temperature monitoring points (TMPs) will be installed to the bottom of the TTZ and will allow for monitoring of subsurface conditions to facilitate potential adjustments to operational activities.

Hydraulic control will be maintained through steam generation and extraction from the caisson during heating operations. Water liberated by impoundment material heating or by seepage into the test cell from the surrounding water cap will be extracted from the MPE wells as required. Pneumatic control will be maintained by vapor extraction from the MPE/vapor extraction wells.

Each caisson will include the following wells:

- Six ISTT heater wells
- Two MPE wells (one centrally located within the inner caisson, one located between the inner caisson and shroud)
- Six TMPs co-located with ISTT heater wells
- Six TMPs (five located within the caisson and one located between the inner caisson and shroud)
- One temperature monitoring well placed approximately 2 feet outside of the shroud (only for one of the caissons)
- One steam injection well installed to the bottom of the TTZ within the inner caisson
- One vapor extraction well located within the inner caisson and screened 2 feet below the caisson cover

Within the annulus between the inner caisson and shroud, insulation material will be placed to reduce heat losses from the test cell and minimize potential development of cold zones where vapor condensation is favored. A layer of pumice or similar porous lightweight (i.e., with specific gravity less than 1) material will be placed inside of the inner caisson before heating operations. Material placement is intended to:

- Provide insulation
- Promote heating by developing a zone where thermal conduction between solids can occur
- Reduce the vapor space volume that must be maintained under inert conditions

Figure 5-2 depicts a plan view of a caisson cover. As illustrated on Figure 5-2, the heater wells are oriented in a hexagonal pattern with a spacing of approximately 2.5 feet. A more detailed depiction of the thermal well layout is provided in project design drawings included in Appendix A.

5.4.1 Well Installation Methods

Well installation will use DPT or a similar well installation method. Test cells will be keyed into the underlying impoundment clay layer. First, the inner caisson and outer shroud will be installed followed by the caisson cover. Heaters, extraction, injection and sensor wells will be installed through nozzles attached to the caisson cover for support and to promote a vapor-tight seal.

5.4.2 Liners and Heaters

Six heater installations will be used to apply energy to each of the caissons. Each heater location will consist of four elements: an outer heater “can”, a stainless steel inner liner, the heater element itself, and steel conduits with thermocouples. Each location will be installed to a total depth of approximately 20 feet bgs. The heater depth will be determined by the final delineation of the impoundment clay layer.

The heater cans and elements will be fabricated offsite and will consist of a 3-inch-diameter Schedule 80 carbon steel outer “heater can” with an approximate 2.5-inch-diameter, thin-walled, stainless steel liner. The heater can will be hoisted and placed into the borehole using either the winch on a drill rig or an all-terrain forklift with extendable boom or will be installed by a crane. A 0.5-inch Schedule 80 carbon steel thermocouple pipe to monitor heater output also will be installed within the heater can.

Within each heater can/stainless steel liner, the proprietary heater element will be installed to approximately 20.5 feet bgs. The additional heater can and liner depth will allow for thermal heater element expansion and elongation during operations.

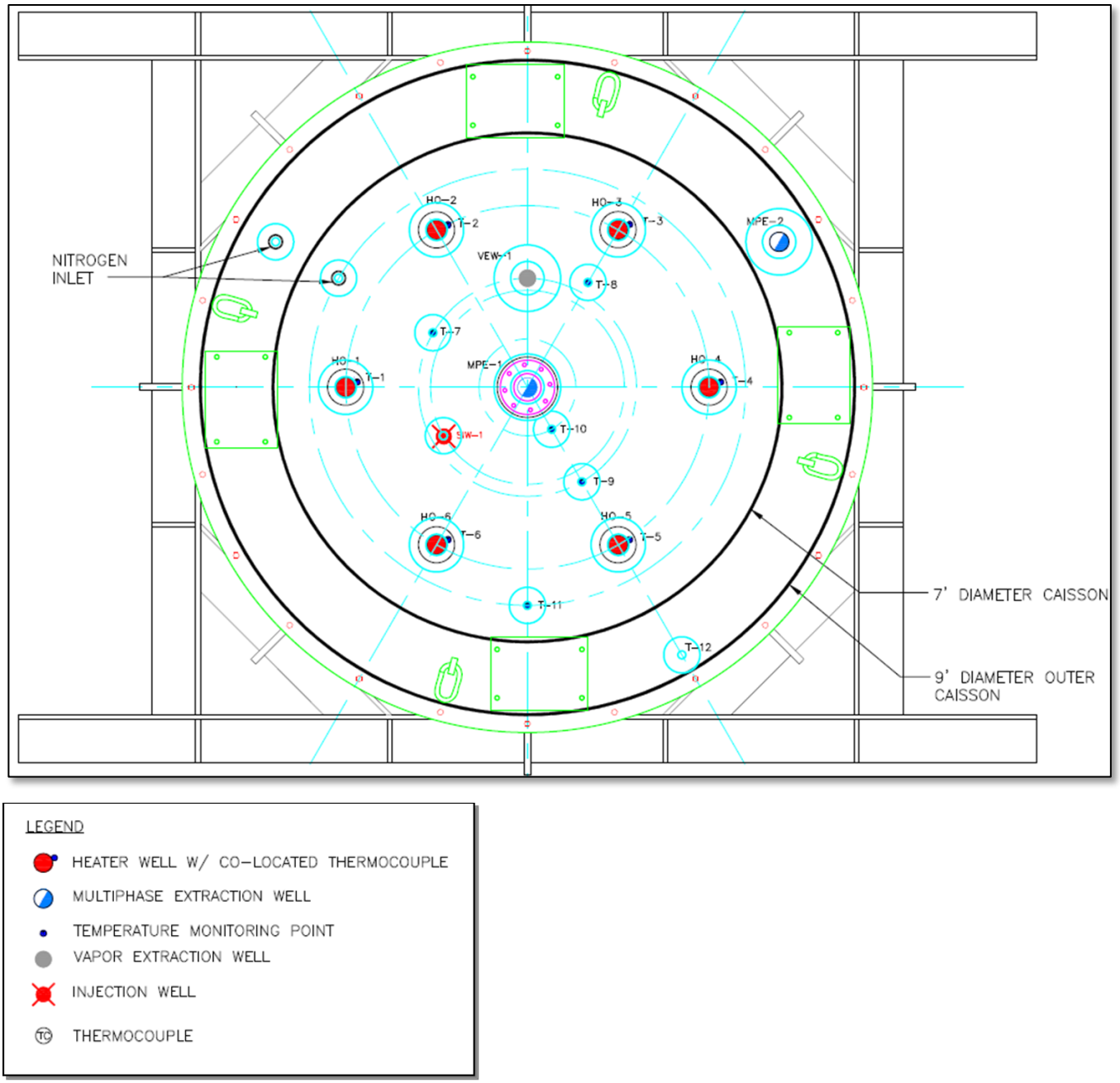

FIGURE 5-2
Proposed Caisson Layout for ISTT Test Cells

5.4.3 Multi-Phase Extraction Wells

The MPE wells will be used to extract steam, vapors, and liquids (if required) from within the caisson as required. The MPE wells will be constructed from 4-inch-diameter, 20-slot, wire-wrap hastelloy screen and Schedule 80 carbon steel riser pipe. The screened segment of the MPE well located within the caissons will extend from 0.5 to approximately 9.5 feet below the caisson cover. Additionally, a 3-foot Schedule 80 carbon steel sump will extend to 12.5 feet below the caisson cover. Schedule 80 carbon steel pipe also will extend from the top of the screen (at 0.5 foot below the caisson cover) to approximately 18 inches above the caisson cover. The MPE wells located outside the inner caisson and inside the shroud will be constructed in a similar manner, with the exception that a sump will not be installed.

Following installation of the MPE wells, the inner caissons will be dewatered and the water will be pumped to the process treatment equipment for treatment and storage before disposal. Detailed descriptions of sampling the

water at the surface of the Impoundment, water within the shroud annular space, and water within the caisson are in Sampling and Analysis Plan, which is being developed. Once operations commence and the initial dewatering period is complete, a vacuum will be placed on the MPE wells to facilitate vapor removal.

5.4.4 Vapor Extraction Well

The VEWs will be used as supplemental extraction points for steam and vapors generated in the caissons. Each ISTT caisson will be completed with one VEW. The VEWs will be constructed of 20-slot, wire-wrap hastelloy screen and will extend approximately 2 feet below the caisson cover. A Schedule 80 carbon steel riser will extend to approximately 18 inches above the caisson cover.

5.4.5 Steam Injection Well

The steam injection well will be installed as a contingency for additional energy input to the bottom of the caisson if needed. The steam injection well will be constructed from 1.5-inch-diameter, 20-slot wire-wrap hastelloy screen, screened from 18.5 to 20.5 feet below the caisson cover. The top of caisson to the top of a Flexifloat is 1 foot. A Schedule 80 carbon steel riser will extend to approximately 18 inches above the caisson cover.

5.4.6 Temperature Monitoring Points

TMPs will be used to monitor heating progress of the impoundment material during treatment and will be constructed of 1.5-inch-diameter capped Schedule 160 carbon steel pipe without slots that extends from the caisson cover to the bottom of the TTZ.

As previously stated, an additional TMP will be located approximately 2 feet beyond the outer shroud. At each TMP, eight thermocouples (TCs) will be installed extending from the caisson cover to the bottom of the TTZ (final depth and spacing to be determined after clay/tar investigation is complete). The deepest thermocouple will be located at the bottom of the TTZ to allow evaluation of vertical as well as horizontal temperature distributions. The total number of TCs for both caissons (not including TCs used to measure heater temperature) will be 104 for both caissons and one array outside the one of the caissons. The spatial distribution developed will allow sufficient resolution to monitor temperatures within the caissons, within the outer shrouds, and in a linear alignment from caisson center to a distance up to 2 feet beyond the caisson outer shroud.

5.4.7 ISTT Caisson Covers

The ISTT caisson covers will be fabricated from carbon steel and configured with nozzles and flanged connections for each of the wells/monitoring points to be installed. Connections will be vapor-tight and sealed using gasket materials to prevent outward vapor leakage and potential odors. Connections will be configured to allow for thermal expansion/contraction of the heater wells and possible expansion of the Site materials. Since the impoundment materials are expected to have minimal bearing strength and the underlying clay may not sustain much weight, the caisson cover will must vertically support all wells and monitoring points. Allowance will be made for water introduction through the caisson cover to quench the test cell when required by the Emergency Preparedness and Contingency Plan.

5.4.8 Caisson Fill and Insulation

Following caisson installation and removal of the impoundment water cap from the caisson enclosures, the void space from the top of the impoundment materials to approximately 1 foot below the caisson cover will be filled with PFM. The PFM chosen is inert, slightly alkaline in chemical makeup. The PFM is used for neutralization and treatment of acid gas streams (like hydrogen sulfide) but more importantly it has a specific gravity equal to 1 and therefore is not anticipated to sink into the impoundment materials.

In addition, the annulus space between the inner caisson and outer shroud will be wrapped with foam glass insulation blocks. The blocks will be placed prior directly into the annular space before the cover installation to provide insulation to the test cell, protect against heat loss, and prevent condensation formation along the caisson walls. Foam glass blocks are available in a variety of sizes and shapes and a combination of loose fill (e.g., foam packing peanuts) to rigid rectangular blocks. Insulation will be selected and placed to promote heat

retention of the inner caisson while maintain sufficient vapor permeability to promote extraction efforts within the annular space.

5.5 Piping, Mechanical, and Electrical Design

All piping, mechanical, and electrical hardware will be installed using materials, processes, and layouts consistent with the practices used by TerraTherm at other project sites. These practices have been developed specifically for the high temperatures and other conditions experienced during ISTT and successfully demonstrated on numerous projects. Piping and mechanical connections are designed for lateral and vertical movement resulting from thermal expansion and contraction; drawing P102 illustrates several locations where flexible hose is integrated to piping system design. Since field piping will be field routed during system construction supplemental features allowing for pipe movement such as expansion joints, bellows, or piping loops will be integrated as required to account for movement in final layout. With the temporary nature of the thermal remediation system, the vapor, liquid and steam manifold piping will be installed on pipe stands secured to the Flexifloat steel platform. Railing stanchions installed on the Flexifloat also will be used to mount system piping, electric, and control wiring.

5.5.1 Vapor Collection Piping

The vapor collection piping will consist of 4-inch-diameter Schedule 80 carbon steel, with flanged connections to allow for physical disconnection during potential flooding events. The vapor collection piping will be heated using insertion heaters and insulated to minimize the potential for condensation. The conveyance piping will consist of a main header trunk line with flanged connections located on the equipment bench and before the Flexifloat. The connections to the extraction wells will be made with chemical and temperature resistant Teflon-lined reinforced hose. During system shakedown the conveyance piping will be leak tested. An identical approach will be used to transition vapor conveyance system from the Flexifloat to the shoreline to allow for vertical and horizontal movement of the platform. The manifold will be sloped to minimize condensate collection points.

5.5.2 Insertion Heaters

Heaters installed in the vapor collection system will be fabricated from mineral insulated (MI) heating cable. The heaters will be used to keep the vapors extracted from the caissons above the dew point temperature of the stream. Maintaining vapor temperature during conveyance is intended to minimize liquid condensation and corrosion in the piping system.

5.5.3 Groundwater Collection Piping

Water collection piping will consist of flexible chemical and temperature resistant Teflon-lined reinforced hose coupled with rigid piping (where required) to convey liquids extracted from the caissons to the treatment equipment located on the shoreline. The conveyance piping will consist of a main header trunk line with branches extending to the individual extraction wells. The conveyance piping between the wellfield and the treatment system will be pressure-tested before starting operations.

5.5.4 Electrical

There are three major parts to the electrical installation: the service drop and transformer/distribution equipment feeds, the wellfield electrical installation, and the process equipment and instrument wiring. All of these activities will be performed by a New Jersey-licensed electrician in accordance with the Site-specific Health and Safety Plan (HASP) and National Fire Protection Association (NFPA) 70 (National Electrical Code) and NFPA 70E (Standard for Electrical Safety in the Workplace).

TerraTherm’s electrical contractor will be responsible for wiring from the secondary side of the transformer (to be installed as part of the service drop) to the electrical distribution panels and all downstream equipment for the ISTT system. The main circuit breaker will be equipped with adjustable ground fault protection as required by the National Electrical Code. In addition, the main circuit breaker will be provided with a shunt trip mechanism, which will interrupt power from the main switchboard if any of the emergency shutdown (ESD) buttons are activated.

Power distribution switchboards will be located on the process equipment bench. TerraTherm and a subcontracted electrician will run secondary conductors from the branch breakers in the electrical switchboards

to the heater power controllers, as well as the effluent treatment system components as summarized by detailed design drawings contained in Appendix A. The majority of the electrical panel boards and vapor and liquid treatment equipment proposed for use on this project are skid-mounted portable equipment. The majority of the wellfield and equipment connections will be made using extra hard duty-rated power cords (e.g., Type W cord, Type G cord, “mining cable”) and other cords (e.g., Type SOW) suited for outdoor use in wet environments.

Power delivered to the heaters will be regulated by SCRs. The SCRs can operate in either manual (percent output) or automatic (temperature/power) control modes to deliver the desired amount of power to the heaters. During system operation, the temperature of the heaters will be monitored and recorded by the process control system developed for the project.

A backup generator with an automatic transfer switch (ATS) will be provided to ensure continued operation of the vapor and liquid treatment systems in the event of a power failure. ESD switches will be provided at several locations around the Flexifloat and process equipment area to immediately shut down power to the Site in the event of an emergency. ESD switches will be interlocked with the generator to prevent the generator from starting if an ESD is activated.

5.6 Hydraulic and Pneumatic Control

Hydraulic and pneumatic control within the caissons will be accomplished by the physical barrier created by the inner caisson, the concurrent extraction of vapor and/or liquids from MPE and VEW components installed in the caisson, the supplemental physical barrier offered by the outer shroud, and the caisson cover.

Water levels and vapor migration will be controlled within the caisson and outer shroud by the MPE wells and the VEWs. Groundwater will be removed from the MPE wells during operation using pneumatic pumps. A vacuum will be applied to the MPE wells and VEWs to extract vapor (steam, COC vapors, and soil vapor).

Additional vapor control measures will be necessary outside the inner caisson as the impoundment material outside of the caisson wall may be partially heated because of the proximity to the ISTT heater wells. The outer shroud will serve as vapor control for this potential steam/COC generation and a vacuum will be applied to the MPE wells located within the outer shroud to capture and treat any volatized COCs.

Finally, the caisson cover will provide a vapor tight seal for the heated zone. To minimize the potential for vapor condensation, foam glass board will be placed on the caisson cover to provide insulation from heat losses through the cover.

Figure 5-3 shows a simplified cross section of one of the thermal caisson covers. The cross section includes the positioning of the ISTT heaters, MPE wells, VEW, one of the TMPs, the inner caisson and shroud boundaries and the caisson cover.

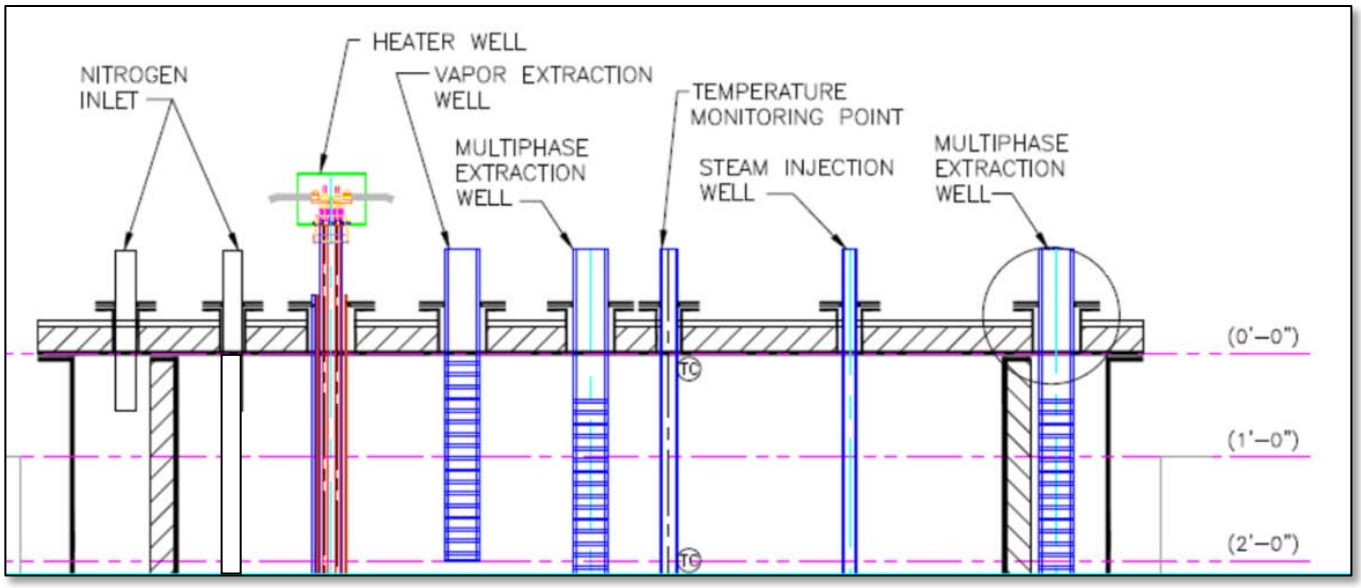

FIGURE 5-3
ISTT Pilot Study Simplified Caisson Cover Cross-Section

5.7 Process Flow Diagram

Given projected vapor phase contaminant loading, the primary vapor treatment method selected for the pilot study is a thermal oxidizer with a caustic scrubber. Granular activated carbon was considered; however, the elevated concentration of benzene, chloride, and sulfur compounds anticipated render this treatment technology ineffective and a significant risk because of the potential for fire within the carbon bed during compound adsorption. For this reason, granular activated carbon also was excluded from consideration for use as a backup vapor treatment system in the event the oxidizer/scrubber is unavailable or offline.

A backup treatment configuration, therefore, was developed to include a refrigerated condenser for solvent recovery followed by a fire-inert impregnated adsorption media. The absorption media recommended is zeolite impregnated with cetyl trimethyl ammonium chloride in one bed and potassium permanganate in a separate bed. Using this strategy, the condenser system will be used for the initial stage of vapor treatment for the removal of condensable materials including water and VOCs liberated from the impoundment material by heating. Vapor exiting the initial stage will consist largely of noncondensable materials that subsequently will be treated using the downstream zeolite adsorption beds.

Initial treatment of extracted water and liquid condensate will include filtration followed by pH neutralization using caustic soda (NaOH) addition. Effluent from the bag filter array will then undergo a second filtration stage through a packed bed vessel containing activated organo clay media for NAPL adsorption. Effluent from the organo clay vessel will be stored onsite in a fractionation tank, characterized, and shipped offsite for treatment. The process flow diagram (PFD) along with the mass and energy balances for several vapor/liquid loading cases are provided in Appendix A.

5.7.1 Vapor Treatment System Summary

A brief overview of the vapor treatment system (VTS) is provided herein. Additional information is provided in the following section and detailed design drawings are presented in Appendix A. Component-specific descriptions follow in the sections below. The vapor collection manifold and vapor treatment system will be maintained under a negative pressure by the blowers to prevent releases of vapor to the atmosphere. The vacuum on the manifold will be adjusted to maintain adequate vapor capture and collection. Extracted vapors will be conveyed to the aboveground process treatment system. Vapor extraction piping will be composed of carbon steel as described above. Vapors in the manifolds will be maintained at a temperature above its dew point by use of insertion

heaters. The vapor manifolds also will be insulated for efficiency and to minimize thermal contact hazard to Site personnel.

Thermal treatment operations will generate steam and volatilize contaminants that will accumulate in the headspace of the two test caissons. A sweep gas will be introduced into the caisson headspaces to help convey generated vapors out of the caissons to offgas conditioning and treatment operations. To safely manage potentially elevated concentrations of flammable or explosive vapors in the system, nitrogen will be used as an inert carrier gas.

The vapor extracted from the caissons will be conveyed to the process treatment equipment area by vacuum blowers, which serve as the prime movers for the vapor stream. The vapor stream then will enter the thermal oxidizer where the organic constituents will be destroyed with a minimum destruction removal efficiency (DRE) necessary to meet regulatory limits as prescribed by NJDEP. A heat exchanger on the discharge side of the oxidizer will be used to pre-heat the process air while cooling the oxidizer exhaust air used to fire the oxidizer. The vapors exiting the thermal oxidizer/heat exchanger will be treated in a wet scrubber system, which uses a recirculating caustic solution to neutralize acid-laden vapors formed during thermal oxidation processes before atmospheric discharge.

As described above, a vapor phase sorbent media treatment system will be on hand to be used for vapor treatment if the thermal oxidizer is offline. Should this become necessary, process vapor will be cooled first by a heat exchanger and chiller system to remove water vapor and COCs by direct condensation. Liquid streams generated will be collected gravity separated, characterized, and stored for offsite disposal. Noncondensable flow exiting the chilled heat exchanger will adsorb readily to the sorbent media.

5.8 Piping and Instrumentation Diagram

A piping and instrumentation diagram (P&ID) has been developed and is included in detailed design drawings presented in Appendix A. The P&ID depicts the major system components, valves, instruments and controls, alarms, and the locations of temperature, pressure, vacuum, liquid levels, and flow monitoring points.

In general, the major process components will be skid mounted, with local control panels on the individual skids. System control will rely on programmable logic controllers (PLCs) will be installed local to system equipment and within a central control panel. The local control panels will report in to a main PLC using a standard network communication protocol such as Modbus. Through this approach, the main PLC will monitor and control the system components based on flow, temperature, pressure, and level inputs from instruments and sensors on companion process equipment skids; the main PLC also will log the operating data for the thermal system components.

In the event of an alarm or upset condition, the PLC on the local skid where the alarm occurs will take immediate action and report the alarm to the main PLC, which then will initiate any other required actions on the other local control panels. The main PLC is equipped with dial out alarm capability to notify the system operator in the event of an alarm or upset condition. A discussion of the various control system components is included sequentially as the components occur in the process treatment system in the following sections.

5.9 Primary Vapor Treatment System

The vapor treatment system depicted on the P&IDs included in Appendix A and described above consists of the following major components:

- Nitrogen inerting system
- Vacuum blowers
- Thermal oxidizer
- Wet scrubber

A summary description of each major component is presented in the following sections. Specification sheets for each piece of equipment will be provided in the Operations and Maintenance Manual that will be prepared once

system components have been purchased (after final system design approval) and system construction is complete.

5.9.1 Nitrogen Inerting System

To ensure maximum safety during ISTT operations, the caisson headspaces will be swept with nitrogen gas to maintain an oxygen-depleted environment to eliminate the risk of combustion. A set flow rate of nitrogen will be introduced into the caisson headspaces via a distribution network to ensure proper mixing and circulation of the carrier gas inside the caisson. Nitrogen will be injected in two locations along the caisson edge to promote distribution within the headspace. To further aid distribution, nitrogen injection will occur over the vertical thickness of the caisson headspace using screened points as depicted in Drawing C102. The caisson is a sealed chamber with gaskets placed on matting surfaces and so leakage into the caisson is expected to be minimal. Since the nitrogen inlet is the only source of vapor into the caisson, the entire vapor space will be filled with nitrogen thus minimizing the potential for short-circuiting.

The nitrogen will be pre-heated by an in-line duct heater before introduction to the caissons to prevent cooling and condensation of steam and contaminant vapors. A slight vacuum will be established within the caisson by the process blowers to remove generated vapors and heated nitrogen sweep gas. The “inerted” vapor streams from both caissons will be collected in a main vapor header.

The nitrogen delivery system will consist of a skid- or trailer-mounted liquid nitrogen storage tank with sufficient capacity for a minimum of 3 days of continuous operation. The storage tank will be coupled with a heat exchanger that will vaporize the cryogenic liquid nitrogen supply and generate a pressurized gas supply line for use at the caissons.

The nitrogen supply pressure, the caisson delivery flow rate, vapor temperatures within the caissons, and oxygen levels in the vent streams will be continuously monitored by the control network. Alarm conditions based on these monitored parameters will trigger an immediate shut down of heater operations.

The inerted vapor stream will be blended with dilution air immediately before introduction to the thermal oxidizer. The ratio of dilution air added to sweep gas will be within the 20:1 to 40:1 range depending on the stage of the project. An oxygen sensor will be used to ensure sufficient air is introduced into the process stream so oxygen levels sufficient to support combustion in the oxidizer are maintained. Additionally, an energy density meter will be used to ensure the vapor stream is maintained below the safe operating limit of 50 percent of the lower explosive limit (LEL) at the oxidizer inlet in accordance with NFPA 86 (Standard for Ovens and Furnaces). The LEL meter also includes alarm interlocks for high level, warning notices for approaching high level, and alarm interlocks for a high rate of change observed in LEL concentration.

5.9.2 Vacuum Blowers (B-101 A/B)

Duplex blowers will provide the pressure gradient required to remove the inerted vapors from the caissons, add a controllable amount of fresh air to the inlet vapor stream, and push the vapor stream through the thermal oxidizer and wet scrubber. The duplex blower configuration was selected so only one blower is required during full operation, while the other is kept in standby mode as a backup. Each blower will have its own discharge silencer, pressure relief valve, monitoring gauges, and vacuum transmitter. The blowers are positive displacement rotary lobe blowers capable of 1,000 cubic feet per minute (cfm) at 10 inches water column (wc) vacuum and up to 50 inches wc pressure. Each blower has its own variable frequency drive (VFD) to provide the greatest operational flexibility, including a closed loop (forward feedback) control to maintain constant vacuum conditions for inlet air and vapor extracted from the caissons.

5.9.3 Thermal Oxidizer and Exhaust Gas Heat Exchanger (V-101 and E-103)

The thermal oxidizer (V-101) is the primary component of the vapor treatment system. The proposed unit is a nominal 1,000 scfm oxidizer with quench and caustic scrubber, with rated benzene DRE of 99.99 percent at 1,500°F. The thermal oxidizer is a portable and self-contained direct-fire thermal oxidizer manufactured by Soil-Therm Equipment, Inc. and requires a minimal spatial footprint for installation. The thermal oxidizer will combust hydrocarbons and sulfur compounds extracted from the caissons yielding primary byproduct components of

carbon dioxide, water vapor, hydrogen chloride gas, and sulfur dioxide. The oxidizer's combustion chamber provides required turbulence for mixing, sufficient retention time, and 1,500°F to 1,800°F operating temperature. However, based on manufacturer's performance recommendations, the oxidizer will be operated at 1,600°F. Because of the limited availability of natural gas at the Site, liquid propane gas will be used as supplemental fuel for the oxidizer. Bulk propane will be stored in a 1,000-gallon tank in an area north of the water treatment plant. Three 100-gallon tanks, which are integral to the oxidizer trailer will be used for secondary storage and shall serve in reserve capacity in the event inclement weather interrupts bulk delivery to the primary storage vessel. These tanks will provide between 3 and 7 days of supplemental fuel for full thermal oxidizer operation. A vapor-vapor exhaust gas heat exchanger has been integrated into the thermal oxidizer design to recover energy and reduce the propane fuel usage.

5.9.4 Wet Scrubber (A-101)

The byproducts of the thermal oxidizer combustion include hydrogen chloride gas and sulfur dioxide. Both byproduct gases will be removed from the vapor stream and transferred into a liquid state with water and caustic soda introduction to a wet scrubber (A-101). A venturi quench will be used to reduce the high temperature of the oxidizer exhaust gases to under 200°F before entering the primary scrubber absorber. The primary scrubber absorber is a counter-current packed column. The column will use circulated water from the high flow liquid volume from the sump of the scrubber. Acid gases present in the thermal oxidizer exhaust stream will be neutralized with a 25 percent NaOH solution to produce a spent caustic solution consisting of sodium hydroxide, sodium chloride, sodium sulfite, sodium bisulfate, and sodium sulfate. The NaOH will be stored in a chemically rated tank (T-102). A closed loop (feed forward) control from a pH transmitter and pH controller will dictate the feed rate for the NaOH solution. The scrubber pH controller will automatically maintain the pH in the scrubber sump between 5.5 and 9.0 SU. Caustic will be stored in a tank and delivered to the scrubber recirculation lines by a chemical feed pump.

The scrubber sump solution will be discharged to T-109 (i.e., blown down) on a regular schedule to maintain total dissolved solid levels in the circulating loop within an acceptable range. The salinity of the wet scrubber recirculation liquid will be controlled by removing and replacing the concentrated salt solution with fresh water as needed (from water tank T-111). At peak extraction and COC production, it is estimated that up to 1,300 pounds per day of dissolved salt could be generated as a result of the neutralization reaction in the scrubber. Lower make-up flow rates would be required during periods of lower COC loading. The anticipated removal efficiency for the wet scrubber is 99 percent for hydrogen chloride gas and 90 percent for sulfur dioxide. The scrubber sump blowdown will be stored in the liquid treatment system discharge tank T-109 before offsite disposal.

5.10 Water Collection and Treatment System

Liquid generated by the MPE wells, condensate collected from vapor conveyance system low points, and blowdown from the scrubber will be routed through the components described below before onsite storage and final offsite disposal. The major components of the water collection and treatment system depicted on the PFD and described below consist of the following:

- Pneumatic pumps
- Duplex bag filters
- Organo clay filtration vessel
- Caustic injection system
- Discharge tank

5.10.1 Pneumatic Pumps

Pneumatic pumps will be installed at the MPE wells to extract groundwater from within the TTZ to dewater the caissons and maintain hydraulic control during the thermal remediation process. Extraction pumps will be high temperature ARO double-diaphragm or similar pneumatic pumps located at the surface with a suction hose down well to enable easy maintenance, rated for an operating temperature of at least 93 ˚C (200˚F).Although the

primary COC removal mechanism will be through volatilization, not direct pumping, the pump was selected to enable accumulated liquid, if present, to be removed from the sump at the base of the MPE wells.

The pump type will be specified to deliver at least 3 gallons per minute (gpm), with as little as 6 inches submergence of the pump intake. The pump body is non-metallic, constructed of Kynar or similar and Teflon and/or Viton internal components. The extraction pump intake will be suspended in the MPE wells. Non-metallic Teflon or similar tubing will be used for the intake, liquid suction, and discharge lines. The air supply line will be 0.5 inch metallic with flexible hose connections to the pumps.

5.10.2 Bag Filters (FX-101A/B)

The primary purpose of the bag filters is to capture particulate matter that may be entrained in the groundwater pumped from the treatment volume. This particulate capture helps protect the remaining pieces of process equipment in the liquid process train from abrasive action or plugging. A Rosedale Model 6 (or similar) bag filter skid will be installed upstream of the organo clay filters to remove silt and sediment pumped from the MPE wells, before entering the liquid chiller. Pressure indicators are located at the inlet and outlet of the bag filters to determine when the filter bags need to be changed.

5.10.3 Chiller Package (Y-101)

A package liquid chiller system (Y-101) will provide the cooling load for the vapor condenser heat exchanger used in the bypass VTS. The chiller will provide 40°F noncontact cooling liquid (e.g., propylene glycol) to cool and condense the passively vented vapor stream such that water and the COCs with lower vapor pressures are removed from the vapor. The chiller's cooling load requirement will be 15 tons. A flow meter provided on the cooling water supply side will be used to monitor flow of cooling water to the system.

5.10.4 Organo Clay Filtration (T-105)

Following filtration effluent from the bag filter array will undergo a second filtration stage through a packed bed vessel containing activated organo clay media. Liquid filtration by organo clay is intended to remove NAPL captured by the multiphase extraction wells installed within the caisson or the caisson annulus. Effluent from the clay filtration will be directed to the discharge tank for storage prior to offsite disposal

5.10.5 Caustic Injection System (T-108)

Liquids pumped directly from the caisson area may be acidic because of the presence of sulfuric acid historically used in coal oil refining operations. To protect the bag filters (FX-101A/B), the clay filtration vessel (T-105) and the discharge tank T-109 from acid corrosion attack, NaOH will be metered into extracted liquid before its introduction to the bag filter array to raise the pH and reduce corrosion concerns. As required by temperature conditions, a caustic blend which includes NaOH and potassium hydroxide may be supplemented for improved freeze protection. Caustic will be metered from storage totes or drums by feedback from a pH transmitter and controller.

5.10.6 Liquid Discharge Tanks (T-106 and T-109)

Two liquid discharge tanks are integrated to the process design. Each vessel is intended to store liquids with different physical and chemical characteristics that may be generated through specific operations in the pilot study treatment processes. Liquid discharge tank (T-106) is an 8,000-gallon fractionation tank that will be staged west of the existing WWTP; this vessel will be used to store liquids generated during blowdown of caustic scrubbing tower (A-101). Liquid discharge tank (T-109), staged in the same area as T-106, is also an 8,000-gallon fractionation tank; this vessel will be used to store liquids extracted from the MPE wells installed in each of the caisson test cells and surrounding annular spaces. Both tanks will be sampled and emptied as needed to retain sufficient storage capacity. Water accumulated in each tank will be independently offloaded to tanker trucks for offsite disposal. Both discharge tanks will be fitted with high-level alarms, and the operator will record the liquid levels manually each day.

5.10.7 Steam Boiler (V-102)

A small, portable, propane gas-fired (or electrically powered) steam boiler will be used as a contingency if steam injection into the TTZ is required. The steam generator will be capable of producing a maximum of 90 pounds per hour of steam.

5.11 Expected Water Production Rates

The projected nominal flow rates and total system discharges are shown in Table 5-4.

TABLE 5-4
Projected Nominal and System Design Flow Rates
100 Percent Design of Pilot Study for OU 8

Source	Projected Nominal Flow (gpm)	Maximum Estimated Discharge (gallons)
Extracted from MPE wells	0.44	60,826
Steam condensate	0.06	8,294
Scrubber blowdown	1.00	138,240
Total estimated discharged rate	1.50	207,360

5.12 Contingency Vapor Treatment System Components

The proposed VTS has a number of integrated contingency systems that will provide for continued soil vapor and water extraction/treatment during circumstances of uncontrolled power disruption and/or periods of required system maintenance. In general, the thermal oxidizer is intended to run continuously during the approximately 4-month pilot study and will not be purposefully shut down, unless maintenance is required under the manufacturer's service schedule or operational anomalies in the equipment cannot be corrected with the unit in service. If thermal oxidizer shut down is necessary for any reason, operating heaters within the caisson also will be shut down. In stopping the input of energy to the impoundment materials, energy for contaminant vaporization and boiling also is terminated, which will reduce the contaminant loading rate to the contingency vapor treatment equipment.

Specifics regarding contingency system components are described below.

- Condenser heat exchanger
- Chiller
- Moisture separator
- Sorbent media vessels

The contingency vapor treatment system is intended to provide short-term passive treatment in the event of oxidizer shutdown; as described previously, bypass treatment will not occur during active heating (i.e., caisson heaters will be shutdown). Bypass system operation is intended only for the duration in which positive pressure generated by steam production occurs in the caisson. As such, the driving forces for vapor conveyance to the chilled condenser is pressure that may be present in the caissons and vacuum generated by the corresponding vapor volume reduction upon condensation. When pressure generation in the caisson subsides (after heater shutdown), each test cell will be manually isolated from the bypass system. Vapor will be "shut-in" the caisson and pressure monitored. If caisson pressure exceeds a defined threshold, the bypass system will be reactivated for pressure relief. When activated and in the absence of continued energy input from the heaters, it is expected that passive vapor flow will cease after a few hours of cooling.

The operational duration of the contingency VTS is limited. As such heating operations (and energy input) within the test cells will be suspended automatically in the event the primary VTS is shut down. Energy input to the test

cells also would be controlled through heater shutdown in the event that utility supplied power to the site is lost or a shortage of project consumables (e.g., nitrogen, caustic, or propane) used in the operation of the primary VTS occurs.

5.12.1 Condenser Heat Exchanger (E-101)

A pre-chilled graphite heat exchanger will be maintained during operations. This design provision will enable an immediate change over to the backup VTS if required. Upon disruption and/or failure of the primary VTS, nitrogen sweeping of the caisson vapors will cease (restart of the primary VTS will include the restart of the nitrogen sweep). Vapors will passively vent through the condenser, which will greatly reduce the quantity of COCs in the vapor stream. COCs with high vapor pressures such as methane, ethane, propane, and hydrogen sulfide will not be effectively removed from the vapor stream via condensation alone.

5.12.2 Moisture Separator (T-110)

Liquid condensate will be removed from the cooled air stream exiting the heat exchanger in a moisture separator. The separator is designed to hold 200 gallons of condensables. The condensables will be manually pumped out on a regular basis, drummed, characterized, and shipped for offsite disposal.

5.12.3 Sorbent Media Vessels (C-101/102)

The contingency sorbent media system will consist of two vessels of impregnated zeolite configured and piped to operate in a lead/lag scenario. The first absorber will contain a zeolite media structure impregnated with cetyl trimethyl ammonium chloride to target adsorption of BTX, and other VOCs. The second absorber contains a zeolite structure impregnated with potassium permanganate to target adsorption of hydrogen sulfide. COCs that will only be removed in small concentrations by either adsorber are methane, ethylene and propane. As stated previously, vapor granular activated carbon will not be used for a vapor treatment contingency because of the potentially high levels of COCs that may be adsorbed to the media during a primary VTS shut down and may cause a carbon fire.

5.13 Control Systems

The control systems are addressed sequentially through the process. It should be noted that the control system that will be employed is of a peer-to-peer PLC control design. PLCs will be strategically located throughout the process system on individual skids and will respond to local conditions independent of each other. Data from each controller will be shared across a data network with a central data collection PLC to provide operational data to TerraTherm operators, the lead project engineer, and project manager. In cases of specialized control, such as caustic pumps, a special controller may be used to improve performance. Control panels and instruments will be rated for outdoor use and fitted for winter operation. PLC panels will be located in nonhazardous locations and will contain approved intrinsically safe barriers and approved conduit seals for the field applied input-output devices and instruments. Instruments applied to the hazardous locations will be approved for use and with the approved barriers.

This approach has been used successfully on all of TerraTherm’s ISTT projects implemented since the inception of the company more than 13 years ago. The entire design and control system, including: sensors, switches, valves, pipes, tanks, pumps, motors, and the programming logic for operations, alarms, and shut downs have been and will be subjected to a Hazard and Operability (HAZOP) review. The first step is to break down the design into individual elements and “nodes” (e.g., caisson equipment or thermal oxidizer) and then evaluate, in detail, each specific component that is essential for the safe, effective, and efficient operation of the system. The objective of the process is to identify potential significant flaws in design and/or operations and correct them before the system becomes operational.

Beginning at the caissons, normal operation includes the heater operating internal to the treatment area while nitrogen from a liquid storage tank and vaporizer assembly is metered into each caisson as a sweep gas. The heaters can only be energized if the primary vapor treatment system is free of alarms and warnings, and is in full operation of redundant components and instrumentation. The heaters will not run if grid power is lost. For primary VTS operation, the extracted vapors from both caissons must have an oxygen content of less than

10 percent (as volume) and the equivalent LEL VOC concentration of the combined caisson streams when mixed with ambient air near the blower intake must be below 50 percent. The oxygen content will be measured continuously with an oxygen analyzer for each caisson. The combined equivalent LEL from the diluted caisson vapors at the thermal oxidizer will be measured continuously with a flammability analyzer. The addition of ambient air adds needed oxygen (for oxidizer combustion) and reduces the combustion energy density in order for the flammability analyzer to function correctly. A second flammability analyzer to continuously measure the LEL level after the sweep gas is mixed with ambient air before the process blower also will be integrated. The flammability analyzers will be calibrated to 1.15 percent (volume) ethylene as 50 percent LEL. Ethylene is one of the 23 identified COCs. It also is the compound with the lowest combustion energy per LEL percentage, making it the most conservative calibration gas choice. A LEL level above 50 percent will generate an alarm condition and signal the oxidizer and scrubber to go into a standby mode.

The oxidizer and scrubber have the requirement of operating on ambient fresh air to allow for startup and standby modes. During startup mode, the oxidizer will not have sufficient combustion process temperature to assure proper treatment of the COCs. During standby mode, the oxidizer and scrubber are functioning correctly but a potentially unsafe condition may exist between the caisson and the process blowers. In either the startup or standby mode, the process blowers will be isolated from the caisson with a fail-close valve and only fresh ambient air will be fed through the process blowers from a fail-open valve. Run mode can only be achieved if the caisson vapor meets the conditions of low oxygen content and low equivalent LEL, confirmed with the two oxygen analyzers and two flammability analyzers.

The oxidizer/scrubber is provided by a manufacturer who has decades of experience with the control and related safety code and regulations. The control between the scrubber and oxidizer is provided by one common PLC.

The backup vapor treatment system was designed to remove potential ignition sources including elevated surface temperatures, electrical discharge or moving/powered components in the vapor stream. The backup vapor treatment system is designed to be passive and is only intended to run during failure of the thermal oxidizer. The chiller will be operated continuously during the project to keep the condenser heat exchanger cold for immediate use as backup for the primary VTS. Without a fully functioning chiller, the heaters will not be energized. Nitrogen sweep gas will be used to inert the pipes from the caissons to the process blowers in the event the contingency VTS is no longer needed and during startup and transition to the primary VTS.

The liquid treatment system is designed to operate independently of the vapor treatment system. The liquid treatment system’s main components are double-diaphragm extraction pumps, filtration, pH neutralization and a bulk storage tank. The major elements of the liquid treatment system controls are associated with pH neutralization to and level control in the discharge storage tank. Level controls and alarms will be integrated into storage vessels associated with treatment equipment operations.

SECTION 6

Solidification and Stabilization Design

As part of the solidification and stabilization design, three processes are involved: homogenization, pH adjustment, and ISS. ISS operations will be conducted in two of three pilot study cells installed (Test Cell 1 and Test Cell 3). This section outlines technical details of pilot study ISS design and implementation strategy.

6.1 Technical Approach

6.1.1 Mixing Equipment

Reagents for pH adjustment, solidification, and stabilization will be added directly to the cell contents and mixed using a Delmag RH-26 auger assembly unit attached to a CAT336 tracked tool carrier. A 72-inch diameter Kelly Bar mixer head will be used for the distribution of pre-slurried reagents. The Delmag RH-26 is equipped with two gears providing modes of 28 and 55 revolutions per minute (RPM) during mixing operations. The auger mixing assembly unit will be operated at 28 RPMs during initial homogenization advancement and at 55 RPMs during vertical mixing operations and equipment removal which will be dependent on the physical composition of the impoundment material at this stage in the mixing process. Alternatively, the 28 RPM mode is determined to be acceptable for vertical mixing and tool withdrawal operations.

Homogenization of the thermally treated impoundment material is anticipated to be facilitated by the lower viscosity at temperatures between 120°F and 170°F. The Delmag RH-26 auger assembly unit is equipped with a torque feedback system that will provide continuous measurement of torque being exerted during mixing operations and a data track of the torque loads applied during homogenization and ISS mixing operations of both the hot and ambient temperature thermally treated and raw impoundment material.

During pilot ISS mixing the test cell shroud access doors will be fitted with a polytetrafluoroethylene (PTFE) material gasket seal that will seat with the Delmag RH-26 auger shaft. Negative pressure will be maintained on the inside of the shroud to capture VOCs and malodorous compounds liberated during ISS operations.

Following pozzolan mixing, the full extent of the treated material will be cored using direct push methods. Sample cores obtained after cell mixing will be cooled to ambient temperatures and extracted for analysis as described in subsequent sections below.

6.1.2 Test Cell 1 Solidification and Stabilization Only

In Test Cell 1, where the material is not thermally treated, testing will be performed with raw impoundment material for homogenization, pH buffering, and pozzolan addition for ISS operations in accordance with the Tier IV bench-scale ISS recipe optimization test findings. The Tier IV testing is currently underway and tests are being conducted following the *Addendum to the Laboratory Treatability Studies Work Plan for Operable Unit 8 American Cyanamid Superfund Site* approved by the USEPA on May 22, 2013 (CH2M HILL 2013c). The ISS Tier IV Optimization Treatability report is under preparation and is scheduled for completion mid- to late-October 2013.

Supplemental Tier IV bench-scale treatability studies will be conducted before the pilot study to optimize reagent recipes identified during laboratory testing completed in 2012. Tier IV testing is intended to evaluate performance improvements to reduce permeability, leaching potential, contaminant volatilization, and identify optimum recipes for treating the raw and thermally pretreated impoundment materials. Table 6-1 provides a summary of the base ISS recipes to be optimized during the Tier IV study.

TABLE 6-1
Tier IV Stabilization and Solidification Study Reagent BASE Recipes
100 Percent Design of Pilot Study for OU 8

Sample Type	De-emulsification	pH Buffering	Pozzolan	Remix/ Stabilization
Imp 2 Raw		6% Hydrated Lime/ 15% H_2O	33% Clay / 23% LN / 15% Omni FBC	10% LPC / 8% H_2O
Imp 2 Raw		6% Hydrated Lime/ 15% H_2O	30% Clay / 38% LN	10% LPC / 8% H_2O
Imp 2 TT	30% HiCal LKD / 30% H_2O		15% H_2O / 12.5% LPC / 15% Omni FBC	10% LPC / 8% H_2O
Imp 2 TT	30% HiCal LKD / 30% H_2O		15% H_2O / 17.5% LN	10% LPC / 8% H_2O

Note:
FBC = fluidized bed combustion ash; LN = LaFarge NewCem; LPC = LaFarge Portland cement; LKD = lime kiln dust

The ISS process is a stepwise approach and will be conducted as follows:

- Water cap removal - Remove water remaining within the test cell. This step is necessary because during the treatability study, the Impoundment 2 model water cap was not miscible with the impoundment materials and the additional water can interfere with the chemistry of the pH adjustment agents and pozzolans.
- Homogenization and pH adjustment - A Delmag RH 26/Cat 336 or equivalent auger mixing unit will be used to conduct the homogenization and pH adjustment step. A pH adjusting agent consisting of hydrated lime will be introduced during the homogenization process through the Kelly bar assembly. The mass of lime introduced will be equal to 6 percent of the total mass of material to be treated. This mixture will be allowed to fully react and samples of the material will be collected for pH testing before initiation of pozzolan addition to solidify and stabilize the materials. The VOC collection and treatment system used under the ISTT operations will remain operational and staffed throughout all ISS operations within the caisson test cells.
- Pozzolan addition, mixing, and sampling - After pH adjustment has been verified, pozzolan will be added through the Kelly bar assembly and the material will be mixed until thoroughly blended. A full-depth vibracore sample will be obtained from within the caisson approximately 24 hours following mixing and will be retained for subsequent screening at 1, 3, and 7 days for apparent strength using a pocket penetrometer. Samples for UCS measurement will be collected from the vibracore in accordance with the sampling and analysis plan.
- Material excavation - After approximately 7 days, the solidified material will be excavated from Test Cell 1 using a bucket auger. This material will be placed into a rolloff container with a tight-fitting cover and staged within the secured laydown area immediately north of Impoundment 2.
- Secondary pozzolan addition – Following excavation, secondary pozzolan reagents will be added to the excavated Test Cell 1 material. The reagents and supplemental water will be added to the Test Cell 1 material within the rolloff container and mixed using an excavator bucket. Following pozzolan addition and mixing operations, the rolloff container will be covered with a fabric tarp “bonnet” to contain any potential fugitive emissions. Predicated upon bench-scale treatability evaluations securing headspace samples, it is anticipated that a small blower skid equipped with two 55-gallon vapor phase carbon packs will provide sufficient treatment capacity for the 28-day cure-out period.
- Ambient air in the work area (Impoundments 1 and 2) will be monitored for total VOCs and hydrogen sulfide continuously. Baseline sampling will be conducted in the work area and at perimeter monitoring locations approximately 1 week before the startup of the heaters for ISTT operation. During the pilot study, ambient air in the work area and perimeter monitoring locations will be monitored continuously using a PID and Jerome hydrogen sulfide detector. Samples will be collected for laboratory analysis every 3 weeks once the treatment system has started. Finally, one set of samples will be collected after the completion of the pilot study. CH2M HILL will conduct stack testing during the pilot study to assess compliance to NJDEP reporting

thresholds for hazardous air pollutants and to evaluate treatment system performance. Additional details regarding air monitoring activities are available in the following documents: Section 13.1 of the Health and Safety Plan (HASP) (CH2M HILL 2013d), Sampling and Analysis Plan (CH2M HILL 2013e), and Perimeter Air Monitoring Plan (CH2M HILL 2013f).

- Characterization and disposal - Following completion of the 28-day cure-out period, waste characterization samples will be collected and the results will be evaluated to determine disposal options.

A detailed list of analysis is presented in Table 6-2.

TABLE 6-2
Core Sampling Approach
100 Percent Design of Pilot Study for OU 8

Cell	Sample Step	Time Interval	Hand Penetrometer	UCS	VOCs	TCLP	SPLP	ANSI 16.1 Monolithic Leaching	USEPA Paint Filter	TSDF Waste Characterization Profile
1	After pH buffering and initial pozzolan addition	24 hours	X							
		72 hours	X							
		7 days	X							
		14 days	X	X						
		28 days	X	X	X		X	X	X	X
1	After material removal and secondary pozzolan addition	24 hours	X							
		72 hours	X							
		7 days	X							
		14 days	X	X						
		28 days	X	X	X	X			X	X
2	After material removal	24 hours	X							
		72 hours	X							
		7 days	X							
		14 days	X	X						
		28 days	X	X	X	X	X	X	X	X
3	After homogenization	24 hours	X							
		72 hours	X							
		7 days	X							
		14 days	X	X						
		28 days	X	X	X		X	X	X	X

TABLE 6-2
Core Sampling Approach
100 Percent Design of Pilot Study for OU 8

Cell	Sample Step	Time Interval	Hand Penetrometer	UCS	VOCs	TCLP	SPLP	ANSI 16.1 Monolithic Leaching	USEPA Paint Filter	TSDF Waste Characterization Profile
3	After Initial pozzolan addition	24 hours	X							
		72 hours	X							
		7 days	X							
		14 days	X	X						
		28 days	X	X	X		X	X	X	X
3	After material removal and secondary pozzolan addition	24 hours	X							
		72 hours	X							
		7 days	X							
		14 days	X	X						
		28 days	X	X	X	X		X	X	X

Notes:
SPLP - synthetic precipitation leaching procedure
TSDF - treatment, storage, and disposal facilities

6.1.3 Test Cell 2 Thermal Treatment Followed by Homogenization Only

Impoundment material in Test Cell 2 will undergo only thermal treatment. The stepwise approach will be as follows:

- At the end of thermal treatment period, the ISTT heating wells will be removed from Test Cell 2 and the treated impoundment material will be permitted to cool to a temperature of approximately 170°F.
- Vibracore samples will be collected using a 4-inch-diameter stainless steel sampling sleeve to secure two full-length core samples. UCS samples will be permitted to fully cure to 28 days and submitted for ASTM International UCS testing for bearing capacity.
- The ISTT equipment will be removed and the caisson cover plate used in thermal treatment (Type 3) will be replaced with the ISS cover plate (Type 1). The Type 1 cover is configured to accommodate the mixing equipment. Following installation, vapor recovery from the inner caisson and outer shroud annular space will be connected with the existing thermal oxidizer ducting.
- When internal temperatures in Test Cell 2 decrease to the 120°F range, mechanical homogenization will be performed (no reagent addition) using an auger mixer with a 60-inch-wide Kelly bar head. Following homogenization, a single vibracore 4-inch-diameter sample will be secured from the center of the caisson cell. UCS samples will be permitted to fully cure to 28 days and submitted for ASTM UCS testing for bearing capacity.
- After homogenization and supplemental cooling to below 100°F, treated material will be removed using a bucket auger. Excavated material will be placed into a covered rolloff container for offsite shipment to an industrial kiln to evaluate final disposition methods. No secondary addition of pozzolan reagents will be made to the Test Cell 2 acid tar material. Following pozzolan addition and mixing operations, the rolloff container

will be covered with a fabric tarp “bonnet” to contain any potential fugitive emissions. Predicated upon bench-scale treatability evaluations securing headspace samples, it is anticipated that a small blower skid equipped with two 55-gallon vapor phase carbon packs will provide sufficient treatment capacity for the 28-day cure-out period. The material during the 28-day cure-out period will be in a rolloff container which will be stored in the laydown area (location indicated in Drawing C-2101).

- Air monitoring activities will be as indicated in Section 6.1.2.

A detailed list of analysis is presented in Table 6-2.

6.1.4 Test Cell 3 Thermal Treatment Followed by Solidification and Stabilization

Solidification and stabilization operations will be conducted with thermally treated impoundment material in Test Cell 3. The stepwise approach will be as follows:

- Cooling and UCS testing - At the end of thermal treatment period, the ISTT heating wells will be removed from Test Cell 3 and the treated impoundment material will be permitted to cool to a temperature of approximately 170°F. Prior to homogenization, a full depth vibracore sample will be obtained from within the caisson and will be sampled for UCS in accordance with the sampling and analysis plan.
- ISS cover plate installation - ISTT equipment will be removed and the caisson cover plate used in thermal treatment (Type 3) will be replaced with the ISS cover plate (Type 1), which is configured to accommodate the mixing equipment. The exchange will be coordinated to minimize VOC emissions during the caisson cover exchange. Following installation of the Type 1 cover, vapor recovery ducting from the inner caisson and outer shroud annular space will be connected with the existing thermal oxidizer ducting. The VOC collection and treatment system used under the ISTT operations will remain operational and staffed throughout all ISS operations within the caisson test cells.
- Homogenization and pH adjustment - A Delmag RH 26/Cat 330 auger mixing unit will be used to conduct the homogenization and pH adjustment step. A pH adjusting agent consisting of hydrated lime will be introduced during the homogenization process through the Kelly bar assembly. The mass of lime introduced will be equal to 6 percent of the total mass of material to be treated. This mixture will be allowed to fully react and samples of the material will be collected for pH testing before initiation of pozzolan addition to solidify and stabilize the materials.
- Pozzolan addition, mixing, and sampling - After pH adjustment has been verified, pozzolan will be added through the Kelly bar assembly and the material will be mixed until thoroughly blended. A full-depth vibracore sample will be obtained from within the caisson approximately 24 hours following mixing and will be retained for subsequent screening at 1, 3, and 7 days for apparent strength using a pocket penetrometer. Samples for UCS will be collected from the vibracore in accordance with the sampling and analysis plan.
- Material excavation - After approximately 7 days, the solidified impoundment material will be excavated from Test Cell 3 using an auger bucket. The material will be placed into a rolloff container with a tight-fitting cover and staged within the secured lay down area immediately north of Impoundment 2.
- Secondary pozzolan addition – Following excavation, secondary pozzolan reagents will be added to the excavated Test Cell 3 material. The reagents and supplemental water will be added to the Test Cell 3 material within the rolloff container and mixed using an excavator bucket. Following pozzolan addition and mixing operations, the rolloff container will be covered with a fabric tarp “bonnet” to contain any potential fugitive emissions. Predicated upon bench-scale treatability evaluations securing headspace samples, it is anticipated that a small blower skid equipped with two 55-gallon vapor phase carbon packs will provide sufficient treatment capacity for the 28-day cure-out period.
- Air monitoring activities will be as indicated in Section 6.1.2.
- Characterization and disposal - Following completion of the 28-day cure-out period, waste characterization samples will be collected and the results will be evaluated to determine disposal options.

A detailed list of analysis is presented in Table 6-2.

6.2 Design Assumptions and Uncertainties

- ISS reagent recipes are predicated upon samples secured in 2012 and may not be exactly representative of the impoundment material layering that will be contained within the three caisson test cell columns
- Depth of impoundment materials within caisson cells following ISTT operations to be verified along with bulk density to confirm ISS reagent mass additions
- Depth of untreated impoundment materials within the ISS-only caisson cell to be verified along with bulk density to confirm ISS reagent mass addition

SECTION 7

Regulatory Framework

7.1 Regulatory and Stakeholder Group Interface

Technologies identified in this design document will be subject to applicable regulations. In accordance with Office of Solid Waste and Emergency Response Directive 9355.7.03 (USEPA 1992):

- "CERCLA (Comprehensive Environmental Response, Compensation, and Liability Act) response actions are exempted by law from the requirement to obtain Federal, State, or local permits related to any activities conducted completely onsite."
- "It is not Agency policy to allow surrogate or permit equivalency procedures to impact the progress or cost of CERCLA site remediation in any respect."

Implementation of the pilot study defined within this document is subject to federal, state, and local regulations. The design will comply with the substantive requirements established by:

- USEPA and the Code of Federal Regulations
- NJDEP and the New Jersey Administrative Code (NJAC)
- Bridgewater Township and established Administrative Articles

In addition to regulatory oversight, the following organization also is a project stakeholder:

- CRISIS - USEPA technical assistance grant recipient

As the design and supporting concepts are refined, developed, and finalized, periodic project updates and communications will be prepared to inform project stakeholders. Information updates for the pilot study may be summarized and disseminated as written technical briefs, through public meeting and presentations, or through delivery of technical documents.

7.2 Permits

Permit equivalencies considered potentially applicable for implementation and operation of the pilot study are summarized in the following sections.

7.2.1 Air Permit Equivalency

The pilot study is expected to be eligible for air permitting equivalency as an environmental improvement pilot test (EIPT). An EIPT is regulated under NJAC 7:27-8.1, and the eligibility requirement is as follows: the project must be a sampling and analytical program using prototype equipment or processes on a temporary basis for the purpose of collecting data necessary for the design of a full-scale process to achieve an environmental improvement or for the purpose of determining the feasibility of using the equipment or process for a particular environmental improvement. The EIPT air permit (or its equivalent) is approved for 90 days of operation, and a one-time extension of an additional 90 operating days is possible. A pre-application meeting with NJDEP was conducted on February 21, 2012, to further evaluate the eligibility of the project for the EIPT air permit based on the 30 percent design.

As a result of the pre-application meeting, it was agreed that an application for an EIPT permit equivalency for the ISTT portion of the pilot study will be submitted and a second application for an EIPT permit equivalency for the ISS portion of the pilot study also will be submitted. If the ISTT portion of the pilot study is projected to extend beyond the 90-day period covered by the permit equivalency, an extension for the ISTT EIPT permit equivalency will be submitted. The ISTT EIPT permit application was submitted to USEPA and NJDEP for review on May 21, 2013.

7.2.2 Flood Hazard Permitting Equivalency

Within New Jersey, the flood hazard area is the area that is inundated by the flood hazard area design flood, which is equal to the 100-year flood plus a factor of safety to account for possible future increases in flows because of development in non-tidal areas. The flood hazard area is the land, and the space above that land, that lies below the flood hazard area design flood elevation. Structures, fill, and vegetation that are situated on land that lies below the flood hazard area design flood elevation are described as being within the flood hazard area. The flood hazard area is comprised of a flood fringe and a floodway.

The Federal Emergency Management Agency (FEMA) has prepared a flood hazard map for the Site (FEMA 2007) that depicts the entire portion of the South Area of the Site within the flood hazard area (Figure 7-1). The area immediately south of the southern berm of Impoundments 1 and 2 is within the floodway, and the area north of the southern berm of Impoundments 1 and 2 is within the flood fringe. The entire project will be completed within the flood fringe portion of the flood hazard area. Based on the design completed to date, construction activities in the flood hazard area will require an individual flood hazard permit equivalency under NJAC 7:13-11.

A Flood Hazard Area (FHA) permit equivalent application for the pilot study was submitted to USEPA on March 12, 2013. The application was approved and the permit equivalent was issued by USEPA on April 22, 2013.

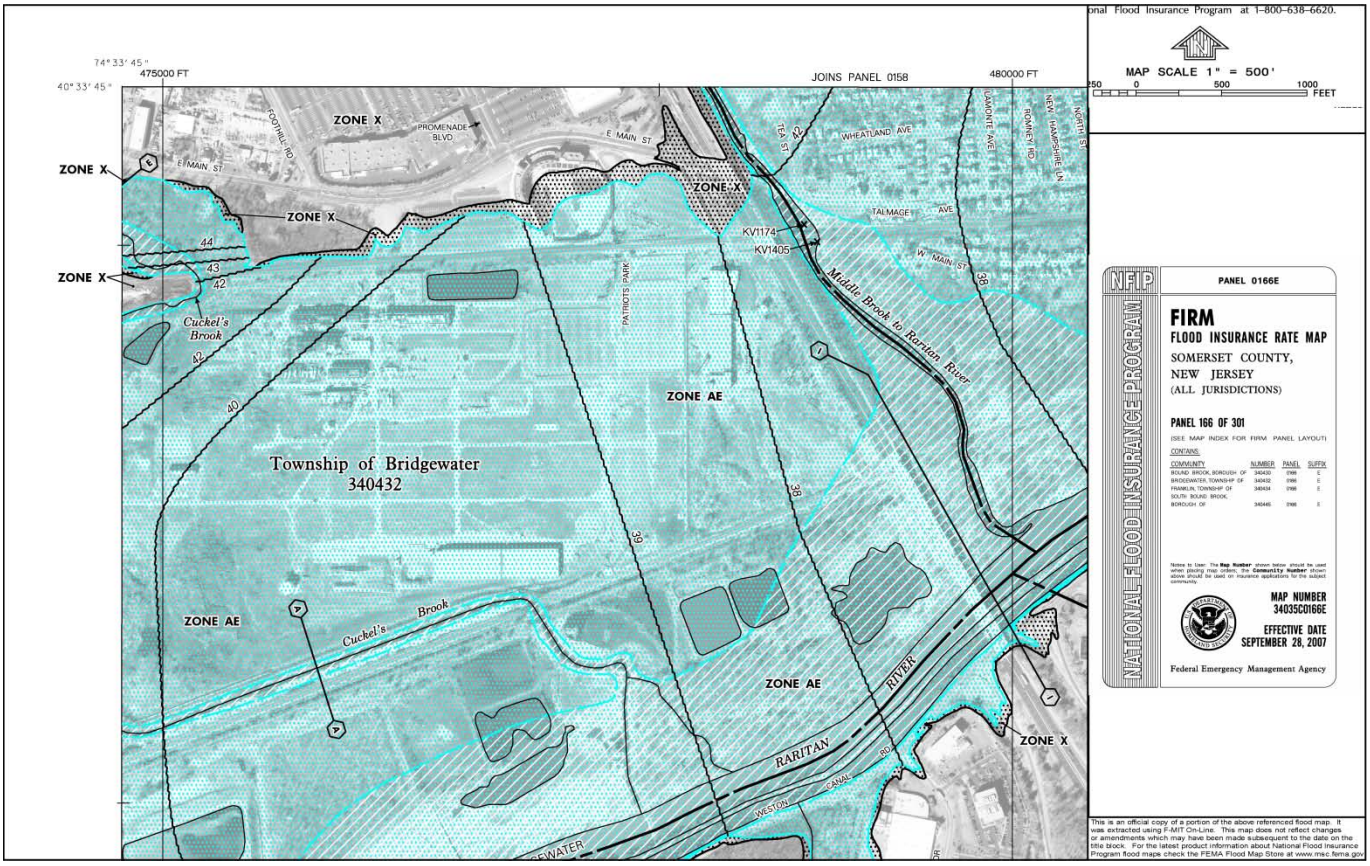

FIGURE 7-1
Flood Insurance Rate Map

7.2.3 Wetlands Permit Equivalency

Construction activity in wetlands within New Jersey is regulated under NJAC 7:7A. NJDEP provided Pfizer with an Authorization for Fresh Water Wetlands Letter of Interpretation Extension dated December 12, 2011. This letter provides interpretation of the extent of wetlands of ordinary, intermediate, and exceptional resource value across the entire Site. Wetlands of intermediate and exceptional resource value were determined to be located in the vicinity of Impoundments 1 and 2. Under NJAC 7:7A-2.5(e), a 50-foot transition zone is required for wetlands of intermediate resource value and a transition zone of 150 feet is required for exceptional resource value wetlands.

Thermal treatment activities are not planned to be conducted in the wetland or the transition zone, and therefore, a wetland permit equivalent will not be required for thermal treatment work.

7.2.4 Local Permit Equivalency

Soil disturbance is the only local permit identified as potentially applicable to activities associated with the pilot study and is regulated in Bridgewater Township under Article XXXVI. A soil erosion and sediment control plan is required for any project causing a soil disturbance of more than 5,000 square feet. The plan is reviewed, approved, and certified by the Township Engineer or by the Somerset-Union County Soil Conservation District. At the current stage of design, disturbance of more than 5,000 square feet of soil is not anticipated.

7.3 Liquid Handling

Pilot study operations are projected to produce liquids from the following origins:

- Condensate produced from vapor and steam extracted from the test cells
- Water extracted from the test cell inner caisson
- Water extracted from the outer caisson annulus
- Blowdown from the thermal oxidizer exhaust gas caustic scrubber
- Stormwater

Water or recoverable NAPL collected from the MPE well in the inner caisson will be directed to liquid storage tanks on the bench for offsite recycling, reuse, or disposal. Except for stormwater, other liquids produced will be collected in an onsite frac tank, the contents of which will be disposed of offsite as necessary.

Stormwater collected from the bench containment area will be directed into Impoundment 2. There is a likelihood of seepage of impoundment surface water into the outer caisson annulus or the treatment cell. The water from the annulus also will be recycled back to Impoundment 2 without treatment. The Sampling and Analysis Plan, which is being prepared, will present details regarding cap sampling procedures for discharge back to the impoundment. If infiltration flow is significant or requires treatment before discharge, provisions for a liquid treatment system may be integrated to the pilot study.

Additional liquids that may be generated during decontamination operations and handling, and disposal procedures for these liquids will be provided in the WMP.

7.4 Waste Management

Specific procedures that will be taken to properly comply with applicable waste storage, handling, and disposal regulations will be provided in the WMP. The following provide general review of the waste procedures.

In parallel with the pilot study, disposal options for treated residuals including organic condensate and solids extracted from the treatment cells will be explored. In support of the disposal option analysis, some or all of the streams generated may be directed to offsite facilities that are permitted to recycle or reclaim energy that remains in the liquid or solid stream. Chemical composition of both the liquid and solid streams generated by treatment cell operation will dictate the most viable method for material reuse or reclamation. Until composition of treated residuals can be confirmed with greater certainty, it is not possible to identify final disposition of streams generated during pilot treatment operations.

If chemical characteristics render some or all of the material generated by pilot study unsuitable for reuse or reclamation, treated material generated during pilot study operations will be stored, transported, and disposed offsite in accordance with local, state, and federal requirements.

Materials generated during the thermal remediation process may include the following and are anticipated to be handled as indicated:

- Recovered NAPL – collected in the contingency VTS and shipped offsite for appropriate disposal
- Liquid condensate – processed through the filtration system and shipped offsite for appropriate disposal

- Brine blowdown from the wet scrubber – collected and shipped offsite for appropriate disposal
- Spent media (e.g., backup vapor treatment system sorbent media, filter bags) – shipped offsite for appropriate disposal or regeneration (by material manufacturer or supplier)
- Decontamination fluids – processed through the filtration system and shipped offsite for appropriate disposal
- Used personal protective equipment – shipped offsite for appropriate disposal
- Normal construction debris – offsite landfill
- Absorbent booms, pads or potentially water derived from water cap

Materials collected from the contingency VTS will accumulate onsite in appropriately designed storage vessels with secondary containment provisions. When enough material has accumulated in these vessels, samples will be collected and shipped to an analytical laboratory for waste characterization purposes. Based on this characterization, treated materials will be shipped offsite to an appropriately licensed waste storage and disposal facility approved by USEPA.

Liquid condensate will also be stored in vessels with secondary containment and level monitoring/alarm systems. Treatment/disposal will be managed at an appropriately licensed offsite disposal facility.

Spent media that may have been in contact with Site COCs will be managed properly. The materials will be sampled, profiled, and disposed of at a properly licensed disposal facility.

Non-impacted construction and office waste will be shipped offsite to an appropriately licensed waste transfer station for recycling/disposal as required.

SECTION 8

Health and Safety

CH2M HILL has developed a Site-specific HASP (CH2M HILL 2013d) to ensure onsite workers and visitors are protected. In addition, all work will be done in accordance with the Site-specific Master HASP. Subcontractors supporting pilot study design, construction, implementation, operation, and demobilization activities including but not limited to TerraTherm, RECON, and other subcontractors also will develop Site-specific HASPs and be provided copies of the AOC. At a minimum, subcontractor plans will meet the requirements of CH2M HILL's HASP and will address specific hazard mitigation and control measures related to implementation of services or treatment technologies.

8.1 Activity Hazard Analyses

Activity Hazard Analyses (AHAs) will be developed to address potential health and safety hazards and control measures for the various work tasks associated with construction, operation and demobilization phases of the project. An AHA will be developed for any unanticipated task or activity or if a significant change in means or methods is required in response to field conditions. Representative AHAs slated for development include but are not limited to:

- Site preparation
- Hot work
- Crane lifting plans
- Over-water operations
- Water safety
- Corrosive materials

8.2 Thermal Treatment Operations

TerraTherm will develop a technology and process-specific HASP in advance of field construction and pilot-scale operations. As required, this section of the basis of design will be updated to document specific features, approaches or contingency plans developed in support of field demonstration.

8.3 Solidification and Stabilization Operations

RECON also will develop a technology-specific HASP in advance of field construction and pilot-scale operations. This section is reserved for future integration of Site-specific safety features that will be implemented during the field-scale demonstration.

SECTION 9

Pilot Study Operations

In preparation for field construction, a Site-specific Work Plan will be developed. Additional information for operators also will be developed to guide operations, sequence activities, and detail materials, methods and approaches for implementation of the pilot study. In advance of fieldwork plan development, this section is intended to provide an overview of the basic tasks which will be conducted following completion of field construction activities.

9.1 Readiness Review

Before operations begin, a readiness review meeting and inspection will be held at the Site. The following will be performed:

- Review of Site-Specific Work Plan
- Review of HASP, job hazard analyses
- Review of Perimeter Air Monitoring Plan
- Review of Emergency Preparedness and Contingency Plan
- Review of Sampling and Analysis Plan
- Review of Quality Assurance Project Plan
- Waste Management Plan

9.2 Caissons and Flexifloat Platform

9.2.1 Commissioning

Following installation of the Flexifloat and caissons, CH2M HILL field staff will perform a thorough evaluation of the construction and placement of the platform and pilot study cells. Activities will include:

- Inspection of the Flexifloat deck to confirm that interlocking float sections are seated in adjacent floats to produce a flat and uniform working/walking surface. Sections that vary in elevation large enough to constitute a tripping hazard will be corrected; elevation changes which cannot be remedied will be labeled with black and yellow stripes to alert occupants of a potential hazard.
- Visual inspection of float chamber to confirm each cell in the platform is leak free.
- Use of a impoundment berm stationed self-leveling Laser Level and laser target stadia rod mounted on the Flexifloat platform, supplemented with a vertical staff gauge or pressure transmitter to monitor impoundment water level relative to platform elevation.
- Inspection of perimeter safety rails to confirm all fasteners are installed and railing sections are positively engaged.
- Horizontal and vertical location of each test cell by a licensed land surveyor.
- Horizontal and vertical location of the work platform including anchorage points on the float and shoreline; the same method use to locate test cells will be employed.
- Inspection of all cables and fasteners used to anchor the work platform to the impoundment shoreline. The Flexifloat platform will be connected by high tensile strength Dyneema synthetic fiber rope to established anchor points; each mooring line will be tensioned using eleven 5-ton and one 10-ton deck-mounted hand winches to provide horizontal stability and to limit the potential lateral movement of the Flexifloat platform to less than 6 inches during normal operations of the pilot study.
- Inspection of caisson support frames for proper installation including fasteners; confirm floats are bearing caisson weight.

- Confirm installation of caisson cover, gasket and fastening system; for covers with doors, confirm operation of all hardware including hinges and seal engagement.
- Determine the recharge rate of the water cap in the annulus between the inner and outer caissons in each test cell.
- Before work begins, confirm appropriate number of safety floatation devices, safety lines, and other safety features are available for immediate use.

9.2.2 Operation

Operations specific to each pilot study cell are described by treatment technology in sections that follow. In general, operational requirements for the Flexifloat platform and caisson test cells are minimal and will generally consist of routine inspection and monitoring of the following items:

- Life rings, throw lines, and complementary safety equipment associated with over water work are located in their designated locations; all equipment is easily accessible, clearly marked and storage areas are free of obstructions.
- Personnel access/egress paths will be clearly noted on the platform to ensure safe movement. A prefabricated aluminium personnel gangway will be installed from the Impoundment 2 northern berm to the Flexifloat to provide on board personnel and alternative method of egress from the platform in the event the primary access ramp is not available
- Mooring anchor lines are properly tensioned and free from abrasion on float surfaces, anchorage points, or ground surface features.
- The elevation of water within the impoundment and the elevation of the work platform; measurements will be taken from known reference points established during construction of the pilot study cells.
- Confirmation that oil adsorbent booms capable of encapsulating the entire work platform are accessible and ready for immediate deployment if a spill or hydrocarbon sheen develops during the pilot study.

9.3 Thermal Treatment Operations

9.3.1 Operational Sequence

As described in Section 5, the following operational sequence has been estimated:

- 7 days of shakedown
- 24 days of heating to the boiling point
- 48 days of thermal treatment at target temperature
- 3 days for the sampling and analysis phase
- 14 days for the post-treatment vapor extraction period

The total operational duration is estimated to be approximately 90 days. In addition to this 90-day operational period, an additional 21 days of post-mixing vapor extraction has been reserved for the thermal/in-situ stabilization caisson. The total estimated operational period is approximately 90 days for ISTT, and an additional 21 days is estimated for ISS operations.

The sections below provide a more detailed description of each operational phase. The thermal heating system will be operated with the objective of optimizing the subsurface heating and contaminant removal process. The operational plan is flexible, allowing for adjustments based on observed hydraulic responses, heating progression, and contaminant extraction rates. In-situ temperatures throughout the TTZ will target the boiling point of water.

9.3.2 Thermal System Construction and Start-up

Mobilization and Site Preparation Activities

TerraTherm will mobilize staff, materials and equipment to the Site to ensure adequate and timely progress throughout the construction project. Basic mobilization and Site preparation activities include the following tasks:

- Fabricate necessary components (heaters, heater cans, any custom piping components, etc.)
- Package and crate materials (well pipes, heaters, manifold pipe, wire, etc.)
- Mobilize TerraTherm personnel
- Evaluate Site security (by others)
- Mobilize temporary facilities (office trailer, storage container, port-a-john, etc.)
- Establish exclusion zones
- Shop-test and ship TerraTherm stock equipment (electrical distribution gear, process treatment equipment, etc.)

Meeting and Readiness Review

Before operations begin, a readiness review meeting and inspection will be held at the Site. The following will be performed:

- Review of the entire Site
- Review of process treatment systems
- Review of operations plan
- Review of HASP, job hazard analyses and completion of safety checklist
- Review of detailed data collection schedule and forms
- Review of sampling and analysis schedule
- Review of staffing plan
- Discussion about uncertainties and contingencies

It is anticipated that this will facilitate start-up of the thermal remediation system a few days following the meeting.

9.3.3 Operations

Heating of the TTZ will proceed through a sequence of steps to reach the target temperature and evaluate system performance. The duration of each step will be actively evaluated, monitored, and may be modified during operations to facilitate attainment of the project objectives. The estimated duration for thermal treatment operations is approximately 90 days as follows:

- Shakedown: The shakedown period is estimated to last 7 days. During this time, hydraulic and pneumatic control will be established and the heaters will be energized at 5 to 10 percent of output to dry them and prepare them for heating. In addition, the water levels in the inner caissons will be lowered by pumping from the MPE wells.

- Heating to Boiling and 100°C Treatment: The heat-up and 100°C treatment period is expected to last approximately **70** days. During this period, it will take approximately 20 days to increase the average temperature of the TTZ to 100°C. After achieving the 100°C target temperature, thermal treatment will be continued for another 50 days. During this period, the majority of VOC constituents will be removed and treated. Very little water extraction is expected to occur as liquid by the MPE wells. Most of the water removed from the TTZ will occur because of vaporization of water during heating and extraction of steam. Some water extraction by direct pumping from the MPE wells may occur if it is required to control water levels within the inner caisson or outer shroud.

- Sampling and Analysis: The sampling and analysis phase is expected to last 3 days. During this time, continuous cores will be collected from the thermal caissons. Treated materials will be analysed for physical and chemical properties to assess compliance with the pilot study objectives.

- Post-Treatment Vapor Extraction: Following the sampling and analysis phase, a post-treatment vapor extraction period lasting approximately 14 days will commence. Subsurface cooling will be facilitated by the continued application of vacuum to the extraction wells. Ambient subsurface temperatures will not be reached but vapor generation from the TTZ will be reduced allowing for cessation of vapor treatment. Post-treatment vapor extraction will continue in the caisson designated for post-thermal in-situ stabilization. Upon completing of heating operations, vapor extraction is anticipated to continue for approximately **20** additional days for the stabilized caisson.
- Shut Down: Following the cooling period and the stabilization effort conducted for the one caisson, the system will be shut down and decommissioning will continue.

9.3.4 Shut Down

Mixing operations in Test Cells 2 and 3 will follow a time schedule dictated by temperature. Upon completion of thermal treatment, the cell contents will be allowed to cool. When Test Cell 2 reaches approximate 170°F, mixing operations will commence. After 7 days, material will be removed from the caissons using a bucket auger; solids removed will be staged for subsequent mixing and compactions study ex situ. Mixing within Cell 3 is identical to Cell 2 except ISS operations will commence in Test Cell 3 when the solids temperature is 100°F.

9.4 In-situ Solidification and Stabilization

9.4.1 Commissioning

Solidification and stabilization activities will follow in close succession to thermal treatment operations; schedule overlap especially for treatment of raw material may be considered to minimize the duration of field activities. Solidification and stabilization services for the pilot study will be provided by RECON. This teaming subcontractor will mobilize the necessary equipment and materials to the Site to support testing. Equipment mobilized will require onsite assembly by the subcontractor. Once completed, CH2M HILL field staff will perform a thorough inspection of the mixing equipment including ancillary equipment used for storage, blending and conveyance of stabilization reagents. Activities will include:

- Equipment inspection for leaking fluids including fuel, hydraulic oil, and grease
- Inspection and confirmation that all equipment guards and safety features are in place and fully functional
- Confirmation for the use of chain/ratchet load binders from Delmag RH-26/CAT 336 unit to existing Flexifloat deck-mounted hold-down pad eyes to maintain position of mixer during ISS operations
- Evidence of spill containment equipment for machinery mobilized and operated during mixing operations
- Inspection and confirmation that quick connect fittings used for material conveyance are equipped with secondary restraints; fitting locking cams are wired or zip tied to prevent accidental opening
- Ensuring proper separation of incompatible compounds
- Inspection of the connections to the vapor recovery system the ensure app connections are intact after the thermal treatment
- Inspection that containment areas for interim storage of pozzolans and pH adjusting agents are properly constructed

9.4.2 Operation

Processes for reagent addition and blending during solidification and stabilization are a combination of numeric parameter measurements and professional experience of the equipment operator. Mixing speed, shaft torque, the rate of vertical mixer movement, and reagent addition rate are some of the discrete monitoring parameters that will be recorded by field staff. During the operational period, vapor and liquid samples will be collected from the treatment system to monitor and track the contaminant mass loading and treatment system performance. In addition, temperature within the caisson headspace and impoundment materials will be monitored to track changes following addition of agents that are exothermic.

9.4.3 Operational Sequence

As described in Section 6, the following operational sequence will be employed:

- Remove water remaining within the test cell before addition of pH adjustment agents and pozzolans
- Homogenization and addition of pH adjustment agents
- Addition of pozzolan following verification of pH
- Samples will be collected at approximately 24 hours following mixing, and at 1, 3, and 7 days
- Material excavation after approximately 7 days
- Secondary pozzolan addition to the excavated Test Cell 1 material and 28 days for curing

The total operational duration is estimated to be approximately 1 month.

9.5 Decommissioning and Demobilization

9.5.1 Caissons and Flexifloat Platform

At the conclusion of the pilot study program, suitable equipment (Grove GMK54240 175 Ton All Terrain Hydraulic Telescoping Crane or equivalent) will be mobilized for removal of the caissons and Flexifloat sections. As the caisson cells are removed from their Flexifloat locations they will be encapsulated within either a plastic sleeve or wrapped in plastic sheeting in order to minimize and release of fugitive emissions from agglomerated acid tar sludge. The caisson will be removed from the Flexifloat platform and brought to an equipment decontamination containment pad for cleaning and subsequent offsite transport to a recycling facility. Currently, an organic surfactant (Citrikleen) is envisioned for use. The Flexifloat platform will be disassembled and each module section brought to an equipment decontamination containment pad area. Adhered and agglomerated material will be removed from the Flexifloat surface in preparation of return shipment to the supplier.

If the test caisson cells cannot be readily pulled from the impoundment using only lifting forces, a vibratory hammer will be employed to aid removal. Once removed from the impoundment and following cleaning and decontamination, the inner and outer surfaces of the caissons will be inspected for signs of corrosion and documented accordingly. Residual materials that adhere to the caissons after withdrawal from the impoundment will be removed, containerized, and prepared for offsite disposal. Similarly, wash water generated in caisson pressure/steam cleaning operations will be collected and containerized for disposal. Upon decontamination and confirmation sampling, the caissons will be recycled offsite.

9.5.2 Thermal Treatment Systems

Once stabilization activities are completed and vapor control is no longer required in the caissons, the conveyance piping and treatment equipment will be broken down and decontaminated with a steam cleaner before demobilization. Heaters and stainless steel liners will be removed from the well casings. Electrical equipment will be disconnected and demobilized from the Site.

9.5.3 Stabilization and Solidification

Mixing equipment mobilized will be thoroughly cleaned before leaving the Site using suitable equipment and decontamination methods including the capture and disposal of wash water, and rinsate.

9.5.4 Site Restoration

Before demobilizing from the Site, excess material, construction and demolition debris and trash will be removed from the Site and properly managed.

SECTION 10

Performance Evaluation and System Monitoring

The following sections describe the planned monitoring program for the ISTT pilot study. Data collected from these efforts will be used to facilitate control of the thermal remediation system, provide a basis for the evaluation of system performance, and support the design of the full-scale remedy. Data collected for air and material before and after sampling will be covered under the *Perimeter Air Monitoring Plan* and in the *Sampling and Analysis Plan*. These documents are under preparation and will be submitted to the USEPA for review independent of this design report.

10.1 Principles of Monitoring and Sampling

During operation, data will be collected and reviewed to track treatment progress and to allow comparison to the predicted performance, so proper operational adjustments can be made in a timely manner. Data will be recorded and provided via monthly progress reports generated from the project database accessible by the project manager, engineering team, and operations staff. These data may include:

- Energy consumption, power delivery and other utility usages
- Mass and energy balances for the subsurface volume (the two caissons)
- Subsurface temperatures
- Analytical data
- Data documenting pneumatic and hydraulic control (water levels and in-situ pressure measurements)
- Mass removal rates and cumulative totals for COCs
- Other key data

These data will be provided in weekly progress reports provided to the project team for review. The progress reports also will include energy balance and energy input plots, snapshots of subsurface temperatures, temperature versus time plots for select locations, average Site temperature versus time plot, and mass removed versus time plot.

Using these data, treatment progress can be monitored and evaluated. TerraTherm will review data and modify operating parameters, as needed, to optimize the heating pattern and enhance mass removal. Operational data from the thermal oxidizer will be recorded and used in conjunction with EIPT permit equivalent required monitoring results completed by CH2M HILL to demonstrate compliance with any operational conditions defined by the EIPT permit equivalent issued under USEPA.

To accomplish the principles of monitoring discussed above, the following categories of data collection will be performed during the ISTT pilot system operation:

- ISTT operational monitoring
- Organic chemical mass removal and system performance monitoring
- EIPT permit equivalent required monitoring
- Ambient air monitoring

Details of each of the types of monitoring are provided in the following sections.

10.2 ISTT Operational Monitoring

The purpose of operational monitoring is to collect data to evaluate system operation and determine if operational changes are required, notify operators of a condition requiring attention, and provide a means for assessing heating progress.

Experienced TerraTherm operators, with engineering staff as needed, will be onsite during the testing and commissioning phase. As the system transitions into full ISTT pilot operation mode, TerraTherm's operators will be at the Site daily, or as required for data collection, maintenance and troubleshooting. Once the system has

transitioned to ISTT operations, the Site initially will be staffed by TerraTherm and CH2M HILL 24 hours per day, 7 days per week, and as system operation progresses, requirement for staffing will be assessed and reduced.

10.2.1 Remote Monitoring

The main PLC will log selected system operating data including relevant temperatures, pressures and flows through the aboveground vapor treatment equipment, as well as the position of safety sensors and controls (e.g., pressure switches, level switches, and motor operated valves). Subsurface temperature data from the field thermocouples will be collected and logged by the PLC (or a separate temperature data collection system). The PLC and temperature logging system will be accessible remotely, allowing TerraTherm engineering and project management staff to access the PLC and observe much of the same operating information available to the field staff. Alarms and shut down conditions will result in notification of TerraTherm's operator by cell phone.

10.2.2 Flammability Analyzer

A PrevEx Flammability Analyzer (Control Instruments Corp.) will be used to monitor the concentration of flammable gas, displayed in percent of the lower flammability limit (%LFL, or %LEL) in the vapors entering the thermal oxidizer. Inerting gas (nitrogen) will be added to the system to maintain vapor concentrations less than 50 percent LEL. The flammability analyzers will be calibrated to 1.15 percent (volume) ethylene as 50 percent LEL. Ethylene is one of the 23 identified COCs. It also is the compound with lowest combustion energy per LEL percentage, making it the most conservative calibration gas choice. The flammability analyzer will allow the thermal oxidizer to operate at maximum LEL throughput (i.e., high efficiency) without compromising safety. Warning alarms will be activated before the inlet stream reaches 50 percent LEL, thus preventing fire or explosion.

10.2.3 Oxygen Analyzer

An oxygen monitoring system (e.g., Oxytron 2000 unit from Ntron division of Neutronics, Inc., or equivalent) shall be used in conjunction with the flammability analyzer, to ensure the oxygen percentage remains below 10 percent (oxygen deficient) and explosion risk is minimized to the extent possible. The unit will be capable of measuring low percent range oxygen levels in a matrix comprised of nitrogen, VOCs, and water vapor, under high temperature (up to 150°C) conditions.

10.2.4 Manual Process Data Collection

The manually collected data include:

- Power usage (reading of totalizing meters)
- Vapor flow rate entering the thermal oxidizer
- Water volume extracted from the caissons (if any)
- Condensate recovered
- NAPL collected by the contingency VTS (if operated)
- Temperature and pressure gauge readings for the treatment system
- Wellfield temperature readings

The daily readings of the extracted streams will be used in conjunction with the screening level and analytical data to estimate organic chemical mass removal and mass removal rates.

10.2.5 In-situ Temperature Monitoring System

Subsurface TCs will be located in dedicated monitoring borings to provide suitable data for evaluating the heating progress and temperature distribution throughout the TTZ. These data are used to identify potential problematic areas for heating and will be used to determine the locations of unanticipated heat loss and water infiltration, and/or for placement of additional heaters, as required.

Subsurface temperatures will be measured at approximately 2.5-foot depth intervals from just below the caisson cover to the bottom of the TTZ. These devices will be monitored daily to document heating progress. Thermocouples installed in the caisson and supporting locations in the treatment system are monitored remotely by an automated control platform. Signals from individual thermocouples are collected on multi-channel input cards wired to a central computer used to control system equipment. Through the control computer, the output

from installed thermocouples, system instrumentation and electronic control devices can be viewed in real-time through the operator's workstation. Process and operational data displayed at the workstation is recorded in a project database configured for trend evaluation onsite or by remote offsite access through a password protected, project specific webpage.

Temperature-sensing devices located next to the ISTT heaters are monitored continuously and used for automatic adjustments of the applied power via SCRs, as previously described. The temperature data will be collected and organized using a database for team utilization and monitoring. The following data representations are used:

- Individual subsurface temperature profiles
- Plots of temperature versus time for all sensors
- Average temperature in the vapor collection zones (i.e., pumice filled caisson headspace area)
- Average temperatures at different depths from top to bottom of the impoundment materials

10.3 Chemical Mass Removal and System Performance Monitoring

Performance monitoring will be used to track organic chemical mass removal from the ISTT pilot system through vapor, aqueous streams, and NAPL extraction (if any).

10.3.1 Process Vapor Flow Monitoring

Simple flow meters or pilot tubes will be used to estimate the vapor flow rates, where possible.

10.3.2 Vapor and Liquid Treatment System Samples

In addition to standard flow, pressure, and temperature measurements, samples of vapor process flows will be submitted for laboratory analysis. Data from these samples will be used to help evaluate vapor phase chemical mass removal to determine when asymptotic trends occur at the target temperature. Additionally, the samples will be used to evaluate the performance of the ex situ treatment equipment.

Because the extracted COCs flow through the manifold piping as liquids and vapors to the treatment system, tracking the chemical mass removed from the two caissons is straightforward. Sample concentration and process flow data from numerous locations will be used by TerraTherm to both optimize system operations and to provide estimates of the organic chemical mass extracted as liquid and vapor. Sampling and monitoring are intended to provide the following information:

- Vapor Treatment System Performance: Verification of thermal oxidizer DRE by measuring vapor concentrations at the inlet/outlet of the unit
- Mass Removed - Vapor State: Measured in the vapor conveyance manifold pipe and/or in the treatment system just before the vapor stream entering the oxidizer or sorbent media.
- Mass Removed – Aqueous Dissolved State: Samples may be collected at an appropriate location (e.g., liquid discharge storage tank) in the treatment system on a regular basis.
- Mass Removed Separate-Phase Liquids, NAPL (if present): The volume of NAPL removed will be measured in the NAPL collection tank(s) daily basis and/or as needed. The mass of NAPL removed will be calculated by multiplying the volume of NAPL removed by the concentrations of chemicals present in the NAPL. The total mass of NAPL removed will be determined by multiplying the total volume of NAPL by the NAPL-specific gravity.

The organic chemical mass removed in each phase (i.e., vapor, aqueous and separate phase liquids) will be tracked separately so the percent contribution of organic chemical mass removed by each phase to the total organic chemical mass removed can be determined.

10.3.3 Energy Balance Calculations

For the TTZ (two combined caissons), an energy balance will be maintained using the following data:

- Energy delivered to the heaters - meter readings and power loads on the heater circuits
- Energy removed in the form of steam - estimated based on the condensate flow rate
- Energy removed in noncondensable air - estimated from total treatment system vapor flow rate and temperature
- Estimated heat losses

The energy balance returns an average heating rate (in degrees per day) and an average TTZ temperature. These numbers are compared to the design numbers (energy delivery, average temperature) and the observed subsurface temperatures (from thermocouple measurements).

Energy Injected

The total energy delivered to the TTZ using the heater wells will be derived from readings from a totalizing electric meter. Power used for the process equipment (blowers, pumps, etc.), will either be subtracted from the total or measured separately.

Energy Removed

Energy will be removed from the TTZ in the form of hot water and vapors. The water will be entrained with the extracted vapors from the vapor extraction wells. The hot vapors from the vapor extraction wells will consist of steam and air. For air and water, the energy fluxes are determined by multiplying the flow rate times a heat capacity times the fluid temperature. For steam, it is determined as a flow rate times the specific enthalpy of the steam (heat of condensation).

10.4 Air Emissions Monitoring – EIPT Permit-Equivalent Requirements

Stack testing will be completed by CH2M HILL to assess compliance with any requirements defined by the EIPT. Supplemental details of air emissions monitoring during pilot study are provided in Sampling and Analysis Plan (anticipated to be submitted in July/August 2013)

10.5 Ambient Air Monitoring

Ambient air in the work zone (near treatment equipment) will be monitored as described in the Perimeter Air Monitoring Plan. The Site-specific HASP will detail additional air monitoring (e.g., with a multigas meter, handheld photoionization detector and/or flame ionization detector, and/or other handheld devices or Dräger tubes) that will be performed when staff performs any intrusive work that may result in exposure to hazardous concentrations of vapors.

10.6 Post ISS Treatment Sampling

Intermediate soil auger samples will be collected following pH buffering/de-emulsification steps to access the additive and blending effectives to raise the pH to greater than 8 SU. Table 6-2 presents the core sampling approach.

10.7 Reporting

The TerraTherm internal project reporting will include:

- Daily reports documenting staff onsite and major activities
- Automated reporting of the subsurface temperatures in a format available for review by the project team
- Weekly progress reports with data assembly showing progress, average treatment zone temperatures for each caisson, simplified energy balances, estimates for mass removal to date, and performance of the effluent treatment system

- Final project report with full data package documenting the operational period, treatment system data results, and documentation of stream management

10.7.1 Data Evaluation for Full-Scale Design

Following completion of the pilot study, the compiled data will be used to evaluate whether the pilot objectives have been met and will be used to evaluate the full-scale technology selection for the Site.

SECTION 11

Schedule

The proposed schedule for completing design activities associated with the pilot study is presented in Appendix B.

SECTION 12

References

American Welding Society (2004). AWS D1.1/D1.1M:2004 Structural Welding Code-Steel

American Society of Civil Engineers (2005). ASCE Standard, ASCE/SEI 7-05, Minimum Design Loads for Buildings and Other Structures

American Institute of Steel Construction (2011). Steel Construction Manual, Fourteenth Edition

CH2M HILL. 2012a. *Impoundments 1 and 2 Treatability Study Results Report, American Cyanamid Superfund Site*.

CH2M HILL. 2012b. *Technology Evaluation Work Plan for Impoundments 1 and 2, American Cyanamid Superfund Site*.

CH2M HILL. 2012c. *Material Collection Work Plan for Impoundments 1 and 2, American Cyanamid Superfund Site*.

CH2M HILL. 2012d. *Laboratory Studies Work Plan for Impoundments 1 and 2 Material, American Cyanamid Superfund Site.*

CH2M HILL. 2012e. *Quality Assurance Project Plan Impoundments 1 and 2 Laboratory Treatability Study, American Cyanamid Superfund Site*.

CH2M HILL. 2012f. *Focused Feasibility Study Work Plan for Impoundments 1 and 2 Laboratory Treatability Study, American Cyanamid Superfund Site*.

CH2M HILL. 2013a. *American Cyanamid Superfund Site Impoundments 1 and 2 Pilot Study 30% Design Summary*.

CH2M HILL. 2013b. *American Cyanamid Superfund Site—Impoundments 1 and 2 Pilot Study 60 Percent Design Summary.*

CH2M HILL. 2013c. *Addendum to the Laboratory Treatability Studies Work Plan for Operable Unit 8 American Cyanamid Superfund Site.*

CH2M HILL. 2013d. *Health and Safety Plan, American Cyanamid Superfund Site, Impoundments 1 and 2 In-Situ Thermal Treatment and In-Situ Stabilization and Solidification Pilot Study for Operable Unit 8. August.*

CH2M HILL. 2013e. *Sampling and Analysis Plan for Operable Unit 8 Pilot Study, American Cyanamid Superfund Site.* October 18.

CH2M HILL. 2013f. *Perimeter Air Monitoring Plan for Operable Unit 8 Pilot Study, American Cyanamid Superfund Site.* October 18.

Federal Emergency Management Agency. 2007. National Flood Insurance Program, Flood Insurance Rate Map, Somerset County, New Jersey (All Jurisdictions). Panel 166 of 301, Map Number 34035C0166E. September 28.

Focus Environmental, Inc. (Focus). 2011. *Treatment Alternatives Evaluation American Cyanamid Superfund Site Impoundments I and 2*. September.

O'Brien & Gere (OBG). 1982. *Source Assessment and Remedy Programs Lagoons 1 and 2*, *Bound Brook, New Jersey*. December.

O'Brien & Gere (OBG). 2010. *Former American Cyanamid Site Impoundments 1 and 2 Characterization Program Summary Report*. November.

U.S. Environmental Protection Agency (USEPA). 1992. *Permits and Permit Equivalency Processes for CERCLA Onsite Response Actions, Office of Solid Waste and Emergency Response Directive 9355.7-03.*

U.S. Environmental Protection Agency (USEPA). 2004. *In-situ Thermal Treatment of Chlorinated Solvents: Fundamentals and Field Applications.*

U.S. Environmental Protection Agency (USEPA). 2013. *Administrative Settlement Agreement and Order on Consent for Remedial Design, Operable Unit 4 and Focused Feasibility Study, Operable Unit 8.* March.

Woodard and Curran. 2012. *Flood Emergency Procedures Plan, Control Copy, Former American Cyanamid Site 1100 West Main Street, Bound Brook, NJ.* March.

Appendix A
Design Drawings (Provided Under Separate Cover)

IMPOUNDMENT #2 PILOT-SCALE DEMONSTRATION WYETH HOLDINGS CORPORATION AMERICAN CYANAMID SUPERFUND SITE BRIDGEWATER, NJ

CH2M HILL DRAWING INDEX

SHEET NUMBER	DRAWING NUMBER	TITLE
GENERAL		
1	G-0001	COVER SHEET
2	G-0002	GENERAL NOTES, ABBREVIATIONS, AND LEGEND
3	G-0003	SITE SOIL/SEDIMENT EROSION CONTROL NOTES
CIVIL		
4	C-2001	SITE GENERAL ARRANGEMENT
5	C-2002	MOORING LINE LAYOUT
6	C-2101	SITE SOIL/SEDIMENT EROSION CONTROL PLAN
7	C-2801	CROSS-FLOW PIPE UTILITY PLAN AND SECTION
8	C-3001	SECTIONS
9	C-5002	FLEXIFLOAT DRILL BARGE ASSEMBLY
10	C-5003	FLEXIFLOAT DRILL BARGE ASSEMBLY
11	C-5004	EQUIPMENT BENCH, GABION BASKET, AND SAFETY RAIL DETAILS
12	C-5005	CIVIL DETAILS
13	C-5101	SITE SOIL/SEDIMENT EROSION CONTROL DETAILS
STRUCTURAL		
14	S-2001	OVERALL CAISSON PLAN
15	S-2002	CAISSON SHROUD COVER - ISS PLAN AND ISOMETRIC VIEW
16	S-2003	CAISSON SHROUD COVER - BLANK PLAN AND ISOMETRIC VIEW
17	S-2004	CAISSON SHROUD COVER - ISTD PLAN, SECTION, ISOMETRIC VIEW AND SCHEDULE
18	S-3001	CAISSON ELEVATION, SECTIONS, AND ISOMETRIC
19	S-3002	LIFTING ELEVATION
20	S-5001	CAISSON DETAILS
21	S-5002	CAISSON DETAILS
22	S-5003	CAISSON DETAILS
23	S-5004	WOODEN STAIRS DETAILS
24	S-5005	GANGWAY
ELECTRICAL		
25	E-0001	GENERAL NOTES AND ABBREVIATIONS
26	E-2001	SITE POWER PLAN
27	E-2002	GROUNDING & POWER DISTRIBUTION
28	E-5001	DETAILS
WOODARD & CURRAN		
1	Fig. 1	WWTP PLATFORM EXTENSION

1

TERRATHERM DRAWING INDEX

TITLE SHEET	DRAWING NUMBER	TITLE
CIVIL		
T1	C101	SITE PLAN
T2	C102	CAISSON LAYOUT (1 OF 2)
T3	C102	CAISSON LAYOUT PROFILE (2 OF 2)
ELECTRICAL		
T4	E100	ELECTRICAL LEGEND
T5	E101	ONE LINE ELECTRICAL (1 OF 3)
T6	E101	ONE LINE ELECTRICAL (2 OF 3)
T7	E101	ONE LINE ELECTRICAL (3 OF 3)
T8	E104	SWBD GROUNDING / NEUTRAL DETAIL (1 OF 2)
T9	E104	GROUNDING DETAIL (2 OF 2)
MECHANICAL		
T10	M101	MECHANICAL LAYOUT
PROCESS		
T11	P101	PROCESS FLOW DIAGRAM (1 OF 2)
T12	P101	MASS AND ENERGY BALANCE (2 OF 2)
T13	P&ID	P&ID LEGEND SHT 1 (1 OF 4)
T14	P&ID	P&ID LEGEND SHT 2 (2 OF 4)
T15	P&ID	P&ID LEGEND SHT 3 (3 OF 4)
T16	P&ID	P&ID LEGEND SHT 4 (4 OF 4)
T17	P102	P&ID, CAISSON EQUIPMENT (1 OF 6)
T18	P102	P&ID, THERMAL OXIDIZER SYSTEM (2 OF 6)
T19	P102	P&ID, SCRUBBER PACKAGE (3 OF 6)
T20	P102	P&ID, LIQUID TREATMENT SYSTEM (4 OF 6)
T21	P102	P&ID, ALTERNATE BYPASS SYSTEM (5 OF6)
T22	P102	P&ID, UTILITIES (6 OF 6)

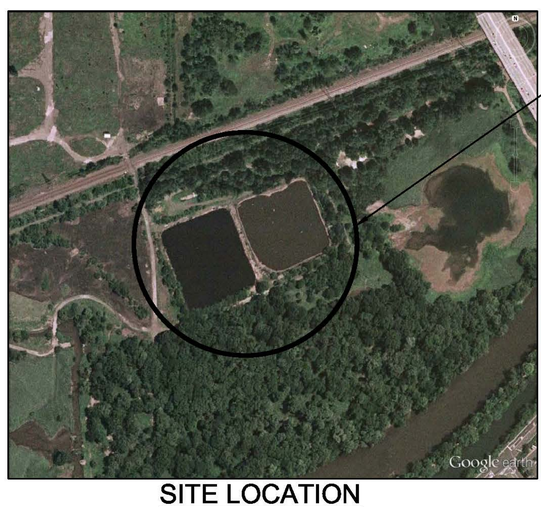

SITE LOCATION

1

RICHARD P. TRAVER'S PE STAMP ON THIS DRAWING ONLY APPLIES TO SHEETS NUMBERED 1-24. Woodward & Curran AND TerraTherm DRAWINGS WERE PREPARED WITH DIFFERENT INDIVIDUALS IN RESPONSIBLE CHARGE AND THOSE DRAWINGS SHOULD BE REVIEWED DIRECTLY FOR ADDITIONAL INFORMATION.

VICINITY MAP

RICHARD P. TRAVER
NJ. PROFESSIONAL ENGINEER NO. 28300

NO.	DATE	REVISION	BY	APVD
1	2013/10/25	REVISION #1	RT	Y
0	2013/09/29	ISSUED FOR CONSTRUCTION	RT	Y

DSGN R. TRAVER | DR S. EMEREUWA | CHK R. TRAVER | APVD R. TRAVER

©CH2M HILL 2010. ALL RIGHTS RESERVED.
REUSE OF DOCUMENTS: THIS DOCUMENT, AND THE IDEAS AND DESIGNS INCORPORATED HEREIN, AS AN INSTRUMENT OF PROFESSIONAL SERVICE, IS THE PROPERTY OF CH2M HILL AND IS NOT TO BE USED, IN WHOLE OR IN PART, FOR ANY OTHER PROJECT WITHOUT THE WRITTEN AUTHORIZATION OF CH2MHILL.

1717 ARCH ST., SUITE 4400
PHILADELPHIA, PA 19103
PH (215) 563-4220 FAX (215) 563-3828
EB 0000072 AA 001992

IMPOUNDMENTS 1 AND 2
PILOT DEMONSTRATION STUDY
WYETH HOLDINGS CORPORATION
AMERICAN CYANAMID SUPERFUND SITE
1 CYANAMID AVE
BRIDGEWATER, NJ

CH2MHILL

GENERAL
COVER SHEET

VERIFY SCALE
BAR IS ONE INCH ON ORIGINAL DRAWING.
0 1"

DATE	2013/08/29
PROJ	472109
DWG	G-0001
SHEET	1

GENERAL INFORMATION

1. FOR ABBREVIATIONS NOT LISTED, SEE ASME Y14.38 "ABBREVIATIONS AND ACRONYMS: PUBLICATION AS DISTRIBUTED BY THE AMERICAN SOCIETY OF MECHANICAL ENGINEERS (ASME).
2. STRUCTURAL OBSERVATION SHALL BE PERFORMED ON THE CAISSONS AFTER FABRICATION AND PRIOR TO SHIPPING.
3. THE CONTRACTOR SHALL SCHEDULE THE OBSERVATION VISITS, PROVIDE 7 DAYS NOTICE TO THE OBSERVER, AND PROVIDE SAFE ACCESS TO ITEMS TO BE OBSERVED. OBSERVATION SHALL BE CONDUCTED BY THE ENGINEER OF RECORD OR QUALIFIED DESIGNEE. THE ENGINEER OF RECORD OR QUALIFIED DESIGNEE SHALL VISIT THE SITE.
4. A WRITTEN REPORT DETAILING PORTIONS OF WORK OBSERVED AND IDENTIFYING ANY DEFICIENT PORTIONS OF WORK, THAT TO THE BEST OF THE STRUCTURAL OBSERVER'S KNOWLEDGE, HAVE NOT BEEN RESOLVED WILL BE DELIVERED TO THE CONTRACTOR, AND OWNER WITHIN ONE WEEK OF THE OBSERVATION. THE REPORT REQUIRED TO DOCUMENT STRUCTURAL OBSERVATION SHALL REFERENCE PERTINENT DRAWING NUMBERS, BUILDING GRIDS, DETAIL NUMBERS, AND SPECIFICATION SECTIONS. THE CONTRACTOR WILL BE NOTIFIED WITHIN 24 HOURS UPON FINDING DEFICIENCES.
5. ALL DIMENSIONS ARE IN FEET AND INCHES UNLESS OTHERWISE NOTED.
6. SOURCE OF THE TOPOGRAPHY SHOWN IN THE PLANS ARE BASE MAPS PROVIDED BY PFIZER FROM SURVEY CONDUCTED BY VARGO ASSOCIATES IN 2010.

   HORIZONTAL DATUM IS IN NEW JERSEY STATE PLANE COORDINATE SYSTEM, NAD 1983_HARN AFTER CONVERSION BY CH2M HILL FROM NEW JERSEY STATE PLANE COORDINATE SYSTEM, NAD 1927. CONVERSION WAS PERFORMED USING AUTODESK CIVIL3D VER. 2012. SPECIFIC POINTS WERE DOUBLE CHECKED USING USACE PROGRAM "CORPSCON" VER. 6 TO CONFIRM PROPER TRANSLATION.

   VERTICAL DATUM IS IN NAVD 1988 AFTER CONVERSION BY CH2M HILL. THE VERTICAL ELEMENTS WERE PROVIDED IN A LOCAL DATUM THAT WAS EQUAL TO NGVD 1929 PLUS 69.29 FT. THE PUBLISHED NGS DATASHEET FOR BENCHMARK L 26 (PID KV1174) SHOWS THE NAVD 88 ELEVATION OF THE POINT TO BE 36.63 FT. THE SHEET ALSO SHOWS THE SUPERCEDED NGVD 29 ELEVATION TO BE 37.53 FT.

   TO GO FROM LOCAL ELEVATION TO NAVD 88 ELEVATION, THE FILES WERE MOVED DOWN IN ELEVATION 70.19 FT. (LOCAL ELEVATION MINUS 69.29 FT TO NGVD 29 ELEVATION MINUS 0.90 FT TO NAVD 88 ELEVATION).
7. RAILROAD FLAGMAN COVERAGE IS NOT ANTICIPATED DUE TO EXISTING AGREEMENT BETWEEN PFIZER AND CONRAIL. COORDINATE ACTIVITIES WITH CONRAIL AS NEEDED.
8. EXISTING TOPOGRAPHSY, STRUCTURES, AND SITE FEATURES ARE SHOWN SCREENED AND/OR LIGHT-LINED. NEW FINISH GRADE, STRUCTURES, AND SITE FEATURES ARE SHOWN HEAVY-LINED.
9. MAINTAIN, RELOCATE, OR REPLACE EXISITNG SURVEY MONUMENTS, CONTROL POINTS, AND STAKES WHICH ARE DISTURBED OR DESTROYED. PERFORM THE WORK TO PRODUCE THE SAME LEVEL OF ACCURACTY AS THE ORIGINAL MONUMENT (S) IN A TEIMELY MANNER, AND AT THE SUBCONTRACTOR'S EXPENSE.
10. LAYDOWN AREA SHALL BE FOR SUBCONTRACTOR'S EMPLOYEE PARKING, SUBCONTRACTOR'S TRAILERS AND ON-SITE STORAGE OF MATERIALS.
11. ELEVATIONS GIVEN ARE TO FINISH GRADE UNLESS OTHERWISE SHOWN.
12. SLOPE UNIFORMLY BETWEEN CONTROUS AND SPOT ELEVATIONS SHOWN.
13. POWER IS NOT AVAILABLE ON SITE. PROVIDING ELECTRICAL POWER NEEDED IS THE REPONSIBILITY OF THE SUBCONTRACTOR.
14. SUBCONTRACTOR IS RESPONSIBLE FOR ARRANGING ANY WATER METER/TAPPING OF EXISTING WATER MAIN ON SITE.
15. UTILITIES MAY BE PRESENT BUT NOT IDENTIFIED. PROTECT ALL EXISITNG UTILITIES DURING CONSTRUCTION. UTILITY MARK OUT BY THIRD PARTY REQUIRED AS WELL AS FOLLOWING NEW JERSEY STATE LAW, CALL NEW JERSEY UTILTIES ASSOCIATION BEFORE YOU DIG. DIAL 8-1-1 OR 1-800-272-1000.

SHORING AND BRACING

1. STRUCTURES SHOWN ON THE DRAWINGS HAVE BEEN DESIGNED FOR STABILITY UNDER FINAL CONDITIONS ONLY. DESIGN SHOWN DOES NOT INCLUDE NECESSARY COMPONENTS OR EQUIPMENT FOR STABILITY OF THE STRUCTURES DURING CONSTRUCTION. CONTRACTOR IS RESPONSIBLE FOR WORK RELATING TO CONSTRUCTION ERECTION METHODS, BRACING, SHORING, RIGGING, GUYS, SCAFFOLDING, FORMWORK, AND OTHER WORK AIDS REQUIRED TO SAFELY PERFORM THE WORK SHOWN.

CAST IN PLACE CONCRETE

1. 28-DAY COMPRESSIVE STRENGTHS:
   ALL STRUCTURES: 4000 PSI
2. DESIGN STRENGTHS ARE SAME AS 28-DAY COMPRESSIVE STRENGTHS.
3. COORDINATE PLACEMENT OF OPENINGS, CURBS, DOWELS, SLEEVES, CONDUITS, BOLTS, AND INSERTS PRIOR TO PLACEMENT OF CONCRETE.
4. NO ALUMINUM CONDUIT OR PRODUCTS CONTAINING ALUMINUM OR ANY OTHER MATERIAL INJURIOUS TO THE CONCRETE SHALL BE EMBEDDED IN THE CONCRETE.

WELDING

1. WELDS SHALL CONFORM TO AMERICAN WELDING SOCIETY (AWS):
   D1.1, STRUCTURAL WELDING CODE - STEEL
   D1.3, STRUCTURAL WELDING CODE - SHEET METAL
2. REPAIR WELDS FOUND DEFECTIVE IN ACCORDANCE WITH AWS D1.1 SECTION 5.26.
3. BUTT JOINT WELDS SHALL BE COMPLETE JOINT PENETRATION (CJP) UNLESS INDICATED OTHERWISE.
4. HOT WORK PERMITS SHALL BE SUBMITTED TO THE ENGINEER OF RECORD OR DESIGNEE PRIOR TO THE INITIATION OF WORK.

STRUCTURAL STEEL AND METAL FABRICATIONS

1. STRUCTURAL STEEL SHALL CONFORM TO THE FOLLOWING ASTM STANDARDS:

W- SHAPES	A992
MISCELLANEOUS SHAPES INCLUDING ANGLES, CHANNELS, PLATES, ETC.	A36
HOLLOW STRUCTURAL SECTIONS (HSS)	A500
GRADE B STEEL PIPE	A53
GRADE B STAINLESS STEEL SHAPES	A276
CAISSONS	A36 OR A572 GRADE 50

2. STRUCTURAL STEEL SHALL BE FABRICATED AND ERECTED IN CONFORMANCE WITH THE AISC MANUAL OF STEEL CONSTRUCTION, CURRENT EDITION, AND CURRENT OSHA STANDARDS.
3. FASTENERS SHALL BE HIGH STRENGTH BOLTS CONFORMING TO THE FOLLOWING ASTM STANDARDS EXCEPT WHERE SPECIFICALLY INDICATED OTHERWISE:
   UNLESS SHOWN OTHERWISE A325-N
   THREADED ROD F1554, GRADE 55
4. ITEMS TO BE EMBEDDED IN CONCRETE SHALL BE CLEAN AND FREE OF OIL, DIRT, AND PAINT.
5. NO HOLES OTHER THAN THOSE SPECIFICALLY DETAILED SHALL BE ALLOWED THROUGH STRUCTURAL STEEL MEMBERS. NO CUTTING OR BURNING OF STRUCTURAL STEEL IS PERMITTED WITHOUT THE APPROVAL OF THE ENGINEER.

1

STRUCTURAL ABBREVIATIONS

@	AT
AB	ANCHOR BOLT
ACI	AMERICAN CONCRETE INSTITUTION
ADDL	ADDITIONAL
ADJ	ADJACENT
AFF	ABOVE FINISH FLOOR
AHR	ANCHOR
AISC	AMERICAN INSTITUTE OF STEEL CONSTRUCTION
AL	ALUMINUM
ALLOW	ALLOWABLE
ALTN	ALTERNATE
ANSI	AMERICAN NATIONAL STANDARDS INSTITUTE
APPROX	APPROXIMATE
APVD	APPROVED
ARCH.	ARCHITECTURAL
ASTM	AMERICAN SOCIETY FOR TESTING AND MATERIALS
AWS	AMERICAN WELDING SOCIETY
BETW	BETWEEN
BF	BOTTOM FACE
BLDG	BUILDING
BM	BEAM
BO	BOTTOM OF
BOT	BOTTOM
BRG	BEARING
C	CHANNEL OR C-SHAPE
C TO C	CENTER TO CENTER
CHKD PL	CHECKERED PLATE
CIPC	CAST-IN-PLACE CONCRETE
CJ	CONSTRUCTION JOINT
CJP	COMPLETE JOINT PENETRATION (WELD)
CL	CENTERLINE
CLR	CLEARANCE, CLEAR
CMU	CONCRETE MASONRY UNIT
COL	COLUMN
CONC	CONCRETE
CONN	CONNECTION
CONSTR	CONSTRUCTION
CONT	CONTINUOUS
COORD	COORDINATE
CRSI	CONCERTE REINFORCING STEEL INSTITUTE
CTLJ	CONTROL JOINT
CTR	CENTER
CTRD	CENTERED
CU	CUBIC
d	PENNY (NAIL SIZE)
DBA	DEFORMED BAR ANCHOR
DBL	DOUBLE
DEG	DEGREE
DET	DETAIL
DF	DOUGLAS FIR
DIA	DIAMETER
DIAG	DIAGONAL
DIM.	DIMENSION
DIR	DIRECTION
DL	DEAD LOAD
DO	DITTO
DTI	DIRECT TENSION INDICATOR
DWG	DRAWING
DWL	DOWEL
EA	EACH
EF	EACH FACE
EJ	EXPANSION JOINT
EL	ELEVATION
ELEC	ELECTRICAL
ELEV	ELEVATOR
EMBED	EMBEDMENT, EMBED
ENGR	ENGINEER
EQL	EQUAL
EQL SP	EQUALLY SPACED
EQPT	EQUIPMENT
EQUIV	EQUIVALENT
EW	EACH WAY
EXP JT	EXPANSION JOINT
EXST	EXISTING
EXT	EXTERIOR
FAB	FABRICATE, FABRICATION
FB	FLAT BAR
FD	FLOOR DRAIN
FDN	FDN
FF	FINISH FLOOR
FG	FINISH GRADE
FL	FLOOR
FRP	FIBERGLASS REINFORCED PLASTIC
FT	FEET, FOOT
FTG	FOOTING
FV	FIELD VERIFY
GA	GAUGE, GAGE
GALV	GALVANIZED (HOT DIP)
GLB	GLUE LAMINATED BEAM
GRTG	GRATING
GVL	GRAVEL
H.A.S.	HEADED ANCHOR STUD
HDR	HEADER
HORIZ	HORIZONTAL
HPT	HIGH POINT
HSS	HOLLOW STRUCTURAL SECTION
HVAC	HEATING , VENTILATION, AND AIR CONDITIONING
IBC	INTERNATIONAL BUILDING CODE
ID	INSIDE DIAMETER
I.F.	INSIDE FACE
IN.	INCH(ES)
INSUL	INSULATION
INTMD	INTERMEDIATE
INTR	INTERIOR
J	JOIST
JB	JOIST BEARING
JT	JOINT
KIP(S)	THOUSAND POUNDS
KSF	KIPS PER SQUARE FOOT
KSI	KIPS PER SQUARE INCH
L	ANGLE OR L-SHAPE
LB(S)	POUND(S) FORCE
LF	LINEAR FEET
LIW	LOAD INDICATING WASHER
LL	LIVE LOAD
LLH	LONG LEG HORIZONTAL
LLV	LONG LEG VERTICAL
LNTL	LINTEL
LONG.	LONGITUDINAL
LPT	LOW POINT
LSL	LONG SLOTTED HOLE
MATL	MATERIAL
MAX	MAXIMUM
MB	MACHINE BOLT
MECH	MECHANICAL
MET.	METAL
MFD	MANUFACTURED
MFR(S)	MANUFACTURER (MANUFACTURER'S)
MIN	MINIMUM
MISC	MISCELLANEOUS
MO	MASONRY OPENING
NA	NOT APPLICABLE
NIC	NOT IN CONTRACT
NO.	NUMBER
NTS	NOT TO SCALE
O TO O	OUT TO OUT
OC	ON CENTER
OD	OUTSIDE DIAMETER
O.F.	OUTSIDE FACE
OPNG(S)	OPENING(S)
OPP	OPPOSITE
P	PILASTER
PERIM	PERIMETER
PJF	PREMOLDED JOINT FILLER
PJP	PARTIAL JOINT PENETRATION (WELD)
PKG	PACKAGE
PL	PLATE
PLCS	PLACES
PLF	POUNDS FORCE PER LINEAR FOOT
PLYWD	PLYWOOD
PNL	PANEL
PRCST	PRECAST
PREFAB	PREFABRICATE(D)
PRELIM	PRELIMINARY
PRI	PRIMARY
PSF	POUNDS FORCE PER SQUARE FOOT
PSI	OPUNDS FORCE PER SQUARE INCH
PT	PRESSURE TREATED
PVC	POLYVINYL CHLORIDE
R	RADIUS, RISER
RAD	RADIUS
RC	REINFORCED CONCRETE
RDAA	REBAR DOWEL ADHESIVE ANCHOR
RDW	REDWOOD
RECT	RECTANGULAR, RECTANGLE
REF	REFERENCE
REINF	REINFORCE, REINFORCING
REQD	REQUIRED
RST	REINFORCING STEEL
S	I-BEAM
SC	SLIP CRITICAL (BOLTS)
SCHED	SCHEDULE
SECT.	SECTION
SH	SHEET
SIM	SIMILAR
SOG	SLAB ON GRADE
SP	SPACE
SPEC(S)	SPECIFICATION(S)
SPECD	SPECIFIED
SPG	SPACING
SQ	SQUARE
SSL	SHORT SLOTTED HOLE
SST	STAINLESS STEEL
STD	STANDARD
STIF	STIFFENER
STIR.	STIRRUP
STL	STEEL
STR	STRAIGHT
STRL	STRUCTURAL
STRUCT	STRUCTURE
SYMM	SYMMETRICAL
T	TREAD
T&B	TOP AND BOTTOM
TAS	THREADED ANCHOR STUD
TC	TOP OF CONCRETE, TOP OF CURB
TEMP	TEMPERATURE
TF	TOP OF FOOTING, TOP FACE
THK	THICK
THKNS	THICKNESS
THRU	THROUGH
TM	TOP OF MASONRY
T.O.	TOP OF
TRANSV	TRANSVERSE
TST	TOP OF STEEL
TW	TOP OF WALL
TYP	TYPICAL
UBC	UNIFORM BUILDING CODE
UNIF	UNIFORM, UNIFORMLY
UON	UNLESS OTHERWISE NOTED
VERT	VERTICAL
W	WIDE FLANGE BEAM
W/	WITH
W/O	WITHOUT
WD	WOOD
WP	WORKING POINT
WS	WATERSTOP, WATER SURFACE
WT	WEIGHT
WWF	WELDED WIRE FABRIC

SECTION / DETAIL DESIGNATIONS

SECTION (LETTER) OR DETAIL (NUMERAL) DESIGNATION

A

DRAWING NUMBER (REPLACED WITH A LINE IF TAKEN AND SHOWN ON SAME SHEET)

1
C-0001

ON DRAWING WHERE SECTION OR DETAIL IS TAKEN:

DRAWING NUMBER WHERE SHOWN

B SECTION
SCALE
S-3001

ON DRAWING WHERE SECTION IS SHOWN:

DRAWING NUMBER(S) WHERE TAKEN

2 DETAIL
SCALE
S-3001

ON DRAWING WHERE DETAIL IS SHOWN:

DRAWING NUMBER(S) WHERE TAKEN

DRAWING TITLE
SCALE

ON DRAWING WHERE ONLY A TITLE IS REQUIRED WITH NO REFERENCE (eg: ELEVATIONS)

B

SECTION CALLOUT WHERE SECTION IS ON THE SAME SHEET AND CUT EXTENDS TO A FIXED LIMIT

B S-3001 B S-3001

SECTION CALLOUT WHERE SECTION IS ON ANOTHER SHEET AND CUT EXTENDS THROUGHOUT ENTIRE SHEET

1

KEYNOTE NUMBER

1

REVISION / ADDENDA NUMBER

N

NORTH ARROW

RICHARD P. TRAVER
N.J. PROFESSIONAL ENGINEER NO. 26300

NO.	DATE	REVISION	BY	APVD
1	2013/10/25	REVISION #1	RT	Y
0	2013/08/29	ISSUED FOR CONSTRUCTION	RT	Y

DSGN H. JOCHIMSEN | DR R. FOREST | CHK W. BENNETT | APVD R. TRAVER

©CH2M HILL 2011. ALL RIGHTS RESERVED.

1717 ARCH ST., SUITE 4400
PHILADELPHIA, PA 19103
PH (215) 563-4220 FAX (215) 563-3828

IMPOUNDMENTS 1 AND 2
PILOT DEMONSTRATION STUDY
WYETH HOLDINGS CORPORATION
AMERICAN CYANAMID GROUND SITE
20 POLHEMUS LANE
BRIDGEWATER, NJ

CH2MHILL®

GENERAL

GENERAL STRUCTURAL NOTES, ABBREVIATIONS, AND LEGEND

REUSE OF DOCUMENTS: THIS DOCUMENT, AND THE IDEAS AND DESIGNS INCORPORATED HEREIN, AS AN INSTRUMENT OF PROFESSIONAL SERVICE, IS THE PROPERTY OF CH2M HILL AND IS NOT TO BE USED, IN WHOLE OR IN PART, FOR ANY OTHER PROJECT WITHOUT THE WRITTEN AUTHORIZATION OF CH2M HILL.

VERIFY SCALE
BAR IS ONE INCH ON ORIGINAL DRAWING.
0 1"

DATE	2013/08/29
PROJ	472109
DWG	G-0002
SHEET	2

SOIL EROSION AND SEDIMENT CONTROL NOTES:

1. THE SUBCONTRACTOR SHALL BE RESPONSIBLE FOR IMPLEMENTING AND MAINTAINING EROSION CONTROL DEVICES DURING CONSTRUCTION.
2. SUBCONTRACTOR SHALL TAKE ALL OTHER MEASURES TO POSITIVELY PRECLUDE EROSION MATERIALS FROM LEAVING THE SITE.
3. THE SUBCONTRACTOR MUST NOTIFY SOMERSET-UNIONSOIL CONSERVATION DISTRICT (SCD) IN WRITING AND BY TELEPHONE AT THE FOLLOWING POINTS:
   3.1. THE REQUIRED PRE-CONSTRUCTION MEETING
4. INSTALL SEDIMENT BARRIERS AROUND ANY STOCKPILE AREAS.
5. ALL SOIL EROSION AND SEDIMENT CONTROL PRACTICES WILL BE INSTALLED IN ACCORDANCE WITH THE STANDARDS FOR SOIL EROSION AND SEDIMENT CONTROL IN NEW JERSEY (NJ STANDARDS), AND WILL BE INSTALLED IN PROPER SEQUENCE AND MAINTAINED UNTIL PERMANENT STABILIZATION IS ESTABLISHED.
6. THE SUBCONTRACTOR SHALL CONSTRUCT ALL EROSION AND SEDIMENT CONTROL MEASURES PER THE APPROVED PLAN AND CONSTRUCTION SEQUENCE. THE SUBCONTRACTOR SHALL ENSURE THAT ALL RUNOFF FROM DISTURBED AREAS IS DIRECTED TO THE SEDIMENT CONTROL DEVISES.
5. THE SUBCONTRACTOR SHALL PROTECT ALL POINTS OF CONSTRUCTION INGRESS AND EGRESS TO PREVENT THE DEPOSITION OF MATERIALS ONTO SITE ROADWAYS. THE SUBCONTRACTOR SHALL INSTALL A MAT TO BE COMPOSED OF NJDOT NO. 2 CRUSHED STONE, 6" THICK, WILL BE AT LEAST 30' X 100' AND SHOULD BE UNDERLAIN WITH A SUITABLE SYNTHETIC SEDIMENT FILTER FABRIC AND MAINTAINED. ALL MATERIALS DEPOSITED ONTO SITE ROADS SHALL BE REMOVED IMMEDIATELY.
6. ALL SOIL WASHED, DROPPED, SPILLED, OR TRACKED OUTSIDE OTHER LIMIT OF DISTURBANCE OR ONTO PUBLIC RIGHT-OF-WAYS WILL BE REMOVED IMMEDIATELY. PAVED ROADWAYS MUST BE KEPT CLEAN AT ALL TIMES.
7. SOIL EROSION AND SEDIMENT CONTROL MEASURES WILL BE INSPECTED AND MAINTAINED ON A REGULAR BASIS, INCLUDING AFTER EVERY STORM EVENT.
8. ANY SURFACE WITH A SLOPE EXCEEDING 3:1 SHALL BE PROTECTED UTILIZING A SOIL EROSION CONTROL MATERIAL SUCH AS COCONUT JUTE.
9. ANY DISTURBED AREA THAT WILL BE LEFT EXPOSED FOR MORE THAN THIRTY (30) DAYS AND NOT SUBJECT TO CONSTRUCTION TRAFFIC SHALL IMMEDIATELY RECEIVE A TEMPORARY SEEDING AND MULCHING. IF THE SEASON PROHIBITS TEMPORARY SEEDING, THE DISTURBED AREA WILL BE MULCHED WITH SALT HAY OR EQUIVALENT AND BOUND IN ACCORDANCE WITH THE NJDOT STANDARDS (I.E. PEG AND TWINE, MULCH NETTING, OR LIQUID MULCH BINDER)
10. IMMEDIATELY FOLLOWING INITIAL DISTURBANCE OR ROUGH GRADING ALL CRITICAL AREAS SUBJECT TO EROSION WILL RECEIVE A TEMPORARY SEEDING IN COMBINATION WITH STRAW MULCH OR A SUITABLE EQUIVALENT, AT A RATE OF 2 TONS PER ACRE, ACCORDING TO THE NJ STANDARDS.
11. PRIOR TO REMOVAL OF SEDIMENT CONTROL MEASURES, THE SUBCONTRACTOR SHALL STABILIZE AND HAVE ESTABLISHED PERMANENT STABILIZATION FOR ALL CONTRIBUTORY DISTURBED AREAS USING SOD OR AN APPROVED PERMANENT SEED MIXTURE WITH REQUIRED SOIL AMENDMENTS AND AN APPROVED ANCHORED MULCH:
   - -LIME - 90 LBS./1,000 SF GROUND LIMESTONE; FERTILIZER - 11 LBS./1,000 SF, 10-20-10 OR EQUIVALENT WORKED INTO THE SOIL A MINIMUM OF 4"
   - -SEED - TYPE W WETLAND GRASS SEED MIXTURE; PLANT BETWEEN MARCH 15 AND NOV. 15
   - -MULCH - SALT HAY OR SMALL GRAIN STRAW AT A RATE OF 70 TO 90 LBS./1,000 SF TO BE APPLIED ACCORDING TO THE NJ STANDARDS. MULCH SHALL BE SECURED BY APPROVED METHODS (I.E. PEG AND TWINE, MULCH NETTING, OR LIQUID MULCH BINDER).
12. WHEN PROPERTY IS BROUGHT TO FINISHED GRADE AND PERMANENT STABILIZATION IS FOUND TO BE IMPRACTICAL, TEMPORARY SEED AND MULCH SHALL BE APPLIED:
   - -LIME - 90 LBS./1,000 SF GROUND LIMESTONE; FERTILIZER - 11 LBS./1,000 SF, 10-20-10 OR EQUIVALENT WORKED INTO THE SOIL A MINIMUM OF 4"
   - -SEED - TYPE W WETLAND GRASS SEED MIXTURE; PLANT BETWEEN MARCH 15 AND NOV. 15
   - -MULCH - SALT HAY OR SMALL GRAIN STRAW AT A RATE OF 70 TO 90 LBS./1,000 SF TO BE APPLIED ACCORDING TO THE NJ STANDARDS. MULCH SHALL BE SECURED BY APPROVED METHODS (I.E. PEG AND TWINE, MULCH NETTING, OR LIQUID MULCH BINDER)

   THE SITE SHALL AT ALL TIMES BE GRADED AND MAINTAINED SUCH THAT ALL STORMWATER RUN-OFF IS DIVERTED TO SOIL EROSION AND SEDIMENT CONTROL FACILITIES.
13. PERMANENT SWALES OR OTHER POINTS OF CONCENTRATED WATER FLOW SHALL BE STABILIZED WITH SOD OR SEED WITH AN APPROVED EROSION CONTROL MATTING, RIP-RAP OR BY OTHER APPROVED STABILIZATION MEASURES.
14. INTERIM STOCKPILES ARE NOT TO BE LOCATED WITHIN 50' OF A FLOODPLAIN, SLOPE, ROADWAY OR DRAINAGE FACILITY. THE BASE OF ALL STOCKPILES SHALL BE CONTAINED BY A HAYBALE SEDIMENT BARRIER OR SILT FENCE.
15. CATCH BASIN INLETS WILL BE PROTECTED WITH AN INLET FILTER DESIGNED IN ACCORDANCE WITH SECTION 30-1 OF THE NJ STANDARDS.
16. STORM DRAINAGE OUTLETS WILL BE STABILIZED, AS REQUIRED, BEFORE THE DISCHARGE POINTS BECOME OPERATIONAL.
17. SURFACE DRAINAGE FLOWS OVER UNSTABILIZED CUT AND FILL SLOPES SHALL BE CONTROLLED BY EITHER PREVENTING DRAINAGE FLOWS FROM TRAVERSING THE SLOPES OR BY INSTALLING PROTECTIVE DEVICES TO LOWER THE WATER DOWNSLOPE WITHOUT CAUSING EROSION. DIKES SHALL BE INSTALLED AND MAINTAINED AT THE TOP OF CUT OR FILL SLOPES UNTIL THE SLOPE AND DRAINAGE AREA TO IT ARE FULLY STABILIZED, AT WHICH TIME THEY MUST BE REMOVED AND FINAL GRADING DONE TO PROMOTE SHEET FLOW DRAINAGE. PROTECTIVE METHODS MUST BE PROVIDED AT POINTS OF CONCENTRATED FLOW WHERE EROSION IS LIKELY TO OCCUR.
18. DUST SHALL BE CONTROLLED VIA THE APPLICATION OF WATER, CALCIUM CHLORIDE OR OTHER APPROVED METHOD IN ACCORDANCE WITH SECTION 16-1 OF THE NJ STANDARDS.
19. SEDIMENT TRAPS OR BASINS ARE NOT PERMITTED WITHIN 20 FEET OF A FOUNDATION THAT EXISTS OR IS UNDER CONSTRUCTION. NO STRUCTURE MAY BE CONSTRUCTED WITHIN 20 FEET OF AN ACTIVE SEDIMENT TRAP OR BASIN.
20. ALL TRAP DEPTH DIMENSIONS ARE RELATIVE TO THE OUTLET ELEVATION. ALL TRAPS MUST HAVE A STABLE OUTFALL. ALL TRAPS AND BASINS SHALL HAVE STABLE INFLOW POINTS.
21. SEDIMENT SHALL BE REMOVED AND THE TRAP OR BASIN RESTORED TO ITS ORIGINAL DIMENSIONS WHEN THE SEDIMENT HAS ACCUMULATED TO ONE QUARTER OF THE TOTAL DEPTH OF THE TRAP OR BASIN. TOTAL DEPTH SHALL BE MEASURED FROM THE TRAP OR BASIN BOTTOM TO THE CREST OF THE OUTLET. SEDIMENT REMOVED FROM SEDIMENT TRAPS AND BASINS, WHEEL WASH, AND OTHER STRUCTURES SHALL BE ADDED TO THE SEDIMENT IN THE TEMPORARY STAGING AND STOCKPILING AREA.
22. SEDIMENT REMOVED FROM TRAPS AND BASINS SHALL BE PLACED AND STABILIZED IN APPROVED AREAS, BUT NOT WITHIN A FLOODPLAIN, WETLAND, OR TREE-SAVE AREA. WHEN PUMPING SEDIMENT LADEN WATER, THE DISCHARGE MUST BE DIRECTED TO A SEDIMENT TRAPPING DEVICE PRIOR TO RELEASE FROM THE SITE. A SUMP PIT OR PORTABLE SEDIMENT TANK MAY BE USED IF SEDIMENT TRAPS THEMSELVES ARE BEING PUMPED OUT.
23. WHERE DEEMED APPROPRIATE BY THE ENGINEER OR INSPECTOR, SEDIMENT BASINS AND TRAPS MAY NEED TO BE SURROUNDED WITH AN APPROVED SAFETY FENCE. THE FENCE MUST CONFORM TO LOCAL ORDINANCES AND REGULATIONS. THE DEVELOPER OR OWNER SHALL CHECK WITH LOCAL BUILDING OFFICIALS ON APPLICABLE SAFETY REQUIREMENT. WHERE SAFETY FENCE IS DEEMED APPROPRIATE AND ORDINANCES DO NOT SPECIFY FENCING SIZES AND TYPES, THE FOLLOWING SHALL BE USED AS A MINIMUM STANDARD: THE SAFETY FENCE MUST BE MADE OF WELDED WIRE AND AT LEAST 42 INCHES HIGH, HAVE POSTS SPACED NO FARTHER APART THAN 8 FEET, HAVE MESH OPENINGS NO GREATER THAN 2 INCHES IN WIDTH AND 4 INCHES IN HEIGHT WITH A MINIMUM OF 14 GAUGE WIRE. SAFETY FENCE MUST BE MAINTAINED IN GOOD CONDITION AT ALL TIMES.
24. OFF-SITE SPOIL OR BORROW AREAS ON STATE OR FEDERAL PROPERTY MUST HAVE PRIOR APPROVAL BY SOMERSET-UNION COUNTY SCD AND OTHER APPLICABLE STATE, FEDERAL, AND LOCAL AGENCIES; OTHERWISE APPROVAL MUST BE GRANTED BY THE LOCAL AUTHORITIES. ALL WASTE AND BORROW AREAS OFF-SITE MUST BE PROTECTED BY SEDIMENT CONTROL MEASURES AND STABILIZED.
25. SITES WHERE INFILTRATION DEVICES ARE USED FOR THE CONTROL OF STORMWATER, EXTREME CARE MUST BE TAKEN TO PREVENT RUNOFF FROM UNSTABILIZED AREAS ENTERING THE EXCAVATION AREA DURING CONSTRUCTION. SEDIMENT CONTROL DEVICES PLACED IN INFILTRATION AREAS MUST HAVE BOTTOM ELEVATIONS AT LEAST TWO (2) FEET HIGHER THAN THE FINISH GRADE BOTTOM ELEVATION OF THE INFILTRATION PRACTICE. WHEN CONVERTING A SEDIMENT TRAP TO AN INFILTRATION DEVICE, ALL ACCUMULATED SEDIMENT MUST BE REMOVED AND DISPOSED OF PRIOR TO FINAL GRADING OF INFILTRATION DEVICE.
26. THE SUBCONTRACTOR SHALL BE RESPONSIBLE FOR ANY EROSION OR SEDIMENTATION THAT MAY OCCUR BELOW STORMWATER OUTFALLS OR OFF-SITE AS A RESULT OF CONSTRUCTION OF THE PROJECT.
27. ANY REVISION TO THE CERTIFIED SOIL EROSION AND SEDIMENT CONTROL PLAN MUST BE SUBMITTED TO SOMERSET-UNION COUNTY SCD FOR REVIEW AND APPROVAL PRIOR TO IMPLEMENTATION IN THE FIELD.
28. THE SOMERSET-UNION COUNTY SOIL CONSERVATION DISTRICT MUST BE NOTIFIED, IN WRITING, AT LEAST 48 HOURS PRIOR TO ANY LAND DISTURBANCE: SOMERSET-UNION SCD, SOMERSET COUNTY 4-H CENTER, 308 MILLTOWN ROAD, BRIDGEWATER, NJ 08807; TEL: 908-526-2701; FAX: 908-526-7017
29. THE OWNER MUST OBTAIN A DISTRICT ISSUED REPORT OF COMPLIANCE PRIOR TO THE ISSUANCE OF ANY CERTIFICATE OF OCCUPANCY. SOMERSET-UNION COUNTY SCD REQUIRES AT LEAST ONE WEEK'S NOTICE TO FACILITATE THE SCHEDULING OF ALL REPORT OF COMPLIANCE INSPECTIONS. ALL SITE WORK MUST BE COMPLETED, INCLUDING TEMPORARY/PERMANENT STABILIZATION OF ALL EXPOSED AREAS, PRIOR TO THE ISSUANCE OF A REPORT OF COMPLIANCE BY BERGEN COUNTY.
30. SOMERSET-UNION COUNTY SCD INSPECTOR HAS THE OPTION OF REQUIRING ADDITIONAL SAFETY OR SEDIMENT CONTROL MEASURES, IF DEEMED NECESSARY.
31. THE SITE'S APPROVAL LETTER, APPROVED EROSION AND SEDIMENT CONTROL PLANS, DAILY LOG BOOKS, AND TEST REPORTS SHALL BE AVAILABLE AT THE PROJECT SITE THROUGHOUT CONSTRUCTION.
32. SITE INFORMATION

A. TOTAL AREA OF SITE	APPROXIMATELY 4	ACRES
B. AREA DISTURBED	0.28	ACRES
C. TOTAL CUT	0	CUBIC YARDS
D. TOTAL FILL	450	CUBIC YARDS

PROJECT SAMPLING REQUIREMENTS:

1. SAMPLING OF SOIL WILL BE PERFORMED BY ENGINEER AND IS OUTSIDE THE SCOPE OF SERVICES FOR THE SUBCONTRACTOR.
2. SUBCONTRACTOR IS RESPONSIBLE FOR ALL DECONTAMINATION SAMPLING AND WIPE SAMPLING WHEN MOVING TO AN UNCONTAMINATED AREA.

RICHARD P. TRAVER
N.J. PROFESSIONAL ENGINEER NO. 28300

©CH2M HILL 2010. ALL RIGHTS RESERVED.

NO.	DATE	REVISION	BY	APVD
0	2013/08/29	ISSUED FOR CONSTRUCTION	RT	Y

DSGN R. TRAVER | DR A. BROWN | CHK R. TRAVER | APVD R. TRAVER

1717 ARCH ST., SUITE 4400
PHILADELPHIA, PA 19103
PH (215) 563-4220 FAX (215) 563-3828
EB 0000072 AA 001992

IMPOUNDMENTS 1 AND 2
PILOT DEMONSTRATION STUDY
WYETH HOLDINGS CORPORATION
AMERICAN CYANAMID SUPERFUND SITE
20 POLHEMUS LANE
BRIDGEWATER, NJ

REUSE OF DOCUMENTS: THIS DOCUMENT, AND THE IDEAS AND DESIGNS INCORPORATED HEREIN, AS AN INSTRUMENT OF PROFESSIONAL SERVICE, IS THE PROPERTY OF CH2M HILL AND IS NOT TO BE USED, IN WHOLE OR IN PART, FOR ANY OTHER PROJECT WITHOUT THE WRITTEN AUTHORIZATION OF CH2MHILL.

CH2MHILL

CIVIL
SITE SOIL/SEDIMENT EROSION CONTROL NOTES

VERIFY SCALE
BAR IS ONE INCH ON ORIGINAL DRAWING.
0 1"

DATE	2013/08/29
PROJ	472109
DWG	G-0003
SHEET	3

FILE NAME: 472109-000-G-0003.dwg PLOT DATE: 10/23/2013 2:03 PM

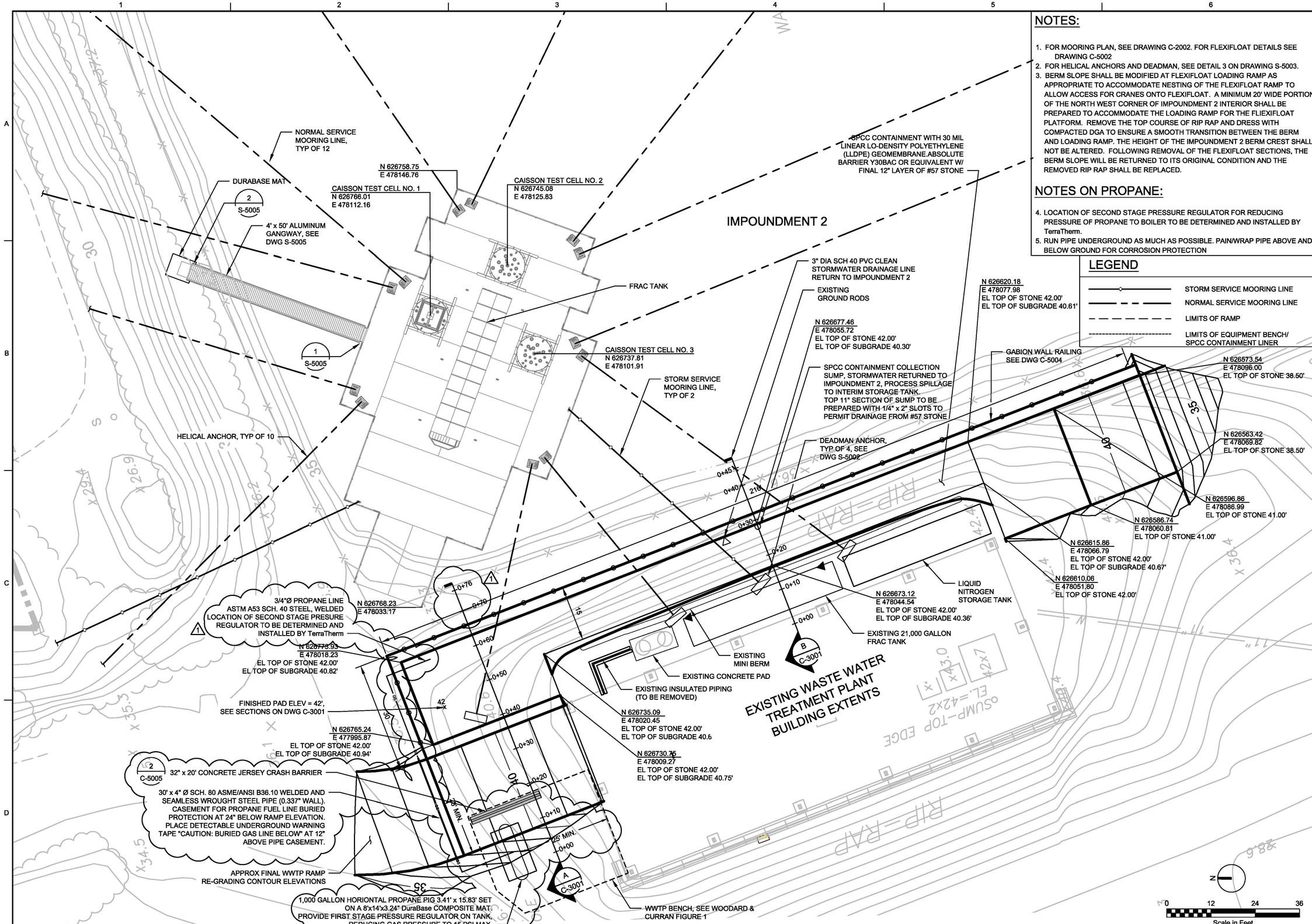

NOTES:

1. FOR MOORING PLAN, SEE DRAWING C-2002. FOR FLEXIFLOAT DETAILS SEE DRAWING C-5002
2. FOR HELICAL ANCHORS AND DEADMAN, SEE DETAIL 3 ON DRAWING S-5003.
3. BERM SLOPE SHALL BE MODIFIED AT FLEXIFLOAT LOADING RAMP AS APPROPRIATE TO ACCOMMODATE NESTING OF THE FLEXIFLOAT RAMP TO ALLOW ACCESS FOR CRANES ONTO FLEXIFLOAT. A MINIMUM 20' WIDE PORTION OF THE NORTH WEST CORNER OF IMPOUNDMENT 2 INTERIOR SHALL BE PREPARED TO ACCOMMODATE THE LOADING RAMP FOR THE FLIEXIFLOAT PLATFORM. REMOVE THE TOP COURSE OF RIP RAP AND DRESS WITH COMPACTED DGA TO ENSURE A SMOOTH TRANSITION BETWEEN THE BERM AND LOADING RAMP. THE HEIGHT OF THE IMPOUNDMENT 2 BERM CREST SHALL NOT BE ALTERED. FOLLOWING REMOVAL OF THE FLEXIFLOAT SECTIONS, THE BERM SLOPE WILL BE RETURNED TO ITS ORIGINAL CONDITION AND THE REMOVED RIP RAP SHALL BE REPLACED.

NOTES ON PROPANE:

4. LOCATION OF SECOND STAGE PRESSURE REGULATOR FOR REDUCING PRESSURE OF PROPANE TO BOILER TO BE DETERMINED AND INSTALLED BY TerraTherm.
5. RUN PIPE UNDERGROUND AS MUCH AS POSSIBLE. PAIN/WRAP PIPE ABOVE AND BELOW GROUND FOR CORROSION PROTECTION

LEGEND

- STORM SERVICE MOORING LINE
- NORMAL SERVICE MOORING LINE
- LIMITS OF RAMP
- LIMITS OF EQUIPMENT BENCH/ SPCC CONTAINMENT LINER

RICHARD P. TRAVER
STATE OF NEW JERSEY
N.J. PROFESSIONAL ENGINEER NO. 26300

NO.	DATE	REVISION	DR	CHK	APVD
1	2013/10/25	REVISION #1	RT	RT	Y
0	2013/08/29	ISSUED FOR CONSTRUCTION	RT	RT	Y
DSGN			S. EMEREUWA	R. TRAVER	R. TRAVER
			R. TRAVER	R. TRAVER	BY

1717 ARCH ST., SUITE 4400
PHILADELPHIA, PA 19103
PH (215) 563-4220 FAX (215) 563-3828
EB 0000072 AA 001992

IMPOUNDMENTS 1 AND 2
PILOT DEMONSTRATION STUDY
WYETH HOLDINGS CORPORATION
AMERICAN CYANAMID SUPERFUND SITE
DANIELSON AVENUE
BRIDGEWATER, NJ

CH2MHILL

CIVIL

SITE GENERAL ARRANGEMENT

VERIFY SCALE
BAR IS ONE INCH ON ORIGINAL DRAWING.
0 1"

DATE	2013/08/29
PROJ	472109
DWG	C-2001
SHEET	4

REUSE OF DOCUMENTS: THIS DOCUMENT, AND THE IDEAS AND DESIGNS INCORPORATED HEREIN, AS AN INSTRUMENT OF PROFESSIONAL SERVICE, IS THE PROPERTY OF CH2M HILL AND IS NOT TO BE USED, IN WHOLE OR IN PART, FOR ANY OTHER PROJECT WITHOUT THE WRITTEN AUTHORIZATION OF CH2M HILL.
©CH2M HILL 2010. ALL RIGHTS RESERVED.

FILE NAME: 472109-001-C-2001.dwg PLOT DATE: 10/24/2013 9:08 AM

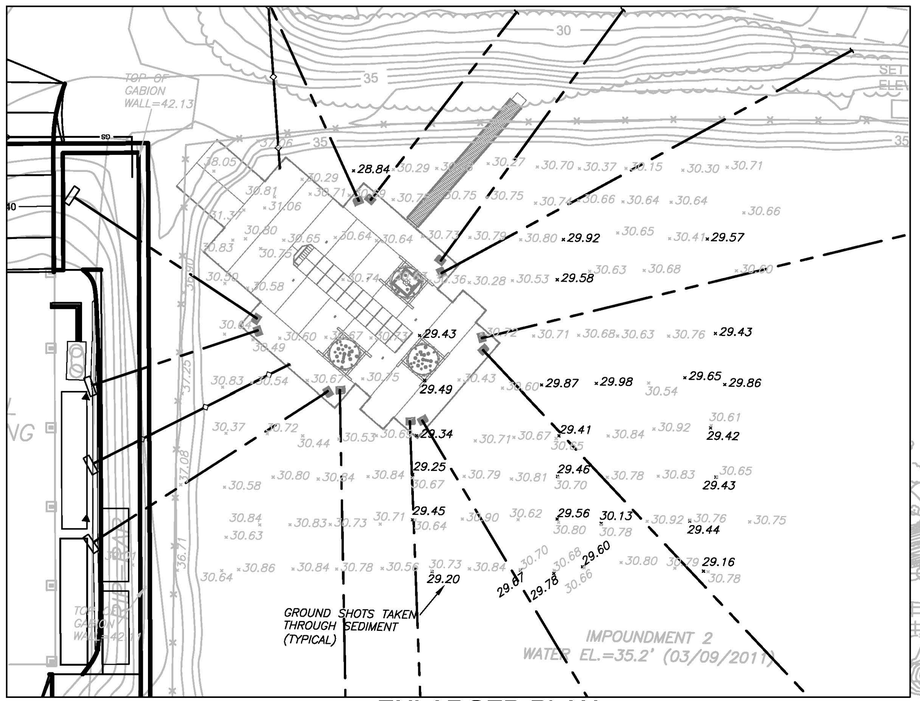

ENLARGED PLAN

½"=1'-0"

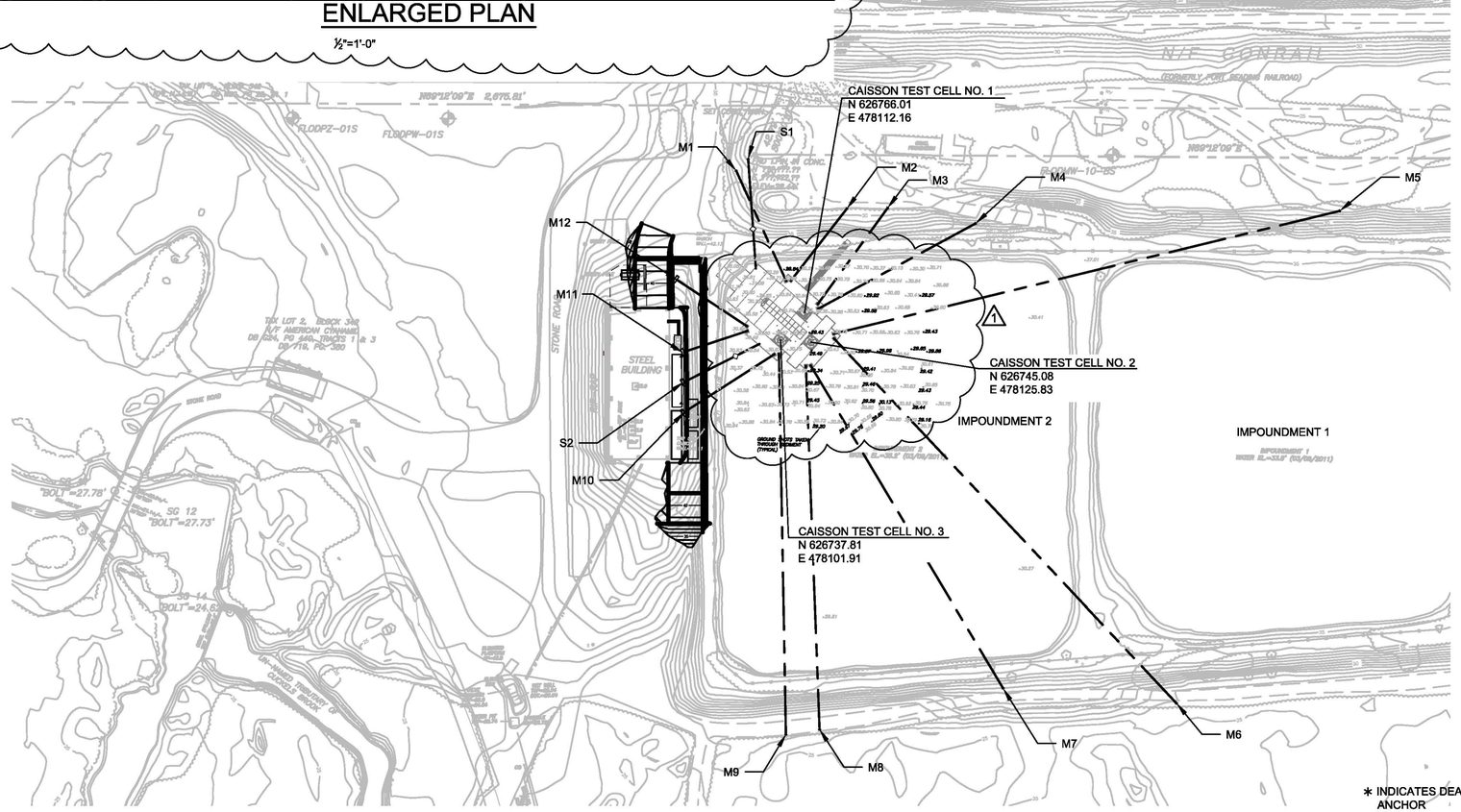

NOTES:

1. FOR FLEXIFLOAT LOCATION, ORIENTATION, AND MOORING LINE LAYOUT SEE DRAWINGS C-2001, C-5002, AND S-2001.
2. MOORING LINE SHALL BE 3/4" ULTRA HIGH MOLECULAR WEIGHT POLYETHYLENE DYNEEMA FIBER LINE WITH A 52,500 LB MINIMUM BREAKING STRENGTH. AMSTEEL BLUE BY SAMSON ROPE OR EQUAL.
3. MOORING LINES SHALL BE TAUT AND SHALL BE INSPECTED THREE TIMES PER WEEK FOR TAUTNESS BY THE CH2M HILL SITE SUPERINTENDENT.
4. PROVIDE ALL REQUIRED MOORING LINE FASTENING HARDWARE.
5. FOR GROUND ANCHORS SEE (-/S-5003).
6. INSTALL GROUND ANCHORS FOR NORMAL SERVICE AND STORM SERVICE PRIOR TO FLEXIFLOAT PLACEMENT.
7. PAINT THE ABOVE GROUND PORTION OF HELICAL ANCHORS BRIGHT ORANGE.
8. MOORING CLEATS SHALL BE THE STANDARD FLEXIFLOAT MOORING CLEATS. INSTALL CLEATS FOR STORM SERVICE MOORING DURING INITIAL FLEXIFLOAT PLACEMENT.
9.. FOR MOORING WINCHES SEE (4/S-5002).
10. SUFFICIENT MOORING LINE SHALL BE KEPT ON SITE TO ATTACH ALL NORMAL SERVICE AND STORM SERVICE MOORING LINES.
11. INSTALL STORM SERVICE MOORING LINES AND LOOSEN ALL MOORING LINES SUFFICIENTLY TO ALLOW FLEXIFLOATS TO RISE 8'-0" ABOVE THE NORMAL SERVICE POND ELEVATION WHEN THE NATIONAL OCEANIC AND ATMOSPHERIC ADMINISTRATION ISSUES AN IMMINENT HURRICANE WARNING FOR THE BOUND BROOK, NEW JERSEY AREA. LOOSEN MOORING LINES THE AMOUNT SHOWN IN ANCHOR TABLE BELOW.
12. ANCHOR LOCATIONS AND ALIGNMENT SHALL FOLLOW MOORING LINE ALIGNMENT AS SHOWN.
13. THE STORM SERVICE MOORING HAS BEEN DESIGNED FOR A FLOW RATE OF 6 FPS PAST THE FLEXIFLOAT BARGE AND A WIND SPEED OF 110 MILES PER HOUR. STORMS THAT CAUSE HIGHER FLOW SPEEDS AND HIGHER WIND SPEEDS MAY EXCEED THE DESIGN CAPACITY OF THE MOORING.
14. GROUND ANCHOR LOCATIONS SHOWN REPRESENT THE ATTACHMENT POINT BETWEEN THE GROUND ANCHOR AND MOORING LINE.
15. DEADMAN ANCHOR LOCATIONS SHOWN REPRESENT THE INTERSECTION BETWEEN THE MOORING LINE AND THE FACE OF DEADMAN.
16. MOORING LINES S1 AND S2 ARE STORM MOORING LOCATIONS.
17. MOORING LINES SHALL HAVE FACTORY FABRICATED SPLICED EYES WITH THIMBLES ON ONE END. THIMBLE EYE SPLICE SHALL NOT REDUCE MOORING LINE STRENGTH.
18. MOORING LINES SHALL BE FREE OF KNOTS WHICH REDUCE MOORING LINE STRENGTH
19. PRIOR TO INSTALLING STORM MOORING LINES, REMOVE ALUMINUM GANGWAY.

N

0 60 120 180

Scale in Feet

ANCHOR TABLE

ANCHOR	GROUND ANCHOR LOCATIONS		WINCH LOCATIONS		APPROX LINE LENGTH	DISTANCE TO LENGTHEN AT STORM WARNING (FT)
	NORTHING	EASTING	NORTHING	EASTING		
M1	626854.82	478017.71	626784.72	478088.79	140	1.60
M2	626858.43	478114.07	626786.38	478092.22	90	1.60
M3	626871.17	478145.31	626776.34	478119.86	115	1.30
M4	626885.12	478217.53	626772.74	478121.47	190	0.50
M5	627002.17	478493.92	626758.13	478140.77	465	0.30
M6	626575.39	478513.76	626754.70	478142.45	430	0.30
M7	626535.76	478375.80	626727.12	478132.44	370	0.40
M8	626450.02	478246.68	626725.47	478128.87	325	0.50
M9	626436.08	478222.35	626726.66	478104.66	335	0.50
M10×	626653.87	478049.08	626724.93	478101.22	95	0.50
M11×	626700.10	478031.12	626734.94	478073.63	55	0.70
M12×	626753.45	478004.31	626738.41	478071.97	85	0.70
	GROUND ANCHOR LOCATIONS		DECK CLEAT LOCATIONS			
S1	626867.37	478023.46	626785.40	478061.75	140	-
S2∗	626677.04	478040.08	626728.42	478086.79	85	-

∗ INDICATES DEADMAN ANCHOR

RICHARD P. TRAVER

N.J. PROFESSIONAL ENGINEER NO. 26300

NO.	DATE	REVISION	DR	CHK	APVD
1	2013/10/25	REVISION #1	RT	Y	
0	2013/08/29	ISSUED FOR PERMITTING	RT	Y	
DSGN	R. TRAVER	S. EMEREUWA	R. TRAVER	R. TRAVER	

REUSE OF DOCUMENTS: THIS DOCUMENT, AND THE IDEAS AND DESIGNS INCORPORATED HEREIN, AS AN INSTRUMENT OF PROFESSIONAL SERVICE, IS THE PROPERTY OF CH2M HILL AND IS NOT TO BE USED, IN WHOLE OR IN PART, FOR ANY OTHER PROJECT WITHOUT THE WRITTEN AUTHORIZATION OF CH2M HILL.
©CH2M HILL 2010. ALL RIGHTS RESERVED.

1717 ARCH ST., SUITE 4400
PHILADELPHIA, PA 19103
PH (215) 563-4220 FAX (215) 983-3828
EB 0000072 AA 001992

IMPOUNDMENTS 1 AND 2
PILOT DEMONSTRATION STUDY
WYETH HOLDINGS CORPORATION
AMERICAN CYANAMID SUPERFUND SITE
20 COMMERCE AVE
BRIDGEWATER, NJ

CH2MHILL

CIVIL

MOORING LINE LAYOUT

VERIFY SCALE
BAR IS ONE INCH ON ORIGINAL DRAWING.
0 1"

DATE	2013/08/29
PROJ	472109
DWG	C-2002
SHEET	5

FILE NAME: 472109-001-C-2002.dwg PLOT DATE: 10/23/2013 2:15 PM

SEQUENCE OF CONSTRUCTION

1. INSTALLATION OF SILT FENCE TO THE NORTH AND EAST SIDE OF PROPOSED 100' X 100' EQUIPMENT LAYDOWN PAD. WEST AND SOUTH SIDES OF AREA ARE BOUNDED BY THE ELEVATED IMPOUNDMENT #2 BERM AND THE ELEVATED ACCESS RAMP TO THE GWTP;
2. CLEARING & GRUBBING OF SCRUB VEGETATION
3. REMOVAL/DISPOSAL OF OLD EQUIPMENT DECONTAMINATION CONTAINMENT SUMP LINER
4. ROUGH GRADING OF 100' X 100' EQUIPMENT LAYDOWN PAD AREA USING EXISTING STONE BASE
5. LAYDOWN OF 8 OZ NON-WOVEN POLYPROPYLENE OR POLYESTER GEOTEXTILE
6. PLACEMENT & COMPACTION OF 12" LIFT OF DGA

N

0 60 120 180
Scale in Feet

RICHARD P. TRAVER

N.J. PROFESSIONAL ENGINEER NO. 26300

NO.	DATE	REVISION	CHK	APVD
0	2013/08/29	ISSUED FOR CONSTRUCTION	RT	Y

DSGN	DR	CHK	APVD
R. TRAVER	A. BROWN	R. TRAVER	R. TRAVER

BY
R. TRAVER

CH2MHILL
1717 ARCH ST., SUITE 4400
PHILADELPHIA, PA 19103
PH (215) 563-4220 FAX (215) 563-3828
EB 0000072 AA 001992

IMPOUNDMENTS 1 AND 2
PILOT DEMONSTRATION STUDY
WYETH HOLDINGS CORPORATION
AMERICAN CYANAMID SUPERFUND SITE
2401 CHERRY LAWN AVE
BRIDGEWATER, NJ

CIVIL
SITE SOIL/SEDIMENT EROSION CONTROL PLAN

VERIFY SCALE
BAR IS ONE INCH ON ORIGINAL DRAWING.
0 1"

DATE	2013/08/29
PROJ	472109
DWG	C-2101
SHEET	6

REUSE OF DOCUMENTS: THIS DOCUMENT, AND THE IDEAS AND DESIGNS INCORPORATED HEREIN, AS AN INSTRUMENT OF PROFESSIONAL SERVICE, IS THE PROPERTY OF CH2M HILL AND IS NOT TO BE USED, IN WHOLE OR IN PART, FOR ANY OTHER PROJECT WITHOUT THE WRITTEN AUTHORIZATION OF CH2M HILL.
©CH2M HILL 2010. ALL RIGHTS RESERVED.

FILE NAME: 472109-001-C-2101.dwg PLOT DATE: 10/23/2013 2:39 PM

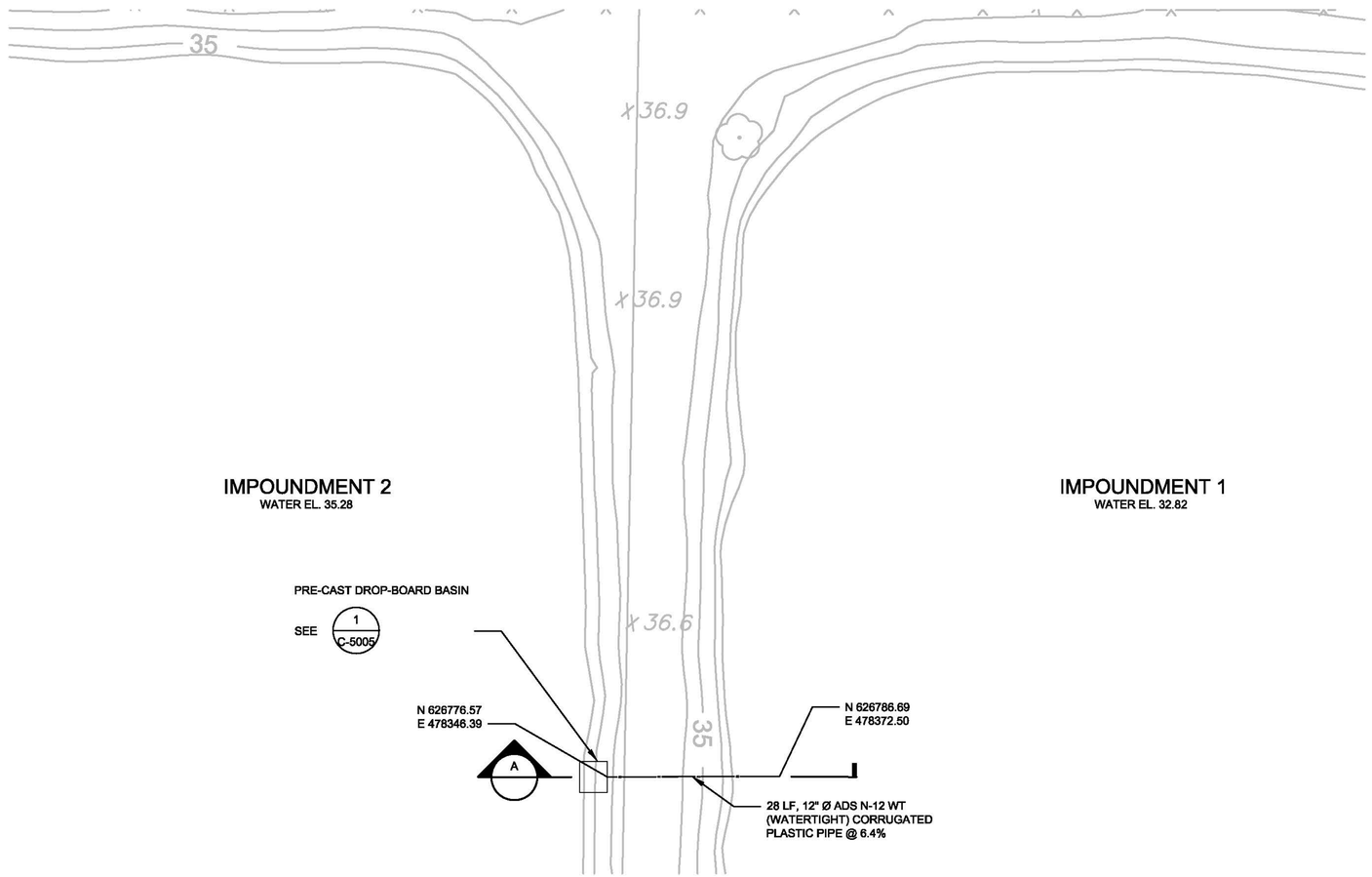

PLAN
1"=1'-0"

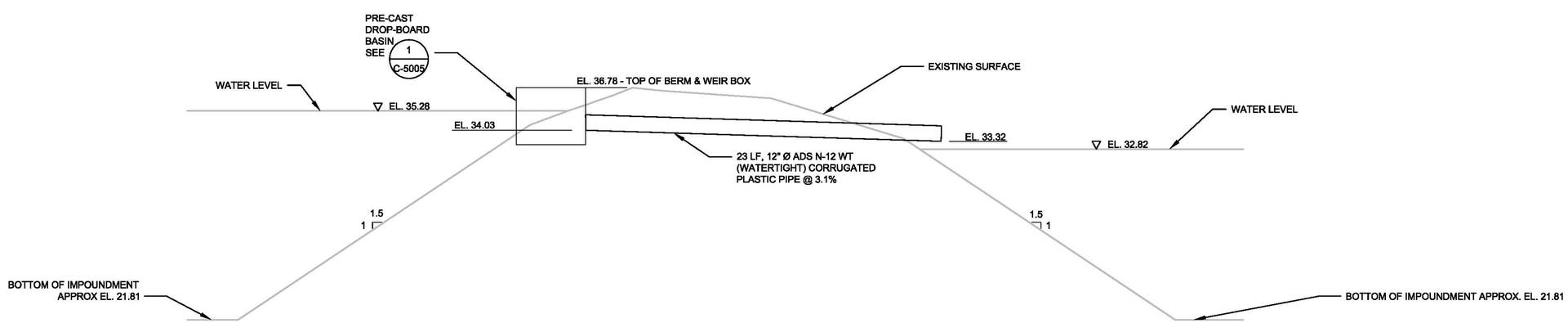

A SECTION
1" = 4'-0"

RICHARD P. TRAVER
N.J. PROFESSIONAL ENGINEER
NO. 26300

NO.	DATE	REVISION	BY	APVD
0	2013/08/29	ISSUED FOR CONSTRUCTION	RT	Y

DSGN R. TRAVER | DR E. KITZMILLER | CHK R. TRAVER | APVD R. TRAVER

1717 ARCH ST. - SUITE 4400
PHILADELPHIA, PA 19103
PH (215) 563-4220 FAX (215) 563-3828
EB 0000072 AA 001992

IMPOUNDMENTS 1 AND 2
PILOT DEMONSTRATION STUDY
WYETH HOLDINGS CORPORATION
AMERICAN CYANAMID SUPERFUND SITE
20 POLHEMUS LANE
BRIDGEWATER, NJ

CH2MHILL

CIVIL
CROSS-FLOW PIPE
UTILITY PLAN AND SECTION

VERIFY SCALE
BAR IS ONE INCH ON ORIGINAL DRAWING.
0 1"

DATE	2013/08/29
PROJ	472109
DWG	C-2801
SHEET	7

REUSE OF DOCUMENTS: THIS DOCUMENT, AND THE IDEAS AND DESIGNS INCORPORATED HEREIN, AS AN INSTRUMENT OF PROFESSIONAL SERVICE, IS THE PROPERTY OF CH2M HILL AND IS NOT TO BE USED, IN WHOLE OR IN PART, FOR ANY OTHER PROJECT WITHOUT THE WRITTEN AUTHORIZATION OF CH2MHILL.
©CH2M HILL 2010. ALL RIGHTS RESERVED.

FILE NAME: 472109-001-C-2801.dwg PLOT DATE: 10/23/2013 2:48 PM

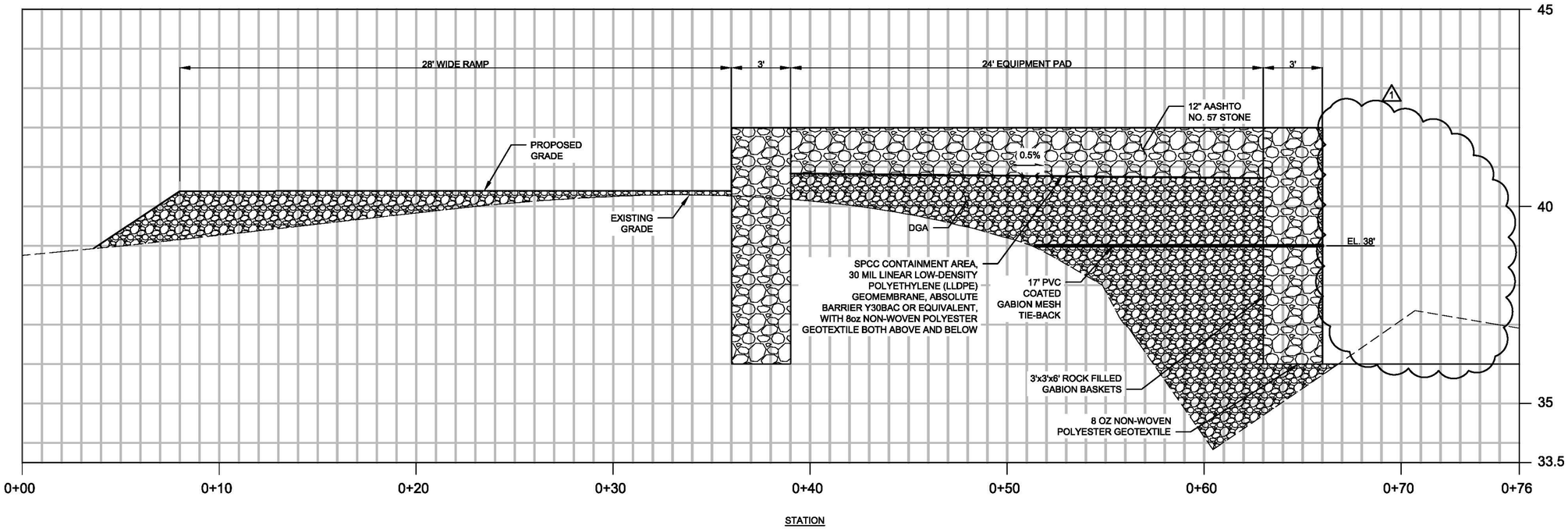

A C-2001 **SECTION**
HORIZONTAL: 1"=3'
VERTICAL: 1"=1.5'

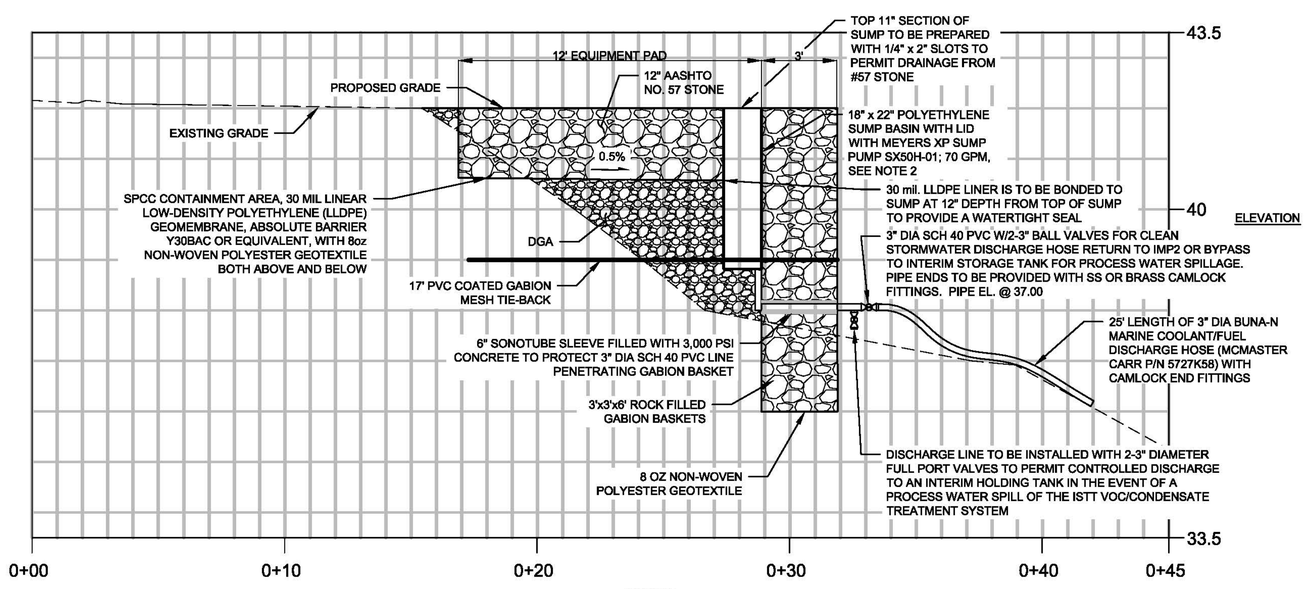

B C-2001 **SECTION**
HORIZONTAL: 1"=3'
VERTICAL: 1"=1.5'

GENERAL NOTES

1. CALCULATED DEPRESSION STORAGE AREA ABOVE SPCC LINER = 8,976 GALLONS.
2. CH2M HILL IS RESPONSIBLE FOR THE SPCC CONTAINMENT AND SPILL MANAGEMENT. PUMP WILL BE SPECIFIED AND PROVIDED BY CH2M HILL'S BENCH CONSTRUCTION SUBCONTRACTOR. TERRATHERM WILL BE REQUIRED TO PROVIDE AN APPROPRIATE ELECTRICAL LINE CONNECTION TO THE PUMP DISCONNECT BOX.
3. THE 500-YEAR FLOOD WATER SURFACE ELEVATION IS 41.71' NAVD 88

NO.	DATE	DSGN	DR	CHK	APVD	BY	REVISION
1	2013/10/23	R. TRAVER	A. BROWN	M. HOLMQUIST	APVD	RT	REVISION #1
0	2013/10/23					RT	ISSUED FOR CONSTRUCTION

RICHARD P. TRAVER
N.J. PROFESSIONAL ENGINEER NO. 28300

©CH2M HILL 2010. ALL RIGHTS RESERVED.

1717 ARCH ST., SUITE 4400
PHILADELPHIA, PA 19103
PH (215) 563-4220 FAX (215) 563-3828
EB 0000072 AA 001992

IMPOUNDMENTS 1 AND 2
PILOT DEMONSTRATION STUDY
WYETH HOLDINGS CORPORATION
AMERICAN CYANAMID SUPERFUND SITE
2 DOUGLAS AVENUE
BRIDGEWATER, NJ

CH2MHILL

CIVIL
SECTIONS

REUSE OF DOCUMENTS: THIS DOCUMENT, AND THE IDEAS AND DESIGNS INCORPORATED HEREIN, AS AN INSTRUMENT OF PROFESSIONAL SERVICE, IS THE PROPERTY OF CH2M HILL AND IS NOT TO BE USED, IN WHOLE OR IN PART, FOR ANY OTHER PROJECT WITHOUT THE WRITTEN AUTHORIZATION OF CH2MHILL.

AS SHOWN
VERIFY SCALE
BAR IS ONE INCH ON ORIGINAL DRAWING.
0 1"

DATE	2013/08/29
PROJ	472109
DWG	C-3001
SHEET	8

FILE NAME: 472109-001-C-3001.dwg PLOT DATE: 10/24/2013 10:57 AM

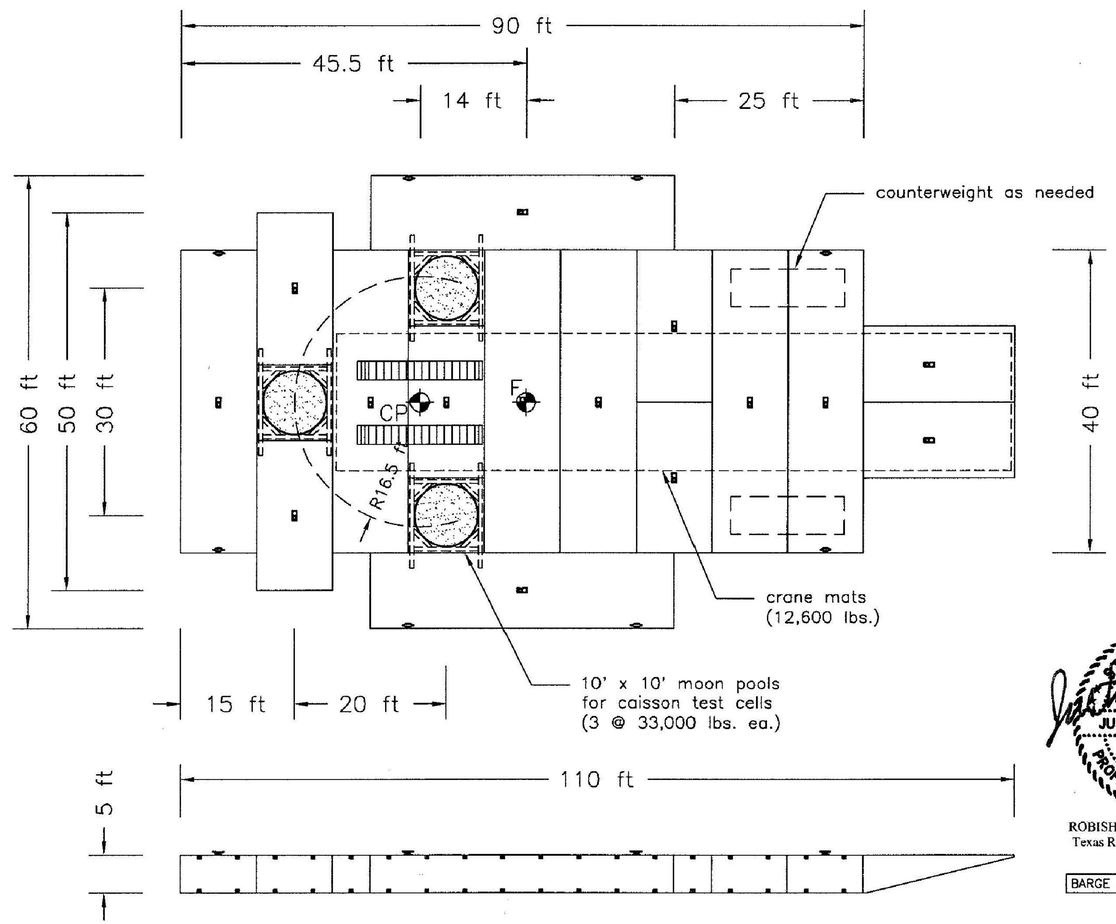

STATE OF TEXAS
JUSTIN R. WARREN
113377
LICENSED
PROFESSIONAL ENGINEER
5/20/13

ROBISHAW ENGINEERING, INC.
Texas Registered Engineering Firm
F-1560

BARGE STATIC STABILITY ONLY

CP – Centerpin of CAT 330 drill rig (178,200 lbs.)
F – Center of Flotation

Series S–50 Equipment
8 Quadrafloats, 40' x 10' x 5'
5 Duofloats, 20' x 10' x 5'
2 Loading Ramps, 20' x 10'
8 Deck Cleats

PROPERTY OF ROBISHAW ENGINEERING, INC.

This drawing is confidential and contains trade secrets and other information proprietary to us. Disclosure to you is expressly conditioned upon your assent that it is not to be copied, reproduced or exhibited to other parties, without consent, but is to be used only with reference to contracts or proposals of this company. It or any copies thereof shall be returned promptly upon request.

Robishaw Engineering, Inc.
Houston, Texas

Flexifloat Drill Barge Assembly
CH2M HILL Pilot Demonstration Test Cell
Bridgewater, New Jersey

DRAWN: SS	DATE: 03/22/13	SKETCH NO: PDH–5361A

1 FLEXIFLOAT DRILL BARGE ASSEMBLY
1" = 10'-0"
C-2001

0 10 20 30
1"=10"

RICHARD P. TRAVER
N.J. PROFESSIONAL ENGINEER
NO. 26300

NO.	DATE	REVISION	BY	APVD
0	2013/08/29	ISSUED FOR CONSTRUCTION	RT	Y

DSGN R. TRAVER | DR S. EMEREUWA | CHK R. TRAVER | APVD R. TRAVER

1717 ARCH ST. - SUITE 4400
PHILADELPHIA, PA 19103
PH (215) 563-4220 FAX (215) 563-3828
EB 0000072 AA 001992

IMPOUNDMENTS 1 AND 2
PILOT DEMONSTRATION STUDY
WYETH HOLDINGS CORPORATION
AMERICAN CYANAMID SUPERFUND SITE
20 POLHEMUS LANE
BRIDGEWATER, NJ

CH2MHILL

CIVIL
FLEXIFLOAT DRILL BARGE ASSEMBLY

1"=20'
VERIFY SCALE
BAR IS ONE INCH ON ORIGINAL DRAWING.
0 1"

DATE	2013/08/29
PROJ	472109
DWG	C-5002
SHEET	9

REUSE OF DOCUMENTS: THIS DOCUMENT, AND THE IDEAS AND DESIGNS INCORPORATED HEREIN, AS AN INSTRUMENT OF PROFESSIONAL SERVICE, IS THE PROPERTY OF CH2M HILL AND IS NOT TO BE USED, IN WHOLE OR IN PART, FOR ANY OTHER PROJECT WITHOUT THE WRITTEN AUTHORIZATION OF CH2MHILL.
©CH2M HILL 2010. ALL RIGHTS RESERVED.

FILE NAME: 472109-001-C-5002.dwg PLOT DATE: 10/23/2013 3:07 PM

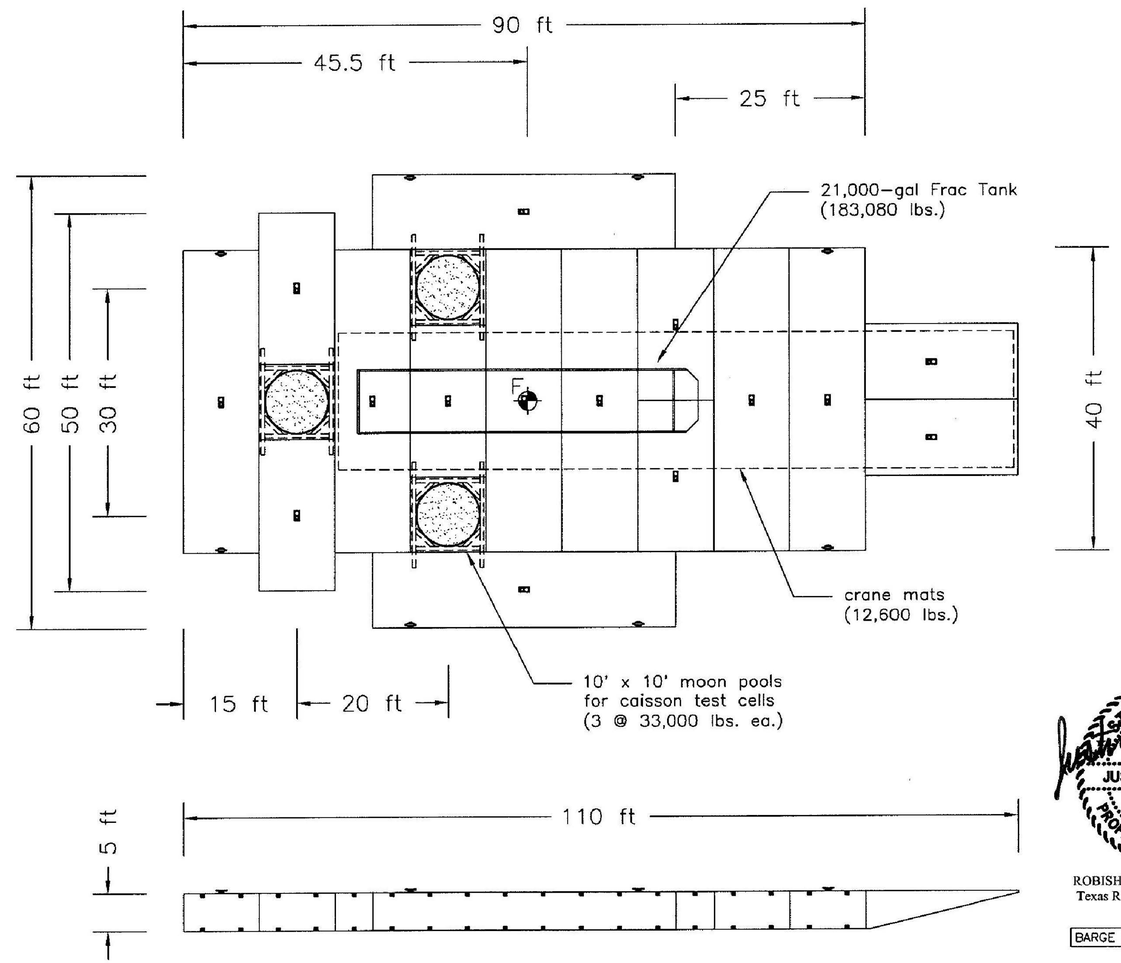

STATE OF TEXAS
JUSTIN R. WARREN
113377
LICENSED
PROFESSIONAL ENGINEER
5/20/13

ROBISHAW ENGINEERING, INC.
Texas Registered Engineering Firm
F-1560

BARGE STATIC STABILITY ONLY

Series S-50 Equipment
8 Quadrafloats, 40' x 10' x 5'
5 Duofloats, 20' x 10' x 5'
2 Loading Ramps, 20' x 10'
8 Deck Cleats

F – Center of Flotation

PROPERTY OF ROBISHAW ENGINEERING, INC.

This drawing is confidential and contains trade secrets and other information proprietary to us. Disclosure to you is expressly conditioned upon your assent that it is not to be copied, reproduced or exhibited to other parties, without consent, but is to be used only with reference to contracts or proposals of this company. It or any copies thereof shall be returned promptly upon request.

Robishaw Engineering, Inc.
Houston, Texas

Flexifloat Drill Barge Assembly
CH2M HILL Pilot Demonstration Test Cell
Bridgewater, New Jersey

DRAWN: SS | DATE: 05/17/13 | SKETCH NO: PDH-5361B

1 FLEXIFLOAT DRILL BARGE ASSEMBLY
1" = 10'-0"
C-2001

0 10 20 30
1"=10"

RICHARD P. TRAVER
STATE OF NEW JERSEY
N.J. PROFESSIONAL ENGINEER
NO. 26300

NO.	DATE	REVISION	BY	APVD
0	2013/08/29	ISSUED FOR CONSTRUCTION	RT	Y

DSGN R. TRAVER | DR S. EMEREUWA | CHK R. TRAVER | APVD R. TRAVER

©CH2M HILL 2010. ALL RIGHTS RESERVED.

1717 ARCH ST., SUITE 4400
PHILADELPHIA, PA 19103
PH (215) 563-4220 FAX (215) 563-3828
EB 0000072 AA 001992

IMPOUNDMENTS 1 AND 2
PILOT DEMONSTRATION STUDY
WYETH HOLDINGS CORPORATION
AMERICAN CYANAMID SUPERFUND SITE
2201 HIGHWAY 202/206
BRIDGEWATER, NJ

CH2MHILL

CIVIL
FLEXIFLOAT DRILL BARGE ASSEMBLY

REUSE OF DOCUMENTS: THIS DOCUMENT, AND THE IDEAS AND DESIGNS INCORPORATED HEREIN, AS AN INSTRUMENT OF PROFESSIONAL SERVICE, IS THE PROPERTY OF CH2M HILL AND IS NOT TO BE USED, IN WHOLE OR IN PART, FOR ANY OTHER PROJECT WITHOUT THE WRITTEN AUTHORIZATION OF CH2MHILL.

VERIFY SCALE
BAR IS ONE INCH ON ORIGINAL DRAWING.
0 1"

DATE	2013/08/29
PROJ	472109
DWG	C-5003
SHEET	10

FILE NAME: 472109-001-C-5003.dwg PLOT DATE: 10/23/2013 3:10 PM

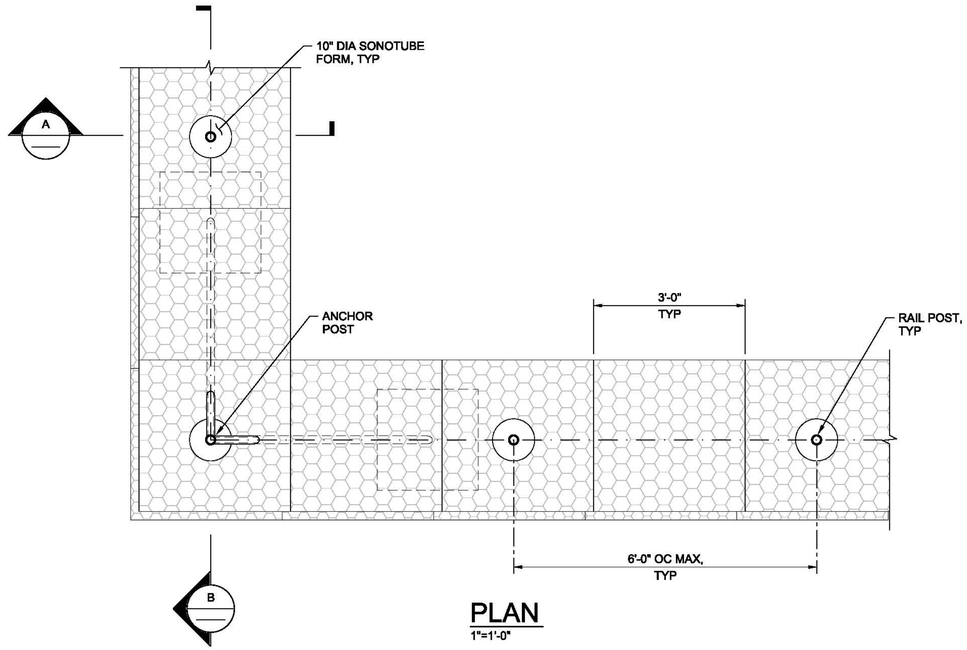

PLAN
1"=1'-0"

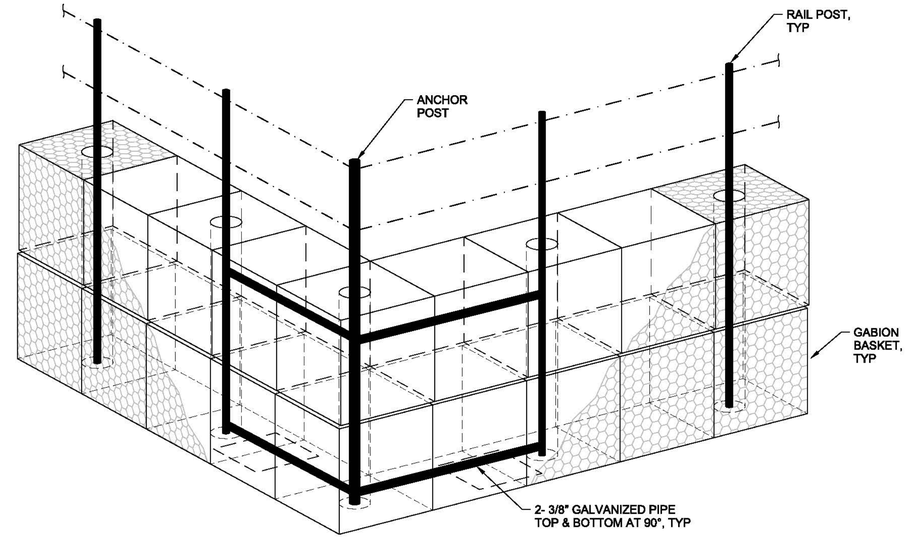

ISOMETRIC VIEW
NTS

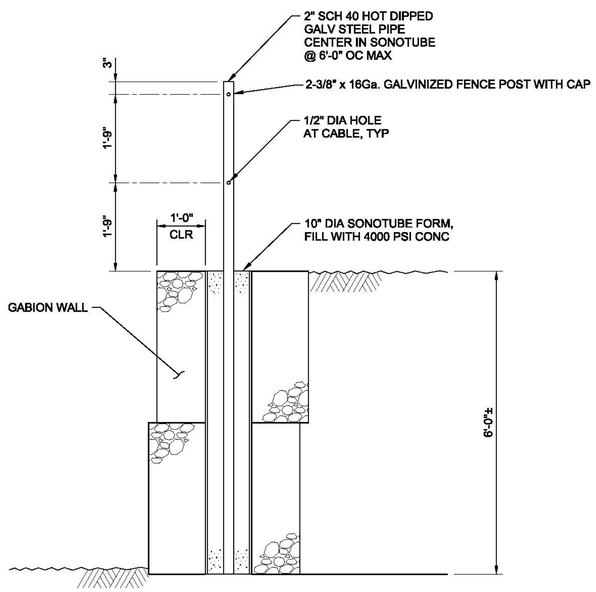

NOTES:
1. RAILING SHALL BE PRE-TENSIONED TO 1,200 POUNDS.
2. PROVIDE ALL REQUIRED TURNBUCKLES, EYES, AND OTHER FITTINGS. FITTINGS, ATTACHMENTS AND SPLICES SHALL BE CAPABLE OF DEVELOPING THE FULL CABLE BREAK STRENGTH.
3. PLACE POST PRIOR TO FILLING GABIONS WITH RIP-RAP

A GABION WALL RAILING
1 1/2"=1'-0"

C-2001

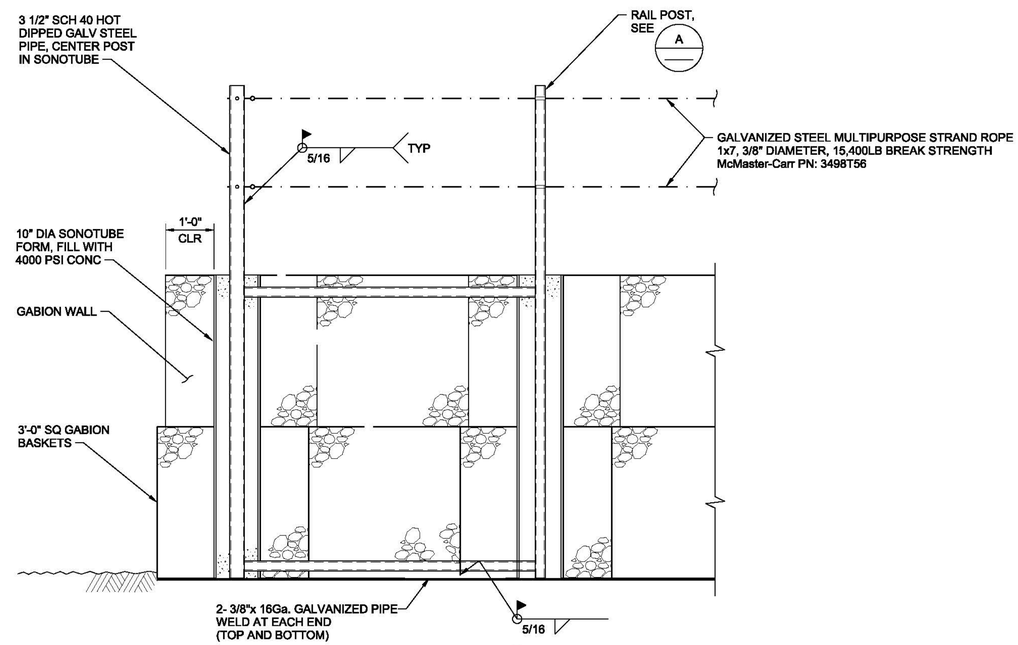

NOTES:
1. FOR INFORMATION NOT SHOWN, SEE A
2. TRIM PIPE BRACE TO FIT IN FIELD.
3. PROVIDE ANCHOR AT ENDS OF RAILING AND EACH SIDE OF OPENINGS IN RAILING.

B GABION WALL RAILING ANCHOR
1 1/2"=1'-0"

C-2001

NO.	DATE	DSGN	DR	CHK	APVD	BY	APVD	REVISION
1	2013/10/25	R. TRAVER	J. HOLMQUIST	M. HOLMQUIST	R. TRAVER	RT	Y	REVISION #1
0	2013/08/29					RT	Y	ISSUED FOR CONSTRUCTION

RICHARD P. TRAVER
N.J. PROFESSIONAL ENGINEER NO. 26300

©CH2M HILL 2011. ALL RIGHTS RESERVED.

1717 ARCH ST., SUITE 4400
PHILADELPHIA, PA 19103
PH (215) 563-4220 FAX (215) 563-3828

IMPOUNDMENTS 1 AND 2
PILOT DEMONSTRATION STUDY
WYETH HOLDINGS CORPORATION
AMERICAN CYANAMID CORPORATION GROUND SITE
20 POLHEMUS LANE
BRIDGEWATER, NJ

CH2MHILL®

CIVIL
EQUIPMENT BENCH
GABION BASKET AND
SAFETY RAIL DETAILS

REUSE OF DOCUMENTS: THIS DOCUMENT, AND THE IDEAS AND DESIGNS INCORPORATED HEREIN, AS AN INSTRUMENT OF PROFESSIONAL SERVICE, IS THE PROPERTY OF CH2M HILL AND IS NOT TO BE USED, IN WHOLE OR IN PART, FOR ANY OTHER PROJECT WITHOUT THE WRITTEN AUTHORIZATION OF CH2M HILL.

AS SHOWN
VERIFY SCALE
BAR IS ONE INCH ON ORIGINAL DRAWING.
0 1"

DATE	2013/08/29
PROJ	472109
DWG	C-5004
SHEET	11

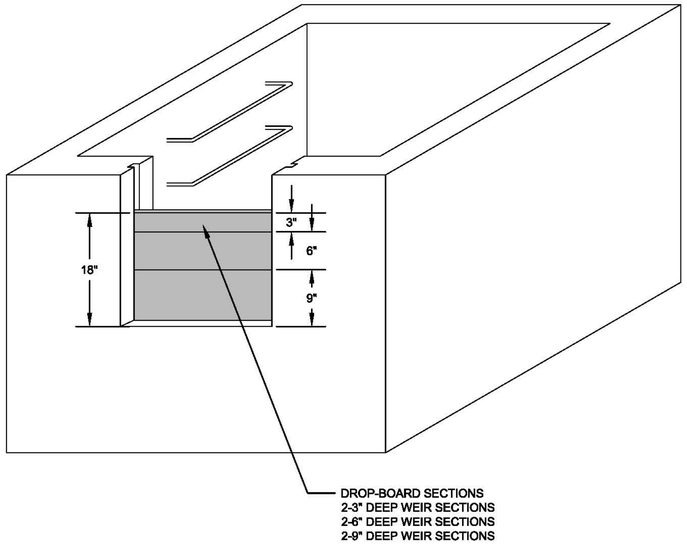

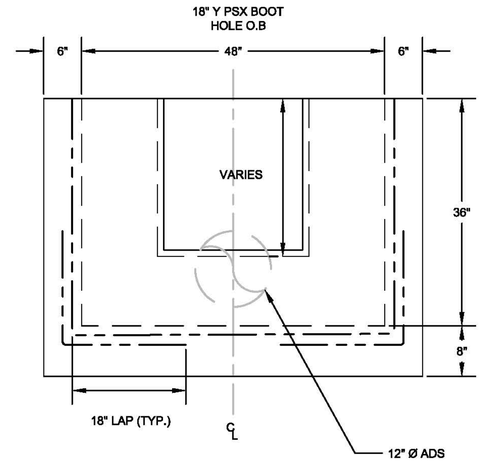

SECTION

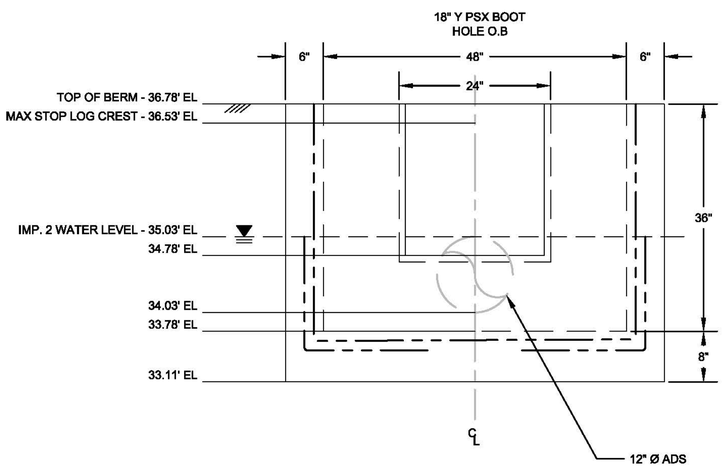

ELEVATIONS

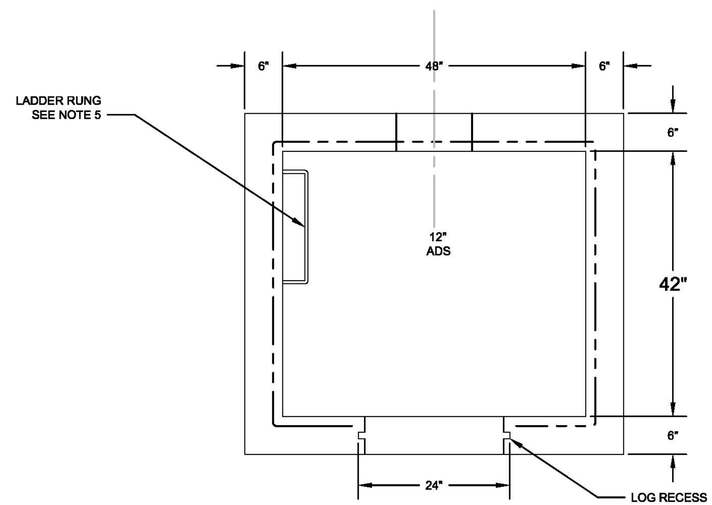

PLAN VIEW

1 42" x 48" PRE-CAST DROP-BOARD BASIN
1" = 1'-0"
C-2801

NOTES:

1. CONCRETE: 4,500 PSI @ 28 DAYS.
2. REINFORCING: AS SPECIFIED, GRADE 60 REBAR.
3. STEPS: DOT APPROVED, STEEL REINFORCED POLYPROPLENE COATED.
4. SEE DRAWING C-2801 FOR DETAILS NOT SHOWN.
5. LADDER RUNGS: DOT APPROVED, STEEL REINFORCED COPOLYMER PROPOYLENE, 1/2" Ø REINFORCEMENT STEEL BAR AS PER ASTM A 615, GRADE 60, WITH POLYPROPYLENE COATING (CLASSIFICATION PP0344B33534Z02) AS PER ASTM D 4101

GROUND FLOOR GWTP: 42.76-FT
NW CORNER IMPOUNDMENT #2: 37.11-FT
ELEVATION NORTH LAYDOWN AREA: 28.13-FT
CENTER BERM WHERE EQUALIZATION PIPE IS LOCATED: 36.78-FT
TOP OF CROSS CONNECT PIPE:
IMPOUNDMENT #1 SIDE: 35.93-FT
IMPOUNDMENT #2 SIDE: 35.28-FT
TOP OF H2O IMPOUNDMENT #1: 32.82-FT
TOP OF H2O IMPOUNDMENT #2: 35.03-FT

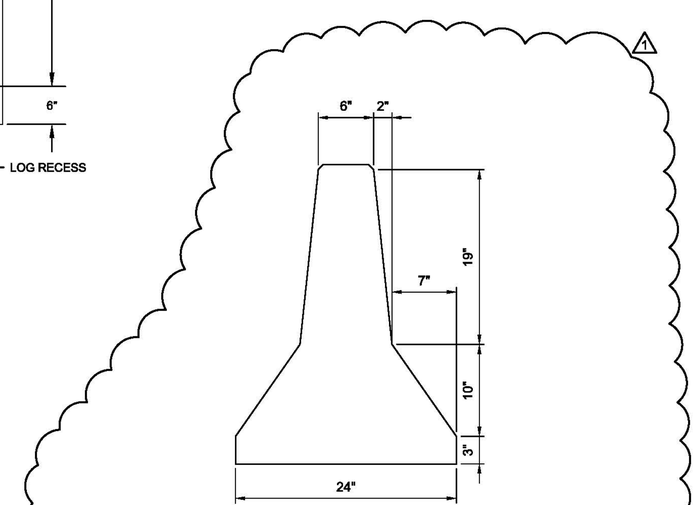

2 NEW JERSEY BARRIER CROSS SECTION
NTS

0 1 2 3
1"=1'-0"

RICHARD P. TRAVER
N.J. PROFESSIONAL ENGINEER
NO. 28300

NO.	DATE	REVISION	BY	APVD
1	2013/10/25	REVISION #1	RT	Y
0	2013/08/29	ISSUED FOR CONSTRUCTION	RT	Y

DSGN R. TRAVER | DR E. KITZMILLER | CHK R. TRAVER | APVD R. TRAVER

1717 ARCH ST. - SUITE 4400
PHILADELPHIA, PA 19103
PH (215) 563-4220 FAX (215) 563-3828
EB 0000072 AA 001992

IMPOUNDMENTS 1 AND 2
PILOT DEMONSTRATION STUDY
WYETH HOLDINGS CORPORATION
AMERICAN CYANAMID SUPERFUND SITE
20 POLHEMUS LANE
BRIDGEWATER, NJ

CH2MHILL

CIVIL
CIVIL DETAILS

VERIFY SCALE
BAR IS ONE INCH ON ORIGINAL DRAWING.
0 1"

DATE	2013/08/29
PROJ	472109
DWG	C-5005
SHEET	12

REUSE OF DOCUMENTS: THIS DOCUMENT, AND THE IDEAS AND DESIGNS INCORPORATED HEREIN, AS AN INSTRUMENT OF PROFESSIONAL SERVICE, IS THE PROPERTY OF CH2M HILL AND IS NOT TO BE USED, IN WHOLE OR IN PART, FOR ANY OTHER PROJECT WITHOUT THE WRITTEN AUTHORIZATION OF CH2MHILL.
©CH2M HILL 2010. ALL RIGHTS RESERVED.

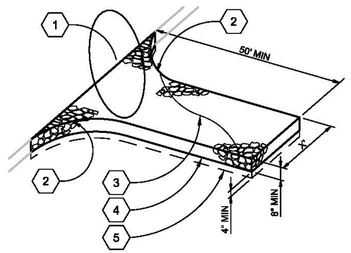

1. EXISTING PAVEMENT OR APPROVED ACCESS POINT.
2. 25' R, MIN.
3. CLEAN PIT RUN OR NJ DOT STANDARD NO. 2 STONE.
4. FREE DRAINING EXCAVATED MATERIAL.
5. GEOTEXTILE

NOTES:

A. ADDITION GRAVEL SHALL BE ADDED PERIODICALLY TO MAINTAIN PROPER FUNCTION OF THE PAD.

B. REMOVE GRAVEL ENTRANCE AND REPLACE WITH NEW BASE COURSE PRIOR TO COMPLETION OF ACCESS ROAD.

1 GRAVEL CONSTRUCTION ENTRANCE

NTS

C-2101

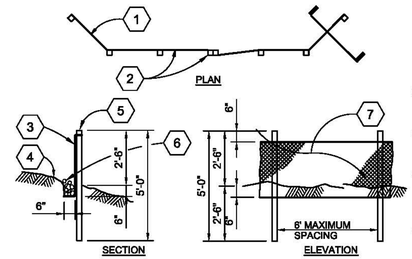

1. ANGLE BOTH ENDS OF FILTER FABRIC FENCE TO ASSURE SOIL IS TRAPPED
2. INTERLOCKED 2"x4" POSTS AND ATTACH
3. FILTER FABRIC MATERIAL
4. NEWLY GRADED OR DISTURBED SLOPE
5. USE STITCHED LOOPS OVER 2"x4" POSTS
6. PROVIDE BASE COURSE BACKFILL IN TRENCH
7. FILTER FABRIC MATERIAL, 36" WIDE ROLLS

NOTES:

A. BURY BOTTOM OF FILTER FABRIC 6" VERTICALLY BELOW FINISHED GRADE.

B. 2"x4" DOUGLAS FIR OR STEEL FENCE POSTS.

C. STITCHED LOOPS TO BE INSTALLED DOWNHILL SIDE OF SLOPE.

D. COMPACT ALL AREAS OF FILTER FABRIC TRENCH.

2 SILT FENCE

NTS

C-2101

RICHARD P. TRAVER

NJ. PROFESSIONAL ENGINEER NO. 28300

NO.	DATE	DR	CHK	APVD	BY	APVD
0	2013/08/29	A. BROWN	R. TRAVER	R. TRAVER	RT	Y
		REVISION				
		ISSUED FOR CONSTRUCTION				

DSGN R. TRAVER

1717 ARCH ST. - SUITE 4400
PHILADELPHIA, PA 19103
PH (215) 963-4220 FAX (215) 563-3828
EB 0000072 AA 001992

IMPOUNDMENTS 1 AND 2
PILOT DEMONSTRATION STUDY
WYETH HOLDINGS CORPORATION
AMERICAN CYANAMID SUPERFUND SITE
470 MOUNTAIN AVE
BRIDGEWATER, NJ

CH2MHILL

CIVIL

SITE SOIL/SEDIMENT EROSION CONTROL DETAILS

1"=20'

VERIFY SCALE

BAR IS ONE INCH ON ORIGINAL DRAWING.
0 1"

DATE	2013/08/29
PROJ	472109
DWG	C-5101
SHEET	13

REUSE OF DOCUMENTS: THIS DOCUMENT, AND THE IDEAS AND DESIGNS INCORPORATED HEREIN, AS AN INSTRUMENT OF PROFESSIONAL SERVICE, IS THE PROPERTY OF CH2M HILL AND IS NOT TO BE USED, IN WHOLE OR IN PART, FOR ANY OTHER PROJECT WITHOUT THE WRITTEN AUTHORIZATION OF CH2MHILL.

©CH2M HILL 2010. ALL RIGHTS RESERVED.

FILE NAME: 472109-001-C-5101.dwg PLOT DATE: 10/23/2013 3:23 PM

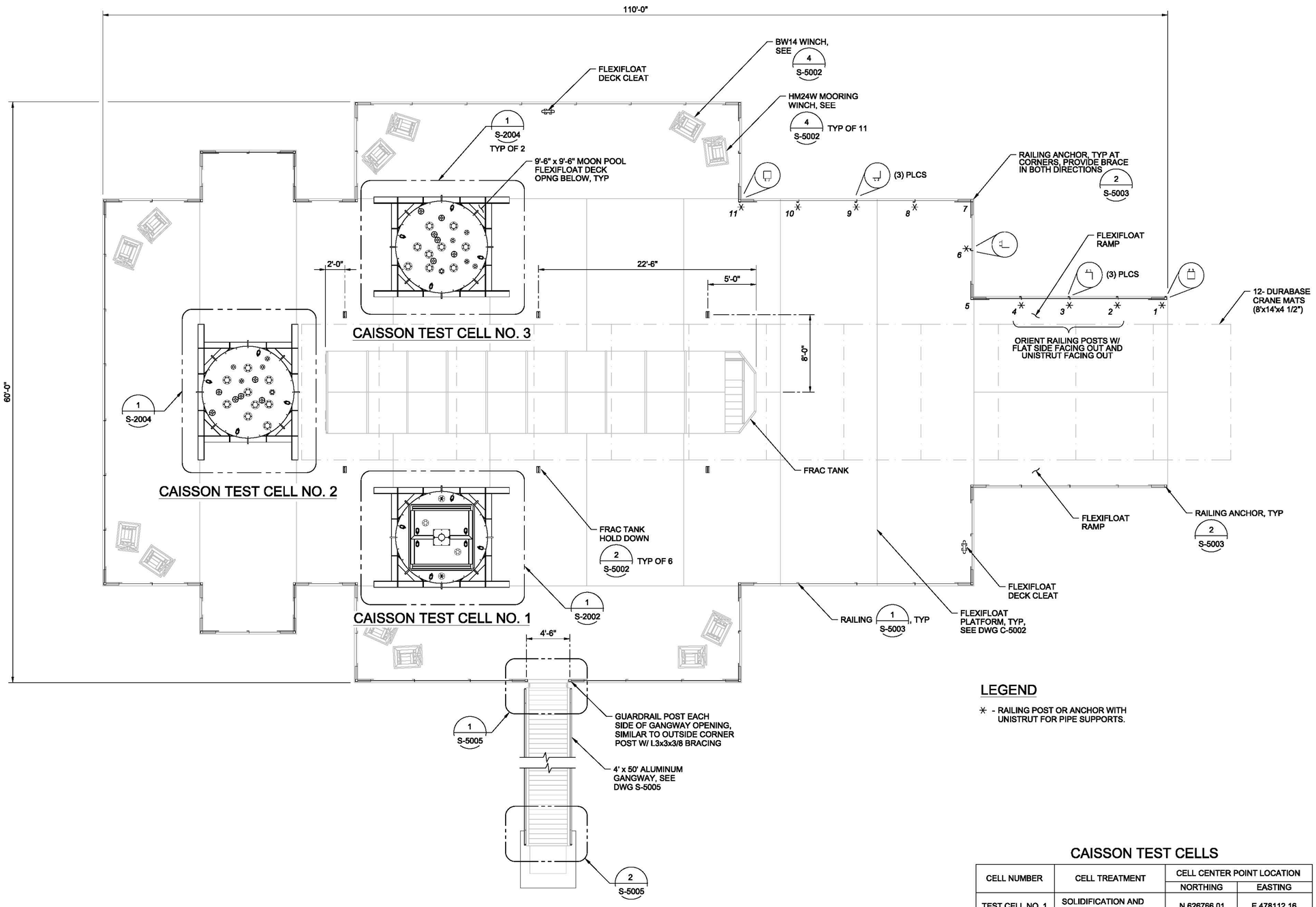

LEGEND

✳ - RAILING POST OR ANCHOR WITH UNISTRUT FOR PIPE SUPPORTS.

NOTES:
1. PAINT ALL TRIPPING HAZARDS BRIGHT ORANGE.
2. RELOCATE SUPPLIED DECK CLEATS AS NECESSARY FOR PLACEMENT OF STORM MOORING LINES.

OVERALL CAISSON PLAN

3/16"=1'-0"

CAISSON TEST CELLS

CELL NUMBER	CELL TREATMENT	CELL CENTER POINT LOCATION	
		NORTHING	EASTING
TEST CELL NO. 1	SOLIDIFICATION AND STABLIZATION ONLY	N 626766.01	E 478112.16
TEST CELL NO. 2	THERMAL TREATMENT WITH HOMOGENIZATION ONLY	N 626745.08	E 478125.83
TEST CELL NO. 3	THERMAL TREATMENT WITH SOLIDIFICATION AND STABILIZATION	N 626737.81	E 478101.91

RICHARD P. TRAVER
N.J. PROFESSIONAL ENGINEER NO. 26300

NO.	DATE	DSGN	DR	CHK	APVD
0	2013/08/29	H. JOCHIMSEN	R. FOREST	W. BENNETT	R. TRAVER

REVISION: ISSUED FOR CONSTRUCTION

CH2MHILL®
1717 ARCH ST., SUITE 4400
PHILADELPHIA, PA 19103
PH (215) 563-2220 FAX (215) 563-3828

IMPOUNDMENTS 1 AND 2
PILOT DEMONSTRATION STUDY
WYETH HOLDINGS CORPORATION
AMERICAN CYANAMID SUPERFUND SITE
20 POLHEMUS LANE
BRIDGEWATER, NJ

STRUCTURAL
OVERALL CAISSON PLAN

3/16" = 1'-0"
VERIFY SCALE
BAR IS ONE INCH ON ORIGINAL DRAWING.
0 1"

DATE	2013/08/29
PROJ	472109
DWG	S-2001
SHEET	14

REUSE OF DOCUMENTS: THIS DOCUMENT, AND THE IDEAS AND DESIGNS INCORPORATED HEREIN, AS AN INSTRUMENT OF PROFESSIONAL SERVICE, IS THE PROPERTY OF CH2M HILL AND IS NOT TO BE USED, IN WHOLE OR IN PART, FOR ANY OTHER PROJECT WITHOUT THE WRITTEN AUTHORIZATION OF CH2M HILL.
©CH2M HILL 2011. ALL RIGHTS RESERVED.

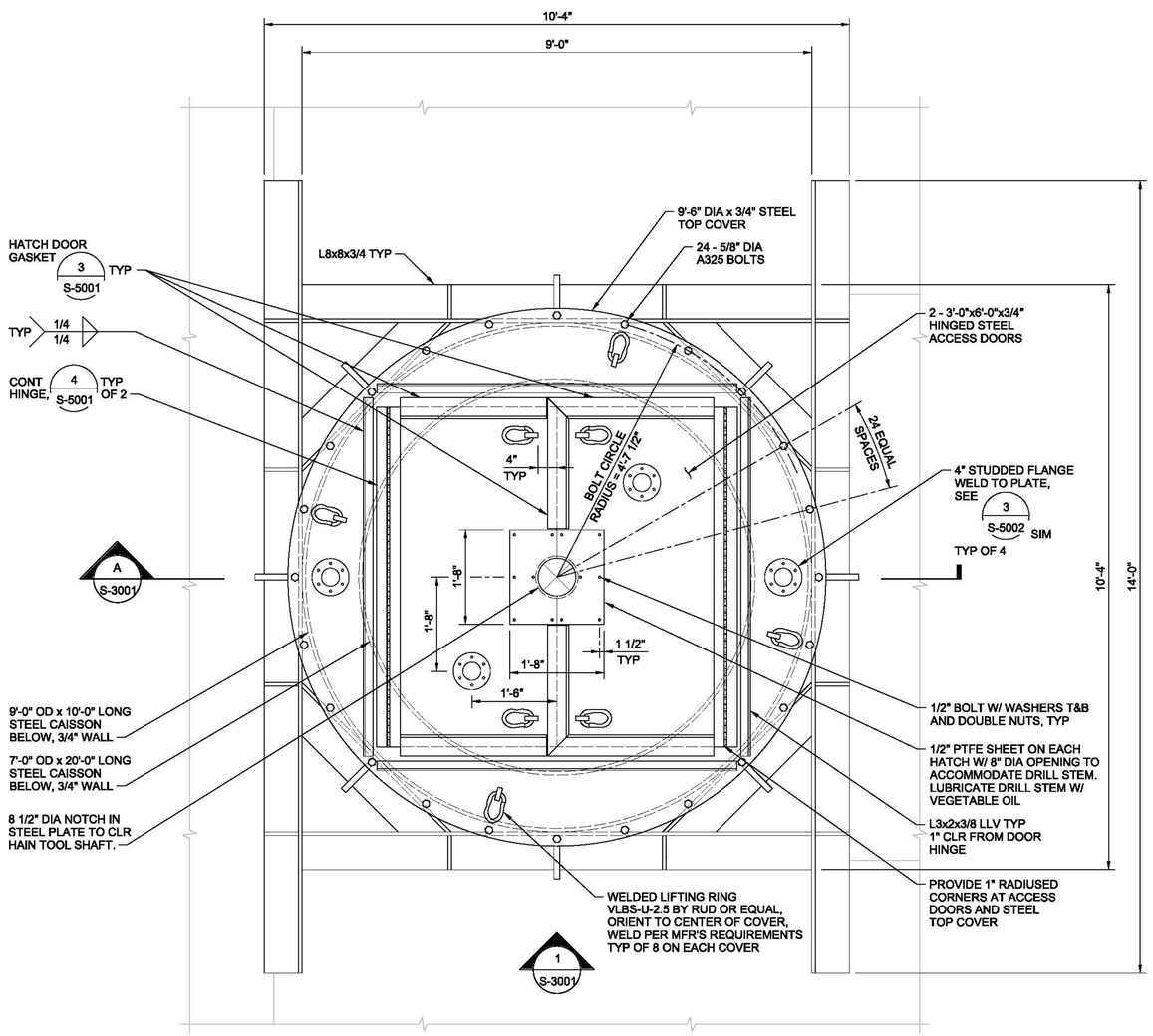

NOTES;

1. 9'-6" DIAMETER x 3/4" STEEL TOP COVER SHALL BE A572 GRADE 50 PLATE.
2. DIMENSIONS ARE NOMINAL UNLESS NOTED OTHERWISE.
3. FABRICATOR SHALL PROVIDE MOUNTING STUDS, NUTS, WASHERS AND 150LB BLIND FLANGES WITH VITON GASKETS FOR ALL STUDDING FLANGES.

1 ISS CAISSON SHROUD COVER - TYPE 1 (2 REQUIRED)

3/4"=1'-0"

S-2001

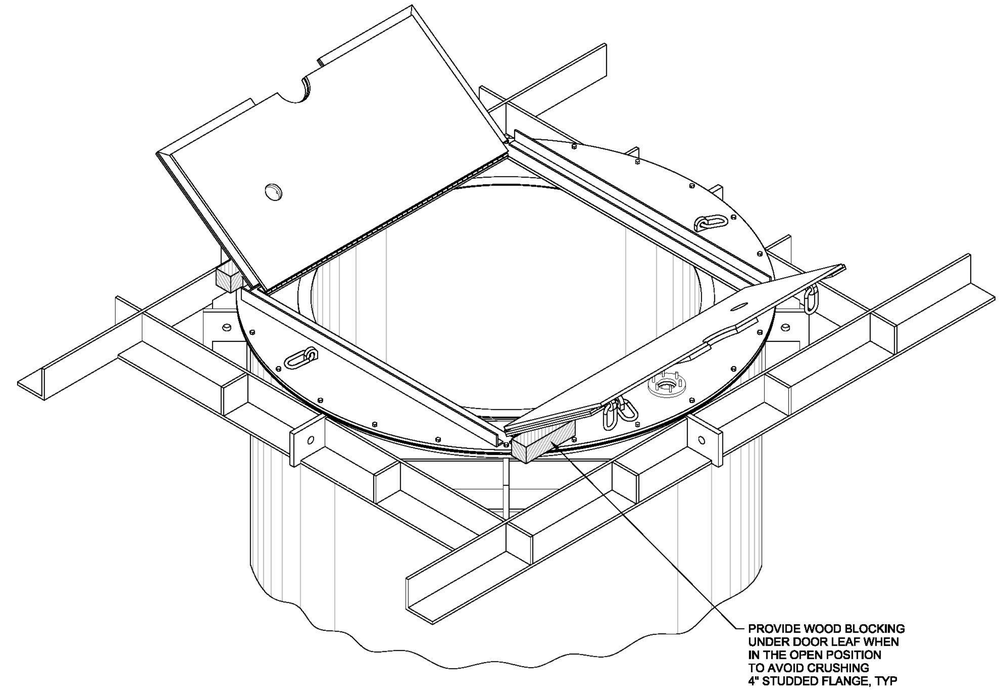

DOORS OPEN

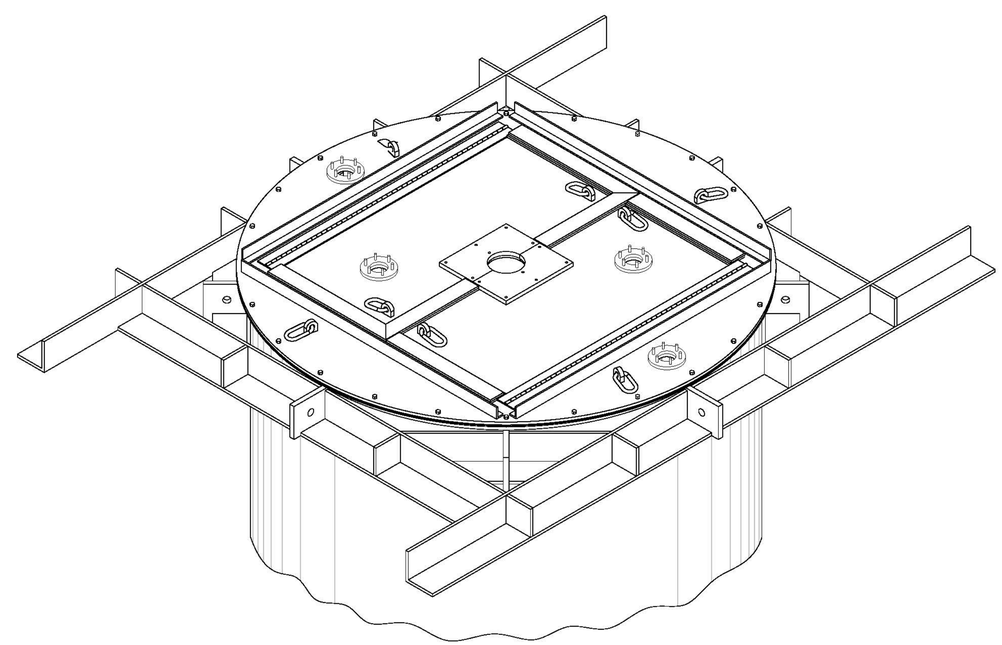

DOORS CLOSED

ISOMETRIC VIEW

3/4"=1'-0"

RICHARD P. TRAVER

N.J. PROFESSIONAL ENGINEER NO. 26300

NO.	DATE	REVISION	BY	APVD
0	2013/08/29	ISSUED FOR CONSTRUCTION	RT	Y

DSGN R. FORREST | DR H. JOCHIMSEN | CHK W. BENNETT | APVD R. TRAVER

1717 ARCH ST - SUITE 4400
PHILADELPHIA, PA 19103
PH (215) 563-4220 FAX (215) 563-3828

IMPOUNDMENTS 1 AND 2
PILOT DEMONSTRATION STUDY
WYETH HOLDINGS CORPORATION
AMERICAN CYANAMID GROUND SITE
20 POLHEMUS LANE
BRIDGEWATER, NJ

CH2MHILL®

STRUCTURAL

CAISSON SHROUD COVER - ISS
PLAN AND ISOMETRIC VIEW

3/4" = 1'-0"

VERIFY SCALE

BAR IS ONE INCH ON ORIGINAL DRAWING.
0 1"

DATE	2013/06/05
PROJ	465352
DWG	S-2002
SHEET	15

REUSE OF DOCUMENTS: THIS DOCUMENT, AND THE IDEAS AND DESIGNS INCORPORATED HEREIN, AS AN INSTRUMENT OF PROFESSIONAL SERVICE, IS THE PROPERTY OF CH2M HILL AND IS NOT TO BE USED, IN WHOLE OR IN PART, FOR ANY OTHER PROJECT WITHOUT THE WRITTEN AUTHORIZATION OF CH2M HILL.
©CH2M HILL 2011. ALL RIGHTS RESERVED.

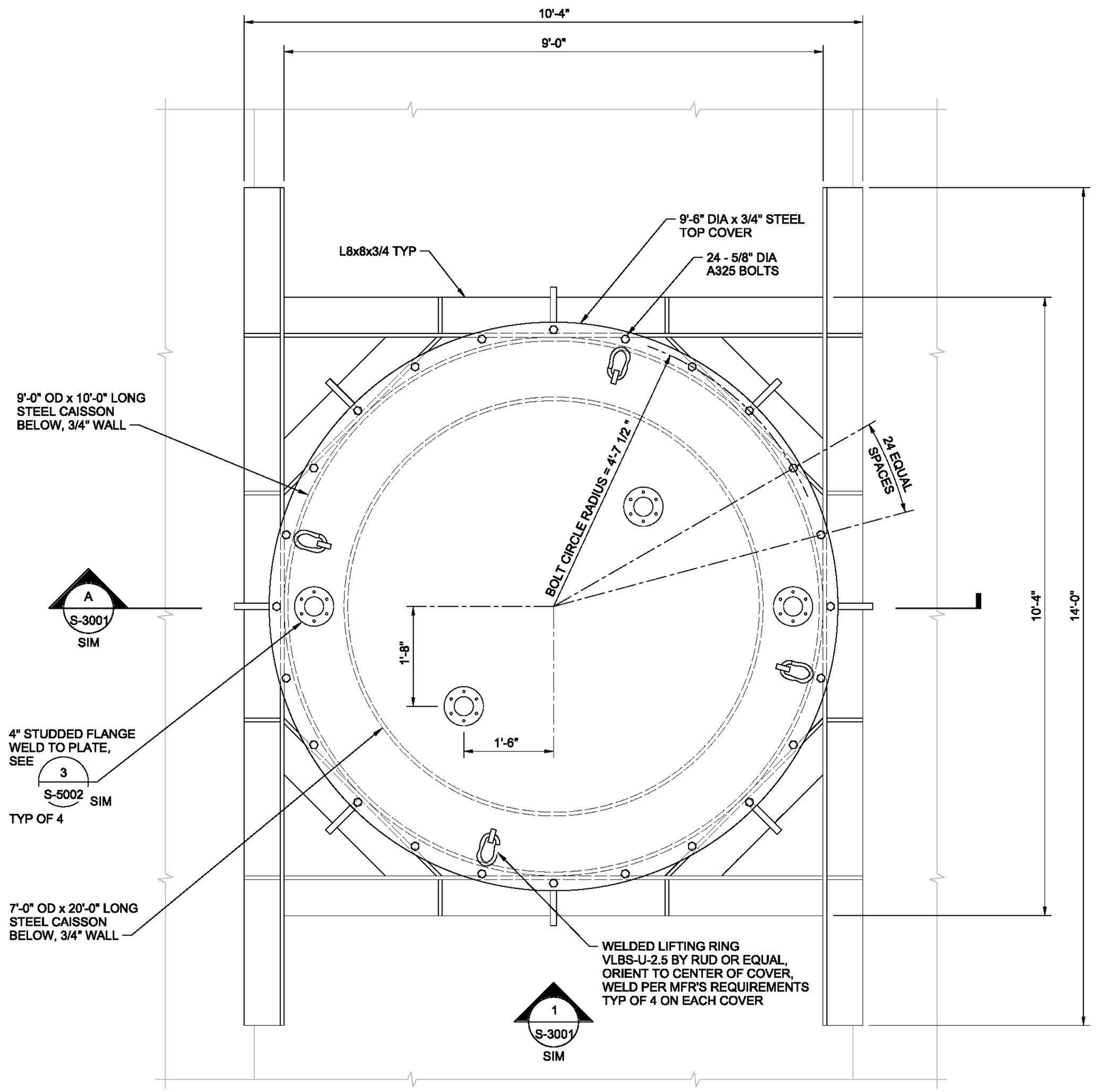

NOTES:

1. 9'-6" DIAMETER x 3/4" STEEL TOP COVER SHALL BE A572 GRADE 50 PLATE.
2. DIMENSIONS ARE NOMINAL UNLESS NOTED OTHERWISE.
3. FABRICATOR SHALL PROVIDE MOUNTING STUDS, NUTS, WASHERS AND 150LB BLIND FLANGES WITH VITON GASKETS FOR ALL STUDDING FLANGES.

1 BLANK CAISSON SHROUD COVER - TYPE 2 (1 REQUIRED)

3/4"=1'-0"

S-2001

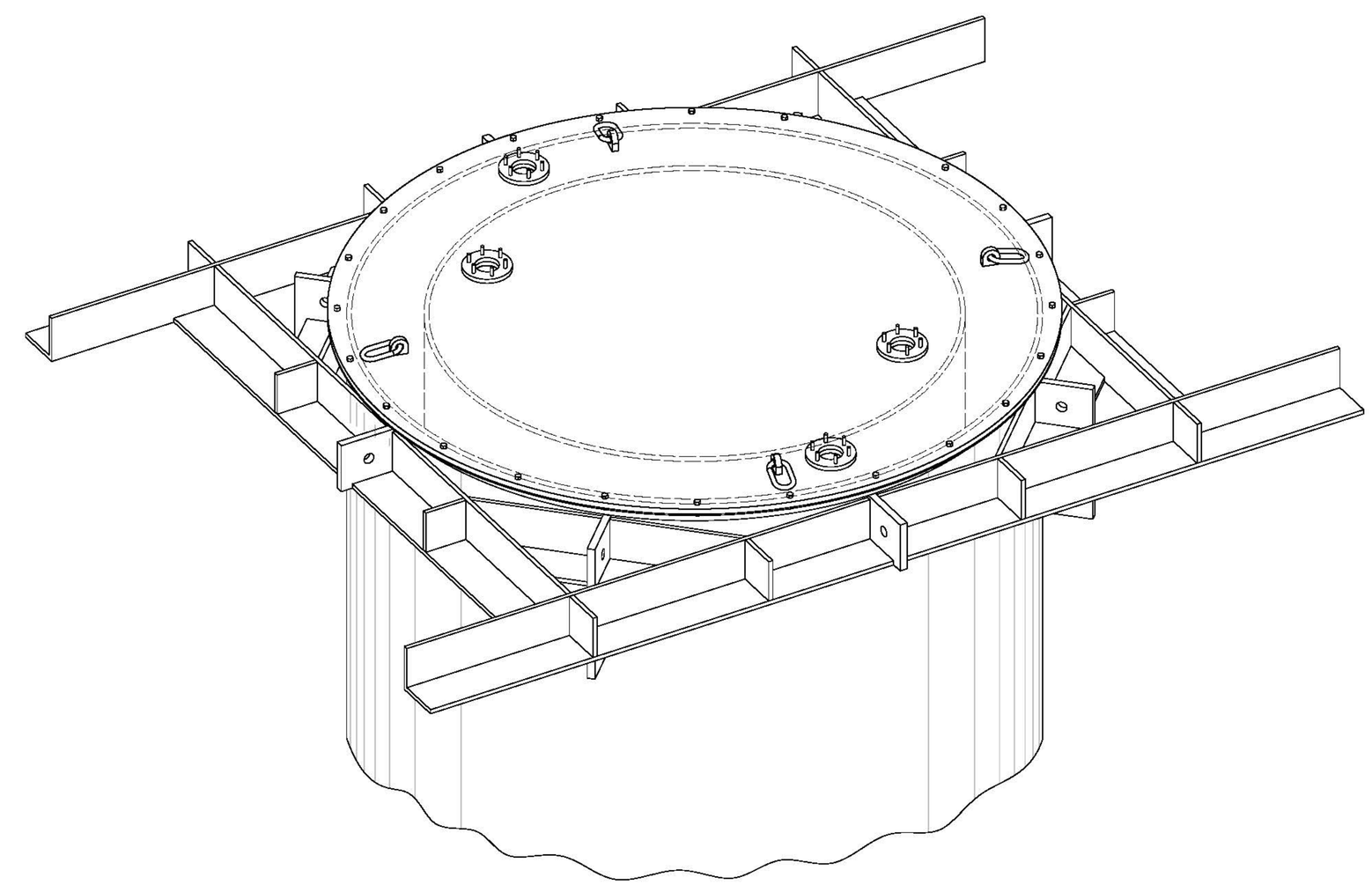

ISOMETRIC VIEW

3/4"=1'-0"

RICHARD P. TRAVER

N.J. PROFESSIONAL ENGINEER NO. 26300

NO.	DATE	REVISION	BY	APVD
0	2013/08/29	ISSUED FOR CONSTRUCTION	RT	Y

DSGN R. FORREST | DR H. JOCHIMSEN | CHK W. BENNETT | APVD R. TRAVER

REUSE OF DOCUMENTS: THIS DOCUMENT, AND THE IDEAS AND DESIGNS INCORPORATED HEREIN, AS AN INSTRUMENT OF PROFESSIONAL SERVICE, IS THE PROPERTY OF CH2M HILL AND IS NOT TO BE USED, IN WHOLE OR IN PART, FOR ANY OTHER PROJECT WITHOUT THE WRITTEN AUTHORIZATION OF CH2M HILL.

©CH2M HILL 2011. ALL RIGHTS RESERVED.

1717 ARCH ST. - SUITE 4400
PHILADELPHIA, PA 19103
PH (215) 563-4220 FAX (215) 563-3828

IMPOUNDMENTS 1 AND 2
PILOT DEMONSTRATION STUDY
WYETH HOLDINGS CORPORATION
AMERICAN CYANAMID SUPERFUND SITE
20 POLHEMUS LANE
BRIDGEWATER, NJ

CH2MHILL®

STRUCTURAL

CAISSON SHROUD COVER - BLANK PLAN AND ISOMETRIC VIEW

3/4" = 1'-0"

VERIFY SCALE

BAR IS ONE INCH ON ORIGINAL DRAWING.
0 1"

DATE	2013/08/29
PROJ	465352
DWG	S-2003
SHEET	16

FILENAME: 472109-001-S-2003.dgn PLOT DATE: 10/23/2013 PLOT TIME: 3:35:17 PM

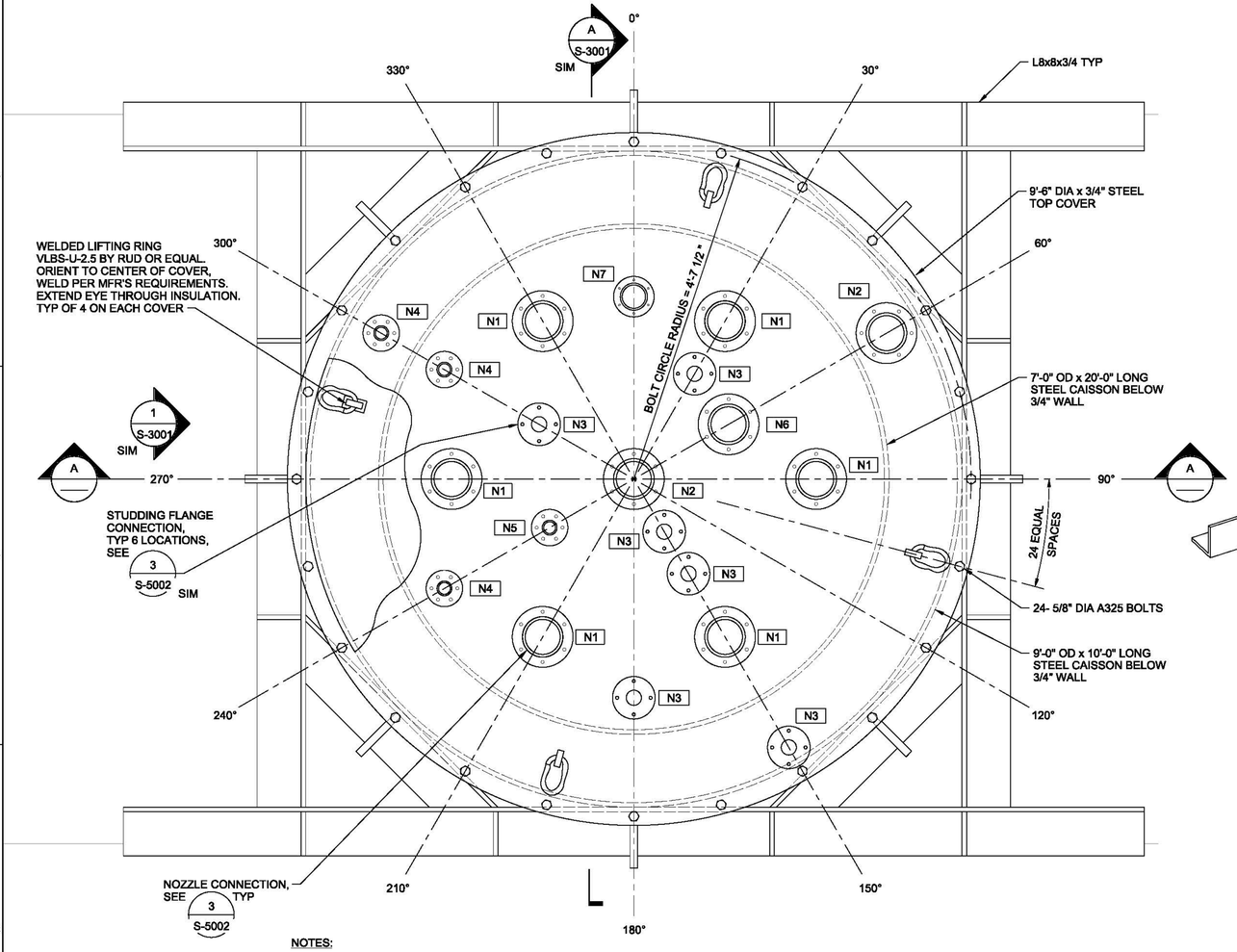

NOTE:
CAISSON THERMAL EXPANSION - BASED UPON THE ANTICIPATED INNER CAISSON WALL TEMPERATURE REACHING ≈100°C (212°F) DURING THE ISTD OPERATIONS, THE THERMAL EXPANSION CALCULATION OF THE CAISSON WITH AN ORIGINAL TEMPERATURE OF ≈10°C (50°F), RESULTING IN A DELTA T ≈72°C (162°F), WILL EXPAND THE 7'-0" OD CAISSON DIAMETER BY 0.12 INCHES. THE 9'-0" OD OUTER SHROUD WILL EXPAND BY 0.12 INCHES. THIS DIMENSIONAL INCREASE WILL NOT SIGNIFICANTLY AFFECT THE CLEARANCE BETWEEN THE INNER CAISSON AND OUTER SHROUD.

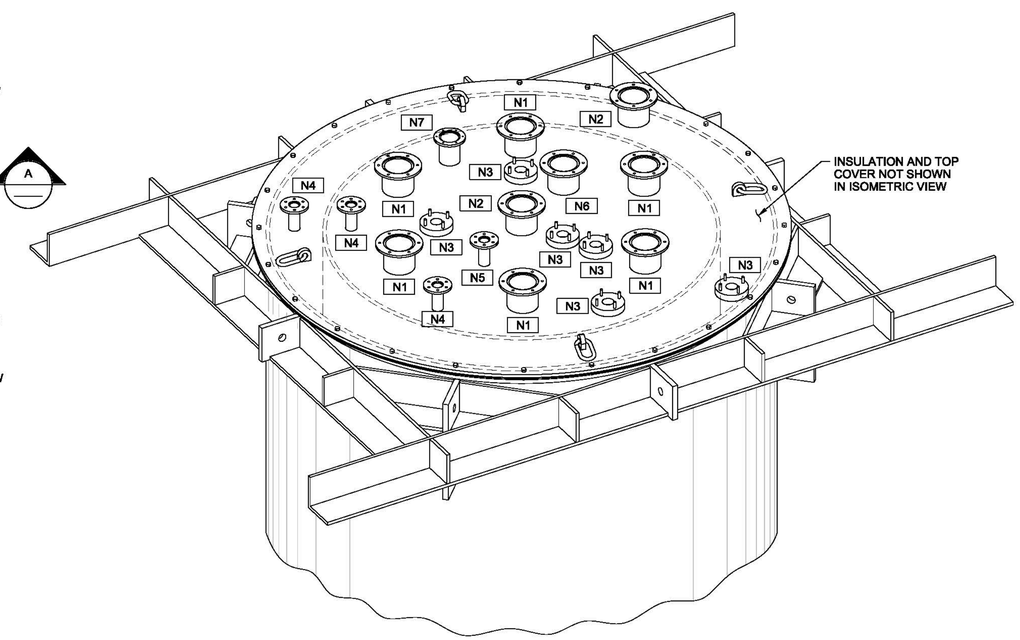

ISOMETRIC VIEW

3/4"=1'-0"

NOTES:

1. FOR ADDITIONAL INFORMATION SEE DRAWING S-3001.
2. FOR L8x8x3/4 DIMENSIONS, SEE 1 S-2002
3. DIMENSIONS ARE NOMINAL UNLESS OTHERWISE NOTED.
4. 9'-6" DIAMETER 3/4" STEEL TOP COVER SHALL BE A572 GRADE 50 PLATE.
5. FABRICATOR SHALL PROVIDE MOUNTING STUDS, NUTS, WASHERS, AND 150LB BLIND FLANGES WITH VITON GASKETS FOR ALL STUDDING FLANGES.

1 ISTD CAISSON SHROUD COVER - TYPE 3 (2 REQUIRED)

S-2001

3/4"=1'-0"

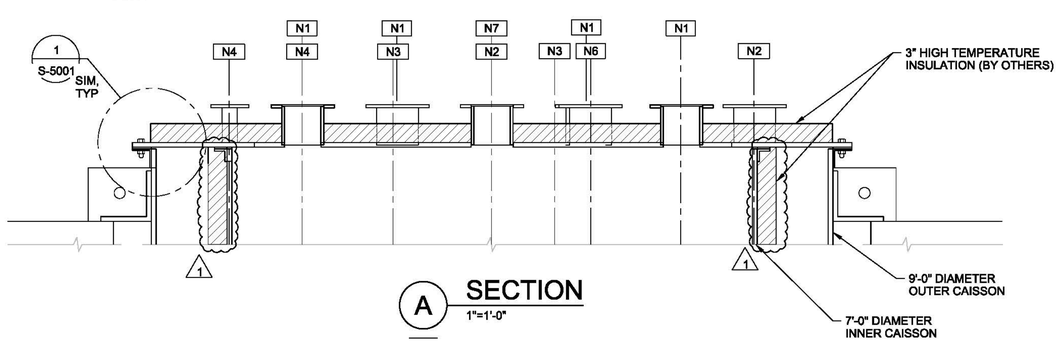

A SECTION

1"=1'-0"

NOZZLE SCHEDULE

NOZZLES	MARK	QUANTITY	SIZE	LOCATION	CL RADIUS	LENGTH	NOTES
HEATERS	N1	6	6"	30° 90° 150° 210° 270° 330°	2'-6" 2'-6" 2'-6" 2'-6" 2'-6" 2'-6"	6" 6" 6" 6" 6" 6"	SET TOP OF NOZZLE FLANGE 6" ABOVE TOP PLATE TO ALLOW ACCESS TO BOLTS ABOVE INSULATION BOARD.
EXTRACTION	N2	2	6"	0° 60°	CENTER 4'-0"	6" 6"	SET TOP OF NOZZLE FLANGE 6" ABOVE TOP PLATE TO ALLOW ACCESS TO BOLTS ABOVE INSULATION BOARD.
TEMPERATURE SENSOR	N3	6	2 1/2"	30° 150° 150° 150° 180° 300°	1'-8" 0'-10" 1'-6" 4'-3" 3'-0" 1'-6"	FLUSH FLUSH FLUSH FLUSH FLUSH FLUSH	STUDDING OUTLET FLANGE WELDED TO TOP PLATE.
INTAKE-NITROGEN	N4	3	2 1/2" (1)	240° 300° 300°	3'-0" 4'-0"	6" 6"	SET TOP OF NOZZLE FLANGE 6" ABOVE TOP PLATE TO ALLOW ACCESS TO BOLTS ABOVE INSULATION BOARD.
STEAM INJECTION	N5	1	2 1/2"	240°	1'-4"	6"	SET TOP OF NOZZLE FLANGE 6" ABOVE TOP PLATE TO ALLOW ACCESS TO BOLTS ABOVE INSULATION BOARD.
VAPOR EXTRACTION	N6	1	6"	60°	1'-6"	6"	SET TOP OF NOZZLE FLANGE 6" ABOVE TOP PLATE TO ALLOW ACCESS TO BOLTS ABOVE INSULATION BOARD.
ACCESS PORT	N7	1	4"	0°	2'-6"	6"	SET TOP OF NOZZLE FLANGE 6" ABOVE TOP PLATE TO ALLOW ACCESS TO BOLTS ABOVE INSULATION BOARD.

NO.	DATE	REVISION	BY	APVD
1	2013/10/25	REVISION #1	RT	Y
0	2013/08/29	ISSUED FOR CONSTRUCTION	RT	Y

DSGN R. FOREST / J. COLE | DR H. JOCHIMSEN/ D. KIERZEK | CHK W. BENNETT | APVD R. TRAVER

RICHARD P. TRAVER
N.J. PROFESSIONAL ENGINEER NO. 26300

CH2MHILL®
1717 ARCH ST., SUITE 4400
PHILADELPHIA, PA 19103
PH (215) 563-4220 FAX (215) 563-3828

IMPOUNDMENTS 1 AND 2
PILOT DEMONSTRATION STUDY
WYETH HOLDINGS CORPORATION
AMERICAN CYANAMID SITE
20 POLHEMUS LANE
BRIDGEWATER, NJ

STRUCTURAL
CAISSON SHROUD COVER - ISTD
PLAN, SECTION, ISOMETRIC
VIEW AND SCHEDULE

REUSE OF DOCUMENTS: THIS DOCUMENT, AND THE IDEAS AND DESIGNS INCORPORATED HEREIN, AS AN INSTRUMENT OF PROFESSIONAL SERVICE, IS THE PROPERTY OF CH2M HILL AND IS NOT TO BE USED, IN WHOLE OR IN PART, FOR ANY OTHER PROJECT WITHOUT THE WRITTEN AUTHORIZATION OF CH2M HILL.
©CH2M HILL 2011. ALL RIGHTS RESERVED.

VERIFY SCALE
BAR IS ONE INCH ON ORIGINAL DRAWING.
0 1"

DATE	2013/08/29
PROJ	465352
DWG	S-2004
SHEET	17

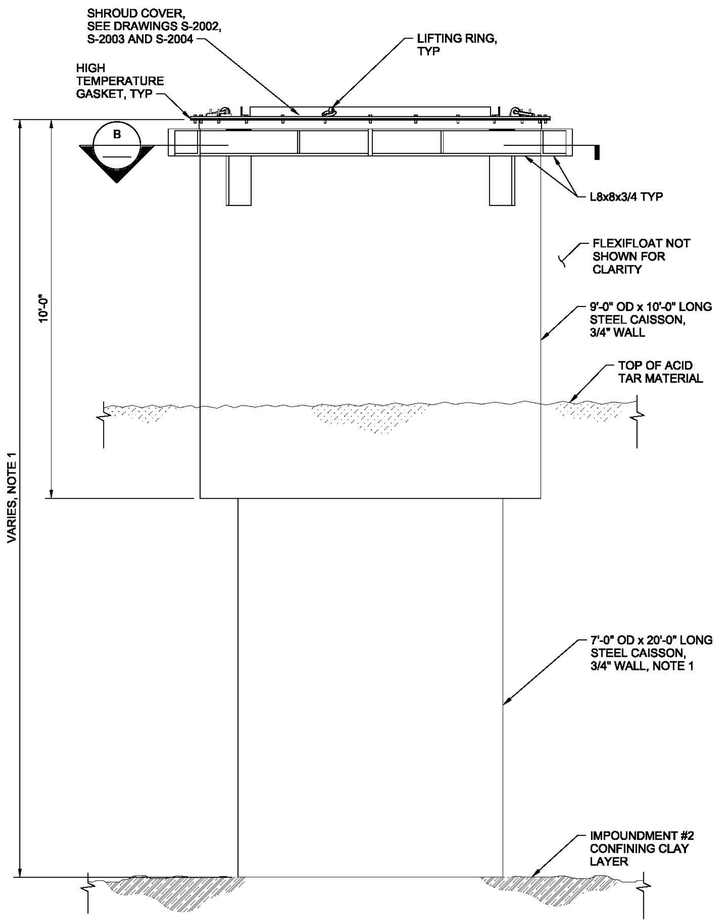

NOTES:

1. 7'-0" OD x 20'-0" STEEL CAISSON IS SHOWN LONGER THAN THE REQUIRED FINAL LENGTH. THE STEEL FABRICATOR WILL BE PROVIDED THE FINAL FABRICATED LENGTH FOR FOR EACH INDIVIDUAL CAISSON A MINIMUM OF 14 DAYS PRIOR TO THE REQUIRED DELIVERY DATE.
2. STENCIL TEST CELL NUMBER ON OUTSIDE OF EACH CAISSON FOR TRACKING OF CAISSON LENGTHS.
3. TYPE 1 COVER SHOWN.

1 ELEVATION
1/2"=1'-0"
S-2002
S-2003
S-2004

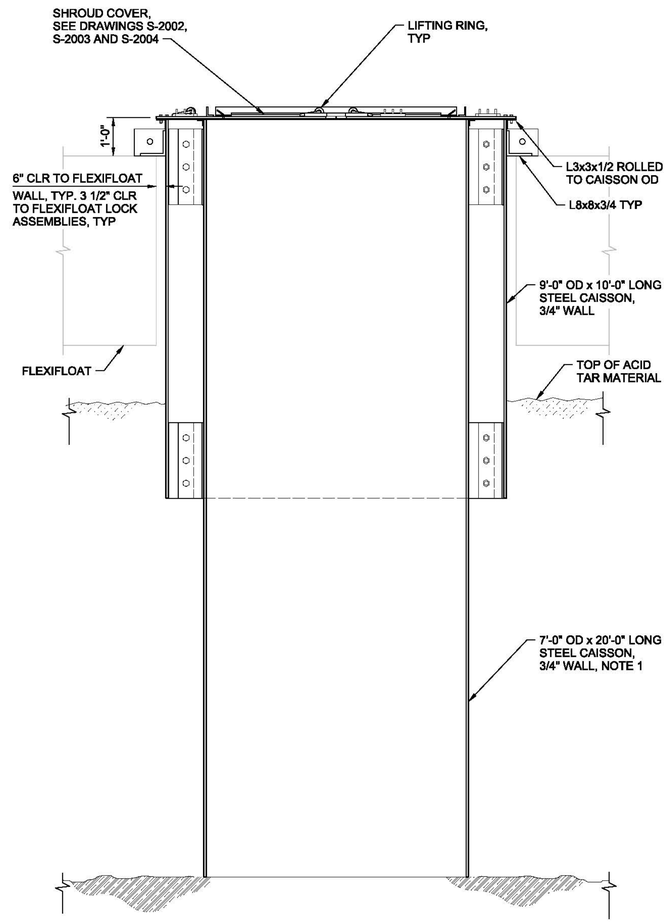

A SECTION
1/2"=1'-0"
S-2002
S-2003

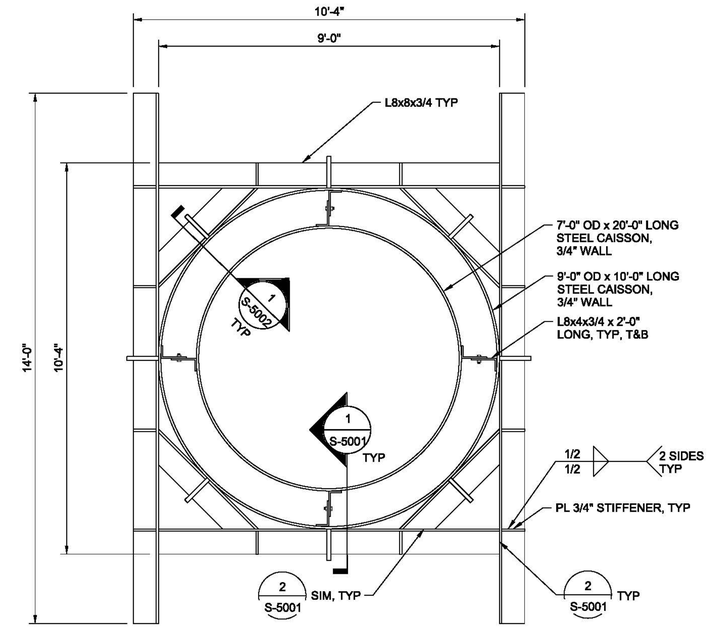

NOTE:
COVER NOT SHOWN FOR CLARITY.

B SECTION
1/2"=1'-0"

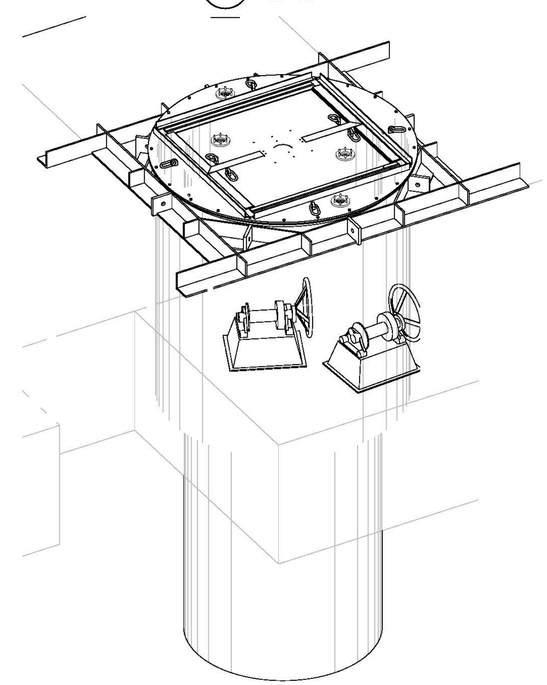

CAISSON SHROUD ISOMETRIC
NTS

RICHARD P. TRAVER
N.J. PROFESSIONAL ENGINEER NO. 26300

NO.	DATE	DSGN	DR	CHK	APVD	BY	APVD
0	2013/08/29	R. FOREST	H. JOCHIMSEN	W. BENNETT	R. TRAVER	RT	Y

REVISION: ISSUED FOR CONSTRUCTION

CH2MHILL®
1717 ARCH ST., SUITE 4400
PHILADELPHIA, PA 19103
PH (215) 563-4220 FAX (215) 563-3828

IMPOUNDMENTS 1 AND 2
PILOT DEMONSTRATION STUDY
WYETH HOLDINGS CORPORATION
AMERICAN CYANAMID SUPERFUND SITE
20 POLHEMUS LANE
BRIDGEWATER, NJ

STRUCTURAL
CAISSON ELEVATION, SECTIONS AND ISOMETRIC

AS SHOWN
VERIFY SCALE
BAR IS ONE INCH ON ORIGINAL DRAWING.
0 1"

DATE	2013/08/29
PROJ	472109
DWG	S-3001
SHEET	18

REUSE OF DOCUMENTS: THIS DOCUMENT, AND THE IDEAS AND DESIGNS INCORPORATED HEREIN, AS AN INSTRUMENT OF PROFESSIONAL SERVICE, IS THE PROPERTY OF CH2M HILL AND IS NOT TO BE USED, IN WHOLE OR IN PART, FOR ANY OTHER PROJECT WITHOUT THE WRITTEN AUTHORIZATION OF CH2M HILL.
©CH2M HILL 2011. ALL RIGHTS RESERVED.

FILENAME: 472109-001-S-3001.dgn PLOT DATE: 10/23/2013 PLOT TIME: 4:03:26 PM

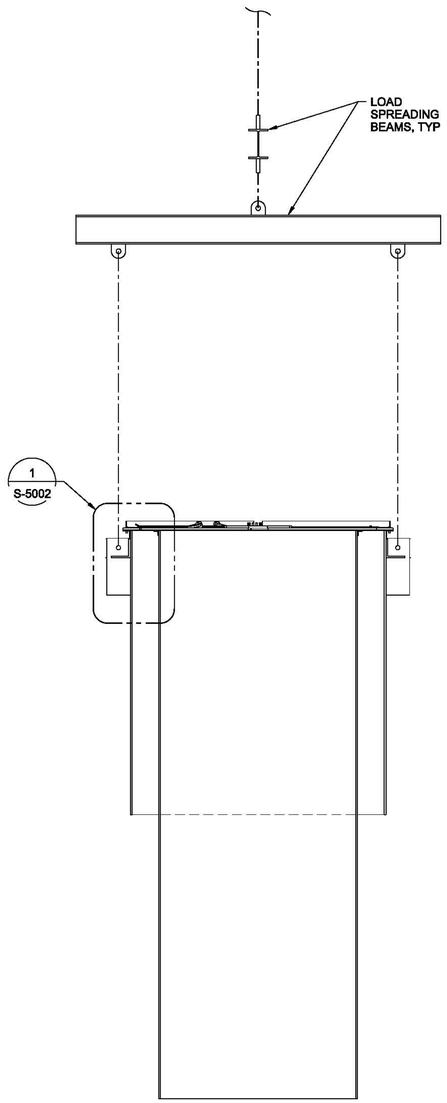

NOTES:

1. CAISSON SHROUD COVER TYPE 2 SHALL BE IN PLACE DURING LIFTING OPERATIONS.
2. MAXIMUM LIFTED LOAD = 49,590 LBS
3. LIFTED LOAD SHALL BE CONTINUOUSLY MONITORED DURING LIFITNG OPERATIONS.
4. IF MAXIMUM LIFTED LOAD IS EXCEEDED THE CONTRACTOR SHALL USE A VIBRATORY HAMMER TO HELP CAISSON.
5. CONTRACTOR SHALL PROVIDE LOAD SPREADING BEAMS, SHACKLES, SLINGS, AND ALL OTHER REQUIRED RIGGING WITH SUFFICIENT WORKING LOAD LIMITS (WLL) TO LIFT THE INDICATED MAXIMUM LIFTED LOAD.
6. LOAD SPREADING BEAMS SHALL DISTRIBUTE LOAD EQUALLY TO 4 LIFITNG EYES, SEE 1 / S-5001

LIFTING PLAN

3/8"=1'-0"

RICHARD P. TRAVER

N.J. PROFESSIONAL ENGINEER NO. 26300

NO.	DATE	REVISION	BY	APVD
0	2013/08/29	ISSUED FOR CONSTRUCTION	RT	Y

DSGN R. FORREST DR H. JOCHIMSEN CHK W. BENNETT APVD R. TRAVER

©CH2M HILL 2011. ALL RIGHTS RESERVED.

1717 ARCH ST., SUITE 4400
PHILADELPHIA, PA 19103
PH (215) 563-4220 FAX (215) 563-3828

IMPOUNDMENTS 1 AND 2
PILOT DEMONSTRATION STUDY
WYETH HOLDINGS CORPORATION
AMERICAN CYANAMID SUPERFUND SITE
20 POLHEMUS LANE
BRIDGEWATER, NJ

STRUCTURAL
LIFTING ELEVATION

REUSE OF DOCUMENTS: THIS DOCUMENT, AND THE IDEAS AND DESIGNS INCORPORATED HEREIN, AS AN INSTRUMENT OF PROFESSIONAL SERVICE, IS THE PROPERTY OF CH2M HILL AND IS NOT TO BE USED, IN WHOLE OR IN PART, FOR ANY OTHER PROJECT WITHOUT THE WRITTEN AUTHORIZATION OF CH2M HILL.

AS SHOWN
VERIFY SCALE
BAR IS ONE INCH ON ORIGINAL DRAWING.
0 1"

DATE	2013/08/29
PROJ	472109
DWG	S-3002
SHEET	19

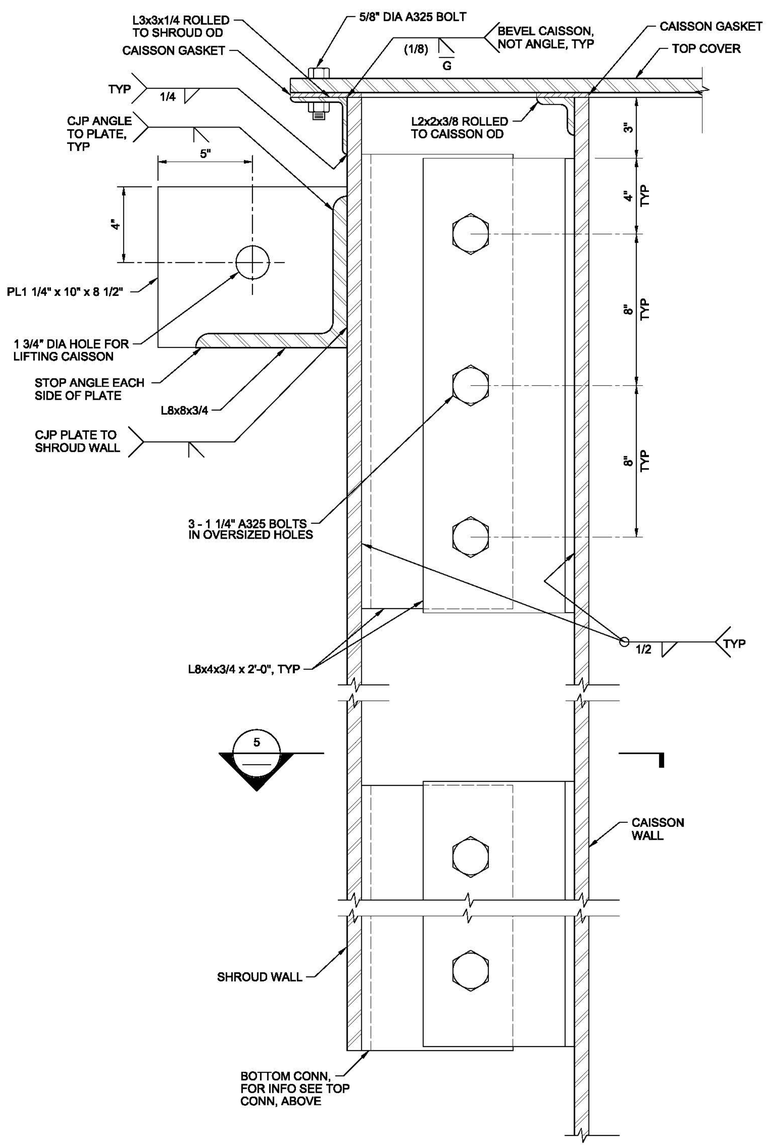

SECTION

NOTES:
1. CAISSON AND ACCESS COVER GASKETS SHALL BE 3/4" WIDE GORE© JOINT SEALANT (OR EQUIVALENT SELF ADHEREING EXPANDED PTFE GASKET TAPE).
2. PREPARE GASKET SURFACES IN ACCORDANCE WITH MANUFACTURER'S RECCOMENDATIONS.
3. INSTALL GASKET TAPE AND SPLICE ENDS IN ACCORDANCE WITH MANUFACTURER'S GUIDELINES FOR SEALING LARGE FLANGES.
4. ALL GASKETS SHALL BE FIELD INSTALLED.
5. PROVIDE SUFFICIENT GASKET MATERIAL FOR THREE COMPLETE GASKET SETS FOR EACH CAISSON.
6. CONTRACTOR SHALL PROPOSE METHOD FOR FITUP BETWEEN CAISSON AND SHROUD TO ENSURE PROPER ALIGNMENT OF BOLT HOLES. DEMONSTRATE PROPER FITUP IN SHOP PRIOR TO SHIPMENT.
7. ALL L8x8 ANGLES SHALL HAVE CONTINUOUS BEARING ALONG THE FULL LENGTH AND WIDTH OF THE ANGLE, EXCEPT WHERE THE ANGLES OVERHANG THE MOON POOL. PROVIDE SHIMS AS NECESSARY TO ACHIEVE CONTINUOUS BEARING.
8. CAISSON WALL INSULATION NOT SHOWN FOR CLARITY. 1

1 CAISSON DETAIL
3"=1'-0"
S-3001

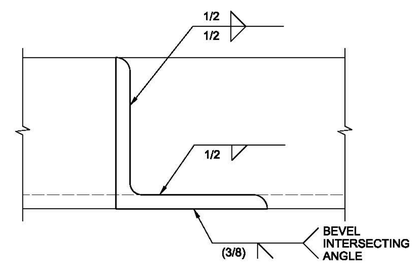

2 ANGLE CONNECTION
3"=1'-0"
S-3001

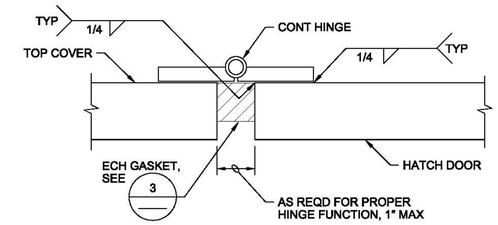

NOTE:
CONTINUOUS HINGE SHALL BE 1/4" THICK BY 5" WIDE WITH 5/8" DIAMETER PIN, MCMASTER-CARR PN 15665A535 OR EQUAL.

4 CONTINUOUS HINGE
1"=1"
S-3001

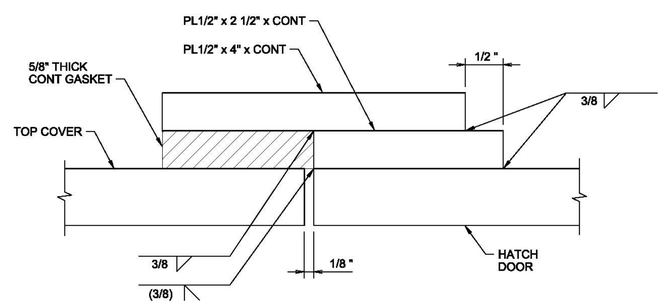

NOTES:
1. GASKET SHALL BE EPICHLOROHYDRIN (ECH) CLOSED CELL SPONGE.
2. GASKET SHALL BE CONTINUOUS AROUND HATCH PERIMETER. BOND SPLICES IN GASKET AS REQUIRED TO MATCH THE TEMPERATURE AND CHEMICAL RESISTANCE OF THE ECH GASKET.
3. CONTRACTOR SHALL PROVIDED ADDITIONAL GASKET MATERIAL OR HIGH TEMPERATURE CAULKING AS REQUIRED TO MAINTAIN VAPOR SEAL.
4. CONTRACTOR MAY ADD ADDITIONAL FASTENERS AS REQUIRED TO MAINTAIN VAPOR SEAL.
5. ADHERE ECH GASKET TO STEEL WITH ADHESIVE AS REQUIRED TO MATCH TEMPERATURE AND CHEMICAL RESISTANCE OF ECH GASKET.

3 HATCH DOOR GASKET
1"=1"
S-3001

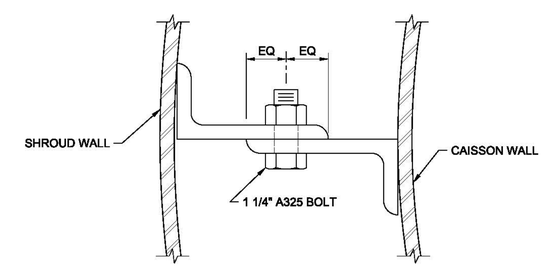

NOTE:
CAISSON WALL INSULATION NOT SHOWN FOR CLARITY. 1

5 SHROUD CONNECTION
3"=1'-0"

RICHARD P. TRAVER
N.J. PROFESSIONAL ENGINEER NO. 26300

NO.	DATE	REVISION	BY	APVD
1	2013/10/25	REVISION #1	RT	Y
0	2013/08/29	ISSUED FOR CONSTRUCTION	RT	Y

DSGN	DR	CHK	APVD
R. FORREST	H. JOCHIMSEN	W. BENNETT	R. TRAVER

©CH2M HILL 2011. ALL RIGHTS RESERVED.

1717 ARCH ST., SUITE 4400
PHILADELPHIA, PA 19103
PH (215) 563-4220 FAX (215) 563-3828

IMPOUNDMENTS 1 AND 2
PILOT DEMONSTRATION STUDY
WYETH HOLDINGS CORPORATION
AMERICAN CYANAMID CORPORATION SITE
20 POLHEMUS LANE
BRIDGEWATER, NJ

STRUCTURAL
CAISSON DETAILS

REUSE OF DOCUMENTS: THIS DOCUMENT, AND THE IDEAS AND DESIGNS INCORPORATED HEREIN, AS AN INSTRUMENT OF PROFESSIONAL SERVICE, IS THE PROPERTY OF CH2M HILL AND IS NOT TO BE USED, IN WHOLE OR IN PART, FOR ANY OTHER PROJECT WITHOUT THE WRITTEN AUTHORIZATION OF CH2M HILL.

AS SHOWN
VERIFY SCALE
BAR IS ONE INCH ON ORIGINAL DRAWING.
0 1"

DATE	2013/08/29
PROJ	472109
DWG	S-5001
SHEET	20

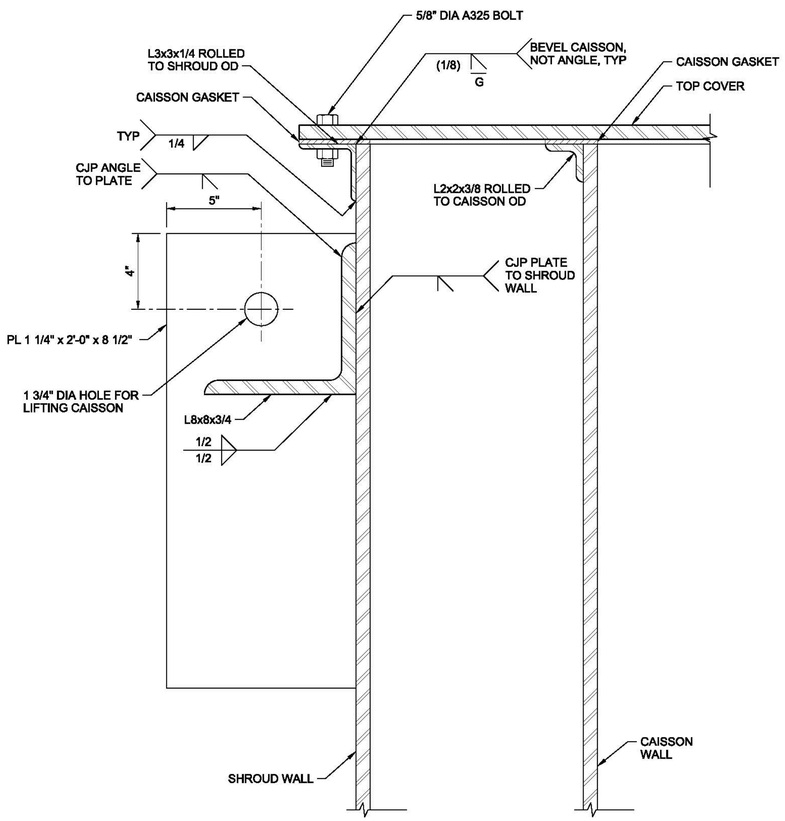

SECTION

NOTES:
1. FOR ADDITIONAL INFORMATION, SEE 1 / S-5001
2. CAISSON WALL INSULATION NOT SHOWN FOR CLARITY. 1

1 CAISSON DETAIL
3"=1'-0"
S-3001
S-3002

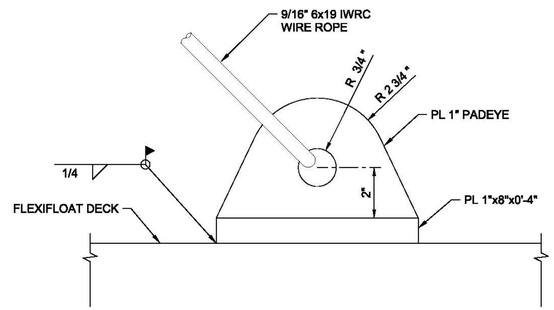

NOTES:
1. CONTRACTOR SHALL PROVIDE ALL HOOKS, TURNBUCKLES, THIMBLE EYES, CLIPS, AND OTHER HARDWARE AS REQUIRED TO HOLD DOWN FRAC TANK.
2. PAINT HOLD DOWN BRIGHT ORANGE.
3. FRAC TANK PROVIDER SHALL PROVIDE HOLD DOWN EYES AT LOCATIONS ON FRAC TANK THAT MATCH HOLD DOWNS ON DECK. HOLD DOWN SHALL HAVE 4,650 LB HORIZONTAL AND 6,650 LB VERTICAL CAPACITY.

2 FRAC TANK HOLD DOWN
NTS
S-2001

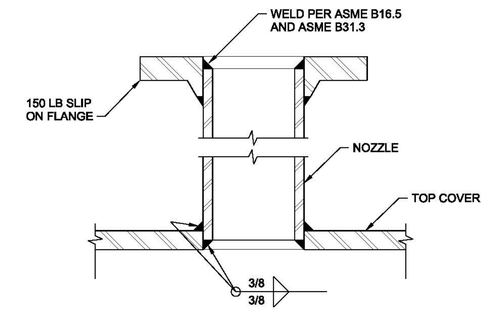

3 TYPICAL NOZZLE CONNECTION
NTS
S-2002
S-2004

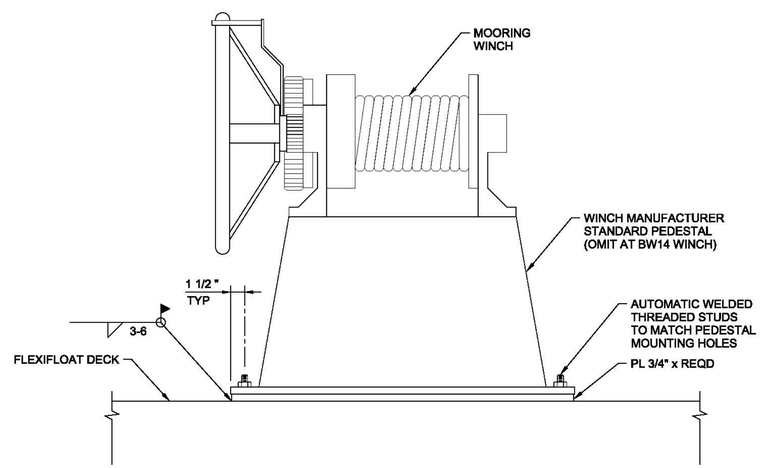

NOTES:
1. MOORING WINCH SHALL BE HM24W WINCH BY WINTECH WINCHES, SHREVEPORT LA OR EQUAL.
2. WINCH FOR MOORING LINE M11 SHALL BE BW14 WINCH BY WINTECH WINCHES, SHREVEPORT LA OR EQUAL.
3. ORIENT MOORING WINCH DIRECTLY AT MOORING LINE.
4. REMOVE WINCHES AFTER TESTING COMPLETION. GRIND WELDS SMOOTH AND PAINT WITH AMERICAN COATINGS EM8301 HIGH BUILD EPOXY PRIMER. DO NOT DAMAGE FLEXIFLOAT WALL.

4 MOORING WINCH
NTS
C-2002
S-2001

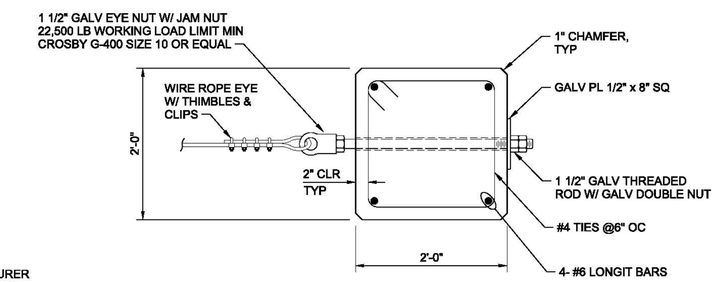

SECTION

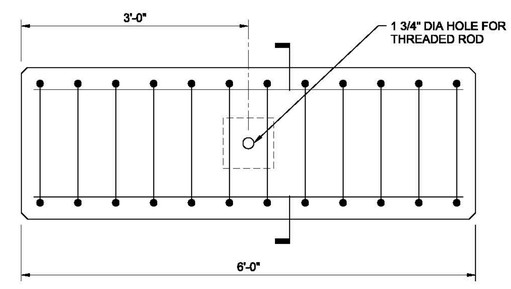

ELEVATION

5 DEADMAN
1"=1'-0"
C-3001
S-5003

NO.	DATE	DSGN	DR	CHK	APVD	BY	APVD
1	2013/10/25	R. FORREST	H. JOCHIMSEN	W. BENNETT		RT	Y
0	2013/08/29					RT	Y

REVISION #1
ISSUED FOR CONSTRUCTION
REVISION

RICHARD P. TRAVER
N.J. PROFESSIONAL ENGINEER NO. 26300
R. TRAVER

1717 ARCH ST., SUITE 4400
PHILADELPHIA, PA 19103
PH (215) 563-4220 FAX (215) 563-3828

IMPOUNDMENTS 1 AND 2
PILOT DEMONSTRATION STUDY
WYETH HOLDINGS CORPORATION
AMERICAN CYANAMID SUPERFUND SITE
20 POLHEMUS LANE
BRIDGEWATER, NJ

CH2MHILL®

STRUCTURAL
CAISSON DETAILS

AS SHOWN
VERIFY SCALE
BAR IS ONE INCH ON ORIGINAL DRAWING.
0 1"

DATE	2013/08/29
PROJ	472109
DWG	S-5002
SHEET	21

REUSE OF DOCUMENTS: THIS DOCUMENT, AND THE IDEAS AND DESIGNS INCORPORATED HEREIN, AS AN INSTRUMENT OF PROFESSIONAL SERVICE, IS THE PROPERTY OF CH2M HILL AND IS NOT TO BE USED, IN WHOLE OR IN PART, FOR ANY OTHER PROJECT WITHOUT THE WRITTEN AUTHORIZATION OF CH2M HILL.
©CH2M HILL 2011. ALL RIGHTS RESERVED.

FILENAME: 472109-001-S-5002.dgn PLOT DATE: 10/23/2013 PLOT TIME: 4:32:30 PM

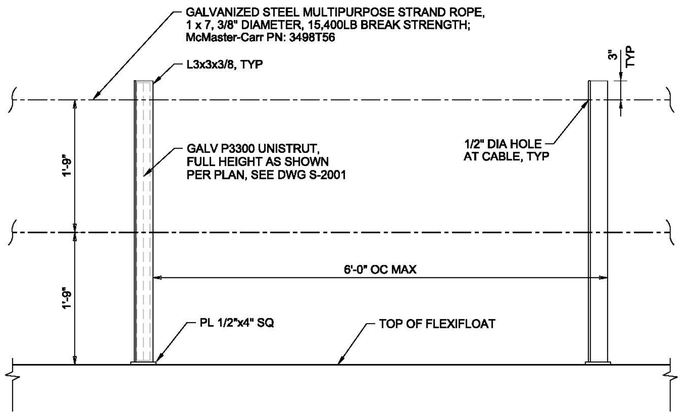

(OUTSIDE SHOWN)

ELEVATION

1"=1'-0"

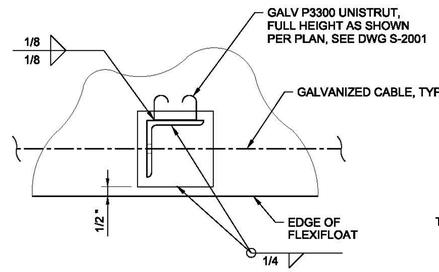

PLAN

3"=1'-0"

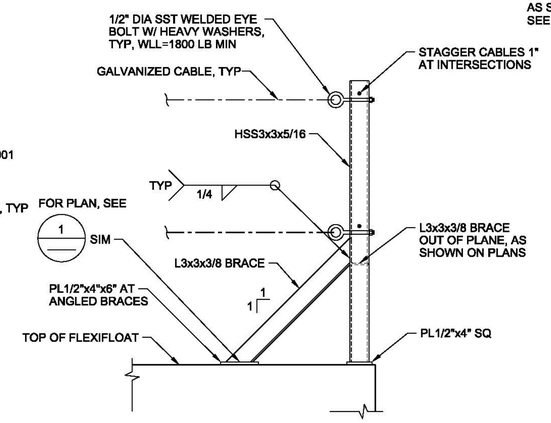

(OUTSIDE CORNER SHOWN)

ELEVATION

1"=1'-0"

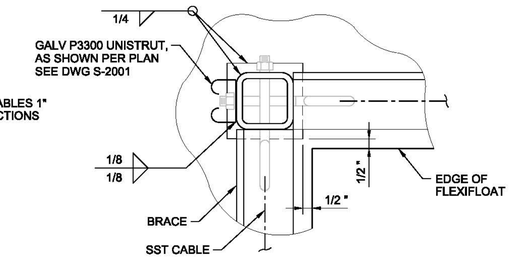

(INSIDE CORNER)

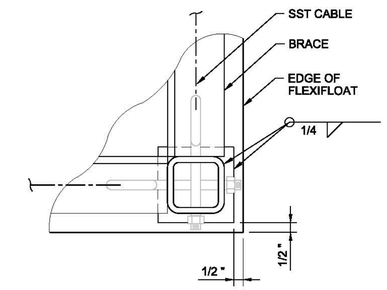

(OUTSIDE CORNER)

PLAN

3"=1'-0"

NOTES:
1. RAILING SHALL BE PRE-TENSIONED TO 1200 LBS.
2. PROVIDE ALL REQUIRED TURNBUCKLES, EYES, AND OTHER FITTINGS. FITTINGS, ATTACHMENTS, AND SPLICES SHALL BE CAPABLE OF DEVELOPING THE FULL CABLE BREAKING STRENGTH.
3. REMOVE RAILING AND POSTS AFTER TESTING COMPLETION. GRIND WELDS SMOOTH AND PAINT DAMAGED COATINGS WITH AMERICAN COATINGS EM8301 HIGH BUILD EPOXY PRIMER. DO NOT DAMAGE FLEXIFLOAT WALL.
4. SEE MECHANICAL FOR PIPE SUPPORT REQUIREMENTS.

NOTE:
FOR INFORMATION NOT SHOWN, SEE 1

1 TYPICAL RAILING

AS SHOWN

S-2001

2 RAILING ANCHOR

AS SHOWN

S-2001

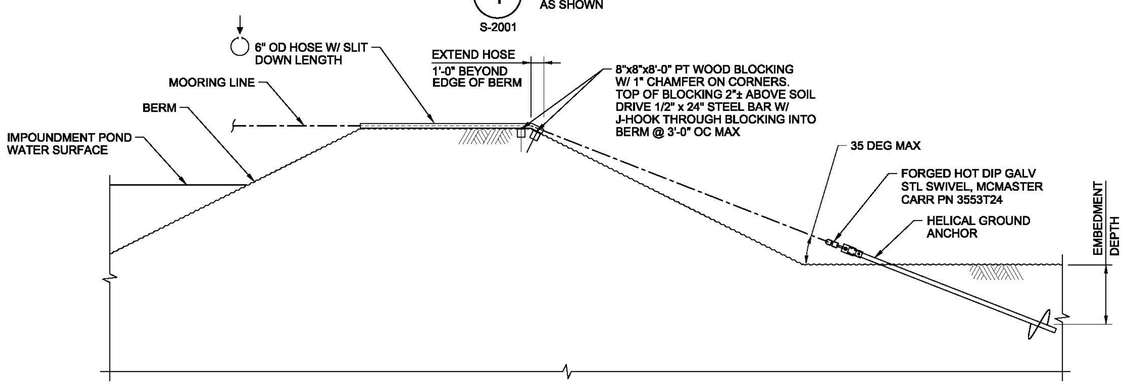

ANCHOR AT NORTH BERM

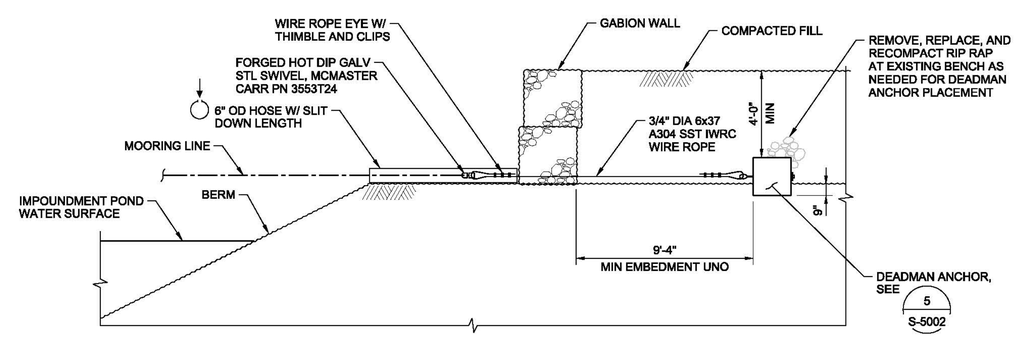

ANCHOR AT WEST BERM

NOTES:
1. GROUND ANCHOR SHALL BE 1 1/2" SQUARE SHAFT SYSTEM SS 5 MINIMUM BY CHANCE CIVIL CONSTRUCTION CENTRALIA, MO OR EQUAL.
2. HELICAL ANCHOR SHALL HAVE A MINIMUM OF A 1-10" DIAMETER AND 1-12" DIAMETER HELICAL PLATE.
3. HELICAL ANCHOR SHALL HAVE 12,000 LB ALLOWABLE (WORKING) CAPACITY.
4. PROVIDE CHAIN SHACKLE ATTACHMENT AT ALL GROUND ANCHORS.
5. INSTALL HELICAL ANCHOR PER MANUFACTURER RECOMMENDATIONS TO 3333 LB-FT MINIMUM TORQUE OR GREATER IF NECESSARY TO PROVIDE REQUIRED ALLOWABLE CAPACITY.
6. PROVIDE 12'-0" MINIMUM EMBEDMENT AT HELICAL ANCHORS.
7. GROUND ANCHORS SHALL BE ORIENTED DIRECTLY AT MOORING POINTS, WITHIN 3 DEGREES OF MOORING LINE ORIENTATION.
8. 6" HOSE SHALL BE TITAN DREDGE SLEEVE BY GOODYEAR RUBBER PRODUCTS OR EQUAL.
9. PAINT ABOVE GROUND PORTION OF ALL GROUND ANCHORS BRIGHT SAFETY ORANGE. ALL TRIPPING HAZARDS SHALL BE CLEARLY IDENTIFIED WITH HIGH VISIBILITY MARKINGS OR SIGNAGE.
10. GROUND ANCHOR EMBEDMENT DEPTH SHALL BE MEASURED FROM THE BOTTOM HELIX TO THE SOIL SURFACE, PERPENDICULAR TO THE SOIL SURFACE.
11. SEE SPECIFICATION 31 63 12 FOR HELICAL ANCHOR TEST AND INSTALLATION REQUIREMENTS.
12. GROUND ANCHOR TEST SHALL UTILIZE A SPREADER BEAM WITH SUPPORTS THAT SPREAD THE LOAD OUT TO 7'-0" MINIMUM EACH SIDE OF GROUND ANCHOR TO AVOID APPLYING PRESSURE TO THE IMMEDIATE VICINITY OF THE ANCHOR.
13. SST WIRE ROPE SHALL HAVE SST THIMBLES AND CLIPS AS REQUIRED PER THE MANUFACTURER'S RECOMMENDATION TO DEVELOP THE WIRE ROPE WORKING LOAD.
14. POSITION DEADMAN PERPENDICULAR TO MOORING LINE.

3 GROUND ANCHOR

NTS

C-2001

RICHARD P. TRAVER

N.J. PROFESSIONAL ENGINEER NO. 26300

NO.	DATE	DSGN	DR	CHK	APVD	BY	APVD
0	2013/08/29	R. FORREST	H. JOCHIMSEN	W. BENNETT		R. TRAVER	

REVISION: ISSUED FOR CONSTRUCTION

©CH2M HILL 2011. ALL RIGHTS RESERVED.

1717 ARCH ST., SUITE 4400
PHILADELPHIA, PA 19103
PH (215) 563-4220 FAX (215) 563-3828

IMPOUNDMENTS 1 AND 2
PILOT DEMONSTRATION STUDY
WYETH HOLDINGS CORPORATION
AMERICAN CYANAMID CORPORATION SITE
20 POLHEMUS LANE
BRIDGEWATER, NJ

REUSE OF DOCUMENTS: THIS DOCUMENT, AND THE IDEAS AND DESIGNS INCORPORATED HEREIN, AS AN INSTRUMENT OF PROFESSIONAL SERVICE, IS THE PROPERTY OF CH2M HILL AND IS NOT TO BE USED, IN WHOLE OR IN PART, FOR ANY OTHER PROJECT WITHOUT THE WRITTEN AUTHORIZATION OF CH2M HILL.

CH2MHILL®

STRUCTURAL

CAISSON DETAILS

AS SHOWN

VERIFY SCALE

BAR IS ONE INCH ON ORIGINAL DRAWING.
0 1"

DATE	2013/08/29
PROJ	472109
DWG	S-5003
SHEET	22

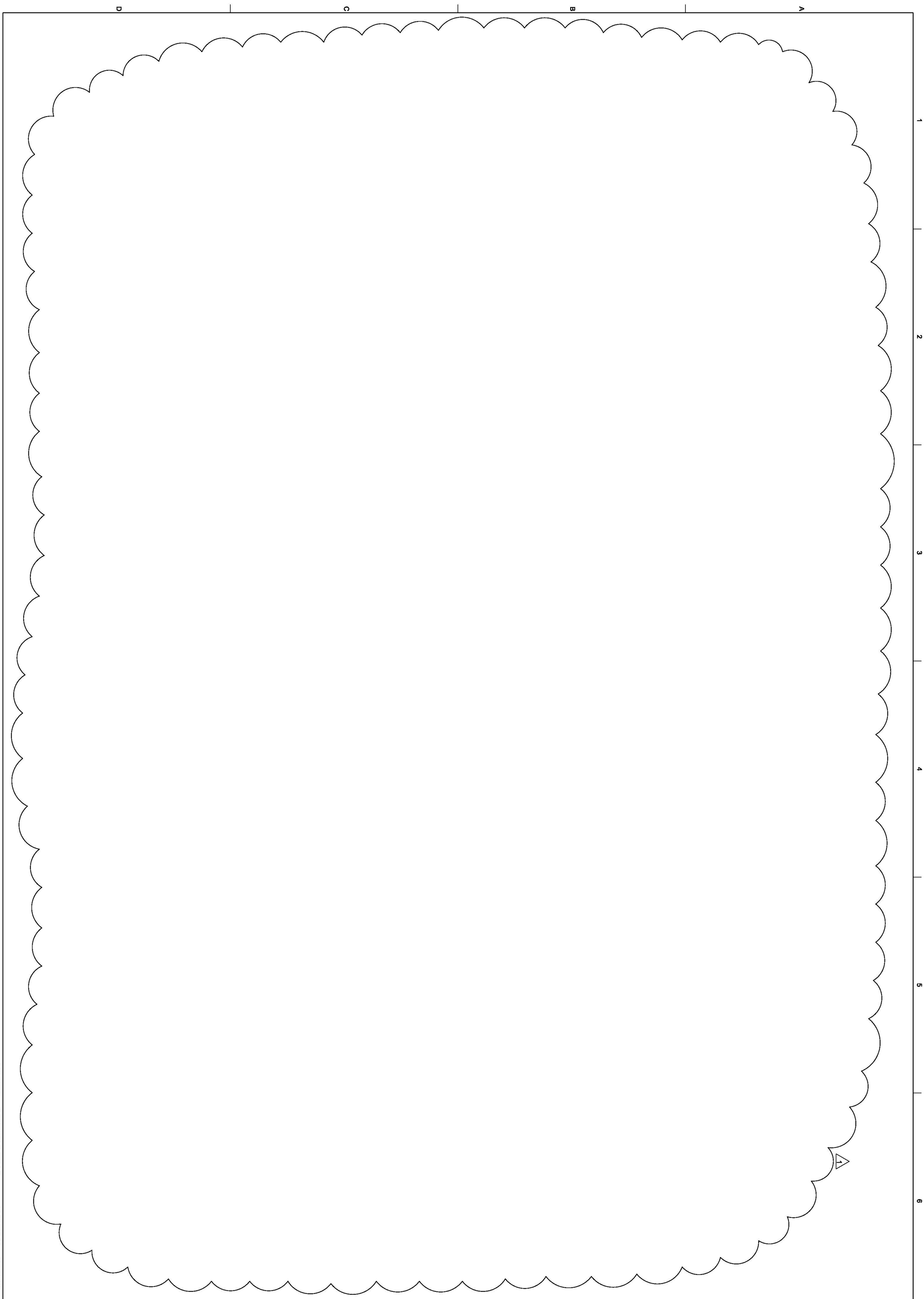

FILENAME: 472109-001-S-5004.dgn	PLOT DATE: 10/23/2013	PLOT TIME: 4:49:44 PM	SHEET 23
DWG S-5004	PROJ 472109	DATE 2013/08/29	BAR IS ONE INCH ON ORIGINAL DRAWING: 0 1"
VERIFY SCALE	AS SHOWN		

CH2MHILL®

1717 ARCH ST. - SUITE 4400
PHILADELPHIA, PA 19103
PH (215) 563-4220 FAX (215) 563-3828

STRUCTURAL

WOODEN STAIRS DETAILS

IMPOUNDMENTS 1 AND 2
PILOT DEMONSTRATION STUDY
WYETH HOLDINGS CORPORATION
AMERICAN CYANAMID SUPERFUND SITE
20 POLHEMUS LANE
BRIDGEWATER, NJ

NO.	DATE	REVISION	BY	APVD
1	2013/10/25	REVISION #1	RT	Y
0	2013/08/29	ISSUED FOR CONSTRUCTION	RT	Y

DSGN	DR	CHK	APVD
R. FORREST	K. POPE	W. BENNETT	R. TRAVER

RICHARD P. TRAVER

STATE OF NEW JERSEY · RICHARD P. TRAVER · 26300 · LICENSED PROFESSIONAL ENGINEER

N.J. PROFESSIONAL ENGINEER
NO. 26300

REUSE OF DOCUMENTS: THIS DOCUMENT, AND THE IDEAS AND DESIGNS INCORPORATED HEREIN, AS AN INSTRUMENT OF PROFESSIONAL SERVICE, IS THE PROPERTY OF CH2M HILL AND IS NOT TO BE USED, IN WHOLE OR IN PART, FOR ANY OTHER PROJECT WITHOUT THE WRITTEN AUTHORIZATION OF CH2MHILL.

©CH2M HILL 2011. ALL RIGHTS RESERVED.

NOTES:

1. ALUMINUM GANGWAY SHALL BE A 4FT x 50FT PREFABRICATED ALUMINUM GANGWAY AS MANUFACTURED BY DOCK ACCENTS, HARTFORD, VA.
2. GANGWAY DECKING SHALL BE ALUMADOCK ALUMINUM DECKING WITH GRAY POWDERCOAT. DECKING TO BE FACTORY ATTACHED.
3. GUARDRAIL DOES NOT REQUIRE ADA COMPLIANCE.
4. DESIGN GANGWAY FOR 100psf SUPERIMPOSED LIVE LOAD.
5. DESIGN GANGWAY FOR ADDITIONAL PIPING/ MECHANICAL DEAD LOAD OF 20LB/FT.
6. MATERIAL AT BARGE CONNECTION SHALL BE COMPATIBLE AND WELDABLE TO FLEXIFLOAT PLATFORM. ALTERNATE MATERIALS WILL REQUIRE ALUMINUM GANGWAY MANUFACTURER DESIGN.

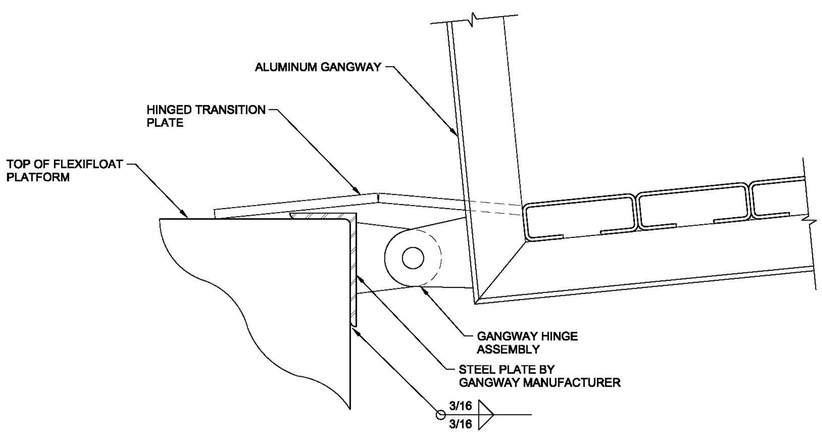

1 BARGE CONNECTION
NTS
C-2001

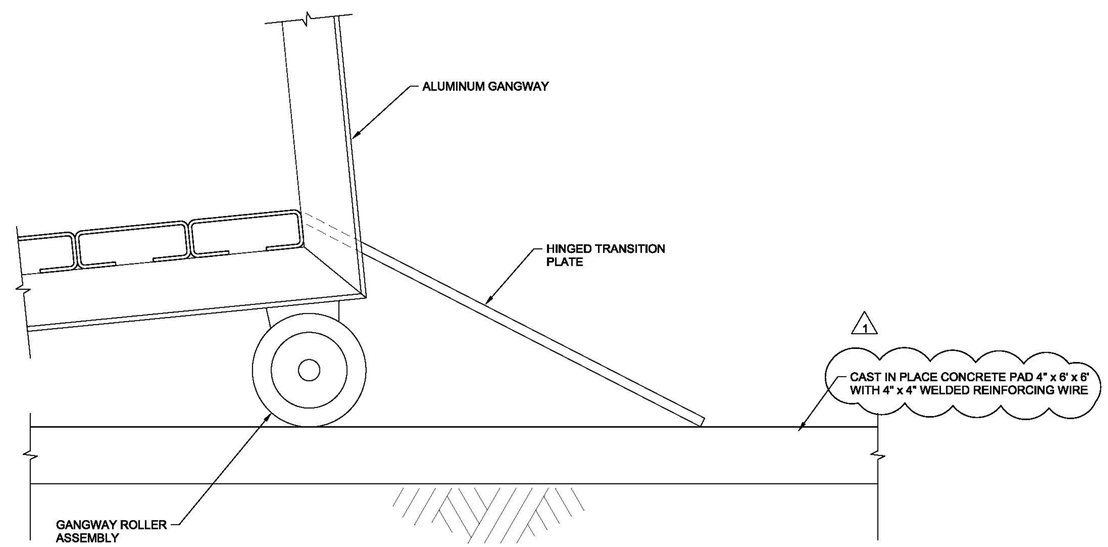

2 LAND CONNECTION
NTS
C-2001

NO.	DATE	DSGN	DR	CHK	APVD	REVISION	BY	APVD
1	2013/10/25	R. FORREST		K. POPE	W. BENNETT	REVISION #1	RT	Y
0	2013/08/29					ISSUED FOR CONSTRUCTION	RT	Y

RICHARD P. TRAVER
N.J. PROFESSIONAL ENGINEER NO. 26300
R. TRAVER

CH2MHILL®
1717 ARCH ST. - SUITE 4400
PHILADELPHIA, PA 19103
PH (215) 563-4220 FAX (215) 563-3828

IMPOUNDMENTS 1 AND 2
PILOT DEMONSTRATION STUDY
WYETH HOLDINGS CORPORATION
AMERICAN CYANAMID SUPERFUND SITE
20 POLHEMUS LANE
BRIDGEWATER, NJ

STRUCTURAL
GANGWAY

AS SHOWN
VERIFY SCALE
BAR IS ONE INCH ON ORIGINAL DRAWING.
0 1"

DATE	2013/08/29
PROJ	472109
DWG	S-5005
SHEET	24

REUSE OF DOCUMENTS: THIS DOCUMENT, AND THE IDEAS AND DESIGNS INCORPORATED HEREIN, AS AN INSTRUMENT OF PROFESSIONAL SERVICE, IS THE PROPERTY OF CH2M HILL AND IS NOT TO BE USED, IN WHOLE OR IN PART, FOR ANY OTHER PROJECT WITHOUT THE WRITTEN AUTHORIZATION OF CH2M HILL.
©CH2M HILL 2011. ALL RIGHTS RESERVED.

FILENAME: 472109-001-S-5005.dgn PLOT DATE: 10/23/2013 PLOT TIME: 4:54:50 PM

GENERAL NOTES:

1. UNDERGROUND CONDUIT SHALL BE SCHEDULE 80 PVC DIRECT BURIED, ALL 600V WIRING SHALL BE RATED "USE–RHH–RHW". UNDERGROUND CONDUIT SHALL BE RUN 3'–0" BELOW FINISHED GRADE U.O.N. CONDUIT SHALL BE AS MANUFACTURED BY ALLIED TUBE AND CONDUIT OR APPROVED EQUAL.
2. FURNISH AND INSTALL ALL REQUIRED 15KV POLE LINE ACCESSORIES NECESSARY TO MAKE THE ELECTRICAL WORK COMPLETE AND READY FOR OPERATION, INCLUDING, BUT NOT LIMITED TO, ALL NECESSARY SUPPORTS AND HARDWARE FOR MOUNTING OF ELECTRICAL EQUIPMENT.
3. COORDINATE ELECTRICAL WORK WITH THE WORK OF OTHER TRADES AND FACILITY OPERATIONS INCLUDING OTHER CONSTRUCTION PROJECTS IN PROGRESS.
4. PERFORM WORK AS PER APPLICABLE CONTRACT SPECIFICATIONS, NATIONAL ELECTRICAL CODE, NATIONAL ELECTRICAL SAFETY CODE AND ALL OTHER APPLICABLE FEDERAL, STATE AND LOCAL REGULATIONS. IN CASE OF CONFLICT, THE MOST RESTRICTIVE SHALL APPLY.
5. ALL MATERIAL AND EQUIPMENT SHALL BE UL, NEMA, ANSI, IEEE, ADA & CBM APPROVED FOR INTENDED SERVICE. MATERIAL AND INSTALLATION SHALL MEET REQUIREMENTS OF NATIONAL, STATE AND LOCAL ELECTRICAL CODES.IN CASE OF CONFLICT THE MOST RESTRICTIVE SHALL APPLY.
6. MAINTAIN RECORD DRAWINGS ON SITE. RECORD SET MUST BE COMPLETE, CURRENT AND AVAILABLE FOR INSPECTION.
7. DRAWINGS ARE DIAGRAMMATIC AND ARE NOT INTENDED TO SHOW ALL DETAILS OF CONSTRUCTION MOUNTING AND WIRING. THE EXACT LOCATION OF EQUIPMENT AND DEVICES SHALL BE DETERMINED IN THE FIELD AND APPROVED BY THE ENGINEER.
8. TEMPORARY LIGHT AND POWER SHALL BE PROVIDED BY THE CONTRACTOR.
9. IMMEDIATELY NOTIFY THE ENGINEER OF ANY DISCREPANCY BETWEEN THE CONTRACT DRAWINGS AND THE EXISTING FIELD CONDITIONS, PRIOR TO INSTALLATION OF ELECTRICAL EQUIPMENT.
10. ALL EQUIPMENT SHALL BE INSTALLED IN A NEAT AND WORKMANLIKE MANNER, RECTILINEAR TO THE STRUCTURE.
11. ALL EQUIPMENT SHALL BE INSTALLED AND ADJUSTED IN ACCORDANCE WITH THE MANUFACTURER'S RECOMMENDATIONS AND AS APPROVED BY THE ENGINEER.
12. THE CONTRACTOR SHALL ABIDE BY ALL SAFETY MEASURES INCLUDING DISCHARGING OF CABLE CAPACITANCE AND GROUNDING TO PROTECT PERSONNEL AGAINST ANY ELECTRICAL SHOCK.
13. UPON AWARD OF CONTRACT, SUBMIT A DETAILED WORK STAGING PLAN TO THE ENGINEER FOR APPROVAL PRIOR TO START OF WORK.
14. ALL WORK ASSOCIATED WITH POWER OUTAGES SHALL BE PERFORMED ON A CONTINUOS BASIS (24 HOURS).
15. FOR HIGH VOLTAGE FEEDERS ONLY, PSE & G PERSONNEL SHALL PERFORM ALL SWITCHING OPERATIONS INCLUDING THE CLOSING OF GROUND SWITCHES, SHUTDOWN OF FEEDERS, RE–ENERGIZING FEEDERS AND TRANSFERRING OF LOADS.
16. VERIFY NECESSARY FEEDERS ARE DE–ENERGIZED AND NECESSARY SWITCHES HAVE BEEN LOCKED OPEN AND TAGGED–OUT PRIOR TO COMMENCING WORK ON THE PORTION OF THE SYSTEM REQUIRED.
17. CABLE ENDS NOT YET SPLICED, SHALL BE PROPERLY SECURED TO AVOID ABSORPTION OF HUMIDITY. MANUFACTURER'S ORIGINAL ENDCAPS SHALL BE MAINTAINED UNTIL SPLICING. IF MANUFACTURER END CAPS ARE UNAVAILABLE, PROVIDE APPROVED MEANS AND METHODS TO PREVENT CABLE MOISTURE ABSORBTION.
18. ALL ELECTRICAL SYSTEM EQUIPMENT, COMPONENTS AND THE MEANS OF THEIR ATTACHMENTS AND SUPPORT SHALL BE INSTALLED IN A MANNER TO RESIST THE EFFECTS OF EARTHQUAKE MOTION AS DETERMINED IN ACCORDANCE WITH THE NEW JERSEY UNIFORM CONSTRUCTION CODE AS AMENDED TO DATE.
19. ALL ELECTRICAL MATERIAL AND EQUIPMENT NECESSARY TO PERFORM ELECTRICAL WORK SHALL BE AVAILABLE ON SITE PRIOR TO START OF WORK.
20. FURNISH AND INSTALL 15KV PRE–FORMED STRESS CONE KITS AS MANUFACTURED BY RAYCHEM, 3M OR APPROVED EQUAL.
21. MEDIUL VOLTAGE COMMISSIONING TESTS SHALL BE PERFORMED BY A THIRD PARTY COMPANY AS INDICATED:
    a. HIGH ENERGY TESTING
    b. EASTERN HIGH VOLTAGE, ROBBINSVILLE, N.J.
    c. SCOTT TESTING INC., TRENTON, N.J.
    d. AMERICAN ELECTRICAL TESTING HAUPPAUQE, N.Y.

    TESTING SHALL CONSIST OF NETA HI–POT CABLE TESTING.

ABBREVIATIONS

AMP	AMPERES
AWG	AMERICAN WIRE GAUGE
C	CONDUIT
CAT.	CATALOG
CKT.	CIRCUIT
DWG.	DRAWING
E	EXISTING
FS	FUSED SWITCH
FT	FOOT, FEET
GFCI	GROUND FAULT CIRCUIT INTERRUPTER
G, GND	GROUND
J, JB	JUNCTION BOX
KVA	KILOVOLT AMPERE
KWA	KILOWATT AMPERE
MTG	MOUNTING
N.I.C.	NOT IN CONTRACT
No., #	NUMBER
PH	PHASE
PNL	PANEL
PR.	PAIR
PWR	POWER
QTY.	QUANTITY
T	TRANSFORMER
T/O	TELECOMMUNICATION OUTLET
TYP	TYPICAL
U.O.N.	UNLESS OTHERWISE NOTED
VAC	VOLT ALTERNATE CURRENT
V	VOLT
WP	ITEM IN WEATHERPROOF ENCLOSURE OR OF WEATHERPROOF CONSTRUCTION
XFMR	TRANSFORMER

PETER J. SOKOLOW

N.J. PROFESSIONAL ENGINEER NO. 24405

NO.	DATE	REVISION	BY	APV'D
0	2013/09/23	ISSUED FOR CONSTRUCTION	PJS	Y
A	2013/08/16	95% REVIEW	PJS	Y

DSGN	DR	CHK	APV'D
N.KANTOR	N. KANTOR	P.J. SOKOLOW	P.J. SOKOLOW

©CH2M HILL 2010. ALL RIGHTS RESERVED.

1717 ARCH ST. - SUITE 4400
PHILADELPHIA, PA 19103
PH (215)563-4220 FAX (215)563-3828
EB 0000072 AA 001992

IMPOUNDMENTS 1 AND 2
PILOT FEASIBILITY COST STUDY
WYETH HOLDINGS CORPORATION
AMERICAN CYANAMID SUPERFUND SITE
20 POLHEMUS LANE
BRIDGEWATER, NJ

CH2MHILL

ELECTRICAL

GENERAL NOTES AND ABBREVIATIONS

N/A

VERIFY SCALE

BAR IS ONE INCH ON ORIGINAL DRAWING.
0 1"

DATE	2013/08/16
PROJ	472109
DWG	E-0001
SHEET	25

REUSE OF DOCUMENTS: THIS DOCUMENT, AND THE IDEAS AND DESIGNS INCORPORATED HEREIN, AS AN INSTRUMENT OF PROFESSIONAL SERVICE, IS THE PROPERTY OF CH2M HILL AND IS NOT TO BE USED, IN WHOLE OR IN PART, FOR ANY OTHER PROJECT WITHOUT THE WRITTEN AUTHORIZATION OF CH2MHILL.

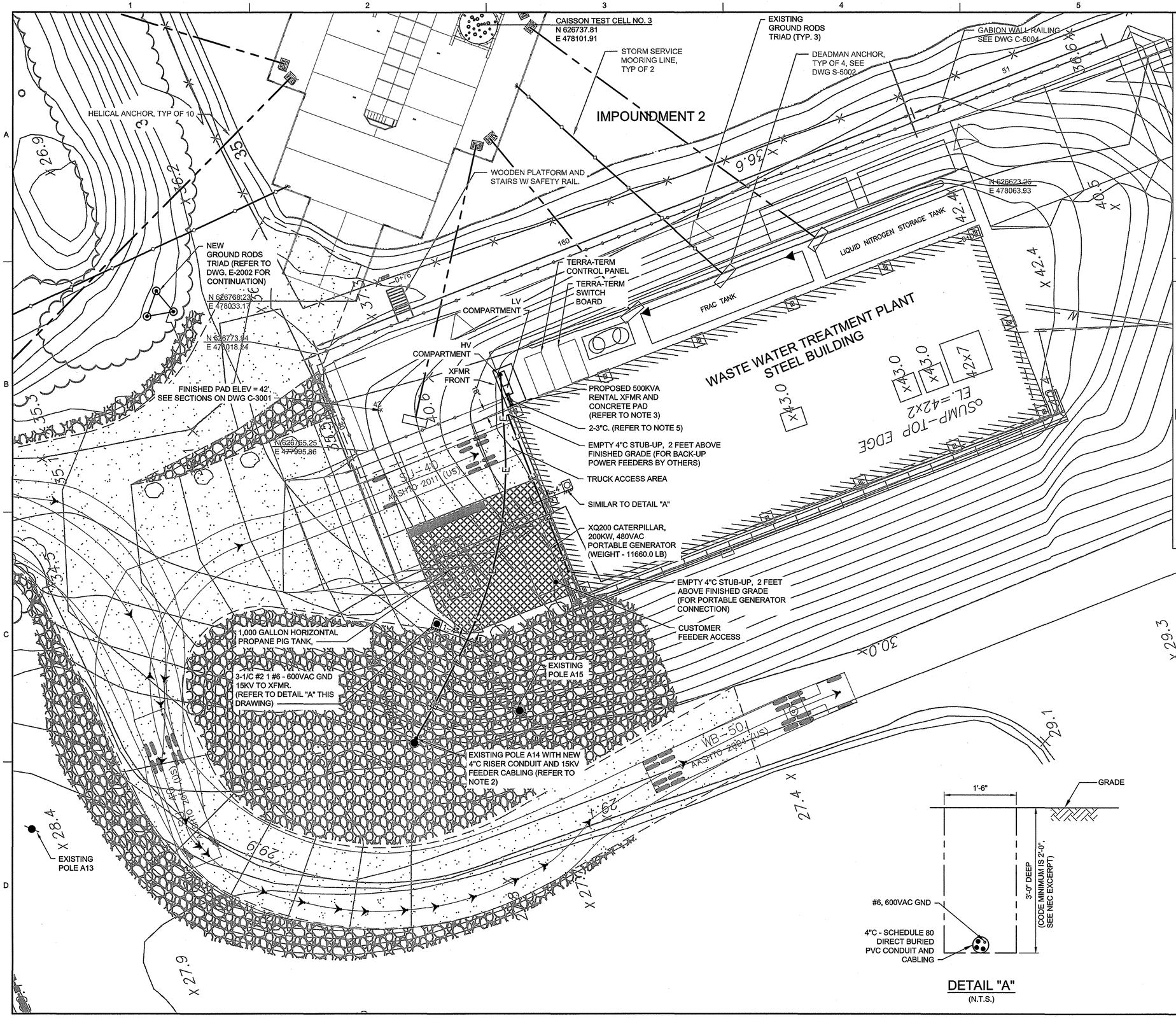

NOTES:

1. FOR GENERAL NOTES AND ABBREVIATIONS REFER DWG. E-0001.
2. FOR POLE DETAILS REFER TO DWG. E-5001.
3. FOR TRANSFORMER PAD DETAILS REFER TO DWG. E-5001.
4. FOR PAVEMENT TYPE REFER TO CIVIL DRAWINGS.
5. TWO (3) INCH, RGS CAPPED EMPTY CONDUIT STUB-UPS FOR TERRA-THERM 480VAC FEEDERS.

LEGEND

- STORM SERVICE MOORING LINE
- NORMAL SERVICE MOORING LINE
- LIMITS OF RAMP
- LIMITS OF EQUIPMENT BENCH/ SPCC CONTAINMENT LINER
- E — E — NEW UNDERGROUND DIRECT BURIED CONDUIT DUCT WITH FEEDER CABLING, AS NOTED.
- 1-4" / 1-4" — UNDERGROUND DUCT BANK CONFIGURATION
  - DENOTES CONDUIT SIZE
  - DENOTES QUANTITY OF CONDUITS
  - DENOTES CONDUIT FILL
  - DENOTES CONDUIT EMPTY
- EXISTING UTILITY POLE

NO.	DATE	DSGN	DR	CHK	APVD	BY	APVD	REVISION
0	2013/08/29	N. KANTOR	N. KANTOR	P.J. SOKOLOW	P.J. SOKOLOW	PJS	Y	ISSUED FOR CONSTRUCTION
A	2013/08/16					PJS	Y	95% REVIEW

PETER J. SOKOLOW
N.J. PROFESSIONAL ENGINEER NO. 24408
10/24/13

1717 ARCH ST - SUITE 4400
PHILADELPHIA, PA 19103
PH (215) 563-4220 FAX (215) 563-3828
EB 0000072 AA 001992

IMPOUNDMENTS 1 AND 2
PILOT DEMONSTRATION STUDY
WYETH HOLDINGS CORPORATION
AMERICAN CYANAMID SUPERFUND SITE
20 POLHEMUS LANE
BRIDGEWATER, NJ

CH2MHILL

ELECTRICAL
SITE POWER PLAN

REUSE OF DOCUMENTS: THIS DOCUMENT, AND THE IDEAS AND DESIGNS INCORPORATED HEREIN, AS AN INSTRUMENT OF PROFESSIONAL SERVICE, IS THE PROPERTY OF CH2M HILL AND IS NOT TO BE USED, IN WHOLE OR IN PART, FOR ANY OTHER PROJECT WITHOUT THE WRITTEN AUTHORIZATION OF CH2MHILL.
©CH2M HILL 2010. ALL RIGHTS RESERVED.

VERIFY SCALE
BAR IS ONE INCH ON ORIGINAL DRAWING.
0 1"

DATE	2013/08/16
PROJ	472109
DWG	E-2001
SHEET	26

FILE NAME: 472109-001-E-2001.dwg PLOT DATE: 10/24/2013 8:39 AM

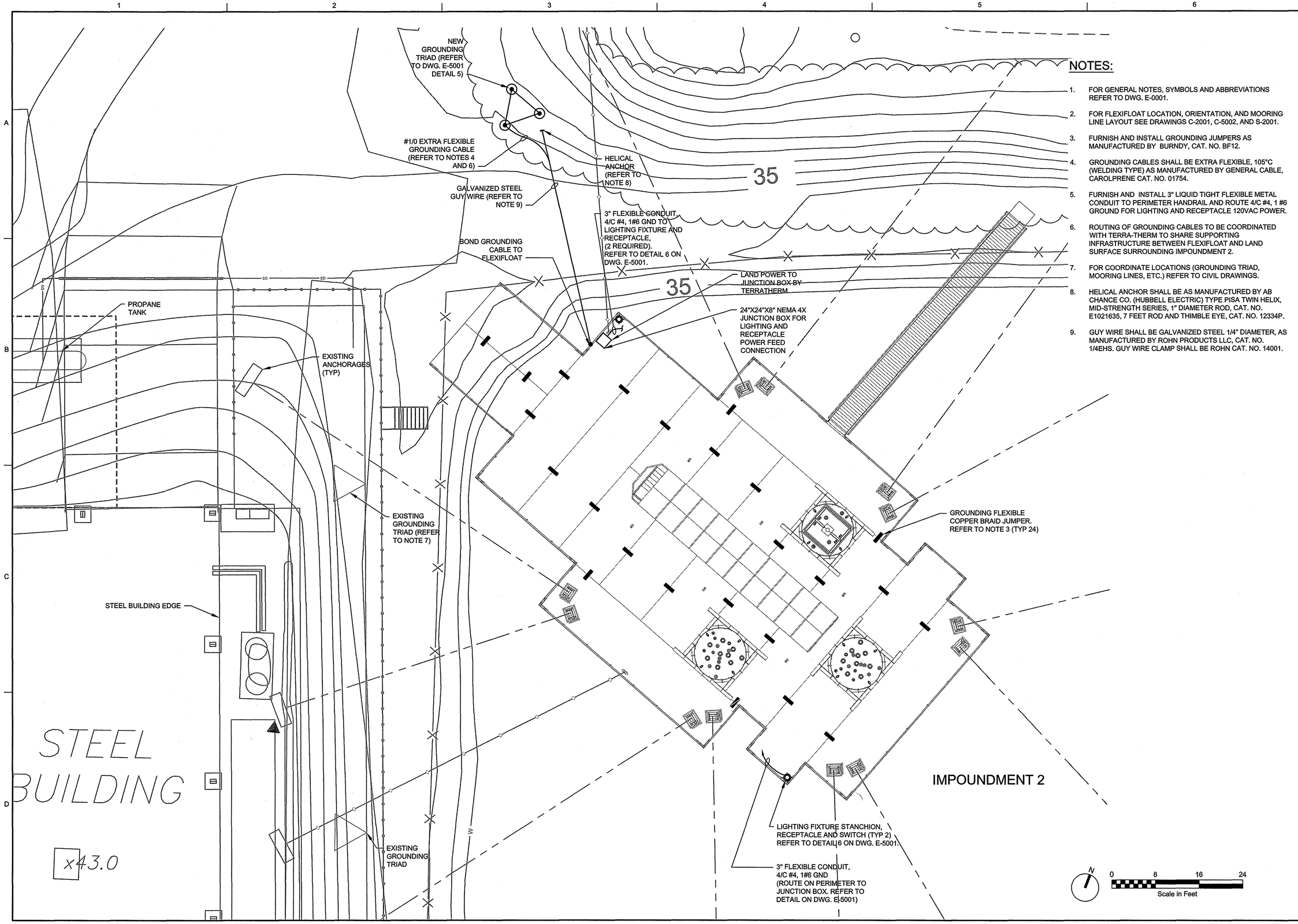

NOTES:

1. FOR GENERAL NOTES, SYMBOLS AND ABBREVIATIONS REFER TO DWG. E-0001.
2. FOR FLEXIFLOAT LOCATION, ORIENTATION, AND MOORING LINE LAYOUT SEE DRAWINGS C-2001, C-5002, AND S-2001.
3. FURNISH AND INSTALL GROUNDING JUMPERS AS MANUFACTURED BY BURNDY, CAT. NO. BF12.
4. GROUNDING CABLES SHALL BE EXTRA FLEXIBLE, 105°C (WELDING TYPE) AS MANUFACTURED BY GENERAL CABLE, CAROLPRENE CAT. NO. 01754.
5. FURNISH AND INSTALL 3" LIQUID TIGHT FLEXIBLE METAL CONDUIT TO PERIMETER HANDRAIL AND ROUTE 4/C #4, 1 #6 GROUND FOR LIGHTING AND RECEPTACLE 120VAC POWER.
6. ROUTING OF GROUNDING CABLES TO BE COORDINATED WITH TERRA-THERM TO SHARE SUPPORTING INFRASTRUCTURE BETWEEN FLEXIFLOAT AND LAND SURFACE SURROUNDING IMPOUNDMENT 2.
7. FOR COORDINATE LOCATIONS (GROUNDING TRIAD, MOORING LINES, ETC.) REFER TO CIVIL DRAWINGS.
8. HELICAL ANCHOR SHALL BE AS MANUFACTURED BY AB CHANCE CO. (HUBBELL ELECTRIC) TYPE PISA TWIN HELIX, MID-STRENGTH SERIES, 1" DIAMETER ROD, CAT. NO. E1021635, 7 FEET ROD AND THIMBLE EYE, CAT. NO. 12334P.
9. GUY WIRE SHALL BE GALVANIZED STEEL 1/4" DIAMETER, AS MANUFACTURED BY ROHN PRODUCTS LLC, CAT. NO. 1/4EHS. GUY WIRE CLAMP SHALL BE ROHN CAT. NO. 14001.

PETER J. SOKOLOW

N.J. PROFESSIONAL ENGINEER NO. 24408

6/24/13

NO.	DATE	REVISION	BY	APVD
0	2013/08/29	ISSUED FOR CONSTRUCTION	PJS	Y
A	2013/08/16	95% REVIEW	PJS	Y

DSGN P. DANIELL | DR N. KANTOR | CHK P. J. SOKOLOW | APVD P. J. SOKOLOW

1717 ARCH ST. - SUITE 4400
PHILADELPHIA, PA 19103
PH (215) 563-4220 FAX (215) 563-3828
EB 0000072 AA 001992

IMPOUNDMENTS 1 AND 2
PILOT DEMONSTRATION STUDY
WYETH HOLDINGS CORPORATION
AMERICAN CYANAMID SUPERFUND SITE
20 POLHEMUS LANE
BRIDGEWATER, NJ

CH2MHILL

ELECTRICAL

GROUNDING & POWER DISTRIBUTION FLEXIFLOAT ENLARGED LAYOUT

VERIFY SCALE

BAR IS ONE INCH ON ORIGINAL DRAWING.
0 1"

DATE	2013/08/16
PROJ	472109
DWG	E-2002
SHEET	27

REUSE OF DOCUMENTS: THIS DOCUMENT, AND THE IDEAS AND DESIGNS INCORPORATED HEREIN, AS AN INSTRUMENT OF PROFESSIONAL SERVICE, IS THE PROPERTY OF CH2M HILL AND IS NOT TO BE USED, IN WHOLE OR IN PART, FOR ANY OTHER PROJECT WITHOUT THE WRITTEN AUTHORIZATION OF CH2MHILL.

©CH2M HILL 2010. ALL RIGHTS RESERVED.

FILE NAME: 472109-001-E-2002.dwg PLOT DATE: 10/24/2013 9:34 AM

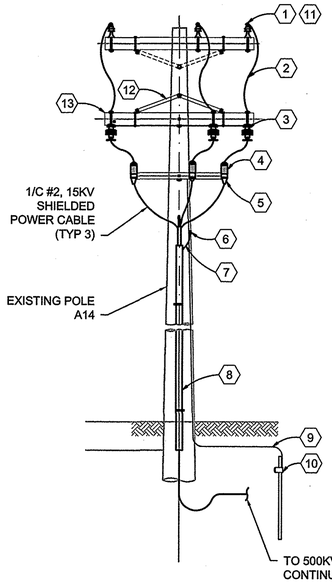

1 EXISTING #2/0 ACSR (TYP 3)
2 #2, 15KV INSULATED CABLE
3 15KV LOAD BREAK FUSED CUT-OUT
4 7.2KV LIGHTNING ARRESTORS (TYP 3)
5 PREFABRICATED STRESS CONES (TYP 3)
6 5KV CABLE SHIELDS GROUNDING
7 RISER CONDUIT GROUNDING
8 4" PVC COATED RGS CONDUIT
9 BARE COPPER #4 GROUND WIRE
10 10 FT. GROUND ROD WITH CADWELD CONNECTION.
11 HOT LINE CLAMP CONNECTOR
12 GALVANIZED METAL SUPPORT
13 8'-0" TREATED CROSS ARM
14 RENTAL TRANSFORMER, PAD MOUNTED, THREE PHASE WITH ONE LOAD BREAK BUSHING PER PHASE AND INTERNAL FUSES.
15 SIGNS, "DANGER" AND "WARNING".
16 EQUIPMENT GROUND CONNECTOR.
17 GROUND ROD - 3/4"Ø X 10'-0' COPPER WELD.
18 FUSED LOAD BREAK ELBOW, COOPER CAT. NO. LFEP125TFEC-AT.
19 6" MIN, TYP UNO.
20 TRANSFORMER EQUIPMENT.
21 CONCRETE ANCHOR, TYP PER TRANSFORMER MANUFACTURER REQUIREMENTS.
22 FINISH GRADE OR PAVEMENT.
23 2-#5 CONT AROUND PERIMETER.
24 PROVIDE 12" COMPACTED GRANDULAR FILL.
25 #5 @ 12" EW, T&B.
26 3" RGS CONDUIT STUB-UPS, (2'-0") FOR TERRA-THERM 480VAC, 600A POWER FEEDERS BY OTHERS.
27 3/4" CHAMFER, TYP.

1 RISER FEEDER POLE WITH FUSED LOAD BREAK CUT-OUT
NTS
E-2001

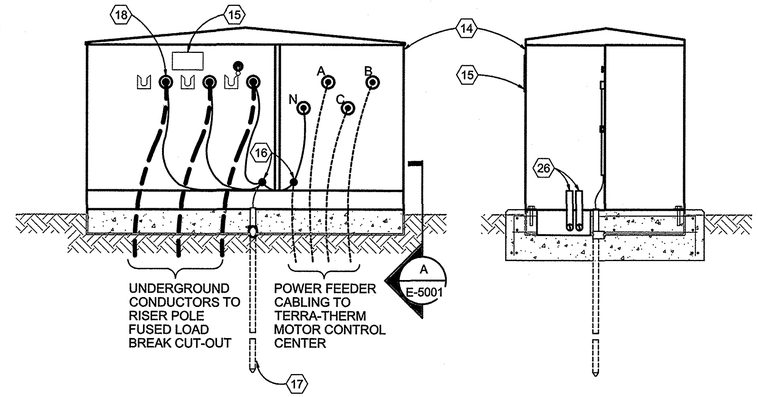

2 THREE PHASE PAD MOUNTED TRANSFORMER
NTS
E-2001

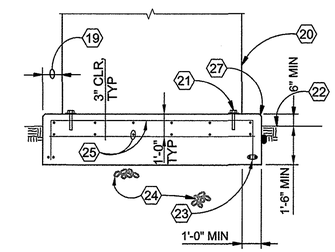

A SECTION
NTS
E-2001

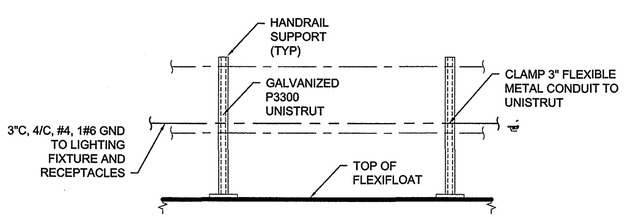

3 TYPICAL FLEXIBLE METAL CONDUIT ATTACHMENT TO FLEXIFLOAT
NTS
E-2002

(FOR TYPICAL RAILING STRUCTURAL DETAILS REFER TO DRAWING S-5003, DETAILS 1 AND 2)

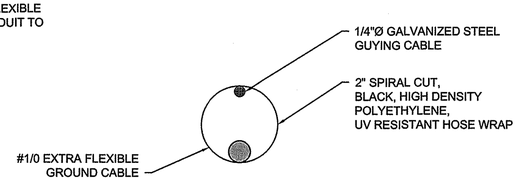

4 GROUND CABLE ATTACHMENT
NTS
E-2002

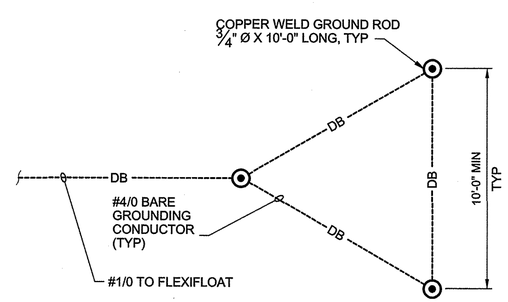

5 GROUND ROD TRIAD
NTS
E-2002

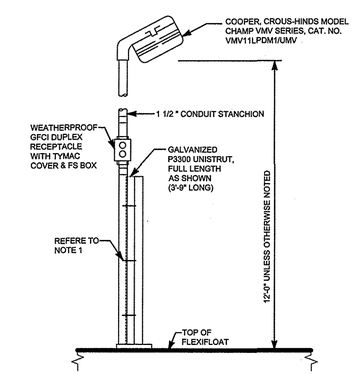

RAILING MOUNTED

NOTES:
1. CLAMP CONDUIT TO UNISTRUT HANDRAIL IN 3 PLACES

6 LIGHTING STANCHION
NTS
E-2002

NO.	DATE	DSGN	DR	CHK	APVD	BY	APVD
0	2013/08/29					PJS	Y
A	2013/08/16					PJS	Y

ISSUED FOR CONSTRUCTION
95% REVIEW
REVISION

N. KANTOR | N. KANTOR | P.J. SOKOLOW | P.J. SOKOLOW

PETER J. SOKOLOW
N.J. PROFESSIONAL ENGINEER NO. 24408
10/24/13

©CH2M HILL 2010. ALL RIGHTS RESERVED.

1717 ARCH ST., SUITE 4400
PHILADELPHIA, PA 19103
PH (215) 563-4220 FAX (215) 563-3828
EB 00000072 AA 001992

IMPOUNDMENTS 1 AND 2
PILOT DEMONSTRATION STUDY
WYETH HOLDINGS CORPORATION
AMERICAN CYANAMID SUPERFUND SITE
20 CONTINENTAL AVE
BRIDGEWATER, NJ

CH2MHILL

ELECTRICAL
DETAILS

REUSE OF DOCUMENTS: THIS DOCUMENT, AND THE IDEAS AND DESIGNS INCORPORATED HEREIN, AS AN INSTRUMENT OF PROFESSIONAL SERVICE, IS THE PROPERTY OF CH2M HILL AND IS NOT TO BE USED, IN WHOLE OR IN PART, FOR ANY OTHER PROJECT WITHOUT THE WRITTEN AUTHORIZATION OF CH2MHILL.

AS NOTED
VERIFY SCALE
BAR IS ONE INCH ON ORIGINAL DRAWING.
0 1"

DATE	2013/08/16
PROJ	472109
DWG	E-5001
SHEET	28

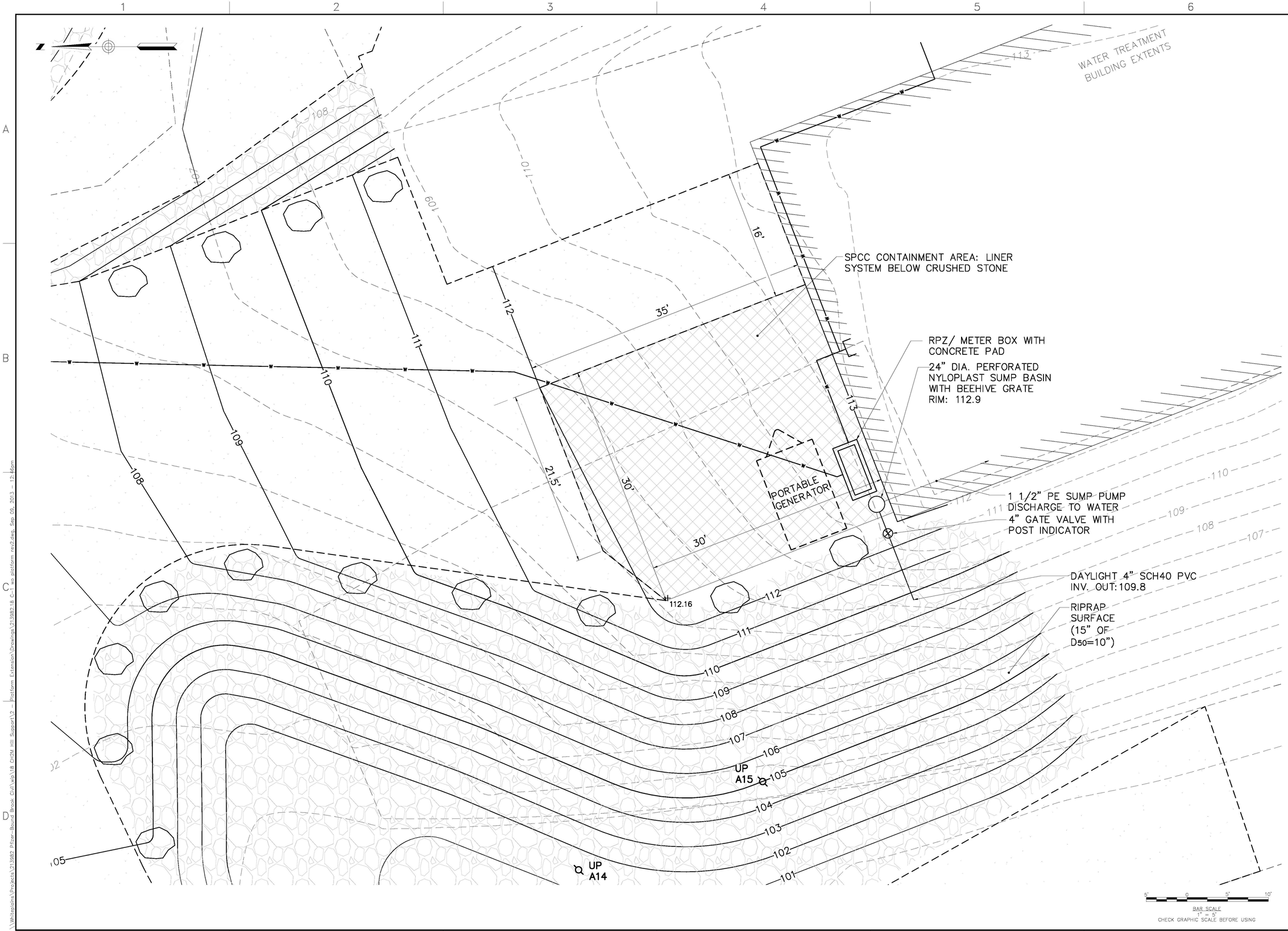

50 Millstone Road, Building 300
East Windsor, New Jersey 08520
877.786.8881 | www.woodardcurran.com
WOODARD & CURRAN
COMMITMENT & INTEGRITY DRIVE RESULTS

THIS DOCUMENT IS THE PROPERTY OF WOODARD & CURRAN INC. AND ITS CLIENT. REPRODUCTION OR MODIFICATION WITHOUT WRITTEN PERMISSION IS PROHIBITED.

REV	DESCRIPTION	DATE
1		

DESIGNED BY: DAS
DRAWN BY: BCM
CHECKED BY: DAS
213982.18 C-1 WO PLATFO*.dwg

WWTP BENCH EXTENSION LAYOUT

WYETH HOLDINGS CORPORATION
AMERICAN CYANAMID SUPERFUND SITE
20 POLHEMUS LANE
BRIDGEWATER, NJ

WWTP PLATFORM EXTENSION

JOB NO.: 213982.18
DATE: SEPT. 2013
SCALE: 1"=5'
SHEET: 1 OF 1

Fig. 1

\\Whiteplains\Projects\213982 Pfizer-Bound Brook Civil\wip\18 CH2M Hill Support\2 - Platform Extension\Drawings\213982.18 C-1 wo platform rev2.dwg, Sep 09, 2013 - 12:46pm

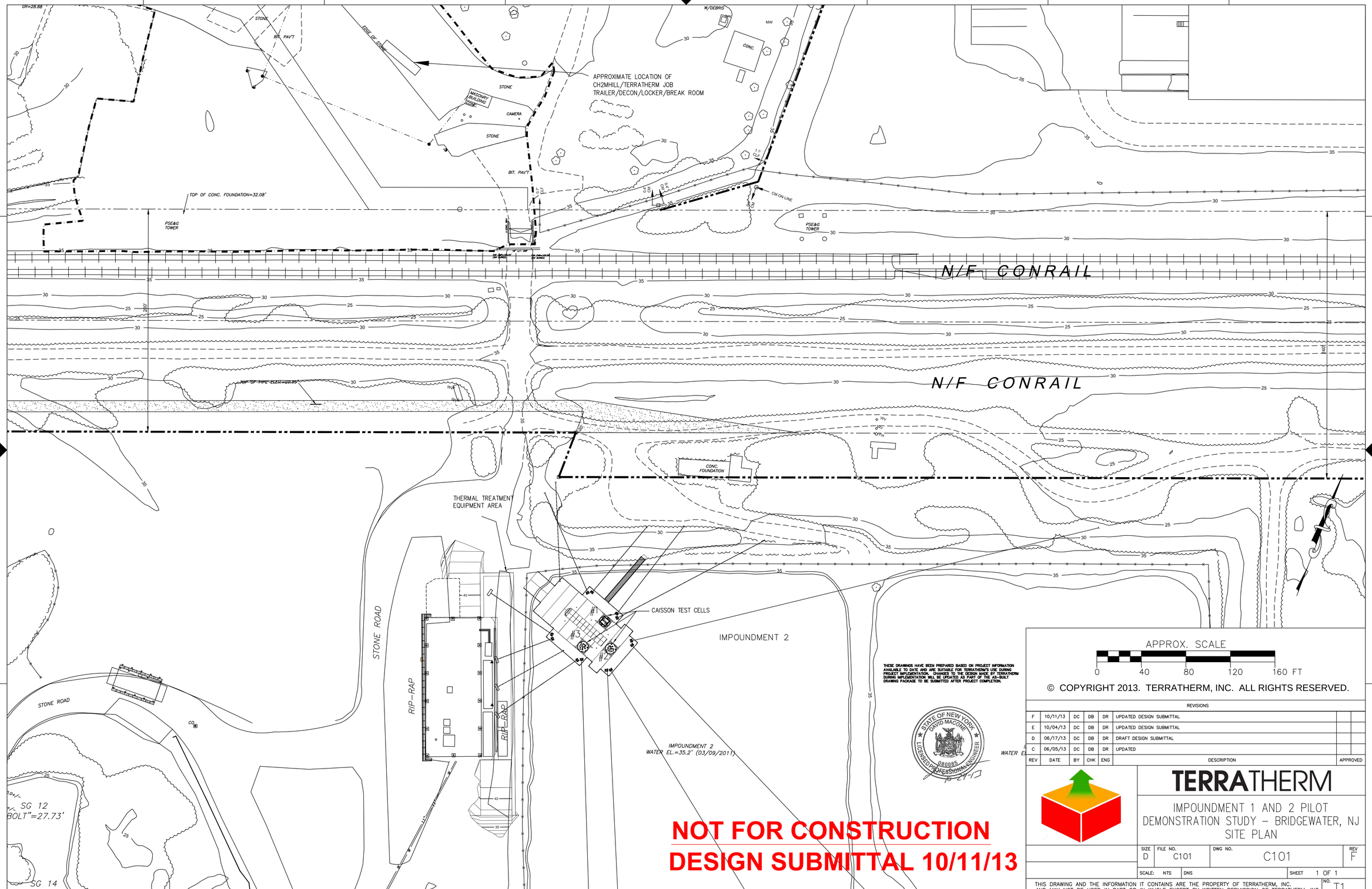

THESE DRAWINGS HAVE BEEN PREPARED BASED ON PROJECT INFORMATION AVAILABLE TO DATE AND ARE SUITABLE FOR TERRATHERM'S USE DURING PROJECT IMPLEMENTATION. CHANGES TO THE DESIGN MADE BY TERRATHERM DURING IMPLEMENTATION WILL BE UPDATED AS PART OF THE AS-BUILT DRAWING PACKAGE TO BE SUBMITTED AFTER PROJECT COMPLETION.

STATE OF NEW YORK DAVID MACONE 080085 LICENSED PROFESSIONAL ENGINEER

NOT FOR CONSTRUCTION
DESIGN SUBMITTAL 10/11/13

APPROX. SCALE

0 40 80 120 160 FT

© COPYRIGHT 2013. TERRATHERM, INC. ALL RIGHTS RESERVED.

REVISIONS

REV	DATE	BY	CHK	ENG	DESCRIPTION	APPROVED
F	10/11/13	DC	DB	DR	UPDATED DESIGN SUBMITTAL	
E	10/04/13	DC	DB	DR	UPDATED DESIGN SUBMITTAL	
D	06/17/13	DC	DB	DR	DRAFT DESIGN SUBMITTAL	
C	06/05/13	DC	DB	DR	UPDATED	

TERRATHERM

IMPOUNDMENT 1 AND 2 PILOT DEMONSTRATION STUDY – BRIDGEWATER, NJ
SITE PLAN

SIZE	FILE NO.	DWG NO.	REV
D	C101	C101	F

SCALE: NTS DNS SHEET 1 OF 1

THIS DRAWING AND THE INFORMATION IT CONTAINS ARE THE PROPERTY OF TERRATHERM, INC. AND MAY NOT BE USED IN PART OR IN WHOLE EXCEPT BY WRITTEN PERMISSION OF TERRATHERM, INC.

NO. T1

NOT FOR CONSTRUCTION
DESIGN SUBMITTAL 10/11/13

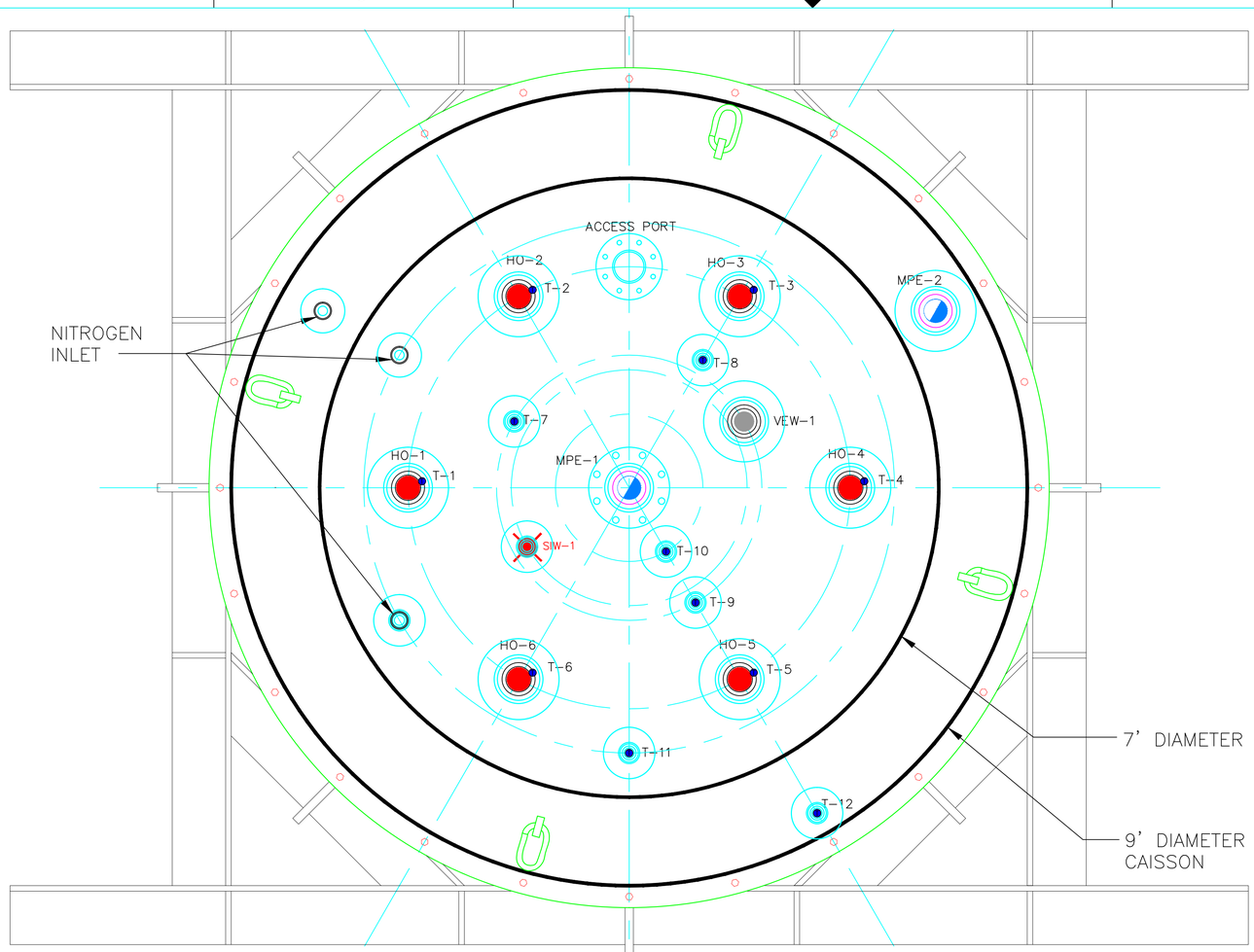

LEGEND

- HEATER WELL W/ CO-LOCATED THERMOCOUPLE
- MULTIPHASE EXTRACTION WELL
- TEMPERATURE MONITORING POINT
- VAPOR EXTRACTION WELL
- STEAM INJECTION WELL
- THERMOCOUPLE
- NITROGEN INLET

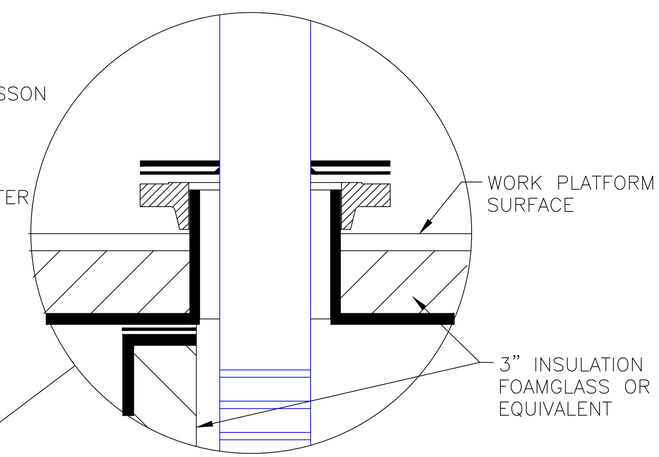

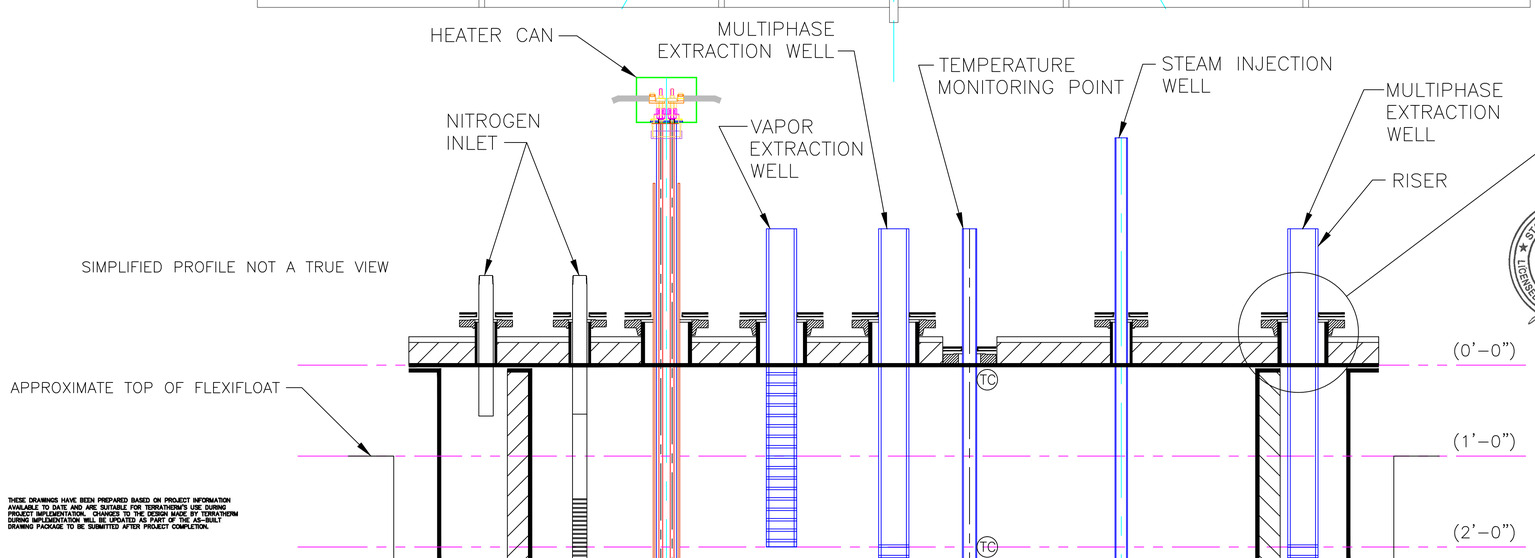

THESE DRAWINGS HAVE BEEN PREPARED BASED ON PROJECT INFORMATION AVAILABLE TO DATE AND ARE SUITABLE FOR TERRATHERM'S USE DURING PROJECT IMPLEMENTATION. CHANGES TO THE DESIGN MADE BY TERRATHERM DURING IMPLEMENTATION WILL BE UPDATED AS PART OF THE AS-BUILT DRAWING PACKAGE TO BE SUBMITTED AFTER PROJECT COMPLETION.

STATE OF NEW YORK · DAVID MACONE · 080085 · LICENSED PROFESSIONAL ENGINEER · 10-27-13

© COPYRIGHT 2013. TERRATHERM, INC. ALL RIGHTS RESERVED.

REVISIONS

REV	DATE	BY	CHK	ENG	DESCRIPTION	APPROVED
E	10/11/13	TM	DB	DR	UPDATED DESIGN SUBMITTAL	
D	06/17/13	DC	DB	DR	DRAFT DESIGN SUBMITTAL	
C	06/05/13	DC	DB	DR	UPDATED	

TERRATHERM

IMPOUNDMENT 1 AND 2 PILOT DEMONSTRATION STUDY – BRIDGEWATER, NJ
CAISSON LAYOUT

SIZE	FILE NO.	DWG NO.	REV
D	C102	C102	E

SCALE: NTS | DNS | SHEET 1 OF 2

THIS DRAWING AND THE INFORMATION IT CONTAINS ARE THE PROPERTY OF TERRATHERM, INC. AND MAY NOT BE USED IN PART OR IN WHOLE EXCEPT BY WRITTEN PERMISSION OF TERRATHERM, INC.

NO. T2

HEATER CAN TYPICAL DETAIL
QTY (6) PER CAISSON – FINAL DEPTH TO BE DETERMINED
2 5/8" OD X 0.065 WALL, 304SS LINER
INSTALLED WITHIN A 4" SCH 160, C.S. HEATER CAN
*THERMOCOUPLE TO BE INSERTED AT EACH HEATER

NITROGEN INLET (ANNULUS) WELL TYPICAL DETAIL
QTY (1) PER CAISSON
2'L, MNPT X PLAIN END (BELOW SURFACE)
1 1/2" SCH 160 C.S. PIPE

NITROGEN INLET (INTERIOR) WELL TYPICAL DETAIL
QTY (2) PER CAISSON
6'L X 1 1/2" WELL SCREEN, 0.020 SLOT, HASTELLOY W/PLATE BOTTOM
WITH A WELDED 30"L X 1 1/2" SCH 160 C.S. RISER W/THREADED END

VAPOR EXTRACTION WELL TYPICAL DETAIL
QTY (1) PER CAISSON
2'L X 4" WELL SCREEN, 0.020 SLOT, HASTELLOY W/PLATE BOTTOM
4" X 18" SCH 160 C.S. RISER W/THREADED END

MULTI-PHASE EXTRACTION (INTERIOR) WELL TYPICAL DETAIL
QTY (1) PER CAISSON – FINAL DEPTH TO BE DETERMINED
6'L X 4" WELL SCREEN, 0.020 SLOT, HASTELLOY
4" SCH 160 C.S. RISER X 42" W/THREADED END
4" SCH 160 C.S. SUMP X 36"L

TEMPERATURE MONITORING POINT DETAIL
QTY (6) PER CAISSON– FINAL DEPTH TO BE DETERMINED
1 1/2" SCH 160, C.S. PIPE WITH WELDED CAP

STEAM INJECTION WELL TYPICAL DETAIL
QTY (1) PER CAISSON– FINAL DEPTH TO BE DETERMINED
2'L X 1 1/2" WELL SCREEN, 0.020 SLOT,
1 1/2" SCH 160 C.S. RISER WELDED JOINT
W/NPT THREADED END

MULTI-PHASE EXTRACTION (ANNULUS) WELL TYPICAL DETAIL
QTY (1) PER CAISSON – FINAL DEPTH TO BE DETERMINED
6'L X 4" WELL SCREEN, 0.020 SLOT, 316SS
4" SCH 160 C.S. RISER X 42" W/THREADED END

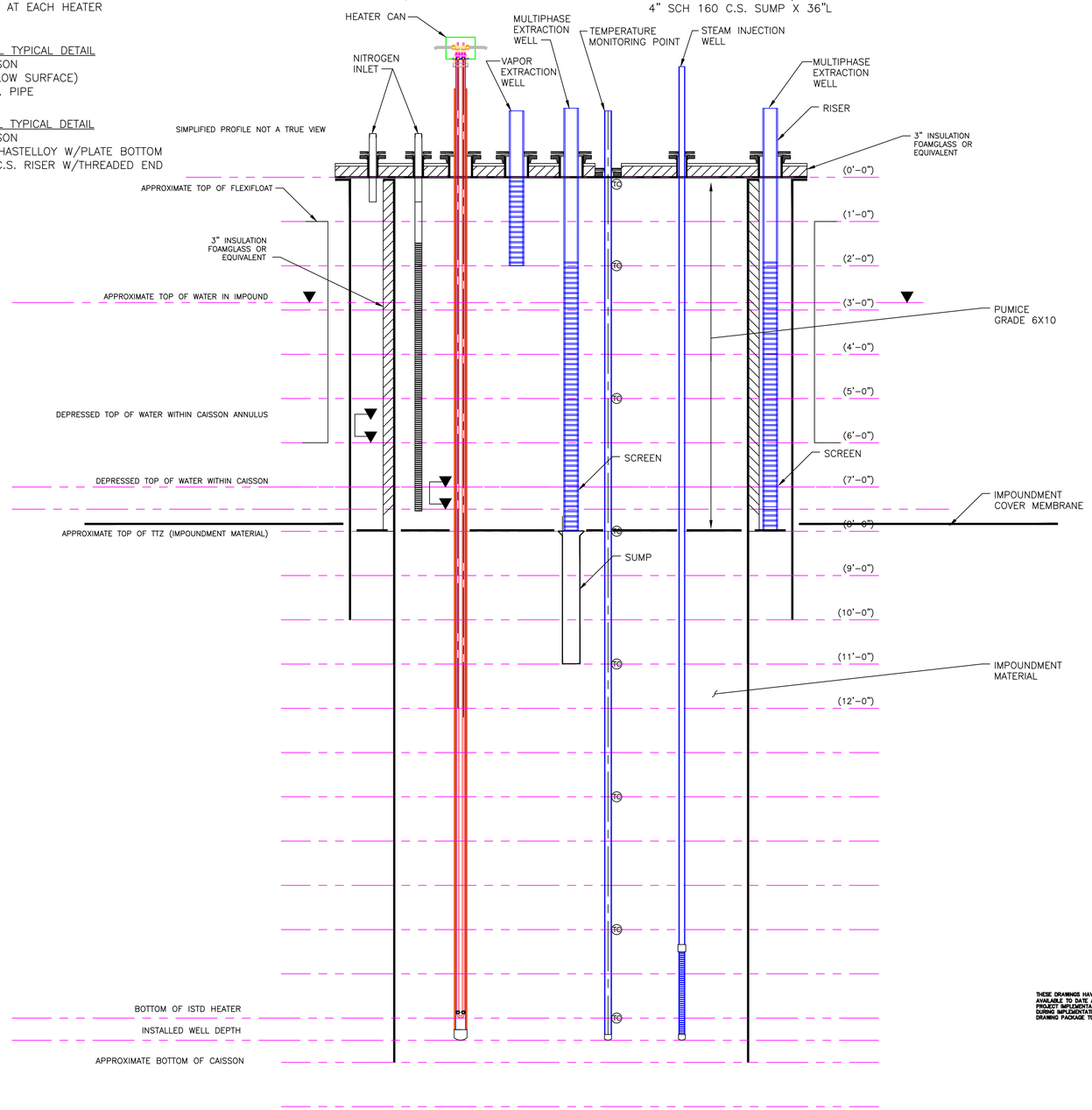

NOT FOR CONSTRUCTION
DESIGN SUBMITTAL 10/11/13

LEGEND

TC THERMOCOUPLE

NOTES:
1. CAISSON VIEW IS SIMPLIFIED, SEE CH2MHILL DWG. S-3001 AND SUPPORTING SHEETS FOR DETAIL.
2. PUMICE TO BE PLACED FROM CAISSON COVER TO TOP OF IMPOUNDMENT MATERIAL.
3. ACTUAL CAISSON LENGTH TO BE DETERMINED BASED ON RESULTS OF CLAY LAYER INVESTIGATION PERFORMED BY CH2MHILL PRIOR TO CONSTRUCTION.

WELL INSTALLATION

INSTALLED
THRU CAISSON COVER CLEARANCE HOLE
TO INSTALLED DEPTH
NOTE: DEPTHS ARE ASSUMED UNTIL A PREDETERMINED
DEPTH TO CLAY IS ESTABLISHED
AND AN ACCEPTED DEPTH ENTRY INTO THE CLAY IS AGREED UPON.

© COPYRIGHT 2013. TERRATHERM, INC. ALL RIGHTS RESERVED.

THESE DRAWINGS HAVE BEEN PREPARED BASED ON PROJECT INFORMATION AVAILABLE TO DATE AND ARE SUITABLE FOR TERRATHERM'S USE DURING PROJECT IMPLEMENTATION. CHANGES TO THE DESIGN MADE BY TERRATHERM DURING IMPLEMENTATION WILL BE UPDATED AS PART OF THE AS-BUILT DRAWING PACKAGE TO BE SUBMITTED AFTER PROJECT COMPLETION.

STATE OF NEW YORK · DAVID MACOLE · 080095 · LICENSED PROFESSIONAL ENGINEER
10-24-13

REVISIONS

REV	DATE	BY	CHK	ENG	DESCRIPTION	APPROVED
E	10/11/13	TM	DB	DR	UPDATED DESIGN SUBMITTAL	
D	06/17/13	DC	DB	DR	DRAFT DESIGN SUBMITTAL	
C	06/05/13	DC	DB	DR	UPDATED	

TERRATHERM

IMPOUNDMENT 1 AND 2 PILOT
DEMONSTRATION STUDY – BRIDGEWATER, NJ
CAISSON LAYOUT PROFILE

SIZE	FILE NO.	DWG NO.	REV
D	C102	C102	E

SCALE: NTS | DNS | SHEET 2 OF 2

THIS DRAWING AND THE INFORMATION IT CONTAINS ARE THE PROPERTY OF TERRATHERM, INC. AND MAY NOT BE USED IN PART OR IN WHOLE EXCEPT BY WRITTEN PERMISSION OF TERRATHERM, INC.

NO. T3

ELECTRICAL ONELINE LEGEND (SMART SYMBOL)

TERRATHERM FREQUENTLY USED TERMS AND SYMBOLS

A	– AMPERE
AMP	– AMPERE
ATS	– AUTOMATIC TRANSFER SWITCH
C.S.	– CARBON STEEL
DP	– DISTRIBUTION PANEL
FLA	– FULL LOAD AMPS. MOTOR FLA ARE SPECIFIED PER NEC 430.250
GFCI	– GROUND FAULT CIRCUIT INTERRUPTER
KVA	– KILOVOLT–AMPERE
KW	– KILOWATTS
KWHR	– KILOWATT–HOUR
LC	– LOAD CENTER
LCP	– LOCAL CONTROL PANEL
MSWB	– MAIN SWITCHBOARD
OWS	– OIL WATER SEPARATOR
SCR	– SILICON CONTROLLED RECTIFIER
T(XXX)	– TERRATHERM EQUIPMENT IDENTIFICATION NUMBER
V	– VOLTS
VFD	– VARIABLE FREQUENCY DRIVE
XX/XXX	– PLACE HOLDER – INFORMATION TO BE ADDED FOR SPECIFIC PROJECT

- WIRE TERMINATION / CONNECTION POINT
- ELECTRICAL CONDUCTOR / WIRE
- SEMI–CONDUCTOR FUSE
- HEATER ELEMENT AS REPRESENTED IN ONELINE. LETTER IN HEXAGON DENOTES HEATER TYPE.
- HEAT TRACE FOR PIPING
- VFD — XX HP — VARIABLE FREQUENCY DRIVE(VFD) WITH DISCONNECT SWITCH AT PANEL. VFD RATING AS NOTED
- XX — FLA XXX — MOTOR. HORSEPOWER AS INDICATED IN CIRCLE. FULL LOAD AMPS (FLA) AS NOTED PER APPLICABLE NEC TABLE.
- XX KW — STANDBY GENERATOR. KW RATING AS NOTED.
- XXX : XXX V — VOLTAGE TRANSFORMER, TYPICALLY USED FOR METERING. VOLTAGE RATIO AS NOTED.
- XXX : 5 A — CURRENT TRANSFORMER, TYPICALLY USED FOR METERING. CURRENT TRANSFORMER RATIO AND POLARITY AS NOTED.
- M — ENERGY METER (KWHR) MODEL AS NOTED
- KVA, PRI_VOLT:480/277V, %z — POWER TRANSFORMER WITH PRIMARY VOLTS, SECONDARY VOLTS, KVA RATINGS, AND % IMPEDANCE AS NOTED
- EQUIPMENT SKID BOUNDARY
- ATS–1, XXX A, N, E, L — AUTOMATIC TRANSFER SWITCH. SWITCH AMP RATING AS NOTED
- RATED HP @460V, FLA X – X, XX AMPS MAX — UL COMBINATION STARTER TYPE E, SELF–PROTECTED OR TYPE F. FULL LOAD AMP RATING ADJUSTABLE IN SPECIFIED RANGE.

ELECTRICAL ONELINE LEGEND (SMART SYMBOL – INTEGRATED EQUIPMENT)

- CB #, AMP, 3 POLES — LOW VOLTAGE AIR CIRCUIT BREAKER WITH RATING AND NUMBER OF POLES AS NOTED. NON–ADJUSTABLE TYPE.
- CB #, XX AT, XX AF, 3 POLES — LOW VOLTAGE AIR CIRCUIT BREAKER WITH RATING AND NUMBER OF POLES AS NOTED. TRIP RATING ADJUSTABLE TYPE.
- CB #, XX AT, XX AF, 3 POLES, LSIG — LOW VOLTAGE AIR CIRCUIT BREAKER WITH RATING AND NUMBER OF POLES AS NOTED. TRIP RATING ADJUSTABLE TYPE. PROTECTION TO BE SPECIFIED AS REQUIRED.
- CB #, XX AT, XX AF, 3 POLES, LSIG — LOW VOLTAGE AIR CIRCUIT BREAKER WITH RATING AND NUMBER OF POLES AS NOTED. TRIP RATING ADJUSTABLE TYPE. PROTECTION TO BE SPECIFIED AS REQUIRED. DRAWOUT TYPE.
- CB #, XX AT, XX AF, 3 POLES, LSIG — MEDIUM VOLTAGE VACUUM CIRCUIT BREAKER WITH RATING AND NUMBER OF POLES AS NOTED. TRIP RATING ADJUSTABLE. PROTECTION TO BE SPECIFIED AS REQUIRED. DRAWOUT TYPE.
- XXX AMP FUSE TYPE — FUSE RATING AND TYPE AS NOTED.
- XXX A – SWITCH, XXX AMP FUSE FUSE_TYPE — FUSED DISCONNECT SWITCH WITH SWITCH RATING, FUSE RATING AND TYPE AS NOTED.

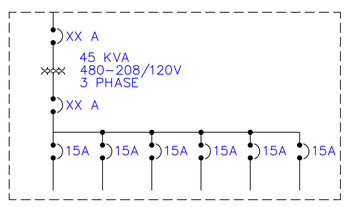

INTEGRATED PANEL WITH TRANSFORMER ASSEMBLY. PRIMARY AND SECONDARY BREAKERS AS NOTED. DISTRIBUTION PANEL CONTAINS BREAKERS AS NOTED.

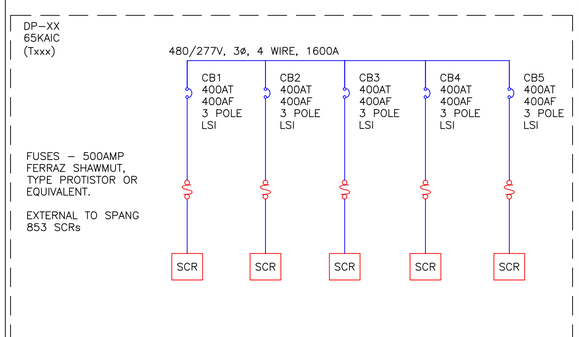

INTEGRATED DISTRIBUTION PANEL WITH BUILT–IN SCR CABINETS / ZONES. EACH ZONE HAS CUSTOMIZABLE PROTECTION FOR THE HEATER CIRCUIT AND THE SCR.

- GFCI WP — GROUND FAULT CIRCUIT INTERRUPTER DUPLEX OUTLET WITH WEATHERPROOF COVER.
- EMERGENCY STOP – PUSHBUTTON STATION
- LIGHT POLE WITH GFCI DUPLEX RECEPTACLE

SCR POWER WIRING SCHEMATICS

HEATER CIRCUIT – WYE CONFIGURED, 277V

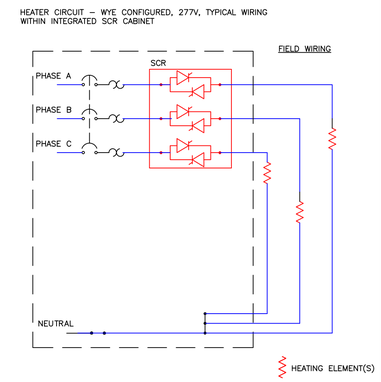

HEATER CIRCUIT – INSIDE DELTA CONFIGURED, 480V

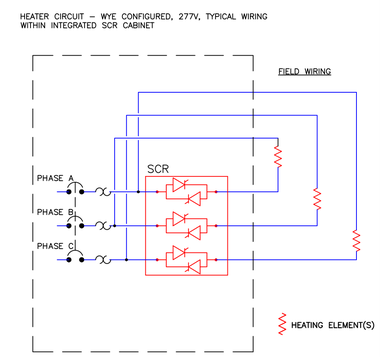

GENERAL NOTES

THE FOLLOWING NOTES ARE APPLICABLE TO ALL ELECTRICAL DRAWINGS, OR E–SERIES, UNLESS SPECIFICALLY STATED OTHERWISE ON THE SPECIFIC DRAWING. THE FOLLOWING IS NOT AN ALL–INCLUSIVE LIST OF RELEVANT CODE APPLICABLE TO THIS PROJECT BUT IS INTENDED TO HIGHLIGHT THE MAJOR SECTIONS ONLY.

GENERAL NOTES:

1. TERRATHERM WILL PROVIDE ALL FLEXIBLE CORDS AND CONNECTORS FOR EQUIPMENT SHOWN ON DRAWING. CONTRACTOR MAY BE REQUESTED TO PROVIDE ADDITIONAL MATERIAL ON A T&M BASIS AS SITE CONDITION CHANGES.
2. TERRATHERM'S ELECTRICAL DESIGNS ARE BASED ON ARTICLE 590, TEMPORARY INSTALLATION, OF THE NATIONAL ELECTRIC CODE, 2011. ALL TEMPORARY WIRING AND EQUIPMENT WILL BE REMOVED AT THE CONCLUSION OF THE PROJECT. ALL CABLE SHALL BE LISTED FOR HARD OR EXTRA–HARD USAGE PER ARTICLE REQUIREMENT.
3. TYPE "W" AND TYPE "G–GC" ARE CLASSIFIED FOR EXTRA HARD USAGE PER NEC TABLE 400–4. TYPE "W" AND TYPE "G–GC" CABLE AMPACITY ARE SPECIFIED PER NEC ARTICLE 400–5(A)(2) USING 75 DEGREE C COLUMN F3 FOR THREE–CONDUCTOR (3/C) CABLES. COLUMN D1 IS USED FOR SINGLE–CONDUCTOR (1/C) WHERE THE CONDUCTOR IS NOT IN PHYSICAL CONTACT WITH EACH OTHER.
4. ALL CABLE SHALL BE BOTTOM ENTRY WHEREVER PRACTICAL. PER NEC 110.14, ALL TERMINALS OF EQUIPMENT >100A ARE ASSUMED TO BE 75C RATED UNLESS OTHERWISE NOTED.
5. GROUNDING SHALL BE INSTALLED PER NEC ARTICLE 250 – "GROUNDING AND BONDING FOR ALL EQUIPMENT". ROUTE ALL HEATER CIRCUIT EQUIPMENT GROUNDS WITH THE HEATER CIRCUIT CONDUCTORS TO EACH WELLHEAD. REFERENCE TYPICAL GROUNDING DETAILS FOR ADDITIONAL INFORMATION.
6. THE GROUNDING ELECTRODE CONDUCTOR FOR A SEPARATELY DERIVED SYSTEM (TRANSFORMER) SHALL BE INSTALLED AT THE FIRST DISCONNECTING MEAN PER NEC ARTICLE 250.30.
7. GENERATOR SHALL BE WIRED PER NEC ARTICLE 702, OPTIONAL STANDBY SYSTEMS. THE GENERATOR WILL BE WIRED TO A THREE (3) POLE TYPE AUTOMATIC TRANSFER SWITCH (ATS) AND SHOULD BE WIRED AS A NON–SEPARATELY DERIVED SYSTEM, I.E. DO NOT BOND NEUTRAL AT GENERATOR. WIRE EMERGENCY STOP SIGNAL TO PREVENT GENERATOR START DURING AN EMERGENCY. EMERGENCY STOP SIGNAL SHALL ALSO BE WIRED TO SHUNT TRIP THE MAIN BREAKER(S).
8. MAINTAIN WORKING CLEARANCE PER NEC ARTICLE 110.26 – "SPACES ABOUT ELECTRICAL EQUIPMENT".
9. ALL POWER DISTRIBUTION EQUIPMENT SHALL BE UL LISTED OR CERTIFIED BY A 3RD PARTY NRTL.
10. ALL PROCESS EQUIPMENT CONTROL PANELS SHALL BE BUILT TO APPLICABLE UL STANDARDS SUCH AS UL 508, UL 698. EQUIPMENT MAY BE FIELD EVALUATED BY A NRTL IF THE ABOVE STANDARD IS NOT AVAILABLE.
11. EQUIPMENT WITH "A" AND "B" TAG SUCH AS P–101A AND P–101B ARE NON–COINCIDENTAL LOADS.
12. USE THE FOLLOWING COLOR CODES FOR CONDUCTOR IDENTIFICATION:

	208Y / 120 VOLT	480 / 277 VOLT
PHASE A	BLACK	BROWN
PHASE B	RED	ORANGE
PHASE C	BLUE	YELLOW
NEUTRAL	WHITE	GRAY

13. ALL WORK SHALL CONFORM TO THE LATEST LOCAL, STATE AND FEDERAL REQUIREMENTS AS INTERPRETED BY THE AUTHORITY HAVING JURISDICTION

SITE SPECIFIC NOTES:

1. AMPACITIES OF CABLE ARE CORRECTED FOR AN MAX AMBIENT TEMPERATURE OF 91 DEGREE F
2. THE AVAILABLE FAULT CURRENT IS ASSUMED TO BE < 65KA.

© COPYRIGHT 2013. TERRATHERM, INC. ALL RIGHTS RESERVED.

THESE DRAWINGS HAVE BEEN PREPARED BASED ON PROJECT INFORMATION AVAILABLE TO DATE AND ARE SUITABLE FOR TERRATHERM'S USE DURING PROJECT IMPLEMENTATION. CHANGES TO THE DESIGN MADE BY TERRATHERM DURING IMPLEMENTATION WILL BE UPDATED AS PART OF THE AS–BUILT DRAWING PACKAGE TO BE SUBMITTED AFTER PROJECT COMPLETION.

COMMONWEALTH OF MASSACHUSETTS — WILLEY W. LEUNG — ELECTRICAL — No. 50619 — REGISTERED PROFESSIONAL ENGINEER — 10/24/13

CONFIDENTIAL

REVISIONS

REV	DATE	BY	CHK	ENG	DESCRIPTION	APPROVED
D	06/18/13	WL		WL	DRAFT DESIGN SUBMITTAL	
C	05/03/13	WL	DB	WL	REVISED PER CUSTOMER COMMENT / NEW VENDOR INFO	
B	04/29/13	WL			PROGRESS DRAFT 4–30–13	

TERRATHERM

THERMAL TREATMENT PILOT TEST
IMPOUNDMENT NO. 2 – BRIDGEWATER, NJ
ELECTRICAL LEGEND

SIZE	FILE NO.	DWG NO.	REV
D	E100	E100	D

SCALE: NTS | DNS | SHEET 1 OF 1

THIS DRAWING AND THE INFORMATION IT CONTAINS ARE THE PROPERTY OF TERRATHERM, INC. AND MAY NOT BE USED IN PART OR IN WHOLE EXCEPT BY WRITTEN PERMISSION OF TERRATHERM, INC.

NO. T4

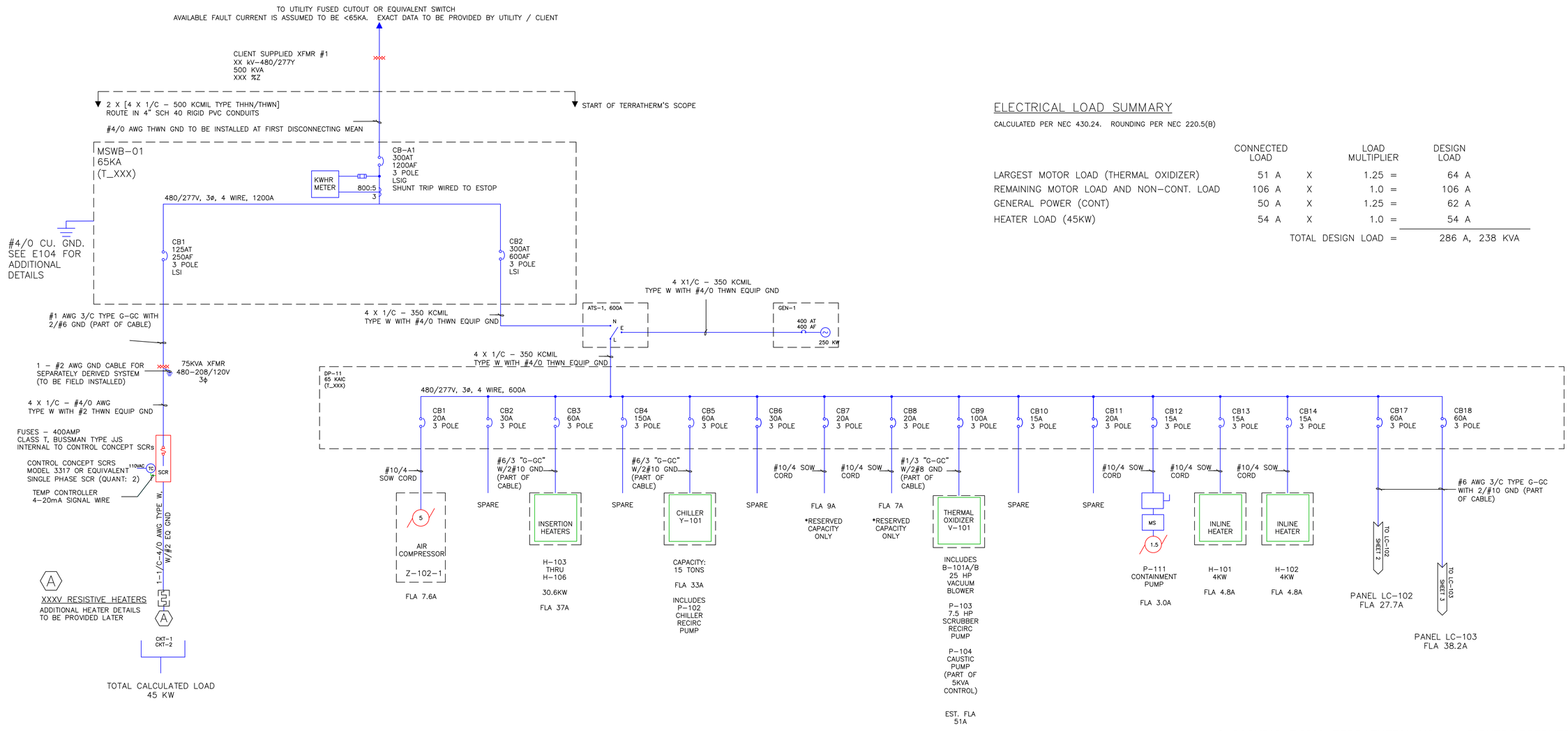

ELECTRICAL LOAD SUMMARY

CALCULATED PER NEC 430.24. ROUNDING PER NEC 220.5(B)

	CONNECTED LOAD		LOAD MULTIPLIER		DESIGN LOAD
LARGEST MOTOR LOAD (THERMAL OXIDIZER)	51 A	X	1.25	=	64 A
REMAINING MOTOR LOAD AND NON–CONT. LOAD	106 A	X	1.0	=	106 A
GENERAL POWER (CONT)	50 A	X	1.25	=	62 A
HEATER LOAD (45KW)	54 A	X	1.0	=	54 A
			TOTAL DESIGN LOAD	=	286 A, 238 KVA

© COPYRIGHT 2013. TERRATHERM, INC. ALL RIGHTS RESERVED.

REVISIONS

REV	DATE	BY	CHK	ENG	DESCRIPTION	APPROVED
F	10/04/13	DC	DB	WL	UPDATED DESIGN SUBMITTAL	
E	06/18/13	WL	DB	WL	DRAFT DESIGN SUBMITTAL	
D	06/05/13	WL	DB	WL	REDUCED CHILLER FROM 60 TON TO 15 TON, GENERAL REVISION	

THESE DRAWINGS HAVE BEEN PREPARED BASED ON PROJECT INFORMATION AVAILABLE TO DATE AND ARE SUITABLE FOR TERRATHERM'S USE DURING PROJECT IMPLEMENTATION. CHANGES TO THE DESIGN MADE BY TERRATHERM DURING IMPLEMENTATION WILL BE UPDATED AS PART OF THE AS–BUILT DRAWING PACKAGE TO BE SUBMITTED AFTER PROJECT COMPLETION.

COMMONWEALTH OF MASSACHUSETTS
WILLEY W. LEUNG
ELECTRICAL
No. 50619
REGISTERED PROFESSIONAL ENGINEER
10/24/13

NOT FOR CONSTRUCTION
DESIGN SUBMITTAL 10/11/13

TERRATHERM

IMPOUNDMENT 1 AND 2 PILOT
DEMONSTRATION STUDY – BRIDGEWATER, NJ
ONE LINE ELECTRICAL

SIZE	FILE NO.	DWG NO.	REV
D	E101	E101	F

SCALE: NTS | DNS | DSN | SHEET 1 OF 3

THIS DRAWING AND THE INFORMATION IT CONTAINS ARE THE PROPERTY OF TERRATHERM, INC. AND MAY NOT BE USED IN PART OR IN WHOLE EXCEPT BY WRITTEN PERMISSION OF TERRATHERM, INC.

NO. T5

PANEL LC–102

TYPE: NEMA 3R
SERVICE: 208/120 V, 3 Ph, 4 W
MFR: SQUARE D, QO

MAIN CB 100 A
LOCATION: BOTTOM
BUS RATING: 100 A

PANEL LOCATION: LC–102
SOURCE: DP–11
FEEDER: CB–17

DESCRIPTION	CKT NO	TRIP		LOADS (W) A	LOADS (W) B	LOADS (W) C		TRIP	CKT NO	DESCRIPTION
PROCESS GFCI #1	1	20		180 180				20	2	PROCESS GFCI #2
PROCESS GFCI #3	3	20			180 180			20	4	PROCESS GFCI #4
PROCESS GFCI #5	5	20				180 180		20	6	MONITORING PACKAGE
SPARE	7	20						20	8	SPARE
SPARE	9	20						20	10	SPARE
TMP REPEATER BOX	11	20				240 1200		20	12	OUTDOOR LIGHTING
CONTROL ROOM	13	60		6600				20	14	SPARE
	15	60			6600			20	16	SPARE
	17	60				6600		20	18	SPARE
WELLFIELD GFCI #1	19	20		180				20	20	SPARE
WELLFIELD GFCI #2	21	20			180			20	22	SPARE
WELLFIELD GFCI #3	23	20				180		20	24	SPARE
SPARE	25	20						20	26	SPARE
SPARE	27	20						20	28	SPARE
SPARE	29	20					180	20	30	LCP–102 SKID GFCI
TOTALS				7140	7140	8760		* HANDLE LOCK–ON DEVICE		

PANEL LC–102
CALCULATED LOAD: 27.7A @480V

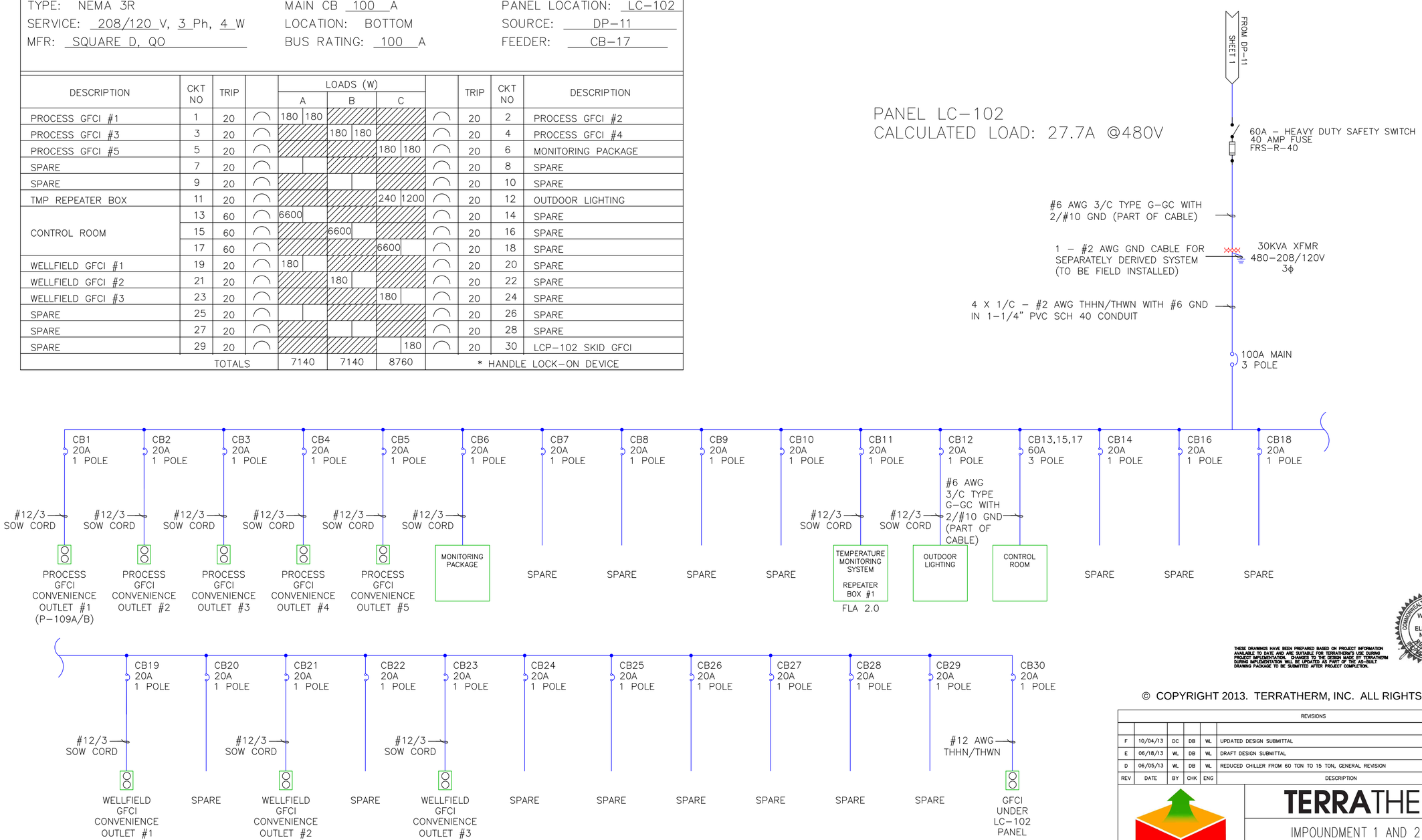

NOT FOR CONSTRUCTION
DESIGN SUBMITTAL 10/11/13

THESE DRAWINGS HAVE BEEN PREPARED BASED ON PROJECT INFORMATION AVAILABLE TO DATE AND ARE SUITABLE FOR TERRATHERM'S USE DURING PROJECT IMPLEMENTATION. CHANGES TO THE DESIGN MADE BY TERRATHERM DURING IMPLEMENTATION WILL BE UPDATED AS PART OF THE AS–BUILT DRAWING PACKAGE TO BE SUBMITTED AFTER PROJECT COMPLETION.

COMMONWEALTH OF MASSACHUSETTS
WILLEY W. LEUNG
ELECTRICAL
No. 50619
REGISTERED PROFESSIONAL ENGINEER
10/24/13

© COPYRIGHT 2013. TERRATHERM, INC. ALL RIGHTS RESERVED.

REVISIONS

REV	DATE	BY	CHK	ENG	DESCRIPTION	APPROVED
F	10/04/13	DC	DB	WL	UPDATED DESIGN SUBMITTAL	
E	06/18/13	WL	DB	WL	DRAFT DESIGN SUBMITTAL	
D	06/05/13	WL	DB	WL	REDUCED CHILLER FROM 60 TON TO 15 TON, GENERAL REVISION	

TERRATHERM

IMPOUNDMENT 1 AND 2 PILOT
DEMONSTRATION STUDY – BRIDGEWATER, NJ
ONE LINE ELECTRICAL

SIZE	FILE NO.	DWG NO.	REV
D	E101	E101	F

SCALE: NTS | DNS | DSN | SHEET 2 OF 3

THIS DRAWING AND THE INFORMATION IT CONTAINS ARE THE PROPERTY OF TERRATHERM, INC. AND MAY NOT BE USED IN PART OR IN WHOLE EXCEPT BY WRITTEN PERMISSION OF TERRATHERM, INC.

NO. T6

PANEL LC–103

TYPE: NEMA 3R
SERVICE: 240/120 V, 1 Ph, 3 W
MFR: SQUARE D, QO–EPD BREAKERS
(EQUIPMENT GROUND FAULT PROTECTION AT 30 MILLIAMP)

MAIN CB 100 A
LOCATION: BOTTOM
BUS RATING: 100 A

PANEL LOCATION: LC–103
SOURCE: DP–11
FEEDER: CB–18

DESCRIPTION	CKT NO	TRIP		LOADS (W) A	LOADS (W) B	LOADS (W) C		TRIP	CKT NO	DESCRIPTION
HEAT TRACE #1	1	20						20	2	HEAT TRACE #2
HEAT TRACE #3	3	20						20	4	HEAT TRACE #4
HEAT TRACE #5	5	20						20	6	HEAT TRACE #6
HEAT TRACE #7	7	20						15	8	P–108 BOOSTER PUMP
AIR COMPRESSOR Z–102–2	9	30						15	10	
	11	30						20	12	HEAT TRACE #8
	13	20						20	14	
	15	70						20	16	
	17	70						20	18	
	19	20						20	20	
	21	20						20	22	
	23	20						30	24	
	25	15						30	26	
	27	15						30	28	
	29	20						30	30	
TOTALS				13832	14732			* HANDLE LOCK–ON DEVICE		

PANEL LC–103
CALCULATED LOAD: 38.2A @480V

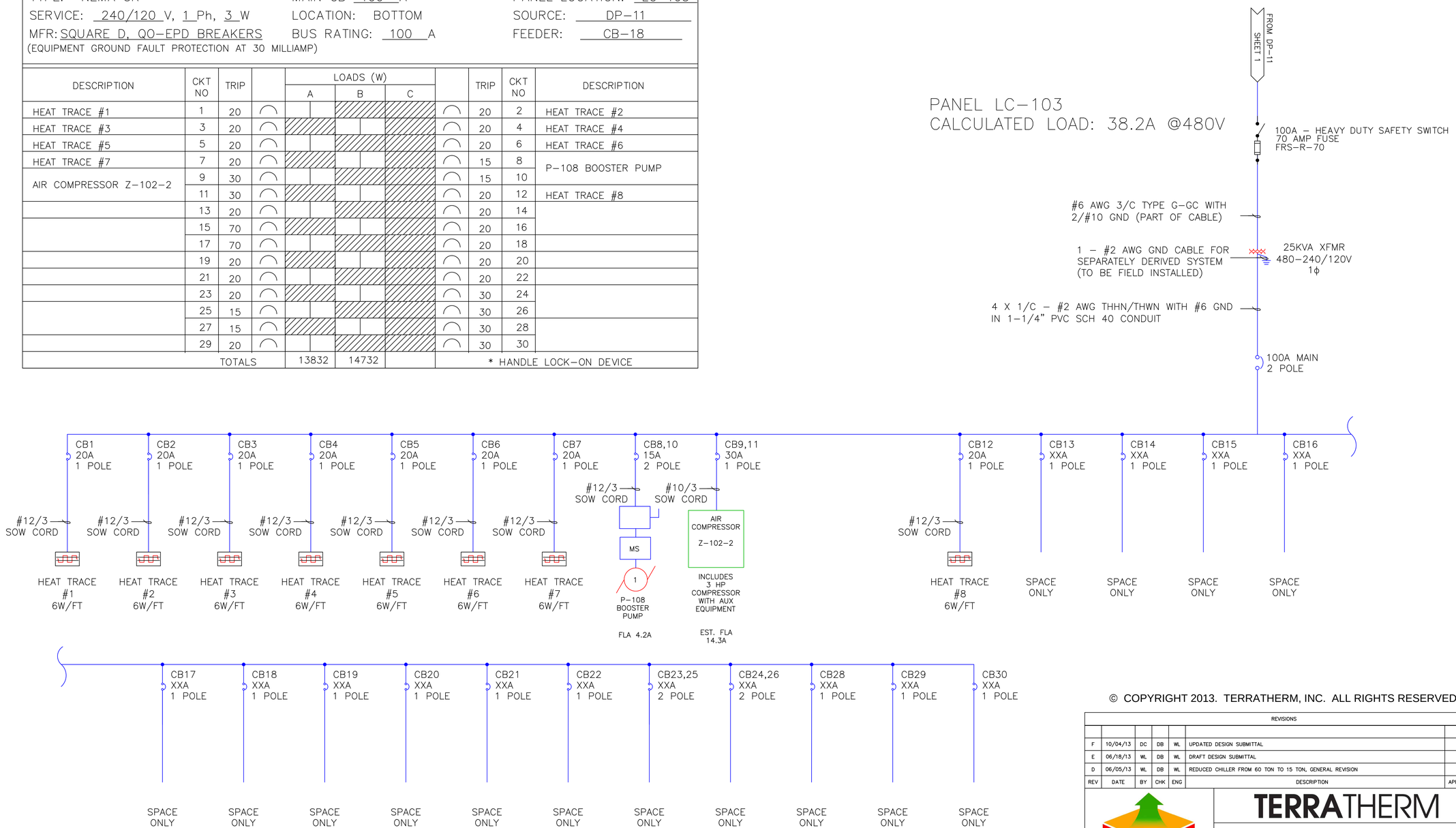

© COPYRIGHT 2013. TERRATHERM, INC. ALL RIGHTS RESERVED.

REVISIONS

REV	DATE	BY	CHK	ENG	DESCRIPTION	APPROVED
F	10/04/13	DC	DB	WL	UPDATED DESIGN SUBMITTAL	
E	06/18/13	WL	DB	WL	DRAFT DESIGN SUBMITTAL	
D	06/05/13	WL	DB	WL	REDUCED CHILLER FROM 60 TON TO 15 TON, GENERAL REVISION	

TERRATHERM

IMPOUNDMENT 1 AND 2 PILOT DEMONSTRATION STUDY – BRIDGEWATER, NJ
ONE LINE ELECTRICAL

SIZE D | FILE NO. E101 | DWG NO. E101 | REV F
SCALE: NTS | DNS | DSN | SHEET 3 OF 3

THIS DRAWING AND THE INFORMATION IT CONTAINS ARE THE PROPERTY OF TERRATHERM, INC. AND MAY NOT BE USED IN PART OR IN WHOLE EXCEPT BY WRITTEN PERMISSION OF TERRATHERM, INC.

NO. T7

THESE DRAWINGS HAVE BEEN PREPARED BASED ON PROJECT INFORMATION AVAILABLE TO DATE AND ARE SUITABLE FOR TERRATHERM'S USE DURING PROJECT IMPLEMENTATION. CHANGES TO THE DRAWINGS MADE BY TERRATHERM DURING IMPLEMENTATION WILL BE UPDATED AS PART OF THE AS-BUILT DRAWING PACKAGE TO BE SUBMITTED AFTER PROJECT COMPLETION.

COMMONWEALTH OF MASSACHUSETTS
WILLEY W. LEUNG
ELECTRICAL
No. 50619
REGISTERED PROFESSIONAL ENGINEER
10/24/13

NOT FOR CONSTRUCTION
DESIGN SUBMITTAL 10/11/13

TYPICAL GROUNDING DETAILS (1)

NOT TO SCALE

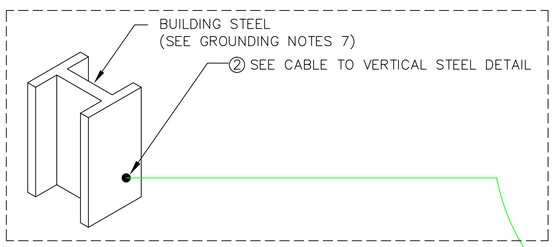

CHOOSE ONE ONLY!

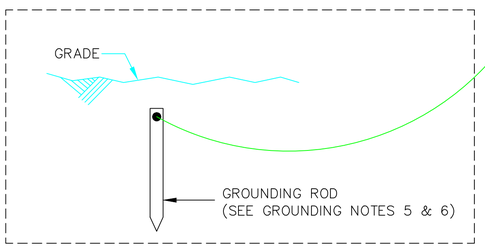

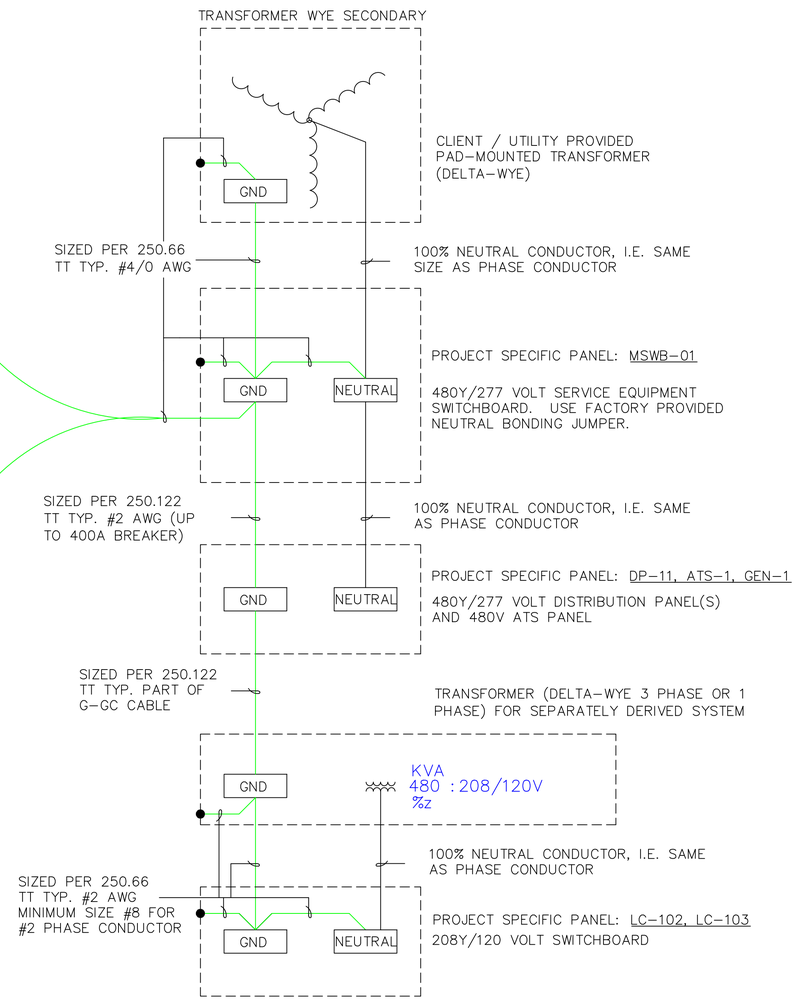

GROUNDING NOTES

1. ALL NON-CURRENT METALLIC PARTS OF EQUIPMENT SHALL BE BONDED TOGETHER AND MADE ELECTRICALLY CONTINUOUS.
2. ALL GROUNDING SHALL BE SIZED IN ACCORDANCE WITH NFPA 70 (NEC).
3. ALL GROUND SPLICE CONNECTIONS SHALL BE THERMOWELD UNLESS INDICATED IN DRAWING.
4. GROUND CONNECTIONS TO ELECTRICAL EQUIPMENT ENCLOSURES, TRANSFORMERS AND SWITCHES SHALL BE MADE WITH DESIGNATED APPROVED GROUNDING CONNECTIONS IN TWO PLACES MINIMUM.
5. GROUNDING ELECTRODES SHALL BE INSTALLED SUCH THAT AT LEAST 8 FEET OF LENGTH IS IN CONTACT WITH THE SOIL AND INSTALLED IN ACCORDANCE WITH NFPA 70. (NEC).
6. GROUND ROD SHALL BE COPPER-CLAD STEEL RODS NOT LESS THAN3/4" IN DIAMETER AND 10 FEET IN LENGTH. SUPPLEMENTAL GROUND ROD MAY BE REQUIRED ACCORDING TO SITE CONDITION. REFERENCE NEC ARTICLE 250.53.
7. IF BUILDING STEEL IS TO BE USED AS THE MAIN GROUNDING ELECTRODE, THE CONDITION OF THE GROUND GRID SHALL BE VERIFIED AND CONFIRMED TO BE SUITABLE FOR THE DESIGNED LOAD

CABLE TO VERTICAL STEEL DETAIL (2)

NOT TO SCALE

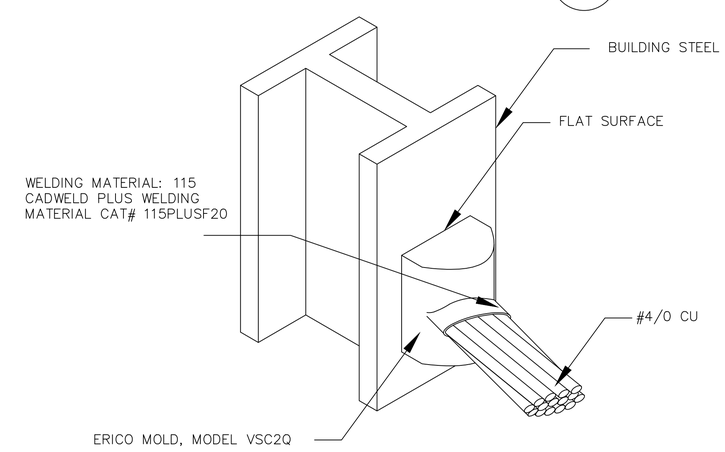

SITE SPECIFIC NOTES

1. ALL EQUIPMENT (METAL CASING) LOCATED ON THE FLEXI-FLOAT SHALL BE GROUNDED IN ACCORDANCE WITH NEC 555.15. ALL GROUNDING CABLE SHALL HAVE A MINIMUM INSULATION OF 600V AND SHOULD HAVE A CONTINUOUS OUTER FINISH THAT IS GREEN OR GREEN WITH ONE OR MORE YELLOW STRIPE.

© COPYRIGHT 2013. TERRATHERM, INC. ALL RIGHTS RESERVED.

THESE DRAWINGS HAVE BEEN PREPARED BASED ON PROJECT INFORMATION AVAILABLE TO DATE AND ARE SUITABLE FOR TERRATHERM'S USE DURING PROJECT IMPLEMENTATION. CHANGES TO THE DESIGN MADE BY TERRATHERM DURING IMPLEMENTATION WILL BE UPDATED AS PART OF THE AS-BUILT DRAWING PACKAGE TO BE SUBMITTED AFTER PROJECT COMPLETION.

COMMONWEALTH OF MASSACHUSETTS
WILLEY W. LEUNG
ELECTRICAL
No. 50619
REGISTERED PROFESSIONAL ENGINEER
10/24/13

FOR REFERENCE ONLY

REVISIONS

REV	DATE	BY	CHK	ENG	DESCRIPTION	APPROVED
B	06/05/13	WL	DB	WL	UPDATED PER COMMENTS	

TERRATHERM

IMPOUNDMENT 1 AND 2 PILOT
DEMONSTRATION STUDY – BRIDGEWATER, NJ
SWBD GROUNDING / NEUTRAL DETAIL

SIZE	FILE NO.	DWG NO.	REV
D	E104	E104	B

SCALE: AS SHOWN | DNS | SHEET 1 OF 2

THIS DRAWING AND THE INFORMATION IT CONTAINS ARE THE PROPERTY OF TERRATHERM, INC. AND MAY NOT BE USED IN PART OR IN WHOLE EXCEPT BY WRITTEN PERMISSION OF TERRATHERM, INC.

NO. T8

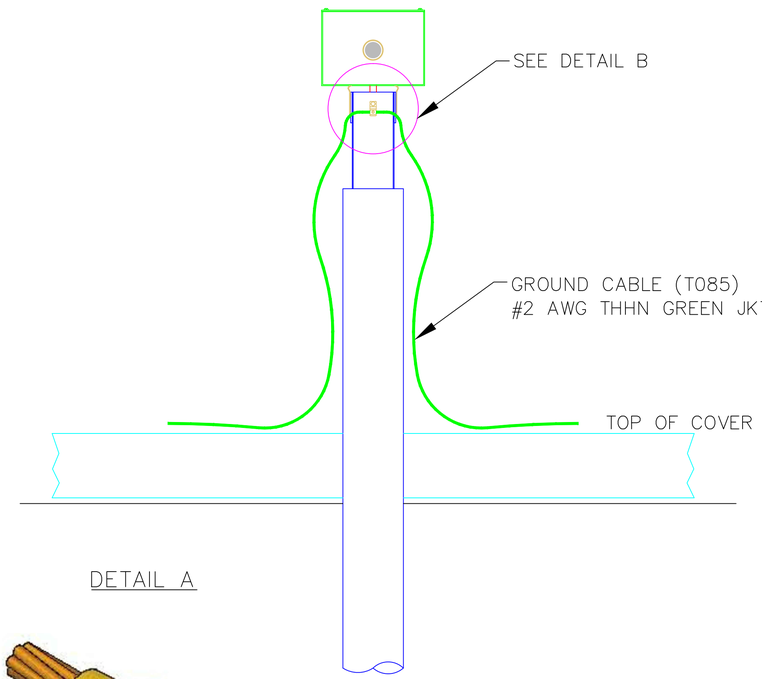

DETAIL A

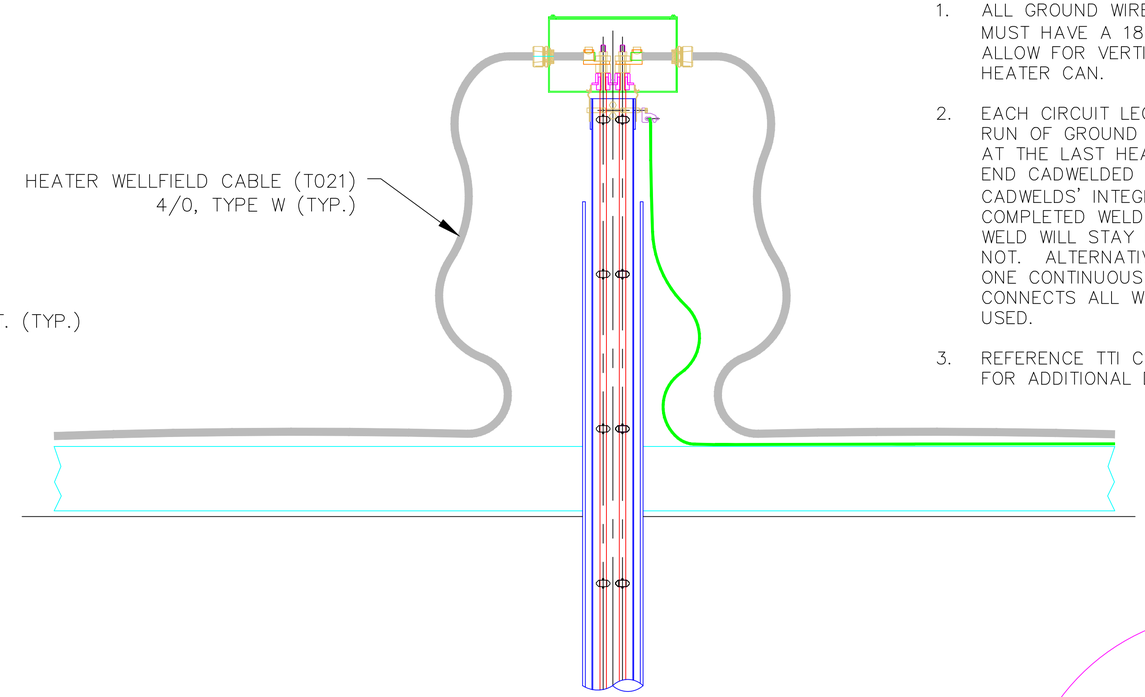

HEATER GROUNDING NOTES:

1. ALL GROUND WIRE AND HEATER WELLFIELD CABLE MUST HAVE A 18" MINIMUM AMOUNT OF SLACK TO ALLOW FOR VERTICAL THERMAL EXPANSION OF THE HEATER CAN.
2. EACH CIRCUIT LEG SHALL UTILIZE A CONTINUOUS RUN OF GROUND CABLE WITH ONE END TERMINATED AT THE LAST HEATER GROUND LUG AND THE OTHER END CADWELDED TO THE HOMERUN. VERIFY ALL CADWELDS' INTEGRITY BY TAPPING ON THE COMPLETED WELD WITH A HAMMER. A SUCCESSFUL WELD WILL STAY INTACT WHILE A FAILED WELD WILL NOT. ALTERNATIVELY, IF SITE CONDITION PERMITS, ONE CONTINUOUS GROUNDING CABLE THAT CONNECTS ALL WELLS OF ONE CIRCUIT MAY BE USED.
3. REFERENCE TTI CADWELD OPERATING INSTRUCTION FOR ADDITIONAL DETAIL.

DETAIL B

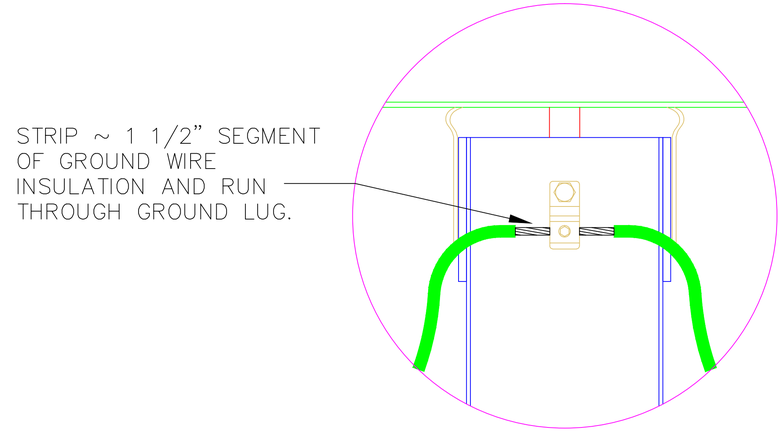

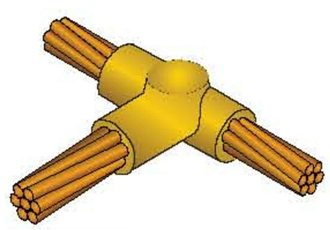

A

B

C

D

E

TYPICAL HEATER GROUND CABLE SCHEMATIC

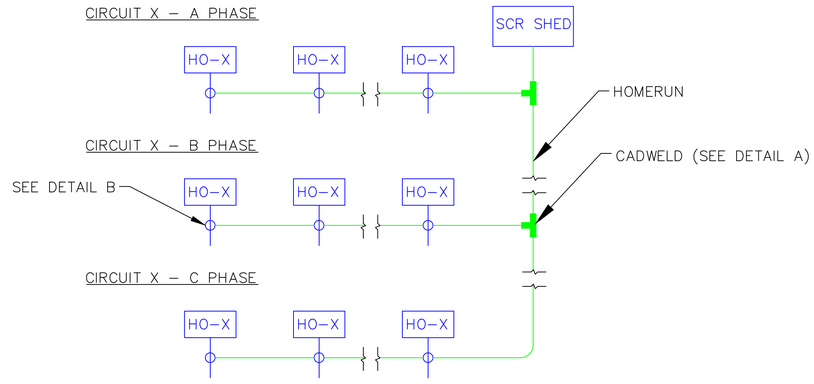

ID	DESCRIPTION	ITEM #
A	CADWELD - CABLE TO CABLE - TYPE TA2 - ERICO PROD	TAC1V1V
B	CADWELD PLUS CONTROL UNIT (Ignitor)WITH 15FT LEAD	PLUSCU15L
C	CADWELD - E-Z HANDLE CLAMP	L160
D	CADWELD - PLUS WELD METAL	45PLUSF20
E	MOLD CLEANING BRUSH	T394

THESE DRAWINGS HAVE BEEN PREPARED BASED ON PROJECT INFORMATION AVAILABLE TO DATE AND ARE SUITABLE FOR TERRATHERM'S USE DURING PROJECT IMPLEMENTATION. CHANGES TO THE DESIGN MADE BY TERRATHERM DURING IMPLEMENTATION WILL BE UPDATED AS PART OF THE AS-BUILT DRAWING PACKAGE TO BE SUBMITTED AFTER PROJECT COMPLETION.

COMMONWEALTH OF MASSACHUSETTS
WILLEY W. LEUNG
ELECTRICAL
No. 50619
REGISTERED PROFESSIONAL ENGINEER
10/24/13

FOR REFERENCE ONLY

© COPYRIGHT 2013. TERRATHERM, INC. ALL RIGHTS RESERVED.

REVISIONS

REV	DATE	BY	CHK	ENG	DESCRIPTION	APPROVED
B	06/05/13	WL	DB	WL	UPDATED PER COMMENTS	

TERRATHERM

IMPOUNDMENT 1 AND 2 PILOT DEMONSTRATION STUDY – BRIDGEWATER, NJ
GROUNDING DETAIL

SIZE	FILE NO.	DWG NO.	REV
D	E104	E104	B

SCALE: AS SHOWN | DNS | SHEET 2 OF 2

THIS DRAWING AND THE INFORMATION IT CONTAINS ARE THE PROPERTY OF TERRATHERM, INC. AND MAY NOT BE USED IN PART OR IN WHOLE EXCEPT BY WRITTEN PERMISSION OF TERRATHERM, INC.

NO. T9

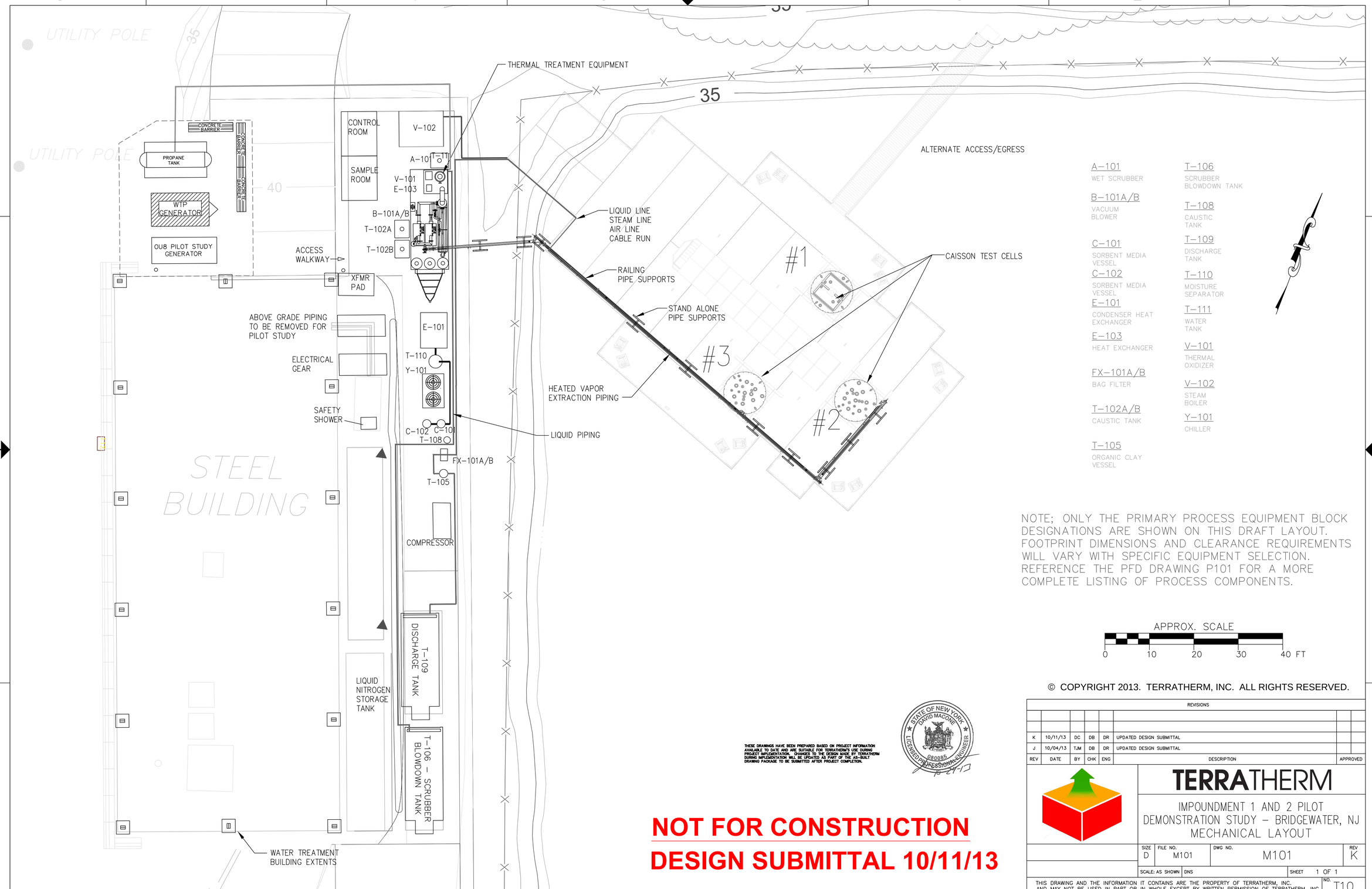

A–101
WET SCRUBBER

B–101A/B
VACUUM BLOWER

C–101
SORBENT MEDIA VESSEL

C–102
SORBENT MEDIA VESSEL

E–101
CONDENSER HEAT EXCHANGER

E–103
HEAT EXCHANGER

FX–101A/B
BAG FILTER

T–102A/B
CAUSTIC TANK

T–105
ORGANIC CLAY VESSEL

T–106
SCRUBBER BLOWDOWN TANK

T–108
CAUSTIC TANK

T–109
DISCHARGE TANK

T–110
MOISTURE SEPARATOR

T–111
WATER TANK

V–101
THERMAL OXIDIZER

V–102
STEAM BOILER

Y–101
CHILLER

NOTE; ONLY THE PRIMARY PROCESS EQUIPMENT BLOCK DESIGNATIONS ARE SHOWN ON THIS DRAFT LAYOUT. FOOTPRINT DIMENSIONS AND CLEARANCE REQUIREMENTS WILL VARY WITH SPECIFIC EQUIPMENT SELECTION. REFERENCE THE PFD DRAWING P101 FOR A MORE COMPLETE LISTING OF PROCESS COMPONENTS.

APPROX. SCALE
0 10 20 30 40 FT

© COPYRIGHT 2013. TERRATHERM, INC. ALL RIGHTS RESERVED.

THESE DRAWINGS HAVE BEEN PREPARED BASED ON PROJECT INFORMATION AVAILABLE TO DATE AND ARE SUITABLE FOR TERRATHERM'S USE DURING PROJECT IMPLEMENTATION. CHANGES TO THE DESIGN MADE BY TERRATHERM DURING IMPLEMENTATION WILL BE UPDATED AS PART OF THE AS-BUILT DRAWING PACKAGE TO BE SUBMITTED AFTER PROJECT COMPLETION.

STATE OF NEW YORK · DAVID MACOME · 080095 · LICENSED PROFESSIONAL ENGINEER · 10-27-13

NOT FOR CONSTRUCTION
DESIGN SUBMITTAL 10/11/13

REVISIONS

REV	DATE	BY	CHK	ENG	DESCRIPTION	APPROVED
K	10/11/13	DC	DB	DR	UPDATED DESIGN SUBMITTAL	
J	10/04/13	TJM	DB	DR	UPDATED DESIGN SUBMITTAL	

TERRATHERM

IMPOUNDMENT 1 AND 2 PILOT DEMONSTRATION STUDY – BRIDGEWATER, NJ
MECHANICAL LAYOUT

SIZE	FILE NO.	DWG NO.	REV
D	M101	M101	K

SCALE: AS SHOWN | DNS | SHEET 1 OF 1

THIS DRAWING AND THE INFORMATION IT CONTAINS ARE THE PROPERTY OF TERRATHERM, INC. AND MAY NOT BE USED IN PART OR IN WHOLE EXCEPT BY WRITTEN PERMISSION OF TERRATHERM, INC.

NO. T10

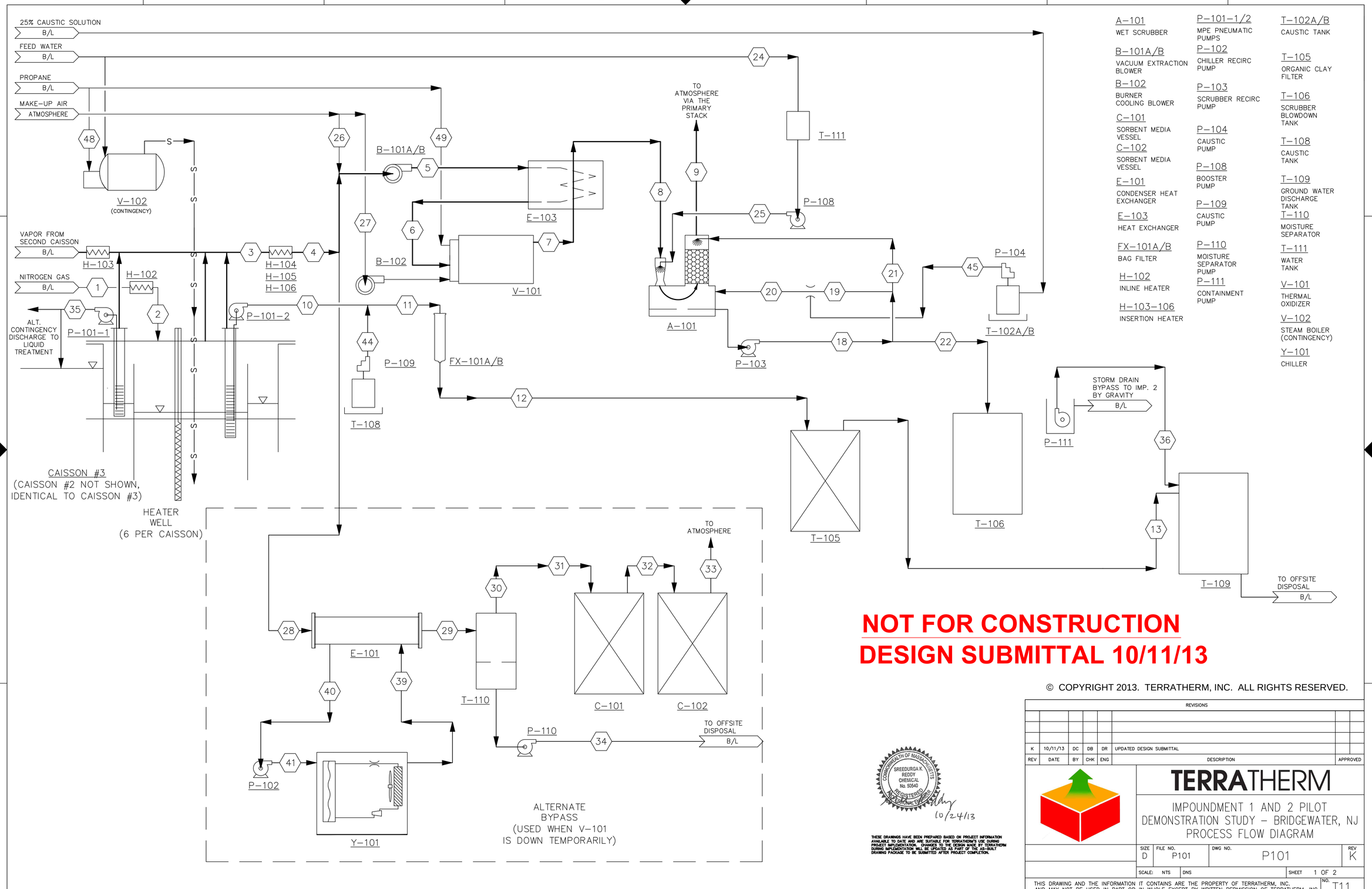

A-101
WET SCRUBBER

B-101A/B
VACUUM EXTRACTION BLOWER

B-102
BURNER COOLING BLOWER

C-101
SORBENT MEDIA VESSEL

C-102
SORBENT MEDIA VESSEL

E-101
CONDENSER HEAT EXCHANGER

E-103
HEAT EXCHANGER

FX-101A/B
BAG FILTER

H-102
INLINE HEATER

H-103-106
INSERTION HEATER

P-101-1/2
MPE PNEUMATIC PUMPS

P-102
CHILLER RECIRC PUMP

P-103
SCRUBBER RECIRC PUMP

P-104
CAUSTIC PUMP

P-108
BOOSTER PUMP

P-109
CAUSTIC PUMP

P-110
MOISTURE SEPARATOR PUMP

P-111
CONTAINMENT PUMP

T-102A/B
CAUSTIC TANK

T-105
ORGANIC CLAY FILTER

T-106
SCRUBBER BLOWDOWN TANK

T-108
CAUSTIC TANK

T-109
GROUND WATER DISCHARGE TANK

T-110
MOISTURE SEPARATOR

T-111
WATER TANK

V-101
THERMAL OXIDIZER

V-102
STEAM BOILER (CONTINGENCY)

Y-101
CHILLER

NOT FOR CONSTRUCTION
DESIGN SUBMITTAL 10/11/13

© COPYRIGHT 2013. TERRATHERM, INC. ALL RIGHTS RESERVED.

COMMONWEALTH OF MASSACHUSETTS
SREEDURGA K. REDDY
CHEMICAL
No. 50540
REGISTERED PROFESSIONAL ENGINEER
10/24/13

THESE DRAWINGS HAVE BEEN PREPARED BASED ON PROJECT INFORMATION AVAILABLE TO DATE AND ARE SUITABLE FOR TERRATHERM'S USE DURING PROJECT IMPLEMENTATION. CHANGES TO THE DESIGN MADE BY TERRATHERM DURING IMPLEMENTATION WILL BE UPDATED AS PART OF THE AS-BUILT DRAWING PACKAGE TO BE SUBMITTED AFTER PROJECT COMPLETION.

REVISIONS

REV	DATE	BY	CHK	ENG	DESCRIPTION	APPROVED
K	10/11/13	DC	DB	DR	UPDATED DESIGN SUBMITTAL	

TERRATHERM

IMPOUNDMENT 1 AND 2 PILOT DEMONSTRATION STUDY – BRIDGEWATER, NJ
PROCESS FLOW DIAGRAM

SIZE	FILE NO.	DWG NO.	REV
D	P101	P101	K

SCALE: NTS | DNS | SHEET 1 OF 2

THIS DRAWING AND THE INFORMATION IT CONTAINS ARE THE PROPERTY OF TERRATHERM, INC. AND MAY NOT BE USED IN PART OR IN WHOLE EXCEPT BY WRITTEN PERMISSION OF TERRATHERM, INC.

NO. T11

VAPOR PROCESS SIDE

Stream Number		1	2	3	4	26	5	6	49	27	7	8	9
Temperature	°F	40	200	200	300	59	93	922	77	59	1600	926	153
Relative Pressure	"wc	0	-3	-5	-10	0	62	57	0	0	35	30	0
Oxygen	scfm	0.0	0.0	10.0	10.0	185.0	195.0	195.0	0.0	12.0	171.9	171.9	171.9
Nitrogen	scfm	50.0	50.0	87.8	87.8	700.2	788.0	788.0	0.0	45.4	833.4	833.4	833.4
Carbon Dioxide	scfm	0.0	0.0	0.0	0.0	0.0	0.0	0.0	0.0	0.0	25.9	25.9	24.6
Sulfur Dioxide	scfm	0.0	0.0	0.0	0.0	0.0	0.0	0.0	0.0	0.0	2.1	2.1	0.0
Chlorine (Cl)	scfm	0.0	0.0	0.2	0.2	0.0	0.2	0.2	0.0	0.0	0.2	0.2	0.0
Water Vapor	scfm	0.2	0.2	22.9	22.9	7.5	30.4	30.4	0.0	0.5	57.3	57.3	379.5
Benzene	scfm	0.0	0.0	1.3	1.3	0.0	1.3	1.3	0.0	0.0	0.0	0.0	0.0
C-6.2 Cl-0.4 H-7.5 O-0.2	scfm	0.0	0.0	0.8	0.8	0.0	0.8	0.8	0.0	0.0	0.0	0.0	0.0
C-1.6 H-4.7	scfm	0.0	0.0	2.5	2.5	0.0	2.5	2.5	0.0	0.0	0.0	0.0	0.0
Hydrogen Sulfide	scfm	0.0	0.0	2.1	2.1	0.0	2.1	2.1	0.0	0.0	0.0	0.0	0.0
Benzene	lbs/hr	0.0	0.0	16.2	16.2	0.0	16.2	16.2	0.0	0.0	0.0016	0.0016	0.0016
C-6.2 Cl-0.4 H-7.5 O-0.2	lbs/hr	0.0	0.0	13.4	13.4	0.0	13.4	13.4	0.0	0.0	0.0013	0.0013	0.0013
C-1.6 H-4.7	lbs/hr	0.0	0.0	9.2	9.2	0.0	9.2	9.2	0.0	0.0	0.0009	0.0009	0.0009
Hydrogen Sulfide	lbs/hr	0.0	0.0	11.3	11.3	0.0	11.3	11.3	0.0	0.0	0.0011	0.0011	0.0001
Propane	scfm	x	x	x	x	x	x	x	2.83	x	x	x	x
Propane	gph	x	x	x	x	x	x	x	4.60	x	x	x	x
Non-condensable	scfm	50	50	105	105	885	990	990	x	57	1033	1033	1030
Vapor Total	scfm	50	50	128	128	893	1020	1020	2.83	58	1091	1091	1409
Vapor Total	acfm	48	63	162	188	877	928	2343	x	57	3919	2667	1635
Oxygen	%	0.0%	0.0%	7.8%	7.8%	20.7%	19.1%	19.1%	x	20.7%	15.8%	15.8%	12.2%
Nitrogen	%	99.6%	99.6%	68.8%	68.8%	78.4%	77.2%	77.2%	x	78.4%	76.4%	76.4%	59.1%
Carbon Dioxide	%	0.0%	0.0%	0.0%	0.0%	0.0%	0.0%	0.0%	x	0.0%	2.4%	2.4%	1.7%
Sulfur Dioxide	%	0.0%	0.0%	0.0%	0.0%	0.0%	0.0%	0.0%	x	0.0%	0.2%	0.2%	0.0%
Water Vapor	%	0.41%	0.41%	17.93%	17.93%	0.85%	2.98%	2.98%	x	0.85%	5.25%	5.25%	26.92%
Chlorine (Cl)	ppmV	0.0	0.0	1314.4	1314.4	0.0	164.5	164.5	x		153.8	153.8	1.2
Benzene	ppmV	0.00	0.00	10428	10428	0.00	1305	1305	x	0.00	0.12	0.12	0.09
C-6.2 Cl-0.4 H-7.5 O-0.2	ppmV	0.00	0.00	6572	6572	0.00	822	822	x	0.00	0.08	0.08	0.06
C-1.6 H-4.7	ppmV	0.00	0.00	19317	19317	0.00	2417	2417	x	0.00	0.23	0.23	0.17
Hydrogen Sulfide	ppmV	0.00	0.00	16637	16637	0.00	2082	2082	x	0.00	0.19	0.19	0.02
LEL	%	0.00%	0.00%	~~208%~~ *	~~208%~~ *	0.00%	26.0%	26.0%	x	0.00%	0.00%	0.00%	0.00%

LIQUID PROCESS SIDE

Stream Number		10	44	11	12	13	18	19	20	21	45	22	24	25
Temperature	°F	170	58	170	165	160	153	153	153	153	68	153	50	50
Pressure	psig	25	50	10	0	0	50	50	0	50	20	1	50	50
H20	lbs/min	14.0	0.2	14.0	14.0	14.0	980.5	37.4	38.5	935.6	1.1	7.5	22.6	22.6
C6H6	lbs/min	0.0	0.0	0.0	0.0	0.0	0.0	0.0	0.0	0.0	0.0	0.0	0.0	0.0
NaOH	lbs/min	0.0	0.0	0.0	0.0	0.0	0.0	0.0	0.0	0.0	0.4	0.0	0.0	0.0
NaHCO3	lbs/min	0.0	0.0	0.0	0.0	0.0	36.8	1.4	1.7	35.1	0.0	0.3	0.0	0.0
Na2SO3	lbs/min	0.0	0.0	0.0	0.0	0.0	89.6	3.4	4.1	85.4	0.0	0.7	0.0	0.0
NaCl	lbs/min	0.0	0.0	0.0	0.0	0.0	3.3	0.1	0.2	3.1	0.0	0.0	0.0	0.0
Total salt	lbs/min	0.0	0.0	0.0	0.0	0.0	129.6	4.9	5.9	123.6	0.4	1.0	0.0	0.0
Solution - Salt %	lbs/lbs	0.0%	0.0%	0.0%	0.0%	0.0%	11.7%	11.7%	13.4%	11.7%	25.0%	11.7%	0.0%	0.0%
Benzene	lbs/min	0.0034	0.0	0.0034	0.0034	0.0034	0.0	0.0	0.0	0.0	0.0	0.0	0.0	0.0
C-6.2 Cl-0.4 H-7.5 O-0.2	lbs/min	0.0022	0.0	0.0022	0.0022	0.0022	0.0	0.0	0.0	0.0	0.0	0.0	0.0	0.0
C-1.6 H-4.7	lbs/min	0.0	0.0	0.0	0.0	0.0	0.0	0.0	0.0	0.0	0.0	0.0	0.0	0.0
Benzene	ppm	243	0	243	243	219	0	0	0	0	0	0	0	0
C-6.2 Cl-0.4 H-7.5 O-0.2	ppm	160	0	160	160	144	0	0	0	0	0	0	0	0
C-1.6 H-4.7	ppm	0	0	0	0	0	0	0	0	0	0	0	0	0
H20	gpm	1.7	x	1.7	1.7	1.7	117.8	4.5	4.6	112.4	x	0.9	2.7	2.7
25% Caustic soda	gph										8.4			

NOTE:
* THE TWO LEL NUMERICAL VALUES WHICH ARE STRIKE-THROUGH REPRESENT THE LEL IF SUFFICIENT OXYGEN WAS PRESENT. WITHOUT SUFFICIENT OXYGEN, THE LEL DOES NOT EXIST.

THESE DRAWINGS HAVE BEEN PREPARED BASED ON PROJECT INFORMATION AVAILABLE TO DATE AND ARE SUITABLE FOR TERRATHERM'S USE DURING PROJECT IMPLEMENTATION. CHANGES TO THE DESIGN MADE BY TERRATHERM DURING IMPLEMENTATION WILL BE UPDATED AS PART OF THE AS-BUILT DRAWING PACKAGE TO BE SUBMITTED AFTER PROJECT COMPLETION.

COMMONWEALTH OF MASSACHUSETTS
SREEDURGA K. REDDY
CHEMICAL
No. 50540
REGISTERED PROFESSIONAL ENGINEER

10/24/13

NOT FOR CONSTRUCTION
DESIGN SUBMITTAL 10/11/13

© COPYRIGHT 2013. TERRATHERM, INC. ALL RIGHTS RESERVED.

REVISIONS

REV	DATE	BY	CHK	ENG	DESCRIPTION	APPROVED
K	10/11/13	DC	DB	DR	UPDATED DESIGN SUBMITTAL	

TERRATHERM

IMPOUNDMENT 1 AND 2 PILOT DEMONSTRATION STUDY – BRIDGEWATER, NJ
MASS & ENERGY BALANCE

SIZE	FILE NO.	DWG NO.	REV
D	P101	P101	K

SCALE: NTS | DNS | SHEET 2 OF 2

THIS DRAWING AND THE INFORMATION IT CONTAINS ARE THE PROPERTY OF TERRATHERM, INC. AND MAY NOT BE USED IN PART OR IN WHOLE EXCEPT BY WRITTEN PERMISSION OF TERRATHERM, INC.

NO. T12

SYMBOL	IDENTIFICATION LETTERS					TYPICAL LETTER COMBINATIONS																	
	FIRST–LETTER		SUCCEEDING–LETTERS			CONTROLLERS																	
	MEASURED VARIABLE (8)	VARIABLE MODIFIER (9)	READOUT/PASSIVE FUNCTION (10)	OUTPUT/ACTIVE FUNCTION (10)	FUNCTION MODIFIER (11)	RECORDING	INDICATING	BLIND	SELF–ACTUATED CONTROL VALVES	READOUT DEVICES RECORDING	INDICATING	SWITCHES AND ALARM DEVICES HIGH	LOW	COMB	TRANSMITTERS RECORDING	INDICATING	BLIND	SOLENOIDS, RELAYS, COMPUTING DEVICES	PRIMARY ELEMENT	TEST POINT	WELL OR PROBE	VIEWING DEVICE, GLASS	SAFETY DEVICE	FINAL ELEMENT
A	ANALYSIS (3)		ALARM			ARC	AIC	AC		AR	AI	ASH	ASL	ASHL	ART	AIT	AT	AY	AE	AP	AW			AV
B	BURNER, COMBUSTION					BRC	BIC	BC		BR	BI	BSH	BSL	BSHL	BRT	BIT	BT	BY	BE		BW	BG		BZ
C	CONDUCTIVITY (1)			CONTROL	CLOSE (3)																			
D	DENSITY (1)	DIFFERENTIAL			DEVIATION (3)																			
E	VOLTAGE		ELEMENT			ERC	EIC	EC		ER	EI	ESH	ESL	ESHL	ERT	EIT	ET	EY	EE					EZ
F	FLOW	RATIO				FRC FQRC FFRC	FIC FQIC FFIC	FC FQC FFC	FCV, FICV	FR FQR FFR	FI FQI FFI	FSH FCSH FFSH	FSL FQSL FFSL	FSHL	FRT	FIT FQIT	FT FQT	FY FQY	FE FCE FFE	FP		FG		FV FQV FFV
G	PH (2)		GAUGE (5)			GRC	GIC	GC		GR	GI	GSH	GSL	GSHL	GRT	GIT	GT		GE					
H	HAND				HIGH		HIC	HC						HS										HV
I	CURRENT		INDICATE (5)		MIDDLE	IRC	IIC			IR	II	ISH	ISL	ISHL	IRT	IIT	IT	IY	IE					IZ
J	POWER		SCAN (3)			JRC	JIC			JR	JI	JSH	JSL	JSHL	JRT	JIT	JT	JY	JE					JV
K	TIME	DERIVATIVE with time		CONTROL STATION (3)		KRC	KIC	KC	KCV	KR	KI	KSH	KSL	KSHL	KRT	KIT	KT	KY	KE					KV
L	LEVEL		LIGHT		LOW	LRC	LIC	LC	LCV	LR	LI	LSH	LSL	LSHL	LRT	LIT	LT	LY	LE		LW	LG		LV
M	MOISTURE (1)					MRC	MIC	MC		MR	MI	MSH	MSL	MSHL	MRT	MIT	MT		ME					
N	LEL (2)					NRC	NIC	NC		NR	NI	NSH	NSL	NSHL	NRT	NIT	NT		NE					
O			RESTRICTION		OPEN (3)																			
P	PRESSURE		POINT (TEST CONNECTION)			PRC PDRC	PIC PDIC	PC PDIC	PCV PDCV	PR PDR	PI PDI	PSH PDSH	PSL PDSL	PSHL	PRT PDRT	PIT PDIT	PT PDT	PY PDY	PE PE	PP PP			PSV PSE	PV PDV
Q	QUANTITY	INTEGRAL, TOTALIZE	INTEGRAL, TOTALIZE			QRC	QIC			QR	QI	QSH	QSL	QSHL	QRT	QIT	QT	QY	QE					QZ
R	RADIATION (3)		RECORD		RUN (3)	RRC	RIC	RC		RR	RI	RSH	RSL	RSHL	RRT	RIT	RT	RY	RE		RW			RZ
S	SPEED, FREQUENCY	SAFETY (7)		SWITCH	STOP (3)	SRC	SIC	SC	SCV	SR	SI	SSH	SSL	SSHL	SRT	SIT	ST	SY	SE					SV
T	TEMPERATURE			TRANSMIT, TRANSMITTER		TRC TDRC	TIC TDIC	TC TDC	TCV TDCV	TR TDR	TI TDI	TSH TDSH	TSL TDSL	TSHL	TRT TDRT	TIT TDIT	TT TDT	TY TDY	TE TE	TP TP	TW TW		TSE	TV TDV
U	MULTIVARIABLE		MULTIFUNCTION	MULTIFUNCTION						UR	UI							UY						UV
V	VIBRATION (3)			VALVE, DAMPER, LOUVER						VR	VI	VSH	VSL	VSHL	VRT	VIT	VT	VY	VE					VZ
W	WEIGHT (3)		WELL, PROBE			WRC WDRC	WIC WDIC	WC WDC	WCV WDCV	WR WDR	WI WDI	WSH WDSH	WSL WDSL	WSHL	WRT WDRT	WIT WDIT	WT WDT	WY WDY	WE WE					WZ WDZ
X	DRAWING SPECIFIC (4)	DRAWING SPECIFIC (4), X–AXIS (3)		DRAWING SPECIFIC (4)	DRAWING SPECIFIC (4)																			
Y	EVENT, STATE	Y–AXIS (3)		AUXILIARY DEVICES			YIC	YC		YR	YI	YSH	YSL				YT	YY	YE					YZ
Z	POSITION	SAFETY INSTRUMENTED SYSTEM (7)				ZRC ZDRC	ZIC ZDIC	ZC ZDC	ZCV ZDCV	ZR ZDR	ZI ZDI	ZSH ZDSH	ZSL ZDSL	ZSHL	ZRT ZDRT	ZIT ZDIT	ZT ZDT	ZY ZDY	ZE ZDE					ZV ZDV

INSTRUMENT IDENTIFICATION

THIS INFORMATION IS BASED UPON ANSI/ISA–5.1–2009 INSTRUMENTATION SYMBOLS AND INDENTIFICATION" AND ISA–5.3–1983 "GRAPHIC SYMBOLS FOR DISTRIBUTED CONTROL/SHARED DISPLAY INSTRUMENTATION, LOGIC AND COMPUTER SYSTEM. BOTH PUBLICATIONS ARE STANDARD OF ISA, INTERNATIONAL SOCIETY OF AUTOMATION.

EXPLANATORY NOTES FOR TABLE

1. TERRATHERM HAS CHOSEN THE SPECIFIC RECOMMENDED FIRST–LETTER LABELS FOR [C], [D] AND [M] PER THE STANDARD.
2. TERRATHERM HAS CHOSEN THE SPECIFIC LABEL FOR THE FIRST–LETTER [G] AS pH, AND [N] AS LEL.
3. LABELS ARE GIVEN PER THE STANDARD, BUT ARE UNCOMMON FOR TERRATHERM'S APPLICATIONS. THEIR USE SHOULD BE AVOIDED AND NO SUBSTITUTION FOR THEIR MEANINGS IS ALLOWED.
4. FIRST–LETTER OR SUCCEEDING–LETTER [X] IS USED AS "DRAWING SPECIFIC" AND IS TO BE DEFINED BY A NOTE ON THE DRAWING.
5. READOUT/PASSIVE FUNCTION LETTERS [G] AND [I] ARE DIFFERENTIATED BY A GAUGE READOUT HAVING ITS ELEMENT INTEGRAL TO THE INSTRUMENT AND AN INDICATION READOUT BEING SEPARATE FROM ITS ELEMENT.
6. READOUT/PASSIVE FUNCTION LETTER [L] INDICATED A LIGHT THAT IS INTENDED TO INDICATE OPERATING STATUS AND IS NOT INTENDED FOR ALARM INDICATION.
7. VARIABLE MODIFIER LETTERS [S] AND [Z] ARE DIFFERENTIATED RESPECTIVELY AS SAFETY VALVES WITH THE VARIABLE LETTERS [F] FLOW, [P] PRESSURE OR [T] TEMPERATURE; AND AS COMPONENTS OF A SAFETY INSTRUMENTED SYSTEM.
8. ALL INSTRUMENT LABELS MUST BEGIN WITH A LETTER FROM THE "MEASURED VARIABLE" COLUMN. NO OTHER LETTERS NOR MEANINGS ARE ALLOWED.
9. "VARIABLE MODIFIER" IS USED AS REQUIRED AS IN THE CASE OF A [DPS] DIFFERENTIAL PRESSURE SWITCH OF AS A [PSV] PRESSURE SAFETY VALVE.
10. "READOUT/PASSIVE FUNCTION" AND OUTPUT/ACTIVE FUNCTION" CAN BE USED CONSECUTIVELY, AS IN THE CASE OF A [PDIS] DIFFERENTIAL PRESSURE INDICATION SWITCH OR A [LIT] LEVEL INDICATION TRANSMITTER.
11. "FUNCTION MODIFIER" ARE USED TO DIFFERENTIATE THE RELATIVE POSITION OF SWITCHES AND ALARMS. THE COMBINATION OF [HH] HIGH–HIGH IS AN ACCEPTABLE PRACTICE.

HAND SWITCH DESIGNATIONS

E –EMERGENCY STOP

J –JOG

2PBL –2 PUSH BUTTONS (ON–OFF) MOMENTARY WITH BACK LIGHT(S)

2PB –2 MOMENTARY PUSH BUTTONS (ON–OFF)

JSR –JOG, STOP, RUN

HOA –HAND, OFF, AUTO

SS –START, STOP

OC –OPEN, CLOSE

OCA –OPEN, CLOSE, AUTO

MR –MANUAL, REMOTE

FOR –FORWARD, OFF, REVERSE

CONFIDENTIAL

© COPYRIGHT 2013. TERRATHERM, INC. ALL RIGHTS RESERVED.

STATE OF NEW YORK · DAVID MACORE · 080085 · LICENSED PROFESSIONAL ENGINEER

7-27-13

THESE DRAWINGS HAVE BEEN PREPARED BASED ON PROJECT INFORMATION AVAILABLE TO DATE AND ARE SUITABLE FOR TERRATHERM'S USE DURING PROJECT IMPLEMENTATION. CHANGES TO THE DESIGN MADE BY TERRATHERM DURING IMPLEMENTATION WILL BE UPDATED AS PART OF THE AS–BUILT DRAWING PACKAGE TO BE SUBMITTED AFTER PROJECT COMPLETION.

REV	DATE	BY	CHK	ENG	DESCRIPTION	APPROVED
A	1/07/11	BC	DB	DR	PRELIMINARY SUBMITTAL TO CLIENT.	PA

REVISIONS

TERRATHERM

PIPING AND INSTRUMENTATION DIAGRAM
LEGEND SHEET

SIZE	FILE NO.	DWG NO.	REV
D	P100	P100	A

SCALE: AS SHOWN | DNS | SHEET 1 OF 4

THIS DRAWING AND THE INFORMATION IT CONTAINS ARE THE PROPERTY OF TERRATHERM, INC. AND MAY NOT BE USED IN PART OR IN WHOLE EXCEPT BY WRITTEN PERMISSION OF TERRATHERM, INC.

NO. T13

GENERAL INSTRUMENTS

INSTRUMENT ATTRIBUTES

- INSTRUMENT FOR SINGLE MEASURED VARIABLE AND ANY NUMBER OF FUNCTIONS. INSTRUMENT IS FIELD MOUNTED.
- INSTRUMENT IS MOUNTED ON FRONT OF CENTRAL PANEL.
- INSTRUMENT IS MOUNTED IN REAR OF CENTRAL PANEL.
- INSTRUMENT IS MOUNTED ON FRONT OF LOCAL PANEL.
- INSTRUMENT IS MOUNTED ON REAR OF LOCAL PANEL.
- ADDITIONAL BLOCK ANY OF THE SYMBOLS ABOVE FOR REPRESENTATION OF SHARED DISPLAY OR CONTROL.

COMPUTER FUNCTION

- COMPUTER FUNCTION NOT NORMALLY ACCESSIBLE TO OPERATOR
- INDICATOR/CONTROLLER/RECORDER OR ALARM POINT NORMALLY ACCESSIBLE TO OPERATOR ON HMI SCREEN

LOGIC AND SEQUENTIAL CONTROL SYMBOLS

- XXXX — COMPLEX INTERCONNECTION LOGIC (INTERLOCK) WITH DETAIL REFERENCE
- PLC LOGIC CONTROLS, NOT NORMALLY ACCESSIBLE BY THE OPERATOR
- PLC LOGIC CONTROLS, ACCESSIBLE BY THE OPERATOR

ALARM & CONTROL STATION DESIGNATIONS

(X) MEASURED INPUT TO CONTROLLER

(Y) OUTPUT FROM CONTROLLER

XAH — XAH / XAL — XP/dt — X()C 101 — YAH / YAL — YP/dt — YAH

XAH YAH – HIGH ALARM
XAL YAL – LOW ALARM
dX/dt – VARIABLE RATE CHANGE (DERIVATIVE)

SHARED HOUSING

- INSTRUMENTS SHARING A COMMON FIELD MOUNTED ENCLOSURE
- INSTRUMENTS SHARING A COMMON LOCAL ENCLOSURE
- ALTERATIVE FOR SHARE DISPLAY OR CONTROL

CONFIDENTIAL

THESE DRAWINGS HAVE BEEN PREPARED BASED ON PROJECT INFORMATION AVAILABLE TO DATE AND ARE SUITABLE FOR TERRATHERM'S USE DURING PROJECT IMPLEMENTATION. CHANGES TO THE DESIGN MADE BY TERRATHERM DURING IMPLEMENTATION WILL BE UPDATED AS PART OF THE AS-BUILT DRAWING PACKAGE TO BE SUBMITTED AFTER PROJECT COMPLETION.

ANSI/ISA – 5.1 – 2009

SIGNALS AND LINES

- SOLIDS FLOW
- CONNECTION TO PROCESS OR INSTRUMENT INPUT
- MAIN PROCESS LINE
- PNEUMATIC SIGNAL
- ELECTRICAL SIGNAL OR INTERNAL SYSTEM LINK
- INTERNAL SYSTEM LINK (SOFTWARE OR DATA LINK)
- CAPILLARY TUBING (FILLED SYSTEM)
- STEAM LINE
- ELECTRICAL LINE (POWER)
- HYDRAULIC LINE
- MECHANICAL LINK

TYPICAL CONNECTION ANY VARIABLE

- IN LINE DEVICE
- DIRECT CONNECTION PROCESS BLOCK VALVE SYMBOL OPTIONAL
- ELECTRICAL CONNECTION
- FILLED SYSTEM DIRECT CONNECTION

SENSORS – PRESSURE

- P( ) — DIRECT CONNECTED
- P( ) — WITH DIAPHRAGM SEAL PIPE MOUNTED
- P( ) — WITH DIAPHRAGM SEAL LINE MOUNTED (FLANGED)

PG – PRESSURE GAUGE
PE – PRESSURE ELEMENT (TRANSDUCER)
PT – PRESSURE TRANSMITTER
PS – PRESSURE SWITCH

TERATHERM INSTRUMENTATION NUMBERING PLAN

000– WELLFIELD VAPOR
100– VAPOR AFTER BLOCK VALVE
200– CONDENSATE PUMPING
300– LIQUID TREATMENT SYSTEM
400– COOLING WATER
500– COMPRESSED AIR
600– POTABLE WATER UTILITY
700 – GAS/ OIL/ FUEL LINES
800– AMBIENT AIR (COMBUSTION, DILUTION, COOLING AIR)
900– BRINE LIQUOR (SCRUBBER)
1000– BOILER STEAM SYSTEM

SENSORS – FLOW (NOTE 2)

- FE — FE – ORIFICE PLATE
- FE — VENTURI TUBE OR FLOW NOZZLE
- FE — PITOT TUBE
- FE — AVERAGING PITOT TUBE
- FE — SONIC FLOWMETER
- FE — VARIABLE AREA FLOWMETER
- FE — TURBINE
- FE — M — MAGNETIC FLOW METER
- FE — IN LINE INSTRUMENT (NOTE 3)
- FE — POSITIVE DISPLACEMENT FLOWMETER
- FE — VORTEX SENSOR
- FE — SINGLE ELEMENT SENSING PROBE
- FE — DUAL ELEMENT SENSING PROBE

SENSORS – TEMPERATURE (NOTE 4)

- T( ) — TG – THERMOMETER; TW – THERMOWELL; TE – ELEMENT, SUCH AS THERMOCOUPE OR CAPILLARY BULB
- T( ) T( ) — DUAL SENSORS IN SINGLE WELL
- T( ) — FILLED SYSTEM WITH CAPILLARY (REMOTE MOUNTED INSTRUMENT)

VALVE NOTATION

MOTOR ACTUATED VALVES (TYPICAL)

HV, M, NO, FC

NORMAL MODE (SEE NOTE BELOW)
FAILURE MODE – FO,FC,FL,FI

DIAPHRAGM ACTUATED VALVES (TYPICAL)

HV, NO, FC

NORMAL MODE
FAILURE MODE – FO,FC,FL,FI

- FAIL TO OPEN POSITION
- FAIL TO CLOSED POSITION
- FAIL TO LOCK IN LAST POSITION
- FAIL AT LAST POSITION
- FAIL AT LAST POSITION

NOTE:

FAIL POSITIONS ALL BODY STYLES
FO–INDICATES FAIL OPEN
FC–INDICATES FAIL CLOSED
FL–INDICATES FAIL LOCKED
FI–INDICATES FAIL INDETERMINATE

NORMAL MODE IDENTIFICATION (I.E. NO. NC.) SHOULD ONLY BE USED FOR ON–OFF TYPE VALVES WHOSE POSITION CANNOT BE SHOWN BY SHADING THE VALVE BODY.

- THREE WAY (NOTE 1) (ARROW SHOWS DE–ENERGIZED PATH)
- FOUR WAY (NOTE 1) (ARROW SHOWS DE–ENERGIZED PATH)

CONTROL VALVE BODIES (NOTE 1)

OPEN / CLOSED

- GATE (GA)
- GLOBE (GL)
- BALL (BA)
- PLUG (PL)
- NEEDLE (NE)
- BUTTERFLY (BF)
- KNIFE GATE (KI)
- DIAPHRAGM (DP)
- FLAPPER VALVE (FL)
- CHECK (CK)
- STRAINER (STR–1)
- DUPLEX STRAINER (STR–2)
- WYE STRAINER (STR)

- D — DRAIN
- S — SAMPLE PORT
- T — HAND OR HAND WHEEL
- S — SINGLE SOLENOID
- S R — MANUAL RESET AFTER LATCH (OPTIONAL)
- A/S — PNEUMATIC DIAPHRAGM WITH POSITIONER

VALVE NOTATION (CONT'D)

- ( )Y I/P — ELECTRIC ANALOG SIGNAL TO PNEUMATIC VALVE WITH /P CONVERTER AND NO POSITIONER
- M — ROTARY MOTOR (SHOWN TYPICALLY WITH ELECTRIC SIGNAL)
- SINGLE–ACTING / DOUBLE–ACTING — PNEUMATIC CYLINDER (PNEUMATIC ANALOG INPUT)

SELF–ACTIVATED DEVICES–PRESSURE

- PCV — BACK PRESSURE REGULATOR SELF–CONTAINED
- PRV — PRESSURE RELIEF VALVE
- VRV — VACUUM RELIEF VALVE
- PSV A/S — PRESSURE/VACUUM RELIEF VALVE WITH FLAME ARRESTER.

SELF–ACTIVATED DEVICES–PRESSURE (CONT'D)

- PSE — RUPTURE DISK OR SAFETY HEAD FOR PRESSURE RELIEF
- PSE — RUPTURE DISK OR SAFETY HEAD FOR VACUUM RELIEF
- PCV H — SPEED CONTROL VALVE
- PCV — PRESSURE REDUCING REGULATOR WITH EXTERNAL PRESSURE TAP
- PCV — BACK PRESSURE REGULATOR WITH EXTERNAL PRESSURE TAP.
- PDCV — DIFFERENTIAL PRESSURE REDUCING REGULATOR WITH INTERNAL AND EXTERNAL PRESSURE TAPS
- PCV — PRESSURE REDUCING REGULATOR. SELF CONTAINED.
- PCV — BACKPRESSURE REGULATOR. EXTERNAL PRESSURE TAP.

THIS INFORMATION IS BASED UPON ANSI/ISA–5.1–2009 INSTRUMENTATION SYMBOLS AND IDENTIFICATION" AND ISA–5.3–1983 "GRAPHIC SYMBOLS FOR DISTRIBUTED CONTROL/SHARED DISPLAY INSTRUMENTATION, LOGIC AND COMPUTER SYSTEM. BOTH PUBLICATIONS ARE STANDARDS OF ISA, INTERNATIONAL SOCIETY OF AUTOMATION.

NOTES:

1. VALVE–BODY PORTS THAT ARE CLOSED IN NORMAL OPERATION ARE BLACKENED. THE OPERATING CONDITION SHOWN FOR MAIN VALVE BODIES CORRESPONDS TO FULL–LOAD OR NORMAL OPERATION REGARDLESS OF THE TYPE OF ACTUATOR SOLENOID PILOT VALVE SHALL BE SHOWN IN THEIR DEENERGIZE POSITION.
2. IDENTIFY BOTH THE ACTUAL ELEMENT WHICH IS PLACED IN THE LINE AND THE INSTRUMENT UNLESS THE DEVICE IS ONE UNIT:
   FE ORIFICE PLATE: FT TRANSMITTER
   FT MAGNETIC FLOWMETER WITH INTEGRAL TRANSMITTER
3. THE TYPE OF FLOW INSTRUMENT IS USUALLY NAMED OUTSIDE THE INSTRUMENT CIRCLE E.G. MAGNETIC FLOWMETER, DISPLACEMENT METER, MASS FLOWMETER.
4. TAG THE THERMOWELL SEPARATELY IF IT IS REMOTE MOUNTED FROM THE INSTRUMENT:
   TW, TIC REMOTE CAPILLARY
   TI DIAL THERMOMETER
   TE, TT THERMOCOUPLE AND TRANSMITTER

© COPYRIGHT 2013. TERRATHERM, INC. ALL RIGHTS RESERVED.

STATE OF NEW YORK — DAVID MACONE — 080085 — LICENSED PROFESSIONAL ENGINEER — 10-24-13

REVISIONS

REV	DATE	BY	CHK	ENG	DESCRIPTION	APPROVED
B	10/24/11	DC			ADDED INSTRUMENTATION NUMBERING SYSTEM	
A	1/18/11	BC	DB	DR	PRELIMINARY SUBMITTAL TO CLIENT.	PA

TERRATHERM

PIPING AND INSTRUMENTATION DIAGRAM
LEGEND SHEET

SIZE	FILE NO.	DWG NO.	REV
D	P100	P100	B

SCALE: AS SHOWN | DNS | SHEET 2 OF 4

THIS DRAWING AND THE INFORMATION IT CONTAINS ARE THE PROPERTY OF TERRATHERM, INC. AND MAY NOT BE USED IN PART OR IN WHOLE EXCEPT BY WRITTEN PERMISSION OF TERRATHERM, INC.

NO. T14

FUNCTION SYMBOLS

- Σ — SUMMATION
- Σ/n — AVERAGE
- Δ — DIFFERENCE
- K — PROPORTION CONTROL ACTION
- 1:1 — PROPORTIONAL
- 2:1
- ∫ — INTEGRAL
- d/dt — DERIVATIVE
- X — MULTIPLICATION
- ÷ — DIVISION
- n/√ — ROOT EXTRACTION
- x^n — EXPONENTIAL
- f(x) — NONLINEAR OR UNSPECIFIED FUNCTION
- f(t) — TIME FUNCTION
- HIGH SELECTING
- LOW SELECTING
- HIGH LIMITING
- LOW LIMITING
- VELOCITY LIMITER
- + — POSITIVE BIAS
- − — NEGATIVE BIAS
- */▲ — CONVERSION
- I/P — ELECTRIC/NEUMATIC
- M — MIDDLE SIGNAL SELECT
- H — HIGH SIGNAL SELECT
- L — LOW SIGNAL SELECT

EXAMPLES

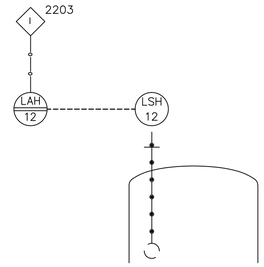

LEVEL ALARM USING A FLANGE MOUNTED FLOAT SWITCH. CONNECTED TO LOCAL CONTROL PANEL WITH OPERATOR ACCESS AND A SOFTWARE INTERLOCK TO A CENTRAL SYSTEM, AS TO NOT TO ALLOW PUMPING TO THIS TANK.

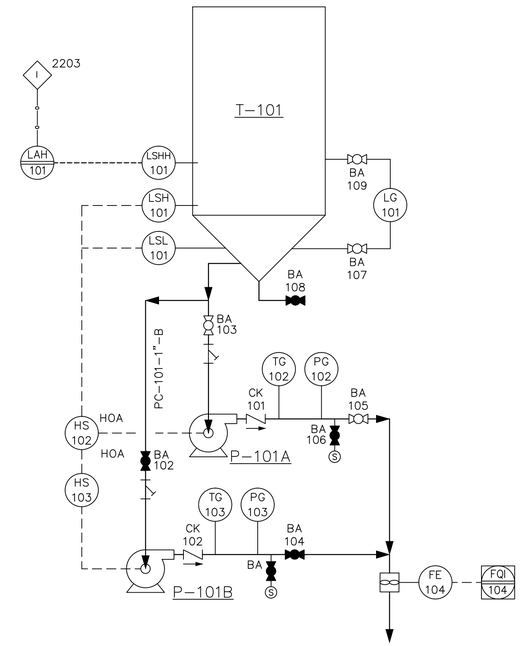

MOISTURE SEPARATOR LEVEL CONTROL: FIELD MOUNTED LEVEL (LG) TEMPERATURE (TG) AND PRESSURE (PG) GUAGES PROVIDE OPERATOR INFORMATION. THE PUMPS ARE USED IN A MANUAL DUPLEX OPERATION. A LOCAL HAND SWITCH (HS) PROVIDES HAND-OFF-AUTO CONTROL FOR THE PUMPS.

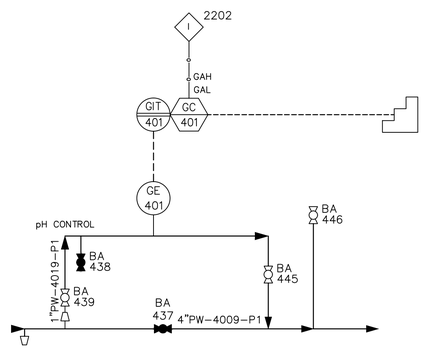

SCRUBBER pH CONTROL USING A pH SENSOR (ELEMENT), A pH INDICATING TRANSMITTER (GIT) AND A PLC FUNCTION (GC) FOR CLOSED LOOP CONTROL TO A CAUSTIC INJECTION PUMP AND HIGH-LOW ALARM LIMITS (GAH & GAL).

CONFIDENTIAL

© COPYRIGHT 2013. TERRATHERM, INC. ALL RIGHTS RESERVED.

REVISIONS

REV	DATE	BY	CHK	ENG	DESCRIPTION	APPROVED
A	1/07/11	BC	DB	DR	PRELIMINARY SUBMITTAL TO CLIENT.	PA

STATE OF NEW YORK · DAVID MACONE · 080085 · LICENSED PROFESSIONAL ENGINEER

12-21-13

THESE DRAWINGS HAVE BEEN PREPARED BASED ON PROJECT INFORMATION AVAILABLE TO DATE AND ARE SUITABLE FOR TERRATHERM'S USE DURING PROJECT IMPLEMENTATION. CHANGES TO THE DESIGN MADE BY TERRATHERM DURING IMPLEMENTATION WILL BE UPDATED AS PART OF THE AS-BUILT DRAWING PACKAGE TO BE SUBMITTED AFTER PROJECT COMPLETION.

TERRATHERM

PIPING AND INSTRUMENTATION DIAGRAM
LEGEND SHEET

SIZE	FILE NO.	DWG NO.	REV
D	P100	P100	A

SCALE: AS SHOWN | DNS | SHEET 3 OF 4

THIS DRAWING AND THE INFORMATION IT CONTAINS ARE THE PROPERTY OF TERRATHERM, INC. AND MAY NOT BE USED IN PART OR IN WHOLE EXCEPT BY WRITTEN PERMISSION OF TERRATHERM, INC.

NO. T15

GENERAL EQUIPMENT

- GEAR PUMP
- DIAPHRAGM PUMP
- CENTRIFUGAL PUMP
- SUMP PUMP
- SUBMERSIBLE PUMP
- VERTICAL PUMP
- POSITIVE DISPLACEMENT PUMP
- PROGRESSIVE CAVITY PUMP
- AGITATOR
- STATIC MIXER
- PRESSURE VESSEL
- HEAD TANK/OPEN TANK
- CENTRIFUGAL FAN
- ROTARY VANE BLOWER
- ROTARY LOBE BLOWER
- VENTURI (EDUCTOR)
- GOARATOR PUMP

GENERAL EQUIPMENT (CONT'D)

- CONTINUOUS CENTRIFUGES
- BATCH CENTRIFUGES
- ROTARY VACUUM FILTERS
- AIR TREATMENT/HANDLING (EG. WET ELECTROSTATIC PRECIPITATOR)
- CARTRIDGE FILTER
- STRAINER
- CONVEYOR
- ROTARY, CENTRIFUGAL & WATER SEALED COMPRESSORS & VACUUM PUMPS
- TURBINES & EXPANDERS
- SCREW CONVEYOR
- TRAY, DISC & DONUT, CASCADE
- PACKED DISTILLATION, ABSORBERS, ADSORBERS
- ONE SHELL PASS ODD NUMBER OF TUBES
- TANK W/CONE ROOF

GENERAL EQUIPMENT (CONT'D)

- PLATE & FRAME
- PARTIAL CONDENSERS, TUBE SIDE
- PARTIAL CONDENSERS, SHELL SIDE
- DUST COLLECTORS, PRECIPITATORS
- CLARIFIERS, THICKENERS
- KILNS/DRYERS
- FIRED HEATERS
- VIDEO CAMERA
- SUMP PUMP WITH MECHANICAL FLOAT SWITCH
- CONE BOTTOM TANK

GENERAL PIPING

- PRIMARY PROCESS FLOW
- SOLIDS FLOW
- SECONDARY PROCESS OR UTILITY FLOW
- DIRECTION OF FLOW
- CONCENTRIC REDUCER OR INCREASER
- ECCENTRIC REDUCER
- EXPANSION JOINT
- FLEXIBLE CONNECTION
- SCREWED CAP
- HOSE CONNECTION
- ATMOSPHERIC VENT
- QUICK CONNECT/DISCONNECT COUPLINGS W/FLEXIBLE HOSE
- WELDED CAP
- FLANGED JOINT
- PLUG
- DRAIN
- INSULATED LINE
- INSULATED LINE WITH HEAT TRACING
- VENT FLAME ARRESTOR
- SIGHT GLASS
- UNION JOINT
- BLIND FLANGED LINE OR VALVE
- TRAP
- LINE FILTER
- SPRAY NOZZLE

VALVE NOTATION

- ROTARY VALVE
- KNIFE GATE VALVE

MISCELLANEOUS

- ALARM HORN
- 1ST DWG.# — LINE BREAK OR RESUMPTION POINT
- B/L — BATTERY LIMITS
- FILLED LINE
- PUMP W/LIQUID SEAL FLUSH
- STEAM TRAP SHOWN THIS WAY
- REPRESENTS THIS CONFIGURATION
- PUMP W/INTERNAL SAFETY RELIEF
- SPECIALTY ITEM
- SPRAY NOZZLE OR SPARGER
- PACKAGE SYSTEM (DETAILS UNKNOWN)

EQUIPMENT NUMBER IDENTIFICATION

T – 101 A

- A — DUPLICATE OR SPARE
- 101 — SEQUENCE NUMBER
- T — EQUIPMENT LETTER (SEE BELOW)

A – AGITATOR
B – BLOWER
CP– CONTROL PANEL
C – COLUMN
D – DRIVE
E – HEAT EXCHANGER
F – FIRED EQUIPMENT
FX– FILTER
G – FLUID MIXING NOZZLE
H – SOLIDS HANDLING EQUIPMENT
M – MIXER, BLENDER
P – PUMP
PX– VENDOR PACKAGE SYSTEM
S – SEPARATOR
T – TANK
U – LUBRICATION PACKAGE
V – VESSEL
W – COOLING TOWER
WX– WEIRS
X – VENT STACKS
Y – MISCELLANEOUS
Z – MISCELLANEOUS EQUIPMENT
ZX– PIPING EXPANSION JOINT

LINE IDENTIFICATION

6"–CS–N–CW–101

- 101 — LINE NUMBER
- CW — FLUID TYPE
- N — PIPE INSULATION
- CS — PIPE MATERIAL
- 6" — NOMINAL PIPE DIAMETER

LINE SERVICE DESIGNATION

MATERIAL

ABS: ACRYLONITRILE BUTADIENE STYRENE
CA: CHEMAIRE TYPE ABS
CPVC: CHLORINATED POLYVINYL CHLORIDE
CS: CARBON STEEL
FRP: FIBERGLASS–REINFORCED PLASTIC
NT: NYLON TUBING
PH: PETROLEUM HOSE
PVC: RIGID POLY–VINYL–CHLORIDE
RH: RUBBER HOSE
SS: STAINLESS STEEL
TT: TEFLON TUBING
CU: COPPER

INSULATION TYPE

C: INSULATION COLD
E: ELECTRIC TRACING
I: INSULATION HOT
N: NONE
T: STEAM TRACING

FLUID TYPE

AA: AMBIENT AIR
AS: COMPRESSED AIR
AS: CHEMICAL FEED
CW: COOLING WATER
IA: INSTRUMENT AIR
NG: NATURAL GAS
PG: PROCESS GAS
PL: PROCESS LIQUID
PW: POTABLE WATER
SL: SLUDGE
ST: STEAM
VE: VAPOR EXTRACTION
VG: VENT GAS (OFFGAS)
PV: PROCESS VAPOR
UW: UTILITY WATER

PIPE RATING

FF: FLAT FACE FLANGE
RF: RAISED FACE FLANGE
T: THREADED

STATE OF NEW YORK — DAVID MACONE — 080085 — LICENSED PROFESSIONAL ENGINEER — 12/2/13

© COPYRIGHT 2011. TERRATHERM, INC. ALL RIGHTS RESERVED.

REVISIONS

REV	DATE	BY	CHK	ENG	DESCRIPTION	APPROVED
C	05/13/13	DC				
B	1/13/11	BC	DB	DR	MODIFIED LINE SERVICE DESIGNATION PER MARKUPS BY DB/PA	PA
A	1/07/11	BC	DB	DR	PRELIMINARY SUBMITTAL TO CLIENT.	PA

TERRATHERM

PIPING AND INSTRUMENTATION DIAGRAM
LEGEND SHEET

SIZE	FILE NO.	DWG NO.	REV
D	P100	P100	C

SCALE: AS SHOWN | DNS | SHEET 4 OF 4

THIS DRAWING AND THE INFORMATION IT CONTAINS ARE THE PROPERTY OF TERRATHERM, INC. AND MAY NOT BE USED IN PART OR IN WHOLE EXCEPT BY WRITTEN PERMISSION OF TERRATHERM, INC.

NO. T16

THESE DRAWINGS HAVE BEEN PREPARED BASED ON PROJECT INFORMATION AVAILABLE TO DATE AND ARE SUITABLE FOR TERRATHERM'S USE DURING PROJECT IMPLEMENTATION. CHANGES TO THE DESIGN MADE BY TERRATHERM DURING IMPLEMENTATION WILL BE UPDATED AS PART OF THE AS-BUILT DRAWING PACKAGE TO BE SUBMITTED AFTER PROJECT COMPLETION.

CONFIDENTIAL

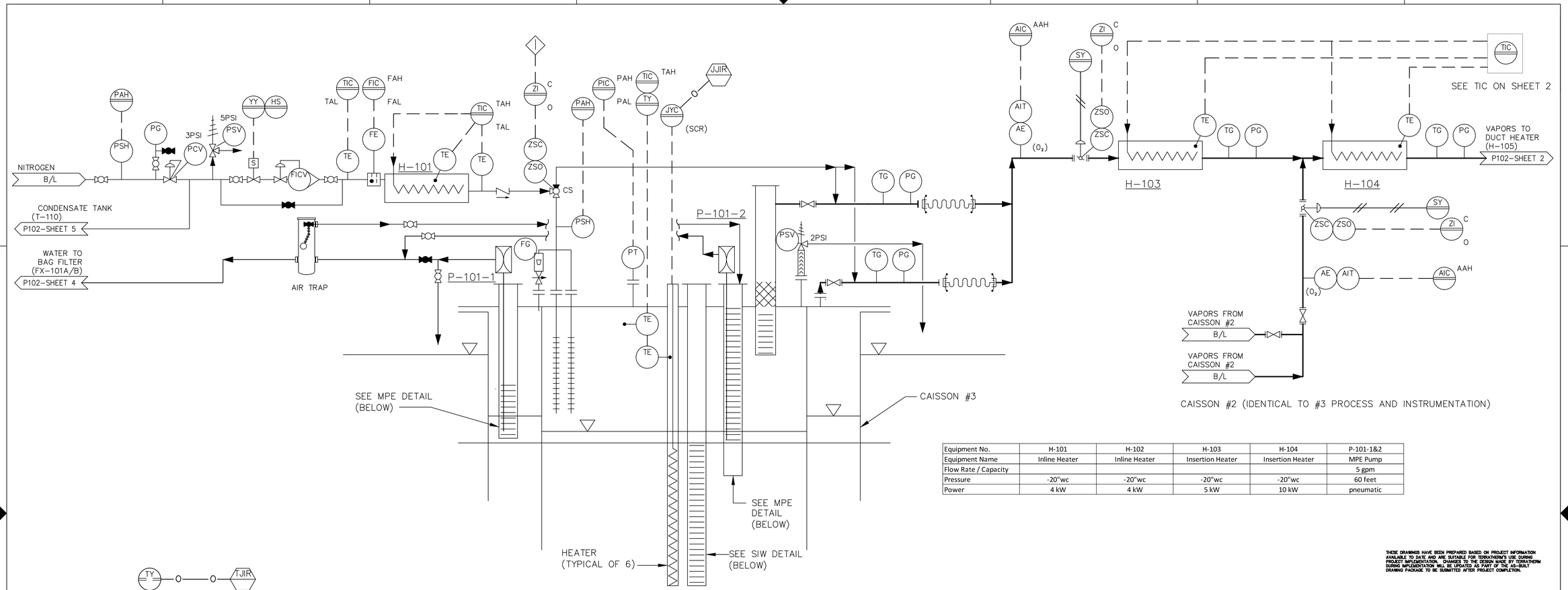

Equipment No.	H-101	H-102	H-103	H-104	P-101-1&2
Equipment Name	Inline Heater	Inline Heater	Insertion Heater	Insertion Heater	MPE Pump
Flow Rate / Capacity					5 gpm
Pressure	-20"wc	-20"wc	-20"wc	-20"wc	60 feet
Power	4 kW	4 kW	5 kW	10 kW	pneumatic

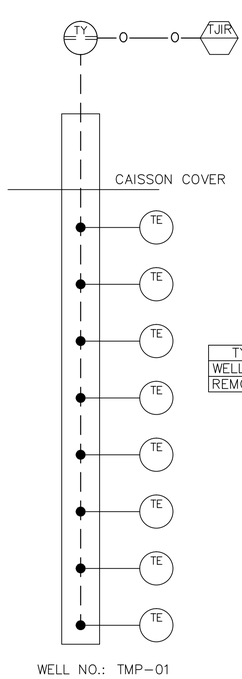

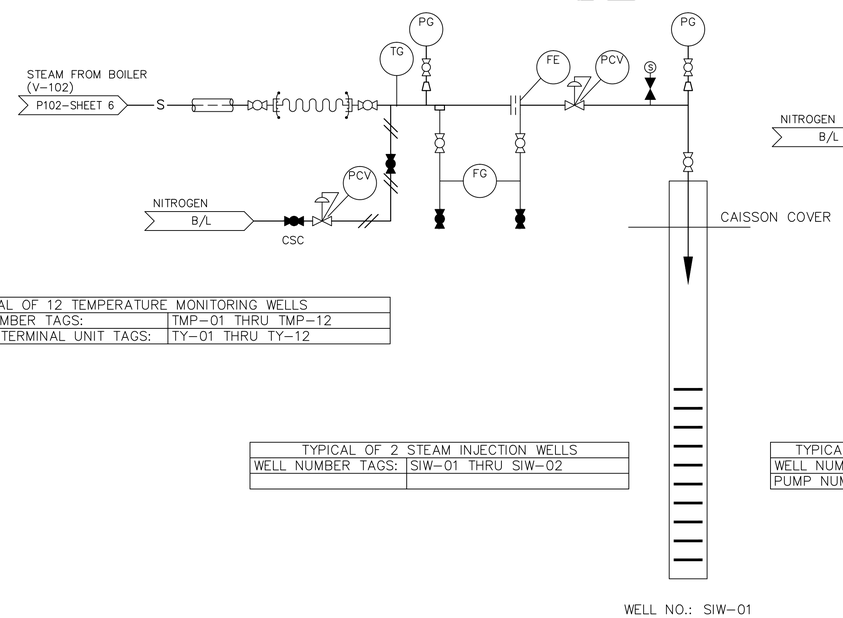

TYPICAL OF 12 TEMPERATURE MONITORING WELLS	
WELL NUMBER TAGS:	TMP-01 THRU TMP-12
REMOTE TERMINAL UNIT TAGS:	TY-01 THRU TY-12

TYPICAL OF 2 STEAM INJECTION WELLS	
WELL NUMBER TAGS:	SIW-01 THRU SIW-02

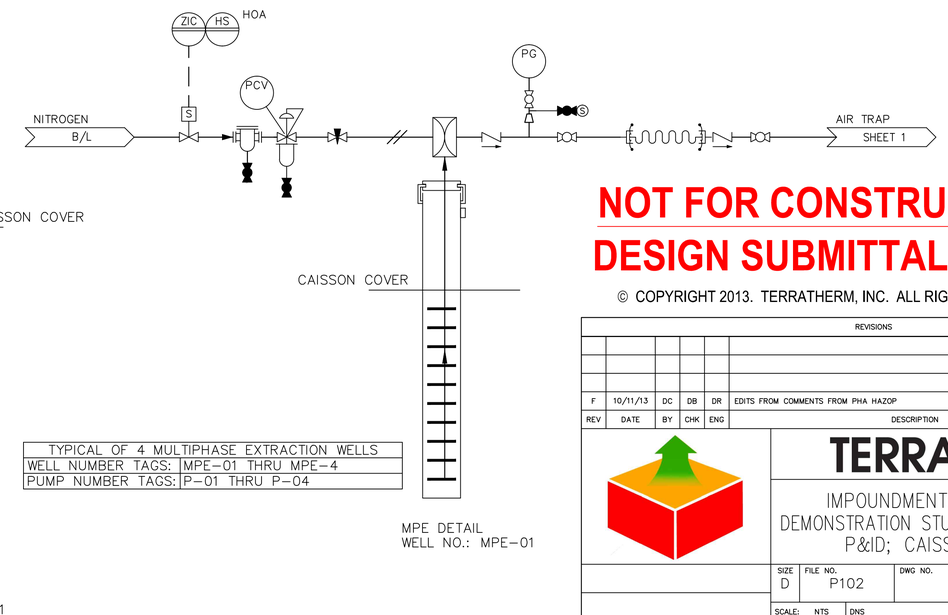

TYPICAL OF 4 MULTIPHASE EXTRACTION WELLS	
WELL NUMBER TAGS:	MPE-01 THRU MPE-4
PUMP NUMBER TAGS:	P-01 THRU P-04

THESE DRAWINGS HAVE BEEN PREPARED BASED ON PROJECT INFORMATION AVAILABLE TO DATE AND ARE SUITABLE FOR TERRATHERM'S USE DURING PROJECT IMPLEMENTATION. CHANGES TO THE DESIGN MADE BY TERRATHERM DURING IMPLEMENTATION WILL BE UPDATED AS PART OF THE AS-BUILT DRAWING PACKAGE TO BE SUBMITTED AFTER PROJECT COMPLETION.

STATE OF NEW YORK · DAVID MACOMBER · 080985 · LICENSED PROFESSIONAL ENGINEER · 10-24-13

NOT FOR CONSTRUCTION
DESIGN SUBMITTAL 10/11/13

© COPYRIGHT 2013. TERRATHERM, INC. ALL RIGHTS RESERVED.

REVISIONS

REV	DATE	BY	CHK	ENG	DESCRIPTION	APPROVED
F	10/11/13	DC	DB	DR	EDITS FROM COMMENTS FROM PHA HAZOP	

TERRATHERM

IMPOUNDMENTS 1 AND 2 PILOT DEMONSTRATION STUDY – BRIDGEWATER, NJ
P&ID; CAISSON EQUIPMENT

SIZE	FILE NO.	DWG NO.	REV
D	P102	P102	F

SCALE: NTS | DNS | SHEET 1 OF 6

THIS DRAWING AND THE INFORMATION IT CONTAINS ARE THE PROPERTY OF TERRATHERM, INC. AND MAY NOT BE USED IN PART OR IN WHOLE EXCEPT BY WRITTEN PERMISSION OF TERRATHERM, INC.

NO. T17

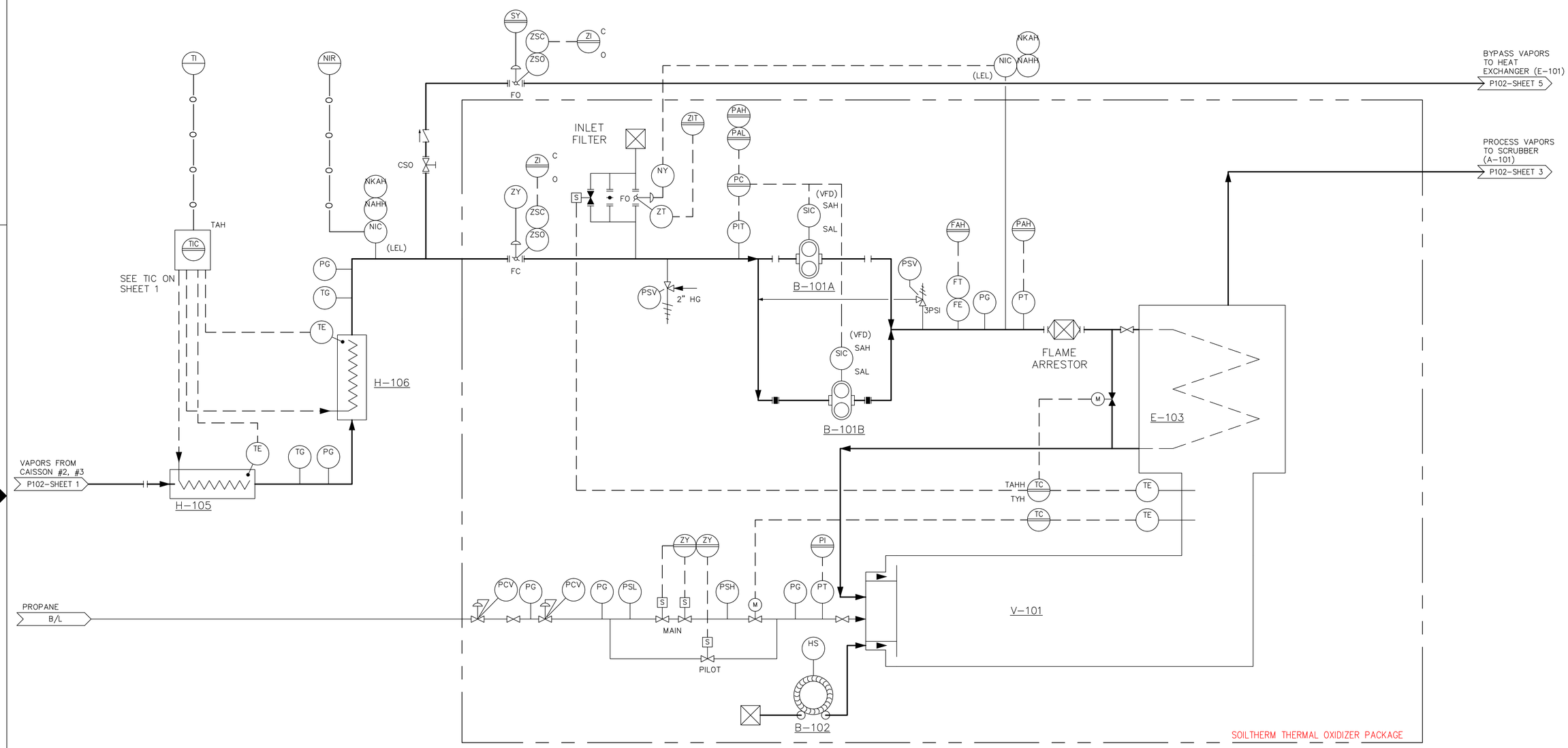

© COPYRIGHT 2013. TERRATHERM, INC. ALL RIGHTS RESERVED.

Equipment No.	H-105	H-106	B-101A/B	E-103	V-101
Equipment Name	Insertion Heater	Insertion Heater	Vacuum Blowers	Oxidizer Heat Exc	Thermal Oxidizer
Flow Rate / Capacity			1000 scfm	1000 scfm	1000 scfm
Pressure	-20"wc	-20"wc	70/-20"wc Eff/Inf	60"wc	100"wc
Power	10 kW	5 kW	40 HP	x	x

THESE DRAWINGS HAVE BEEN PREPARED BASED ON PROJECT INFORMATION AVAILABLE TO DATE AND ARE SUITABLE FOR TERRATHERM'S USE DURING PROJECT IMPLEMENTATION. CHANGES TO THE DESIGN MADE BY TERRATHERM DURING IMPLEMENTATION WILL BE UPDATED AS PART OF THE AS-BUILT DRAWING PACKAGE TO BE SUBMITTED AFTER PROJECT COMPLETION.

STATE OF NEW YORK · DAVID MACORE · 080095 · LICENSED PROFESSIONAL ENGINEER · 10-27-13

NOT FOR CONSTRUCTION
DESIGN SUBMITTAL 10/11/13

REVISIONS

REV	DATE	BY	CHK	ENG	DESCRIPTION	APPROVED
F	10/11/13	DC	DB	DR	EDITS FROM COMMENTS FROM PHA HAZOP	

TERRATHERM

IMPOUNDMENT 1 AND 2 PILOT DEMONSTRATION STUDY – BRIDGEWATER, NJ
P&ID; THERMAL OXIDIZER SYSTEM

SIZE D | FILE NO. P102 | DWG NO. P102 | REV F
SCALE: NTS | DNS | SHEET 2 OF 6

THIS DRAWING AND THE INFORMATION IT CONTAINS ARE THE PROPERTY OF TERRATHERM, INC. AND MAY NOT BE USED IN PART OR IN WHOLE EXCEPT BY WRITTEN PERMISSION OF TERRATHERM, INC.

NO. T18

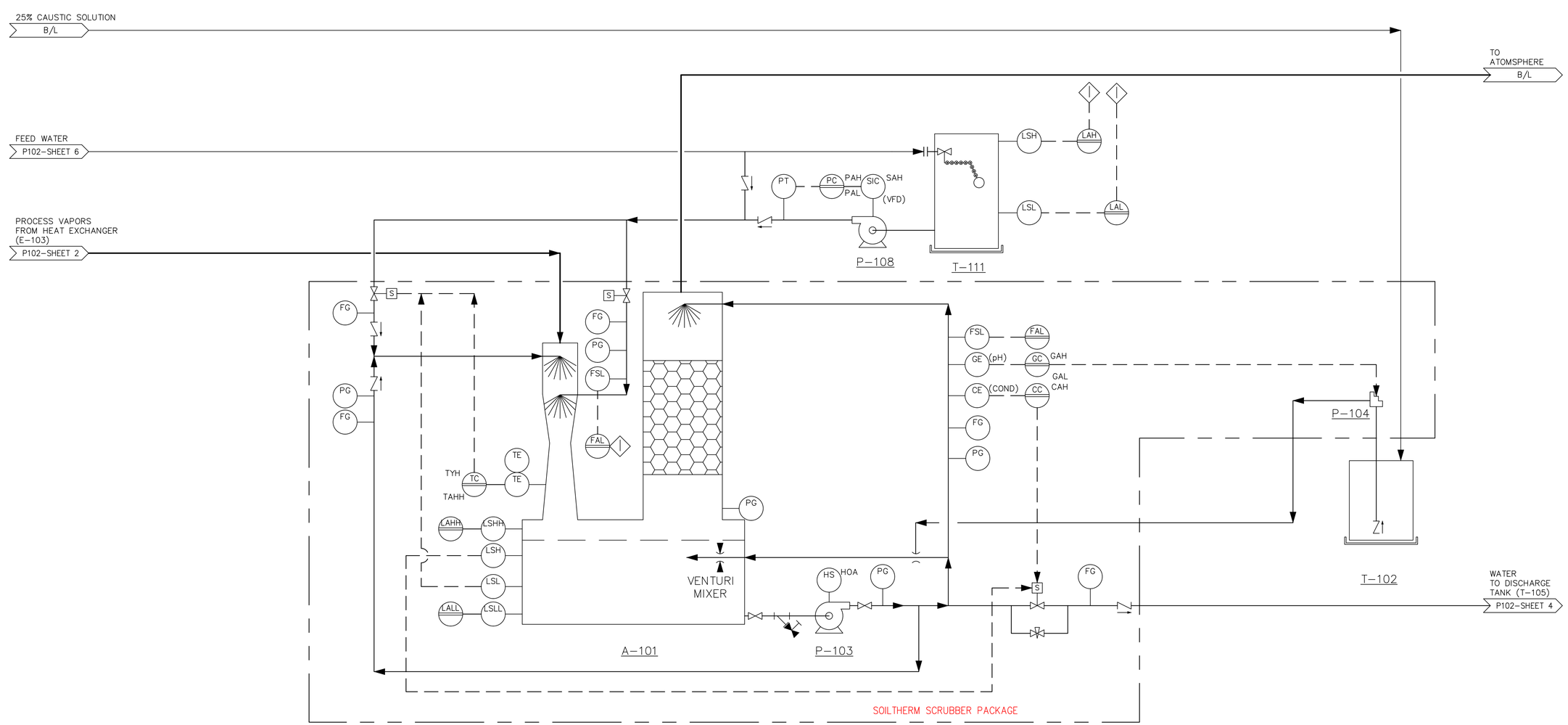

© COPYRIGHT 2013. TERRATHERM, INC. ALL RIGHTS RESERVED.

Equipment No.	A-101	P-103	P-108	T-111	T-102	P-104
Equipment Name	Scrubber	Scrubber Pump	Potable Water Pump	Potable Water Tank	Caustic Tank	Caustic Pump
Flow Rate / Capacity	1200 scfm	50 gpm	5 gpm			
Pressure	x	150 feet	100 feet			
Power						

THESE DRAWINGS HAVE BEEN PREPARED BASED ON PROJECT INFORMATION AVAILABLE TO DATE AND ARE SUITABLE FOR TERRATHERM'S USE DURING PROJECT IMPLEMENTATION. CHANGES TO THE DESIGN MADE BY TERRATHERM DURING IMPLEMENTATION WILL BE UPDATED AS PART OF THE AS-BUILT DRAWING PACKAGE TO BE SUBMITTED AFTER PROJECT COMPLETION.

STATE OF NEW YORK · DAVID MACONE · 080085 · LICENSED PROFESSIONAL ENGINEER · 10-21-13

NOT FOR CONSTRUCTION
DESIGN SUBMITTAL 10/11/13

REVISIONS

REV	DATE	BY	CHK	ENG	DESCRIPTION	APPROVED
F	10/11/13	DC	DB	DR	EDITS FROM COMMENTS FROM PHA HAZOP	

TERRATHERM

IMPOUNDMENTS 1 AND 2 PILOT DEMONSTRATION STUDY – BRIDGEWATER, NJ
P&ID; SCRUBBER PACKAGE

SIZE	FILE NO.	DWG NO.	REV
D	P102	P102	F

SCALE: NTS | DNS | SHEET 3 OF 6

THIS DRAWING AND THE INFORMATION IT CONTAINS ARE THE PROPERTY OF TERRATHERM, INC. AND MAY NOT BE USED IN PART OR IN WHOLE EXCEPT BY WRITTEN PERMISSION OF TERRATHERM, INC.

NO. T19

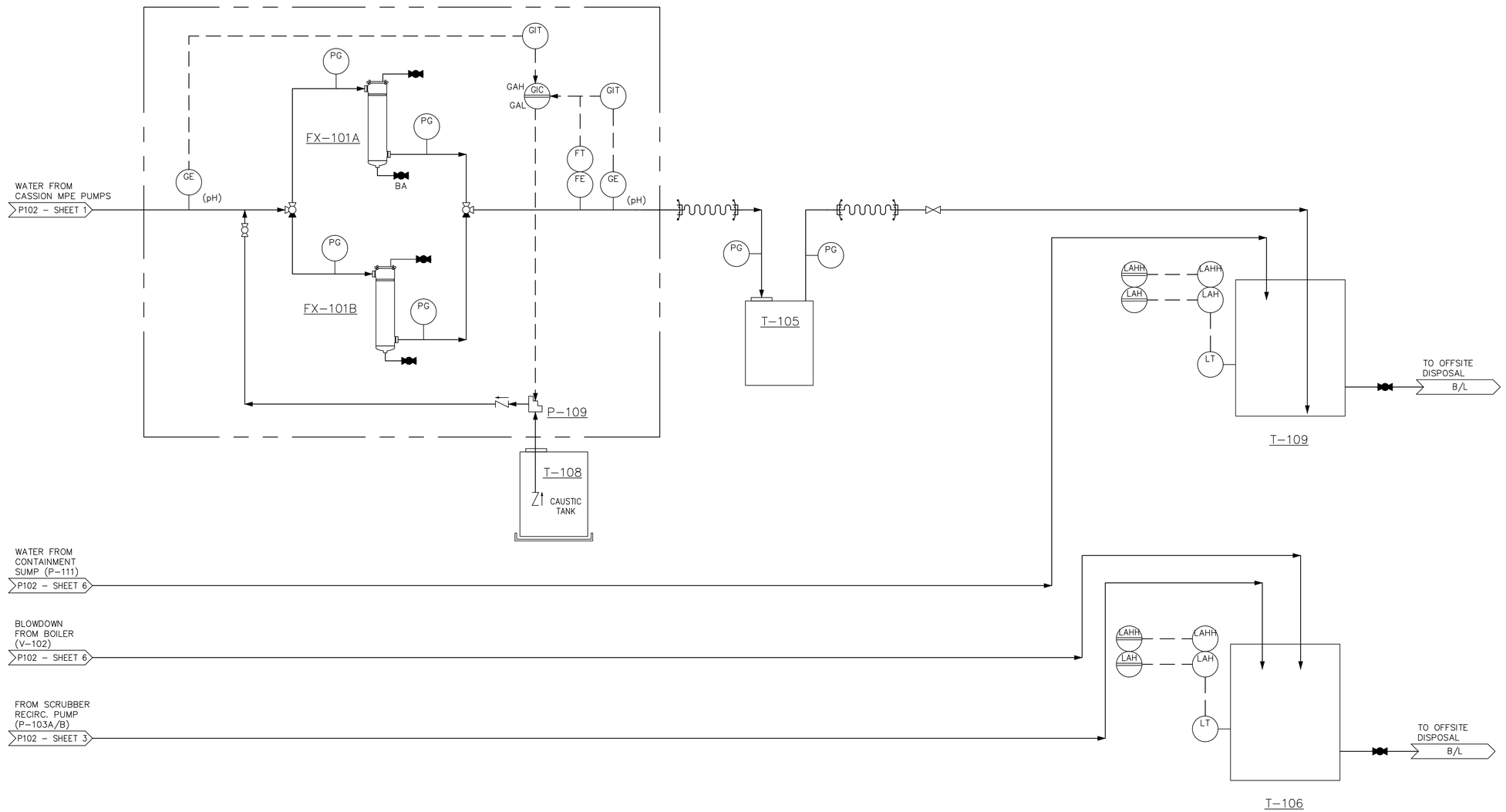

NOTE: SECONDARY CONTAINMENT PROVIDED BY CONTAINMENT LINER UNLESS OTHERWISE NOTED.

© COPYRIGHT 2013. TERRATHERM, INC. ALL RIGHTS RESERVED.

Equipment No.	C-103	FX-101A/B	T-104	T-106	T-109
Equipment Name	Organic Clay	Bag Filters	Caustic Tank	Discharge Tank	Discharge Tank
Flow Rate / Capacity	55 gallons	5 gpm	30 gallons	10,000 gallons	10,000 gallons
Pressure	x	150 feet	x	x	x
Power	x	x	x	x	x

THESE DRAWINGS HAVE BEEN PREPARED BASED ON PROJECT INFORMATION AVAILABLE TO DATE AND ARE SUITABLE FOR TERRATHERM'S USE DURING PROJECT IMPLEMENTATION. CHANGES TO THE DESIGN MADE BY TERRATHERM DURING IMPLEMENTATION WILL BE UPDATED AS PART OF THE AS–BUILT DRAWING PACKAGE TO BE SUBMITTED AFTER PROJECT COMPLETION.

STATE OF NEW YORK · DAVID MACONE · 080085 · LICENSED PROFESSIONAL ENGINEER
10-29-13

NOT FOR CONSTRUCTION
DESIGN SUBMITTAL 10/11/13

REVISIONS

REV	DATE	BY	CHK	ENG	DESCRIPTION	APPROVED
F	10/11/13	DC	DB	DR	EDITS FROM COMMENTS FROM PHA HAZOP	

TERRATHERM

IMPOUNDMENTS 1 AND 2 PILOT DEMONSTRATION STUDY – BRIDGEWATER, NJ
P&ID; LIQUID TREATMENT SYSTEM

SIZE	FILE NO.	DWG NO.	REV
D	P102	P102	F

SCALE: NTS | DNS | SHEET 4 OF 6

THIS DRAWING AND THE INFORMATION IT CONTAINS ARE THE PROPERTY OF TERRATHERM, INC. AND MAY NOT BE USED IN PART OR IN WHOLE EXCEPT BY WRITTEN PERMISSION OF TERRATHERM, INC.

NO. T20

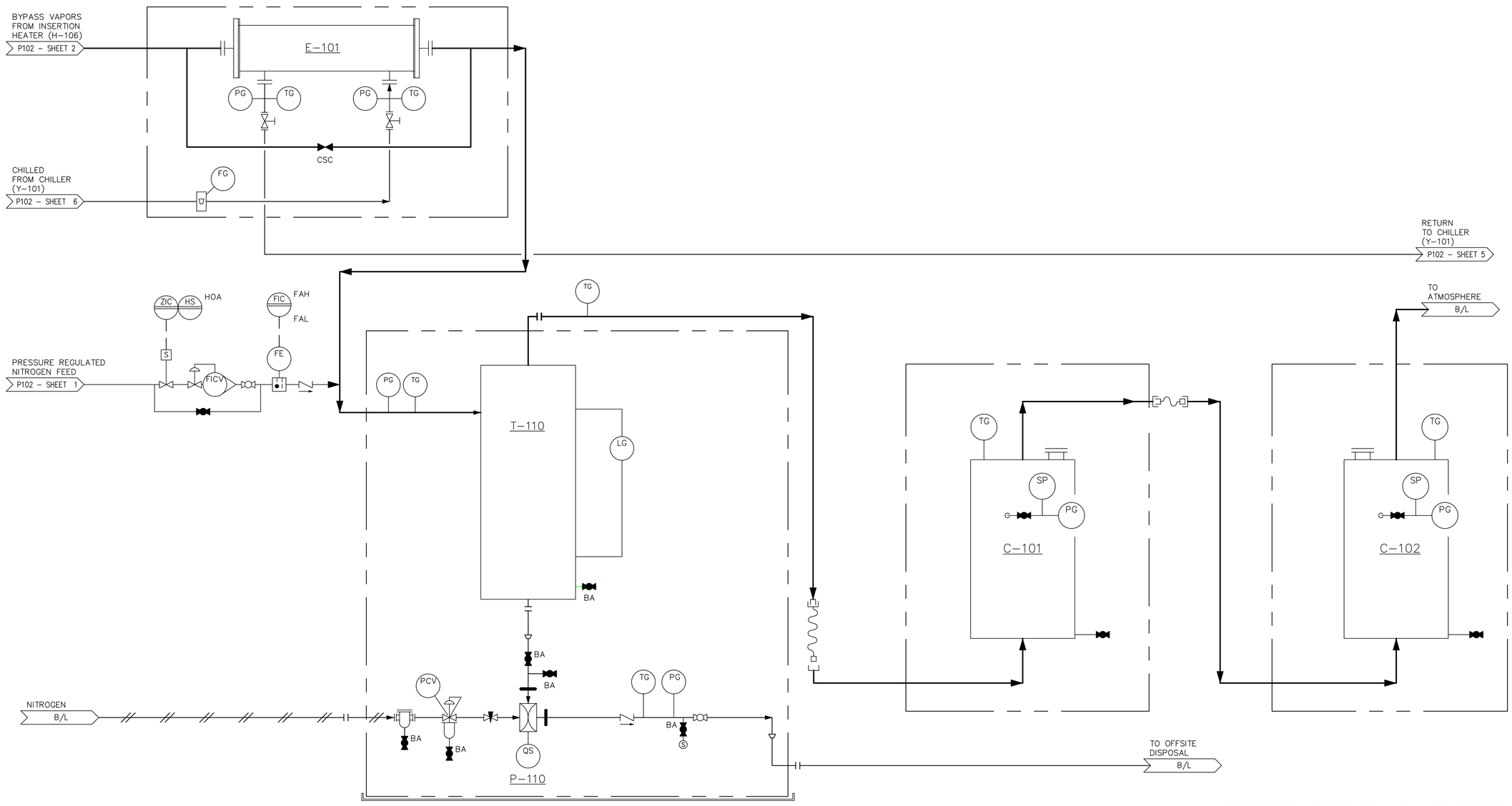

© COPYRIGHT 2013. TERRATHERM, INC. ALL RIGHTS RESERVED.

Equipment No.	E-101	T-110	C-101	C-102	P-110
Equipment Name	Condenser Heat Exchanger	Condensate Tank	Sorbent Media Vessels	Sorbent Media Vessels	Condensate Pump
Flow Rate / Capacity			100 SCFM	100 SCFM	5 gpm
Pressure	5 PSIG	+/- 2 PSIG	5 PSIG	5 PSIG	60 feet
Power			X	X	Pneumatic

THESE DRAWINGS HAVE BEEN PREPARED BASED ON PROJECT INFORMATION AVAILABLE TO DATE AND ARE SUITABLE FOR TERRATHERM'S USE DURING PROJECT IMPLEMENTATION. CHANGES TO THE DESIGN MADE BY TERRATHERM DURING IMPLEMENTATION WILL BE UPDATED AS PART OF THE AS-BUILT DRAWING PACKAGE TO BE SUBMITTED AFTER PROJECT COMPLETION.

STATE OF NEW YORK
DAVID MACONE
080085
LICENSED PROFESSIONAL ENGINEER
10-21-13

NOT FOR CONSTRUCTION
DESIGN SUBMITTAL 10/11/13

REVISIONS

REV	DATE	BY	CHK	ENG	DESCRIPTION	APPROVED
F	10/11/13	DC	DB	DR	EDITS FROM COMMENTS FROM PHA HAZOP	

TERRATHERM

IMPOUNDMENTS 1 AND 2 PILOT DEMONSTRATION STUDY – BRIDGEWATER, NJ
P&ID; ALTERNATE BYPASS SYSTEM

SIZE	FILE NO.	DWG NO.	REV
D	P102	P102	F

SCALE: NTS DNS SHEET 5 OF 6

THIS DRAWING AND THE INFORMATION IT CONTAINS ARE THE PROPERTY OF TERRATHERM, INC. AND MAY NOT BE USED IN PART OR IN WHOLE EXCEPT BY WRITTEN PERMISSION OF TERRATHERM, INC.

NO. T21

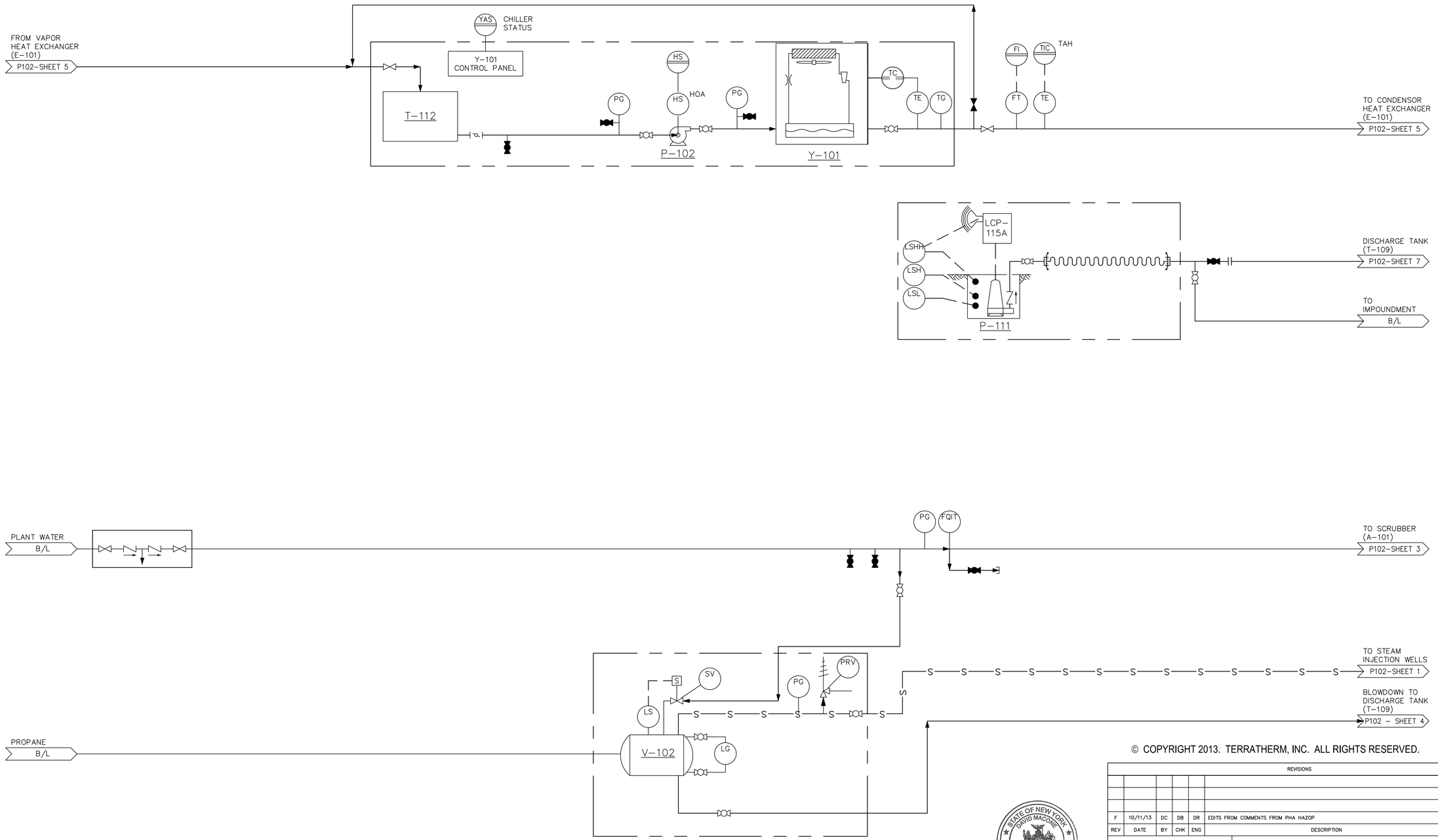

Equipment No.	T-112	Y-101	V-102	P-102	P-111
Equipment Name	Chiller Water Tank	Chiller	Steam Boiler	Chiller Recirc. Pump	Containment Pump
Flow Rate / Capacity		15 TON		40 gpm	25 gpm
Pressure				120 feet	60 feet
Power					

THESE DRAWINGS HAVE BEEN PREPARED BASED ON PROJECT INFORMATION AVAILABLE TO DATE AND ARE SUITABLE FOR TERRATHERM'S USE DURING PROJECT IMPLEMENTATION. CHANGES TO THE DESIGN MADE BY TERRATHERM DURING IMPLEMENTATION WILL BE UPDATED AS PART OF THE AS-BUILT DRAWING PACKAGE TO BE SUBMITTED AFTER PROJECT COMPLETION.

STATE OF NEW YORK
DAVID MACONE
080085
LICENSED PROFESSIONAL ENGINEER
10-24-13

NOT FOR CONSTRUCTION
DESIGN SUBMITTAL 10/11/13

© COPYRIGHT 2013. TERRATHERM, INC. ALL RIGHTS RESERVED.

REVISIONS

REV	DATE	BY	CHK	ENG	DESCRIPTION	APPROVED
F	10/11/13	DC	DB	DR	EDITS FROM COMMENTS FROM PHA HAZOP	

TERRATHERM

IMPOUNDMENTS 1 AND 2 PILOT DEMONSTRATION STUDY – BRIDGEWATER, NJ
P&ID; UTILITIES

SIZE D | FILE NO. P102 | DWG NO. P102 | REV F

SCALE: NTS | DNS | SHEET 6 OF 6

THIS DRAWING AND THE INFORMATION IT CONTAINS ARE THE PROPERTY OF TERRATHERM, INC. AND MAY NOT BE USED IN PART OR IN WHOLE EXCEPT BY WRITTEN PERMISSION OF TERRATHERM, INC.

NO. T22

Appendix B
Project Schedule

Appendix B: American Cyanamid Superfund Site, Construction Schedule for the Impoundment 1 and 2 FFS Process

ID	Task Name	Duration	Start	Finish	Predecessors
1	**Offsite Activites**	**92 days**	**Fri 7/26/13**	**Mon 12/2/13**	
2	Caisson Fabrication	27 days	Mon 9/16/13	Tue 10/22/13	
3	Flexifloat Procurement/Shipping	22 days	Fri 7/26/13	Mon 8/26/13	
4	Thermal Oxidizer Fabrication	51 days	Mon 9/23/13	Mon 12/2/13	
5	**Site Infrastructure**	**81 days**	**Mon 8/5/13**	**Mon 11/25/13**	
6	Erosion and Sediment Controls	3 days	Mon 8/5/13	Wed 8/7/13	
7	Fencing Removal and Road Install	4 days	Thu 8/8/13	Tue 8/13/13	6
8	Gabion Basket and Anchors Installation	21 days	Wed 8/28/13	Wed 9/25/13	
9	Bench Construction	3 days	Thu 9/26/13	Mon 9/30/13	8
10	Safety Rail Installation	2 days	Tue 10/1/13	Wed 10/2/13	9
11	Decon Pad Installation	2 days	Fri 11/22/13	Mon 11/25/13	10FS+36 days
12	Install Flexifloats	10 days	Fri 10/11/13	Thu 10/24/13	
13	Clay Survey Drilling	5 days	Mon 10/21/13	Fri 10/25/13	
14	Caisson Delivery to Site	3 days	Wed 10/23/13	Fri 10/25/13	2
15	Caisson Installation	3 days	Tue 10/29/13	Thu 10/31/13	14FS+1 day
16	**In Situ Thermal Treatment**	**106 days**	**Fri 10/25/13**	**Fri 3/21/14**	
17	Delivery of Thermal Oxidizer to Site	1 day	Mon 12/2/13	Mon 12/2/13	4FS-1 day
18	Construct Thermal Treatment System	35 days	Fri 10/25/13	Thu 12/12/13	12
19	Shakedown of Thermal System	7 days	Fri 12/13/13	Mon 12/23/13	18
20	Heating to Target Temperature	17 days	Tue 12/24/13	Wed 1/15/14	19
21	Thermal Treatment (48 days)	42 days	Thu 1/16/14	Fri 3/14/14	20
22	Post Treatment Vapor Extraction	11 days	Fri 3/7/14	Fri 3/21/14	
23	**Stabilization/Solidification**	**39 days**	**Mon 3/17/14**	**Thu 5/8/14**	
24	Mobilize/Setup S/S Equipment	6 days	Mon 3/17/14	Mon 3/24/14	21
25	Homogenization Process	6 days	Tue 3/25/14	Tue 4/1/14	24
26	Removal of material from caisson	11 days	Thu 3/27/14	Thu 4/10/14	24FS+2 days
27	Sample Analysis of material	20 days	Fri 4/11/14	Thu 5/8/14	26
28	**Pilot Test Reporting**	**97 days**	**Fri 5/23/14**	**Mon 10/6/14**	
29	Subcontractor Reporting and Lab Analysis	26 days	Fri 5/23/14	Fri 6/27/14	27FS+10 days
30	Overall Pilot Test Report Preparation	28 days	Mon 6/30/14	Wed 8/6/14	29
31	Submit Pilot Test Report to EPA	0 days	Wed 8/6/14	Wed 8/6/14	30
32	EPA Review of Pilot Test Report	43 days	Thu 8/7/14	Mon 10/6/14	31
33	**FFS**	**76 days**	**Thu 8/7/14**	**Thu 11/20/14**	
34	Prepare Technology Evaluation Presentation	15 days	Thu 8/7/14	Wed 8/27/14	31
35	EPA Meeting on Technology Evaluation Presen	1 day	Tue 9/2/14	Tue 9/2/14	34FS+3 days
36	EPA Review of Technology Evaluation	5 days	Wed 9/3/14	Tue 9/9/14	35
37	Prepare Screening of Alternatives Presentation	15 days	Wed 9/10/14	Tue 9/30/14	36
38	EPA Comments on Screening of Alternative Pre	15 days	Wed 10/1/14	Tue 10/21/14	37
39	Prepare Draft FFS	22 days	Wed 10/22/14	Thu 11/20/14	38
40	Submission of Draft FFS to EPA	0 days	Thu 11/20/14	Thu 11/20/14	39

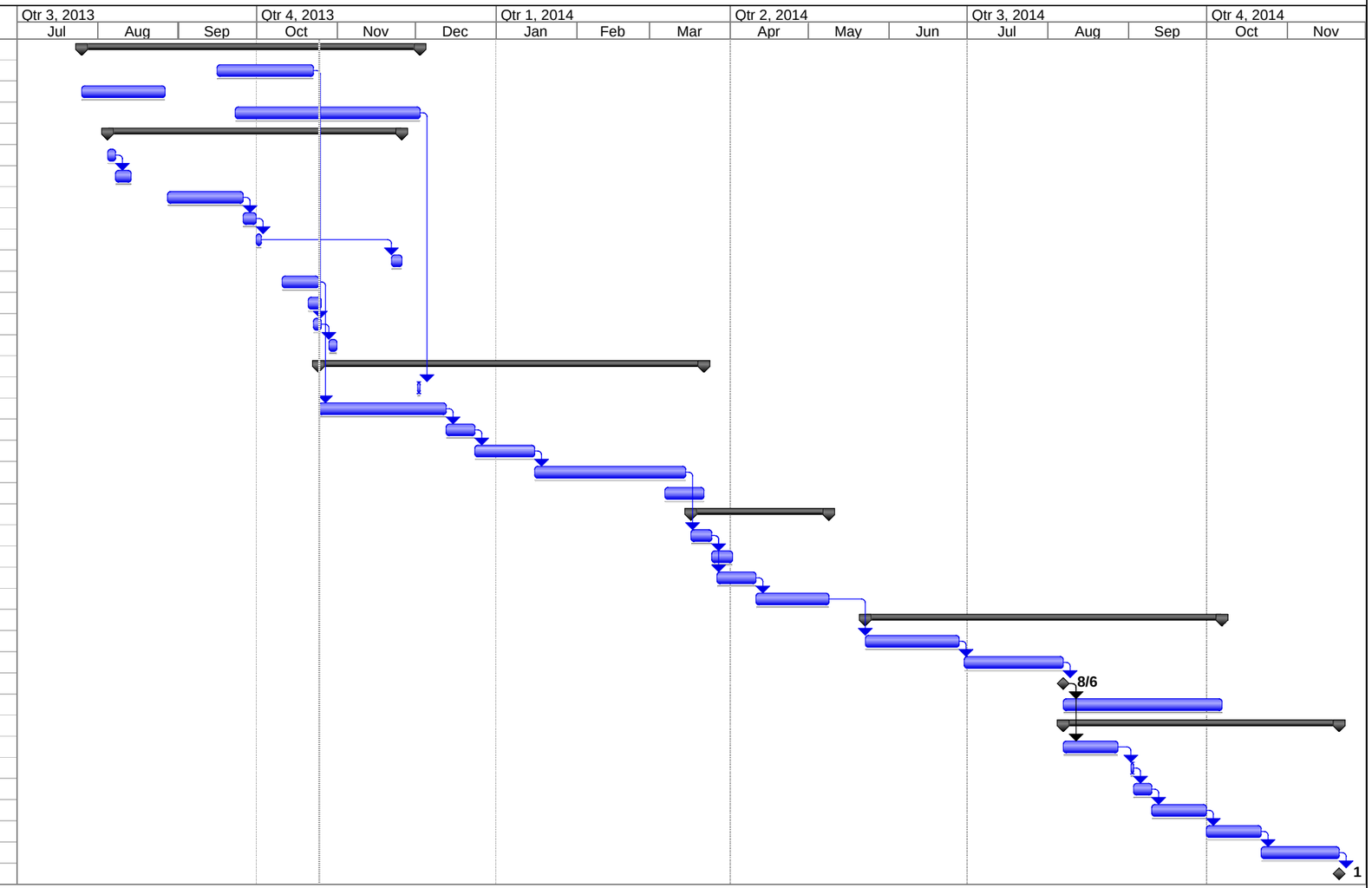

Project: Impound 1-2 FFS Schedule cc
Date: Fri 10/25/13

Task | Split | Progress | Milestone | Summary | Project Summary | External Tasks | External Milestone | Deadline