FINAL
OPERATIONS, MAINTENANCE & PERFORMANCE MONITORING PLAN
DAPL EXTRACTION PILOT TEST

OLIN CHEMICAL SUPERFUND SITE
51 EAMES STREET
WILMINGTON, MASSACHUSETTS

Submitted to:

United States Environmental Protection Agency
Region I – New England
5 Post Office Square, Suite 100; Mail Code 05RR07-4
Boston, Massachusetts 02109-3912

Submitted by:

Olin Corporation
3855 North Ocoee Street; Suite 200
Cleveland, Tennessee 37312

Prepared by:

AMEC Environment & Infrastructure, Inc.
511 Congress Street, Suite 200
Portland, Maine 04101

October 2012

SEMS Doc ID 647004

OPERATIONS, MAINTENANCE & PERFORMANCE MONITORING PLAN
DAPL EXTRACTION PILOT TEST

OLIN CHEMICAL SUPERFUND SITE
51 EAMES STREET
WILMINGTON, MASSACHUSETTS

Submitted to:

United States Environmental Protection Agency
Region I – New England
5 Post Office Square, Suite 100; Mail Code 05RR07-4
Boston, Massachusetts 02109-3912

Submitted by:

Olin Corporation
3855 North Ocoee Street; Suite 200
Cleveland, Tennessee 37312

Prepared by:

AMEC Environment & Infrastructure, Inc.
511 Congress Street, Suite 200
Portland, Maine 04101

October 2012

Peter Thompson
Project Manager

Michael J. Murphy
Project Principal

Mark Peters, PE
Principal Engineer

TABLE OF CONTENTS

LIST OF FIGURES v
LIST OF TABLES v
LIST OF APPENDICES v
LIST OF ACRONYMS AND ABBREVIATIONS vi

1.0 INTRODUCTION 1-1
1.1 DAPL Extraction Pilot Test Objectives 1-1
1.1.1 DAPL Geochemical Considerations 1-1
1.1.2 DAPL Density Flow Considerations 1-2
1.2 Key Contacts 1-3

2.0 DAPL EXTRACTION AND MONITORING SYSTEM 2-1
2.1 Extraction System Summary 2-1
2.2 Monitoring Well Network 2-2
2.2.1 Induction Logging Wells 2-3
2.2.2 Multilevel Piezometer Construction 2-3

3.0 DAPL EXTRACTION AND STORAGE SYSTEM 3-1
3.1 DAPL Extraction Pump 3-1
3.1.1 Extraction Pump Description 3-1
3.1.2 Extraction Pump Instrumentation and Controls 3-1
3.1.3 Operational Sequence 3-2
3.2 DAPL Carrier Piping 3-3
3.2.1 Carrier Piping Description 3-3
3.2.2 Carrier Piping Instrumentation and Controls 3-4
3.2.3 Operational Sequence 3-4
3.3 DAPL Storage Tank 3-5
3.3.1 Storage Tank Description 3-5
3.3.2 Storage Tank Instrumentation and Controls 3-5
3.3.3 Operational Sequence 3-6
3.4 Control System (West Warehouse) 3-7
3.4.1 Control System Description 3-7
3.4.2 Instrumentation and Controls 3-7
3.4.3 Operation Sequence 3-7

4.0 HEALTH AND SAFETY 4-1
4.1 Directions to Hospital 4-1
4.2 Safety Shower / Eyewash Stations 4-2
4.3 Safety Equipment 4-2
4.4 Personal Protective Equipment Requirements 4-2
4.5 Fire Extinguisher 4-2
4.6 Telephone 4-3
4.7 Lockout/Tagout 4-3
4.8 Personnel Training and License Requirements 4-3

5.0 SYSTEM START UP AND SHUT DOWN PROCEDURES 5-1
5.1 System Start Up 5-1
5.2 System Shut Down 5-1

6.0 TANK TRUCK LOADING OPERATIONS 6-1
6.1 Site-Specific Procedures.....6-1

7.0 ROUTINE OPERATION AND MAINTENANCE 7-1
7.1 Leaks and Spills.....7-2
7.2 Retention of Records 7-2

8.0 TROUBLESHOOTING 8-1

9.0 PERFORMANCE MONITORING.....9-1
9.1 Monitoring Approach.....9-1
9.1.1 Baseline Monitoring Phase.....9-1
9.1.2 DAPL Extraction Monitoring Period 9-2
9.2 Monitoring Schedule 9-3
9.2.1 Baseline Monitoring Period.....9-3
9.2.2 DAPL Extraction Period.....9-4
9.3 Sample Collection and Analysis 9-4
9.3.1 Groundwater Sample Collection 9-5
9.3.2 Groundwater Sample Analysis 9-6
9.3.3 DAPL Sample Collection and Analysis 9-7
9.3.4 Equipment Decontamination.....9-7
9.3.5 Investigation Derived Waste 9-7
9.4 Data Reporting and Assessment.....9-8
9.4.1 Interface Criteria.....9-8
9.4.2 Column Study Observations 9-8

10.0 REPORTING SCHEDULE.....10-1

11.0 REFERENCES.....11-1

LIST OF FIGURES

Figure 1 Site Location
Figure 2 Off-PWD DAPL Extraction Pilot Area Bedrock Contours
Figure 3 Extraction and Monitoring Well Configuration
Figure 4 DAPL Removal Pilot Test Decision Tree

LIST OF TABLES

Table 1 Checklist for DAPL Transfer
Table 2 2010 Monitoring Data from MP-2
Table 3 Monitoring Schedule - Baseline Period
Table 4 Monitoring Schedule - Pumping Rate 1
Table 5 Monitoring Schedule - Pumping Rate 2
Table 6 Monitoring Schedule - Pumping Rate 3
Table 7 Monitoring Schedule - Extended Pumping Period
Table 8 Analytical Program Summary

LIST OF APPENDICES

Appendix A DAPL Extraction System Drawings
Appendix B Well Installation Construction Diagrams
Appendix C Standard Operating Procedures for Induction Logging
Appendix D Equipment and Instrumentation Documentation
Appendix E Vendor Contact Information

LIST OF ACRONYMS AND ABBREVIATIONS

AMEC	AMEC Environment & Infrastructure, Inc.
CMR	Code of Massachusetts Regulations
COC	chain of custody
DAPL	Dense Aqueous Phase Liquid
DAPL Pilot	DAPL Extraction Pilot Test
DI	deionized
Fe_2O_3	ferric oxide
FeOH	ferrous hydroxide
gpm	gallons per minute
HASP	Health and Safety Plan
HAZWOPER	hazardous waste operations training
HDPE	high density polyethylene
HMI	human machine interface
HTCP	heat trace control panel
Hz	hertz
I/CO	inspection/cleanout manhole
I/O	input/output
IDW	investigation derived waste
IRSWP	Interim Response Steps Work Plan
LOTO	lockout/tagout
mA	milliamp
MCP	Massachusetts Contingency Plan
MassDEP	Massachusetts Department of Environmental Protection
mg/L	milligrams per liter
off-PWD	off-Property West Ditch
Olin	Olin Corporation
OM&PM	Operation, Maintenance & Performance Monitoring Plan
ORP	oxidation-reduction potential
ϕ	phase
P&ID	Piping and Instrumentation Diagram
PID	photoionization detector
PLC	programmable logic controller
PPE	personal protective equipment
psi	pounds per square inch
PVC	polyvinyl chloride

QA/QC	Quality Assurance and Quality Control
RPD	relative percent difference
SVOC	semi-volatile organic compound
SOP	standard operating procedure
TEFC	totally enclosed fan cooled
THTCF	tank heat trace control fault
THTCP	tank heat trace control panel
µmhos/cm	micro-ohms per centimeter
USEPA	United States Environmental Protection Agency
V	Volt
VFD	variable frequency drive
VOC	volatile organic compound

1.0 INTRODUCTION

This Operation, Maintenance & Monitoring Plan (Plan) has been prepared for the Olin Chemical Superfund Site (Site) in Wilmington, Massachusetts on behalf of Olin Corporation (Olin) by AMEC Environment & Infrastructure Inc. (AMEC). Figure 1 shows the location of the Site. This Plan has been prepared to aid project personnel in monitoring, operating, and maintaining the Dense Aqueous Phase Liquid (DAPL) extraction system at the 51 Eames Street Superfund Site (Site). Section 1.0 of this manual provides general Site and background information. Section 2.0 describes the DAPL extraction well and monitoring well network construction details. The DAPL extraction and storage system is described in Section 3.0., and health and safety information is presented in Section 4.0. System start-up and shut down procedures are described in Section 5.0. Section 6.0 describes tank truck loading procedures. Routine operations and maintenance procedures are summarized in Section 7.0. Extraction pump trouble shooting is discussed in Section 8.0. Section 9.0 outlines DAPL recovery performance monitoring procedures, with the reporting schedule addressed in Section 10.0. Section 11.0 outlines the procedure to update this OM&PM Plan.

The DAPL Extraction Pilot Test (DAPL Pilot) is intended to evaluate the feasibility of DAPL extraction in the off-Property West Ditch (off-PWD) Study Area, and to assess the hydrogeologic and geochemical impact of DAPL extraction on groundwater and surface water quality in areas proximate to the extraction operations.

This Plan identifies the schedule of implementation of the DAPL Extraction Pilot Test and the criteria that will be used to evaluate the effectiveness of the DAPL recovery during and following the Pilot Test. The Plan describes the monitoring well network which will be used to evaluate whether DAPL removal results in a disturbance of the DAPL/Diffuse Layer and shallow groundwater interface, and if any such disturbance causes increased concentrations of contamination in the overlying groundwater.

1.1 DAPL Extraction Pilot Test Objectives

The overall objective of the DAPL Pilot is assess the feasibility of recovering DAPL from the subsurface in a manner that minimizes disturbance of the DAPL pool surface and mixing with overlying diffuse groundwater. Information developed during the DAPL Pilot will be used in the Operable Unit 3 Feasibility Study for groundwater.

1.1.1 DAPL Geochemical Considerations

Column flushing studies conducted by Geomega (Geomega, 2004a, 2004c) have clearly demonstrated the potential for precipitation of inorganic minerals and pore throat clogging (i.e., the blocking of the smaller apertures within the connected inter-granular pore spaces between soil particles) when DAPL is displaced by higher pH groundwater, thus changing Eh and pH conditions within the aquifer. At the lower pH conditions that are characteristic of DAPL, the majority of the dissolved iron is present as ferrous iron. As pH increases, the mineralization

mechanism is initiated by oxidation of soluble ferrous to insoluble ferric iron and precipitation of iron oxides. Precipitates of aluminum-chromium sulfate complexes then form on the surface of the iron oxides. These mineral phases are not only capable of clogging aquifer pore spaces, but presumably also extraction well screens, sand pack, and piping when appropriate conditions are created. One of the extraction test objectives is to remove DAPL in a manner that minimizes intrusion of overlying groundwater and Diffuse Layer into the DAPL, and thereby preventing or minimizing undesirable mineral formation.

The DAPL will be extracted from the bottom of the DAPL layer at controlled rates in order to avoid uncontrolled, large scale mixing of DAPL with Diffuse Layer and overlying groundwater, which could potentially cause precipitation reactions that could clog the subsurface soil matrix and potentially make further DAPL extraction difficult or infeasible.

1.1.2 DAPL Density Flow Considerations

The movement of the DAPL is governed by density-driven flow mechanisms that are dominated by convection. The DAPL is contained within a shallow sloping bedrock depression, which forms a “bowl shaped” sloping aquifer with a central low point, or bottom. Extraction of fluid from the low point of this depression will result in DAPL movement along this sloping boundary toward the central extraction point. For a DAPL removal strategy to be effective, the rate at which the DAPL is pumped should not exceed the density driven flow rate towards the extraction point. Pumping at an excessive rate over an extended period of time could create several general conditions that would favor failure of the extraction strategy. These include:

- Causing the DAPL pool to become disconnected and intruded by Diffuse Layer and overlying regions of groundwater resulting in mineralization and aquifer clogging;
- Causing excessive DAPL drawdown of the DAPL/Diffuse Layer interface in vicinity of the pumping wells with similar detrimental effects;
- Causing a disturbance of either the DAPL or the Diffuse Layer could induce convective flow patterns that may exacerbate the existing conditions (e.g., cause contamination to spread over a broader area, increase concentrations at shallow depths in the aquifer and/or in off-PWD surface water); and
- Causing an expansion of the diffuse layer thickness.

Geomega (Geomega, 2004c) has made an initial estimate of the density driven flow rate for the upper DAPL pool in the off-PWD Study Area. This estimate, which ranges from 0.2 to 0.8 gallons per minute (gpm), is a function of the DAPL density, bedrock slope, aquifer porosity and hydraulic conductivity. The DAPL pool is known to be density stratified, and density is a variable that will change with time and presumably affect sustainable DAPL pumping rates. Mineral formation within the aquifer, discussed previously, could also impact aquifer porosity and conductivity. Sustainable pumping rates will be evaluated by increasing the pumping rate in step changes and monitoring drawdown of the DAPL/Diffuse Layer interface and associated chemical changes in the extracted DAPL.

The monitoring system to evaluate feasibility of extracting the DAPL required installation of a specialized monitoring network including induction logging wells and closely spaced multi-port wells to observe conditions in proximity to the extraction well with a high degree of resolution. In additional to the various wells described above, ammonia will be monitored at established in overlying groundwater at specific locations.

1.2 Key Contacts

The following table lists the key contacts for the DAPL Extraction System Operations.

Name	Title	Telephone
Brian Guichard Olin Corporation 51 Eames Street Wilmington, MA 01887	Facility Manager (Emergency Coordinator)	Office: 978-658-6121 Mobile: 508-265-8615
Mr. Leroy Johnson Olin Corporation 51 Eames Street Wilmington, MA 01887	Extraction System Operator	Office: 978-658-6121 Mobile: 508-265-5143
James Cashwell Olin Corporation 3855 Ocoee St, Suite 200 Cleveland, TN 37312	Principal Environmental Specialist	Office: 423-336-4012 Mobile: 423-650-1836

The following are the key regulatory agency contacts:

Name	Title	Telephone
Jim DiLorenzo	EPA Remedial Project Manager	617-918-1247
Joseph Coyne	MassDEP contact	617-348-4066

2.0 DAPL EXTRACTION AND MONITORING SYSTEM

2.1 Extraction System Summary

The DAPL Pilot is being conducted within the off-PWD DAPL Pool, which is contained within a broad bedrock depression with an interpreted extent as shown on Figure 2. The DAPL extraction well and monitoring well network are located on the property at 8 Jewel Drive. The DAPL Pilot system consists of a single extraction well and a closely spaced monitoring well network proximate to the extraction well. The extraction well (EX-1) is located in the deepest accessible portion of the bedrock depression where DAPL approaches its maximum thickness. The extracted DAPL will be pumped through a heat-traced, dual-wall conveyance pipe to a dual-wall storage tank located on the Olin property at 51 Eames Street where it will be offloaded to tanker trucks for off-site transport and disposal.

Details of the extraction system are provided in construction plans and specifications in Appendix A. Major components of the system are described below and in subsequent sections. The following subsection also describes the extraction system and monitoring network. The DAPL will be extracted from a well screened within the bottom five feet of the DAPL pool. At the extraction well, the ground surface elevation is approximately 88 feet MSL, based on prior spot elevation surveys. The top of the DAPL pool is estimated at 55 feet MSL and the top of bedrock near 43 feet MSL. The DAPL pool has an estimated thickness of 12 feet[1]. Extraction well installation is described in more detail below.

The extraction well is located within a 6-foot by 6-foot by 3-foot 11 inch deep enclosure vault with double-leaf access doors on the 8 Jewel drive property. The extraction pump is an electrically-operated variable speed peristaltic type pump with maximum 11 gpm flow rate and rated discharge pressure of 230 pounds per square inch (psi). The pump discharges through a conveyance system comprised of a 1½-inch diameter high density polyethylene (HDPE) carrier pipe contained within a 4-inch diameter containment pipe. The use of a peristaltic pump isolates the mechanical pump parts from the DAPL to address potential corrosion related issues.

The carrier pipe runs in an underground utility trench from the pump enclosure vault through a series of Inspection/Cleanout (I/CO) structures to I/CO-3 located on the 51 Eames Street Olin property. From there, the carrier pipe runs above ground on the Olin property where it discharges into an above-ground 8,700 gallon dual-wall HDPE storage tank located on the dock of the West Warehouse building.

Electrical service to operate the pump is provided by conductors installed from the extraction system main control panel located on the Olin 51 Eames Street property at the West Warehouse through electrical conduit alongside the DAPL carrier pipe. Heat trace and

[1] The most recent estimate of DAPL thickness in the off-PWD Study Area is based on the results of the inductance logging performed in July 2010, as summarized in Geomega (2011) and direct push investigations conducted and well installations completed in 2011.

instrumentation conduits also run alongside the carrier pipe. An electrical equipment rack at I/CO-3 provides 230 Volt (V) single-phase power service for the DAPL extraction pump.

Drawing C-101 shows the proposed Site Plan and Drawings C-201 through C-304 show equipment layouts and details. The Piping and Instrumentation Diagram (P&ID) for the DAPL extraction system is shown in Drawing D-601. Drawings E-001 and E-101 through E-103, along with E-601 and E-602, show electrical equipment plans and details. These drawings are included in Appendix A.

The extraction well is a 6-inch diameter, Schedule 40 polyvinyl chloride (PVC) well with a 5-foot long, continuous slot (0.010-inch) well screen installed approximately 40 to 45 feet below the ground surface. The extraction well was installed by rotosonic drilling methods to minimize physical disturbance of the formation. The extraction well includes a two foot sump installed into the top of bedrock. Above the sump, the well screens the bottom 5 feet of the DAPL which sits above the top of rock and a thin basal till zone. The sand pack constructed from #00 U.S Silica Filpro™ well sand, extends two feet above the top of screen and is sealed with three feet of bentonite chips. The remainder of the well annulus is grouted to the surface with a cement/bentonite grout.

The top of the riser section includes a transition to three five-foot sections of threaded carbon steel casing to facilitate completion of the well head vault and protection of the well. The bottom seven feet of the steel riser section was grouted in-place with cement allowing the uppermost five-foot section to be removed temporarily to facilitate placement of the vault and protect the well casing from potential damage. A ½ -inch diameter PVC drop tube is positioned within the bottom of the well screen and connected to the peristaltic pump.

2.2 Monitoring Well Network

The monitoring network around the pumping well includes two multilevel piezometers and two induction logging wells. The configuration of the monitoring well network was adapted to a revised location for the extraction well. The details of the well locations and configuration are depicted in Figure 2 and Figure 3. The multilevel piezometers are located at distances approximately 6 and 17 feet upgradient from the extraction well. The two induction monitoring wells are located at distances of approximately 19 and 34 feet upgradient from the extraction well. This configuration, as shown in Figure 3, pairs one induction logging well with a multilevel piezometer approximately 18 feet upgradient from the extraction well. This will be used to assess comparability of these two different monitoring approaches.

The installation of the monitoring wells was overseen by an experienced geologist along with USEPA oversight by Nobis Engineering. The borings for the wells were completed using rotosonic methods that provide a continuous soil core from ground surface. The boreholes were logged visually and the soils classified prior to installation of the monitoring wells and multilevel piezometers. Well construction diagrams for the monitoring network are included in Appendix B.

2.2.1 Induction Logging Wells

The induction logging wells are two-inch diameter, flush threaded, Schedule 40 PVC risers with a solid cap bottom. These wells were filled with deionized (DI) water as they were constructed and installed down the borehole to help overcome buoyancy. The DI water will remain in the wells for logging. The PVC induction wells were centered in the borehole and the annulus backfilled with # 00 U.S Silica Filpro™ well sand to near the ground surface. The drill casing was removed as the annulus was backfilled. The induction logging wells were completed within a flush-mounted road box. The road box was bedded in gravel to facilitate drainage.

The induction wells will be inductively logged prior to and during the extraction test period. The induction logging data will be plotted with depth from ground surface and the resulting profiles used to interpret the depth of the DAPL/diffuse groundwater interface. Multiple logging events will be compared to monitor perturbations or instability in the DAPL/diffuse groundwater interface during the extraction test. Two other wells, GW-43D and GW-42D, will also be inductively logged to observe conditions approximately 200 feet away in the Upper DAPL pool.

Induction logging will be completed with a Geonics EM39 probe that provides measurement of the electrical conductivity of the soil and fluids surrounding the monitoring well using an inductive electromagnetic technique. The unit has a large conductivity range, high sensitivity, and very low noise and drift, which will allow accurate measurement of subsurface conditions. This is the same type of probe used previously at the Site and will allow greater comparability with historical inductance logging data.

The probe will be lowered into the borehole and retrieved using a Geonics dedicated winch and console system. Measurements will be recorded with a digital data logger. The standard operating procedure for induction logging is included in Appendix C.

2.2.2 Multilevel Piezometer Construction

The 2-inch diameter multilevel piezometers were constructed using the Model 401 Waterloo System from Solinst™ with single stem PVC sample ports. The piezometers were constructed within a temporarily-cased 6-inch diameter borehole completed by rotosonic drilling methods. The casing was withdrawn as the annulus of the well was carefully backfilled using a tremie pipe with sand and bentonite chips around the sampling ports and riser pipe sections of the multilevel piezometer, respectively. The sand pack around the sample ports are # 000 U.S Silica Filpro™ well sand. After a sand pack was completed around a sample port, a bentonite pellet seal was placed between it and the next sand pack and sample port. The depth to ground surface and the diameter of the tubing were recorded in the log book and on a well construction diagram.

The number of multilevel ports that can be installed is dependent on the tubing diameter. A larger diameter port tubing (1/2” OD x 3/8”ID) was used to facilitate physical measurement of the potentiometric surface at three selected ports as shown on the construction diagrams. The other remaining port sample tubes are smaller diameter (3/8”OD x ¼”ID) to permit the tubing bundle to fit within the well casing and manifold. All ports are suitable for sample collection

using a peristaltic pump. The larger diameter tubing includes one port in the overlying groundwater, one port in the Diffuse Layer, and one port in the DAPL to allow physical measurement of potentiometric surfaces in all three of these zones.

3.0 DAPL EXTRACTION AND STORAGE SYSTEM

Construction of the DAPL extraction and monitoring wells was presented in Section 2.0. The following subsections describe the design basis and operation of the following individual process units leading from the well:

- DAPL Extraction Pump
- DAPL Carrier Piping
- DAPL Storage Tank
- Control System

3.1 DAPL Extraction Pump

3.1.1 Extraction Pump Description

The extraction well is equipped with a single DAPL extraction pump with the following specifications:

Parameter	Specifications
Type:	High performance hose pump (peristaltic pump)
Manufacturer/Model	Watson-Marlow Bredel #SPX25
Construction:	Cast iron with 316 SS frame, flanges, clamps, and hardware; epoxy shoes, and Buna seals
Capacity:	8 gpm continuous duty
Nominal Pump Diameter:	1 inch.
Maximum discharge pressure:	230 psi
Suction pressure:	28-foot lift
Motor:	1.0 hp TEFC
Operating Speed:	Variable frequency drive
Power Type:	230V, 60 Hz, 1ϕ

3.1.2 Extraction Pump Instrumentation and Controls

The following table lists the instruments and process IDs associated with the extraction pump and enclosure vault. Please refer to P&ID sheet D-601 in Appendix A for a depiction of the instrumentation.

Instrumentation/Process ID	Description
Extraction Pump and Pump Enclosure Vault	
HS-100	Hand Switch – emergency off at pump enclosure vault
HS-103	Hand switch – emergency off at main control panel

Instrumentation/Process ID	Description
Extraction Pump and Pump Enclosure Vault	
LS-105	Level Switch indicating extraction pump internal hose break
PIT-100	Pressure Indicator Transmitter for extraction pump discharge
FE-100	Flow element on extraction pump discharge
FIT-100	Flow Indicator Transmitter on extraction pump discharge
LSH-100	Level Switch High for pump enclosure vault sump
SC-100	Speed Control for extraction pump at main control panel
LAH-105	Level Alarm High for extraction pump internal hose break at main control panel
PAH-100	Pressure Alarm High for PIT-100 at main control panel
FQI-100A	Flow Totalizing Indicator for extraction pump discharge at main control panel (non-resettable)
FAH-100	Flow Alarm High for extraction pump discharge at main control panel
FAL-100	Flow Alarm Low for extraction pump discharge at main control panel
FQI-100B	Flow Totalizing Indicator for extraction pump discharge at main control panel (resettable by operator)
FI-100	Flow Indicator at main control panel

3.1.3 Operational Sequence

Pump operation (on/off) is controlled by “emergency off” push buttons at the pump enclosure vault (HS-100), main control panel (HS-103), electrical equipment rack (HS-200), and by the programmable logic controller (PLC) at the main control panel at West Warehouse. The operator is able to control extraction pump speed through a variable frequency drive (VFD) speed control adjust (SC-100) located at the main control panel.

A flow transmitter (FIT-100) on the DAPL carrier pipe provides a flow-proportioned 4-20 milliamp (mA) output signal to flow totalizers FQI-100A and FQI-100B and high and low flow alarms (FAH-100 and FAL-100). Flow totalizer FQI-100A totalizes quantity of pumped DAPL from inception and is not resettable. Flow totalizer FQI-100B totalizes current batch pumped flow and is configurable and resettable by the operator. A flow indicator (FI-100) in the main control panel provides remote flow indication for the operator. A pressure indicator transmitter (PIT-100) monitors pressure in the carrier pipe and provides a remote signal to the high pressure alarm.

Additional instrumentation consists of a high level switch (LSH-100) in the enclosure vault sump to monitor accumulation of liquid (in event of a leak within the vault) and provide an open/closed circuit signal to the PLC. A high level hose leak sensor (high level switch [LSH-105]) on the extraction pump is “normally closed” and opens at a too high lubricant/liquid level in the pump head, indicating failure of the pump hose and accumulation of liquid within the pump head.

During normal operation, the pump will operate continuously. The PLC will initiate the sequence for alarm conditions when the following conditions exist relative to the extraction pump system:

- FQI-100B reaches the batch set point
- PAH-100 exists (line pressure is too high)
- LSH-100 exists (extraction well sump is at high level)
- LAH-105 is active (high level hose leak sensor contacts open – hose break)
- FAH-100 or FAL-100 exists (high or low flow occurs in the DAPL carrier pipe)

Alarm conditions consist of immediately stopping the extraction pump, initiating the auto dialer, and activating the strobe at the main control panel. The system will remain inoperable under alarm condition until all alarm conditions are cleared and the reset button on the main control panel has been activated.

3.2 DAPL Carrier Piping

3.2.1 Carrier Piping Description

Extracted DAPL is conveyed from the extraction pump to the storage tank through 1½-inch diameter HPDE carrier piping inside of 4-inch diameter heat-traced and insulated containment piping. Between the pump enclosure vault and I/CO-3, the DAPL piping shares a common utility trench with one electric power feed conduit, two instrumentation conduits, and one heat-trace power conduit. Cleanout structures are provided to allow inspection and facilitate maintenance on the underground force main. Carrier piping and conduits were installed beneath the railroad tail track and spur are contained in Schedule-40 steel casing pipe sleeves. A spare pipe sleeve was installed under the rail lines. An equipment rack at I/CO-3 contains a panel mounted fused disconnect switch, power supply (MPZB), heat trace control panel (HTCPB), and emergency stop button (HS-103). The carrier piping and conduits run on above ground racks between I/CO-3 and the West Warehouse building.

Drawings C-101 and E-101 in Appendix A show the approximate location of the pump enclosure vault and carrier pipe routing. Drawings C-301 and D-601 show details of the pump enclosure vault and piping and instrumentation diagrams, respectively.

The I/CO manholes, leak detection manhole, and above ground pipe run are not equipped with lighting for inspection/repair/maintenance work after dark. A portable generator, kept at the Olin Property will be used to supply electricity for night time lighting and/or to operate electric hand tools.

3.2.2 Carrier Piping Instrumentation and Controls

The following table lists the instruments and process IDs associated with the DAPL carrier piping. Please refer to the P&ID sheet D-601 and Electrical sheet E-102 in Appendix A for a depiction of the instrumentation.

Instrumentation/Process ID	Description
DAPL Carrier Piping	
HS-103	Hand Switch – emergency off at I/CO-3 equipment rack
LSH-101	Level Switch High – inspection/cleanout manhole 1 (I/CO-1)
LSH-102	Level Switch High – inspection/cleanout manhole 2 (I/CO-2)
LSH-103	Level Switch High – leak detection manhole (LDM-1)
LSH-104	Level Switch High – inspection/cleanout manhole 4 (I/CO-2)
HTCPB	Heat Trace Controller Panel – for underground piping
LAH-101	Level Alarm High – inspection/cleanout manhole 1 (I/CO-1)
LAH-102	Level Alarm High – inspection/cleanout manhole 2 (I/CO-1)
LAH-103	Level Alarm High – leak detection manhole 1 (LDM-1)
LAH-104	Level Alarm High – inspection/cleanout manhole 3 (I/CO-3)
YAH-100	Heat Trace Controller Fault

3.2.3 Operational Sequence

During normal operation, the pump will operate continuously. Each I/CO manhole and Leak Detection Manhole (LDM-1) are fitted with a high level switch that provides an open/closed circuit signal to the PLC at the main control panel. In the event of a malfunction in the heat trace system, Heat Trace Controller Panel B provides a fault signal to the PLC relative to the heat trace cable between I/CO-3 and the enclosure vault.

The PLC will initiate the sequence for alarm conditions when the following conditions exist in one or more of the following structures:

- Manhole(s) (I/CO-1, I/CO-2, LDM-1and I/CO-3) is at high level - LSH-101 through LSH-104 respectively are activated

Alarm conditions consist of immediately stopping the extraction pump, initiating the auto dialer, and activating the strobe at the main control panel. The system will remain inoperable under alarm condition until all alarm conditions are cleared and the manual reset button on the main control panel has been activated.

The PLC will initiate the sequence for warning conditions when the following conditions exist:

- Piping heat trace controller fault - YAH-100 is activated.

Warning conditions consist of initiating the auto dialer and activating the strobe at the main control panel. The extraction pump will continue to operate under warning conditions.

3.3 DAPL Storage Tank

3.3.1 Storage Tank Description

The DAPL storage tank (T-1) is an 8,700-gallon rotationally-molded, HDPE, double wall tank with an oxidation resistant liner system and a leak detection system. DAPL carrier pipe enters the tank through a fitting on the top of the tank and discharges above the high liquid level. This is to prevent back-siphoning of DAPL if a leak were to occur in the carrier piping between the extraction pump and the tank. DAPL is removed from the tank through a 4-inch diameter siphon pipe that begins 2-inches above the tank bottom and extends up through the tank top and down the outside wall, terminating with a 4-inch quick disconnect fitting (Kamlock) for connection to a hose with compatible fittings on a vacuum transport truck. A manually operated ball valve with chain wheel is provided at the top of the siphon loop to control discharge, and a ½-inch ball valve is provided as a manual vacuum breaker for discharge piping. The tank is vented through a 6-inch vent fitted with an insect screen in the tank top. The DAPL tank is insulated and heat traced.

3.3.2 Storage Tank Instrumentation and Controls

The following table lists the instruments and process IDs associated with the DAPL storage tank. Please refer to the P&ID sheet D-601 for a depiction of the instrumentation.

Instrumentation/Process ID	Description
DAPL Storage Tank	
LS-201	Level Switch – supplied with storage tank (T-1)
TLMP	Tank Leak Monitor Panel – supplied with storage tank (T-1)
LSHH-200	Level Switch High High – storage tank (T-1)
LT-200	Level Transmitter – storage tank (T-1)
HTCPA	Heat Trace Control Panel – piping railroad crossing to tank (T-1)
THTCP	Tank Heat Trace Control Panel – storage tank (T-1)
LAH-201	Tank Leak Alarm– storage tank/LS201
LAHH-200	Level Alarm High High – storage tank/LSHH-200
LI-200	Level indicator – storage tank/LT-200
LAH-200	Level Alarm High - storage tank/LT-200
YAH-200	Heat Trace Controller Fault – storage tank/THTCP
YAH-201	Heat Trace Controller Fault – carrier piping/HTCPA

3.3.3 Operational Sequence

During normal operation, a level transmitter (LT-200) mounted through the tank top monitors DAPL level in the tank and provides a level-proportioned signal to a level indicator (LI-200) and high level alarm (LAH-200). This alarm initiates the auto dialer. The auto dialer will continue to call out until acknowledged. A high high level alarm (LAHH-200) provides system redundancy and shuts the system down when activated as described below.

Additional instrumentation includes a level switch (LS-201) that monitors the space between the inner and outer tank walls for accumulation of DAPL that would indicate a leak in the inner tank. The level sensor provides an open/closed circuit indication to the tank leak monitor panel (TLMP) to Tank Leak Alarm (LAH-201). A high high level switch (LSHH-200) monitors the tank interior for high levels of DAPL and provides an open/closed circuit indication to high high level alarm LAHH-200. If the LSHH-200 contact is made, then the system will shut down automatically and the high high level alarm will be indicated. The system will have to be manually re-started under this condition.

A tank heat trace control panel (THTCP) controls the heating pads provided for tank T-1, and piping heat trace control panel (HTCPA) controls heat trace for DAPL piping between the railroad crossing and the DAPL storage tank. In the event of a malfunction in the tank heat trace system, the THTCP provides a fault signal to the PLC which activates the alarm system. In the event of a malfunction in the piping heat trace system, HTCPA provides a fault signal to the PLC which activates the alarm/warning system.

During normal operation, the extraction pump will operate continuously. The PLC will initiate the sequence for alarm conditions when the following conditions exist:

- LAH-200 is activated when the tank is full
- LAHH is activated when the tank is overfilled
- LAH-201 is activated when the inner tank has a leak

LAH-200 Alarm conditions consist of initiating the auto dialer and activating the strobe at the main control panel. LAHH-200 and LAH-201 alarm conditions immediately stops the extraction pump. The system will remain inoperable under alarm condition until all alarm conditions are cleared and the reset button on the main control panel has been manually activated.

The PLC will initiate the sequence for warning conditions when the following conditions exist:

- YAH-200 is activated when there is a tank heat trace controller fault
- YAH-201 is activated when there is a piping heat trace controller fault

Warning conditions consist of initiating the auto dialer and activating the strobe at the main control panel. The extraction pump will continue to operate under warning conditions.

3.4 Control System (West Warehouse)

3.4.1 Control System Description

The control system located on the 51 Eames Street property at the West Warehouse building includes two fused disconnect switches, main control panel, heat trace controller panel for above ground piping (HTCPA), tank leak monitor panel (TLMP), and storage THTCP. The main control panel houses the PLC, human machine interface (HMI), pump speed adjust, low-voltage (24V) power supply, uninterruptable power supply, an emergency stop push button, reset button, and a cellular phone auto dialer. The PLC handles the input/output (I/O) associated with monitoring carrier piping flow and pressure and initiating warning sequences associated heat trace controller faults and alarm sequences associated with low/high flow carrier pipe flow; high carrier pipe pressure; and high liquid level in the extraction well sump, manholes (I/CO-1, I/CO-2, I/CO-3, LDM-1), and storage tank (T-1); and tank leak monitor panel.

The HMI at the main control panel displays the real-time status of equipment, controls, and alarms. The HMI is a touch screen, but also has a keypad. Navigating through the different screens may be done either by touching that screen's symbol on the touch screen or by using the function key (F keys) associated with that screen. There is no electronic data logging conducted; process parameters are read and recorded manually as described later in Section 4.0.

The speed adjust controls the VFD for the extraction pump.

The auto dialer is configured to call the key facility contacts listed in Subsection 1.2 in sequence until answered. The auto dialer may be configured to provide a specific message to each individual alarm. The actual auto dialer message can be customized and recorded by the operator. For example the message when LAH-200 is activated could simply state "level alarm condition exists in DAPL storage tank".

3.4.2 Instrumentation and Controls

Instrumentation and controls associated with the operation of the DAPL extraction and storage system are described in detail in previous subsections. Please refer to the Drawings D-601, E-101, E-102, E-103, and E-601 in Appendix A for a depiction of the instrumentation.

3.4.3 Operation Sequence

The PLC I/O schematics are presented on Drawing D-601 in Appendix A.

System Interlocks

The control system has the following automatic interlocks that shutdown the extraction pump to prevent storage tank overflow, release of DAPL, damage to extraction system components, and also trigger the auto dialer and strobe alarm:

- There is liquid in the pump hose housing (LS-105).
- The liquid level in extraction vault sump reaches High Level (LSH-100).
- There is excessive pressure in the carrier piping (PIT-100).
- The liquid level in the inspection/cleanout manholes (I/CO-1, I/CO-2, I/CO-3), and leak detection manhole (LDM-1) reaches High Level Switch LSH-101, LSH-102, LSH-104, and LSH-103, respectively.
- The liquid level in the storage tank (T-1) reaches High High Level (LSHH-200).
- The liquid level in interstitial space between the inner and outer storage tank (T-1) walls activates LS-200.

The control system has the following automatic interlocks that trigger the auto dialer and strobe alarm, but allow the extraction pump to continue operating:

- There is a heat trace controller fault (HTCFA) for the carrier piping between the extraction vault and leak detection manhole 1.
- There is a heat trace controller fault (HTCFB) for the carrier piping between the railroad crossing and the DAPL storage tank.
- There is a tank heat trace controller fault (THTCF).

4.0 HEALTH AND SAFETY

The following paragraphs provide brief information regarding health and safety related to the OM&PM Plan at the Site. Additional information concerning Site health and safety requirements is available in the Olin Corporation Health and Safety Plan (HASP) for Contractors.

4.1 Directions to Hospital

In the event of a medical emergency requiring medical assistance, call 911 and summons an ambulance. The emergency hospital for the Site is Winchester Hospital. This hospital is located approximately 7 miles from the Site at 41 Highland Avenue, Winchester, Massachusetts. The telephone number is (781) 729-9000.

Quickest route (7.5 miles, 13 minutes):

- From the Site, turn northeast on Eames Street towards Woburn Street, proceed 0.5 miles.
- Turn left at Woburn Street, proceed 0.5 miles
- Turn right at Lowell Street, proceed 0.6 miles
- Take ramp onto I-93 South, proceed 4 miles.
- Take Exit 36 for Montvale Avenue toward Stoneham/Woburn, proceed 0.3 miles.
- Turn right at Montvale Avenue, proceed 0.2 miles.
- Turn left at Washington Street, proceed 0.9 miles
- Turn left at Forest St, proceed 0.2 miles.
- Take the third right, proceed 92 feet.
- Turn right at Highland Avenue, proceed 0.2 miles. Hospital will be on the right.

Alternate route (6.3 miles, 15 minutes):

- From the Site, head southwest on Eames Street towards Main Street, proceed 476 feet.
- Turn left at Main Street, proceed 3.4 miles.
- Turn left at Union Street, proceed 0.2 miles.
- Slight left at Montvale Avenue, 1.3 miles.
- Turn right at Washington Street, proceed 0.9 miles
- Turn left at Forest St, proceed 0.2 miles.
- Take the third right, proceed 92 feet.
- Turn right at Highland Avenue, proceed 0.2 miles. Hospital will be on the right.

4.2 Safety Shower / Eyewash Stations

An emergency eyewash will be available adjacent to the DAPL storage tank during unloading operations. There is an existing emergency shower and eyewash station located in Plant B. A portable eyewash bottle will be available during maintenance and sampling activities on the Jewel Drive portion of the DAPL pilot system.

4.3 Safety Equipment

Depending upon the task at hand, one or more of the following safety equipment devices or items may be required to complete a specific task:

- Photoionization Detector (PID):
- Lockout/tagout (LOTO) kit

Note that the DAPL material does not contain more than trace concentration volatile organic compounds. A series of PID screenings of clean out structures and the well vault atmosphere should be conducted early in the operating program to verify these structures do not contain VOCs in the atmosphere. Once documented it should not be necessary to conduct such screening on an on-going basis.

4.4 Personal Protective Equipment Requirements

Most routine OM&PM activities require Level D personal protective equipment (PPE) which includes:

- steel toe boots
- hard hat (for any activities around heavy equipment or overhead obstructions)
- safety glasses (or goggles or face shield)
- safety vest (around heavy equipment or traffic, as needed)
- hearing protection (as needed)
- gloves (type is dependent upon the task)

Refer to the HASP for task-specific PPE requirements.

4.5 Fire Extinguisher

A fire extinguisher is currently located on the East Warehouse dock and will be relocated adjacent to the main control panel in the West Warehouse.

4.6 Telephone

A cell phone auto dialer is located at the main control panel. Olin on-site personnel carry mobile phones; the auto dialer phone can also be used as a phone during emergencies, and can receive calls. The auto dialer phone number will be determined when the service is activated.

4.7 Lockout/Tagout

To ensure that all individuals working at the Site are protected from accidental or unexpected activation of mechanical and/ or electrical equipments during maintenance, repairing, cleaning, servicing, or adjusting of any machinery or equipment, Olin's site LOTO procedures will be implemented (see Site Health and Safety Plan for specific procedures).

4.8 Personnel Training and License Requirements

Because of the elevated levels of contaminants in the DAPL/groundwater at the Site, OSHA 40-hour hazardous waste operations training (HAZWOPER), as outlined in 29 CFR Part 1910.120, is required for Site personnel for certain tasks. Refer to the HASP for detailed information on training requirements.

5.0 SYSTEM START UP AND SHUT DOWN PROCEDURES

5.1 System Start Up

Controls for pump operation are located on the main control panel as discussed in Subsection 3.4.1.

If the system is shut down automatically by the PLC as a result of alarm conditions, it cannot be restarted until all alarm conditions are cleared and the reset button has been pushed on the main control panel.

As a general summary, to start up DAPL extraction system, the following procedure should be followed:

Startup Sequence	Comments
1. Inspect the extraction system	• Check the piping for integrity. • Repair faulty or damaged piping before continuing with system start-up procedures. • Check for correct manual valve positioning. – Carrier pipe valves are open. – Sample port is closed. – Discharge pipe valve is closed. – Vacuum breaker valve is closed. • Check the position of all level sensors to ensure they are secure and the float set points are positioned properly.
2. Energize the Extraction Pump	• Energize the main panel. • Push the reset button on the main control panel.
3. Check the System for Proper Operation	• Check PLC and enunciator for any alarm conditions and address accordingly. • Confirm that extraction pump begins operating. • Adjust pump speed to desired point. • Confirm that all flow meters and pressure indicators are within their proper ranges.

5.2 System Shut Down

To manually shutdown the extraction system, push the emergency stop button at any one of three locations: the main control panel, the electrical equipment rack, and in the pump enclosure vault.

The extraction pump needs to be shutdown manually if:

- A leak is identified in the carrier piping.
- Maintenance of the equipment or troubleshooting of the system is required.

The system will shut down automatically for alarm conditions discussed previously.

6.0 TANK TRUCK LOADING OPERATIONS

Personnel should exercise care when transferring DAPL to avoid leaks and/or spills. In addition to the tank truck driver, an Olin employee will be present whenever DAPL is being transferred to assist the driver and monitor transfer operations. Portable drip pans will be placed beneath the transfer pipe connection to the tank truck and beneath the aboveground storage tank discharge connection.

6.1 Site-Specific Procedures

Table 1 contains a check list to be followed during DAPL transfer. These procedures may be modified as appropriate if approved by the Emergency Coordinator and facility personnel responsible for overseeing chemical pickup.

7.0 ROUTINE OPERATION AND MAINTENANCE

It is anticipated the extraction pump will require minimal maintenance other than disassembly and lubrication of the pump head at appropriate intervals. At this time the pump head tubing will also be replaced, if needed. The pump head tubing will be inspected for wear at routine intervals initially, to establish the appropriate replacement and inspection interval. The dual wall carrier piping and storage tank should not require maintenance. The primary operational requirements for the DAPL Extraction System will be periodic adjustment of the pumping rate and loading of tanker trucks for DAPL disposal.

Since the objective for pumping is minimal to no drawdown, there is no technical requirement for the extraction system to operate continuously, and the pump will be shut down for short periods of time as system operations demand.

The schedule for routine inspections and maintenance to be performed at the extraction system will be developed based on operation needs and operator judgment as experience is gained with the system. Thorough inspections will be conducted as part of the pre-startup safety and operations reviews. In the initial period following start-up the frequency of routine inspections will be higher and gradually reduced in accordance with maintenance and inspection needs. If any component of the extraction system is determined to be defective, or to have failed, the condition and its cause will be investigated and documented. Actions to correct the deficiency and prevent a re-occurrence will be documented and be placed on file in the 51 Eames Street Office.

Inspection and maintenance activities shall be conducted in accordance with the HASP. In addition to the inspection and maintenance forms, the operator will maintain a Site log book for documenting work performed, samples collected, unusual conditions, and other observations.

Routine inspections will occur during normal Olin weekday work hours (i.e., Monday through Friday) and will include the following general types of activities:

- Check for and respond to warning and/or alarm conditions (whenever at main control panel).
- Check extraction pump flow rate (FQ1-100A).
- Check extraction system discharge pressure (PAH-100).
- Visually inspect the storage tank and tank piping for evidence of damage, needed maintenance, or other issues.
- Check that storage tank discharge valve is closed and locked.
- Confirm that communication equipment is working (i.e., auto dialer cell phone).
- Check pump hose lubricant.

- Visually inspect pump enclosure vaults/ inspection/cleanout manholes for evidence of leaks, or needed maintenance.
- Visually inspect above ground carrier piping, conduits, and electrical equipment rack for evidence damage to insulation, or needed maintenance.
- Check for buildup of solids/precipitate in storage tank.

Routine maintenance will typically include lubricating and replacing pump head hoses, and on an infrequent basis verifying operation of the portable generator.

7.1 Leaks and Spills

If a DAPL spill or leak occurs, actions would be taken to prevent further release and migration of DAPL and to cleanup spilled material. DAPL extraction would be stopped, and the cause of the release determined. For a leak or spill within the pump enclosure vault, the inspection/cleanout structures, and leak detection manhole, or the West Warehouse, the spilled material would be removed. Liquid material may be added to the aboveground storage tank for disposal. Should a leak or spill occur outside, absorbent material would be immediately placed to contain and soak up any pooled liquid. Materials generated as result of spills, leaks or system maintenance will be characterized appropriately and disposed of according to state and federal regulations. Any additional conditions are covered in the Site Contingency Plan.

EPA will be informed of any spills or leaks within 24-hours after the incident is discovered.

7.2 Retention of Records

All inspection forms, log books, manifests, bills of lading, test results, reports, incident reports, and other pertinent records are to be maintained according to Olin's Records Retention Policy.

8.0 TROUBLESHOOTING

The troubleshooting guide is provided in tabular format addressing potential operation issues for the DAPL extraction system. Further information may be found in the equipment or instrumentation documentation materials presented in Appendix D or by contacting the appropriate vendor, supplier, or contractor (contact information provided in Appendix E).

EQUIPMENT BASED TROUBLESHOOTING GUIDE			
Equipment	**Possible Trouble**	**Possible Cause**	**Corrective Action(s)**
Extraction Pump	Extraction Pump does not operate (no/low flow)	• Electric feed from main power supply shut off.	• Turn on main power supply.
		• Emergency stop(s) locked in closed position	• Unlock/open emergency stop(s).
		• Automatic shutdown because of pump hose leak (LS-105)	• LOTO as necessary. Verify hose leak and/or switch function. Replace hose if needed. Replace switch if appropriate. Reset alarm at main control panel by pressing reset button
		• Automatic shutdown because of high liquid level in enclosure vault sump (LSH-100)	• LOTO as necessary. Remove liquid if present; identify source; repair piping, fittings, or vault as appropriate to prevent further liquid accumulation. Verify switch function. Reset alarm at main control panel by pressing reset button.
		• Automatic shutdown because of high liquid level in inspection/cleanout manholes or leak detection manhole (LSH-101 through LSH-104)	• LOTO as necessary. Remove liquid if present; identify source; repair piping, fittings, or vault as appropriate to prevent further liquid accumulation. Verify switch function. Reset alarm at main control panel by pressing reset button.

EQUIPMENT BASED TROUBLESHOOTING GUIDE			
Equipment	**Possible Trouble**	**Possible Cause**	**Corrective Action(s)**
Extraction Pump *(cont.)*	Extraction Pump does not operate (no/low flow) *(cont.)*	• Automatic shutdown because of high pressure in carrier piping (PIT-100)	• LOTO as necessary. Use PLC to confirm high system pressure prior to shutdown. Check position of downstream isolation valve in enclosure vault and in-line shut-off valves in I/CO-3 and LDM-1 (should be open). Verify function of PIT-100, repair/replace if appropriate. Check for obstructions in carrier piping, clear if needed. Reset alarm at main control panel by pressing reset button.
		• Automatic shutdown because of storage tank high level (LI-200)	• Visually confirm high liquid level in storage tank, remove DAPL if needed. Check settings for LAH-200. Verify LI-100 function, repair/replace if appropriate. Reset alarm at main control panel by pressing reset button.
		• Automatic shutdown because of storage tank high high level (LSHH-200)	• Visually confirm high liquid level in storage tank, remove DAPL if needed. Check settings for LSHH-200. Verify LSHH-200 function, repair/replace if appropriate. Reset alarm at main control panel by pressing reset button.
		• Automatic shutdown because of storage tank leak (LS-201)	• Visually confirm liquid presence/level between tank walls. Identify source, remove interstitial liquid and DAPL from tank, repair /replace storage tank if needed. Check settings for LSHH-200. Verify LSHH-200 function, repair/replace if appropriate. Reset alarm at main control panel by pressing reset button.
		• Pump motor failure	• LOTO as necessary. Remove and inspect pump. Repair per manufacturer's instructions. Replace if necessary.
		• VFD failure	• LOTO as necessary. Inspect VFD. Repair per manufacturer's instructions. Replace if necessary.

9.0 PERFORMANCE MONITORING

Effectiveness of the OPWD pilot system will be monitored by assessing the performance of the system, as well as assessing certain primary criteria as outlined below. Figures 2 and 3 present the DAPL Pilot monitoring well network.

The primary criteria that will be important in evaluating the performance of the DAPL recovery system include:

- DAPL/Diffuse Layer Interface Drawdown: The amount of drawdown of the DAPL/Diffuse Layer interface near the extraction well that occurs in response to pumping at different rates. In a system that is operating properly, the DAPL interface elevation will be similar across the OPWD DAPL pool (both near the extraction point and at points further away) while DAPL is being extracted. The measure of this criterion will be the induction logging results.
- Constituent Concentrations: The DAPL pumping rate that can be sustained without adversely affecting overlying groundwater contaminant concentrations and causing measurable intrusion of higher pH Diffuse Layer and overlying groundwater into the DAPL. The primary measure of this criterion will be physical collection and analysis of DAPL/ Diffuse Layer, and groundwater samples from multilevel piezometers in combination with inductance logging results.
- Mechanical Characteristics: Fouling or clogging of the extraction well, pumping system and carrier pipe. The best measure of these elements will be maintenance required to keep the system operating in accordance with design objectives.

This section discusses the monitoring approach, schedule, and sampling and analytical programs. The discussions are divided between the baseline and the active DAPL recovery phases of the Pilot Test.

9.1 Monitoring Approach

The technical approach to performance monitoring includes a baseline phase prior to extraction system startup, and a DAPL extraction phase. The extraction phase assumes three DAPL recovery pumping step changes at 0.5, 1.0, and 2.0 gpm pumping rates.

9.1.1 Baseline Monitoring Phase

The baseline monitoring program includes a short monitoring period to assess stable aquifer conditions. There is a potential that prior well installations could have disturbed the Diffuse Layer/overlying groundwater or DAPL/Diffuse Layer interfaces. The wells were installed nearly one year prior to system startup, so we anticipate that the referenced interfaces have had adequate time to stabilize. Therefore, the baseline monitoring phase will consist initially of two inductance logging and multilevel piezometer sampling events prior to system start up. The multilevel monitoring program will include collection of DAPL, Diffuse Layer, and overlying

groundwater samples and monitoring water levels. The paired multilevel piezometer and induction logging well will be monitored simultaneously to verify that groundwater sampling does not induce measurable changes or perturbations in the conductivity profile. These wells have been installed as close to one another as possible (2 to 3 feet) given site drilling and access conditions. This will require that the induction logging be conducted multiple times while the multilevel piezometer is being sampled.

The baseline data will be used to:

- Provide an initial assessment of variability in monitoring parameters in individual multilevel piezometer ports;
- Provide an indication of the elevation of the DAPL/Diffuse Layer and Diffuse Layer/overlying groundwater interfaces based on chemical and induction logging data; and
- Evaluate whether physical extraction of groundwater samples from the multilevel piezometers produces a measurable change in induction logging results in the paired induction logging wells.

Analysis of the DAPL, Diffuse Layer, and overlying groundwater samples will include measurement of sulfate, chloride, and ferrous and total iron, obtaining ferric iron by subtraction. Overlying groundwater samples will also be analyzed for ammonia. These parameters were selected as reliable indicators by which to monitor intrusion of the DAPL/Diffuse Layer interface, the potential for precipitation reactions, and increases of DAPL constituents in overlying overburden groundwater. The analysis will be by HACH field test kits conducted on-site by Olin personnel. Water quality parameters including pH, specific-conductance, oxidation-reduction potential (ORP), temperature, and turbidity will be obtained with a calibrated water quality meter in a flow-through cell prior to sample collection. The analytical program includes split samples that will be submitted to an off-site laboratory. The proposed monitoring Schedule is described in Subsection 9.2.

Water quality monitoring in MP-2 will be limited to ports that span the DAPL/Diffuse Layer and Diffuse Layer/overlying groundwater interfaces. Table 2 summarizes select parameter data from MP-2 collected in 2010. Based on this table, the ports initially selected for monitoring in MP-2 include ports 3 through 7 to characterize vertical distribution of water quality parameters and the interface between DAPL and Diffuse Layer and ports 10 through 13 to characterize the Diffuse Layer and overlying groundwater interface. Based on monitoring data, these port selections may be modified.

9.1.2 DAPL Extraction Monitoring Period

Monitoring during the DAPL Pilot is designed primarily to evaluate potential changes at the DAPL/Diffuse Layer interface and the Diffuse Layer/ overlying groundwater interface in proximity to the extraction well. The DAPL Pilot includes three DAPL extraction periods (Pumping Step 1 – 0.5 gpm, Pumping Step 2 – 1 gpm, and Pumping Step 3 – 2 gpm). The rate will be increased

assuming each preceding pumping step can be successfully demonstrated. We have assumed the following durations: Pumping Step 1 – 13 weeks; Pumping Step 2 – 17 weeks; Pumping Step 3 – 23 weeks. Assuming monitoring indicates successful pumping during each step, this schedule will be maintained. Pumping may be stopped, or the rate reduced, if adverse mixing or drawdown is observed in the DAPL/Diffuse Layer interface and/or overlying groundwater, respectively.

The DAPL Pilot will closely monitor the conditions in proximity to the pumping well and within the DAPL pool at two wells (GW43DR and GW-42D) located within two hundred and forty feet of the extraction point. The monitoring well network and monitoring approach are intended to:

- Monitor the response of the DAPL/Diffuse Layer and Diffuse Layer/overlying groundwater interfaces during pumping;
- Assess trends of monitored parameters in the DAPL, Diffuse Layer, and overlying groundwater in proximity to the extraction well during pumping;
- Monitor specific physical and chemical characteristics of extracted DAPL; and
- Monitor ammonia concentrations in overlying groundwater during the performance period of the DAPL Extraction Pilot Test.

9.2 Monitoring Schedule

The schedule for monitoring will be adjusted as the test progresses using an observational approach that is intended to optimize the monitoring program. The optimization objectives are aimed at eliminating data collection activities that do not yield usable results, and adding activities that enhance data usability. Tables 3 through 6 provide an overview of the proposed monitoring schedule for water level, induction monitoring and sample collection. If an extended pumping period is needed (> 1 year), the monitoring schedule in Table 7 would apply. Note that as the test progresses, the frequency of monitoring decreases during each of the phases. Olin intends to modify monitoring frequency as appropriate based on results as they are received and an understanding of data variability is gained. Olin will notify USEPA of the proposed modification prior to implementation.

9.2.1 Baseline Monitoring Period

Table 3 summarizes the baseline monitoring period. The multilevel piezometers and induction logging wells will be monitored (e.g., sampled and inductively logged) twice prior to system startup. If additional baseline monitoring is required, USEPA will be notified prior to extending the baseline phase. The baseline monitoring will also include induction logging of GW-43DR and GW-42D.

9.2.2 DAPL Extraction Period

Tables 4 through 6 summarize the three pumping steps respectively (Pumping Step 1 – Table 4; Pumping Step 2 – Table 5; Pumping Step 3 – Table 6). If an extended pumping period is warranted to evaluate longer term pumping operation, that pumping period length would be dependent on the additional data needs (Table 7).

The initially proposed monitoring is more frequent in the weeks immediately following a pumping rate change. Three monitoring events will occur during the first week of each pumping step, and two monitoring events will occur during the second week (Table 4 through 6). After that, sampling events are expected to occur weekly over the next two weeks, every other week for the next two to four weeks, and then once every third week. Monitoring of each pumping step will continue as long as needed to confirm conditions are stable prior to moving to the next pumping step. Monitoring frequency may be adjusted as experience with the system is gained.

As discussed previously, the objective of the monitoring is to collect data that documents the response of the system to pumping. If, during early stages of monitoring, data indicate that more frequent data collection is beneficial to the test, the schedule of monitoring will be adjusted accordingly and the USEPA notified of proposed changes. Conversely, if data indicate that the monitoring frequency may be reduced, or the number of sample ports monitored modified, the USEPA will be notified of those proposed changes.

9.3 Sample Collection and Analysis

Sample collection, documentation, and analysis will be completed by procedures specified in the Olin Wilmington Quality Assurance Project Plan (MACTEC, 2009) or as specified in this document.

The DAPL Extraction Pilot Test data quality objectives include:

- Obtaining analytical results for chloride, sulfate, and iron that can be used to monitor chemical changes in the DAPL/Diffuse Layer interface and overlying groundwater (including ammonia).
- Obtaining verifiable, analytical results for these parameters within a one to three working day time frame from the date of sample collection.

These data quality objectives will be met through a sample collection and analysis program that makes use of on-site chemical analysis and confirmed by 10% off-site laboratory analysis. The on-site portion of the analytical program will be performed by Olin site personnel who will be trained by an AMEC chemist. Sample collection and analysis, as well as Quality Assurance and Quality Control (QA/QC), procedures are described in the following sections.

9.3.1 Groundwater Sample Collection

Prior to collecting groundwater samples, the water level associated with the overlying groundwater, Diffuse Layer and DAPL in each multilevel piezometer will be measured to the nearest 0.01 foot using a water level meter and recorded in a log-book.

Field sampling equipment will be calibrated consistent with the existing RI/FS Work Plan prior to each day's use and checked at the end of each day. Calibration results will be recorded on a Field Instrument Calibration Record or in the field notebook

Groundwater samples will be collected using a peristaltic pump using the dedicated port tubing at the wellhead manifold. The water samples will be collected in sequence from the shallowest to deepest port in each multilevel piezometer which is from the least to most highly contaminated zones.

The sand pack around each Solinst port contains an estimated 1.5 liters of fluid volume. Depending on diameter and length, the port tubing contains between 0.2 to 0.9 liters. Therefore approximately 1.7 to 2.4 liters of water will be purged from each zone at a flow rate between 150 to 300 ml/min prior to sample collection. The fluid (groundwater or DAPL) will be pumped through a flow-through cell instrumented with a calibrated water quality probe capable of measuring the required parameters (YSI 600 XL, or equivalent). Parameters will be measured every minute and recorded for five minutes or until specific conductance and pH (primary decision indicators) are stable within 10 percent of their initial values, whichever is less. At this point, groundwater samples will be collected through a port prior to the flow-through cell or by disconnecting the inlet tube to the flow-through cell. The purpose of this procedure is to collect representative samples from the interval being monitored but without over purging. It is important that the sampling methodology not cause unintended disturbances to the system being monitored.

The majority of samples will be collected for on-site analysis as indicated in Subsection 9.3.2. QA split duplicate samples will be collected for off-site analysis at a frequency of 10 percent from the two baseline monitoring events, and first and a middle sample event from each step of the DAPL recovery. The off-site samples will be analyzed for all the same on-site parameters and in addition will be analyzed for chromium, calcium, and sodium.

Field duplicate samples will be collected for on-site analysis at a frequency of five percent for each parameter to assess the measurement precision of the overall sampling and analytical system. Aqueous field duplicate samples will be collected immediately after the original sample. The field duplicate sample bottle will be filled using the same procedures as the original sample.

All groundwater samples will be collected in clean, certified sample containers and provided with a unique sample identification number that includes sample location, port number, sample date, and sample type (i.e., field sample or duplicate).

Field data will be recorded in a field logbook.

9.3.2 Groundwater Sample Analysis

After collection of groundwater samples, they will be stored in the field on ice until they are transported under on-site chain of custody to the Olin 51 Eames Street office where on-site analysis will be conducted for sulfate, chloride, ammonia, and ferrous and total iron. Table 8 provides a summary of the analytical program. The analysis will be performed by Olin staff using HACH field kits with a portable spectrophotometer and ISE probes identified in Table 8 in accordance with manufacturers' instructions. A calibration check sample will be run at a frequency of 5 percent (one every twenty samples) or once per day if less than twenty samples are analyzed. An AMEC chemist will be available to provide input on sampling activities as requested. An AMEC chemist will conduct a review of the data and results. This review will include review of on-site and off-site split sample results, field duplicate results, calibration check standard and results, the laboratory analytical notebook, records, and raw and calculated final results.

Reference sample jars (40 ml vials) will be collected for assessing fluid color during the initial day of sampling. These samples will be used to develop a general color code classification system that is consistent with site-specific conditions.

An on-site laboratory Chain of Custody (COC) form will be completed for each set of samples collected and delivered to the on-site laboratory. When samples are delivered to the on-site laboratory, the unused portions of the COC form will be crossed out and the signed by the sample manager indicating the transfer of custody. The on-site laboratory COC form will be included in a loose-leaf notebook binder and maintained as a permanent record in the project files. The following information will be recorded on the COC form:

- Signature of sampler
- Sample identification number;
- Date and time of collection
- Sample matrix
- List of parameters for analysis
- Identification of locations where off-site splits were collected
- Time and date samples were received by the field laboratory

A laboratory analysis logbook will be completed and maintained on-site at the Olin 51 Eames Street Office. This logbook will contain information recorded on the manufacturer, serial number, and lot numbers of all equipment and chemicals and standards used in the analysis of samples.

The laboratory logbook will include records of:

- Calibration of analytical equipment
- Preparation of standards
- Sample number, sample collection date and time
- Date and time of analysis
- Sample dilutions
- Raw results
- Final results
- Continuing check standards

A chemist will review the on-site laboratory early in the program and provide ongoing review of the on-site laboratory logbooks and calculate precision of field duplicates (expressed as relative percent difference [RPD]), as shown in the following equation:

$$RPD = \frac{|X1 - X2| \times 100}{(X1 + X2)/2}$$

Where: RPD = relative percent difference between duplicate results
X1 and X2 = results of original sample and duplicate analyses
|X1 - X2| = absolute difference between duplicates X1 and X2

9.3.3 DAPL Sample Collection and Analysis

A sample of the DAPL will be collected weekly from the pump discharge sample port and measured for field parameters (pH, specific conductance, ORP, temperature) and visually observed for color.

9.3.4 Equipment Decontamination

Within each multilevel piezometer, sampling will be conducted from the least to the most contaminated zones. After a sample is collected, equipment decontamination will consist of purging DI water through the peristaltic pump head hose. Decontamination between wells will be performed in accordance with the Final Remedial Investigation/Feasibility Study Work Plan (MACTEC, 2009).

9.3.5 Investigation Derived Waste

Investigation Derived Waste (IDW) generated by performance monitoring will include purge water, decontamination fluids, and laboratory waste. Disposition of these materials will be performed in accordance with the Final Remedial Investigation/Feasibility Study Work Plan (MACTEC, 2009).

9.4 Data Reporting and Assessment

This subsection discusses the manner in which data will be managed, reported and evaluated during progress of the Pilot Test. The DAPL Extraction Pilot Test was conceptualized in the Release Abatement Measure Plan (MACTEC, 2004); however, it is being implemented under the IRSWP (MACTEC, 2008a). Performance monitoring will be reported in semiannual status reports.

The water quality parameters measured in the field and any other on-site analytical data will be transferred into and maintained in an electronic format. Data will be compiled on a weekly basis as it is collected and stored electronically for assessment and archival. The progress and interpretation of the test will be based on this data, definitions of criteria discriminating between DAPL, Diffuse Layer, and overlying groundwater, characterization data obtained during baseline monitoring, and insights developed during the column studies (Geomega, 2004a and 2004c). These criteria and insights, as they are known today, are reviewed below.

9.4.1 Interface Criteria

Geomega established criteria defining the DAPL/Diffuse layer interface (Geomega, 1999). Based on 1998 sample data, Geomega determined that sample populations of DAPL and Diffuse Layer material were statistically different at a 95% confidence level when a specific gravity of 1.025 was used as a cutoff point between the sample populations. Chemical parameters were then evaluated to see which one produced significant correlations with DAPL or Diffuse Layer material based on this cutoff. Specific conductivity (>20,600 micro-mhos per centimeter [µmhos/cm]), sulfate (>16,000 milligrams per liter [mg/L]) chloride (>2,800 mg/L), ammonia (>1,250 mg/L), magnesium (>270 mg/L), and sodium (>1700 mg/L) were all determined to have a strong correlation at these values to the 1.025 specific gravity DAPL cutoff point. Other parameters, such as pH, were determined to have only a weak correlation. Specific conductance will, therefore, be the primary criteria used to discriminate between DAPL, the Diffuse Layer, and overlying groundwater.

Criteria to discriminate between the Diffuse Layer and the overlying groundwater were based on the results of induction logging and multiple-level piezometer data collected during the March 2003 sampling event (Geomega 2003). At a 95% confidence level, a specific conductance value of 3,000 µmhos/cm was determined as the cut off between the Diffuse Layer and overlying groundwater.

9.4.2 Column Study Observations

The column studies by Geomega (January and December 2004) developed data that provide important insights into behavior and distribution of DAPL constituents when removed by drainage and displaced by Diffuse Layer groundwater. These observations are germane to the monitoring program and interpretation of the data that will be collected over the DAPL/Diffuse Layer interface. They include:

- With respect to partitioning within the DAPL saturated soil, sulfate and chloride are primarily partitioned to the aqueous phase while iron, calcium, magnesium, and aluminum are typically associated with the solid phase. Other primary constituents, including sodium, chromium, and ammonia, are present in both phases.
- After approximately 1.5 pore volumes of DAPL displacement by Diffuse Layer groundwater, precipitation reactions may begin plugging the aquifer materials.
- After approximately 1.5 pore volumes of flushing, the fluid remaining no longer exhibits characteristic DAPL criteria and by this point approximately 80% of DAPL constituents have been removed.
- pH is a recalcitrant parameter that may remain below a value of 5.0 standard units for an extended and unknown length of time.

Data Assessment

At the conclusion of the Baseline monitoring period, the data from sample ports will be tabulated and categorized as DAPL, Diffuse Layer groundwater, and overlying groundwater based on specific conductance data.

As data is collected during the test, time series plots of specific conductance, sulfate, chloride, ferrous and total iron, and pH will be maintained for samples from each port of the multilevel piezometers, including the baseline data. This will allow recognition of time-dependent concentration changes or patterns within the multilevel piezometers by visual comparison.

The technical objective of the DAPL removal is to pump DAPL at a rate that maintains no or minimal drawdown of DAPL at the extraction well and does not disturb the DAPL/Diffuse Layer interface. If this objective can be achieved, then the vertical decline in elevation of the DAPL/Diffuse Layer interface should be approximately uniform across the DAPL pool. Induction logging measurements at two points (GW-42D and GW-43DR) at distances removed from the extraction well will be evaluated for vertical changes in the conductivity profiles. The basis for selecting these wells is as follows: 1) GW-43DR is at the edge of the DAPL pool and primarily observes Diffuse Layer /overlying groundwater interface, and 2) GW-42D allows observation of both Diffuse Layer/DAPL and Diffuse Layer/ overlying groundwater interfaces.

A logic diagram for modifying pumping rates is presented as Figure 4 to illustrate the decision logic that will be applied during the test. The logic diagram essentially has two components:1) Determining if the drawdown interface is stable and 2) evaluating the magnitude and rate of concentration changes at the DAPL/Diffuse Layer interface and overlying groundwater.

Two tools will be employed to evaluate the interface stability over time: induction logging and multilevel piezometer sampling. The induction logging profiles will be compared between wells (IL-1 and IL-2) and with time to identify vertical shifts or declines in fluid specific conductance. These data will be compared to physical/chemical data collected from corresponding elevations in the multilevel piezometers. It should be noted that a reduction in the elevation of the DAPL

/Diffuse Layer interface could possibly be masked geochemically by stranding of residual DAPL in the Diffuse Layer. Since this work is a pilot study that will be evaluated in a feasibility study, it is strongly recommended that the pumping steps be maintained for the durations specified in Table 4 through 7. As pumping progresses any decision to modify the pumping step duration will be made based on data.

As decisions are made to increase the pumping rate, there are two potential conditions of concern that are indicated in the logic diagram. One condition is excessive drawdown of the DAPL / Diffuse Layer interface around the point of extraction, EW-1, whereby Diffuse Layer becomes entrained in the DAPL. This condition should be apparent by comparing water level, chemical and induction logging data at corresponding elevations at ML-1, ML-2, ILW-1 and ILW-2. It is expected that as the pumping rate is increased a measurable drawdown cone of depression will develop. While some amount of drawdown may be inevitable and acceptable during the pilot test, Diffuse Layer should not be allowed to drawdown into DAPL toward the well screen in EW-1. The pumping rate should be immediately reduced if the relative elevation of the DAPL / Diffuse Layer interface in ML-2 and ML-1 changes vertically by one measurement port during the pilot test. The geochemistry of corresponding ports in ML-2 and ML-1 will be compared for consistent geochemical changes during progress of an individual pumping step (especially the ports that straddle the DAPL / Diffuse Layer). If the corresponding ports in ML-2 (located closest to the EW-1), show more rapid chemical changes than ML-1 (ports 5 and 4 for example in Figure 3) this would suggest drawdown of the DAPL interface closer to the extraction well. Column studies showed sulfate removals nearly twice that of chloride at equivalent pore volume indicating that sulfate appears to be a more sensitive indicator of changes in DAPL composition during displacement by Diffuse Layer. Therefore evaluation of compositional changes at the DAPL/Diffuse layer interface will also include sulfate/chloride ratios.

The second condition of concern is convective mixing above the DAPL layer. This could result from excessive drawdown of the DAPL/Diffuse Layer interface such that the interface is disturbed and causes inadvertent mixing of DAPL and Diffuse Layer. This will be evaluated by monitoring constituent concentrations in the Diffuse Layer and overlying groundwater. If constituent concentrations in the Diffuse Layer and overlying groundwater increase during pumping, then we will consider that evidence of convective mixing. This would require that pumping rate be immediately reduced or pumping stopped until DAPL/Diffuse Layer interface stabilizes once again.

Dissolved and total iron trends, as well as ferrous and ferric iron ratios, in combination with pH and ORP are potentially important indicators for precipitation reactions in the aquifer. Hydraulic fouling of the aquifer may be difficult to measure unless obvious signs such as fouling of sample ports, water discoloration, or fouling of the extraction well screen occur. If obvious signs of fouling occur, the pumping rate should be reduced and subsequent effects of that change in pumping rate evaluated over time. Fouling may occur as a normal condition as Diffuse Layer gradually displaces DAPL vertically or it may occur as a consequence of convective mixing.

10.0 REPORTING SCHEDULE

Operating conditions will be reported semiannually as part of the semiannual status report for the Site. A brief status letter will be provided monthly.

11.0 REFERENCES

Geomega, 1999. Olin Wilmington Technical Series: III. *Results of the August 1998 Multilevel Piezometer Sampling Event and DAPL/Diffuse Layer Discrimination Analysis*. Prepared for Olin Corporation by Geomega, Inc., Boulder, CO. January, 1999.

Geomega, 2003. Olin Wilmington Technical Series XXVIII*: Results of the 2003 (7th Annual) Induction-Logging and Multilevel Piezometer Sampling Event*, Olin Corporation, Wilmington, MA. Geomega, Inc., Boulder CO. August, 2003.

Geomega, 2004a. *Olin Wilmington Technical Series XXXII: Determining DAPL Removal Rates Using a Laboratory Column Test to Simulate Aquifer Pumping,* Olin Corporation, Wilmington, MA. Geomega, Inc., Boulder CO. January 2004.

Geomega, 2004b. *Olin Wilmington Technical Series XXXVI: Results of the 2004 Induction-Logging and Multilevel Piezometer Sampling Events.* Geomega, Inc., Boulder CO. September 2004.

Geomega, 2004c. *Olin Wilmington Technical Series XXXVII: Conclusion of the Laboratory Column Test Simulating Aquifer Pumping for DAPL Removal.* Geomega, Inc., Boulder CO. December 2004.

MACTEC, 2004. *Release Abatement Measure, Off Property West Ditch DAPL Recovery Prove Out*. Wilmington – Olin Chemical, August, 2004.

MACTEC, 2007. *Draft Focused Remedial Investigation Report,* Olin Chemical Superfund Site, Wilmington, Massachusetts. October 2007.

MACTEC, 2008. *Final Interim Response Steps Work Plan*, Olin Chemical Superfund Site, Wilmington, Massachusetts. August, 2008.

MACTEC, 2009. *Final Remedial Investigation/Feasibility Study Work Plan*, Olin Chemical Superfund Site, Wilmington, Massachusetts. August, 2009.

FIGURES

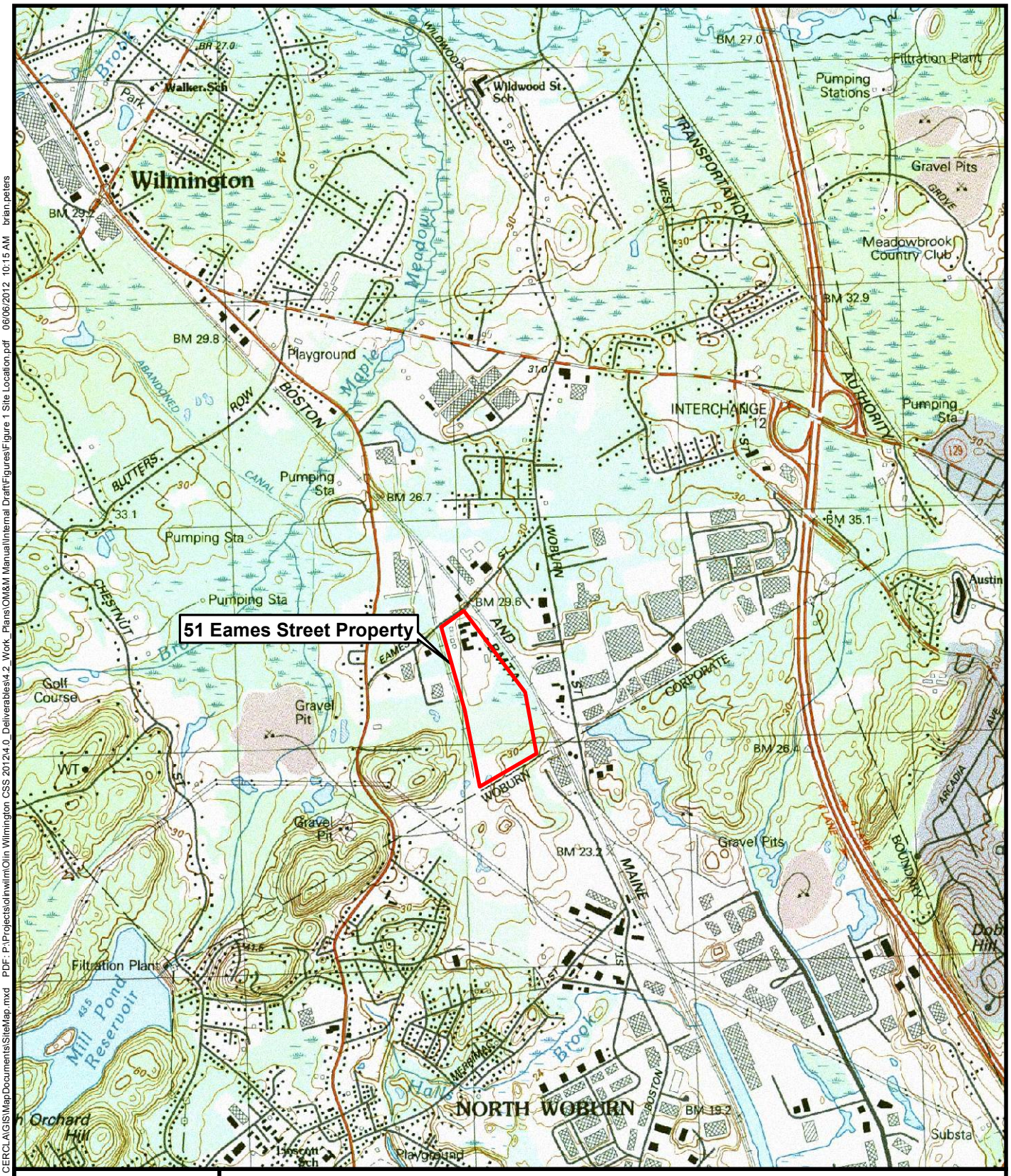

Source: Office of Geographic and Environmental Information (MassGIS), Commonwealth of Massachusetts Executive Office of Environmental Affairs at http://www.mass.gov/mgis

N

0 1,000 2,000 Feet

Prepared by BRP 11/11/10 | Checked by SWR 11/11/10

Figure 1
Site Location
DAPL Extraction Pilot Test

Olin Chemical Superfund Site
Wilmington, Massachusetts

amec

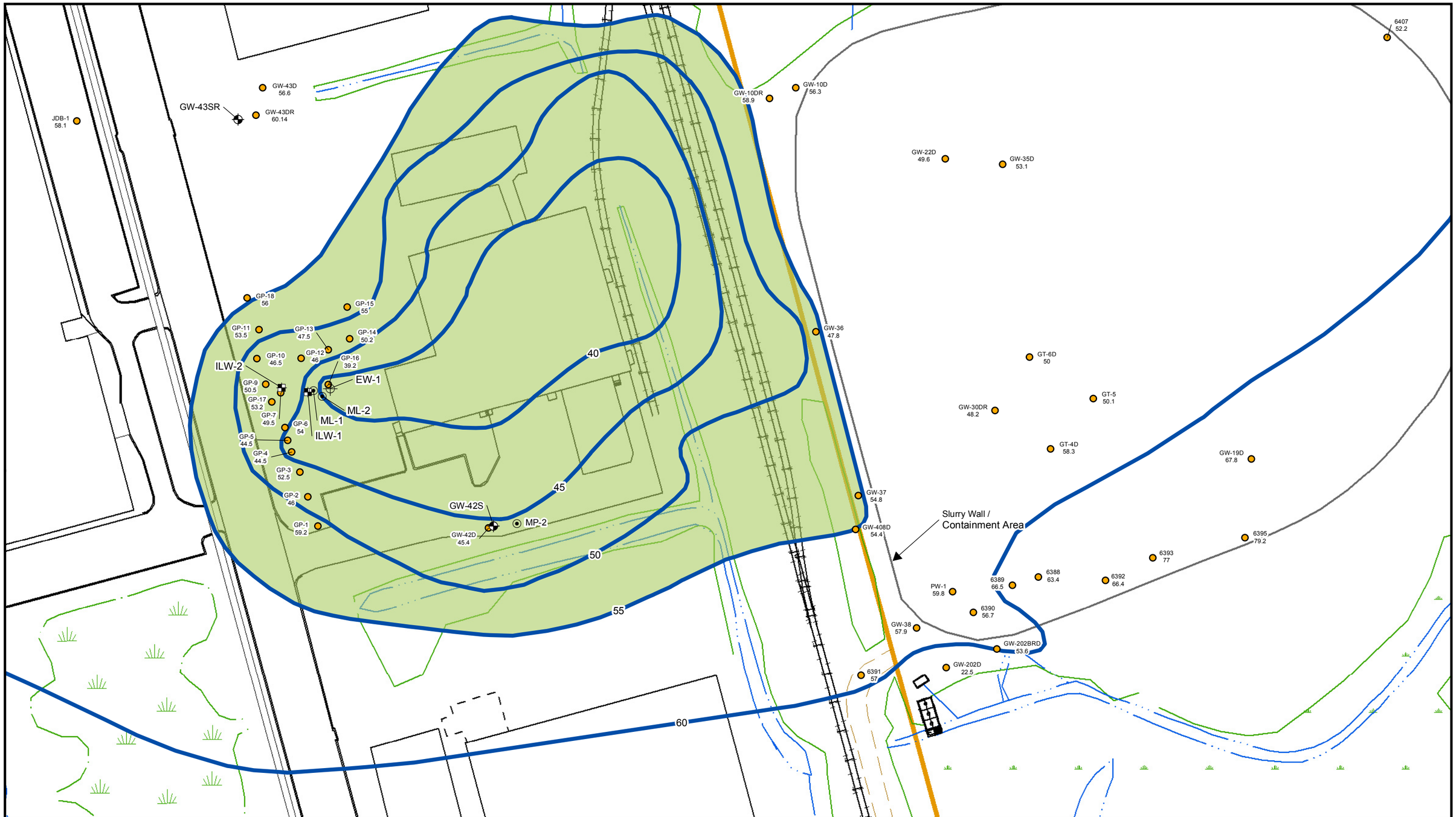

Legend

- Monitoring Well Location
- Induction Logging Well
- Multi Level Well
- Extraction Well
- Updated Bedrock Contours
- Interpreted Extent of DAPL Off Property Below 55 ft Contour
- Exploration Confirming Bedrock Elevation
- Railroad
- Paved Road
- Unpaved Road
- Sidewalks
- Surface Water
- Trails
- Wetland Symbol
- Wetland Boundary
- 51 Eames St. Property Boundary

amec
AMEC Environment & Infrastructure
107 Audubon Road Suite 301
Wakefield, MA 01880

N

0 35 70 140 Feet

Figure 2
Off-PWD DAPL Extraction
Pilot Area Bedrock Contours

Olin Chemical Superfund Site
Wilmington, Massachusetts

Prepared by BJR | Checked by PHT

LEGEND

ILW = Induction Logging Well
ML = MultiLevel Well
EW = Extraction Well
GP = GeoProbe
= Sand Filter Around ML Port Zones
= Bentonite Seal in ML Wells

Horz. 1" = 10'
Vert. 1" = 5'

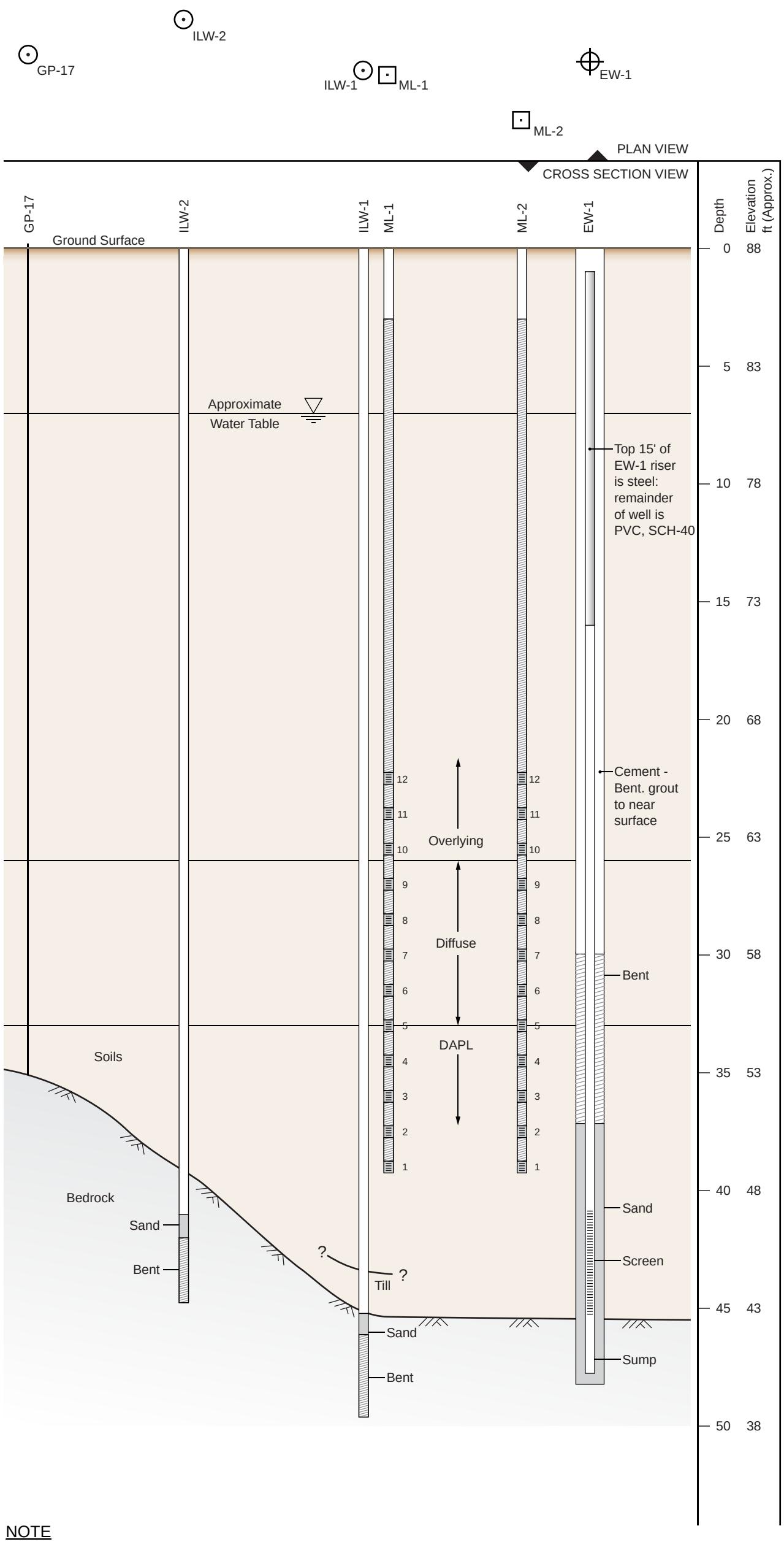

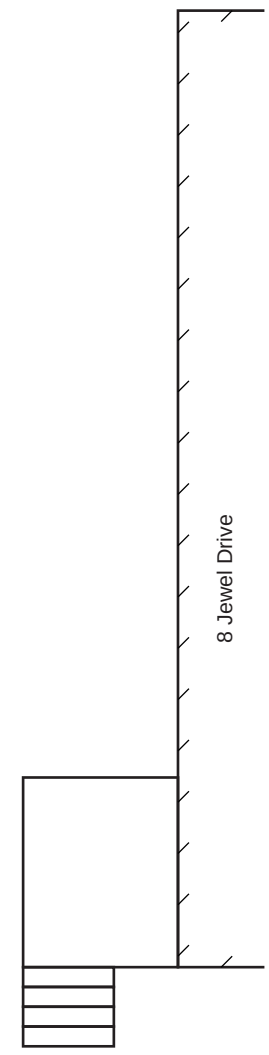

NOTE

For ML-1 and ML-2:
Tubing for Ports at Zones 4, 9, and 12 are 3/8" Inside Diameter.
All other Port tubings are 1/4" Inside Diameter.

Prepared by: JPH 6/6/12
Checked by: TDL 6/6/12

Olin Chemical Superfund Site Wilmington, Massachusetts	AMEC Environment & Infrastructure 107 Audubon Road Suite 301 Wakefield, MA 01880	Extraction and Monitoring Well Configuration DAPL Extraction Pilot Test Proj. No.: 6107120016 Figure 3

PORT2011042a.ai

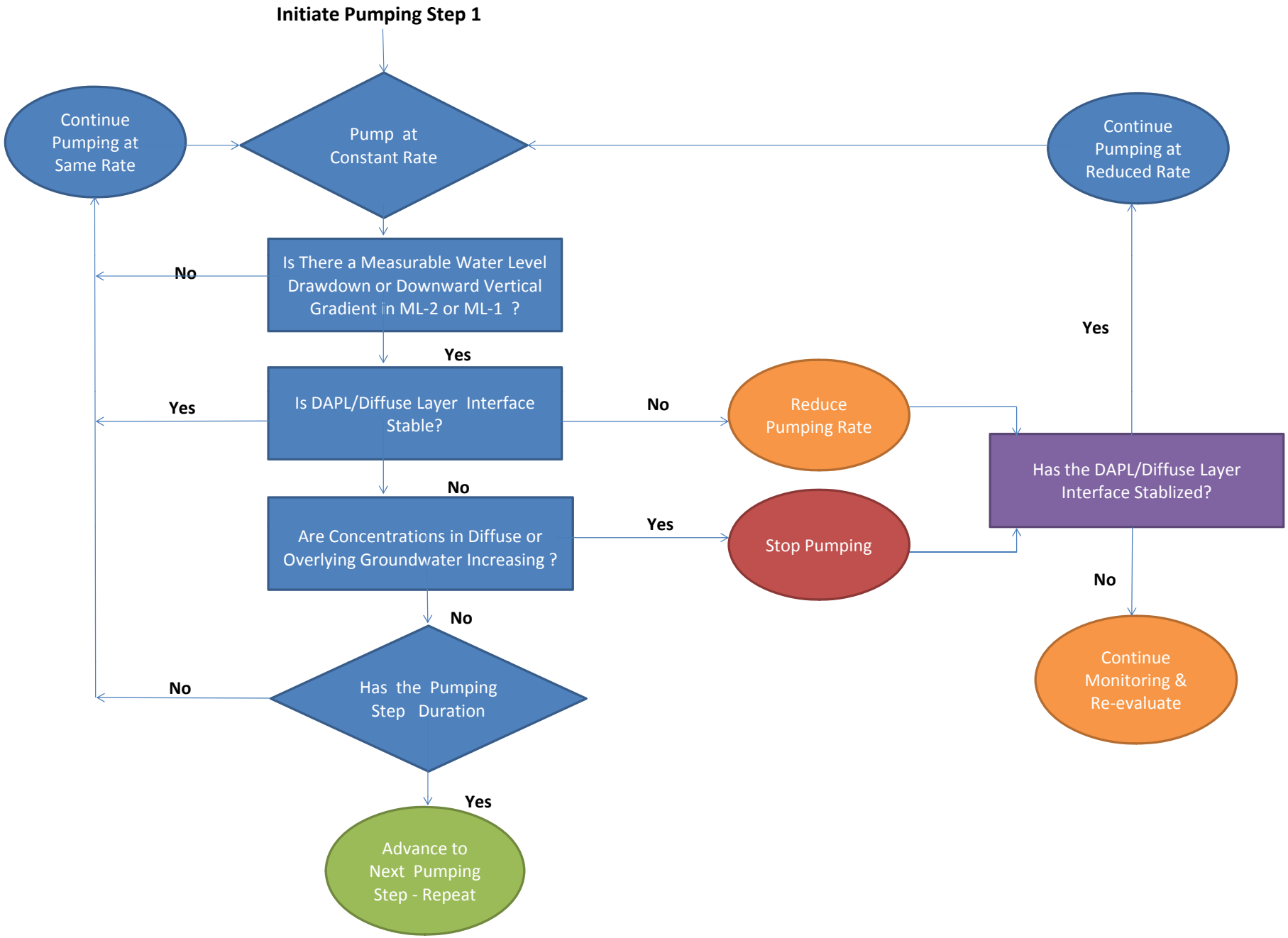

Olin Chemical Superfund Site Wilmington, Massachusetts	amec AMEC Environment & Infrastructure, Inc. 107 Audubon Road Suite 301 Wakefield, MA 01880	DAPL Removal Pilot Test Decision Tree DAPL Extraction Pilot Test Proj. No.: 6107120016 Figure 4

TABLES

Table 1
Checklist for DAPL Transfer

Olin Wilmington Chemical Superfund Site
Operations, Maintenance, & Performance Monitoring Plan - DAPL Extraction Pilot Test

1. Make sure truck driver has properly chocked truck wheels.
2. Place “Are all valves and hoses secure?” sign in front of truck.
3. Confirm with driver that he/she is aware of the volume to be transferred and that the tank truck does not contain incompatible residues.
4. After driver connects transfer hoses, place drip pans under suction valve at truck and discharge valve at storage tank.
5. Confirm with driver that hose connections are secure.
6. Make sure that vacuum breaker valve on storage tank is closed.
7. Coordinate transfer with driver.
8. When transfer is complete:
    a) Close discharge valve at storage tank
    b) Open vacuum breaker valve
    c) Air purge hoses and discharge pipe
9. Allow driver to disconnect and stow hoses. Use drip pans to catch any DAPL remaining in transfer hoses.
10. Complete manifests / Bills of Lading.
11. Check vehicle for proper placarding.
12. Instruct driver to examine the lowermost drain and all outlets of vehicle for leakage, and if necessary tighten or adjust drain outlets to prevent liquid leakage while in transit. Confirm with driver that “All valves and hoses are secure”.
13. Remove sign from in front of truck.
14. Make sure that discharge valve and vacuum breaker valve on storage tank are closed and that discharge valve is locked.

Prepared by: SWR 06/06/2012
Checked by: PHT 06/06/2012

Table 2
2010 Monitoring Data From MP-2

Olin Wilmington Chemical Superfund Site
Operations, Maintenance, Performance Monitoring Plan - DAPL Extraction Pilot Test

Location	Port	Depth (feet)	Elevation (feet)	Date Sample	Chloride (mg/L)	Magnesium (mg/L)	Ammonia (mg/L)	Sodium (mg/L)	Sulfate (mg/L)	pH (field - S.U.)	SC (field - µmhos/cm)
MP-2	17	5.5	78.64	7/19/10						5.95	507
MP-2	16	8	76.14	7/19/10						5.8	472
MP-2	15	10.5	73.64	7/19/10	120	1.5	2.8	75	10	5.72	482
MP-2	14	12	72.14	7/19/10						5.78	403
MP-2	13	13.5	70.64	7/19/10						5.66	375
MP-2	12	15	69.14	7/19/10						5.36	718
MP-2	11	17.5	66.64	7/19/10	370	13	250	310	1,300	4.96	3,447
MP-2	10	20	64.14	7/19/10	530	23	350	480	2,200	4.31	4,932
MP-2	9	22.5	61.64	7/19/10	400	14	290	350	1,600	4.07	4,041
MP-2	9 (dup)	22.5	61.64	7/19/10	390	14	290	360	1,500		
MP-2	8	24	60.14	7/19/10						4.08	3,721
MP-2	7	25.5	58.64	7/19/10						4.12	3,860
MP-2	6	27	57.14	7/19/10	730	34	560	700	3,500	4.03	7,250
MP-2	4	30	54.14	7/19/10	2,500	310	3,100	4,700	18,000	3.69	33,600
MP-2	3	32.5	51.64	7/19/10						3.55	57,720
MP-2	2	35	49.14	7/19/10						3.31	76,900
MP-2	1	37.5	46.64	7/19/10	13,000	1,300	600	20,000	71,000	3.39	84,360

Overlying Groundwater, SC < 3,000 umhos/cm
Diffuse Layer, SC >3,000 < 20,600 umhos/cm
DAPL, SC > 20,600 umhos/cm

mg/l = milligrams per liter
µmhos/cm = micro-ohms per centimeter

Prepared by/Date:LJ 06/06/2012
Checked by/Date: PHT 06/06/2012

Table 3
Monitoring Schedule - Baseline Period

Olin Wilmington Chemical Superfund Site
Operations, Maintenance, Performance Monitoring Plan - DAPL Extraction Pilot Test

Baseline Monitoring Period		
Week	1	2
Induction Logging		
ILW-1	X	X
ILW-2	X	X
GW-43D	X	X
GW-42D	X	X
Groundwater Sampling [1]		
EW-1 [2]		
ML-1	X	X
ML-2	X	X
MP-2	X	X
Water Levels [3]		
EW-1		
ML-1	X	X
ML-2	X	X
MP-2	X	X
GW-43DR	X	X
GW-42D	X	X

Notes:

1. Groundwater analysis includes ferrous and total iron, sulfate by Hach test kits, chloride and ammonia by Ion Selective Electrode, the parameters: pH, specific conductance, ORP, temperature,and turbidity will be collected with a water quality meter. Color will be described based on judgement
2. Samples to be collected from effluent of extraction well will be monitored for pH, specific conductance, ORP, temperature, turbidity, and color.
3. Water levels in multilevel piezometers will be collected in the 3/8-inch ID ports

EW = Extraction Well

GW = Groundwater

ILW = Induction Logging Well

ML = Multilevel Piezometer Adjacent to Extraction Well

MP = Existing Multilevel Piezometer

Prepared by/Date:TDL 06/06/2012
Checked by/Date: PHT 06/06/2012

Table 4
Monitoring Schedule - Pumping Step 1

Olin Wilmington Chemical Superfund Site
Operations, Maintenance, Performance Monitoring Plan - DAPL Extraction Pilot Test

Phase	DAPL Recovery Phase - Pumping Step 1																						
Week	1							2							3	4	5	6	7	8	9	10	11	12	13
Day	M	T	W	T	F	S	S	M	T	W	T	F	S	S											
Induction Logging																									
ILW-1	X		X		X			X			X				X	X		X		X		X			X
ILW-2	X		X		X			X			X				X	X		X		X		X			X
GW-43DR								X							X			X				X			X
GW-42D								X							X			X				X			X
Groundwater Sampling [1]																									
EW-1 [2]	X		X		X				X			X			X	X	X	X	X	X	X	X	X	X	X
ML-1	X		X		X				X			X			X	X		X		X		X			X
ML-2	X		X		X				X			X			X	X		X		X		X			X
MP-2															X			X				X			X
Water Levels [3]																									
EW-1	X		X		X				X			X			X	X		X		X		X			X
ML-1	X		X		X				X			X			X	X		X		X		X			X
ML-2	X		X		X				X			X			X	X		X		X		X			X
MP-2	X														X			X				X			X
GW-43D	X														X			X				X			X
GW-42D	X														X			X				X			X

Notes:

parameters: pH, specific conductance, ORP, temperature,and turbidity will be collected with a water quality meter. Color will be described based on judgement

2. Samples to be collected from effluent of extraction well will be monitored for pH, specific conductance, ORP, temperature, turbidity, and color

3. Water levels in multilevel piezometers will be collected in the 3/8-inch ID ports

EW = Extraction Well

GW = Groundwater

ILW = Induction Logging Well

ML = Multilevel Piezometer Adjacent to Extraction Well

MP = Existing Multilevel Piezometer

Prepared by/Date:TDL 06/06/2012
Checked by/Date: PHT 06/06/2012

Table 5
Monitoring Schedule - PumpingStep 2

Olin Wilmington Chemical Superfund Site
Operations, Maintenance, Performance Monitoring Plan - DAPL Extraction Pilot Test

DAPL Recovery Phase - Pumping Step 2																											
Week	1							2							3	4	5	6	7	8	9	10	11	12	13	14	15	16	17
Day	M	T	W	T	F	S	S	M	T	W	T	F	S	S	M		M		M		M			M			M		M
Induction Logging																													
ILW-1	X		X		X			X			X				X	X		X		X			X			X			X
ILW-2	X		X		X			X			X				X	X		X		X			X			X			X
GW-43D	X														X			X					X						X
GW-42D	X														X			X					X						X
Groundwater Sampling [1]																													
EW-1[2]	X		X		X			X			X				X	X	X	X	X	X	X	X	X	X	X	X	X	X	X
ML-1	X		X		X			X			X				X	X		X		X			X			X			X
ML-2	X		X		X			X			X				X	X		X		X			X			X			X
MP-2	X														X			X					X						X
Water Levels [3]																													
EW-1	X		X		X				X			X			X	X		X		X			X			X			X
ML-1	X		X		X				X			X			X	X		X		X			X			X			X
ML-2	X		X		X				X			X			X	X		X		X			X			X			X
MP-2	X								X						X	X		X		X			X			X			X
GW-43D	X														X			X					X						X
GW-42D	X														X			X					X						X

Notes:

1. Groundwater analysis includes ferrous and total iron, sulfate by Hach test kits, chloride and ammonia by Ion Selective Electrode, the parameters: pH, specific conductance, ORP, temperature,and turbidity will be collected with a water quality meter. Color will be described based on judgement
2. Samples to be collected from effluent of extraction well will be monitored for pH, specific conductance, ORP, temperature, turbidity, and color
3. Water levels in multilevel piezometers will be collected in the 3/8-inch ID ports

EW = Extraction Well

GW = Groundwater

ILW = Induction Logging Well

ML = Multilevel Piezometer Adjacent to Extraction Well

MP = Existing Multilevel Piezometer

Prepared by/Date:TDL 06/06/2012
Checked by/Date: PHT 06/06/2012

Table 6
Monitoring Schedule - Pumping Step 3

Olin Wilmington Chemical Superfund Site
Operations, Maintenance, Performance Monitoring Plan - DAPL Extraction Pilot Test

DAPL Recovery Phase - Pumping Step 3																															
Week	1							2							3	4	5	6	7	8	9	10	11	12	13	14	15	16	17	18	19	20	21	22	23
Day	M	T	W	T	F	S	S	M	T	W	T	F	S	S																					
Induction Logging																																			
ILW-1	X		X		X			X			X				X	X		X		X			X			X			X			X			X
ILW-2	X		X		X			X			X				X	X		X		X			X			X			X			X			X
GW-43DR	X							X							X	X		X		X			X			X			X			X			X
GW-42D	X							X							X	X		X		X			X			X			X			X			X
Groundwater Sampling [1]																																			
EW-1 [2]	X		X		X				X			X			X	X	X	X	X	X	X	X	X	X	X	X	X	X	X	X	X	X	X	X	X
ML-1	X		X		X				X			X			X	X		X		X			X			X			X			X			X
ML-2	X		X		X				X			X			X	X		X		X			X			X			X			X			X
MP-2	X														X					X						X						X			X
Water Levels [3]																																			
EW-1	X		X		X				X			X			X	X		X		X			X			X			X			X			X
ML-1	X		X		X				X			X			X	X		X		X			X			X			X			X			X
ML-2	X		X		X				X			X			X	X		X		X			X			X			X			X			X
MP-2	X								X						X	X		X		X			X			X			X			X			X
GW-43DR	X														X					X						X						X			X
GW-42D	X														X					X						X						X			X

Notes:

1. Groundwater analysis includes ferrous and total iron, sulfate by Hach test kits, chloride and ammonia by Ion Selective Electrode, the parameters: pH, specific conductance, ORP, temperature,and turbidity will be collected with a water quality meter. Color will be described based on judgement

2. Samples to be collected from effluent of extraction well will be monitored for pH, specific conductance, ORP, temperature, turbidity, and color

3. Water levels in multilevel piezometers will be collected in the 3/8-inch ID ports

EW = Extraction Well

GW = Groundwater

ILW = Induction Logging Well

ML = Multilevel Piezometer Adjacent to Extraction Well

MP = Existing Multilevel Piezometer

Prepared by/Date:TDL 06/06/2012
Checked by/Date: PHT 06/06/2012

Table 7
Monitoring Schedule - Extended Pumping Period

Olin Wilmington Chemical Superfund Site
Operations, Maintenance, Performance Monitoring Plan - DAPL Extraction Pilot Test

DAPL Recovery Phase - Extended Pumping Period																										
Week	1	2	3	4	5	6	7	8	9	10	11	12	13	14	15	16	17	18	19	20	21	22	23	24	25	26
Induction Logging																										
ILW-1	X	X		X		X		X			X			X			X			X			X			X
ILW-2	X	X		X		X		X			X			X			X			X			X			X
ILW-3	X	X		X		X		X			X			X			X			X			X			X
GW-43DR	X	X		X		X		X			X			X			X			X			X			X
GW-42D	X	X		X		X		X			X			X			X			X			X			X
Groundwater Sampling [1]																										
EW-1 [2]	X	X	X	X	X	X	X	X	X	X	X	X	X	X	X	X	X	X	X	X	X	X	X	X	X	X
ML-1	X	X		X		X		X			X			X			X			X			X			X
ML-2	X	X		X		X		X			X			X			X			X			X			X
MP-2	X			X				X						X						X						X
Water Levels [3]																										
EW-1 [2]	X	X		X		X		X			X			X			X			X			X			X
ML-1	X	X		X		X		X			X			X			X			X			X			X
ML-2	X	X		X		X		X			X			X			X			X			X			X
MP-2	X	X		X		X		X			X			X			X			X			X			X
GW-43DR	X			X				X						X						X						X
GW-42D	X			X				X						X						X						X

Notes:

1. Groundwater analysis includes ferrous and total iron, sulfate by Hach test kits, chloride and ammonia by Ion Selective Electrode, the parameters: pH, specific conductance, ORP, temperature,and turbidity will be collected with a water quality meter. Color will be described based on judgement
2. Samples to be collected from effluent of extraction well will be monitored for pH, specific conductance, ORP, temperature, turbidity, and color
3. Water levels in multilevel piezometers will be collected in the 3/8-inch ID ports

EW = Extraction Well

GW = Groundwater

ILW = Induction Logging Well

ML = Multilevel Piezometer Adjacent to Extraction Well

MP = Existing Multilevel Piezometer

Prepared by/Date:TDL 06/06/2012
Checked by/Date: PHT 06/06/2012

Table 8
Analytical Program Summary

Olin Wilmington Chemical Superfund Site
Operations, Maintenance, Performance Monitoring Plan - DAPL Extraction Pilot Test

ON-SITE ANALYTICAL METHODS							
Analyte	**Medium**	**Expected Concentration Range (mg/L)**		**HACH Method**	**Detection Range (mg/L)**		**Sample Bottle ****
Sulfate	GW	3	8500	SulfaVer® 4, Method 8051 - DR 2800 Spectrophotometer	2	70	500 ml
Ammonia - N	GW	0.08	380	*	0.1	17,000	
Chloride	GW	6.1	15000	*	1.8	35,500	
Sulfate	DAPL/ Diffuse	440	830000	Tubidimetric Method 10227 TNT plus 864 plus 865 DR 2800 Spectrophotometer	40 150	150 900	500 ml
Ferrous Iron	DAPL/ Diffuse	7.1	3100	1, 10-Phenanthrolein Method 8146 - DR 2800 Spectrophotometer	0.02	3	
Total Iron	DAPL/ Diffuse	600	3600	FerroVer®, Method 8008 - DR 2800 Spectrophotometer	0.02	3	
Chloride	DAPL/ Diffuse	590	130000	*	1.8	35,500	

OFF-SITE ANALYTICAL METHODS							
Analyte	**Medium**	**Expected Concentration Range (mg/L)**		**EPA Method**	**Detection Limit**	**Preservation Method**	**Sample Bottle**
Chloride	All	6.1	130000	300	1 mg/L	4 degrees C	125/ 250 ml
Ammonia - N	GW	0.08	380	Lachat (EPA 350.1)	73 ug/L	H2SO4, 4 degrees C	
Sulfate	All	3	830000	300	2 mg/L	4 degrees C	
Iron	All	0.048	3600	6010B	100 ug/L	HNO3	250 ml
Calcium (T)	All	-	640	6010B	400 ug/L	HNO3	
Sodium (T)	All	-	22000	6010B	2000 ug/L	HNO3	
Chromium (T)	All	-	3500	6010B	5 ug/L	HNO3	

Notes:

* Ion Selective Electrode (ISE) combination probe and meter.

** all on-site methods can be run from one 500 ml sample

HNO3 = Nitric Acid

mg/l = milligrams per liter

ml = milliliters

ug/l = micrograms per liter

Prepared by/Date:PHT 06/06/2012
Checked by/Date: TLC 06/06/2012

APPENDIX A
DAPL EXTRACTION SYSTEM DRAWINGS

DAPL EXTRACTION PILOT TEST

OLIN CHEMICAL SUPERFUND SITE
WILMINGTON, MASSACHUSETTS

ISSUED FOR CONSTRUCTION
MARCH 2011

2

DRAWING INDEX

INCLUDED IN THIS SUBMITTAL	SHEET NUMBER	DRAWING TITLE	DISCIPLINE NUMBER
•	1	COVER SHEET	G-001
•	2	PROPOSED SITE PLAN	C-101
•	3	PROPOSED PIPING PROFILE	C-201
•	4	PROPOSED PROFILE PIPE SLEEVES UNDER RAILROAD SPURS AND DETAILS	C-202
•	5	CIVIL DETAILS	C-301
•	6	CIVIL DETAILS	C-302
•	7	CIVIL DETAILS	C-303
•	8	CONSTRUCTION SPECIFICATIONS	C-304
•	9	PIPING AND INSTRUMENTATION DIAGRAM	D-601
•	10	ELECTRICAL GENERAL NOTES AND LEGEND	E-001
•	11	PROPOSED ELECTRICAL SITE PLAN	E-101
•	12	ELECTRICAL PLANS AND DETAIL	E-102
•	13	ELECTRICAL DETAILS	E-103
•	14	ONE-LINE, HEAT TRACE RISERS, WIRING DIAGRAMS, SCHEDULES	E-601
•	15	ELECTRICAL SPECIFICATIONS AND SEQUENCE OF OPERATIONS	E-602

COMMONWEALTH OF MASSACHUSETTS
MARK A. PETERS
35251
REGISTERED PROFESSIONAL ENGINEER

3/9/11

This drawing is the property of MACTEC Engineering and Consulting, Inc. including all patented and patentable features, and/or confidential information and its use is conditioned upon the users agreement not to reproduce the drawing, in whole or part, nor the material described thereon, nor the use of the drawing for any purpose other than specifically permitted in writing by MACTEC Engineering and Consulting, Inc.

NO.	DATE	REVISIONS	BY	CHK
2	03/09/11	ISSUED FOR CONSTRUCTION	REO	MAP
1	02/12/10	FINAL	REO	MAP
0	12/07/09	ISSUED FOR BID	REO	MAP
A	11/12/09	FOR CLIENT REVIEW	REO	MAP

DRAWN: DEL	PROJECT NO: 6107-10-0016
ENGINEER: MAP	SCALE: –
CHECKED: REO	APPROVED: PHT
DATE: 12/08/10	DATE: 12/08/10

MACTEC
Engineering and Consulting, Inc.
P.O. Box 7050, 511 Congress Street
Portland, ME 04112-7050
(207) 775-5401

DAPL EXTRACTION PILOT TEST
OLIN CHEMICAL SUPERFUND SITE
WILMINGTON, MASSACHUSETTS

GENERAL

COVER SHEET

DRAWING NO: G-001

1 / 15

M:\Projects\OLIN-Wilmington\G-001.dwg Wed, 09 Mar 2011 - 12:08pm mmdacey

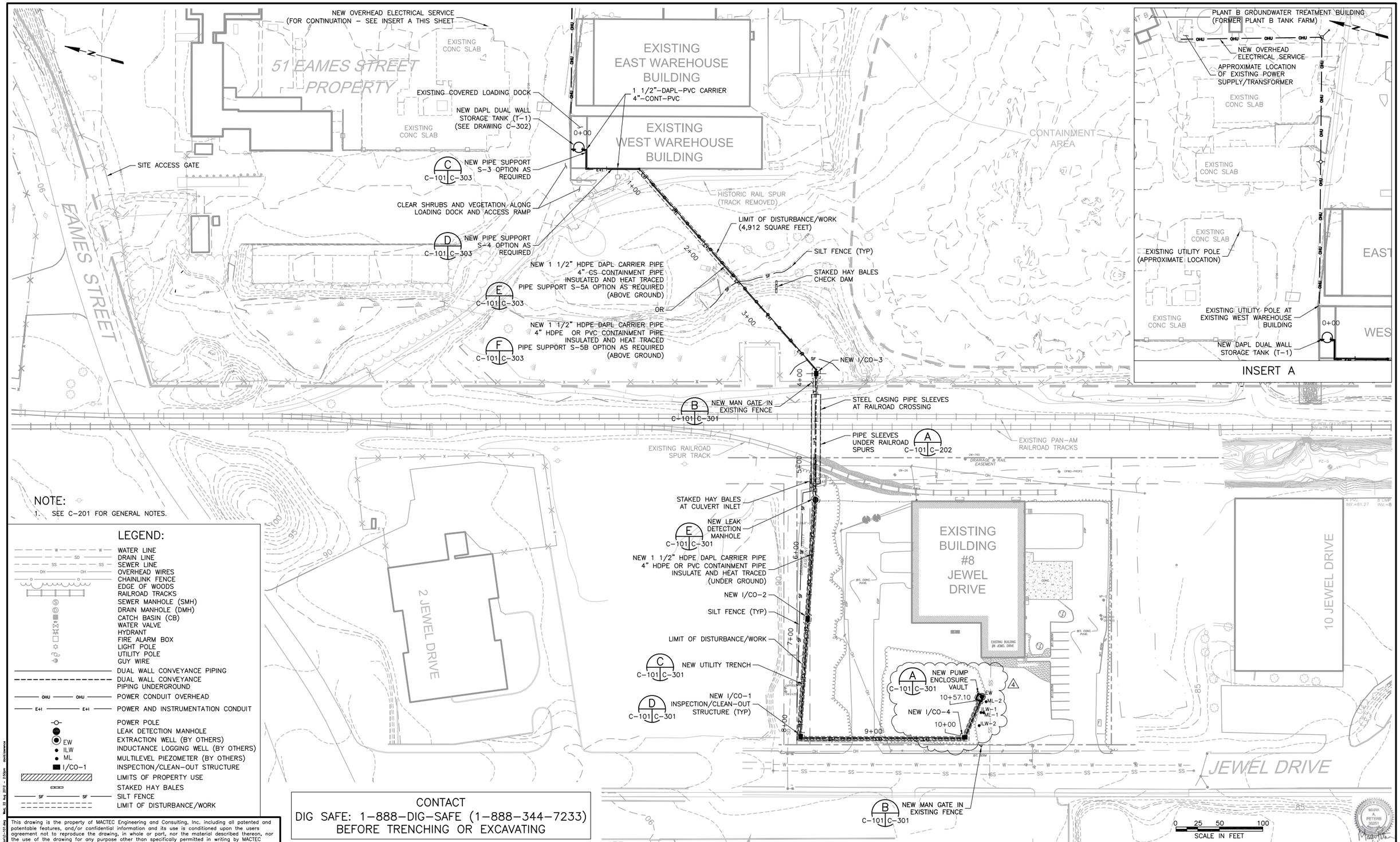

NOTE:

1. SEE C-201 FOR GENERAL NOTES.

LEGEND:

- WATER LINE
- DRAIN LINE
- SEWER LINE
- OVERHEAD WIRES
- CHAINLINK FENCE
- EDGE OF WOODS
- RAILROAD TRACKS
- SEWER MANHOLE (SMH)
- DRAIN MANHOLE (DMH)
- CATCH BASIN (CB)
- WATER VALVE
- HYDRANT
- FIRE ALARM BOX
- LIGHT POLE
- UTILITY POLE
- GUY WIRE
- DUAL WALL CONVEYANCE PIPING
- DUAL WALL CONVEYANCE PIPING UNDERGROUND
- POWER CONDUIT OVERHEAD
- POWER AND INSTRUMENTATION CONDUIT
- POWER POLE
- LEAK DETECTION MANHOLE
- EW — EXTRACTION WELL (BY OTHERS)
- ILW — INDUCTANCE LOGGING WELL (BY OTHERS)
- ML — MULTILEVEL PIEZOMETER (BY OTHERS)
- I/CO-1 — INSPECTION/CLEAN-OUT STRUCTURE
- LIMITS OF PROPERTY USE
- STAKED HAY BALES
- SILT FENCE
- LIMIT OF DISTURBANCE/WORK

CONTACT
DIG SAFE: 1-888-DIG-SAFE (1-888-344-7233)
BEFORE TRENCHING OR EXCAVATING

This drawing is the property of MACTEC Engineering and Consulting, Inc. including all patented and patentable features, and/or confidential information and its use is conditioned upon the users agreement not to reproduce the drawing, in whole or part, nor the material described thereon, nor the use of the drawing for any purpose other than specifically permitted in writing by MACTEC Engineering and Consulting, Inc.

NO.	DATE	REVISIONS	BY	CHK
4	11/03/11	REVISED LOCATION FOR EW AND VAULT	REO	MAP
3	04/05/11	ADDRESSED TOWN OF WILMINGTON COMMENTS	REO	MAP
2	03/09/11	ISSUED FOR CONSTRUCTION	REO	MAP
1	02/12/10	FINAL	REO	MAP
0	12/07/09	ISSUED FOR BID	REO	MAP
A	11/12/09	FOR CLIENT REVIEW	REO	MAP

DRAWN: DEL	PROJECT NO: 6107-10-0016
ENGINEER: MAP	SCALE: 1" = 50'
CHECKED: REO	APPROVED: PHT
DATE: 03/09/11	DATE: 03/09/11

MACTEC

Engineering and Consulting, Inc.
P.O. Box 7050, 511 Congress Street
Portland, ME 04112-7050
(207) 775-5401

DAPL EXTRACTION PILOT TEST
OLIN CHEMICAL SUPERFUND SITE
WILMINGTON, MASSACHUSETTS

CIVIL

PROPOSED SITE PLAN

DRAWING NO: C-101

2 / 15

P:\Projects\CADD-PORT\Projects\Olin-Wilmington\C-101.dwg Wed, 22 Aug 2012 - 2:50pm dodd.lawrence

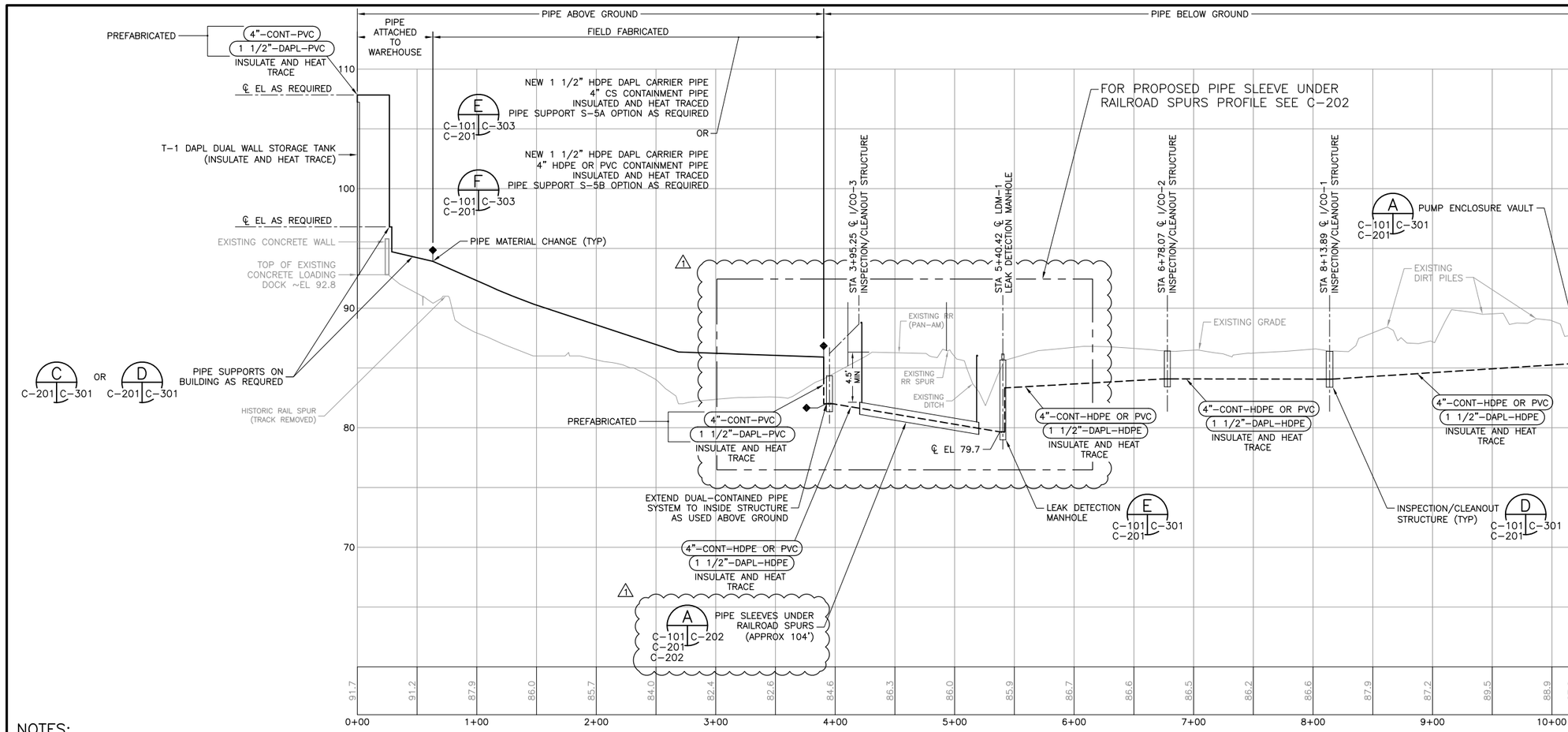

NOTES:

1. FOR PIPING ELEVATIONS AT STRUCTURES, SEE DRAWING C–301.

GENERAL NOTES:

1. COORDINATE USE OF THE SITE WITH OLIN, THE ENGINEER, AND THE SITE'S CURRENT OWNER.
2. KNOWN UNDERGROUND UTILITIES AND STRUCTURES ARE SHOWN ON THE DRAWINGS. THE LOCATION OF THESE EXISTING UNDERGROUND UTILITIES AND STRUCTURES SHOULD BE CONSIDERED APPROXIMATE THEREFORE, PRIOR TO THE COMMENCEMENT OF SITE ACTIVITIES, THE CONTRACTOR SHALL VERIFY THE LOCATION OF ALL EXISTING UTILITIES OR STRUCTURES IN THE AREAS OF WORK: DIG SAFE: 1–888–DIG–SAFE (1–888–344–7233). IF UTILITIES ARE TO REMAIN IN PLACE, PROVIDE ADEQUATE MEANS OF PROTECTION.
3. SHOULD UNCHARTED, OR INCORRECTLY CHARTED, PIPING OR OTHER UTILITIES BE ENCOUNTERED DURING EXCAVATION, CONSULT THE UTILITY OWNER AND ENGINEER IMMEDIATELY FOR DIRECTIONS. COOPERATE WITH THE ENGINEER AND UTILITY OWNER IN KEEPING RESPECTIVE FACILITIES IN OPERATION. THE CONTRACTOR SHALL REPAIR DAMAGED UTILITIES TO SATISFACTION OF THE UTILITY OWNER.
4. DO NOT INTERRUPT EXISTING UTILITIES SERVING OCCUPIED FACILITIES, EXCEPT WHEN PERMITTED IN WRITING BY THE OWNER AND ENGINEER AND THEN ONLY AFTER ACCEPTABLE TEMPORARY UTILITY SERVICES HAVE BEEN PROVIDED.
5. EXISTING SITE ACCESS DRIVES SHALL BE MAINTAINED AT ALL TIMES EXCEPT WHEN PERMITTED IN WRITING BY THE CURRENT OWNER AND OLIN.
6. BITUMINOUS PAVEMENT SHALL BE DEMOLISHED AND REMOVED FROM EXCAVATION/TRENCHING AREAS AND PROPERLY DISPOSED OFFSITE. PAVEMENT SHALL BE SAW CUT AT LIMITS OF REMOVAL.
7. EXISTING BITUMINOUS PAVEMENT, LAWN, FENCING AND ANY OTHER FEATURES DISTURBED BY THE WORK SHALL BE RESTORED TO EXISTING CONDITIONS UPON COMPLETION OF THE WORK.
8. SOURCE OF BASE MAP: EXISTING CONDITIONS & SPOT ELEVATIONS SHOWN ON THE DRAWINGS ARE THE RESULT OF AN ON THE GROUND SURVEY PERFORMED BY DANA F. PERKINS, INC. ON JUNE 27 & 29, 2005.

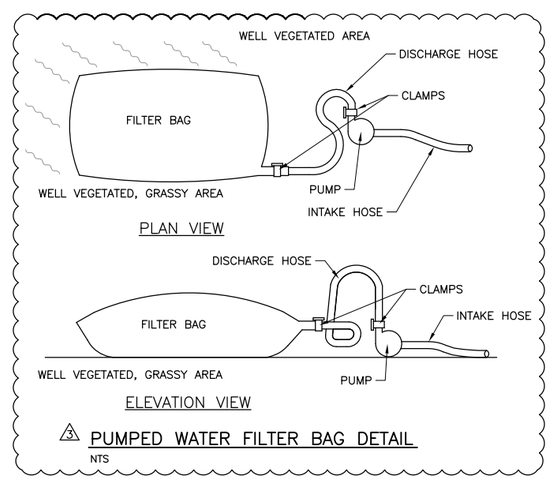

3 PUMPED WATER FILTER BAG DETAIL
NTS

1 MOVED PIPE SLEEVES UNDER RAILROAD DETAIL TO C–202

0 25 50 100 HORIZONTAL SCALE IN FEET

0 2.5 5 10 VERTICAL SCALE IN FEET

This drawing is the property of MACTEC Engineering and Consulting, Inc. including all patented and patentable features, and/or confidential information and its use is conditioned upon the users agreement not to reproduce the drawing, in whole or part, nor the material described thereon, nor the use of the drawing for any purpose other than specifically permitted in writing by MACTEC Engineering and Consulting, Inc.

NO.	DATE	REVISIONS	BY	CHK
3	04/05/11	ADDRESSED TOWN OF WILMINGTON COMMENTS	REO	MAP
2	03/09/11	ISSUED FOR CONSTRUCTION	REO	MAP
1	02/12/10	FINAL	REO	MAP
0	12/07/09	ISSUED FOR BID	REO	MAP
A	11/12/09	FOR CLIENT REVIEW	REO	MAP

DRAWN: MRS	PROJECT NO: 6107–10–0016
ENGINEER: MAP	SCALE: AS NOTED
CHECKED: REO	APPROVED: PHT
DATE: 03/09/11	DATE: 03/09/11

MACTEC
Engineering and Consulting, Inc.
P.O. Box 7050, 511 Congress Street
Portland, ME 04112–7050
(207) 775–5401

DAPL EXTRACTION PILOT TEST
OLIN CHEMICAL SUPERFUND SITE
WILMINGTON, MASSACHUSETTS

CIVIL

PROPOSED PIPING PROFILE

DRAWING NO: C–201
3 / 15

P:\Projects\CADD–PDXP\Projects\OLIN–Wilmington\C–201.dwg Wed, 22 Aug 2012 – 3:05pm dsid:lawrence

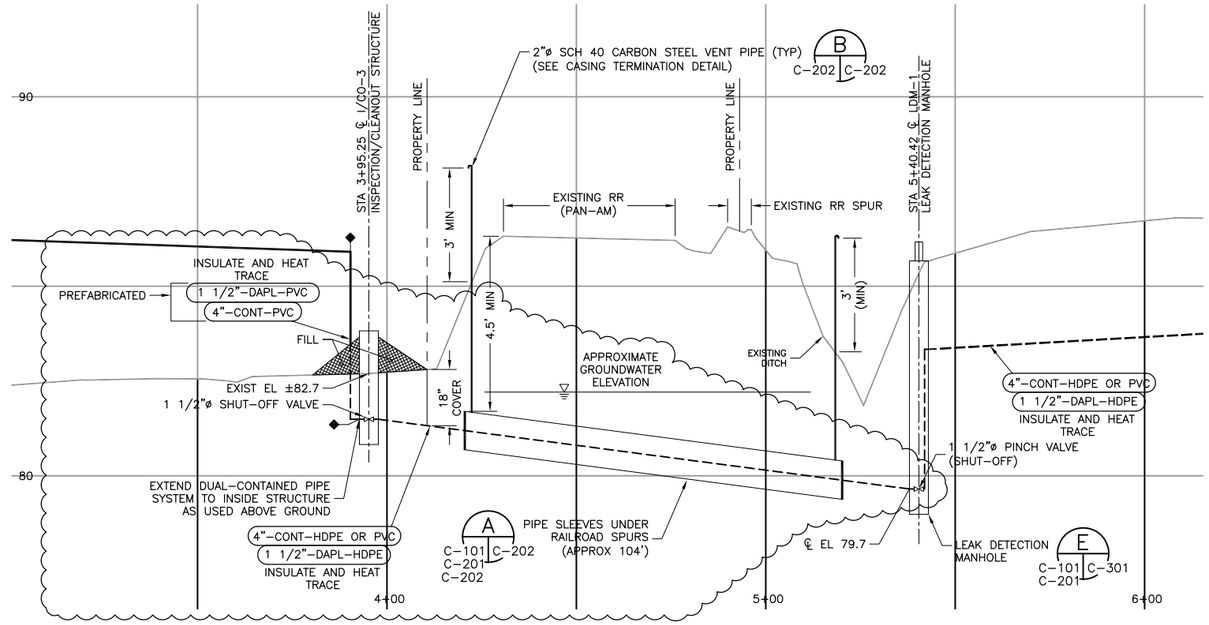

2

PROPOSED PROFILE PIPE SLEEVE UNDER RAILROAD SPURS

0 10 20 40 HORIZONTAL SCALE IN FEET

0 1 2 4 VERTICAL SCALE IN FEET

A

NOTES:

1. FOR PIPING ELEVATIONS AT STRUCTURES, SEE DRAWING C-301.

RAILROAD UTILITY CROSSING NOTES:

1. THE RAILROAD WORK AREA IS PART OF THE WOBURN LOOP IS CONSIDERED AN ACTIVE TRACK AND THEREFORE A POTENTIALLY HAZARDOUS WORK AREA. ALL WORK MUST BE COORDINATED WITH PAN AM RAILWAY FOR TRAIN MOVEMENTS. REPRESENTATIVES FOR THE CONTRACTOR, OLIN, MACTEC, USEPA, MADEP, AND SUBCONTRACTORS MUST BE ACCOMPANIED BY A RAILROAD FLAGMAN/INSPECTOR PER FEDERAL RAILROAD ADMINISTRATION REGULATIONS AND PAN AM SPECIFICATIONS.

2. ANY WORK ACTIVITIES THAT AFFECT THE PAN AM RAILWAY RIGHT-OF-WAY (ROW) AND/OR OPERATIONS DURING THIS PROJECT WILL REQUIRE PRIOR PAN AM APPROVAL AND THE PRESENCE OF A RAILROAD FLAGMAN/INSPECTOR.

3. THE CONTRACTOR WILL BE REQUIRED TO SUBMIT A PIPING INSTALLATION PROCEDURE TO PAN AM RAILWAY DETAILING THE MATERIALS AND METHODS OF CONSTRUCTION TO BE UTILIZED DURING THE RAILROAD UTILITY CROSSING WORK AFFECTING THE PAN AM ROW. ADDITIONALLY, THE CONTRACTOR MUST EXECUTE A STANDARD RAILROAD SERVICE CONTRACT OR PROPERTY ACCESS AND INDEMNIFICATION AGREEMENT AND PROVIDE AN ACCEPTABLE RAILROAD-PROTECTIVE INSURANCE POLICY TO THE PAN AM RAILWAY REAL ESTATE DEPARTMENT.

4. THE PROPOSED PIPE CROSSING WORK WILL IMPACT EXISTING FREIGHT SERVICE OPERATIONS FOR THE GLEN FALLS SAND & GRAVEL FACILITY. THE PAN AM RAILWAY TRANSPORTATION DEPARTMENT WILL BE REQUIRED TO APPROVE THE TRACK OUTAGE REQUIRED TO ACCOMMODATE THE INSTALLATION WORK AND ISSUE A SAFETY BULLETIN TO RAILROAD PERSONNEL AND GLEN FALLS EMPLOYEES OF THE RESTRICTED FREIGHT OPERATION LIMITS AND OTHER POTENTIAL HAZARDS DURING THE PROJECT. THE CONTRACTOR SHALL PROVIDE AN ESTIMATED SCHEDULE PROVIDING DATES AND DURATION TO CONDUCT THE PIPE CROSSING WITH THE PIPING INSTALLATION PROCEDURE.

5. THE PROPOSED UTILITY CROSSING WILL BE INSTALLED VIA OPEN CUT AND DIRECT BURY PROCEDURES. PAN AM RAILROAD FORCES OR A PAN AM APPROVED SUBCONTRACTOR WILL BE REQUIRED TO CONSTRUCT THE RAILROAD WORK, INCLUDING REMOVAL AND REPLACEMENT OF RAIL, TIES, AND BALLAST STONE THROUGHOUT THE RAILROAD UTILITY CROSSING WORK AREA.

6. THE PIPE SLEEVES OR CASING PIPE SHALL BE STEEL PIPE CONFORMING TO ASTM A 53 OR API SPEC 5L, GRADE B (35,000 PSI MINIMUM YIELD STRESS), TYPE E OR S, SCHEDULE 40 BLACK STEEL PIPE.
   - 10-INCH, SCHEDULE 40, WALL THICKNESS = 0.365 INCHES.
   - 4-INCH, SCHEDULE 40, WALL THICKNESS = 0.237 INCHES

7. AS INDICATED SHUT-OFF VALVES WILL BE INSTALLED ON THE DAPL DISCHARGE PIPE IN BOTH THE LEAK DETECTION MANHOLE AND INSPECTION/CLEANOUT STRUCTURE I/CO-3 LOCATED AT BOTH ENDS OF THE PIPELINE CROSSING.

8. BOTH ENDS OF THE PIPE SLEEVE OR CASING PIPE CARRYING THE DAPL PIPING SHALL BE PROVIDED WITH CASING SEALS AND VENTS AS INDICATED.

9. THE DAPL PIPE SHALL BE CENTERED WITHIN THE PIPE SLEEVE OR CASING PIPE USING PRE-MANUFACTURED NON-METALLIC CASING SPACERS. THE SPACERS SHALL BE LOCATED AT 6 TO 8 FEET ON CENTERED ALONG THE ENTIRE PIPE CASING LENGTH.

10. EXCAVATION AND BACKFILL ACTIVITIES MUST BE PERFORMED IN CONFORMANCE WITH APPLICABLE PAN AM RAILWAY SPECIFICATIONS AND AS OUTLINED HEREIN:
    - ESTIMATED GROUNDWATER LEVELS INDICATE THAT THE PIPING INSTALLATION IS EXPECTED TO OCCUR SEVERAL FEET BELOW THE GROUNDWATER ELEVATION. THE CONTRACTOR SHALL PROVIDE ADEQUATE DEWATERING FACILITIES TO MAINTAIN EXCAVATED AREAS SUFFICIENTLY DRY FROM GROUNDWATER AND/OR SURFACE WATER RUNOFF TO ALLOW PROPER BACKFILL AND COMPACTION AND THAT WILL NOT ADVERSELY AFFECT CONSTRUCTION PROCEDURES NOR CAUSE EXCESSIVE DISTURBANCE OF UNDERLYING NATURAL GROUND. THE DRAINAGE OF ALL WATER RESULTING FROM PUMPING SHALL BE MANAGED SO AS NOT TO CAUSE PHYSICAL OR ENVIRONMENTAL DAMAGE TO ADJACENT AREAS. PUMPING SHALL BE CONTINUOUS, AS REQUIRED, TO PROTECT THE WORK AND/OR TO MAINTAIN SATISFACTORY PROGRESS IN THE WORK. SEE PUMPED WATER FILTER BAG DETAIL ON DRAWING C-201.
    - THE TRENCH SHALL BE BACKFILLED WITH STRUCTURAL FILL CONSISTING OF GRAVEL BORROW MEETING THE REQUIREMENTS OF MASSHIGHWAY SPECIFICATION SECTION M1.03.0 TYPE A, B, OR C. IT SHALL BE OF SUCH A GRADATION AND MATERIAL THAT IT CAN BE COMPACTED TO THE MINIMUM SPECIFIED DRY DENSITY INDICATED BELOW.
    - TRENCH BACKFILL SHALL BE COMPACTED TO MINIMUM OF 95% MODIFIED PROCTER BASED ON AMERICAN ASSOCIATION OF STATE HIGHWAY AND TRANSPORTATION OFFICIALS (AASHTO) DESIGNATION T-180, OR ASTM D 1557. TRENCH BACKFILL MATERIAL SHALL BE PLACED IN A MAXIMUM 8-INCH LOOSE LIFTS. IN PLACE DENSITY AND MOISTURE TESTING PER ASTM D 6938 AT A MINIMUM RATE OF 2 TESTS PER LIFT SHALL BE TAKEN AND DOCUMENTED DURING THE WORK.
    - BALLAST STONE, TIES AND RAIL MATERIAL AND INSTALLATION SHALL BE CONDUCTED PER PAN AM RAILWAY REQUIREMENTS AND SPECIFICATIONS.

1

0

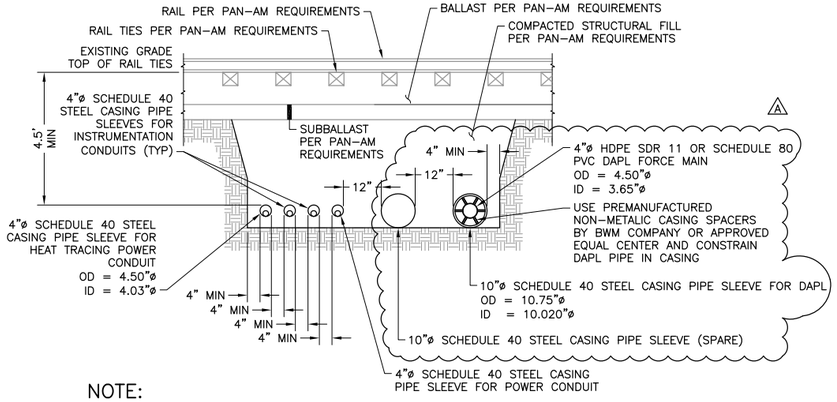

A

NOTE:

1. RAILROAD WORK SHALL BE CONDUCTED BY AN APPROVED PAN-AM SUBCONTRACTOR HIRED BY THE CONTRACTOR. THE CONTRACTOR SHALL PROVIDE PIPING AND CONDUIT MATERIALS, INCLUDING CASING PIPE, AND COORDINATE PIPE INSTALLATION WITH THE PAN-AM APPROVED SUBCONTRACTOR.

2. CASING PIPE SHALL EXTEND A MINIMUM OF 25' FROM CENTERLINE OF OUTSIDE RAIL LINE.

PIPE SLEEVES UNDER RAILROAD SPURS

NTS

A
C-101 C-202

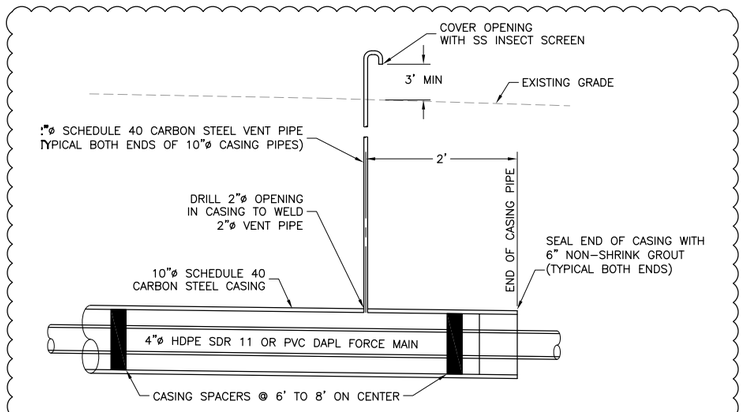

CASING TERMINATION

NTS

B
C-202 C-202

A

This drawing is the property of MACTEC Engineering and Consulting, Inc. including all patented and patentable features, and/or confidential information and its use is conditioned upon the users agreement not to reproduce the drawing, in whole or part, nor the material described thereon, nor the use of the drawing for any purpose other than specifically permitted in writing by MACTEC Engineering and Consulting, Inc.

NO.	DATE	REVISIONS	BY	CHK
2	02/14/12	REVISED DUE TO FIELD CONDITIONS	MAP	REO
1	04/05/11	ADDRESSED TOWN OF WILMINGTON COMMENTS	REO	MAP
0	03/09/11	ISSUED FOR CONSTRUCTION	REO	MAP
A	02/12/10	FINAL	REO	MAP

DRAWN: DEL	PROJECT NO: 6107-10-0016
ENGINEER: MAP	SCALE: AS NOTED
CHECKED: REO	APPROVED: PHT
DATE: 03/09/11	DATE: 03/09/11

MACTEC
Engineering and Consulting, Inc.
P.O. Box 7050, 511 Congress Street
Portland, ME 04112-7050
(207) 775-5401

DAPL EXTRACTION PILOT TEST
OLIN CHEMICAL SUPERFUND SITE
WILMINGTON, MASSACHUSETTS

CIVIL

PROPOSED PROFILE
PIPE SLEEVES UNDER RAILROAD SPURS
AND DETAILS

DRAWING NO: C-202

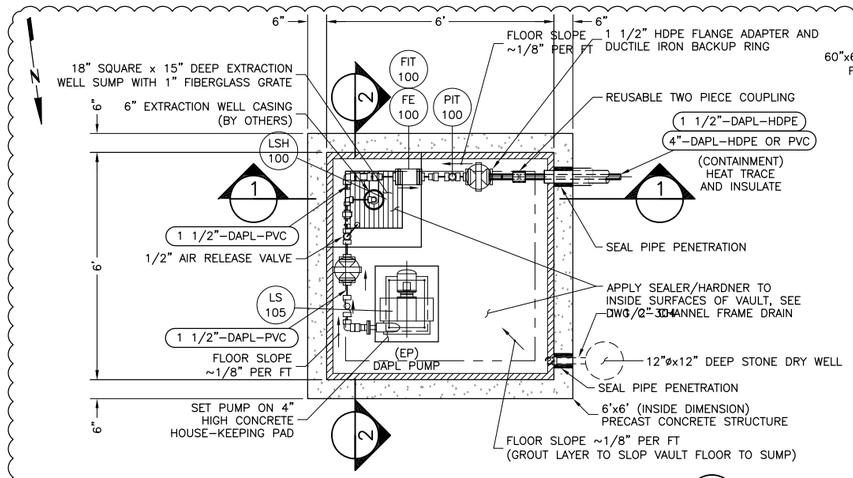

PUMP ENCLOSURE VAULT FLOOR PLAN DETAIL (A)
NTS
C-101 C-301

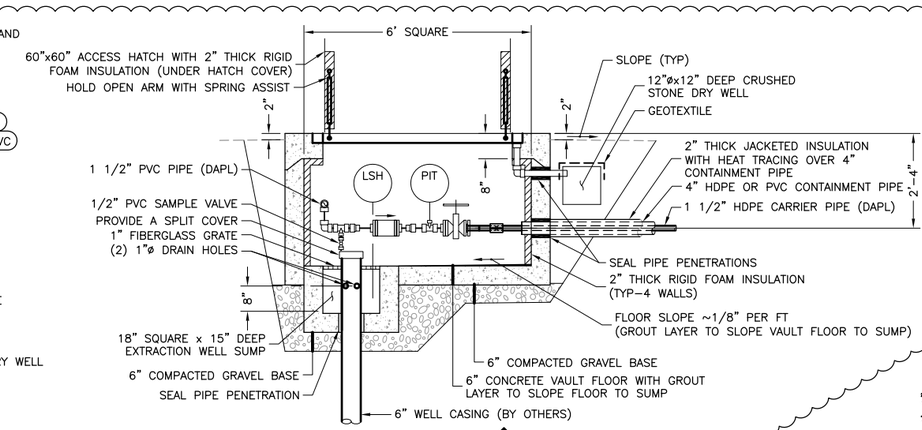

SECTION (1)
NTS

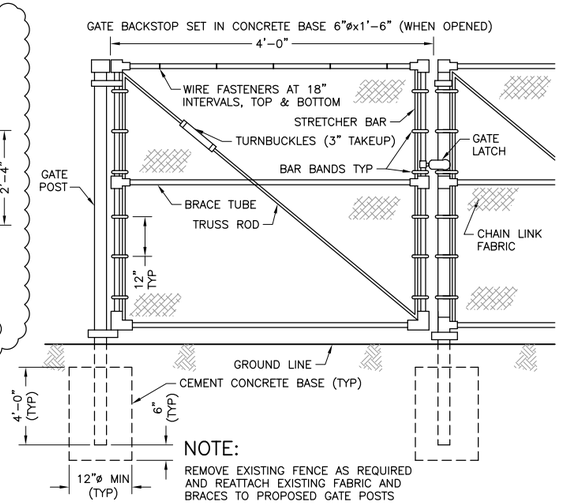

NOTE:
REMOVE EXISTING FENCE AS REQUIRED AND REATTACH EXISTING FABRIC AND BRACES TO PROPOSED GATE POSTS

CHAIN LINK FENCE WITH SINGLE (MAN) GATE DETAIL (B)
NTS
C-101 C-301

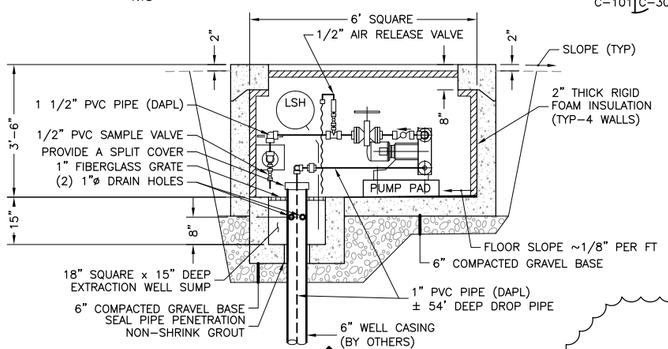

SECTION (2)
NTS

FOR REVISIONS TO PUMP ENCLOSURE VAULT FLOOR PLAN DETAIL AND SECTIONS – SEE DRAWING FC1 (5)

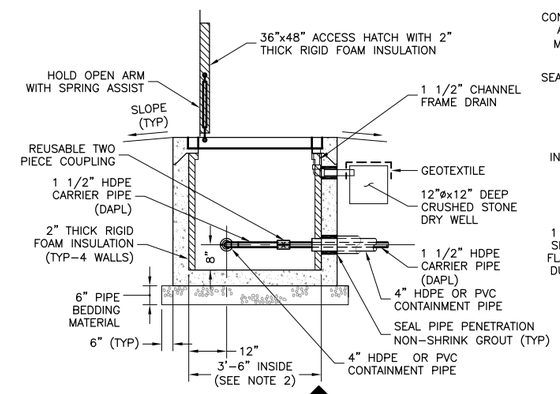

SECTION (3)
NTS

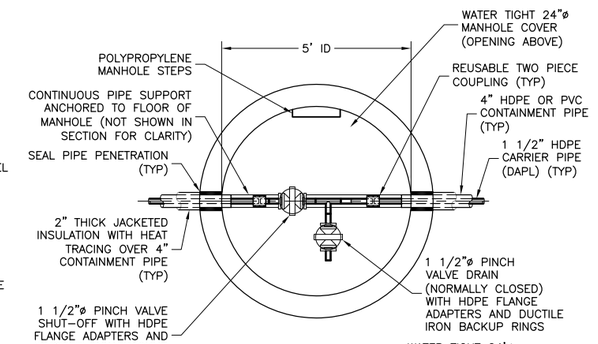

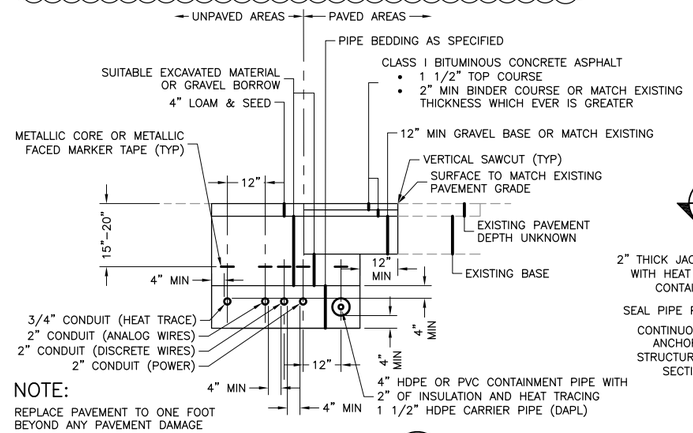

NOTE:
REPLACE PAVEMENT TO ONE FOOT BEYOND ANY PAVEMENT DAMAGE

UTILITY TRENCH (C)
NTS
C-101 C-301

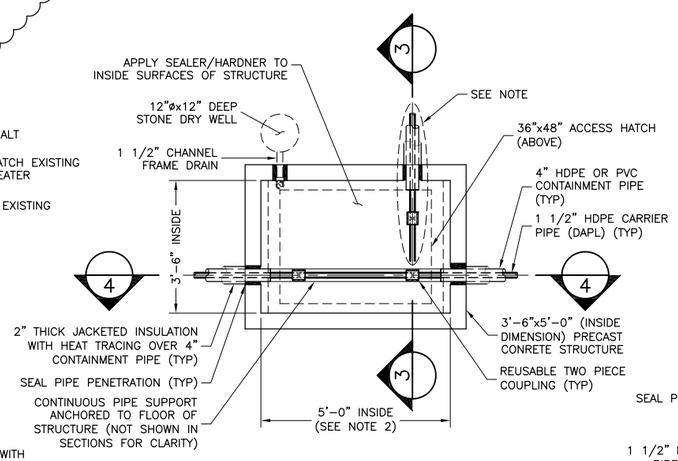

NOTE:
1. INSTALL 1 1/2" HDPE 90° ELBOW WHERE REQUIRED BY THE PIPING ORIENTATION.

(SEE PROPOSED SITE PLAN FOR PIPING ORIENTATION)
INSPECTION/CLEAN-OUT STRUCTURE DETAIL (D)
C-101 C-301

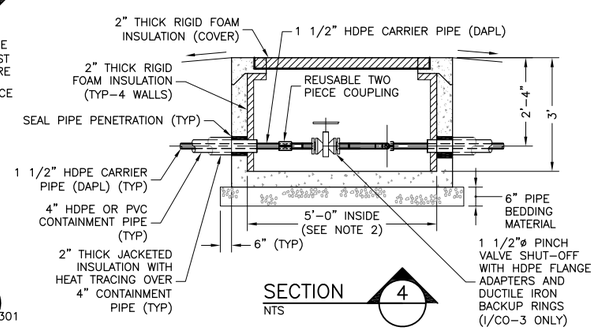

SECTION (4)
NTS

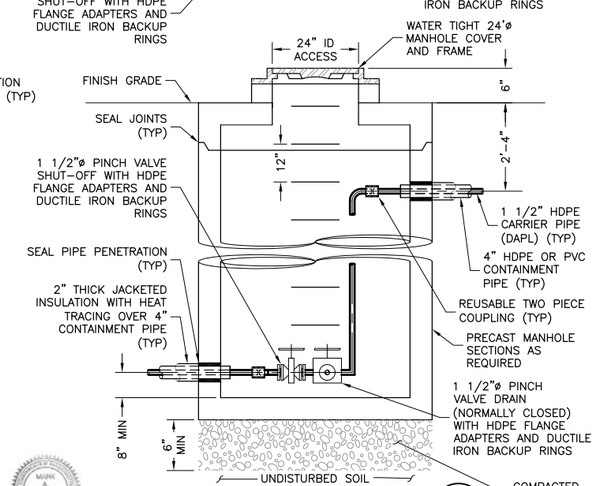

LEAK DETECTION MANHOLE (E)
NTS
C-101 C-301

This drawing is the property of MACTEC Engineering and Consulting, Inc. including all patented and patentable features, and/or confidential information and its use is conditioned upon the users agreement not to reproduce the drawing, in whole or part, nor the material described thereon, nor the use of the drawing for any purpose other than specifically permitted in writing by MACTEC Engineering and Consulting, Inc.

NO.	DATE	REVISIONS	BY	CHK
5	05/15/12	REVISED VAULT	DEL	MAP
4	12/19/11	REVISED VAULT ORIENTATION FOR NEW EW LOCATION	REO	MAP
3	03/09/11	ADDRESSED TOWN OF WILMINGTON COMMENTS	REO	MAP
2	03/19/11	ISSUED FOR CONSTRUCTION	REO	MAP
1	02/12/10	FINAL	REO	MAP
0	12/07/09	ISSUED FOR BID	REO	MAP

DRAWN: DEL	PROJECT NO: 6107-10-0016
ENGINEER: MAP	SCALE: NONE
CHECKED: REO	APPROVED: PHT
DATE: 03/09/11	DATE: 03/09/11

MACTEC
Engineering and Consulting, Inc.
P.O. Box 7050, 511 Congress Street
Portland, ME 04112-7050
(207) 775-5401

DAPL EXTRACTION PILOT TEST
OLIN CHEMICAL SUPERFUND SITE
WILMINGTON, MASSACHUSETTS

CIVIL

CIVIL DETAILS

DRAWING NO: C-301

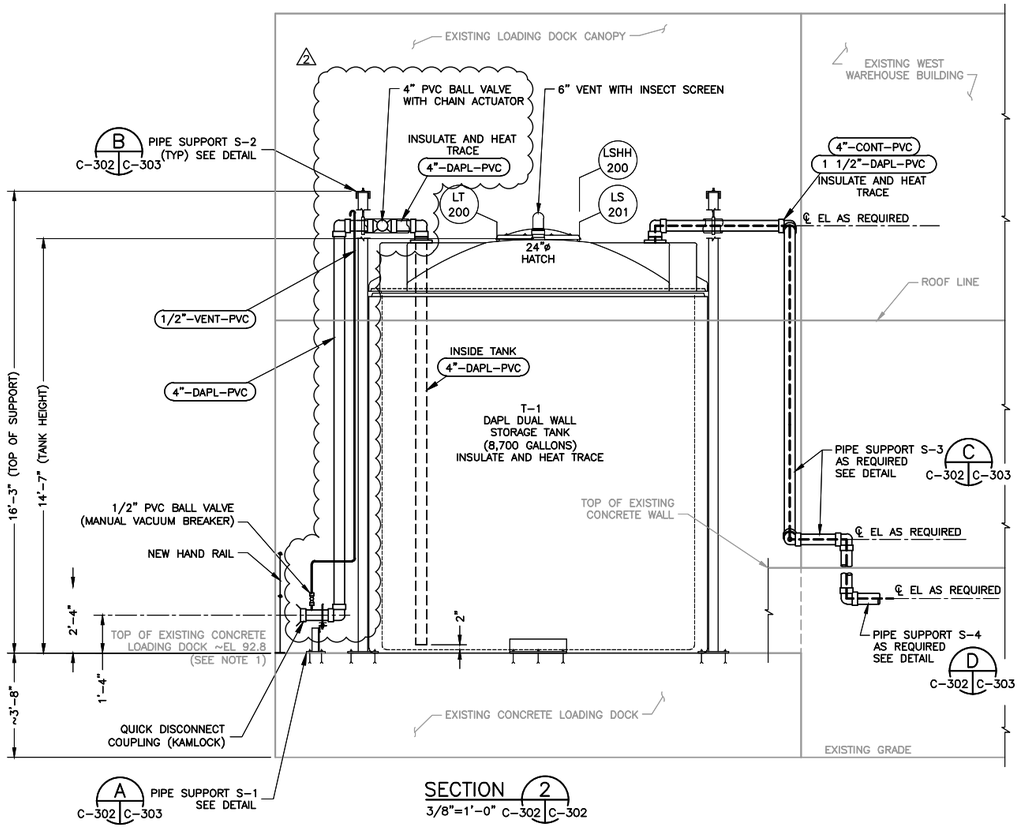

SECTION 2
3/8"=1'-0" C-302 C-302

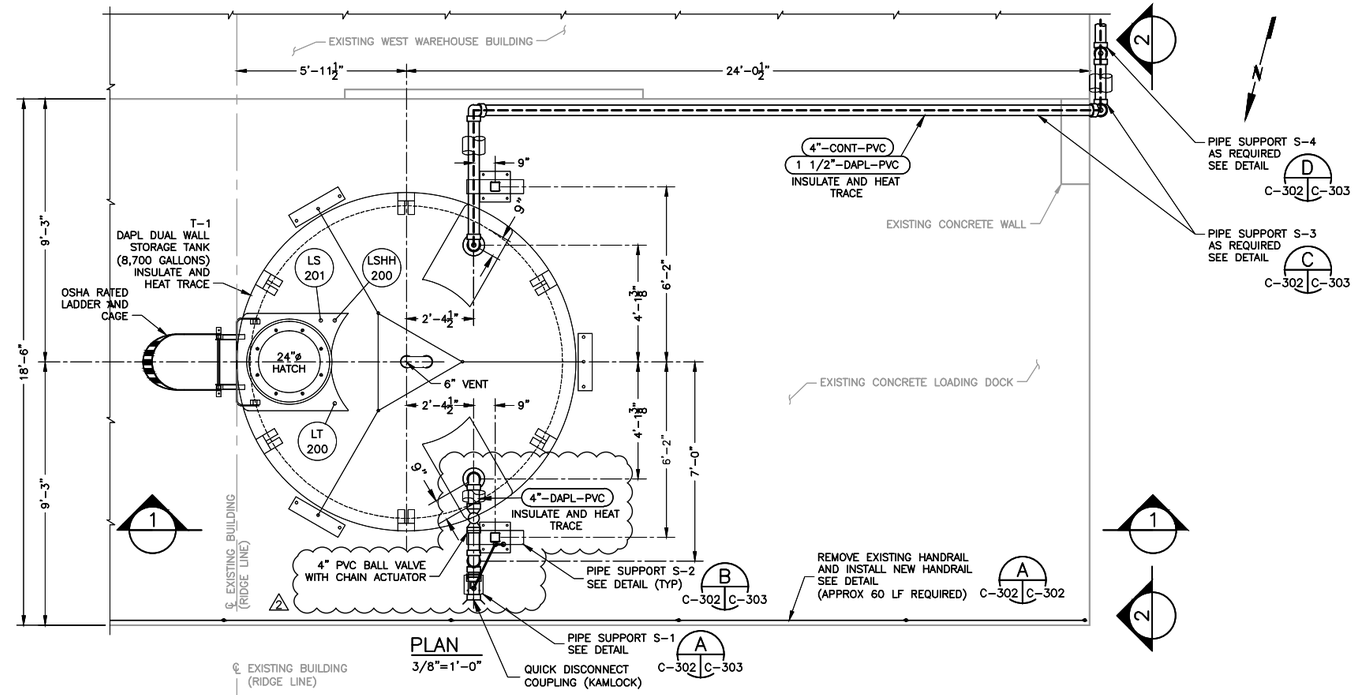

PLAN
3/8"=1'-0"

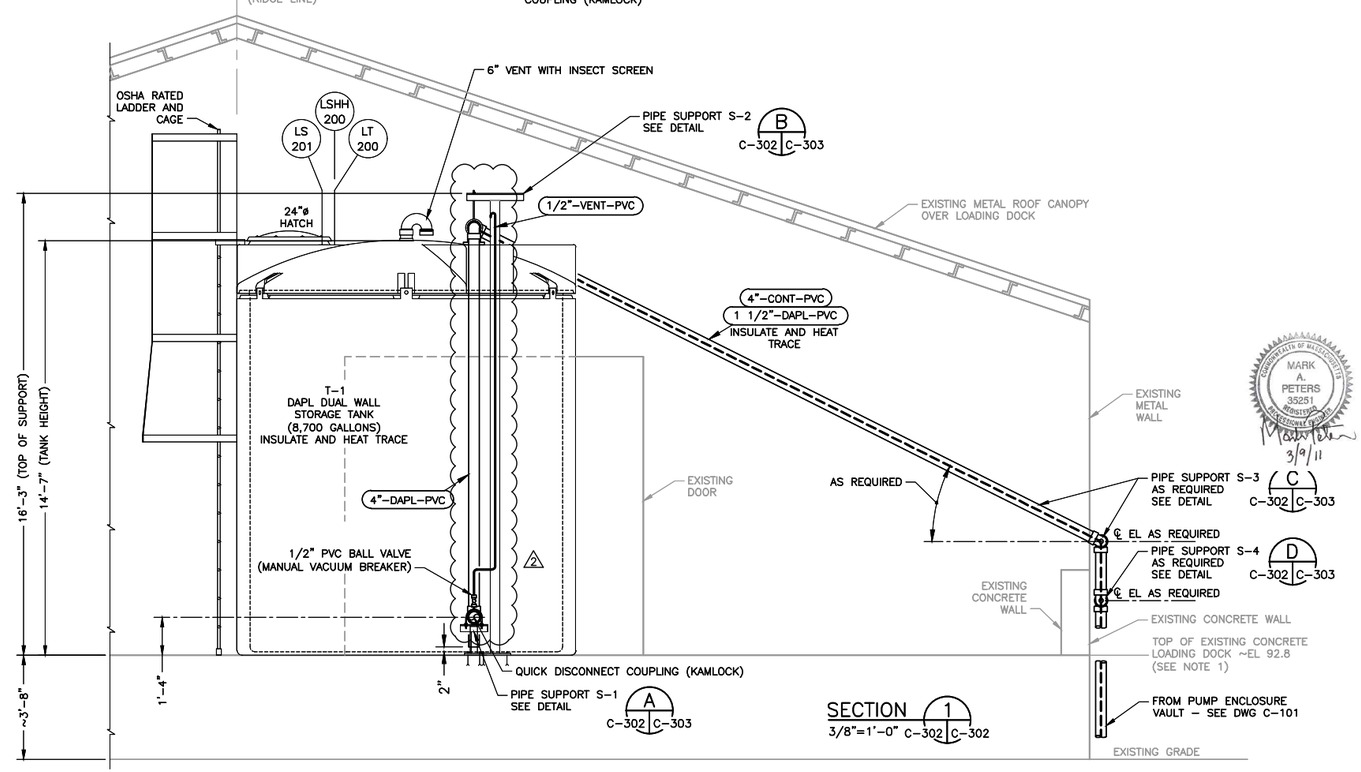

SECTION 1
3/8"=1'-0" C-302 C-302

MARK A. PETERS 35251 REGISTERED PROFESSIONAL ENGINEER COMMONWEALTH OF MASSACHUSETTS
3/9/11

HANDRAIL NOTES:

1. HANDRAIL MATERIAL:
   A. ALUMINUM: 6063-TS
   B. STEEL: ASTM A53 GRADE B
2. POSTS SHALL BE 1 1/2"ø NPS SCH 80 AND RAILS 1 1/2"ø NPS SCH 40 WELDED CONSTRUCTION WITH TYPE "A" MILL FINISH.
3. ALL SHARP CORNERS AND ROUGH EDGES TO BE GROUND SMOOTH AFTER FABRICATION.
4. WHERE PRACTICAL, RAILS TO BE DISCONTINUOUS AT CHANGES IN DIRECTION OR ELEVATION.
5. COAT CONTACT SURFACES OR DISSIMILAR MATERIALS WITH COAL TAR EPOXY. (ALUMINUM ONLY).
6. FINISH: ONE COAT LATEX PRIMER, ONE COAT LATEX FINISH TOP COAT (COLOR YELLOW).

NOTES:

1. TOP OF LOADING DOCK IS 3'-8" ABOVE ADJACENT ASPHALT DRIVE (APPROXIMATE ELEVATION 92.7). ACTUAL ELEVATIONS MAY BE FIELD ADJUSTED BASED ON ACTUAL ELEVATION DEVELOPED FROM SITE SUBGRADE PREPARATION. RELATED ELEVATIONS BETWEEN SITE FEATURES SHALL BE MAINTAINED AS APPROVED.
2. LAYOUT AND DIMENSIONS MAY BE FIELD ADJUSTED BASED ON ACTUAL TANKS AND EQUIPMENT USED AND AS APPROVED.

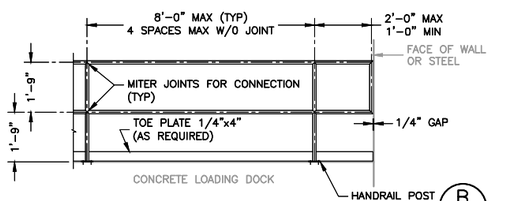

STANDARD HANDRAIL DETAIL A C-302 C-302
NTS

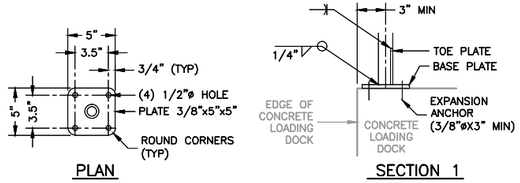

PLAN SECTION 1

HANDRAIL POST CONNECTION B C-302 C-302
NTS

2 0 2 4 6
SCALE OF FEET
3/8" = 1'-0"

This drawing is the property of MACTEC Engineering and Consulting, Inc. including all patented and patentable features, and/or confidential information and its use is conditioned upon the users agreement not to reproduce the drawing, in whole or part, nor the material described thereon, nor the use of the drawing for any purpose other than specifically permitted in writing by MACTEC Engineering and Consulting, Inc.

NO.	DATE	REVISIONS	BY	CHK
2	03/09/11	ISSUED FOR CONSTRUCTION	REO	MAP
1	02/12/10	FINAL	REO	MAP
0	12/07/09	ISSUED FOR BID	REO	MAP
A	11/12/09	FOR CLIENT REVIEW	REO	MAP

DRAWN: DEL	PROJECT NO: 6107-10-0016
ENGINEER: MAP	SCALE: NONE
CHECKED: REO	APPROVED: PHT
DATE: 03/09/11	DATE: 03/09/11

MACTEC
Engineering and Consulting, Inc.
P.O. Box 7050, 511 Congress Street
Portland, ME 04112-7050
(207) 775-5401

DAPL EXTRACTION PILOT TEST
OLIN CHEMICAL SUPERFUND SITE
WILMINGTON, MASSACHUSETTS

CIVIL

CIVIL DETAILS

DRAWING NO: C-302
6 / 15

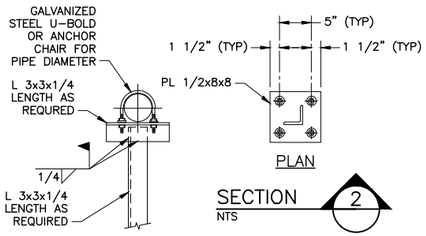

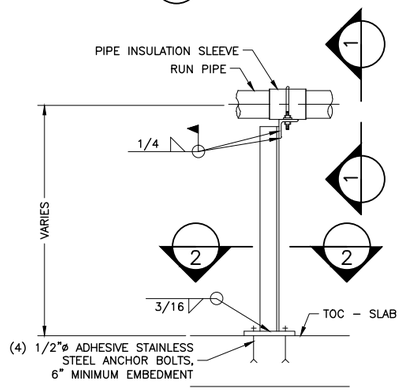

PIPE SUPPORT S–1 DETAIL (A) C–302 | C–303
NTS

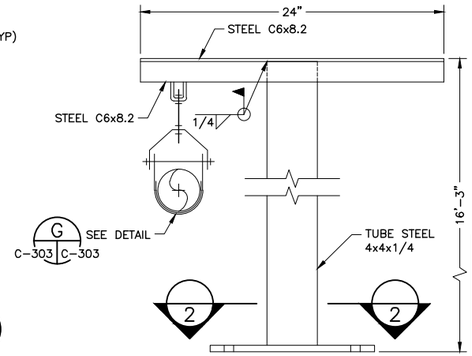

NOTE:

PIPE SUPPORT OPTION: SUPPORT ROD HANGER WITH CLEVIS HANGER FROM EXISTING BUILDING PURLINS, CONSULT ENGINEER FOR APPROVAL.

PIPE SUPPORT S–2 DETAIL (B) C–302 | C–303
NTS

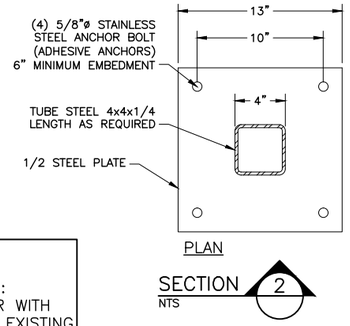

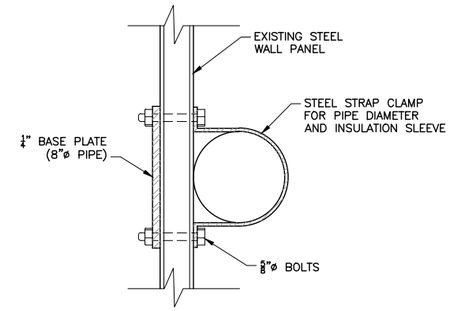

PIPE SUPPORT S–3 DETAIL (C) C–101 | C–303, C–302
NTS

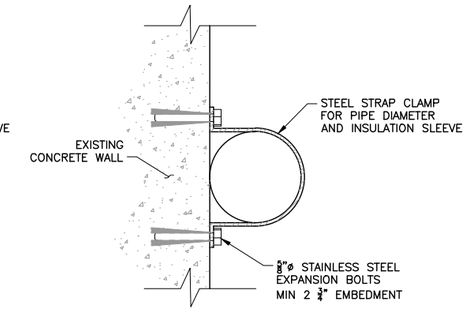

PIPE SUPPORT S–4 DETAIL (D) C–101 | C–303, C–302
NTS

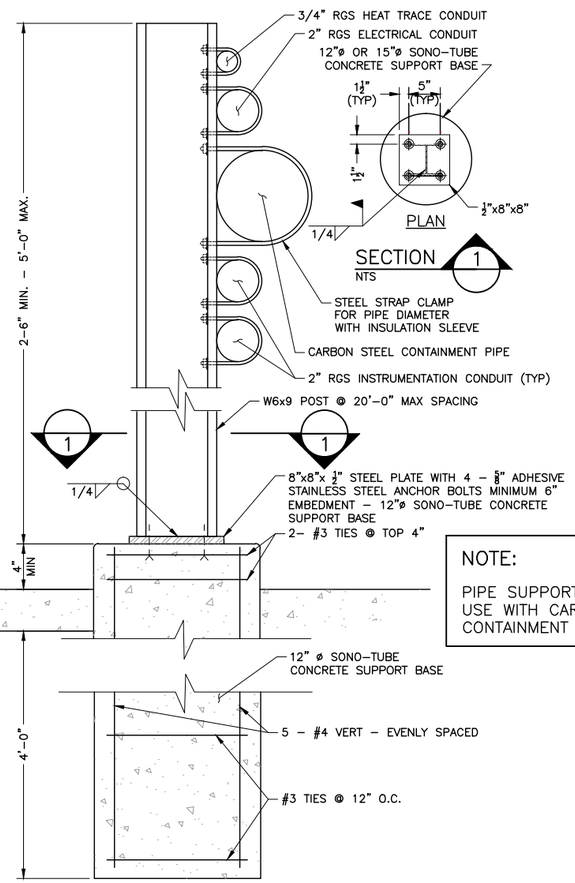

NOTE:

PIPE SUPPORT OPTION 1: FOR USE WITH CARBON STEEL CONTAINMENT PIPE OPTION 1.

PIPE SUPPORT S–5A DETAIL (E) C–101 | C–303, C–303
NTS

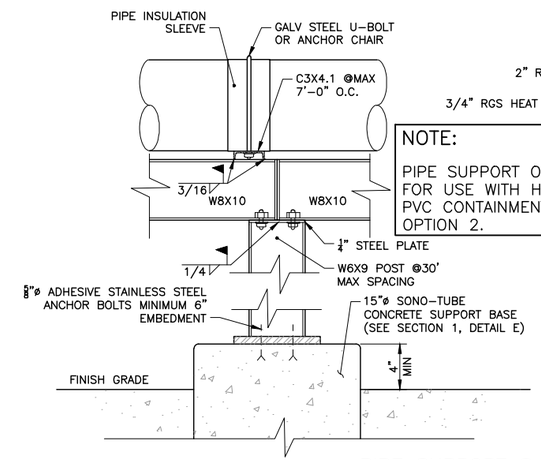

NOTE:

PIPE SUPPORT OPTION 2: FOR USE WITH HDPE OR PVC CONTAINMENT PIPE OPTION 2.

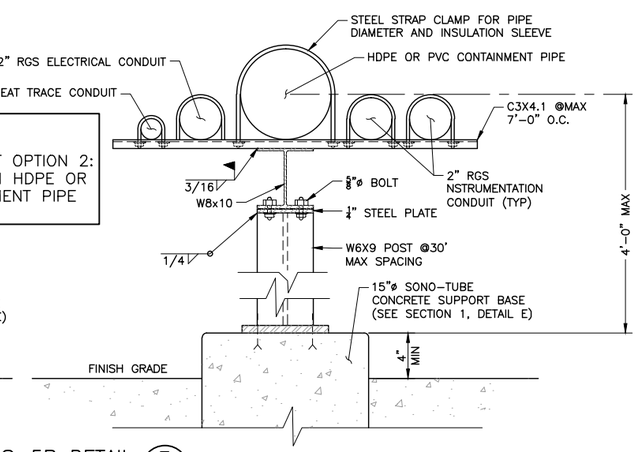

PIPE SUPPORT S–5B DETAIL (F) C–101 | C–303, C–302
NTS

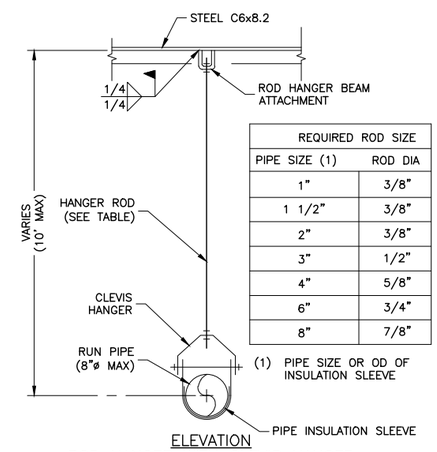

REQUIRED ROD SIZE	
PIPE SIZE (1)	ROD DIA
1"	3/8"
1 1/2"	3/8"
2"	3/8"
3"	1/2"
4"	5/8"
6"	3/4"
8"	7/8"

ROD HANGER WITH CLEVIS HANGER
PIPE SUPPORT S–2

DETAIL (G) C–303 | C–303
NTS

NOTE:

TIGHTEN ALL STEEL STRAP CLAMPS, ALLOWING FOR PIPE EXPANSION AND CONTRACTION – DO NOT OVER TIGHTEN.

This drawing is the property of MACTEC Engineering and Consulting, Inc. including all patented and patentable features, and/or confidential information and its use is conditioned upon the users agreement not to reproduce the drawing, in whole or part, nor the material described thereon, nor the use of the drawing for any purpose other than specifically permitted in writing by MACTEC Engineering and Consulting, Inc.

NO.	DATE	REVISIONS	BY	CHK
2	03/09/11	ISSUED FOR CONSTRUCTION	REO	MAP
1	02/12/10	FINAL	REO	MAP
0	12/07/09	ISSUED FOR BID	REO	MAP
A	11/12/09	FOR CLIENT REVIEW	REO	MAP

DRAWN: DEL	PROJECT NO: 6107–10–0016
ENGINEER: MAP	SCALE: NONE
CHECKED: REO	APPROVED: PHT
DATE: 03/09/11	DATE: 03/09/11

MACTEC
Engineering and Consulting, Inc.
P.O. Box 7050, 511 Congress Street
Portland, ME 04112–7050
(207) 775–5401

DAPL EXTRACTION PILOT TEST
OLIN CHEMICAL SUPERFUND SITE
WILMINGTON, MASSACHUSETTS

CIVIL

CIVIL DETAILS

DRAWING NO: C–303

CONSTRUCTION SPECIFICATIONS:

BACKFILL AND COMPACTION

1. GRAVEL BORROW AND GRAVEL BASE:

- MATERIAL – GRAVEL BORROW FOR FILL LOCATIONS OR GRAVEL BASE CONSTRUCTION SHALL BE MASSHIGHWAY M1.03.0 GRAVEL BORROW TYPE A, B, C, OR D. MATERIAL SHALL BE FREE OF TRASH, ICE, SNOW, TREE STUMPS, AND OTHER UNSUITABLE AND DELETERIOUS MATERIALS. IT SHALL BE OF SUCH A NATURE AND CHARACTER THAT IT CAN BE COMPACTED TO THE MINIMUM SPECIFIED DRY DENSITY INDICATED BELOW.
- PLACEMENT – MAXIMUM 12-INCH LIFTS
- COMPACTION – FOR BACKFILL MATERIALS PLACED IN VEGETATED AREAS, COMPACT TO A MINIMUM DENSITY OF 92% (MEASURED AS A PERCENTAGE OF THE MAX. DRY DENSITY AS DETERMINED BY ASTM D 698). FOR BACKFILL MATERIALS PLACED IN TRAFFIC AREAS UNDER PAVEMENT OR GRAVEL SURFACE, COMPACT TO A MINIMUM DENSITY OF 98%. IN PLACE DENSITY MAY BE DETERMINED BY DENSITY TESTING CONDUCTED AT A FREQUENCY OF 1 TEST (ASTM D 6938 – NUCLEAR GAUGE) PER LIFT PER 600 SF OR PER 200 LF OF TRENCH (MINIMUM 2 TESTS PER LIFT).
- SUBMITTALS – FOR EACH SOURCE OF GRAVEL BORROW SUBMIT TO THE ENGINEER A GRAIN SIZE ANALYSIS (ASTM D 422) AND A MOISTURE-DENSITY CURVE (STANDARD PROCTOR – ASTM D 698). FOR ALL SOIL MATERIALS FROM OFF-SITE SOURCES, PROVIDE CLEAN CERTIFICATION PER MEDEP RESIDENTIAL STANDARDS.

2. PIPE BEDDING:

- MATERIAL – USE GRAVEL BORROW MATERIAL EXCEPT MAXIMUM STONE SIZE SHALL BE ½-INCH.
- PLACEMENT – MAXIMUM 6-INCH LIFTS
- COMPACTION – SEE GRAVEL BORROW AND GRAVEL BASE.
- SUBMITTALS – FOR EACH SOURCE OF PIPE BEDDING SUBMIT TO THE ENGINEER A GRAIN SIZE ANALYSIS (ASTM D 422) AND A MOISTURE-DENSITY CURVE (STANDARD PROCTOR – ASTM D 698).

ASPHALT

1. PAVEMENT:

- MATERIAL – MASSHIGHWAY M3.11.00 CLASS I BITUMINOUS CONCRETE TYPE I-1. SURFACE OR FINAL COURSE USE M3.11.03 TABLE A TOP COURSE, DENSE MIX OR SURFACE TREATMENT. BASE COURSE USE M3.11.03 TABLE A BASE COURSE, BINDER COURSE OR DENSE BINDER COURSE.
- PLACEMENT – THE BITUMINOUS CONCRETE MIXTURE SHALL NOT BE PLACED WHENEVER THE SURFACE IS WET OR FROZEN OR WHEN THE TEMPERATURE IS OUTSIDE THE LIMITATIONS STATED IN MASSHIGHWAY SECTION 460, UNLESS THE CONTRACTOR HAS A COLD WEATHER PAVING PROCEDURE APPROVED BY THE ENGINEER. THE CONTRACTOR SHALL BE RESPONSIBLE FOR SUBMITTING THE PROCEDURE AT LEAST ONE WEEK IN ADVANCE OF ANY PAVING OPERATIONS THAT MAY RESULT IN PLACEMENT OF THE BITUMINOUS CONCRETE PAVEMENT OUTSIDE OF THE TEMPERATURE LIMITATIONS STATED IN HIGHWAY SECTION 460. THE BITUMINOUS CONCRETE PAVEMENT SHALL BE PLACED IN TWO LIFTS (BINDER AND TOP COURSES). A THIN UNIFORM TACK COAT SHALL BE APPLIED PRIOR TO PLACEMENT OF THE TOP COURSE.
- COMPACTION – NO COMPACTION TESTING IS REQUIRED, BUT THE BITUMINOUS CONCRETE PAVEMENT SHALL BE COMPACTED TO A SMOOTH FIRM FINISH AS DETERMINED BY CONTINUOUS OBSERVATION BY THE CONTRACTOR AND ENGINEER
- SUBMITTALS – SUBMIT TO THE ENGINEER A JOB MIX FORMULA FOR EACH BITUMINOUS CONCRETE CLASS USED.

STRUCTURAL STEEL

1. PIPE SUPPORTS:

- STEEL – ASTM A36, ASTM A 500 AND/OR ASTM A 501
- WELDS SHALL BE E70XX. IN ACCORDANCE WITH AWS D1.1
- ANCHOR BOLTS – ADHESIVE ANCHORS, STAINLESS STEEL, ASTM A 307
- FINISH – ONE COAT LATEX PRIMER AND TWO COATS LATEX FINISH TOP COAT (COLOR GRAY). PREPARATION OF SURFACE SHALL BE IN ACCORDANCE WITH SSPC SP-2, SP-3, SP-6, OR SP-7 AS REQUIRED FOR SURFACE CONDITION OF STEEL.

CAST-IN-PLACE CONCRETE

1. MIX:

- STRENGTH – MINIMUM 4000 PSI 28-DAY COMPRESSIVE STRENGTH.
- WATER/CEMENT RATIO – MINIMUM 0.45.
- SLUMP – 3 (±1) INCHES. MAXIMUM SLUMP MAY BE INCREASED ONE INCH FOR METHODS OF CONSOLIDATION OTHER THAN VIBRATION. SLUMP MAY BE INCREASED TO 7 INCHES WHEN SUPERPLASTICIZERS ARE USED
- AIR ENTRAINMENT – 4 (±1.5) PERCENT. PROVIDE AIR ENTRAINMENT USING AIR-ENTRAINING ADMIXTURE
- COARSE AGGREGATE – MAXIMUM NOMINAL AGGREGATE SIZE OF 1-1/2 INCHES (ASTM C 33 SIZE 57.
- SUBMITTALS – . CONCRETE MIX DESIGN – TEN DAYS MINIMUM PRIOR TO CONCRETE PLACEMENT, SUBMIT A MIX DESIGN FOR EACH STRENGTH AND TYPE OF CONCRETE. SUBMIT A COMPLETE LIST OF MATERIALS INCLUDING TYPE; BRAND; SOURCE AND AMOUNT OF CEMENT, FLY ASH, POZZOLANS, GROUND SLAG, AND ADMIXTURES; AND APPLICABLE REFERENCE SPECIFICATIONS.

2. CEMENT:

- ASTM C 150, TYPE I OR II OR ASTM C 595, TYPE IP(MS) OR IS(MS) BLENDED CEMENT EXCEPT AS MODIFIED HEREIN. THE BLENDED CEMENT SHALL CONSIST OF A MIXTURE OF ASTM C 150, TYPE II, CEMENT AND ONE OF THE FOLLOWING MATERIALS: ASTM C 618 POZZOLAN OR FLY ASH, ASTM C 989 GROUND IRON BLAST-FURNACE SLAG. THE POZZOLAN OR FLY ASH CONTENT SHALL NOT EXCEED 25 PERCENT BY WEIGHT OF THE TOTAL CEMENTITIOUS MATERIAL. THE GROUND IRON BLAST-FURNACE SLAG SHALL NOT EXCEED 50 PERCENT BY WEIGHT OF TOTAL CEMENTITIOUS MATERIAL. FOR EXPOSED CONCRETE, USE ONE MANUFACTURER FOR EACH TYPE OF CEMENT, GROUND SLAG, FLY ASH, AND POZZOLAN.

3. REINFORCEMENT:

- REINFORCING BARS: ACI 301 UNLESS OTHERWISE SPECIFIED. ASTM A 615 WITH THE BARS MARKED A, S, W, GRADE 60; OR ASTM A 996 WITH THE BARS MARKED R, GRADE 60
- WELDED WIRE FABRIC: ASTM A 185 OR ASTM A 497. PROVIDE FLAT SHEETS OF WELDED WIRE FABRIC FOR SLABS AND TOPPINGS.

4. SEALER/HARDENER:

- APPLY SEALER TO PUMP ENCLOSURE VAULT FLOOR AND SUMP SURFACES, SEALANT SHALL CONSIST OF A PENETRATING, PERMANENT SEALER PROVIDING CHEMICAL AND ACID RESISTANCE. USE MOXIE 1500 BY MOXIE INTERNATIONAL, DURO-NOX BY NOX CRETE®, OR APPROVED EQUAL.

TOPSOIL AND VEGETATION

1. TOPSOIL:

- MATERIAL – STRIP AND REUSE EXISTING TOPSOIL. IF ADDITIONAL TOPSOIL IS REQUIRED, OFFSITE MATERIAL SHALL BE A LOCAL WELL-GRADED TOPSOIL OR LOAM MATERIAL SUITABLE FOR THE FORMATION OF A SEED BED, SEED GERMINATION AND PLANT GROWTH.
- PLACEMENT – ONE 4-INCH LIFT.
- COMPACTION – LIGHTLY COMPACT USING A HAND TAMPER..

2. VEGETATION:

- SEED MIX – BRAND NAME LAWN MIX SUITABLE FOR SUN OR SHADE CONDITIONS.
- PLACEMENT – PER VENDOR INSTRUCTIONS OR A MINIMUM OF 1.5 LB. PER 1000 SQUARE FEET.
- SUBMITTALS – VENDOR INFORMATION INCLUDING SPECIES PRESENT IN THE SEED MIX, GERMINATION AND PURITY.

INSPECTION/CLEAN-OUT STRUCTURE:

1. PRECAST CONCRETE STRUCTURE:

- INSPECTION/CLEANOUT MANHOLES SHALL BE 3'-6" WIDE X 5'-0" LONG AND 3'-0" DEEP (INSIDE DIMENSIONS) PRECAST CONCRETE STRUCTURES. MANHOLE SHALL BE MANUFACTURED IN ACCORDANCE WITH ASTM C 478 FOR H-20 LOADING WITH CONCRETE DESIGNED TO OBTAIN A MINIMUM COMPRESSIVE STRENGTH OF 4,000 PSI AFTER 28 DAYS.
- INSULATION: INSULATE SIDEWALLS WITH EXPANDED POLYSTYRENE (EPS) RIGID FOAM INSULATION.

2. ACCESS HATCHWAY:

- HEAVY DUTY SINGLE LEAF CONSTRUCTION SHALL BE OF ¼" THICK DIAMOND PATTERN ALUMINUM PLATE. USE HALLIDAY PRODUCTS, MODEL NO. H1W3648 OR APPROVED EQUAL.
- LOAD RATING: MINIMUM H-20 LOADING.
- FRAME: EXTRUDED ALUMINUM FRAME CHANNEL FRAME.
- ALL HARDWARE INCLUDING LATCHES, LIFTING MECHANISM ASSEMBLIES, GUIDES, BRACKETS, HINGES, PINS, HOLD OPEN ARMS, RELEASE HANDLE, AND GUIDES SHALL BE MADE OF 316 SS.
- TAMPER PROOF HINGES SHALL BE ACCESSIBLE ONLY WHEN THE ACCESS DOOR IS IN THE OPEN POSITION.
- PROVIDE A RECESSED LIFTING HANDLE AND NON-CORROSIVE PADLOCK BAR.
- INSULATION: INSULATE COVER WITH EXPANDED POLYSTRENE (ESP) RIGID FOAM INSULATION.

3. SUBMITTALS: VENDOR SHOP DRAWINGS ON THE PRECAST CONCRETE VAULT, JOINTS, AND ACCESS HATCHWAY.

PUMP ENCLOSURE VAULT:

1. PRECAST CONCRETE STRUCTURE:

- INSPECTION/CLEANOUT MANHOLES SHALL BE 6'-0" WIDE X 6'-0" LONG AND 3'-6" DEEP (INSIDE DIMENSIONS) PRECAST CONCRETE STRUCTURES. MANHOLE SHALL BE MANUFACTURED IN ACCORDANCE WITH ASTM C 478 FOR H-20 LOADING WITH CONCRETE DESIGNED TO OBTAIN A MINIMUM COMPRESSIVE STRENGTH OF 4,000 PSI AFTER 28 DAYS.
- INSULATION: INSULATE SIDEWALLS WITH EXPANDED POLYSTYRENE (EPS) RIGID FOAM INSULATION.

2. ACCESS HATCHWAY:

- HEAVY DUTY DOUBLE LEAF CONSTRUCTION SHALL BE OF ¼" THICK DIAMOND PATTERN ALUMINUM PLATE. USE HALLIDAY PRODUCTS, MODEL NO. H2W6060 OR APPROVED EQUAL.
- LOAD RATING: MINIMUM H-20 LOADING.
- FRAME: EXTRUDED ALUMINUM FRAME CHANNEL FRAME.
- ALL HARDWARE INCLUDING LATCHES, LIFTING MECHANISM ASSEMBLIES, GUIDES, BRACKETS, HINGES, PINS, HOLD OPEN ARMS, RELEASE HANDLE, AND GUIDES SHALL BE MADE OF 316 SS.
- TAMPER PROOF HINGES SHALL BE ACCESSIBLE ONLY WHEN THE ACCESS DOOR IS IN THE OPEN POSITION.
- PROVIDE A RECESSED LIFTING HANDLE AND NON-CORROSIVE PADLOCK BAR.
- INSULATION: INSULATE COVER WITH EXPANDED POLYSTRENE (ESP) RIGID FOAM INSULATION.

3. SUBMITTALS: VENDOR SHOP DRAWINGS ON THE PRECAST CONCRETE VAULT, JOINTS, AND ACCESS HATCHWAY.

LEAK DETECTION MANHOLE:

1. PRECAST CONCRETE MANHOLE: 5-FOOT DIAMETER (INSIDE DIMENSION) PRECAST CONCRETE MANHOLE STRUCTURE. MANHOLE SHALL BE MANUFACTURED IN ACCORDANCE WITH ASTM C-478 WITH CONCRETE DESIGNED FOR A MINIMUM 5000 PSI 28-DAY COMPRESSIVE STRENGTH. SHIPLAP JOINTS BETWEEN RISERS AND COVER SHALL BE SEALED TO PROVIDE A WATER-TIGHT JOINT WITH O-RING GASKET OR A MINIMUM 1-INCH STRIP OF BUTYL RUBBER SEALANT.

2. FRAME AND COVER: HEAVY DUTY CAST IRON IN ACCORDANCE WITH ASTM A-48, CLASS 35B GRAY IRON. PROVIDE WATER-TIGHT FRAME WITH NEOPRENE GASKET AND TYPE D STRAP IRON FASTENING DEVICE SUITABLE FOR LOCKING WITH PADLOCK. PROVIDE NEENAH FOUNDRY CATALOG NO. R-1916-F OR APPROVED EQUAL.

3. MANHOLE STEPS: POLYPROPYLENE PLASTIC MANHOLE STEPS AT 12-INCHES ON CENTER.

4. SUBMITTALS: VENDOR SHOP DRAWINGS ON THE MANHOLE, JOINTS, STEPS, FRAME AND COVER.

DAPL STORAGE TANK

1. TANK

- WALL THICKNESS CALCULATED BASED ON A SPECIFIC GRAVITY OF 1.10 AND A HOOP STRESS OF 600 PSI @ 100°F, USING ASTM D 1998 REQUIREMENTS.
- ROTATIONALLY-MOLDED, HIGH DENSITY CROSS-LINKED POLYETHYLENE, DOUBLE WALL, FLAT BOTTOM TANKS WITH AN OXIDATION RESISTANT LINER SYSTEM.
- EACH ASSEMBLY SHALL CONSIST OF A CYLINDRICAL, CLOSED TOP INNER PRIMARY TANK WITH A CAPACITY OF 8,700 GALLONS AND A CYLINDRICAL, OPEN TOP OUTER CONTAINMENT TANK.
- ONE-PIECE SEAMLESS CONSTRUCTION.
- DESIGN TO PREVENT RAINWATER FROM ENTERING THE CONTAINMENT TANK.
- COVER DESIGNED WITH THICKNESS EQUAL TO THE THICKNESS OF THE TOP OF THE STRAIGHT SIDEWALL WITH AT LEAST 3 FLAT AREAS.
- PROVIDE AT LEAST 3 LIFTING LUGS AND 3 CONCRETE SLAB ATTACHMENT LUGS.
- OSHA DESIGNED FIBERGLASS LADDER WITH TANK AND SLAB ATTACHMENT HARDWARE WITH REQUIRED CAGES.
- PROVIDE FITTINGS AND CONNECTIONS AS SHOWN ON THE DRAWINGS WITH EPDM GASKETS.
- MINIMUM 24" DIAMETER MANWAY WITH AN EMERGENCY PRESSURE RELIEF DEVICE.
- INTERNAL PIPING SHALL BE SUPPORTED FROM THE TANK WALL @ 6' MAXIMUM SPACING, AS MANUFACTURED BY POLY PROCESSING COMPANY, AND SHALL EXTEND TO WITHIN 2" OF TANK FLOOR.

2. LEVEL INDICATION

- PROVIDE AN ULTRASONIC LEVEL TRANSMITTER SUITABLE FOR A NON-HAZARDOUS ENVIRONMENT.
- DESIGNED FOR OUTSIDE LOCATIONS.
- CAPABLE OF PROVIDING A 4-20 mA SIGNAL FOR REMOTE INDICATION (BY OTHERS).
- POWER SUPPLY 110 VAC.

3. LEAK DETECTION

- LEAK SENSOR SHALL BE A CAPACITIVE PROXIMITY SWITCH OF PP WITH A NEMA 4X RATING THAT OPERATES BETWEEN -13 AND 158°F.
- POWERED BY 110 VAC.
- SENSOR TO BE 34mm DIAMETER WITH VARIABLE SENSITIVITY ADJUSTMENT.
- PROVIDE A LEAK DETECTION SYSTEM PANEL FOR EACH OF THE DAPL TANKS SUITABLE FOR MOUNTING NEAR THE TANK ON A STAND PROVIDED BY THE TANK MANUFACTURER.
- PROVIDE CONTACTS IN THE PANEL FOR REMOTE TRANSMISSION OF THE ALARM.
- TO BE INSTALLED BY MANUFACTURER BETWEEN THE INNER AND OUTER TANK WALLS.
- CABLE AND TANK WALL PENETRATION ASSEMBLY TO BE PROVIDED BY MANUFACTURER.

4. HEATING SYSTEM

- POWER SUPPLY 110 VAC
- ALUMINUM HEAT TAPE TO BE SIZED TO PROVIDE A ΔT OF 60°F FROM AMBIENT TEMPERATURE (MINIMUM SIZE PER TANK 2100 WATTS).
- HEAT TAPE TO BE SIZED AND INSTALLED IN FACTORY BY TANK MANUFACTURER, PRIOR TO INSTALLATION OF THE 2" POLYURETHANE INSULATION.
- SUPPLY HEATING SYSTEM CONTROLLER MOUNTED ON THE EXTERIOR OF EACH TANK, RATED NEMA 4, SUITABLE FOR NON-HAZARDOUS LOCATIONS.
- PROVIDE AN OVER TEMPERATURE THERMOSTAT SET AT 150°F.

5. SUBMITTALS – TANK, LEVEL TRANSMITTER, LEAK DETECTION, AND HEATING SYSTEM FOR MATERIALS, PRESSURE AND TEMPERATURE RATING, FUNCTION, AND OPERATION.

PIPING AND VALVES

1. BALL VALVES (PVC)

- PVC SIZED TO MATCH THE PIPING SHOWN ON THE DRAWINGS, TRUE UNION DESIGN, FULL PORT, ABS HANDLE, EPDM O-RINGS AND SEALS, TEFLON RENEWABLE SEAT, RATED 150 PSI AT 75°F WITH FLANGED ENDS.
- BALL VALVES SHALL BE CAPABLE OF OPERATION BETWEEN 30°F AND 140°F.
- THE VALVE SHALL BE EQUAL TO DUO BLOC TRUE UNION BALL VALVES MADE BY ASAHI/AMERICA OR APPROVED EQUAL.

2. PINCH VALVES

- THE PINCH VALVES SHALL BE OPEN FRAME, MECHANICAL PINCH TYPE WITH FLANGED ENDS ON THE BODY AND SLEEVE TRIM.
- THE SLEEVE SHALL HAVE 100% PORT FOR THE ENTIRE LENGTH OF THE SLEEVE AND BE VISIBLE WHILE BEING PINCHED IN ALL POSITIONS.
- THE SLEEVE TRIM SHALL BE ONE PIECE EPDM WITH INTEGRAL FLANGES RETAINED BY THE FLANGE BOLTS. TABS SHALL ATTACH THE SLEEVE TO THE PINCH BAR.
- THE STEEL PINCH MECHANISM SHALL BE DOUBLE ACTING. CAST PARTS ARE NOT ACCEPTABLE.
- NON-RISING STEM AND HANDWHEEL.
- EQUAL TO SERIES 70 MANUFACTURED BY RED VALVE CO, CARNEGIE, PA.

3. CHECK VALVES

- PVC SIZED TO MATCH THE PIPING SHOWN ON THE DESIGN DRAWINGS, WITH PVC BALL.
- EPDM SEATS AND SEALS RATED AT 150 PSI AT A TEMPERATURE OF 100°F.
- SOCKET WELD ENDS.
- RATED FOR FULL VACUUM SERVICE.
- EQUAL TO TRUE UNION BALL CHECK VALVES MADE BY ASAHI/AMERICA OR APPROVED EQUAL.

PIPE MATERIALS:

1. PUMP ENCLOSURE VAULT: SCHEDULE 80 PVC, SOCKET WELD PIPE.

2. UNDERGROUND PIPING:

- CARRIER PIPE – HDPE DR 11, FUSED, IPS SIZED PIPE.
- CONTAINMENT – SCHEDULE 40 PVC, SOCKET WELD PIPE OR HDPE DR 17, FUSED, IPS SIZED PIPE.

3. ABOVEGROUND (FIELD FABRICATED):

- CARRIER – HDPE DR 11, FUSED, IPS SIZED PIPE.
- CONTAINMENT OPTION 1 (USE WITH PIPE SUPPORT OPTION S-5A) – STEEL PIPE CONFORMING TO ASTM A 53/A 53M, GRADE A OR B, TYPE E OR S, SCHEDULE 80 BLACK STEEL PIPE; OR API SPEC 5L SEAMLESS OR ELECTRIC RESISTANCE WELDED, SCHEDULE 80, BLACK STEEL PIPE AS SPECIFIED IN ASME B31.8.
- CONTAINMENT OPTION 2 (USE WITH PIPE SUPPORT OPTION S-5B). SCHEDULE 80 PVC, SOCKET WELD PIPE OR HDPE DR 11, FUSED, IPS SIZED PIPE.

4. ABOVEGROUND – PREFABRICATED DOUBLE CONTAINMENT SYSTEMS (PREFABRICATED)

- CARRIER – SCHEDULE 80 PVC, SOCKET WELD PIPE. PIPE AND FITTINGS SHALL BE FACTORY MADE WITH CARRIER PIPE PERMANENTLY ATTACHED TO THE CONTAINMENT PIPE READY FOR FIELD SOLVENT WELDING OF THE DOUBLE WALLED PIPING.
- CONTAINMENT PIPING – SCHEDULE 80 PVC, SOCKET WELD PIPE. PROVIDE FACTORY INSTALLED CENTRALIZERS. PROVIDE PVC STYLE B TERMINATION FITTING ON THE CONTAINMENT PIPE IN THE INSPECTION/CLEANOUT STRUCTURE. PREFABRICATED DOUBLE CONTAINMENT PIPING WHERE INDICATED ON THE DRAWINGS SHALL BE PREFABRICATED DOUBLE CONTAINMENT PIPING SYSTEM EQUAL TO GUARDIAN SYSTEM MANUFACTURED BY IPEX, INC. OR APPROVED EQUAL.

5. PIPE SLEEVES UNDER RAIL ROAD – STEEL PIPE CONFORMING TO ASTM A 53/A 53M, GRADE B, TYPE E OR S, SCHEDULE 40 BLACK STEEL PIPE; OR API SPEC 5L SEAMLESS OR ELECTRIC RESISTANCE WELDED, SCHEDULE 40, BLACK STEEL PIPE AS SPECIFIED IN ASME B31.8.

6. PIPE TESTING – INSTALLED CARRIER PIPE SHALL BE PRESSURE TESTED AT 50 PSI FOR A 2 HOUR PERIOD WITH NO LEAKAGE. ANY LEAKAGE WILL BE REPAIRED AND RETESTED UNTIL NO LEAKAGE OCCURS DURING THE TEST PERIOD.

PIPE INSULATION:

1. PROVIDE ALUMINUM JACKET PROTECTIVE SLEEVES AT ALL SUPPORTS.

2. ABOVEGROUND PIPING

- THE INSULATION SHALL BE 2" THICK FIBERGLASS PIPE INSULATION AND CONFORM TO ASTM C547, ASTM C1136, AND NFPA 90A.
- THE INSULATION SHALL HAVE A MAXIMUM THERMAL CONDUCTIVITY (K) OF 0.22 BTU•IN/HR•FT²•°F.
- THE JACKETING SHALL CONFORM TO ASTM D374, ASTM E96, ASTM D882, ASTM 774, AND ASTM D781.
- THE JACKETING SHALL BE EQUAL TO SARAN 560 VAPOR RETARDED FILM, MANUFACTURED BY THE DOW CHEMICAL COMPANY.

3, UNDERGROUND PIPING

- THE INSULATION SHALL BE INSULATED WITH 2" THICK EXTRUDED POLYSTYRENE PIPE INSULATION AND CONFORM TO ASTM D1622, ASTM D1621, ASTM C272, ASTM C518, ASTM D2842, ASTM E96, ASTM D2126, AND ASTM D696.
- THE INSULATION SHALL HAVE A MAXIMUM THERMAL CONDUCTIVITY (K) OF 0.259 BTU•IN/HR•FT²•°F.
- THE JACKETING SHALL CONFORM TO ASTM D374, ASTM E96, ASTM D882, ASTM 774, AND ASTM D781.
- THE JACKETING SHALL BE EQUAL TO SARAN 560 VAPOR RETARDED FILM, MANUFACTURED BY THE DOW CHEMICAL COMPANY.

PIPING AND VALVE SUBMITTALS:

1. FOR MATERIALS, PRESSURE RATING, FUNCTION, AND OPERATION.

EXTRACTION PUMP

1. PUMP

- CI PUMP WITH 316SS FRAME, FLANGES, CLAMPS, AND HARDWARE.
- 1" DIAMETER EPDM HOSE WITH 316SS INSERT MATERIAL.
- EPOXY SHOES.
- BUNA SEALS.
- MAXIMUM CONTINUOUS OUTPUT 11 GPM AT 100 RPM. MINIMUM RATED DISCHARGE PRESSURE 200 PSI.
- PUMP MODEL # SPX25 HOSE PUMP.
- MANUFACTURER SHALL BE WATSON-MARLOW BREDEL.
- 1 HP TEFC MOTOR WITH 230V 1Φ POWER SUPPLY.

2. VARIABLE FREQUENCY DRIVE

- 120/240VAC, 1-PHASE
- NEMA 1 ENCLOSURE (MOUNT IN NEMA 4X ENCLOSURE)
- INTEGRAL KEYPAD WITH LCD DISPLAY
- TRANSISTOR & RESISTOR BRAKING
- 9-DIGITAL INPUTS, 2 RELAY OUTPUTS, 2 DIGITAL OUTPUTS, 2 ANALOG INPUTS, 2 ANALOG OUTPUTS
- 0-500HZ OUTPUT FREQUENCY
- REVERSING FUNCTION
- RS485 MODBUS PORT
- RATED FOR 1-3HP LOADS
- THE VFD SHALL BE EQUAL TO BALDOR VS1SP-6-1-1-B.

PORTABLE SPILL PAN

- TWO-WHEELED ROLL-UNDER SPILL PAN WITH APPROXIMATE 40 GALLON CAPACITY – 60-INCHES X 30 INCHES X 6 INCHES DEEP.
- ALUMINUM FRAME AND HANDLE WITH A FIBERGLASS PAN.
- PROVIDE A 3/4-INCH NPT STAINLESS COUPLING IS PROVIDED FOR ATTACHING EITHER A VALVE OR PUMP FOR DRAINING.
- PROVIDE A SPILL-BARROW™ AS MANUFACTURED BY TRANS ENVIRONMENTAL SYSTEMS, INC., (TESI).

OTHER CONTRACTOR SUBMITTALS:

1. VENDOR DATA ON GATES (SEE DRAWING C-301)
2. PHOTOGRAPHIC SITE DOCUMENTATION PRIOR TO AND AFTER COMPLETION OF THE WORK.

This drawing is the property of MACTEC Engineering and Consulting, Inc. including all patented and patentable features, and/or confidential information and its use is conditioned upon the users agreement not to reproduce the drawing, in whole or part, nor the material described thereon, nor the use of the drawing for any purpose other than specifically permitted in writing by MACTEC Engineering and Consulting, Inc.

NO.	DATE	REVISIONS	BY	CHK
2	03/09/11	ISSUED FOR CONSTRUCTION	REO	MAP
1	02/12/10	FINAL	REO	MAP
0	12/07/09	ISSUED FOR BID	REO	MAP
A	11/12/09	FOR CLIENT REVIEW	REO	MAP

DRAWN: DEL	PROJECT NO: 6107-10-0016
ENGINEER: MAP	SCALE: NONE
CHECKED: REO	APPROVED: PHT
DATE: 03/09/11	DATE: 03/09/11

MACTEC Engineering and Consulting, Inc.
P.O. Box 7050, 511 Congress Street
Portland, ME 04112-7050
(207) 775-5401

DAPL EXTRACTION PILOT TEST
OLIN CHEMICAL SUPERFUND SITE
WILMINGTON, MASSACHUSETTS

CIVIL

CONSTRUCTION SPECIFICATIONS

DRAWING NO: C-304

8 / 15

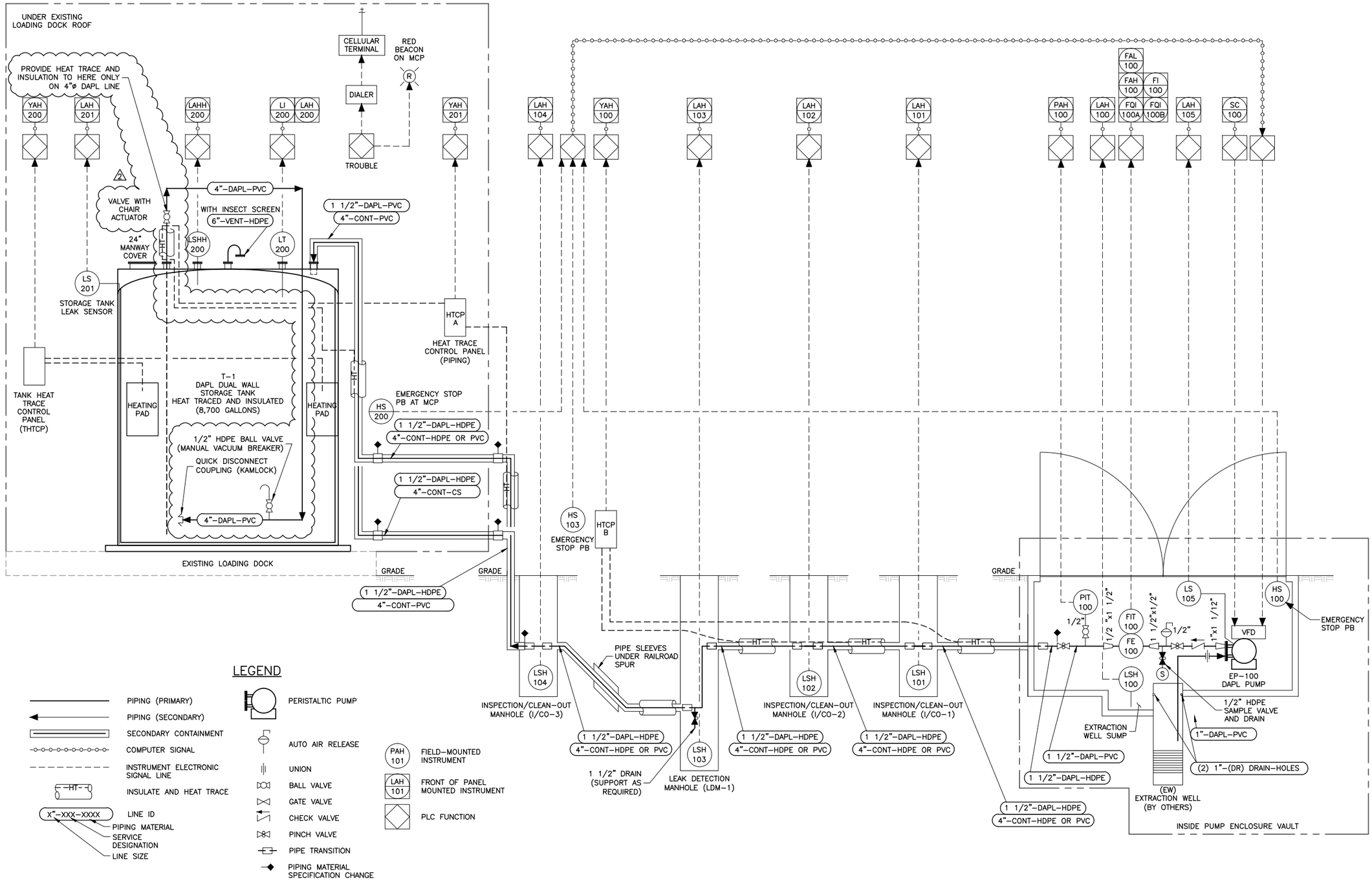

ABBREVIATIONS:

CONT	CONTAINMENT PIPE
DAPL	DENSE AQUEOUS PHASE LIQUID
DR	DRAIN
EP	EXTRACTION PUMP
EW	EXTRACTION WELL
FAH	FLOW ALARM HIGH
FAL	FLOW ALARM LOW
FE	FLOW ELEMENT
FI	FLOW INDICATOR
FIT	FLOW INDICATOR TRANSMITTER
FQI	FLOW TOTALIZING INDICATOR
FR	FLOW RECORDER
FS	FLOW SWITCH
HDPE	HIGH DENSITY POLYETHYLENE
HS	HAND SWITCH – ON/OFF (MAINT.)
HT	HEAT TRACE
HTCP	HEAT TRACING CONTROL PANEL
LAH	LEVEL ALARM HIGH
LAHH	LEVEL ALARM HIGH HIGH
LI	LEVEL INDICATOR
LS	LEVEL SWITCH
LSH	LEVEL SWITCH HIGH
LSHH	LEVEL SWITCH HIGH HIGH
LT	LEVEL TRANSMITTER
MCP	MAIN CONTROL PANEL
PAH	PRESSURE ALARM HIGH
PIT	PRESSURE INDICATOR TRANSMITTER
PSH	PRESSURE SWITCH HIGH
PVC	POLYVINYL CHLORIDE
S	SAMPLE PORT
SC	SPEED CONTROL
THTCP	TANK HEAT TRACING CONTROL PANEL
VFD	VARIABLE FREQUENCY DRIVE
YAH	HEAT TRACE CONTROLLER FAULT

NOTES:

1. FQI-100B IS RESETABLE, BY OPERATOR FQI-100A IS NOT RESETABLE.
2. ALL ALARMS ACTIVATE AUTO DIALER.

LEGEND

- PIPING (PRIMARY)
- PIPING (SECONDARY)
- SECONDARY CONTAINMENT
- COMPUTER SIGNAL
- INSTRUMENT ELECTRONIC SIGNAL LINE
- -HT- INSULATE AND HEAT TRACE
- X"-XXX-XXXX LINE ID
  - PIPING MATERIAL
  - SERVICE DESIGNATION
  - LINE SIZE
- PERISTALTIC PUMP
- AUTO AIR RELEASE
- UNION
- BALL VALVE
- GATE VALVE
- CHECK VALVE
- PINCH VALVE
- PIPE TRANSITION
- PIPING MATERIAL SPECIFICATION CHANGE
- PAH 101 FIELD-MOUNTED INSTRUMENT
- LAH 101 FRONT OF PANEL MOUNTED INSTRUMENT
- PLC FUNCTION

This drawing is the property of MACTEC Engineering and Consulting, Inc. including all patented and patentable features, and/or confidential information and its use is conditioned upon the users agreement not to reproduce the drawing, in whole or part, nor the material described thereon, nor the use of the drawing for any purpose other than specifically permitted in writing by MACTEC Engineering and Consulting, Inc.

NO.	DATE	REVISIONS	BY	CHK
2	03/09/11	ISSUED FOR CONSTRUCTION	REO	MAP
1	02/12/10	FINAL	REO	MAP
0	12/07/09	ISSUED FOR BID	REO	MAP
A	11/12/09	FOR CLIENT REVIEW	REO	MAP

DRAWN: DEL	PROJECT NO: 6107-10-0016
ENGINEER: REO	SCALE: NONE
CHECKED: MAP	APPROVED: PHT
DATE: 03/09/11	DATE: 03/09/11

MACTEC
Engineering and Consulting, Inc.
P.O. Box 7050, 511 Congress Street
Portland, ME 04112-7050
(207) 775-5401

DAPL EXTRACTION PILOT TEST
OLIN CHEMICAL SUPERFUND SITE
WILMINGTON, MASSACHUSETTS

PROCESS

PIPING AND INSTRUMENTATION DIAGRAM

DRAWING NO: D-601

COMMONWEALTH OF MASSACHUSETTS MARK A. PETERS 35251 REGISTERED PROFESSIONAL ENGINEER
3/9/11

ABBREVIATIONS

A	AMPERE
AC	ALTERNATING CURRENT
AD	AUTO DIALER
AFF	ABOVE FINISHED FLOOR
AFG	ABOVE FINISHED GRADE
AIC	AMPERES INTERRUPTING CAPACITY
ATC	AUTOMATIC TEMPERATURE CONTROL
ATS	AUTOMATIC TRANSFER SWITCH
AUX	AUXILIARY
AWG	AMERICAN WIRE GAUGE
BKR	BREAKER
C	CONDUIT
CB	CIRCUIT BREAKER
CKT	CIRCUIT
CT	CURRENT TRANSFORMER
CU	COPPER
DC	DIRECT CURRENT
DISC	DISCONNECT
EG	EQUIPMENT GROUND
EH	ELECTRICALLY HELD
EM	EMERGENCY
EMT	ELECTRICAL METALLIC TUBING
EPR	ETHYLENE PROPYLENE RUBBER
EMH	ELECTRICAL MANHOLE
EQUIP	EQUIPMENT
ES	EMERGENCY STOP
EUH	ELECTRIC UNIT HEATER
EX	EXTERIOR
EXTG	EXISTING
FA	FIRE ALARM
FC	FOOT-CANDLE
FDR	FEEDER
FLUOR	FLUORESCENT
FS	FLOW SWITCH (FA SYSTEM)
FVNR	FULL VOLTAGE NON REVERSING
FVR	FULL VOLTAGE REVERSING
GEN	GENERATOR
GF	GROUND FAULT
GFI	GROUND FAULT CIRCUIT INTERRUPTER
GND	GROUND
H	HAND HOLE
HOA	HAND-OFF-AUTOMATIC
HP	HORSE POWER
HPS	HIGH PRESSURE SODIUM
HT	HEAT TRACE
HV	HIGH VOLTAGE
HZ	HERTZ
IG	ISOLATED GROUND
JB	JUNCTION BOX
KV	KILOVOLT
KVA	KILO VOLT-AMPERE
KW	KILOWATT
KWH	KILOWATT HOUR
LPS	LOW PRESSURE SODIUM
LTG	LIGHTING
LSH	LEVEL SWITCH HIGH
LV	LOW VOLTAGE
MCB	MAIN CIRCUIT BREAKER
MCC	MOTOR CONTROL CENTER
MCP	MOTOR CIRCUIT PROTECTION
MDP	MAIN DISTRIBUTION PANEL
MH	METAL HALIDE
MOD	MOTOR OPERATED DAMPER
MS	MANUAL STARTER OIL/RIL
MTS	MANUAL TRANSFER SWITCH
MVA	MEGAVOLT-AMPERE
OH	OVERHEAD
OIT	OPERATOR INTERFACE TERMINAL
OL	OVER LOAD
OOA	ON-OFF-AUTOMATIC
P	POLE
PB	PUSH BUTTON
PF	POWER FACTOR
PH	PHASE
PNL	PANEL
POHE	PRIMARY OH ELECTRIC
PRI	PRIMARY
PT	POTENTIAL TRANSFORMER
PVC	POLYVINYL CHLORIDE
RGSC	RIGID GALVANIZED STEEL CONDUIT
RVSS	REDUCED VOLTAGE SOLID STATE
RSC	RIGID STEEL CONDUIT
S	SIGNAL
SEC	SECONDARY
SHLD	SHIELDED CABLE
SOHE	SECONDARY OH ELECTRIC
SV	SOLENOID VALVE
SW	SWITCH
SYM	SYMMETRICAL
T	TELEPHONE
TD	TELEDIALER
TDR	TIME DELAY RELAY
TEL	TELEPHONE
TM	TELEMETRY
TS	TEMPERATURE SWITCH
TR	TRANSFORMER
UG	UNDERGROUND
UPS	UNINTERRUPTED POWER SUPPLY
UT	UTILITY
V	VOLT
VA	VOLT-AMPERE
VFD	VARIABLE FREQUENCY DRIVE
VM	VOLT METER
VR	VOLTAGE REGULATOR
W	WATT
WH	WATT HOUR
WP	WEATHERPROOF
XFMR	TRANSFORMER
XLP	CROSS LINKED POLYETHYLENE
XP	EXPLOSION PROOF

POWER

DESCRIPTION

- 200/3 UNFUSED SAFETY SWITCH, RATING AS NOTED — POLES — AMPERES
- 30/15/3 FUSED SAFETY SWITCH, RATING AS NOTED — POLES — FUSE AMPERE RATING — SWITCH AMPERE RATING
- 1 MAGNETIC MOTOR STARTER, RATING AS NOTED — NEMA SIZE
- COMBINATION TYPE MAGNETIC MOTOR STARTER, RATING AS NOTED
- PUSHBUTTON OR SELECTOR SWITCH STATION
- EMERGENCY STOP P.B.
- C LIGHTING OR POWER CONTACTOR
- CB ENCLOSED CIRCUIT BREAKER
- T THERMOSTAT — C COOLING ONLY — F FREEZESTAT — D DUCT-MOUNTED
- UTILITY METER
- PANELBOARD, SURFACE MTD.
- PANELBOARD, FLUSH MTD.
- EQUIPMENT, TERMINAL, OR CONTROL CABINET
- 5 THREE PHASE MOTOR (HP AS SHOWN)
- SINGLE PHASE MOTOR
- T TRANSFORMER
- H ELECTRICAL HANDHOLE
- J JUNCTION BOX

SINGLE LINE DIAGRAM

DESCRIPTION

- TRANSFORMER
- CT CURRENT TRANSFORMER
- PT POTENTIAL TRANSFORMER
- 100AF — FRAME SIZE; CIRCUIT BREAKER; 70AT — TRIP AMPS
- SURGE CAPACITOR
- LIGHTNING ARRESTER
- DELTA CONNECTION
- WYE CONNECTION
- GROUND CONNECTION

LIGHTING FIXTURES

- H.I.D. WALL MOUNTED FIXTURE

WIRING

- — OHE — OVERHEAD ELECTRICAL
- WIRING, CONCEALED IN FINISHED AREAS, EXPOSED WHERE PERMITTED BY SPECIFICATIONS
- WIRING INSTALLED IN OR BELOW FLOOR SLAB
- LP1/2 HOME RUN TO PANEL (CKT. NO. AS SHOWN)
- 1 HOME RUN (NO. REFERS TO COND. & WIRE SCHED.)
- — DC — DC WIRING
- 3/4"C (2#12, 1#12G) CONDUIT (WIRES)
- CONDUIT DOWN
- CONDUIT UP
- US UNSWITCHED
- — — — E — BURIED ELECTRIC

HEAT TRACING

- HTCP P HT HEAT TRACE POWER CONNECTION
- HTCP E HT HEAT TRACE END KIT WITH POWER INDICATOR
- HTCP HEAT TRACE CONTROL PANEL
- — — — HT — HEAT TRACE LINE

WIRING DEVICES

DESCRIPTION

- 20 AMPERE, 120 VOLT DUPLEX RECEPTACLE
- +48" — INDICATES INCHES AFF MOUNTING HEIGHT
- WP — WEATHERPROOF
- GFI — GROUND FAULT INTERUPTER
- 20 AMPERE, 120 VOLT QUAD RECEPTACLE
- 20 AMPERE, 120 VOLT SINGLE RECEPTACLE
- W TELEPHONE OUTLET, +18" AFF — WALL MOUNTED, +54" AFF
- 30 SINGLE SPECIAL PURPOSE RECEPTACLE — INDICATES AMPERE SIZE

SCHEMATIC DIAGRAM

- CR CONTROL RELAY
- M MOTOR CONTACTOR
- CONTACT NORMALLY OPEN
- CONTACT NORMALLY CLOSED
- OVERLOAD HEATER ELEMENT
- SINGLE POLE SINGLE THROW SWITCH
- SELECTOR SWITCH
- START PUSHBUTTON, MOMENTARY CONTACT
- STOP PUSHBUTTON, MOMENTARY CONTACT
- RED MUSHROOM-HEAD MAINTAINED-TYPE EMERGENCY STOP PUSHBUTTON
- LIMIT SWITCH
- TEMPERATURE SWITCH
- FLOAT SWITCH
- PRESSURE SWITCH
- TIMED CONTACT
- R PILOT LIGHT, LETTER INDICATES COLOR — G GREEN — R RED — A AMBER

NEMA CLASSIFICATIONS FOR ELECTRICAL EQUIPMENT AND ENCLOSURES

(UNLESS OTHERWISE NOTED OR SPECIFIED)

LOCATION	CLASSIFICATION
EXTERIOR POWER	NEMA 3R
INTERIOR POWER	NEMA 1

GENERAL NOTES

1. ALL CONDUIT AND EQUIPMENT SHALL BE INSTALLED AND GROUNDED IN ACCORDANCE WITH THE RULES AND REGULATIONS OF THE CURRENT NATIONAL ELECTRICAL CODE.
2. CONDUIT RUNS ARE SHOWN DIAGRAMMATICALLY ONLY AND SHALL BE INSTALLED IN A MANNER TO PREVENT CONFLICTS WITH EQUIPMENT AND STRUCTURES. CONDUITS SHALL BE CONCEALED IN WALLS, AND ABOVE ANY SUSPENDED CEILINGS WHERE APPLICABLE. EXPOSED CEILING CONDUITS SHALL BE PERMITTED WHERE SUSPENDED CEILINGS ARE NOT USED. EXPOSED CONDUITS SHALL BE INSTALLED PARALLEL TO BEAMS AND WALLS.
3. CONDUITS SHALL BE PROPERLY TERMINATED WITH NEAT CONNECTIONS TO ALL ASSOCIATED EQUIPMENT.
4. CONTROL AND INSTRUMENTATION CONDUIT SIZES AND NUMBER OF CONDUCTORS ARE TO BE DETERMINED FROM SCHEMATIC DIAGRAMS, INSTRUMENTATION DIAGRAMS, AND/OR SPECIFICATIONS, IF NOT DIRECTLY SHOWN ON POWER PLANS. THE WIRING DIAGRAMS, QUANTITY AND SIZE OF WIRES AND CONDUIT REPRESENT A SUGGESTED ARRANGEMENT BASED UPON SELECTED STANDARD COMPONENTS OF ELECTRICAL AND INSTRUMENTATION EQUIPMENT. MODIFICATIONS REVIEWED BY THE ENGINEER WITH NO EXCEPTIONS TAKEN, MAY BE MADE BY THE CONTRACTOR TO ACCOMMODATE EQUIPMENT ACTUALLY PURCHASED. THE BASIC SEQUENCE AND METHOD OF CONTROL MUST BE MAINTAINED AS INDICATED ON THE DRAWINGS AND SPECIFICATIONS. EACH CONTROL AND INSTRUMENTATION CONDUIT SHALL ALSO CONTAIN 10 PER CENT SPARE CONDUCTORS, WITH A MINIMUM OF TWO SPARES, UP TO THE LIMIT OF CONDUIT FILL AS SPECIFIED BY THE NATIONAL ELECTRICAL CODE. INSTRUMENTATION SHIELDED CABLES SHALL BE INSTALLED IN RGS CONDUIT SEPARATE FROM OTHER POWER WIRING. PVC IS ALLOWED FOR INSTRUMENTATION UNDERGROUND.
5. EACH CONDUIT TO CARRY GROUND WIRE(S) ACCORDING TO NATIONAL ELECTRIC CODE IN ADDITION TO NUMBER OF CONDUCTORS SHOWN ON DRAWINGS OR PER NOTE 4 ABOVE. ALL GROUNDING MUST CONFORM TO ARTICLE 250 OF CURRENT NATIONAL ELECTRICAL CODE.
6. MINIMUM CONDUIT SIZE SHALL BE 3/4". MINIMUM POWER WIRING SHALL BE 2C#12 AWG WITH GROUND, AND 2C#14 FOR CONTROL. INSTRUMENTATION CABLE SHALL BE 2C#16 TWS AND 3C#16 TWS FOR SPEED POTENTIOMETER INSTALLED PER NEC. PROVIDE CONDUIT AND WIRING AS INDICATED.
7. ALL PANELBOARDS SHALL BE MOUNTED SO THAT THE DISTANCE FROM THE TOP CIRCUIT BREAKER OPERATING HANDLE TO FINISHED FLOOR SHALL NOT EXCEED 6'-6".
8. ALL SURFACE MOUNTED PANELS AND PANELBOARDS ON EXTERIOR WALLS ABOVE GRADE, SHALL BE MOUNTED TO MAINTAIN A 1/4" AIR SPACE BETWEEN THE ENCLOSURE AND THE WALL.
9. ELECTRICAL EQUIPMENT LOCATIONS ARE APPROXIMATE ONLY. COORDINATE LOCATIONS WITH PROCESS PIPING, ARCHITECTURAL, STRUCTURAL, AND MECHANICAL DRAWINGS. CONTRACTOR SHALL COORDINATE MANUFACTURERS EQUIPMENT REQUIREMENTS WITH SPACE AVAILABLE. FINAL CONTROL PANEL LOCATIONS SHALL BE FIELD COORDINATED.
10. ALL FIELD CONTROL CONDUCTORS WILL TERMINATE AT INDIVIDUAL TERMINAL BLOCKS WITHIN THE CONTROL ENCLOSURE. SERIES AND PARALLEL CONNECTION OF FIELD CONTROL CONDUCTORS WILL BE MADE ONLY AT CONTROL PANEL TERMINAL BLOCKS.
11. GROUND ALL CONDUCTOR SHIELDS AT PANEL ONLY – DO NOT GROUND SHIELDS AT BOTH ENDS.
12. AT THE FOLLOWING LOCATIONS, UNLESS OTHERWISE NOTED, PULL, JUNCTION, TERMINAL, SWITCH, AND OUTLET BOXES SHALL BE CAST IRON WHERE STEEL CONDUIT IS TERMINATED; OR SHALL BE CAST ALUMINUM WHERE ALUMINUM CONDUIT IS TERMINATED:

    A – AT LOCATIONS WHERE VAPORTIGHT LIGHTING FIXTURES AND/OR WATERTIGHT RECEPTACLES ARE INDICATED.
    B – AT LOCATIONS ON OR IN ALL OUTSIDE WALLS.
    C – OUTDOORS
13. NAMEPLATES SHALL CONFORM STRICTLY TO INSTRUCTIONS IN THE ELECTRICAL SPECIFICATIONS AND ON THE DRAWINGS. THE FOLLOWING SHALL HAVE NAMEPLATES:

    A – ALL LOCAL CONTROL STATIONS AT OR NEAR EQUIPMENT.
    B – ALL PANELBOARDS AND CONTROL PANELS.
14. PIPE SLEEVES FOR CONDUITS PASSING FROM NON-HAZARDOUS AREAS TO HAZARDOUS AREAS SHALL HAVE CAULKING APPLIED TO MAKE THE INSTALLATION GASTIGHT.
15. CONTRACTOR SHALL PROVIDE ALL CONDUIT, WIRING, EQUIPMENT, AND CONTROL DEVICES AS INDICATED BY SCHEMATICS, SINGLE LINE DIAGRAMS, SCHEDULES, PLANS, SPECIFICATIONS, AND VENDOR DOCUMENTATION TO PROVIDE A COMPLETE WORKING SYSTEM.
16. PROVIDE CONDUIT FREEZE EXPANSION FITTINGS FOR ALL EXTERIOR CONDUIT SYSTEMS AS REQUIRED.
17. CONTRACTOR SHALL PROVIDE A COMPLETE WORKING OPERATING SYSTEM IN ACCORDANCE WITH ALL DRAWINGS, SPECIFICATIONS, CODES AND STANDARDS.
18. ALL CONDUIT UNDERGROUND SHALL BE SCHEDULE 80 PVC.
19. ALL GENERAL NOTES, SYMBOL LISTS, AND ABBREVIATIONS SHALL BE CONSIDERED AS APPLICABLE TO ALL ELECTRICAL DRAWINGS FOR THIS PROJECT. SYMBOLS AND ABBREVIATIONS SHOWN ON THIS SHEET ARE FOR REFERENCE ONLY AND DO NOT INDICATE THEIR INCORPORATION IN THE DESIGN.

3-4-2011

This drawing is the property of MACTEC Engineering and Consulting, Inc. including all patented and patentable features, and/or confidential information and its use is conditioned upon the users agreement not to reproduce the drawing, in whole or part, nor the material described thereon, nor the use of the drawing for any purpose other than specifically permitted in writing by MACTEC Engineering and Consulting, Inc.

NO.	DATE	REVISIONS	BY	CHK
2	03/09/11	ISSUED FOR CONSTRUCTION	REO	MAP
1	02/12/10	FINAL	REO	MAP
0	12/07/09	ISSUED FOR BID	REO	BDE
A	12/07/09	FOR CLIENT REVIEW	REO	BDE

DRAWN: BDE	PROJECT NO: 6107-10-0016
ENGINEER: BDE	SCALE: NONE
CHECKED: REO	APPROVED: PHT
DATE: 03/09/11	DATE: 03/09/11

MACTEC Engineering and Consulting, Inc.
P.O. Box 7050, 511 Congress Street
Portland, ME 04112-7050
(207) 775-5401

DAPL EXTRACTION PILOT TEST
OLIN CHEMICAL SUPERFUND SITE
WILMINGTON, MASSACHUSETTS

ELECTRICAL

ELECTRICAL GENERAL NOTES AND LEGEND

DRAWING NO: E-001

10 / 15

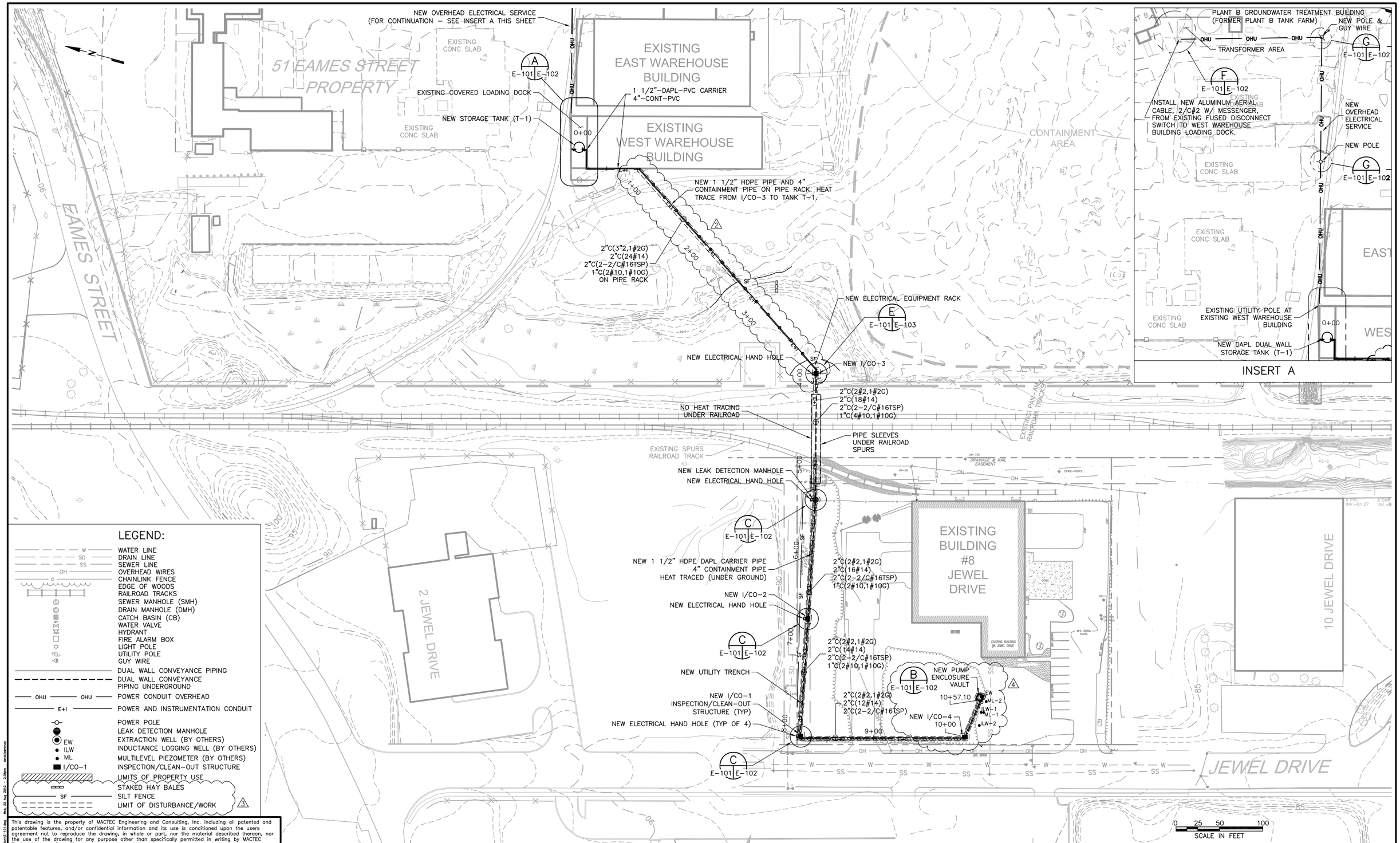

This drawing is the property of MACTEC Engineering and Consulting, Inc. including all patented and patentable features, and/or confidential information and its use is conditioned upon the users agreement not to reproduce the drawing, in whole or part, nor the material described thereon, nor the use of the drawing for any purpose other than specifically permitted in writing by MACTEC Engineering and Consulting, Inc.

NO.	DATE	REVISIONS	BY	CHK
4	11/03/12	REVISED LOCATION FOR EW AND VAULT	REO	MAP
3	04/05/11	ADDRESSED TOWN OF WILMINGTON COMMENTS	REO	MAP
2	03/09/11	ISSUED FOR CONSTRUCTION	REO	MAP
1	02/12/10	FINAL	REO	MAP
0	12/07/09	ISSUED FOR BID	REO	BDE
A	11/12/09	FOR CLIENT REVIEW	REO	BDE

DRAWN: DEL	PROJECT NO: 6107-10-0016
ENGINEER: BDE	SCALE: 1" = 50'
CHECKED: REO	APPROVED: PHT
DATE: 03/09/11	DATE: 03/09/11

MACTEC
Engineering and Consulting, Inc.
P.O. Box 7050, 511 Congress Street
Portland, ME 04112-7050
(207) 775-5401

DAPL EXTRACTION PILOT TEST
OLIN CHEMICAL SUPERFUND SITE
WILMINGTON, MASSACHUSETTS

ELECTRICAL

PROPOSED ELECTRICAL SITE PLAN

DRAWING NO: E-101

11/15

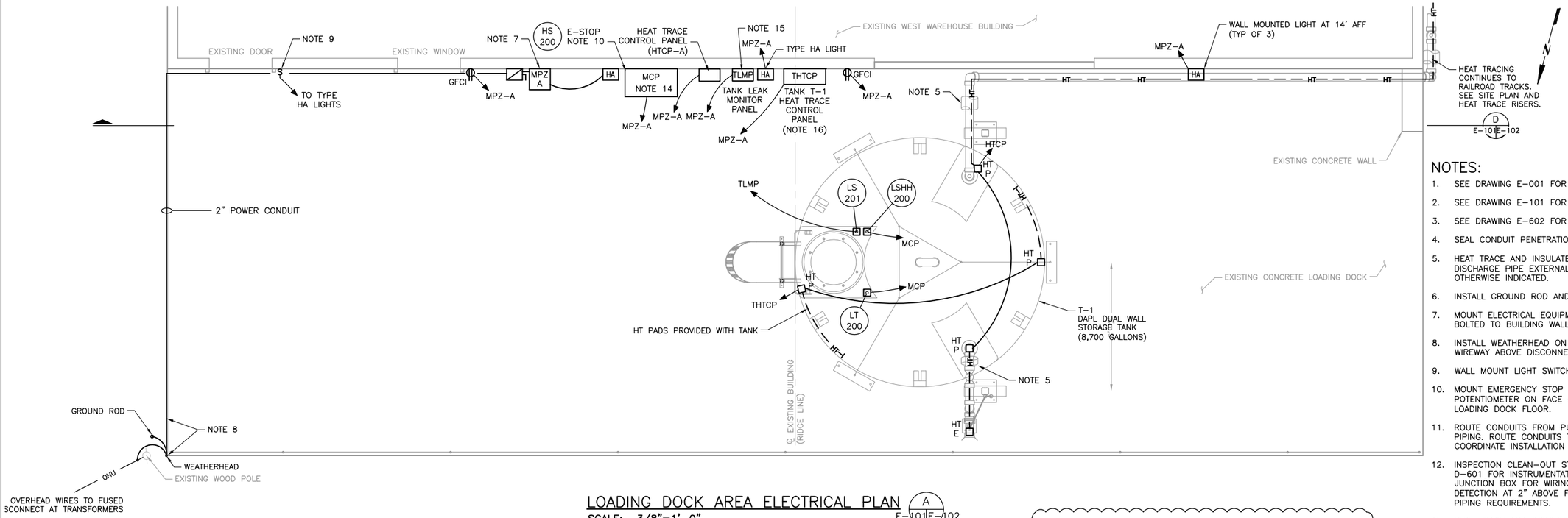

LOADING DOCK AREA ELECTRICAL PLAN (A / E-101 E-102)

SCALE: 3/8"=1'-0"

2 0 2 4 6 — SCALE OF FEET — 3/8" = 1'-0"

NOTES:

1. SEE DRAWING E-001 FOR SYMBOLS AND LEGEND.
2. SEE DRAWING E-101 FOR ELECTRICAL SITE PLAN.
3. SEE DRAWING E-602 FOR ELECTRICAL SPECIFICATIONS.
4. SEAL CONDUIT PENETRATIONS THROUGH ALL BELOW GRADE WALLS.
5. HEAT TRACE AND INSULATE 4" PVC CONTAINMENT PIPE, 4" PVC TANK DISCHARGE PIPE EXTERNAL TO PUMP ENCLOSURE VAULT, UNLESS OTHERWISE INDICATED.
6. INSTALL GROUND ROD AND GROUND CONDUCTOR TO LP-A.
7. MOUNT ELECTRICAL EQUIPMENT ON GALVANIZED STEEL CHANNEL RACK BOLTED TO BUILDING WALL. SEE DETAIL D, SHEET E-103.
8. INSTALL WEATHERHEAD ON SIDE OF BUILDING. INSTALL CONDUIT TO WIREWAY ABOVE DISCONNECTS AND MPZ-A.
9. WALL MOUNT LIGHT SWITCH.
10. MOUNT EMERGENCY STOP PUSHBUTTON AND PUMP SPEED POTENTIOMETER ON FACE OF MAIN CONTROL PANEL, 54" ABOVE LOADING DOCK FLOOR.
11. ROUTE CONDUITS FROM PUMP VAULT AREA TO TANK AREA FOLLOWING PIPING. ROUTE CONDUITS TO EACH DEVICE AS REQUIRED IN FIELD. COORDINATE INSTALLATION WITH PIPING AND SUPPORT REQUIREMENTS.
12. INSPECTION CLEAN-OUT STRUCTURE LEVEL SWITCH. SEE DRAWING D-601 FOR INSTRUMENTATION NUMBER FOR EACH DEVICE. PROVIDE JUNCTION BOX FOR WIRING FROM DISCRETE CONDUIT. SET FOR DETECTION AT 2" ABOVE FINISHED BASE. COORDINATE LOCATION WITH PIPING REQUIREMENTS.
13. HEAT TRACE AND INSULATE 4" PVC CONTAINMENT PIPE EXTERNAL TO INSPECTION/CLEAN-OUT STRUCTURES AND LEAK DETECTION MANHOLE.
14. CONTROL PANEL SHALL CONTAIN PLC FOR SYSTEM, TELEPHONE DIALER, OPERATOR INTERFACE TOUCH SCREEN DISPLAY, PUMP SPEED CONTROL & CELLULAR TERMINAL.
15. TANK LEAK MONITOR CONTROL PANEL PROVIDED WITH TANK.
16. TANK HEAT TRACE CONTROL PANEL FURNISHED WITH TANK.
17. POWER FOR INSTRUMENTS ON TANK T-1 SHALL ORIGINATE AT THE MAIN CONTROL PANEL. ALL REQUIRED CONVERTERS AND POWER SUPPLIES FOR FIELD DEVICES SHALL BE PROVIDED WITH MAIN CONTROL PANEL.

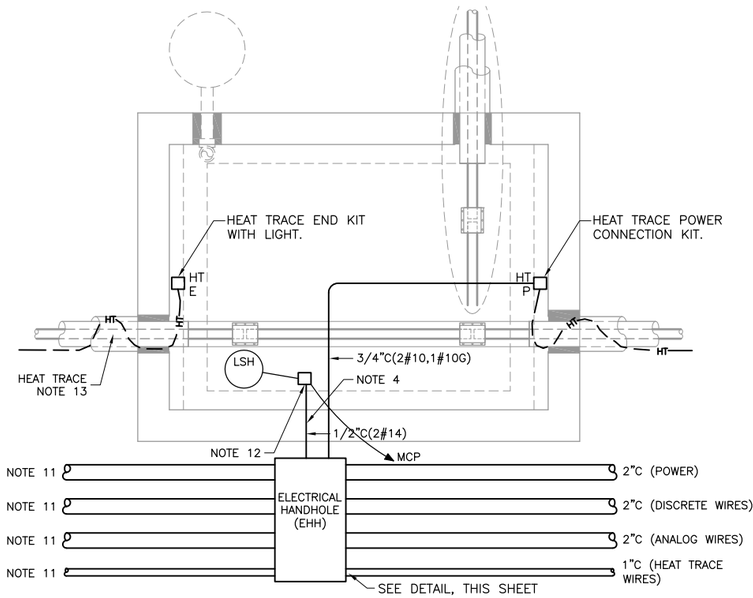

TYPICAL INSPECTION/CLEAN-OUT STRUCTURE ELECTRICAL PLAN (C / E-101 E-102)

NTS

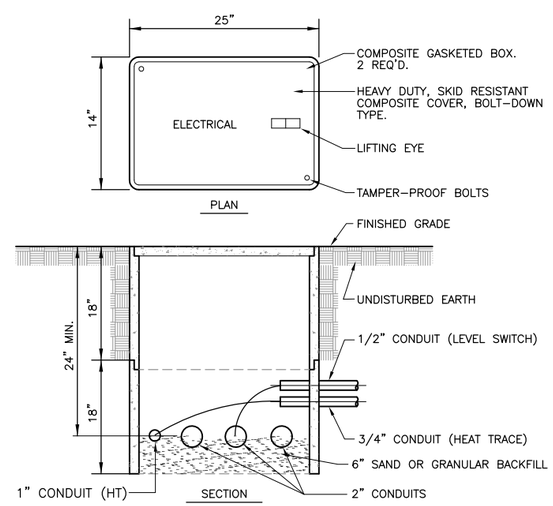

ELECTRICAL HANDHOLE DETAIL

NTS

4

FOR REVISIONS TO PUMP ENCLOSURE VAULT FLOOR PLAN DETAIL – SEE DRAWING C-301

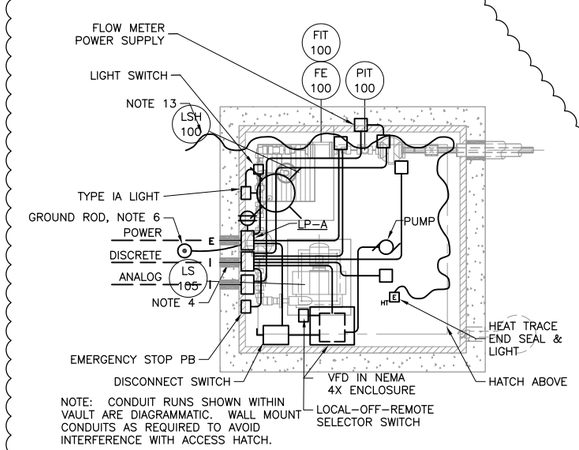

NOTE: CONDUIT RUNS SHOWN WITHIN VAULT ARE DIAGRAMMATIC. WALL MOUNT CONDUITS AS REQUIRED TO AVOID INTERFERENCE WITH ACCESS HATCH.

PUMP ENCLOSURE VAULT ELECTRICAL PLAN (B / E-101 E-102)

NTS

WORK IN PUMP ENCLOSURE VAULT:

A. INSTALL LOAD CENTER LP-A, DISCONNECT SWITCH, VFD AND ENCLOSURE (PROVIDED BY PUMP SUPPLIER), LOCAL-OFF-REMOTE SWITCH, DAPL PUMP, LIGHT AND SWITCH, EMERGENCY STOP PUSHBUTTON, FE-100 POWER SUPPLY AND GFCI RECEPTACLE.

B. INSTALL WIRING TO FLOAT SWITCH, FLOW ELEMENT AND TRANSMITTER, PRESSURE TRANSMITTER AND GLYCOL PRESSURE SWITCH (IN PUMP). INSTALL WIRES FROM DEVICES TO MAIN CONTROL PANEL VIA ANALOG OR DISCRETE CONDUITS AS REQUIRED. SEE D-601.

C. INSTALL HEAT TRACING CABLE, END KIT, AND WIRE AND CONDUIT TO HEAT TRACE CONTROL PANEL HTCP-B. MOUNT HTCP-B ON EQUIPMENT RACK. SEE HEAT TRACE RISERS ON E-601.

D. PROVIDE 6"X6"X4" GASKETED JUNCTION BOXES ON ENDS OF 2" INSTRUMENTATION CONDUITS WITHIN VAULT. EXTEND CONDUITS AND CONDUCTORS FROM JUNCTION BOXES TO LOADS WITHIN VAULT. FIELD ROUTE CONDUITS AS REQUIRED. COORDINATE WITH MECHANICAL PIPING.

E. PRESSURE TRANSMITTER PIT-100 SHALL BE LOOP POWERED, 24VDC, WITH 4-20mA OUTPUT AND LOCAL DISPLAY, 0-100PSIG. DWYER 619-4 OR EQUAL.

F. 120VAC INPUT, 24-VOLT, DC OUTPUT POWER SUPPLY FOR FIT-100 SHALL BE MOUNTED IN A NEMA 3R ENCLOSURE IN THE PUMP VAULT NEAR THE FLOW TRANSMITTER. TRC ELECTRONICS LPV-20-24, SOLA OR EQUAL.

This drawing is the property of MACTEC Engineering and Consulting, Inc. including all patented and potentable features, and/or confidential information and its use is conditioned upon the users agreement not to reproduce the drawing, in whole or part, nor the material described thereon, nor the use of the drawing for any purpose other than specifically permitted in writing by MACTEC Engineering and Consulting, Inc.

NO.	DATE	REVISIONS	BY	CHK
4	05/15/12	REVISED VAULT	REO	MAP
3	04/05/11	ADDRESSED TOWN OF WILMINGTON COMMENTS	REO	MAP
2	03/09/11	ISSUED FOR CONSTRUCTION	REO	MAP
1	02/12/10	FINAL	REO	MAP
0	12/07/09	ISSUED FOR BID	REO	BDE
A	11/12/09	FOR CLIENT REVIEW	REO	BDE

DRAWN: DEL	PROJECT NO: 6107-10-0016
ENGINEER: KWD	SCALE: AS NOTED
CHECKED: REO	APPROVED: PHT
DATE: 03/09/11	DATE: 03/09/11

MACTEC
Engineering and Consulting, Inc.
P.O. Box 7050, 511 Congress Street
Portland, ME 04112-7050
(207) 775-5401

DAPL EXTRACTION PILOT TEST
OLIN CHEMICAL SUPERFUND SITE
WILMINGTON, MASSACHUSETTS

ELECTRICAL
ELECTRICAL PLANS AND DETAIL

DRAWING NO: E-102
12 / 15

NOTES:

1. SEE MAIN CONTROL PANEL DETAIL, SHEET E-601.

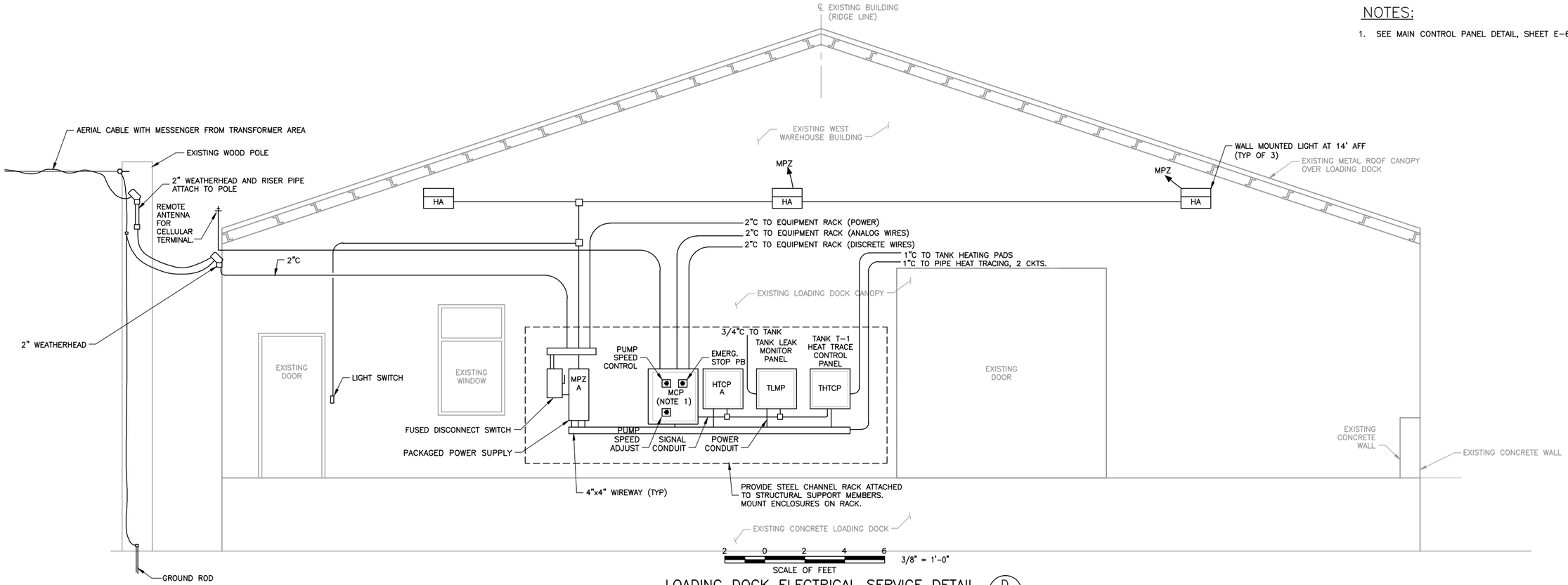

LOADING DOCK ELECTRICAL SERVICE DETAIL (D / E-101 | E-103)

3/8"=1'-0"

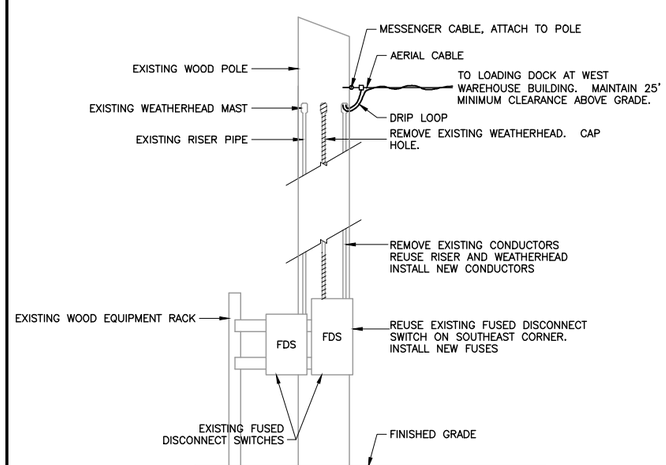

TRANSFORMER AREA SERVICE CONNECTION DETAIL (F / E-101 | E-103)

NOT TO SCALE

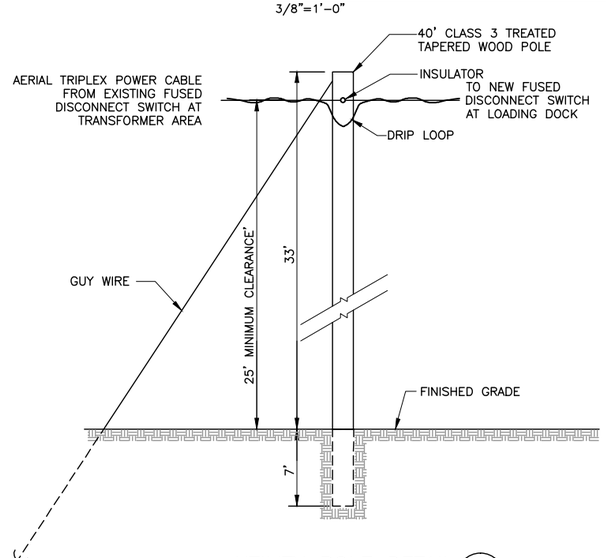

UTILITY POLE DETAIL (G / E-101 | E-103)

NOT TO SCALE

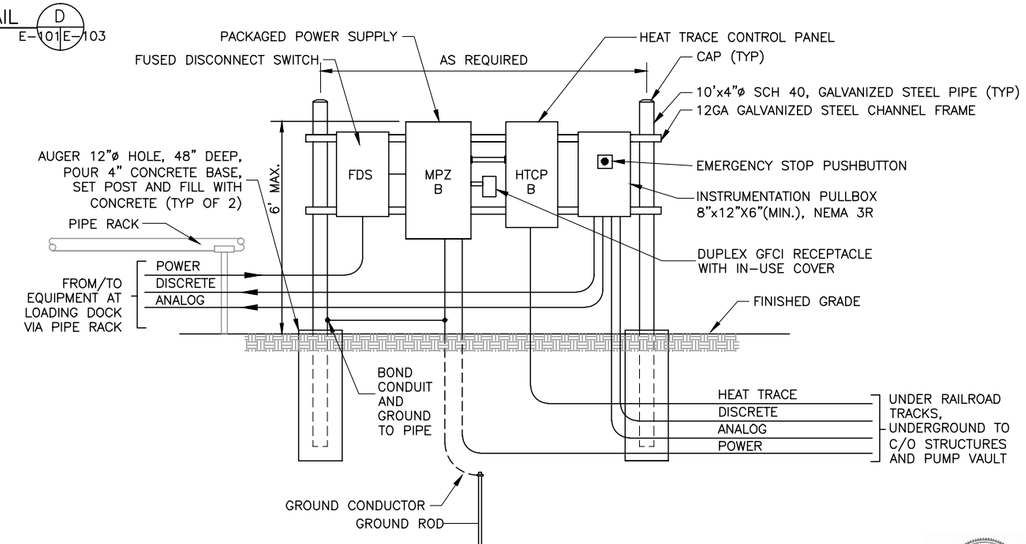

EQUIPMENT RACK DETAIL (E / E-101 | E-103)

NOT TO SCALE

This drawing is the property of MACTEC Engineering and Consulting, Inc. including all patented and patentable features, and/or confidential information and its use is conditioned upon the users agreement not to reproduce the drawing, in whole or part, nor the material described thereon, nor the use of the drawing for any purpose other than specifically permitted in writing by MACTEC Engineering and Consulting, Inc.

NO.	DATE	REVISIONS	BY	CHK
2	03/09/11	ISSUED FOR CONSTRUCTION	REO	MAP
1	02/12/10	FINAL	REO	MAP
0	12/07/09	ISSUED FOR BID	REO	BDE
A	11/12/09	FOR CLIENT REVIEW	REO	BDE

DRAWN: BDE	PROJECT NO: 6107-10-0016
ENGINEER: BDE	SCALE: AS NOTED
CHECKED: REO	APPROVED: PHT
DATE: 03/09/11	DATE: 003/09/11

MACTEC
Engineering and Consulting, Inc.
P.O. Box 7050, 511 Congress Street
Portland, ME 04112-7050
(207) 775-5401

DAPL EXTRACTION PILOT TEST
OLIN CHEMICAL SUPERFUND SITE
WILMINGTON, MASSACHUSETTS

ELECTRICAL

ELECTRICAL DETAILS

DRAWING NO: E-103

13 / 15

LUMINAIRE SCHEDULE

CODE	LIGHT SOURCE TYPE	LIGHT SOURCE LAMPING	MOUNTING	MANUFACTURER	CATALOG NO.	VOLTS	DESCRIPTION
HA	METAL HALIDE	175 WATT	WALL	LITHONIA	TWP-175M-120-SF	120 VAC	WALL PACK LUMINAIRE, CAST ALUM. HOUSING, POLYCARBONATE REFRACTOR, DARK BRONZE FINISH
IA	INCANDESCENT	150 WATT	WALL	CROUSE-HINDS	VXHBF15GP	120 VAC	ENCLOSED AND GASKETED LUMINAIRE, CAST ALUM. HOUSING, TEMPERED GLASS GLOBE, GUARD

MPZ-A SCHEDULE

TRANSFORMER SIZE: 10KVA
MOUNTING TYPE: SURFACE
MAIN CB RATING: 30A
SEC CB RATING: 60A

LOCATION: LOADING DOCK
SUPPLY VOLTAGE: 480V, 1PH, 3W
SECONDARY VOLTAGE: 120/240V, 1PH, 3W
FED FROM: FUSED DISC AT LOADING DOCK
SC RATING (KAIC): 18kAIC

LOAD AMPS	CB SIZE	LOAD DESCRIPTION	CKT NO.	PH-A VA	PH-B VA	CKT NO.	CB SIZE	LOAD DESCRIPTION	LOAD AMPS
5	20	MAIN CONTROL PANEL (MCP)	1	600		2	20	SPARE	0
18	30	HEAT TRACE CONTROL PANEL (HTCP-A)	3		3360	4	20	GFCI RECEPTACLES	10
0	20	SPARE	5	600		6	20	LEVEL SENSORS AND TRANSMITTER	5
0	20	SPARE	7		0	8	20	SPARE	0
24	30	TANK HEAT TRACE PANEL (THTCP)	9	3600		10	20	LIGHTS	6
		LOAD PER PHASE (AMPS)		40	28				
		LOAD PER PHASE (KVA)		4.8	3.36				

MPZ-B SCHEDULE

TRANSFORMER SIZE: 10KVA
MOUNTING TYPE: SURFACE
MAIN CB RATING: 30A
SEC CB RATING: 60A

LOCATION: EQUIPMENT RACK
SUPPLY VOLTAGE: 480V, 1PH, 3W
SECONDARY VOLTAGE: 120/240V, 1PH, 3W
FED FROM: FUSED DISC AT EQUIP. RACK
SC RATING (KAIC): 18kAIC

LOAD AMPS	CB SIZE	LOAD DESCRIPTION	CKT NO.	PH-A VA	PH-B VA	CKT NO.	CB SIZE	LOAD DESCRIPTION	LOAD AMPS
6	20	PANEL LP-A (PUMP VAULT)	1	720		2	20	SPARE	0
9			3		4080	4	30	HEAT TRACE CONTROL PANEL (HTCP-B)	25
10	20	GFCI RECEPTACLE	5	1800		6	20	FLOW METER & PRESSURE TRANSMITTER	5
0	20	SPARE	7		0	8	20	SPARE	0
0	20	SPARE	9	0		10	20	SPARE	0
		LOAD PER PHASE (AMPS)		21	34				
		LOAD PER PHASE (KVA)		2.52	4.08				

LP-A SCHEDULE

MOUNTING TYPE: SURFACE
RATING: 100A BUS
MAIN LUGS ONLY

LOCATION: PUMP VAULT
SUPPLY VOLTAGE: 120/240V, 1PH, 3W
FED FROM: MPZ-B
SC RATING (KAIC): 18kAIC

LOAD AMPS	CB SIZE	LOAD DESCRIPTION	CKT NO.	PH-A VA	PH-B VA	CKT NO.	CB SIZE	LOAD DESCRIPTION	LOAD AMPS
4	20	DAPL PUMP & VFD	1	480		2	20	SPARE	0
4			3		1080	4	20	GFCI RECEPTACLE	5
1	20	FLOW TRANSMITTER FIT-100 24VDC P/S	5	240		6	20	VAULT LIGHT	1
		LOAD PER PHASE (AMPS)		6	9				
		LOAD PER PHASE (KVA)		0.72	1.08				

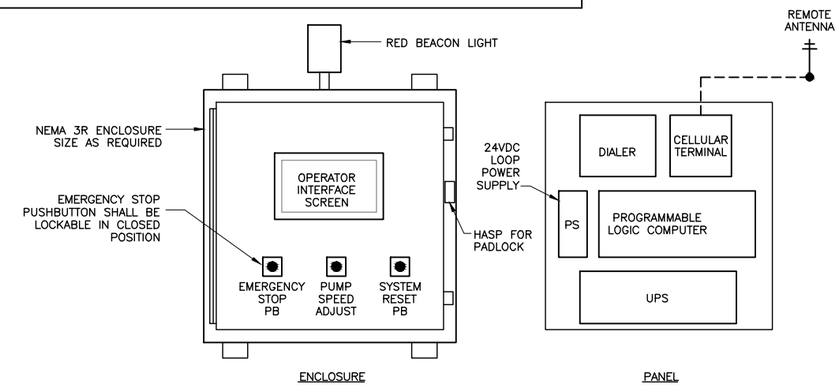

MAIN CONTROL PANEL DETAIL

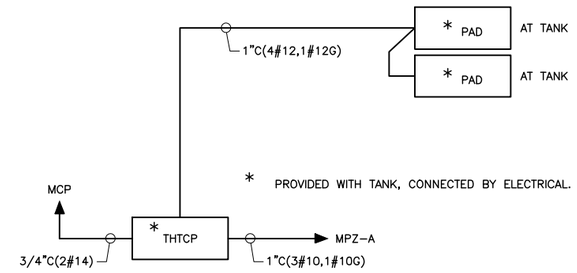

AT LOADING DOCK

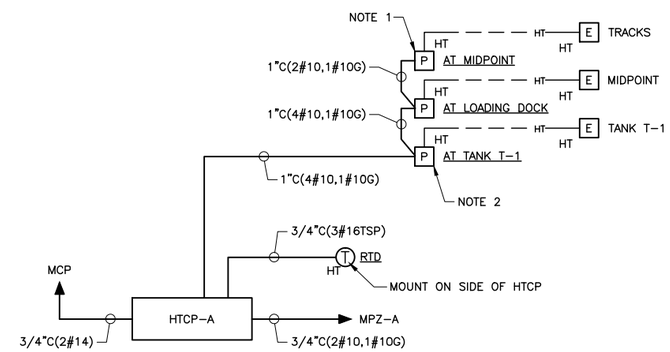

AT LOADING DOCK

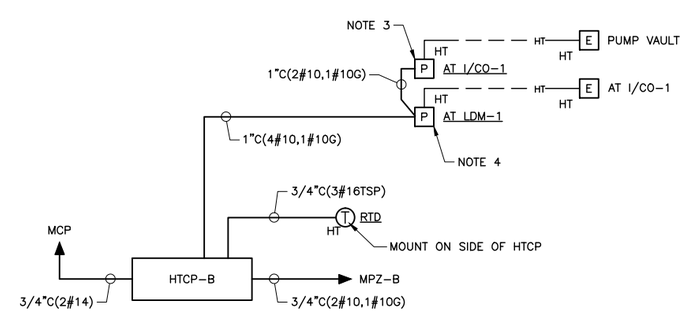

AT EQUIPMENT RACK

HEAT TRACING RISERS

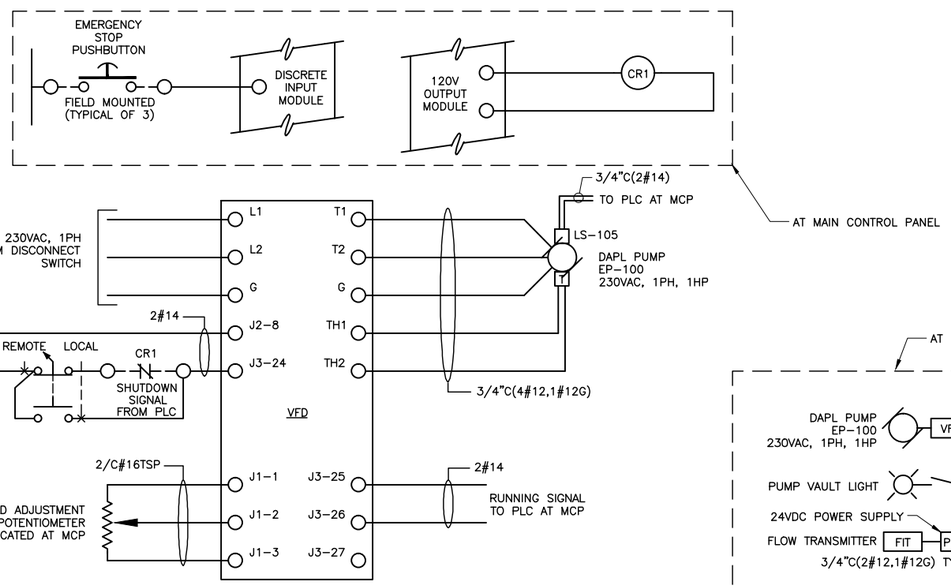

DAPL PUMP VFD AND E-STOP WIRING DIAGRAM

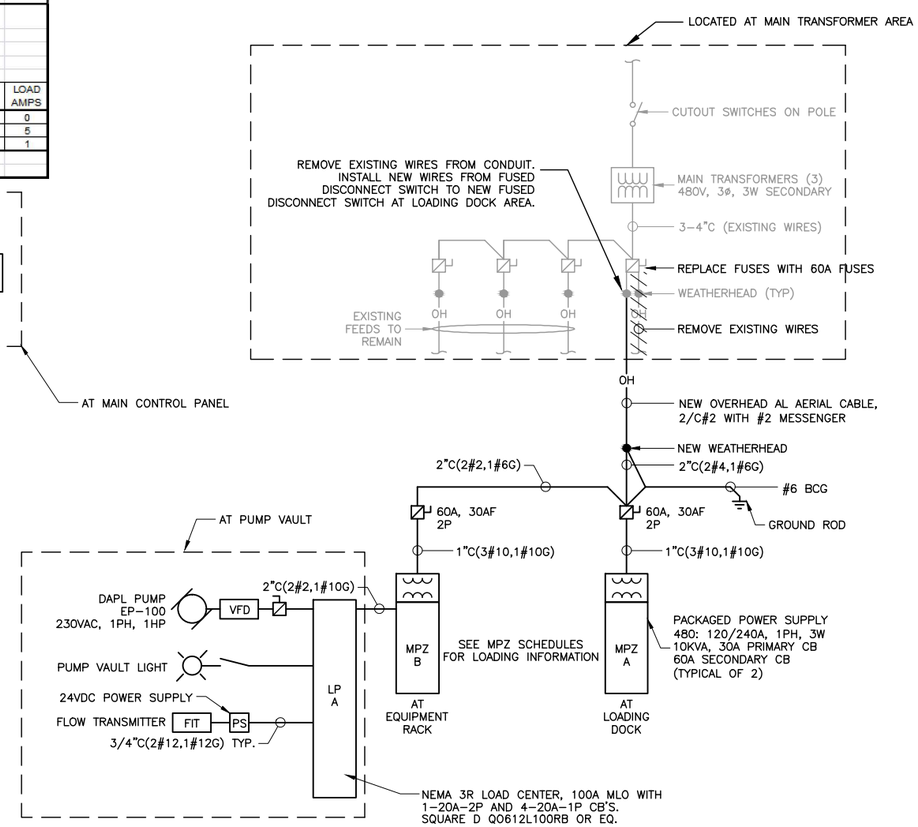

POWER ONE-LINE DIAGRAM

HEAT TRACING NOTES:

1. INSTALL POWER CONNECTION KIT AT A POINT MIDWAY BETWEEN THE WAREHOUSE BUILDING AND THE NEW ELECTRICAL EQUIPMENT RACK, APPROX. STA. 2+00. INSTALL HEAT TRACE CABLE ON EXPOSED PIPING FROM POWER KIT TO EQUIPMENT RACK.
2. INSTALL POWER CONNECTION KIT AT TANK T-1. CONDUIT AND WIRE FROM TANK T-1 TO A POINT MIDWAY BETWEEN THE WAREHOUSE BUILDING AND THE NEW ELECTRICAL EQUIPMENT RACK. INSTALL END SEAL KIT WITH LIGHT. ALSO INSTALL POWER CONNECTION KIT, HEAT TRACE CABLE AND END KIT WITH LIGHT AT TANK DISCHARGE PIPE, POWERED FROM THE SAME CIRCUIT.
3. INSTALL POWER CONNECTION KIT IN LEAK DETECTION MANHOLE LDM-1. INSTALL CONDUIT AND WIRES TO MPZ-B VIA SLEEVE UNDER TRACKS. INSTALL HEAT TRACE CABLE FROM LDM-1 TO I/CO-1. INSTALL END SEAL KIT WITH LIGHT.
4. INSTALL POWER CONNECTION KIT AT I/CO-1. INSTALL HEAT TRACE CABLE FROM I/CO-1 TO PUMP VAULT. INSTALL END SEAL KIT WITH LIGHT.

COMMONWEALTH OF MASSACHUSETTS BRIAN D. ELIBANK ELECTRICAL No. 45351 PROFESSIONAL ENGINEER 3-9-2011

This drawing is the property of MACTEC Engineering and Consulting, Inc. including all patented and patentable features, and/or confidential information and its use is conditioned upon the users agreement not to reproduce the drawing, in whole or part, nor the material described thereon, nor the use of the drawing for any purpose other than specifically permitted in writing by MACTEC Engineering and Consulting, Inc.

NO.	DATE	REVISIONS	BY	CHK
2	03/09/11	ISSUED FOR CONSTRUCTION	REO	MAP
1	02/12/10	FINAL	REO	MAP
0	12/07/09	ISSUED FOR BID	REO	BDE
A	11/12/09	FOR CLIENT REVIEW	REO	BDE

DRAWN: BDE	PROJECT NO: 6107-10-0016
ENGINEER: BDE	SCALE: NONE
CHECKED: REO	APPROVED: PHT
DATE: 03/09/11	DATE: 03/09/11

MACTEC
Engineering and Consulting, Inc.
P.O. Box 7050, 511 Congress Street
Portland, ME 04112-7050
(207) 775-5401

DAPL EXTRACTION PILOT TEST
OLIN CHEMICAL SUPERFUND SITE
WILMINGTON, MASSACHUSETTS

ELECTRICAL
ONE-LINE, HEAT TRACE RISERS
WIRING DIAGRAMS, SCHEDULES

DRAWING NO: E-601
14 / 15

1.01 DESCRIPTION

A. THE DRAWINGS ARE DIAGRAMMATIC AND SHOW ONLY APPROXIMATE LOCATIONS OF EQUIPMENT, FIXTURES, PANELBOARDS, WIRING DEVICES, ETC.
B. THE GENERAL RUN OF ELECTRICAL FEEDERS, BRANCH CIRCUITS, CONDUITS, ETC. IS INDICATED ON THE DRAWINGS. IT IS NOT INTENDED THAT THE EXACT ROUTING BE DETERMINED THEREFROM.
C. CIRCUIT DESIGNATIONS ON SINGLE LINE DIAGRAMS, ELECTRICAL SCHEMATICS, INSTRUMENTATION SCHEMATICS, PANELBOARD SCHEDULES AND IN THE FORM OF "HOME RUNS" ON THE DRAWINGS, INDICATES THE DESIGNATION OF THE BRANCH CIRCUIT, THE SIZE AND QUANTITY OF BRANCH CIRCUIT CONDUCTORS, THE BRANCH CIRCUIT OVERCURRENT DEVICE RATING AND THE PANELBOARD OR INTERCONNECTION BOX FROM WHICH THE BRANCH CIRCUIT IS SERVED.
D. ALL EQUIPMENT, ACCESSORIES AND ASSOCIATED RACEWAYS, ETC., SHALL BE INSTALLED IN SUCH A MANNER THAT AMPLE MAINTENANCE AND PASSAGE SPACE AND CODE REQUIREMENT SPACE/ACCESS IS PROVIDED.
E. WHERE MORE THAN ONE TRADE IS INVOLVED IN AN AREA, ALL SHALL COOPERATE AND INSTALL THEIR OWN WORK TO UTILIZE THE SPACE EQUALLY BETWEEN THEM IN PROPORTION TO THEIR INDIVIDUAL REQUIREMENTS.
F. PROVIDE AND INSTALL ALL GROUNDING AND APPURTENANCES AS SHOWN ON THE DRAWINGS AND AS SPECIFIED HEREIN.
G. FURNISH AND INSTALL COMPLETE INSTRUMENTATION AND PROCESS CONTROL SYSTEMS AS DESCRIBED AND SPECIFIED HEREIN AND AS SHOWN ON THE CONTRACT DRAWINGS.
H. FURNISH AND INSTALL ALL INSTRUMENTATION DEVICES, CONVERTERS, POWER SUPPLIES AND OTHER APPURTENANCES REQUIRED FOR A COMPLETE SYSTEM.

1.02 QUALITY ASSURANCE

A. IN GENERAL, THE WORKMANSHIP OF THE ELECTRICAL INSTALLATION SHALL BE AS DESCRIBED IN THE N.E.C.A. ELECTRICAL DESIGN GUIDELINES. ALL METHODS OF CONSTRUCTION, DETAILS OF WORKMANSHIP, ETC. THAT ARE NOT SPECIFICALLY DESCRIBED THEREIN OR INDICATED IN THE CONTRACT DOCUMENTS, SHALL BE SUBJECT TO THE CONTROL AND APPROVAL OF THE ENGINEER.

1.03 SUBMITTALS

A. SUBMIT VENDOR DATA FOR PERFORMANCE, FUNCTIONS, MATERIALS, AND OPERATION FOR ALL PRODUCTS LISTED IN PART 2 – PRODUCTS. WHERE APPLICABLE, SUBMIT OPERATION AND MAINTENANCE MANUALS.
B. UPON COMPLETION OF PROJECT, SUBMIT AS-CONSTRUCTED DRAWINGS SHOWING ACTUAL LOCATION OF DEVICES AND WIRING. SUBMIT IN AUTOCAD DRAWING FORMAT.

PART 2 – PRODUCTS

2.01 MATERIALS

A. CONDUIT
1. RIGID HEAVY WALL STEEL CONDUIT (RSC OR RGS) SHALL BE CONSTRUCTED OF HOT DIPPED GALVANIZED OR ELECTRO-GALVANIZED STEEL. ACCEPTABLE MANUFACTURERS: REPUBLIC, TRIANGLE PWC, ALLIED, WHEATLAND.
2. PVC CONDUIT SHALL BE SCHEDULE 80. MANUFACTURERS: CARLON, HUBBELL, CANTEX, SOUTHERN PIPE.
3. ALL FITTINGS SHALL BE OF THE SAME MATERIAL AS THE RESPECTIVE RACEWAY SYSTEM.
4. FITTINGS FOR SEALING AROUND CONDUITS PASSING THROUGH NEW BELOW-GRADE CONCRETE WALLS SHALL BE O.Z./GEDNEY CO. TYPE FSK, OR EQUIVALENT.

B. CONDUCTORS AND CABLE
1. UNLESS SHOWN OTHERWISE ON THE DRAWINGS, ALL POWER CONDUCTORS SHALL BE INSULATED FOR 600 VOLTS AND SHALL BE STANDARD AWG AND MCM SIZES. CONDUCTORS SHALL BE 98 PERCENT COPPER, STRANDED, HEAT AND MOISTURE RESISTANT AND THERMAL PLASTIC INSULATED FOR ALL SIZES NO. 12 AWG AND LARGER. CONDUCTORS SHALL BE LABELED WITH U.L. APPROVAL AND BE MARKED WITH THE MANUFACTURER'S NAME, WIRE SIZE AND INSULATION TYPE. INSULATION FOR ALL 600 VOLT CONDUCTORS SHALL BE TYPE THWN/THHN OR TYPE XHHW. ALL WIRING SHALL BE SUITABLE FOR WET, WATER-FILLED APPLICATIONS. ACCEPTABLE MANUFACTURERS: OKONITE, SOUTHWIRE, PIRELLI, CABLEC, BIW.
2. ALL DISCRETE CONTROL CONDUCTORS SHALL BE INSULATED FOR 600 VOLTS, UNLESS OTHERWISE NOTED, AND SHALL BE NO. 14 AWG MINIMUM SIZE. CONDUCTORS SHALL BE 98 PERCENT COPPER, STRANDED, HEAT AND MOISTURE RESISTANT, AND THERMAL PLASTIC INSULATED. ACCEPTABLE MANUFACTURERS: OKONITE, SOUTHWIRE, PIRELLI.
3. ALL ANALOG CONTROL WIRING CONDUCTORS SHALL BE INSULATED FOR 250 VOLTS, UNLESS OTHERWISE NOTED, AND SHALL BE 2/C#16 TWISTED SHIELDED PAIR (TSP). ACCEPTABLE MANUFACTURERS: BELDEN, SOUTHWIRE, AMERICAN INSULATED WIRE CORP, GENERAL CABLE.

C. OUTLET BOXES
1. OUTLET BOXES EXPOSED TO MOISTURE SHALL BE CADMIUM CAST ALLOY COMPLETE WITH HUBS AND GASKETED SCREW FASTENED COVERS. ACCEPTABLE MANUFACTURERS: STEEL CITY, APPLETON, CROUSE-HINDS, RACO.

D. PULL AND JUNCTION BOXES
1. BOXES SHALL BE SUITABLE FOR SURFACE MOUNTING IN ACCORDANCE WITH THE LOCATION TO BE INSTALLED. BOXES INSTALLED IN DAMP LOCATIONS SHALL BE OF WATERTIGHT CONSTRUCTION WITH GASKETED COVER AND CONDUIT HUBS.

E. WIRING DEVICES
1. WIRING DEVICES SHALL BE SPECIFICATION GRADE AS DESCRIBED HEREIN. PROVIDE IN-USE COVER PLATES FOR RECEPTACLES AND SWITCHES. ACCEPTABLE MANUFACTURERS: HUBBELL, GENERAL ELECTRIC, ARROW-HART, PASS AND SEYMOR, BRYANT.
2. TOGGLE SWITCHES
   a. 20 AMPERE, 1-POLE, 240 VOLT: HUBBELL 1221
   b. 20 AMPERE, 3-WAY, 220 VOLT: HUBBELL 12233.
3. RECEPTACLES
   a. 20 AMPERE, 125 VOLT, DUPLEX G.F.I. RECEPTACLE: HUBBELL GF-5362
   b. 20 AMPERE, 125 VOLT, DUPLEX, WEATHERPROOF: CROUSE HINDS WLRD-1 WITH GFI RECEPTACLE AND IN-USE COVER.

F. SAFETY SWITCHES
1. FURNISH AND INSTALL 600-VOLT, HEAVY-DUTY SAFETY SWITCHES AS INDICATED ON THE PLANS. SWITCHES SHALL BE THREE-POLE OR SINGLE POLE, SINGLE THROW AS INDICATED ON THE PLANS, FUSIBLE OR NON-FUSIBLE AS INDICATED. ALL SAFETY SWITCHES SHALL BE NEMA TYPE HD AND UL LISTED. ENCLOSURE SHALL BE RATED NEMA 3R. SERVICE ENTRANCE RATED, WITH GROUND LUG. ACCEPTABLE MANUFACTURERS: SQUARE D, EATON, CUTLER-HAMMER, SIEMENS, GENERAL ELECTRIC.

G. GROUNDING MATERIALS
1. PROVIDE EQUIPMENT GROUNDING AS SHOWN ON THE DRAWINGS
2. PROVIDE GROUNDING CONDUCTORS FROM GROUND ELECTRODES TO EQUIPMENT.
3. DO NOT USE CONDUIT AS THE GROUND AND/OR BONDING CONDUCTOR.
4. BOND GROUND TERMINAL OF RECEPTACLES TO OUTLET BOXES WITH #12 AWG GREEN INSULATED WIRE.
5. GROUND CONDUIT SYSTEM AND NEUTRAL CONDUCTOR OF WIRING SYSTEM WITH A CONNECTION AT THE MAIN ELECTRICAL SERVICE.
6. GROUND RODS
   a. GROUND RODS SHALL BE COPPER-CLAD STEEL, 3/4-INCH IN DIAMETER AND 10 FEET LONG. THE RODS SHALL HAVE A HARD, CLEAN, SMOOTH, CONTINUOUS, SURFACE THROUGHOUT.

H. HEAT TRACING EQUIPMENT
1. HEATING CABLE
   a. SELF REGULATING WITH A NOMINAL POWER OUTPUT OF 5 W/FT.
   b. TEMPERAUTE ID NUMBER OF T6, 185 DEG F, CONSISTENT WITH NEC.
   c. MINIMUM BEND RADIUS OF 0.5" AT 68 DEG F.
   d. EQUAL TO RAYCHEM 5BTV.
2. END SEAL KIT
   a. COMPATIBLE WITH BTV-CT HEAT CABLE.
   b. ABOVE INSTALLATION MOUNTED END SEAL WITH RED LED SIGNAL LIGHT.
   c. INGRESS PROTECTION NEMA 4X
   d. EQUAL TO RAYCHEM E-100-L2-A.
3. SINGLE ENTRY POWER KIT
   a. FOR USE WITH CONDUIT.
   b. COMPATIBLE WITH BTV-CT HEAT CABLE.
   c. INGRESS PROTECTION NEMA 4X
   d. MAXIMUM CONDUCTOR SIZE – 8 AWG.
   e. EQUAL TO RAYCHEM JBS-100-A.
4. CONTROL SYSTEM
   a. NEMA 4X PROTECTION.
   b. RELATIVE HUMIDITY – 0% TO 90%, NONCONDENSING
   c. RELAY TYPES – 2-POLE, SOLID STATE, NORMALLY OPEN
   d. VOLTAGE, MAXIMUM – 120VAC NOMINAL, 50/60 HZ
   e. CURRENT, MAXIMUM – 30A @ 104'F
   f. CONTROL ALGORITHMS – LINE SENSING ON/OFF, PROPORTIONAL, PROPORTIONAL AMBIENT, POWER LIMITING, SOFT START
   g. EQUAL TO DIGITRACE 920 SSR
5. AMBIENT TEMPERATURE THERMOSTAT
   a. ENCLOSURE – NEMA 4X, CAST ALUMINUM, POLYURETHANE COATED
   b. SET POINT RANGE – -40'F TO 140'F
   c. SENSOR MATERIAL – 300 STAINLESS STEEL
   d. SENSOR TYPE – FIXED FLUID-FILLED BULB AND CAPILLARY
   e. ELECTRICAL RATING – 22A AT 120-480VAC
   f. CONDUIT ENTRY – 3/4" NPT CONDUIT HUB
   g. EQUAL TO DIGI-TRACE AMC-1A

I. LEVEL SWITCHES
1. MERCURY-FREE, POLYPROPYLENE HOUSING FLOAT SWITCH, TETHERED MOUNTING. 10A, 250VAC RATED SWITCH. EQUAL TO W.E. ANDERSON SERIES FSW.
2. NORTHEAST FLUID CONTROL MODEL 7010-A-4-20 WIDE ANGLE FLOAT, PUMP DOWN OR EQUAL.

J. LEVEL TRANSMITTERS
1. NORTHEAST FLUID CONTROL MODEL LU81-5101 ECHO SPAN 2-WIRE. 16.4 FOOT RANGE, DISPLAY, 2 INCH NPT, NEMA 4X.

K. FLOW METER
1. ULTRASONIC CLAMP ON FLOW METER FOR 0.5" PVC PIPE. FLOW RANGE 0.5 GPM TO 2 GPM. FLOW RATE AND TOTALIZER DISPLAY. TOTALIZER DISPLAY IN THOUSANDS OF GALLONS. 4-20 mA OUTPUT SIGNAL. SUITABLE FOR ENVIRONMENT. COORDINATE PIPE REQUIREMENTS WITH MECHANICAL. EQUAL TO DYNASONICS TXFL SERIES.

L. AUTO DIALER
1. FOUR CHANNEL INPUT, 4 CUSTOM VOICE CALLOUTS, 1 CONTACT OUTPUT. EQUAL TO SENSAPHONE 400 MODEL.

M. PLC CONTROLLER
1. ALL INPUTS SHALL TERMINATE AT PLC IN MAIN CONTROL PANEL. PLC SHALL ACTIVATE ALL OUTPUT NOTIFICATION DEVICES. .
2. MIN. MEMORY: 16 KILOBYTES OF PROGRAMMABLE RAM MEMORY AND 8K OF DATA STORAGE WITH EEPROM BACKUP.
3. MIN. NUMBER OF I/O POINTS (DISCRETE OR ANALOG): 960
4. POWER: 110/220 VAC POWER SUPPLY. THE PLC SHALL BE CONNECTED TO AN UNINTERRUPTIBLE POWER SUPPLY (UPS).
5. REQUIRED AGENCY APPROVALS: UL LISTED (UL 508), CSA CERTIFIED (CSA 142).
6. EXTERNAL COMMUNICATIONS VIA RS-232/485/ETHERNET PORTS.
7. PROGRAMMING AND DIAGNOSTIC SOFTWARE SHALL BE IBM-COMPATIBLE (WINDOWS BASED) VIA RELAY LADDER LOGIC (RLL), BASIC, AND CUSTOM PROGRAMMING TOOLS FOR THE PLC. PROVIDE TO THE ENGINEER AND OWNER A LICENSED COPY OF ALL PROGRAMMING SOFTWARE USED TO CONFIGURE AND PROGRAM THE PLC AND PC. THE SOFTWARE SHALL INCLUDE BOTH THE SOFTWARE AND HARDWARE (I.E. CABLES, INTERFACE BOX, ETC.) REQUIRED FOR DIRECT PLC-TO-PC COMMUNICATIONS FOR PLC PROGRAMMING. ALL SOFTWARE SHALL BE PROVIDED ON CD ROM. A COPY OF THE PLC PROGRAM SHALL BE PROVIDED TO THE ENGINEER AND OWNER. ALL PLCS SHALL BE PROGRAMMABLE AND OPERATE ON THE SAME SOFTWARE LICENSE.
8. PROVIDE PROGRAMMING TIME REQUIRED TO CONFIGURE PLC TO PROVIDE COMPLETE CONTROL AND MONITORING FUNCTIONS AS DESCRIBED IN DRAWINGS AND DESCRIBED HEREIN.
9. THE EXTRACTION PUMP SHALL OPERATE CONTINUOUSLY. THE FOLLOWING DEVICES SHALL STOP THE EXTRACTION PUMP IMMEDIATELY AND INITIATE THE PLC SEQUENCE FOR ALARM CONDITION; VAULT SUMP HIGH LEVEL SWITCH, STORAGE TANK CONTAINMENT HIGH LEVEL, INSPECTION/CLEANOUT MANHOLES HIGH LEVEL, STORAGE TANK HIGH HIGH LEVEL. ONCE THE PUMP IS STOPPED BY AN ALARM CONDITION IT CAN ONLY BE RESTARTED MANUALLY AT THE CONTROL PANEL. THE PUMP WILL ONLY START WHEN ALL ALARMS ARE CLEAR. WHEN THE COMMON ALARM IS ACTIVATED, THE PLC SHALL INITIATE THE AUTODIALER
10. PLC SHALL BE ALLEN-BRADLEY MICROLOGIX 1100 OR EQUAL.
11. PROVIDE ALLEN-BRADLEY PANELVIEW 500 OR EQUAL, FOR TANK LEVEL READOUTS, FLOW TOTALS, PRESSURE INDICATION AND ALARM INDICATION/ACKNOWLEDGEMENT.

N. CONTROL PANEL HARDWARE
1. ALL ALARM INDICATING DEVICES SHALL BE PILOT LIGHT LED TYPE, SHALL BE THROUGH-DOOR TYPE SEALED WITH EQUIPMENT MANUFACTURERS RECOMMENDATIONS.
2. ALL H-O-A SWITCHES AND PUSH BUTTON SWITCHES, SHALL BE THROUGH-DOOR FLUSH MOUNTED AND SEALED IN ACCORDANCE WITH RESPECTIVE EQUIPMENT AND CONTROL PANEL MANUFACTURERS RECOMMENDATIONS

O. WEATHERHEAD
1. FURNISH AND INSTALL A THREADED, CAST-ALUMINUM, WIRE ENTRANCE CAP (WEATHERHEAD) AT LOCATIONS INDICATED ON THE PLANS. WEATHERHEAD SHALL HAVE FIVE POWER CONDUCTOR OPENINGS AND ONE GROUND CONDUCTOR OPENING. ACCEPTABLE MANUFACTURERS: APPLETON (F200), EATON, CUTLER-HAMMER, SQUARE D, SIEMENS.

P. AERIAL CABLE
1. FURNISH AND INSTALL 600-VOLT TRIPLEX SERVICE DROP AERIAL CONDUCTORS WITH INTEGRAL MESSENGER CABLE. CONDUCTORS SHALL BE SIZED AS INDICATED ON THE PLANS AND SHALL BE SUITABLE FOR EXTERIOR INSTALLATIONS. CONDUCTORS SHALL BE ALUMINUM WITH XLPE PVC INSULATION, 75-DEGREE C. MESSENGER CABLE SHALL BE USED AS THE GROUNDING CONDUCTOR AND SHALL BE GROUNDED TO THE EXISTING SYSTEM GROUND AND TO THE NEW GROUND ROD AND SERVICE EQUIPMENT. ACCEPTABLE MANUFACTURERS: SOUTHWIRE, OKONITE, GENERAL CABLE, SERVICE WIRE CO., AMERICAN INSULATED WIRE CORP.

Q. TREATED WOOD UTILITY POLES
1. FURNISH AND INSTALL TREATED WOOD UTILITY POLES AT LOCATIONS INDICATED. POLES SHALL BE CLASS 3, 40' MINIMUM, TAPERED SOUTHERN PINE WITH PRESERVATIVE TREATMENT. MINIMUM TIP CIRCUMFERENCE SHALL BE 23-INCHES. POLES SHALL BE LABELED WITH SUPPLIER'S CODE OR TRADEMARK, PLANT AND YEAR OF TREATMENT, POLE SPECIES AND PRESERVATIVE USED AND CIRCUMFERENCE CLASS AND LENGTH. ACCEPTABLE MANUFACTURERS: APACHE FOREST PRODUCTS, NORTH PACIFIC GROUP INC., POWERTECH EQUIPMENT INC.

R. FUSES
1. FURNISH AND INSTALL NEW CLASS RK5, DUAL ELEMENT, TIME-DELAY 600-VOLT RATED FUSES IN EXISTING 400-AMP FUSED DISCONNECT SWITCHES AND SAFETY SWITCHES AS INDICATED ON THE DRAWINGS. FUSES SHALL BE NON-RENEWABLE CARTRIDGE TYPE. PROVIDE REDUCERS IF REQUIRED TO INSTALL FUSES IN EXISTING SPACE. ACCEPTABLE MANUFACTURERS: COOPER BUSSMAN, FERRAZ SHAWMUT, LITTELFUSE, INC.

S. WIREWAY
1. FURNISH AND INSTALL A NEMA 3R WIREWAY IN LOCATION INDICATED ON THE DRAWINGS. WIREWAY SHALL BE GANGABLE, OUTDOOR RAINTIGHT WITH DRIP SHIELD. MANUFACTURED FROM GALVANIZED STEEL WITH GRAY POLYESTER FINISH, GASKETED END PLATES, GASKETED COVER WITH MOUNTING CLAMPS AND WALL-MOUNTING HARDWARE. UL LISTED AS STEEL ENCLOSED WIREWAY. ACCEPTABLE MANUFACTURERS: SQUARE D, EATON, CUTLER-HAMMER, SIEMENS.

T. ELECTRICAL HANDHOLE
1. FURNISH AND INSTALL AN ELECTRICAL HANDHOLE, LOAD RATED A8, AT LOCATIONS INDICATED ON THE DRAWINGS. HANDHOLE SHALL BE STACKABLE COMPOSITE TYPE WITH OPEN BOTTOM AND GASKETED TOP COVER. TWO HANDHOLES AND ONE COVER ARE REQUIRED AT EACH LOCATION. PROVIDE WITH TAMPER-PROOF BOLTS. ACCEPTABLE MANUFACTURERS: QUAZITE, SHAKESPHERE, GALLOWAY.

U. CELLULAR TERMINAL
1. FURNISH AND INSTALL A FIXED CELLULAR TERMINAL IN MAIN CONTROL PANEL. UNIT SHALL BE 200mW, 800MHz WITH DUAL RJ-11 PHONE JACKS, DIPOLE ANTENNA, LED STATUS INDICATORS. ACCEPTABLE MANUFACTURER: TELULAR MODEL SX5T-505C OR APPROVED EQUAL.

PART 3 – EXECUTION

3.01 INSTALLATION

A. UNLESS OTHERWISE NOTED, WIRING FOR ALL SYSTEMS INDICATED IN THE CONTRACT DOCUMENTS SHALL CONSIST OF INSULATED CONDUCTORS INSTALLED IN RACEWAYS. RACEWAYS SHALL BE CONTINUOUS FROM OUTLET BOX TO OUTLET BOX AND FROM OUTLET BOX TO CABINET, JUNCTION OR PULL BOX. SECURE AND BOND RACEWAYS TO ALL BOXES AND CABINETS SUCH THAT EACH SYSTEM OF RACEWAYS WILL BE ELECTRICALLY CONTINUOUS THROUGHOUT.
B. INSTALL ALL CONDUCTORS IN THE FOLLOWING APPLICABLE RACEWAY SYSTEM:
1. CONDUCTORS 600 VOLTS OR LESS IN OUTDOOR, ABOVE GRADE LOCATIONS: GALVANIZED RIGID HEAVY WALL STEEL CONDUIT.
2. CONDUCTORS 600 VOLTS OR LESS IN WET LOCATIONS: GALVANIZED RIGID HEAVY WALL STEEL CONDUIT.
3. CONDUCTORS 600 VOLTS OR LESS IN BELOW-GRADE LOCATIONS: PVC SCHEDULE 80 PLASTIC CONDUIT.
4. WATER-TIGHT, FLEXIBLE METAL CONDUIT SHALL BE USED FOR FINAL CONNECTION TO ALL MOTORS, ROTATING OR VIBRATING EQUIPMENT. MAXIMUM LENGTH OF FLEXIBLE CONDUIT SHALL BE 36 INCHES.

C. RACEWAYS:
1. SIZE AS INDICATED ON THE DRAWINGS. WHERE SIZES ARE NOT INDICATED, RACEWAYS SHALL BE SIZED PER THE NATIONAL ELECTRICAL CODE IN ACCORDANCE WITH THE QUANTITY, SIZE, TYPE AND INSULATION OF CONDUCTORS TO BE INSTALLED.
2. POWER RACEWAYS SHALL BE MINIMUM THREE-QUARTER (3/4") TRADE SIZE.
3. CONDUITS TO INSTRUMENTATION DEVICES SHALL BE SIZED TO ACCOMODATE THE DEVICE CONNECTIONS. MINIMUM HALF-INCH (1/2") TRADE SIZE.
4. INSTALL TO PROVIDE ADEQUATE GROUNDING BETWEEN ALL OUTLETS AND THE ESTABLISHED ELECTRICAL SYSTEM GROUND.
5. CUT RACEWAYS SQUARE, REMOVE BURRS FORMED BY FIELD CUTTING OR DURING MANUFACTURING. BUSH WHERE NECESSARY.
6. INSTALL WITH EXTERIOR SURFACES NOT LESS THAN SIX INCHES (6") FROM ANY SURFACE WITH A TEMPERATURE OF 200 DEGREES F OR HIGHER.
7. PLUG THE ENDS OF EACH ROUGHED-IN RACEWAY WITH AN APPROVED CAP OR DISC TO PREVENT THE ENTRANCE OF FOREIGN MATERIALS DURING CONSTRUCTION
8. INSTALL PARALLEL OR PERPENDICULAR TO FLOORS, WALLS AND CEILINGS.
9. ARRANGE IN A NEAT MANNER FOR ACCESS AND ALLOW FOR ACCESS TO WORK INSTALLED BY OTHER TRADES.
10. PROVIDE A BUSHING AT EACH CONDUIT TERMINATION, UNLESS FITTING AT BOX WHERE CONDUIT TERMINATES AT HUBS, DESIGNED IN SUCH A MANNER TO AFFORD EQUIVALENT PROTECTION TO CONDUCTORS. PROVIDE GROUNDING TYPE INSULATED BUSHINGS ON ALL CONDUIT SIZES ONE AND ONE-QUARTER INCH (1-1/4") TRADE SIZE AND LARGER, AND ON ALL FEEDER RACEWAYS REGARDLESS OF SIZE. PROVIDE STANDARD BUSHINGS FOR CONDUITS ONE INCH (1") AND SMALLER UNLESS OTHERWISE STATED. PROVIDE SEALING BUSHINGS FOR ALL CONDUITS ENTERING FROM BELOW GRADE.

D. BECOME FAMILIAR WITH THE GENERAL CONSTRUCTION OF THE SITE AND PLACE SLEEVES, INSERTS, ETC., AS REQUIRED. ALL PENETRATIONS THROUGH NEW BELOW-GRADE CONCRETE WALLS OR FLOORS SHALL BE SEALED USING FITTINGS AS SPECIFIED IN ABOVE.

E. WIRING METHODS
1. DO NOT PULL CONDUCTORS INTO RACEWAYS UNTIL RACEWAY SYSTEM, INCLUDING ALL OUTLETS, CABINETS, BUSHINGS AND FITTINGS, IS COMPLETED. VERIFY THAT ALL WORK OF OTHER TRADES WHICH MAY CAUSE CONDUCTOR DAMAGE IS COMPLETED. USE ONLY U.L. APPROVED CABLE LUBRICANTS WHEN NECESSARY. DO NOT USE MECHANICAL MEANS TO PULL CONDUCTORS.
2. CONDUCTORS SHALL BE THE SAME SIZE FROM THE LAST PROTECTIVE DEVICE TO THE LOAD.
3. ALL WIRING SYSTEMS SHALL BE PROPERLY GROUNDED AND CONTINUOUSLY POLARIZED THROUGHOUT, FOLLOWING STANDARD COLOR CODING.
4. FOR SPLICES AND TAPS, NO. 10 AWG AND SMALLER, USE SOLDERLESS "THREAD-ON" CONNECTORS HAVING SPIRAL STEEL SPRING AND INSULATED WITH A VINYL CAP AND SKIRT, AS MANUFACTURED BY 3M CO. (PRE- INSULATED "SCOTCH-LOCK") OR IDEAL ("WING-NUTS").
5. FOR SPLICES AND TAPS, NO. 8 AND LARGER, USE SOLDERLESS "SPLIT BOLT" TYPE CONNECTOR AS MANUFACTURED BY ANDERSON, BURNDY, KEARNEY, THOMAS & BETTS, OR APPROVED EQUAL.
6. USE CAST CONNECTIONS, CADWELD OR THERMOWELD, FOR GROUND CONDUCTORS.
7. MAKE ALL SPLICES AND CONNECTIONS IN ACCESSIBLE BOXES AND CABINETS ONLY.
8. AT RECEPTACLE AND SWITCH BOXES, LEAVE A MINIMUM OF EIGHT INCHES (8") FREE CONDUCTOR FOR INSTALLATION OF DEVICES.
9. INSTALL HEAT TRACE CABLES, EQUIPMENT AND CONNECTIONS PER MANUFACTURERS REQUIREMENTS.

F. OUTLET BOXES
1. LOCATION OF OUTLETS SHOWN ON DRAWINGS IS APPROXIMATE ONLY. LOCATE OUTLET SO THAT WHEN PLACED IN POSITION, OUTLET WILL SERVE ITS DESIRED PURPOSE WITHOUT INTERFERING.
2. OUTLET BOXES SHALL BE MINIMUM 4 INCHES SQUARE, 1-1/2 INCHES DEEP, GALVANIZED SHEET METAL.
3. SURFACE MOUNTED OUTLET BOXES SHALL BE CAST TYPE WITH THREADED HUBS AND GASKETED COVER PLATES SECURED BY NON-FERROUS SCREWS.
4. INSTALL LOCKABLE IN-USE COVER PLATES ON ALL EXTERIOR RECEPTACLES AND SWITCHES.

G. JUNCTION AND PULL BOXES
1. INSTALL JUNCTION AND PULL BOXES IN READILY ACCESSIBLE LOCATIONS. ACCESS TO BOXES SHALL NOT BE BLOCKED BY EQUIPMENT, PIPING, DUCTS AND THE LIKE. PROVIDE ALL NECESSARY JUNCTION OR PULL BOXES REQUIRED DUE TO FIELD CONDITIONS AND AS REQUIRED BY THE NATIONAL ELECTRICAL CODE.

H. HANGERS AND SUPPORTS
1. PROVIDE STEEL ANGLES, CHANNELS AND OTHER MATERIALS NECESSARY FOR THE PROPER SUPPORT AND ERECTION OF EQUIPMENT.

I. GROUNDING INSTALLATION
1. MAKE CONNECTIONS TO GROUND RODS WITH AN EXOTHERMIC WELDING PROCESS. MECHANICAL CONNECTIONS MAY BE MADE AT EQUIPMENT ONLY.
2. ENSURE THAT A GROUND LOOP IS NOT FORMED BETWEEN EQUIPMENT GROUND IN ELECTRICAL CONDUIT AND GROUNDING ELECTRODE CONDUCTORS DIRECTLY CONNECTED TO GROUND ELECTRODES.
3. EQUIP EXPOSED "PIGTAILS" OR GROUNDING ELECTRODE CONDUCTORS WITH AN ARMORED SHEATH.
4. GROUP AND BOND GROUND WIRES TO PANELS, BOXES, RECEPTACLES, ETC., NOT TO SYSTEM NEUTRAL.
5. MAKE CONNECTION TO VAULT HATCH COVERS WITH A SUITABLE GROUND CLAMP OR LUG CONNECTION.

3.02 TESTS

A. BRANCH CIRCUITS SHALL BE TESTED DURING INSTALLATION FOR CONTINUITY AND IDENTIFICATION AND SHALL PASS OPERATIONAL TESTS TO DETERMINE THAT ALL CIRCUITS PERFORM THE FUNCTION FOR WHICH THEY ARE DESIGNED.

SEQUENCE OF OPERATIONS

A. NORMAL OPERATION

REFERENCE D-601 FOR DEVICE LOCATION IN PROCESS.

ALL ALARMS MUST BE CLEAR TO BEGIN OPERATION.

THE EXTRACTION PUMP SHALL BEGIN OPERATION WHEN THE OPERATOR PRESSES THE RESET PUSHBUTTON ON CONTROL PANEL.

WHILE NORMAL OPERATION CONTINUES FLOW TOTALIZER FQI-100A SHALL TOTALIZE THE QUANTITY OF PUMPED PRODUCT FROM INCEPTION. FQI-100A SHALL NOT BE RESETABLE. FLOW TOTALIZER FQI-100B SHALL TOTALIZE THE CURRENT BATCH PUMPED TO THE TANKS. FQ101B SHALL BE CONFIGURABLE AND RESETABLE BY THE OPERATOR.

B. WARNING CONDITION

YAH-100, LAH-200, YAH-200, YAH-201, LAH-101, LAH-102, LAH-103 AND LAH-104 SHALL INITIATE THE AUTO-DIALER WARNING CONDITION. WARNING CONDITIONS SHALL NOT SHUT OFF THE EXTRACTION PUMP. WARNING CONDITIONS SHALL NOTIFY OF PENDING STORAGE TANK FULL, TANK HEATER FAULT.

WHILE IN ALARM OR WARNING STATUS, THE AUTODIALER WILL CONTINUE TO CALL OUT UNTIL ACKNOWLEDGED.

C. ALARM CONDITION

THE EXTRACTION PUMP SHALL CONTINUE TO OPERATE UNTIL ONE OR MORE OF THE FOLLOWING CONDITIONS EXISTS:

1. E-STOP HS-200, HS-103 OR HS-100 IS PRESSED.
2. FQI-100B REACHES THE BATCH SETPOINT. BATCH SETPOINT IS SET BY THE OPERATOR ON CONTROL PANEL.
3. PAH-100 EXISTS. (LINE PRESSURE IS TOO HIGH)
4. LAH-100 EXISTS. (EXTRACTION WELL SUMP IS AT HIGH LEVEL)
5. LAHH-200 EXISTS. (TANK OVERFILLED)
6. LAH-105 IS ACTIVE. (HIGH LEVEL INTERNAL TO EXTRACTION PUMP-HOSE BREAK)
7. FAL-100 OR FAH-100 EXISTS. (LOW OR HIGH FLOW OCCURS IN THE DAPL CARRIER PIPE LINE).
8. LAH-201 EXISTS. (TANK HAS A LEAK)

EACH CONDITION ABOVE SHALL SHUTDOWN THE EXTRACTION PUMP AND INITIATE THE AUTO-DIALER ALARM CONDITION. THE SYSTEM WILL REMAIN INOPERABLE UNTIL ALL ALARM CONDITIONS ARE CLEAR AND THE RESET PUSHBUTTON ON THE CONTROL PANEL HAS BEEN ACTIVATED.

ALL WARNING AND ALARM SIGNALS SHALL ACTIVATE A STROBE AT THE MAIN CONTROL PANEL.

This drawing is the property of MACTEC Engineering and Consulting, Inc. including all patented and patentable features, and/or confidential information and its use is conditioned upon the users agreement not to reproduce the drawing, in whole or part, nor the material described thereon, nor the use of the drawing for any purpose other than specifically permitted in writing by MACTEC Engineering and Consulting, Inc.

BRIAN D. EUBANK ELECTRICAL
3-4-2011

NO.	DATE	REVISIONS	BY	CHK
2	03/09/11	ISSUED FOR CONSTRUCTION	REO	MAP
1	02/12/10	FINAL	REO	MAP
0	12/07/09	ISSUED FOR BID	REO	BDE
A	11/12/09	FOR CLIENT REVIEW	REO	BDE

DRAWN: BDE	PROJECT NO: 6107-10-0016
ENGINEER: BDE	SCALE: NONE
CHECKED: REO	APPROVED: PHT
DATE: 03/09/11	DATE: 03/09/11

MACTEC
Engineering and Consulting, Inc.
P.O. Box 7050, 511 Congress Street
Portland, ME 04112-7050
(207) 775-5401

DAPL EXTRACTION PILOT TEST
OLIN CHEMICAL SUPERFUND SITE
WILMINGTON, MASSACHUSETTS

ELECTRICAL

ELECTRICAL SPECIFICATIONS AND SEQUENCE OF OPERATIONS

DRAWING NO: E-602

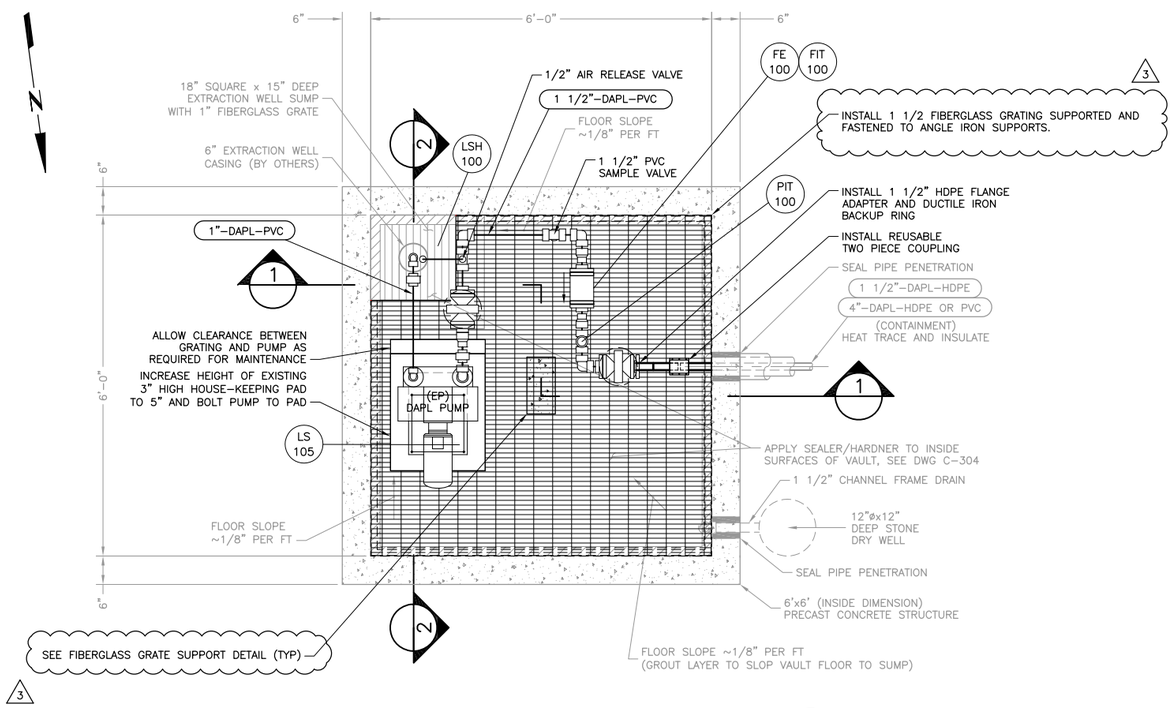

PUMP ENCLOSURE VAULT FLOOR PLAN DETAIL (A)
NTS
C-101 C-301

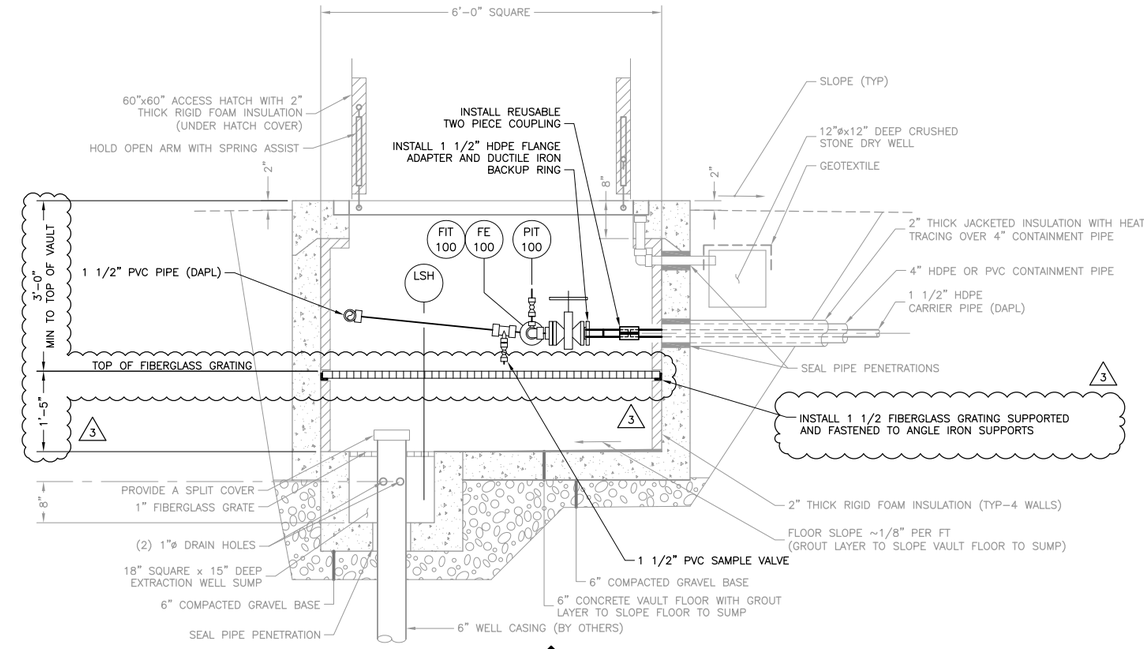

SECTION 1
NTS

NOTE:
1" MINIMUM CLEAR SPACE BETWEEN ALL PIPING AND CLOSED HATCH COVER.

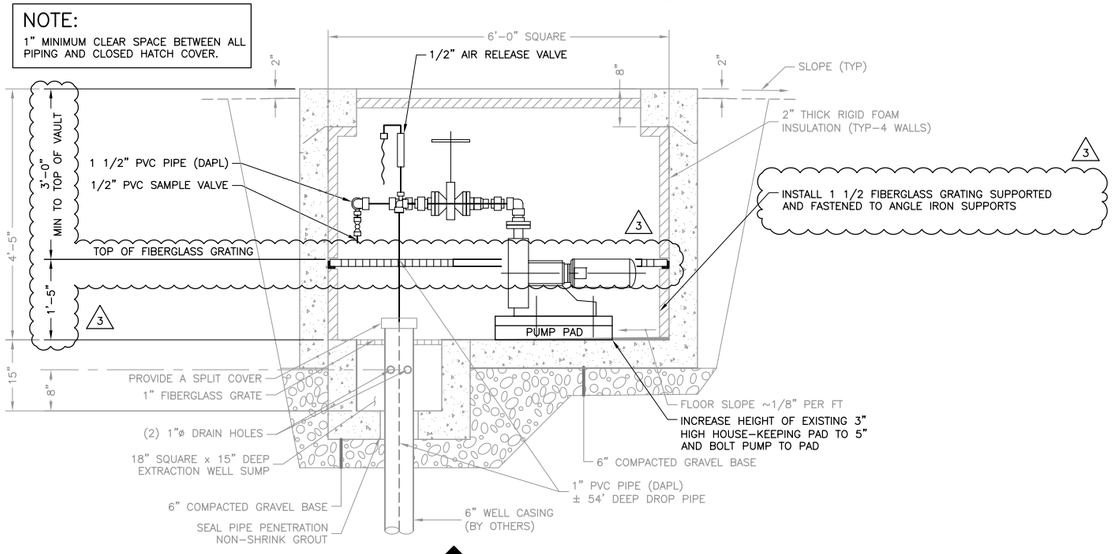

SECTION 2
NTS

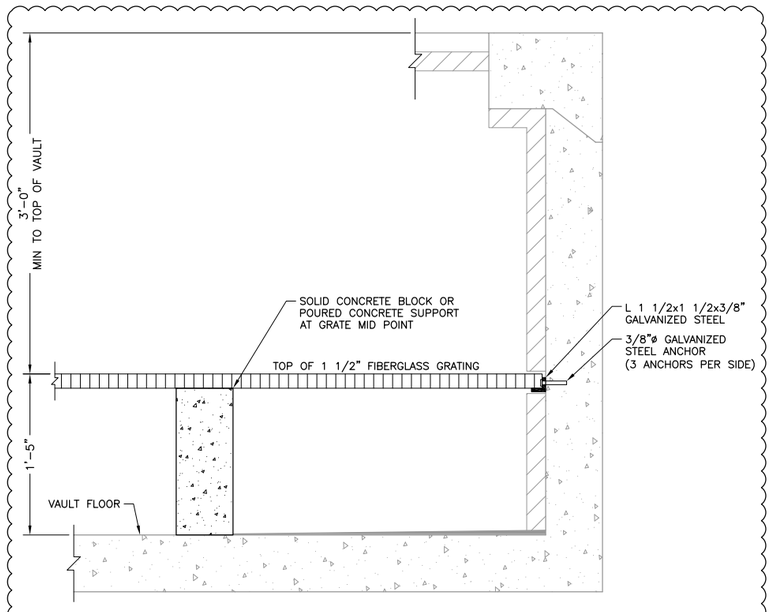

FIBERGLASS GRATING SUPPORT DETAIL
NTS

This drawing is the property of MACTEC Engineering and Consulting, Inc. including all patented and patentable features, and/or confidential information and its use is conditioned upon the users agreement not to reproduce the drawing, in whole or part, nor the material described thereon, nor the use of the drawing for any purpose other than specifically permitted in writing by MACTEC Engineering and Consulting, Inc.

NO.	DATE	REVISIONS	BY	CHK
3	07/16/2012	ATTACHED GRATING SUPPORTS REVISED	DEL	MAP
2	06/08/12	ATTACHED GRATING SUPPORTS TO VAULT FLOOR	DEL	MAP
1	05/18/12	FIELD CHANGE 1	DEL	MAP

DRAWN: DEL	PROJECT NO: 6107-10-0016
ENGINEER: MAP	SCALE: NONE
CHECKED: REO	APPROVED: PHT
DATE: 05/18/12	DATE: 05/18/12

MACTEC
Engineering and Consulting, Inc.
P.O. Box 7050, 511 Congress Street
Portland, ME 04112-7050
(207) 775-5401

DAPL EXTRACTION PILOT TEST
OLIN CHEMICAL SUPERFUND SITE
WILMINGTON, MASSACHUSETTS

CIVIL
PUMP ENCLOSURE VAULT
PLAN DETAIL AND SECTIONS

DRAWING NO: FC1
1 / 1

P:\Projects\CADD-FORT\Projects\Olin-Wilmington\FC1.dwg Mon, 16 Jul 2012 - 2:43pm david.lawrence

APPENDIX B
WELL INSTALLATION CONSTRUCTION DIAGRAMS

WELL CONSTRUCTION DIAGRAM

LOCATION ID: **EW-1**

Project Name:	Olin Chemical Superfund Site	Date Started:	12/5/2011 Date Completed: 12/6/2011
Project Location:	Wilmington, MA	Logged By:	T. Longley
Project Number:	6107110016 Task Number 2	Checked By:	Checked Date:
Subcontractor:	Boart Longyear Drilling Method: Sonic		
Development Method:	Development Date:		
Bucking Posts/Ballards:	None		

Notes: Protective Casing is a Flush-to-Ground, temporary 8" x 1' Steel Casing
Well is completed as a Flush-to-Ground completion - will be incorporated into a surface vault in the future; the top 15' of casing is steel; the remainder is SCH 40 PVC

Measuring Point Information

Measuring Point (MP) Type: Ground Surface (GS)

MP Elevation (ft):

Item	Depth BMP (ft)	Elevation (ft)
Stickup	NA	
Riser Pipe (Top)		
Ground Surface	0	
Top of Well Seal	29.8	
Top of Sand Pack	37.25	
Top of Screen	40.9	
Base of Screen	45.32	
End Cap	48.2	
Drilled Depth	48.2	
Bottom of Exploration	48.2	
Bedrock Surface	45.5	

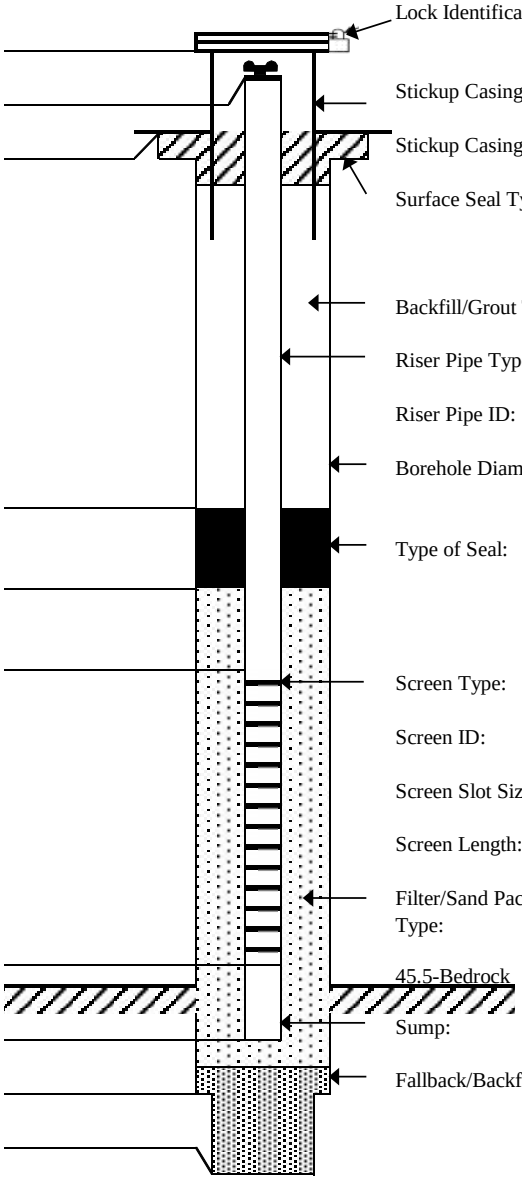

Description	
Lock Identification	NA
Stickup Casing Type:	Flush-to-Ground; steel
Stickup Casing Diameter:	8"
Surface Seal Type:	concrete
Backfill/Grout Type:	cement/bentonite grout
Riser Pipe Type:	Sch 40 PVC; top 15' (from ~16.2) is steel
Riser Pipe ID:	6"
Borehole Diameter:	10"
Type of Seal:	Cetco, coated bent. tablets
Screen Type:	Sch 40 PVC
Screen ID:	6"
Screen Slot Size:	0.010"
Screen Length:	approx. 5 feet
Filter/Sand Pack Type:	Filpro WG #00
Sump:	
Fallback/Backfill:	cave and sand

NOT TO SCALE

amec
511 Congress Street, Portland Maine 04101

WELL CONSTRUCTION DIAGRAM

LOCATION ID: **ILW-1**

Project Name:	Olin Chemical Superfund Site	Date Started:	5/24/2011 Date Completed: 5/25/2011
Project Location:	Wilmington, MA	Logged By:	T. Longley
Project Number:	6107110016 Task Number 2	Checked By:	Checked Date:
Subcontractor:	Boart Longyear Drilling Method: Sonic		
Development Method:	Not Applicable Development Date: N/A		
Bucking Posts/Ballards:	None		
Notes:	Well is a Flush-to-Ground completion, no screen; solid 2"-ID PVC filled with di-ionized water to ground surface		

Measuring Point Information

Measuring Point (MP) Type:	Ground Surface (GS)
MP Elevation (ft):	

Item	Depth BMP (ft)	Elevation (ft)
Stickup	NA	
Riser Pipe (Top)		
Ground Surface	0	
Top of Well Seal	N/A	
Top of Sand Pack	4.8	
Top of Screen	N/A	
Base of Screen	N/A	
End Cap	45	
Drilled Depth	49.5	
Bottom of Exploration	49.5	
Bedrock Surface	45	

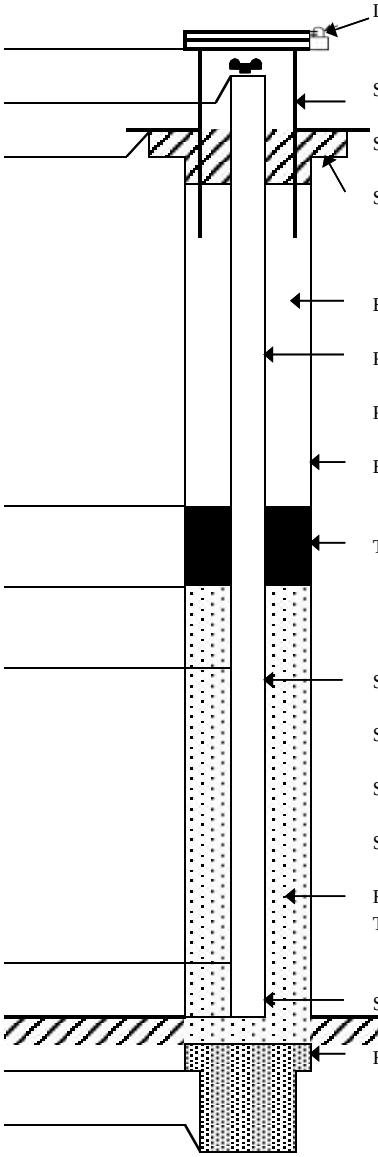

Description	
Lock Identification	N/A
Stickup Casing Type:	Flush-to-Ground Steel
Stickup Casing Diameter:	Flush-to-Ground 6"
Surface Seal Type:	Concrete
Backfill/Grout Type:	N/A
Riser Pipe Type:	
Riser Pipe ID:	2"
Borehole Diameter:	6"
Type of Seal:	N/A
Screen Type:	N/A
Screen ID:	N/A
Screen Slot Size:	N/A
	N/A
Screen Length:	N/A
Filter/Sand Pack Type:	Filpro, #00 Sand: 46' to 4.8'
Sump:	
Fallback/Backfill:	Bentonite 46' to 49.5'

NOT TO SCALE

amec

511 Congress Street, Portland Maine 04101

WELL CONSTRUCTION DIAGRAM

LOCATION ID: **ILW-2**

Project Name:	Olin Chemical Superfund Site			Date Started: 5/25/2011	Date Completed: 5/25/2011
Project Location:	Wilmington, MA			Logged By: T. Longley	
Project Number:	6107110016	Task Number	2	Checked By:	Checked Date:
Subcontractor:	Boart Longyear	Drilling Method:	Sonic		
Development Method:	Not Applicable	Development Date:	N/A		
Bucking Posts/Ballards:	None				

Notes: Well is a Flush-to-Ground completion, no screen; solid 2"-ID PVC filled with di-ionized water to ground surface
Fractured rock 39' to 43.5'

Measuring Point Information

Measuring Point (MP) Type: Ground Surface (GS)
MP Elevation (ft):

Item	Depth BMP (ft)	Elevation (ft)
Stickup	NA	
Riser Pipe (Top)		
Ground Surface	0	
Top of Well Seal	N/A	
Top of Sand Pack	3.5	
Top of Screen	N/A	
Base of Screen	N/A	
End Cap	41	
Drilled Depth	45	
Bottom of Exploration	45	
Bedrock Surface	39	

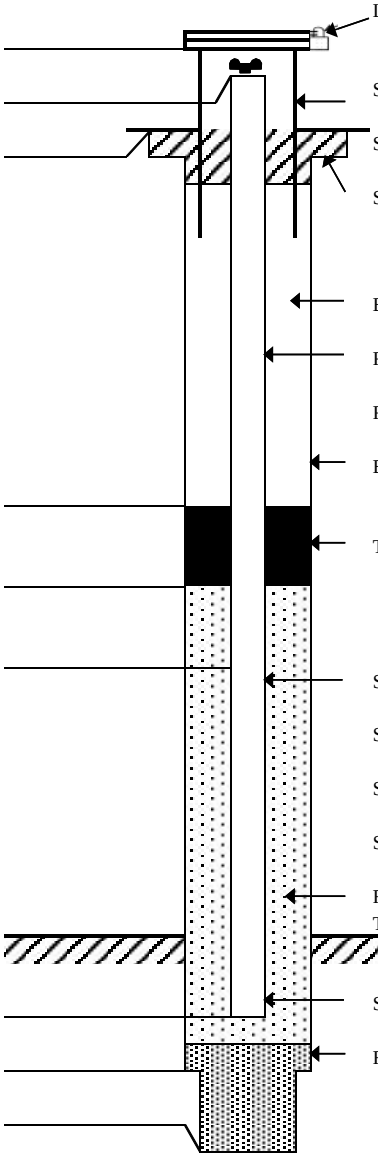

Description	
Lock Identification	N/A
Stickup Casing Type:	Flush-to-Ground Steel
Stickup Casing Diameter:	Flush-to-Ground 6"
Surface Seal Type:	Concrete
Backfill/Grout Type:	N/A
Riser Pipe Type:	
Riser Pipe ID:	2"
Borehole Diameter:	6"
Type of Seal:	N/A
Screen Type:	N/A
Screen ID:	N/A
Screen Slot Size:	N/A
	N/A
Screen Length:	N/A
Filter/Sand Pack Type:	Filpro, #00 Sand: 42'-3.5'
Sump:	
Fallback/Backfill:	Bentonite 43.5' to 42'
	Cave 45' to 43.5'

NOT TO SCALE

amec

511 Congress Street, Portland Maine 04101

WELL CONSTRUCTION DIAGRAM

LOCATION ID: **ML-1**

Project Name:	Olin Chemical Superfund Site			Date Started: 12/6/2011	Date Completed: 12/8/2011
Project Location:	Wilmington, MA			Logged By: T. Longley	
Project Number:	6107110016	Task Number	2	Checked By:	Checked Date:
Subcontractor:	Boart Longyear	Drilling Method:	Sonic		
Development Method:	Not Applicable	Development Date:	N/A		
Bucking Posts/Ballards:	None				

Notes: Well is a Flush-to-Ground completion
Surface completion includes a manifold for the tubing from each zone; well is
a 2-inch dia. Solinst Multi-level Piezometer; sandpack around zones is 000 sand

Measuring Point Information

Measuring Point (MP) Type: Ground Surface (GS)

MP Elevation (ft):

Item	Depth BMP (ft)	Elevation (ft)
Ground Surface	0	88
	1	86
	2	85
	3	84
	4	83
	5	82
	6	81
Approximate	7	80
Water	8	79
Table	9	78
	10	77
	11	76
	12	75
	13	74
	14	73
	15	72
	16	71
	17	70
	18	69
	19	68
	20	67
	21	66
	22	65
	23	64
	24	63
Overlying	25	62
Zone	26	61
	27	60
	28	59
	29	58
Diffuse	30	57
Zone	31	56
	32	55
	33	54
	34	53
DAPL	35	52
Zone	36	51
	37	50
	38	49
	39	48
	40	47

Description

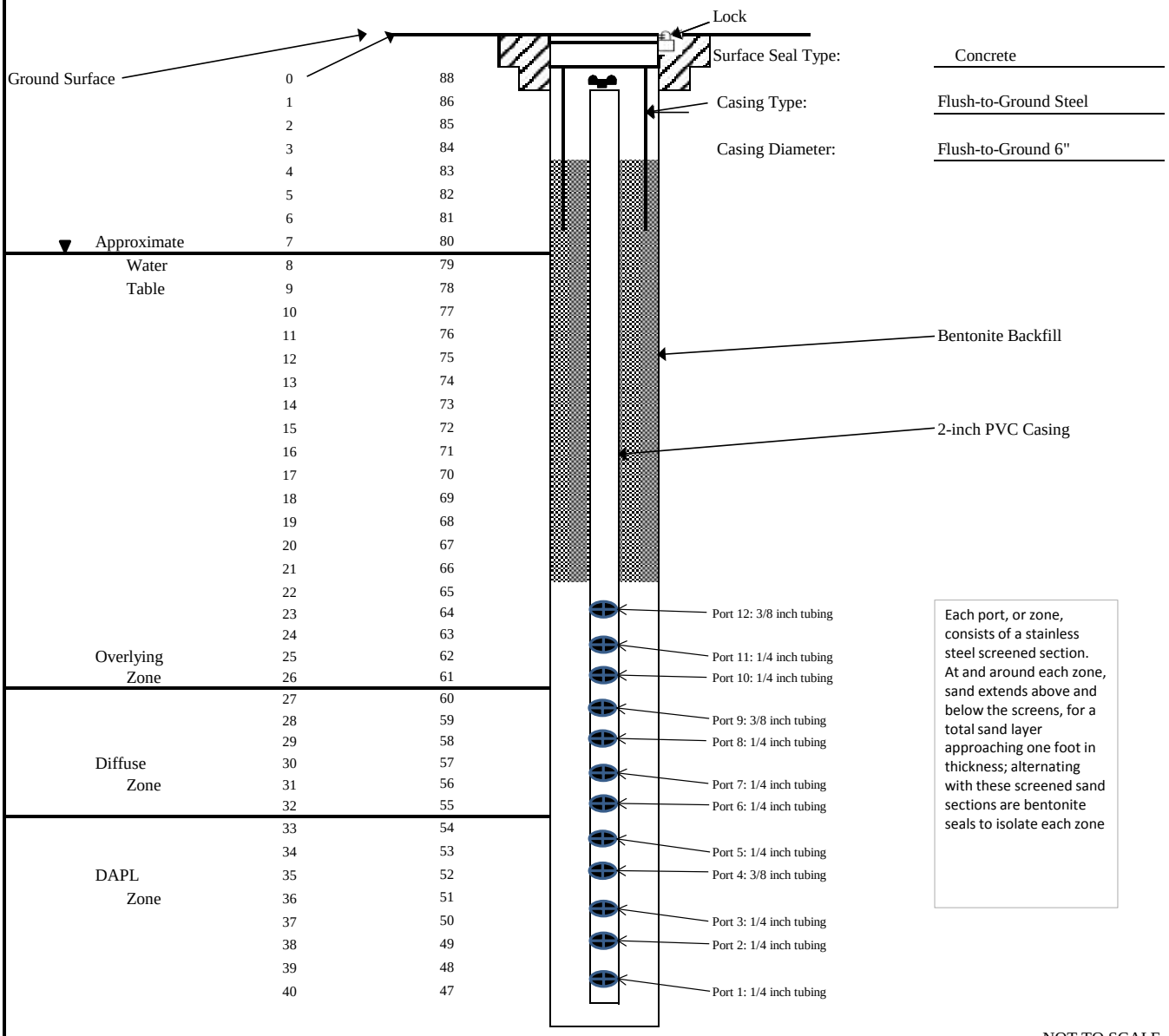

Each port, or zone, consists of a stainless steel screened section. At and around each zone, sand extends above and below the screens, for a total sand layer approaching one foot in thickness; alternating with these screened sand sections are bentonite seals to isolate each zone

NOT TO SCALE

amec

511 Congress Street, Portland Maine 04101

WELL CONSTRUCTION DIAGRAM

LOCATION ID: **ML-2**

Project Name:	Olin Chemical Superfund Site			Date Started: 12/8/2011	Date Completed: 12/9/2011
Project Location:	Wilmington, MA			Logged By: T. Longley	
Project Number:	6107110016	Task Number	2	Checked By:	Checked Date:
Subcontractor:	Boart Longyear	Drilling Method:	Sonic		
Development Method:	Not Applicable	Development Date:	N/A		
Bucking Posts/Ballards:	None				

Notes: Well is a Flush-to-Ground completion
Surface completion includes a manifold for the tubing from each zone; well is
a 2-inch dia. Solinst Multi-Level Piezometer; sandpack around zones is 000 sand

Measuring Point Information

Measuring Point (MP) Type:	Ground Surface (GS)
MP Elevation (ft):	~88' MSL

Item	Depth BMP (ft)	Elevation (ft)
Ground Surface	0	88
	1	86
	2	85
	3	84
	4	83
	5	82
	6	81
Approximate	7	80
Water	8	79
Table	9	78
	10	77
	11	76
	12	75
	13	74
	14	73
	15	72
	16	71
	17	70
	18	69
	19	68
	20	67
	21	66
	22	65
	23	64
	24	63
Overlying	25	62
Zone	26	61
	27	60
	28	59
	29	58
Diffuse	30	57
Zone	31	56
	32	55
	33	54
	34	53
DAPL	35	52
Zone	36	51
	37	50
	38	49
	39	48
	40	47

Description

Surface Seal Type:	Concrete
Casing Type:	Flush-to-Ground Steel
Casing Diameter:	Flush-to-Ground 6"

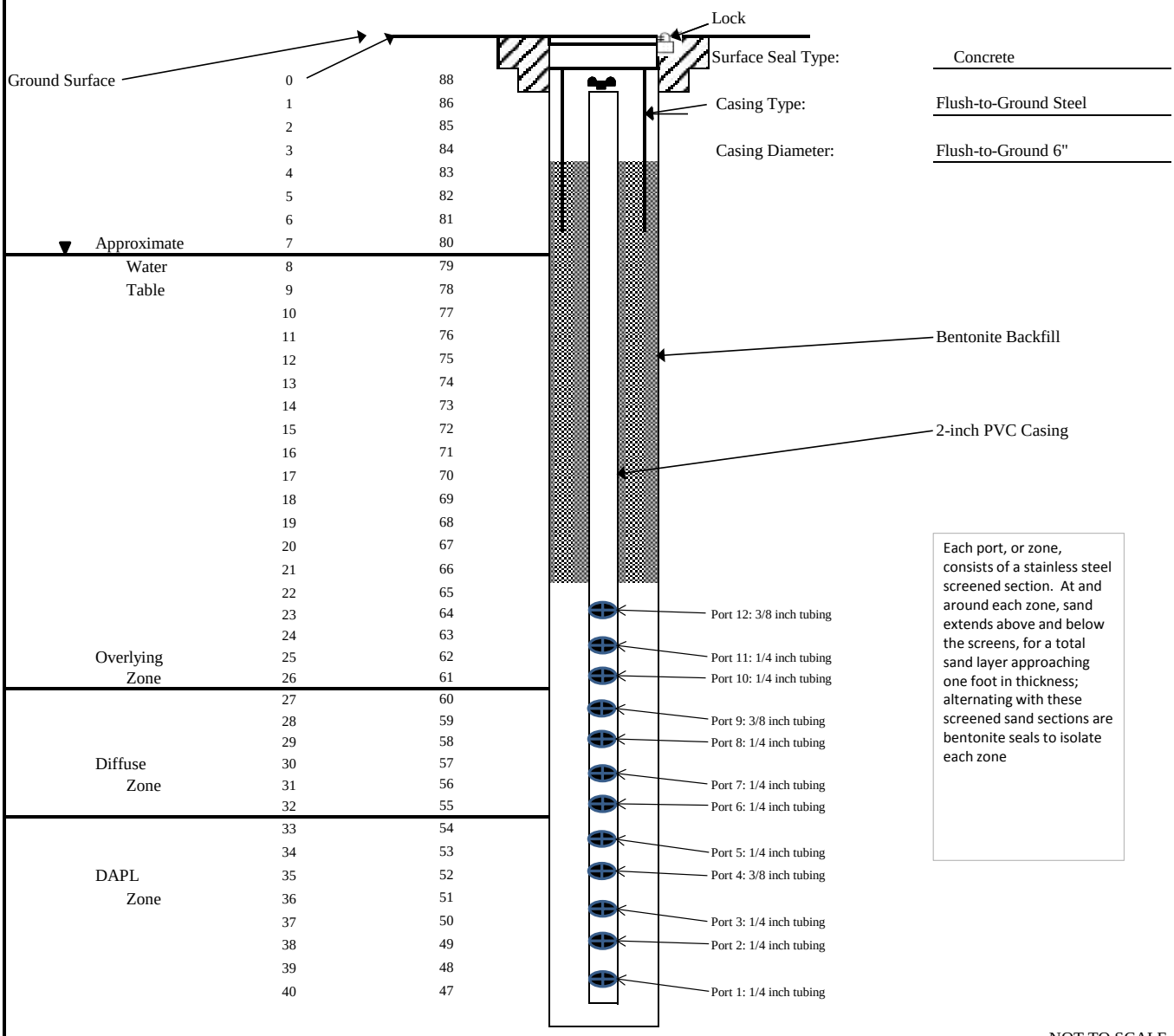

Each port, or zone, consists of a stainless steel screened section. At and around each zone, sand extends above and below the screens, for a total sand layer approaching one foot in thickness; alternating with these screened sand sections are bentonite seals to isolate each zone

NOT TO SCALE

amec

511 Congress Street, Portland Maine 04101

APPENDIX C
STANDARD OPERATING PROCEDURES FOR INDUCTION LOGGING

SOP No. S-1

AMEC E&I STANDARD OPERATING PROCEDURE

GENERAL PROCEDURE FOR INDUCTION LOGGING IN WELLS

1.0 SCOPE AND APPLICABILITY

This Standard Operating Procedure (SOP) describes the use of induction logging in monitoring wells. Induction logging may be used to determine spatial and temporal changes in electrical conductivity in the subsurface due to dissolved contaminants in groundwater. This SOP is intended to compliment (not replace) information, procedures and guidelines as supplied by the logging equipment vendor and/or manufacturer and associated equipment-specific procedures.

2.0 EQUIPMENT

The following equipment and supplies are recommended prior to initiating field activities:

2.1 MEASUREMENT SPECIFIC SUPPLIES

- Induction log probe (Geonics EM 39, or equivalent)
- Wire line winch system compatible with the log probe
- Tripod and pulley apparatus
- Field-capable computer or data logger with the required software for the logging system
- 12V battery (fully charged)
- 12V to AC inverter
- Keys and necessary tools to open wells
- Duct tape
- Water level meter

2.2 FIELD DATA AND RECORD KEEPING SPECIFIC SUPPLIES

- Field notebook and pen with indelible ink
- Well construction details for the well(s) to be logged (total depth, etc.)

2.3 DECONTAMINATION SUPPLIES

- Deionized (DI) water
- AlconoxTM detergent, or equivalent
- Paper towels

2.4 HEALTH AND SAFETY EQUIPMENT

- As required per site Health and Safety plan

3.0 PREPARATION

The induction logging probe has been factory calibrated and does not require calibration prior to each field deployment. In the unlikely event calibration is required; calibration may be performed by the vendor from which the equipment has been supplied. Calibration may be checked per the manufacturer's guidelines with the calibration ring provided with the equipment. Instrument calibration should be performed only by vendor- or manufacturer-supplied procedures and guidelines. Atmosphere should provide a zero conductivity value as a quick operational check. It is a good general practice to re-log a portion of at least one hole on a daily basis (perhaps twenty feet where value changes are noted) for repeatability check. Checking calibration at the beginning and conclusion of each logging event is recommended.

Verify the charge status of the 12V battery (fully charged). If the 12V battery in the vehicle is being used, the motor should be off.

Before proceeding to the first well to be logged, set up all equipment to be used in the field (12V battery, inverter, wire line console, probe, and computer or data logger) and verify that the signal is being received and recorded.

4.0 PROCEEDURES

1. Open the well cap and check the wellhead and breathing space atmosphere for worker health (as required by the applicable Site Health and Safety Plan). Record the results if measurements are collected. Take appropriate respiratory precautions (including leaving the area) if conditions warrant.
2. Measure and record the groundwater water level below the top of casing or other established datum. Measure to the nearest 0.01 foot, unless specified otherwise by the Site work plan or Data Quality Objectives (DQO). Compare the result to historic values, if available, and note any significant deviations.
3. Verify the total depth (TD) of the well from completion logs or other validated data source. The total depth of the well may be measured using the water level probe.
4. Connect all associated equipment (probe, cable, PC/data logger, inverter, battery) per manufacture's and/or vendor's guidelines, and before turning power on to the logging unit.
5. Turn the power on to the logger (Note: NEVER attach probe to cable with power on!).
6. Lower probe into the well and set the point where the probe and cable attach at the surveyed measuring point of the well casing. This is the point at which the depth measurements will be "zeroed" and must be set consistently so that previous and subsequent logging data can be compared. Use the tripod and pulley system as allowed by local site and well construction conditions.
7. Open the data logging software and follow the on-screen procedures to zero the depth, set the desired sampling interval (0.1 ft is recommended), and create a data file with a unique file name. Verify that an ASCII-format data file is being created so that data can be accessed by appropriate software for post processing.

8. Record the time, well or location ID, and data file name in the field log book or field recording form.
9. Activate the winch to lower the probe down the well, adjusting the speed so that the system can acquire quality data at a specified sampling rate (10 ft/min. is recommended for 0.1 ft sampling interval). Monitor the software display to ensure that data is being received and recorded.
10. Monitor the depth of the probe to ensure that excess cable slack is not generated when probe reaches the bottom of the well.
11. When the probe reaches the bottom of the well, stop the winch and, if desired, close the data file. A new data file may be created for recording the data when the probe is raised from the well. Alternatively, the file may be kept open and recording as the winch is stopped and reversed with the ascending data separated during post-processing.
12. Closely monitor the depth of the probe as it is being raised to ensure that it is stopped before it reaches the top of the well.
13. When the logging is complete close and save the data file before removing the probe. Also verify that the file contains appropriate data before removing the probe from the well. Re-log the well if needed.
14. TURN OFF POWER TO PROBE AND DISCONECT POWER SUPPLY BEFORE DISASSEMBLING SYSTEM! NEVER REMOVE THE PROBE FROM CABLE WITH THE POWER ON!
15. If necessary, decontaminate the probe with AlconoxTM solution and DI water rinse. The cable may be decontaminated by holding a wet rag on the cable as the tool is being retrieved, but care must be taken not to interfere with the function of the depth recording apparatus on the winch.
16. Secure the well and record the time in the log book or field data form. Also record any pertinent observations made during the logging that may affect data processing and interpretation.
17. At the earliest convenience, backup recorded logging data from the data logger or computer onto other media (from data logger to computer, from computer to USB flash drive, etc.) to minimize the potential for data loss or corruption prior to data analyses.

APPENDIX D
EQUIPMENT AND INSTRUMENTATION DOCUMENTATION

Dynasonics®

MODEL TFXL

ULTRASONIC FLOW METER

Installation and Operating Instructions

RACINE FEDERATED INC.
UL
REGISTERED FIRM
ISO 9001:2008
10001652 QM08

TABLE OF CONTENTS

- **Quick Start Instructions** **4**
- **Introduction** **6**
- **Specifications** **7**
- **Symbol Explanations** **7**
- **Components and Terminology** **8**
- **Flow Meter Mounting Procedure** **11**
- **Electronic Connections** **14**
- **4-20mA Output Connections** **16**
- **Pulse Output Connections** **18**
- **Applying Power** **20**
- **Software Utility** **22**
- **Maintenance** **37**
- **Troubleshooting Guide** **38**
- **Warranty** **39**
- **Service Instructions** **40**
- **Drawings** **41**
- **Notes** **42**

QUICK-START INSTRUCTIONS

This manual contains detailed operating instructions for the TFXL instrument. The following condensed instructions are provided to assist an experienced operator in basic operation of the instrument. If the operator is unfamiliar with this type of instrument, refer to the detailed explanations located on pages 10-32.

A. Select a flow meter mounting location with at least 10 pipe diameters upstream and 5 diameters downstream from the meter with no flow disturbances (i.e. elbows, tees, needle valves, etc.). See **Figure 1**.

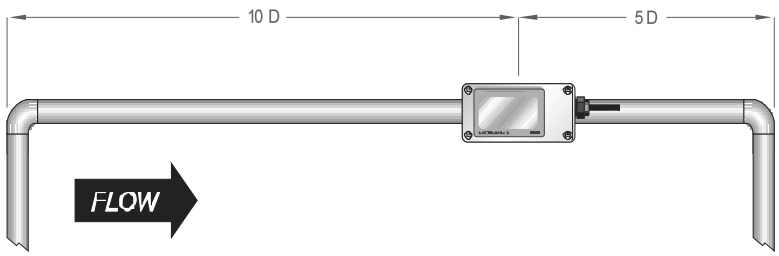

FLOW METER MOUNTING

Figure 1

B. On horizontal pipe, choose a flow meter mounting location within approximately 45-degrees of the side of the pipe. See **Figure 2**. Locate the flow meter so that the pipe will be completely full of liquid when flow is occurring in the pipe. Avoid mounting on vertical pipes where the flow is moving in a downward direction.

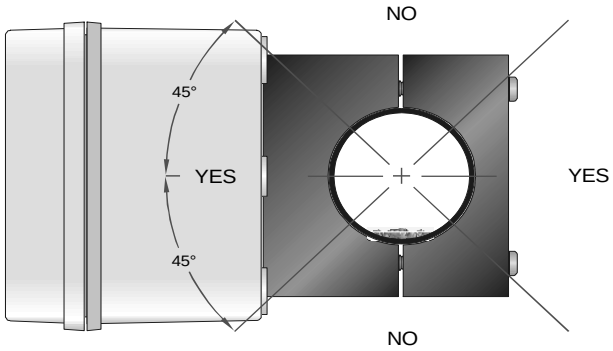

Figure 2

FLOW METER MOUNTING ORIENTATION

C. Remove rust, scale and paint from the flow meter mounting location. Clean to bare metal. Plastic pipes do not require preparation.

D. Apply a thin, even layer of silicone grease to the two transducer faces. Ensure that air bubbles are not present over the two brown plastic sound-guides. Place the electronic portion of the flow meter onto the prepared area of pipe, making sure that the flow direction arrow is pointing in the direction of flow. Place the clamp portion opposite the flow meter and secure with the enclosed screws. Only moderate torque is required on the screws—DO NOT OVER TIGHTEN and DO NOT ROTATE the flow meter on the pipe once the screws have been tightened.

E. Connect 11-30 Vdc to the power terminals within the TFXL transmitter. Ensure that the power supply is capable of sourcing a minimum of 0.25 Amps. Observe polarity.

F. Connect either the 4-20mA, pulse output or both outputs to the data acquisition or monitoring system as required.

G. Apply power.

H. If the pipe is full of liquid, a flow rate reading will appear. If the pipe is empty or partially empty, a ERROR 0010 will be shown on the display. The error will clear when flow resumes and the pipe fills up with water.

I. Configuration changes and advanced troubleshooting can be accomplished using the UltraLink software utility, a PC computer and a PC interface cable.

INTRODUCTION AND OPERATING THEORY

TFXL transit time flow meters measure flow velocity by sending pulses of ultrasound energy back and forth between two piezoelectric devices. See **Figure 3**. The piezoelectric components are located behind the oval-shaped, dark plastic sound guides that are embedded in the flow sensor clamp. If the liquid inside of the pipe is moving, the sound will travel faster when it is sent in the direction of liquid flow than it will when it is sent against the liquid flow. The TFXL microprocessor generates the pulses and measures the elapsed time required for the sound to travel between the piezoelectric devices. Liquid velocity is proportional to the difference in time between upstream and downstream time measurements. The TFXL compensates for gas content in the liquid and will remove gaseous content from flow rate and totalizer readings. Outputs from the flow meter include 4-20 mA analog, turbine frequency output/ pulse output.

Figure 3

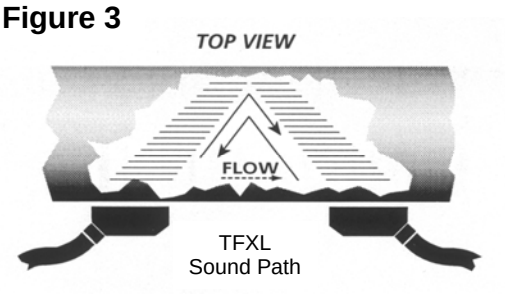

Model Number Matrix

D T F X L □ ▪ □ □ □ ▪ N N

Display Options

1) ABS Enclosure-Blind (no display)
2) ABS Enclosure-Display (rate & total)
3) Polycarbonate Enclosure-Blind
4) Polycarbonate Enclosure-Display

Pipe Size

A) ½" ANSI Pipe
B) ¾" ANSI Pipe
C) 1" ANSI Pipe
D) 1¼" ANSI Pipe
E) 1½" ANSI Pipe
F) 2" ANSI Pipe
G) ½" Copper
H) ¾" Copper
I) 1" Copper
J) 1¼" Copper
K) 1½" Copper Pipe
L) 2" Copper Pipe
M) ½" Tubing
N) ¾" Tubing
P) 1" Tubing
Q) 1¼" Tubing
R) 1½" Tubing
S) 2" Tubing
X) Remote Transducer (Not shown in this manual)

Output Options

1) 4-20 mA and Rate Pulse
3) Totalizer Pulse

Connector Options

N) ½-inch Conduit Hole
A) Water-tight Cable Clamp
C) 4-Pin Connector (male)
D) 1/2 inch Flexible Conduit Connector

Accessories	Part Number
PC Cable w/Ultralink Software	D010-0204-001
90-240VAC Power Supply	D005-2502-005

SPECIFICATIONS/OPERATING CONDITIONS

For a complete table of specifications, see Series TFXL Data Sheet

Description	Specification
Input Voltage	11-30 VDC @ 0.25A
Flow Range Reference	0.1 to 40 FPS [0.03 to 12.4 MPS]
Sch 40 ½" Pipe	0.5 to 25 GPM [20 to 850 BPD]
Sch 40 ¾" Pipe	1.0 to 55 GPM [40 to 1800 BPD]
Sch 40 1" Pipe	2.0 to 100 GPM [80 to 3400 BPD]
Sch 40 1¼" Pipe	4.0 to 150 GPM [170 to 5000 BPD]
Sch 40 1½" Pipe	5.0 to 220 GPM [170 to 7500 BPD]
Sch 40 2" Pipe	8.0 to 400 GPM [275 to 13500 BPD]
Accuracy	±1% of rate above 1 FPS [0.3 MPS]
Environment	Indoor use
Ambient Temperature	General Purpose: 0 to +185°F [-20 to +85°C] Hazardous Area: 0 to +105°F [-20 to +40°C
Altitude	Up to 2000 meters
Humidity	-20º to 31ºC; 80% max; decreasing linearly to 50% at 40ºC
Transient Overvoltag-es	According to installation category 1, in accord-ance with IEC 664
Pollution Degree	2 in accordance with IEC 664
Enclosure Material	ABS/Polycarbonate
Approvals	General Requirements: ANSI/ISA 82.02.01; Hazardous Location: CSA C22.2 No. 213, E79-15-95, ANSI/ISA 12.12.01 Class I Div 2, Groups C & D (DTFXL3 & DTFXL4 models only)
4-20 mA Output	12-bit, sourcing, DC ground referenced
Pulse Output	Turbine Frequency Output/Pulse Output—Switch Selectable, non-ground referenced AC/Ground referenced square wave, 0-1,000 Hz, 100mVpp minimum/5VDC.

SYMBOL EXPLANATIONS

⚠ Caution—Refer to accompanying documents

FLOW METER COMPONENTS AND TERMINOLOGY

The pictures on the following two pages reference key components and their respective terminology of the TFXL flow meter. These terms are utilized throughout this manual.

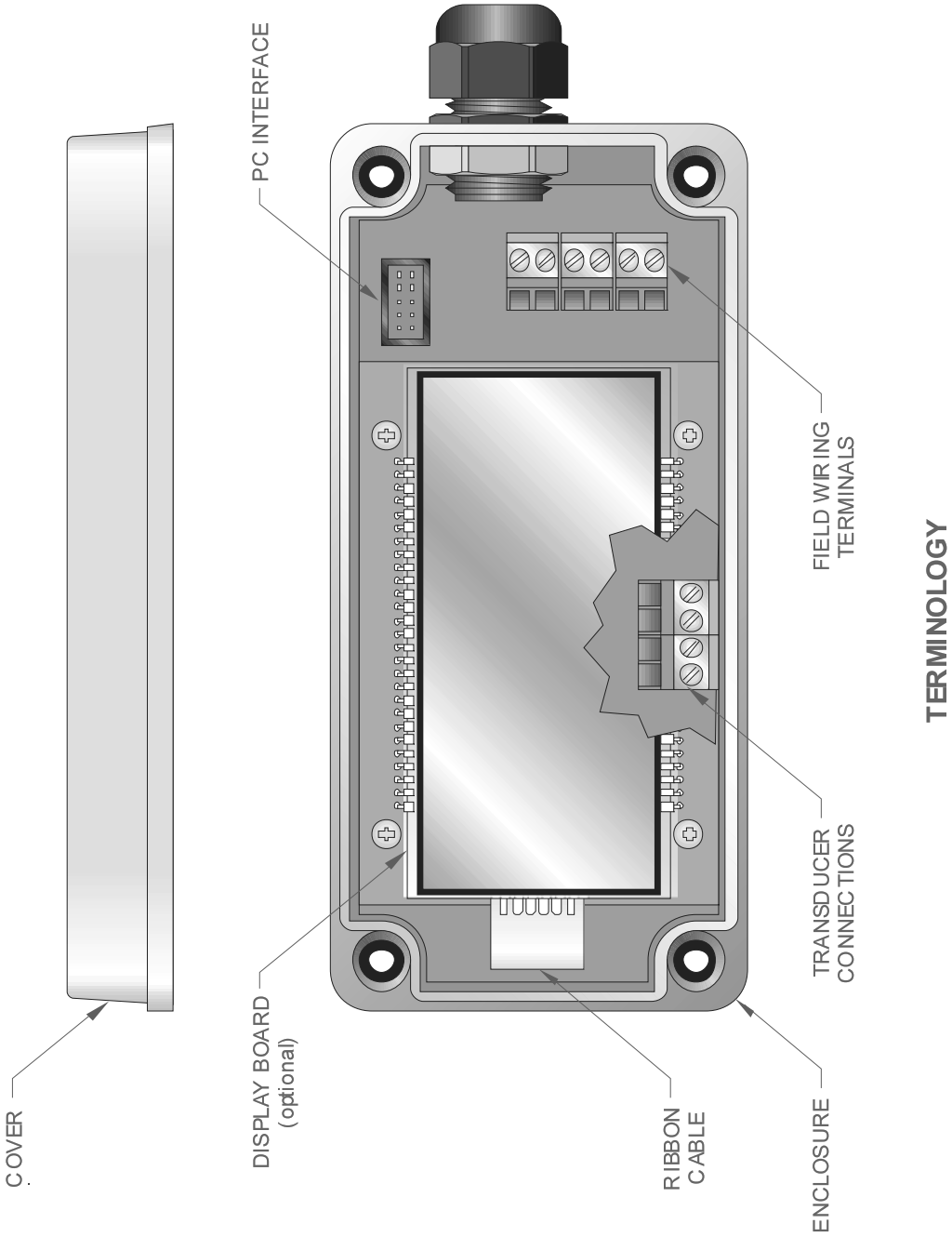

TERMINOLOGY

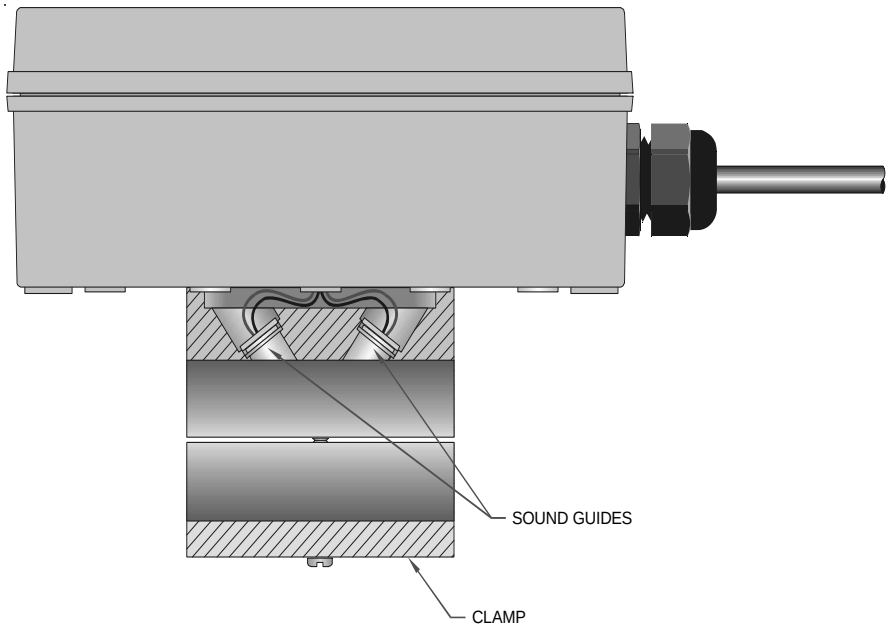
SOUND GUIDES
CLAMP

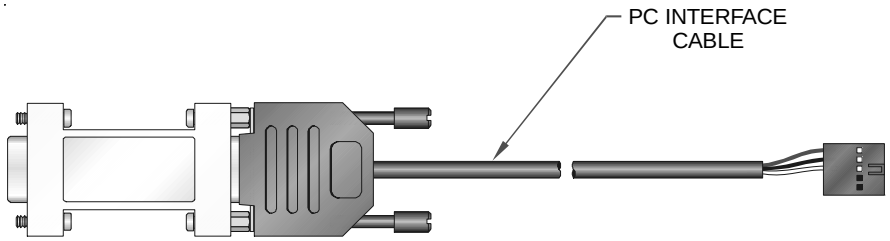
PC INTERFACE
CABLE

FLOW METER INSTALLATION

IMPORTANT NOTE:
Not following instructions properly may impair safety of equipment and/or personnel.

IMPORTANT NOTE:
Must be operated by a power supply suitable for the location.

IMPORTANT NOTE:
Do not connect or disconnect either power or outputs unless the area is known to be non-hazardous.

IMPORTANT NOTE:
Do not connect the interface cable between a TFXL and a personal computer unless the area is known to be non-hazardous.

A. FLOW METER LOCATION

The first step in the installation process is the selection of an optimum location for the flow measurement to be made. For this to be done effectively, a basic knowledge of the piping system and its plumbing is required.

An optimum location would be defined as a piping system that is completely full of liquid when measurements are being taken and has lengths of straight pipe such as those described in **Figure 4**. The optimum straight pipe diameter recommendations apply to pipes in both horizontal and vertical orientation.

NOTE: If adequate straight plumbing cannot be provided the TFXL will operate repeatably, but will most likely not achieve ideal accuracy.

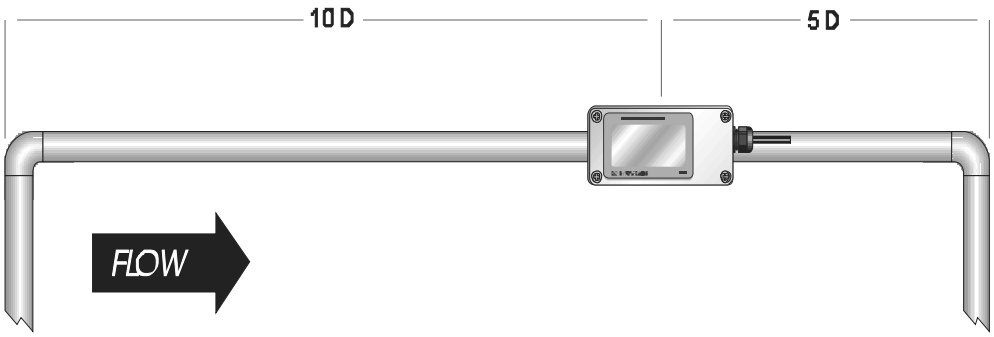

FLOW METER MOUNTING

Figure 4
Straight Pipe Recommendations

B. MOUNTING ORIENTATION ON THE PIPE

If the flow meter is applied to horizontal pipe, choose a mounting position within approximately 45-degrees of 3 o'clock or 9 o'clock on the pipe, assuming 12 o'clock to be to top of the pipe. These positions provide optimum acoustic penetration into the moving liquid. As illustrated in **Figure 5,** placement at the top or bottom of the pipe can result in poor sound penetration due to air pockets (on the top of the pipe) or sediment (at the bottom of the pipe).

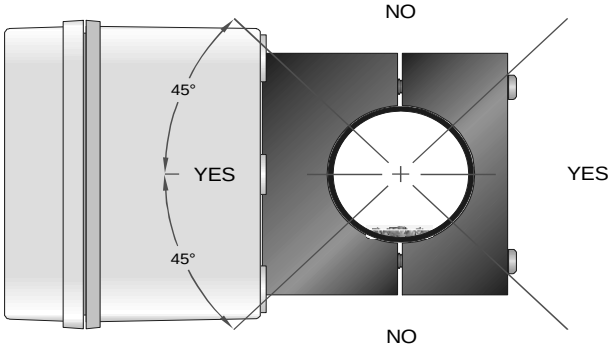

Figure 5 Mounting Orientation on Horizontal Pipes

FLOW METER MOUNTING ORIENTATION

It is best to plumb and orient the piping system so that it will be completely full of liquid at all times—whether the liquid is flowing or not. Typically, by slightly sloping the pipe in the upward direction or orienting the check valve judiciously within the piping system this can be accomplished.

If the flow meter is applied to vertical pipe with flow moving in an upward direction, radial orientation does not matter.

C. PIPE PREPARATION

Before the transducer face can be coupled to a pipe surface, an area slightly larger than the flat surface of the transducer must be cleaned to bare metal on the pipe. Remove all scale rust and paint. Thoroughly dry and clean the mounting surface.

NOTE: For plastic pipes, such as PVC or PVDF, pipe preparation is typically not required.

D. APPLYING ACCOUSTIC COUPLANT

To assure an acoustically conductive path between the transducer face and the prepared pipe surface, a coupling compound is employed. Enclosed with the TFXL flow meter is a tube of silicone based grease. This grease is adequate for the majority of installations. If an alternate grease is utilized, the grease must be specified not to flow at the temperature of the pipe surface or the ambient conditions.

Apply an even layer of grease, approximately 1/16" [1.5 mm] thick to the entire inside surface of the transducer. See **Figure 6**.

Figure 6
Applying
Acoustic Couplant

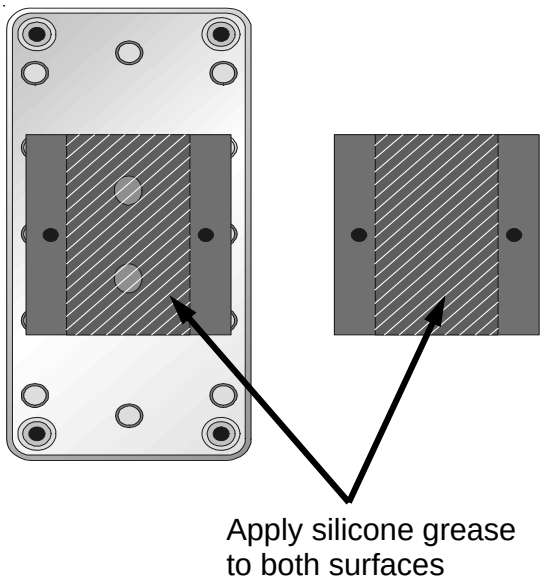

E. MOUNTING THE FLOW METER

Place the flow meter on the prepared area of the pipe, observing the flow direction arrow on the side of the flow meter enclosure. Place the flow meter clamp on the backside of the pipe and secure with the two enclosed screws. Tighten only enough to hold the flow meter in place and to squeeze some of the acoustic couplant from the mounting faces. Over tightening may strip the threads and is unnecessary for flow meter operation.

IMPORTANT NOTE: Do not rotate the TFXL flow meter on the pipe once the screws have been tightened, as the acoustic grease may be disturbed. If the grease layer between the sound guides and the pipe obtains an air pocket, the flow meter signal strength and, hence, operation may be compromised.

If upon power up the flow meter indicates ERROR 0010 and the pipe is full of liquid, reapplication of the acoustic grease will be necessary.

F. FIELD WIRING—GENERAL

The TFXL is equipped with a single conduit hole located in the flow meter enclosure that should be suitable for most installations. A sealed cord grip or conduit connection should be utilized to retain the NEMA 3 integrity of the flow meter enclosure. Failure to do so will void the manufacturers warranty and can lead to product failure.

For hazardous area installation, see drawing at back of this manual (D091-1054-001). For non-hazardous location installations, flow meter power and output signals can be carried by a single cable with multiple conductors. Select a 20-24 AWG shielded cable with an external jacket suitable for the installation environment and either 2, 4, or 6 conductors—dependent on the electronic output requirements.

Wiring methods and practices are to made in accordance with the NEC—National Electrical Code® and/or other local ordinances that may be in affect. Consult the local electrical inspector for information regarding wiring regulations.

When making connections to the field wiring terminals inside of the flow meter, strip back the wire insulation approximately 0.25

inches [6 mm]. Stripping back too little may cause the terminals to clamp on the insulation and not make good contact. Stripping back too much insulation may lead to a situation where the wires could short together between adjacent terminals. Wires should be secured in the Field Wiring Terminals using a screw torque of between 0.5 and 0.6 Nm.

G. FIELD WIRING—POWER

IMPORTANT NOTE:
Must be operated by a power supply suitable for the location.

IMPORTANT NOTE:
Do not connect or disconnect either power or outputs unless the area is known to be non-hazardous.

Power for the TFXL flow meter is obtained from a direct current DC power source. The power source should be capable of supplying between 11 and 30 Vdc at a minimum of 0.25 Amps or 250 milliamps. With the power from the DC power source disabled or disconnected, connect the positive supply wire and ground to the appropriate field wiring terminals in the flow meter. See **Figure 7**. A wiring diagram decal is located on the inner cover of the flow meter enclosure.

If the flow meter is only to be utilized as a flow rate indicator or totalizer, no further wiring will be required. Skip to step J.

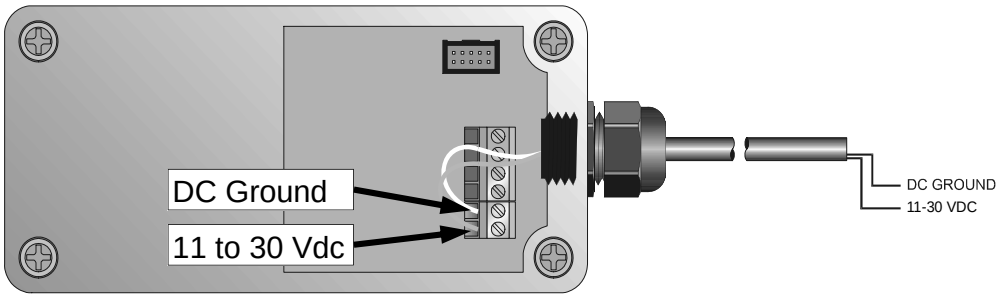

Figure 7
DC Power Connection

H. CONNECTING THE 4-20 mA OUTPUT

The TFXL is equipped with a ground-referenced 4-20 mA output—the output shares a common ground with the power supply. The output transmits a continuous current output that is proportional to liquid flow rate. The output was scaled at the Dynasonics factory and the scaling information is recorded on the label located on the side of the TFXL enclosure. To ensure that the instrument or data acquisition system that is receiving the 4-20 mA signal responds properly, it must be spanned identically to the TFXL.

The 4-20 mA output is designed to source current across a loop resistance that is typically located within a data acquisition system or other receiving instrument. The maximum resistance that the TFXL can accommodate is directly related to the DC power source that is powering the flow meter and the 4-20 mA loop. **Chart 1** illustrates the range of load resistance that can be used with a given power supply voltage. Ensure that the loop load resistance is within the shaded region of the graph, or non-linearity and transmitting errors will occur.

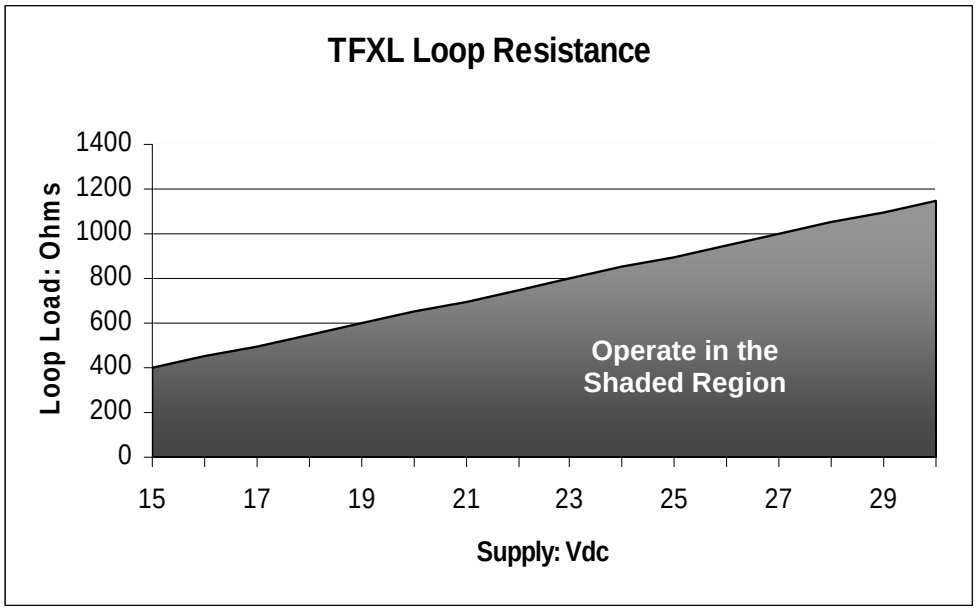

Chart 1
4-20 mA Loop Load

The 4-20 mA output is polarized and since the output shares the DC common with the power supply, reversing the connections can cause a short circuit in the DC power circuit. **Figure 8** shows a block diagram of how the 4-20 mA interfaces with the receiving device.

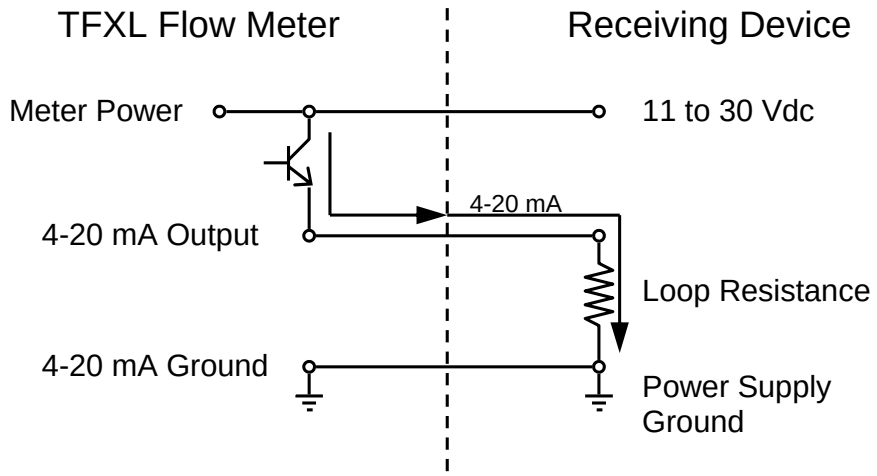

Figure 8
4-20 mA Block Diagram

Connect the wires to the appropriate Field Wiring Terminals within the TFXL enclosure. See **Figure 9**.

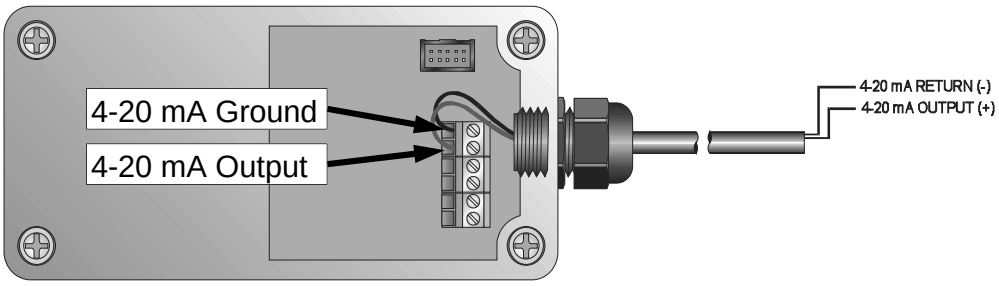

Figure 9
4-20 mA Connections

I. CONNECTING THE PULSE OUTPUT

The TFXL is equipped with a circuit that outputs a pulse waveform that varies proportionally with flow rate. The quantity of pulses per unit volume of liquid is described by the K-factor that is recorded on the side of the flow meter enclosure. To ensure that accurate readings are being recorded by the receiving instrument, the TFXL and the receiving instrument must have identical K-factor values programmed into them.

Two pulse output options are available with the TFXL:

- Turbine meter simulation—This option is utilized when a receiving instrument is capable of interfacing directly with a turbine flow meter's magnetic pickup. The output is a relatively low voltage AC signal that is not ground referenced. The minimum AC amplitude is approximately 500 mV peak-to-peak. The TFXL is configured for turbine simulation if the third character after the first dash number in the model number is a "1". Dip switch SW1 must be in the off or open position.
- TTL pulse frequency—This option is utilized when a receiving instrument requires that the pulse voltage level be either of a higher potential and/or referenced to DC ground. The output is a square-wave with a peak-to-peak voltage swing of 5 volts. The TFXL is configured for TTL pulse frequency if the third character after the first dash number in the model number is a "2". Dip switch SW1 must be in the on or closed position.

Turbine Meter Simulation Output Connection

Connection of the turbine meter simulation output is simply a matter of connecting the two Field Wiring Terminals to the turbine meter input terminals on the receiving instrument and verifying that the K-factor listed on the side of the TFXL enclosure is programmed into the receiving instrument. This output is not referenced to DC ground and is not polarized, so wiring polarity is not important. See **Figure 10**.

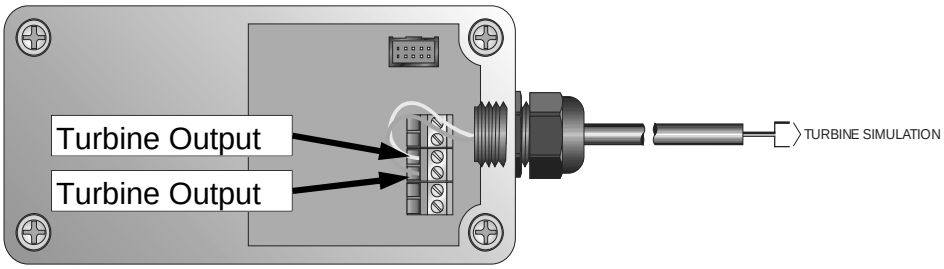

Figure 10
Turbine Meter
Simulation Connections

TTL Pulse Frequency Connection

Connection of the TTL pulse frequency output is a matter of connecting the two Field Wiring Terminals to the frequency input terminals on the receiving instrument and verifying that the K-factor listed on the side of the TFXL enclosure is programmed into the receiving instrument. This output is referenced to DC ground and is polarized. Connect the TTL Pulse plus (+) field terminal in the flow meter to the frequency input on the receiving instrument. Connect the TTL Pulse negative (-) field terminal to the frequency input negative or DC common connection in the receiving instrument. See **Figure 11**.

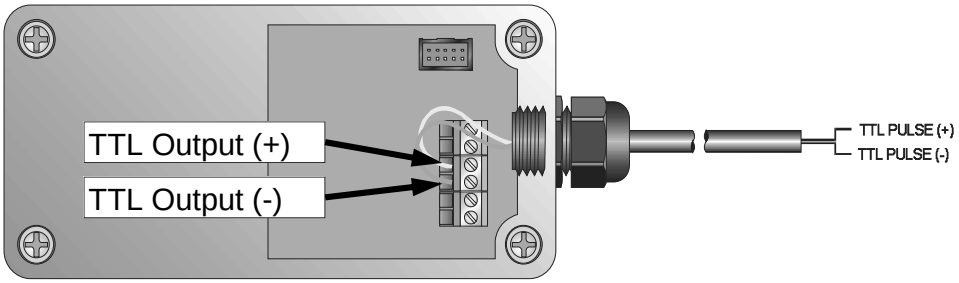

Figure 11
TTL Pulse Output
Connections

J. APPLYING POWER TO THE TFXL

The TFXL flow meter requires a full pipe of liquid before a successful startup can be completed. Do not attempt to make adjustments or change configurations until a full pipe is verified.

1. Verify that all wiring is properly connected and routed as described in Steps A though I of this manual.
2. Verify that the flow sensor is properly mounted and that the acoustic grease is intact between the transducer faces and the pipe.
3. Apply power. The display of the TFXL2 (with a display) will display a display test where all segments will illuminate in

succession and then the software version will be displayed. The meter will then enter RUN Mode. If the flow meter is a TFXL1 (without a display) verify that one of the red LEDs on the main printed circuit board is illuminated continuously and that the other one begins to blink.

4. Upon entering RUN Mode, the TFXL2 will provide one of the following responses:

   - The display may indicate ERROR 0010, which indicates low signal strength. Low signal strength is caused by one of the following:

     ⇒ an empty pipe (gas locked)

     ⇒ gas content in the liquid that exceeds 10%

     ⇒ inadequate acoustic grease between the flow meter transducer and the pipe

     ⇒ a broken connection between a transducer and the main circuit board—check wire terminations under the display.

   - The display may indicate a flow rate.

     ⇒ If 0.000 is indicated, it means that the meter is operating properly, but that the liquid is not moving.

     ⇒ A negative value would indicate that flow is moving backwards—against the flow direction arrow. A standard TFXL will not output flow signals under this condition.

     ⇒ The flow meter indicates flow rate. This verifies that signal strength is adequate and that the flow is moving in the direction that the flow arrow signifies.

5. TFXL1 Responses—The TFXL1 is not equipped with a display, so troubleshooting requires the use of a computer and a PC interface cable. See pages 22-28.

ULTRALINK™ COMPUTER SOFTWARE

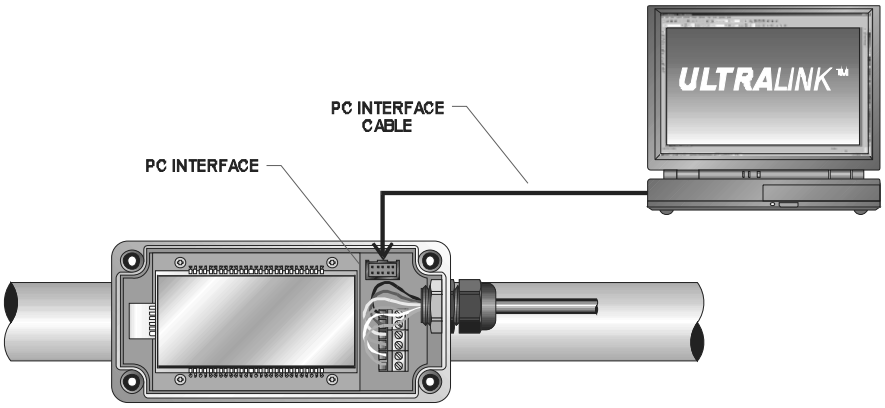

The *ULTRALINK* utility has been designed to provide the TFXL user with a powerful and convenient way to configure, troubleshoot and calibrate TFXL flow meters. Several operating features can be setup or revised from factory set values using the *ULTRALINK* utility.

Minimum PC Requirements

Computer type - PC, operating system: Windows 95, Windows 98, Windows 2000, Windows ME, Windows XP and Windows Vista®, an RS232 serial communications port, hard disk and CD-ROM drive.

Installation

1. ***ULTRALINK*** can be found on the Dynasonics website for no charge or a CD can be purchased by contacting Dynasonics sales.
2. Backup/Copy all files from the website link to a folder on the computer hard disk.
3. From the “Start” command, RUN **UISetup.exe** from the hard disk folder.
4. **UISetup** will automatically extract and install on the hard disk and place a short-cut icon on the desktop.
5. Most PCs will require a restart after a successful installation.

UTRALINK **Initialization**

IMPORTANT NOTE:
Do not connect the interface cable between a TFXL and a personal computer unless the area is known to be non-hazardous.

1. Connect the PC to the TFXL flow meter by connecting the PC interface cable between a COM port on the PC and the PC Interface connection within the TFXL flow meter—See Page 8 for location of the connector.
2. Double-click on the ***ULTRALINK*** icon. If it is the first time that *ULTRALINK* has been run on the computer, *ULTRALINK* will test Communications Port 1 for connection with the TFXL meter. If Comm port 1 is already in use by another application, *ULTRALINK* will prompt for another Comm port number. Once *ULTRALINK* has established communications, it will default to that setup upon program launch.

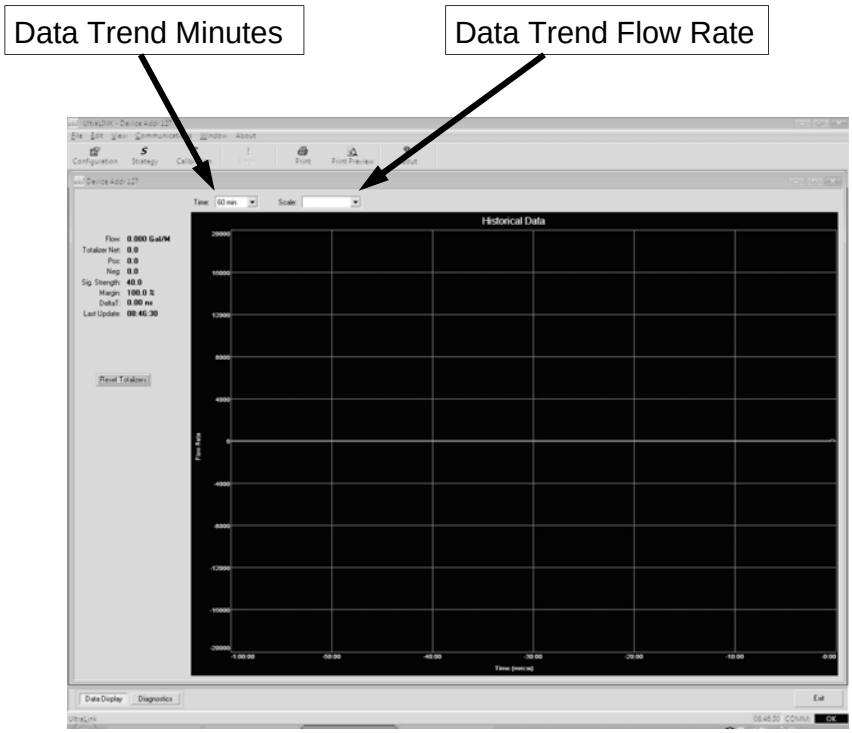

Figure 12
ULTRALINK Data Screen

3. The opening screen, shown in **Figure 12,** is called the Data Screen. It contains a large data trend chart that can be adjusted for both the X(time) and Y(flow rate) axis. This screen also contains real-time information regarding flow rate, totalizer accumulations, system signal strength and diagnostic data. The indicator in the lower right-hand corner will indicate communications status. If a red **ERROR** appears, click on the Communications button on the top bar. Click on Initialize. Choose the appropriate COM port and RS232. Proper communications are established when a green **OK** is indicated in lower right-hand corner of the PC display.

   NOTE: Power on unit may need to be cycled in order to establish communication.

4. Click on the button labeled **Configuration** for updating flow range, liquid, pipe and I/O operating information. The first screen that appears after clicking the **Configuration** button is the **BASIC** tab. See **Figure 13**.

5. **BASIC** TAB—See **Figure 13**

- **General Units** allows selection of either English (U.S.) or Metric units of measure. If measurements of the pipe are to be entered in inches, select English. If pipe measurements

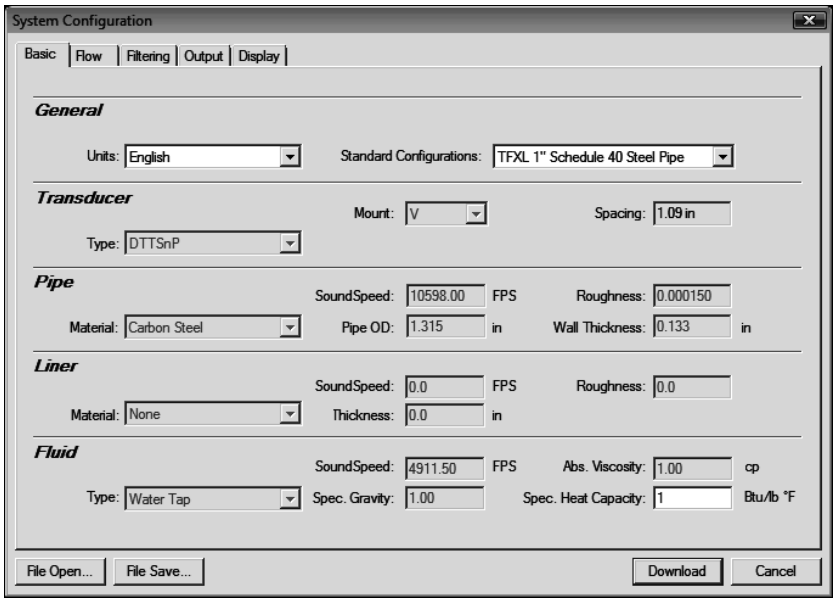

Figure 13
Basic Tab

are to be entered in millimeters, select Metric. It is recommended that if the General Units are altered from those at instrument startup, that the Download button be pressed on the lower right-hand portion of the screen and that the TFXL have its power cycled.

- **Standard Configurations** contains the most popular applications for the TFXL. The TFXL has been constructed and configured at the Dynasonics factory for a specific pipe size. If the Standard Configuration does not match the pipe schedule or material, select the proper configuration from the drop down list. If the pipe schedule is not listed or if the liquid is not water, select **Other** on the drop down list and fill in the proper information on the setup screen.

TFXL flow meters are constructed and configured at the Dynasonics factory for a single pipe size. Altering pipe material and schedule is possible, but do not change pipe size or the meter may not operate or may operate with a large error.

6. **FLOW** Tab—See **Figure 14**

- **Flow Rate Units** are selected from the pull down lists. Select an appropriate rate unit and rate time-base from the two lists.
- **Totalizer Units** are selected from pull down lists. Select an appropriate totalizer unit and totalizer exponent. The totalizer exponents are in Scientific Notation and permit the eight digit totalizer to accumulate very large values before the totalizer “rolls over” and starts again at zero. **Table 1** illustrates the Scientific Notation values and their respective decimal equivalents.
- **MIN Flow** is used by the TFXL to establish filter settings in its operating system. Enter a flow rate that is the minimum flow rate anticipated within the system. For unidirectional systems, this value is typically zero. For bi-directional systems this value is set to a negative number that is equal to the maximum negative flow rate that is anticipated within the system.

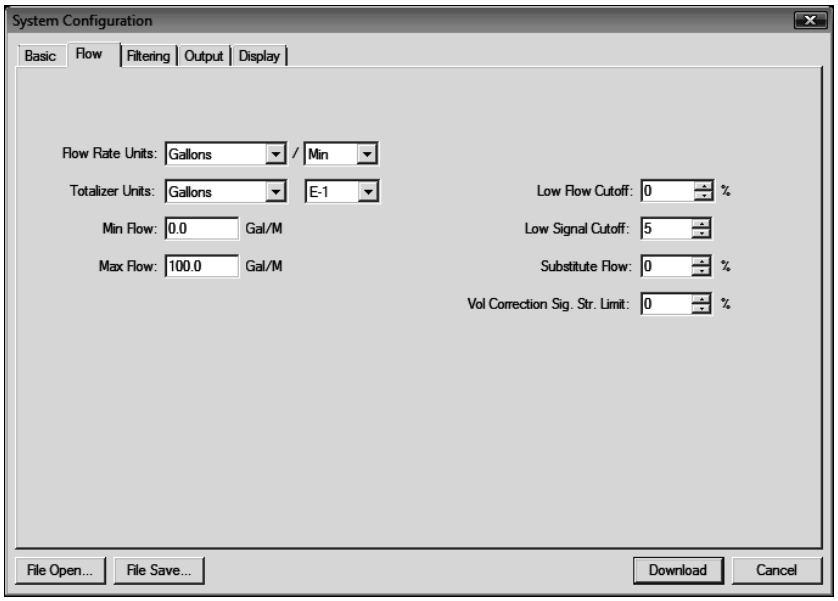

Figure 14
Flow Tab

TABLE 1—Totalizer Exponent Values

Exponent	Display Multiplier
E-1	× 1 (No multiplier)
E0	× 1 (No multiplier)
E1	×10
E2	×100
E3	×1,000
E4	×10,000
E5	×100,000
E6	×1,000,000

- **MAX Flow** is used by the TFXL to establish filter settings in its operating system. Enter a flow rate that is the maximum, positive flow rate anticipated within the system.
- **Low Flow Cutoff** is entered as a percentage of MAX Flow and influences how the flow meter will act at flows very near zero. Generally, an entry of 1% provides for a stable zero indication, while providing a 100:1 turndown ratio for measurements.
- **Low Signal Cutoff** is a relative value that should be entered after a successful flow meter startup. For an initial value, enter 5 (Signal Strength indications below 5 are considered to be below the noise ceiling and should not be indicative of a successful flow meter startup). The entry has three purposes: provides an error indication—Low Signal Strength [Error 0010 on the TFXL display] when liquid conditions in the pipe have changed to the point where flow measurements may not be possible, warns if the pipe's liquid level has fallen below the level of the transducers, and signals that something with the flow meter installation or configuration may have changed. Examples would include such things as the couplant used to mount the transducer has become compromised, a cable has become disconnected or a pipe size setting has been altered.
- **Substitute Flow** is used to provide an indication and output that signifies that an error exists with the flow meter or its setup. It is set as a percentage between MIN Flow and MAX Flow. In a unidirectional system this value is typically set to zero, to indicate zero flow while in an error condition. In a bi-directional system, the percentage can be set such that zero is displayed in a error condition. To calculate where to set the Substitute Flow value in a bi-directional system perform the following operation:

$$\text{SUBSTITUTE FLOW} = 100 - \frac{100 \times \text{MAX Flow}}{\text{MAX Flow} - \text{MIN Flow}}$$

- Entry of data in the **Basic** and **Flow** tabs are all that is required to provide flow measurement functions to the flow meter. If the user is not going to utilize input/output functions, click on the **Download** button to transfer the configuration to the TFXL instrument.

7. FILTERING TAB—See **Figure 15**

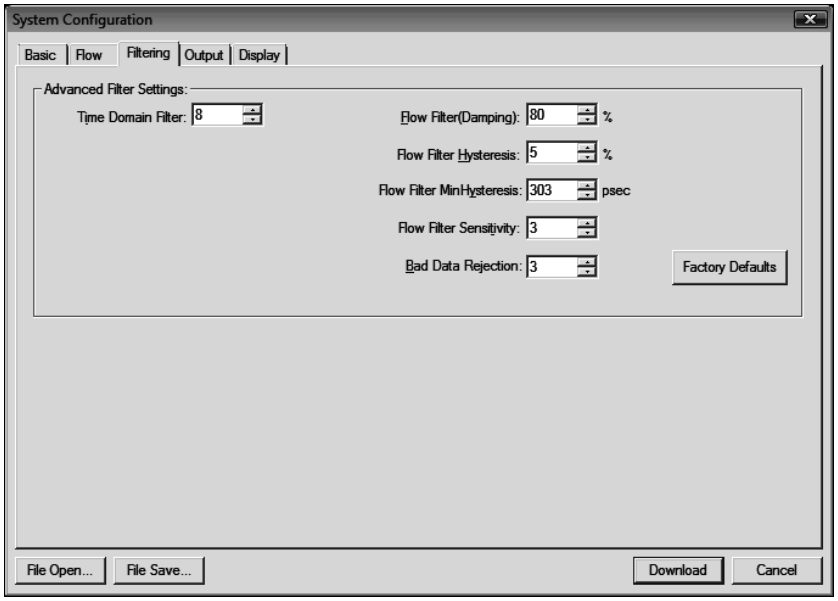

Figure 15
Filtering Tab

The Filtering TAB contains several filter settings for the TFXL flow meter. These filters can be adjusted to match response times and data "smoothing" performance to a particular application. The factory settings are suitable for most installations.

- **Time Domain Filter** adjusts the number of raw data sets (the wave forms viewed on the *ULTRALINK* Diagnostics Screen) that are averaged together. Increasing this value will provide greater damping of the data and slow the response time of the flow meter. This filter is not adaptive—it is operational to the value set at all times.

- **Flow Filter Damping** establishes a <u>maximum</u> adaptive filter value. Under stable flow conditions (flow that varies less than the **Flow Filter Hysteresis** entry) this adaptive filter will

increase the number of successive flow readings that are averaged together up to this maximum value. If flow changes outside of the **Flow Filter Hysteresis** window, the Flow Filter adapts by decreasing and allows the meter to react faster. Increasing this value tends to provide smoother steady-state flow readings and outputs.

- **Flow Filter Hysteresis** creates a window around the average flow measurement reading whereby if the flow varies within that window, greater **Flow Filter Damping** will occur. The filter also establishes a flow rate window where measurements outside of the window are captured by the **Bad Data Rejection Filter**. The value is entered as a percentage of actual flow rate.

  Example:

  If the average flow rate is 100 GPM and the Flow Filter Hysteresis is set to 5%, a filter window of 95-105 GPM is established. Successive flow measurements that are measured within that window are recorded and averaged in accordance with the **Flow Filter Damping** setting. Flow readings outside of the window are held up in accordance with the **Bad Data Rejection Filter**.

- **Flow Filter MinHysteresis** sets a minimum hysteresis window that is invoked at low flow rates, where the “of rate” **Flow Filter Hysteresis** is very small and ineffective. This entry is entered in pico-seconds and is differential time. This value is factory set and should not be altered without consulting the Dynasonics technical services department.

- **Flow Filter Sensitivity** allows configuration of how fast the **Flow Filter Damping** will adapt in the <u>positive</u> direction. Increasing this value allows greater damping to occur faster than lower values. Adaptation in the negative direction is not user adjustable.

- **Bad Data Rejection** is a value related to the number of successive readings that must be measured outside of the Flow Filter Hysteresis and Flow Filter MinHysteresis windows before the flow meter will use that flow value. Larger values are entered into the Bad Data Rejection when measuring

liquids that contain gas bubbles, as the gas bubbles tend to disturb the ultrasonic signals and cause more extraneous flow readings to occur. Larger Bad Data Rejection values tend to make the flow meter more sluggish to rapid changes in actual flow rate.

8. **Output** TAB—See **Figure 16**

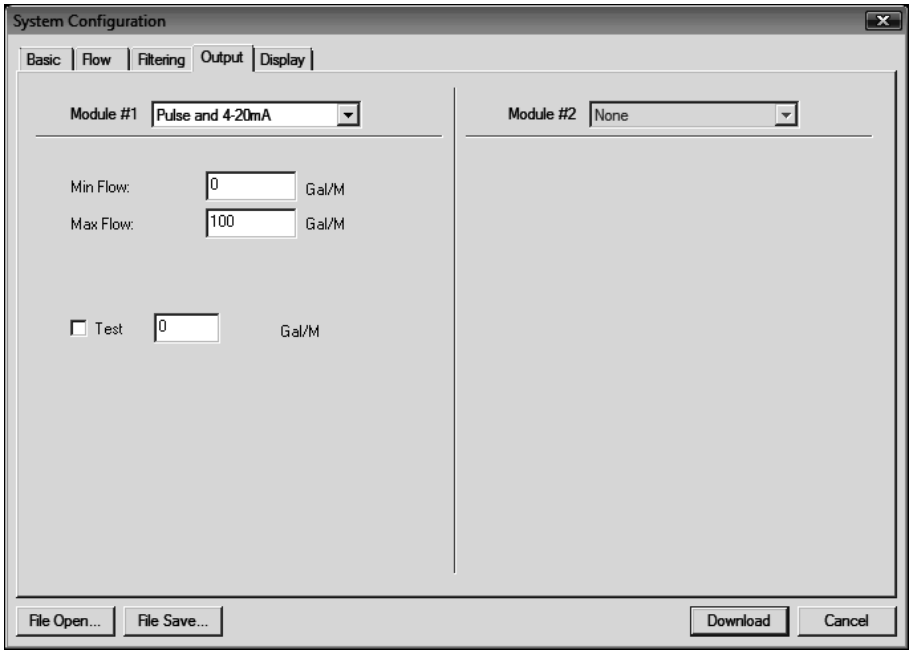

Figure 16
Output Tab

The entries made in the Output TAB establish range factors for the 4-20 mA and frequency outputs on the meter. The 4-20mA is calibrated at the Dynasonics factory and cannot be altered in the field. However, the range of the output can be altered.

The unit has been factory calibrated to output 1KHz at the maximum flow rate. To change the frequency output at full scale, the value for the “Flow @1KHz” must be altered. This may be required when installing the meter to replace a turbine style flow meter. This example shows how to change the frequency output to match that of a turbine style flow meter.

$$\frac{\text{Max flow rate}}{\text{Required frequency @max flow}} = \frac{\text{Flow @1KHz}}{\text{1000Hz}}$$

1) To determine the frequency out of a turbine meter at maximum flow, convert the maximum flow rate to gallons/ second, then multiply by the nominal K-factor (pulses/gallon).
2) Calculate the flow rate that corresponds to 1000Hz. Multiply the maximum flow rate times 1000Hz, then divide by the required frequency at maximum flow.
3) Enter this value in the “Flow @1KHz” field.

   Example:

   Maximum Flow Rate = 400 GPM

   Desired K-factor = 52 pulses/gallon

   400 gallons/minute = 6.67 gallons/second

   6.67 gallons/second × 52 pulses/gallons = 346.67Hz

   Therefore:

   (400 GPM × 1000Hz) / 346.67Hz = 1153.83 GPM

   Enter 1153.83 into the “Flow @1KHz” field.

To adjust the range of the 4-20mA output, simply enter the flow rate that corresponds to 4mA output in the “Flow @0Hz” field. Enter the flow rate that corresponds to 20mA output in the “Flow @ 1KHz” field.

9. Display TAB—See **Figure 17**

The Display TAB permits configuration of the flow meter display.

Display

- Select Flow to display flow rate only on the display.
- Select Total to display the flow accumulator only on the display.
- Select Both to periodically toggle between rate and accumulated flow displays.

Display Total

- Select Net to display the accumulated difference between the positive and negative totalizers. This feature will subtract backflow (drain back) from the totalizer value.
- Select Positive to display only flows moving in the forward direction.
- Select Negative to display only flows moving in the backwards direction.

Display Dwell Time

- Enter a value between 1 and 10 seconds to establish how long the flow meter will display flow rate, then accumulated total, then rate and so on.

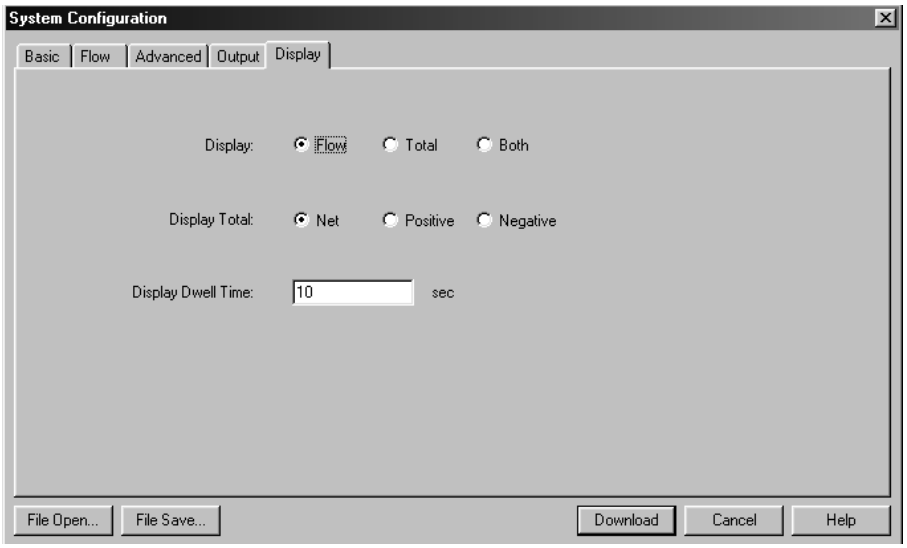

Figure 17
Display Tab

Setting Zero and Calibration

ULTRALINK contains a powerful multi-point calibration routine that can be used to calibrate the TFXL flow meter to a primary measuring standard in a particular installation. To initialize the three step calibration routine, press the Calibration button located on the top of the ***ULTRALINK* Data Screen**. The display shown in **Figure 18** will appear. The first step in the calibration process is the selection of the engineering units that the calibration will be performed with. Select the units and press the **Next** button at the bottom of the window.

NOTE: Changes here will invalidate the current calibration.

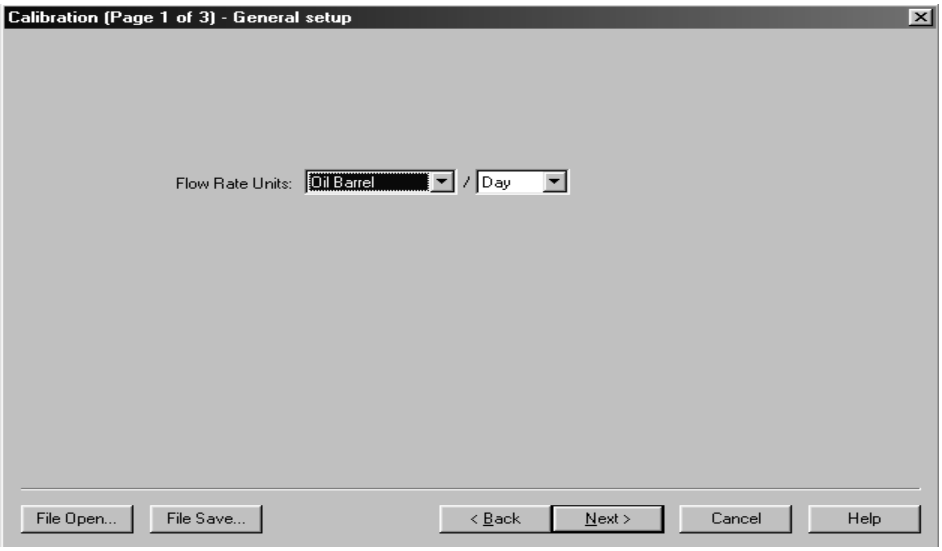

Figure 18
Calibration Units

The second screen, **Figure 19**, establishes a baseline zero flow rate measurement for the instrument. To zero the flow meter, establish zero flow in the pipe (turn off all pumps and close a dead-heading valve). Wait until the delta-time interval shown in **Figure 19** is stable (and typically very close to zero). Press the **Set** button. Press the **Next** button when complete, then press the **Finish** button on the Calibration Screen. If the **Set** button was pressed, do not proceed with Flow Rate Calibration before pressing the **Finish** button to save the Zero setting.

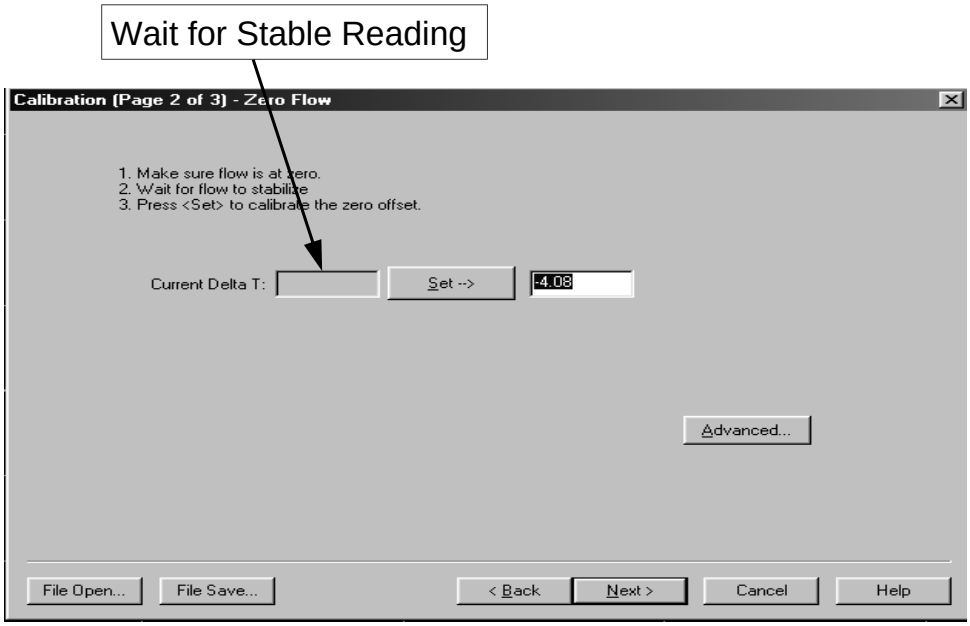

Figure 19
Setting Zero Flow

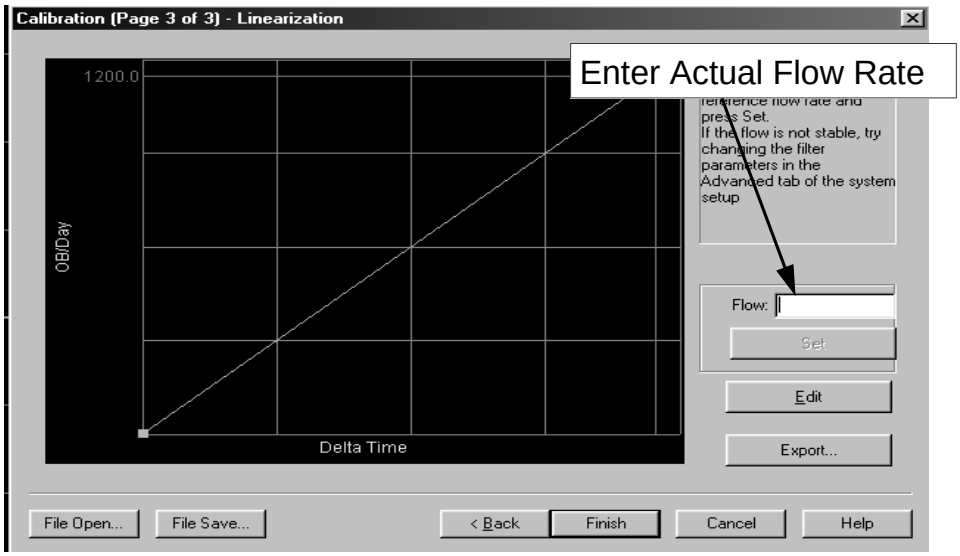

Figure 20
Flow Rate Calibration

The screen shown in **Figure 20** allows multiple actual flow rates to be run past the meter and the values recorded by the TFXL. To calibrate a point, establish a stable, known flow rate (verified by a real-time primary flow instrument), enter the actual flow rate in the **Figure 20** window and press the **Set** button. Repeat for as many points as desired. **NOTE:** If only one point is to be used, it is preferred that a flow rate as high as anticipated in normal operation is used as the calibration point. If an erroneous data point is collected, the point can be removed by pressing the **Edit** button, selecting the bad point and selecting Remove.

NOTE:
Do not enter a zero point on this screen. A zero will cause the TFXL to read no flow.

Press the **Finish** button when all points have been gathered.

Saving Meter Configuration on a PC

The complete configuration of the flow meter can be saved from the **Configuration** screen. Select **Save** and name the file. This file may be transferred to other flow meters or may be recalled should the same pipe be surveyed again or multiple meters programmed with the same information.

Printing a Flow Meter Configuration and Calibration Report

Select **File** from the upper task bar and **Print** to print a calibration/configuration information sheet for the flow meter installation.

Maintenance

No periodic maintenance is required for this product.

TFX Error Codes

Warnings		
Code Number	**Description**	**Correction**
0001	Serial number not present	Hardware serial number has become inoperative — system performance will not be influenced.
0010	Signal strength is below signal strength cutoff entry.	Low signal strength is typically caused by one of the following: • Empty pipe • Improper programming/ incorrect values • Improper transducer spacing • Non-homogeneous pipe wall
0011	Measured speed of sound in the liquid is greater than ±10% different than the value entered during meter setup	Verify that the correct liquid was selected in the Basic menu. Verify that the pipe size parameters are correct.
Class C Errors		
Code Number	**Description**	**Correction**
1001	System tables have changed	Initiate a meter RESET by cycling the power.
1002	System configu-ration has changed	Initiate a meter RESET by cycling the power.

TFX Error Codes (cont.)

Class B Errors		
Code Number	**Description**	**Correction**
3001	Invalid hardware configuration.	Upload corrected files.
3002	Invalid system configuration.	Upload corrected files.
3003	Invalid strategy file.	Upload corrected files.
3004	Invalid calibra-tion data	Recalibrate the system.
3005	Invalid speed of sound calibra-tion data.	Upload new data
3006	Bad system tables.	Upload new table data
Class A Errors		
4001	Flash memory full.	Return to factory for evaluation.

Unit does not turn "ON" when power is applied	• Verify that voltage in the range of 11-30 Vdc is present at the field terminals • If the voltage is present and neither LED on the main printed circuit board is illuminated, return the flow meter to the Dynasonics factory for evaluation.
Unit reads zero flow when flow is actually running	• Verify that the Maximum Flow Rate value is not set to a very high value and causing the Flow Cutoff percent entry to drive the readings to zero. Decrease Max Flow setting or decrease Flow Cutoff percentage. • Verify that a zero was not entered on page 3 of the calibration screen.
ERROR 0010 is Displayed on the Screen	• The flow meter is not mounted onto the pipe using an acoustic couplant. • The acoustic couplant is not uniform between the flow meter transducer and the pipe. • The liquid contains more than 10% suspended gas bubbles. • The pipe is full of gas—gas locked.
Flow Meter Reads Negative Flow Readings	• Flow is running backwards when compared to the FLOW DIRECTION arrow located on the side of the flow meter enclosure.
Flow Meter is Reading Flow, But Output Is Not Transmitting	• Verify that one of the LEDs on the main printed circuit board is flashing—if not, return the flow meter to the Dynasonics factory. • Verify connections and polarity of wiring. • Test output with a milliamp meter, oscilloscope or other test instrument • Verify that the output is configured for RATE (Figure 16)

STATEMENT OF WARRANTY

Dynasonics, division of Racine Federated Inc. warrants to the end purchaser, for a period of one year from the date of shipment from the factory, that all new transmitters and transducers manufactured by it are free from defects in materials and workmanship. This warranty does not cover products that have been damaged due to misapplication, abuse, lack of maintenance or improper installation. Dynasonics' obligation under this warranty is limited to the repair or replacement of a defective product, at no charge to the end purchaser, if the product is inspected by Dynasonics and found to be defective. Repair or replacement is at Dynasonics' discretion. A return goods authorization (RGA) number must be obtained from Dynasonics before any product may be returned for warranty repair or replacement. The product must be thoroughly cleaned and any process chemicals removed before it will be accepted for return.

The purchaser must determine the applicability of the product for its desired use and assumes all risks in connection therewith. Dynasonics assumes no responsibility or liability for any omissions or errors in connection with the use of its products. Dynasonics will under no circumstances be liable for any incidental, consequential, contingent or special damages or loss to any person or property arising out of the failure of any product, component or accessory.

All expressed or implied warranties, including **the implied warranty of merchantability and the implied warranty of fitness for a particular purpose or application are expressly disclaimed** and shall not apply to any products sold or services rendered by Dynasonics.

The above warranty supersedes and is in lieu of all other warranties, either expressed or implied and all other obligations or liabilities. No agent or representative has any authority to alter the terms of this warranty in any way.

SERVICE AND REPAIR

When returning equipment, it is necessary for you to contact our service department at (800) 535-3569 or (262) 639-6770 to obtain an RGA number for the authority and tracking of your material and its proper inspection and return. All returns of equipment must go to the following address:

Dynasonics
Attn: RGA#xxxx
8635 Washington Avenue
Racine, WI 53406

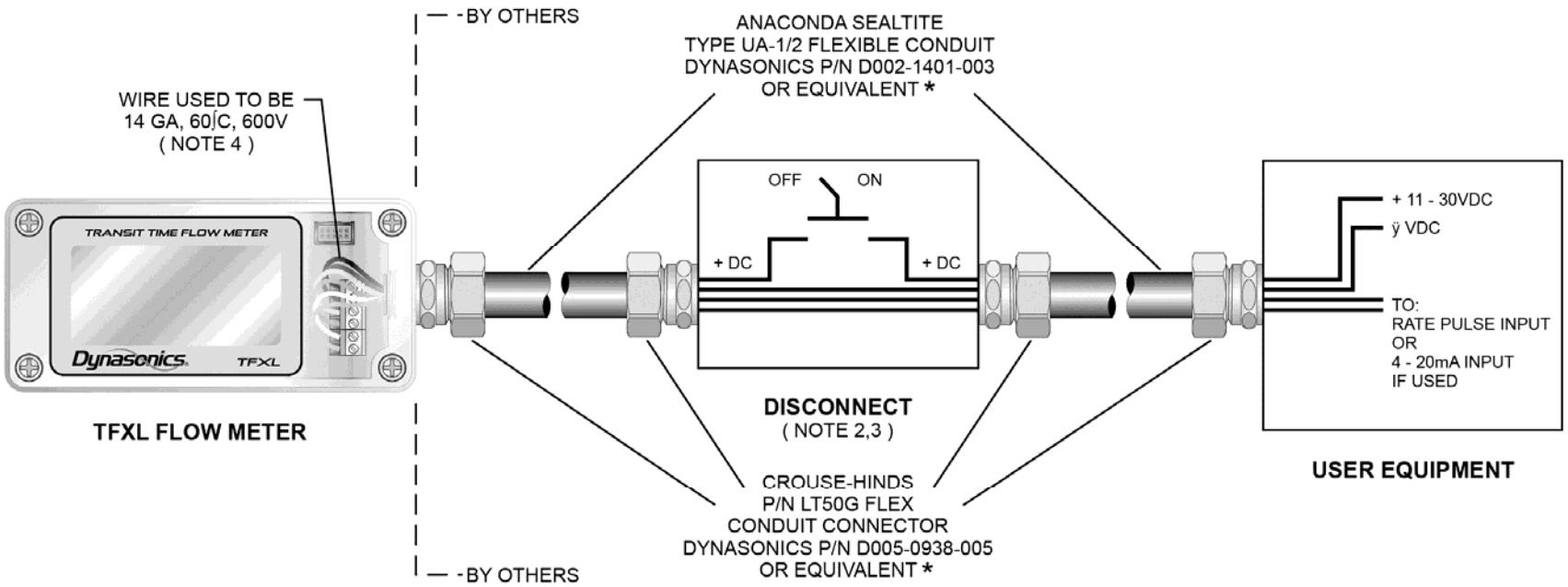

* Substitute part must be suitable for Class I, II, Div 2, Groups C, D.

1. Information shown on this drawing is provided to indicate wiring requirements to comply with National Electrical Code® (NEC) Article 500.
2. Disconnect to be located near the TFXL Flow Meter.
3. Disconnect may not be required if TFXL Flow Meter is powered from a class 2 Power Supply.
4. Smaller gauge wire may be acceptable if overall system meets NEC requirements per Article 725 Part III.

Dynasonics®
DIVISION OF RACINE FEDERATED INC.

NAME: **TFXL HAZARDOUS AREA INSTALLATION**

PART NUMBER: **D091-1054-001**

8635 Washington Avenue
Racine, WI 53406
Toll-Free in U.S. and Canada:
Tel: (800) 535-3569 Fax: (800) 732-8354
Tel: (262) 639-6770 Fax: (262) 639-2267
www.dynasonics.com

DYNASONICS is a registered trademark of Racine Federated Inc.
Ultralink is a trademark of Racine Federated Inc.
WINDOWS and VISTA are registered trademarks of Microsoft Corp.
NATIONAL ELECTRICAL CODE is a registered trademark of NFPA.
UL is a registered trademark of Underwriters Laboratories, Inc.
Specifications are subject to change without notice.

© 2011 Racine Federated Inc.
Printed in USA
Form 06-TTM-UM-00157 08/11

Installation Instructions

MicroLogix 1100 Programmable Controllers

Catalog Numbers 1763-L16AWA, 1763-L16BWA, 1763-L16BBB, 1763-L16DWD

http://literature.rockwellautomation.com/idc/groups/literature/documents/in/1763-in001_-mu-p.pdf

FR	Cette publication est disponible en français sous forme électronique (fichier PDF). Pour la télécharger, rendez-vous sur la page Internet indiquée ci-dessus.
IT	Questa pubblicazione è disponibile in Italiano in formato PDF. Per scaricarla collegarsi al sito Web indicato sopra.
DE	Diese Publikation ist als PDF auf Deutsch verfügbar. Gehen Sie auf die oben genannte Web-Adresse, um nach der Publikation zu suchen und sie herunterzuladen.
ES	Esta publicación está disponible en español como PDF. Diríjase a la dirección web indicada arriba para buscar y descarga esta publicación.
PT	Esta publicação está disponível em portugués como PDF. Vá ao endereço web que aparece acima para encontrar e fazer download da publicação.

Allen-Bradley • Rockwell Software
Rockwell Automation

Installation Instructions

MicroLogix 1100 Programmable Controllers

Catalog Numbers 1763-L16AWA, 1763-L16BWA, 1763-L16BBB, 1763-L16DWD

Topic	Page
Important User Information	4
Additional Resources	5
Overview	6
Controller Description	7
Hazardous Location Considerations	8
Mounting the Controller	9
Connecting 1762 I/O Expansion Modules	15
Wiring the Controller	16
Specifications	22

Allen-Bradley • Rockwell Software

Rockwell Automation

Important User Information

Solid state equipment has operational characteristics differing from those of electromechanical equipment. Safety Guidelines for the Application, Installation and Maintenance of Solid State Controls (Publication SGI-1.1 available from your local Rockwell Automation sales office or online at http://literature.rockwellautomation.com) describes some important differences between solid state equipment and hard-wired electromechanical devices. Because of this difference, and also because of the wide variety of uses for solid state equipment, all persons responsible for applying this equipment must satisfy themselves that each intended application of this equipment is acceptable.

In no event will Rockwell Automation, Inc. be responsible or liable for indirect or consequential damages resulting from the use or application of this equipment.

The examples and diagrams in this manual are included solely for illustrative purposes. Because of the many variables and requirements associated with any particular installation, Rockwell Automation, Inc. cannot assume responsibility or liability for actual use based on the examples and diagrams.

No patent liability is assumed by Rockwell Automation, Inc. with respect to use of information, circuits, equipment, or software described in this manual.

Reproduction of the contents of this manual, in whole or in part, without written permission of Rockwell Automation, Inc., is prohibited.

Throughout this manual, when necessary, we use notes to make you aware of safety considerations.

WARNING	Identifies information about practices or circumstances that can cause an explosion in a hazardous environment, which may lead to personal injury or death, property damage, or economic loss.
IMPORTANT	Identifies information that is critical for successful application and understanding of the product.
ATTENTION	Identifies information about practices or circumstances that can lead to personal injury or death, property damage, or economic loss. Attentions help you identify a hazard, avoid a hazard and recognize the consequences.
SHOCK HAZARD	Labels may be on or inside the equipment (for example, drive or motor) to alert people that dangerous voltage may be present.
BURN HAZARD	Labels may be on or inside the equipment (for example, drive or motor) to alert people that surfaces may reach dangerous temperatures.

Additional Resources

Resource	Description
MicroLogix 1100 Programmable Controllers User Manual 1763-UM001	A more detailed description of how to install and use your MicroLogix 1100 programmable controller and expansion I/O system.
MicroLogix 1100 Instruction Set Reference Manual1763-RM001	A reference manual that contains data and function files, instruction set, and troubleshooting information for MicroLogix 1100.
Installation Instructions 1762-INxxx	Information on installing and using 1762 expansion I/O modules.
Industrial Automation Wiring and Grounding Guidelines 1770-4.1	More information on proper wiring and grounding techniques.

If you would like a manual, you can:

- download a free electronic version from the internet: http://literature.rockwellautomation.com
- purchase a printed manual by contacting your local Allen-Bradley distributor or Rockwell Automation representative

Overview

MicroLogix 1100 controllers are suitable for use in an industrial environment when installed in accordance with these instructions. Specifically, this equipment is intended for use in clean, dry environments (Pollution degree 2[1]) and with circuits not exceeding Over Voltage Category II[2] (IEC 60664-1).[3]

Install your controller using these installation instructions.

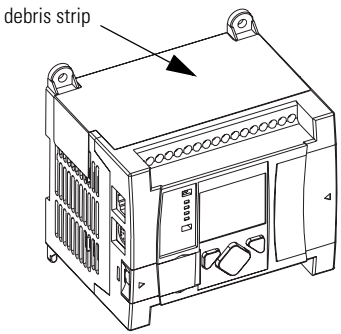

ATTENTION

Do not remove the protective debris strip until after the controller and all other equipment in the panel near the controller are mounted and wiring is complete. Once wiring is complete, remove protective debris strip. Failure to remove strip before operating can cause overheating.

ATTENTION

Electrostatic discharge can damage semiconductor devices inside the controller. Do not touch the connector pins or other sensitive areas.

(1) Pollution Degree 2 is an environment where, normally, only non-conductive pollution occurs except that occasionally a temporary conductivity caused by condensation shall be expected.

(2) Over Voltage Category II is the load level section of the electrical distribution system. At this level transient voltages are controlled and do not exceed the impulse voltage capability of the product's insulation.

(3) Pollution Degree 2 and Over Voltage Category II are International Electrotechnical Commission (IEC) designations.

Controller Description

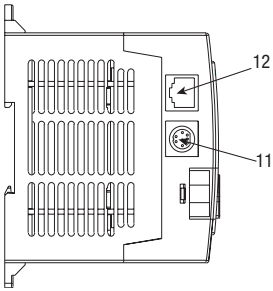

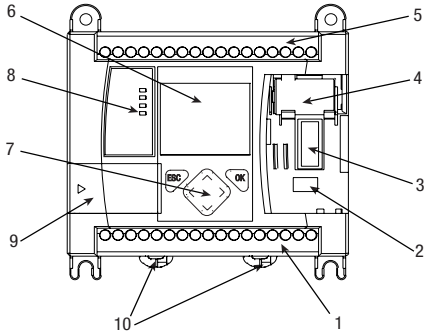

Item	Description
1	Output Terminal Block
2	Battery Connector
3	Bus Connector Interface to Expansion I/O
4	Battery
5	Input Terminal Block
6	LCD Display
7	LCD Display Keypad (ESC, OK, Up, Down, Left, Right)
8	Status LEDs
9	Memory Module Port Cover(1) -or- Memory Module(2)
10	DIN Rail Latches
11	RS-232/485 Communication Port (Channel 0, isolated)
12	Ethernet Port (Channel 1)

(1) Shipped with controller.

(2) Optional equipment.

Catalog Number	Description				
	Input Power	Digital Inputs	Analog Inputs	Digital Outputs	Comm. Ports
1763-L16AWA	120/240V ac	(10) 120V ac	(2) voltage input 0...10V dc	(6) relay All individually isolated	(1) RS-232/485 combo (isolated) (1) Ethernet
1763-L16BWA	120/240V ac	(6) 24V dc (4) high-speed 24V dc[1]	(2) voltage input 0 ...10V dc	(6) relay All individually isolated	(1) RS-232/485 combo (isolated) (1) Ethernet
1763-L16BBB	24V dc	(6) 24V dc (4) high-speed 24V dc[1]	(2) voltage input 0...10V dc	(2) relay (isolated) (2) 24V dc FET (2) high-speed 24V dc FET	(1) RS-232/485 combo (isolated) (1) Ethernet
1763-L16DWD	12/24V dc	(6) 12/24V dc (4) high-speed 12/24V dc[1]	(2) voltage input 0...10V dc	(6) relay All individually isolated	(1) RS-232/485 combo (isolated) (1) Ethernet

(1) The 4 high-speed inputs (inputs 0 through 3) can be used for pulse latching or higher speed counting. Refer to Input Specifications on page 24 and the MicroLogix 1100 Instruction Set Reference Manual, publication 1763-RM001, for more information.

Hazardous Location Considerations

This equipment is suitable for use in Class I, Division 2, Groups A, B, C, D or non-hazardous locations only. The following WARNING statement applies to use in hazardous locations.

WARNING

EXPLOSION HAZARD

- Substitution of components may impair suitability for Class I, Division 2.
- Do not replace components or disconnect equipment unless power has been switched off.
- Do not connect or disconnect components unless power has been switched off.
- This product must be installed in an enclosure. All cables connected to the product must remain in the enclosure or be protected by conduit or other means.
- All wiring must comply with N.E.C. article 501-10(b).

Use only the following communication cables in Class I, Division 2 hazardous locations.

Environment Classification	Communication Cables
Class I, Division 2 Hazardous Environment	1761-CBL-AC00 Series C or later
	1761-CBL-AM00 Series C or later
	1761-CBL-AP00 Series C or later
	1761-CBL-PM02 Series C or later
	1761-CBL-HM02 Series C or later
	2707-NC9 Series C or later
	1763-NC01 Series A or later

ATTENTION

UNSUPPORTED CONNECTION

Do not connect a MicroLogix 1100 controller to another MicroLogix family controller such as MicroLogix 1000, MicroLogix 1200, or MicroLogix 1500 using a 1761-CBL-AM00 (8-pin mini-DIN to 8-pin mini-DIN) cable or equivalent.

This type of connection will cause damage to the RS-232/485 communication port (Channel 0) of the MicroLogix 1100 and/or the controller itself. Communication pins used for RS-485 communications are alternately used for 24V power on the other MicroLogix controllers.

Mounting the Controller

General Considerations

Most applications require installation in an industrial enclosure to reduce the effects of electrical interference and environmental exposure. Locate your controller as far as possible from power lines, load lines, and other sources of electrical noise such as hard-contact switches, relays, and ac motor drives. For more information on proper grounding guidelines, see the Industrial Automation Wiring and Grounding Guidelines, publication 1770-4.1.

ATTENTION

Vertical mounting is not supported due to thermal considerations.

ATTENTION

Be careful of metal chips when drilling mounting holes for your controller or other equipment within the enclosure or panel. Drilled fragments that fall into the controller could cause damage. Do not drill holes above a mounted controller if the protective debris strips have been removed.

Mounting Dimensions

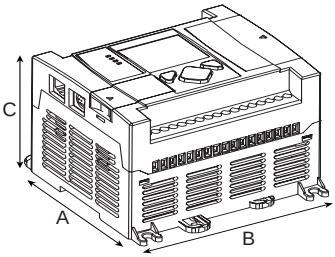

1763-L16AWA, 1763-L16BWA, 1763-L16BBB, 1763-L16DWD

Dimension	1763-			
	L16AWA	L16BWA	L16BBB	L16DWD
A	90 mm (3.5 in.)			
B	110 mm (4.33 in.)			
C	87 mm (3.43 in.)			

Controller Spacing

The controller mounts horizontally, with the expansion I/O extending to the right of the controller. Allow 50 mm (2 in.) of space on all but the right side for adequate ventilation, as shown below.

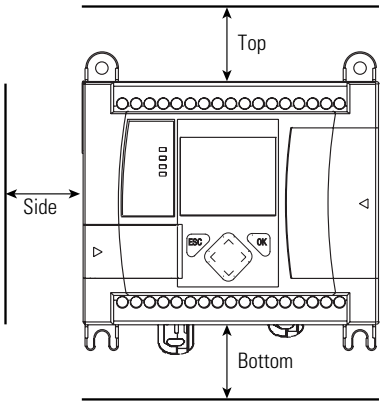

DIN Rail Mounting

The maximum extension of the latch is 14 mm (0.55 in.) in the open position. A flat-blade screwdriver is required for removal of the controller. The controller can be mounted to EN50022-35x7.5 or EN50022-35x15 DIN rails. DIN rail mounting dimensions are shown below.

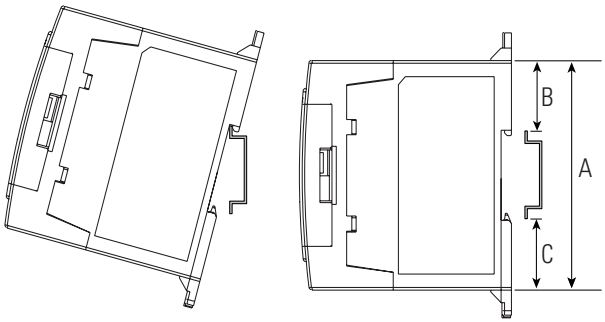

Dimension	Height
A	90 mm (3.5 in.)
B	27.5 mm (1.08 in.)
C	27.5 mm (1.08 in.)

Follow these steps to install your controller on the DIN rail.

1. Mount your DIN rail. (Make sure that the placement of the controller on the DIN rail meets the recommended spacing requirements. See Controller Spacing on page 11. Refer to the mounting template inside the back cover of this document.)

2. If it is open, close the DIN latch.

3. Hook the top slot over the DIN rail.

4. While pressing the controller down against the top of the rail, snap the bottom of the controller into position.

5. Leave the protective debris strip attached until you are finished wiring the controller and any other devices.

Follow these steps to remove your controller from the DIN rail.

1. Place a flat-blade screwdriver in the DIN rail latch at the bottom of the controller.

2. Holding the controller, pry downward on the latch until the latch locks in the open position.

3. Repeat steps 1 and 2 for the second DIN rail latch.

4. Unhook the top of the DIN rail slot from the rail.

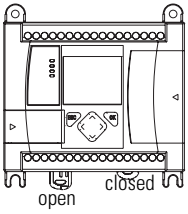

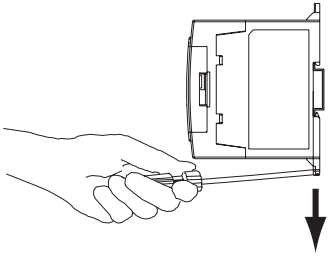

Panel Mounting

Mount to panel using #8 or M4 screws. Follow these steps to install your controller using mounting screws.

1. Remove the mounting template from inside the back cover of this document.
2. Secure the template to the mounting surface. (Make sure your controller is spaced properly. See Controller Spacing on page 11.)
3. Drill holes through the template.
4. Remove the mounting template.
5. Mount the controller.
6. Leave the protective debris strip in place until you are finished wiring the controller and any other devices

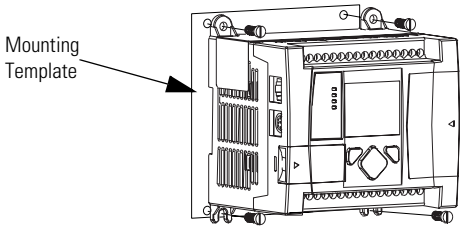

Using the Battery

The MicroLogix 1100 controller is equipped with a replaceable battery. The Battery Low indicator on the LCD display of the controller shows the status of the replaceable battery. When the battery is low, the indicator is set (displayed as a solid rectangle). This means that either the battery wire connector is disconnected, or the battery may fail within 2 days if it is connected.

IMPORTANT

The MicroLogix 1100 controller ships with the battery wire connector connected.

Ensure that the battery wire connector is inserted into the connector port if your application needs battery power. For example, when using a real-time clock (RTC), or to store the program in the controller's memory for an extended period of time while the power is removed.

Refer to the MicroLogix 1100 Programmable Controller User Manual, publication 1763-UM001, for more information on installation, handling, usage, storage, and disposal of the battery.

Follow these steps to connect the replaceable battery.

1. Insert the replaceable battery wire connector into the battery connector.
2. Secure the battery connector wires along the wire guide as shown below.

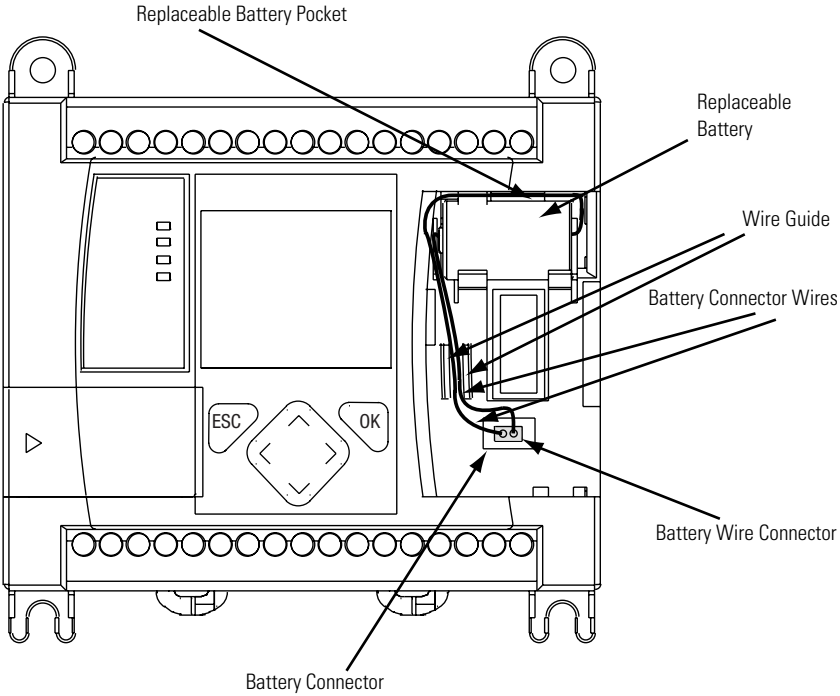

Connecting 1762 I/O Expansion Modules

ATTENTION

Remove power to the system before installing or removing expansion I/O or damage to the controller may result.

Connect 1762 I/O after mounting the controller.

1. Remove the expansion port cover to install expansion I/O modules.
2. Plug the ribbon cable connector into the bus connector.
3. Replace the cover as shown below.

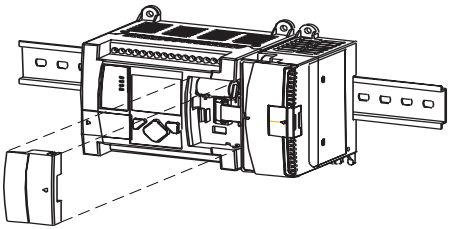

The MicroLogix 1100 controller is designed to support up to any four 1762 expansion I/O modules.

For detailed information on using expansion I/O, refer to the installation instructions for your expansion module.

Wiring the Controller

Terminal Block Layouts

TIP The shading in the following terminal block illustrations indicates which terminals are tied to which commons.

1763-L16AWA

Input Terminal Block

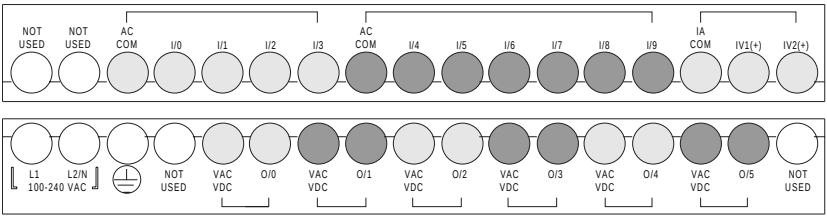

Output Terminal Block

1763-L16BWA

Input Terminal Block

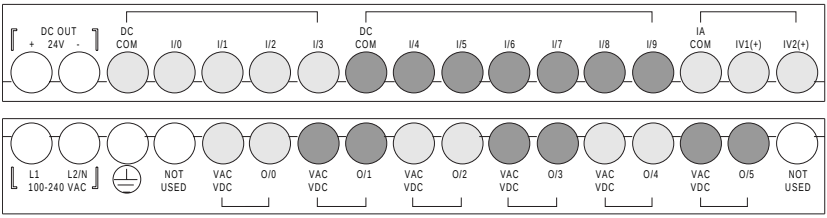

Output Terminal Block

1763-L16BBB

Input Terminal Block

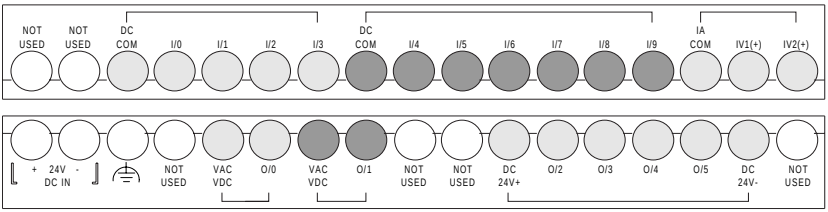

Output Terminal Block

1763-L16DWD

Input Terminal Block

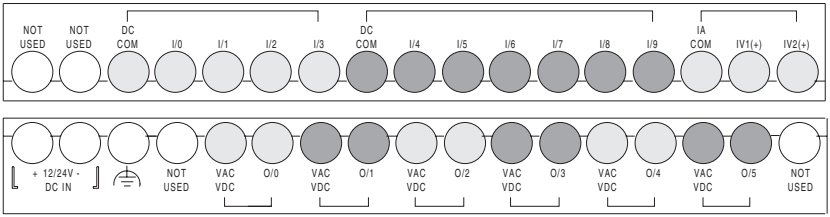

Output Terminal Block

Wire Requirements

Wire Type		Wire Size (2 wire maximum per terminal)	
		1 wire per terminal	**2 wire per terminal**
Solid	Cu-90 °C (194 °F)	12...20 AWG	16...20 AWG
Stranded	Cu-90 °C (194 °F)	14...20 AWG	18...20 AWG

Wiring torque = 0.56 Nm (5.0 in-lb) rated.

ATTENTION

Be careful when stripping wires. Wire fragments that fall into the controller could cause damage. Once wiring is complete, be sure the controller is free of all metal fragments before removing the protective debris strip. Failure to remove the strip before operating can cause overheating.

Wiring Recommendation

The MicroLogix 1100 controllers have screw-cage clamps on the input and output terminal blocks. With screw-cage clamp terminal blocks, there is no need to attach additional hardware such as a spade lug to the wire, or use a finger-safe cover.

Follow these steps to wire the terminal block.

1. Strip the end of the wire.

   The recommended length for the stripped end of the wire is 11.0 mm (0.440 in.).

2. Insert it into an open clamp.

3. Using a small, flat-blade screwdriver, tighten the terminal screw. To ensure that the wire conductor is secured inside the clamp, tighten it to the rated torque, 0.56 Nm (5.0 in-lb).

   The diameter of the terminal screw head is 5.5 mm (0.220 in.).

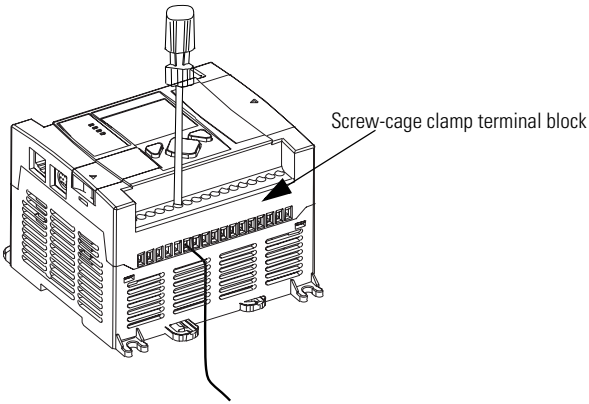

Surge Suppression

ATTENTION

Inductive load devices such as motor starters and solenoids require the use of some type of surge suppression to protect the controller output. Switching inductive loads without surge suppression can significantly reduce the life of relay contacts or damage transistor outputs. By using suppression, you also reduce the effects of voltage transients caused by interrupting the current to that inductive device, and prevent electrical noise from radiating into system wiring. Refer to the MicroLogix 1100 Programmable Controller User Manual, publication 1763-UM001, for more information on surge suppression.

Grounding the Controller

In solid-state control systems, grounding and wire routing helps limit the effects of noise due to electromagnetic interference (EMI). Run the ground connection from the ground screw of the controller to the ground bus prior to connecting any devices. Use AWG #14 wire. For ac-powered controllers, this connection must be made for safety purposes.

ATTENTION

All devices connected to the RS-232/485 communication port must be referenced to controller ground, or be floating (not referenced to a potential other than ground). Failure to follow this procedure may result in property damage or personal injury.

- For the 1763-L16BWA controller:

  The COM of the sensor supply is also connected to chassis ground internally. The 24V dc sensor power source should not be used to power output circuits. It should only be used to power input devices.

- For 1763-L16BBB and 1763-L16DWD controllers:

  The VDC NEUT or common terminal of the power supply is also connected to chassis ground internally.

You must also provide an acceptable grounding path for each device in your application. For more information on proper grounding guidelines, refer to the Industrial Automation Wiring and Grounding Guidelines, publication 1770-4.1.

Wiring Your Analog Channels

Analog input circuits can monitor voltage signals and convert them to serial digital data.

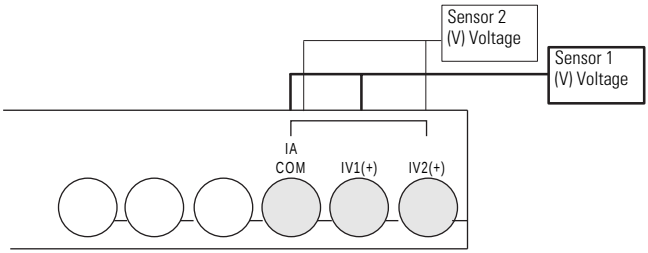

The controller does not provide loop power for analog inputs. Use a power supply that matches the transmitter specifications as shown below.

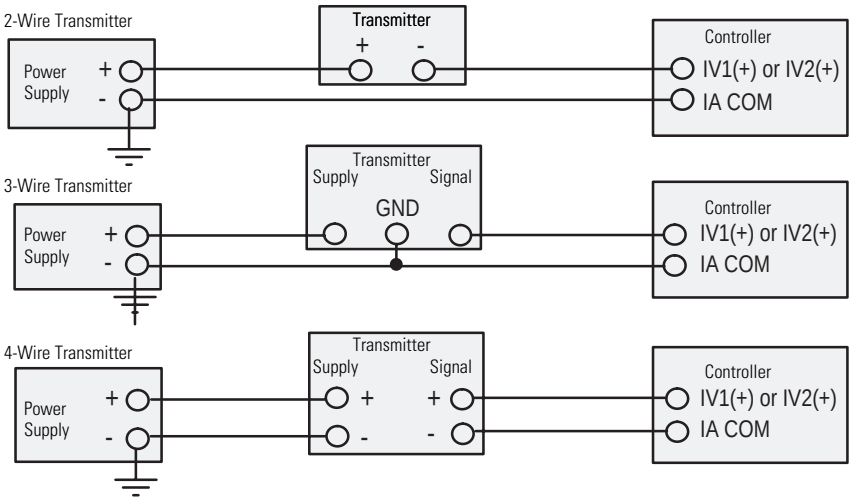

Minimizing Electrical Noise on Analog Channels

Inputs on analog channels employ digital high-frequency filters that significantly reduce the effects of electrical noise on input signals. However, because of the variety of applications and environments where analog controllers are installed and operated, it is impossible to ensure that all environmental noise will be removed by the input filters.

Several specific steps can be taken to help reduce the effects of environmental noise on analog signals:

- install the MicroLogix 1100 system in a properly rated (NEMA) enclosure. Make sure that the MicroLogix 1100 system is properly grounded.
- use Belden cable #8761 for wiring the analog channels, making sure that the drain wire and foil shield are properly earth grounded.
- route the Belden cable separately from any ac wiring. Additional noise immunity can be obtained by routing the cables in grounded conduit.

Grounding Your Analog Cable

Use shielded communication cable (Belden #8761). The Belden cable has two signal wires (black and clear), one drain wire, and a foil shield. The drain wire and foil shield must be grounded at one end of the cable.

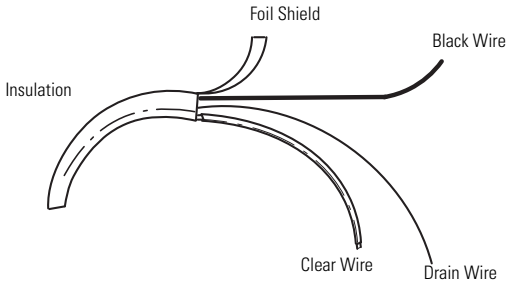

IMPORTANT Do not ground the drain wire and foil shield at both ends of the cable.

Specifications

General Specifications

Description	1763-			
	L16AWA	L16BWA	L16BBB	L16DWD
Dimensions	Height: 90 mm (3.5 in.), 104 mm (4.09 in.) (with DIN latch open) Width: 110 mm (4.33 in.), Depth: 87 mm (3.43 in.)			
Shipping Weight	0.9 kg (2.0 lbs)			
Number of I/O	12 inputs (10 digital and 2 analog) and 6 outputs			
Power Supply Voltage	100...240V ac (-15%, +10%) at 47...63 Hz		24V dc (-15%, +10%) Class 2 SELV	12V to 24V dc (-15%, +10%) Class 2 SELV
Heat Dissipation	Refer to the MicroLogix 1100 Programmable Controllers User Manual, Publication 1763-UM001.			
Power Supply Inrush Current	120V ac: 25 A for 8 ms 240V ac: 4 0A for 4 ms		24V dc: 15 A for 20 ms	
Power Consumption	46 VA	52 VA	35W	
24V dc Sensor Power	none	24V dc at 250 mA 400 µF max.	none	
Input Circuit Type	Digital: 120V ac Analog: 0...10V dc	Digital: 24V dc sink/source (standard and high-speed) Analog: 0...0V dc	Digital: 24V dc sink/source (standard and high-speed) Analog: 0...10V dc	Digital: 12/24V dc sink/source (standard and high-speed) Analog: 0...10V dc
Output Circuit Type	Relay	Relay	Relay/FET	Relay
Temperature, Operating	-20... +65 °C (-4 ...+149 °F)			
Temperature, Storage	-40...+85 °C (-40... +185 °F)			
Relative Humidity	5...95% non-condensing			
Vibration	Operating: 10... 500 Hz, 5 g, 0.015 in. max. peak-to-peak, 2 hours each axis Relay Operation: 1.5 g			
Shock, Operating	30 g; 3 pulses each direction, each axis Relay Operation: 10 g			
Shock, Nonoperating	50 g panel mounted (40 g DIN Rail mounted); 3 pulses each direction, each axis			

General Specifications

Description	1763-			
	L16AWA	L16BWA	L16BBB	L16DWD
Terminal Screw Torque	0.56 Nm (5.0 in-lb) rated			
Certifications	UL Listed Industrial Control Equipment for use in Class 1, Division 2, Hazardous Locations, Groups A, B, C, D			
	C-UL Listed Industrial Control Equipment for use in Canada			
	CE marked for all applicable directives			
	C-Tick marked for all applicable acts			
Electrical/EMC	The controller has passed testing at the following levels:			
ESD Immunity	EN 61000-4-2 4 kV contact, 8 kV air, 4 kV indirect			
Radiated RF Immunity	EN 61000-4-3 10V/m, 26 to 1000 MHz (alternatively, 80 to 1000 MHz), 80% amplitude modulation, +900 MHz keyed carrier			
Fast Transient Immunity	EN 61000-4-4 2 kV, 5 kHz communications cable such as EtherNet, RS-232, and RS-485: 1 kV, 5 kHz			
Surge Transient Immunity	EN 61000-4-5 Unshielded communications cable: 2 kV CM (common mode), 1 kV DM (differential mode) Shielded communications cable: 1 kV galvanic gun I/O: 2 kV CM (common mode), 1 kV DM (differential mode) ac Power Supply Input: 4 kV CM (common mode), 2 kV DM (differential mode) dc Power Supply Input: 500V CM (common mode), 500V DM (differential mode) ac/dc Auxiliary Output: 500V CM (common mode), 500V DM (differential mode)			
Conducted RF Immunity	EN 61000-4-6 10V, 150 kHz...80 MHz			
Conducted Emissions	EN 55011 ac Power Supply Input: 150 kHz...30 MHz			
Radiated Emissions	EN 55011 30...1000 MHz			
Line Related Tests	EN 61000-4-11 ac Power Supply Input: voltage drop: -30% for 10 ms, -60% for 100 ms voltage interrupt: at voltage greater than -95% for 5 secs. voltage fluctuation: +10% for 15 minutes, -10% for 15 minutes dc Power Supply Input: voltage fluctuation: +20% for 15 minutes, -20% for 15 minutes			

Input Specifications

Digital Inputs

Description	1763-L16AWA	1763-L16BWA, -L16BBB	
		Inputs 0 through 3 (4 high-speed dc inputs)	**Inputs 4 and higher (6 standard dc inputs)**
On-State Voltage Range	79 ...132V ac	14...24V dc (14...26.4V dc (+10%) at 65 °C/149 °F) (14...30V dc (+25%) at 30 °C/86 °F)	10...24V dc (10...26.4V dc (+10%) at 65 °C/149 °F) (10...30V dc (+25%) at 30 °C/86 °F)
Off-State Voltage Range	0...20V ac	0...5V dc	
Operating Frequency	47...63 Hz	0 Hz...20 kHz	0 Hz...1 kHz (scan time dependent)
On-State Current: • minimum • nominal • maximum	• 5.0 mA at 79V ac • 12 mA at 120V ac • 16.0 mA at 132V ac	• 2.5 mA at 14V dc • 8.8 mA at 24V dc • 12.0 mA at 30V dc	• 2.0 mA at 10V dc • 8.5 mA at 24V dc • 12.0 mA at 30V dc
Off-State Leakage Current	2.5 mA max.	1.5 mA max.	
Nominal Impedance	12 kΩ at 50 Hz 10 kΩ at 60 Hz	3.1 kΩ	3.1 kΩ
Inrush Current (max.) at 120V ac	250 mA	Not Applicable	

Digital Input Specifications for 1763-L16DWD

Description	1763-L16DWD	
	Inputs 0 through 3 (4 high-speed dc inputs)	**Inputs 4 and higher (6 standard dc inputs)**
On-State Voltage Range	10...24V dc at 65 °C/149 °F) (10...30V dc at 30 °C/86 °F)	
Off-State Voltage Range	0...5V dc	
Operating Frequency	0 Hz...40 kHz[1]	0 Hz...1 kHz
On-State Current: • minimum • nominal • maximum	• 2.0 mA at 10V dc • 8.5 mA at 24V dc • 12.0 mA at 30V dc	
Off-State Leakage Current	1.5 mA max.	
Nominal Impedance	2.61 kΩ	3.1 kΩ
Maximum Inrush Current	Not Applicable	

(1) OS Series B FRN 4 or later.

Analog Inputs

Description	1763-L16AWA, -L16BWA, -L16BBB, -L16DWD
Voltage Input Range	0 ...10.0V dc - 1 LSB
Type of Data	10-bit unsigned integer
Input Coding (0 to 10.0V dc - 1 LSB)	0 ...+1,023
Voltage Input Impedance	210 kΩ
Input Resolution	10 bit
Non-linearity	±0.5% of full scale
Overall Accurarcy -20...+65 °C (-4...+149 °F)	±0.5% of full scale
Voltage Input Overvoltage Protection	10.5V dc
Field Wiring to Logic Isolation	Non-isolated with logic

Output Specifications For Hazardous Locations Applications (Class I, Division 2, Groups A, B, C, D)

General

Description		1763	
		-L16AWA, -L16BWA, -L16DWD	-L16BBB
Relay and FET Outputs			
Maximum Controlled Load		1080 VA	360 VA
Maximum Continuous Current:			
Current per Group Common		3A	3A
Current per Controller	at 150V max	18 A or total of per-point loads, whichever is less	
	at 240V max	18 A or total of per-point loads, whichever is less	
Relay Outputs			
Turn On Time/Turn Off Time		10 msec (maximum)[1]	
Load Current		10 mA (minimum)	

(1) Scan time dependent.

Relay Contact Ratings

Maximum Volts	Amperes		Amperes Continuous	Volt-Amperes	
	Make	Break		Make	Break
240V ac	7.5 A	0.75 A	3.0 A	1800 VA	180 VA
120V ac	15.0 A	1.5 A	3.0 A	1800 VA	180 VA
125V dc	0.22 A		1.0 A	28 VA	

Output Specifications For Ordinary (Non-Hazardous) Locations only

General

Description		1763	
		-L16AWA, -L16BWA, -L16DWD	-L16BBB
Relay and FET Outputs			
Maximum Controlled Load		1440 VA	720 VA
Maximum Continuous Current:			
Current per Group Common		5A	5A
Current per Controller	at 150V max	30 A or total of per-point loads, whichever is less	
	at 240V max	20 A or total of per-point loads, whichever is less	
Relay Outputs			
Turn On Time/Turn Off Time		10 msec (maximum)[1]	
Load Current		10 mA (minimum)	

(1) Scan time dependent.

Relay Contact Ratings

Maximum Volts	Amperes		Amperes Continuous	Volt-Amperes	
	Make	Break		Make	Break
240V ac	15.0 A	1.5 A	5.0 A[1]	3600 VA	360 VA
120V ac	30.0 A	3.0 A		3600 VA	360 VA
125V dc	0.22 A		1.0 A	28 VA	

(1) 3.0 A above 40 °C.

BBB FET Output Specifications

Description	General Operationl	High Speed Operation[1] (Output 2 and 3 Only)
Power Supply Voltage	24V dc (-15%, +10%)	
On-State Voltage Drop: • at maximum load current • at maximum surge current	 • 1V dc • 2.5V dc	 • Not Applicable • Not Applicable
Current Rating per Point • maximum load • minimum load • maximum leakage	 • See graphs below • 1.0 mA • 1.0 mA	 • 100 mA • 10 mA • 1.0 mA
Maximum Output Current (temperature dependent):		

FET Current per Point
(1763-L16BBB)

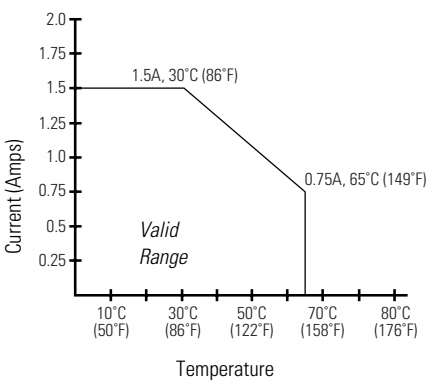

FET Total Current
(1763-L16BBB)

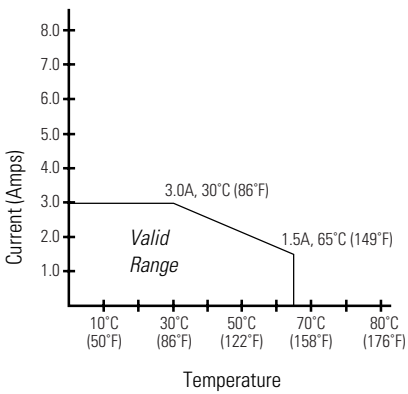

Surge Current per Point: • peak current • maximum surge duration • maximum rate of repetition at 30 °C (86 °F) • maximum rate of repetition at 65 °C (149 °F)	 • 4.0 A • 10 ms • once every second • once every 2 seconds	 • Not Applicable • Not Applicable • Not Applicable • Not Applicable

BBB FET Output Specifications

Description	General Operationl	High Speed Operation[1] (Output 2 and 3 Only)
Turn-On Time (maximum)	0.1 ms	6 µs
Turn-Off Time (maximum)	1.0 ms	18 µs
Repeatability (maximum)	Not Applicable	2 µs
Drift (maximum)	Not Applicable	1 µs per 5 °C (9 °F)

(1) Output 2 and 3 are designed to provide increased functionality over the other FET outputs. Output 2 and 3 may be used like the other FET transistor outputs, but in addition, within a limited current range, they may be operated at a higher speed. Output 2 and 3 also provide a pulse train output (PTO) or pulse width modulation output (PWM) function.

Working Voltage

Working Voltage (1763-L16AWA)

Description	1763-L16AWA
Power Supply Input to Backplane Isolation	Verified by one of the following dielectric tests: 1836V ac for 1 second or 2596V dc for 1 second
	265V ac Working Voltage (IEC Class 2 reinforced insulation)
Input Group to Backplane Isolation	Verified by one of the following dielectric tests:1517V ac for 1 second or 2145V dc for 1 second
	132V ac Working Voltage (IEC Class 2 reinforced insulation)
Input Group to Input Group Isolation	Verified by one of the following dielectric tests:1517V ac for 1 second or 2145V dc for 1 second
	132V ac Working Voltage (basic insulation)
Output Group to Backplane Isolation	Verified by one of the following dielectric tests: 1836V ac for 1 second or 2596V dc for 1 second
	265V ac Working Voltage (IEC Class 2 reinforced insulation)
Output Group to Output Group Isolation	Verified by one of the following dielectric tests: 1836V ac for 1 second or 2596V dc for 1second
	265V ac Working Voltage (basic insulation), 150V ac Working Voltage (IEC Class 2 reinforced insulation)

Working Voltage (1763-L16BWA)

Description	1763-L16BWA
Power Supply Input to Backplane Isolation	Verified by one of the following dielectric tests:1836V ac for 1 second or 2596V dc for 1 second
	265V ac Working Voltage (IEC Class 2 reinforced insulation)
Input Group to Backplane Isolation and Input Group to Input Group Isolation	Verified by one of the following dielectric tests: 1100V ac for 1 second or 1697V dc for 1 second
	75V dc Working Voltage (IEC Class 2 reinforced insulation)
Output Group to Backplane Isolation	Verified by one of the following dielectric tests: 1836V ac for 1 second or 2596V dc for 1 second
	265V ac Working Voltage (IEC Class 2 reinforced insulation).
Output Group to Output Group Isolation	Verified by one of the following dielectric tests: 1836V ac for 1 second or 2596V dc for 1 second
	265V ac Working Voltage (basic insulation) 150V Working Voltage (IEC Class 2 reinforced insulation)

Working Voltage (1763-L16BBB)

Description	1763-L16BBB
Input Group to Backplane Isolation and Input Group to Input Group Isolation	Verified by one of the following dielectric tests: 1100V ac for 1 second or 1697V dc for 1 second
	75V dc Working Voltage (IEC Class 2 reinforced insulation)
FET Output Group to Backplane Isolation	Verified by one of the following dielectric tests: 1100V ac for 1 second or 1697V dc for 1 second
	75V dc Working Voltage (IEC Class 2 reinforced insulation)
Relay Output Group to Backplane Isolation	Verified by one of the following dielectric tests: 1836V ac for 1 second or 2596V dc for 1 second
	265V ac Working Voltage (IEC Class 2 reinforced insulation)
Relay Output Group to Relay Output Group and FET Output Group Isolation	Verified by one of the following dielectric tests: 1836V ac for 1 second or 2596V dc for 1 second
	265V ac Working Voltage (basic insulation), 150V Working Voltage (IEC Class 2 reinforced insulation)

Working Voltage (1763-L16DWD)

Description	1763-L16DWD
Input Group to Backplane Isolation and Input Group to Input Group Isolation	Verified by one of the following dielectric tests: 1200V ac for 1 second or 1697V dc for 1 second
	75V dc Working Voltage (IEC Class 2 reinforced insulation)
Output Group to Backplane Isolation	Verified by one of the following dielectric tests: 1836V ac for 1 second or 2596V dc for 1 second
	265V ac Working Voltage (IEC Class 2 reinforced insulation).
Output Group to Output Group Isolation	Verified by one of the following dielectric tests: 1836V ac for 1 second or 2596V dc for 1 second
	265V ac Working Voltage (basic insulation) 150V Working Voltage (IEC Class 2 reinforced insulation)

Notes:

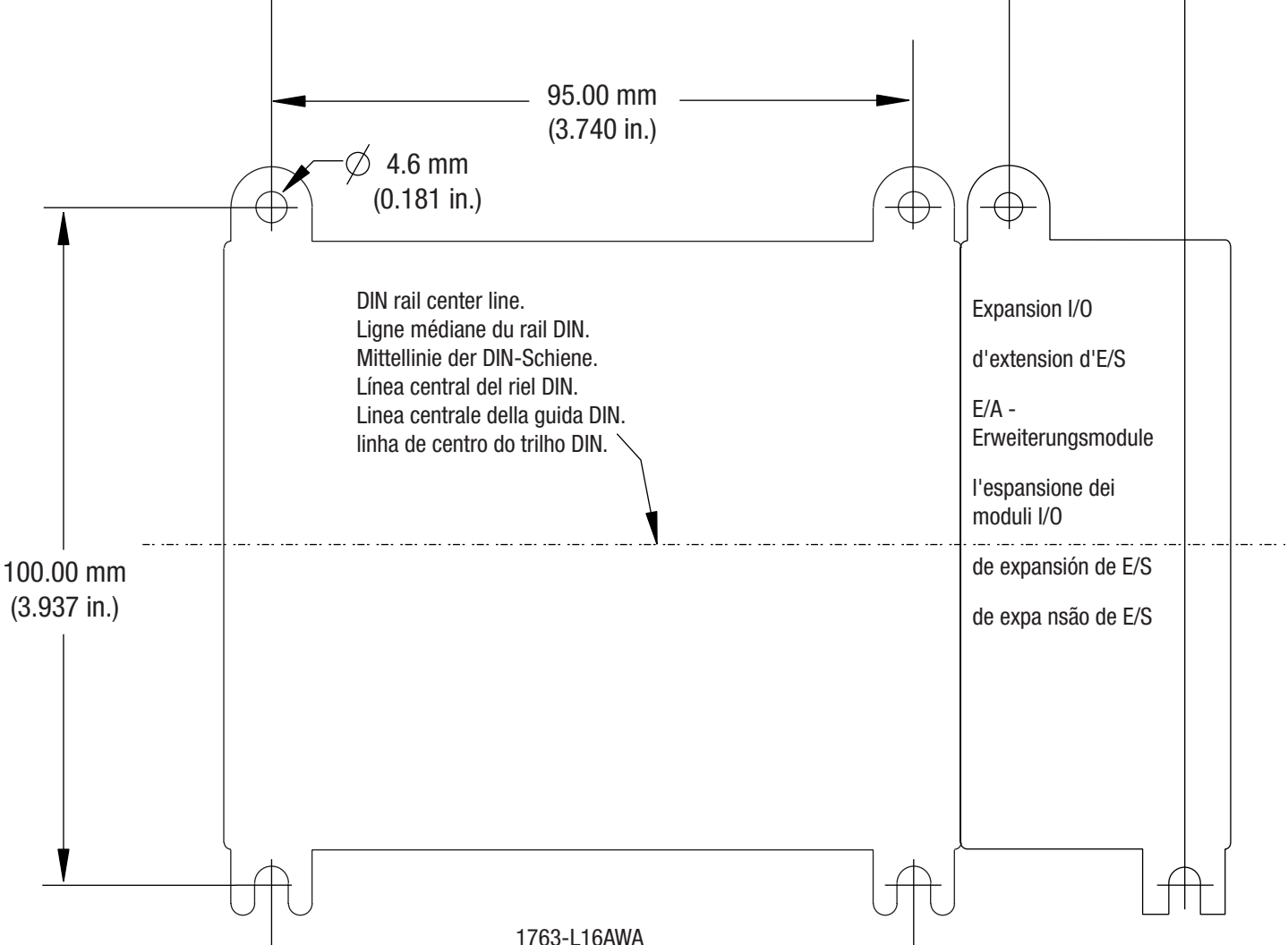
95.00 mm
(3.740 in.)
∅ 4.6 mm
(0.181 in.)
DIN rail center line.
Ligne médiane du rail DIN.
Mittellinie der DIN-Schiene.
Línea central del riel DIN.
Linea centrale della guida DIN.
linha de centro do trilho DIN.
Expansion I/O
d'extension d'E/S
E/A -
Erweiterungsmodule
l'espansione dei
moduli I/O
de expansión de E/S
de expa nsão de E/S
100.00 mm
(3.937 in.)
1763-L16AWA

IP:
S/MASK:
G/WAY:

INPUTS	
0	
1	
2	
3	
4	
5	
6	
7	
8	
9	
10	
11	

OUTPUTS	
0	
1	
2	
3	
4	
5	
6	
7	
8	
9	
10	
11	

IP:
S/MASK:
G/WAY:

INPUTS	
0	
1	
2	
3	
4	
5	
6	
7	
8	
9	
10	
11	

OUTPUTS	
0	
1	
2	
3	
4	
5	
6	
7	
8	
9	
10	
11	

Rockwell Automation Support

Rockwell Automation provides technical information on the Web to assist you in using its products. At http://support.rockwellautomation.com, you can find technical manuals, a knowledge base of FAQs, technical and application notes, sample code and links to software service packs, and a MySupport feature that you can customize to make the best use of these tools.

For an additional level of technical phone support for installation, configuration and troubleshooting, we offer TechConnect support programs. For more information, contact your local distributor or Rockwell Automation representative, or visit http://support.rockwellautomation.com.

Installation Assistance

If you experience a problem with a hardware module within the first 24 hours of installation, please review the information that's contained in this manual. You can also contact a special Customer Support number for initial help in getting your module up and running:

United States	1.440.646.3434 Monday – Friday, 8am – 5pm EST
Outside United States	Please contact your local Rockwell Automation representative for any technical support issues.

New Product Satisfaction Return

Rockwell Automation tests all of its products to ensure that they are fully operational when shipped from the manufacturing facility. However, if your product is not functioning and needs to be returned, follow these procedures.

United States	Contact your distributor. You must provide a Customer Support case number (see phone number above to obtain one) to your distributor in order to complete the return process.
Outside United States	Please contact your local Rockwell Automation representative for return procedure.

Allen-Bradley, Rockwell Automation, MicroLogix, and TechConnect are trademarks of Rockwell Automation, Inc.

Trademarks not belonging to Rockwell Automation are property of their respective companies.

www.rockwellautomation.com

Power, Control and Information Solutions Headquarters

Americas: Rockwell Automation, 1201 South Second Street, Milwaukee, WI 53204-2496 USA, Tel: (1) 414.382.2000, Fax: (1) 414.382.4444
Europe/Middle East/Africa: Rockwell Automation, Vorstlaan/Boulevard du Souverain 36, 1170 Brussels, Belgium, Tel: (32) 2 663 0600, Fax: (32) 2 663 0640
Asia Pacific: Rockwell Automation, Level 14, Core F, Cyberport 3, 100 Cyberport Road, Hong Kong, Tel: (852) 2887 4788, Fax: (852) 2508 1846

Publication 1763-IN001B-EN-P - September 2007 PN 40071-185-01(4)

Supersedes Publication 1763-IN001A-EN-P - May 2005

Copyright © 2007 Rockwell Automation, Inc. All rights reserved. Printed in Singapore.

Product Information

Allen-Bradley

2711P and 2711PC PanelView Plus Terminals

IMPORTANT This document contains important information related to agency certifications for the PanelView Plus terminals. The product is marked with all agency approvals and certifications.

This document is **not intended for installing, configuring, or operating these products**. Do not install these products until you have first read this document and the appropriate documents under Additional Resources. For product information, use these resources:

- To view or download product publications, go to http://www.rockwellautomation.com/literature and search documents under Operator Interface.
- To order paper copies of technical documentation, contact your local Rockwell Automation distributor or sales representative.
- For declarations of conformity, certificates, and other certification details, visit the Product Certifications page at http://www.ab.com.

Important User Information

Solid-state equipment has operational characteristics that differ from electromechanical equipment. Safety Guidelines for the Application, Installation, and Maintenance of Solid State Controls, publication SGI-1.1, available from your local Rockwell Automation sales office or online at http://www.rockwellautomation.com/literature, describes important differences between solid-state equipment and hard-wired electromechanical devices. Because of these differences and the wide variety of uses for solid-state equipment, all persons responsible for applying this equipment must satisfy themselves that each intended application of this equipment is acceptable.

In no event will Rockwell Automation, Inc. be responsible or liable for indirect or consequential damages resulting from the use or application of this equipment.

This document uses these symbols to make you aware of safety considerations.

WARNING: Identifies information about practices or circumstances that can cause an explosion in a hazardous environment, which may lead to personal injury or death, property damage, or economic loss.

ATTENTION: Identifies information about practices or circumstances that can lead to personal injury or death, property damage, or economic loss. Attention statements help you identify a hazard, avoid a hazard, and recognize the consequences.

Additional Resources

Resource
PanelView Plus 700 to 1500 Terminals User Manual, publication 2711P-UM006 supports FactoryTalk View Machine Edition software, version 6.0 or later Cat. Nos. 2711P-*xxxx*8, 2711P-*xxxx*9
PanelView Plus 700 to 1500 Terminals Installation Instructions, publication 2711P-IN029 supports FactoryTalk View Machine Edition software, version 6.0 or later Cat. Nos. 2711P-*xxxx*8, 2711P-*xxxx*9, 2711P-RP8*x*, 2711P-RP9*x*, 2711P-RD*xx*
PanelView Plus Terminals User Manual, publication 2711P-UM001 supports FactoryTalk View Machine Edition software, version 5.1 or earlier Cat. Nos. 2711P-x4xxx, 2711P-x6xxx, 2711P-xxxx1, 2711P-xxxx2, 2711P-xxxx6, 2711P-xxxx7
PanelView Plus Compact Terminals User Manual, publication 2711PC-UM001 supports FactoryTalk View Machine Edition software, version 5.1 or later Cat. Nos. 2711PC-x4xxx, 2711PC-x6xxx, 2711PC-x10xxx
PanelView Plus 700 to 1500, PanelView Plus Compact 1000 Terminals and Display Modules Installation Instructions, publication 2711P-IN001 FactoryTalk View Machine Edition software, version 5.1 or earlier - Cat. Nos. 2711P-xxxx1, 2711P-xxxx2, 2711P-xxxx6, 2711P-xxxx7, 2711PC-x10xxx
PanelView Plus and PanelView Plus Compact 400 and 600 Installation Instructions, publication 2711P-IN002 supports FactoryTalk View Machine Edition software, version 5.1 or earlier - Cat. Nos. 2711P-x4xxx, 2711P-x6xxx, 2711PC-x4xxx, 2711PC-x6xxx
Wiring and Grounding Guidelines for PanelView Plus Terminals Technical Data, publication 2711P-TD001
Industrial Automation Wiring and Grounding Guidelines, publication 1770-4.1

Product Ratings

Attribute	Value
Temperature, operating	0…55 °C (32…131 °F)
Enclosure rating	NEMA Type 12, 13, 4X (indoor only) and IEC IP54, IP65 only when terminal is mounted in an enclosure with equivalent rating
Mounting torque 700 to 1500 panel installation	0.09…1.1 N•m (8…10 lb•in)

Wiring Specifications

Power Wiring

Terminal	Input Voltage(1)		Wire Type	Dual-wire Size(3) Min…Max	Single-wire Size Min…Max	Terminal Screw Torque
400 and 600	85…264V AC	18…30V DC	Cu 90 °C (194 °F)(2) stranded or solid	0.3…1.3 mm² 22…16 AWG	0.3… 2.1 mm² 22…14 AWG	AC/DC: 0.45…0.56 N•m (4…5 lb•in) DC: 0.45…0.56 N•m (4…5 lb•in)
700 to 1500, 3-terminal	85…264V AC	18…32V DC				AC: 0.56 N•m (5 lb•in) DC: 0.23…0.34 N•m (2…3 lb•in)
700 to 1500, 2-terminal	–	18…32V DC				DC: 0.56 N•m (5 lb•in)

(1) See label on product for power or current requirements.
(2) Minimum required insulation temperature rating.
(3) Two wire maximum per terminal.

Protective Earth/Functional Earth Wiring

Terminal	Input Voltage	Protective Earth	Functional Earth	Wire Type	Wire Size	Terminal Screw Torque
400 and 600	85…264V AC	⏚	–	Cu 90 °C (194 °F)(3) stranded or solid	2.1…3.3 mm² 14…12 AWG	0.45…0.56 N•m (4…5 lb•in)
700 to 1500 (1) (2)		⏚	–			0.56 N•m (5 lb•in)
			⏚ GND		2.1…5.3 mm² 14…10 AWG	1.13…1.36 N•m (10…12 lb•in)
400 to 600	18…30V DC	–	⏚	Cu 90 °C (194 °F) (3) stranded or solid	2.1…3.3 mm² 14…12 AWG	0.45…0.56 N•m (4…5 lb•in)
700 to 1500 (2)	18…32V DC	–	⏚ GND		2.1…5.3 mm² 14…10 AWG	1.13…1.36 N•m (10…12 lb•in)

(1) 700 to 1500 terminals with an AC power input, require to connect both the protective earth and functional earth to ground.
(2) The functional earth connection is on the back of the display.
(3) Minimum required insulation temperature rating.

North American Hazardous Location Approval

The following information applies when operating this equipment in hazardous locations.	**Les informations suivantes s'appliquent pour les équipements utilisés dans des environnements dangereux.**
When marked, these products are suitable for use in Class I, Division 2, Groups A, B, C, D; Class I, Zone 2, Group IIC, Class II, Division II, Groups F, G; Class III hazardous locations and nonhazardous locations only. Each product is supplied with markings on the rating nameplate indicating the hazardous location temperature code. When combining products within a system, the most adverse temperature code (lowest "T" number) may be used to help determine the overall temperature code of the system. Combinations of equipment in your system are subject to investigation by the local Authority Having Jurisdiction at the time of installation.	Les produits marqués "CL I, DIV 2, GP A, B, C, D" ne conviennent qu'à une utilisation en environnements de Classe I Division 2 Groupes A, B, C, D dangereux et non dangereux. Chaque produit est livré avec des marquages sur sa plaque d'identification qui indiquent le code de température pour les environnements dangereux. Lorsque plusieurs produits sont combinés dans un système, le code de température le plus défavorable (code de température le plus faible) peut être utilisé pour déterminer le code de température global du système. Les combinaisons d'équipements dans le système sont sujettes à inspection par les autorités locales qualifiées au moment de l'installation.
WARNING: EXPLOSION HAZARD • Do not disconnect equipment unless power has been removed or the area is known to be nonhazardous. • Do not disconnect connections to this equipment unless power has been removed or the area is known to be nonhazardous. • Substitution of components may impair suitability for Class I, Division 2. • Peripheral equipment must be suitable for the location in which it is used. • The battery or real-time clock module in this product must only be changed in an area known to be nonhazardous. • All wiring must be in accordance with Class I, Division 2, Class II, Division 2, or Class III, Division 2 wiring methods of Articles 501, 502 or 503, as appropriate, of the National Electrical Code and/or in accordance with Section 18-1J2 of the Canadian Electrical Code, and in accordance with the authority having jurisdiction.	**AVERTISSEMENT :** RISQUE D'EXPLOSION • Couper le courant ou s'assurer que l'environnement est classé non dangereux avant de débrancher l'équipement. • Couper le courant ou s'assurer que l'environnement est classé non dangereux avant de débrancher les connecteurs. • La substitution de composants peut rendre cet équipement inadapté à une utilisation en environnement de Classe I, Division 2 • Les équipements périphériques doivent s'adapter à l'environnement dans lequel ils sont utilisés. • La batterie ou le module de l'horloge en temps réel de ce produit doit être changé(e) uniquement dans un environnement classé sans risque. • Tous les systèmes de câblage doivent être de Classe I, Division 2, Classe II, Division 2, ou Classe III, Division 2, conformément aux méthodes de câblage indiquées dans les Articles 501, 502 ou 503 du National Electrical Code (Code Electrique National) et/ou conformément à la Section 18-1J2 du Canadian Electrical Code (Code Electrique Canadien), et en fonction de l'autorité de jurisdiction.

Environment and Enclosure Information

ATTENTION:

This equipment is intended for use in a Pollution Degree 2 industrial environment, in overvoltage Category II applications (as defined in IEC 60664-1), at altitudes up to 2000 m (6561 ft) without derating.

The terminals are intended for use with programmable logic controllers. Terminals that are AC powered must be connected to the secondary of an isolating transformer. Terminals that are DC Class 2 powered may be supplied from an isolated DC source when used with the indicated fuse kit.

This equipment is considered Group 1, Class A industrial equipment according to IEC CISPR 11. Without appropriate precautions, there may be difficulties ensuring electromagnetic compatibility in residential and other environments due to conducted or radiated disturbances.

This equipment is supplied as open-type equipment. It must be mounted within an enclosure that is suitably designed for those specific environmental conditions that will be present and appropriately designed to prevent personal injury resulting from accessibility to live parts. The interior of the enclosure must be accessible only by the use of a tool. The terminals meet specified NEMA Type and IEC ratings only when mounted in a panel or enclosure with the equivalent rating. Subsequent sections of this publication may contain additional information regarding specific enclosure type ratings that are required to comply with certain product safety certifications.

In addition to this publication, see:
- Industrial Automation Wiring and Grounding Guidelines, publication 1770-4.1, for additional installation requirements.
- NEMA Standards 250 and IEC 60529, as applicable, for explanations of the degrees of protection provided by different types of enclosure.

USB Ports

The PanelView Plus terminals contain universal serial bus (USB) ports that comply with hazardous location requirements. The PanelView Plus 700 to 1500 terminals have two USB host ports; the PanelView Plus 400 and 600 terminals have one USB host port. Field-wiring compliance requirements are provided in compliance with the National Electric Code, Article 500.

Figure 1 - PanelView Plus Terminals Control Drawing - Associated Nonincendive Field-wiring Apparatus

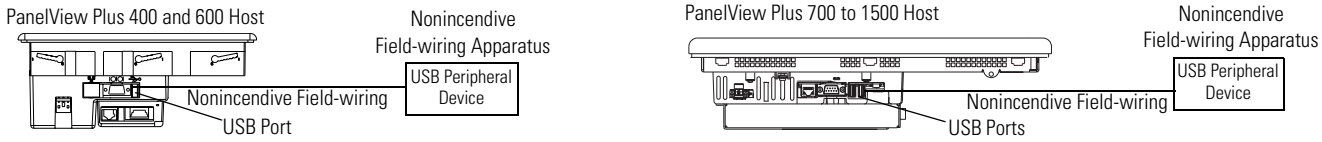

Table 1 - PanelView Plus USB Port Circuit Parameters

PanelView Plus Terminal Type	V_{oc}	I_{sc}	C_a		L_a	
			Groups A and B	Groups C and D	Groups A and B	Groups C and D
PanelView Plus 400 and 600, Series A and B	5.25V DC	1.68 A	10 µF	10 µF	15 µH	15 µH
PanelView Plus 400 and 600, Series C or later	5.25V DC	1.68 A	10 µF	10 µF	3.5 µH	15 µH
PanelView Plus 700 to 1500	5.25V DC	1.68 A	10 µF	10 µF	15 µH	15 µH

Selected nonincendive field wiring apparatus must have nonincendive circuit parameters conforming with Table 2.

Table 2 - Required Circuit Parameters for the USB Peripheral Device

V_{max}	≥	V_{oc}	$C_i + C_{cable}$	≤	C_a
I_{max}	≥	I_{sc}	$L_i + L_{cable}$	≤	L_a

Application Information

The circuit parameters of the PanelView Plus 700 to 1500 USB port are given in Table 1. The USB peripheral device and its associated cabling shall have circuit parameters with the limits given in Table 2 for them to remain nonincendive when used with the PanelView Plus 700 to 1500 USB port. If cable capacitance and inductance are not known, the following values from ANSI/ISA-RP 12.06.01-2003 may be used:

C_{cable} = 197 pF/m (60 pF/ft)
L_{cable} = 0.7 µH/m (0.20 µH/ft)

Nonincendive field wiring must be wired and separated in accordance with 501.10(B)(3) of the National Electrical Code (NEC) ANSI/NFPA 70 or other local codes as applicable. This associated nonincendive field-wiring apparatus has not been evaluated for use in combination with another associated nonincendive field-wiring apparatus.

Table 3 - Symbol Definitions

V_{oc}	Open circuit voltage of the host USB port.
I_{sc}	Maximum output current of the host USB port.
V_{max}	Maximum applied voltage rating of the USB peripheral device. V_{max} shall be greater than or equal to V_{oc} in Table 1 ($V_{max} \geq V_{oc}$).
I_{max}	Maximum current to which the USB peripheral device can be subjected. I_{max} shall be greater than or equal to I_{sc} in Table 1 ($I_{max} \geq I_{sc}$).
C_i	Maximum internal capacitance of the USB peripheral device.
C_a	Maximum allowed capacitance of the USB peripheral device and its associated cable. The sum of C_i of the USB peripheral device and C_{cable} of the associated cable shall be less than or equal to C_a ($C_i + C_{cable} \leq C_a$).
L_i	Maximum internal inductance of the USB peripheral device.
L_a	Maximum allowed inductance of the USB peripheral device and its associated cable. The sum of L_i of the USB peripheral device and L_{cable} of the associated cable shall be less than or equal to L_a ($L_i + L_{cable} \leq L_a$).

Battery Removal

This product contains a sealed lithium battery. For the 700 to 1500 terminals, you may need to replace the battery during the life of the product. For the 400 and 600 terminals, the battery is permanently connected and should be removed only by trained professionals at the end of product life. At the end of its life, the battery in these products should be collected separately from any unsorted municipal waste. The collection and recycling of batteries helps protect the environment and contributes to the conservation of natural resources as valuable materials are recovered.

WARNING: There is a danger of explosion if the lithium battery or real-time clock module in these products is incorrectly replaced. Replace the battery only with the indicated type. Do not replace the battery or real-time clock module unless power has been removed and the area is known to be nonhazardous.

Do not dispose of the lithium battery or real-time clock module in a fire or incinerator. Dispose of the battery in accordance with local disposal regulations. For safety information on handling lithium batteries, including handling and disposal of leaking batteries, see Guidelines for Handling Lithium Batteries, publication AG-5.4.

PanelView Plus 700 to 1500 Terminals

Follow these steps to remove the battery from the 700 to 1500 terminals during or at the end of product life.

1. Disconnect power from the terminal.
2. Detach the communication module, if attached, from the logic module by removing the four screws.
3. Loosen the captive screws that attach the logic module to the display module.
4. Carefully lift the logic module away from the terminal and flip over to expose the circuit board.
5. Remove the battery by lifting up the side of the battery.
6. Insert the replacement battery, catalog number 2711P-RY2302.
7. Attach the logic module by aligning the two connectors on the bottom of the module with the connectors on the terminal.
8. Push down to firmly seat the logic module, then tighten the captive screws to a torque of 0.58 N•m (5…7 lb•in).
9. Attach the communication module (if used) and tighten the four screws to a torque of 0.58 N•m (5…7 lb•in).

PanelView Plus 400 and 600 Terminals

Follow these steps to remove the permanently connected battery from the 400 and 600 terminals at the end of product life.

1. Disconnect power from the terminal.
2. Detach the communication module, if attached, from the logic module by removing the three screws.
3. Unlatch the eight retaining tabs (two on each side) on the back cover and remove cover.
4. Locate the yellow battery on the logic board.
5. Remove the battery.

Allen-Bradley, PanelView Plus, Rockwell Software, and Rockwell Automation are trademarks of Rockwell Automation, Inc.

Trademarks not belonging to Rockwell Automation are property of their respective companies.

Rockwell Otomasyon Ticaret A.Ş., Kar Plaza İş Merkezi E Blok Kat:6 34752 İçerenköy, İstanbul, Tel: +90 (216) 5698400

www.rockwellautomation.com

Power, Control and Information Solutions Headquarters

Americas: Rockwell Automation, 1201 South Second Street, Milwaukee, WI 53204 USA, Tel: (1) 414.382.2000, Fax: (1) 414.382.4444
Europe/Middle East/Africa: Rockwell Automation, Vorstlaan/Boulevard du Souverain 36, 1170 Brussels, Belgium, Tel: (32) 2 663 0600, Fax: (32) 2 663 0640
Asia Pacific: Rockwell Automation, Level 14, Core F, Cyberport 3, 100 Cyberport Road, Hong Kong, Tel: (852) 2887 4788, Fax: (852) 2508 1846

Publication 2711P-PC001B-EN-P - August 2010 PN-77640
Supersedes Publication 2711P-PC001A-EN-P - June 2009
Copyright © 2010 Rockwell Automation, Inc. All rights reserved. Printed in the U.S.A.

Barksdale

Installation And Maintenance Instructions

HEAT TRACING TEMPERATURE SWITCH FOR ORDINARY AREAS

Model **TPR Series**
Remote sensing bulb and capillary type

Description

This short remote bulb and capillary type is used to sense the ambient media temperature for freeze protection applications.

Caution: Do not use this switch for hazardous environments. Sensing bulb and probe must not exceed specified proof temperatures.

Installation

Caution: This switch should be installed by a trained service person.

Switch Mounting: Switch may be mounted in any position.

Sensors: For heat tracing, install bulb toward the bottom of pipe or vessel, away from heat sinks and approximately 90° from the heat tracing cable. Always secure both bulb and capillary and wrap with proper insulating tape.

For ambient sensing, orient the probe for optimal ambient temperature sensing, away from heat sources or heat sinks.

Enclosure: Type NEMA 4X .
Enclosure temperature limits:
-30 °F to 140 °F (-34 °C to 60 °C).

Wiring

All electrical wiring must comply with local and national electrical codes.

Caution: Electrical rating must be within range stated on switch nameplate. Failure to stay within rating may result in damage to, or failure of electrical contacts.

Electrical Rating: 22A at 125, 250, 480 VAC.

Electrical Connection: Two #14 AWG wires 12 inches long.

Switch Number Coding

TPR-L1N-3X-Q10

- Q10: Insert "Q10" for HEAT TRACING TEMPERATURE SWITCH
- X: Insert "X" for NEMA 4X ENCLOSURE
- 3: CAPILLARY LENGTH: Insert "3" for 3 feet capillary length.
- N: SENSOR MATERIAL: Insert "N" for tin plated copper.
- 1: TEMPERATURE RANGE (See back)
- L: Insert "L" for LIMIT SWITCH CLASS
- TPR: SENSOR MOUNT TYPE: Insert "R" for remote bulb and capillary.

Testing of the Switch

Testing of the switch may be done before or after final installation. If bench tested, the switch should be re-tested when installed in the final application. Be sure switch can be tested without affecting other equipment. Check nameplates for electrical rating and circuitry (normally closed or normally open) of switch. Cycle switch a few times to check operation.

Set-Point Adjustment

Switch is factory set. Set-point is not user-adjustable. Switch contacts close at 40°±4°F on decreasing temperature set-point.

Agency Approvals

Underwriters Laboratories, Inc.
Temperature Indicating and Regulating Equipment File No. E56247, Guide No. XAPX.

Canadian Standards Association listed for Temperature Indicating and Regulating Equipment File No. LR34555, Guide No. 400-E-O, Class 4813.

Troubleshooting

Warning: Disconnect electrical power supply to switch before removal or inspection. Failure to observe this warning could result in serious injury or switch damage.

Important: The switch is not field-repairable. In case of damage, replace entire switch.

Causes of improper operation:

1. Incorrect electrical connection: check leads to switch. Be sure they are properly connected. See "Wiring" section for circuitry color code.
2. Faulty control circuit: check electrical power supply to switch. Check for loose or blown fuses, open-circuited or grounded wires, loose connections at switch.
3. Excessive vibration: check for temperature fluctuations in system. Check switch mounting and be sure there is no excessive vibration.

If the operation of the switch cannot be corrected by the above means, consult factory or authorized factory representative.

For service or ordering information

Consult factory or authorized factory representative. Specify full catalog number (with any optional modifications or factory set-point) as shown on part number code.

Warranty

All products of the company are sold and all services are offered subject to the company's standard conditions of sale.

TEMPERATURE RANGE

INSERT IN PART NO.	FIXED SET POINT	BULB SENSOR EXPOSURE LIMITS (PROOF)
1	40 °F (4.4 °C) DECREASING	-40 TO 160 °F (-40 TO 71 °C)

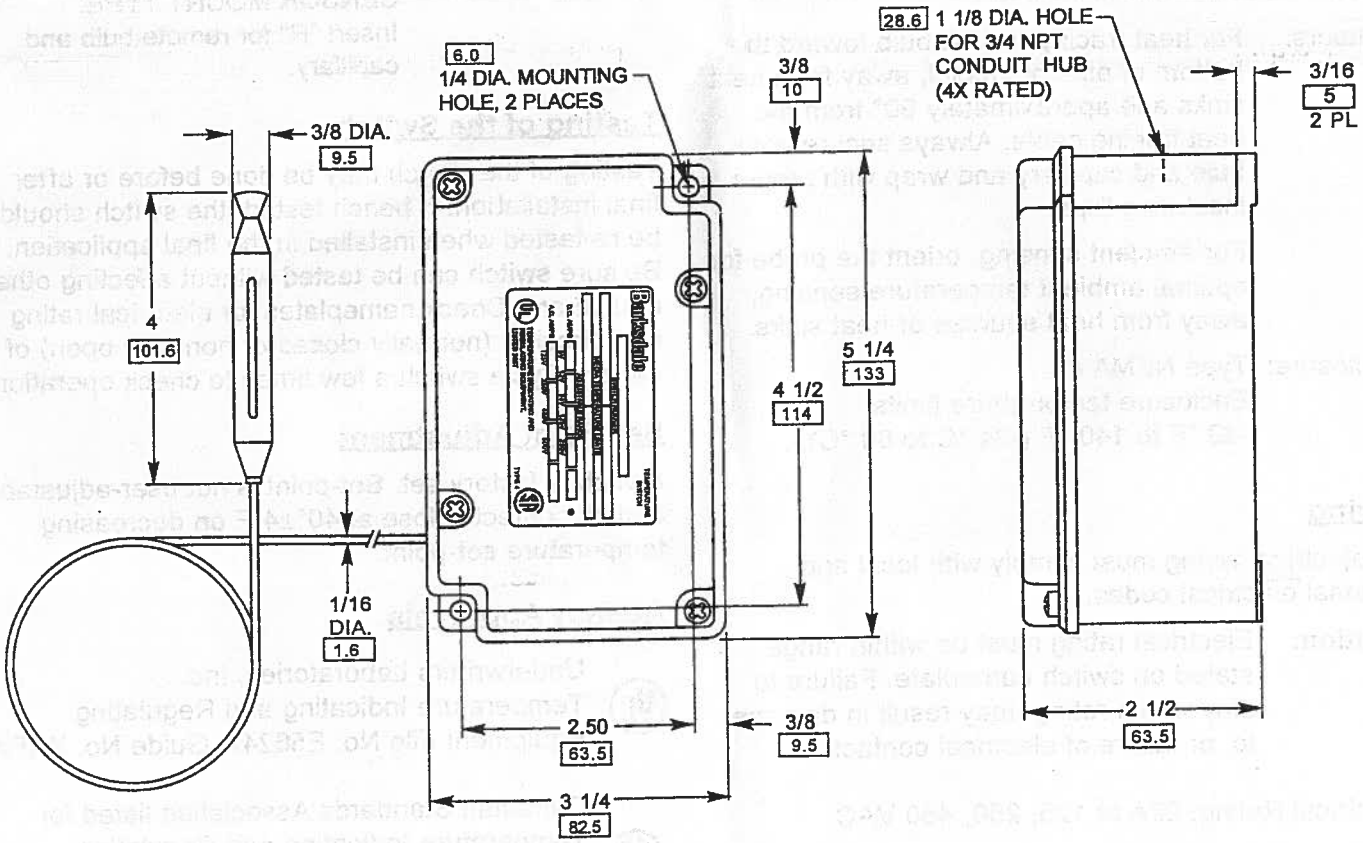

DIMENSIONS IN BOXES ARE IN MILLIMETERS

Installation Instructions

Installing the Thermostat

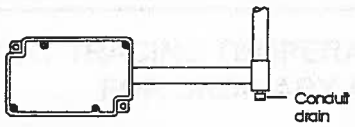

1. Verify that the thermostat is suitable for the area where it is to be installed.
2. Check the line voltage and the heat-tracing load to ensure that the thermostat ratings are not exceeded.
3. Mount the unit in a position that prevents condensation from draining into the enclosure from the connecting conduit, (see diagram at left).

Positioning (Ambient)

4. Mount ambient-sensing units in the area exposed to the coldest temperature and most wind. DO not mount on the side of a warm building or in a location that is exposed to warm air currents or direct sunlight.

Positioning the Sensor Bulb (Line Sensing)

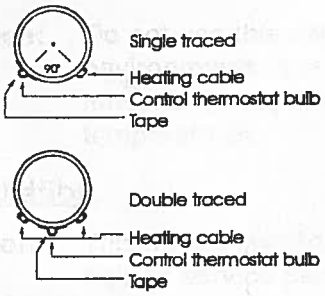

5. Position the bulb in the lower quadrant of the pipe as shown in the diagrams to the left. Place the bulb at least three feet from pipe supports, valves, or other heat sinks; protect the capillary from kinks or bends less than 1/2 inch in radius.
6. Tape the bulb firmly to the pipe with aluminum tape, making sure there is no air space between the bulb and pipe. Do not overlap the bulb and heating cable with the same piece of tape.

Wiring

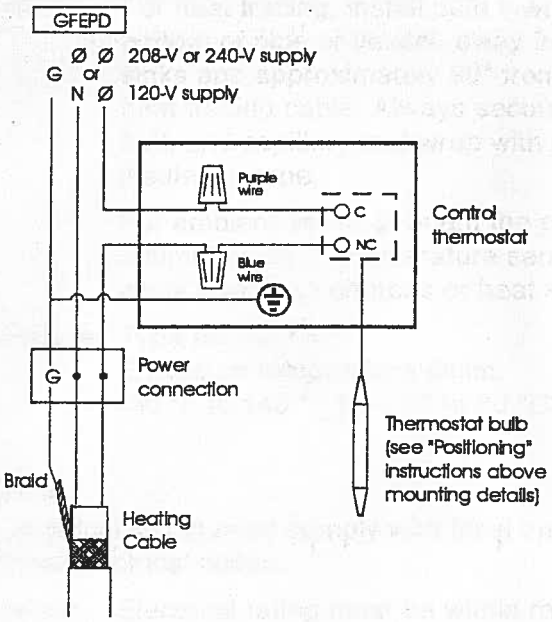

Figure 1. Heat-tracing control

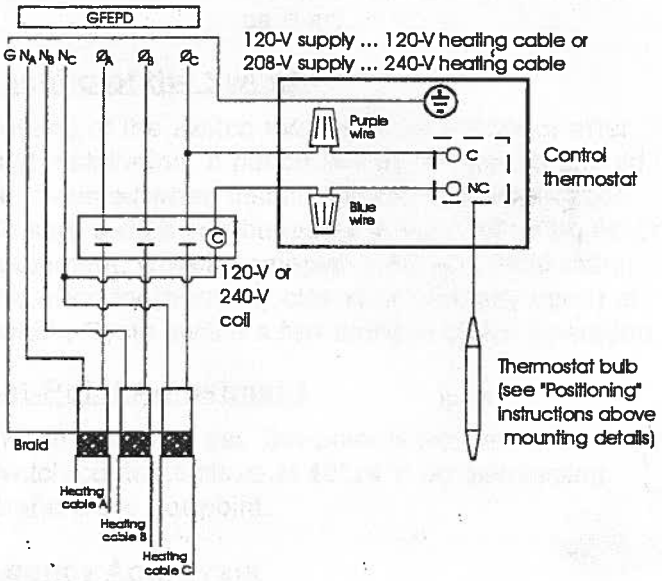

Figure 2. Contactor control

For switching heat-tracing loads greater than 22 A or switching multiple heat-tracing circuits.

***Important:** All information, including illustrations, is believed to be reliable. Users, however, should independently evaluate the suitability of each product for their particular application.*

EchoSpan

LU80-5101, LU8-5161,LU81-5101, LU81-5161, LU83-5101, LU83-5161, LU84-5101 & LU84-5161 Series

Revision A.1

Flowline Inc.
10500 Humbolt Street
Los Alamitos, CA 90720
Tel: (562) 598-3015
Fax: (562) 431-8507
www.flowline.com

Preface
This manual explains how to use the EchoSpan, LU81, LU83 and LU84 series transmitter.

Warranty, Service & Repair
To register your product with the manufacturer, go to the Flowline website for on-line registration. The website address is as follows:

www.flowline.com

On-line Warranty Registration can be found on the Flowline home page.

If for some reason your product must be returned for factory service, go to the Flowline website to receive a Material Return Authorization number (MRA), providing the following information:

1. Full Part Number, Full Serial Number
2. Name and telephone number of someone who can answer technical questions related to the product and its application.
3. Return Shipping Address
4. Brief Description of the Symptom
5. Brief Description of the Application

On-line Material Return Authorization can be found under Support in the Navigation Bar along the side of the home page. Click on *Return Authorization* to begin the MRA request. Once you have received a MRA number, ship the product prepaid in its original packing to:

Flowline Factory Service
MRA_____
10500 Humbolt Street
Los Alamitos, CA 90720

To avoid delays in processing your repair, write the MRA on the shipping label. Please include the information about the malfunction with your product. This information enables our service technicians to process your repair order as quickly as possible.

Warranty

Flowline warrants to the original purchaser of its products that such products will be free from defects in material and workmanship under normal use and service in accordance with instructions furnished by Flowline for a period, which is equal to the shorter of one year from the date of purchase of such products or two years from the date of manufacture of such products. Flowline's obligation under this warranty is solely and exclusively limited to the repair or replacement, at Flowline's option, of the products or components, which Flowline's examination determines to its satisfaction to be defective in material or workmanship within the warranty period. Flowline must be notified pursuant to the instructions below of any claim under this warranty within thirty (30) days of any claimed lack of conformity of the product. Any product repaired or replaced under this warranty will be warranted only for the remainder of the original warranty period.

Returns

Products cannot be returned to Flowline without Flowline's prior authorization. To return a product that is thought to be defective, go to www.flowline.com, and submit a customer return (MRA) request form and follow the instructions therein. All warranty and non-warranty product returns to Flowline must be shipped prepaid and insured. Flowline will not be responsible for any products lost or damaged in shipment.

Limitations

This warranty does not apply to products which: 1) are beyond the warranty period or are products for which the original purchaser does not follow the warranty procedures outlined above; 2) have been subjected to electrical, mechanical or chemical damage due to improper, accidental or negligent use; 3) have been modified or altered; 4) anyone other than service personnel authorized by Flowline have attempted to repair; 5) have been involved in accidents or natural disasters; or 6) are damaged during return shipment to Flowline. Flowline reserves the right to unilaterally waive this warranty and dispose of any product returned to Flowline where: 1) there is evidence of a potentially hazardous material present with the product; or 2) the product has remained unclaimed at Flowline for more than 30 days after Flowline has dutifully requested disposition. This warranty contains the sole express warranty made by Flowline in connection with its products. ALL IMPLIED WARRANTIES, INCLUDING WITHOUT LIMITATION, THE WARRANTIES OF MERCHANTABILITY AND FITNESS FOR A PARTICULAR PURPOSE, ARE EXPRESSLY DISCLAIMED. The remedies of repair or replacement as stated above are the exclusive remedies for the breach of this warranty. IN NO EVENT SHALL FLOWLINE BE LIABLE FOR ANY INCIDENTAL OR CONSEQUENTIAL DAMAGES OF ANY KIND INCLUDING PERSONAL OR REAL PROPERTY OR FOR INJURY TO ANY PERSON. THIS WARRANTY CONSTITUTES THE FINAL, COMPLETE AND EXCLUSIVE STATEMENT OF WARRANTY TERMS AND NO PERSON IS AUTHORIZED TO MAKE ANY OTHER WARRANTIES OR REPRESENTATIONS ON BEHALF OF FLOWLINE. This warranty will be interpreted pursuant to the laws of the State of California. If any portion of this warranty is held to be invalid or unenforceable for any reason, such finding will not invalidate any other provision of this warranty.

Introduction:

The EchoSpan is a general-purpose ultrasonic level transmitter that provides a loop powered 4-20 mA output. The 4-20 mA output can be used to provide the proportional level of liquid in any tank or vessel. The signal can be connected to any device that accepts a loop powered 4-20 mA signal, such as a PLC, SCADA, DCS, display, controller, etc.

New Features

- Simple configuration with push button configuration
- Adjustable Loop Fail-Safe, Hold Last, Empty, Full, 21 mA, 22 mA
- Easy to reverse mA output, 4-20 mA to 20-4 mA
- Increased output filtering

Table of Contents

Introduction 5
About this manual 5
Specifications 7
Dimensions 7
Wiring 8
To a Display, Controller & PLC 8
Getting Started 10
Feature Guide 11
Getting Around 11
How to enter the MENU 12
How to configure UNITS 12
How to configure the DISPLAY 13
How to configure the operational range (Height & Fill-H) 14
How to reverse the current output (Rev mA) 15
How to set the Fail-Safe (SAFE) settings 15
How to set Target Calibration (TG CAL) 16
Installation 17
Mounting Guide 17
Fitting Selection 18
Appendix 21
SETUP 21
Diagnostic (DIAG) parameters 21
Reset 21
Troubleshooting 22

About this Manual:

PLEASE READ THE ENTIRE MANUAL PRIOR TO INSTALLING OR USING THIS PRODUCT. This manual includes information on the EchoSpan series Ultrasonic Level Switch from FLOWLINE. Please refer to the part number located on the switch label to verify the exact model configuration, which you have purchased.

User's Responsibility for Safety:

FLOWLINE manufactures a broad range of level sensing technologies. While each of these sensors is designed to operate in a wide variety of applications, it is the user's responsibility to select a sensor model that is appropriate for the application, install it properly, perform tests of the installed system, and maintain all components. The failure to do so could result in property damage or serious injury.

Proper Installation and Handling:

Only professional staff should install and/or repair this product. Install the switch with the included Viton gasket and never over tighten the switch within the fitting. Always check for leaks prior to system start-up.

Wiring and Electrical:

A supply voltage of 12 to 28 VDC is used to power the EchoSpan. Electrical wiring of the transmitter should be performed in accordance with all applicable national, state, and local codes.

Material Compatibility:

The enclosure is made of Polycarbonate (PC). The transducer is made of Polyvinylidene Fluoride (PVDF). Make sure that the model, which you have selected, is chemically compatible with the application media.

Enclosure:

While the switch housing is liquid-resistant the EchoSpan is not designed to be operational when immersed. It should be mounted in such a way that the enclosure and transducer do not come into contact with the application media under normal operational conditions.

The enclosure has a flip cover with dual 1/2" NPT female conduit ports and an internal terminal strip for wiring. To open the enclosure, you will need a small insertion tool such as a screwdriver. Loosen the locking screw located at the top front of the enclosure. Rotate the hinged cover up for 135° access to the faceplate and terminal strips. Before closing the enclosure, make sure that the enclosure gasket is properly seated, and that any conduit fittings, cable connectors or plugs are installed correctly and sealed.

Handling Static-Sensitive Circuits/Devices:

When handling the transmitter, the technician should follow these guidelines to reduce any possible electrostatic charge build-up on the technician's body and the electronic part.

1. Always touch a known good ground source before handling the part. This should be repeated while handling the part and more frequently after sitting down from a standing position, sliding across the seat or walking a distance.
2. Avoid touching electrical terminals of the part unless making connections.
3. DO NOT open the unit cover until it is time to calibrate.

Make a Fail-Safe System:
Design a fail-safe system that accommodates the possibility of switch and/or power failure.
FLOWLINE recommends the use of redundant backup systems and alarms in addition to the primary system.

Flammable, Explosive or Hazardous Applications:

EchoSpan should not be used within classified hazardous environments.

Warning:

Always use the Viton gasket when installing the EchoSpan, and make sure that all electrical wiring of the switch is in accordance with applicable codes.

Components:

EchoSpan is offered in three different models. Depending on the model purchased, you may or may not have been shipped all the components shown below. You do however, need an EchoSpan and Viton® gasket to configure, install and operate EchoSpan.

- EchoSpan
  - LU80-5101 – 9.8’ (3 m) range, Type 4X encl., 1” NPT
  - LU80-5161 – 9.8’ (3 m) range, Type 4X encl., 1” G
  - LU81-5101 – 18.0’ (5.5 m) range, Type 4X encl., 2” NPT
  - LU81-5161 – 18.0’ (5.5 m) range, Type 4X encl., 2” G
  - LU83-5101 – 26.2’ (8 m) range, Type 4X encl., 2” NPT
  - LU83-5161 – 26.2’ (8 m) range, Type 4X encl., 2” G
  - LU84-5101 – 32.8’ (10 m) range, Type 4X encl., 2” NPT
  - LU84-5161 – 32.8’ (10 m) range, Type 4X encl., 2” G
- Viton Gasket
  - Part #220128 – for LU80 series only
  - Part #220129 – for LU81, LU83 and LU84 series
- Quick Start Guide

Specifications:

Range:	LU80: 4" to 9.8' (10 cm to 3m) LU81: 8" to 18.0' (20 cm to 5.5m) LU83: 8" to 26.4' (20 cm to 8m) LU84: 12" to 32.8' (30 cm to 10m)
Accuracy:	± 0.2% of range
Resolution:	LU80: 0.019" (0.5mm) LU81/83: 0.039" (1mm) LU84: 0.078" (2 mm)
Dead band:	LU80: 4" (10cm) LU81\83: 8" (20 cm) LU84: 12" (30 cm)
Beam width:	LU80: 2" (5cm) LU81/83/84" 3" (7.6 cm) dia.
Configuration:	Push button
Memory:	Non-volatile
Display type:	LCD, 6-digit
Display units:	Inch, cm, Feet, m or percent

Supply voltage:	12-28 VDC
Loop resistance:	500 Ohms @ 24 VDC
Signal output:	4-20 mA, two-wire
Signal invert:	4-20 mA / 20-4 mA
Signal fail-safe:	4mA, 20 mA, 21 mA, 22 mA, hold last
Process temp.:	F: -4° to 140° C: -20° to 60°
Temp. comp.:	Automatic
Ambient temp.:	F: -31° to 140° C: -35° to 60°
Pressure:	MWP = 30 PSI
Enclosure rating:	NEMA 4X (IP65)
Encl. material:	PC/ABS FR
Encl. hardware:	Brass and stainless
Enclosure vent:	Water tight membrane
Conduit entrance:	Dual, 1/2" NPT
Trans. material:	PVDF
Process mount:	LU80: 1" NPT/1" G LU81/83/84: 2" NPT/2" G
Mount. gasket:	Viton®
Classification:	General purpose
Compliance:	CE, RoHS

Dimensions:

Side View / LU80 Series

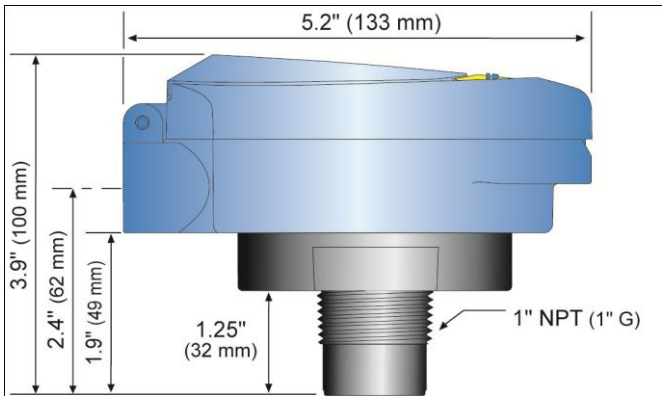

Side View / LU81, LU83 and LU84 Series

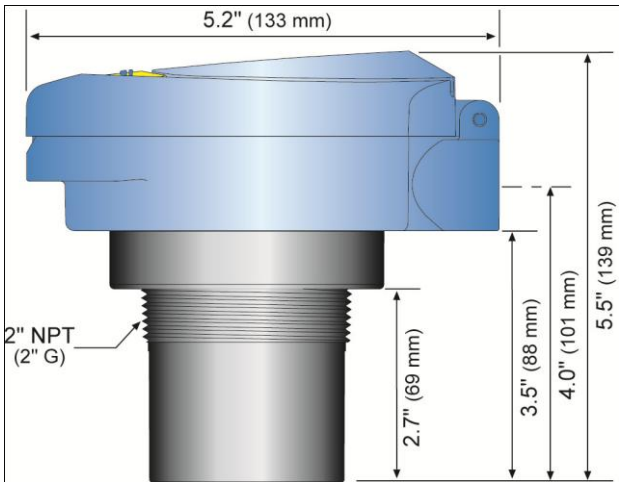

Wiring to Display, Controllers & PLC's

Below is a quick review of wiring the EchoSpan to common display, controllers and PLC's.

DataView LI55 Series
Level Controller

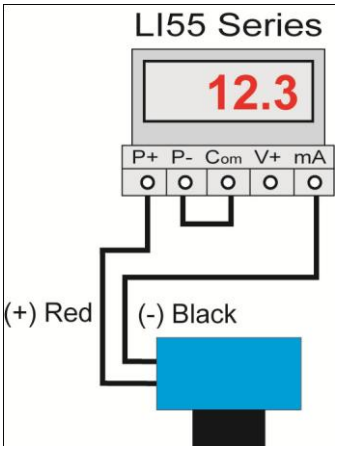

Commander LI90 Series
Multi-Tank Level Controller

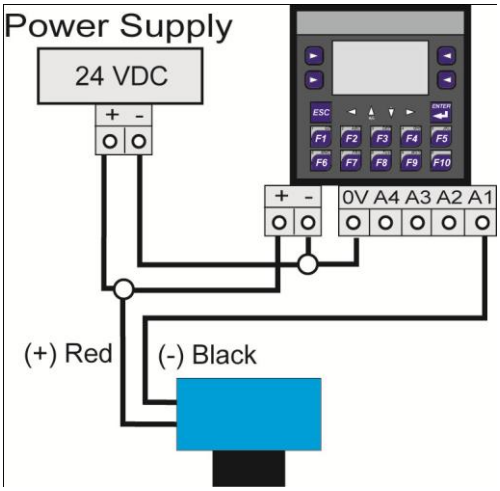

DataLoop LI25 Series
Level Indicator
without the backlight

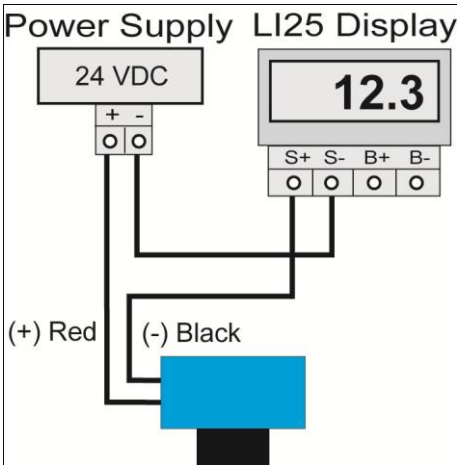

DataLoopLI25 Series
Level Indicator
with the backlight

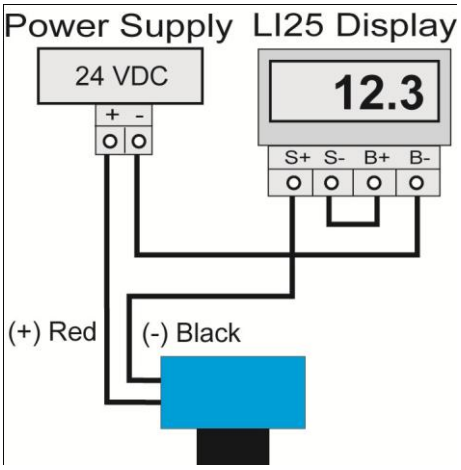

DataPoint LC52 Series
Level Controller
JWA mode (Factory Setting)

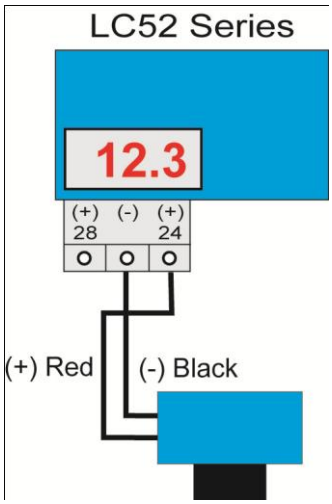

DataPoint LC52 Series
Level Controller
JWB mode

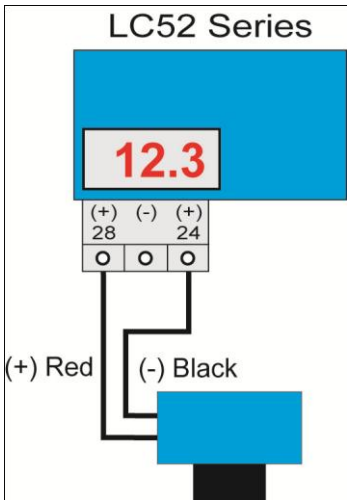

Generic Loop
Powered Display

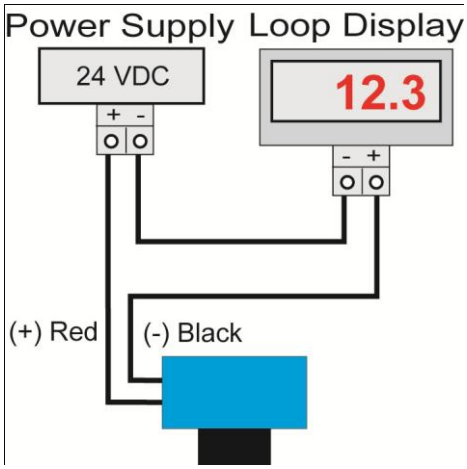

Generic PLC

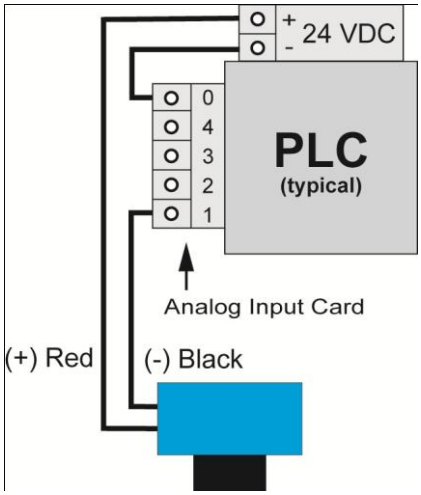

General notes for electrical connections, usage and safety:

- Where personal safety or significant property damage can occur due to a spill, the installation must have a redundant backup safety system installed.
- Wiring should always be completed by a licensed electrician.
- Supply voltage should never exceed 28 VDC.
- The sensor materials must be Chemically compatible with the liquids to be measured.
- Design a fail-safe system for possible sensor and/or power failure.
- Never use the sensor in environments classified as **Hazardous**.

Voltage Output

EchoSpan can be used as a 0 to 5 or 0 to 10 VDC output device. A resistor will need to be added to the circuit to enable a voltage output (refer to the wiring diagram below).

- 0-5 VDC output
  - Add a 250 Ohm resistor
  - Actual output will be 0.8 to 5 VDC
- 0-10 VDC output
  - Add a 500 Ohm resistor
  - Actual output will be 2 to 10 VDC

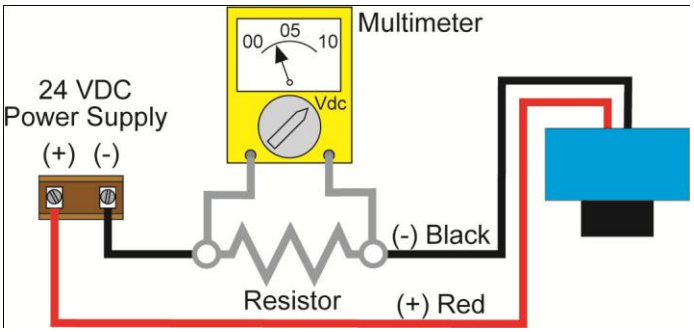

Getting Started:

EchoSpan can be configured before installation. The switch features non-volatile memory, so the set points configured before installation will not be lost when the switch is powered down. To start, all you need is the following information:

- Basic Tank Information:
  - ***HEIGHT*** – Distance from the transducer face to the bottom of the tank.
  - ***FILL-H*** – Maximum fill height of the liquid from the bottom of the tank.
  - These values will all be in the same distance value (inches, centimeters, feet or meters) and will all be measured from the bottom of the tank.
- Power:
  - Provide 12 to 28 VDC input power to the EchoSpan.

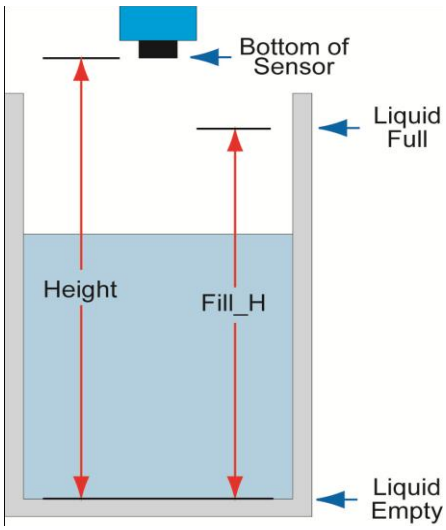

Feature Guide:

FEATURE	ACCESS BY
Easy to use **MENU**	Press and hold *SELECT* key until **MENU** is displayed approximately 5 seconds. The **MENU** items will rotate through display, press *SELECT* to change an item.
Many **UNITS** of measurement.	In the **MENU** mode, press *SELECT* when **UNITS** is display, then select ***INCHES***, ***CM*** (centimeter), ***FEET***, ***METERS*** or ***PERCENT***.
No cumbersome measure required. Set point distances are relative to the tank bottom.	In **MENU** mode, select the **TANK** item and set the ***HEIGHT*** of the tank from the transducer face to the bottom of the tank. Set the Fill Height (***FILL-H***) to the maximum fill height of the liquid from the bottom of the tank. Now all of the set points are from the bottom of the tank up.
Optional Target Calibration	Use this feature if the tank is at the empty or full setting. This will accept the current level as either empty (***TG CAL EMPTY***) of full (***TG CAL FULL***).
Fail-Safety	Use the **SAFE** function to preset the output to either Empty (***4 mA***), Full (***20 mA***, ***21 mA*** or ***22 mA***) or ***Hold*** Last Value in case the transmitter looses its signal (**LOST**).

Getting around:

EchoSpan is configured by the use of three push buttons (UP, DOWN and SELECT) and a LCD display. As a lockout feature, the buttons are inactive until the SELECT button is held down for 5 seconds, and then the display will begin to scroll through the top level of the configuration menu.

Steps for Basic Configuration:

1. Select and Set the units of operation in the **UNITS** menu.
2. Configure the Sensor ***Height*** and ***Fill-H*** under the **TANK** menu.
3. Set the **SAFE** vaule.

Top Level

- The Configuration menu will continue to scroll through the items below until the **SELECT** button is pressed.
- **UNITS – TANK – SAFE – TG CAL – VALUES - HELP – RUN**.
- To return to the Operational mode of EchoSpan, press *SELECT* while RUN appears in the display.
- **UNITS** – Allows end user to select the units for configuration and operation. Select between Inches, Centimeters, Feet, Meters or Percent. Press *EXIT* to return to the Top Level menu.
- **TANK** – Allows the end user to configure the operational range for the switch.
    - ***HEIGHT*** – Distance from the transducer face to the bottom of the tank.
    - ***FILL-H*** – Maximum fill height of the liquid from the bottom of the tank.
    - ***REV MA*** – Allows the transmitter to reverse the current output such that 4 mA is at FULL and 20 mA is at EMPTY.
    - Press *Exit* to return to the Top level Menu.

- ***Note:*** *if UNITS is set to Percent, then TANK will not appear. To view TANK, set UNITS to any of the following: Inches, Centimeters, Feet or Meters.*

- **SAFE** – The fail-safe for the EchoSpan can be preset to the customer's requirement.
  - ***22 mA*** – Overfill fail-safe setting.
  - ***21 mA*** – Overfill fail-safe setting.
  - ***20 mA*** – Full fail-safe setting.
  - ***4 mA*** – Empty fail-safe setting.
  - ***HOLD*** – Keeps the output at its last current reading when fail-safe condition occurs.
- **TG CAL** – Target Calibration (allows for the sensor to accept the current level as either EMPTY or FULL.
- **VALUES** – Provides setup information, the ability to reset the EchoSpan and a simulation mode to test the relay function.
  - **SETUP** – Will display the setting for all functions of EchoSpan.
  - **DIAG** – This is a production test feature used by the factory to confirm operation. ***This mode should only be used when supervised by a Flowline representative.***
  - **RESET** – Will reset the EchoSpan back to its original factory setting.
- **HELP** – Provides information for contacting Flowline no-line.
- **RUN** – Returns the unit to normal measurement and control mode.

How to enter the MENU:

1. Press and hold *SELECT* key (approximately 5 seconds) until **MENU** is displayed.
2. The menu items will rotate through display.
3. Press *SELECT* to change an item.

How to configure UNITS:

1. In the **MENU** mode, press select when **UNITS** is display.
2. Press *SELECT* to choose between ***INCHES***, ***CM*** (centimeter), ***FEET***, ***METERS*** or ***PERCENT***.
3. Select *EXIT* to return to the Top Level Menu.

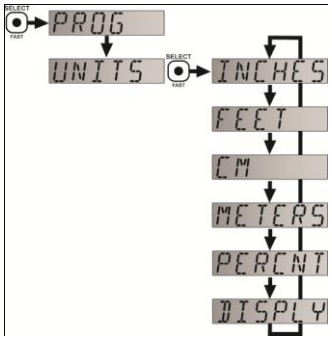

Note: Reading the level of liquid in Percent:

- Flowline recommends that when selecting ***PERCENT***, configure the ***HEIGHT*** and ***FILL-H*** settings before selecting ***PERCENT*** in order to span the EchoSpan for your application requirements.
- When in ***PERCENT***, the operational span will be based upon the last **TANK** settings, typically the factory settings for ***HEIGHT*** and ***FILL-H***.

EchoSpan	*HEIGHT*	*FILL-H*
LU80 Series	118.1” (300 cm)	114.1” (290 cm)
LU81 Series	216.5” (550 cm)	208.5” (530 cm)
LU83 Series	314.9” (800 cm)	307.1” (780 cm)
LU84 Series	393.7” (1000 cm)	381.9” (970 cm)

- When ***PERCENT*** is selected, the **TANK** settings (***HEIGHT*** and ***FILL-H***) will be disabled.

DISPLAY - AIR Mode vs. LIQUID Mode:

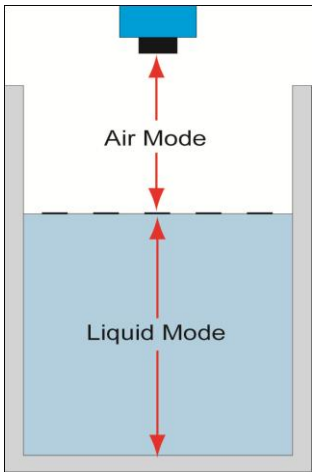

The display can be made to display either the height of liquid in the tank (***LIQUID*** mode) or the amount of air in the tank (***AIR*** mode).

***AIR* mode** – Will display the distance from the bottom of the sensor to the surface of the liquid.

***LIQUID* mode** – Will display the height of liquid measured from the bottom of the tank.

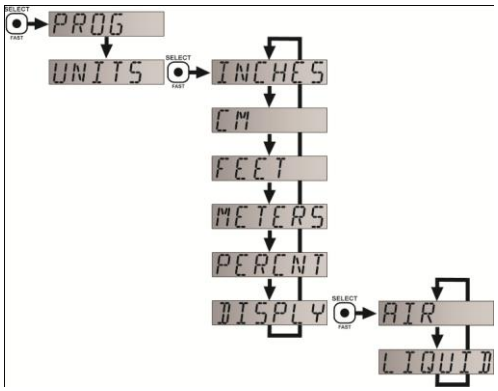

How to change the display mode:

1. In the **MENU** mode, press select when **UNITS** is display.
2. Press *SELECT* when ***DISPLAY*** appears.
3. Press *SELECT* to choose between ***AIR*** or ***LIQUID***.
4. When ***EXIT*** appears, press *SELECT* return to Top Level Menu.

How to configure the Operational range of EchoSpan:

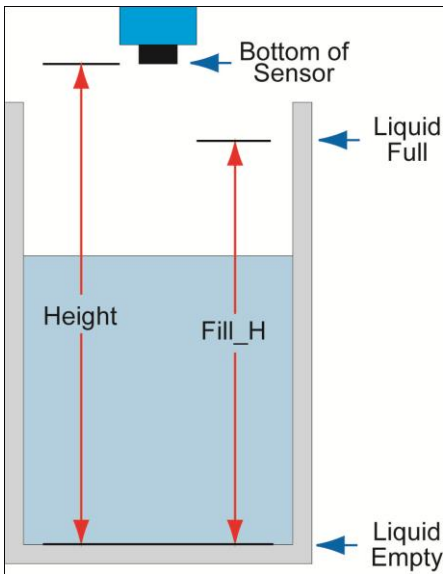

No cumbersome measurement is required via Target Calibration to establish set points. Set point distances are relative to the tank bottom.

1. In **MENU** mode, select the **TANK** item.
2. When ***HEIGHT*** appears, press *SELECT*.
3. Using the *UP* and *DOWN* buttons, set the ***HEIGHT*** of the tank from the transducer face to the bottom of the tank.
4. To enter the value, press and hold *SELECT* (Approximately 2 seconds) until ***SAVED*** is displayed.
5. When ***FILL-H*** appears, press *SELECT*.
6. Using the *UP* and *DOWN* buttons, set the Fill Height (***FILL-H***) to the maximum fill height of the liquid from the bottom of the tank.
7. Press and hold *SELECT* (2 seconds) to enter the value.
8. When ***EXIT*** appears, press *SELECT* return to Top Leve Menu.

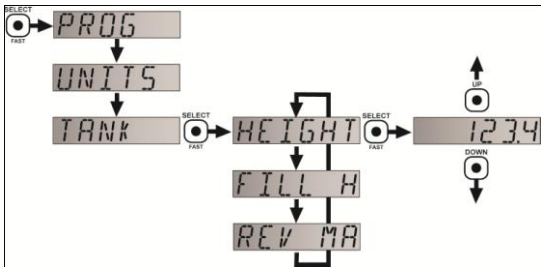

Sensor Height

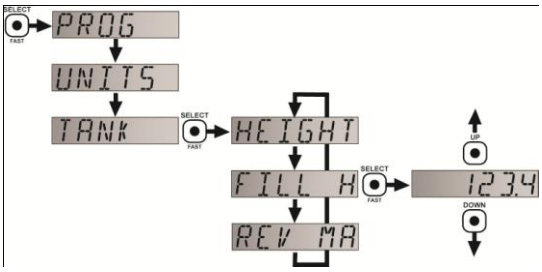

Fill-Height

Note:

- Flowline recommends that when selecting PERCENT, configure the Height and Fill-H settings before selecting PERCENT in order to span the EchoSpan for your application requirements.
- When PERCENT is selected, the TANK settings (Height and Fill-H) will be disabled.

How to set a Reverse the Current Output:

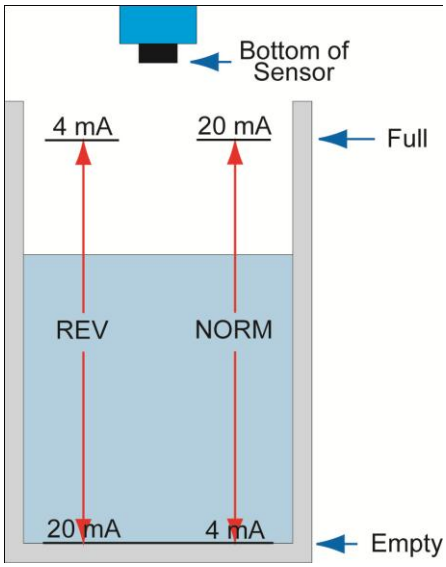

The default for EchoSpan is to have 4 mA at Empty and 20 mA at Full. This is the normal (***NORM***) setting. The output can be reversed (***REV***) with 20 mA at Empty and 4 mA at Full.

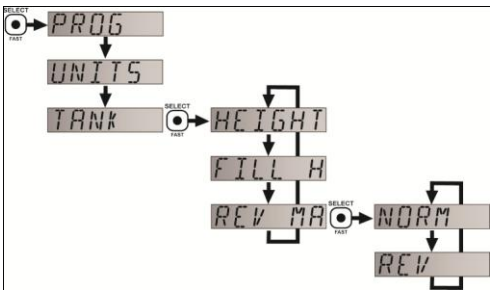

1. In **MENU** mode, select the **TANK** item.
2. When ***REV MA*** appears, press *SELECT*.
3. When ***REV*** appears, press *SELECT*.
4. When ***EXIT*** appears, press *SELECT* return to Top Level Menu.

EchoSpan is now in the Reverse mode. To switch back to the Normal mode, follow the instructions above and select ***NORM*** under step 3.

How to set the SAFE setting:

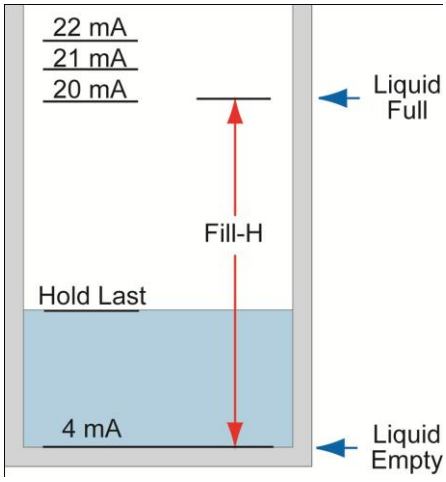

The default for Fail-Safety (LOST) can be preset. The choices are ***4 mA***, ***20 mA***, ***21 mA***, ***22 mA*** and ***HOLD***.

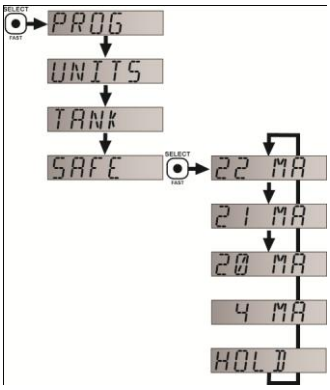

1. In **MENU** mode, select the **SAFE** item.
2. When the required setting appears, press *SELECT*.
3. When ***EXIT*** appears, press *SELECT* return to Top Level Menu.

How to set using Target Calibration (Empty):

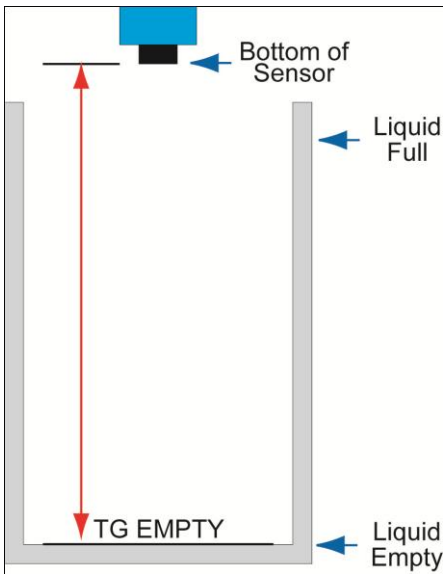

Instead of measuring for Empty tank, the Empty distance can be set automatically. This method requires that the tank be Empty or at the level that is considered Empty in the application. To set ***TG Empty***, follow the instructions below.

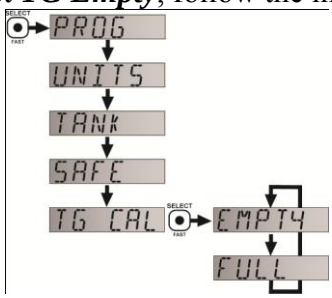

1. Before beginning, make sure the level is tank is at the Empty level.
2. In **MENU** mode, select the **TG CAL** item.
3. When ***EMPTY*** appears, press *SELECT*. This sets the current distance as the new Empty setting.
4. When ***EXIT*** appears, press *SELECT* return to Top Level Menu.

How to set using Target Calibration (Full):

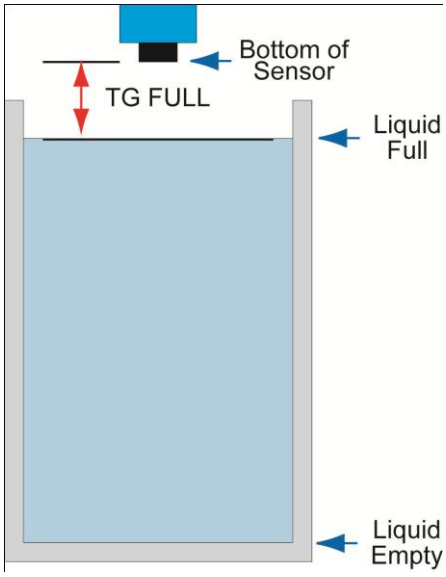

Instead of measuring for Full tank, the Full distance can be set automatically. This method requires that the tank be Full or at the level that is considered Full in the application. To set ***TG Full***, follow the instructions below.

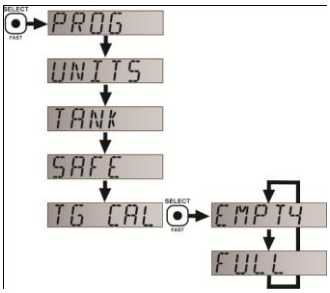

1. Before beginning, make sure the level is tank is at the Full level.
2. In **MENU** mode, select the **TG CAL** item.
3. When ***FULL*** appears, press *SELECT*. This sets the current distance as the new Full setting.
4. When ***EXIT*** appears, press *SELECT* return to Top Level Menu.

*Note: When setting either the **TG EMPTY** or **TG FULL**, make sure the reflective surface is perpendicular to the EchoSpan and not at an angle. Be careful if the tank has a sloped or cone bottom and the bottom of the tank is exposed to air.*

Installation

The EchoSpan should always be mounted perpendicular to the liquid surface and installed using the provided Viton mounting gasket. Make sure that the fitting and transmitter threads are not damaged or worn. Always *hand-tighten* the transmitter within the fitting. Perform an installed leak test under normal process conditions prior to system start up. ***Note:*** *The preferred mounting fitting for the LU80 series is the LM52-1400 (2" thread x 1" thread) reducer bushing.*

Mounting Guide

1. Do not mount at an angle
2. Liquid should never enter the dead band
3. Side Wall:
    a. For LU80 Series - mount at least 2" from the side wall
    b. For LU81, LU83 & LU84 Series - mount at least 3" from the side wall
4. Do not mount where obstacles will intrude on sensor's beam width
    a. See Specifications on page 8
5. Do not mount in a vacuum
6. Avoid mounting in the center of a dome top tank.
7. In cone bottom tank, position the sensor over the deepest part of the tank.

Do not install at angle relative to the liquid.	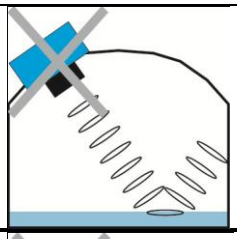	*Do not install within 3" of tank sidewall.*	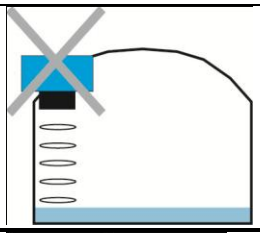
Do not install with objects in the beam.	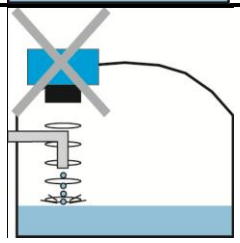	*Do not install in applications with vacuum.*	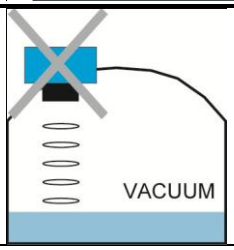

Installation in existing fittings

If the existing fitting is larger than the threads of the EchoSpan, select a reducer bushing such as the LM52-1400 (2" thread x 1" thread) or LM52-2400 (3" thread x 2" thread).

Metal Tanks (LU80 series)

Flowline ultrasonic transmitters have been optimized for use in non-metallic fittings.

1. For best performance, avoid the use of metallic fittings.
    a. Use a plastic 2" x 1" reducer bushing, such as the LM52-1400 or a plastic 1" flange, such as the LM52-1850 for metallic tanks.
2. While installations directly into a 1" metal fitting are not recommended, acceptable results may be obtained if the 1" fitting is a half coupling in form and the outer diameter of the coupling is tightly wrapped in vinyl tape to dampen vibrations.

Fitting Selection:

Check the part number to determine the required fitting mount size and thread type. EchoSpan is commonly installed in tank adapters, flanges, brackets or standpipes. Note: Always include the gasket when installing the EchoSpan.

1. **Tank Adapter:** Select a tank adapter fitting, such as the LM52-1890 for the LU80 series or the LM52-2890 for the LU81, LU83 & LU84 series.
    a. *For best results, select a 2" tank adapter and add a reducer bushing such as the LM52-1400, thread x thread, reducer bushing.*
    b. Avoid tank adapter (thread x thread) styles and/or pipe stops forward of the installed transducer.

2" Tank Adapter Socket x Thread

Tank Adapter w/ 2"x1" Reducer Bushing

Tank Adapter Thread x Thread

Do not use thread x thread

2. **Riser:** Installations with tall, narrow risers can impede the acoustic signal.
    a. **LU81, LU83 & LU84 Series:** 2" (5 cm) diameter risers should be no taller than 5" (12.7 cm). Larger diameter risers should be no taller than 12" (30.5 cm).
    b. **LU80 Series:**

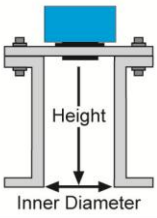

Riser Specifications	
Inner Diameter	Maximum Height
2" (5 cm)	3" (7.6 cm)
4" (10 cm)	8" (20 cm)
6" (15 cm)	12" (30 cm)

Note: *Do not exceed the dimensions listed above*

3. **Flange (LU80 series):** If installing on a flange, select a flange with a thread that is above the plane of the flange, such as the LM52-1850.
    a. *The LU81, LU81 & LU83 series works well with Flange installations.*
    b. Avoid the use of blind flanges with tapped threads or flanges where the threads are even with the plane of the flange, such as the Banjo 1" Poly ANSI Flange (series AF100).
    c. Use a flange with a 2” thread and add a 2” to 1” reducer bushing to complete the installation.

2” Flange w/ thread out of plane

2” Flange w/ thread in plane

Do not use thread in plane

2” Flange w/ Reducer Bushing

4. **Side Mount Bracket:** For installations in open tanks and sumps, use the LM50 series side mount bracket.
    a. For the LU80 series, order the LM50-1001-1, which includes a 2”x 1” Reducer Bushing.
    b. For the LU81, LU83 & LU84, series, order the LM50-1001 side mount bracket.

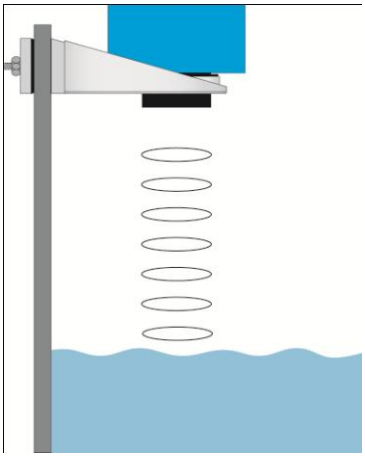

5. **Stand Pipe:** A standpipe maybe used to dampen turbulence or when foam is present in the application.
    a. Pipe can be made of any material.
    b. Select a minimum 3” ID pipe for the stand pipe.
        i. A 2” pipe is usable with the LU80 series, but is the minimum.
        ii. Pipes larger than 3” can also be used.
    c. Use a coupling and reducer bushing to attach the EchoSpan to the pipe.
        i. With the LU80 series, be sure to use a plastic reducing bushing such as LM52-1400 2” T x 1” T fitting or the LM52-1410 2” S x 1” T fitting.
    d. The pipe length should run the measurement span and the bottom of the pipe should remain submerged at all times to prevent foam from entering the pipe.
    e. Cut a 45°notch at the bottom of the pipe and drill a 1/4”pressure equalization hole in the dead band.
    f. The pumps should not drive liquid past the open end of the stand pipe which causes the liquid in the pipe to oscillate.

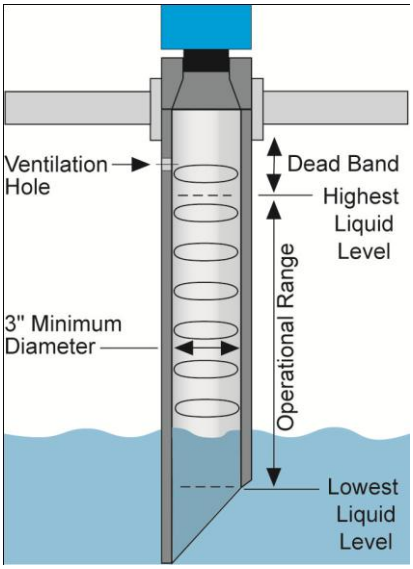

Appendix:

Setup:

You can view how the EchoSpan is configured.

1. From the main **MENU** level, press *SETUP* when **VALUES** appears.
2. When ***SETUP*** appears, press the *SELECT* key.
3. Setup will display the following information:
    a. ***Units***, ***Display***, ***Rev mA***, ***Safe***, **Height**, ***Fill-H***
4. When completed, press *SELECT* when ***EXIT*** appears to return to the main program level.

Diagnostics (DIAG) Parameters:

This mode runs diagnostic tests that confirm operation of EchoSpan. ***This mode should only be used when supervised by a Flowline representative.***

Reset:

EchoSpan enables the end user to reset the entire configuration back to the original factory settings. Follow the instructions below to reset EchoSpan:

1. From the main **MENU** level, press *SELECT* when ***VALUES*** appears.
2. When ***RESET*** appears, press the *SELECT* key.
3. When ***YES*** appears, press *SELECT* key to reset EchoSpan.
    a. To cancel the reset, press *SELECT* when ***NO*** appears.
4. When completed, press *SELECT* when **EXIT** appears to return to the main program level.

Factory Settings:

EchoSpan	*HEIGHT*	*FILL-H*
LU80 Series	118.1” (300 cm)	114.1” (290 cm)
LU81 Series	216.5” (550 cm)	208.5” (530 cm)
LU83 Series	314.9” (800 cm)	307.1” (780 cm)
LU84 Series	393.7” (1000 cm)	381.9” (970 cm)

Troubleshooting:

PROBLEM	SOLUTION
TANK does not appear on the main menu:	Units function is set for ***PERCENT*** on EchoSpan: When Units is set for ***PERCENT***, the **TANK** function is disabled. To re-enable **TANK**, change units to ***INCHES***, ***CM***, ***FEET*** or ***METERS***.
Display shows ***FULL***:	Level of liquid is above the ***FILL-H*** setting: Check the ***FILL-H*** setting, making sure the ***FILL-H*** setting is high enough so the level of liquid is below the ***FILL-H*** setting. The ***Fill-H*** setting is the distance from the bottom of the tank to the Full level of liquid.
Display shows ***EMPTY***:	Level of liquid is beyond the ***HEIGHT*** setting: Check the ***HEIGHT*** setting, making sure the ***HEIGHT*** setting is low enough so the level of liquid is above the ***HEIGHT*** setting.
Display shows ***WARMUP***:	Typically occurs when power is being applied to transmitter. Indicates a weak power supply, bad wire connections or the sensor is out of the operational range.
Display shows ***LOST***:	Sensor is in a Fail-Safe state. The return sound pulses are not reaching the transducer. First, cycle power off and on, waiting 5 seconds between the off and on states. If problem persists, check the installation fitting against the Installation instructions in the manual.
Display is opposite of the measured value:	Check the ***DISPLAY*** setting. ***AIR*** mode indicates the distance from the liquid to the sensor. ***LIQUID*** mode indicates the height of liquid in the tank. Change the ***DISPLAY*** mode from ***AIR*** to ***LIQUID*** or vice versa to correct.
Transmitter indicates a current of 0 mA:	Check the wiring for an open circuit. An open circuit is the most common issue with a 0 mA signal.
Transmitter jumps to a current reading between 19 and 20 mA:	Check the installation of the transmitter. Bad installation fittings will cause false signals near the top of the tank, which typically translates to a signal between 19 and 20 mA. Also look for interference just below the transmitter. If the transmitter is installed in a metal fitting, switch to a plastic fitting.
Transmitter indicates a current over 23 mA:	Immediately check the wiring for a short circuit. The EchoSpan is current limited to 22 mA. Anything above 23 mA indicates a short circuit.

Technical Support

For complete product documentation, video training, and technical support, go to www.flowline.com.

For phone support, call 562-598-3015 from 8am to 5pm PST, Mon - Fri. (Please make sure you have the Part and Serial number available.)

Flowline Inc. 10500 Humbolt St, Los Alamitos, CA 90720

Warranty

Flowline warrants to the original purchaser of its products that such products will be free from defects in material and workmanship under normal use and service in accordance with instructions furnished by Flowline for a period, which is equal to the shorter of one year from the date of purchase of such products or two years from the date of manufacture of such products. Flowline's obligation under this warranty is solely and exclusively limited to the repair or replacement, at Flowline's option, of the products or components, which Flowline's examination determines to its satisfaction to be defective in material or workmanship within the warranty period. Flowline must be notified pursuant to the instructions below of any claim under this warranty within thirty (30) days of any claimed lack of conformity of the product. Any product repaired or replaced under this warranty will be warranted only for the remainder of the original warranty period.

Returns

Products cannot be returned to Flowline without Flowline's prior authorization. To return a product that is thought to be defective, go to www.flowline.com, and submit a customer return (MRA) request form and follow the instructions therein. All warranty and non-warranty product returns to Flowline must be shipped prepaid and insured. Flowline will not be responsible for any products lost or damaged in shipment.

Limitations

This warranty does not apply to products which: 1) are beyond the warranty period or are products for which the original purchaser does not follow the warranty procedures outlined above; 2) have been subjected to electrical, mechanical or chemical damage due to improper, accidental or negligent use; 3) have been modified or altered; 4) anyone other than service personnel authorized by Flowline have attempted to repair; 5) have been involved in accidents or natural disasters; or 6) are damaged during return shipment to Flowline. Flowline reserves the right to unilaterally waive this warranty and dispose of any product returned to Flowline where: 1) there is evidence of a potentially hazardous material present with the product; or 2) the product has remained unclaimed at Flowline for more than 30 days after Flowline has dutifully requested disposition. This warranty contains the sole express warranty made by Flowline in connection with its products. ALL IMPLIED WARRANTIES, INCLUDING WITHOUT LIMITATION, THE WARRANTIES OF MERCHANTABILITY AND FITNESS FOR A PARTICULAR PURPOSE, ARE EXPRESSLY DISCLAIMED. The remedies of repair or replacement as stated above are the exclusive remedies for the breach of this warranty. IN NO EVENT SHALL FLOWLINE BE LIABLE FOR ANY INCIDENTAL OR CONSEQUENTIAL DAMAGES OF ANY KIND INCLUDING PERSONAL OR REAL PROPERTY OR FOR INJURY TO ANY PERSON. THIS WARRANTY CONSTITUTES THE FINAL, COMPLETE AND EXCLUSIVE STATEMENT OF WARRANTY TERMS AND NO PERSON IS AUTHORIZED TO MAKE ANY OTHER WARRANTIES OR REPRESENTATIONS ON BEHALF OF FLOWLINE. This warranty will be interpreted pursuant to the laws of the State of California. If any portion of this warranty is held to be invalid or unenforceable for any reason, such finding will not invalidate any other provision of this warranty.

FLOWLINE We do Your Level Best

FLOWLINE®

Model: LU81/83/84-51_1

EchoSpan®

Quick Start

QS301550 Rev. C
©2010 Flowline, Inc.
All Rights Reserved
Made in USA

10500 Humbolt Street, Los Alamitos, CA 90720 USA
Tel: 562.598.3015 Fax: 562.431.8507 www.flowline.com

Welcome to the EchoSpan® Quick Start

The EchoSpan® Quick Start is meant to show some of the more common setup solutions to getting the EchoSpan® up and running quickly. If you run into an issue that is not addressed here or wish to install or set up with a non-standard configuration, please address the EchoSpan® Manual or refer to the Flowline website at www.flowline.com.

We Do Your Level Best

Thank you for purchasing Flowline's EchoSpan®. The EchoSpan® provides a 4-20 mA analog output with integrated LCD and three push-button configuration. This Quick Start includes everything you'll need to get the transmitter up and running. For complete information, please refer to EchoSpan® documentation located at www.flowline.com.

Components

Depending on the model shipped to you, you should have the components shown below. Both components – the EchoSpan® and Viton® gasket – are required to install the EchoSpan®.

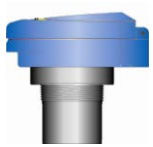

EchoSpan®
LU81-5101
LU81-5161
LU83-5101
LU83-5101
LU84-5101
LU84-5161

Viton® gasket
Part#: 200129 (2")

Select Fail Safety Output

In the event the transmitter does not receive an echo, the Select Fail Safety Output setting can be set either to 22mA, 21mA, 20mA or HOLD the last value to achieve the desired fail-safe condition. During fail-safe, the display will read LOST.

1) Enter the configuration menu (as discussed previously),
2) Select **SAFE** from the menu,
3) Select an output option, such as **22mA**, **21mA**, **20mA**, **4mA**, or **HOLD**, and
4) Select **EXIT** to return to the Configuration menu.

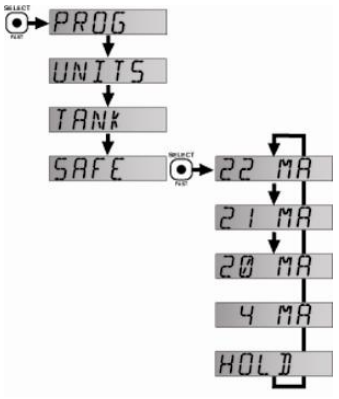

Select Fail Safety Output

Reverse 4-20 mA Signal

The transmitter allows you to switch the 4-20 mA value at the top and bottom of the application. By default, 4mA is configured as the bottom and 20mA is configured as the top. The transmitter displays this as NORM. Follow these instructions to reverse this setting:

1) Enter the configuration menu (as discussed previously),
2) Select **TANK** from the menu,
3) Select **Rev MA** from the menu,
4) Then, select **Rev** from the menu, and
5) Select **EXIT** to return to the Configuration menu.

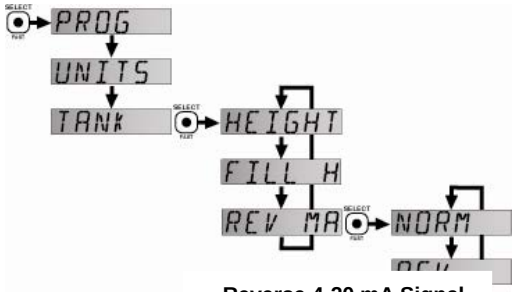

Reverse 4-20 mA Signal

Troubleshooting

If you face any issues not addressed in this quick start, please refer to the EchoSpan® Manual located on Flowline website at www.flowline.com.

FLOWLINE We do Your Level Best

Set Units

The transmitter displays information in inches, feet, centimeters, meters, or percentages. This can be displayed to represent the amount of air or the amount of liquid in a tank.

Air Display Mode shows the distance from the bottom of the sensor to the liquid surface. Liquid Display mode show the distance from the liquid surface to the bottom of the tank.

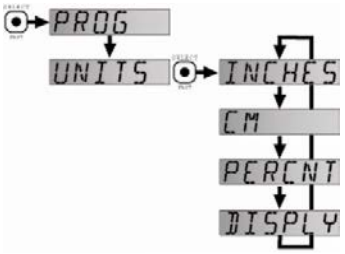

Setting Units

Follow these instructions to set how units are displayed:

1) Enter the configuration menu (as discussed previously),

2) Select **UNITS** from the menu,

3) Select the type of unit or the type of DISPLAY you desire, and

4) Select **EXIT** to return to the Configuration menu.

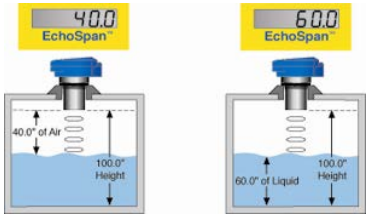

Set Height and Fill Height

This setting customizes the reading for your installation. Follow these instructions to set the height and fill height for your tank:

1) Enter the configuration menu (as discussed previously),

2) Select **TANK** from the menu,

3) Select **HEIGHT**. Use the UP and DOWN buttons to set the height of your tank. Then, hold down the SELECT button to save this setting,

4) Select **FILL-H** for the fill height. Use the UP and DOWN buttons to set the fill height of your tank. Then, hold down the SELECT button to save this setting, and

5) Select **EXIT** to return to the Configuration menu.

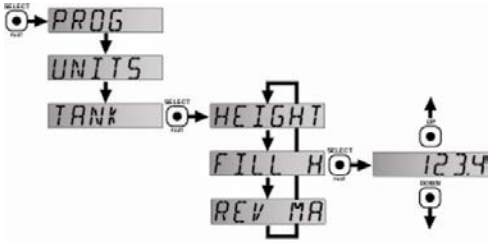

Setting Fill Height

Mounting the Transmitter

The transmitter should always be mounted perpendicular to the liquid surface using the provided Viton® mounting gasket. Insure that there are no restrictions or obstacles in the path of the ultrasonic signal.. Further mounting information can be found on the Flowline website at www.flowline.com.

The LU81, 83, & 84 has a 2" NPT or G fitting that can be installed in standard 2" tank adapters. It is best to keep the height of any adapter to a minimum with 6" being the absolute maximum for a 2" riser. The LM-1001 is a good choice for sidewall mount applications.

Mounting with a Tank Adapter: Select a tank adapter fitting, such as the LM52-2890.

Mounting with a Riser: As installations with tall, narrow risers can impede the acoustic signal. 2" diameter risers should be no taller than 5". Larger diameter risers should be no taller than 12".

Mounting with a Side Mount Bracket: Use Flowline's LM50-1001 side mount bracket.

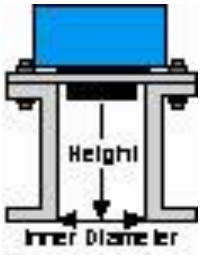

Riser Mounting

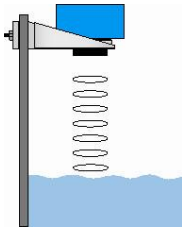

Side Mounting

Mounting with a Stand Pipe: A standpipe may be used to dampen turbulence, separate surface foam from the point of measurement or increase performance in heavy vapor. Select a 2" pipe and attach the transmitter with a coupling and reducer bushing. The pipe length should run the measurement span and the bottom of the pipe should remain submerged at all times to prevent foam from entering the pipe. Cut the bottom end of the pipe at 45° and drill a 1/4"pressure equalization hole high in the dead band. The pumps should not drive liquid past the open end of the standpipe which causes the liquid in the pipe to oscillate.

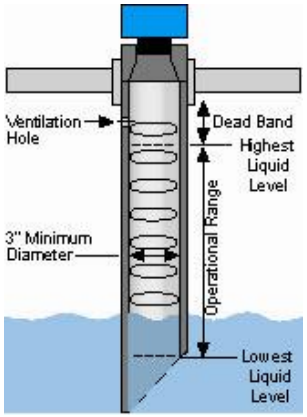

FLOWLINE We do Your Level Best

Mounting with a Standpipe

IMPORTANT MOUNTING GUIDELINES:

1) Never mount the sensor at an angle.
2) Liquid should never enter the dead band.
3) Mount at least 3” from the side wall.
4) Never mount in a vacuum.
5) Do not obstruct the sensor’s 3” beam width.
6) Isolate air gaps between inner and outer threads for best performance.

Wiring the Transmitter

The following wiring diagrams can be used when wiring the transmitter.

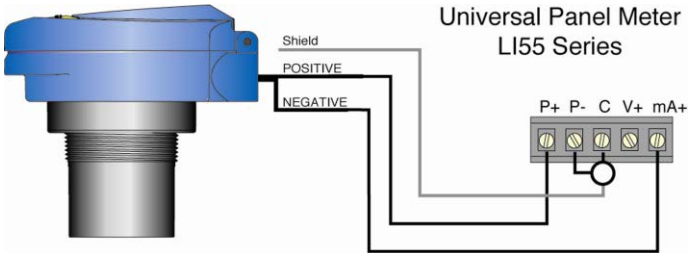

Wiring Schematic for Flowline DataView L155

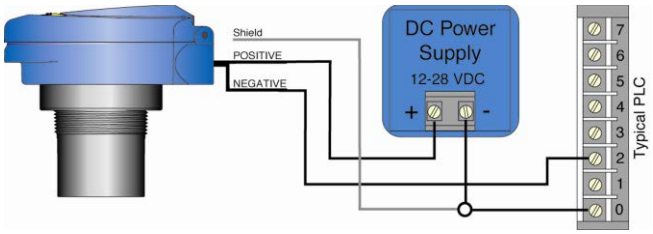

Wiring Schematic for Typical PLC

Some final notes on safety:

- Where personal safety or significant property damage can occur due to a spill, the installation must have a redundant backup safety system.
- Wiring should always be completed by a licensed electrician.
- Supply voltage should never exceed 28 VDC.
- The sensor must be chemically compatible with the application.
- Design a fail-safe system for possible sensor and/or power failure.
- Never use the sensor in classified hazardous environments.

Configuring the Transmitter

The transmitter features a non-volatile memory, and can be configured prior to installation. Your configuration will not be lost when the transmitter is powered down.

Before configuring, be sure to have the following information:

Height. This is the distance from the transducer face to the bottom of the tank.

Fill Height (Fill-H). This is the distance from the highest level of liquid to the bottom of the tank

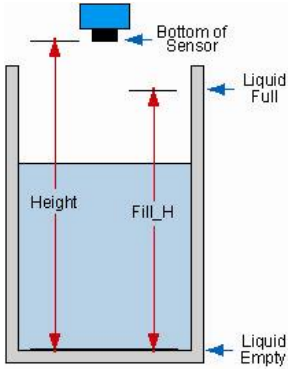

Height and Fill Height

Configuration Menu

The transmitter is configured with the three buttons on the transmitter’s face (**UP**, **DOWN** and **SELECT**) and the transmitter's LCD. To access the transmitter's configuration menu, simply hold down the SELECT button for five seconds or until the menu is displayed. When the SELECT button is released, the display menu will begin to scroll through the uppermost level of the configuration menu.

Transmitter Interface

When the menu scrolls to an item you wish to configure, simply press the SELECT button again when that item appears. Once you've made your configuration changes, press SELECT again when “Exit” appears to scroll through the options and once more while RUN appears in the display. This will return the transmitter to its operational mode.

FLOWLINE We do Your Level Best

SERIES F7 LIQUID LEVEL SWITCHES

Specifications – Installation and Operating Instructions

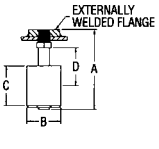

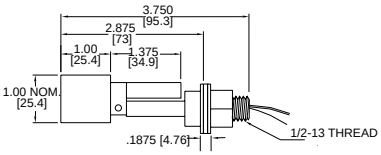

F7-MHS, INTERNAL HORIZONTAL MOUNT

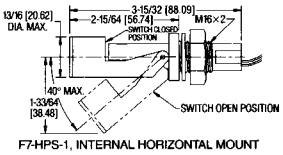

F7-HPS-1, INTERNAL HORIZONTAL MOUNT

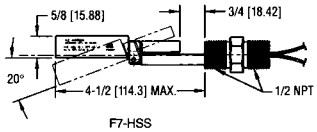

F7-HSS

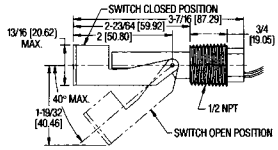

F7-HPS-2, EXTERNAL HORIZONTAL MOUNT

Series F7 Level Switches provide simple, inexpensive control of liquid level within tanks or similar vessels. Switch ratings are suitable for many solid state control systems and monitors or alarms. Simple relay interfaces can be used for higher current applications. Two basic styles offer a choice of vertical or horizontal mounting. Hermetically sealed reed switches are actuated by magnets permanently bonded inside the float and can be easily adapted to open or close a circuit on rising or falling levels.

SWITCH ACTION (Normally open/Normally closed)

Vertical Models

Vertical mount models are shipped with normally open switch contacts which close as the float rises toward the mounting threads. Reverse switch action by removing the float, rotating it end-for-end and replacing it on the stem.

Horizontal Models

Horizontal models are in the normally open position when the indicating arrow points up (float is down), and normally closed when the arrow points down (float is up).

INSTALLATION

Choose a location away from fill pipes, drains, or other areas where turbulence or wave motion might occur. Turbulence will cause false actuation and shorten contact life. Excess contaminants in fluid may inhibit float operation and occasional wipe-down may be necessary. Care should be taken that switches are always operated within electrical ratings. Read and understand all safety precautions on back of this sheet before installing.

MOUNTING

Install vertical mount models in an appropriate 1/8″ NPT fitting. Vertical models mount internally, oriented within 30° of vertical, or select optional fittings for external mounting. Models F7-HPS-1 and F7-MHS must be mounted internally, which means the switch must be secured to the wall of the tank or vessel from the inside. Install horizontal model F7-HPS-1 in a 5/8″ (16 mm) hole or model F7-MHS in a 1/2″ (12.7 mm) hole. Secure into place with the nut provided. Tank wall should not exceed 1/8″ (3 mm). Model F7-HPS-2 requires a horizontal 1/2″ NPT female fitting and can be fitted to the tank or vessel from the outside. Model F7-HSS requires a horizontal 1/2″ NPT female fitting and can be mounted from the inside or outside (internally or externally) of the tank or vessel.

SPECIFICATIONS

Electrical Rating (Maximum):

F7-SB, -SS2 AC: 25VA, 1.0A, 200 V DC: 10W, 1.0A, 200V
F7-PP, -BT, -HSS, -MHS
AC: 25VA, 1.0A, 200 V DC: 10W, 1.0A, 200V
F7-HPS-1, -2 AC: 25VA, 1.0A, 200 V DC: 10W, 1.0A, 200V
(F7-HSS is rated explosion-proof for Class I, Groups A, B, C, D; Class II, Groups E, F, G; Class III).

Mounting Connection: 1/8″ NPTM (all vertical mount), 1/2″ NPTM (F7-HPS-2, F7-HSS), M16 x 2 (F7-HPS-1), 1/2″ x 13 thread (F7-MHS)

Wire leads: 22 AWG x 18″ (46 cm), vertical mount models; 22 AWG x 39″ (1 m), models F7-HPS-1, -2; 22 AWG x 24″ (61 cm), models F7-HSS, -MHS.

Magnet: Alnico (F7-SB, -PP, -BT, -HPS), ceramic (F7-SS2, -HSS, -MHS).

Weight: 2 oz. (58 g), F7-SB; 1.2 oz. (34g), F7-SS2; 0.8 oz. (23 g), F7-PP; 0.7 oz.. (20 g), F7-BT; 1.5 oz. (43 g), F7-HPS-1; 2 oz. (57 g), F7-HPS-2 and -MHS; 3 oz. (94 g), F7-HSS.

DIMENSIONS, INCHES (MM) - Vertical Mount

Model Number	(A) Stem Length	(B) Float Diameter	(C) Float Height	(D) Actuation from HEX*
F7-SB	2.75 (70)	1.13 (29)	1.38 (35)	1.2 (31)
F7-SS2	2.06 (52)	1.0 (25)	1.0 (25)	0.73 (19)
F7-PP	2.18 (55)	1.18 (30)	1.0 (25)	0.69 (18)
F7-BT	2.18 (55)	1.18 (30)	1.0 (25)	0.69 (18)

*Distance between HEX and liquid (S.G. = 1) level @ actuation pt. will vary with specific gravity changes.

PHYSICAL DATA

Model Number	Material Float/Stem	Max. Temp.	Max. Press.	Min. S.G.	Approx. Deadband
Vertical Mount					
F7-SB	Buna-N & Epoxy/ 316SS	220°F 105°C	150 psig 10 bar	0.60	1/16″ 2 mm
F7-SS2	316/SS (CYC)/ 316SS	300°F 149°C	450 psig 31 bar	0.75	1/16″ 2 mm
F7-PP	Polypropylene & Epoxy/ Polypropylene	220°F 105°C	100 psig 6.89 bar	0.60	1/8″ 4 mm
F7-BT	Buna-N & Epoxy/ PBT*	220°F 105°F	150 psig 10 bar	0.45	1/8″ 4 mm
Horizontal Mount					
F7-HPS -1, -2	Polysulfone/ Polysulfone	185°F 85°C	150 psig 10 bar	0.85	3/16″ 5 mm
F7-HSS	316SS/316SS	392°F 200°C	300 psig 20.7 bar	0.60	1/8″ 4 mm
F7-MHS	316 SS/316SS	392°F 200°C	100 psig 6.89 bar	0.70	3/16″ 5 mm

* PBT - Polybutylene Terephtalate

DWYER INSTRUMENTS, INC.
P.O. BOX 373 • MICHIGAN CITY, INDIANA 46361, ,U.S.A.
Phone: 219/879-8000
Fax: 219/872-9057
Lit-By Fax: 888/891-4963
www.dwyer-inst.com
e-mail: info@dwyer-inst.com

Installation Notes-

Do not subject reed switch controls to excessive shock or vibration or any of the following:

- Bending or placing force loads on reed switch housing.
- Over-torquing fittings on reed switch housing.
- Placing pull-out force on lead wires.

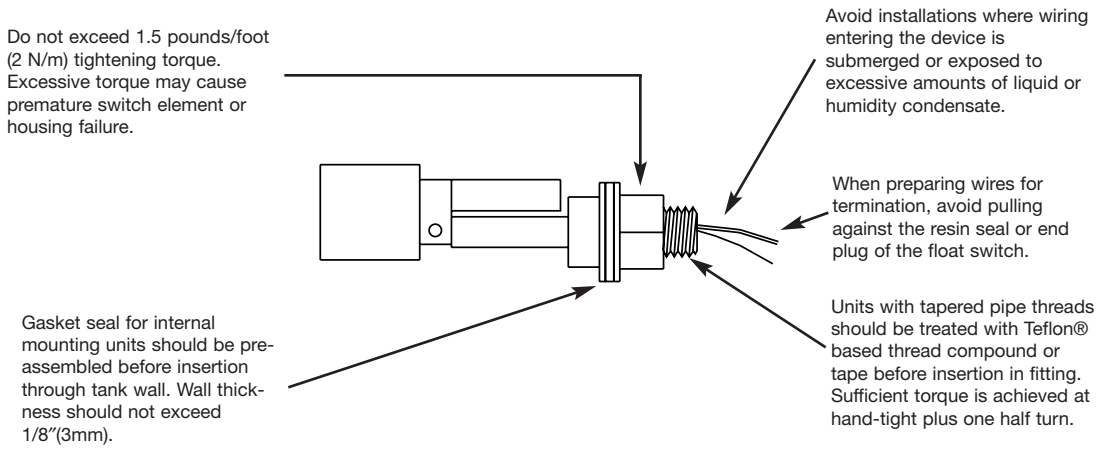

CIRCUIT INFORMATION FOR REED SWITCH PROTECTION

READ INFORMATION BELOW BEFORE INSTALLING YOUR NEW REED SWITCH CONTROL!

Exceeding the current capacity of this Reed Switch control may cause FAULTY OPERATION! Be aware of the inductive and capacitive or lamp loads you may be placing on your Reed Switch Control. the circuits below outline possible solution to preventing overloads due to inrush or surge currents exceeding maximum or when the switch current and product of the inductive back EMF exceed the switch's power rating. Also, the circuit for prevention of overload when switching filament lamps (low "cold" resistance) is outlined below. Failure to follow these measures to protect Reed Switch Contacts may cause the contacts to weld together or result in premature wear.

Possible Circuit Solutions Indicated by Dashed Lines

Inductive Loads

Possible causes-

An electromagnetic relay, electromagnetic solenoid, electromagnetic counter with inductive component as circuit load.

DIODE SUPPRESSION

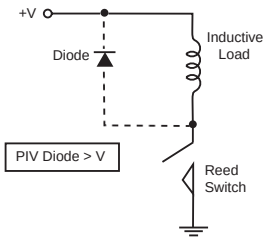

VARISTER PROTECTION

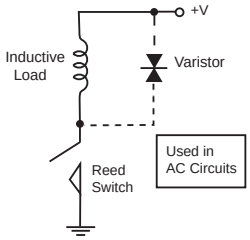

RC SUPPRESSION

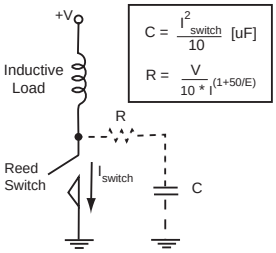

Capacitive Loads

Possible causes-

A capacitor connected in series or parallel with Reed Switch Control. In a closed circuit, a cable length (usually greater than 50m [162.5 ft]) used to connect reed switch may also introduce static capacitance.

SURGE LIMITER FOR CAPACITANCE IN SERIES

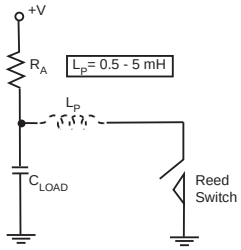

RESISTOR PROTECTION FOR CAPACITIVE LOAD

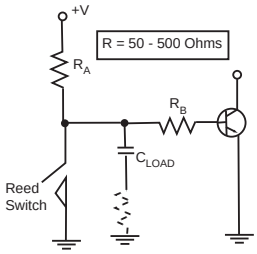

INDUCTIVE PROTECTION FOR CABLE LENGTH CAPACITANCE

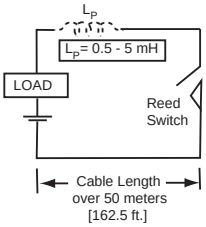

Lamp Loads

Possible causes-

A tungsten filament lamp load.

CURRENT LIMITING RESISTOR IN SERIES

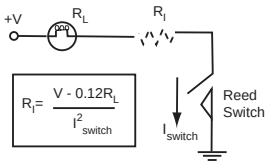

CURRENT LIMITING RESISTOR IN PARALLEL

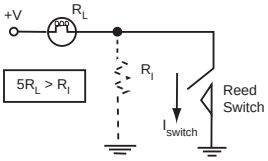

©Copyright 1999 Dwyer instruments, Inc

Printed in U.S.A. 2/99

FR 82-440677-00

DWYER INSTRUMENTS, INC.
P.O. BOX 373 • MICHIGAN CITY, INDIANA 46361, ,U.S.A.
Phone: 219/879-8000
Fax: 219/872-9057
Lit-By Fax: 888/891-4963
www.dwyer-inst.com
e-mail: info@dwyer-inst.com

Hazardous Material Disclosure Table for IPB Products Certified as RoHS Compliant Under Directive 2002/95/EC With Mercury

The information included on the other side of this sheet is required for this product to be imported into the Peoples Republic of China.

The chart acknowledges the presence of small quantities of certain materials in the product, and is applicable to China RoHS only.

On these products, there will be a label indicating the estimated "Environmentally Friendly Use Period" (EFUP). This is an estimate of the number of years that these substances would "not leak out or undergo abrupt change".

This product may contain replaceable subassemblies/components which have a shorter EFUP such as batteries and lamps. These components will be separately marked.

Part Name	Toxic or Hazardous Substances and Elements					
	Lead (Pb)	Mercury (Hg)	Cadmium (Cd)	Hexavalent Chromium (Cr(VI))	Polybrominated Biphenyls (PBB)	Polybrominated Diphenyl Ethers (PBDE)
Housing	X	O	O	O	O	X
Display	X	X	O	O	O	X
Printed Circuit Board	X	O	O	O	O	X
Metal Fasteners	X	O	O	O	O	O
Cable Assembly	X	O	O	O	O	X
Fan Assembly	X	O	O	O	O	X
Power Supply Assemblies	X	O	O	O	O	X
Battery	O	O	O	O	O	O

O: Indicates that this toxic or hazardous substance contained in all of the homogeneous materials for the part is below the limit requirement in SJ/T11363-2006.

X: Indicates that this toxic or hazardous substance contained in at least one of the homogeneous materials used for this part is above the limit requirement in SJ/T11363-2006.

This Electronic Information Product may contain replaceable subassemblies/components which have a shorter EFUP which is indicated on the product.

Battery	10 years
CCFL Lamp	10 years

表格上的信息表示本产品中含有少量的某些材料, 这只适用于中国ROHS.

在这些产品上会有一个显示 " 环境友好使用期限 " 的标签. 这个期限是估算的 " 产品不会有泄露或者突变 " 的年限.

这个产品可能含有某些可替换元件，这些元件的环境友好使用期限可能比较短. 这些元件会有单独标记.

部件名称	有毒有害物质或元素					
	铅 (Pb)	汞 (Hg)	镉 (Cd)	六价铬 (Cr(VI))	多溴联苯 (PBB)	多溴二苯醚 (PBDE)
壳体 (Housing)	X	O	O	O	O	X
显示 (Display)	X	X	O	O	O	X
印刷电路板 (Printed Circuit Board)	X	O	O	O	O	X
金属螺帽 (Metal Fasteners)	X	O	O	O	O	O
电缆组装 (Cable Assembly)	X	O	O	O	O	X
风扇组装 (Fan Assembly)	X	O	O	O	O	X
电力供应组装 (Power Supply Assemblies)	X	O	O	O	O	X
电池 (Battery)	O	O	O	O	O	O

O: 表示该有毒有害物质在该部件所有均质材料中的含量均在SJ/T11363-2006 标准规定的限量要求以下。

X: 表示该有毒有害物质至少在该部件的某一均质材料中的含量超出SJ/T11363-2006 标准规定的限量要求。（企业可在此处，根据实际情况对上表中打“×”的技术原因进行进一步说明。）

这个产品可能含有某些可替换元件，这些元件的环境友好使用期限可能比较短. 这些元件会有单独标记.

电池: 10 年
CCFL灯： 10 年

41061-388-01 (1)
Printed in U.S.A.

Rockwell Automation

기기의 명칭 (모델명)	Color Touch Display Module (2711P-T10C15D1)
인증받은자의 상호	(주)로크웰오토메이션코리아
인증번호	ABK-2711P-T10C15D1(A)
제조자 / 제조국	ROCKWELL AUTOMATION/ ALLEN-BRADLEY / 미국
기기의 명칭 (모델명)	Color Touch Display Module (2711P-T10C4D1)
인증받은자의 상호	(주)로크웰오토메이션코리아
인증번호	ABK-2711P- T10C4D1(A)
제조자 / 제조국	ROCKWELL AUTOMATION/ ALLEN-BRADLEY / 미국
기기의 명칭 (모델명)	Color Touch Display Module (2711P-T12C4D1)
인증받은자의 상호	(주)로크웰오토메이션코리아
인증번호	ABK-2711P-T12C4D1(A)
제조자 / 제조국	ROCKWELL AUTOMATION/ ALLEN-BRADLEY / 미국
기기의 명칭 (모델명)	Color Touch Display Module (2711P-T15C15D2)
인증받은자의 상호	(주)로크웰오토메이션코리아
인증번호	ABK-2711P-T15C15D2(A)
제조자 / 제조국	ROCKWELL AUTOMATION/ ALLEN-BRADLEY / 미국
기기의 명칭 (모델명)	Color Touch Display Module (2711P-T15C4D1)
인증받은자의 상호	(주)로크웰오토메이션코리아
인증번호	ABK-2711P-T15C4D1(A)
제조자 / 제조국	ROCKWELL AUTOMATION/ ALLEN-BRADLEY / 미국
기기의 명칭 (모델명)	Color Touch Display Module (2711P-T15C4D2)
인증받은자의 상호	(주)로크웰오토메이션코리아
인증번호	ABK-2711P-T15C4D2(A)
제조자 / 제조국	ROCKWELL AUTOMATION/ ALLEN-BRADLEY / 미국

www.rockwellautomation.com

Power, Control and Information Solutions Headquarters

Americas: Rockwell Automation, 1201 South Second Street, Milwaukee, WI 53204-2496 USA, Tel: (1) 414.382.2000, Fax: (1) 414.382.4444
Europe/Middle East/Africa: Rockwell Automation, Vorstlaan/Boulevard du Souverain 36, 1170 Brussels, Belgium, Tel: (32) 2 663 0600, Fax: (32) 2 663 0640
Asia Pacific: Rockwell Automation, Level 14, Core F, Cyberport 3, 100 Cyberport Road, Hong Kong, Tel: (852) 2887 4788, Fax: (852) 2508 1846

중요 이 설명서는 PanelView/PanelView Plus 표준 단말기에 대한 중요한 인증 정보를 포함합니다. 제품에는 모든 필요한 승인과 인증이 표시되어 있습니다.

이 설명서는 기기의 설치, 구성, 작동을 위한 것이 아닙니다. 중요한 리소스에서 적절한 제품 설치 정보를 먼저 읽고 나서 제품을 설치하도록 합니다. 제품 설치 정보, 사양, 사용자 매뉴얼, 그 외 다른 제품 정보는 이 리소스를 사용합니다.:

- 제품 정보를 다운로드하기 위해, http://literature.rockwellautomation.com으로 가서 Operator Interface 다음의 설명서를 검색합니다.
- 기술 설명서 주문을 위해, 지역 Rockwell Automation 업체나 판매처에 문의합니다.
- 인증 등의 자세한 사항은, http://www.ab.com에 있는 Product Certification을 참조합니다.

중요한 리소스

리소스	설명
2711P-IN002	한국 PanelView Plus와 PanelView Plus Compact 400과 600 설치 정보
2711P-IN001	한국 PanelView 700에서 1500과 PanelView Plus Compact 1000 단말기, Display Modules 설치 정보
2711-IN036	한국 PanelView 1000 키패드와 터치스크린 단말기 설치 정보

한국 전자파 적합 규정

ATTENTION

한국 전자파 적합 규정 – 이 기기는 업무용(A급)으로 전자파적합등록을 한 기기이오니 판매자 또는 사용자는 이 점을 주의하시기 바라며, 가정 외의 지역에서 사용하는 것을 목적으로 합니다.

전자파적합등록 인증정보

기기의 명칭 (모델명)	Color Touch Display Module (2711-T10C15)
인증받은자의 상호	(주)로크웰오토메이션코리아
인증번호	ABK-2711-T10C15(A)
제조자 / 제조국	ROCKWELL AUTOMATION/ ALLEN-BRADLEY / 미국
기기의 명칭 (모델명)	Color Touch Display Module (2711P-T6C20D)
인증받은자의 상호	(주)로크웰오토메이션코리아
인증번호	ABK-2711P-T6C20D(A)
제조자 / 제조국	ROCKWELL AUTOMATION/ ALLEN-BRADLEY / 미국
기기의 명칭 (모델명)	Color Touch Display Module (2711P-T7C4D1)
인증받은자의 상호	(주)로크웰오토메이션코리아
인증번호	ABK-2711P-T7C4D1(A)
제조자 / 제조국	ROCKWELL AUTOMATION/ ALLEN-BRADLEY / 미국

SENSAPHONE®

Model 400

User's Manual

Version 1.3

Every effort has been made to ensure that the information in this document is complete, accurate and up-to-date. PHONETICS, Inc. assumes no responsibility for the results of errors beyond its control. PHONETICS, Inc. also cannot guarantee that changes in equipment made by other manufacturers, and referred to in this manual, will not affect the applicability of the information in this manual.

Copyright © 2006 by Phonetics, Inc., d.b.a. Sensaphone®

First Edition, version 1.3, April, 2010

Written and produced by Sensaphone.

Please address all comments on this publication to:

SENSAPHONE

901 Tryens Road

Aston, PA 19014

www.sensaphone.com

Sensaphone® is a registered trademark of Phonetics, Inc.

Touch-Tone™ is a registered trademark of AT&T.

IMPORTANT SAFETY INSTRUCTIONS

Your Model 400 has been carefully designed to give you years of safe, reliable performance. As with all electrical equipment, however, there are a few basic precautions you should take to avoid hurting yourself or damaging the unit:

- Read the installation and operating instructions in this manual carefully. Be sure to save it for future reference.
- Read and follow all warning and instruction labels on the product itself.
- To protect the Model 400 from overheating, make sure all openings on the unit are not blocked. Do not place on or near a heat source, such as a radiator or heat register.
- Do not use your Model 400 near water, or spill liquid of any kind into it.
- Be certain that your power source matches the rating listed on the AC power transformer. If you're not sure of the type of power supply to your facility, consult your dealer or local power company.
- Do not allow anything to rest on the power cord. Do not locate this product where the cord will be abused by persons walking on it.
- Do not overload wall outlets and extension cords, as this can result in the risk of fire or electric shock.
- Never push objects of any kind into this product through ventilation holes as they may touch dangerous voltage points or short out parts that could result in a risk of fire or electric shock.
- To reduce the risk of electric shock, do not disassemble this product, but return it to Sensaphone Customer Service, or other approved repair facility, when any service or repair work is required. Opening or removing covers may expose you to dangerous voltages or other risks. Incorrect reassembly can cause electric shock when the unit is subsequently used.
- If anything happens that indicates that your Model 400 is not working properly or has been damaged, unplug it immediately and follow the procedures in Appendix F for having it serviced. Return the unit for servicing under the following conditions:

1. The power cord or plug is frayed or damaged.
2. Liquid has been spilled into the product or it has been exposed to water.
3. The unit has been dropped, or the cabinet is damaged.
4. The unit doesn't function normally when you're following the operating instructions.

- Avoid using a telephone (other than a cordless type) during an electrical storm. There may be a remote risk of electric shock from lightning.
- Do not use the telephone to report a gas leak in the vicinity of the leak.

CAUTION

To Reduce the Risk of Fire or Injury to Persons, Read and Follow these Instructions:

1. Use only the following type and size batteries:
   Alkaline, size C.
2. Do not dispose of the batteries in a fire. The cell may explode. Check with local codes for possible special disposal instructions.
3. Do not open or mutilate the batteries. Released electrolyte is corrosive and may cause damage to the eyes or skin. It may be toxic if swallowed.
4. Exercise care in handling batteries in order not to short the battery with conducting materials such as rings, bracelets, and keys. The battery or conductor may overheat and cause burns.
5. Do not mix old and new batteries in this product.

FCC Requirements

Part 68: The Sensaphone® Model 400 complies with Part 68 of the FCC rules. On the back of the unit there is a label that contains, among other information, the FCC Registration Number and the Ringer Equivalence Number (REN) for this equipment. You must, upon request, provide this information to your local telephone company.

The REN is useful to determine the quantity of devices that you may connect to your telephone line and still have all of those devices ring when your telephone number is called. In most, but not all areas, the sum of the RENs of all devices connected to one line should not exceed five (5.0). To be certain of the number of devices that you may connect to your line, you may want to contact your local telephone company to determine the maximum REN for your calling area.

This equipment may not be used on coin service provided by the telephone company. Connection to party lines is subject to state tariffs.

Should the Model 400 cause harm to the telephone network, the telephone company may discontinue your service temporarily. If possible, they will notify you in advance. But if advance notice isn't practical, the telephone company may temporarily discontinue service without notice and you will be notified as soon as possible. You will be informed of your right to file a complaint with the FCC. The telephone company may make changes in its facilities, equipment, operations, or procedures where

such action is reasonably required in the operation of its business and is not inconsistent with the rules and regulations of the FCC that could affect the proper functioning of your equipment. If they do, you will be notified in advance to give you an opportunity to maintain uninterrupted telephone service.

If you experience trouble with this equipment, or you need information on obtaining service or repairs, please contact:

PHONETICS, INC.

901 Tryens Road, Aston, PA 19014

610-558-2700 Fax: 610-558-0222

The telephone company may ask that you disconnect this equipment from the network until the problem has been corrected or until you are sure that the equipment is not malfunctioning.

Part 15: This equipment has been tested and found to comply with the limits for a Class B digital device, pursuant to Part 15 of the FCC Rules. These limits are designed to provide reasonable protection against harmful interference in a residential installation. This equipment generates, uses and can radiate radio frequency energy and, if not installed and used in accordance with the instructions, may cause harmful interference to radio communications. However, there is no guarantee that interference will not occur in a particular installation. If this equipment does cause harmful interference to radio or television reception, which can be determined by turning the equipment off and on, the user is encouraged to try to correct the interference by one or more of the following measures:

- Reorient or relocate the receiving antenna.
- Increase the separation between the equipment and the receiver.
- Connect the equipment into an outlet on a circuit different from that to which the receiver is connected.
- Consult the dealer or an experienced radio/television technician for help.

Canadian Department of Communications Statement

Notice: The Canadian Department of Communications label identifies certified equipment. This certification means that the equipment meets certain telecommunications network protective operational and safety requirements. The Department does not guarantee the equipment will operate to the user's satisfaction.

Before installing this equipment, users should ensure that it is permissible to be connected to the facilities of the local telecommunications company. The equipment must also be installed using an acceptable method of connection. In some cases, where the company's inside wiring is associated with a single line, individual service may be extended by means of a certified connector assembly (telephone extension cord). The customer should be aware that compliance with the above conditions may not prevent degradation of service in some situations.

Repairs to certified equipment should be made by an authorized Canadian maintenance facility designated by the supplier. Any repairs or alterations made by the user to this equipment, or equipment malfunctions, may give the telecommunications company cause to request the user to disconnect the equipment.

Users should ensure for their own protection that the electrical ground connections of the power utility telephone lines and internal metallic water pipe system, if present, are connected together. This precaution may be particularly important in rural areas.

CAUTION: Users should not attempt to make such connections themselves, but should contact the appropriate electric inspection authority, or electrician, as appropriate.

The Load Number (LN) assigned to each terminal device denotes the percentage of the total load to be connected to a telephone loop which is used by the device to prevent overloading. The termination on loop may consist of any combination of devices subject only to the requirement that the total of the Load Numbers of all the devices does not exceed 100. For the Sensaphone® Model 400, the Load Number is 0.3.

1 YEAR LIMITED WARRANTY

PLEASE READ THIS WARRANTY CAREFULLY BEFORE USING THE PRODUCT.

THIS LIMITED WARRANTY CONTAINS SENSAPHONE'S STANDARD TERMS AND CONDITIONS. WHERE PERMITTED BY THE APPLICABLE LAW, BY KEEPING YOUR SENSAPHONE PRODUCT BEYOND THIRTY (30) DAYS AFTER THE DATE OF DELIVERY, YOU FULLY ACCEPT THE TERMS AND CONDITIONS SET FORTH IN THIS LIMITED WARRANTY.

IN ADDITION, WHERE PERMITTED BY THE APPLICABLE LAW, YOUR INSTALLATION AND/OR USE OF THE PRODUCT CONSTITUTES FULL ACCEPTANCE OF THE TERMS AND CONDITIONS OF THIS LIMITED WARRANTY (HEREINAFTER REFERRED TO AS "LIMITED WARRANTY OR WARRANTY"). IF YOU DO NOT AGREE TO THE TERMS AND CONDITIONS THIS WARRANTY, INCLUDING ANY LIMITATIONS OF WARRANTY, INDEMNIFICATION TERMS OR LIMITATION OF LIABILITY, THEN YOU SHOULD NOT USE THE PRODUCT AND SHOULD RETURN IT TO THE SELLER FOR A REFUND OF THE PURCHASE PRICE. THE LAW MAY VARY BY JURISDICTION AS TO THE APPLICABILITY OF YOUR INSTALLATION OR USE ACTUALLY CONSTITUTING ACCEPTANCE OF THE TERMS AND CONDITIONS HEREIN AND AS TO THE APPLICABILITY OF ANY LIMITATION OF WARRANTY, INDEMNIFICATION TERMS OR LIMITATIONS OF LIABILITY.

1. **WARRANTOR**: In this Warranty, Warrantor shall mean "Dealer, Distributor, and/or Manufacturer."

2. **ELEMENTS OF WARRANTY**: This Product is warranted to be free from defects in materials and craftsmanship with only the limitations and exclusions set out below.

3. **WARRANTY AND REMEDY**: One-Year Warranty — In the event that the Product does not conform to this warranty at any time during the time of one year from original purchase, warrantor will repair the defect and return it to you at no charge.

This warranty shall terminate and be of no further effect at the time the product is: (1) damaged by extraneous cause such as fire, water, lightning, etc. or not maintained as reasonable and necessary; or (2) modified; or (3) improperly installed; or (4) misused; or (5) repaired or serviced by someone other than Warrantors' authorized personnel or someone expressly authorized by Warrantor's to make such service or repairs; (6) used in a manner or purpose for which the product was not intended; or (7) sold by original purchaser.

LIMITED WARRANTY, LIMITATION OF DAMAGES AND DISCLAIMER OF LIABILITY FOR DAMAGES: THE WARRANTOR'S OBLIGATION UNDER THIS WARRANTY IS LIMITED TO REPAIR OR REPLACEMENT OF THE PRODUCT, AT THE WARRANTOR'S OPTION AS TO REPAIR OR REPLACEMENT. IN NO EVENT SHALL WARRANTORS BE LIABLE OR

RESPONSIBLE FOR PAYMENT OF ANY INCIDENTAL, CONSEQUENTIAL, SPECIAL AND/OR PUNITIVE DAMAGES OF ANY KIND, INCLUDING BUT NOT LIMITED TO ANY LABOR COSTS, PRODUCT COSTS, LOST REVENUE, BUSINESS INTERRUPTION LOSSES, LOST PROFITS, LOSS OF BUSINESS, LOSS OF DATA OR INFORMATION, OR FINANCIAL LOSS, FOR CLAIMS OF ANY NATURE, INCLUDING BUT NOT LIMITED TO CLAIMS IN CONTRACT, BREACH OF WARRANTY OR TORT, AND WHETHER OR NOT CAUSED BY WARRANTORS' NEGLIGENCE. IN THE EVENT THAT IT IS DETERMINED IN ANY ADJUDICATION THAT THE LIMITED WARRANTIES OF REPAIR OR REPLACEMENT ARE INAPPLICABLE, THEN THE PURCHASER'S SOLE REMEDY SHALL BE PAYMENT TO THE PURCHASER OF THE ORIGINAL COST OF THE PRODUCT, AND IN NO EVENT SHALL WARRANTORS BE LIABLE OR RESPONSIBLE FOR PAYMENT OF ANY INCIDENTAL, CONSEQUENTIAL, SPECIAL AND/OR PUNITIVE DAMAGES OF ANY KIND, INCLUDING BUT NOT LIMITED TO ANY LOST REVENUE, BUSINESS INTERRUPTION LOSSES, LOST PROFITS, LOSS OF BUSINESS, LOSS OF DATA OR INFORMATION, OR FINANCIAL LOSS, FOR CLAIMS OF ANY NATURE, INCLUDING BUT NOT LIMITED TO CLAIMS IN CONTRACT, BREACH OF WARRANTY OR TORT, AND WHETHER OR NOT CAUSED BY WARRANTORS' NEGLIGENCE.

WITHOUT WAIVING ANY PROVISION IN THIS LIMITED WARRANTY, IF A CIRCUMSTANCE ARISES WHERE WARRANTORS ARE FOUND TO BE LIABLE FOR ANY LOSS OR DAMAGE ARISING OUT OF MISTAKES, NEGLIGENCE, OMISSIONS, INTERRUPTIONS, DELAYS, ERRORS OR DEFECTS IN WARRANTORS' PRODUCTS OR SERVICES, SUCH LIABILITY SHALL NOT EXCEED THE TOTAL AMOUNT PAID BY THE CUSTOMER FOR WARRANTORS' PRODUCT AND SERVICES OR $250.00, WHICHEVER IS GREATER. YOU HEREBY RELEASE WARRANTORS FROM ANY AND ALL OBLIGATIONS, LIABILITIES AND CLAIMS IN EXCESS OF THIS LIMITATION.

INDEMNIFICATION AND COVENANT NOT TO SUE: YOU WILL INDEMNIFY, DEFEND AND HOLD HARMLESS WARRANTORS, THEIR OWNERS, DIRECTORS, OFFICERS, EMPLOYEES, AGENTS, SUPPLIERS OR AFFILIATED COMPANIES, AGAINST ANY AND ALL CLAIMS, DEMANDS OR ACTIONS BASED UPON ANY LOSSES, LIABILITIES, DAMAGES OR COSTS, INCLUDING BUT NOT LIMITED TO DAMAGES THAT ARE DIRECT OR INDIRECT, INCIDENTAL, SPECIAL OR CONSEQUENTIAL, AND INCLUDING ATTORNEYS FEES AND LEGAL COSTS, THAT MAY RESULT FROM THE INSTALLATION, OPERATION, USE OF, OR INABILITY TO USE WARRANTORS' PRODUCTS AND SERVICES, OR FROM THE FAILURE OF THE WARRANTORS' SYSTEM TO REPORT A GIVEN EVENT OR CONDITION, WHETHER OR NOT CAUSED BY WARRANTORS' NEGLIGENCE.

YOU AGREE TO RELEASE, WAIVE, DISCHARGE AND COVENANT NOT TO SUE WARRANTORS, THEIR OWNERS, DIRECTORS, OFFICERS, EMPLOYEES, AGENTS, SUPPLIERS OR AFFILIATED COMPANIES, FOR ANY AND ALL LIABILITIES POTENTIALLY ARISING FROM ANY CLAIM, DEMAND OR ACTION BASED UPON ANY LOSSES, LIABILITIES, DAMAGES

OR COSTS, INCLUDING BUT NOT LIMITED TO DAMAGES THAT ARE DIRECT OR INDIRECT, INCIDENTAL, SPECIAL OR CONSEQUENTIAL, AND INCLUDING ATTORNEYS FEES AND LEGAL COSTS, THAT MAY RESULT FROM THE INSTALLATION, OPERATION, USE OF, OR INABILITY TO USE WARRANTORS' PRODUCTS AND SERVICES, OR FROM THE FAILURE OF THE WARRANTORS' SYSTEM TO REPORT A GIVEN EVENT OR CONDITION, WHETHER OR NOT CAUSED BY WARRANTORS' NEGLIGENCE, EXCEPT AS NECESSARY TO ENFORCE THE EXPRESS TERMS OF THIS LIMITED WARRANTY.

EXCLUSIVE WARRANTY: THE LIMITED WARRANTY OR WARRANTIES DESCRIBED HEREIN CONSTITUTE THE SOLE WARRANTY OR WARRANTIES TO THE PURCHASER. ALL IMPLIED WARRANTIES ARE EXPRESSLY DISCLAIMED, INCLUDING: THE WARRANTY OF MERCHANTABILITY AND THE WARRANTY OF FITNESS FOR A PARTICULAR USE AND THE WARRANTY OF FITNESS FOR A PARTICULAR PURPOSE AND THE WARRANTY OF NON-INFRINGEMENT AND/OR ANY WARRANTY ARISING FROM A COURSE OF DEALING, USAGE, OR TRADE PRACTICE.

It must be clear that the Warrantors are not insuring your premises or business or guaranteeing that there will not be damage to your person or property or business if you use this Product. You should maintain insurance coverage sufficient to provide compensation for any loss, damage, or expense that may arise in connection with the use of products or services, even if caused by Warrantors' negligence. The warrantors assume no liability for installation of the Product and/or interruptions of the service due to strikes, riots, floods, fire, and/or any cause beyond Seller's control, further subject to the limitations expressed in any License Agreement or other Agreement provided by Warrantors to purchaser.

The agreement between the Warrantors and the Purchaser, including but not limited to the terms and conditions herein shall not be governed by the Convention for the International Sale of Goods. Where applicable, the Uniform Commercial Code as adopted by the State of Delaware shall apply.

4. **PROCEDURE FOR OBTAINING PERFORMANCE OF WARRANTY**: In the event that the Product does not conform to this warranty, the Product should be shipped or delivered freight prepaid to a Warrantor with evidence of original purchase.

5. **LEGAL REMEDIES AND DISCLAIMER**: Some jurisdictions may not allow, or may place limits upon, the exclusion and/or limitation of implied warranties, incidental damages and/or consequential damages for some types of goods or products sold to consumers and/or the use of indemnification terms. Thus, the exclusions, indemnification terms and limitations set out above may not apply, or may be limited in their application, to you. If the implied warranties can not be excluded, and the applicable law permits limiting the duration of implied warranties, then the implied warranties herein are to be limited to the same duration as the applicable written warranty or warranties herein. The warranty or warranties

herein may give you specific legal rights that will depend upon the applicable law. You may also have other legal rights depending upon the law in your jurisdiction.

6. **CHOICE OF FORUM AND CHOICE OF LAW**: In the event that a dispute arises out of or in connection with this Limited Warranty, then any claims or suits of any kind concerning such disputes shall only and exclusively be brought in either the Court of Common Pleas of Delaware County, Pennsylvania or the United States District Court for the Eastern District of Pennsylvania.

Regardless of the place of contracting or performance, this Limited Warranty and all questions relating to its validity, interpretation, performance and enforcement shall be governed by and construed in accordance with the laws of the State of Delaware, without regard to the principles of conflicts of law.

Effective date 05/01/2004

PHONETICS, INC. d.b.a. SENSAPHONE
901 Tryens Road
Aston, PA 19014
Phone: 610.558.2700 Fax: 610.558.0222
www.sensaphone.com

TABLE OF CONTENTS

CHAPTER 1: INTRODUCTION 17

FEATURE SUMMARY 18
ABOUT THIS MANUAL 18
LAYOUT 19
LED INDICATORS 19
TECHNICAL SUPPORT 20

CHAPTER 2: INSTALLATION 21

2.1 OPERATING ENVIRONMENT 21
2.2 MOUNTING 21
2.3 POWER SURGE PROTECTION 21
2.4 POWER SUPPLY AND BATTERY BACKUP 22
2.5 STARTING THE MODEL 400. 22
2.6 RUN MODE AND STANDBY MODE 22
2.7 TELEPHONE LINE 23
2.8 THE MICROPHONE 25
2.9 ALERT ZONES. 25
2.10 INSTALLING THE SENSOR 26
2.11 MULTIPLE SENSORS 27
2.12 OUTDOOR WIRING 28
2.13 DISCONNECTING THE MODEL 400 FOR STORAGE OR SEASONAL USE. 29

CHAPTER 3: QUICK START 31

3.1 THE LOCAL KEYPAD 31
3.2 PREPARATION FOR PROGRAMMING. 31
3.3 QUICK-START PROGRAMMING STEPS 32
3.4 SUMMARY OF THE ALARM DIAL-OUT PROCESS 36

CHAPTER 4: COMMUNICATIONS PROGRAMMING 39

4.1 VOICE MESSAGES. 39
4.2 THE UNIT ID NUMBER. 42
4.2.1 Programming the ID Number. 42
4.2.2 Interrogating the ID Number 43

4.3 DIAL-OUT TELEPHONE NUMBERS 43
4.3.1 Programming Dial-out Telephone Numbers 44
4.3.2 Interrogating a Dial-out Telephone Number 44
4.3.3 Erasing a Telephone Number 45
4.4 DIAL-OUT TEST MODE. 46
4.4.1 To test a dialout phone number:. 46
4.4.2 Manually Dial a Telephone Number 46
4.5 TONE OR PULSE DIALING 47
4.6 SPECIAL DIALING 47
4.6.1 Special Dialing Keys 48
4.6.2 Incorporating a Pause 49
4.6.3 Incorporating a Pound (#) or Star (*). 51
4.6.4 Special Dialing to a Beeper or Pager 52
4.7 RINGS UNTIL ANSWER. 53
4.7.1 Programming Rings Until Answer 53
4.7.2 Interrogating Rings Until Answer. 53
4.8 TAD (TELEPHONE ANSWERING DEVICE). 54
4.8.1 TAD Enable/Disable 54
4.8.2 Using the TAD Feature. 54
4.8.3 No TAD In Use 55
4.9 LISTEN-IN TIME 55
4.9.1 Programming the Listen-in Time. 55
4.9.2 Interrogating the Listen-in Time. 56
4.10 CALL DELAY 56
4.10.1 Programming the Call Delay. 57
4.10.2 Interrogating Call Delay. 57
4.11 LOCAL VOICE MUTE 58
4.11.1 Enable/Disable Local Voice Mute. 58
4.12 VOICE REPETITIONS 59
4.12.1 Programming Voice Repetitions. 59
4.12.2 Interrogating Voice Repetitions 60
4.13 INTERCALL TIME 60
4.13.1 Programming Intercall Time. 60
4.13.2 Interrogating Intercall Time 61
4.14 MAXIMUM NUMBER OF CALLS (MAX CALLS). 62
4.14.1 Programming Max Calls 62
4.14.2 Interrogating Max Calls 63

4.15 THE CLOCK 63
4.15.1 Setting the Clock 63
4.15.2 Interrogating for the Current Time 64
4.16 THE SECURITY CODE 64
4.16.1 Locking the Keypad 65
4.16.2 Unlocking the Keypad 65

CHAPTER 5: ALARM PROGRAMMING 67
5.1 ZONE CONFIGURATION 67
5.1.1 Programming Zone Configuration. 68
5.1.2 Interrogating Zone Configuration 69
5.2 ENABLE/DISABLE ZONES 69
5.2.1 Changing Enabled/Disabled Zone Status 69
5.2.2 Verifying Enabled/Disabled Zone Status 70
5.3 ZONE RECOGNITION TIME 70
5.3.1 Programming Zone Recognition Time 71
5.3.2 Interrogating Zone Recognition Time 72
5.4 ESTABLISHING HIGH AND LOW TEMPERATURE LIMITS .72
5.4.1 Programming Temperature Limits for a Selected Zone 72
5.4.2 Disabling Alarm Response to High or Low Temperature . 74
5.4.3 Interrogating High and Low Temperature Limits 74
5.5 TEMPERATURE SCALE 75
5.6 TEMPERATURE CALIBRATION. 75
5.6.1 Programming Temperature Calibration. 75
5.6.2 Interrogating Temperature Calibration 76
5.7 OBTAINING CURRENT TEMPERATURE 77
5.8 AC POWER MONITORING ENABLE/DISABLE 77
5.8.1 Enabling/Disabling the AC Power Alarm 77
5.9 AC POWER FAILURE RECOGNITION TIME. 78
5.9.1 Programming Power Failure Recognition Time. 78
5.9.2 Interrogating Power Failure Recognition Time 79
5.10 SOUND ALARM MONITORING 79
5.10.1 Programming Sound Alarm Sensitivity. 80
5.10.2 Interrogating Sound Sensitivity. 80
5.10.3 Programming High Sound Alarm Recognition Time 81
5.10.4 Interrogating High Sound Alarm Recognition Time 82
5.11 HIGH SOUND ALARM ENABLE/DISABLE 82
5.11.1 Changing Enabled/Disabled High Sound Alarm 82
5.12 EXIT DELAY 83
5.13 DESIGNATING A ZONE AS UNUSED 83

CHAPTER 6: ACKNOWLEDGMENT, STATUS REPORT & REMOTE ACCESS 85
6.1 ALARM ACKNOWLEDGMENT 85
6.1.1 Local Acknowledgment 85
6.1.2 Touch-Tone™ Acknowledgment 85
6.1.3 Callback Acknowledgment 86
6.2 STATUS REPORT 87
6.2.1 Example: Status Report, No Alarms 88
6.2.2 Example: Status Report, Existing Alarms 88
6.2.3 Example: Status Report, Disabled Zones 89
6.2.4 Battery Condition 90
6.2.5 Remote Access by Touch-Tone™ Telephone 90

CHAPTER 7: OPERATION 95
7.1 ALARM DETECTION, DIAL-OUT AND ACKNOWLEDGMENT 95
7.2 EXAMPLE: A DIAL-OUT TELEPHONE CALL. 99

CHAPTER 8: CONTROLLING THE OUTPUT 101
8.1 OUTPUT MODES. 101
8.1.1 To program the Output Mode: 102
8.1.2 To play back the programmed Output Mode:. 103
8.2 SWITCHING THE OUTPUT USING THE KEYPAD. 103
8.2.1 Switching the Output Over the Phone. 103
8.3 TYPICAL APPLICATIONS 104
8.3.1 Single Thermostat Control 104
8.3.2 Dual Thermostat Control 106
8.3.3 CONTROLLING LIGHTS OR OTHER DEVICES 108

APPENDIX A: WEEKLY TESTING PROCEDURE 109

APPENDIX B: TROUBLESHOOTING 111
Error Messages 111
Communications / Dial Out 111
Temperature Monitoring 114
Sound Level Monitoring 115
Other monitoring 116

APPENDIX C: 400 QUICK REFERENCE . . . 119

APPENDIX D: ACCESSORIES 123

APPENDIX E: SPECIFICATIONS 125

Alert Zones 125
Microphone 125
Phone Interface 125
LED Indicator 125
Relay Output 125
Power Supply 126
Environmental 126
Physical 126

APPENDIX F: RETURNING THE UNIT FOR REPAIR 127

APPENDIX G: TEST LOG 129

CHAPTER 1: INTRODUCTION

The Sensaphone® Model 400 is a fully-programmable, environmental monitoring system that offers extensive on-site and remote monitoring capability to small businesses, private homes, farms, greenhouses, computer rooms, and remote facilities. Designed for desktop or wall mounting, the Model 400 is simple to install, program and operate; no changes to standard electrical or telephone service are required. When connected to a telephone line, it will respond to an alarm by dialing up to four separate telephone numbers. When the call is answered, an "Alert Condition" message is delivered in user recordable voice.

The Model 400 features built-in sensors to monitor a variety of conditions:

- High sound level
- AC electric power failure
- Battery backup
- Temperature*

*__Note:__ While technically not a "built-in" sensor, temperature is factory installed on zone 1.

The 400 is equipped with 4 alert zones. Additional sensors* can be added to extend monitoring capabilities to include:

- Intrusion or unauthorized entry
- Water leaks and seepage
- Temperature
- Humidity
- Equipment operation
- Many other conditions that may require unique monitoring solutions

* Refer to Appendix D for information on additional sensors (available separately from Sensaphone) best suited to your application.

The status of each monitored condition is readily obtained at the unit's installation site, or remotely by telephone. At the close of every Status Report, time is provided for listening to on-site sounds.

To ensure reliable operation, the Model 400 features power backup capability; in the event of AC power failure, six C-cell alkaline batteries (not included) will continue to power the unit for approximately 24 hours.

FEATURE SUMMARY

The Sensaphone 400 includes the following features:

- Four zones configurable as temperature or dry contact
- Each zone can be individually enabled or disabled
- Fully automatic input configuration
- Temperature sensor included on zone #1
- Calibration for each zone
- Power monitor
- High sound-level monitor
- User-recordable voice messages
- Dial out to four telephone numbers
- Alarm dial out via voice and numeric pager
- Microphone for onsite listen-in
- Built-in line seizure
- Relay output (manual or automatic control)
- Four status LEDs
- Surge protection on all zones, telephone line, and power supply
- 24 hour battery backup (batteries not included)
- Wall or desktop installation

ABOUT THIS MANUAL

This manual comprises the instructions and commands for installing and operating the Model 400. The Quick Start chapter is included to speed understanding of programming and operation. Communication and Alarm Programming chapters demonstrate step-by-step methods for utilizing the full range of available features. The Troubleshooting chapter provides assistance in the event that problems are encountered.

LAYOUT

1. Programming Keypad
2. Power Jack
3. Phone Extension Jack
4. Phone Line Jack
5. Speaker
6. Built in Microphone
7. System on LED
8. Phone-in-use LED
9. Alarm LED
10. Battery OK LED
11. Battery Compartment
12. Input/Output Wiring Door

LED INDICATORS

The LEDs provide on-site alarm and status information. Listed below are descriptions of how the LEDs work.

System On

LED Off: Unit is off

LED On: Unit is in Run mode

LED Blinking: Unit is in Standby mode

Phone-In-Use

LED On: The unit or some other device is communicating on the phone line

LED Off: Phone line is not in use

LED Blinking: No telephone service detected

Alarm

LED Off: No alarms exist

LED Blinking: Unacknowledged alarm exists

LED On: Acknowledged alarm exists

Battery OK

LED On: Battery condition good

LED Blinking: Battery condition low

LED Off: No battery/critically low battery condition

TECHNICAL SUPPORT

If any questions arise upon installation or operation of the Model 400, please contact the Sensaphone Technical Service Department at the number shown below, and have the following information:

- Date of Purchase _____
- Serial number of your Model 400 _____

Technical Support is available from 8:00am to 5:00pm EST.

You may also e-mail us at support@sensaphone.com.

SENSAPHONE
901 Tryens Road
Aston, PA 19014

Phone: 610-558-2700
Fax: 610-558-0222

www.sensaphone.com

CHAPTER 2: INSTALLATION

Correctly installing the Model 400 will ensure proper functioning of the unit. Please read the entire chapter before starting the installation process.

Within the packaging will be a Warranty Registration Card. Please take the time to fill this out and mail. The One Year Limited Warranty is explained in the front of this manual.

2.1 OPERATING ENVIRONMENT

The Model 400 should be installed and operated in a clean, dry area that provides space for wiring sensors to the screw terminals, near an AC power source and telephone line. Operating temperature ranges from 32° Fahrenheit (0° Celsius) to +122° Fahrenheit (+50° Celsius).

NOTE: The Model 400 is a sensitive electronic device. Do not install the Model 400 near strong electrostatic, electromagnetic or radioactive fields. Do not expose to humid environments, fumes, or corrosive vapors.

2.2 MOUNTING

Flat Mount: Place the Model 400 on top of a desk or other horizontal surface. Wall Mount: Mount on a wall with two flathead screws using the keyholes on the back panel of the unit. Place the flathead screws or bolts 4” apart at the desired height from the floor. Hook the unit over the screws and toward the floor. Refer to Figure 2-1.

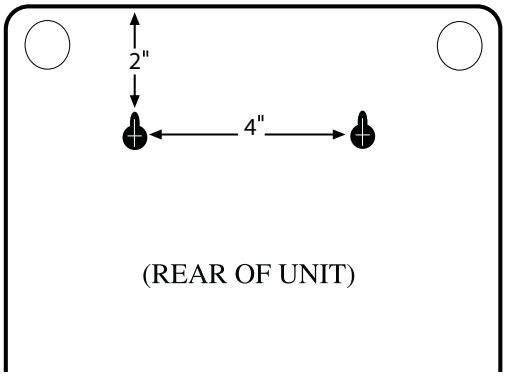

Figure 2-1. Wall Mount

2.3 POWER SURGE PROTECTION

The Model 400 can be damaged by power surges and lightning through the telephone line and the 120 VAC power supply. Although the Model 400 has built-in surge protection, we recommend that additional protection be obtained for the unit and for any electronic equipment that is attached

to your power supply and telephone lines. Power surge protection is especially important if you live in a lightning-prone area. The ISOTEL Surge Protector Model IB-4 is available through Sensaphone. See Appendix D.

2.4 POWER SUPPLY AND BATTERY BACKUP

The Model 400 is provided with a DC power transformer that will plug into any standard 120 VAC outlet and a battery backup (batteries not included) that enables the unit to continue functioning if AC power is removed (due to electric power disruption or failure). The Model 400 uses six, C-cell alkaline batteries. Do not use rechargeable batteries. Connect the DC power transformer into the jack on the back of the unit and plug the adapator into a 120VAC outlet

NOTE: Be sure that the DC transformer is plugged into an outlet before installing batteries.

To install the batteries, remove the battery compartment door located on the front of the unit below the keypad. Press down and slide the door away from the unit, align batteries according to the diagram shown in Figure 2-2, and replace the hatch.

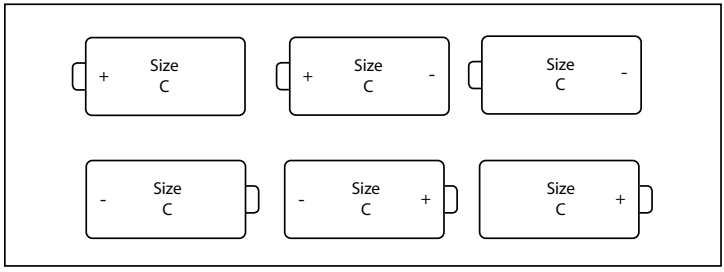

Figure 2-2. Battery Installation

2.5 STARTING THE MODEL 400

When the DC power transformer is first plugged into the electrical outlet, the Model 400 automatically starts in RUN mode. The System On light will begin to glow. The unit will respond with,"Hello, this is Sensaphone 400."

2.6 RUN MODE AND STANDBY MODE

Pressing the RUN/STANDBY key on the Model 400 keypad will alternately activate or deactivate the unit. If the unit is activated and in RUN mode, the system on light glows steadily. In STANDBY mode, the system on light goes out, but will blink every few seconds to indicate that power is still supplied to the unit.

In RUN mode, the Model 400 is able to receive incoming calls and to dial out automatically in the event of an alarm on one of the monitored conditions. To enter STANDBY mode, press RUN/STANDBY.

As soon as the Model 400 enters STANDBY mode, it responds with "Goodbye." The system on light immediately goes out and then resumes with a blink every few seconds. While in STANDBY mode, all functions are disabled, but programmed memory is preserved. Upon exiting STANDBY mode, any currently existing alarms will be announced.

> **NOTE:** STANDBY mode is not equivalent to "power off"—an electrical source, such as the 120 VAC, or the battery backup, continues to provide full power to the unit. If the unit is placed in STANDBY mode, unplugged from the 120 VAC outlet, and placed in storage, the batteries will continue to power the Model 400, discharging until they fail. Consequently, batteries should always be removed from the unit following disconnection from any 120 VAC outlet, prior to storage.

Press the RUN/STANDBY key again to return to RUN mode.

Figure 2-3. The RUN/STANDBY Key

2.7 TELEPHONE LINE

The Model 400 will operate with all standard analog telephone lines that accept pulse or tone dialing. The Model 400 cannot be used on an extension line to dial its own telephone number. Also, it may not be installed on a party line, pay telephone line, or digital telephone system.

Certain private telephone systems and public switching equipment may not accept the Model 400 dialing or may generate an unacceptable ring signal. In those cases, a dedicated line may be required. Consult the supplier of your telephone system if you encounter problems.

If you do not have a modular telephone extension at the Model 400's location, you must contact your local telephone company to have one installed (there is a charge for this service). If you have four-pin jacks, adapters are available to convert them to the modular plugs. Contact your local telephone company or electronics parts store.

> **CAUTION:** Never install telephone wiring during a lightning storm. Never install telephone jacks in wet locations unless the jack is specifically designed for wet locations. Never touch uninsulated telephone wires or terminals unless the telephone line has been disconnected at the network interface. Use caution when installing or modifying telephone lines.

To install the telephone line, plug one end of the modular cord into the "line" jack on the back of the model 400 (as shown) and plug the other end into any standard RJ11 phone outlet.

Refer to Figure 2-4.

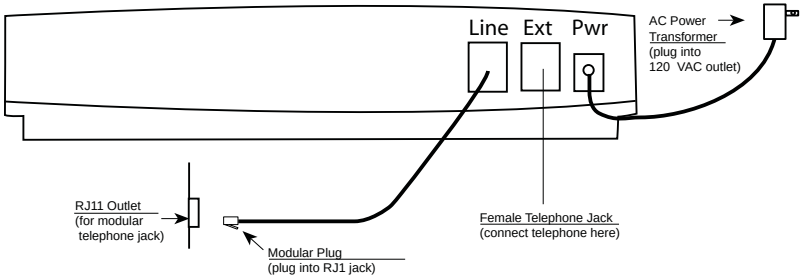

Figure 2-4. Installing the Telephone Line

On the back of the Model 400 is an extra female telephone jack labeled "EXT". This is provided so that a telephone or other answering device may be used on the same line as the unit. (It is not necessary to hook up a telephone for the Model 400 to operate.) This extension jack features Line Seizure which means that it will disconnect the extension jack when the Model 400 needs to make a telephone call. To ensure that the unit has priority over any other device on the line, you must connect all extensions to this jack. (see figure)

On the unit there are two RJ11C phone jacks:

- The RJ11C jack labeled "LINE"is to be connected to the incoming line of your phone service, ahead of all other phones or telephone extensions.
- The RJ11C telephone jack labeled "EXT" is to be connected to all extensions.

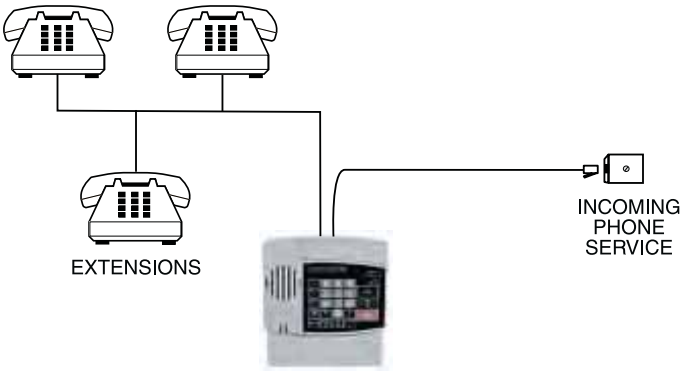

2.8 THE MICROPHONE

The Model 400 is provided with a built-in microphone which is used to monitor high sound levels produced near the installation site. The sensitivity of the microphone is configurable and will detect a continuous as well as a pulsating alarm. Note that beeping alarms that have a half second or more of silence between beeps will not be detected.

Other programming options that apply to the microphone include setting the length of time before a high sound causes an alarm.

If this sound level exists for 8 consecutive seconds (default) or for the programmed length of time, the Model 400 will dial out with an alarm message.

> **NOTE:** The proximity of the audible alarm to the microphone is extremely important.

Normally, the Model 400 and the audible alarm must be in the same room. The maximum distance can vary considerably depending on the alarm, the acoustics, and the size of the room.

During an alarm dial-out, the microphone allows four-second intervals to listen-in to sounds at the Model 400's location.

When calling for a Status Report, the microphone permits listening to on-site sounds for a programmed time interval.

2.9 ALERT ZONES

Open the input/output wiring door located above the keypad.The Model 400 can monitor up to 4 zones (represented by the numbered terminal screws shown in Figure 2-5, below).

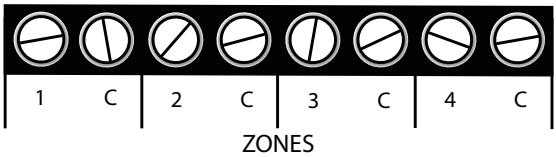

Figure 2-5 Alert Zones

Zones are configured as either dry contact or temperature. A zone configured as dry contact can be used with any normally open (N.O.) or normally closed (N.C.) device. "Open" refers to an opened circuit path; if conditions cause the circuit to close, an alert condition occurs. "Closed" refers to a continuous circuit path; if a closed circuit is opened, an alert condition occurs. The Model 400 determines the way zones are configured by the type of sensor connected to each alert zone (refer to Chapter 5.)

A zone configured as "temperature" is designed to evaluate a range of settings. The Model 400 will read the temperature at the sensor's loca-

tion and compare that value to programmed high and low temperature limits. Temperature zones must be used with Sensaphone's 2.8K Remote Temperature Sensor or weatherproof sensor.

> **NOTE:** Before wiring, it is advisable to disable the zones to prevent accidentally tripping an alarm. See Chapter 5.

Important Note regarding Ultra-Low temperature freezers:
If you are connecting the Sensaphone to an ultra low temperature freezer (-80° C) and the freezer is equipped with alarm terminals/contacts you can connect these directly to one of the zones on your Sensaphone (refer to your freezer owner's manual for proper connection).

2.10 INSTALLING THE SENSOR

After you have selected the sensor, loosen the screw of the alert zone and its corresponding common (c). Two wire leads are used to connect any monitoring sensor. Fasten one lead to the numbered screw and the other lead to C. Tighten both screws. If the zone was not disabled, the Model 400 may recite its "Alarm Exists" message as you connect the sensor. If it does, just press ALARM CANCEL to stop it. Re-enable the zone after wiring. Refer to Figures 2-6 and 2-7 for connecting a sensor to an alert zone.

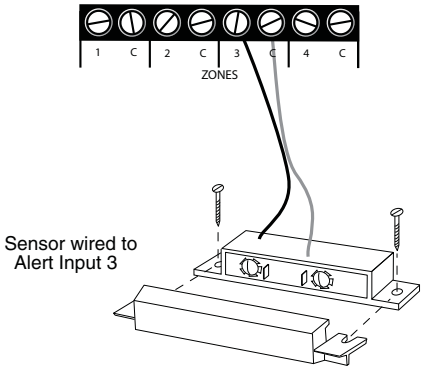

Figure 2-6. Sensor Connected to an Alert Zone

Any sensor can be attached to the Model 400 using 18-26-gauge wire (#22 recommended). The sensor can be several hundred feet from the unit, as long as the total resistance of the circuit is not greater than 50 ohms. Use wire appropriate for the application.

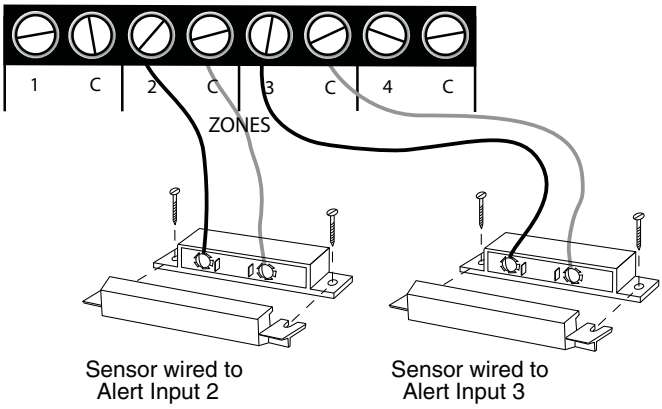

Figure 2-7 Two Sensors Wired to Adjacent Zones

NOTE: Do not use sensors, switches, or relays that supply any voltage or current to the Model 400. Be aware of proximity to other electrical wires or components when placing wires that lead from the sensors to the unit. Avoid running the wires near electrical devices that use high voltage or current, such as motors, heavy machinery, etc. This voltage may be inductively coupled into the sensor wiring and could result in damage to the the Model 400's circuitry. Try to place wires at least 6 inches from other electrical wiring or devices.

2.11 MULTIPLE SENSORS

The Model 400 may have more than one sensor connected to the same alert zone, as long as the normal condition for each sensor on the same alert zone is identical (either all N.O. or all N.C.). However, only one remote temperature sensor can be used on each zone.

When wiring several normally closed sensors on one zone, they must be connected in series. Connect one lead from the first sensor to the numbered screw of the alert zone. Next, take the other lead from the first sensor and connect it to one lead from the next sensor. Continue connecting sensors end-to-end until you have connected all of your sensors. Take the second lead from the last sensor and connect it to the common screw on the Model 400. See Figure 2-8. Multiple N.C. sensors are typically magnetic reed switches to monitor the security of windows and doors.

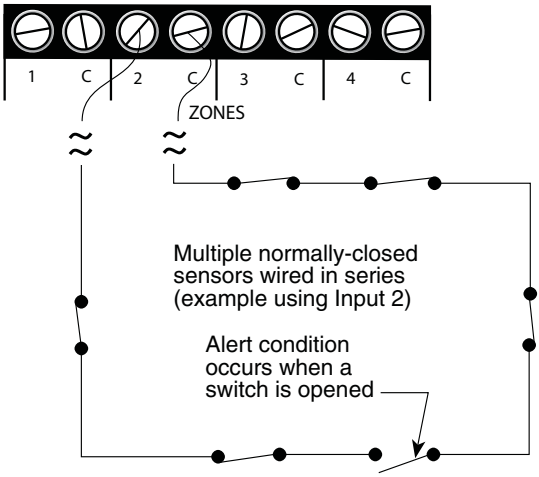

Figure 2-8. Multiple Normally Closed Sensors

To wire several normally open sensors to one alert zone, connect them in parallel. To do this, take one lead from each sensor and attach it to the numbered terminal. Then, take the second lead from each sensor and attach each to the corresponding common screw. Refer to Figure 2-9.

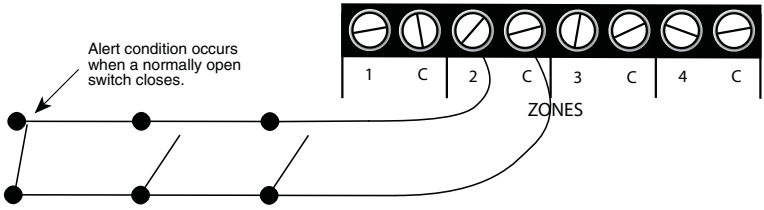

Figure 2-9 Multiple Normally Open Sensors

2.12 OUTDOOR WIRING

When wiring sensors outdoors, DO NOT allow exposed wires to run freely in open air; under such conditions, the Model 400 is susceptible to serious damage during a lightning storm. Depending upon the distance outdoor wiring must travel, consideration should be given to the use of shielded wire inside a metal conduit. Both shield and conduit should be connected to an earth ground. This prevents stray voltage from entering the unit.

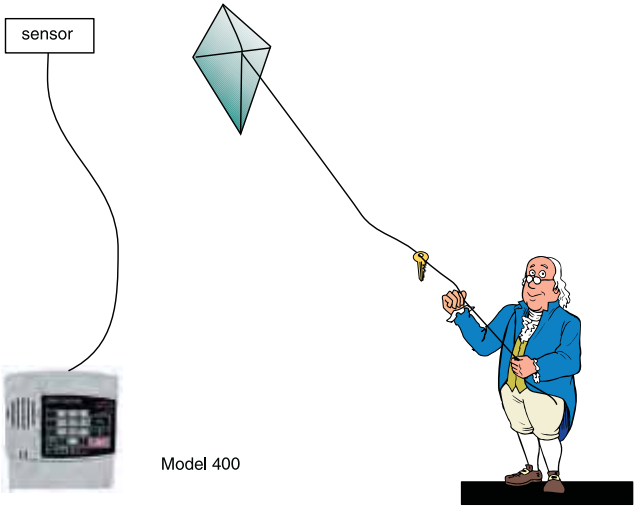

Figure 2-10. Potential Sensor Damage from Stray Electrical Noise

2.13 DISCONNECTING THE MODEL 400 FOR STORAGE OR SEASONAL USE.

If you plan to employ the Model 400 as a seasonal "watchdog" for a few months during the year, you must disconnect all wires from the unit completely to avoid damage to the circuitry when the unit is not in use. If the unit is unplugged but left in place with all the sensors still connected, the wires act as antennae that draw in any stray "electrical noise" from such devices as fans, blowers, microwaves, etc.

Additionally, it is important to remove the batteries, or they will discharge until they fail.

Preserve your Model 400 during the off-season, or when not in use:

- Remove the sensor wires at the screw terminals
- Remove the batteries
- Unplug the unit and store in a safe place

CHAPTER 3: QUICK START

This section presents a useful guide for first-time programming of the Model 400. Follow instructions for installation before attempting to program the Model 400. Refer to Chapter 2: Installation.

3.1 THE LOCAL KEYPAD

Programming is accomplished using the local keypad (shown below, Figure 3-1). Notice that a single key has several functions assigned to it; programming results are determined by the order in which keys are pressed.

Individual keystrokes are illustrated to show programming steps in the correct order. If you make a mistake by entering the wrong key, do not press another key until you hear the message "Error 1." Then, start over with the first key in the programming sequence.

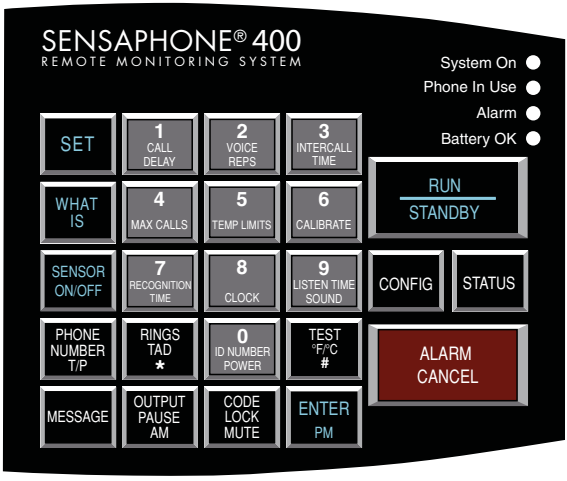

Figure 3-1. The Model 400 Keypad

3.2 PREPARATION FOR PROGRAMMING

Read complete instructions in Chapter 2: Installation, and make sure to follow these three steps first:

1. Plug the AC adapter into the 120 VAC outlet.

2. Install the batteries.

3. Connect the Model 400 to a telephone line.

When these steps are completed, the Model 400 is fully operational and able to monitor temperature, high sound, AC power failure and battery backup condition; it can also be called on the telephone for a Status Report or be used for listening to on-site sounds from any remote location. Now, the unit is ready for programming.

3.3 QUICK-START PROGRAMMING STEPS

STEP 1: SET CONFIGURATION OF ZONES

The Model 400 will scan the 4 external zones and determine if they are N.O. (normally open), N.C. (normally closed), or Temperature. If external sensors are added, make sure they are in their normal positions before proceeding—refer to Chapter 5, Section 5.1.

1. Press STANDBY to place the Model 400 in Standby mode.

2. If you have external sensors available, wire the sensors to the zones on the back of the Model 400 (see Chapter 2, Section 2.10). Otherwise, skip this step and move to step 3.

3. Press RUN. The System On light glows when the Model 400 returns to Run mode.

4. Press SET.

5. Press CONFIGURE.

6. The Model 400 will audibly recite the new configuration for each of the four zones, responding with "normally open", "normally closed", or "Temperature." If a zone is unused, it is treated as normally open.

STEP 2: SET THE ID NUMBER

It is recommended that you set the ID number to reflect the telephone number on which the Model 400 is installed.

1. Press SET

2. Press ID NUMBER.

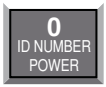

3. Using the number keys, enter the digits (up to 16 are permitted) for the ID number. The Model 400 will recite the digits as they are pressed.

4. Press ENTER. The 400 will respond: “Okay.”

STEP 3: SET DIAL-OUT TELEPHONE NUMBERS

To program dial-out telephone numbers:

1. Press SET.

2. Press PHONE NUMBER.

3. Select which telephone number to program. Press any unassigned number key (from 1 to 8) to represent the new telephone number entry. Model 400 will respond: “Enter number.”

4. Enter the complete telephone number using the number keys.

The Model 400 will recite the digits as they are pressed.

5. Press ENTER. The unit will respond: "Okay."

6. Repeat above procedure to program up to four separate telephone numbers.

STEP 4: SET TEMPERATURE LIMITS

High and low temperature limits can be separately programmed for each zone that is configured as temperature. Limits can range from –20° to +150°F, or from –30° to 65°C. Default settings are: 10° F for low temperature and 100° F for high temperature. Do not set temperature limits too close to normal room temperature, since minor fluctuations could result in frequent and unnecessary alarm dialouts.

1. Press SET.

2. Press TEMP LIMITS.

3. Using the number keys, press a number (from 1 to 4) that corresponds to the temperature zone being programmed.

The Model 400 responds: “Enter low temperature limit.”

4. Using the number keys, enter a value for low temperature limit. The Model 400 will recite the digits as they are pressed. If a negative number is required, first press *, then enter the number.

5. Press ENTER.

The Model 400 responds: “Enter high temperature limit.”

6. Using the number keys, enter the value for high temperature limit. The Model 400 will recite the digits as they are pressed.

7. Press ENTER. The Model 400 responds: “Enter.”

This concludes minimum programming to achieve normal operation of the Model 400. In addition to the programming just accomplished, default settings for many more features take effect when the unit is first powered. You will be able to reprogram most of these factory-set defaults to suit your application.

For a complete explanation of each feature (with illustrations of key-strokes), refer to Chapter 4: Communications Programming and Chapter 5: Alarm Programming.

To gain a basic understanding of how the alarm dial-out feature works, refer to this chapter, Section 3-4. For extended information regarding dial-out and related programmable parameters, refer to Chapter 7: Operation.

3.4 SUMMARY OF THE ALARM DIAL-OUT PROCESS

Action—Response	Programmable Feature
1. THE MODEL 400 DETECTS AN ALERT CONDITION An alert condition is not the same as a valid alarm—the condition must continue for the programmed time period, or ***Recognition Time***, before it is recognized as a valid alarm.	• **Recognition Time** This is the programmed waiting period to determine if an alert condition has persisted long enough to be considered a valid alarm. If the sensor returns to normal within recognition time, then no alarm will occur.
2. A VALID ALARM IS CONFIRMED An audible, on-site alarm message begins and continues until the alarm is acknowledged. (If the Mute feature is turned on, there is no on-site message.) ***Call Delay*** is activated.	• **Call Delay** This is the programmed waiting period, before the first telephone number is called, to report an alarm.
3. DIAL-OUT BEGINS Dial-out begins by calling telephone number 1 to report an alarm. If there is no acknowledgment, the Model 400 waits the programmed ***Intercall Time*** before dialing subsequent telephone numbers. Dial-out continues in this manner, cycling through the remaining telephone numbers, for the programmed ***Max Calls***.	• **Intercall Time** This is the programmed waiting period, in between sequential dialing of telephone numbers, to report an alarm.

4. THE ALARM IS ACKNOWLEDGED When the alarm is acknowledged, the dial-out process is cancelled and the audible, on-site alarm message stops.	• **Max Calls** This is the total number of telephone calls that will be dialed in response to any valid alarm. Telephone numbers are dialed sequentially, and continue to cycle until the maximum number of calls is reached. If no acknowledgment occurs, then at the completion of Max Calls, all alarms are automatically acknowledged.

CHAPTER 4: COMMUNICATIONS PROGRAMMING

This chapter explains the keypad commands for communications programming of the Model 400, including interrogation and resetting of the following:

- Voice Messages
- The Unit ID Number
- Dial-out Telephone Numbers
- Tone or Pulse Dialing
- Special Dialing with Pagers, Beepers and Access Numbers.
- Dial-out test mode
- Rings Until Answer
- Telephone Answering Device Compatibility
- Listen-in Time
- Call Delay
- Local Voice Mute
- Voice Repetitions
- Intercall Time
- Maximum Number of Calls
- The Clock
- Security Code

4.1 VOICE MESSAGES

The 400's digital speech recording feature allows you to record custom messages for each of the four Zones and an ID Message. This means that when the 400 calls you during an alarm, you will hear a personalized Voice Message identifying the unit and telling you exactly what alarm condition exists. You can record a separate message for each of the four Zones. The message can run a maximum of 5 seconds. The ID Message can be a maximum of 8 seconds. You can shorten the message length by pressing the ENTER key after reciting the message.

The **ID Message** is used to identify the unit. This could be a particular building name, its location (address or city), or some other identifier.

To program the ID Message:

1. Press the SET key.

2. Press the MESSAGE key. The 400 will say "Enter Message Number."

3. Press the ID key (number 0 key).

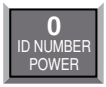

4. When the unit beeps, begin speaking your message into the microphone. The unit will say "OK," when the recording time has elapsed; then it will play back your recorded message.

To play back the ID Message:

1. Press the WHAT IS key.

2. Press the MESSAGE key.

3. Press the ID key (number 0 key).

The 400 will play back your recorded message.

The Zone Messages are used to identify the device or condition being monitored such as temperature, humidity, equipment alarms, security alarms, etc.

To program the Voice Message for a Zone:

1. Press the SET key.

2. Press the MESSAGE key. The 400 will say, “Enter Message Number.”

3. Press the number key for the corresponding Zone.

4. When the unit beeps, begin speaking your message into the microphone. The unit will say “OK,” when the recording time has elapsed; then it will play back your recorded message.

To play back the message for a Zone:

1. Press the WHAT IS key.

2. Press the MESSAGE key.

3. Press the corresponding Zone number key.

The 400 will play back your recorded message.

To erase a Zone or ID message:

1. Press the SENSOR ON/OFF key.

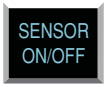

2. Press the MESSAGE key.

The 400 will say "Enter message number."

3. Press the Zone Number or ID key.

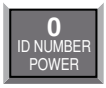

The 400 will say, "Message erased."

4.2 THE UNIT ID NUMBER

The Unit ID Number is the identification number of the Model 400. This number is typically the telephone number where the unit is installed, or it may be designated using any number that best suits your application.

The purpose of the Unit ID Number is to immediately provide the source of any alarm, especially when using multiple Model 400 units in a complex monitoring system. When the Model 400 is called from a remote location, it always begins its message with the identification number:

"Hello, this is (Unit ID Number)."

4.2.1 PROGRAMMING THE ID NUMBER

To program the ID Number:

1. Press SET.

2. Press ID NUMBER.

3. Using the number keys, enter up to 16 digits for the ID number. The Model 400 will recite the digits as they are pressed.

4. Press ENTER. The Model 400 will respond: “Okay.”

4.2.2 INTERROGATING THE ID NUMBER

To interrogate the ID numbers:

1. Press WHAT IS.

2. Press ID NUMBER. The Model 400 will recite the Unit ID Number programmed.

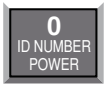

4.3 DIAL-OUT TELEPHONE NUMBERS

The Model 400 can store up to four 48-digit phone numbers. These are the numbers that will be called during alarm dial-out. In the event of an alarm, the numbers are dialed sequentially, 1 through 4. Begin programming the first telephone number by assigning it to the key labeled with the number 1 on the keypad, and continue to assign any other telephone numbers in numerical order. A pause, pound or star can be added to an individual phone number to access different phone and beeper systems. See Special Dialing, Section 4.5.

4.3.1 PROGRAMMING DIAL-OUT TELEPHONE NUMBERS

To program dial-out telephone numbers:

1. Press SET.

2. Press PHONE NUMBER.

3. Select which telephone number to program. Press any unassigned number key (from 1 to 4) to represent the new telephone number entry. The Model 400 will respond: "Enter number."

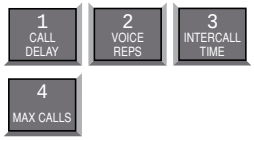

4. Enter the complete telephone number using the number keys.

5. Press ENTER. The unit will respond with "Okay."

6. Repeat above procedure to program up to four separate telephone numbers.

4.3.2 INTERROGATING A DIAL-OUT TELEPHONE NUMBER

To interrogate dial-out telephone numbers:

1. Press WHAT IS.

2. Press PHONE NUMBER.

3. Press a number key (from 1 to 4).

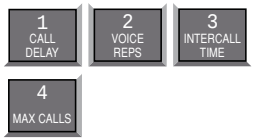

Model 400 will recite the corresponding telephone number. If there is no number programmed for a particular key, the unit will respond: “No number.”

4.3.3 ERASING A TELEPHONE NUMBER

To erase a telephone number:

1. Press SET.

2. Press PHONE NUMBER.

3. Press the number key (from 1 to 4) representing the telephone number you want to erase.

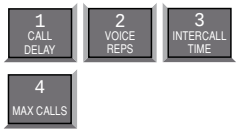

4. Press ENTER. The Model 400 will say “Number # erased.”

4.4 DIAL-OUT TEST MODE

The 400 allows you to test your telephone programming by simulating an alarm dialout to any programmed telephone number. This can be a valuable tool for insuring that your programming is correct and also for troubleshooting dialing problems. In this mode all signals on the telephone line are audible through the local speaker.

4.4.1 TO TEST A DIALOUT PHONE NUMBER:

1. Press the SET key.

2. Press the TEST key.

The 400 will say "Enter Number."

3. Press a number key (1–4) corresponding to the phone number entry you wish to test, and press ENTER.

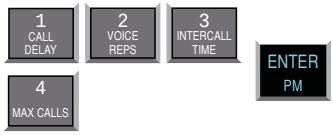

The 400 will dial the number and announce the date and time for voice calls, or send its ID number for pager calls.

4.4.2 MANUALLY DIAL A TELEPHONE NUMBER

1. Press the SET key.

2. Press the TEST key.

The 400 will say "Enter number."

3. Press 0 then ENTER to enter manual dialing mode. The 400 will go off-hook and you should hear a dial tone through the speaker. Press any number keys to dial a telephone number.

4. Press ALARM CANCEL to hang up and exit the test.

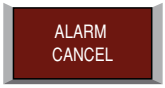

4.5 TONE OR PULSE DIALING

The Model 400 can dial out in pulse or Touch Tone™. Select the type of dialing, in either pulse or tone, depending upon the type of service provided by your telephone company. The default is tone.

To program for either pulse or tone:

1. Press the SENSOR ON/OFF key.

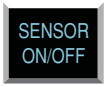

2. Press PHONE NUMBER T/P.

The Model 400 will respond: “Tone” to indicate that tone dialing is enabled, or “Pulse” to indicate that pulse dialing is on and enabled.

3. Repeat key sequence to switch between settings.

4.6 SPECIAL DIALING

The Model 400 has provisions for special dialing sequences. Special dialing sequences allow:

- Dialing that requires an access number to connect with an outside line.
- Dialing that requires the pound (#) or star (*).
- Dialing to a beeper or pager.

4.6.1 SPECIAL DIALING KEYS

The following designated keys represent special functions when used with PHONE NUMBER entries:

1. Pause

PAUSE represents a two-second pause in dialing. It can be used when an access number is required before dialing to an outside line. (For example, in some cases a "9" or other number, must be dialed first, in order to get a dial tone for an outside line.)

2. Pound (#)

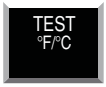

A pound may be required when calling some phone or beeper systems.

3. Star (*)

A star may be required when calling some phone or beeper systems.

4. Code

The CODE key can be used to perform special functions during the dialing sequence. These include: Pager dialing, Wait for Answer, and Switch to Touch-tones. These functions enable the Sensaphone to send a numeric page, or dial a telephone number + office extension, or combine pulse & touch-tone dialing in the same telephone number. Multiple codes can be used during telephone number programming if required. See section 4.5.4 for special instructions on dialing to a beeper or pager.

Code 1 Pager

When CODE + 1 is inserted as the first digit of the telephone number, the Model 400 will make a pager call. This means that the unit will expect the call to be answered by a paging service provider, then it will send its ID number (using touch-tones), followed by the digits that identify the zone(s) in alarm. The unit will hang-up after it completes the call. See section 4.5.4 for specific programming examples for dialing a pager.

Code 2 Wait-For-Answer

You can force your Sensaphone to Wait-For-Answer in the middle of dialing a telephone number. This is useful when calling a telephone extension that is initially answered by an auto-attendant. By inserting the wait-for-answer code you can instruct your Sensaphone to call the main number, then wait for an answer by the auto-attendant, then dial the extension. The Sensaphone will not speak it's voice message until the telephone is answered at the extension.

Example:

SET + PHONE NUMBER + any unassigned number key 1-4

+ telephone number + CODE + 2 + extension number + ENTER

Code 3 Switch to Touch-tone

This command allows you to change from pulse dialing to touch-tone dialing in the middle of dialing a telephone number. This is useful when your telephone service only supports pulse dialing, but you need to send touch-ones after connecting – such as when dialing a numeric pager or navigating a voice menu.

Example:

In this example a telephone number is dialed, the Sensaphone waits for the call to be answered, then changes to touch-tones to dial an extension.

SET + PHONE NUMBER + any unassigned number key 1-4 +

telephone number + CODE + 2 + CODE + 3 +

extension number + ENTER

4.6.2 INCORPORATING A PAUSE

Incorporate PAUSE to access an outside telephone line:

1. Press SET.

2. Press PHONE NUMBER.

3. Press any unassigned number key (from 1 to 4) to represent the new telephone number entry. Model 400 will respond: "Enter number."

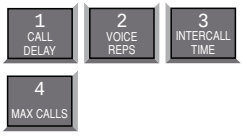

4. From the number keys, enter the access digit (i.e., 9). The Model 400 will recite the digit.

5. Press PAUSE. The Model 400 will "pause."

6. Enter the complete telephone number using the number keys. The Model 400 will recite the digits as they are pressed.

7. Press ENTER. The Model 400 will say "Okay."

4.6.3 INCORPORATING A POUND (#) OR STAR (*)

Incorporate a pound or star if it is normally included in telephone number:

1. Press SET.

2. Press PHONE NUMBER.

3. Press any unassigned number key (from 1 to 4) to represent the new telephone number entry. Model 400 will respond: “Enter number.”

4. Enter the telephone number using the number keys. The Model 400 will recite the digits as they are pressed.

5. Position the pound (#) or star (*) within the telephone number where required by pressing the designated keys. The Model 400 will say “pound” or “star” each time the key is pressed.

–OR–

6. Enter any remaining digits of the telephone number.

7. Press ENTER. The Model 400 will say “Enter.”

4.6.4 SPECIAL DIALING TO A BEEPER OR PAGER

Your Sensaphone can be programmed to send an alarm message to a numeric beeper/pager. The message will include the Sensaphone's telephone number (ID number) and the Zone numbers that are in alarm. For example, if zones 1 and 4 are in alarm, the message on your pager would be: 8882227777-1-4, where 8882227777 is the unit's ID number. A Sound alarm will appear as alarm -9 and a Power alarm will appear as alarm -0. To program a telephone number for Pager dialout, you must enter Code 1 at the beginning of the telephone number. The Sensaphone will say "Code one, Pager" when you enter the command.

Follow the key sequence below to dial a numeric pager:

SET + PHONE NUMBER + any unassigned number key 1-4 +

CODE + 1 + pager telephone number + ENTER

To check your programming:

WHAT IS + PHONE NUMBER + assigned # 1-4

The Sensaphone will say "Pager", followed by the programmed telephone number.

To send a test page:

SET + TEST + assigned # key 1-4 + ENTER

The Sensaphone will let you listen to the dialout sequence through its speaker and send you a message that includes the Sensaphone's telephone number (ID number).

Voice Prompted Paging Systems

If your paging provider is answered by a voice prompt which requires you to enter one or more touch-tones to send a message, then use the wait-for-answer code (4.5.1) in combination with the Pause key and other number keys to navigate the voice menu until you reach the message entry point. The Sensaphone will automatically send it's telephone number, Zone numbers, and a pound (#) tone at the end of the number. For assistance contact Sensaphone Technical Support at 1(877)373-2700.

4.7 RINGS UNTIL ANSWER

Rings Until Answer is the programmed number of times the telephone rings before the Model 400 will answer an incoming call. This can be set from 1 to 15 rings. The default value is 4.

4.7.1 PROGRAMMING RINGS UNTIL ANSWER

To program Rings Until Answer:

1. Press SET.

2. Press RINGS/TAD. The Model 400 will respond: “Enter number.”

3. Using the number keys, enter a value.

4. Press ENTER. The Model 400 will respond: “Okay.”

4.7.2 INTERROGATING RINGS UNTIL ANSWER

To interrogate Rings Until Answer:

1. Press WHAT IS.

2. Press RINGS/TAD.

4.8 TAD (TELEPHONE ANSWERING DEVICE)

The TAD feature is especially useful because it integrates the operation of the Model 400 with your telephone answering device (e.g. answering machine) in a way that retains the full flexibility of each system. This allows you to have on-demand telephone access to the Model 400, for obtaining a Status Report, or for issuing call-in commands, while your telephone answering device is set to receive outside calls. Programming for use with a telephone answering device (TAD) is always used in conjunction with Rings Until Answer, detailed in section 4.6.

NOTE: The TAD feature only applies to answering devices connected to the same telephone line as the Model 400.

4.8.1 TAD ENABLE/DISABLE

To enable/disable the TAD feature:

1. Press SENSOR ON/OFF.

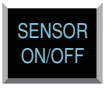

2. Press RINGS/TAD.

The Model 400 will respond: "TAD On." (If the Model 400 says "TAD Off," repeat steps 1 and 2 to reactivate TAD.)

4.8.2 USING THE TAD FEATURE

1. Make sure the TAD feature is enabled on the Model 400. (The default setting is disabled, so you must enable it first.)
2. Determine the number of rings your telephone answering device uses to answer the telephone. (Most answering devices require 4 rings; others are selectable.)
3. On the Model 400, program Rings Until Answer to a greater number than the number of rings set on your answering machine.

Example:

Telephone answering device, rings = 4

Model 400, Rings Until Answer = 6

Using the procedure just outlined, all incoming calls will be answered by the telephone answering device, allowing it to operate normally. With the programming just accomplished, the Model 400 can be accessed remotely, by telephone, to obtain the Status Report.

1. Dial the telephone number of the Model 400.
2. Let the telephone ring once and then hang up.
3. Wait approximately ten seconds
4. Call the Model 400 back.

It will answer the telephone on the first ring.

Explanation: The pattern of one ring, followed by a second call (within 30 seconds), signals the Model 400 to answer your incoming call, bypassing the telephone answering device.

> **NOTE:** Special Case: If the Model 400 shares the same line with a telephone answering device, and during certain time periods, frequent, incoming calls are expected on that line, then you may want to temporarily disable the TAD feature. If you leave the TAD enabled, it will not adversely affect normal operation, but if two outside telephone calls are received within the same 30-second time window, the Model 400 will interpret this pattern as a signal to answer the telephone. If this occurs, press any key on the Model 400 to hang up.

4.8.3 NO TAD IN USE

If a telephone answering device is not used on the same telephone line as the Model 400, make sure that the TAD feature is disabled, or turned off. Only Rings Until Answer programming will determine how incoming calls are answered. For example, if you program Rings Until Answer to 3, incoming calls will be answered in 3 rings.

4.9 LISTEN-IN TIME

The Listen-in Time is the amount of time you can listen to sounds from the Model 400's built-in microphone at its installation site. When you call in for a Status Report, the Model 400 announces Listen-in Time at the end of its first round of status readings, saying, "Listen for (programmed time entered)." The programmable range is from 0 to 255 seconds (or up to 4.17 minutes). The default value is 15 seconds.

> **NOTE:** The microphone is also used to monitor high sound level. See Chapter 5, Section 5.10 through Section 5.11.1.

4.9.1 PROGRAMMING THE LISTEN-IN TIME

To program the Listen-in Time:

1. Press SET.

2. Press LISTEN TIME. The Model 400 will respond: "Enter seconds."

3. Using the number keys, enter the seconds. The Model 400 will recite the digits as they are pressed.

4. Press ENTER. The Model 400 will respond: "Okay."

4.9.2 INTERROGATING THE LISTEN-IN TIME

To interrogate the Listen-in Time:

1. Press WHAT IS.

2. Press LISTEN TIME. The Model 400 will recite the listen-in time.

4.10 CALL DELAY

Call Delay is the programmed length of time the Model 400 waits, following detection of an alarm, before it begins the dial-out sequence. This applies only to the first call. (Delay time between calls is also programmable: refer to Intercall Time, Section 4-12.)

The purpose for Call Delay is to allow time for personnel at the Model 400's installation site to respond to and cancel an alarm before dial-out begins. During this time, the Model 400 will audibly repeat its "alarm" message (unless the Local Voice Mute feature has been activated—refer to Section 4.10). The default for Call Delay is 30 seconds. Call Delay can be programmed from 0 seconds to 60 minutes (1 hour).

4.10.1 PROGRAMMING THE CALL DELAY

To program the Call Delay:

1. Press SET.

2. Press CALL DELAY.

The Model 400 will respond: “Enter minutes.”

3. Using the number keys, enter the minutes.

The Model 400 recites the digits as they are pressed.

4. Press ENTER. The Model 400 responds: “Enter seconds.”

5. Using the number keys, enter the seconds. The Model 400 recites the digits as you press them.

6. Press ENTER. The Model 400 responds: “Okay.”

4.10.2 INTERROGATING CALL DELAY

To interrogate Call Delay:

1. Press WHAT IS.

2. Press CALL DELAY.

The Model 400 will recite the programmed Call Delay.

4.11 LOCAL VOICE MUTE

When the Model 400 dials out to report an alarm, it also audibly recites the alarm message through it's speaker. The Local Voice Mute command allows you to turn off the speaker at the Model 400's site during alarm dialouts and status call-ins. This feature is used to prevent intruders or unauthorized persons from hearing the alarm dial-out message or from hearing the Status Report during an off-site call.

4.11.1 ENABLE/DISABLE LOCAL VOICE MUTE

To enable/disable Local Voice Mute:

1. Press SENSOR ON/OFF.

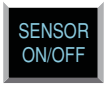

2. Press MUTE.

The Model 400 will say "Mute On" to indicate that Local Voice Mute is enabled, or "Mute Off" to indicate that it is disabled.

3. Repeat key sequence to switch between enabled or disabled Local Voice Mute.

4.12 VOICE REPETITIONS

The Voice Repetitions feature allows programming of the number of times the alarm message is repeated per phone call during alarm dial-out.

The maximum repetitions may be set to 10; the default is 3 repetitions.

4.12.1 PROGRAMMING VOICE REPETITIONS

To program Voice Repetitions:

1. Press SET.

2. Press VOICE REPS.

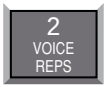

The Model 400 will respond: “Enter number.”

3. Using the number keys, enter a value from 1 to 10.

4. Press ENTER. The Model 400 will respond: “Okay.”

4.12.2 INTERROGATING VOICE REPETITIONS

To interrogate Voice Repetitions:

1. Press WHAT IS.

2. Press VOICE REPS.

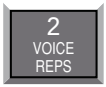

The Model 400 will recite the number programmed.

4.13 INTERCALL TIME

The Intercall Time is the programmable period of time the Model 400 waits in calling subsequent telephone numbers. Intercall Time is activated only after alarm dial-out to the first telephone number fails to be acknowledged. This period can be programmed from 10 seconds to 60 minutes. The default intercall time is 1 minute.

If an incoming telephone call is made to the Model 400 during Intercall Time (in between its dialing of subsequent telephone numbers to report an alarm), it will answer the incoming call and immediately report any existing alarms.

4.13.1 PROGRAMMING INTERCALL TIME

To program Intercall Time:

1. Press SET.

2. Press INTERCALL TIME.

The Model 400 will respond: "Enter minutes."

3. Using the number keys, enter the minutes.

The Model 400 recites the digits as you press them.

4. Press ENTER. The Model 400 will respond: "Enter seconds."

5. Using the number keys, enter the seconds. The Model 400 recites the digits as you press them.

6. Press ENTER. The Model 400 responds: “Okay.”

4.13.2 INTERROGATING INTERCALL TIME

To interrogate Intercall Time:

1. Press WHAT IS.

2. Press INTERCALL TIME.

The Model 400 will recite the programmed Intercall Time.

4.14 MAXIMUM NUMBER OF CALLS (MAX CALLS)

The Max Calls feature controls the total number of repeated calling attempts by the Model 400 in the event of an alarm. When an alarm occurs, the dial-out process begins, and continues to cycle through your programmed telephone numbers until the alarm is acknowledged or until the maximum number of calls is reached. The Max Calls setting regulates the number of calls that will be made as a result of any alarms; if more than one alarm is detected at once, or if a second alarm occurs during dial-out on the first alarm, the Max Calls setting will start the calling process from zero, until the programmed number of calling attempts are completed.

The default setting for Max Calls is 100, but it may be programmed from 1 to 255 calls. Max Calls is cancelled when an alarm is acknowledged. If the maximum number of calls is completed and no alarm acknowledgement has occurred, the Model 400 will automatically acknowledge any alarm and stop the dial-out.

NOTE: If only one telephone number is programmed, the Model 400 will dial out a maximum of 15 times to report an alarm in accordance with FCC rules.

4.14.1 PROGRAMMING MAX CALLS

To program Max Calls:

1. Press SET.

2. Press MAX CALLS.

The Model 400 will respond: "Enter number."

3. Using the number keys, enter a value. The Model 400 will recite the digits as you press them.

4. Press ENTER. The Model 400 responds: “Okay.”

4.14.2 INTERROGATING MAX CALLS

To interrogate Max Calls:

1. Press WHAT IS.

2. Press MAX CALLS.

The Model 400 will recite the value set for Max Calls.

4.15 THE CLOCK

The Model 400 has a built-in clock. The power-up time is 12 am. The clock will keep time from 12 am until you program the current time. It will then keep time from your programmed time. If the AC power fails, the clock will continue to keep time until the battery back-up fails. It will then reset to 12 am when power is restored. An incorrect time is a good indication that the power has failed and the batteries have been expended.

4.15.1 SETTING THE CLOCK

To set the clock:

1. Press SET.

2. Press CLOCK.

3. Using the number keys, enter the correct time. The Model 400 will recite the digits as they are pressed.

4. If the time is AM, press the AM key. The Model 400 will say "am" If the time is PM , press the PM key. The Model 400 will say "pm."

Example: You want to set the clock to 9:45 am. Press the following keys in the order shown:

SET + CLOCK + 9 + 4 + 5 + AM

4.15.2 INTERROGATING FOR THE CURRENT TIME

To interrogate the Model 400 for the current time:

1. Press WHAT IS.

2. Press CLOCK. The Model 400 will recite the current time.

4.16 THE SECURITY CODE

The Security Code is the last step after setting all other programming parameters for the Model 400. The code consists of a 4-digit number you select and will effectively prevent unauthorized changes to the Model 400's programming. When the Security Code is activated, all keyboard programming is locked. The Model 400 may be interrogated using the WHAT IS key, but the keyboard must be unlocked, via the Security Code, before any programming changes are possible.

4.16.1 LOCKING THE KEYPAD

To program the Security Code:

1. Press SET.

2. Press CODE.

The Model 400 will say “Enter security code.”

3. Using the number keys, enter 4 digits.

4. Press ENTER.

The Model 400 says, “OK.” The keyboard is now locked.

If unauthorized persons attempt to set a parameter, an error message, “Error 2,” is returned. Whenever any operation except WHAT IS takes place without entering the security code first, this error message occurs.

4.16.2 UNLOCKING THE KEYPAD

To unlock the keyboard:

1. Press WHAT IS.

2. Press CODE.

The Model 400 will say “Enter Security Code.”

3. Using the number keys, enter the digits for the code.

4. Press ENTER.

If the correct code is entered, the Model 400 will say "OK." If the wrong code is entered, the Model 400 will say "Error 2."

CHAPTER 5: ALARM PROGRAMMING

This chapter explains the alarm programming and monitoring capabilities of the Model 400, with specific instructions for the following features:

- Configure zones as dry contact or temperature
- Enable/disable zones
- Program alarm Recognition Time for each zone
- Program high and low temperature limits
- Disable alarm response to high or low temperature
- Program temperature in Fahrenheit or Celsius scale
- Calibrate temperature
- Obtain current temperature
- Program AC power-failure Recognition Time
- Enable/disable AC power monitoring
- Program sound level sensitivity
- Program high sound Recognition Time
- Disable alarm response to high sound
- Use Exit Delay via Status Report

5.1 ZONE CONFIGURATION

In preparing the Model 400 to sense an alert condition, the zones must be configured as dry contact (either open or closed) or as temperature zones. The default setting for zone 1 is temperature; for zones 2-4, the default is dry contact and open. To configure zone normality, sensors are first wired to the terminal strip at the back of the unit. (Refer to Chapter 2, Section 2.9–2.12, for an explanation on wiring zones.)

The configuration process directs the Model 400 to initialize the 4 zones and establish normal settings. Any change in the status of a zone (for example, from a normally open contact to a suddenly closed contact) is recognized as an alert condition. In the case of a temperature zone, an alert condition is recognized when established temperature limits are exceeded.

NOTE: Before starting keyboard commands to configure zone normality on the Model 400, it is very important to check that the sensors you have wired to the unit are set in their normal, non-alarm positions. For example, if a magnetic reed switch (a normally-closed sensor used to detect unauthorized entry) has been wired to the Model 400, make sure that the door or window to be monitored is shut before configuring the zone. If a motion-detector is wired to the unit, it is advisable to block all sources of motion from the sensor before and during configuration.

5.1.1 PROGRAMMING ZONE CONFIGURATION

1. Press STANDBY to place the Model 400 in Standby mode.

2. Wire sensors to the zones to the back of the Model 400 (see Chapter 2, Section 2.10).
3. Press RUN. The red light glows when the Model 400 returns to Run mode.

4. Press SET.

5. Press CONFIG.

6. The Model 400 audibly recites the configuration for each of the four zones:

- If the zone is open, the Model 400 recites the number of the zone and says "normally open."
- If the zone is closed, the Model 400 recites the number of the zone, and says "*normally closed*."
- If the zone is configured as temperature, the Model 400 recites the number of the zone, followed by "Temperature."

5.1.2 INTERROGATING ZONE CONFIGURATION

1. Press WHAT IS.

2. Press CONFIG.

The Model 400 will audibly recite the configuration of each zone.

5.2 ENABLE/DISABLE ZONES

This function allows you to enable or disable a zone's response to an alert condition. An enabled zone will respond to an alert condition and allow dial-out. A disabled zone will cause dial-out to be suppressed, but any existing alert conditions will be revealed during the Status Report. Enable/disable programming is useful during wiring of zones (see Chapter 2) or when a condition needs to be monitored, but is not critical enough to be programmed for dial-out reporting. It is important to verify zone status after performing any task that requires disabling. The default setting for all zones is enabled (ON).

If an alert condition exists when zones are re-enabled, Recognition Time will restart—refer to Section 5.3.

5.2.1 CHANGING ENABLED/DISABLED ZONE STATUS

1. Press SENSOR ON/OFF.

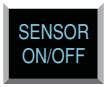

2. Press the number (1 to 4) of the selected zone to enable/disable. The Model 400 says "Alarm Disabled" to indicate disabled or "Alarm Enabled" to indicate enabled.

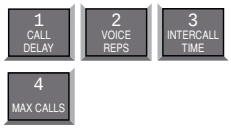

5.2.2 VERIFYING ENABLED/DISABLED ZONE STATUS

1. Press WHAT IS.

2. Press STATUS.

The Model 400 audibly recites the current status of every zone. In a Status Report, each zone is first identified by its zone number, followed by a report that specifies parameters currently affecting that zone. If a zone is disabled, the word "Alarm Disabled" immediately follows the number recited for that zone.

For example, zone 3 is configured as a normally open, dry contact zone. During the Status Report:

- If disabled, the Model 400 recites:

"Zone 3, the Alarm is Disabled" for zone 3.

- If enabled, the Model 400 recites:

"Zone 3—OK," for zone 3.

In another example, zone 2 is configured as a temperature zone. The current temperature is 76 degrees. During a Status Report:

- If disabled, the Model 400 recites:

"Zone 2, the alarm is disabled, it is now 76 degrees fahrenheit—OK"

- If enabled, the Model 400 recites:

"Zone 2—76 degrees fahrenheit—OK."

5.3 ZONE RECOGNITION TIME

The Zone Recognition Time is the length of time an alert condition must be present before a valid alarm exists and dial-out is activated. This time period is programmable, from 0 minutes, 0 seconds (for immediate response) up to a period of 540 minutes, 0 seconds. If an alert condition begins and then clears within the established Recognition Time, no dial-out will occur. When an alert condition continues beyond the programmed Recognition Time, the Model 400 initiates dial-out. The default setting for Zone Recognition Time is 0 minutes, 3 seconds.

5.3.1 PROGRAMMING ZONE RECOGNITION TIME

1. Press SET.

2. Press RECOGNITION TIME.

3. Press the number (1 to 4) of the selected zone to be programmed.

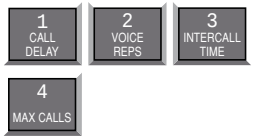

The Model 400 responds: "Enter minutes."

4. Using the number keys, enter the minutes. For example, to set a Recognition Time of five minutes, simply press “5” on the keypad. The Model 400 recites the digits as they are pressed.

5. Press ENTER. The Model 400 responds: “Enter seconds.”

6. Using the number keys, enter the seconds. The Model 400 recites the digits as they are pressed.

7. Press ENTER. The Model 400 responds: “Okay.”

5.3.2 INTERROGATING ZONE RECOGNITION TIME

1. Press WHAT IS.

2. Press RECOGNITION TIME.

3. Press the corresponding zone key (1 to 4).

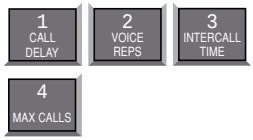

The Model 400 recites the programmed Recognition Time for that zone.

5.4 ESTABLISHING HIGH AND LOW TEMPERATURE LIMITS

High and low temperature limits can be separately programmed for each zone configured as temperature. Limits can range from –20° to +150° Fahrenheit, or from –30° to 65° Celsius.

When temperature limits exceed high or low settings, the Model 400 will dial out with an alarm message. Default settings are: 10° F for low temperature and 100° F for high temperature.

5.4.1 PROGRAMMING TEMPERATURE LIMITS FOR A SELECTED ZONE

1. Press SET.

2. Press TEMP LIMITS.

3. From the number keys, press a number (from 1 to 4) that corresponds to the temperature zone being programmed.

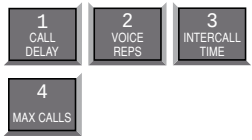

The Model 400 responds: "Enter low temperature limit."

4. Using the number keys, enter a value for low temperature limit. The Model 400 will recite the digits as they are pressed. If a negative number is required, first press *, then enter the number.

5. Press ENTER.

The Model 400 responds: “Enter high temperature limit.”

6. Using the number keys, enter the value for high temperature limit. The Model 400 recites the digits as they are pressed.

7. Press ENTER. The Model 400 responds: “Enter.”

NOTE: Do not set temperature limits too close to normal room temperature. Minor temperature fluctuations could result in frequent and unnecessary alarm dialouts.

5.4.2 DISABLING ALARM RESPONSE TO HIGH OR LOW TEMPERATURE

To disable alarm response to either high or low temperature settings exclusively, enter the following temperature limit when programming the selected zone. (The Model 400 will not respond to temperatures encountered at maximum settings or beyond.) Begin by following the key sequence shown in Section 5.4.1, and when prompted to enter the high or low temperature value:

- Set high temperature to either +150° F or +65° C (high temperature limit) to prevent the Model 400 from responding to a high temperature alarm.
- Set low temperature to either -20° F or -30° C to prevent the Model 400 from responding to a low temperature alarm.

5.4.3 INTERROGATING HIGH AND LOW TEMPERATURE LIMITS

1. Press WHAT IS.

2. Press TEMP LIMITS.

3. Press the number key corresponding to the selected temperature zone.

5.5 TEMPERATURE SCALE

Temperature zones may be set in either Fahrenheit or Celsius degrees. The default temperature scale is Fahrenheit. To change to Celsius:

1. Press SENSOR ON/OFF.

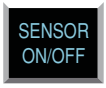

2. Press °F / °C. The Model 400 responds: “Degrees Celsius” indicating Celsius scale has replaced Fahrenheit scale.

3. To return to Fahrenheit scale, repeat the key sequence. The Model 400 responds: “Degrees Fahrenheit” indicating Fahrenheit scale is in effect.

NOTE: When switching from Fahrenheit to Celsius, or vice versa, the change applies to all zones configured to read temperature. When switching temperature scales it is important to reset high and low temperature limits on all temperature zones. Refer to Section 5.4.1 to reset temperature limits.

5.6 TEMPERATURE CALIBRATION

To compensate for minor variances in sensor accuracy, an offset may be programmed for each temperature zone. The amount of offset is measured in degrees Fahrenheit or degrees Celsius. Adjustments are possible within a range from -10 degrees to +10 degrees. For example, if zone 3 is sensing temperature and is reading 1 degree too high, then the calibration for zone 3 is set at -1 to obtain an accurate reading.

5.6.1 PROGRAMMING TEMPERATURE CALIBRATION

1. Press SET.

2. Press CALIBRATE.

3. Press the number (1 to 4) of the selected temperature zone to be calibrated.

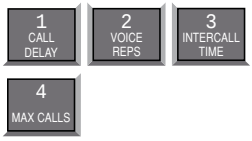

4. Enter the number required to offset the current temperature reading so a correct reading is obtained.

- To program a positive offset number (up to +10 degrees), enter the number on the keypad. The Model 400 recites the digits as they are pressed.
- To program a negative offset number (up to –10 degrees), first press *. The unit responds with "negative." Next, enter the number on the keypad. The unit recites the digits as they are pressed.

5. Press ENTER. The Model 400 responds:"Okay."

NOTE: If you find that your calibration offset exceeds more than + 5 or –5 degrees, other complicating factors could be affecting normal operation of the Model 400. Call Sensaphone for technical assistance.

5.6.2 INTERROGATING TEMPERATURE CALIBRATION

1. Press WHAT IS.

2. Press CALIBRATE.

3. Press the number key corresponding to the selected temperature zone.

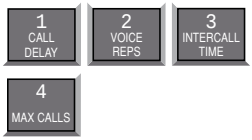

5.7 OBTAINING CURRENT TEMPERATURE

Current temperature readings for each temperature zone may be accessed at any time. The Model 400 recites the zone number, and the actual temperature detected by the attached sensor, for all zones configured as temperature. To obtain current temperature:

1. Press WHAT IS.

2. Press TEST °F/°C.

5.8 AC POWER MONITORING ENABLE/DISABLE

The Model 400 monitors AC power failure. This command enables or disables the power failure detection feature.When enabled, the Model 400 will monitor power and dial out when AC power failure exceeds a programmable span of time (refer to AC Power Failure Recognition Time, Section 5.9).

The default setting for AC power monitoring is enabled (on). When disabled, the Model 400 will not dial-out to report power failure.

5.8.1 ENABLING/DISABLING THE AC POWER ALARM

1. Press SENSOR ON/OFF.

2. Press POWER.

- The Model 400 will say “Power Alarm Disabled” to indicate that the power alarm is disabled, or
- The Model 400 will say “Power Alarm Enabled” to indicate that the power alarm is enabled.

3. Repeat key sequence to change settings.

5.9 AC POWER FAILURE RECOGNITION TIME

The AC Power Failure Recognition Time is the length of time that AC electric power is off before a valid alarm is recognized and dial-out begins. The default setting is 5 minutes, 0 seconds, but is programmable from 0 seconds to a maximum of 540 minutes.

When AC power failure occurs, and throughout the programmed Recognition Time, the Model 400 steadily repeats the message "the power is off" at the unit's installation site. There is no Call Delay programming available for AC power failure. Immediately following Recognition Time, the Model 400 begins the dial-out process to report power failure.

To cancel the power-failure message locally at the keypad (during or after Recognition Time) press the ALARM CANCEL key on the Model 400 keypad. This action also cancels the dial-out process.

5.9.1 PROGRAMMING POWER FAILURE RECOGNITION TIME

1. Press SET.

2. Press RECOGNITION TIME.

3. Press POWER. The Model 400 responds: "Enter minutes."

4. Using the number keys, enter the number of minutes. The Model 400 will recite the digits as they are pressed.

5. Press ENTER. The Model 400 responds: "Enter seconds."

6. Using the number keys, enter the number of seconds. The Model 400 will recite the digits as they are pressed.

7. Press ENTER. The Model 400 responds: "OK."

5.9.2 INTERROGATING POWER FAILURE RECOGNITION TIME

1. Press WHAT IS.

2. Press RECOGNITION TIME.

3. Press POWER.

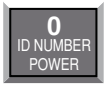

The Model 400 will recite the power Recognition Time.

5.10 SOUND ALARM MONITORING

This feature allows you to program the level and duration of sound that will cause the Model 400 to respond to an alarm and dial-out. It may be useful to desensitize the Model 400 to sound if it is installed in an area with a relatively high noise level, or where a loud noise occurs frequently but is not associated with an alarm. In some applications, it may be desirable to increase sound sensitivity to low sound levels.

5.10.1 PROGRAMMING SOUND ALARM SENSITIVITY

The sensitivity setting for sound alarm monitoring ranges from 1 to 160. A value of 1 makes the microphone the MOST sensitive to changes in sound. The value 160 makes the microphone the LEAST sensitive to sound. The default value is 32.

1. Press SET.

2. Press CALIBRATE.

3. Press SOUND. The Model 400 responds: "Enter number."

4. Using the number keys, enter a value for sound sensitivity.

The Model 400 recites the digits as you press them.

5. Press ENTER. The Model 400 responds: "Okay."

5.10.2 INTERROGATING SOUND SENSITIVITY

1. Press WHAT IS.

2. Press CALIBRATE.

3. Press SOUND. The Model 400 recites the programmed sound sensitivity level.

5.10.3 PROGRAMMING HIGH SOUND ALARM RECOGNITION TIME

The Recognition Time for sound alarm monitoring ranges from 5 seconds to 60 seconds. The default value is 8 seconds.

1. Press SET.

2. Press RECOGNITION TIME.

3. Press SOUND. The Model 400 responds: “Enter seconds.”

4. Using the number keys, enter the number of seconds. The Model 400 will recite the digits as they are pressed.

5. Press ENTER.

5.10.4 INTERROGATING HIGH SOUND ALARM RECOGNITION TIME

The Recognition Time for sound alarm monitoring ranges from 5 seconds to 60 seconds. The default value is 8 seconds.

1. Press SET.

2. Press RECOGNITION TIME.

3. Press SOUND. The Model 400 responds: "Enter seconds."

5.11 HIGH SOUND ALARM ENABLE/DISABLE

The Model 400 monitors sound through the built-in microphone. When the sound level suddenly exceeds the programmed high sound limit, the Model 400 will respond with an alert condition. The increased sound level must continue throughout the programmed recognition time. The default for high sound alarm is enabled (on).

NOTE: The microphone is also used for listening to on-site sounds. Refer to Chapter 4, Section 4.8. Disabling the sound alarm does not affect listen-in capability.

5.11.1 CHANGING ENABLED/DISABLED HIGH SOUND ALARM

1. Press SENSOR ON/OFF.

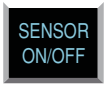

2. Press SOUND. The Model 400 will say "Sound Alarm Disabled" to indicate disabled or "Sound Alarm Enabled" to indicate enabled.

3. Repeat key sequence to change settings.

5.12 EXIT DELAY

When tripping an alarm is unavoidable, yet a true alert condition has not actually occurred, the alarm response, including dial-out, can be temporarily suppressed.

The Model 400 is able to suppress and then reset its dial-out function automatically through use of the Status Report. This is especially convenient when an alert condition is created upon exiting a monitored door, and there is no way to cancel from the local keypad.

> **Example:** You are planning to exit through a monitored door. Prior to exiting, you initiate a Status Report recitation at the Model 400 keypad by pressing WHAT IS, followed by STATUS, (key sequence shown below). This allows you approximately 40 seconds to exit without activating the Model 400's programmed response to an alarm. At the conclusion of the status report, normal alarm response is reactivated.

To use exit delay, initiate the Status Report.

1. Press WHAT IS.

2. Press STATUS. The Model 400 recites the full Status Report; during this time, you are able to exit the monitored area without tripping an alarm.

5.13 DESIGNATING A ZONE AS UNUSED

This feature allows you to mark selected Zones, Power, or Sound as unused, which will prohibit them from going into alarm and will also leave them out of the status report. Note that programming for the selected Zone will be preserved when the Zone is marked as "unusued" and will not be reconfigured if automatic Zone configuration is activated.

To designate a Zone as unused:

1. Press the SENSOR ON/OFF key.

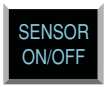

2. Press the SET key.

The 1400 will say "Enter Zone Number."

3. Press the corresponding number of the Zone you wish to mark as unused.

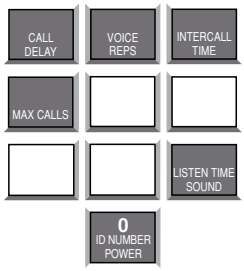

The 1400 will respond by saying Zone 1–4, Power, or Sound "Off/On." Repeat the key sequence to place the Zone back in use.

CHAPTER 6: ACKNOWLEDGMENT, STATUS REPORT & REMOTE ACCESS

In addition to communication and alarm monitoring capabilities, the Model 400 will also respond to your instructions and provide you with access to information on monitored conditions at all times.

By issuing commands to the unit, either at the installation site or over standard telephone lines, the following features may be activated:

- Acknowledgment of existing alarms
- The Status Report on all monitored conditions.
- Limited programming.

6.1 ALARM ACKNOWLEDGMENT

When the Model 400 dials out with an alarm message, it will request acknowledgment before hanging up. Acknowledgment indicates to the unit that the alarm message has been received. Upon acknowledgment, the Model 400 will cancel the dial-out sequence.

There are three ways* that an alarm is acknowledged directly:

- Local Acknowledgment
- Touch-Tone™ Acknowledgment
- Callback Acknowledgment

* A fourth method of alarm acknowledgment is indirect. Refer to Max Calls, Chapter 4, Section 4.13 for an example of automatic alarm acknowledgment.

6.1.1 LOCAL ACKNOWLEDGMENT

To acknowledge an alarm locally (directly at the installation site of the Model 400), press the ALARM CANCEL Key.

6.1.2 TOUCH-TONE™ ACKNOWLEDGMENT

This method of remote alarm acknowledgment works with a Touch-Tone™ telephone.

Example: You receive a call from the Model 400, reporting that an alarm exists. The message concludes: "*Enter Acknowledgement code*." Now, or at any time during this call, you may acknowledge the alarm with the code "**555**" if you are using a Touch-Tone™ telephone.

- To enter "555," press the number (5) key on the Touch-Tone™ phone keypad three times. The Model 400 will respond: "**Alarm Acknowledged**." The Model 400 will hang up and the dial-out sequence, including any further response to the alarm, will be cancelled.
- If you enter the wrong code or do not enter it within 10 seconds following the conclusion of the message, the Model 400 will respond: "**Error, Enter Acknowledgement code**." If you do not enter the acknowledgement a second time the unit will say "error" then "goodbye" and hang up. The alarm is still not acknowledged until you call back. You have a period equal to the programmed Intercall Time to call the unit back and enter the "555" acknowledgment code. If you are calling from a pulse or rotary telephone, refer to Callback Acknowledgment, Section 6.1.3, below.

6.1.3 CALLBACK ACKNOWLEDGMENT

Callback Acknowledgement is a feature that allows you to acknowledge an alarm without entering Touch-Tones™. This feature is disabled by default and must be enabled by entering the key sequence below. When Callback Acknowledgment is enabled, simply call the unit back and allow the line to ring 10 times. The unit will then answer the call, announce the alarm, then say "Alarm Acknowledged." This indicates that the alarm has been acknowledged.

To enable or disable Callback Acknowledgement:

1. Press SENSOR ON/OFF.

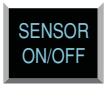

2. Press STATUS.

The Model 400 will say "*Callback Acknowledgement Enabled*" to indicate that Callback Acknowledgment is Enabled, or "*Callback Acknowledgement Disabled*" to indicate that Callback Acknowledgement is Disabled. This method of remote alarm acknowledgment works with any telephone: pulse, rotary, or Touch-Tone™.

Example: The Model 400 calls you with an alarm message. You answer the call with a rotary or pulse telephone, and do the following:

- You listen to the message and hang up.
- Then you call the Model 400 back on any telephone. You must wait for 10 rings—this signals the Model 400 to answer your telephone call. (Make

sure to call back within the programmed setting for Intercall Time—refer to Chapter 4, Section 4.12.)

When the Model 400 answers your return call, it announces the alarm. Then it says: "*Alarm Acknowledged*." This indicates that the alarm has been acknowledged.

NOTE: If you have the TAD feature (telephone answering device) enabled, call the unit and let the phone ring once, then hang up. Wait a few seconds then call the unit back a second time. The model 400 will now answer on the first ring. If TAD is disabled, the telephone must be allowed to ring 10 times. This serves as a precaution against a random alarm acknowledgment. Refer to Chapter 4, Section 4.7, for complete information on using the TAD feature.

6.2 STATUS REPORT

The Status Report allows access to complete information on all monitored conditions either locally, from the keypad, or by telephone, from any location. The Model 400 will answer an incoming telephone call following the programmed Rings Until Answer (refer to Chapter 4, Section 4.6). Included with the Status Report are messages related to alarm conditions, AC power, battery backup and sound level. It also provides an opportunity for listening to on-site sounds (refer to Listen-in Time, Chapter 4, Section 4.8).

To initiate the Status Report:

1. Press WHAT IS.

2. Press STATUS.

Sections 6.2.1, 6.2.2, and 6.2.3 demonstrate two different Status Report recitations. The Status Report starts with:

"Hello. This is 555-1234 (or the programmed ID), (Custom ID Message)."

"It is now 12:15pm (or the current time)."

The Model 400 proceeds with a separate report for each zone. Each zone identifies itself by reciting the zone number and it's associated voice message.

6.2.1 EXAMPLE: STATUS REPORT, NO ALARMS

Zones 2, 3, and 4 are configured as dry contact and zone 1 is configured as temperature. No alarms exist. The Status Report begins by saying, "*Hello, this is 555-1234, this is building M, third floor; it is now 2:30 pm.*"

Following this introduction, the report continues:

"Zone 1, room temperature, 74 degrees, OK."

"Zone 2, door alarm, OK."

"Zone 3, ups alarm, OK."

"Zone 4, water sensor, OK."

"The sound is OK."

"The power is ON." This refers to AC power.

"The batteries are OK." Other possible responses: *"Batteries are low"* or *"Replace batteries."* (Refer to Section 6.2.4 for additional information regarding battery condition.)

"The output is off."

"Listen to the sound for 10 seconds." In this case, the programmed Listen-in Time is set at 10 seconds. (This feature is not available when obtaining the Status Report on-site, directly at the keypad.)

The Status Report repeats once more and the Model 400 concludes the call, saying: *"Goodbye."* (The Status Report will not repeat if obtained at the keypad; *"Goodbye,"* is also not recited.)

The phrase *"no number"* at the end of a Status Report indicates that no dial-out phone numbers have been programmed.

6.2.2 EXAMPLE: STATUS REPORT, EXISTING ALARMS

Zones 2, 3, and 4 are configured as dry contact and zone 1 is configured as temperature. An emergency situation is at hand: a fire in a greenhouse has tripped a smoke alarm and electrical power has been disrupted. In addition to high sound and AC power alarms, separate alarms exist on zones 1, 2, 3, and 4. You happen to call in for the Status Report, which begins with, "*Hello, this is 555-1234; "this is the Sensaphone 400 at ACME Greenhouse, 225 Oak Street"*

It is now 8:45 PM

Zone 1, "Temperature in greenhouse", 110 degrees Fahrenheit, too high, acknowledged alarm exists

Zone 2, "Door alarm in greenhouse", not OK, acknowledged alarm exists

Zone 3 "Water pressure alarm in greenhouse", not OK, acknowledged alarm exists

Zone 4 "Greenhouse control system", not OK, acknowledged alarm exists

A High Sound alarm exists, it is now too high

The Power is Off.

The Batteries are Low.

The Output is Off.

Listen to the sound for 10 seconds.

Goodbye.

6.2.3 EXAMPLE: STATUS REPORT, DISABLED ZONES

If a zone is disabled, the dial-out feature for that zone is deactivated, but all other programmed parameters remain in effect. In the example below, all 4 zones are disabled, although zones 1 and 3 are detecting alarms. AC power and Sound Level are also disabled for dial-out. When you call the Model 400 for a Status Report, you hear the following:

Hello, this is 555-1234; "this is the Sensaphone 400 at ACME Greenhouse, 225 Oak Street"

It is now 8:45 PM

Zone 1, "Temperature in greenhouse", the alarm is disabled, it is now 110 degrees Fahrenheit, too high, acknowledged alarm exists

Zone 2, "Door alarm in greenhouse", the alarm is disabled, it is not OK.

Zone 3 "Water pressure alarm in greenhouse", the alarm is disabled, it is not OK.

Zone 4 "Greenhouse control system", the alarm is disabled, it is not OK.

The Sound alarm is disabled, it is now too high

The Power alarm is disabled, it is now Off.

The Batteries are Low.

The Output is On.

Listen to the sound for 10 seconds.

Goodbye.

The Status Report repeats once more and the Model 400 concludes the call, saying: *"Goodbye."*

6.2.4 BATTERY CONDITION

During a Status Report, you may hear one of three possible messages regarding battery power. The Model 400 determines the appropriate message by measuring battery voltage. Depending upon the remaining voltage, it may respond:

- *"The batteries are OK,"* if over 8.2 Volts.
- "*The batteries are low,"* if between 7.2 and 8.2 Volts.
- *"Replace batteries,"* if below 7.2 Volts.

6.2.5 REMOTE ACCESS BY TOUCH-TONE™ TELEPHONE

You can issue a number of commands to the 400 remotely using a Touch-Tone™ telephone. This command mode can be entered at any time during the status report. Simply press a Touch-Tone™ and the unit will halt the report and respond with "OK." You are now in Touch-Tone™ command mode. Commands are available to perform the following functions:

- Enable and disable zones, power monitoring, and sound monitoring
- Recite/Set High and Low alarm limits
- Recite/Set telephone numbers
- Record/Play custom voice messages
- Recite/Set the relay output
- Activate the microphone for listen-in
- Recite status report

Note: If a security code is enabled, the 400 will prompt you with "Enter security code." Enter the four-digit keypad security code plus "#" to enter touch-tone command mode. If entered correctly, the 400 will respond with "OK" and you can proceed to enter the commands. If entered incorrectly, the unit will give you one more chance. If it is incorrect a second time, the unit will say "Error, goodbye" and hang up.

The commands are put together based on the letters of a touch-tone telephone. See typical telephone keypad layout below.

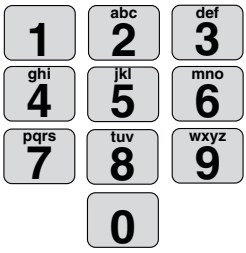

Many of the commands use three letters that represent an abbreviation of the selected command. For example, to Set a High limit on Zone 1 you would press S + H + 1 (or in numeric form 7 + 4 + 1)

The tables below list all of the touch-tone commands that are supported. Commands are listed in both character and numeric formats. The # key is used as an ENTER key. Use the * key to represent a negative sign or to represent the [CODE] key when programming telephone numbers.

Enable/Disable Zones

This command will toggle the selected zone between the enabled or disabled state.

Description	Touch-Tone Command
Enable/Disable Zone	* + Z(9) + (zone number)

Set and Recite High & Low Alarm Limits

The following commands are used to set or recite the Low Alarm Limit for any Zone.

Description	Touch-Tone Command
Set Zone Low Limit	S(7) + L(5) + (zone #) + (value) + #
Description	Touch-Tone Command
What Is Zone Low Limit	W(9) + L(5) + (zone #)

The following commands are used to set or recite the High Alarm Limit for any Zone.

Description	Touch-Tone Command
Set Zone High Limit	S(7) + H(4) + (zone #) + (value)+ #
Description	Touch-Tone Command
What Is Zone High Limit	W(9) + H(4) + (zone #)

Set and Recite Telephone Numbers

The following commands will allow you to program and recite dialout telephone numbers. You may need to use the Special Dialing Codes below.

Special Dialing Codes Summary

Code 1: Numeric pager type

Code 2: Wait for answer

Code 3: Change to Touch-Tone

Code 4: Pause

Code 5: Star (*)

Code 6: Pound (#)

Description	Touch-Tone Command
Setting a phone number	S(7) + T(8) + (entry 1–4) + (telephone number) + #

Description	Touch-Tone Command
Reciting a phone number	W(9) + T(8) + (entry 1–4)

Record and Play Custom Voice Messages

The following commands will allow you to record and play back custom voice messages for the ID message (0) and each zone (1–4).

Description	Touch-Tone Command
Record a Message	S(7) + M(6) + (entry 0–4)

Description	Touch-Tone Command
Play a Message	W(9) + M(6) + (entry 0–4)

Control the Relay Output

The following commands will allow you to check the status of the relay output and to toggle the Relay Output On and Off.

Description	Touch-Tone Command
Reciting the Output Status	W(9) + R(7) + O(6)

Description	Touch-Tone Command
Switching the Output	S(7) + R(7) + O(6)

Activate Microphone Listen-in

The following command will allow you to activate the microphone listen-in for the programmed duration.

Description	Touch-Tone Command
Activate Mic Listen-in	M(6) + I(4) + C(2)

Request Status Report

The following command will initiate a status report.

Description	Touch-Tone Command
Recite status report	W(9) + S(7) + R(7)

Hang-up

The following command will make the 400 hang up the telephone line.

Description	Touch-Tone Command
Hang-up the phone line	B(2) + Y(9) + E(3)

CHAPTER 7: OPERATION

After installation and programming is completed, the Model 400 is fully operational. This chapter explains the sequence of events that occur during an alarm dialout to illustrate how the Model 400 operates.

7.1 ALARM DETECTION, DIAL-OUT AND ACKNOWLEDGMENT

Generally, an alarm event is structured in the following manner:

I. The Model 400 detects an alert condition due to a change at the sensor.

II. A valid alarm is recognized.

III. Dial-out begins.

IV. The alarm is acknowledged.

Often, an alarm does not proceed through all stages: either an alert condition does not persist long enough to be considered valid, or a valid alarm is cancelled.

The table on the following pages explains the alarm detection, dial-out and acknowledgment features and lists important variable factors affecting their operation.

I. Model 400 Detects a Change at the Sensor	Variable Factors
Model 400 detects a change in the monitored condition (from the sensor wired to one of the zones). This is considered an alert condition, and does not qualify as a valid alarm at this point. The condition continues throughout the programmed Recognition Time. If the condition (or sensor) reverts to its normal state before the Recognition Time is reached, no alarm will occur.	*Zone Type: (1) An open circuit closes, (2) a closed circuit opens, or (3) temperature limits are exceeded.* *Recognition Time: Activated*
II. A Valid Alarm is Recognized	**Variable Factors**
The condition must persist long enough to meet or exceed the programmed Recognition Time. When Recognition Time has expired, but the alert condition continues, the Model 400 will determine that a valid alarm exists. When a valid alarm is determined, Call Delay is activated, forcing the Model 400 to wait for a programmed period of time before starting the dial-out process. Call Delay applies to the period just prior to dial-out, before the first telephone call is made. Call Delay provides the opportunity to cancel a valid alarm at the Model 400's installation site, before dial-out occurs. An audible voice message indicates which of the zones is in alarm. If on-site personnel acknowledge the alarm within the Call Delay time, the Model 400 will not dial out. (Local Voice Mute is disabled, so that alarm messages can be heard at the site.)	*Recognition Time: Expired* *Valid Alarm: Exists* *Call Delay: Activated* *Alarm Message: Audible, On-site Activated* *Local Voice Mute: Disabled*

III. Dial Out Begins	Variable Factors
The dial-out process is activated as soon as the Call Delay time expires (if the alarm has not been cancelled at the Model 400's installation site.) The dial-out begins with telephone number 1 and proceeds sequentially, through the remaining telephone numbers.	*Call Delay: Expired*
If the alarm is not acknowledged with the first dial-out telephone call, the Model 400 waits the duration of Intercall Time before dialing the next telephone number. Intercall Time is the programmed waiting period in between each dial-out telephone call.	*Intercall Time: Activated*
When the telephone is answered, the programmed Voice Repetitions determine the number of times per call the Model 400 recites the alarm message.	*Voice Repetitions: Activated*
Call Progress, an automatic feature, enables the Model 400 to detect whether or not the telephone call is answered. After 10 rings, or if a busy signal is encountered, the Model 400 will hang up, wait the programmed Intercall Time, and proceed to dial the next telephone number.	*Call Progress: Activated*
If no telephone calls are answered, the Model 400 dials out sequentially, through the remaining telephone numbers and continues to cycle until the programmed Maximum Number of Calls is reached.	*Max Calls: Activated*
When the telephone is answered, the Model 400 will immediately begin reciting a message that indicates which of the zones is in alarm. At the same time, the alarm message is repeating at the Model 400's installation site. The Model 400 will request acknowledgment, if it has not yet occurred.	*Alarm Messages: By Telephone and On site*

IV. The Alarm Is Acknowledged	Variable Factors
At any time after a valid alarm is determined, the alarm may be acknowledged at the Model 400's installation site, by pressing ALARM CANCEL key.	*Local, On-site Acknowledgment*
When the Model 400 dials out and the call is answered via Touch-Tone telephone, any alarm may be instantly acknowledged by pressing "555."	
If the alarm message repeats for the number of programmed Voice Repetitions, and "555" has not been entered, the Model 400 will say: *"Enter acknowledgement code."* The Model 400 waits 10 seconds for the Touch-Tone code "555" to be entered. If the code is entered within 10 seconds, it responds: *"Alarm acknowledged."* The alarm is considered acknowledged and the dialout concludes.	*Touch-Tone Acknowledgment: Fast Code 555* *Touch-Tone Acknowledgment: Normal Code 555*
If the Model 400 does not receive the Touch-Tone code within 10 seconds, it recites the following: *"Error, enter acknowledgement code."* If the Model 400 does not receive the acknowledgement code a second time, it says "error, goodbye" and hangs up. The recipient of this message must call the Model 400 back within the period programmed for Intercall Time, in order to acknowledge the alarm. If Local Voice Mute is off, the unit will beep at the installation site while waiting for this call. Callback Acknowledgement: If enabled, the Model 400 waits 10 rings before answering to guard against random acknowledgment. If an answering device is connected to the same line as the Model 400 (and TAD is enabled), you must call the unit and let the line ring once, then hang up, wait ten seconds and call back again within 30 seconds. The Model 400 will answer on the first ring. It will recite any unacknowledged alarms, then say: *"Alarm acknowledged, goodbye."*	*Tone or Pulse Callback Acknowledgment: Within Intercall Time*

	Variable Factors
When the Model 400 hangs up, the alarm is acknowledged and dial-out stops. If calls remain unanswered, or if they are received by an answering machine or FAX, the Model 400 continues the dialout sequence; it waits the Intercall Time and proceeds to dial the next telephone number. Telephone numbers are dialed sequentially, and this cycle continues for the number of Max Calls programmed. If no acknowledgment occurs, then at the completion of Max Calls, the alarm is automatically acknowledged and the dial-out process is terminated.	*Tone or Pulse* *Callback Acknowledgment: TAD Enabled* *Max Calls Acknowledgment*

NOTE: Acknowledging the alarm does not correct the situation! The alarm condition will still exist until the sensor is restored to its normal state.

7.2 EXAMPLE: A DIAL-OUT TELEPHONE CALL

The following parameters are selected for demonstration purposes:

- Model 400 Unit ID Number is set to 555-5674. It is currently installed at your place of business.
- Dial-out Telephone Number 1 is programmed to 555-1234, your home telephone number.
- Voice Repetitions are set to 4.

The Model 400 is detecting an alarm on zone 2.

The telephone rings at 555-1234, your home number.

You answer the telephone and hear the following message:

"Hello, this is 555-5674. This is the Sensaphone 400 at John's Printing Express. It is now 12:30 Am. Zone two, back door security sensor, alarm exists, it is not okay."

(4-seconds to hear on-site sound from unit's microphone.)

"Hello, this is 555-5674. This is the Sensaphone 400 at John's Printing Express. It is now 12:30 Am. Zone two, back door security sensor, alarm exists, it is not okay."

(4-seconds to hear on-site sound from unit's microphone.)

"Hello, this is 555-5674. This is the Sensaphone 400 at John's Printing Express. It is now 12:30 Am. Zone two, back door security sensor, alarm exists, it is not okay."

(4-seconds to hear on-site sound from unit's microphone.)

"Hello, this is 555-5674. This is the Sensaphone 400 at John's Printing Express. It is now 12:30 Am. Zone two, back door security sensor, alarm exists, it is not okay."

(4-seconds to hear on-site sound from unit's microphone.)

"Enter acknowledgement code."

NOTE: It is important that your dial-out telephone numbers be answered by you or other authorized personnel in order to ensure adequate response to an alarm.

CHAPTER 8: CONTROLLING THE OUTPUT

The Sensaphone 400 includes a relay output that can be used to control a light, siren, or other device. The output is a Form-C Normally Open/ Normally Closed mechanical relay and is rated for up to 30VAC/VDC 1A. A sample wiring diagram is shown below:

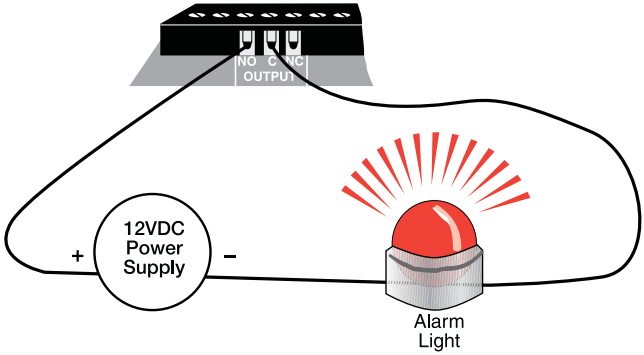

Figure 1: Relay output connected to alarm

The output can be programmed to operate in one of 9 automatic modes or it can operate in manual mode (default). The 9 automatic modes allow the output to automatically turn on and off based on individual alarms or any alarm. In manual mode the output is controlled via keypad command or remotely via touch-tone phone. A description of each mode is described below.

8.1 OUTPUT MODES

Mode	Description
1	Output on when zone 1 goes into alarm. Off when alarm is acknowledged.
2	Output on when zone 2 goes into alarm. Off when alarm is acknowledged
3	Output on when zone 3 goes into alarm. Off when alarm is acknowledged.
4	Output on when zone 4 goes into alarm. Off when alarm is acknowledged.
9	Output on when a Sound alarm occurs. Off when alarm is acknowledged.
0	Output on when a Power alarm occurs. Off when alarm is acknowledged.

Mode	Description
Phone	Output on when phone line is unplugged for more than 15 seconds. Off when a phone line is plugged in.
•	Output on when any alarm occurs. Off when all alarms are acknowledged.
#	Output controlled manually via keypad command or touch-tone.

8.1.1 TO PROGRAM THE OUTPUT MODE:

1. Press the SET key.

2. Press the OUTPUT key.

The 400 will say "Enter output mode."

3. Using the number keys, enter a value for the output mode.

4. Press the ENTER key.

The 400 will say "OK" and recite a description of the mode selected, such as "Automatic on Zone 1" or "Manual." Note that when Mode * is selected, the 400 will simply say "Automatic on Alarm," meaning that the output will automatically turn on when any alarm occurs.

8.1.2 TO PLAY BACK THE PROGRAMMED OUTPUT MODE:

1. Press WHAT IS.

2. Press OUTPUT.

The 400 will recite the programmed output mode.

8.2 SWITCHING THE OUTPUT USING THE KEYPAD

When programmed for Manual mode, the command to switch the output is:

SENSOR ON/OFF + OUTPUT.

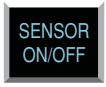

The 400 will respond “The output is on/off” to indicate the state of the output.

> **Note:** If the 400 says “Error,” the output is not programmed for manual mode.

8.2.1 SWITCHING THE OUTPUT OVER THE PHONE

The following commands will allow you to check the status of the relay output and to toggle the Relay Output On and Off.

To recite the Output Status press W(9) + R(7) + O(6)

To switch the Output press S(7) + R(7) + O(6)

8.3 TYPICAL APPLICATIONS

Heating Up Your Cottage Or Cabin Remotely

If you keep your cottage or cabin open all year around, or if you do not drain your pipes and add antifreeze to your plumbing, you likely keep your furnace active when you are away but at a very low temperature. The Sensaphone will provide an invaluable service to you by keeping you updated to any change in the status of your furnace operation. Prior to your arrival at your cottage or cabin, you can remotely use your Sensaphone 400 to raise the thermostat and increase the heat.

Most furnaces use a typical 4-wire (heat/cooling) or 3-wire (heat only) thermostat. The Sensaphone can easily control these types of thermostats. **If your heating source consists of high voltage electric baseboard heaters, you should consult a qualified electrician or heating professional for proper installation of the Sensaphone remote control facility**. Electric baseboard heaters may utilize either a low voltage (2-wire) thermostat or a direct control high voltage thermostat. Only the low voltage thermostat may be directly connected to the Sensaphone.

8.3.1 SINGLE THERMOSTAT CONTROL

There are two installation methods that can be used to remotely change the thermostat setting in your cottage or cabin; the single thermostat method and the dual thermostat method (see section 8.3.2 for details on the dual thermostat method). The single thermostat method requires you to install a model with an input to switch between two temperature settings. Sensaphone offers a 7-day programmable thermostat and power supply which has this feature (order part #'s FGD-0064 & XFR-0024). This thermostat has been carefully chosen to work with the model 400 to allow remote control between normal or vacation mode. You will need to replace your current thermostat, so if you are unsure about performing this work yourself, please contact a licensed heating/cooling professional for installation assistance. Follow the manufacturer's instructions for installing the thermostat.

The Model 400 will need to be wired to the thermostat to control it. For a visually appealing installation you may want to locate the Sensaphone close to your heater so that the cable follows the same path as the one from your heater to the thermostat. An added benefit of this location is that you can easily add a water sensor to monitor for leaks around your hot water heater or other plumbing. Typically the water heater is located near the heating and cooling system.

Step 1: Install the thermostat.

Refer to the manufacturer's instructions for installation. For installation assistance, contact Aube Technologies at 1-800-831-AUBE.

Step 2: Mount the Sensaphone 400.

Choose a location for your Sensaphone that allows for easy wiring to the thermostat, such as near your heater/air conditioning system. Mount the unit on a wall or flat on a desktop or table surface. Plug in the power supply and connect the telephone line.

Step 3: Connect cable from thermostat to Sensaphone 400.

This Sensaphone 400 has a terminal strip below the input/output wiring door that will connect to the 12VDC power supply and X & C terminals of the thermostat (See Figure 1). This connection is required to switch the thermostat between normal and vacation modes. Run a two-conductor cable from the thermostat to the Model 400. On the thermostat, connect the red wire to the X (+) terminal, and the black wire to the C (-) terminal. On the 400, connect the red wire to the NO terminal. Connect the black wire to the negative wire from the power supply. Use a wire nut to complete this connection. Connect the positive wire from the power supply to the "C" terminal on the model 400.

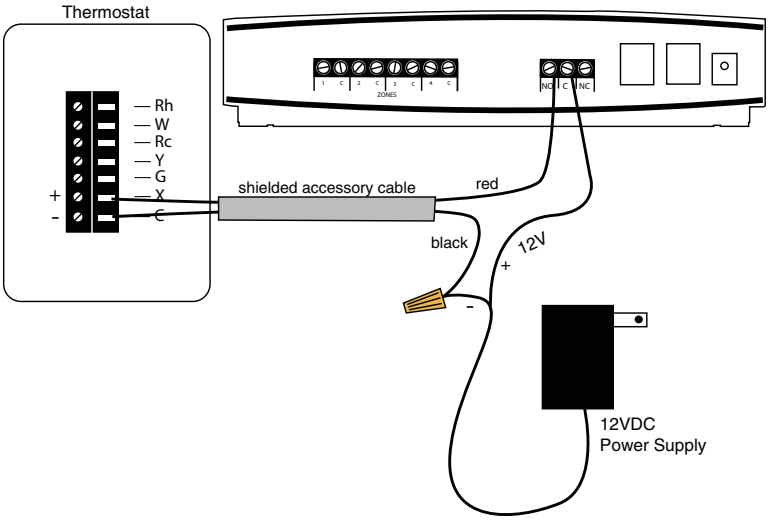

Step 4: Program the Thermostat.

Refer to the manufacturers instructions for programming the thermostat. Be sure to program settings for both normal and vacation modes.

Controlling the Thermostat

The operating mode of the thermostat (normal/vacation) can be controlled at the Model 400 keypad or remotely via Touch-Tone comands. Both methods are described below:

Keypad commands:

1) To enable Vacation Mode, press the [SENSOR ON/OFF] key, then the [OUTPUT] key. The unit will respond by saying "ON" to indicate that Vacation Mode is set. The Suitcase icon will appear and blink on the thermostat LCD.

2) To enable Normal Mode, press the [SENSOR ON/OFF] key, then the [OUTPUT] key. The unit will respond by saying "OFF" to indicate that Normal Mode is set. The Sun or Moon icon will appear on the thermostat LCD.

TouchTone Commands:

Call the Sensaphone. When the unit answers, it will begin reciting a status report. At any time during the call, press a Touch-Tone. The unit will respond with "OK." The Sensaphone is now ready to accept Touch-Tone commands.

1) To enable Vacation Mode, press SRO (776). The unit will respond by saying "ON" to indicate that Vacation Mode is set. The Suitcase icon will appear and blink on the thermostat LCD.

2) To enable Normal Mode, press SRO (776). The unit will respond by saying "OFF" to indicate that Normal Mode is set. The Sun or Moon icon will appear on the thermostat LCD.

3) To check the status of the ouput press WRO (976). The unit will respond "OFF" for Normal Mode or "ON" for Vacation Mode.

4) Hang up.

8.3.2 DUAL THERMOSTAT CONTROL

When a three or four wire low voltage thermostat is used, it is easy to connect the Sensaphone to your furnace with the addition of a secondary thermostat. One thermostat is set to your preferred "away" temperature and the other thermostat is set to your preferred "home" temperature. With your Sensaphone 400, you will be able to switch between these two thermostats using the relay output.

Ideally, the "away" thermostat would be in your pump or furnace room. Remember that your "away" thermostat will be the only thermostat that keeps your cottage or cabin at minimal heat while you are away. It should

not be located near a window or where direct sunlight might warm it, near a furnace radiator or vent, or any heat source such as a pilot light.

The second thermostat, the one pre-set for your preferred temperature when you arrive at your cottage or cabin, should be located in your normal living space. This would likely be your existing thermostat, already located in a suitable location by your heating professional at the time your furnace was installed.

By connecting these two thermostats together in a parallel fashion, and by passing the low voltage supply through the Sensaphone (See Figure 1), you can remotely or locally decide which thermostat is in control of your furnace.

It is recommended that the "away" thermostat be connected to the NC (Normally Closed) terminal while the "home" thermostat be connected to the N0 (Normally Open) terminal of the Sensaphone. This way, it's easy to understand which state your furnace is in: Output ON = Home and Output OFF = Away. The supply voltage from your furnace (typically the wire labeled R or 24VAC), should always be connected to the C (Common) terminal on the 400.

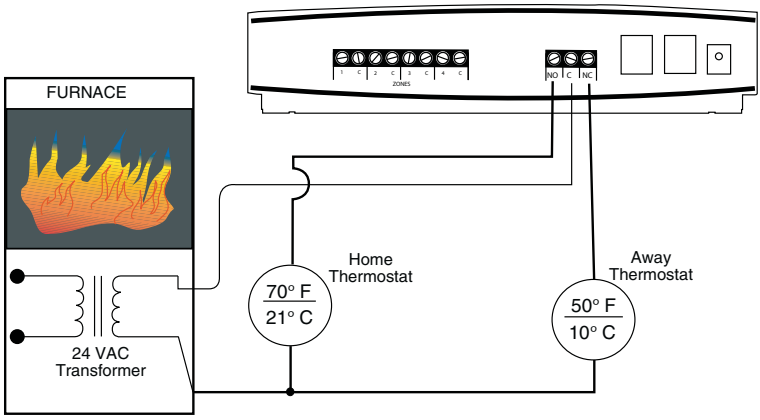

Figure 1: Dual Thermostat Setup

Note: This is a typical configuration when using standard single-zone heat/cool thermostats. For ease-of-use it is recommended that both thermostats be the same model. Note also that all thermostats may not be compatible with the dual-thermostat wiring diagram. Consult your heating/cooling professional for installation assistance.

8.3.3 CONTROLLING LIGHTS OR OTHER DEVICES

Using X10 technology, you can remotely activate any electrical device or appliance in your home through your Sensaphone. X10 technology is a suite of control modules that plug into your existing electrical outlets and transmit coded signals to lamps, lights, and appliances to turn them on or off (See Figure 2).

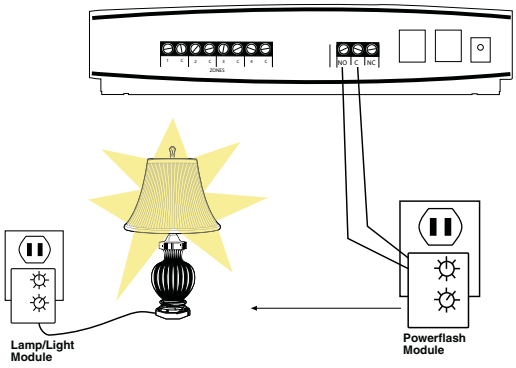

Figure 2: X10 Lighting Control Setup

Sensaphone supports these devices through use of the popular X10 Powerflash relay interface. To learn more about this technology, consult X10 products on the web at www.x10.com or visit your local electronics shop such as Radio Shack.

Such applications may include turning on a lamp or exterior lights remotely from your cellular telephone when arriving at your residence late at night. Or you can use the X10 Powerflash Module (set to momentary contact) in conjunction with the X10 Universal Module to remotely control your electric garage door opener over the telephone—an ideal way of letting in your service personnel without being on-site. You may also use the X10 technology to send the ON/OFF signal to a furnace or heater if your thermostat is not easy to wire directly.

Finally, in addition to remotely controlling devices, X10 technology lets you extend the reach of certain Sensaphone sensors such as door contacts, motion sensors, or water sensors. This is of great benefit where it is impossible to wire directly from your sensors to your Sensaphone. Consult a qualified electrician or your heating professional for assistance with locating your remote sensors or contact your Sensaphone dealer.

APPENDIX A: WEEKLY TESTING PROCEDURE

We recommend that you test your Sensaphone weekly to be sure it is functioning properly. This will ensure that when a problem arises the Sensaphone will be ready to alert the appropriate personnel.

There are several tests that can be performed:

1) Call the unit and listen to the Status Report. This will test the unit's ability to answer the phone and speak a message. It will also verify that all of the zones are reading properly, the alarm conditions are OK, the electricity is on, the microphone is functioning, and the batteries are OK.

2) Create an alarm on each zone by tripping all connected sensors.
   Temperature sensors: Heat or cool the sensor.

   Motion sensors: Have someone walk in front of the sensor.

   Door/window sensors: open the door/window.

Water sensors: Apply a small amount of water beneath the sensor or use a wet towel and touch it to the sensor probes.

Humidity sensors: Raise the humidity around the sensor by holding a cup of very hot water beneath the sensor.

Allow the unit to contact all programmed telephone numbers. This will make sure that the Sensaphone is programmed properly. It will also prepare personnel to respond appropriately when they receive a call from the Sensaphone.

3) Test the batteries by unplugging the AC adapter and making sure that the Sensaphone continues to function. Press WHAT IS, then STATUS on the keypad, and listen to the status report. Make sure the report states that "the power is off" and "batteries are OK." Keep the AC adapter unplugged so that a Power Failure alarm occurs. Allow the unit to dial all programmed telephone numbers while running on battery backup. Plug in the AC adapter after the unit has finished dialing all of the telephone numbers.

4) If you are using your Sensaphone to listen for a smoke alarm, then be sure to test the smoke alarm to make sure that the Sensaphone picks up the audible signal and triggers a high-sound-level alarm. Allow the unit to dial all programmed telephone numbers.

5) Keep a log of your tests, noting the date and whether the 400 passed in each category tested. An example of such a log is shown below. (See "Test Log" at the end of this manual.)

400 Test Log

Date	Inputs		Dialout		Call-in		Tested by
7/1/04	Pass ☒	Fail ☐	Pass ☒	Fail ☐	Pass ☒	Fail ☐	Bob H
7/15/04	Pass ☒	Fail ☐	Pass ☒	Fail ☐	Pass ☒	Fail ☐	Alex G.
7/22/04	Pass ☒	Fail ☐	Pass ☒	Fail ☐	Pass ☒	Fail ☐	Bob H.
	Pass ☐	Fail ☐	Pass ☐	Fail ☐	Pass ☐	Fail ☐	
	Pass ☐	Fail ☐	Pass ☐	Fail ☐	Pass ☐	Fail ☐	

If you require assistance, call Sensaphone Technical Support at 610-558-2700.

APPENDIX B: TROUBLESHOOTING

In the event that a problem is encountered, this section will assist you in determining the cause, so you can return the unit to its usual monitoring routine with minimal interruption.

Most problems with the Model 400 are easy to identify and quickly corrected, and are found under the following general headings:

- Error Messages
- Communications/dial-out functions
- Temperature monitoring
- Sound level monitoring
- Other monitoring functions

If you have tried the solutions outlined in this section and are not satisfied with the results, call Sensaphone Technical Support at 610-558-2700, or follow the guidelines for shipping the Model 400 to Sensaphone for repair (see Appendix F).

ERROR MESSAGES

Problem	Cause	Solution
The unit says “Error 1.”	An invalid value has been entered or too much time has passed without entering a value.	Only enter values within the allowed programming range, and make programming changes in a timely fashion.
The unit says “Error 2.”	Programming changes were attempted without unlocking the keypad.	Unlock the keypad, then make programming changes.

COMMUNICATIONS / DIAL OUT

Problem	Cause	Solution
1)The Model 400 fails to dial out.	a) The telephone number may be incorrectly programmed.	Recheck programming steps. Refer to Chapter 4, Section 4.2.1.
	b) Tone or pulse (the current dialing method) is not compatible with the telephone line on which the Model 400 is installed.	Switch from the current setting: from tone to pulse, or from pulse to tone. Refer to Chapter 4, Section 4.3.
	c) Recognition Time is too long. An alert condition does not remain in effect long enough to become a valid alarm.	Reprogram Recognition Time. Set the Recognition Time to the minimum duration required to create a valid alarm. If possible, test the new setting by deliberately creating an alert condition. Refer to Chapter 5, Section 5.3.
	d) The Model 400 is connected to an incompatible telephone line.	The Model 400 must be connected to a standard (2-wire analog) telephone line, not a digital extension to a phone system. If the unit will not dial out and the factors previously listed have been ruled out, try connecting the unit to a standard residential telephone line.

Problem	Cause	Solution
2. The Model 400 will not answer the telephone when called for a Status Report or alarm acknowledgment.	a) Rings Until Answer is incorrectly programmed.	Recheck programming of Rings Until Answer. Refer to Chapter 4, Section 4.5.1.
	b) The Model 400 is connected to an incompatible telephone line.	Some telephone systems will not allow the telephone to ring beyond 4 rings. If your Model 400's Rings Until Answer is set at more than 4 rings, you may not be able to access the unit. Try setting the Rings Until Answer to less than 4 rings. If this does not correct the problem, it may indicate telephone line incompatibility. In this case, try connecting the Model 400 to a standard, residential telephone line.
3. The Model 400 will not answer the telephone for Callback Acknowledgement.	You did not allow the telephone to ring 10 times. Note: If the TAD (telephone answering device) is disabled, the telephone rings ten times before the Model 400 answers. If the TAD is enabled, you must call the unit and let the line ring once, then hang up, wait ten seconds and call back again within 30 seconds.	When calling the Model 400, and the TAD is disabled, allow the telephone to ring 10 times. Refer to Chapter 6, Section 6.1.3, and Chapter 4, Section 4.6.3.
4. The Model 400 recites the alarm message or Status Report over the telephone, but is silent at the installation site.	The local voice mute feature is in effect.	Deactivate local voice mute. Refer to the programming steps in Chapter 4, Section 4.9.
5. The Model 400 and telephone answering device (sharing the same line) answer incoming calls simultaneously.	The Model 400's number of Rings Until Answer is set to equal the number of rings set for the telephone answering device.	Change the number of Rings Until Answer for the Model 400. Refer to Chapter 4, Section 4.5.

TEMPERATURE MONITORING

Problem	Cause	Solution
1. Can't program temperature limits; or the unit won't read the temperature sensor.	The zone isn't configured to read a temperature sensor.	Press SET and CONFIGURE to program the zone. (See Section 5.1.1 for more information on configuring zones.)
2. The temperature reading is -20° F or -30° C.	The temperature sensor has been disconnected or has broken wires.	Examine the wires to temperature sensor and connect or replace wiring.
3. Temperature reads 150° F or 65° C.	Temperature sensor wires are touching or have shorted.	Verify and correct wiring.
4. Temperature reading is inaccurate.	a) Temperature sensing may be affected by a source of ambient heat (ie., direct sunlight, or heat duct proximity). b) Temperature may require calibration. c) The unit is using the wrong temperature scale (Fahrenheit vs. Celsius).	Try moving the unit to a different location. After moving or placing the unit away from ambient heat sources, the temperature may be calibrated to offset inaccurate normal reading by several degrees. Refer to Chapter 5, Section 5.6. Verify temperature scale. Refer to Chapter 5, Section 5.5.
5. False high temperature alarms from freezer.	Most freezers have a defrost cycle during which the temperature will rise considerably, thus causing an alarm to occur.	Program an zone recognition time longer than the defrost cycle.
6. The Sensaphone calls with a high/low temperature alarm but recites a temperature that's within the programmed limits.	The Sensaphone recites the "current" temperature when it calls you, not the temperature at the time the alarm occurred. It is likely that the temperature has changed since the time the alarm was detected and has since returned to normal operating conditions.	Shorten the Call Delay or lengthen the Zone Recognition Time.

SOUND LEVEL MONITORING

Problem	Cause	Solution
1. False high sound alarms occur frequently.	The programmed sound sensitivity results in over-sensitivity to non-alarm sound as well as alarm sound. Sound Recognition Time is too short.	Reprogram the sound sensitivity. Refer to Chapter 5, Section 5.10. Lengthen the sound Recognition Time. Refer to Chapter 5, Section 5.10.
2. High sound does not cause an alarm.	The unit is not close enough to the high sound source, or the programmed sound setting results in a lack of sensitivity to high sound.	Move the unit closer or reprogram the sound sensitivity. Refer to Chapter 5, Section 5.10.

OTHER MONITORING

Problem	Cause	Solution
1. Alarm status of an alert zone is incorrect.	Incorrect zone normality.	Reconfigure the zone. Refer to Chapter 5, Section 5.1.
2. False power out alarms	Programmed Recognition Time is too short.	AC power is often subject to brief interruptions. To avoid frequent, false alarms, increase the power Recognition Time. Refer to Chapter 5, Section 5.9.
3. The Model 400 does not recognize power failure.	a) Batteries are either incorrectly installed or drained.	To verify proper battery function, unplug the unit and verify continued operation using batteries only. If unit ceases to function, first try reinstalling the batteries. If this is not successful, replace the batteries. Refer to Chapter 2, Section 2.4 for complete instructions.
	b) Recognition time setting is too long.	Reprogram Recognition Time. Set the Recognition Time to the minimum required before a valid alarm occurs. If possible, test the condition by deliberately creating an alert condition. Refer to Chapter 5, Section 5.9.

4. The Model 400 does not recognize any alarm.	a) Zones for alarm are disabled. b) Programmed Recognition Time is too long.	Enable the zones for alarm. Refer to Chapter 5, Section 5.2. Reprogram Recognition Time. Set the Recognition Time to the minimum required for a monitored condition to become a valid alarm. If possible, test the condition by deliberately creating an alert condition. Refer to Chapter 5, Section 5.3.
5. The batteries drain prematurely.	The unit's AC transformer is unplugged or for some other reason, full AC power is not available to the unit.	The batteries will take over powering the unit when the AC transformer is unplugged from the 120 VAC outlet. When storing the unit, be sure to remove the batteries. Refer to Chapter 2, Section 2.4. *Be sure to use alkaline batteries—do not use rechargeable batteries.*

If the solutions offered above do not appear to correct the problem, apply the following steps, in the order shown.

- Remove the batteries.
- Unplug the unit.
- Wait one minute for the Model 400 to completely power down.
- Plug in the unit's AC adaptor into a standard 120 VAC outlet.
- Replace the batteries.

Refer to Chapter 2, Installation, for additional information on batteries and installation procedures.

APPENDIX C: 400 QUICK REFERENCE

Parameter	Description	Key Sequence*	Range	Default
Call Delay	Time delay until first call is made	[SET] or [WHAT IS] + [CALL DELAY]	Min: 00:00 Max 60:00 (min:sec)	00:30 (min:sec)
Voice Reps	Number of times alarm message is repeated over the phone	[SET] or [WHAT IS] + [VOICE REPS]	Min: 1 rep Max: 10 reps	3 reps
Intercall Time	Time delay between phone calls	[SET] or [WHAT IS] + [INTERCALL TIME]	Min: 00:10 Max: 60:00 (min:sec)	01:00 (min:sec)
Max Calls	Number of calls until unit self-acknowledges	[SET] or [WHAT IS] + [MAX CALLS]	Min: 1 call Max: 255 calls	100 calls
Temp Limits	High and low temperature alarm limits	[SET] or [WHAT IS] + [TEMP LIMITS] + [zone #]	Min: -20°F/-30°C Max: 150°F/65°C	Low: 10°F High:100°F
Calibrate	Temperature Correction factor	[SET] or [WHAT IS] + [CALIBRATE] + [zone #]	Min: -10° Max: 10°	0°
Recognition Time: zones 1–4	Length of time a fault condition must exist to trip an alarm	[SET] or [WHAT IS]+ [RECOGNITION TIME]	Min: 00:00 Max: 540:00 (min:sec)	00:03 (min:sec)
Recognition Time: Power Failure	Length of time the power must be off to trip an alarm	[SET] or [WHAT IS] +[RECOGNITION TIME]+[POWER]	Min: 0:00 Max: 540:00 (min:sec)	05:00 (min:sec)
Recognition Time: High Sound Level	Length of time the sound must be high to trip an alarm	[SET] or [WHAT IS] +[RECOGNITION TIME]	Min: 5 Max: 60 (sec)	00:08 (min:sec)
Clock	Real time clock	[SET] or [WHAT IS] + [CLOCK] + [time] + [AM] or [PM]		12:00 AM
High Sound Level Alarm Sensitivity	Microphone sensitivity for high sound level alarm	[SET] or [WHAT IS] + [CALIBRATE] + [SOUND]	Min: 1 unit Max: 160 units	32 units
Listen Time	Length of listen-in time during call-in status report	[SET] or [WHAT IS] + [LISTEN TIME]	Min: 0 sec Max: 255 sec	15 sec
Rings Until Answer	Number of rings until unit answers an incoming call	[SET] or [WHAT IS] + [RING]	Min: 1 ring Max: 15 rings	4 rings

* press [ENTER] after all Key Sequences starting with [SET]

Parameter	Description	Key Sequence*	Range/ Response	Default
TAD	Telephone Answering Device Compatibility	[SENSOR ON/OFF] + [TAD]	Enable / Disable	Disabled
ID Number	Sets the unit's telephone number	[SET] + [ID NUMBER]	0-16	
Dialout Test	Permits testing of dialout Telephone numbers	[SET] + [TEST]+ [1-8]	1-8	
Output Mode	Sets the relay output Mode	[SET] + [OUTPUT]	1-4, *, #, PHONE	Manual
Output Control	Switches the relay output On or Off (manual mode)	[SENSOR ON/ OFF] + [OUTPUT]		Off
Voice Message	Program or recite voice messages	[SET] or [WHAT IS] + [MESSAGE]+ [RECOGNITION TiME] + [zone#]	0-4	
Zone Configuration	Program or recite zone configuration	[SET] or [WHAT IS] +[CONFIG]	temp, NO, NC	No
Call Progress	Turns call progress Detection on or off	[SENSOR ON/ OFF] + [CONFIG]	Enable / Disable	Enabled
Telephone Number	Program or recite dialout telephone numbers	[SET] + [PHONE NUMBER] + [1-8]		
Status Report	Recites a Status Report	[WHAT IS] + [STATUS]		
Run/Standby Mode	Changes the operating mode between run and standby	[RUN/STANDBY]		Run

Parameter	Description	Key Sequence	Response	Default
Speaker Mute	Turns off the speaker during alarm conditions	[SENSOR ON/OFF] + [MUTE]	On or Off	off
Designating A Zone Unused	Removes zone from status and alarm reports	[SENSOR ON/OFF] + [SET] + [zone #]	On or Off	On
Zone Enable/ Disable	Turns zone alarm detection on or off	[SENSOR ON/OFF] + [zone#]	Enabled / Disabled	Enabled
Power Alarm Enable/Disable	Turns power alarm detection on or off	[SENSOR ON/OFF] + [POWER]	Enabled / Disabled	Enabled
Sound Alarm Enable/Disable	Turns high sound level alarm detection on or off	[SENSOR ON/OFF] + [SOUND]	Enabled / Disabled	Enabled
Temperature Scale	Selects between Fahrenheit and Celsius	[SENSOR ON/OFF] + [F/C]	Fahrenheit or Celsius	Fahrenheit
Security Code	Prohibits programming changes	[SET] or [WHAT IS] + [CODE] + [4 digit code]		none
Callback Acknowledgment	Turns Callback Acknowledgment on or off	[SENSOR ON/OFF] + [PHONE]	Enabled / Disabled	Disabled

APPENDIX D: ACCESSORIES

The sensors listed below are available from Phonetics, Inc., and represent the most commonly used zone devices. Other dry contact sensors, designed for more specialized applications, may also be used. Commercial or industrial electrical supply houses can provide devices to monitor virtually any condition. For further information, contact Sensaphone Customer Service at 610-558-2700.

PART #	SENSOR / SWITCH
FGD-0006	Magnetic Reed Switch
FGD-0007	Passive Infra-Red Detector
FGD-0010	50’ two-conductor #22AWG Shielded Cable
FGD-0013	Spot Water Detector
FGD-0022	Temp° Alert
FGD-0064	Surge Suppressor
FGD-0027	Humidistat
FGD-0049	Smoke Detector with Built-in Relay
FGD-0054	Power-Out Alert™
FGD-0056	Zone Water Detector w/Water Rope
FGD-0063	Additional 10’ Water Rope for FGD-0056
FGD-0064	Programmable Thermostat with Remote Setback
XFR-0024	12VDC Power Supply for Thermostat
FGD-0100	Remote Temperature Sensor
FGD-0101	Weatherproof Temperature Probe
FGD-0205	Multi-Point Wireless I/O System

APPENDIX E: SPECIFICATIONS

ALERT ZONES

Number of Zones: 4 (thermistor installed on zone #1 for local temperature monitoring)

Zone Connector: terminal block

Zone Types: N.O./N.C. contact, 2.8K thermistor (-20° F to 150° F or -30° C to 65° C)

Zone Characteristics: 5.11K to 2.85V (Short circuit current: 1mA max.)

A/D Converter Resolution: 10 bits ±2 LSB

Zone Protection: 5.5VDC Metal Oxide Varistor with fast acting diode clamps.

MICROPHONE

Internal Electret Condenser: For listening in to on-site sounds and detecting high sound levels.

PHONE INTERFACE

Line RJ11 Jack: For connection to a two-wire analog telephone line. (6' modular cord included)

Extension RJ11 Jack w/ Line Seizure: For connecting other devices on the same telephone line, devices connected to this jack are disconnected in the event that the 400 must dial out for an alarm.

Phone Line Protection: Metal Oxide Varistor & self-resetting fuse

LED INDICATOR

System On: On steady when the unit is in RUN mode. LED blinks once every few seconds while in STANDBY mode.

Phone In Use: On steady when the telephone line is being used. LED blinks when no dial tone is detected. Off when telephone line is not in use.

Alarm: Off when no alarm exists. Blinks when an unacknowleged alarm exists. On steady when an acknowledged alarm exists

Battery Ok: On steady when the battery is in good condition. Blinks when the battery is low. Off when the battery must be replaced.

RELAY OUTPUT

Rated for 1A 30VAC/1A 30VDC maximum.

POWER SUPPLY

Power Supply: 120VAC/9VDC 60Hz 6W wall plug-in transformer w/6' cord.

Power Consumption: 1.5 Watts

Power Protection: Metal Oxide Varistor

Battery Backup: Six size-C alkaline batteries (not included), providing up to 24 hours of back-up time.

ENVIRONMENTAL

Operating Temperature: 32–122° F (0–50° C)

Operating Humidity: 0–90% RH non-condensing

Storage Temperature: 32°–140° F (0–60° C)

PHYSICAL

Dimensions: 2.1"h x 7.8"w x 8.8"d

Weight: 2 lbs.

Enclosure: Indoor-rated plastic housing suitable for wall or desktop installation.

Alarm: Off when no alarm exists. Blinks when an unacknowleged alarm exists. On steady when an acknowledged alarm exists

Battery Ok: On steady when the battery is in good condition. Blinks when the battery is low. Off when the battery must be replaced.

APPENDIX F: RETURNING THE UNIT FOR REPAIR

In the event that the Model 400 does not function properly, we suggest that you do the following:

1) Record your observations regarding the Model 400's malfunction.

2) Call the Technical Service Department at 610-558-2700 prior to sending the unit to Sensaphone for repair.

If the unit must be sent to Sensaphone for Servicing, please do the following:

1) Unplug the AC power supply from the wall outlet, remove the batteries, and disconnect all sensors from the alert zones.

2) Carefully pack the unit to avoid damage in transit. Use the original container (if available) or a sturdy shipping box.

3) You must include the following information to avoid shipping delays:

a) Your name, address and telephone number.

b) A note explaining the problem.

4) Ship your package to the address below:

SERVICE DEPARTMENT

SENSAPHONE

901 Tryens Road

Aston, PA 19014

5) Ship prepaid and insured via UPS or US Mail to ensure a traceable shipment with recourse for damage or replacement.

APPENDIX G: TEST LOG

Date	Inputs	Dialout	Call-In	Battery		Tested By
	Pass ☐ Fail ☐	Pass ☐ Fail ☐	Pass ☐ Fail ☐	Pass ☐ Fail ☐	Pass ☐ Fail ☐	
	Pass ☐ Fail ☐	Pass ☐ Fail ☐	Pass ☐ Fail ☐	Pass ☐ Fail ☐	Pass ☐ Fail ☐	
	Pass ☐ Fail ☐	Pass ☐ Fail ☐	Pass ☐ Fail ☐	Pass ☐ Fail ☐	Pass ☐ Fail ☐	
	Pass ☐ Fail ☐	Pass ☐ Fail ☐	Pass ☐ Fail ☐	Pass ☐ Fail ☐	Pass ☐ Fail ☐	
	Pass ☐ Fail ☐	Pass ☐ Fail ☐	Pass ☐ Fail ☐	Pass ☐ Fail ☐	Pass ☐ Fail ☐	
	Pass ☐ Fail ☐	Pass ☐ Fail ☐	Pass ☐ Fail ☐	Pass ☐ Fail ☐	Pass ☐ Fail ☐	
	Pass ☐ Fail ☐	Pass ☐ Fail ☐	Pass ☐ Fail ☐	Pass ☐ Fail ☐	Pass ☐ Fail ☐	
	Pass ☐ Fail ☐	Pass ☐ Fail ☐	Pass ☐ Fail ☐	Pass ☐ Fail ☐	Pass ☐ Fail ☐	
	Pass ☐ Fail ☐	Pass ☐ Fail ☐	Pass ☐ Fail ☐	Pass ☐ Fail ☐	Pass ☐ Fail ☐	
	Pass ☐ Fail ☐	Pass ☐ Fail ☐	Pass ☐ Fail ☐	Pass ☐ Fail ☐	Pass ☐ Fail ☐	
	Pass ☐ Fail ☐	Pass ☐ Fail ☐	Pass ☐ Fail ☐	Pass ☐ Fail ☐	Pass ☐ Fail ☐	
	Pass ☐ Fail ☐	Pass ☐ Fail ☐	Pass ☐ Fail ☐	Pass ☐ Fail ☐	Pass ☐ Fail ☐	
	Pass ☐ Fail ☐	Pass ☐ Fail ☐	Pass ☐ Fail ☐	Pass ☐ Fail ☐	Pass ☐ Fail ☐	
	Pass ☐ Fail ☐	Pass ☐ Fail ☐	Pass ☐ Fail ☐	Pass ☐ Fail ☐	Pass ☐ Fail ☐	
	Pass ☐ Fail ☐	Pass ☐ Fail ☐	Pass ☐ Fail ☐	Pass ☐ Fail ☐	Pass ☐ Fail ☐	
	Pass ☐ Fail ☐	Pass ☐ Fail ☐	Pass ☐ Fail ☐	Pass ☐ Fail ☐	Pass ☐ Fail ☐	
	Pass ☐ Fail ☐	Pass ☐ Fail ☐	Pass ☐ Fail ☐	Pass ☐ Fail ☐	Pass ☐ Fail ☐	
	Pass ☐ Fail ☐	Pass ☐ Fail ☐	Pass ☐ Fail ☐	Pass ☐ Fail ☐	Pass ☐ Fail ☐	
	Pass ☐ Fail ☐	Pass ☐ Fail ☐	Pass ☐ Fail ☐	Pass ☐ Fail ☐	Pass ☐ Fail ☐	
	Pass ☐ Fail ☐	Pass ☐ Fail ☐	Pass ☐ Fail ☐	Pass ☐ Fail ☐	Pass ☐ Fail ☐	

Date	Inputs	Dialout	Call-In	Battery		Tested By
	Pass ☐ Fail ☐	Pass ☐ Fail ☐	Pass ☐ Fail ☐	Pass ☐ Fail ☐	Pass ☐ Fail ☐	
	Pass ☐ Fail ☐	Pass ☐ Fail ☐	Pass ☐ Fail ☐	Pass ☐ Fail ☐	Pass ☐ Fail ☐	
	Pass ☐ Fail ☐	Pass ☐ Fail ☐	Pass ☐ Fail ☐	Pass ☐ Fail ☐	Pass ☐ Fail ☐	
	Pass ☐ Fail ☐	Pass ☐ Fail ☐	Pass ☐ Fail ☐	Pass ☐ Fail ☐	Pass ☐ Fail ☐	
	Pass ☐ Fail ☐	Pass ☐ Fail ☐	Pass ☐ Fail ☐	Pass ☐ Fail ☐	Pass ☐ Fail ☐	
	Pass ☐ Fail ☐	Pass ☐ Fail ☐	Pass ☐ Fail ☐	Pass ☐ Fail ☐	Pass ☐ Fail ☐	
	Pass ☐ Fail ☐	Pass ☐ Fail ☐	Pass ☐ Fail ☐	Pass ☐ Fail ☐	Pass ☐ Fail ☐	
	Pass ☐ Fail ☐	Pass ☐ Fail ☐	Pass ☐ Fail ☐	Pass ☐ Fail ☐	Pass ☐ Fail ☐	
	Pass ☐ Fail ☐	Pass ☐ Fail ☐	Pass ☐ Fail ☐	Pass ☐ Fail ☐	Pass ☐ Fail ☐	
	Pass ☐ Fail ☐	Pass ☐ Fail ☐	Pass ☐ Fail ☐	Pass ☐ Fail ☐	Pass ☐ Fail ☐	
	Pass ☐ Fail ☐	Pass ☐ Fail ☐	Pass ☐ Fail ☐	Pass ☐ Fail ☐	Pass ☐ Fail ☐	
	Pass ☐ Fail ☐	Pass ☐ Fail ☐	Pass ☐ Fail ☐	Pass ☐ Fail ☐	Pass ☐ Fail ☐	
	Pass ☐ Fail ☐	Pass ☐ Fail ☐	Pass ☐ Fail ☐	Pass ☐ Fail ☐	Pass ☐ Fail ☐	
	Pass ☐ Fail ☐	Pass ☐ Fail ☐	Pass ☐ Fail ☐	Pass ☐ Fail ☐	Pass ☐ Fail ☐	
	Pass ☐ Fail ☐	Pass ☐ Fail ☐	Pass ☐ Fail ☐	Pass ☐ Fail ☐	Pass ☐ Fail ☐	
	Pass ☐ Fail ☐	Pass ☐ Fail ☐	Pass ☐ Fail ☐	Pass ☐ Fail ☐	Pass ☐ Fail ☐	
	Pass ☐ Fail ☐	Pass ☐ Fail ☐	Pass ☐ Fail ☐	Pass ☐ Fail ☐	Pass ☐ Fail ☐	
	Pass ☐ Fail ☐	Pass ☐ Fail ☐	Pass ☐ Fail ☐	Pass ☐ Fail ☐	Pass ☐ Fail ☐	
	Pass ☐ Fail ☐	Pass ☐ Fail ☐	Pass ☐ Fail ☐	Pass ☐ Fail ☐	Pass ☐ Fail ☐	
	Pass ☐ Fail ☐	Pass ☐ Fail ☐	Pass ☐ Fail ☐	Pass ☐ Fail ☐	Pass ☐ Fail ☐	
	Pass ☐ Fail ☐	Pass ☐ Fail ☐	Pass ☐ Fail ☐	Pass ☐ Fail ☐	Pass ☐ Fail ☐	

1 YEAR WARRANTY

User's Guide

Shop online at

omega.com®

OMEGA®

omega.com
e-mail: info@omega.com
For latest product manuals:
omegamanual.info

ISO 9001 CERTIFIED CORPORATE QUALITY — STAMFORD, CT

ISO 9002 CERTIFIED CORPORATE QUALITY — MANCHESTER, UK

PX764 SERIES
Industrial Pressure Transmitters

OMEGAnet® Online Service omega.com	Internet e-mail info@omega.com

Servicing North America:

U.S.A.:
ISO 9001 Certified

One Omega Drive, P.O. Box 4047
Stamford, CT 06907-0047
TEL: (203) 359-1660
FAX: (203) 359-7700
e-mail: info@omega.com

Canada:

976 Bergar
Laval (Quebec) H7L 5A1, Canada
TEL: (514) 856-6928
FAX: (514) 856-6886
e-mail: info@omega.ca

For immediate technical or application assistance:

U.S.A. and Canada:

Sales Service: 1-800-826-6342/1-800-TC-OMEGA®
Customer Service: 1-800-622-2378/1-800-622-BEST®
Engineering Service: 1-800-872-9436/1-800-USA-WHEN®

Mexico:

En Español: (001) 203-359-7803
FAX: (001) 203-359-7807
e-mail: espanol@omega.com
info@omega.com.mx

Servicing Europe:

Czech Republic:

Frystatska 184, 733 01 Karviná, Czech Republic
TEL: +420 (0)59 6311899
FAX: +420 (0)59 6311114
Toll Free: 0800-1-66342
e-mail: info@omegashop.cz

Germany/Austria:

Daimlerstrasse 26, D-75392 Deckenpfronn, Germany
TEL: +49 (0)7056 9398-0
FAX: +49 (0)7056 9398-29
Toll Free in Germany: 0800 639 7678
e-mail: info@omega.de

United Kingdom:
ISO 9002 Certified

One Omega Drive, River Bend Technology Centre
Northbank, Irlam, Manchester
M44 5BD United Kingdom
TEL: +44 (0)161 777 6611
FAX: +44 (0)161 777 6622
Toll Free in United Kingdom: 0800-488-488
e-mail: sales@omega.co.uk

It is the policy of OMEGA Engineering, Inc. to comply with all worldwide safety and EMC/EMI regulations that apply. OMEGA is constantly pursuing certification of its products to the European New Approach Directives. OMEGA will add the CE mark to every appropriate device upon certification.

The information contained in this document is believed to be correct, but OMEGA accepts no liability for any errors it contains, and reserves the right to alter specifications without notice.
WARNING: These products are not designed for use in, and should not be used for, human applications.

INDEX

- Sensor specification tables 1
- Dimensions 1

1 - PRODUCT SHEET 2
1.1 - Functional data 2
1.2 - Operating conditions 2
1.3 - Operating influences 2
1.4 - Physical specifications 3
1.5 - Explosion protection 3
1.6 - Electromagnetic compatability 3

2 - THEORY OF OPERATION.....4
2.1 - Basic operation 4
2.2 - Transmitters output levels.....4

3 - INSTALLATION 5
3.1 - Instrument identification 5
3.2 - Transmitter mounting 5
3.3 - Pressure measurement 5
3.4 - Transmitter wiring 6
3.5 - Power supply 6
3.6 - Safety instructions for the employment in areas with presence of potentially explosive atmospheres 7
3.6.1 - Premise.....7
3.6.2 - General.....7
3.6.3 - Installation.....7
3.6.3.1 - Fitness of the transmitter for the installation area.....7
3.6.3.2 - Safety data definitions.....7
3.6.3.3 - Additional warnings for installation.....8
3.6.3.4 - Electrical connections.....8
3.6.4 - Verification and maintenance.....8
3.6.5 - Instrument service.....8

4 - CONFIGURATION 9
4.1 - Definitions 9
4.2 - Display and push buttons 9
4.3 - Configuration of the display 9
4.4 - Configuration of the device - Use of functions.....10

5 - CALIBRATION 14
5.1 - Output Current Calibration 14
5.2 - Sensor's non-linearity adjustment 14

6 - MAINTENANCE 15
6.1 - Periodic service 15
6.2 - Troubleshooting 15

MAIN DATA: DIMENSIONS (mm) AND SENSOR'S RANGES

MODEL NO.	CALIBRATED RANGE (psi)	NOMINAL RANGE (Bar)	SPAN min/max (Bar)	RANGE LIMITS (Bar)	PROOF PRESSURE (Bar)
GAUGE PRESSURE					
PX764-005GI	0-5	0-0.35	0.035/0.735	-0.3675/+0.3675	2
PX764-015GI	0-15	0-1	0.1/2.05	-1/+1.05	6
PX764-030GI	0-30	0-2.5	0.25/3.625	-1/+2.625	10
PX764-060GI	0-60	0-5	0.5/6.25	-1/+5.25	16
PX764-150GI	0-150	0-10	1/11.5	-1/+10.5	30
PX764-400GI	0-400	0-30	3/32.5	-1/+31.5	75
ABSOLUTE PRESSURE					
PX764-005AI	0-5	0-.35	0.035/0.3675	0/0.3675	2
PX764-015AI	0-15	0-1	0.1/1.05	0/1.05	6
PX764-030AI	0-30	0-2.5	0.25/2.625	0/2.625	10
PX764-060AI	0-60	0-5	0.5/5.25	0/5.25	16
PX764-150AI	0-150	0-10	1/10.5	0/10.5	30

*** 100 mm CLEARANCE TO REMOVE COVER (BOTH ENDS)**

PX764-005GI and PX764-005AI

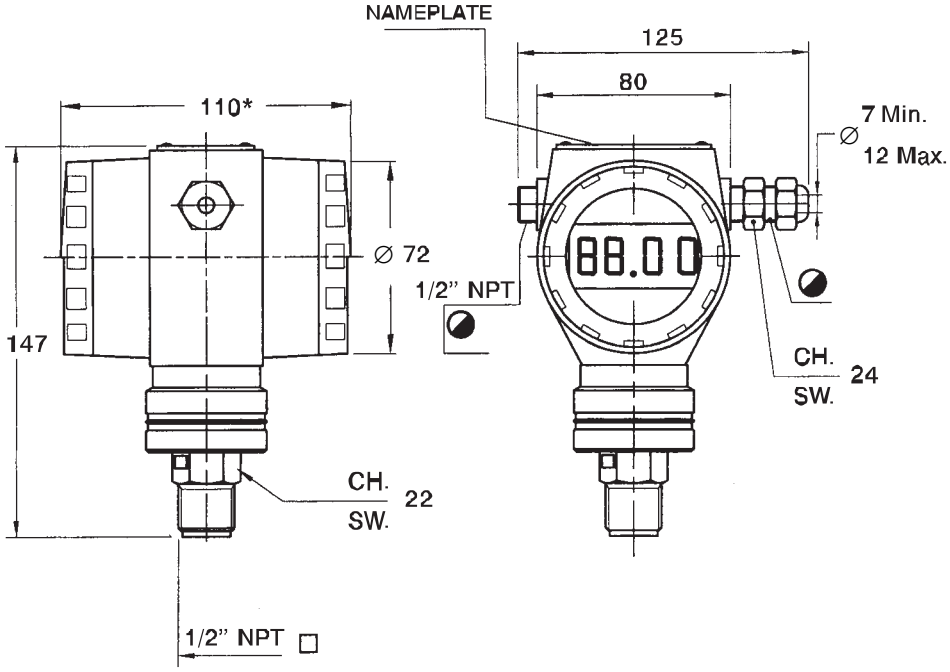

PX764 ≥ 15 PSI

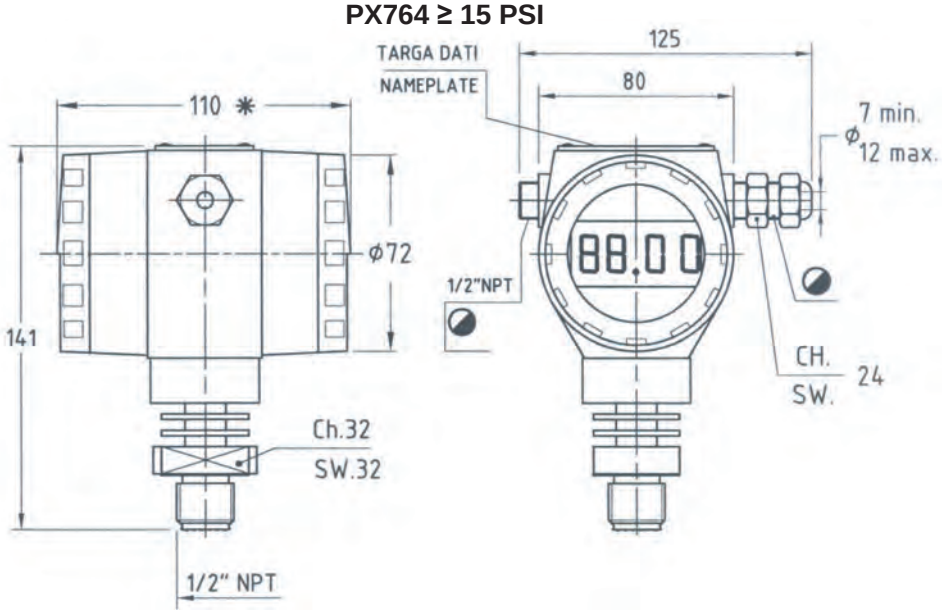

1 - PRODUCT SHEET

GENERAL

Series PX764 transmitters, complete with diaphragm in AISI 316, measure relative or absolute pressure in measuring spans between 0,035 and 31,5 bar. The pressure measuring element is a piezoresistive sensor. It is possible to choose between sensors to satisfy the process conditions.
The sensor, protected from the process fluid by diaphragm, generates a signal corresponding to the actual pressure and is completed with a PTC thermistor which also transmits the temperature of the the measuring cell to the electronic system. On the basis of these two values and of the configured parameters the electronic system generates a standard output signal (4 to 20 mA, two wires system) and displays all the necessary data on the LCD display. The operating parameters can be changed by means of the two push buttons that are below the LCD display.
Among the relevant characteristics of this microprocessor based transmitter, are the following :
- wide rangeability for the measuring span (abt. 1 to 10)
- automatic temperature compensation in the measuring cell.
- complete programmability

1.1 - FUNCTIONAL DATA

With reference to the following, please note these definitions:
Nominal range: (referred to the sensor mounted on the instrument) the pressure range (included between a minimum and a maximum values) to measure which the sensor has been designed.
Nominal span: the pressure interval between the minimum and maximum values of the sensor nominal range. The span is a number.
Measuring range: the pressure range between minimum and maximum for which the transmitter has been calibrated.
Measuring span: the pressure interval between minimum and maximum values of the measuring range.
Input scale initial value or zero input: minimum pressure value included in the measuring range.
Input full scale value: maximum pressure value included in the measuring range.

PHYSICAL CHARACTERISTICS

Power supply: 11,1 - 30 V d.c. with no load.
Relation between supply voltage and permissible load with Imax 22,4 mA:
- 0/250 ohm for 16,7 V d.c.
- 0/576 ohm for 24 V d.c.
- 0/844 ohm for 30 V d.c.

Output signal: 4/20 mA - 2 wire system.
LCD display reading: -10 to +65°C.
4 digits LCD display, 5 symbols (bar, mbar, psi, %, sec).
Settling time: 150 ms (at 27°C).

1.2 - OPERATING CONDITIONS

Temperature.
Housing: - 20 to + 80° C.
Process fluid: -20 to 90°C for 0.35 bar nominal range
-20 to 130°C for ranges ≥ 1 bar (minimum calibration 0.5 bar)
Handling and storage: -20 to + 90° C.
Relative humidity: 0 100%. R.H. Non condensing.

Performance
Unless otherwise stated, performance specifications are referred at atmospheric pressure, nominal span, silicon oil filling and are given as a percent of span.
Accuracy rating: It is assured within the following limits:
Non linearity: ≤ 0,10%.
Repeatability: ≤ 0,10%.
Hysteresis: ≤ 0,10%.

1.3 - OPERATING INFLUENCES

Thermal drift: it is referred to -10 to +65°C range.
Zero: ± 0,1%/10°K. Span: ± 0,1%/+10°K at nominal range.
Power supply effect: negligible between 11,1 and 30 V d.c.

1.4 - PHYSICAL SPECIFICATIONS

Process wetted parts: AISI 316
Housing: die cast aluminium alloy AL UNI 4514 finished with epoxy resin (RAL 5014).
Covers O-ring: Buna N.
Filling fluid: silicon oil.
Nameplate: stainless steel, fixed on housing.

Calibration
Standard: at nominal range, linear.
Optional: at the conditions specified with the order.

Environmental protection: the transmitter is dust and sand tight and protected against sea waves effects as defined by IEC IP 66. Suitable for tropical climate operation as defined in DIN 50.015.

Process connections:
1/2" NPT male

Electrical connections: two cable entries on electronic housing, 1/2" NPT and cable gland PG 13,5 for 7 to 12 mm diameter cable.

Terminal board: 2 terminals for signal wiring up to 14 AWG. Earth connection for shield of cable

Mounting: direct on pressure connection.

Net weight: 1,2 kg

1.5 - EXPLOSION PROTECTION

EQUIPMENTS AND PROTECTION SYSTEMS ATEX 94/9/CE
Intrinsic safety EExia IIB T6/T5/T4.
Amb. temp. °C: -20 to +40 (T6) / +55 (T5) / +80 (T4).

Group II class 1G suitable for zone 0,1,2 - EN 60079-10
EC type-examination certificate CESI 07 ATEX 001.

Power supply parameters:
Ui = 30 V; Ii = 152 mA; Pi = 0,95 W; Li = 135 µH; Ci = 10 nF.

1.6 - ELECTROMAGNETIC COMPATABILITY

Conforms to the standard EM 50081-2, EM 50082-2 in accordance 89/336/EEC and following modifications.

2 - THEORY OF OPERATION

2.1 - BASIC OPERATION

The functional block diaphragm of the transmitter is shown in the figure below:

Fig. 2.1.1

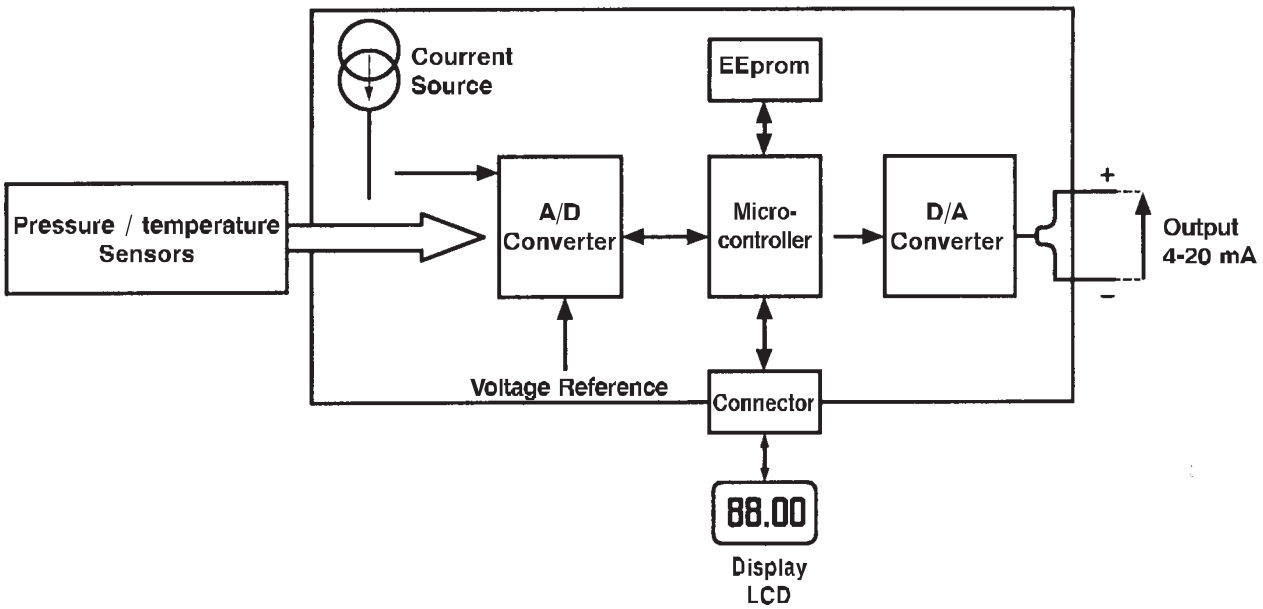

Inputs are sampled and digitized by the "analog to digital" converter (ADC). The sensor signal integrity is checked by a diagnostic routine. Digital data is linearised and converted to the selected engineering units e.g. bar. The measurement is then ranged to the lower and upper range values. This value is finally converted to a 4-20 mA analog output signal. The configuration is held in a non volatile memory (not lost in case of power failure).

The transmitter configuration can be changed by using several functions through the push buttons on the LCD display.

The transmitter continuosly performs internal diagnostics to give maximum reliability and help the user to identify any problems. Any critical condition will drive the output to the selected failsafe direction (Hi/Lo).

2.2 - TRANSMITTER OUTPUT LEVELS

Fig. 2.2.1 Output levels

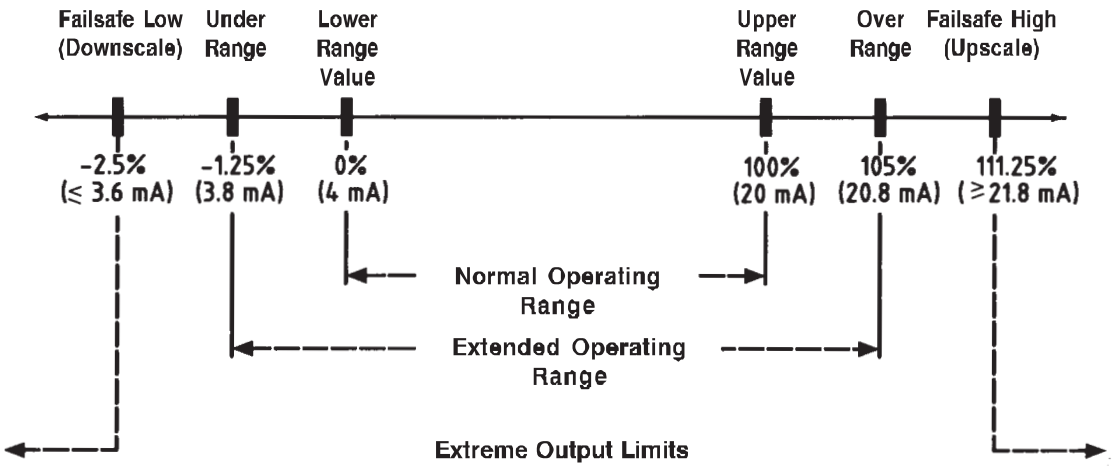

3 - INSTALLATION

3.1 - INSTRUMENT IDENTIFICATION

Instrument data can be found on the nameplate fixed to the top of transmitter housing. The Serial Number that must be quoted at the occurence of specific requests to the manufacturer.
Fig. 3.1.1 shows both sides of the housing with covers removed.

3.2 - TRANSMITTERS MOUNTING

The transmitter is supplied for direct mounting by the fittings. A mounting bracket is available for fixing to a DN 50 pipe, horizontal or vertical or used for surface mounting. Refer to dimensional drawing for details and clearances.The housing position does not affect the instrument operation.

3.3 - PRESSURE MEASUREMENT

The transmitter PX764 may be used for pressure and, in the lower ranges.
On Fig. 3.3.1 and Fig. 3.3.2 it is shown the simplest mounting, direct on piping.

Fig. 3.1.1 - TRANSMITTER TOPWORK

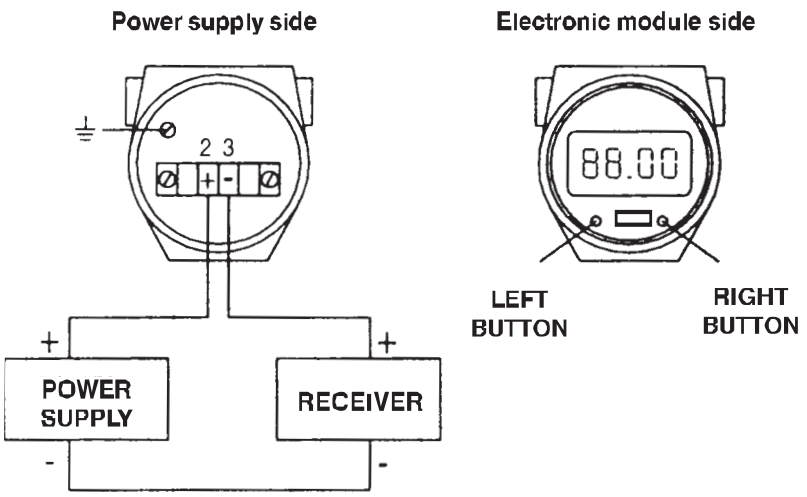

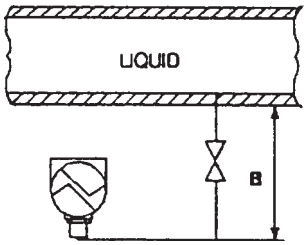

Fig. 3.3.1

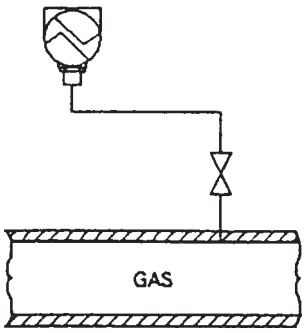

Fig. 3.3.2

Pressure measurement

3.4 - TRANSMITTER WIRING

Remove the cover of terminal compartment for access to terminals "+, "−" and ground (earth). Insert the power supply cable through one of the two 1/2" NPT openings.
As shown in Fig. 3.1.1 connect terminal "+" to "+" power supply, "−" to "+" receiver.
In the case of reversed polarity, the instrument will not operate; however in this case the instrument will not be damaged.
See Fig. 4 for a typical connection.

A 2-core cable (section 0,5 mm² or greater) may be used for connection.
Twisted wires are better protected from electrical noise. Some applications may require shielded cables; earth the shield at the power supply ground only.
Avoid locating cables near a.c. power cables such as mains supply.
Connect the earth screw to a ground, preferably the same ground used in the measuring circuit.
Cabling may be up to 3 km long.
Reinstall the removed cover.

3.5 - POWER SUPPLY

To guarantee a 4 to 22,4 mA output signal, the minimum supply voltage must be calculated. It is a function of the total resistive load (output load).
This value is the sum of the resistances of each component in the circuit, excluding the transmitter.
The graph shown in Fig. 5 gives the minimum supply voltage required. The value can also be obtained from the following formula:

$$Vcc = 0{,}0224 \times R + 11{,}1$$

where: R = output load.

See example on Fig. 5. For a total circuit resistance of 576 Ohm, the minimum supply voltage must be 24 V c.c. The power unit must be able to supply a minimum 25 mA for standard operation of the current loop.

Fig. 4

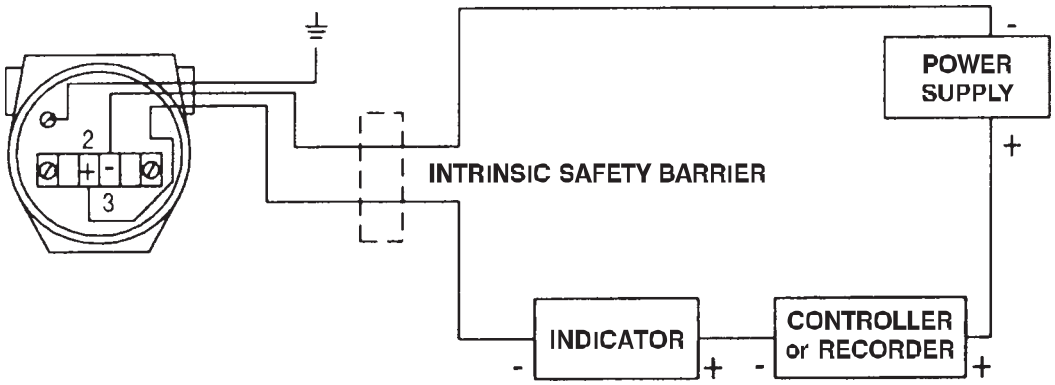

Fig. 5

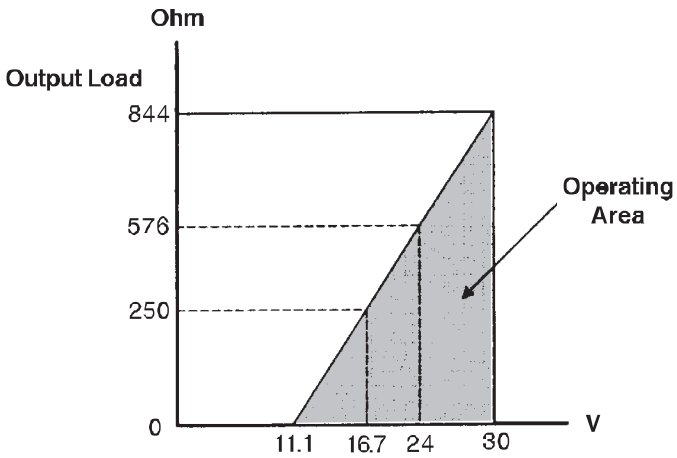

horizontal or vertical

3.6 - SAFETY INSTRUCTIONS FOR THE EMPLOYEMENT IN AREAS WITH PRESENCE OF POTENTIALLY EXPLOSIVE ATMOSPHERES

3.6.1 - PREMISE

These safety instructions are referred to the installation, use and maintenance of series PX764 transmitters, for the employment in areas with presence of potentially explosive atmospheres.
Letter x individualize the different model of transmitter that depends on the type of measuring cell mounted.

The transmitters object of the present Instructions are characterized by the following methods of protection:

EEx Ia II B T6 for Tamb –20 ÷ +40 °C
EEx Ia II B T5 for Tamb –20 ÷ +55 °C
EEx Ia II B T4 for Tamb –20 ÷ +80 °C

The indications contained in the present safety instructions must be observed together with the instructions brought in the operator manual.

3.6.2 - GENERAL

Instruments of the PX764 series are Transmitters of relative and absolute pressure. They are devices with solid state electronics whose operation is based on piezoresistive sensors.
They measure pressures of liquids, gas and vapours with nominal ranges from 0,35 up to 31,5 bar and transmit an current output signal 4-20 mA proportional to the measured pressure. They can also be used to measure level in open or closed tanks.

3.6.3 - INSTALLATION

3.6.3.1 - FITNESS OF THE TRANSMITTER FOR THE INSTALLATION AREA

In case of use in areas with danger of explosion, it must be verified that the identified type of transmitter fits for the classification of the zone and for the presence of flammable substances in the plant.
The safety essential requisite against the risk of explosion in the classified areas are fixed from the European Directives 94/9/CE of March 23 rd 1994 (as far as it concerns the apparatus) and 1999/92/CE of December 16 th 1999 (as far as it concerns the plant).
The criterions for the classification of the areas with risk of explosion are given from the standard EN60079-10.
The technical requisite of the electric fittings in the classified areas are given from the standard EN60079-14.
On the plate, besides the functional data, the references of the notified body undertaken for the certification are also pointed out .

3.6.3.2 - SAFETY DATA DEFINITIONS

II 1 G	Transmitter for surface plants with presence of gas or vapours, Group II, category 1, fit for zone 0 and with redundancy for zone 1 and 2
EEx Ia	Intrisically Safe transmitter, category "ia"
II B	Group IIB apparatus, fit for substances (gas) of group IIB
T6, T5, T4	Temperature Class of the transmitter (maximum temperature)
CE	Conformity mark to European Directives applicable to the apparatus
Ex	Conformity marking to 94/9/CE Directive and technical rules
CESI 07 **ATEX 001**	Name of the laboratory that released the EC type-examination certificate; **07** –Year; **001**–certificate number
0722	Identifying Number of the notified body (CESI) that assess the quality system of the manufacturer
T. amb.	Ambient minimum and maximum temperature
UI, II, PI, CI, LI	Maximum Input parameters of the apparatus (related to Intrinsic safety)

Note:
a) the transmitters for the group IIB also fit for gas group IIA;
b) the transmitters with class of temperature T6 also fit for all the substances with higher class of temperature (T5, T4, T3, T2, T1);
c) the transmitters with class of temperature T5 also fit for all the substances with higher class of temperature (T4, T3, T2, T1);
d) the transmitters with class of temperature T4 also fit for all the substances with higher class of temperature (T3, T2, T1);
e) the choice of the associated apparatus must be made on the base of the maximum input parameters of the transmitter.

3.6.3.3 - ADDITIONAL WARNINGS FOR INSTALLATION

For the correct installation refer to the chapter operator manual and to sketches brought there.
The process connection must be realized in such a way that guarantees the hold at the maximum working pressure and temperature.
Do not overcome the maximum pressure and temperatures indicated in the technical data sheet of the selected model.
When the device is connected to the process it can be submitted to high pressures and temperatures. To avoid accidents subsequent to sudden discharge of pressure and/or to contact with dangerous or flammable fluids it is necessary to take the maximum attention when the device is taken off, heated or repaired, verifying that it is isolated from the process and is not submitted to pressure and/or temperature.

3.6.3.4 - ELECTRICAL CONNECTIONS

For the electrical connections please follow the instructions brought in the operator manuals taking care that for the use in classified areas it is necessary to foresee the use of associated apparatuses (e.g. safety barriers), certified according to the standard EN 50020, with output electrical characteristics compatible with the maximum input parameters (brought on the plate) of the certified transmitter.
The evaluation of the system constituted by the associated apparatus, the transmitter and the cables of connection must be done by experienced personnel only and must match the requisite of the standard EN 50039 relative to the intrinsically safe systems.
For the correct installation it is necessary to follow the safety instructions of the selected associated apparatus.

Electrical parameters related to Intrinsic Safety

Parameter	Value
Maximum input voltage **Ui**	30 V
Maximum input current **Ii**	152 mA
Maximum input power **Pi**	0,95 W
Maximum internal capacitance **Ci**	10 nF
Maximum internal inductance **Li**	135 mH

3.6.4 - VERIFICATION AND MAINTENANCE

The verifications and the maintenances of the transmitters must be done according to the criterions of the standard EN60079-17.

3.6.5 - INSTRUMENT SERVICE

In case of malfunction or damage it is advised to contact OMEGA Engineering.

4. CONFIGURATION

4.1 - DEFINITIONS

• **Nominal range**	Referred to the instrument's sensor, it is the pressures range to measure which the instrument has been designed.
• **Nominal Span:**	The difference between the two points of the Nominal Range. E.g. PX764 Nominal Range 0/5 bar (Ref. D) Nominal Span = 5 bar
• **USL (Upper Sensor Limit)**	Maximum Range limit of measurable pressure
• **LSL (Lower Sensor Limit):**	Minimum Range limit of measurable pressure
• **Calibration Range:**	A Pressure Range included between maximum limit (USL) and minimum limit (LSL)
• **URV (Upper Range Value):**	High value of calibrated range (corresponds to 20 mA)
• **LRV (Lower Range Value):**	Low value of calibrated range (corresponds to 4 mA)
• **Span:**	Difference between Upper and Lower points of the calibrated range (Span = URV-LRV)

4.2 - DISPLAY AND PUSH BUTTONS

✓ When you power up the instrument, it will show a pre-established sequence for about 6 seconds. This procedure allows the display of the software revision, test of the LCD segments, internal diagnostics, etc.
✓ After initialization, the display shows the primary variable (pressure).
✓ The push buttons combinations are referenced as follows:

LB	⇒	Left Button
RB	⇒	Right Button
LB+RB	⇒	Both buttons are pushed at the same time
LB or RB	⇒	One of the two buttons
LB&RB	⇒	First press **LB**, while **LB** is pressed, press **RB**
RB&LB	⇒	First press **RB**, while **RB** is pressed, press **LB**

4.3 - CONFIGURATION OF THE DISPLAY

The display parameters that can be configured are:

GROUP 1: Pressure unit configuration

✓ bar / mbar depending on sensors' range or
✓ PSI depending on the selected engineering unit (see function F9)
✓ % relative to the span set by the user (LRV/URV).

You can also configure the display to alternate between two measurements units:

✓ Automatic switching between [bar or PSI] and %
✓ Automatic switching between [bar or PSI] and °C (where °C is the sensor temperature)

GROUP 2: Temperature or pressure

✓ Temperature of the sensor expressed in °C
✓ Pressure expressed as % of the sensor normal measuring range (LRL/URL)
✓ Numerical value of the analog to digital converter (0 to 4096).

To select the desired configuration:

✓ First rotate by pressing **LB** as many times as you reach the desired unit, then release **LB**.
✓ To change from one group to the other one, push **LB** followed by **RB** (**LB&RB**).
✓ To activate/inactivate the alternate display of [bar <-> %] or [PSI <-> %], enter in Group 1, push **LB** for about 2 seconds.
✓ To activate/inactivate the alternate display of [bar <-> °C] or [PSI <-> °C], enter in Group 1, push **RB** for about 2 seconds.

Example

✓ If you want to read the pressure as a % of the sensor nominal range (LRL/URL):
1. Select group 2 by **LB&RB.**
2. Press **LB** as many times as you read the pressure as a % of the sensor nominal range, then release.

✓ If you want to read the pressure in bar:
1. Go back to group 1 by **LB&RB.**
2. Press **LB** as many times as you read the pressure value with the symbol "bar", then release.

4.4 - CONFIGURATION OF THE DEVICE - USE OF FUNCTIONS

The device configuration functions are:

F1	⇒	Save configuration in Non Volatile Memory
F2	⇒	Display of LRV and URV
F3	⇒	Low Range Value change
F4	⇒	Upper Range Value change
F5	⇒	Damping
F6	⇒	Configure and calibrate LRV/URV from Input pressures (span unchanged)
F7	⇒	Configure and calibrate LRV/URV from Input pressures (span modified)
F8	⇒	Calibrate zero pressure reference
F9	⇒	Engineering unit (bar/PSI)
F10	⇒	Failsafe direction
F11	⇒	Output action selection
F12	⇒	Transfer Function Selection (Linear/SQR)

✓ To scroll functions, keep the **LB+RB** pushed until you reach the desired function.
✓ When the required function appears on the display, the buttons have to be released to remain in that state.
✓ Functions can be executed according to the procedure described in the following paragraphs.
✓ A time out is implemented and therefore, if no action is taken after 3 seconds, the device returns to the normal display.

FUNCTION 1: Allows the storage of the configuration in the Non Volatile Memory

Press **LB+RB** ⇒ to select F1, then release
Press **LB** ⇒ A short message will appear (Ld) to confirm that your configuration has been loaded in the Non Volatile Memory.

After this message, the system returns to the normal display and your configuration has been saved.

NOTE:
This function saves the following parameter inside the Non Volatile Memory:
1) Zero calibration of the instrument (zero pressure reference).
2) Visualization mode.
3) URV and LRV.
4) Damping filter valve.
5) Fail mode selection.
6) Output action selection
7) Transfer function selection.

FUNCTION 2: Low Range Value (LRV) and Upper Range Value (URV) display only

With this function you can read LRV and URV but you cannot change them. (See functions 3 and 4 for any change.)

Press **LB+RB** ⇒ until you reach F2, then release
Press **LB** ⇒ Display LRV
Press **LB&RB** ⇒ Display LRV as % of the sensor nominal range
Press **RB** ⇒ Display URV
Press **RB&LB** ⇒ Display URV as % of the sensor nominal range

FUNCTION 3: Allows to change the LRV without changing URV (span will be modified)

Press **LB+RB** ⇒ until you reach F3, then release
Press **LB** or **RB** ⇒ Display LRV
Press **RB** ⇒ Increase until you reach the desired value
Press **LB** ⇒ Decrease until you reach the desired value
Press **RB+LB** ⇒ Store the value in Volatile Memory

After the confirmation LB+RB, the message "Ld" will appear to confirm that your modification has been loaded in the Volatile Memory. After this message, the system returns to the normal display.

NOTE: The minimum span you are allowed to set without changing URV is 10 % of the sensor nominal range.

Remember to store the new values in the Non Volatile Memory though the F1 function otherwise the data will get lost after switching off the instrument.

FUNCTION 4: Allows to change the URV without changing LRV (span will be modified)

Press **LB+RB** ⇒ until you reach F4, then release
Press **LB** or **RB** ⇒ Display URV
Press **RB** ⇒ Increase until you reach the desired value
Press **LB** ⇒ Decrease until you reach the desired value
Press **RB+LB** ⇒ Store the value in Volatile Memory

After the confirmation LB+RB, the message "Ld" will appear to confirm that your modification has been loaded in the Volatile Memory. After this message, the system returns to the normal display.

NOTE: The minimum span you are allowed to set without changing LRV is 10 % of the sensor nominal range.

Remember to store the new values in the Non Volatile Memory though the F1 function otherwise the data will get lost after switching off the instrument.

FUNCTION 5: Allows to display and modify the damping filter

Press **LB+RB** ⇒ until you reach F5, then release
Press **LB** or **RB** ⇒ Display the filter value
Press **RB** ⇒ Increase until you reach the desired filter value
Press **LB** ⇒ Decrease until you reach the desired filter value
Press **RB+LB** ⇒ Store the value in Volatile Memory

After the confirmation LB+RB, the message "Ld" will appear to confirm that your modification has been loaded in the Volatile Memory. After this message, the system returns to the normal display.

NOTE:
✓ The filter value you are allowed to set is between 1 second and 31 seconds.
✓ If the filter value is not equal to zero, the "sec." symbol will appear in normal display.
✓ The filter is a digital 1st order Low Pass Filter

Remember to store the new values in the Non Volatile Memory though the F1 function otherwise the data will get lost after switching off the instrument.

FUNCTION 6: Allows to configure and calibrate URV or LRV using the input pressures (span unchanged)

Press **LB+RB** ⇒ until you reach F6, then release
⇒ Apply LRV pressure
Press **LB** ⇒ Display the applied pressure value
Press **LB&RB** ⇒ Set LRV (4 mA) to the displayed pressure value
⇒ Apply URV pressure
Press **RB** ⇒ Display the applied pressure value
Press **RB&LB** ⇒ Set URV (20 mA) to the displayed pressure value

The new LRV is accepted only if:
✓ Pressure value + span < 105 % of sensor nominal range

The new URV is accepted only if:
✓ Pressure value < 105 % of the sensor nominal range
✓ Pressure value — span > -105% of the sensor nominal range

When the above mentioned conditions are met, the message "Ld" will appear to confirm that your modification has been loaded in the Volatile Memory. After this message, the system returns to the normal display. If the message "Ld" does not appear, the first step of F6 is displayed again.

NOTE: The minimum span you are allowed to set is equal to 10 % of the sensor nominal range.

Remember to store the new values in the Non Volatile Memory though the F1 function otherwise the data will get lost after switching off the instrument.

FUNCTION 7: Allows to configure and calibrate URV or LRV using the input pressures (span modified)

Press **LB+RB**	⇒	until you reach F7, then release
	⇒	Apply LRV pressure
Press **LB**	⇒	Display the applied pressure value
Press **LB&RB**	⇒	Set LRV (4 mA) to the displayed pressure value
	⇒	Apply URV pressure
Press **RB**	⇒	Display the applied pressure value
Press **RB&LB**	⇒	Set URV (20 mA) to the displayed pressure value

The new LRV is accepted only if:

✓ Pressure value < 95 % of the sensor nominal range

The new URV is accepted only if:

✓ Pressure value < 105 % of the sensor nominal range

✓ Pressure value > -105% of sensor nominal range + minimum span

When the above mentioned conditions are met, the message "Ld" will appear to confirm that your modification has been loaded in the Volatile Memory. After this message, the system returns to the normal display. If the message "Ld" does not appear, the first step of F7 is displayed again.

If the new LRV (URV) decreases **the span under 10% of the sensor nominal range**, URV (LRV) will be changed to have a span value equal to minimum.

⚠ **Remember to store the new values in the Non Volatile Memory though the F1 function otherwise the data will get lost after switching off the instrument.**

FUNCTION 8: Allows to calibrate the zero pressure value of the instrument

Press **LB+RB**	⇒	until you reach F8, then release Ensure zero pressure applied (P=atmospheric pressure for gauge tx or P=vacuum for absolute pressure tx)
Press **LB**	⇒	Display the applied pressure value
Press **LB&RB** and hold both pushed	⇒	Set the primary value to zero The display will show "0000" value After about 3 sec "Ld" is displayed: new zero is loaded in the volatile memory
Release **RB** while **LB** is still pressed	⇒	The display returns to show the applied pressure value

After the "Ld" message, the system returns to the normal display

⚠ **Remember to store the new values in the Non Volatile Memory though the F1 function otherwise the data will get lost after switching off the instrument.**

FUNCTION 9: Allows to choose the engineering units PSI or bar

Press **LB+RB**	⇒	until you reach F9, then release
Press **LB (first time)**	⇒	Display the actual engineering unit
Press **LB**	⇒	Change the unit (bar <-> PSI) and store the new selection in volatile memory
Press **LB+RB**	⇒	Go to the next function (F10)

⚠ **WARNING:**

✓ The time out will confirm the last unit you have selected.

✓ If the bar engineering unit has been selected, the symbol "bar" (or mbar) will appear on the display.

✓ If the PSI engineering unit has been selected, the symbol PSI will not appear with the primary value, but will be displayed alone every ten seconds.

⚠ **Remember to store the new values in the Non Volatile Memory though the F1 function otherwise the data will get lost after switching off the instrument.**

FUNCTION 10: Failsafe direction Selection

The transmitter will go to a failsafe direction when it detects a failure. (In that case, the measurement in % on the display goes to 555.5 %.)

LO: low alarm with a fixed current < 3.6 mA

HI: high alarm with a fixed current > 21.8 mA

Press **LB+RB**	⇒	until you reach F10, then release
Press **LB (first time)**	⇒	Display the actual failsafe direction
Press **LB**	⇒	Change the direction (**Hi** <-> Lo) and store the new selection in volatile memory.
Press **LB+RB**	⇒	Go to the next function (F11).

WARNING: The time out will confirm the last direction you have selected.

Remember to store the new values in the Non Volatile Memory though the F1 function otherwise the data will get lost after switching off the instrument.

FUNCTION 11: Output Action Selection

The current output signal (4-20 mA) is related to the input signal (pressure) depending on the action selection:

dO (direct Output): Direct linear action

Input=LRV - Output= 0%=4 mA

Input=URV - Output= 100%=20 mA

CO (complementary Output): Reverse linear action

Input=LRV - Output=100%=20 mA

Input=URV - Output= 0%=4 mA

Press **LB+RB**	⇒	Until you reach F11, then release
Press **LB (first time)**	⇒	Display the actual Output action
Press **LB**	⇒	Change the action (dO <-> cO) and store the new selection in volatile memory
Press **LB+RB**	⇒	Go to the next (F12)

WARNING: The time out will confirm the last direction you have selected.)

Remember to store the new values in the Non Volatile Memory though the F1 function otherwise the data will get lost after switching off the instrument.

FUNCTION 12: Transfer Function Selection

The transmitter has an output signal (4 - 20 mA) following a

LF (Linear Function): Out%= X*100

SF (SQR Function) : for X>0 Out%= SQR (X) *100.

with **X= [Input/(URV-LRV)]**

Press **LB+RB**	⇒	until you reach F12, then release
Press **LB (first time)**	⇒	Display the actual Transfer Function
Press **LB**	⇒	Change the Transfer Function (SF <-> LF) and store the new selection in volatile memory
Press **LB+RB**	⇒	The system returns to the normal display.

WARNING: The time out will confirm the last direction you have selected.

Remember to store the new values in the Non Volatile Memory though the F1 function otherwise the data will get lost after switching off the instrument.

5. CALIBRATION

The instrument allows the access to a procedure for periodic calibration of current output and of pressure measurement

- ✓ When the device is powered it will show a pre-established sequence for about 6 seconds.
- ✓ If during this sequence both buttons are pushed **(LB+RB)** the instrument enters in to the calibration procedure.
- ✓ Using this procedure it is possible to calibrate the current output 4 — 20 mA and the pressure measurement using accurate reference instruments.

> ⚠ **Remember that the following calibration procedures change the factory trims.**
> **WARNING: Do not calibrate if the instrument is operative on the process.**
> **Follow with care the instruction.**

5.1 - OUTPUT CURRENT CALIBRATION

- ✓ Using this calibration you can verify and ad just the output signal 4 —20 mA.
- ✓ For the calibration are required:
- ✓ A precision multimeter for current measurement
- ✓ Insert the multimeter in series in the current loop (range µA)

After power on the display will show the first step of the current calibration sequence : **1c04**
The calibration starts at 4 mA and ends at 20 mA with steps of 2 mA.
The **1c** characters identify the present procedure
The **xx** (**04** — **06** — **08 - .....- 20**) characters identify the current value (mA) to be calibrated.

Press **LB**	⇒	To decrease the current until the reading on the multimeter reaches the value to be calibrated (e.g. **1c04** ⇒ I=4.00 mA, **1c06** ⇒ I= 6.00 mA). On the display the Digital to Analogue Converter value is shown.
Press **RB**	⇒	To increase the current until the reading on the multimeter reaches the value to be calibrated (e.g. **1c04** ⇒ I=4.00 mA, **1c06** ⇒ I= 6.00 mA). On the display the Digital to Analogue Converter value is shown.
Press **LB+RB**	⇒	To confirm the value and pass to the following step (e.g. **1c04** ⇒**1c06**). Proceed the calibration until **1c20.**

> ℹ **NOTE:** The last step **1c20** calibrates the 20 mA output, saves the data in to non volatile memory and pass to the pressure calibration sequence.

> ⚠ **To exit from the procedure without any changes on the current calibration turn off the power before the end of 1c20 step.**
> **Do non turn off the power during the 1c20 step otherwise the data in the non volatile memory could get lost.**

5.2 - SENSOR'S NON-LINEARITY ADJUSTMENT

- ✓ Using this procedure it is possibile to adjust the pressure measurement on one side (positive or negative) of the transmitter referring it to an external pressure generator/indicator.
- ✓ For the calibration are required:
- ✓ An accurate pressure generator/indicator.
- ✓ Connect the pressure generator at the positive (or negative: see following note) pressure connection of the transmitter.

At the end of the current calibration procedure on the display will appear the first step of the pressure calibration sequence : **3c00**
To skip this calibration turn off the power.
The calibration proceed from 0% to 100% of the nominal range with steps of 20%.
The **3c** characters identify the present procedure
The **xx** (**00** — **20** — **40 - .....- 80**) characters identify the value (% of the nominal range) to be calibrated.

Display **3c00**		Set of zero pressure reference. Leave both the pressure connections at the atmospheric pressure.
Push **LB**	⇒	On display will be shown the actual value of the Analogue to Digital Converter
Push **RB**	⇒	On display will be shown the actual value of the measurement as % of the Nominal Range.
Push **LB+RB**	⇒	To set the value and go to the following step (e.g. **3c00** ⇒**3c20**).

> ℹ NOTE: The new value is accepted only if it differs maximum +/- 5% respect to the ideal calibration (perfect linear sensor).

Display	3c20 ⇒ 3c80	Pressure Calibration. Apply a pressure equal to the **xx%** of the Nominal Full Scale of the Sensor. E.g. Display = **3c40,** Full Scale = **4 bar** Apply **P = 1,6 bar** (equal to 40% of 4 bar)
Push **LB**	⇒	On display will be shown the actual value of the Analogue to Digital Converter
Push **RB**	⇒	On display will be shown the actual value of the measurement as % of the Nominal Range.
Push **LB+RB**	⇒	To set the value and go to the following step (e.g. **3c20** ⇒**3c40**).

NOTE: The new value is accepted only if it differs maximum +/- 5% respect to the ideal calibration (perfect linear sensor).

Display **3cFS**		Full Scale Calibration. Apply a pressure equal to the FS
Push **LB**	⇒	On display will be shown the actual value of the Analogue to Digital Converter
Push **RB**	⇒	On display will be shown the actual value of the measurement as % of the Nominal Range.
Push **LB&RB**	⇒	To set the value and save the pressure calibration data in to non volatile memory. **The instrument automatically resets and returns to the normal display**

NOTE:
- ✓ The new value is accepted only if it differs maximum +/- 5% respect to the ideal calibration (perfect linear sensor).
- ✓ Calibration always refers to the Nominal Range of the sensor and is indipendent from the LRV and URV.
- ✓ The last step **3cFS** calibrates the Full Scale and saves the data in to the non volatile memory.

NOTE:
In place of calibrate the positive side of the measuring cell it is possible to calibrate the negative side.
In this case connect the negative pressure connection of the transmitter to the pressure generator.
During calibration the measure (%) of the pressure will be negative.

To exit from the procedure without any changes on the current calibration turn off the power before the end of 3cFS step.
Do non turn off the power during the 3cFS step otherwise the data in the non volatile memory could get lost.

6 - MAINTENANCE

6.1 - PERIODIC SERVICE

The transmitters of this series have no moving components and therefore the maintenance operations are related only to the environment conditions. It is suggested a periodic control of the internal parts in the top housing to ensure that no moisture infiltration is present and that the the terminals are clean so as to assure a good electric continuity.
Do not use solvents for cleaning. The main electronic components, the housing with incapsulated sensor and electronic module are mounted and calibrated in factory and if the necessary equipment is not available it is very difficult to replace one of these components; it is necessary to send the instrument to our factory or to OMEGA Engineering.

6.2 - TROUBLESHOOTING

Verification of correct operation of the transmitter should be based on the instruction discussed in the present manual.
In absence of output signal or an output value not corresponding to the real value, the following tests are suggested:
6.2.1 Connections. The process piping must be installed correctly, unwanted gas or liquid pockets can affect the measured value and accumulation of dirt and pipe incrustation may cause blocks. The interception must be in the open position.
Check that wiring is correct (polarity) and in good condition, both for mains supply and shielding.
6.2.2 - External load: supply voltage value is a function of the resistive load, verify this value.
6.2.3 - Power supply: the D.C. voltage must have the correct value and polarity.
6.2.4 - Calibration tests.
Follow the instruction in chapter 4 and 5.
With the adjustment of LB and RB buttons it should be possible to set lower and upper scale values to 4 and 20 mA.
If this operation is not succesful, the unit should be repaired by OMEGA Engineering.

WARRANTY/DISCLAIMER

OMEGA ENGINEERING, INC. warrants this unit to be free of defects in materials and workmanship for a period of **13 months** from date of purchase. OMEGA's WARRANTY adds an additional one (1) month grace period to the normal **one (1) year product warranty** to cover handling and shipping time. This ensures that OMEGA's customers receive maximum coverage on each product.

If the unit malfunctions, it must be returned to the factory for evaluation. OMEGA's Customer Service Department will issue an Authorized Return (AR) number immediately upon phone or written request. Upon examination by OMEGA, if the unit is found to be defective, it will be repaired or replaced at no charge. OMEGA's WARRANTY does not apply to defects resulting from any action of the purchaser, including but not limited to mishandling, improper interfacing, operation outside of design limits, improper repair, or unauthorized modification. This WARRANTY is VOID if the unit shows evidence of having been tampered with or shows evidence of having been damaged as a result of excessive corrosion; or current, heat, moisture or vibration; improper specification; misapplication; misuse or other operating conditions outside of OMEGA's control. Components in which wear is not warranted, include but are not limited to contact points, fuses, and triacs.

OMEGA is pleased to offer suggestions on the use of its various products. However, OMEGA neither assumes responsibility for any omissions or errors nor assumes liability for any damages that result from the use of its products in accordance with information provided by OMEGA, either verbal or written. OMEGA warrants only that the parts manufactured by it will be as specified and free of defects. OMEGA MAKES NO OTHER WARRANTIES OR REPRESENTATIONS OF ANY KIND WHATSOEVER, EXPRESS OR IMPLIED, EXCEPT THAT OF TITLE, AND ALL IMPLIED WARRANTIES INCLUDING ANY WARRANTY OF MERCHANTABILITY AND FITNESS FOR A PARTICULAR PURPOSE ARE HEREBY DISCLAIMED. LIMITATION OF LIABILITY: The remedies of purchaser set forth herein are exclusive, and the total liability of OMEGA with respect to this order, whether based on contract, warranty, negligence, indemnification, strict liability or otherwise, shall not exceed the purchase price of the component upon which liability is based. In no event shall OMEGA be liable for consequential, incidental or special damages.

CONDITIONS: Equipment sold by OMEGA is not intended to be used, nor shall it be used: (1) as a "Basic Component" under 10 CFR 21 (NRC), used in or with any nuclear installation or activity; or (2) in medical applications or used on humans. Should any Product(s) be used in or with any nuclear installation or activity, medical application, used on humans, or misused in any way, OMEGA assumes no responsibility as set forth in our basic WARRANTY/DISCLAIMER language, and, additionally, purchaser will indemnify OMEGA and hold OMEGA harmless from any liability or damage whatsoever arising out of the use of the Product(s) in such a manner.

RETURN REQUESTS/INQUIRIES

Direct all warranty and repair requests/inquiries to the OMEGA Customer Service Department. BEFORE RETURNING ANY PRODUCT(S) TO OMEGA, PURCHASER MUST OBTAIN AN AUTHORIZED RETURN (AR) NUMBER FROM OMEGA'S CUSTOMER SERVICE DEPARTMENT (IN ORDER TO AVOID PROCESSING DELAYS). The assigned AR number should then be marked on the outside of the return package and on any correspondence.

The purchaser is responsible for shipping charges, freight, insurance and proper packaging to prevent breakage in transit.

FOR **WARRANTY** RETURNS, please have the following information available BEFORE contacting OMEGA:

1. Purchase Order number under which the product was PURCHASED,
2. Model and serial number of the product under warranty, and
3. Repair instructions and/or specific problems relative to the product.

FOR **NON-WARRANTY** REPAIRS, consult OMEGA for current repair charges. Have the following information available BEFORE contacting OMEGA:

1. Purchase Order number to cover the COST of the repair,
2. Model and serial number of the product, and
3. Repair instructions and/or specific problems relative to the product.

OMEGA's policy is to make running changes, not model changes, whenever an improvement is possible. This affords our customers the latest in technology and engineering.

OMEGA is a registered trademark of OMEGA ENGINEERING, INC.

© Copyright 2007 OMEGA ENGINEERING, INC. All rights reserved. This document may not be copied, photocopied, reproduced, translated, or reduced to any electronic medium or machine-readable form, in whole or in part, without the prior written consent of OMEGA ENGINEERING, INC.

Where Do I Find Everything I Need for Process Measurement and Control? OMEGA...Of Course!

Shop online at omega.com

TEMPERATURE

- Thermocouple, RTD & Thermistor Probes, Connectors, Panels & Assemblies
- Wire: Thermocouple, RTD & Thermistor
- Calibrators & Ice Point References
- Recorders, Controllers & Process Monitors
- Infrared Pyrometers

PRESSURE, STRAIN AND FORCE

- Transducers & Strain Gages
- Load Cells & Pressure Gages
- Displacement Transducers
- Instrumentation & Accessories

FLOW/LEVEL

- Rotameters, Gas Mass Flowmeters & Flow Computers
- Air Velocity Indicators
- Turbine/Paddlewheel Systems
- Totalizers & Batch Controllers

pH/CONDUCTIVITY

- pH Electrodes, Testers & Accessories
- Benchtop/Laboratory Meters
- Controllers, Calibrators, Simulators & Pumps
- Industrial pH & Conductivity Equipment

DATA ACQUISITION

- Data Acquisition & Engineering Software
- Communications-Based Acquisition Systems
- Plug-in Cards for Apple, IBM & Compatibles
- Datalogging Systems
- Recorders, Printers & Plotters

HEATERS

- Heating Cable
- Cartridge & Strip Heaters
- Immersion & Band Heaters
- Flexible Heaters
- Laboratory Heaters

ENVIRONMENTAL MONITORING AND CONTROL

- Metering & Control Instrumentation
- Refractometers
- Pumps & Tubing
- Air, Soil & Water Monitors
- Industrial Water & Wastewater Treatment
- pH, Conductivity & Dissolved Oxygen Instruments

M4335/0307

BALDOR®

A MEMBER OF THE ABB GROUP

VS1SP
AC V/Hz and Sensorless Vector Control

10/11 **Installation & Operating Manual** MN764

Any trademarks used in this manual are the property of their respective owners.

Important:
Be sure to check www.baldor.com for the latest software, firmware and drivers for your VS1SP product. Also you can download the latest version of this manual in Adobe Acrobat PDF format.

Table of Contents

Chapter 1
Introduction
1.1 Getting Assistance from Baldor 1-1
1.2 Safety Notices 1-1
1.3 Quick Start 1-3

Chapter 2
General Information
2.1 Limited Warranty 2-1
2.2 Standards. 2-1
2.2.1 Design and Test Standards 2-1
2.2.2 Environmental Test Standards 2-1
2.2.3 Marks 2-1

Chapter 3
Installing the Drive
3.1 Receiving & Inspection 3-1
3.2 General Requirements for the Installation Site 3-1
3.2.1 Location Instructions 3-1
3.2.2 Minimum Mounting Clearances 3-1
3.3 Mounting the Drive. 3-1
3.3.1 Protecting the Drive from Debris 3-1
3.3.2 Watts Loss Data. 3-1
3.4 Cover Removal. 3-2

Chapter 4
Power Wiring
4.1 Grounding the Drive 4-1
4.1.1 Ungrounded Distribution System. 4-1
4.1.2 Input Power Conditioning 4-1
4.2 Line Impedence 4-1
4.2.1 Line Reactors 4-2
4.2.2 Load Reactors 4-2
4.3 Line Disconnect 4-2
4.4 Protective Devices 4-2
4.5 Reduced Input Voltage Considerations 4-2
4.6 Electrical Installation 4-2
4.7 Optional Filter/Reactor. 4-3
4.8 Incoming Power and Motor Connections 4-7
4.9 Operating a 3-Phase Control on Single Phase Input Power 4-8
4.9.1 Single Phase Power Derating 4-8
4.10 M-Contactor 4-12
4.11 Long Motor Leads 4-12
4.12 Optional Dynamic Brake Hardware 4-13

Chapter 5
Control Wiring

5.1 Control Board Connections 5-1
5.2 Analog Inputs 5-3
5.2.1 Analog Input 1 5-4
5.2.2 Analog Input 2 5-4
5.3 Analog Outputs 5-5
5.4 Opto-Isolated Inputs 5-5
5.5 Operating Modes 5-5
5.5.1 Keypad 5-5
5.5.2 Standard Run 2-Wire 5-6
5.5.3 Standard Run 3-Wire 5-7
5.5.4 15 Preset Speeds 5-8
5.5.5 Fan Pump 2-Wire 5-9
5.5.6 Fan Pump 3-Wire 5-10
5.5.7 Process Control 5-11
5.5.8 3 Speed Analog 2-Wire 5-12
5.5.9 3 Speed Analog 3-Wire 5-13
5.5.10 E-POT 2-Wire 5-14
5.5.11 E-POT 3-Wire 5-15
5.5.12 Network 5-16
5.5.13 Profile Run 5-17
5.5.14 Bipolar 5-18
5.5.15 Pulse Follower 5-20
5.5.16 PLC 5-20
5.6 Digital Outputs 5-20
5.7 Relay Outputs 5-21
5.8 USB Port 5-21
5.9 Communication Expansion Boards 5-22
5.9.1 RS485 Modbus 5-22
5.10 Opto-Isolated Inputs 5-23
5.11 Opto-Isolated Outputs 5-23
5.12 Pre-Operation Checklist 5-24
5.13 Powerup Procedure 5-24
5.14 Mint WorkBench 5-25
5.14.1 Install USB Driver 5-25
5.14.2 Install Mint WorkBench 5-26
5.14.3 Update Firmware 5-28

Chapter 6
Using the Keypad

6.1 Keypad Components 6-1
6.1.1 Display Description 6-1
6.1.2 Display Features 6-2
6.2 Status Mode. 6-3
6.3 Menu Display 6-4
6.4 Basic Params 6-4
6.5 Save Parameter Values 6-7
6.6 Restore Parameter Values 6-8
6.7 Advanced Prog 6-9
6.7.1 Modified Parameters 6-10
6.7.2 Linear List. 6-10
6.8 Event Log 6-12
6.9 Diagnostics 6-12
6.10 Display Options 6-14
6.11 Operating the Control from the Keypad. 6-15
6.11.1 Accessing the Keypad JOG Command 6-15
6.11.2 Speed Adjustment using Local Speed Reference 6-15

Chapter 7
Parameter Descriptions

7.1 Level 1 Parameters (Advanced Prog, Level 1 Blocks) 7-1
7.2 Level 2 Parameters (Advanced Prog, Level 2 Blocks) 7-16
7.3 Level 3 Parameters (Advanced Prog, Level 3 Blocks) 7-29

Chapter 8
Customizing Your Application

8.1 Customizing Your Application 8-1

Chapter 9
Troubleshooting

9.1 Event Log 9-1
9.2 Diagnostic Information. 9-6
9.3 Fault Messages 9-8
9.4 Electrical Noise Considerations 9-13

Chapter 10
PLC Mode Description

10.1 Overview 10-1
10.2 Configuring Parameters. 10-1
10.3 Comparator Function. 10-1
10.4 Timers 10-2
10.5 PLC Mode as Standard Run 2-Wire Mode 10-8
10.6 PLC Mode as 15 Preset Speed Mode 10-9
10.7 PLC Mode as Process PID Mode 10-10
10.8 PLC Mode as a Modified Process PID Mode 10-11

Chapter 11
Composite Reference Description
11.1 Overview 11-1
11.2 Composite Reference Examples 11-2

Chapter 12
Monitor and RTC Description
12.1 Monitor Parameters (P0001 to P0202). 12-1
12.2 Real Time Clock (RTC) Overview 12-6

Appendix A
Technical Specifications
A.1 VS1SP Specifications A-1
A.2 Specifications for Power Terminal Block Wiring A-4
A.3 Identifying the Drive by Model Number. A-5
A.4 Storage Guidelines A-6
A.5 VS1SP Drive Ratings, Model Numbers and Frame Sizes A-6
A.6 VS1SP Terminal Wire Gauge Specifications A-10
A.7 Drive Dimensions and Weights A-12

Appendix B
Parameter Tables
B.1 Level 1 Parameters (Advanced Prog, Level 1 Blocks). B-1
B.2 Level 2 Parameters (Advanced Prog, Level 2 Blocks). B-8
B.3 Level 3 Parameters (Advanced Prog, Level 3 Blocks). B-13

Appendix C
CE Guidelines
C.1 Outline C-1
C.2 EMC - Conformity and CE Marking. C-1
C.3 EMC Installation Options. C-2
C.4 Grounding the Wall Mounting (Class A) C-2
C.5 Grounding the Enclosure Mounting (Class B) C-2
C.6 Use of CE Compliant Components. C-2
C.7 EMC Wiring Technique C-3
C.8 EMC Installation Instructions. C-4

Appendix D
Options and Kits
D.1 Dynamic Braking (DB) Hardware D-1
D.2 Expansion Boards D-2
D.3 Keypad Extension Cable D-3
D.4 Optional Remote Keypad Installation D-4

Appendix E
Remote Keypad Mounting Template
E.1 Remote Keypad Mounting Template E-1

Chapter 1
Introduction

The information in this manual supports firmware versions up through 1.23.
This manual is intended for qualified electrical personnel familiar with installing, programming and maintaining AC Drives.
This manual contains information on:

- Installing and wiring the VS1SP drive
- Programming the drive
- Troubleshooting the drive

1.1 Getting Assistance from Baldor

For technical assistance, contact your Baldor District Office. Before calling, please review the troubleshooting section of this manual. You will be asked for the drive model number or catalog number that is located on the nameplate along with the drive serial number.

1.2 Safety Notices

This equipment contains voltages that may be as high as 1000 volts! Electrical shock can cause serious or fatal injury. Only qualified personnel should attempt the start-up procedure or troubleshoot this equipment.
This equipment may be connected to other machines that have rotating parts or parts that are driven by this equipment. Improper use can cause serious or fatal injury. Only qualified personnel should attempt the start-up procedure or troubleshoot this equipment.

CLASSIFICATIONS OF CAUTIONARY STATEMENTS

WARNING: **Indicates a potentially hazardous situation which, if not avoided, could result in injury or death.**

CAUTION: **Indicates a potentially hazardous situation which, if not avoided, could result in damage to property.**

PRECAUTIONS

WARNING: **Do not touch any circuit board, power device or electrical connection before you first ensure that power has been disconnected and there is no high voltage present from this equipment or other equipment to which it is connected. Electrical shock can cause serious or fatal injury. Only qualified personnel should attempt the start-up procedure or troubleshoot this equipment.**

WARNING: **Be sure that you are completely familiar with the safe operation of this equipment. This equipment may be connected to other machines that have rotating parts or parts that are controlled by this equipment. Improper use can cause serious or fatal injury. Only qualified personnel should attempt the start-up procedure or troubleshoot this equipment.**

WARNING: **Do not use motor overload relays with an automatic reset feature. These are dangerous since the process may injure someone if a sudden or unexpected automatic restart occurs. If manual reset relays are not available, disable the automatic restart feature using external control wiring.**

WARNING: **This unit has an automatic restart feature that will start the motor whenever input power is applied and a RUN (FWD or REV) command is issued. If an automatic restart of the motor could cause injury to personnel, the automatic restart feature should be disabled.**

WARNING: **Be sure the system is properly grounded before applying power. Do not apply AC power before you ensure that all grounding instructions have been followed. Electrical shock can cause serious or fatal injury.**

WARNING: **Do not remove cover or open door for at least five (5) minutes after AC power is disconnected to allow capacitors to discharge. Dangerous voltages are present inside the equipment. Electrical shock can cause serious or fatal injury.**

WARNING: **Improper operation of control may cause violent motion of the motor shaft and driven equipment. Be certain that unexpected motor shaft movement will not cause injury to personnel or damage to equipment. Certain failure modes of the control can produce peak torque of several times the rated motor torque.**

WARNING: **Motor circuit may have high voltage present whenever AC power is applied, even when motor is not rotating. Electrical shock can cause serious or fatal injury.**

WARNING: **Dynamic brake resistors may generate enough heat to ignite combustible materials. Keep all combustible materials and flammable vapors away from brake resistors.**

WARNING: **The motor shaft will rotate during the autotune procedure. Be certain that unexpected motor shaft movement will not cause injury to personnel or damage to equipment.**

WARNING: **MEDICAL DEVICE/PACEMAKER DANGER - Magnetic and electromagnetic fields in the vicinity of current carrying conductors and industrial motors can result in a serious health hazard to persons with cardiac pacemakers, internal cardiac defibrillators, neurostimulators, metal implants, cochlear implants, hearing aids, and other medical devices. To avoid risk, stay away from the area surrounding a motor and its current carrying conductors.**

CAUTION: **Disconnect motor leads (T1, T2 and T3) from control before you perform a dielectric withstand (insulation) test on the motor. Failure to disconnect motor from the control will result in extensive damage to the control. The control is tested at the factory for high voltage/leakage resistance as part of the Underwriters Laboratory requirements.**

CAUTION: **Suitable for use on a circuit capable of delivering not more than the RMS symmetrical short circuit amperes listed here at rated voltage.**

Horsepower	RMS Symmetrical Amperes
1-50	5,000
51-200	10,000
201-400	18,000
401-600	30,000
601-900	42,000

CAUTION: **Do not connect AC power to the Motor terminals T1, T2 and T3. Connecting AC power to these terminals may result in damage to the control.**

CAUTION: **Baldor does not recommend using "Grounded Leg Delta" transformer supplies that may create ground loops. Instead, we recommend using a four wire Wye.**

CAUTION: **Do not supply any power to the External Trip (motor thermostat) leads at TH1 and TH2. Power on these leads can damage the control. Use a dry contact type that requires no external power to operate.**

CAUTION: **If a customer installed Dynamic Brake (DB) hardware mounting is in any position other than vertical, the DB hardware must be derated by 35% of its rated capacity.**

CAUTION: **Before external Dynamic Brake Hardware is added, the internal resistor must be disconnected (frames AA, B, C and D only). Remove the resistor from the B+/R1 and R2 terminals and insulate the leads to avoid accidental connection to drive circuity. The external resistor can be connected across these terminals. Failure to remove the internal resistor will decrease the total resistance (parallel connection) and cause damage.**

CAUTION: **Do not set Level 2, Drive Configure, Power Input parameter to Common Bus if AC power is connected to L1, L2 or L3. Common Bus requires numerous changes. Contact Baldor for information.**

CAUTION: **Only Baldor cables should be used to connect the keypad and control. These are special twisted pair cables to protect the control and keypad. Damage associated with other cable types are not covered by the Baldor warranty.**

CAUTION: **If an M-Contactor is installed, the control must be disabled for at least 200msec before the M-Contactor is opened. If the M-Contactor is opened while the control is supplying voltage and current to the motor, the control may be damaged. Before the control is enabled, the M-Contactor must be closed for at least 200msec.**

CAUTION: **Use of power correction capacitors on the output of the drive can result in erratic operation of the motor, nuisance tripping, and/or permanent damage to the drive. Remove power correction capacitors before proceeding. Failure to observe this precaution could result in damage to, or destruction of, the equipment.**

CAUTION: **Do not connect any shields to the encoder case or motor frame. The encoder +5/12VDC supply at pins 8 and 9 of the encoder board is referenced to circuit board common. Do not connect any shields to ground or another power supply or damage to the control may result.**

CAUTION: **Motor thermostat leads must be routed in a separate conduit than the motor power leads. Failure to isolate these connections may cause nuisance trips, misoperation or component failure.**

1.3 Quick Start (Quick Start Guide MS764 is also available separately from www.baldor.com.)

If you are an experienced user of Baldor controls, you are probably already familiar with the keypad programming and keypad operation methods. If so, this quick start guide has been prepared for you. This procedure will help get your system up and running in the keypad mode quickly and allows motor and control operation to be verified. This procedure assumes that the Control, Motor and Dynamic Brake hardware are correctly installed (see Chapters 3, 4, and 5 for procedures) and that you have an understanding of the keypad programming and operation procedures. Figure 1-1 shows minimum connection requirements. It is not necessary to wire the terminal strip to operate in Keypad mode (Chapter 5 describes terminal strip wiring procedures).
The quick start procedure is as follows:

1. Read the Safety Notice and Precautions in this Chapter.
2. Mount the control. Refer to Chapters 3, 4, and 5 “Physical Location” procedure.
3. Connect AC power ensuring source voltage matches drive voltage (Figure 1-1). See wire and fuse size guidelines in Chapter 4. Torque connections per Table A-2.
4. Connect the motor ensuring motor is wired for same voltage as drive (Figure 1-1). Torque connections per Table A-2. Do not couple the motor shaft to the load until auto tune is complete.
5. Install Dynamic brake hardware, if required. Refer to Chapter 4 “Optional Dynamic Brake Hardware.”
6. Connect motor thermostat leads to TH1 and TH2 after removing factory supplied jumper. Be sure to route these leads in a separate conduit from the motor power leads.

CAUTION: After completing the installation but before you apply power, be sure to check the following electrical items:

1. Verify AC line voltage at source matches control rating.
2. Inspect all power connections for accuracy, workmanship and torques as well as compliance to codes.
3. Verify control and motor are grounded to each other and the control is connected to earth ground.
4. Check all signal wiring for accuracy.
5. Be certain all brake coils, contactors and relay coils have noise suppression. This should be an R-C filter for AC coils and reverse polarity diodes for DC coils. MOV type transient suppression is not adequate.

CAUTION: Make sure that unexpected operation of the motor shaft during start up will not cause injury to personnel or damage to equipment.

Procedure - Initial Conditions
Be sure the Control, Motor and Dynamic Brake hardware are wired according to the procedures described in Chapters 4 and 5 of this manual. Become familiar with the keypad programming and keypad operation of the control as described in Chapter 6 of this manual.

1. Remove all power from the control.
2. Verify that any enable inputs to J2-8 are open (remove factory jumper from J2-8 to J3-24).
3. Uncouple the motor from the load (including coupling or inertia wheels).
4. Turn power on. Be sure there are no faults displayed. If a fault is indicated, refer to Chapter 9 “Troubleshooting”.
5. Select “Advanced Prog”, “Level 2 Blocks”, “Drive Config” and set the parameter “Factory Settings” to “Yes”. This will change all parameters to Factory Default.
6. Set the Level 2 Drive Limits block, “OPERATING ZONE” parameter as desired.
   (STD CONST TQ, STD VAR TQ, QUIET CONST TQ or QUIET VAR TQ).
7. If external dynamic brake hardware is used, set the Level 2 Brake Adjust block “Resistor Ohms” and “Resistor Watts” parameters (see parameter description in Chapter 7 for more information).
8. Enable the control (J2-8 connect to J3-24).

CAUTION: The motor shaft will rotate during this procedure. Be certain that unexpected motor shaft movement will not cause injury to personnel or damage to equipment.

9. Select Basic Params from the main keypad menu. Perform each step including motor data and “Calc Motor Model”.
10. For more advanced tuning of the uncoupled motor to the drive, see the Autotune parameters in Level 2 programming.
11. Remove all power from the control.
12. Couple the motor to its load.
13. Verify freedom of motion of motor shaft.
14. Verify the motor coupling is tight without backlash.
15. Verify the holding brakes, if any, are properly adjusted to fully release and set to the desired torque value.
16. Turn power on. Be sure no errors or faults are displayed.
17. Run the drive from the keypad using one of the following: the arrow keys for direct speed control, a keypad entered speed or the JOG mode.
18. Select and program additional parameters to suit your application.

The control is now ready for use in the keypad mode. If a different operating mode is desired, refer to Chapter 5 Operating Modes and Chapter 6 and 7 for Programming and Operation.

For more advanced tuning of the drive speed loop once coupled to the load, see “Speed Loop Tune” in “Autotune Block” in Chapter 7.

Figure 1-1 Minimum Connection Diagram

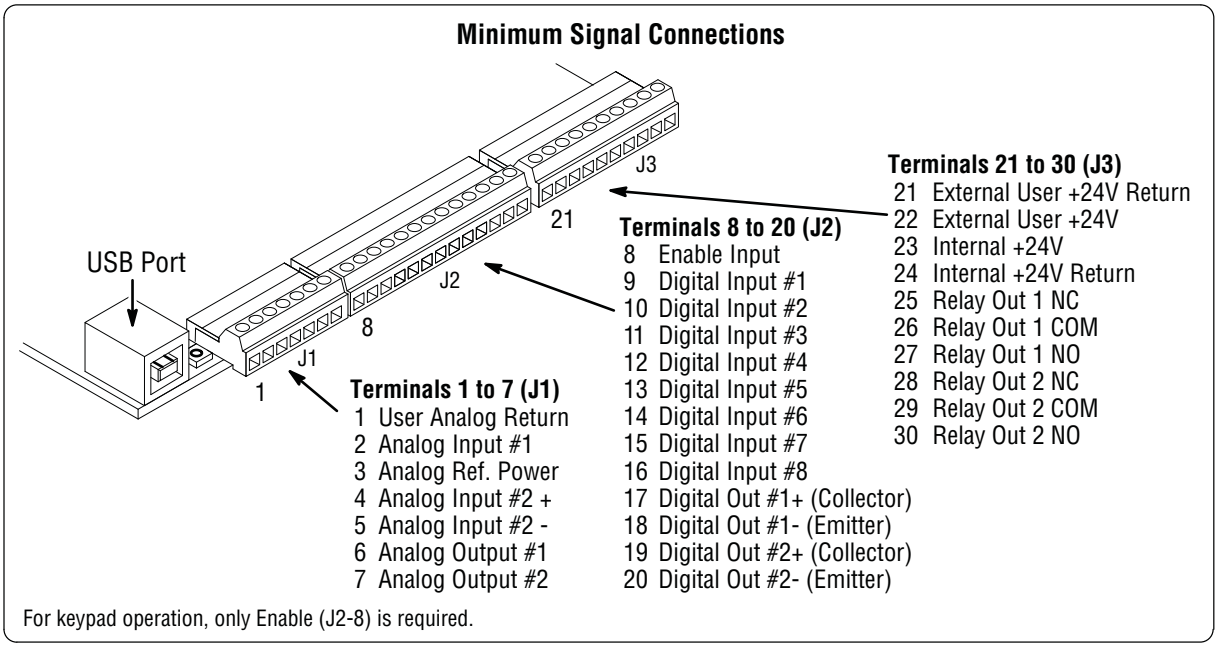

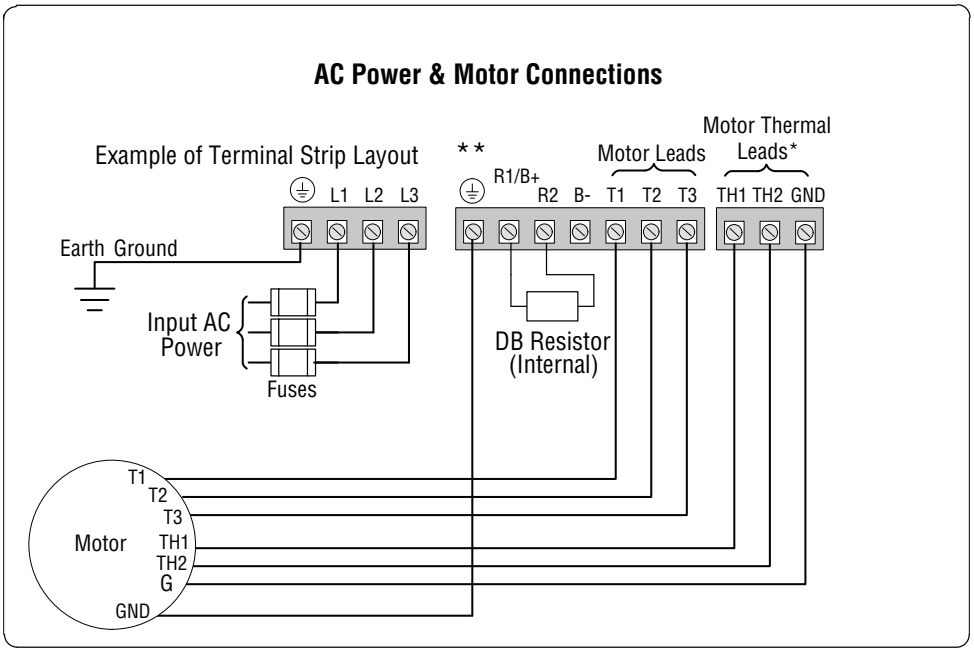

Note: The control enable input must be active to allow operation. Therefore, J2-8 Enable is connected by a factory installed jumper to J3-24. This uses the internal supply and provides an active low at J2-8.

* Remove TH1 and TH2 jumper if Motor Thermal Leads are connected.
Note: Motor thermal leads must be run in a separate conduit from motor power leads.
Note: An open circuit on these terminals will generate a motor overtemperature fault. Refer to the fault / troubleshooting information provided in Chapter 9.
** See Figure 4-3 for terminal arrangement for the various frame sizes.

Chapter 2
General Information

The VS1SP control uses flux vector technology. Flux vector technology (sometimes referred to as Field Oriented Control) is a control scheme that uses an algorithm to adjust the frequency and phase of voltage and current applied to a three phase induction motor.

The control's rated output power is based on the use of a NEMA design B four pole motor and 60Hz operation at nominal rated input voltage. If any other type of motor is used, the control should be sized to the motor using the rated current of the motor. The control may be used in various applications. It may be programmed by the user to operate in four different operating zones: standard or quiet and constant torque or variable torque. It can also be configured to operate in a number of modes depending upon the application requirements and user preference. It is the responsibility of the user to determine the optimum operating zone and mode to interface the control to the application. These choices are made with the keypad as explained in Chapter 6 of this manual.

2.1 Limited Warranty

For a period of two (2) years from the date of original purchase, BALDOR will repair or replace without charge controls and accessories which our examination proves to be defective in material or workmanship. This warranty is valid if the unit has not been tampered with by unauthorized persons, misused, abused, or improperly installed and has been used in accordance with the instructions and/or ratings supplied. This warranty is in lieu of any other warranty or guarantee expressed or implied. BALDOR shall not be held responsible for any expense (including installation and removal), inconvenience, or consequential damage, including injury to any person or property caused by items of our manufacture or sale. (Some states do not allow exclusion or limitation of incidental or consequential damages, so the above exclusion may not apply.) In any event, BALDOR's total liability, under all circumstances, shall not exceed the full purchase price of the control. Claims for purchase price refunds, repairs, or replacements must be referred to BALDOR with all pertinent data as to the defect, the date purchased, the task performed by the control, and the problem encountered. No liability is assumed for expendable items such as fuses.

Goods may be returned only with written notification including a BALDOR Return Authorization Number and any return shipments must be prepaid.

2.2 Standards

The VS1SP drives have been designed and tested to comply with the following standards.

2.2.1 Design and Test Standards

- UL508C: Power Conversion Equipment.
- UL840: Insulation coordination including clearance and creepage distances for electrical equipment.
- CSA C22.2 No. 14: Industrial Control Equipment.
- EN61800-5-1: Adjustable speed electrical power drive systems. Safety requirements. Electrical, thermal and energy.
- EN50178: Electronic equipment for use in power installations.
- EN60529: Degrees of protection provided by enclosures.
- EN61800-3: When installed as directed in this manual, VS1SP drives conform to the category C3 emission limits and the 'second environment' immunity requirements defined by this standard.

2.2.2 Environmental Test Standards

- EN60068-1: Environmental testing, general and guidance.
- EN60068-2-2: Environmental testing, Test B. Dry heat.
- EN60068-2-78: Environmental testing, Test cab. Damp heat, steady state.
- EN60068-2-6: Vibration testing.

2.2.3 Marks

See also Appendix C for general recommendations for CE compliance.

Chapter 3
Installing the Drive

This chapter provides information that must be considered when planning a VS1SP drive installation and provides drive mounting information and installation site requirements.

3.1 Receiving & Inspection

When you receive your control, there are several things you should do immediately.

1. Observe the condition of the shipping container and report any damage immediately to the commercial carrier that delivered your control.
2. Remove the control from the shipping container and remove all packing materials from the control. The container and packing materials may be retained for future shipment.
3. Verify that the catalog number of the control you received is the same as the catalog number listed on your purchase order.
4. Inspect the control for external physical damage that may have been sustained during shipment and report any damage immediately to the commercial carrier that delivered your control.
5. If the control is to be stored for several weeks before use, make sure that it is stored in a location that conforms to published storage humidity and temperature specifications stated in this manual.

3.2 General Requirements for the Installation Site

It is important to ensure that the drive's environment and operating conditions are satisfactory. The area behind the drive must be kept clear of all control and power wiring. Power connections may create electromagnetic fields that may interfere with control wiring or components when run in close proximity to the drive.
Read the recommendations in the following sections before continuing with the drive installation.

3.2.1 Location Instructions

Before deciding on an installation site, consider the following guidelines:

- Protect the cooling fan by avoiding dust or metallic particles.
- Do not expose the drive to a corrosive atmosphere.
- Protect the drive from moisture and direct sunlight.
- Verify that the drive location will meet the environmental conditions specified in Table 3-1.

Table 3-1 Ambient Temperatures and Mounting Clearances

<table>
<tr><th rowspan="2">Frame Size</th><th colspan="2">Ambient Temperature</th><th rowspan="2">Enclosure Rating</th><th colspan="2">Minimum Mounting Clearances</th></tr>
<tr><th>Minimum</th><th>Maximum</th><th>Top & Bottom</th><th>Left & Right Sides</th></tr>
<tr><td rowspan="2">AA</td><td rowspan="7">-10°C (14°F)</td><td rowspan="2">45°C</td><td>NEMA 1</td><td rowspan="5">2 inches (50mm)</td><td>2 inches (50mm)</td></tr>
<tr><td>NEMA 4X</td><td>0 inches (0mm)</td></tr>
<tr><td rowspan="2">B</td><td>45°C</td><td>NEMA 1</td><td>2 inches (50mm)</td></tr>
<tr><td>40°C</td><td>NEMA 4X</td><td>0 inches (0mm)</td></tr>
<tr><td>C</td><td rowspan="4">45°C</td><td rowspan="4">NEMA 1</td><td rowspan="3">2 inches (50mm)</td></tr>
<tr><td>D</td></tr>
<tr><td>E</td></tr>
<tr><td>F</td><td colspan="2">Not Required</td></tr>
</table>

3.2.2 Minimum Mounting Clearances

Be sure to provide proper top, bottom and side clearance per Table 3-1.

3.3 Mounting the Drive

Mount the drive upright on a flat, vertical surface. Avoid mounting the drive in locations that would subject the drive to vibration in excess of the 0.5G RMS rating (e.g. adjacent to a large punch press).

3.3.1 Protecting the Drive from Debris

Drives supplied in NEMA 1 enclosures must be protected from debris falling through the drive vents during installation and operation. The drive is designed to operate in NEMA1 Type installations. The atmosphere must not contain airborne particles that can collect on the internal circuitry of the drive, especially conductive particles. Drives supplied in NEMA 4X enclosures are designed for harsh environments including dust and water. NEMA 1 and NEMA 4X drives are for indoor use only.

Note: F-Frame Size drives are supplied with door mounted filters that are replaceable. The replacement filter part number is available on a label next to the filter on the inside of the door. If the user desires, these filters can also be cleaned by blowing or vacuuming out any collected debris as long as the filter media remains intact. See section 12.2 for instructions for optionally setting the drive's real time clock to provide an alert message or output at regular cleaning intervals.

3.3.2 Watts Loss Data

Table 3-2 Watts Loss Data

Frame Size	240VAC		480VAC		600VAC	
	2.5kHz PWM	8.0kHz PWM	2.5kHz PWM	8.0kHz PWM	2.5kHz PWM	8.0kHz PWM
AA, B, C, D, E and F	50Watts + (14 W/Amp)	50Watts + (17 W/Amp)	50Watts + (17 W/Amp)	50Watts + (26 W/Amp)	50Watts + (18 W/Amp)	50Watts + (25 W/Amp)

Example: At 2.5kHz, a 3hp, 240VAC control draws 10Amps. Watts loss = 50W + (10x14) = 190Watts

3.4 Cover Removal (NEMA 1 Drives):

To connect power and signal wires, the cover must be removed (AA, B, C, D and E frame drives). This procedure describes how to access all terminal connections inside the control.

1. Remove the four cover screws shown in Figure 3-1.
2. Lift and remove the cover.
3. Press in the two Cover Releases (Control) and rotate the control cover open as shown.
4. For E-frame drives, two additional screws must be removed from conduit box to gain access to the power conduit openings.

Figure 3-1 Cover Removal

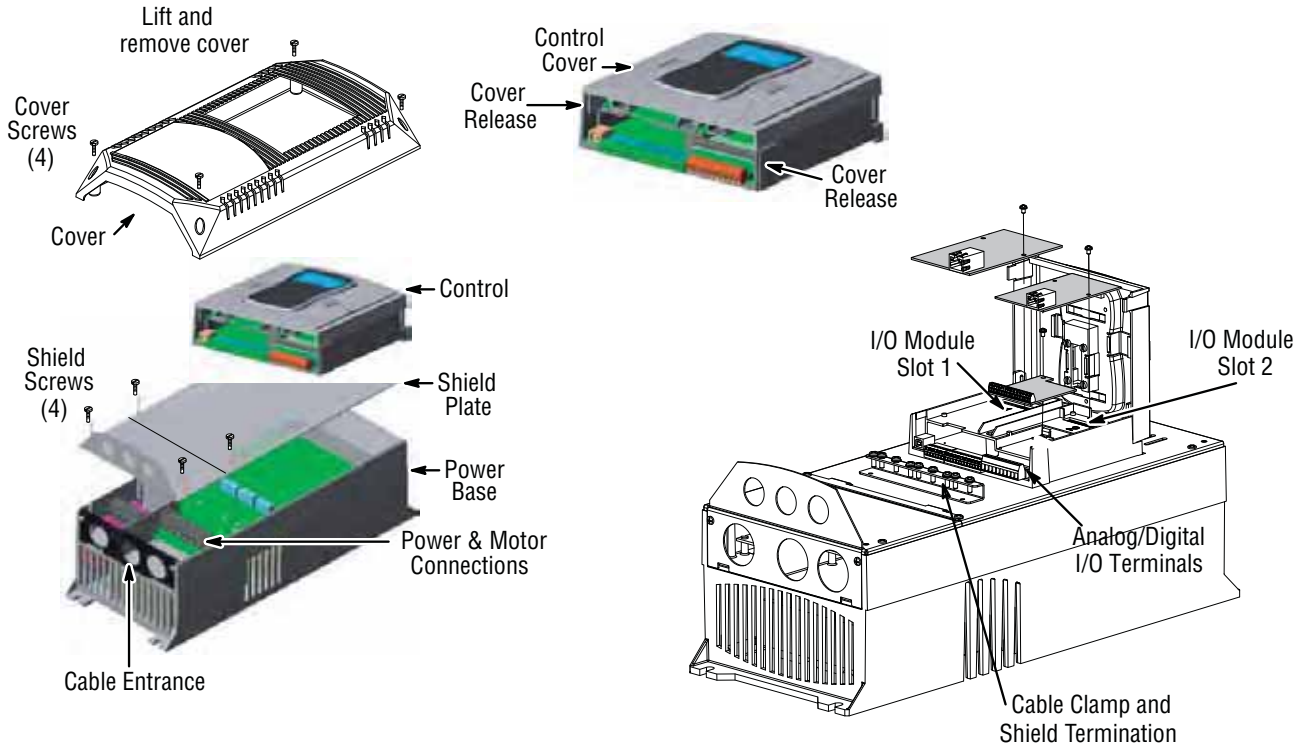

3.5 Cover Removal Procedure (NEMA 4X Frames AA and B):

CAUTION: **Failure to follow this procedure may result in damage to the controller cover gasket which will cause improper sealing and inability to maintain specified NEMA 4X ratings.**

1. While supporting cover, remove all cover screws reserving for usage when replacing cover.
2. Do not use any kind of tool to pry the cover away from the drive to avoid damaging the gasket or surrounding plastic.
3. Separate cover from base a short distance by pulling it away from the drive while being careful to not pull on the keypad cable which is attached to both the cover and the control board.
4. Disconnect the keypad cable from the keypad board connector on the inside of the cover by pressing in on the retention clip and gently pulling the cable out of the connector.

3.6 Cover Replacement Procedure (NEMA 4X Frames AA and B):

CAUTION: **Failure to follow this procedure may result in damage to the controller cover gasket which will cause improper sealing and inability to maintain specified NEMA 4X ratings.**

1. While holding the cover close to the controller, plug the keypad cable (disconnected in step 4 above) into the connector on the keypad board making sure that the retention clip snaps into place.
2. Check that keypad cable is not overlapping any of the cover edges while placing cover on drive. Ensure that gasket is seated in cover groove around the complete perimeter of the cover without any folds.
3. While holding the cover against the base, insert, start and tighten all cover screws and tighten only to the point of contact with the cover while following the numerical sequence outlined in the diagram below.
4. Using the numerical sequence on the following figure, tighten each screw to 15 in-lbs. of torque.
5. Do not over-tighten ensuring that the cover is seated flush around complete perimeter of base.

Figure 3-2 Cover Replacement (NEMA 4X)

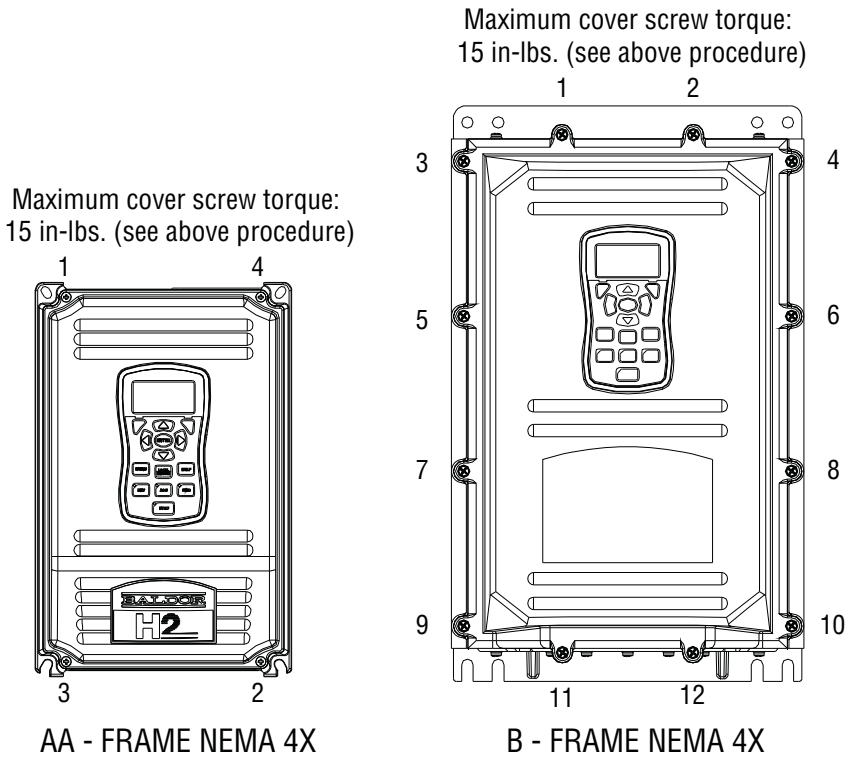

Chapter 4
Power Wiring

4.1 Grounding the Drive

Baldor does not recommend using “Grounded Leg Delta” transformer power leads that may create ground loops. Instead we recommend using a four wire Wye. Baldor drives are designed to be powered from standard three phase lines that are electrically symmetrical with respect to ground. System grounding is an important step in the overall installation to prevent problems. The recommended grounding method is shown in Figure 4-1.

Figure 4-1 Recommended System Grounding

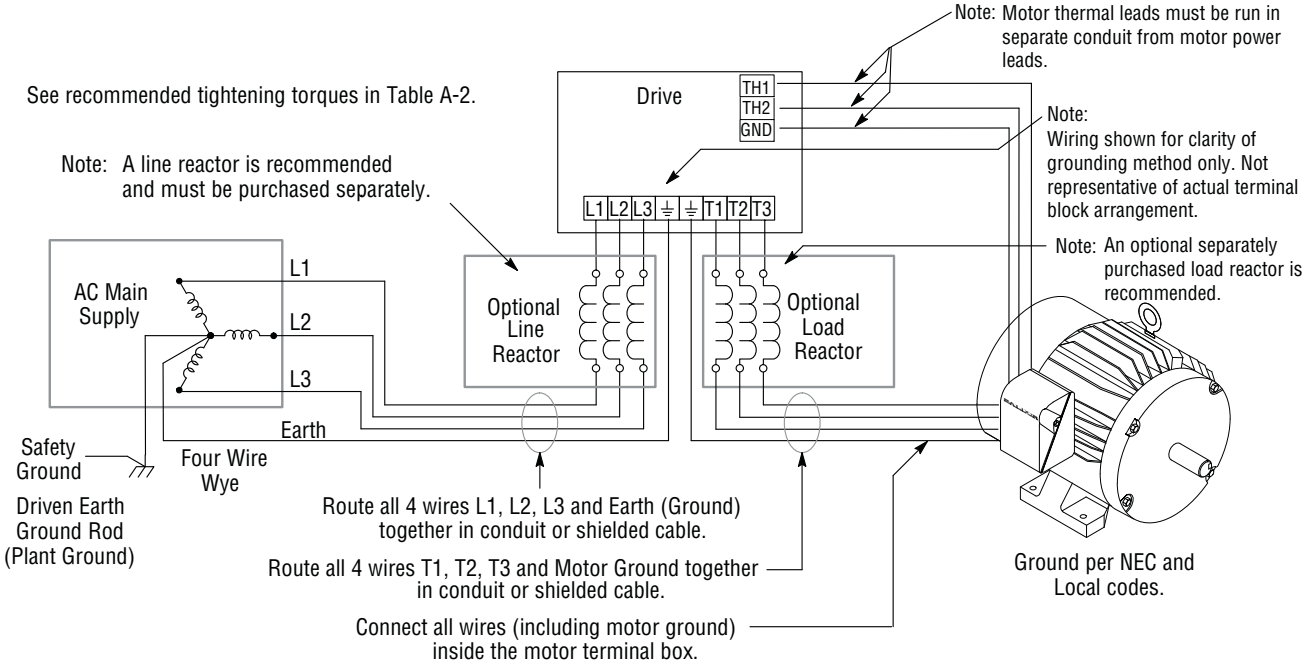

4.1.1 Ungrounded Distribution System

With an ungrounded power distribution system it is possible to have a continuous current path to ground through the MOV devices internal to the VS1SP. To avoid equipment damage, an isolation transformer with a WYE grounded secondary is recommended. This provides three phase AC power that is symmetrical with respect to ground.

4.1.2 Input Power Conditioning

Baldor drives are designed for direct connection to standard three phase lines that are electrically symmetrical with respect to ground. An AC line reactor or an isolation transformer may be required for some power conditions.

- If the feeder or branch circuit that provides power to the drive has permanently connected power factor correction capacitors, an input AC line reactor or an isolation transformer must be connected between the power factor correction capacitors and the drive.
- If the feeder or branch circuit that provides power to the drive has power factor correction capacitors that are switched on line and off line, the capacitors must not be switched while the drive is connected to the AC power line. If the capacitors must be switched while the drive is connected to the AC power line, additional protection is required. TVSS (Transient Voltage Surge Suppressor) of the proper rating must be installed on the drive input between the drive and any type of input impedance such as an input reactor or drive isolation transformer.

4.2 Line Impedance

Baldor VS1SP drives require 1% line impedance minimum (3% for AA frame size drives and B Frame NEMA 4X drives). If the impedance of the incoming power does not meet this requirement, a 3 phase line reactor can be used to provide the needed impedance in most cases. The input impedance of the power lines can be determined as follows:
Measure the line to line voltage at no load and at full rated load.
Use these measured values to calculate impedance as follows:

$$\% \text{ Impedance} = \frac{\text{Volts}_{\text{No Load}} - \text{Volts}_{\text{Full Load}}}{\text{Volts}_{\text{No Load}}} \times 100$$

4.2.1 Line Reactors

Three phase line reactors are available from Baldor. The line reactor to order is based on the full load current of the motor (FLA). If providing your own line reactor, use the following formula to calculate the minimum inductance required.

$$L = \frac{(V_{L-L} \times 0.01)}{(I \times \sqrt{3} \times 377)}$$

Where:	L	Minimum inductance in Henries.
	V_{L-L}	Input volts measured line to line.
	0.01	Desired percentage of input impedance 1%. (Note: Change this value to 0.03 for AA Frame size drives and for B Frame size NEMA 4X drives.)
	I	Input current rating of drive.
	377	Constant used with 60 Hz power. Use 314 if input power is 50 Hz.

4.2.2 Load Reactors

Line reactors may be used at the drive output to the motor. When used this way, they are called Load Reactors. Load reactors serve several functions that include:

- Protect the drive from a short circuit at the motor.
- Limit the rate of rise of motor surge currents.
- Slowing the rate of change of power the drive delivers to the motor.

Load reactors should be installed as close to the drive as possible. Selection should be based on the motor nameplate FLA value.

4.3 Line Disconnect

A power disconnect should be installed between the input power service and the drive for a fail safe method to disconnect power. This drive will remain in a powered-up condition until all input power is removed from the drive and the internal bus voltage is depleted.

4.4 Protective Devices

NOTE: Integral solid state short circuit protection does not provide branch circuit protection. Branch circuit protection must be provided in accordance with the National Electrical Code and any additional local codes.

Recommended fuse sizes are based on the following:
115% of maximum continuous drive input current for time delay.
150% of maximum continuous drive input current for Fast or Very Fast action.
Note: These recommendations do not consider harmonic currents or ambient temperatures greater than 45°C. Be sure a suitable input power protection device is installed. Use the recommended fuses and wire sizes shown in Tables 4-1 through 4-6. Wire size is based on the use of copper conductor wire rated at 75 °C. The table is specified for NEMA B motors.

Fast Action Fuses:	240VAC, Buss® KTN	
	480VAC, Buss® KTS to 600A (KTU for 601 to 1200A)	
	600VAC, Buss® KTS to 600A (KTU for 601 to 1200A)	
Very Fast Action:	240VAC, Buss® JJN	
	480VAC, Buss® JJS	
	600VAC, Buss® JJS	
Time Delay:	240VAC, BUSS FRN	
	480VAC, BUSS FRS (KLU for 601 to 1200A)	
	600VAC, BUSS FRS (KLU for 601 to 1200A)	
Semiconductor Fuses:	240VAC, Ferraz Shawmut A50QS	
	480VAC, Ferraz Shawmut A70QS	
	600VAC, Ferraz Shawmut A70QS	
UL Listed Breakers:	Frame Size D -	250 A maximum (all ratings)
	Frame Size E -	300 A maximum for the 150 HP
		400 A maximum for the 200 HP
		500A maximum for the 250 HP
	Frame Size F -	600A maximum for the 300 HP
		700A maximum for the 350 HP
		750A maximum for the 400 HP
		800A maximum for the 450 HP
		1000A maximum for the 500 HP

Buss® is a trademark of Cooper Industries, Inc.

4.5 Reduced Input Voltage Considerations

When operating with other than nominal input voltages or with non-standard motors, the output current rating of the drive must be greater than or equal to the continuous load requirements of the motor.

4.6 Electrical Installation

All interconnection wires between the drive, AC power source, motor, host control and any other operator interface stations should be in metal conduits or shielded cable must be used. If the connection being made is on a connection stud or grounding screw, then use listed closed loop connectors that are of appropriate size for wire gauge being used. Connectors are to be installed using crimp tool specified by the manufactuer of the connector. Only class 1 wiring should be used. See Appendix A for conduit hole size for each frame size.

4.7 Optional Filter/Reactor

Figure 4-2 shows the connections for installing an optional Line Filter and AC Reactor.

Figure 4-2 Filter and Reactor Connections

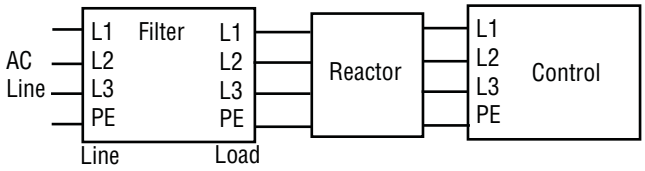

Table 4-1 240VAC Three Phase Wire Size and Protective Devices

Control Rating		Input Fuse (Amps)				Wire Gauge	
HP	Input Amps	Fast Acting (UL)	Fast Acting (CUL)	Time Delay	Semiconductor (CUL)	AWG	mm²
1	4.2	12	12	9		14	2.5
2	7.0	15	15	12		14	2.5
3	10	25	25	20		14	2.5
5	16	35	35	30		12	4.0
7.5	22	35	35	30		10	6.0
10	28	70	70	60		8	10.0
15	42	80	80	70		6	16.0
20	53	100	100	90		4	25.0
25	66	125	*125		A50QS125-4	4	25.0
30	78	175	*175		A50QS150-4	3	35.0
40	104	175	*175		A50QS150-4	2	50.0
50	130	200	200	175		2/0	70.0
60	154	250	250	200		3/0	85.0

*Requires custom drive for CUL application using fast fuses.
Note: Wire sizes based on 75°C copper wire. Fuses based on 40°C ambient, max continuous output and no harmonic current.

Table 4-2 240VAC Three Phase Breaker Size

HP	UL Listed Breaker Size (AMPS)
1	
2	
3	
5	
7.5	
10	
15	
20	
25	
30	
40	
50	250
60	250

Table 4-3 480VAC Three Phase Wire Size and Protective Devices

Control Rating		Input Fuse (Amps)				Wire Gauge	
HP	Input Amps	Fast Acting (UL)	Fast Acting (CUL)	Time Delay	Semiconductor (CUL)	AWG	mm^2
1	2.1	6	6	4.5		14	2.5
2	3.4	8	8	6.3		14	2.5
3	4.8	12	12	10		14	2.5
5	7.6	17.5	17.5	15		14	2.5
7.5	11	25	25	17.5		14	2.5
10	14	25	25	17.5		12	4.0
15	21	40	40	35		10	5.3
20	27	50	50	45		8	10.0
25	34	60	60	50		8	10.0
30	40	80	*80		A70QS60-4	8	10.0
40	52	100	*100		A70QS80-4	6	16.0
50	65	125	*125		A70QS100-4	4	25.0
60	77	125	125	100		3	35.0
75	96	150	150	125		1	50.0
100	124	200	200	175		2/0	70.0
125	156	250	250	200		3/0	85.0
150	180	350	350	300		One-4/0 or Two-1/0	One-110.0 or Two-55.0
200	240	450	450	400		Two-3/0	Two-85.0
250	302	600	600	450		Two-250 kcmil	Two-127.0
300	361	650	650	450		Two-4/0	Two-110.0
350	414	750	750	550		Two-300 kcmil	Two-152.0
400	477	800	800	600		Two-350 kcmil	Two-177.0
450	534	900	900	650		Two-400 kcmil	Two-203.0
500	590	1000	1000	750		Two-500 kcmil	Two-253.0
550 ◊	650	1000	1000	750		Two-600 kcmil	Two-304.0

◊ This rating is applicable when using the VS1SP4500-1 in the SVT (standard variable torque) operating zone.

Table 4-4 480VAC Three Phase Breaker Size

HP	UL Listed Breaker Size (AMPS)
1	
2	
3	
5	
7.5	
10	
15	
20	
25	
30	
40	
50	
60	250
75	250
100	250
125	250
150	300
200	400
250	500
300	600
350	700
400	750
450	800
500	1000
550	1000

Table 4-5 600VAC Three Phase Wire Size and Protective Devices

Control Rating		Input Fuse (Amps)				Wire Gauge	
HP	Input Amps	Fast Acting (UL)	Fast Acting (CUL)	Time Delay	Semiconductor (CUL)	AWG	mm^2
1	1.7	6	6	5		14	2.5
2	2.7	6	6	5		14	2.5
3	3.9	10	10	8		14	2.5
5	6.1	15	15	12		14	2.5
7.5	9.0	17.5	17.5	15		14	2.5
10	11	17.5	17.5	15		14	2.5
15	17	35	35	30		10	6.0
20	22	40	40	35		10	6.0
25	27	50	50	40		8	10.0
30	32	70	*70		A70QS50-4	8	10.0
40	41	80	*80		A70QS70-4	6	16.0
50	52	80	*80		A70QS80-4	6	16.0
60	62	100	100	80		4	25.0
75	77	125	125	100		3	35.0
100	99	150	150	125		1	50.0
125	125	200	200	175		2/0	70.0
150	144	300	300	250		3/0	95.0
200	192	350	350	300		One - 250 kcmil or Two - 1/0	150 or Two - 70
250	242	450	450	400		Two - 3/0	Two - 95
300	289	600	600	450		Two - 4/0	Two - 120

*Requires custom drive for CUL application using fast fuses.
Note: Wire sizes based on 75°C copper wire. Fuses based on 40°C ambient, max continuous output and no harmonic current.

Table 4-6 600VAC Three Phase Breaker Size

HP	UL Listed Breaker Size (AMPS)	HP	UL Listed Breaker Size (AMPS)
1		40	
2		50	
3		60	250
5		75	250
7.5		100	250
10		125	250
15		150	250
20		200	300
25		250	400
30		300	400

4.8 Incoming Power and Motor Connections

Figure 4-3 shows the layout of the terminals on the power connectors for each size drive. All cables must be in conduits or shielded and the conduits or shields must be grounded at the cable entrance. The brake resistor and cable must be in a conduit or shielded if installed outside the enclosure.

Figure 4-3 Power Connections

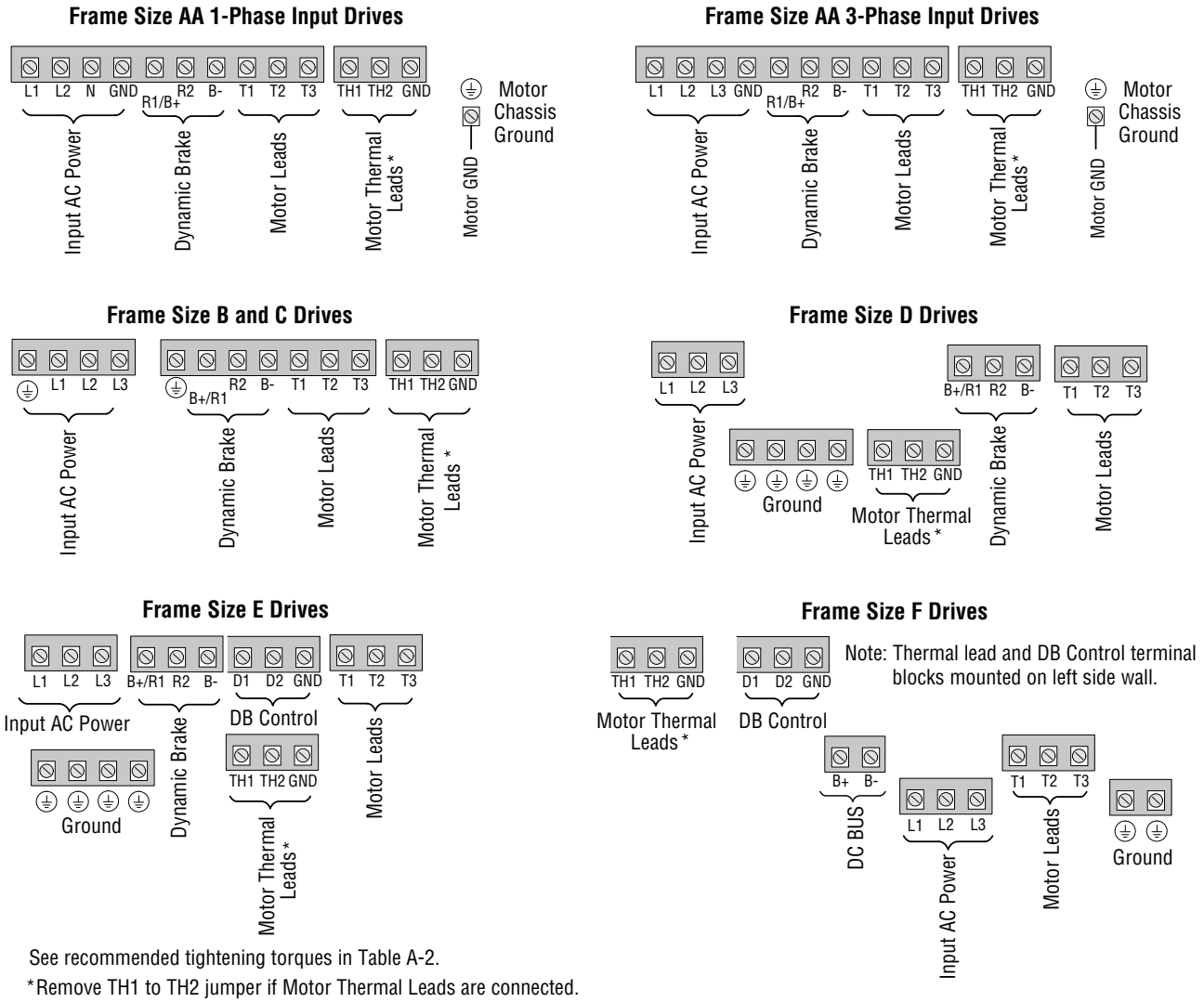

See recommended tightening torques in Table A-2.

*Remove TH1 to TH2 jumper if Motor Thermal Leads are connected.

Note: An open circuit between TH1 and TH2 will cause an overtemperature fault. Refer to fault/troubleshooting information in Chapter 9.

1. Access the Power and Motor Terminals (see Cover Removal procedure).
2. Feed the power supply and motor cables into the drive through the cable entrance.
3. Connect the line L1, L2, L3 and GND to the power terminal connectors.
4. Connect motor leads to T1, T2, T3 and GND motor terminal connectors.

Note: H2E-Frame Size, 250HP and 300HP (575V) drives utilize studs for power terminations.

Figure 4-4 3 Phase Input Power Connections

*Optional components not provided with control.

1. See “Protective Devices” described previously in this section.
2. Use same gauge wire for Earth ground as is used for L1, L2 and L3 for AA, B, C frame drives. For D, E and F frame drives, size the grounding conductor per the local electrical codes.
3. Metal conduit should be used. Connect conduits so the use of a Reactor or RC Device does not interrupt EMI/RFI shielding.
4. See Line/Load Reactors described previously in this section.

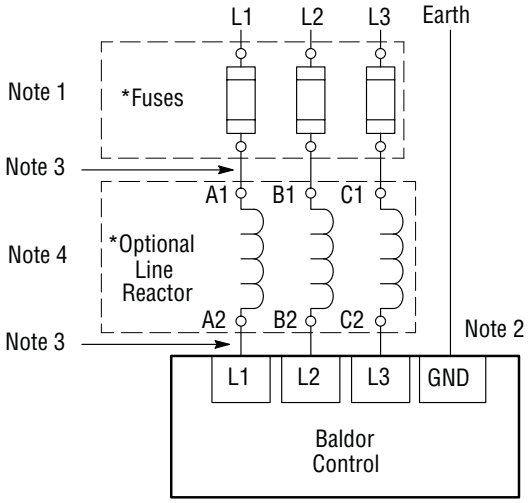

4.9 Operating a 3-Phase Control on Single Phase Input Power

Single phase AC input power can be used to power the control instead of three phase for control sizes AA, B and C. The specifications and control sizes are listed in Appendix A of this manual. If single phase power is to be used, the rated Horsepower of the control must be reduced (derated). In addition, power wiring and jumper changes are required. Both connection types are shown in Figures 4-5 and 4-6.
Single phase rating wire size and protection devices are listed in Tables 4-7 and 4-8.

4.9.1 Single Phase Power Derating:

Single phase power derating requires that the continuous and peak current ratings of the control be reduced by the following:

1. **1 - 7.5HP 240 and 480VAC controls:**
   Derate output hp to the next lower hp value (i.e. 7.5hp becomes 5hp, etc.)
2. **10 - 50HP 240 and 480VAC controls:**
   Derate output hp by 50% of the nameplate rating.

Table 4-7 Single Phase Wire Size and Protection Devices - 240VAC Controls

Drive HP	Derated Rating		Input Fuse (Amps)			Wire Gauge	
	HP	Input Amps	Fast Acting (UL)	Fast Acting (CUL)	Semiconductor (CUL)	AWG	mm²
2	1	8.0	12	12		14	2.5
3	2	10	20	20		14	2.5
5	3	15	25	25		12	4.0
7.5	5	28	45	45		10	6.0
10	5	28	45	45		12	4.0
15	7.5	40	60	60		8	10.0
20	10	50	80	80		6	16.0
25	10	50	80	*80	A50QS125-4	6	16.0
30	15	68	100	*100	A50QS150-4	4	25.0
40	20	88	125	*125	A50QS150-4	3	35.0

*Requires custom drive for CUL application using fast fuses.
Note: Wire sizes based on 75°C copper wire. Fuses based on 40°C ambient, max continuous output and no harmonic current.

Table 4-8 Single Phase Wire Size and Protection Devices - 480VAC Controls

Drive HP	Derated Rating		Input Fuse (Amps)			Wire Gauge	
	HP	Input Amps	Fast Acting (UL)	Fast Acting (CUL)	Semiconductor (CUL)	AWG	mm²
2	1	4.0	6	6		14	2.5
3	2	6.0	10	10		14	2.5
5	3	8.5	15	15		14	2.5
7.5	5	14	20	20		14	2.5
10	5	14	20	20		14	2.5
15	7.5	20	30	30		12	4.0
20	10	25	40	40		10	6.0
25	10	25	40	40		10	6.0
30	15	34	50	*50	A70QS50-4	8	10.0
40	20	44	60	*60	A70QS60-4	8	10.0
50	25	55	80	*80	A70QS80-4	6	16.0

*Requires custom drive for CUL application using fast fuses.
Note: Wire sizes based on 75°C copper wire. Fuses based on 40°C ambient, max continuous output and no harmonic current.

Frames D, E and F drives cannot be applied with a single phase power source.

Figure 4-5 Size AA Single Phase Power Connections to a 3-Phase Control

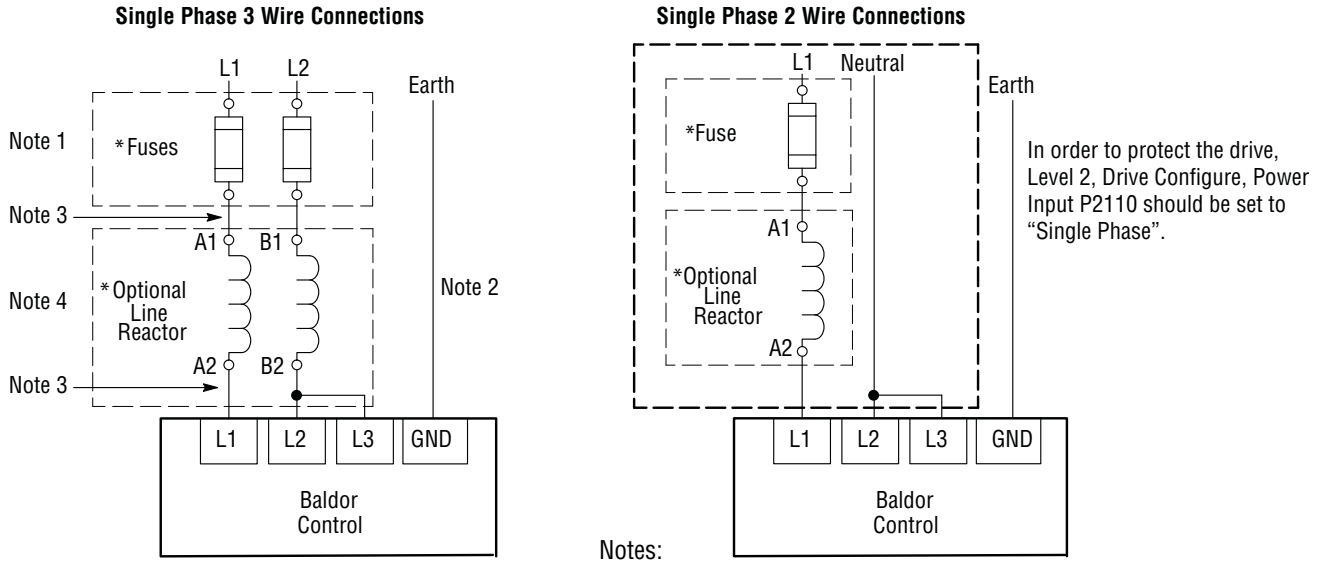

*Optional components are not provided with control.

See recommended tightening torques in Table A-2.

Notes:

1. See Protective Devices described previously in this section.
2. Use same gauge wire for Earth ground as is used for L1 and L2.
3. Metal conduit should be used. Connect conduits so the use of a Reactor or RC Device does not interrupt EMI/RFI shielding.
4. See Line/Load Reactors described previously in this section. Line Reactors are built-in for size B and larger controls.

Figure 4-6 Size B and C Single Phase Power Connections to a 3 Phase Control

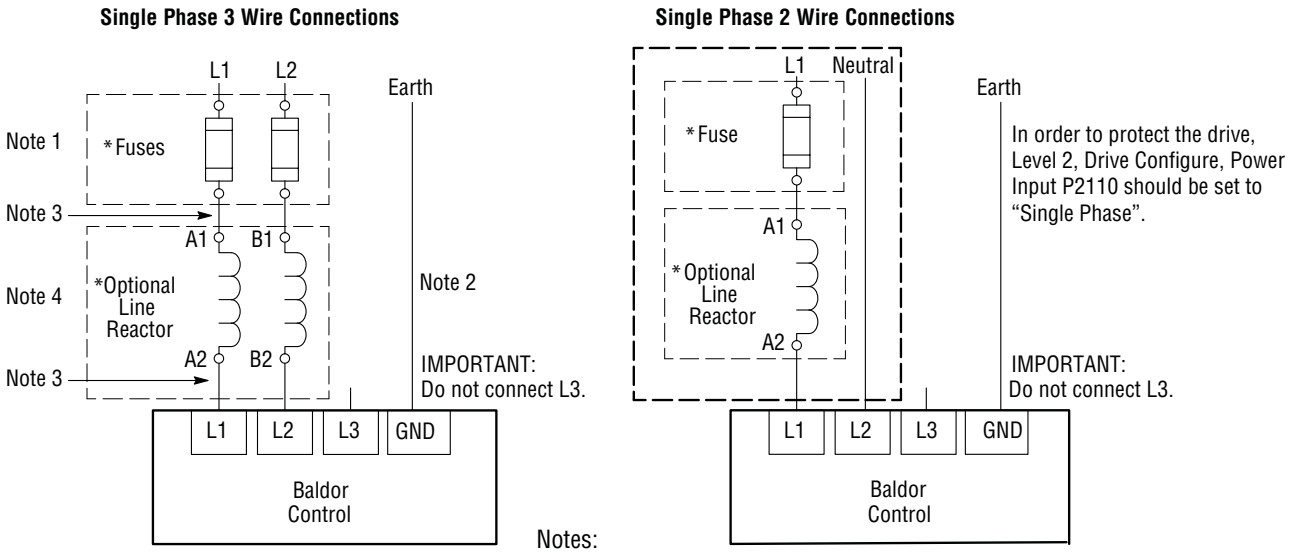

*Optional components not provided with control.

See recommended tightening torques in Table A-2.

Notes:

1. See Protective Devices described previously in this section.
2. Use same gauge wire for Earth ground as is used for L1 and L2.
3. Metal conduit should be used. Connect conduits so the use of a Reactor or RC Device does not interrupt EMI/RFI shielding.
4. See Line/Load Reactors described previously in this section. Line Reactors are built-in for size B and larger controls.

Single Phase Power and Motor Connections VS1SP6XX-XX

Figure 4-7 shows the minimum connections required at the power connector. All cables must be in conduits or shielded and the conduits or shields must be grounded at the cable entrance. The brake resistor and cable must be in a conduit or shielded if installed outside the enclosure.

Figure 4-7 Single Phase Control Power Terminals

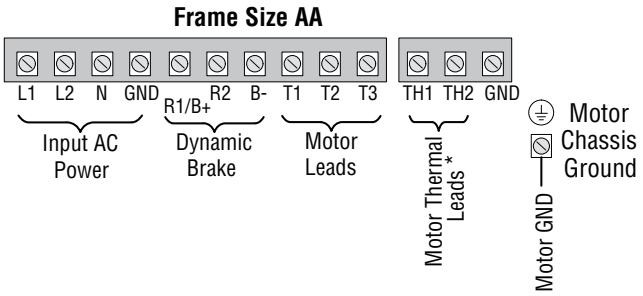

See recommended tightening torques in Table A-2.

*Remove TH1 to TH2 jumper if Motor Thermal Leads are connected.

Note: An open circuit between TH1 and TH2 will be used by the drive to generate a motor overtemperature fault. Refer to the fault/troubleshooting information provided in Chapter 9.

1. Access the Power and Motor Terminals (see Cover Removal procedure).
2. Feed the power supply and motor cables into the drive through the cable entrance.
3. Connect the line L1, L2, N and GND to the power terminal connections, Figure 4-7.
4. Connect motor leads to T1, T2, T3 and GND motor terminal connectors.

Figure 4-8 Single Phase Power Control Connections

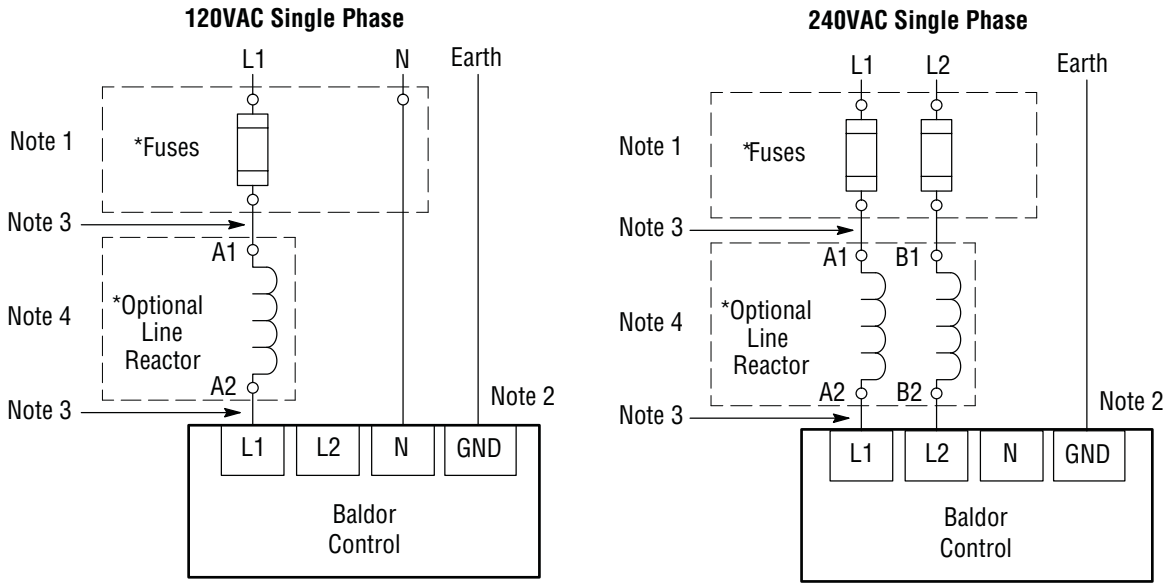

See recommended tightening torques in Table A-2.

*Optional components not provided with control.

Notes:
1. See Table 4-6.
2. Use same gauge wire for Earth ground as is used for L1, L2 and N.
3. Metal conduit should be used. Connect conduits so the use of a reactor or RC Device does not interrupt EMI/RFI shielding.
4. See Line/Load Reactors described previously in this section.

Table 4-9 Single Phase Rating Wire Size and Protection Devices - 120/240VAC Controls

HP	120VAC Single Phase Input				240VAC Single Phase Input			
	Input Amps	Input Fuse (Amps) Fast Acting	AWG	mm^2	Input Amps	Input Fuse (Amps) Fast Acting	AWG	mm^2
1	12	20	12	4.0	6.3	12	14	2.5
2	20	30	10	6.0	10.2	20	14	2.5
3	30	35	10	6.0	14.4	25	12	4.0

Note: All wire sizes are based on 75^{0}C copper wire. Recommended fuses are based on 40^{0}C ambient, maximum continuous control output and no harmonic current.

4.10 M-Contactor

If required by local codes or for safety reasons, an M-Contactor (motor circuit contactor) may be installed. However, incorrect installation or failure of the M-Contactor or wiring may damage the control.
M-Contactor connections are shown in Figure 4-9.

CAUTION: **If an M-Contactor is installed, the control must be disabled for at least 200msec before the M-Contactor is opened. If the M-Contactor is opened while the control is supplying voltage and current to the motor, the control may be damaged. Before the control is enabled, the M-Contactor must be closed for at least 200msec.**

Figure 4-9 Motor Connections and Optional Connections

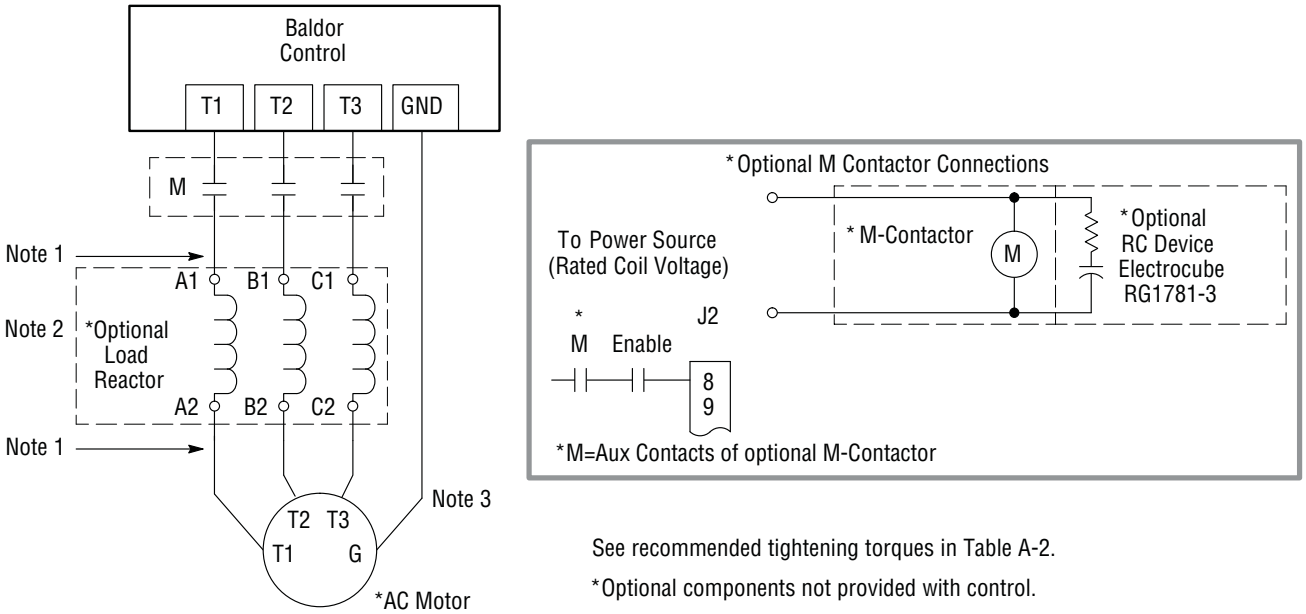

Notes:
1. Metal conduit should be used. Connect conduits so the use of the Load Reactor or RC Device does not interrupt EMI/RFI shielding.
2. See Line/Load Reactors described previously in this section.
3. Use same gauge wire for ground as for T1, T2 and T3 for AA, B, and C controls. For size D, E and F controls, size the grounding conductor per the local electrical code.

4.11 Long Motor Leads

The wire leads that connect the motor to the control are critical in terms of sizing, shielding and the cable characteristics. Short cable runs are usually trouble free but fault-monitoring circuitry can produce numerous faults when long cables (over 100 feet) are used.
- 100+ft (30m): Baldor recommends adding an optional load reactor to the output of the control
- 250+ft (75m): Baldor recommends adding and optional load reactor and common mode choke to the control.

The load reactor and/or common mode choke should be placed in close physical proximity to the control. Unexpected faults may occur due to excessive charging current required for motor cable capacitance. If you use long motor leads and experience unexpected trips due to overload conditions and are not sure how to correctly size and connect the optional load reactors, contact your Baldor representative.

4.12 Optional Dynamic Brake Hardware

Refer to Figure 4-10 for DB resistor connections. Dynamic Brake (DB) hardware must be installed on a flat, non-flammable, vertical surface for effective cooling and operation.

CAUTION: **Before external Dynamic Brake Hardware is added, the internal resistor must be disconnected (frames AA, B, C and D). Remove the resistor from the B+/R1 and R2 terminals. The external resistor can be connected across these terminals. Failure to remove the internal resistor will decrease the total resistance (parallel connection) and cause damage.**

Figure 4-10 DB Terminal Identification

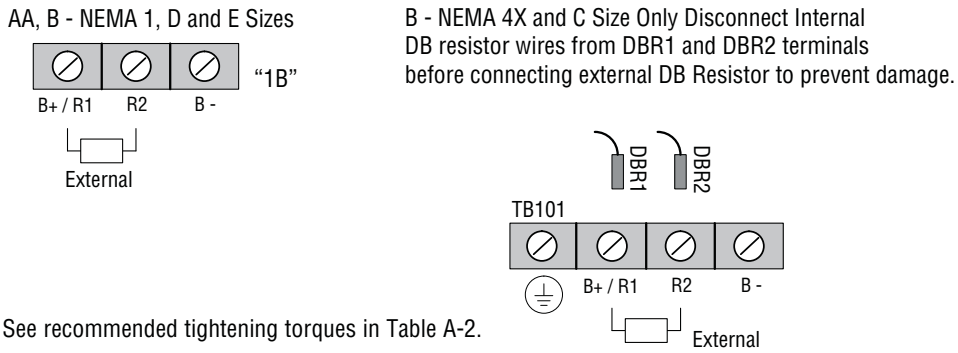

Notes:
1. Wires from the internal Dynamic Brake resistor for size AA, B, C and D controls must be removed before external resistor hardware is installed.
2. E and F size drives do not include an internal Dynamic Brake resistor may not include the transistor.
3. Although not shown, metal conduit should be used to shield all power wires and motor leads.

E-Frame and F-Frame Sizes
An internal dynamic braking transistor is not included on standard VS1SP E-Frame and F-Frame drives (note that the VS1GV E-Frame and F-Frame drives up to 450 HP do include an internal transistor, but not a resistor). To accommodate braking on VS1SP E-Frame and F-Frame drives, control terminals are provided that may be used to control an external braking transistor such as a Baldor RTA or RBA assembly. See manual MN701 for more details on these external options. Figure 4-11 shows the braking control terminals provided on the E-Frame and F-Frame drives. Figure 4-12 shows an example utilizing a Baldor RTA assembly with a Baldor RGA resistor.

Figure 4-11 E-Frame and F-Frame Brake Terminal Identification

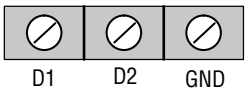

See recommended tightening torques in Table A-2.

Figure 4-12 Wiring for RTA Assembly

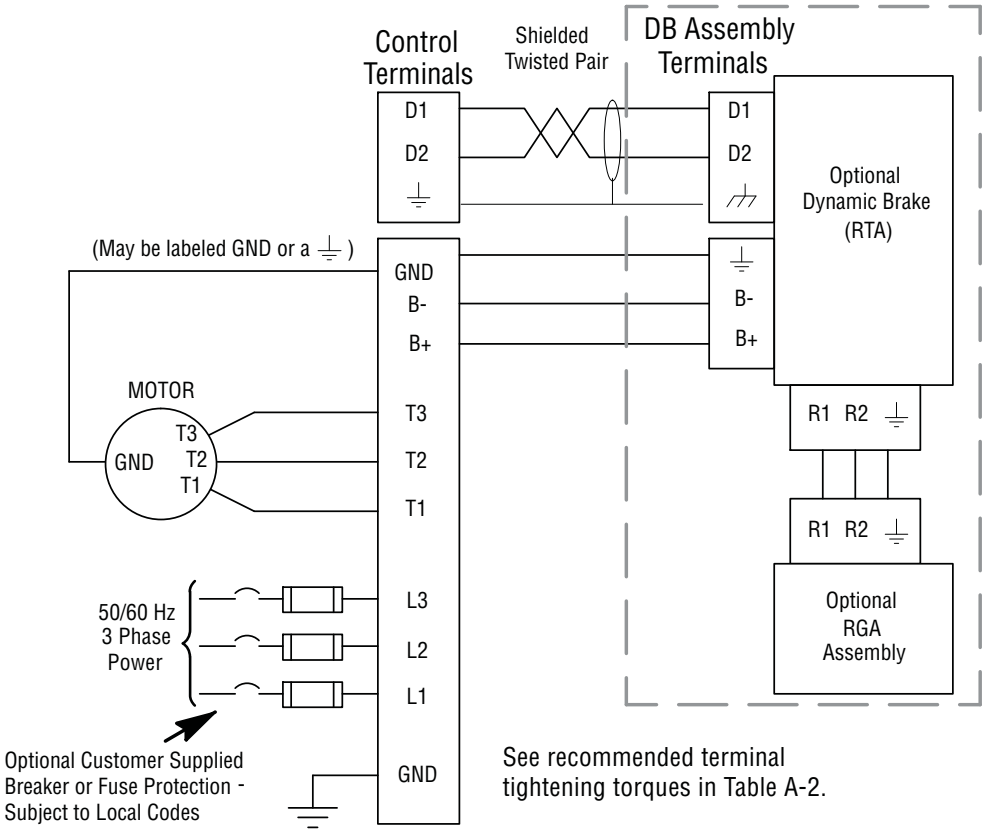

Chapter 5
Control Wiring

5.1 Control Board Connections

The analog and digital inputs and output terminals are shown in Figure 5-1. The signals are described in Tables 5-1, 5-2 and 5-3. Connections will depend upon which of the operating modes are chosen. Each mode described and a connection diagram is provided later in this section.

Figure 5-1 Control I/O Connections

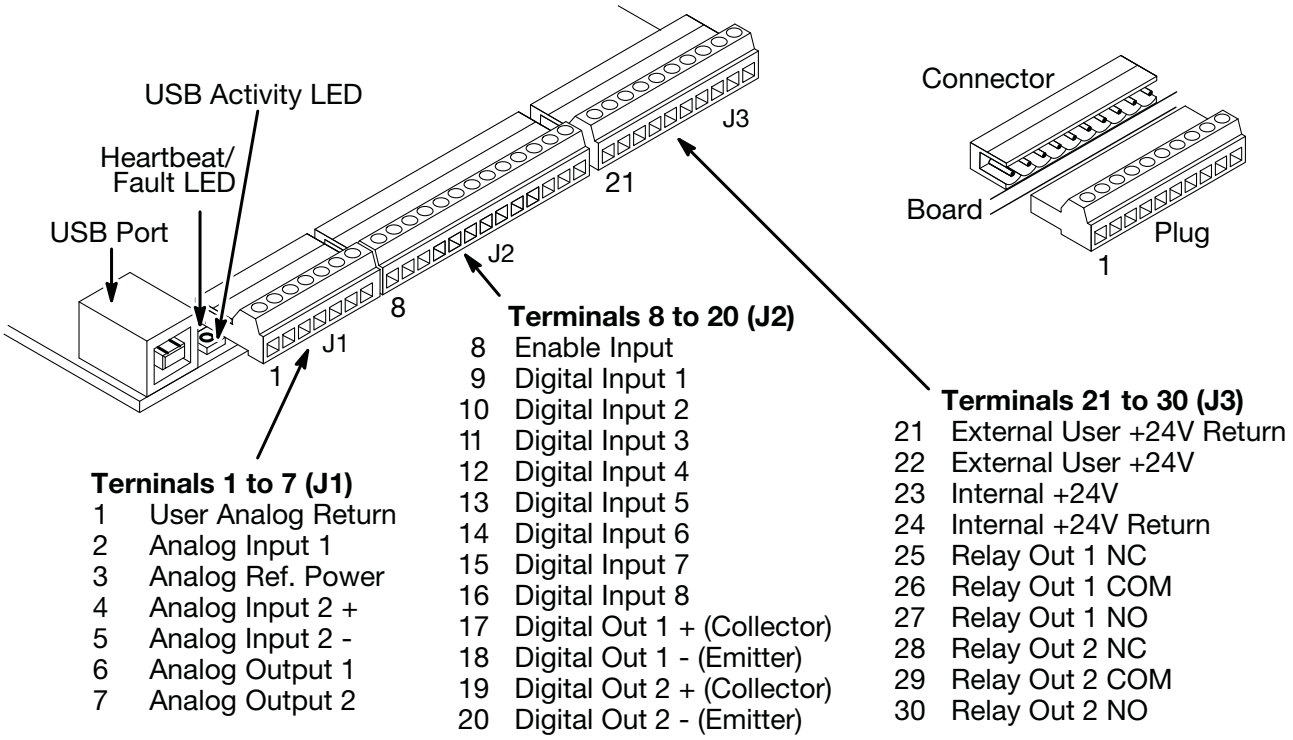

See recommended tightening torques in Table A-2.

Table 5-1 J1 Connector Definition

Connector Terminal	Signal Description
J1-1	0VDC - Common reference for Analog Inputs and Outputs
J1-2	AIN1 – Analog Input 1
J1-3	AREF - Analog reference power (+10V for Analog Input 1)
J1-4	AIN2+ - Analog Input 2+
J1-5	AIN2- - Analog Input 2-
J1-6	AOUT1 - Analog Output 1
J1-7	AOUT2 - Analog Output 2

Table 5-2 J2 Connector Definition

Connector Terminal	Signal Description
J2-8	Enable Input
J2-9	DIN1 – Digital Input 1
J2-10	DIN2 – Digital Input 2
J2-11	DIN3 – Digital Input 3
J2-12	DIN4 – Digital Input 4
J2-13	DIN5 – Digital Input 5
J2-14	DIN6 – Digital Input 6
J2-15	DIN7 – Digital Input 7
J2-16	DIN8 – Digital Input 8
J2-17	Digital Output #1+ (Collector)
J2-18	Digital Output #1- (Emitter)
J2-19	Digital Output #2+ (Collector)
J2-20	Digital Output #2- (Emitter)

Table 5-3 J3 Connector Definition

Connector Terminal	Signal Description
J3-21	External User +24V Return
J3-22	External User +24V
J3-23	Internal +24VDC
J3-24	Internal +24VDC Return
J3-25	Relay Output #1 N.C.
J3-26	Relay Output #1 COMMON
J3-27	Relay Output #1 N.O.
J3-28	Relay Output #2 N.C.
J3-29	Relay Output #2 COMMON
J3-30	Relay Output #2 N.O.

5.2 Analog Inputs

Two analog inputs are available: Analog Input 1 (J1-1 and J1-2) and Analog Input 2 (J1-4 and J1-5) as shown in Figure 5-2. Either analog input may be selected in the Level 1 Input block, Command Source Parameter.

Figure 5-2 Analog Inputs

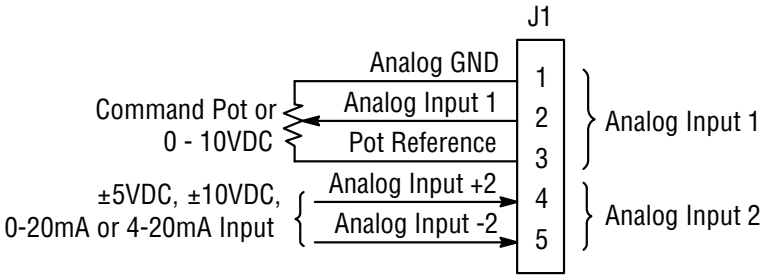

See recommended terminal tightening torques in Table A-2.

5.2.1 Analog Input 1 (Single Ended)

When using a potentiometer as the speed command, process feedback or setpoint source, the potentiometer should be connected at Analog Input 1. When using Analog Input 1, the respective parameter must be set to “Analog Input 1”.
Note: A potentiometer value of 5kΩ to 10kΩ, 0.5 watt may be used.

Parameter Selection

The single ended Analog Input 1 is typically used in one of three ways:

1. Speed or Torque command (Level 1 Input block, Command Source=Analog Input 1).
2. Process Feedback (Level 2 Process Control block, Process Feedback=Analog Input 1).
3. Setpoint Source (Level 2 Process Control block, Setpoint Source=Analog Input 1).

5.2.2 Analog Input 2 (Differential)

Analog Input 2 accepts a differential command ±5VDC, ±10VDC, 0-20 mA or 4-20 mA.
If pin J1-4 is positive with respect to pin 5 and P1408=±5V or ±10V, the motor will rotate in the forward direction.
If pin J1-4 is negative with respect to pin 5 and P1408=±5V or ±10V, the motor will rotate in the reverse direction. If forward direction is not correct, change Level 2, Motor Data Reverse Rotation parameter P2415.
Analog Input 2 can be connected for single ended operation by connecting either of the differential terminals to common, provided the common mode voltage range is not exceeded.
Analog Input 2 can be set for voltage or current mode operation. With JP1 as shown in Figure 5-3, Voltage mode is selected. If JP1 is connected to pins 2 and 3, current mode is selected.
The Level 1 Input Setup Parameter P1408 can be set to the full scale voltage or current range desired.

Note: The common mode voltage can be measured with a voltmeter. Apply the maximum command voltage to Analog Input 2 (J1-4,5). Measure the AC and DC voltage across J1-1 to J1-4. Add the AC and DC values. Measure the AC and DC voltage from J1-1 to J1-5. Add these AC and DC values.
If either of these measurement totals exceeds a total of ±15 volts, then the common mode voltage range has been exceeded. To correct this condition, isolate the command signal with a signal isolator, such as Baldor catalog number BC145.

Figure 5-3 Jumper Locations

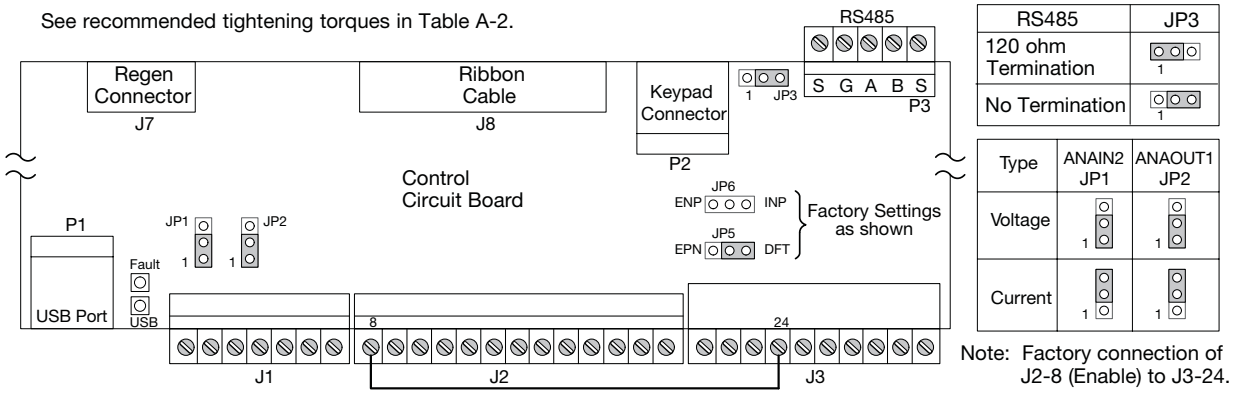

5.3 Analog Outputs

Two programmable analog outputs are provided on J1-6 and J1-7. These outputs are scaled and can be used to provide status of various control conditions. The return for these outputs is J1-1 analog return. Each output function is programmed in the Level 1 Output block, Analog Out1 Signal or Analog Out2 Signal parameter values.

Analog Output 1 can be set for voltage or current mode operation. With JP2 as shown in Figure 5-3, Voltage mode is selected. If JP2 is connected to pins 2 and 3, current mode is selected.
The Level 1 Output Setup Parameter P1510 can be set to the full scale voltage or current range desired.

5.4 Opto-Isolated Inputs

Logic input connections are made at terminal strip J2 pins 8 to 16. J2 inputs can be wired as Active High or Active Low as shown in Figure 5-4. Internal or external power source is selected by jumpers JP5 and JP6 shown in Figure 5-4.

Notes for Figure 5-4:
1. See operating modes defined later in this chapter for input usage.
2. Factory connection of J2-8 (Enable) is made to J3-24 for Internal, Active Low connection. For other configurations, the wire at J3-24 must be moved to J3-23, J3-21 or J3-22 as needed.

Figure 5-4 Active HIGH (Sourcing)/LOW (Sinking) Relationship

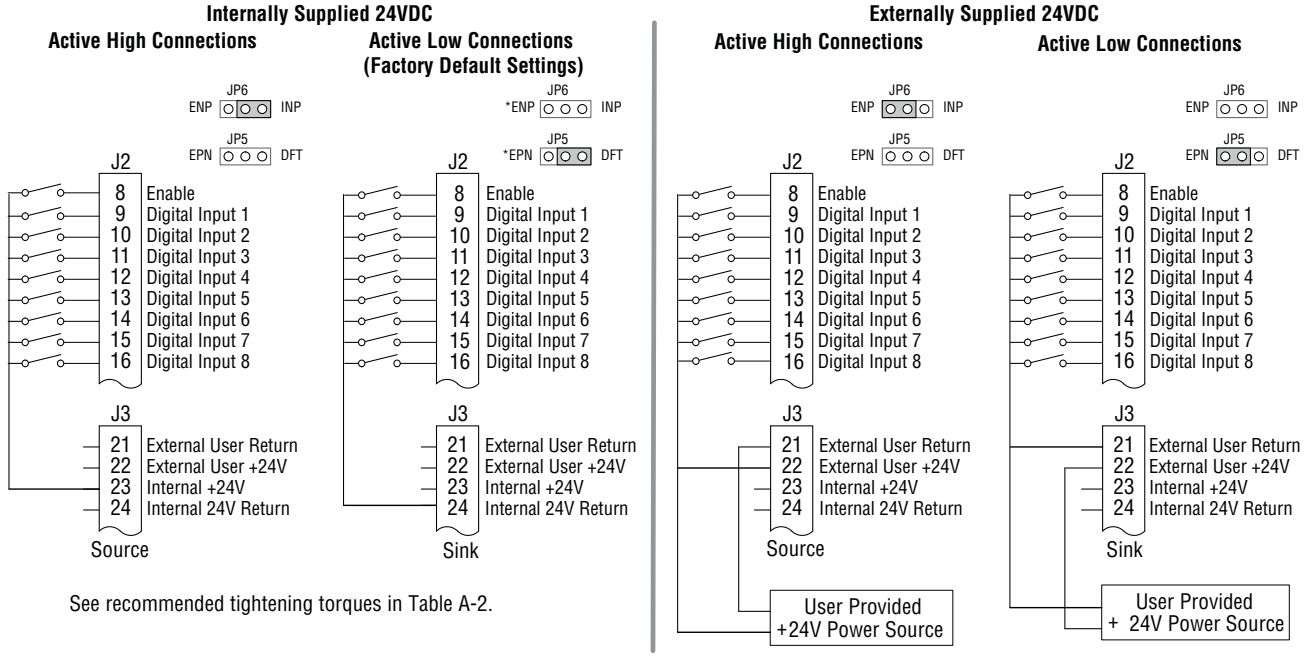

See recommended tightening torques in Table A-2.

5.5 Operating Modes

The operating modes define the basic motor control setup and the operation of the input and output terminals. After the circuit connections are completed, the operating mode is selected by programming the Operating Mode parameter in the Level 1 Input Setup Programming Block (P1401).

Operating modes include:

- Keypad
- Fan Pump 2Wire
- 3 Spd Ana 3Wire
- Profile Run*
- Standard Run 2Wire
- Fan Pump 3Wire
- Electronic Pot 2Wire
- Bipolar
- Standard Run 3Wire
- Process Control*
- Electronic Pot 3Wire
- Pulse Follower*
- 15 Preset Speeds
- 3 Sps Ana 2Wire
- Network
- PLC*

*To view and change parameters associated with these modes, Operating Mode (P1401) must be set to the respective mode. For example, this means Process Control parameters will not appear on the keypad for selection unless Level 1, Input Setup, Operating Mode (P1401) is set to “Process Control”.
Each mode requires connections to the J1, J2 and J3 terminal strips. The terminal strips are shown in Figure 5-1. The connection of each input or output signal is described in the following pages.

5.5.1 Keypad

The Keypad mode allows the control to be operated from the keypad. In this mode only the Enable input is required. However, the Stop and External Trip inputs may optionally be used. All other Digital Inputs remain inactive. The Analog Outputs and Digital Outputs remain active at all times.

Figure 5-5 Keypad Connection Diagram

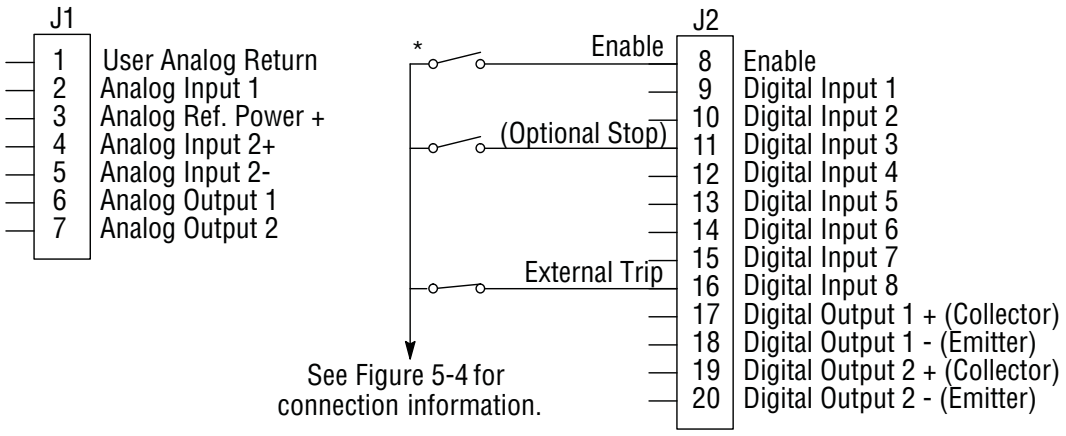

See recommended tightening torques in Table A-2.
*Note: Remove factory jumper from J2-8 and J3-24 before connecting switch at J2-8.
For keypad operation, only Enable (J2-8) is required.

J2-8	CLOSED allows normal control operation. OPEN disables the control and motor coasts to stop.
J2-11	Optional STOP input (not required). CLOSED allows normal control operation. OPEN motor coasts or brakes to stop if Level 1 Keypad Setup block, Local Hot Start parameter is set to “ON”.
J2-16	Optional External Trip input (not required). If used, you must set Level 2 Drive Protect block, External Trip to “ON”. CLOSED allows normal operation. OPEN causes an External Trip to be received by the control (when programmed to “ON”).

5.5.2 Standard Run 2-Wire

In Standard Run 2Wire mode, the control is operated by the digital inputs and the command source. Also, Preset Speed 1 can be selected. The opto inputs can be switches as shown in Figure 5-6 or logic signals from another device.

Figure 5-6 Standard Run 2-Wire Connection Diagram

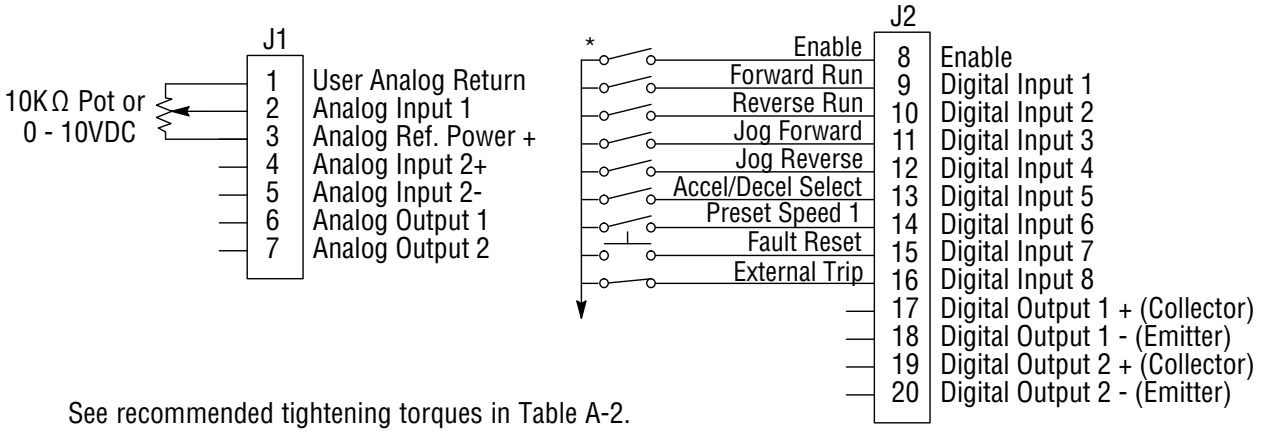

See recommended tightening torques in Table A-2.

*Note: Remove factory jumper from J2-8 and J3-24 before connecting switch at J2-8.

J2-8	CLOSED allows normal operation. OPEN disables the control and motor coasts to a stop.
J2-9	CLOSED starts motor operation in the Forward direction. OPEN motor decels to stop. If Level 1, Keypad Setup, Stop Mode is set to “coast”, motor coasts to stop.
J2-10	CLOSED starts motor operation in the Reverse direction. OPEN motor decels to stop. If Level 1, Keypad Setup, Stop Mode is set to “coast”, motor coasts to stop.
J2-11	CLOSED starts motor JOG operation in the Forward direction. OPEN motor decels to stop. If Level 1, Keypad Setup, Stop Mode is set to “coast”, motor coasts to stop.
J2-12	CLOSED starts motor JOG operation in the Reverse direction. OPEN motor decels to stop. If Level 1, Keypad Setup, Stop Mode is set to “coast”, motor coasts to stop.
J2-13	CLOSED selects ACC / DEC / S-ACC / S-DEC group 2. OPEN selects ACC / DEC / S-ACC / S-DEC group 1.
J2-14	CLOSED selects Preset Speed #1 (J2-11 or 12 will override this Preset Speed). OPEN allows speed command from the command source (P1402).
J2-15	CLOSED to reset fault. OPEN to run.
J2-16	Optional External Trip input (not required). If used, you must set Level 2 Drive Protect block, External Trip to “ON”. CLOSED allows normal operation. OPEN causes an External Trip to be received by the control.

Note: When command source is a unipolar signal (0-10V, 0-5V, 4-20mA etc.) and forward or reverse are closed, motion will occur (unless both are closed at the same time).

5.5.3 Standard Run 3-Wire

In Standard Run 3Wire mode, the control is operated by the digital inputs and the command source. Also, Preset Speed 1 can be selected. The opto inputs can be switches as shown in Figure 5-7 or logic signals from another device.

Figure 5-7 Standard Run 3-Wire Connection Diagram

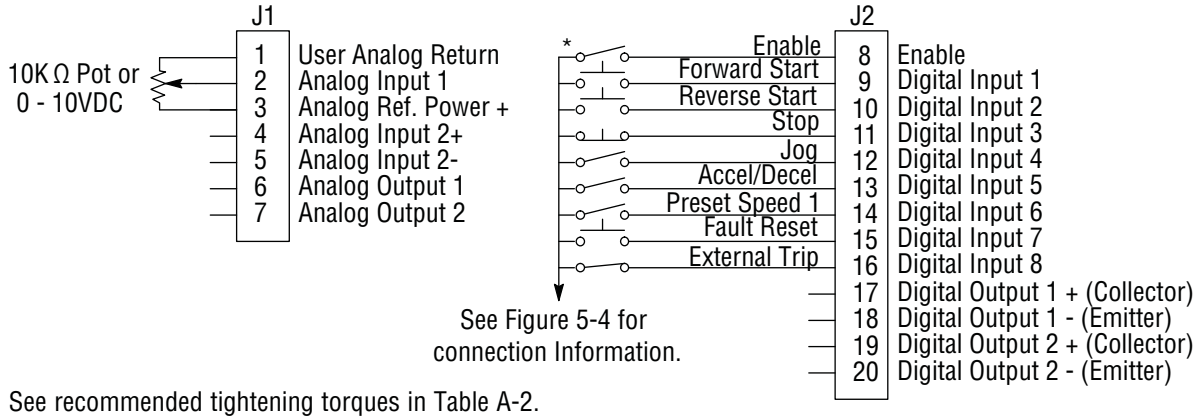

See recommended tightening torques in Table A-2.

*Note: Remove factory jumper from J2-8 and J3-24 before connecting switch at J2-8.

J2-8	CLOSED allows normal operation. OPEN disables the control and motor coasts to a stop.
J2-9	MOMENTARY CLOSED starts motor operation in the Forward direction. In JOG mode (J2-12 CLOSED), motor jogs in the Forward direction as long as closed.
J2-10	MOMENTARY CLOSED starts motor operation in the Reverse direction. In JOG mode (J2-12 CLOSED), motor jogs in the Reverse direction as long as closed.
J2-11	MOMENTARY OPEN motor decels to stop.
J2-12	CLOSED places control in JOG mode, Forward and Reverse run are used to jog the motor.
J2-13	CLOSED selects ACC / DEC / S-ACC / S-DEC group 2. OPEN selects ACC / DEC / S-ACC / S-DEC group 1.
J2-14	CLOSED selects Preset Speed #1 (J2-12 will override this Preset Speed). OPEN allows speed command from the command source (P1402).
J2-15	CLOSED to reset fault. OPEN to run.
J2-16	Optional External Trip input (not required). If used, you must set Level 2 Drive Protect block, External Trip to “ON”. CLOSED allows normal operation. OPEN causes an External Trip to be received by the control.

Note: When command source is a unipolar signal (0-10V, 0-5V, 4-20mA etc.) and forward or reverse are closed, motion will occur (unless both are closed at the same time).

5.5.4 15 Preset Speeds

Operation in 15 Preset Speeds 2-Wire mode is controlled by the opto isolated inputs at J2. The values of the Preset Speeds are set in the Level 1 Preset Speeds block, Preset Speed 1 to Preset Speed 15. J2-11 through J2-14 inputs allow selection of 15 Preset Speeds. The opto inputs can be switches as shown in Figure 5-8 or logic signals from another device.

Figure 5-8 15 Preset Speeds

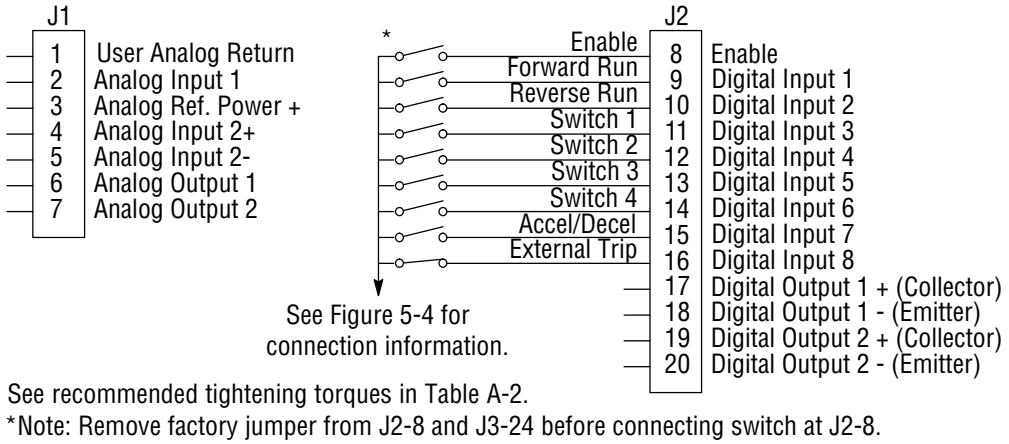

See recommended tightening torques in Table A-2.

*Note: Remove factory jumper from J2-8 and J3-24 before connecting switch at J2-8.

J2-8	CLOSED allows normal operation. OPEN disables the control and motor coasts to a stop.
J2-9	CLOSED operates the motor in the Forward direction (with J2-10 open). OPEN motor decels to stop.
J2-10	CLOSED operates motor in the Reverse direction (with J2-9 open). OPEN motor decels to stop.
J2-11 thru J2-14	Selects programmed Preset Speeds as defined in Table 5-4.
J2-15	CLOSED selects ACC / DEC / S-ACC / S-DEC group 2. OPEN selects ACC / DEC / S-ACC / S-DEC group 1.
J2-16	Optional External Trip input (not required). If used, you must set Level 2 Drive Protect block, External Trip to “ON”. CLOSED allows normal operation. OPEN causes an External Trip to be received by the control.

Table 5-4 Switch Truth Table for 15 Speed, 2-Wire Control Mode

J2-11	J2-12	J2-13	J2-14	Function
OPEN	OPEN	OPEN	OPEN	Selects Level 1:Preset Speed:Preset Speed 1 (P1001)
CLOSED	OPEN	OPEN	OPEN	Selects Level 1:Preset Speed:Preset Speed 2 (P1002)
OPEN	CLOSED	OPEN	OPEN	Selects Level 1:Preset Speed:Preset Speed 3 (P1003)
CLOSED	CLOSED	OPEN	OPEN	Selects Level 1:Preset Speed:Preset Speed 4 (P1004)
OPEN	OPEN	CLOSED	OPEN	Selects Level 1:Preset Speed:Preset Speed 5 (P1005)
CLOSED	OPEN	CLOSED	OPEN	Selects Level 1:Preset Speed:Preset Speed 6 (P1006)
OPEN	CLOSED	CLOSED	OPEN	Selects Level 1:Preset Speed:Preset Speed 7 (P1007)
CLOSED	CLOSED	CLOSED	OPEN	Selects Level 1:Preset Speed:Preset Speed 8 (P1008)
OPEN	OPEN	OPEN	CLOSED	Selects Level 1:Preset Speed:Preset Speed 9 (P1009)
CLOSED	OPEN	OPEN	CLOSED	Selects Level 1:Preset Speed:Preset Speed 10 (P1010)
OPEN	CLOSED	OPEN	CLOSED	Selects Level 1:Preset Speed:Preset Speed 11 (P1011)
CLOSED	CLOSED	OPEN	CLOSED	Selects Level 1:Preset Speed:Preset Speed 12 (P1012)
OPEN	OPEN	CLOSED	CLOSED	Selects Level 1:Preset Speed:Preset Speed 13 (P1013)
CLOSED	OPEN	CLOSED	CLOSED	Selects Level 1:Preset Speed:Preset Speed 14 (P1014)
OPEN	CLOSED	CLOSED	CLOSED	Selects Level 1:Preset Speed:Preset Speed 15 (P1015)
CLOSED	CLOSED	CLOSED	CLOSED	Fault Reset

5.5.5 Fan Pump 2-Wire

Operation in the Fan Pump 2-Wire mode is controlled by the opto isolated inputs at J2-8 through J2-16. The opto inputs can be switches as shown in Figure 5-9 or logic signals from another device.

Figure 5-9 Fan Pump 2-Wire Connection Diagram

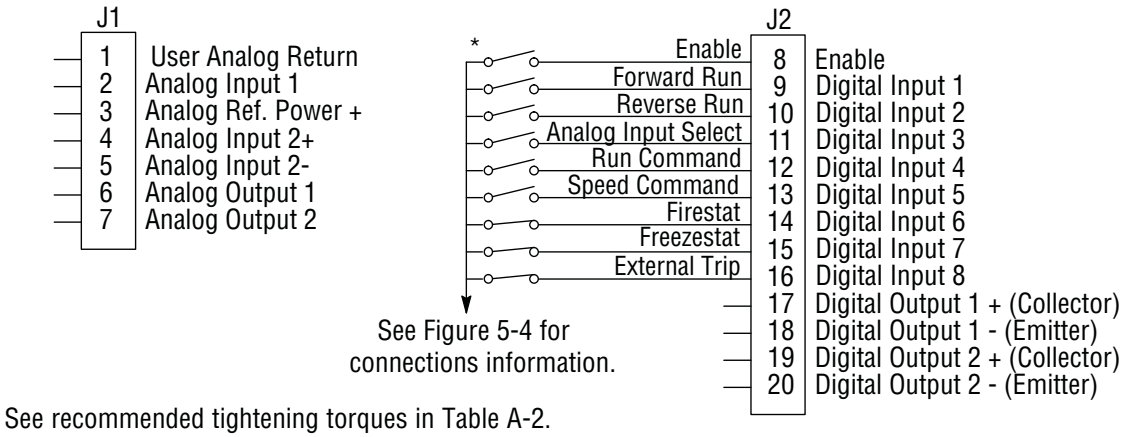

See recommended tightening torques in Table A-2.

*Note: Remove factory jumper from J2-8 and J3-24 before connecting switch at J2-8.

J2-8 CLOSED allows normal control operation.
OPEN disables the control and the motor coasts to a stop.

J2-9 CLOSED operates the motor in the Forward direction (with J2-10 open).
OPEN motor decels to stop. Note: J2-9 and J2-10 are both closed = Fault Reset.

J2-10 CLOSED operates the motor in the Reverse direction (with J2-9 open).
OPEN motor decels to stop. Note: J2-9 and J2-10 are both closed = Fault Reset.

J2-11 CLOSED selects Analog Input 1 (if J2-13, J2-14 and J2-15 are closed).
OPEN selects Command Source (Level 1, Input, Command Source) if J2-13, J2-14 and J2-15 are closed.

J2-12 CLOSED selects STOP/START and Reset commands from terminal strip.
OPEN selects STOP/START and Reset commands from Keypad.

J2-13 CLOSED allows other selections, see Speed Select Table 5-5 .
OPEN selects speed commanded from Keypad (if J2-14 and J2-15 are closed).
Note: When changing from Terminal Strip to Keypad (J2-12 or J2-13) the motor speed and direction will remain the same after the change.

J2-14 Firestat. Selects Level 1, Preset Speeds, Preset Speed 1.

J2-15 Freezestat. Level 1, Preset Speeds, Preset Speed 2 (if J2-14 is closed).

J2-16 Optional External Trip input (not required). If used, you must set Level 2 Drive Protect block, External Trip to “ON”.
CLOSED allows normal operation.
OPEN causes an External Trip to be received by the control (when programmed to “ON”).

Table 5-5 Speed Select Table – Fan Pump 2-Wire

J2-11	J2-13	J2-14	J2-15	Command
	OPEN	CLOSED	CLOSED	Keypad Speed Command
		OPEN		Level 1, Preset Speeds, Preset Speed 1
		CLOSED	OPEN	Level 1, Preset Speeds, Preset Speed 2
OPEN	CLOSED	CLOSED	CLOSED	Level 1, Input Setup, Command Source (parameter P1402)
CLOSED	CLOSED	CLOSED	CLOSED	Analog Input 1

Note: When command source is a unipolar signal (0-10V, 0-5V, 4-20mA etc.) and forward or reverse are closed, motion will occur (unless both are closed at the same time).

5.5.6 Fan Pump 3-Wire

Operation in the Fan Pump 3-Wire mode is controlled by the opto isolated inputs at J2-8 through J2-16. The opto inputs can be switches as shown in Figure 5-10 or logic signals from another device.

Figure 5-10 Fan Pump 3-Wire Connection

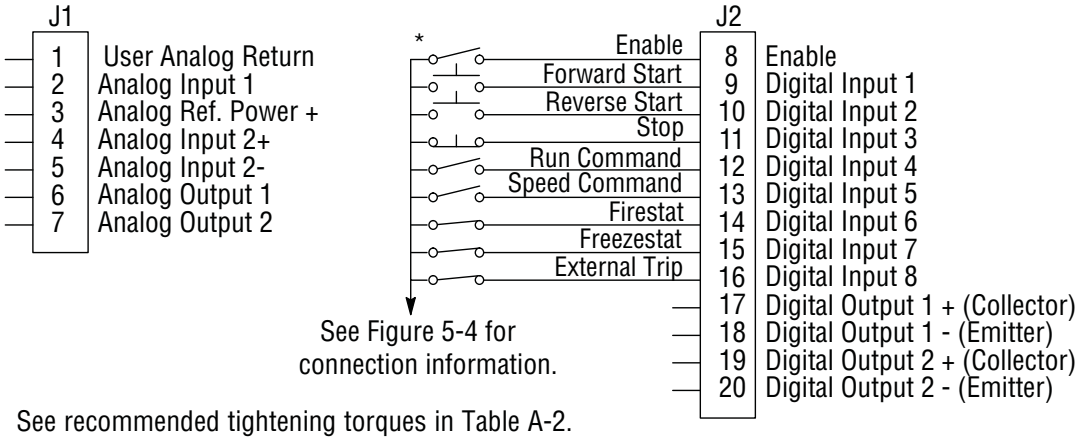

See recommended tightening torques in Table A-2.

*Note: Remove factory jumper from J2-8 and J3-24 before connecting switch at J2-8.

J2-8 CLOSED allows normal control operation.
OPEN disables the control and the motor coasts to a stop.

J2-9 MOMENTARY CLOSED starts motor operation in the Forward direction.
Note: Closing both J2-9 and J2-10 at the same time will reset a fault.

J2-10 MOMENTARY CLOSED starts motor operation in the Reverse direction.
Note: Closing both J2-9 and J2-10 at the same time will reset a fault.

J2-11 MOMENTARY OPEN motor decels to stop.

J2-12 CLOSED selects STOP/START and Reset commands from terminal strip.
OPEN selects STOP/START and Reset commands from Keypad.

J2-13 CLOSED allows other selections, see Speed Select Table 5-6.
OPEN selects speed commanded from Keypad (if J2-14 and J2-15 are closed).
Note: When changing from Terminal Strip to Keypad (J2-12 or J2-13) the motor speed and direction will remain the same after the change.

J2-14 Firestat. Selects Level 1, Preset Speeds, Preset Speed 1.

J2-15 Freezestat. Selects Level 1, Preset Speeds, Preset Speed 2 (if J2-14 is closed).

J2-16 Optional External Trip input (not required). If used, you must set Level 2 Drive Protect block, External Trip to “ON”.
CLOSED allows normal operation.
OPEN causes an External Trip to be received by the control (when programmed to “ON”).

Table 5-6 Speed Select Table – Fan Pump 3-Wire

J2-13	J2-14	J2-15	Command
	OPEN		Level 1, Preset Speeds, Preset Speed 1
CLOSED	CLOSED	OPEN	Level 1, Preset Speeds, Preset Speed 2
OPEN	CLOSED	CLOSED	Keypad Speed Command
CLOSED	CLOSED	CLOSED	Level 1, Input Setup, Command Source (parameter P1402)

5.5.7 Process Control

The process control mode provides an auxiliary closed loop general purpose PID set point control. The process control loop may be configured in various ways and detailed descriptions of the Process Control are given in MN707 “Introduction to Process Control”. The opto inputs can be switches as shown in Figure 5-11 or logic signals from another device.

Figure 5-11 Process Control Connections

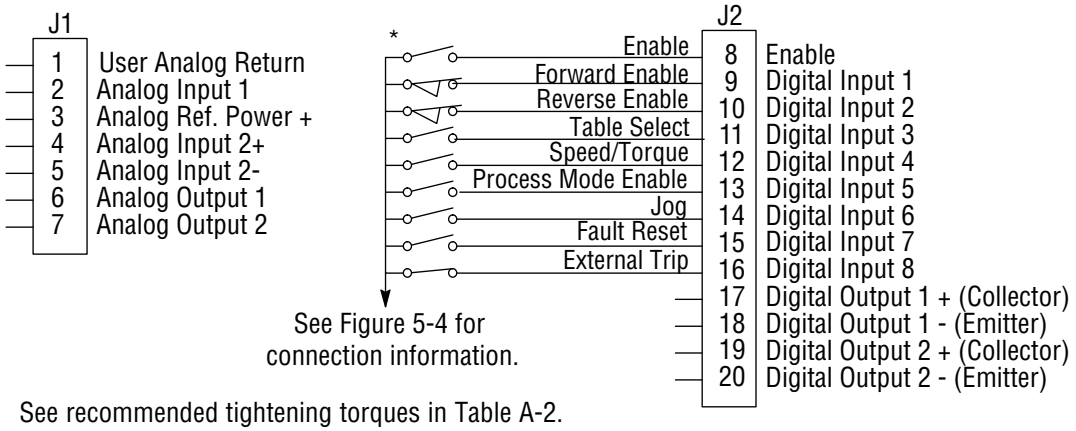

See recommended tightening torques in Table A-2.

*Note: Remove factory jumper from J2-8 and J3-24 before connecting switch at J2-8.

J2-8 CLOSED allows normal control operation.
OPEN disables the control and the motor coasts to a stop.

J2-9 CLOSED to enable operation in the Forward direction.
OPEN to disable Forward operation (drive will decel to a stop if a Forward speed command is still present).
Reverse operation is still possible if J2-10 is closed.

J2-10 CLOSED to enable operation in the Reverse direction.
OPEN to disable Reverse operation (drive will decel to a stop if a Reverse speed command is still present).
Forward operation is still possible if J2-9 is closed.
Note: If J2-9 and J2-10 are both opened, the drive will decel to a stop.

J2-11 CLOSED = TABLE 2,
OPEN = TABLE 1. Refer to Table 5-7.
Note: The Operating Mode (P1401) must be set to a mode that allows table switching in both tables T1 and T2.

J2-12 CLOSED Selects ACC/DEC group 2 (V/F) or selects torque mode (Vector).
OPEN Selects ACC/DEC group 1 (V/F) or selects speed mode (Vector).
Note: If a stop command is issued while in the torque (current) mode, the control will stop but will not maintain position (zero current). This is different than zero speed operation for the velocity mode.

J2-13 CLOSED to enable PID and FF. Feedforward (FF) is from Command Source (P1402).
OPEN to enable FF only.
PID is disabled with its integrator reset to zero.

J2-14 CLOSED to enable JOG mode. Jog in either direction is allowed if enabled by J2-9 or J2-10.

J2-15 CLOSED to reset a fault.
OPEN to run.

J2-16 Optional External Trip input (not required). If used, you must set Level 2 Drive Protect block, External Trip to “ON”.
CLOSED allows normal operation.
OPEN causes an External Trip to be received by the control (when programmed to “ON”).

Table 5-7 Table Select – Process Control

J2-11	Command
OPEN	Selects Parameter Table 1
CLOSED	Selects Parameter Table 2

Note: See multiple parameter sets in this section.

5.5.8 3 Speed Analog 2-Wire

Provides 2 wire input control and allows selection of 3 Preset Speeds. The values of the Preset Speeds are set in the Level 1 Preset Speeds block, Preset Speed #1, Preset Speed #2 and Preset Speed #3. The opto inputs can be switches as shown in Figure 5-12 or logic signals from another device.

Figure 5-12 3 Speed Analog 2-Wire Connection Diagram

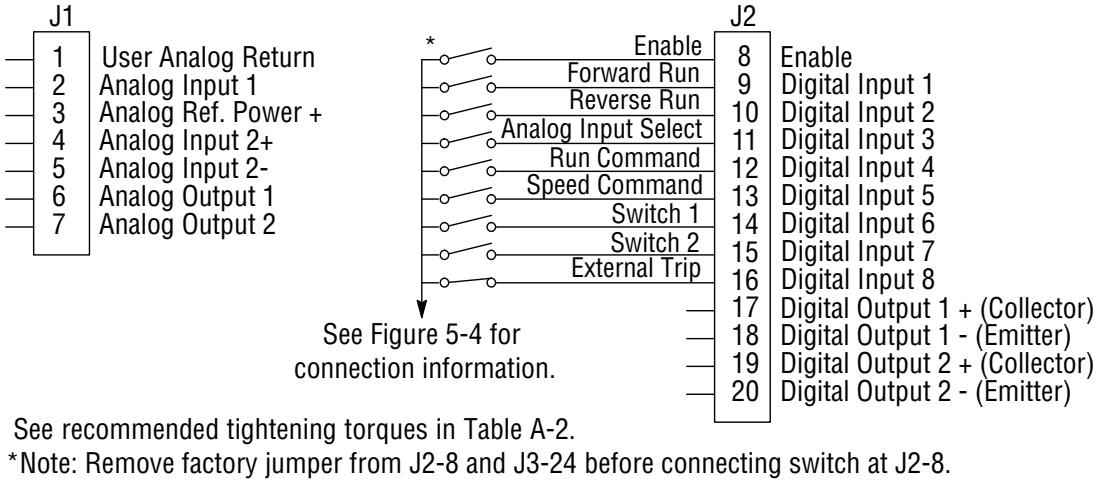

See recommended tightening torques in Table A-2.

*Note: Remove factory jumper from J2-8 and J3-24 before connecting switch at J2-8.

J2-8 CLOSED allows normal control operation.
OPEN disables the control and the motor coasts to a stop.

J2-9 CLOSED operates the motor in the Forward direction (with J2-10 open).
OPEN motor decels to stop.

J2-10 CLOSED operates the motor in the Reverse direction (with J2-9 open).
OPEN motor decels to stop.
Note: Closing both J2-9 and J2-10 at the same time will reset a fault.

J2-11 CLOSED selects Analog Input 1.
OPEN selects Level 1 Input block, Command Source parameter.
Note: If Command Source (Level 1 Input block) is set to Analog Input 1, then Analog Input 1 is always selected regardless of this switch position.

J2-12 CLOSED selects STOP/START and Reset Commands from the terminal strip.
OPEN selects STOP/START and Reset Commands from the keypad.

J2-13 CLOSED selects Level 1 Input block, Command Source parameter.
OPEN selects speed commanded from Keypad.
Note: When changing from Terminal Strip to Keypad (J2-12 or J2-13) the motor speed and direction will remain the same after the change.

J2-14 Selects Preset Speeds as defined in the Speed Select Table (Table 5-8).

J2-15 Selects Preset Speeds as defined in the Speed Select Table (Table 5-8).

J2-16 Optional External Trip input (not required). If used, you must set Level 2 Drive Protect block, External Trip to “ON”.
CLOSED allows normal operation.
OPEN causes an External Trip to be received by the control (when programmed to “ON”).

Table 5-8 Speed Select Table

J2-14	J2-15	Command
OPEN	OPEN	Level 1, Input Setup, Command Source (parameter P1402)
CLOSED	OPEN	Preset 1
OPEN	CLOSED	Preset 2
CLOSED	CLOSED	Preset 3

Note: When command source is a unipolar signal (0-10V, 0-5V, 4-20mA, etc.) and forward run or reverse run is closed, motion will occur (unless both forward run and reverse run are closed at the same time).

5.5.9 3 Speed Analog 3-Wire

Provides 3 wire input control and allows selection of 3 Preset Speeds. The values of the Preset Speeds are set in the Level 1 Preset Speeds block, Preset Speed #1, Preset Speed #2 and Preset Speed #3. The opto inputs can be switches as shown in Figure 5-13 or logic signals from another device.

Figure 5-13 3 Speed Analog 3-Wire Connection Diagram

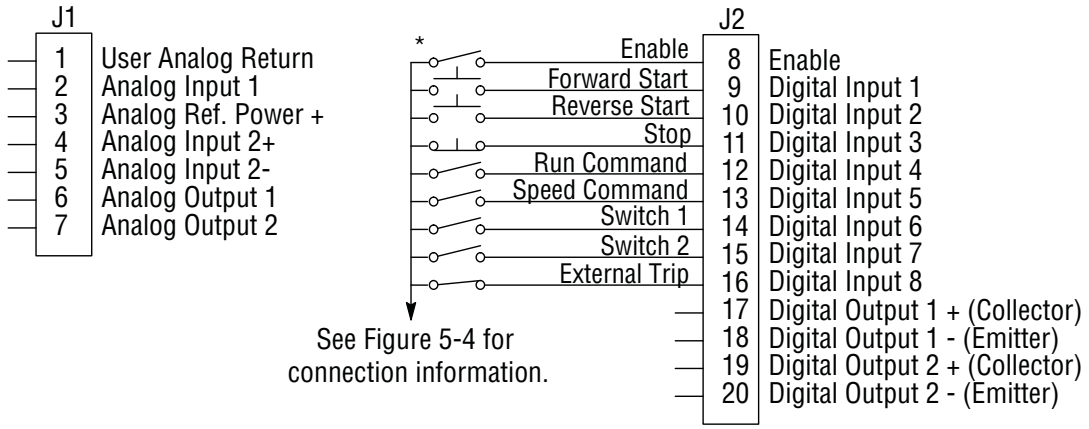

See recommended tightening torques in Table A-2.

*Note: Remove factory jumper from J2-8 and J3-24 before connecting switch at J2-8.

J2-8 CLOSED allows normal control operation.
OPEN disables the control and the motor coasts to a stop.

J2-9 MOMENTARY CLOSED starts motor operation in the Forward direction.

J2-10 MOMENTARY CLOSED starts motor operation in the Reverse direction.
Note: Closing both J2-9 and J2-10 at the same time will reset a fault.

J2-11 MOMENTARY OPEN motor decels to stop.

J2-12 CLOSED selects STOP/START and Reset Commands from the terminal strip.
OPEN selects STOP/START and Reset Commands from the keypad.

J2-13 CLOSED selects Level 1 Input block, Command Source parameter.
OPEN selects speed commanded from Keypad.
Note: When changing from Terminal Strip to Keypad (J2-12 or J2-13) the motor speed and direction will remain the same after the change.

J2-14 Selects Preset Speeds as defined in the Speed Select Table (Table 5-9).

J2-15 Selects Preset Speeds as defined in the Speed Select Table (Table 5-9).

J2-16 Optional External Trip input (not required). If used, you must set Level 2 Drive Protect block, External Trip to “ON”.
CLOSED allows normal operation.
OPEN causes an External Trip to be received by the control (when programmed to “ON”).

Table 5-9 Speed Select Table

J2-14	J2-15	Command
OPEN	OPEN	Level 1, Input Setup, Command Source (parameter P1402)
CLOSED	OPEN	Preset 1
OPEN	CLOSED	Preset 2
CLOSED	CLOSED	Preset 3

5.5.10 E-POT 2-Wire

Provides speed Increase and Decrease inputs to allow E-POT (Electronic Potentiometer) operation with 2 wire inputs. The values of the Preset Speeds are set in the Level 1 Preset Speeds block, Preset Speed #1 or Preset Speed #2. The opto inputs can be switches as shown in Figure 5-14 or logic signals from another device.

Figure 5-14 E-POT 2-Wire Connection Diagram

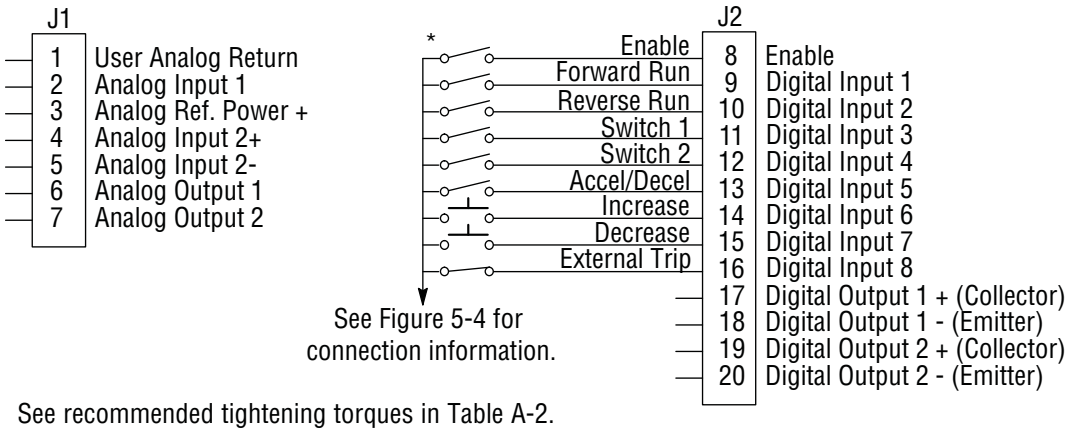

See recommended tightening torques in Table A-2.

*Note: Remove factory jumper from J2-8 and J3-24 before connecting switch at J2-8.

J2-8 CLOSED allows normal control operation.
OPEN disables the control and the motor coasts to a stop.

J2-9 CLOSED starts motor operation in the Forward direction.
OPEN motor decels to stop.

J2-10 CLOSED starts motor operation in the Reverse direction.
OPEN motor decels to stop.
Note: Closing both J2-9 and J2-10 at the same time will reset a fault.

J2-11 Selects Preset Speeds as defined in the Speed Select Table (Table 5-10).

J2-12 Selects Preset Speeds as defined in the Speed Select Table (Table 5-10).

J2-13 CLOSED selects ACC / DEC / S-ACC /S-DEC group 2.
OPEN selects ACC / DEC / S-ACC /S-DEC group 1.

J2-14 MOMENTARY CLOSED increases motor speed while contact is closed.

J2-15 MOMENTARY CLOSED decreases motor speed while contact is closed.

J2-16 Optional External Trip input (not required). If used, you must set Level 2 Drive Protect block, External Trip to “ON”.
CLOSED allows normal operation.
OPEN causes an External Trip to be received by the control (when programmed to “ON”).

Table 5-10 Speed Select Table

J2-11	J2-12	Command
OPEN	OPEN	Electronic Pot
CLOSED	OPEN	Level 1, Input Setup, Command Source (parameter P1402)
OPEN	CLOSED	Preset 1
CLOSED	CLOSED	Preset 2

5.5.11 E-POT 3-Wire

Provides speed Increase and Decrease inputs to allow E-POT operation with 3 wire inputs. The opto inputs can be switches as shown in Figure 5-15 or logic signals from another device.

Figure 5-15 E-POT 3-Wire Connection Diagram

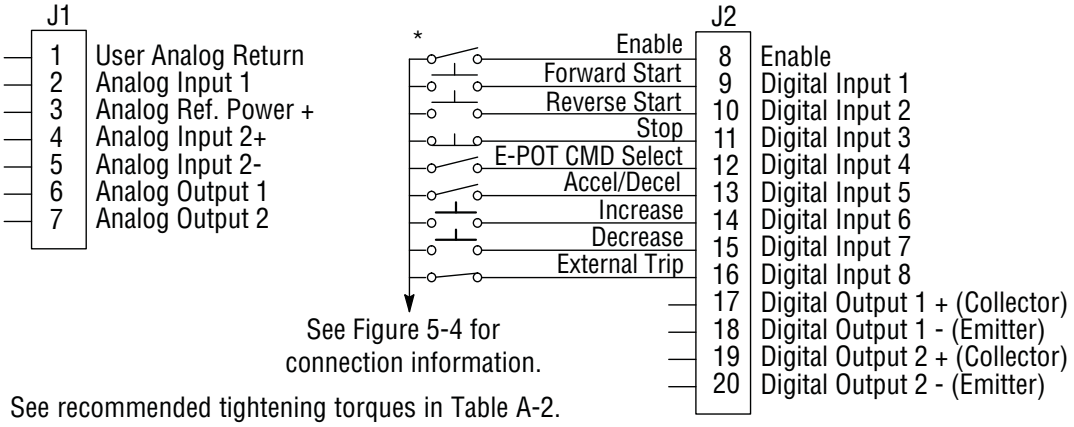

J2-8	CLOSED allows normal control operation. OPEN disables the control and the motor coasts to a stop.
J2-9	MOMENTARY CLOSED starts motor operation in the Forward direction.
J2-10	MOMENTARY CLOSED starts motor operation in the Reverse direction. **Note:** Closing both J2-9 and J2-10 at the same time will reset a fault.
J2-11	MOMENTARY OPEN motor decels to stop.
J2-12	CLOSED selects Level 1 Command Source parameter value. OPEN selects E-POT.
J2-13	CLOSED selects ACC / DEC / S-ACC /S-DEC group 2. OPEN selects ACC / DEC / S-ACC /S-DEC group 1.
J2-14	MOMENTARY CLOSED increases motor speed while contact is closed.
J2-15	MOMENTARY CLOSED decreases motor speed while contact is closed.
J2-16	Optional External Trip input (not required). If used, you must set Level 2 Drive Protect block, External Trip to “ON”. CLOSED allows normal operation. OPEN causes an External Trip to be received by the control (when programmed to “ON”).

5.5.12 Network

Provides bipolar speed or torque control. Preset speeds are set in software. The opto inputs can be switches as shown in Figure 5-16 or logic signals from another device.

Figure 5-16 Network Connection Diagram

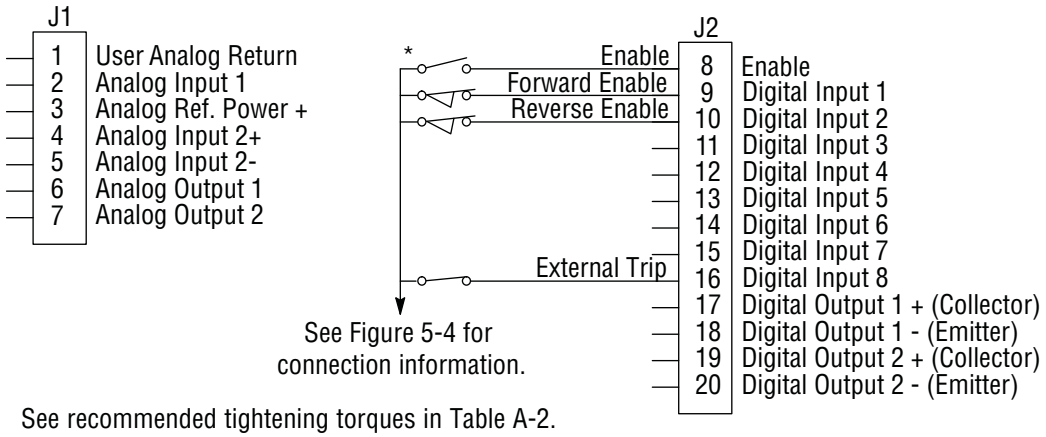

See recommended tightening torques in Table A-2.

*Note: Remove factory jumper from J2-8 and J3-24 before connecting switch at J2-8.

J2-8 CLOSED allows normal control operation.
OPEN disables the control and the motor coasts to a stop.

J2-9 CLOSED to enable operation in the Forward direction.
OPEN to disable Forward operation (drive will decel to a stop if a Network Forward command is still present).
Reverse operation is still possible if J2-10 is closed.

J2-10 CLOSED to enable operation in the Reverse direction.
OPEN to disable Reverse operation (drive will decel to a stop if a Network Reverse command is still present).
Forward operation is still possible if J2-9 is closed.

J2-16 Optional External Trip input (not required). If used, you must set Level 2 Drive Protect block, External Trip to “ON”.
CLOSED allows normal operation.
OPEN causes an External Trip to be received by the control (when programmed to “ON”).

Table 5-11 Modbus Coils that Affect this Mode

Coil		Coil	
2	Torque Mode (Vector Only)	35	Network Reference Source
3	Speed Mode	42	Select Acc/Dec Group 1
10	Process Torque (Vector Only)	43	Select Acc/Dec Group 2
11	Process Velocity	78	Stop, stops the motor
13	Network Current Limiting	79	Forward Run (terminal J2-9 must also be true)
15	Jog Mode	80	Reverse Run (terminal J2-10 must also be true)
33	Keypad Reference Source (local)	81	Bipolar Mode (terminals J2-9 and J2-10 must also be true)
34	Terminal Block Reference Source (remote)	82	Network Drive enable and drive hardware enable (terminal J2-8) must both be set else drive is disabled

5.5.13 Profile Run

Provides a speed profile consisting of seven segments to setup a cyclic operation or test cycle. The opto inputs can be switches as shown in Figure 5-17 or logic signals from another device. Speed settings for Speed curve 1 to speed curve 7 are Preset Speed 1 to Preset Speed 7. See level 3, Profile Run block for more information.

Figure 5-17 Profile Run Connection Diagram

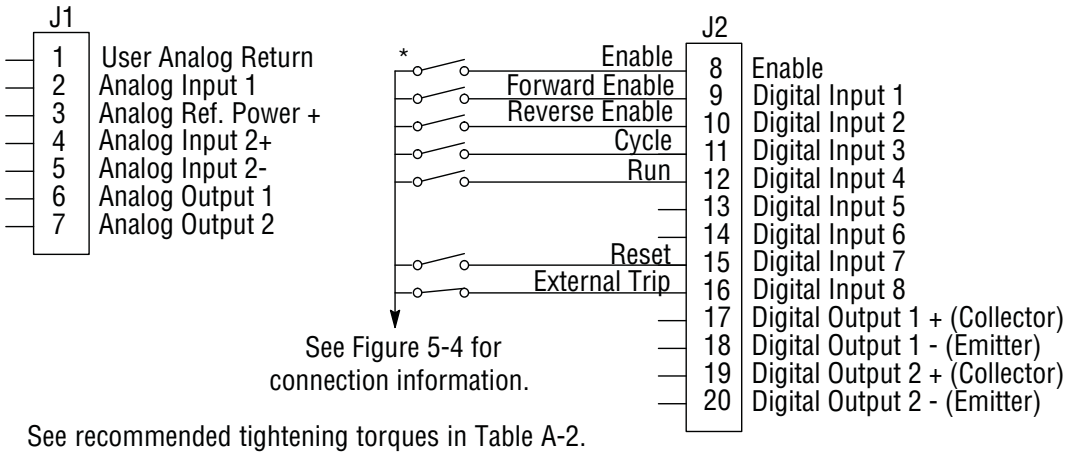

See recommended tightening torques in Table A-2.

*Note: Remove factory jumper from J2-8 and J3-24 before connecting switch at J2-8.

J2-8	CLOSED allows normal operation. OPEN disables the control and motor coasts to a stop.
J2-9	CLOSED to enable operation in the Forward direction. OPEN to disable Forward operation (drive will decel to a stop if a Forward profile run command is still present). Reverse operation is still possible if J2-10 is closed.
J2-10	CLOSED to enable operation in the Reverse direction. OPEN to disable Reverse operation (drive will decel to a stop if a Reverse profile run command is still present). Forward operation is still possible if J2-9 is closed.
J2-11	CLOSED runs the profile for an indefinite number of cycles. When the Level 3, Profile Run, Number of Cycles (P3001) cycle count is reached, the counter is reset and the mode restarts (continuous cycling). Example: If P3001 = 5 the profile runs 5 times, the counter is reset to zero, and will begin running 5 more cycles immediately. As long as pin 11 is closed it will keep resetting the count to zero every time the number of cycles is reached. OPEN cycle mode is terminated when cycle count is reached.
J2-12	CLOSED uses Run Command from J2-9 or J2-10. OPEN uses Run Command from Keypad.
J2-13	Not used.
J2-14	Not used.
J2-15	CLOSED resets an alarm or fault. OPEN normal operation.
J2-16	Optional External Trip input (not required). If used, you must set Level 2 Drive Protect block, External Trip to “ON”. CLOSED allows normal operation. OPEN causes an External Trip to be received by the control (when programmed to “ON”).

5.5.14 Bipolar

Provides bipolar speed or torque control (torque control is only available in Vector mode). Preset Speeds are set in software, the control is operated by the digital inputs and the command source. The opto inputs can be switches as shown in Figure 5-18 or logic signals from another device.

Figure 5-18 Bipolar Connection Diagram

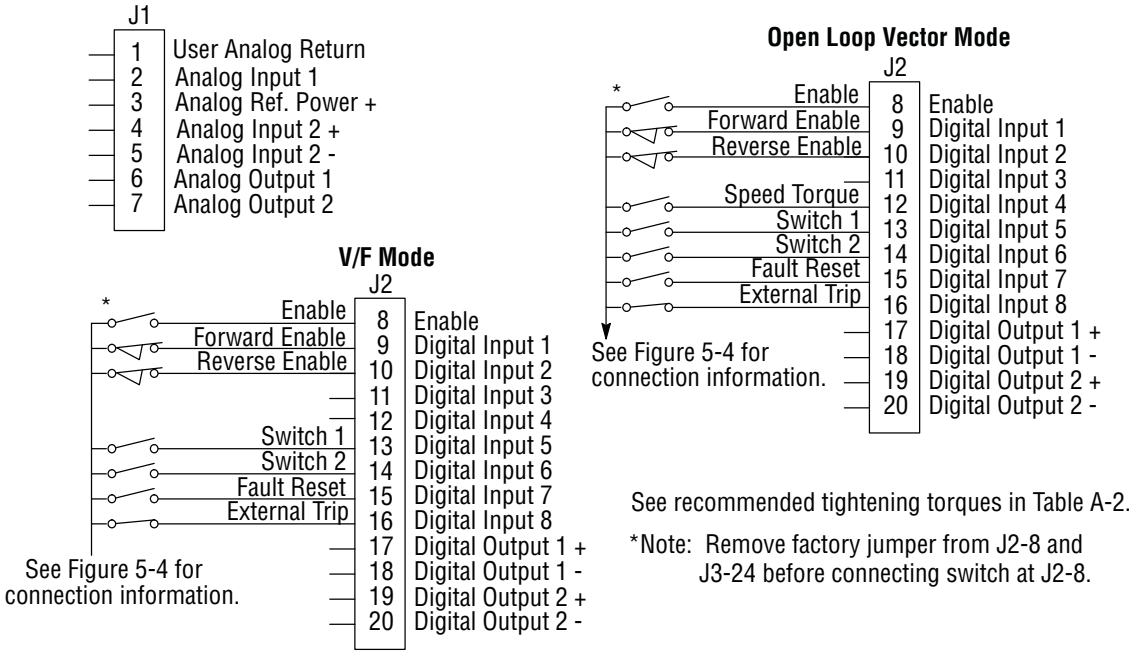

J2-8	CLOSED allows normal control operation. OPEN disables the control and the motor coasts to a stop.
J2-9	CLOSED to enable operation in Forward direction. OPEN to disable Forward operation (drive will decel to a stop if a Forward reference command is still present). Reverse operation is still possible if J2-10 is closed.
J2-10	CLOSED to enable operation in the Reverse direction. OPEN to disable Reverse operation (drive will decel to a stop if a Reverse reference command is still present). Forward operation is still possible if J2-9 is closed. **Note:** If J2-9 and J2-10 are both opened, the drive will decel to a stop.
J2-12	CLOSED puts the control in torque command mode, Vector modes only. OPEN puts the control in speed (velocity) command mode. **Note:** If a stop command is issued while in the torque (current) mode, the control will stop but will not maintain position (zero current). This is different than zero speed operation for the velocity mode.
J2-13 & J2-14	Select from four parameter tables as defined in Table 5-12.
J2-15	Momentary CLOSED to reset fault condition. OPEN allows normal operation.
J2-16	Optional External Trip input (not required). If used, you must set Level 2 Drive Protect block, External Trip to “ON”. CLOSED allows normal operation. OPEN causes an External Trip to be received by the control (when programmed to “ON”).

Table 5-12 Bipolar Mode Table Select Truth Table

J2-13	J2-14	Function
OPEN	OPEN	Parameter Table 1 (T1)
CLOSED	OPEN	Parameter Table 2 (T2)
OPEN	CLOSED	Parameter Table 3 (T3)
CLOSED	CLOSED	Parameter Table 4 (T4)

Note: See multiple parameter sets in this section.

Bipolar - Multiple Parameter Sets
The following procedure allows you to program up to four complete sets of parameter values and to use these multiple parameter sets. Each parameter table must be properly initialized before use. Each table must have an operating mode that supports table switching (Process Control, Bipolar or Network) and all motor data and related parameters must be the same in each table if switching tables with the drive enabled. When programming each parameter set, use the ENTER key to accept and automatically save parameter values.
Note: The control can be programmed in the REMOTE mode with the drive enabled. The control must be disabled to change the operating mode parameter. The operating mode is not stored with the other parameters in a parameter table.

1. If this is a new installation, do this procedure after the Pre-Operation Checklist and Power-Up Procedures at the end of this section.
2. Set the Level 1 INPUT block, Operating Mode parameter value to BIPOLAR in each of the parameter sets.
3. Set switches J2-13 and J2-14 to Parameter Table 1 (both switches open). Be sure switches J2-8, J2-9 and J2-10 are OPEN. Select Basic Parameters from the main Keypad menu. Perform each step including Calc Motor Model. This creates and saves the first parameter set which is numbered Table 1.
4. Set switches J2-13 and J2-14 to Parameter Table 2. Be sure switches J2-8, J2-9 and J2-10 are OPEN. Select Basic Parameters from the main Keypad menu. Perform each step including Calc Motor Model. This creates and saves the second parameter set which is numbered Table 2.
5. Set switches J2-13 and J2-14 to Parameter Table 3. Be sure switches J2-8, J2-9 and J2-10 are OPEN. Select Basic Parameters from the main Keypad menu. Perform each step including Calc Motor Model. This creates and saves the third parameter set which is numbered Table 3.
6. Set switches J2-13 and J2-14 to Parameter Table 4. Be sure switches J2-8, J2-9 and J2-10 are OPEN. Select Basic Parameters from the main Keypad menu. Perform each step including Calc Motor Model. This creates and saves the final parameter set which is numbered Table 4.
7. Remember that to change the value of a parameter in one of the parameter tables, you must first select the table using the switches. You cannot change a value in a table until you have first selected that table.
   Note: The active parameter table is selected by Level 2:Drive Configure:Active Parameter Table P0052.

Example:
Before attempting to switch parameter tables during operation “on the fly” using the digital inputs J2-13 & 14, the operating mode for each parameter table to be used must be initialized. Specifically, to switch from Table 1 to Table 2 then back to Table 1 both parameter Table 1 and parameter Table 2 must have operating modes that support table switching. Otherwise, once the switch occurs, switching back will not be possible.

To illustrate this, prior to running Bipolar Mode perform the following steps:

1. Use the keypad, set Level 2:Drive Configure:Active Parameter Table to 0 “Table 1”.
2. Go to Level One and set Level 1:Input Setup:Operating Mode to Bipolar.
   Repeat the above steps but this time for Table 2.
3. Use the keypad, set Level 2:Drive Configure:Active Parameter Table to 1 “Table 2”.
4. Go to Level One and set Level 1: Input Setup:Operating Mode to Bipolar.

The drive is now properly configured to switch between parameter Table 1 and Table 2.

5.5.15 Pulse Follower

Provides encoder following (velocity mode only) of a control from an upstream pulse reference.
This mode requires expansion board EXBHH007 and its operation is described in MN755.

5.5.16 PLC

Provides control from a PLC device (Programmable Logic Control) as described in Chapter 10 of this manual. Preset speeds are set in software. The opto inputs can be switches as shown in Figure 5-19 or logic signals from another device.

Figure 5-19 PLC Connection Diagram

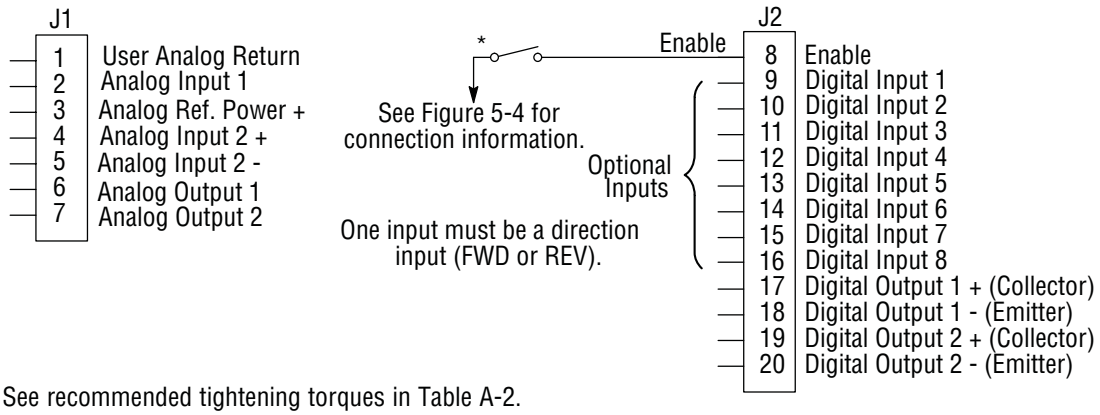

See recommended tightening torques in Table A-2.

*Note: Remove factory jumper from J2-8 and J3-24 before connecting switch at J2-8.

5.6 Digital Outputs

Digital Outputs 1 and 2 are opto isolated. Internal supply or a customer provided external power source may be used as shown in Figure 5-20. The maximum voltage from Digital Output to common when active is 1.0 VDC.
If the Digital Outputs are used to directly drive a relay, a flyback diode rated at 1A, 100V (IN4002 or equivalent) minimum should be connected across the relay coil. See Figure 5-21. Each opto output is programmed in the Output programming block.

Figure 5-20 Digital Output Power Connections

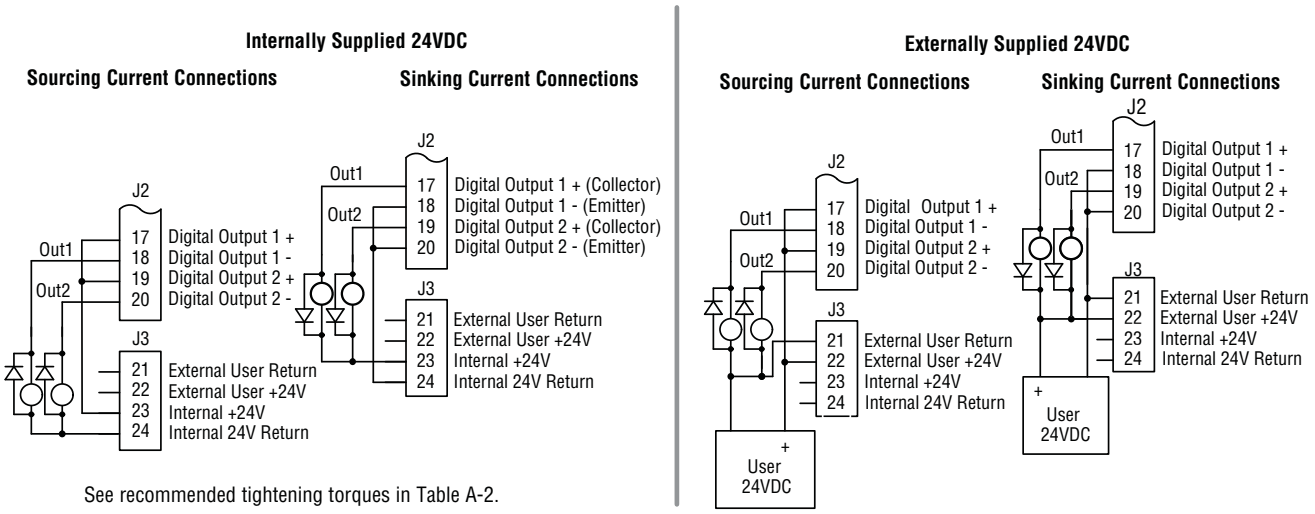

See recommended tightening torques in Table A-2.

Note: Digital Outputs are rated to 24VDC @ 60mA resistive (non-inductive).

5.7 Relay Outputs

Relay Outputs 1 and 2 provide N.O. and N.C. voltage free contacts. The internal relay function is shown in Figure 5-21.

Figure 5-21 Relay Contacts

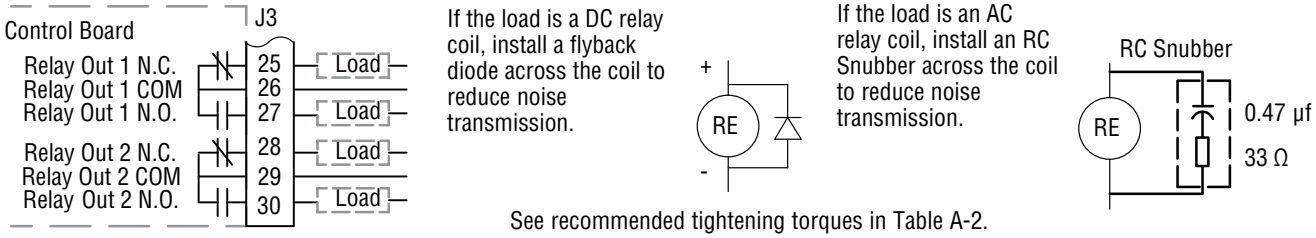

Note: Relay Outputs are rated to 10-30VDC or 240VAC @ 5A resistive (non-inductive).

5.8 USB Port

The USB port shown in Figure 5-22 is a full 12Mbps USB 2.0 compliant port for serial communications. The connections are described in Figure 5-22 and Table 5-13.

Figure 5-22 USB Receptacle Pin Identification

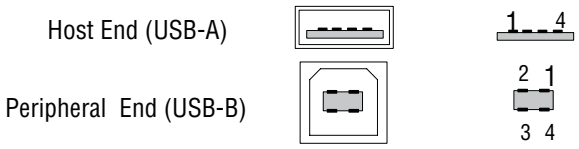

Table 5-13 USB Port Connections

Pin	Signal Name	Description
1	Vbus	USBus power from the host for monitoring
2	D-	Data Return
3	D+	Data In
4	GND	Power Supply Return

5.9 Communication Expansion Boards

The communication module slots are shown in Figure 5-23. All option boards are designed as plug-in modules.

Figure 5-23 Expansion Board Location

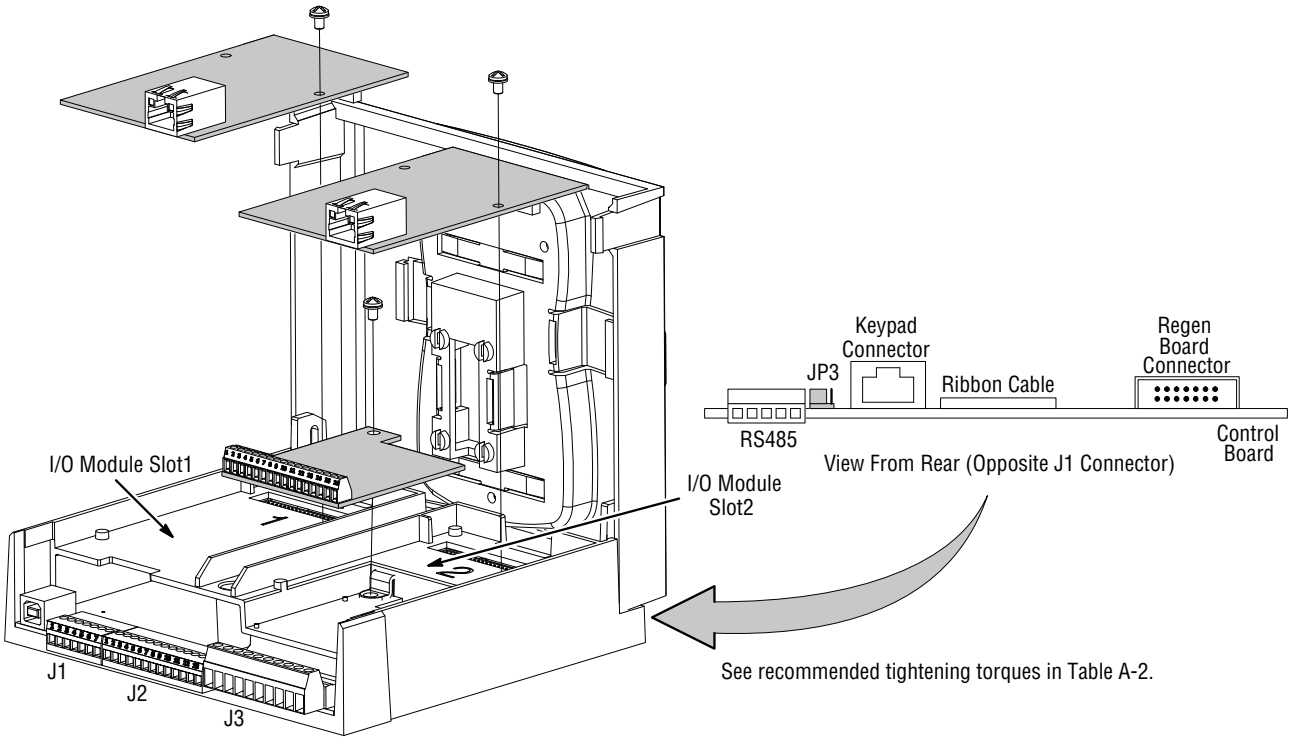

5.9.1 RS485 Modbus

The serial communications port on the control board supports RS485 communications, Figure 5-23. The baud rate and node addresses are selectable from the Keypad. Jumper JP3 (Figure 5-23) on the control board sets termination. As shown (pins 2 and 3 jumpered) no terminating resistor is used. Setting the jumper to pins 1 and 2 selects the 120 ohm terminating resistor for the RS485 cable. The RS485 connections are described in Table 5-14. Refer to MN744 for connection and software information. Note that the hardware specifications for this port follow the RS-485 standard.

Table 5-14 RS485 Multi-Drop Port Connections

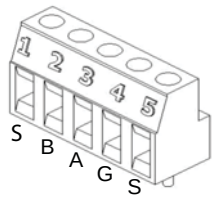

Pin	Signal Name	Description
1	SCR	Screen termination, connected to chassis on the control board
2	B	Data Return
3	A	Data In
4	GND	Power Supply Return
5	SCR	Screen termination, connected to chassis on the control board

5.10 Opto-Isolated Inputs

The equivalent circuit of the nine opto inputs is shown in Figure 5-24. The function of each input depends on the operating mode selected and are described previously in this section. This Figure also shows the connections using the internal opto input Supply.

Figure 5-24 Opto-Input Connections

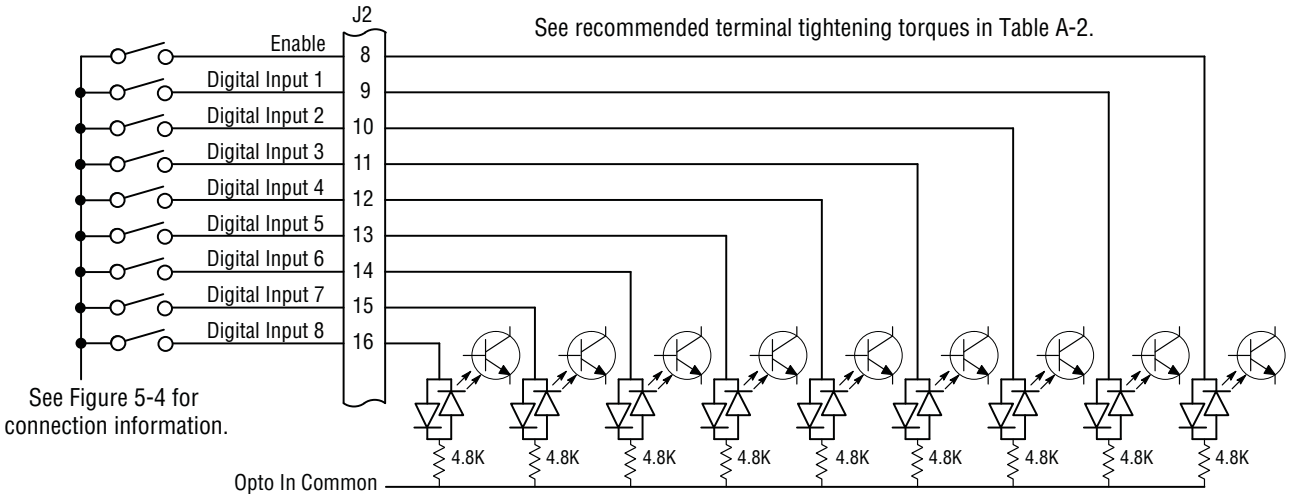

5.11 Opto-Isolated Outputs

The outputs are opto isolated and may be configured for sinking or sourcing. However, all must be configured the same. The maximum voltage from opto output to common when active is 1.0 VDC (TTL compatible). The equivalent circuit for the opto isolated outputs is shown in Figure 5-25.

Figure 5-25 Opto-Output Equivalent Circuit

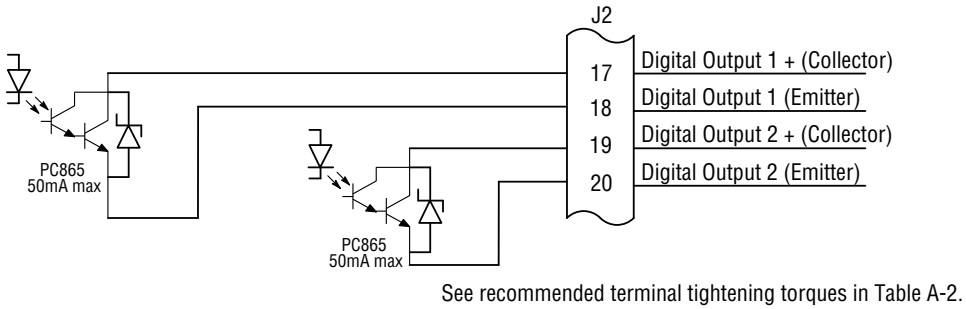

5.12 Pre-Operation Checklist (Check of Electrical Items)

1. Verify AC line voltage at source matches control rating.
2. Inspect all power connections for accuracy, workmanship and tightness and compliance to codes.
3. Verify control and motor are grounded to each other and the control is connected to earth ground.
4. Check all signal wiring for accuracy.
5. Be certain all brake coils, contactors and relay coils have noise suppression. This should be an R-C filter for AC coils and reverse polarity diodes for DC coils. MOV type transient suppression is not adequate.

5.13 Powerup Procedure

1. Remove all power from the control.
2. Verify that any enable inputs to J2-8 are open.
3. Disconnect the motor from the load (including coupling or inertia wheels).
4. Turn power on. Be sure there are no faults.
5. Set the Level 2 Output Limits block, “OPERATING ZONE” parameter as desired (STD CONST TQ, STD VAR TQ, QUIET CONST TQ or QUIET VAR TQ).
6. If external dynamic brake hardware is used, set the Level 2 Brake Adjust block “Resistor Ohms” and “Resistor Watts” parameters.
7. Enable the control (J2-8 connect to J3-24).
   WARNING: The motor shaft will rotate during this procedure. Be certain that unexpected motor shaft movement will not cause injury to personnel or damage to equipment.
8. Select basic parameters from the main Keypad menu. Perform each step including “CALC MOTOR MODEL” (P2414).
9. Select “Advanced Prog”, Level 2 Blocks, Auto Tune, “One-Step Tuning” and run all tests.
10. Remove all power from the control.
11. Couple the motor to its load.
12. Verify freedom of motion of motor shaft.
13. Verify the motor coupling is tight without backlash.
14. Verify the holding brakes if any, are properly adjusted to fully release and set to the desired torque value.
15. Turn power on. Be sure no errors are displayed.
16. Execute “Speed Loop Tune” (Vector Mode Only).
17. Run the drive from the keypad using one of the following: the arrow keys for direct speed control, a keypad entered speed or the JOG mode.
18. Select and program additional parameters to suit your application.

The control is now ready for use in the keypad mode. If a different operating mode is desired, refer to Chapter 5 Operating Modes and Chapter 6 Programming and Operation.

5.14 Mint WorkBench

As an alternative to using the keypad for programming and setup, Baldor's Mint WorkBench software version 5.5 or greater can be used. When the software is installed and configured, the help topics provide information on how to use the software. The following procedure will help you install and configure the software.
Before you can use Mint WorkBench software, it must be installed on your PC's hard drive.
Be sure that the USB port of the control is connected to a USB port on your PC.
This must be connected to establish communication after the software is installed.

5.14.1 Install USB Driver

The control connects to a PC by using USB cable connection. This procedure installs the USB driver that is required by Windows.

1. The software must be downloaded from the Baldor site: http://www.baldor.com. Simply log into that web site and select Products then select AC Controls then select VS1SP to locate the Software tools.
2. USB Device Driver

Figure 5-26 USB Driver

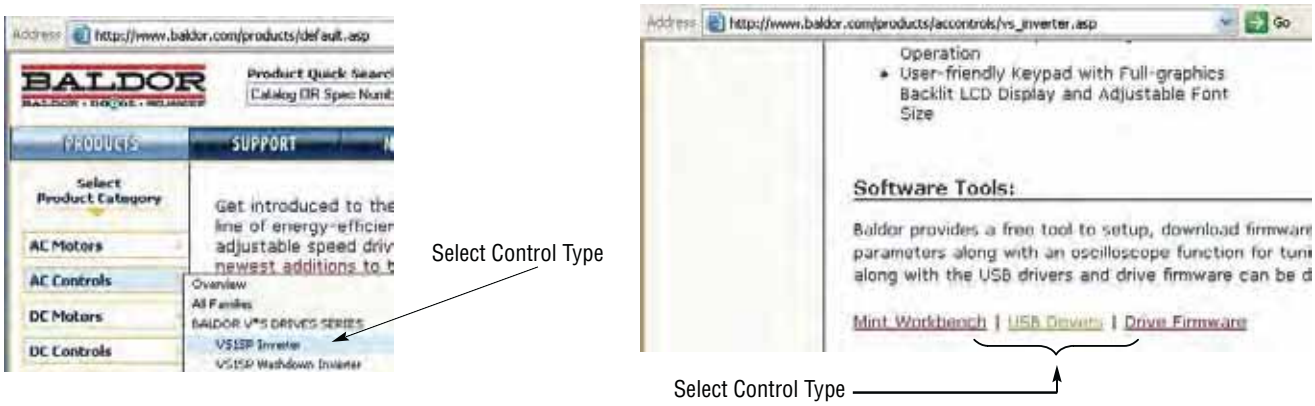

3. Click on USB Device Drive and select Open to view the uncompressed files.

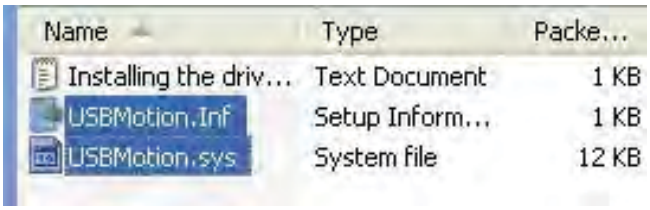

4. Be sure the control is powered up.
5. Connect the USB cable to the control.
6. Install the USB drivers.
   a. Choose "install from a list or specific location" and click Next.
   b. Choose "Don't search I will choose the driver to install".
   c. Click "Have Disk". Then enter the location that you stored the inf and sys file (in step 3) and click Next to install the driver files.

7. Proceed to the Mint WorkBench installation procedure.

5.14.2 Install Mint WorkBench

1. Use the Add/Remove Software feature of the Windows control panel and remove previous versions of Mint WorkBench software.
2. The software must be downloaded from the Baldor site: http://www.baldor.com
   Simply log into that web site, Figure 5-26, and locate
   1. Mint WorkBench v X.x
3. Click on Download the software, and run the installation program.
4. When installation is complete, the Mint WorkBench program will start, see Figure 5-27.
   a. Click “Start New Project”.
   b. Click “Scan”.
   c. Select “H2” platform from the list.
   d. Click Select and the Mint WorkBench main menu is displayed, see Figure 5-28.

Figure 5-27 Mint WorkBench Software Set-up

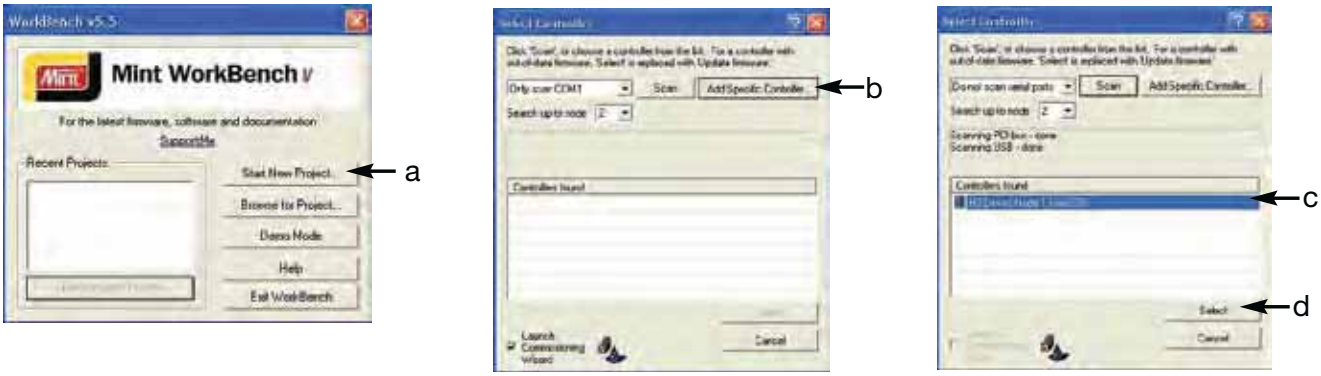

Figure 5-28 Communication Established

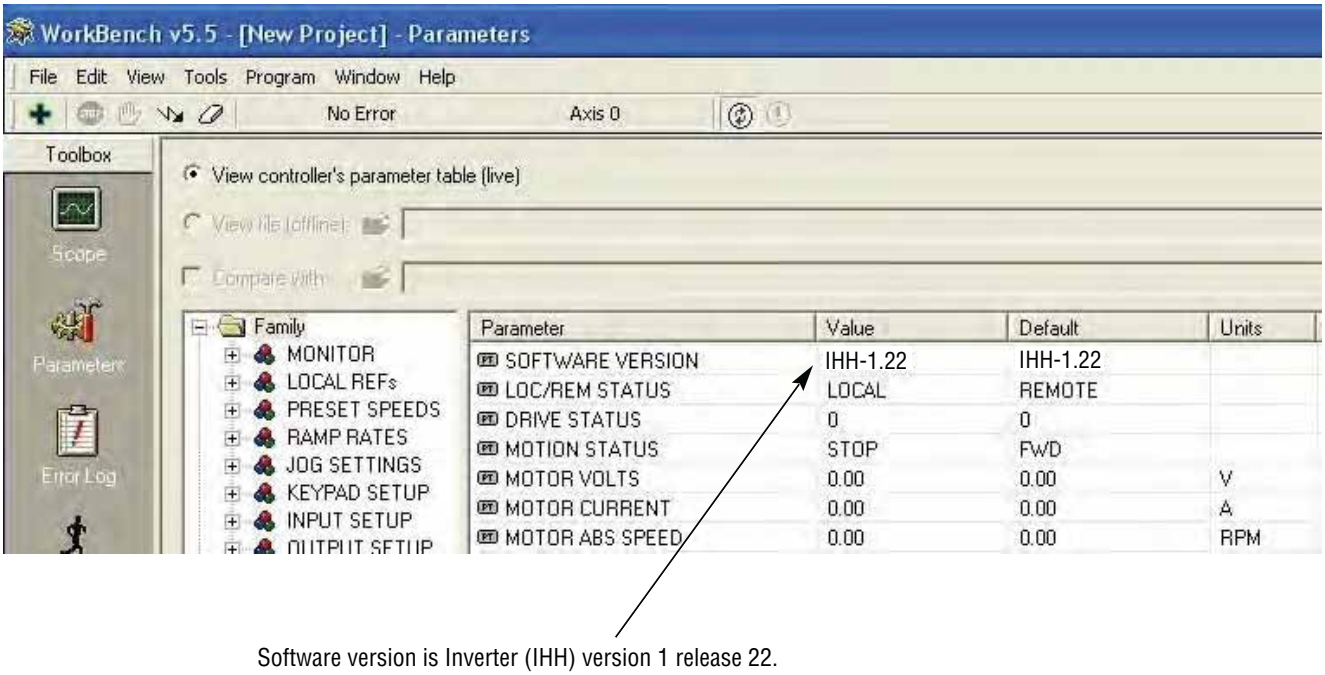

Software version is Inverter (IHH) version 1 release 22.

5. Parameter values can be modified as desired.

Figure 5-29 Mint WorkBench Main Menu

Change a Parameter Value Example:
Change Preset Speed 1 to 48 RPM.
Click on Preset Speeds Block.
Click in the Value Column for Preset Speed 1.
Type in the new value “48” press enter.
Note that the keypad will instantly display the new value.

If the parameter value is a selection, a list will appear for you to make the selection.

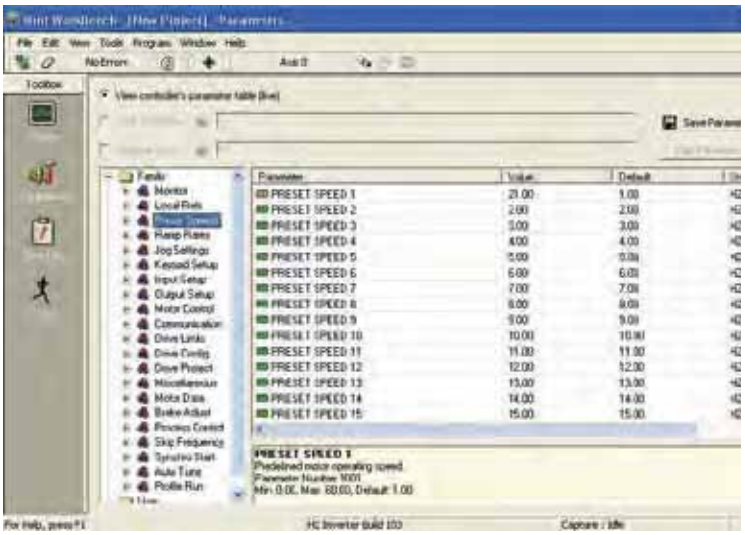

6. When all parameter values are as desired, they can be saved to a file. Click File, see Figure 5-30. The PTX file is saved in My Documents\My Mint directory.
7. When complete, the entire project can be saved to your PCs hard disk for future use. Click File, Save File, see Figure 5-30. The WBX file is saved in C:\Program Files\Mint Machine Center\Firmware\ you can choose the directory.

Figure 5-30 Save Parameters & Project

Note: For Parameter Tables, a .ptx extension is automatically added when you enter a file name.

Note: For Mint WorkBench Projects, a .wbx extension is automatically added when you enter a file name.

The help menus provided with the software can be used to explore other features and descriptions of menu choices. As previously stated, either the Mint WorkBench program or the Keypad can be used to adjust parameter values for the application.

5.14.3 Update Firmware

Installing chx Files

(If you are installing msx files skip this procedure and go to “Installing msx Files”).
This procedure erases memory and restores factory settings. All user data will be lost. After the firmware download, all user data values must be reprogrammed.

1. The software must be downloaded from the Baldor site: http://www.baldor.com
   Simply log into that web site, Figure 5-26. Locate and click on Drive Firmware.
2. Save the firmware file to a location on your hard disk.
   (for example: C:\Program Files\Mint Machine Center\Firmware\VS1 Vector\IHH_1_22.chx).

This procedure erases memory and restores factory settings. All user data will be lost. After the firmware download, all user data values must be reprogrammed.

3. Start the Workbench program as before, see Figure 5-31.
   a. Select “Download Firmware” from the Tools menu.
   b. Select “Advanced” then “Download Firmware File”, click “Yes” at the warning to download.
   c. Select the firmware file to download (for example: IHH_1_22chx).
   d. When complete, the new firmware version is displayed and the control is ready for use.

Note: All user settings and motor parameter values have been over written by factory settings.

Figure 5-31 Mint WorkBench Firmware Update

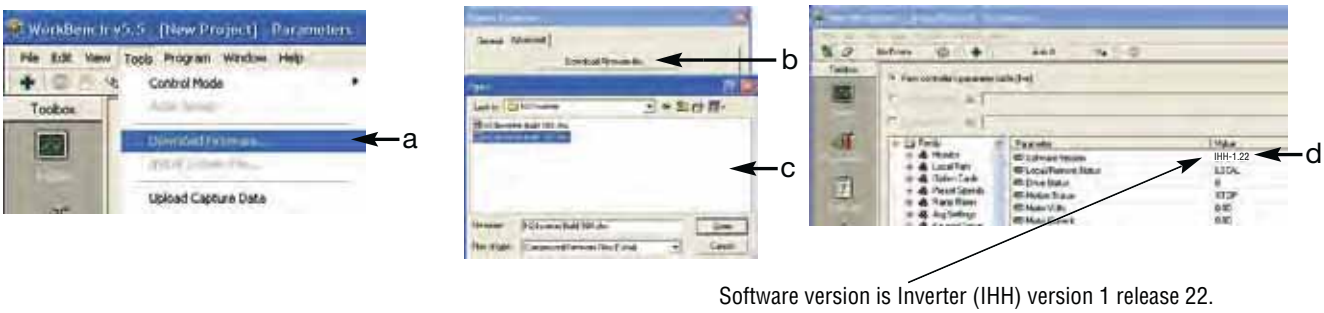

Installing A Mint System (.msx) file

(If you are installing chx files skip this procedure and go to “Installing chx Files”).
This procedure erases memory and restores factory settings. All user data will be lost. After the firmware download, all user data values must be reprogrammed.

1. The msx file must be saved to a location on your hard disk (for example: C:\Program Files\Mint Machine Center\Firmware\VS1 Inverter\VS1 Inverter Build 122msx). This procedure installs the msx file contents within the same directory (chx, ini and txt files are extracted).
2. Start the WorkBench program as before, see Figure 5-27.
   a. Select “Install System File Firmware” from the Tools menu, Figure 5-32.
   b. Select the firmware file to download (for example: VS1 Inverter Build 122.msx)
   c. Select OPEN.
   d. When complete, the install successful message is displayed, click OK.

Figure 5-32 Mint WorkBench Firmware Update

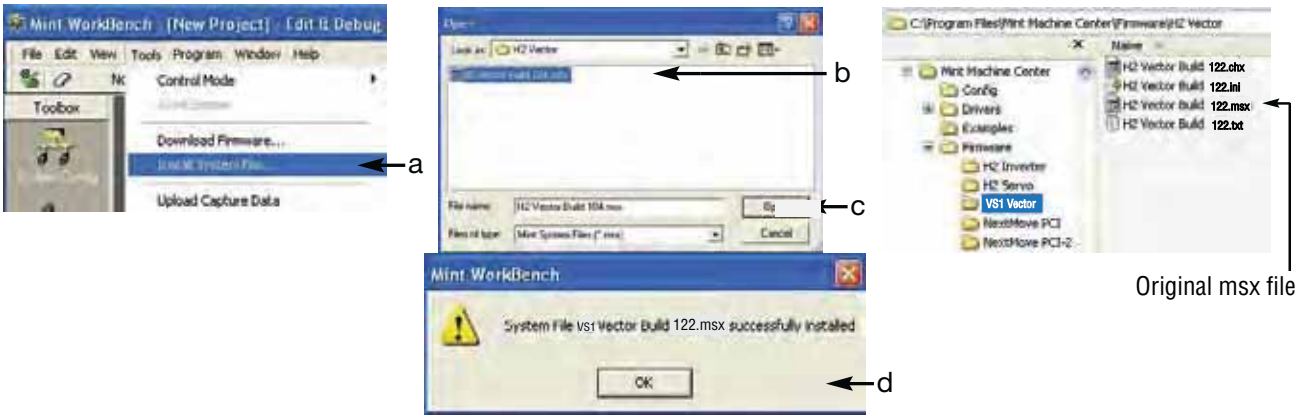

3. This procedure erases memory and restores factory settings. All user data will be lost. After the firmware download, all user data values must be reprogrammed.
   a. Select “Download Firmware” from the Tools menu, Figure 5-33.
   b. Select control type and version to download.
   c. Select Download to control to download the firmware.
   d. When complete, the new firmware version is displayed and the control is ready for use.

Note: All user settings and motor parameter values have been over written by factory settings.

Figure 5-33 Mint WorkBench Firmware Update

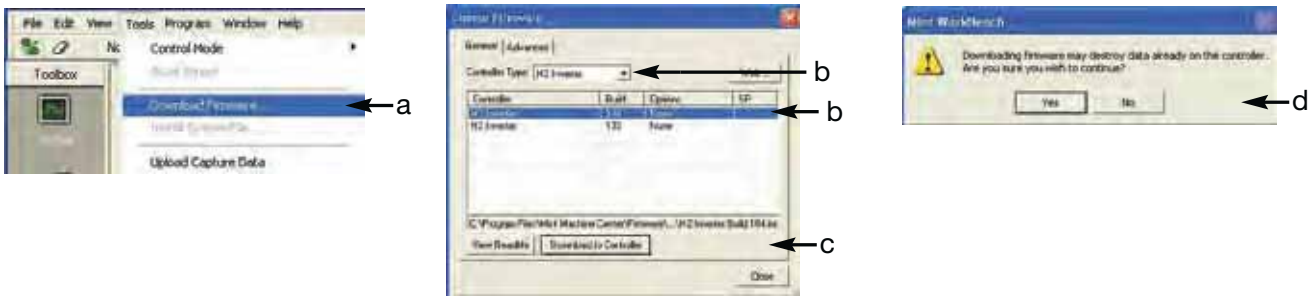

Chapter 6
Using the Keypad

6.1 Keypad Components

The keypad is used to program the control parameters, to operate the motor and to monitor the status and outputs of the control by accessing the display options, the diagnostic menus and the fault log. Additionally drive parameters can be stored in the keypad for future retrieval.

6.1.1 Display Description

Keypad Display – Displays status Information during Local or Remote operation. It also displays information during parameter setup and fault or Diagnostic information.

F1 – Alternates or "toggles" between The last two menu choices or function Indicated by text displayed directly Above key.

ENTER – Press ENTER to save parameter value changes. In the display mode the ENTER key is used to directly set the local speed reference. It is also used to select other operations when prompted by the keypad display.

MENU/ESC – Selects the menu display when viewing status. The following menu items are shown: Status, Basic Params, Advanced Prog, Event Log, Diagnostics and Display Options. Backs up one level for other screens.

REV – When pressed, initiates a reverse direction run command.

STOP – Initiates a stop command. Note: Pressing the stop key twice in succession will immediately disable the drive placing the motor in a coast stop condition.

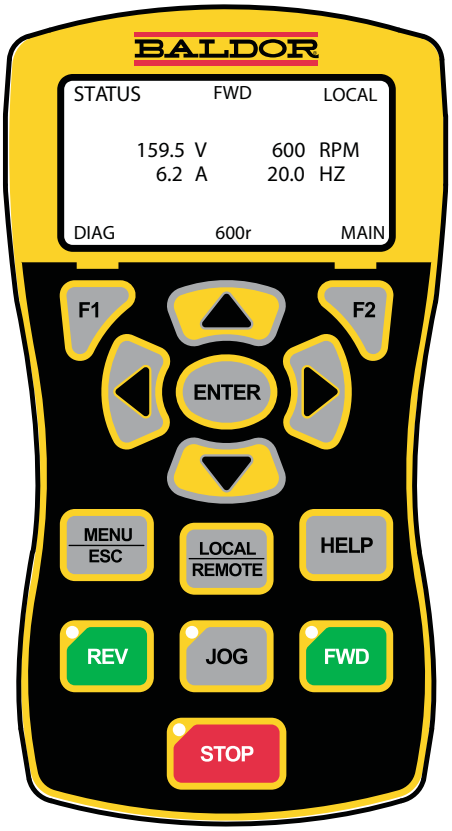

Display Diagnostics –
I/O Status
I/O Function configuration
Modified Parameters
Control Operation Data
Custom Units
Fault Display – 10 Faults with Time Stamp

F2 – Clears faults or undo parameter edit changes or function indicated by text displayed directly above key.

▲ Up Arrow
▼ Down Arrow
◀ Left Arrow
▶ Right Arrow

Moves cursor to select menu choices.

LOCAL/REMOTE – Switches between local and remote modes.

HELP – Provides help at each display screen, setup parameter and fault. Press to view/close help information.

JOG – Initiates Jog mode. Press FWD or REV for motion. Only active in local mode.

FWD – When pressed, initiates a forward direction run command.

Indicator Lights – (on indicated key)
STOP key with red light indicator.
FWD key with green light indicator.
REV key with green light indicator.
JOG key with green light indicator.

6.1.2 Display Features

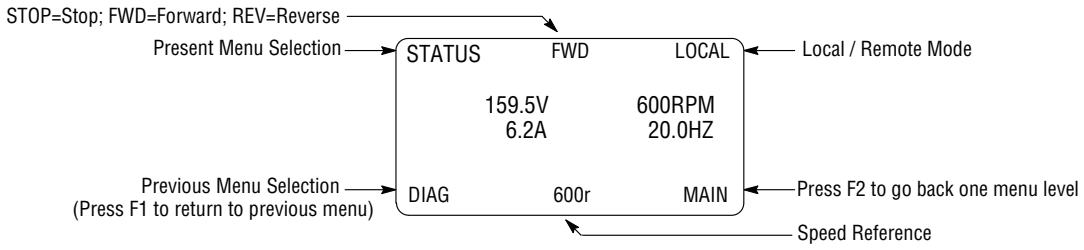

Prog Mode Display Features:

The first character of the parameter number has the following meaning:

F = Factory Setting (parameter value has not been changed)

C = Custom value set by user (not factory value)

V = Parameter value may be Viewed but not changed

L = Parameter value is locked, security code required

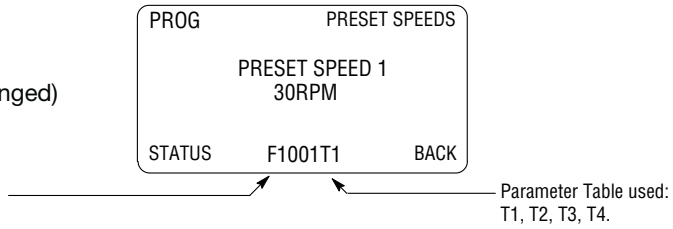

6.2 Status Mode

When AC power is applied to the control, the keypad will display the status.

Action	Description	Display	Comments
A	S	BALDOR	
	A S	STATUS STOP LOCAL A DIAG 0.00r MAIN	▶ ◀
▶		STATUS LOCAL STOP A DIAG 0.00r MAIN	
▶		STATUS LOCAL STOP DIAG 0.00r MAIN	
▶		STATUS LOCAL A STOP DIAG 0.00r MAIN	
▶		STATUS LOCAL STOP A DIAG 0.00r MAIN	
▶		STATUS LOCAL STOP A DIAG 0.00r MAIN	
▶		STATUS STOP LOCAL A DIAG 0 r MAIN	
		STATUS FWD LOCAL A DIAG 600r MAIN	

6.3 Menu Display

After power-up the display shows the Status screen. Press the Menu key to display menu options.

Action	Description	Display	Comments
S		STATUS STOP LOCAL A DIAG 0.00r MAIN	
		STATUS BASIC PARAMS ADVANCED PROG EVENT LOG DIAGNOSTICS ▼ DIAG BACK	▲ ▼

6.4 Basic Params

From the Menu display screen, select Basic Params and press Enter.

Parameter Status
All programmable parameters are displayed with an “F” at the bottom center of the display. “F” means it is the factory setting value. “C” means it is a custom value set by the user. “V” means the parameter value may be viewed but not changed while the motor is operating. If the parameter is displayed with an “L”, the value is locked and may not be changed until the security code is entered.

Action	Description	Display	Comments
Basic Params Display	Control type display. The parameter number “1601” is given at the bottom center of the display. “F”1601 indicates it is at the factory setting and has not been changed.	BASIC MOTOR CONTROL CONTROL TYPE V/F Control STATUS F1601T1 BACK	Press Enter to select the parameter and press the ▲ or ▼ keys to change the preset value to a di erent control type. Press enter when nished to exit and save the new value or F2 to exit without saving.
Press ▶ to go to the next Basic Params screen.		BASIC MOTOR DATA MOTOR RATED HP 10.0 HP STATUS F2416T1 BACK	
Press ▶ to go to the next Basic Params screen.		BASIC MOTOR DATA MOTOR RATED VOLT 240.0 V STATUS F2401T1 BACK	T1 indicates the Table Number or the parameter list in use. Four parameter tables are available, T1, T2, T3 or T4 (See Level 2, Drive Cong, Active Param Table parameter P0052.)
Press ▶ to go to the next Basic Params screen.		BASIC MOTOR DATA MOTOR RATED AMPS 9.6 A STATUS F2402T1 BACK	
Press ▶ to go to the next Basic Params screen.		BASIC MOTOR DATA MOTOR MAG AMPS 3.1 A STATUS F2405T1 BACK	
Press ▶ to go to the next Basic Params screen.		BASIC MOTOR DATA MOTOR RATED SPD 1754 RPM STATUS F2403T1 BACK	

Basic Params Continued

Action	Description	Display	Comments
▶ B		BASIC MOTOR DATA MOTOR RATED FREQ 60.00 HZ STATUS F2404T1 BACK	
▶ B		BASIC MOTOR DATA CALC MOTOR MODEL No STATUS F2414 BACK	
▶ B		BASIC INPUT SETUP OPERATING MODE Keypad STATUS F1401T1 BACK	
▶ B		BASIC RAMP RATES ACCEL TIME 1 3.0 SEC STATUS F1101T1 BACK	
▶ B		BASIC RAMP RATES DECEL TIME 1 3.0 SEC STATUS F1104T1 BACK	
▶ B		BASIC DRIVE LIMITS MIN OUTPUT SPEED 0.00 Hz STATUS F2002T1 BACK	
▶ B		BASIC DRIVE LIMITS MAX OUTPUT SPEED 60.00 Hz STATUS F2003T1 BACK	
▶ B		BASIC END OF BASIC PARAMS STATUS BACK	

How to Change a Value
These are the BASIC screens. To change a value, simply display the desired parameter and press Enter and change the value. For example:

Action	Description	Display	Comments
▶ B		BAS MOTOR CONTROL CONTROL TYPE STATUS F1601T1 BACK	
		EDIT MOTOR CONTROL CONTROL TYPE END F1601T1 BACK	
▲ ▼		EDIT MOTOR CONTROL CONTROL TYPE Open Vector END F1601T1 BACK	
		BASIC MOTOR CONTROL CONTROL TYPE Open Vector STATUS C1601T1 BACK	

When editing a parameter value, the function of the “F1” key (previous parameter block) shown in the lower left of the display changes to one of the following to help select the parameter value: TOP Press “F1” to display and select the first value in the list of parameter values.

When the first parameter value is displayed, press Enter or scroll to select a different value. END Press “F1” to display and select the last value in the list of parameter values.

When the last parameter value is displayed, press Enter or scroll to select a different value. DEF Press “F1” to display and select the Factory Setting value.
PREV Press “F1” to display and select previous value.
MIN Press “F1” to display and select minimum parameter value.
MAX Press “F1” to display and select maximum parameter value.

Note: When END is displayed, Pressing “F1” will display the last value in the list but then TOP or DEF is displayed. The “F1” key allows you to quickly move through large lists of parameter choices. The value is not selected until you press “Enter”.

6.5 Save Parameter Values

The keypad keys and display work with the memory of the control. When a parameter value is displayed, the displayed value is the value stored in control memory. The changes are written to non-volatile memory and are stored even when power is removed. Normal control operation can resume when power is restored.

Keypad memory is only used to backup the four parameter tables stored in control memory. This means that after the parameters are configured for the application and the control operation is as desired, a copy of the parameters can be saved to keypad memory as a backup copy. This backup copy can be restored at any time. This is useful to restore program operation after a firmware update or to make several controls operate the same. It prevents having to make the changes to each control individually.

Action	Description	Display	Comments
	G A S	PRESET SPEEDS RAMP RATES JOG SETTINGS KEYPAD SETUP INPUT SETUP STATUS BACK	
S	S A A S A	PROG KEYPAD SETUP PARAMS TO KEYPAD No STATUS F1310 BACK	
		EDIT KEYPAD SETUP PARAMS TO KEYPAD Yes STATUS F1310 BACK	▲ S
		PROG KEYPAD SETUP PARAMS TO KEYPAD No STATUS F1310 BACK	S

A copy of all four parameter tables have now been saved to non-volatile keypad memory.

6.6 Restore Parameter Values

The keypad keys and display work with the memory of the control. When a parameter value is displayed, the displayed value is the value stored in control memory. The changes are written to non-volatile memory and are stored even when power is removed. Normal control operation can resume when power is restored.

Keypad memory is only used to backup the four parameter tables stored in control memory. This means that after the parameters are configured for the application and the control operation is as desired, a copy of the parameters can be saved to keypad memory as a backup copy. This backup copy can be restored at any time. This is useful to restore program operation after a firmware update or to make several controls operate the same. It prevents having to make the changes to each control individually.

Action	Description	Display	Comments
	G A S	PRESET SPEEDS RAMP RATES JOG SETTINGS KEYPAD SETUP INPUT SETUP	
S	S A S	PROG KEYPAD SETUP DOWNLOAD SELECT ALL STATUS F1311T1 BACK	**A** **otor** **t er** A
	S A A A S	PROG KEYPAD SETUP KEYPAD TO PARAMS No STATUS F1312 BACK	
		EDIT KEYPAD SETUP KEYPAD TO PARAMS Yes STATUS F1312 BACK	▲ S
		PROG KEYPAD SETUP KEYPAD TO PARAMS No STATUS F1312 BACK	S

A copy of all four parameter tables have now been restored to non-volatile memory control.

6.7 Advanced Prog

At the Menu display screen, select ADVANCED PROG and press Enter. This menu provides access to all drive parameters which are organized in blocks that are grouped into one of 3 levels. Examples of tasks accomplished via this menu are:

1. Adjustment of motor data not available in the basic parameters menu.
2. Auto Tune the motor.
3. Customize the drive parameters to your application.

Parameter Status

All programmable parameters are displayed with its parameter number shown at the bottom center of the display. “F” means it is the factory setting value. “C” means it is a custom value set by the user. “V” means the parameter value may be viewed but not changed while the motor is operating. If the parameter is displayed with an “L”, the value is locked and may not be changed until the security code is entered.

Action	Description	Display	Comments
A	A	LEVEL 1 BLOCKS LEVEL 2 BLOCKS LEVEL 3 BLOCKS MODIFIED PARAMS LINEAR LIST STATUS BACK	▼ ▼ ▼
	A B	PRESET SPEEDS RAMP RATES JOG SETTINGS KEYPAD SETUP INPUT SETUP STATUS BACK	▼ block
S		PROG PRESET SPEEDS PRESET SPEED 1 STATUS F1001T1 BACK	▼ S
S	▲ ▼	EDIT PRESET SPEEDS PRESET SPEED 1 MAX F1001T1 RESET	▲ ▼
	▲	EDIT PRESET SPEEDS PRESET SPEED 1 MAX F1001T1 RESET	
		PROG PRESET SPEEDS PRESET SPEED 1 STATUS C1001T1 BACK	S

Parameter values in other Level 1, 2 and 3 blocks can be selected and edited in the same way.

6.7.1 Modified Parameters

Allows viewing of all parameters that have been changed from factory set values.

Action	Description	Display	Comments
A	A	LEVEL 1 BLOCKS LEVEL 2 BLOCKS LEVEL 3 BLOCKS MODIFIED PARAMS LINEAR LIST	▼
		PROG PRESET SPEEDS PRESET SPEED 1 STATUS C1001T1 BACK	▶ A
		PROG INPUT SETUP OPERATING MODE PLC STATUS C1401T1 BACK	▶ A

6.7.2 Linear List

Action	Description	Display	Comments
Advanced Prog Display	Top Level Advanced Prog menu.	LEVEL 1 BLOCKS LEVEL 2 BLOCKS LEVEL 3 BLOCKS MODIFIED PARAMS LINEAR LIST	Press ▼ to scroll to Linear List. Press enter to view list of parameters beginning with 1001.
Press Enter to select se uential view of parameters by parameter number "Linear List".	The number and name of each parameter is displayed in listing format. The first character of the parameter number has the following meaning: F = Factory Setting C = Custom value set by user V = Parameter value may be Viewed but not changed. L = Parameter value is locked, security code required.	C1001 PRESET SPEED 1 F1002 PRESET SPEED 2 F1003 PRESET SPEED 3 F1004 PRESET SPEED 4 F1005 PRESET SPEED 5 PNUM BACK	Press ▲ or ▼ keys to scroll to through the parameter list. Press ▶ or ◀ keys to ump to next page. Press F2 to return to previous menu.

Change a parameter value within the linear list as follows:

Action	Description	Display	Comments
		C1001 PRESET SPEED 1 F1002 PRESET SPEED 2 F1003 PRESET SPEED 3 F1004 PRESET SPEED 4 F1005 PRESET SPEED 5 PNUM BACK	▲ ▼ ▶ ◀
	A	PROG PRESET SPEEDS PRESET SPEED 1 STATUS C1001T1 BACK	

Jump to display a different range of parameters as follows:

Press F1 key (PN) to highlight Parameter Number.	The parameter number is highlighted.	C1001 PRESET SPEED 1 F1002 PRESET SPEED 2 F1003 PRESET SPEED 3 F1004 PRESET SPEED 4 F1005 PRESET SPEED 5 PNUM BACK	Press F1 key (PN) to highlight Parameter Number. Press ▲ or ▼ keys to scroll. Press F2 (BAC) to return to previous menu.
Press Enter key to edit the highlight Parameter Number.	The parameter number is highlighted.	C2001 PRESET SPEED 1 F1002 PRESET SPEED 2 F1003 PRESET SPEED 3 F1004 PRESET SPEED 4 F1005 PRESET SPEED 5 PNUM BACK	se cursor keys to position cursor and increase or decrease each character under the cursor as desired. Press Enter when nished. Press F2 to return to previous menu.
	The newly selected parameter number range is displayed. These values may be viewed and changed or ump to a different parameter range may be performed.	F2001 OPERATING ZONE F2002 MIN OUTPUT SPEED F2003 MAX OUTPUT SPEED F2004 PWM FREQUENCY F2006 PEAK CURR LEVEL PNUM BACK	Press ▲ or ▼ keys to scroll to through the parameter list. Press ▶ or ◀ keys to ump to next page. Press F2 (BAC) to return to previous menu.

6.8 Event Log

From the Menu display screen, select Event Log and press enter. Trace is used to display control conditions present at the time the fault occurred. A separate trace log is recorded for each event.

Action	Description	Display	Comments
	Displays error name, Entry # and time the error occurred. LOW INITIAL BUS 0 Date Time Entry # SS 0-9	EV. LOG STOP LOCAL LOW INITIAL BUS 0 4-Jul-06 09:35:00 STATUS TRACE	▲ ▼ S

Input states, Output states, various voltage and current values etc. can be viewed to help understand the cause of the fault condition. See Chapter 9 of this manual for more information.

6.9 Diagnostics

From the Menu display screen, select Diagnostics and press enter. These are read only values with the exception of the real time clock settings.
See Chapter 9 for a more detailed description.

Action	Description	Display	Comments
Press enu	Displays top level menu options.	STATUS BASIC PARAMS ADVANCED PROG EVENT LOG DIAGNOSTICS STATUS BACK	Press ▲ or ▼ to move cursor over the "D A N ST CS" selection. Press Enter to view diagnostic information.
Press ▶ to display next group.	Displays active operating mode settings.	DIAG STOP LOCAL OPERATING MODE Keypad Speed V/F Control EV. LOG 0.00r MAIN	
Press ▶ to display next group.	Bit display of digital inputs, outputs and the voltage present at the internal 24V supply terminals. Note Example display shows that the drive enable terminal (2) is on and that elay ut 2 is on.	DIAG STOP LOCAL DIGITAL I/O INPUTS 100000000 OUTPUTS 0001 USER 24V 24.9V EV. LOG 0.00r MAIN	Press ▶ or ◀ to go to the next or previous Diagnostic screen. Press F2 to return to previous menu.
Press ▶ to display next group.	Output Frequency, % Feedforward % Setpoint, % Feedback	DIAG STOP LOCAL PROC CONTROL PID 0.00HZ 0.0FF 0.0SP 0.0FB EV. LOG 0.00r MAIN	Press ▶ or ◀ to go to the next or previous Diagnostic screen. Press F2 to return to previous menu. Note: This screen does not appear unless P#1401 is set to Process Control.
Press ▶ to display next group.	Displays software version, hp, volts and Amp/Volt ratings.	DIAG STOP LOCAL IHH-1.22 RATED HP 3HP RATED VOLTS 240.0V RATED A/V 4.0A/V EV. LOG 0.00r MAIN	Press ▶ or ◀ to go to the next or previous Diagnostic screen. Press F2 to return to previous menu.
Press ▶ to display next group.	Displays software version, drive rated and peak current ratings.	DIAG STOP LOCAL 1.22 RATED CURRE 9.6A RATED PK CU 16.8A EV. LOG 0.00r MAIN	Press ▶ or ◀ to go to the next or previous Diagnostic screen. Press F2 to return to previous menu.

Diagnostics Continued

Action	Description	Display	Comments
▶	B GA	DIAG STOP LOCAL POWER BASE VERSION ID 0x000A2003 EE VER 0x00000001 FPGA VER 0x00000A02 EV. LOG 0.00r MAIN	▶ ◀ B
▶		DIAG STOP LOCAL REAL TIME CLOCK Jan 1, 2009 22:07:35 RUN TIMER 474.1HR EV. LOG 0.00r MAIN	▶ ◀
▶		DIAG STOP LOCAL ENERGY EST POWER 0.00KW EST ENERGY 0.0KWH EST COST 0.0$ EV. LOG 0.00r MAIN	▶ ◀ S
▶	A	DIAG STOP LOCAL ANALOG INPUTS ANA IN1 1.3v ANA IN2 0.0v EV. LOG 0.00r MAIN	▶ ◀
▶	A	DIAG STOP LOCAL ANALOG OUTPUTS ANA OUT1 0.0V ANA OUT2 0.0V EV. LOG 0.00r MAIN	▶ ◀
▶		DIAG STOP LOCAL OPTION BOARDS OPTION 1 ETHERNET OPTION 2 NONE FEEDBACK NONE EV. LOG 0.00r MAIN	▶ ◀ S
▶		DIAG STOP LOCAL KEYPAD VERSION KEYPAD SOF 1.1X EV. LOG 0.00r MAIN	
▶		DIAG STOP LOCAL COMPOSITE REF COMPONENT A 0.00% COMPONENT B 0.00% REFERENCE 0.00% EV. LOG 0.00r Alarm	
▶	B	DIAG STOP LOCAL DRIVE BUS VOLTAGE 333.9V DRIVE TEMP 26.1C DRIVE O/L L 100.0% EV. LOG 0.00r Alarm	▶ ◀
▶		DIAG STOP LOCAL MOTOR MOTOR VOLTAGE 333.9V MOTOR CURR 4.8A MOTOR O/L L 100.0% EV. LOG 0.00r Alarm	▶ ◀

6.10 Display Options

Action	Description	Display	Comments
		PROG KEYPAD SETUP KEYPAD CONTRAST 50% DIAG F1313T1 BACK	▶ ◀
		PROG KEYPAD SETUP BACKLIGHT On DIAG F1314T1 BACK	▶ ◀

6.11 Operating the Control from the Keypad

To activate the LOCAL Mode, first press the “STOP” key (if enabled).
Note: Pressing the keypad STOP key (if enabled) will automatically issue a motor stop command and change to LOCAL mode. Selection of LOCAL Mode overrides any remote or serial control inputs except the External Trip input, Local Enable Input or STOP input.
The control can operate the motor from the keypad in two ways.
1. JOG Command.
2. Speed adjustment with Keypad entered values and/or Keypad Up/Down arrow keys.

Note: If the level 1, input block operating mode parameter is set to Keypad, then no other means of operation is permitted other than from the keypad.

6.11.1 Accessing the Keypad JOG Command

Action	Description	Display	Comments
S		STATUS STOP LOCAL 0.0V 0RPM 0.0A 0.0HZ DIAG 0.00r MAIN	
G	G G G	STATUS FWD LOCAL 26.8V 210RPM 1.3A 7.0HZ DIAG 7.00r MAIN	S S S G

6.11.2 Speed Adjustment using Local Speed Reference

Action	Description	Display	Comments
At the Status Display, press ENTE key to access Local Speed eference.		EDIT LOCAL REFs LOC SPEED REF 000.00 Hz MAX F0201 RESET	
		EDIT LOCAL REFs LOC SPEED REF 000.00 Hz DIAG F0201 BACK	Press ▶ or ◀ to move cursor. Press ▲ or ▼ to increase or decrease value at cursor. Press ENTE when nished and save the new value.
		EDIT LOCAL REFs LOC SPEED REF 020.00 Hz DIAG C0201 BACK	Press ▶ or ◀ to move cursor. Press ▲ or ▼ to increase or decrease value at cursor. Press ENTE when nished and save the new value.
Press F D or EV key.	The control will turn the motor shaft at the local speed ref speed.	STATUS FWD LOCAL 76.7V 600RPM 1.3A 20.0Hz DIAG 20.00r BACK	Press ST P key to terminate local speed mode. Press ▲ or ▼ to increase or decrease motor speed during rotation.

Chapter 7
Parameter Descriptions

7.1 Level 1 Parameters (Advanced Prog, Level 1 Blocks)

Table 7-1 Level 1 Parameter Block Definitions

Block Title	Parameter (Number) Selection (Value)	Parameter Name and Description
PRESET SPEEDS	**PRESET SPEED 1** (1001) **PRESET SPEED 2** (1002) **PRESET SPEED 3** (1003) **PRESET SPEED 4** (1004) **PRESET SPEED 5** (1005) **PRESET SPEED 6** (1006) **PRESET SPEED 7** (1007) **PRESET SPEED 8** (1008) **PRESET SPEED 9** (1009) **PRESET SPEED 10** (1010) **PRESET SPEED 11** (1011) **PRESET SPEED 12** (1012) **PRESET SPEED 13** (1013) **PRESET SPEED 14** (1014) **PRESET SPEED 15** (1015)	Preset Value: 1 Preset Value: 2 Preset Value: 3 Preset Value: 4 Preset Value: 5 Preset Value: 6 Preset Value: 7 Preset Value: 8 Preset Value: 9 Preset Value: 10 Preset Value: 11 Preset Value: 12 Preset Value: 13 Preset Value: 14 Preset Value: 15 Range: 0 - Max Speed Hz
		Allows selection of 15 predefined motor operating speeds. Each speed may be selected using external switches connected to terminals at J2. For motor operation, a motor direction command must be given along with a preset speed command.
RAMP RATES	**ACCEL TIME 1** (1101) **ACCEL TIME 2** (1107)	Preset Value: 3.0 Preset Value: 3.0 Range: 0.0 to 3600.0 Seconds
		Accel time is the number of seconds required for the motor to increase at a linear rate from 0 to “Max Output Speed” parameter (P2003) in the Level 2 Output Limits block.
	DECEL TIME 1 (1104) **DECEL TIME 2** (1110)	Preset Value: 3.0 Preset Value: 3.0 Range: 0.0 to 3600.0 Seconds
		Decel time is the number of seconds required for the motor to decrease at a linear rate from the speed specified in the “Max Output Speed” parameter (P2003) to 0.
	START S-ACC 1 (1102) **START S-ACC 2** (1108)	Preset Value: 0.0 Preset Value: 0.0 Range: 0.0 to 100.0%
		Start S-Curve Acceleration as a percentage of accel time (% 1 and 2).
	END S-ACC 1 (1103) **END S-ACC 2** (1109)	Preset Value: 0.0 Preset Value: 0.0 Range: 0.0 to 100.0%
		End S-Curve Acceleration as a percentage of accel time (% 1 and 2).
	START S-DEC 1 (1105) **START S-DEC 2** (1111)	Preset Value: 0.0 Preset Value: 0.0 Range: 0.0 to 100.0%
		Start S-Curve Deceleration as a percentage of decel time (% 1 and 2).
	END S-DEC 1 (1106) **END S-DEC 2** (1112)	Preset Value: 0.0 Preset Value: 0.0 Range: 0.0 to 100.0%
		End S-Curve Deceleration as a percentage of decel time (% 1 and 2).

Table 7-1 Level 1 Parameter Block Definitions Continued

Block Title	Parameter (Number) Selection (Value)	Parameter Name and Description
RAMP RATES (Continued)	**PL DEC TIME** (1113)	Preset Value: 1.0 Range: 0.0 to 3600.0 Seconds
		Time to stop the motor from maximum drive speed during a power loss. 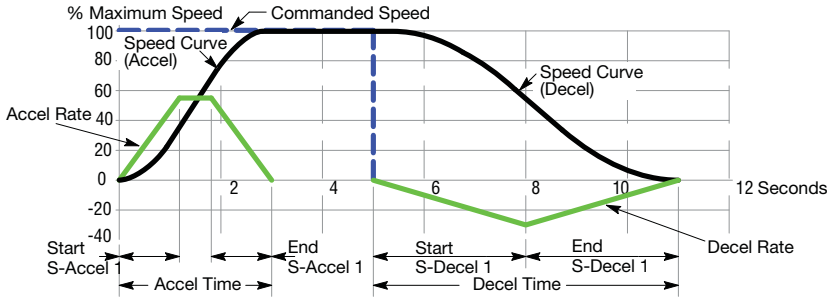
JOG SETTINGS	**JOG SPEED** (1201)	Preset Value: 7 Range: 0 - MAX Speed Hz
		Jog Speed is the programmed speed used during jog. Jog can be initiated from the keypad or terminal strip. At the Keypad, press the JOG key then press and hold the direction (FWD or REV). For Standard Run 3Wire mode, close the JOG input (J2-12) at the terminal strip then close and maintain the direction input (J2-9 or J2-10). Process Control mode operation is different. If the terminal strip Process Control Enable input (J2-13) is closed, pressing the Keypad JOG key (or closing J2-14) will cause the drive to move in the direction of the error (without pressing FWD or REV).
	JOG ACCEL TIME (1202)	Preset Value: 10.0 Range: 0.0 to 3600.0 Seconds
		The accel rate or time to reach max Speed. Time to reach Jog Speed=(Jog Speed/Max Speed) x (Jog Accel Time).
	JOG START S-ACC (1203)	Preset Value: 0.0 Range: 0.0 to 100.0%
		Start S-Curve Acceleration as a percentage of jog accel time.
	JOG END S-ACC (1204)	Preset Value: 0.0 Range: 0.0 to 100.0%
		End S-Curve Acceleration as a percentage of jog accel time.
	JOG DECEL TIME (1205)	Preset Value: 10.0 Range: 0.0 to 3600.0 Seconds
		The decel rate or time to decel from max Speed. Time to reach zero speed=(Jog Speed/Max Speed) x (Jog Decel Time).
	JOG START S-DEC (1206)	Preset Value: 0.0 Range: 0.0 to 100.0%
		Start S-Curve Deceleration as a percentage of jog decel time.
	JOG END S-DEC (1207)	Preset Value: 0.0 Range: 0.0 to 100.0%
		End S-Curve Deceleration as a percentage of jog decel time.
	JOG FORWARD (1209)	Preset Value: 1 Range: 0 - 1
	Off (0)	Mode Disabled.
	On (1)	Enables Jog in the drive forward direction at Jog speed for keypad mode.
	JOG REVERSE (1210)	Preset Value: 1 Range: 0 - 1
	Off (0)	Mode Disabled.
	On (1)	Enables Jog in the drive reverse direction at Jog speed for keypad mode.

Table 7-1 Level 1 Parameter Block Definitions Continued

Block Title	Parameter (Number) Selection (Value)	Parameter Name and Description
KEYPAD SETUP	**STOP KEY** (1301)	Preset Value: 1 Range: 0 - 1
	Off (0)	Keypad STOP key is not active.
	On (1)	Allows keypad STOP key to initiate motor stop during remote or serial operation. If active, pressing STOP selects Local mode and initiates the stop command. Note: Pressing STOP key twice in rapid succession will immediately terminate PWM to motor and disable the drive.
	STOP MODE (1302)	Preset Value: 0 Range: 0 - 1
	Regen (0)	The voltage and frequency to the motor is reduced at a rate set by Decel Time.
	Coast (1)	Motor is turned off and allowed to coast to a stop.
		Selects if the Stop command causes the motor to COAST to a stop or REGEN to a stop.
	RUN FORWARD (1303)	Preset Value: 1 Range: 0 - 1
	Off (0)	Disables FWD key in Local mode.
	On (1)	Makes the keypad FWD key active in Local mode.
	RUN REVERSE (1304)	Preset Value: 1 Range: 0 - 1
	Off (0)	Disables REV key in Local mode.
	On (1)	Makes the keypad REV key active in Local mode.
	SWITCH ON FLY (1305) (LOCAL/REMOTE KEY)	Preset Value: 0 Range: 0 - 1
	Off (0)	Disables Switch on Fly.
	On (1)	Allows switching between Local and Remote while Control is on.
	LOCAL HOT START (1306)	Preset Value: 0 Range: 0 - 1
	Off (0)	Disables the Stop input at J2-11 in the keypad operating mode.
	On (1)	Enables the Stop input at J2-11 in the keypad operating mode.
	SPEED INCREMENT (1307)	Preset Value: 1 Range: 1 to 1800 RPM or 0.01 to 60 Hz
		Sets the increment of speed change for each key press. (1-3600 RPM or 0-60 Hz)
	INIT LOCAL SPEED (1308)	Preset Value: 0 Range: 0 - 2
	Zero Speed (0)	Initializes local speed to 0 RPM on Power Up.
	Last Speed (1)	Initializes local speed to last speed on Power Up.
	Set Speed (2)	Initializes local speed to “Set Speed” (P1309) on Power Up.
	SET SPEED (1309)	Preset Value: 1 Range: 0 - MAX Speed
		At power up, initializes the local speed to this preset value if “Init Local Speed” = Set Speed.
	PARAMS TO KEYPAD (1310)	Preset Value: 0 Range: 0 - 1
	Off (0)	No action.
	On (1)	Transfers the parameter settings stored in the control memory (flash) to keypad memory.

Table 7-1 Level 1 Parameter Block Definitions Continued

Block Title	Parameter (Number) Selection (Value)	Parameter Name and Description
KEYPAD SETUP (Continued)	**DOWNLOAD SELECT** (1311)	Preset Value: 0 Range: 0 - 2
	All (0)	All parameters.
	Motor (1)	Motor parameters only.
	Other (2)	All parameters except Motor parameters.
		Selects parameters to download (All, Motor or Other) with “Keypad to Params” (P1312). See Appendix B for notation of which parameters are motor related.
	KEYPAD TO PARAMS (1312)	Preset Value: 0 Range: 0 - 1
	No (0)	No action.
	Yes (1)	Transfers the parameter settings stored in keypad memory to the control memory (flash).
	KEYPAD CONTRAST (1313)	Preset Value: 50 Range: 0 - 100%
		Sets LCD contrast: 0=dimmest, 100=brightest.
	BACKLIGHT (1314)	Preset Value: 1 Range: 0 - 1
	Off (0)	Sets the Keypad Display backlight OFF.
	On (1)	Sets the Keypad Display backlight ON.
	LOC TORQUE MODE (1315) Open Vector Only.	Preset Value: 0 Range: 0 - 1
	Off (0)	Disables local torque mode.
	On (1)	Enables local torque mode operation.
	LOC TORQUE REF (1316) Open Vector Only.	Preset Value: 0.00 Range: -100 to 100%
		Local torque mode reference value.
INPUT SETUP	**OPERATING MODE** (1401)	Preset Value: 0 Range: 0 - 16
	Keypad (0)	Drive operates from keypad only.
	Standard Run 2Wire (1)	Drive operates from digital inputs and command source. Preset Speed 1 may also be selected.
	Standard Run 3Wire (2)	Drive operates from digital inputs and command source. Preset Speed 1 may also be selected.
	15 Preset Speeds (3)	Operation in 15 Preset Speeds 2 Wire Mode is controlled by digital inputs at J2. Speeds set in parameters P1001 to P1015.
	Fan & Pump 2Wire (4)	Operation in Fan & Pump 2 Wire controlled by digital inputs at J2.
	Fan & Pump 3Wire (5)	Operation in Fan & Pump 3 Wire controlled by digital inputs at J2.
	Process Control (6)	The Process Control provides an auxiliary closed loop general purpose PID set point control.
	3Spd Ana 2Wire (7)	Provides 2 Wire control and allows selection of 3 Preset Speeds.
	3Spd Ana 3Wire (8)	Provides 3 Wire control and allows selection of 3 Preset Speeds.
	E-Pot 2Wire (9)	Electronic Potentiometer provides digital inputs for Speed Increase and Speed Decrease. Also provides 2 digital inputs for selection of E-Pot or "Command Source" (1402), Preset Speed 1, and Preset Speed 2.
	E-Pot 3Wire (10)	Electronic Potentiometer provides digital inputs for Speed Increase and Speed Decrease. Also provides a digital input for selection of E-Pot or “Command Source” (1402).
	Network (11)	Provides Bipolar speed or torque control.

Table 7-1 Level 1 Parameter Block Definitions Continued

Block Title	Parameter (Number) Selection (Value)	Parameter Name and Description
INPUT SETUP (Continued)	**OPERATING MODE** (1401) (Continued)	
	Profile Run (12)	Provides a seven segment speed profile for cyclic operation or test cycle. See Level 3, Profile Run Block.
	Bipolar (14)	Provides bipolar speed or torque control. Torque control only available in vector mode.
	Pulse Follower (15)	Provides electronic gearing of two or more controls from upstream reference. (Requires Expansion Board EXBHH007).
	PLC (16)	Provides for control from custom designed internal logic.
		External connections to the control are made at the control terminal strip (wiring diagrams are shown in Chapter 5 “Operating Modes”).
	COMMAND SOURCE (1402)	Preset Value: 1 Range: 0 - 10
	None (0)	Command Source is not used.
	Analog In1 (1)	Connect a 10Kohm pot at J1 or connect a 0-10VDC signal to J1-2 and J1-1.
	Analog In2 (2)	Connect a 0-5V, 0-10V, ±5V, ±10V, 0-20mA or 4-20mA source to J1-4 and 5. 4-20mA should be considered when a long distance (greater than 50 ft) between the external device and J1-4 and 5 of the control is necessary.
	Keypad (3)	Command is from Keypad.
	Network (4)	Signal source is from a device on the network.
	Composite Ref (5)	The result of the Level 3 Composite Reference set by the user.
	Opt1 Ana In1 (6)	Scaled value of option board 1 analog input 1 signal value.
	Opt1 Ana In2 (7)	Scaled value of option board 1 analog input 2 signal value.
	Opt2 Ana In1 (8)	Scaled value of option board 2 analog input 1 signal value.
	Opt2 Ana In2 (9)	Scaled value of option board 2 analog input 2 signal value.
	EXB Pulse Foll (10)	Signal source is from the EXB Pulse Follower expansion board.
	ANA IN1 TYPE (1403)	Preset Value: 1 Range: 0 - 1
	None (0)	Input not used.
	Potentiometer (1)	0 - 10V signal used.
	ANA IN2 TYPE (1408)	Preset Value: 1 Range: 0 - 6
	None (0)	Input not used.
	-10V to +10V (1)	Bipolar 10V signal used.
	-5V to +5V (2)	Bipolar 5V signal used.
	4 to 20 mA (3)	4-20mA current signal used.
	0 to 20 mA (4)	0-20mA current signal used.
	0 to 10V (5)	Unipolar 10V signal used.
	0 - 5V (6)	Unipolar 5V signal used.
		Defines signal being used.

Table 7-1 Level 1 Parameter Block Definitions Continued

Block Title	Parameter (Number) Selection (Value)	Parameter Name and Description
INPUT SETUP (Continued)	**ANA IN1 INVERT** (1404) **ANA IN2 INVERT** (1409)	Preset Value: 0 Preset Value: 0 Range: 0 - 1
	Off (0)	Will cause a low input voltage (e.g. 0VDC) to be a low motor speed command and a maximum input voltage (e.g. 10VDC) to be a maximum motor speed command.
	On (1)	Will cause a low input voltage (e.g. 0VDC) to be a maximum motor speed command and a maximum input voltage (e.g. 10VDC) to be a low motor speed command.
	ANA IN1 GAIN (1405) **ANA IN2 GAIN** (1410)	Preset Value: 100.0% Preset Value: 100.0% Range: 0.0% to 300.0%
		Allows 0 to 300% gain to be applied ((as in Y=Gain*(X-Offset)).
	ANA IN1 OFFSET (1406) **ANA IN2 OFFSET** (1411)	Preset Value: 0.0 Preset Value: 0.0 Range: -100.0% to 100.0%
		Provides an offset to the Analog Input to minimize signal error. For example, if the minimum speed signal is 1VDC (instead of 0VDC) the Ana In1 Offset can be set to -10% so the minimum voltage input is seen by the control as 0VDC. This parameter is automatically adjusted during the auto tune Analog Offset Trim test.
	ANA IN1 FILTER (1407) **ANA IN2 FILTER** (1413)	Preset Value: 0 Preset Value: 0 Range: 0 - 6
	No Filter (0)	No Filtering.
	Max Filter (6)	Max Filtering.
		Amount of low pass signal filtering to use.
	ANA IN2 D.BAND (1412)	Preset Value: 0.0 Range: 0.0% to 75.0%
		Allows a defined range of voltage to be a deadband. A command signal within this range will not affect the control output. The deadband value is the voltage above and below the zero command signal level.
	EXT. CUR LIMIT (1414) Only available in Open Vector mode. Ignore this parameter for V/F mode.	Preset Value: 0 Range: 0 - 1
	Off (0)	Ramp output to speed loop is held at its present value as long as regen current limit is active.
	On (1)	Ramp output to speed loop is always ramped to the value of its input and the Iq current demand from the speed loop to the current loop is limited by the source defined in “Current Limit Source (P1415)” as a percentage of the current level defined in “Peak Current Level (P2006)”.
	CURR LMT SOURCE (1415) Only available in Open Vector mode. Ignore this parameter for V/F mode.	Preset Value: 0 Range: 0 - 9
	None (0)	Turns off external current limit.
	Analog In1 (1)	Connect a 10Kohm pot at J1 or connect a 0-10VDC signal to J1-2 and J1-1.
	Analog In2 (2)	Connect a 0-5V, 0-10V, ±5V, ±10V, 0-20mA or 4-20mA source to J1-4 and 5. 4-20mA should be considered when a long distance (up to 50 ft) between the external device and J1-4 and 5 of the control is necessary.
	Keypad (3)	Turns off Current Limit Source from Keypad.
	Composite Ref (4)	See Chapter 11 for more information.

Table 7-1 Level 1 Parameter Block Definitions Continued

Block Title	Parameter (Number) Selection (Value)	Parameter Name and Description
INPUT SETUP (Continued)	**CURR LMT SOURCE** (1415) Only available in Open Vector mode. Ignore this parameter for V/F mode. (Continued)	
	Opt1 Ana In1 (5)	Selects analog input from high resolution analog input/output Expansion Board (EXBHH005) mounted in expansion slot 1.
	Opt1 Ana In2 (6)	Selects analog input from high resolution analog input/output Expansion Board (EXBHH005) mounted in expansion slot 1.
	Opt2 Ana In1 (7)	Selects analog input/output Expansion Board (EXBHH005) mounted in expansion slot 2.
	Opt2 Ana In2 (8)	Selects analog input/output Expansion Board (EXBHH005) mounted in expansion slot 2.
	Network (9)	Selects the network current limit word as the current limit source.
		Selects the external current limit reference to be used, converts it internally to a percentage and then sets the torque limit of the drive as a percentage of the drive's Peak Current Level (P2006).
	SLEEP MODE (1416)	Preset Value: 0 Range: 0 - 1
	Off (0)	No action.
	On (1)	Disables control when Command Source is less than CMD Sleep Band (P1417). Active in all speed modes.
	CMD SLEEP BAND (1417)	Preset Value: 0.00 Range: 0.00 to 100.00%
		Disables the control when Command Source is less than CMD Sleep Band (P1417). Active in all speed modes and is also applied to the torque reference when in torque mode.
	TORQUE FF SRC (1418) Only available or active in Open Vector mode. Ignore this parameter for V/F mode.	Preset Value: 0 Range: 0 - 8
	None (0)	Turns off external torque feedforward reference.
	Analog In1 (1)	Connect a 10Kohm pot at J1 or connect a 0-10VDC signal to J1-2 and J1-1.
	Analog In2 (2)	Connect a 0-5V, 0-10V, ±5V, ±10V, 0-20mA or 4-20mA source to J1-4 and 5. 4-20mA should be considered when a long distance (greater than 50 ft) between the external device and J1-4 and 5 of the control is necessary.
	Keypad (3)	Turns off external torque feedforward reference. (Keypad uses Local Keypad Torque Reference as feedforward.)
	Composite Ref (4)	See Chapter 11 for more information.
	Opt1 Ana In1 (5)	Selects analog input from high resolution analog input/output expansion Board(EXBHH005) mounted in expansion slot 1.
	Opt1 Ana In2 (6)	Selects analog input from high resolution analog input/output expansion Board(EXBHH005) mounted in expansion slot 1.
	Opt2 Ana In1 (7)	Selects analog input/output Expansion Board (EXBHH005) mounted in expansion slot 2.
	Opt2 Ana In2 (8)	Selects analog input/output Expansion Board (EXBHH005) mounted in expansion slot 2.
		Selects the external torque feedforward reference to be used which is added to the torque demand from the speed loop. The result then becomes the torque reference for the current loop.
	1451 - 1474	**Parameters 1451-1474** are used to configure the High Resolution Analog I/O Expansion Board. See manual MN754 for configuration details.

Table 7-1 Level 1 Parameter Block Definitions Continued

Block Title	Parameter (Number) Selection (Value)	Parameter Name and Description
OUTPUT SETUP	**DIGITAL OUTPUT 1** (1501) **DIGITAL OUTPUT 2** (1502) **RELAY OUTPUT 1** (1503) **RELAY OUTPUT 2** (1504)	Preset Value: 1 Preset Value: 8 Preset Value: 9 Preset Value: 17 Range: 0 - 31
	Drive Run (0)	Active when drive is “On” and a FWD/REV direction command is present.
	Drive Ready (1)	Active after soft start, when drive is enabled and no faults are present.
	Drive On (2)	(V/F) Active when drive is “Ready” and producing PWM to motor. (Vector) Active when drive is “Ready” and motor flux is present.
	Drive Stopped (3)	Active when stop command is present and motor is stopped (or coasting to stop).
	Jog (4)	Active during Jog mode.
	Accelerate (5)	Active when control is accelerating.
	Constant Speed (6)	Active when control speed is constant.
	Decelerate (7)	Active when control is decelerating.
	At Zero Speed (8)	Active when motor speed is less than the Level 1 Output Setup “Zero SPD Set Pt (P1505)”.
	At Speed (9)	Active when motor speed is within band set by the Level 1 Output Setup “At Speed Band (P1506)”.
	At Set Speed (10)	Active when output speed is at or greater than the Level 1 Output Setup “Set Speed Point (P1507)”.
	Curr Overload (11)	Active when motor current is greater than “Overload Set Point (P1508)”.
	Curr Underload (12)	Active when motor current is less than “Underload Set Point (P1509)”.
	I^2T Overload (13)	Active when overload left is less than 100%.
	Keypad Control (14)	Active when control is in Local keypad control.
	Dynamic Brake (15)	Active when Dynamic Brake transistor is turned ON.
	Foldback (16)	Active when current foldback is active (V/Hz Mode only).
	Fault (17)	Active when a fault condition is present (will cause trip).
	Alarm (18)	Active when an Alarm condition is present (but doesn’t cause trip).
	Command Forward (19)	Active during forward run command.
	Command Reverse (20)	Active during reverse run command.
	Motor Forward (21)	Active when motor is moving in Drive forward direction.
	Motor Reverse (22)	Active when motor is moving in Drive reverse direction.
	Process Error (23)	Active when absolute process error is greater than P2606 (Process Error Tolerance).
	Network (24)	Active when commanded by network. Network device controls this output.
	At Position (25)	Active when load is at position (|Position error|≤P1517) AND (|Motor Speed|≤P1505).
	In Motion (26)	Active when load is moving (|Position error|>P1517) OR (|Motor Speed|>P1505).
	PLC (27)	Output is controlled by PLC mode.
	RTC (28)	Output is controlled by RTC module.
	Powered Up (29)	Active when Bus is “UP” and no faults are present.
	Par Tbl Switch (30)	If drive is disabled, output turns on when table switch is commanded and will turn off when completed.
	Heater (31)	Output turns on when trickle current heating is active.
		See also 1505, 1506, 1507, 1508, 1509, 1517, Chapter 10, Chapter 11, Chapter 12.

Table 7-1 Level 1 Parameter Block Definitions Continued

Block Title	Parameter (Number) Selection (Value)	Parameter Name and Description
OUTPUT SETUP (Continued)	**ZERO SPD SET PT** (1505)	Preset Value: 6.00 Range: 0 - MAX Speed
		A digital output programmed to “At Zero Speed” becomes active when motor speed becomes less than this setting for vector modes or when speed demand is less than this setting when in V/F mode. This is useful when a motor brake is to interlock operation with a motor.
	AT SPD BAND (1506)	Preset Value: 2.00 Range: 0 - MAX Speed
		A digital output programmed to “At Speed” becomes active when the speed error for vector modes or when the reference minus the demand for V/F mode is less than the value set in this parameter.
	SET SPEED POINT (1507)	Preset Value: 60.00 Range: 0 - MAX Speed
		A digital output programmed to “At Set Speed” becomes active when the motor speed is greater than the value programmed in this parameter for vector modes or when the speed demand is greater than the value programmed in this parameter for V/F mode.This is useful when another machine must not start or stop until the motor exceeds a predetermined speed.
	OVERLOAD SET PT (1508)	Preset Value: 150.0 Range: 0.0 - 200.0%
		Sets the motor current value as a percent of drive rated current at which the Overload digital output is active.
	UNDERLOAD SET PT (1509)	Preset Value: 50.0 Range: 0.0 - 200.0%
		Sets the motor current value as a percent of drive rated current at which the Underload digital output is active.
	ANA OUT1 TYPE (1510)	Preset Value: 0 Range: 0 - 3
	0 to +10V (0)	Sets the Analog Output Signal to 0 - 10V.
	0 to 5V (1)	Sets the Analog Output Signal to 0 - 5V.
	4mA to 20mA (2)	Sets the Analog Output Signal to 4 - 20mA.
	0mA to 20mA (3)	Sets the Analog Output Signal to 0 - 20mA.
	ANA OUT2 TYPE (1513)	Preset Value: 1 Range: 0 -1
	+5/-5V (0)	Sets the Output Signal ±5V.
	+10/-10V (1)	Sets the Output Signal ±10V.
	ANA OUT1 SIGNAL (1511) **ANA OUT2 SIGNAL** (1514)	Preset Value: 29 Preset Value: 3 Range: 0 - 34
	Speed Ref (0)	Scaled value of speed reference (input to velocity profiler) (ACC/DEC ramp).
	Speed Demand (1)	Scaled value of speed reference (output of velocity profiler) (ACC/DEC ramp).
	ACC/DEC (2)	Scaled value of ACC/DEC rate. Range is from 0 to max ACC/DEC rate.
	Motor Current (3)	Scaled value of Motor Current. Range is based on 2 times drive FLA. (Includes both MAG and Load currents).
	Mag Current (4)	Scaled value of magnetizing current, range is based on 2 times drive FLA.
	Mag Curr Cmd (5)	The commanded D-axis PI vector magnetizing current to the current controller, range is based on 2 times drive FLA.
	Load Current (6)	Scaled value of the load amps, range is based on 2 times drive FLA.
	Load Curr Cmd (7)	The commanded Q-axis PI vector load current to the current controller, range is based on 2 times drive FLA.

Table 7-1 Level 1 Parameter Block Definitions Continued

Block Title	Parameter (Number) Selection (Value)	Parameter Name and Description
OUTPUT SETUP (Continued)	**ANA OUT1 SIGNAL** (1511) **ANA OUT2 SIGNAL** (1514) (Continued)	
	Power Factor (8)	Scaled value of power factor, range is from 0 to 1.0.
	Ph1 Current (9)	Scaled value of the phase 1 motor current, range is based on 2 times drive FLA.
	Ph2 Current (10)	Scaled value of the phase 2 motor current, range is based on 2 times drive FLA.
	Ph3 Current (11)	Scaled value of the phase 3 motor current, range is based on 2 times drive FLA.
	Motor Voltage (12)	Scaled value of the motor voltage, range is based on drive rated output voltage.
	VD Demand (13)	Flux controller output. Used to diagnose control problems.
	VQ Demand (14)	Load controller output. Used to diagnose control problems.
	Bus Voltage (15)	Scaled value of the Bus voltage. (Range is based on 123% of drive rated output voltage).
	Est. Abs Torque (16)	Scaled value of the absolute torque, range is based on peak torque (2 x rated torque).
	Est. Torque (17)	Scaled value of the motor torque (signed), range is based on rated torque (2 x rated torque).
	Control Temp (18)	Scaled value of the control heatsink temperature, range is -50 to 150ºC.
	Analog In1 (19)	Scaled value of the analog input 1 signal value.
	Analog In2 (20)	Scaled value of the analog input 2 signal value, range depends on input type P1408.
	Opt1 Ana In1 (21)	Scaled value of option board 1 analog input 1 signal value, range depends on input type selected.
	Opt1 Ana In2 (22)	Scaled value of option board 1 analog input 2 signal value, range depends on input type selected.
	Opt2 Ana In1 (23)	Scaled value of option board 2 analog input 1 signal value, range depends on input type selected.
	Opt2 Ana In2 (24)	Scaled value of option board 2 analog input 2 signal value, range depends on input type selected.
	Proc Feedforward (25)	Scaled value of the process feedforward signal, range is -100% to 100% of Process Feedforward signal.
	Proc Feedback (26)	Scaled value of the process feedback signal, range is -100% to 100% of Process Feedback signal.
	Proc Setpoint (27)	Scaled value of the process setpoint source, range is -100% to 100% of Process Setpoint signal.
	Electric Angle (28)	Scaled value of the electrical angle of shaft, range is from 0-359 degrees.
	Abs Speed (29)	Scaled value (absolute) of actual motor speed, range is 0-Max Motor Speed P2003.
	Velocity (30)	Scaled value (signed) of actual motor speed, range is - Max Motor Speed to +Max Motor Speed P2003.
	Network (31)	Represents the network speed reference, see MN744. Analog 1 holding register is 40014:40013, Analog 2 holding register is 40016:40015.
	Composite Ref (32)	Scaled value of the Composite Reference output, range is -100% to 100% of composite reference calculation.
	Power (kW) (33)	Scaling power calculated using nominal output amps and RMS output volts.
	Calibrate (34)	Produces maximum value of selected analog output type.

Table 7-1 Level 1 Parameter Block Definitions Continued

Block Title	Parameter (Number) Selection (Value)	Parameter Name and Description
OUTPUT SETUP (Continued)	**ANA OUT1 GAIN** (1512) **ANA OUT2 GAIN** (1515)	Preset Value: 100.0 Preset Value: 100.0 Range: 0.0 – 500.0%
		Scale factor for analog output (as in Y=Gain*X).
	CAL ANA OUT (1516)	Preset Value: 0.0 Range: -100.0% to 100.0%
		Scalable output signal used to calibrate output device (-100% to 100% of Analog Out 1 Type).
		The drive at position target if (|Position-Feedback|) < Band.
	1551 - 1562	**Parameters 1551 - 1562** are used to configure the High Resolution Analog I/O Expansion Board. See manual MN754 for configuration details.
MOTOR CONTROL	**CONTROL TYPE** (1601)	Preset Value: 0 Range: 0 - 1
	V/F Control (0)	Sets the control type to V/F Control.
	Open Vector (1)	Sets the control type to Open Vector.
	CNTL BASE SPEED (1602)	Preset Value: Motor Rated Speed (P2403) Range: 0 - MAX Speed
		The speed at which Field Weakening begins.
	CNTL BASE VOLT (1611) Only available or active in V/F mode. Ignore this parameter for Open Vector mode.	Preset Value: CALC Range: 0 - Drive Rated Voltage
		The voltage output to the motor at Control Base Speed (P1602). Typically set to motor rated voltage.
	STATIC BOOST (1612) Only available or active in V/F mode. Ignore this parameter for Open Vector mode.	Preset Value: 0.0 Range: 0.0 - 15.0%
		Additional voltage applied to motor at start-up.
	DYN BOOST CUTIN (1613) Only available or active in V/F mode. Ignore this parameter for Open Vector mode.	Preset Value: 30.00 Range: 6.00 - 60.00 Hz
		Speed at which dynamic boost takes full effect.
	DYNAMIC BOOST (1614) Only available or active in V/F mode. Ignore this parameter for Open Vector mode.	Preset Value: 0.0 Range: 0.0 - 10.0%
		The Dynamic Boost parameter can be adjusted to provide more or less running torque from the motor than is available with the factory setting. The boost adjustment alters the output voltage to the motor from the normal voltage value by increasing or decreasing the voltage per frequency unit as defined by the V/F profile.
	V/F EFFICIENCY (1615) Only available or active in V/F mode. Ignore this parameter for Open Vector mode.	Preset Value: 0 Range: 0 - 1
	Off (0)	Smoothing disabled.
	On (1)	Smooting enabled.
		Smooths transitions between static boost and V/F curve.

Table 7-1 Level 1 Parameter Block Definitions Continued

Block Title	Parameter (Number) Selection (Value)	Parameter Name and Description
MOTOR CONTROL (Continued)	**V/F PROFILE** (1616) Only available or active in V/F mode. Ignore this parameter for Open Vector mode.	Preset Value: 0 Range: 0.0 - 100.0%
	0 = Linear 100 = Quadratic	Set the Volts/Frequency ratio of the control output (to the motor) for all values of output voltage versus output frequency up to the control base frequency. Because motor voltage is related to motor current, motor voltage can then be related to motor torque. A change in the V/F profile can adjust how much torque is available from the motor at various speeds. 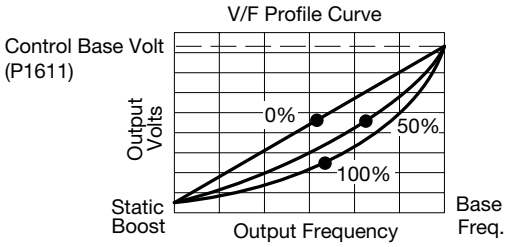
	CUSTOM V/F CURVE (1617) Only available or active in V/F mode. Ignore this parameter for Open Vector mode.	Preset Value: 0 Range: 0 - 2
	Off (0)	Curve set in parameter “V/F Profile” (P1616).
	3 Point (1)	Allows two linear V/F segments by setting the V/F 3 Point Volts and V/F 3 Point Frequency parameters.
	7 Point (2)	Allows six linear V/F segments by setting the 7-Point voltage and frequency values.
		Allows custom V/F Curve profile settings to taylor the V/F Curve to specific applications for optimum performance. Only available or active when “Control Type” (P1601) is set to PM V/F Control. Takes precedence over “V/F Profile” (P1616). 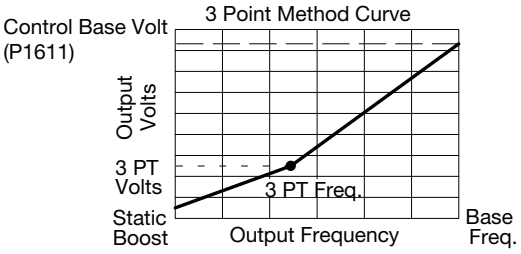
	3 POINT VOLTAGE (1618) Only available or active in V/F mode. Ignore this parameter for Open Vector mode.	Preset Value: 50.0 Range: 0.0 - 100.0%
		The output voltage associated with the 3 Point Frequency parameter. Calculated as a percentage of drive rated output voltage.
	3 POINT FREQ (1619) Only available or active in V/F mode. Ignore this parameter for Open Vector mode.	Preset Value: 30.00 Range: 0.00 - MAX Speed
		The output frequency associated with the 3 Point Volts parameter.

Table 7-1 Level 1 Parameter Block Definitions Continued

Block Title	Parameter (Number) Selection (Value)	Parameter Name and Description
MOTOR CONTROL (Continued)	**SLIP COMP ENABLE** (1620) Only available or active in V/F mode. Ignore this parameter for Open Vector mode.	Preset Value: 0 Range: 0 - 1
	Off (0)	Slip compensating disabled.
	On (1)	Slip compensating enabled.
		Compensates for change in slip due to varying load conditions during normal operation to maintain constant rotor speed.
	7 POINT FREQ 1 (1621) **7 POINT FREQ 2** (1623) **7 POINT FREQ 3** (1625) **7 POINT FREQ 4** (1627) **7 POINT FREQ 5** (1629) Only available or active in V/F mode. Ignore this parameter for Open Vector mode.	Preset Value: 10 Preset Value: 20 Preset Value: 30 Preset Value: 40 Preset Value: 50 Range: 0 - MAX Speed
		Coupled with the 7 Point Voltage parameters to set the frequency portion of the breakpoints in the 7-point V/F curve.
	7 POINT VOLT 1 (1622) **7 POINT VOLT 2** (1624) **7 POINT VOLT 3** (1626) **7 POINT VOLT 4** (1628) **7 POINT VOLT 5** (1630) Only available or active in V/F mode. Ignore this parameter for Open Vector mode.	Preset Value: 16.7 Preset Value: 33.3 Preset Value: 50.0 Preset Value: 66.7 Preset Value: 83.3 Range 0.0 - 100.0%
		Coupled with the 7 Point Frequency parameters to set the voltage portion of the breakpoints in the 7-point V/F curve.
	CURR PROP GAIN (1633) Only available or active in Open Vector mode. Ignore this parameter for V/F mode.	Preset Value: CALC Range: 0.00 - 150.00
		Sets the current loop proportional gain.
	CURR INT GAIN (1634) Only available or active in Open Vector mode. Ignore this parameter for V/F mode.	Preset Value: 150.00 Range: 0.0 - 3000.00 Hz
		Sets the current loop integral gain.
	SPEED PROP GAIN (1635) Only available or active in Open Vector mode. Ignore this parameter for V/F mode.	Preset Value: 5.00 Range: 0.00 - 1000.00
		Sets the speed (velocity) loop proportional gain. Excessive speed prop gain will cause ringing around the set point. Decreasing the speed prop gain will result in slower response and decrease the ringing, but will increase the overshoot.
	SPEED INT GAIN (1636) Only available or active in Open Vector mode. Ignore this parameter for V/F mode.	Preset Value: 10.00 Range: 0.00 - 1000.00 Hz
		Sets the speed (velocity) loop integral gain.
	SPEED DIFF GAIN (1637) Only available or active in Open Vector mode. Ignore this parameter for V/F mode.	Preset Value: 0.00 Range: 0.00 - 1.00
		Sets the speed (velocity) loop differential gain.

Table 7-1 Level 1 Parameter Block Definitions Continued

Block Title	Parameter (Number) Selection (Value)	Parameter Name and Description
MOTOR CONTROL (Continued)	**A.S. PROP GAIN** (1639) Only available or active in Open Vector mode. Ignore this parameter for V/F mode.	Preset Value: 10.0 Range: 0.0 - 255.0
		Sets the anti-saturation proportional gain.
	A.S. INT GAIN (1640) Only available or active in Open Vector mode. Ignore this parameter for V/F mode.	Preset Value: 50.00 Range: 0.00 - 200.00 Hz
		Sets the anti-saturation integral gain.
	MOTOR Xm (1641) Only available or active in Open Vector mode. Ignore this parameter for V/F mode.	Preset Value: CALC Range: 0.00 - 1000.00Ω
		Sets the Motor magnetizing reactance value at 60 Hz.
	MOTOR R1 (1642)	Preset Value: 0 Range: 0.00 - 1000.00Ω
		Stator resistance in ohms. If set too high, the motor will tend to stall at zero speed when reversing or accelerating from low speed. Reducing this value may eliminate the problem. When too low, speed regulation may suffer. If V/F mode, used for IR drop compensation. Must set to zero for multi-motor applications.
	MOTOR X1 (1643) Only available or active in Open Vector mode. Ignore this parameter for V/F mode.	Preset Value: CALC Range: 0.000 - 1000.000Ω
		Stator leakage reactance, in ohms at 60Hz. This parameter has most impact when reversing motor rotation at full current limit. If set too low, the decel time will tend to increase.
	ROTOR TIME CONST (1644)	Preset Value: CALC Range: 0.000 - 60.000 seconds
		Sets the rotor time constant value.
	MOTOR R2 (1645) Only available or active in Open Vector mode. Ignore this parameter for V/F mode.	Preset Value: CALC Range: 0 - 1000Ω
		Sets the Motor rotor resistance value.
	MOTOR X2 (1646) Only available or active in Open Vector mode. Ignore this parameter for V/F mode.	Preset Value: CALC Range: 0 - 1000Ω
		Sets the Motor rotor leakage reactance value.
	TRICKLE HEAT AMPS (1678)	Preset Value: 0.0 Range 0.0 - 50.0% of Motor Rated Amps
		Used to provide heating amps in the motor windings while the motor is stopped to help eliminate condensation within the motor. A value of 0.0 amps in this parameter disables the function. A non-zero value will cause the amount of amps programmed in this parameter to flow through the motor windings after the motor is stopped and a 300 second delay. Both the REV and FWD LEDs on the keypad will flash while the timer is counting and then both LEDs are on solid when trickle current is flowing.

Table 7-1 Level 1 Parameter Block Definitions Continued

Block Title	Parameter (Number) Selection (Value)	Parameter Name and Description
COMMUNI-CATION	**BAUD RATE** (1701)	Preset Value: 1 Range: 0 - 4
	9600 (0)	Baud Rate = 9600
	19200 (1)	Baud Rate = 19200
	38400 (2)	Baud Rate = 38400
	56000 (3)	Baud Rate = 56000
	115200 (4)	Baud Rate = 115200
		Sets the Modbus-RTU communication baud rate.
	PARITY (1702)	Preset Value: 0 Range: 0 - 2
	None (0)	No parity used.
	Odd (1)	Odd parity used.
	Even (2)	Even parity used.
		Sets Modbus-RTU communication parity.
	STOP BITS (1703)	Preset Value: 0 Range: 0 - 1
	One (0)	One stop bit used.
	Two (1)	Two stop bits used.
		Sets the number of stop bits to use for Modbus-RTU.
	DRIVE ADDRESS (1704)	Preset Value: 1 Range: 1 - 247
		Sets the drive address for communication via USB or Modbus-RTU.
	OPT CARD RESET (1705)	Preset Value: 0 Range: 0 - 3
	Off (0)	No Action.
	Slot 1 (1)	Reset Expansion Board in slot 1.
	Slot 2 (2)	Reset Expansion Board in slot 2.
	Slots 1 & 2 (3)	Resets both Expansion boards 1 & 2.
		Sends a power up reset command to all expansion boards, slot 1 only, or slot 2 only.
	SECURITY DEFAULT (1706)	Preset Value: 0 Range: 0 - 1
	No (0)	No Action.
	Yes (1)	Reset settings.
		Restores factory settings to Browser User ID and Password.
	BROWSER USER ID (1707) (1708)	Preset Value: baldor
		ASCII user ID for the Ethernet Web Browser Option Board if installed.
	BROWSER PASSWORD (1709) (1710)	Preset Value: baldor
		Password for the Ethernet Web Browser Option Board if installed.
	1720 - 1796	See documentation provided with communications expansion board.

7.2 Level 2 Parameters (Advanced Prog, Level 2 Blocks)

Table 7-2 Level 2 Parameter Block Definitions

Block Title	Parameter (Number) Selection (Value)	Parameter Name and Description
DRIVE LIMITS	**OPERATING ZONE** (2001)	Preset Value: 0 Range: 0 - 3
	Std Const Trq (0)	Sets the PWM operating zone to Standard 2.5kHz output carrier frequency Constant Torque. Constant Torque allows 175% for 3 seconds and 150% for 60 seconds of peak overload capacity.
	Std Var Trq (1)	Sets the PWM operating zone to Standard 2.5kHz output carrier frequency Variable Torque. Variable Torque allows 125% for 1 second and 115% for 60 seconds of peak overload capacity.
	Quiet Const Trq (2)	Sets the PWM operating zone to Quiet 8.0kHz output carrier frequency Constant Torque. Constant Torque allows 175% for 3 seconds and 150% for 60 seconds of peak overload capacity.
	Quiet Var Trq (3)	Sets the PWM operating zone to Quiet 8.0kHz output carrier frequency Variable Torque. Variable Torque allows 125% for 1 second and 115% for 60 seconds of peak overload capacity.
	MIN OUTPUT SPEED (2002)	Preset Value: 0 Range: 0 - MAX Speed Hz
		Sets the minimum motor speed in Hz. During operation, the motor speed will not decrease below this value except for motor starts or during dynamic braking to a stop.
	MAX OUTPUT SPEED (2003)	Preset Value: Rated Motor Speed Range: 10 - 500 Hz
		Sets the maximum motor speed in Hz.
	PWM FREQUENCY (2004)	Preset Value: 2500 Range: 1500 - 16000Hz
		The frequency that the output transistors are switched. PWM (pulse width modulation) frequency is also referred to as “Carrier” frequency. PWM should be as low as possible to minimize stress on the output transistors and motor windings. It is recommended that the PWM frequency be set to approximately 15 times the maximum output frequency of the control. Ratios less than 15 will result in non-Sinusoidal current waveforms.
	CURR RATE LIMIT (2005) Only available or active in Open Vector mode. Ignore this parameter for V/F mode.	Preset Value: 0.004 Range: 0.000 - 10.000 seconds
		Limits the rate of torque change in response to a torque command. This parameter sets the time in seconds to change the output torque by 1 times motor rated torque.
	PEAK CURR LEVEL (2006)	Preset Value: CALC Range: 0 - Peak Rated Current
		(Vector) Sets maximum motor current level for operation. (V/F) Sets the motor current (including MAG current) where foldback begins.
	REGEN TORQ LIMIT (2007)	Preset Value: CALC Range: 0.0 - Drive Rated Peak Current in amps
		Sets the maximum motor current (not including MAG current allowed during regen. Based upon brake resistor ohms programmed in P2501.
	REGEN ADJUST (2008) Only available or active in V/F mode. Ignore this parameter for Open Vector mode.	Preset Value: 0 Range 0 - 500 Hz/Sec
		Used to increase the drive output frequency to the motor when regen current is greater than 1/10th of current limit to avoid overvoltages when applying the drive with cyclic regenerative loads such as pump jacks.

Table 7-2 Level 2 Parameter Block Definitions Continued

Block Title	Parameter (Number) Selection (Value)	Parameter Name and Description
DRIVE CONFIG	**SPEED UNITS** (2101)	Preset Value: 0 Range: 0 - 1
	Hz (0)	Sets units to Frequency, Hz.
	RPM (1)	Sets units to RPM.
	LANGUAGE SELECT (2102)	Preset Value: 0 Range: 0 - 1
	English (0)	Sets English as displayed text.
	Other (1)	Sets "OTHER", (Spanish, German, Italian, French, or Portuguese) English and one language can be stored (Spanish, German, Italian, French and Portuguese). Standard firmware allows English and Spanish. For other languages, language tables must be loaded into the drive's language flash area.
	FACTORY SETTINGS (2103)	Preset Value: 0 Range: 0 - 1
	No (0)	No Action.
	Yes (1)	Restores factory settings for all parameters. (Overwrites all stored values for all four parameter tables).
	SECURITY (2105)	Preset Value: 0 Range: 0 - 3
	Off (0)	Security not enabled.
	Local (1)	Security enabled for keypad only.
	Network (2)	Security enabled for Network only.
	Total (3)	Security enabled for both Keypad and Network.
		Enables Security.
	ACCESS TIMEOUT (2106)	Preset Value: 5.0 Range: 1.0 - 600.0 seconds
		If security is enabled and program mode is entered, the access code must be correctly entered. After parameters are changed and program mode exited this timer begins to timeout. If program mode is accessed after timeout, the security code must be entered a second time.
	ACCESS CODE (2107)	Preset Value: 9999 Range: 0 - 9999
		Sets security code for login required to access locked parameters.
	ACTIVE PARAM TBL (0052)	Preset Value: 0 Range: 0 - 3
	T1 (0)	Table 1 is used as active parameter set.
	T2 (1)	Table 2 is used as active parameter set.
	T3 (2)	Table 3 is used as active parameter set.
	T4 (3)	Table 4 is used as active parameter set.
		Note: This parameter is not actually in the Level 2 Blocks. It is Parameter 0052 in the MONITOR block if using Workbench.
	CLEAR FAULT LOG (2108)	Preset Value: 0 Range: 0 - 1
	No (0)	No Action.
	Yes (1)	Deletes all fault log entries and trace values.
	DEAD TIME COMP (2109) Only available or active in V/F mode. Ignore this parameter for Open Vector mode.	Preset Value: 100.0 Range: 0 to 100.0%
		Compensates for voltage loss due to switching dead time at the PWM output.

Table 7-2 Level 2 Parameter Block Definitions Continued

Block Title	Parameter (Number) Selection (Value)	Parameter Name and Description
DRIVE CONFIG (Continued)	**POWER INPUT** (2110)	Preset Value: 2 Range: 0 - 3
	Single Phase (0)	The output values are derated for single phase operation. Note: For three phase power input, if a phase is lost this parameter will automatically be changed to single phase and the control will automatically be derated for single phase operation.
	Common Bus Slave (1)	Selected when only DC input power (master) is available. **Do not choose if AC power is connected.** Common bus setting disables precharge and soft start features of the control.
	Three Phase (2)	Standard operation.
	Common Bus Master (3)	Selected for special installations, three phase with common bus slave support.
		The Power base senses the control power base (single or three phase). If connecting a three phase control to a single phase power source, change value from 2 to 0 to avoid “Loss of Phase” trips.
	BUS VOLT FILTER (2111) Only available or active in V/F. Ignore for Open Vector mode.	Preset Value: 10.00 Range: 0.10 - 1000.00 Hz
		Sets the cutoff frequency for the BUS Voltage Filter (used to demodulate the BUS).
	EXECUTE MACRO (2112)	Preset Value: 0 Range: 0 - 5
	No (0)	Do not execute macro.
	M1 (1)	Execute Macro M1.
	M2 (2)	Execute Macro M2.
	M3 (3)	Execute Macro M3.
	M4 (4)	Execute Macro M4.
	M5 (5)	Execute Macro M5.
		Executes the selected macro one time. A macro is a list of parameter numbers and values that when executed set the respective parameters in the list to the predefined values.
	UNDO MACRO (2113)	Preset Value: 0 Range: 0 - 1
	No (0)	Don’t undo macro.
	Yes (1)	Value in the parameter Macro Status (P116) is read and that macro is undone (factory settings are restored for values modified by that macro).
	TORQ ENABLE SEQ (2114)	Preset Value: 0 Range: 0 - 1
	Torque On Enable (0)	Regulates motor torque any time the drive is enabled.
	Torque On Command (1)	Regulates motor torque only after the drive has received a run forward or run reverse command.
		This parameter determines whether the drive starts regulating motor torque immediately upon closure of the drive enable input (J2-8) or only after the drive receives a forward/reverse command input. Only effective during remote operation while in open vector mode.
DRIVE PROTECT	**EXTERNAL TRIP** (2201)	Preset Value: 0 Range: 0 - 1
	Off (0)	External Trip is disabled.
	On (1)	External Trip is enabled. If a normally closed contact at J2-16 is opened, an External Trip fault will occur and cause the drive to shut down.

Table 7-2 Level 2 Parameter Block Definitions Continued

Block Title	Parameter (Number) Selection (Value)	Parameter Name and Description
DRIVE PROTECT (Continued)	**FOLLOWING ERROR** (2202) Only available or active in Open Vector mode. Ignore for V/F mode.	Preset Value: 0 Range: 0 - 1
	Off (0)	Control ignores “At Speed Error” from the process.
	On (1)	Control monitors the following error from the process. If the process speed is outside the range set in the Level 1 Output block, At Speed Band parameter, the drive will fault and will disable.
	TORQUE PROVING (2203) Only available or active in Open Vector mode. Ignore for V/F mode.	Preset Value: 0 Range: 0 - 1
	Off (0)	Control ignores unbalanced motor phases.
	On (1)	Control looks for balanced output current in all three phases to the motor. Unbalanced output current will cause a trip and create a torque proving fault. This occurs after establishing flux current in the motor.
	FOLDBACK GAIN (2205) Only available or active in V/F mode. Ignore for Open Vector mode.	Preset Value: 0.010 Range: 0.000 - 10.000
		Sets the rate of change of output frequency during current limit.
	OVERLOAD (2206)	Preset Value: 0 Range: 0 - 2
	Fault (0)	Drive will fault and disable PWM to motor if overload capability is exceeded.
	Foldback (1)	Drive attempts to reduce current to 80% of Drive rated current so that time remaining can count back up.
	Hold (2)	Drive attempts to reduce current to 100% of drive rated current so that time remaining can hold at present value.
		Sets how the control handles I^2T power overloads. When an overload occurs it will either Fault, Foldback, or Hold based on the control output AMPS.
	OVERLOAD TRIGGER (2207) Only available or active in V/F mode. Ignore for Open Vector mode.	Preset Value: 50.0 Range: 0.0 - 100.0%
		Sets the trigger point for an overload condition.
	SINGLE PHASING (2209)	Preset Value: 1 Range: 0 - 1
	Derate (0)	When an input power phase is lost, single phase operation is assumed and control output is derated by 50% and operation is allowed at the reduced output.
	Fault (1)	When input power phase is lost for approximately 10 cycles, control trips on fault.
		Single Phasing Not available for size AA controls.
	OVER TEMPERATURE (2210)	Preset Value: 1 Range: 0 - 1
	Derate (0)	When control temperature reaches 80°C (standard or 90°C quiet mode), output is derated by 30% (current limiting) and operation is allowed at the reduced value. Operation at full current is allowed when control temperature decreases to 70°C. If control temperature reaches 85°C, control trips on fault.
	Fault (1)	When control temperature reaches 85°C, control trips on fault.

Table 7-2 Level 2 Parameter Block Definitions Continued

Block Title	Parameter (Number) Selection (Value)	Parameter Name and Description
DRIVE PROTECT (Continued)	**PWR DOWN OPTIONS** (2211)	Preset Value: 0 Range: 0 -1
	Fault (0)	If Control is enabled it will trip on a fault, (disable) while powering down.
	Ride Through (1)	Control wil decelerate attempting to maintain DC Bus voltage and continue operation.
		Determines how the drive responds to a line loss.
	CNTL STP BUS LVL (2212)	Preset Value: CALC Range: 200 to 800V
		Active during a power loss ride-through. Sets the DC bus level at which a controlled stop may be triggered.
	CNTL STOP DELAY (2213)	Preset Value: 1.0 Range: 0 to 3600.0 Seconds
		Active during a power loss controlled stop or ride-through. Sets the delay time required after a controlled stop before drive enable.
	Kp RIDE THROUGH (2214)	Preset Value: 10.0000 Range: 0 to 1000.0000
		Proportional gain of PI controller for power loss ride through.
	Ki RIDE THROUGH (2215)	Preset Value: 0 Range: 0 to 1000.0000
		Integral gain of PI controller for power loss ride through.
MISCELLA-NEOUS	**AUTO RESTART** (2301)	Preset Value: 1 Range: 0 - 3
	Manual (0)	If set to Manual and a run command (enable signal & FWD or REV command) is present at power up, the motor will not run. The run command must be removed then reapplied to start operation. The run command refers to the enable plus direction (FWD or REV) signals. Restart after Fault - If a fault occurs during operation, the control must be reset and the run command must be removed then reapplied to start operation. Note: If Restarts/Hr (P2302) is zero, the control must be manually reset. If Restarts/Hr (P2302) is non-zero, the control will automatically attempt to reset the fault but will not restart until the run command is removed then reapplied to start operation.
	At Powerup (1)	If a run command (enable signal & FWD or REV command) is present at power up, the control will automatically start. Auto restarts enabled at power up but disabled after a fault.
	After Fault (2)	If a fault occurs during operation, the control will automatically reset (after the restart delay time) to resume operation if the Restarts/Hr (P2302) is set to a non zero value. Auto restarts disabled at power up but enabled after a fault.
	Both (3)	Auto restarts active at power up and after faults. 3 Wire modes, AUTO start after a fault or loss of power will not occur because the momentary contacts are open and the run command must again be applied. The run command refers to the enable plus direction (FWD or REV) lines.
	RESTARTS/HOUR (2302)	Preset Value: 3 Range: 0 - 10
		The maximum number of automatic restart attempts before requiring a manual restart. After one hour without reaching the maximum number of faults or if power is turned off and on again, the fault count is reset to zero.
	RESTART DELAY (2203)	Preset Value: 3 Range: 0 - 3600 seconds
		Sets the time delay after a fault occurs before a fault reset and automatic restart are attemped. If the fault reset is successful, the restart will occur. If not successful, a new delay occurs. Useful to allow sufficient time to clear a fault condition before restart is attempted.

Table 7-2 Level 2 Parameter Block Definitions Continued

Block Title	Parameter (Number) Selection (Value)	Parameter Name and Description
MISCELLA-NEOUS (Continued)	**PWM TECHNIQUE** (2304)	Preset Value: 1 Range: 0 - 1
	Space Vector (0)	Utilizes Vector Orientation to determine pulse firing.
	Sine Triangle (1)	Utilizes Sine/Triangle Waveform Intersect technique to determine pulse widths.
		Sets the method used to generate the motor voltage PWM signal.
	COST OF ENERGY (2305)	Preset Value: 0.10 Range: 0.00 - 99999.00$/KWH
		Sets the billing cost per KWH charged by the local power utility.
	RESET ENERGY (2306)	Preset Value: 0 Range: 0 - 1
	No (0)	No Action.
	Yes (1)	Resets the energy counter (in power base of the control).
	FILTER TYPE (2309)	Preset Value: 0 Range: 0 - 3
	None (0)	Sets the auxiliary filter to None.
	Low Pass (1)	Sets the auxiliary filter to Low Pass.
	High Pass (2)	Sets the auxiliary filter to High Pass.
	Notch (3)	Sets the auxiliary filter to Notch.
	FILTER SOURCE (2310)	Preset Value: 0 Range: 0 - 9
	None (0)	Sets the auxiliary filter to None.
	Raw Speed (1)	Sets the auxiliary filter to Raw Speed.
	Torque (2)	Sets the auxiliary filter to Torque Loop.
	Analog In1 (3)	Sets the auxiliary filter to Analog In1.
	Analog In2 (4)	Sets the auxiliary filter to Analog In2.
	Composite Ref (5)	Sets the auxiliary filter to Composite Reference
	Opt1 Ana In1 (6)	Sets the auxiliary filter to Opt1 Ana In1.
	Opt1 Ana In2 (7)	Sets the auxiliary filter to Opt1 Ana In2.
	Opt2 Ana In1 (8)	Sets the auxiliary filter to Opt2 Ana In1.
	Opt2 Ana In2 (9)	Sets the auxiliary filter to Opt2 Ana In2.
	FILTER DEST (2311)	Preset Value: 0 Range: 0 - 6
	None (0)	Sets the Filter Destination, (Output), to None.
	Speed Loop (1)	Sets the Filter Destination, (Output), to Speed Loop.
	Torque Loop (2)	Sets the Filter Destination, (Output), to Torque Loop.
	Speed FFWD (3)	Sets the Filter Destination, (Output), to Speed Forward.
	Process FBK (4)	Sets the Filter Destination, (Output), to Process Feedback.
	Process FFWD (5)	Sets the Filter Destination, (Output), to Process Feedforward.
	Process SP (6)	Sets the Filter Destination, (Output), to Process Setpoint.
	FILTER CUTOFF (2312)	Preset Value: 0.00 Range: 0.00 - 1000.00Hz
		Sets the cutoff frequency of the auxiliary filter (a low value = slower response).
	NOTCH CNTR FREQ (2313)	Preset Value: 0.00 Range: 0.00 - 500.00Hz
		Sets the center frequency for the notch filter (if Filter Type=Notch).

Table 7-2 Level 2 Parameter Block Definitions Continued

Block Title	Parameter (Number) Selection (Value)	Parameter Name and Description
MISCELLA-NEOUS (Continued	**NOTCH BAND** (2314)	Preset Value: 0.00 Range: 0.00 - 200.00Hz
		Sets the frequency band of the notch filter (if Filter Type=Notch).
MOTOR DATA	**MOTOR RATED VOLT** (2401)	Preset Value: CALC Range: 0 - 1000 Volts
		The rated voltage of the motor (listed on the motor nameplate).
	MOTOR RATED AMPS (2402)	Preset Value: CALC Range: 0 - MAX AMPS
		The rated current of the motor (listed on the motor nameplate).
	MOTOR RATED SPD (2403)	Preset Value: 1754 Range: 0 - 30000 RPM
		The rated speed of the motor (listed on the motor nameplate).
	MOTOR RATED FREQ (2404)	Preset Value: 60.00 Range: 10.00 - 500.00
		The rated frequency of the motor (listed on the motor nameplate).
	MOTOR MAG AMPS (2405)	Preset Value: CALC Range: 0 - 90% MAX AMPS
		The motor magnetizing current value (listed on the motor nameplate) also called no load current. Measure using a clamp on amp meter on a motor lead while the motor is running at line frequency with no load connected to the motor shaft.
	INSTABILITY FREQ (2406) Only available or active in V/F mode. Ignore for Open Vector mode.	Preset Value: 0.00 Range: 0.00 - 500.00Hz
		If the motor exhibits instability (usually no load) this parameter should be set to the center of the instability band.
	STABILITY GAIN (2407) Only available or active in V/F mode. Ignore for Open Vector mode.	Preset Value: 0.000 Range: 0.000 - 10.000
		Sets the amount of correction to stabilize the motor.
	ELEC SLIP FREQ (2412)	Preset Value: CALC Range: 0.000 - 20.000Hz
		Sets the rated slip frequency of the motor.
	CALC MOTOR MODEL (2414)	Preset Value: 0 Range: 0 - 1
	No (0)	No presets are calculated.
	Yes (1)	Loads preset values into memory that are required to perform auto tune.
	REVERSE ROTATION (2415)	Preset Value: 0 Range: 0 - 1
	Off (0)	Standard rotation not changed.
	On (1)	Control output phase change to reverse rotation direction without motor wiring change.
	MOTOR RATED HP (2416)	Preset Value: CALC Range 0 - 4 times Drive Rated HP
		Used to record the motor nameplate horsepower.
BRAKE ADJUST	**RESISTOR OHMS** (2501)	Preset Value: CALC Range: 0.00 - 255.0Ω
		The dynamic braking resistor value in ohms. Refer to dynamic braking manual for additional information.

Table 7-2 Level 2 Parameter Block Definitions Continued

Block Title	Parameter (Number) Selection (Value)	Parameter Name and Description
BRAKE ADJUST (Continued)	**RESISTOR WATTS** (2502)	Preset Value: CALC Range: 0 - 999999W
		The dynamic braking resistor watts rating.
	RESISTOR TTC (2503)	Preset Value: CALC Range: 20 – 3600 seconds
		Sets the time for heat dissipation for the dynamic braking resistor. If 2X watts is dissipated continuously “Regen R Fault” will occur in the time set by this parameter. If 3x watts is dissipated continuously, “Regen R Fault” will occur in ½ the time set by this parameter.
	DC BRAKE VOLTS (2504) Only available or active in V/F mode. Ignore for Open Vector mode.	Preset Value: 0.00 Range: 0 - 20.00%
		The amount of DC braking voltage applied to the motor windings during a stop command. Increase this value for more braking torque during stops. The increased braking voltage may cause the motor to overheat for applications that require frequent starts/stops. Be careful in selecting this value. The maximum DC Brake Voltage = (1.414) X (Max Output Volts) X 20%.
	DC BRAKE TRIGGER (2505) Only available or active in V/F mode. Ignore for Open Vector mode.	Preset Value: 0.00 Range: 0.00 - 50.00Hz
		The frequency at which dc injection braking will begin.
	BRAKE ON STOP (2506)	Preset Value: 0 Range: 0 - 1
	Off (0)	DC Injection Braking not active.
	On (1)	Enables DC Injection Braking.
		DC injection braking will begin when a stop command is issued. After a stop command, the DC brake voltage will be applied to the motor windings when the output frequency reaches the DC brake trigger.
	BRAKE ON REVERSE (2507) Only available or active in V/F mode. Ignore for Open Vector mode.	Preset Value: 0 Range: 0 - 1
	Off (0)	Brake on Reverse not active.
	On (1)	DC Injection Braking enabled on a "Change Motor Rotation Direction” command.
		DC Injection braking will begin after a change-motor-rotation command is issued. After a stop command, the DC brake voltage will be applied to the motor windings when the output frequency reaches the DC brake trigger. Braking continues until the motor is stopped or until stop brake time is exhausted. The motor will then accelerate in the opposite direction.
	STOP BRAKE TIME (2508) Only available or active in V/F mode. Ignore for Open Vector mode.	Preset Value: 0.0 Range: 0.0 - 60.0 seconds
		The maximum number of seconds that DC injection brake voltage will be applied to the motor windings after a stop command. After the time specified by this value, DC injection braking is automatically turned off. If DC injection braking starts at a frequency less than the DC brake trigger parameter, the stop brake time is calculated as follows: BrakeTime = StopBrakeTime X (OutputFrequencyatBraking / DCBrakeTrigger)

Table 7-2 Level 2 Parameter Block Definitions Continued

Block Title	Parameter (Number) Selection (Value)	Parameter Name and Description
BRAKE ADJUST (Continued)	**BRAKE ON START** (2509) Only available or active in V/F mode. Ignore for Open Vector mode.	Preset Value: 0 Range: 0 - 1
	Off (0)	Brake on Start not active.
	On (1)	Enables Brake on Start.
		ON turns DC injection braking ON for a period of time (Start Brake Time) when a run command is issued. This ensures the motor is not rotating. Braking will automatically turn off and the motor will accelerate at the end of the start brake time.
	START BRAKE TIME (2510) Only available or active in V/F mode. Ignore for Open Vector mode.	Preset Value: 0.0 Range: 0.0 - 60.0 seconds
		The amount of time that DC injection braking will be applied after a run command is issued. This will only occur if brake on start is set to ON. Braking may cause the motor to overheat for applications that require frequent starts/ stops. Be careful in selecting this value. The start brake time should be just long enough to ensure the motor shaft is not rotating when a start command is issued.
PROCESS CONTROL	**PROCESS TYPE** (2601)	Preset Value: 0 Range: 0 - 2
	None (0)	PID is disabled, however feedforward is always available.
	Forward Acting (1)	The process error computed as: PE = (Set Point) - (Feedback). Useful when feedback increases as motor speed increases.
	Reverse Acting (2)	The process error computed as: PE =(Feedback) - (Set Point). Useful when feedback decreases as motor speed increases.
		Sets the type of PID control.
	SETPOINT ADJ LIM (2602)	Preset Value: 10.0 Range: 0.0 - 100.0%
		Sets as a percent of motor speed. It limits speed corrections due to process error.
	PROC FEEDBACK (2603)	Preset Value: 0 Range: 0 - 10
	None (0)	No feedback assigned.
	Setpoint Cmd (1)	Setpoint command value used for feedback.
	Loc Speed Ref (2)	Local speed reference used for feedback.
	Analog In1 (3)	Analog Input 1 signal used for feedback.
	Analog In2 (4)	Analog Input 2 signal used for feedback.
	Network (5)	Network value used for feedback.
	Composite Ref (6)	Output of Composite Ref signal used for feedback.
	Opt1 Ana In1 (7)	Option 1, Analog Input 1 used for feedback.
	Opt1 Ana In2 (8)	Option 1, Analog Input 2 used for feedback.
	Opt2 Ana In1 (9)	Option 2, Analog Input 1 used for feedback.
	Opt2 Ana In2 (10)	Option 2, Analog Input 2 used for feedback.
		Sets the type of signal used for the process feedback signal.

Table 7-2 Level 2 Parameter Block Definitions Continued

Block Title	Parameter (Number) Selection (Value)	Parameter Name and Description
PROCESS CONTROL (Continued)	**SETPOINT SOURCE** (2604)	Preset Value: 0 Range: 0 - 10
	None (0)	Source of Process Loop Setpoint is not defined.
	Setpoint Cmd (1)	Setpoint command value used for Setpoint.
	Loc Speed Ref (2)	Local speed reference used for Setpoint.
	Analog In1 (3)	Analog Input 1 signal used for Setpoint.
	Analog In2 (4)	Analog Input 2 signal used for Setpoint.
	Network (5)	Network value used for Setpoint.
	Composite Ref (6)	Output of Composite Ref signal used for Setpoint.
	Opt1 Ana In1 (7)	Option 1, Analog Input 1 used for Setpoint.
	Opt1 Ana In2 (8)	Option 1, Analog Input 2 used for Setpoint.
	Opt2 Ana In1 (9)	Option 2, Analog Input 1 used for Setpoint.
	Opt2 Ana In2 (10)	Option 2, Analog Input 2 used for Setpoint.
		Sets the source input signal type to which the process feedback will be compared. If “Setpoint CMD” is selected, the fixed value of the set point is entered in the Setpoint Command parameter value.
	SETPOINT COMMAND (2605)	Preset Value: 0.0 Range: -100.0% to +100.0%
		Sets the value as a percentage of the process feedback signal; the control will try to maintain by adjusting motor speed. This is only used when the Setpoint Source is a fixed value “Setpoint CMD” under Setpoint Source.
	PROC ERR TOL (2606)	Preset Value: 10.0 Range: 0.0 - 100.0%
		The band within which the Opto or Relay Output is active (turned ON) indicating the process is within the desired range.
	PROC PROP GAIN (2607)	Preset Value: 1.0000 Range: 0.0000 - 9999.9990
		Sets the PID loop proportional gain. Determines how much adjustment to motor speed is due to process error.
	PROC INTG GAIN (2608)	Preset Value: 0.0000 Range: 0.0000 - 9999.9990
		Sets the PID loop Integral gain. Determines how quickly the motor speed is adjusted to correct long term error.
	PROC INTG CLAMP (2609)	Preset Value: 100.0 Range: 0.0 - 100.0%
		Sets the level of the Integrator clamp as a percentage of maximum motor speed.
	PROC DIFF GAIN (2610)	Preset Value: 0.0000 Range: 0.0000 - 9999.9990
		Sets the PID loop differential gain. This determines how much adjustment to motor speed is made for transient error.
	PROFILE ADJUST (2611)	Preset Value: 0 Range: 0 - 1
	Off (0)	No adjustment is made.
	On (1)	ACC/DEC group is selected based upon comparing process error to Profile Adjust Band (P2612).

Table 7-2 Level 2 Parameter Block Definitions Continued

Block Title	Parameter (Number) Selection (Value)	Parameter Name and Description
PROCESS CONTROL (Continued)	**PROFILE ADJ BAND** (2612)	Preset Value: 50.0 Range: 0 - 200.0%
		Active when Profile Adjust (P2611) is ON. If process error is within this band, ACC/DEC Group 1 is used. If process error is outside this band, ACC/DEC 2 is used. Useful when the PID's response needs to differ when process error is small as compared to when it is large.
	PROC SLEEP BAND (2613)	Preset Value: 0.0 Range: 0 - 100.0%
		Non-zero - Enables process PID sleep mode. When Process error remains within this band for 5 seconds, sleep mode is active (control is disabled, motor coasts). If at any time the process error moves out of this band, sleep mode is terminated and normal PID operation is resumed. Zero - Disables sleep mode.
	PROC OUT FILTER (2614)	Preset Value: 0.00 Range: 0.0 - 100.0 seconds
		Sets the amount of filtering for the PID process output.
	PROC OUT OFFSET (2615)	Preset Value: 0.0 Range: -100.0 - 100.0%
		Sets the amount of offset for the PID process output.
	PROC OUT GAIN (2616)	Preset Value: 100.0 Range: 0.0 - 200.0%
		Sets the amount of gain for the PID process output.
SKIP FRE-QUENCY	**SKIP FREQ 1** (2701) **SKIP FREQ 2** (2703) **SKIP FREQ 3** (2705)	Preset Value: 0.00 Preset Value: 0.00 Preset Value: 0.00 Range: 0 - MAX Speed Hz
		The center frequency of the frequency band to skip or treat as a deadband. Three bands can be defined independently or the three values can be selected to skip one wide frequency band.
	SKIP BAND 1 (2702) **SKIP BAND 2** (2704) **SKIP BAND 3** (2706)	Preset Value: 0.00 Preset Value: 0.00 Preset Value: 0.00 Range: 0 - MAX Speed Hz
		Defines the width of the band on either side of the Skip Frequency. The drive is not allowed to operate continuously at any point within a range defined by the Skip Frequency and the Skip Band. The lower boundary of this band is equal to the Skip Frequency minus the Skip Band. The upper boundary of this band is equal to the Skip Frequency plus the Skip Band. If the speed reference is set to a value between the lower boundary and the upper boundary, the drive will operate at the lower boundary when the band is being approached from a speed less than the lower boundary. If the band is being approached from a speed greater than the upper boundary, the drive will operate at the upper boundary. Should the speed reference be set to a value outside the band, then the drive will ramp through the band using the normal ACC/DEC settings. For example, if Skip Frequency 1 (P2701) is set to 20Hz and Skip Band 1 (P2702) is set to 5Hz, then the lower boundary of the band is at 15Hz and the upper boundary of the band is at 25Hz.
SYNCHRO START	**SYNC START FWD** (2801)	Preset Value: 0 Range: 0 - 1
	Off (0)	Synchro Start Forward feature not active.
	On (1)	Synchro Start Forward feature active.
		Synchro Start Forward feature begins scanning motor rotational frequency in the drive forward direction. If on, scan always starts in FWD direction even if P2802 is ON.

Table 7-2 Level 2 Parameter Block Definitions Continued

Block Title	Parameter (Number) Selection (Value)	Parameter Name and Description
SYNCHRO START (Continued)	**SYNC START REV** (2802)	Preset Value: 0 Range: 0 - 1
	Off (0)	Synchro Start Reverse feature not active.
	On (1)	Synchro Start Reverse feature active.
		Synchro Start feature begins scanning motor rotational frequency in the drive reverse direction. If P2801 is ON, scan always starts in FWD direction even if P2802 is ON.
	SYNC AT MAX FREQ (2803)	Preset Value: 1 Range: 0 - 1
	Off (0)	Synchro at Max Frequency feature not active.
	On (1)	Synchro at Max Frequency feature active.
		Allows the Synchro Start feature to begin scanning motor rotational frequency at the MAX Frequenhcy (On) or at the last speed reference command (Off).
	SYNCHRO SCAN V/F (2804)	Preset Value: 10.0 % V/F – 10% Open Vector Range: 1.0 - 25.0%
		Sets the Volts/Hertz ratio for the Synchro Start feature as a percentage of the V/F ratio defined by the “Control Base Volts/Control Base Frequency”. This Synchro Scan V/F percentage value is multiplied by the “Control Base Volts/ Control Base Frequency” value. If this value is too high, the inverter may fault on Overcurrent.
	SYNC SETUP TIME (2805)	Preset Value: 0.20 V/F – 0.10 Open Vector Range: 0.5 - 10.0 seconds
		The time at max frequency (or last reference) before scanning begins. Allows motor currents to settle before scanning starts. Active in both forward and reverse directions.
	SYNC SCAN TIME (2806)	Preset Value: 2.0 V/F – 0.50 Open Vector Range: 0.5 - 10.0 seconds
		The maximum time allowed for Synchro Start to scan and detect rotor speed in either direction. Scanning begins at the Start at MAX Frequency to 0Hz. Generally, the shorter the Synchro Scan Time the more likely a false Synchro Start will be detected. This value should be set high enough to eliminate false Synchro Starts. This time applies in each direction.
	SYNC RECOVER (2807)	Preset Value: 1.0 V/F – 0.10 Open Vector Range: 0.1 - 10.0 seconds
		This time applies after the synchro frequency has been found. It is the amount of time given to ramp the voltage from the synchro start V/F ratio voltage level to the full V/F voltage level required by the motor.
AUTO TUNE	**ANA OFFSET TRIM** (2901)	Preset Value: 0 Range: 0 - 1
	No (0)	No action.
	Yes (1)	Measures analog offset for all analog inputs. Set analog inputs to zero before executing.
	ONE-STEP TUNING (2902) Only available or active in Open Vector mode. Ignore for V/F mode.	Preset Value: 0 Range: 0 - 1
	No (0)	No action.
	Yes (1)	Performs one step auto tune. (Prompts for “Press Enter” before a rotational test is performed).
	STATOR R1 TUNE (2903)	Preset Value: 0 Range: 0 - 1
	No (0)	No action.
	Yes (1)	Measures Stator Resistance. Stationary test will not cause motor shaft rotation.

Table 7-2 Level 2 Parameter Block Definitions Continued

Block Title	Parameter (Number) Selection (Value)	Parameter Name and Description
AUTO TUNE (Continued)	**MEASURE Xm (ROT)** (2904) Only available or active in Open Vector mode. Ignore for V/F mode.	Preset Value: 0 Range: 0 - 1
	No (0)	No action.
	Yes (1)	Measures MAG Reactance. This is a rotational test. Load should be decoupled from the motor.
	MEASURE LEAKAGE (2905) Only available or active in Open Vector mode. Ignore for V/F mode.	Preset Value: 0 Range: 0 - 1
	No (0)	No action.
	Yes (1)	Measures leakage reactance and rotor resistance.
	CUR. LOOP TUNE (2906) Only available or active in Open Vector mode. Ignore for V/F mode.	Preset Value: 0 Range: 0 - 1
	No (0)	No action.
	Yes (1)	Tunes the current controller loop.
	FLUX CUR. TUNE (2907) Only available or active in Open Vector mode. Ignore for V/F mode.	Preset Value: 0 Range: 0 - 1
	No (0)	No action.
	Yes (1)	Tunes the flux controller loop. This is a rotational test.

7.3 Level 3 Parameters (Advanced Prog, Level 3 Blocks)

Table 7-3 Level 3 Parameter Block Definitions

Block Title	Parameter (Number) Selection (Value)	Parameter Name and Description
PROFILE RUN	**NUMBER OF CYCLES** (3001)	Preset Value: 0 Range: 0 - 255
		Sets the number of cycles that the profile will automatically run before stopping.
	PR RESTART MODE (3002)	Preset Value: 0 Range: 0 - 1
	Restart (0)	If interrupted, profile will start from the first step.
	Continue (1)	If interrupted, profile will start from current step.
		Sets the restart mode if Profile Run is interrupted.
	SPEED CURVE 1 (3003) **SPEED CURVE 2** (3005) **SPEED CURVE 3** (3007) **SPEED CURVE 4** (3009) **SPEED CURVE 5** (3011) **SPEED CURVE 6** (3013) **SPEED CURVE 7** (3015)	Preset Value: 0 Preset Value: 0 Preset Value: 0 Preset Value: 0 Preset Value: 0 Preset Value: 0 Preset Value: 0 Range: 0 - 3
	FWD-Group1 (0)	FWD-ACC/DEC Group1
	REV-Group1 (1)	REV-ACC/DEC Group1
	FWD-Group2 (2)	FWD-ACC/DEC Group2
	REV-Group2 (3)	REV-ACC/DEC Group2
		Speed for curve is set by the value of the correlating Preset Speed.
	PROFILE TIME 1 (3004) **PROFILE TIME 2** (3006) **PROFILE TIME 3** (3008) **PROFILE TIME 4** (3010) **PROFILE TIME 5** (3012) **PROFILE TIME 6** (3014) **PROFILE TIME 7** (3016)	Preset Value: 0.00 Preset Value: 0.00 Preset Value: 0.00 Preset Value: 0.00 Preset Value: 0.00 Preset Value: 0.00 Preset Value: 0.00 Range: 0 - 65535.00 seconds
		Sets the amount of time Profile Run stays at a preset speed. Time starts when speed is within the At Speed Band P1506. ACC/DEC times are not included. A setting of zero causes an immediate transition to the next speed segment after the current segment is within the speed band. (See also 1506.)
PULSE FOLLOWER	**MASTER PPR** (3101)	Preset Value: 1024 Range: 50 - 20000 counts
		The number of encoder pulses per revolution of the master encoder. (See also MN755.)
	INPUT VOLTS (3102)	Preset Value: 0 Range: 0 - 1
	5V (0)	Encoder operating voltage is 5V.
	12V (1)	Encoder operating voltage is 12V.
	INPUT TYPE (3103)	Preset Value: 1 Range: 0 - 2
	None (0)	No encoder input signal to the EXBHH007 expansion board.
	Quadrature (1)	Quadrature encoder input signal to the EXBHH007 expansion board.
	Speed (2)	Speed encoder input signal to the EXBHH007 expansion board.

Table 7-3 Level 3 Parameter Block Definitions Continued

Block Title	Parameter (Number) Selection (Value)	Parameter Name and Description
PULSE FOLLOWER (Continued)	**TRACK MODE** (3104)	Preset Value: 0 Range: 0
	Velocity Following (0)	Increment/Decrement changes the Rx Ratio Output by the value of the increment step parameter on the fly, and follows the velocity of the master (no position loop). The present position gain parameter disabled (internally set to 0).
		Note that Position Following and Position Sync modes are not applicable.
	INCREMENT STEP (3105)	Preset Value: 1 Range: 1 - 1024
		Output portion of the selected I:O ratio or absolute position is changed by this.
	RX RATIO INPUT (3106)	Preset Value: 1024 Range: 1 - 1048576
		Receive Input Ratio or the received counts input divisor.
	RX RATIO OUT 1 (3107) **RX RATIO OUT 2** (3108) **RX RATIO OUT 3** (3109) **RX RATIO OUT 4** (3110)	Preset Value: 1024 Preset Value: 1024 Preset Value: 1024 Preset Value: 1024 Range: 1 - 1048576
		Received counts output multiplier.
	OUTPUT TYPE (3111)	Preset Value: 0 Range: 0 - 1
	Quadrature (0)	Quadrature encoder output signal from the EXBHH007 expansion board.
	Speed (1)	Speed encoder output signal from the EXBHH007 expansion board.
	TX RATIO INPUT (3112)	Preset Value: 1:1024 Range: 1 - 1048576
		Retransmitted input count ratio or retransmitted input counts divisor.
	TX RATIO OUTPUT (3113)	Preset Value: 1024 Range: 1 - 20000
		Retransmitted output count ratio or retransmitted output counts output multiplier. 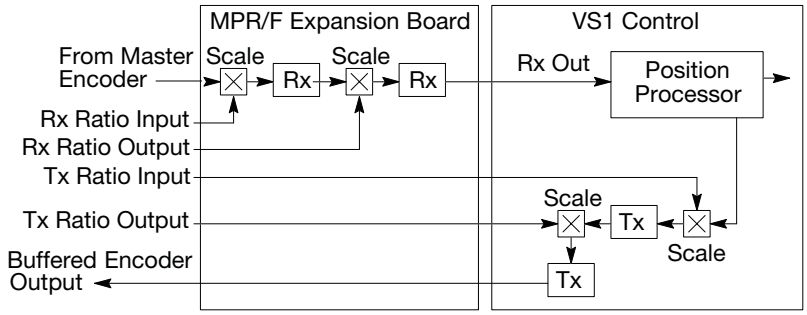 **Example:** Master Encoder=1024, Buffered Encoder Output = 1024 (Desired) Rx Ratio In=1024, Rx Ratio Out = 2048 Rx Out to H2 Control = 2048 Tx Ratio In = 2048, Tx Ratio Out = 1024 Buffered Encoder Output = 1024
	SAVE RX OUT RATI (3114)	Preset Value: 0 Range: 0 – 1
	No (0)	Does not save values to non-volatile memory.
	Yes (1)	Saves values to non-volatile memory.
		Determines whether or not receive output ratios are saved to non-volatile memory so that they are retained upon loss of drive power.

Table 7-3 Level 3 Parameter Block Definitions Continued

Block Title	Parameter (Number) Selection (Value)	Parameter Name and Description
CUSTOM UNITS	**MAX DEC PLACES** (3201)	Preset Value: 1 Range: 0 - 5
	0	Zero decimal places for the Custom Units display.
	1	One decimal place for the Custom Units display.
	2	Two decimal places for the Custom Units display.
	3	Three decimal places for the Custom Units display.
	4	Four decimal places for the Custom Units display.
	5	Five decimal places for the Custom Units display.
		The number of decimal places for the Custom Units display.
	VALUE AT SPEED (3202)	Preset Value: 0.0: 0 Range: 0.0 - 9999999.0 (X.X: YRPM)
		Sets the desired output rate per RPM of motor speed for the Custom Units display. This parameter provides scaling. Normal status display used until “y” is set to a non-zero value. The value “X.X” is displayed at “Y” RPM. Note that “Y” RPM is programmed in parameter P3204 when using Mint WorkBench.
	UNITS OF MEASURE (3203)	Preset Value: Cust Range: ASCII & Graphic Characters
		Allows user specified units of measure to be displayed for the Custom Units display. Characters are selected from display using ▲ and ▼ keys. More characters are available (press MORE “F1” on keypad) for additional characters.
PLC MODE	**PLC LOCK** (3400)	Preset Value: 0 Range 0 - 1
	Off (0)	Contents of PLC parameters P3401 through P3430 are viewable. If security is Off or the access code is entered, then the contents of these parameters are also changeable.
	On (1)	Contents of PLC parameters P3401 through P3430 are hidden from user by displaying 0.0.0.0 for each of these parameters. This parameter is used to protect OEM/System Integrator programming that has been developed for the PLC operating mode. Set this parameter to 1-On to protect the code.
		This parameter is only accessible by using Mint WorkBench. It cannot be viewed or changed from the keypad. Note: Transitioning this parameter from 1-On to 0-Off resets each of the parameters P3401 through P3430 to their factory default thus clearing the programming.
	PLC CONFIG 1 through PLC CONFIG 30 (3401 - 3430)	Preset Value: 000.128.000.000 Range: 0 to 255.255.255.255
		30 PLC statements that define the 32 bit word format and structure as: Parameter Number Format = DDD.CCC.BBB.AAA Example: P3401 = 051.000.000.020 Where: DDD = bits 31-24 Byte 3 051 = Digital Input 1 (see Chapter 10) CCC = bits 23-16 Byte 2 000 = OR (see Chapter 10) BBB = bits 15-8 Byte 1 000 = False (see Chapter 10) AAA = bits 7-0 Byte 0 020 = Forward (see Chapter 10) Parameter No. | Hex Byte 3 | Hex Byte 2 | Hex Byte 1 | Hex Byte 0 PS3401 - 3430 | Condition ID MSD (see Chapter 10) | Logical Operator ID (see Chapter 10) | Condition ID (see Chapter 10) | Action ID LSD (see Chapter 10) See also Chapter 10.

Table 7-3 Level 3 Parameter Block Definitions Continued

Block Title	Parameter (Number) Selection (Value)	Parameter Name and Description
PLC MODE (Continued)	**COMPARE A PARAM** (3431) **COMPARE B PARAM** (3433)	Preset Value: 0 Preset Value: 0 Range: 00000 to 10000
		Comparator parameters provide a way to monitor real-time signals within the drive and apply them to the PLC Mode's logic. The setting of this parameter is the number of the parameter to be monitored by the comparator. They may be used on the condition definition side of the PLC Mode's logic. (See Chapter 10).
	COMPARE A CNST1 (3432) **COMPARE B CNST1** (3434) **COMPARE A CNST2** (3435) **COMPARE B CNST2** (3436)	Preset Value: 0.00 Preset Value: 0.00 Preset Value: 0.00 Preset Value: 0.00 Range: 0.00 to 100.00%
		See Chapter 10.
	TIMER A DURATION (3440) **TIMER B DURATION** (3441) **TIMER C DURATION** (3442) **TIMER D DURATION** (3443)	Preset Value: 0.00 Preset Value: 0.00 Preset Value: 0.00 Preset Value: 0.00 Range: 0.00 to 999999.00 seconds
		See Chapter 10.
COMP REF	**PARAM A NUMBER** (3501) **PARAM B NUMBER** (3503)	Preset Value: 0 Preset Value: 0 Range: 00000 to 10000
		Holds number to the second parameter used in the reference. See Chapter 11.
	PARAM A FUNCTION (3502) **PARAM B FUNCTION** (3504)	Preset Value: 0 Preset Value: 0 Range: 0 - 9
	Zero (0)	
	Identity (1)	
	Absolute Value (2)	
	Invert (3)	
	Square (4)	
	Square Root (5)	
	Sine (6)	
	Cosine (7)	
	Ramp Generator (8)	
	Freq Generator (9)	
		Mathematical function applied to the first (A) and second (B) parameter. See Chapter 11.
	OPERATOR (3505)	Preset Value: 0 Range: 0 - 5
	Sum (0)	
	Difference (1)	
	Multiply (2)	
	Divide (3)	
	Maximum (4)	
	Minimum (5)	
		The mathematical operator applied to the first and second parameters. See Chapter 11.

Table 7-3 Level 3 Parameter Block Definitions Continued

Block Title	Parameter (Number) Selection (Value)	Parameter Name and Description
COMP REF (Continued)	**FUNCTION** (3506)	Preset Value: 1 Range: 0 - 9
	Zero (0)	
	Identity (1)	
	Absolute Value (2)	
	Invert (3)	
	Square (4)	
	Square Root (5)	
	Sine (6)	
	Cosine (7)	
	Ramp Generator (8)	
	Freq Generator (9)	
		Mathematical function applied after the operator. See Chapter 11.
	PARAM A GAIN (3507) **PARAM B GAIN** (3508)	Preset Value: 1.00 Preset Value: 1.00 Range: -1000.000 to 1000.000
		Provides numerical scaling for parameter A and B. See Chapter 11.
RTC FEATURES	**RTC ACTION 1** (3601) **RTC ACTION 2** (3602)	Preset Value: 0 Preset Value: 0 Range: 0 - 23
	None (0)	
	D.Out1 On (1)	
	D.Out1 Off (2)	
	D.Out2 On (3)	
	D.Out2 Off (4)	
	R.Out1 On (5)	
	R.Out1 Off (6)	
	R.Out2 On (7)	
	R.Out2Off (8)	
	Increment (9)	
	Decrement (10)	
	Reset (11)	
	D.Out1 On/IncP107 (12)	
	D.Out1 Off/IncP107 (13)	
	D.Out1 On/DecP107 (14)	
	D.Out1 Off/DecP107 (15)	
	D.Out1 On/Reset (16)	
	D.Out1 Off/Reset (17)	
	R.Out1 On/IncP107 (18)	
	R.Out1 Off/IncP107 (19)	
	R.Out1 On/DecP107 (20)	
	R.Out1 Off/DecP107 (21)	
	R.Out1 On/Reset (22)	
	R.Out1 Off/Reset (23)	
		First action taken as a result of an edge from the RTC. See Chapter 12.
		Second action taken as a result of an edge from the RTC. See Chapter 12.

Table 7-3 Level 3 Parameter Block Definitions Continued

Block Title	Parameter (Number) Selection (Value)	Parameter Name and Description
RTC FEATURES (Continued)	**RTC MESSAGE 1** (3603) **RTC MESSAGE 2** (3604)	Preset Value: 0 Preset Value: 0 Range: 0 - 8
	None (0)	
	Clean Filter (1)	
	Change Filter (2)	
	Apply Oil/Lube (3)	
	Lube Mtr. Brngs (4)	
	Service Drive (5)	
	Service Coolant (6)	
	Service Heating (7)	
	RTC Alarm (8)	
		First message sent as a result of an edge from the RTC. See Chapter 12.
		Second message sent as a result of an edge from the RTC. See Chapter 12.
	ACT1 QUALIFIER (3605) **ACT2 QUALIFIER** (3606)	Preset Value: 0 Preset Value: 0 Range: 0 - 6
	Once (0)	
	Second (1)	
	Minute (2)	
	Hourly (3)	
	Daily (4)	
	Monthly (5)	
	Yearly (6)	
		Schedule qualifier for the RTC action 1. See Chapter 12.
		Schedule qualifier for the RTC action 2. See Chapter 12.
	MSG1 QUALIFIER (3607) **MSG2 QUALIFIER** (3608)	Preset Value: 0 Preset Value: 0 Range: 0 - 6
	Once (0)	
	Second (1)	
	Minute (2)	
	Hourly (3)	
	Daily (4)	
	Monthly (5)	
	Yearly (6)	
		Schedule qualifier for the RTC message 1. See Chapter 12.
		Schedule qualifier for the RTC message 2. See Chapter 12.
	ACT1 DATE/TIME (3609) **ACT 2 DATE/TIME** (3610)	Preset Value: 01 January 2000, 00:00:00 Preset Value: 01 January 2000, 00:00:00 Range: 01 January 2000, 00:00:00 - 31 December 2063, 23:59:59
		Schedule qualifier for the RTC message 1. See Chapter 12.
		Schedule qualifier for the RTC message 2. See Chapter 12.

Table 7-3 Level 3 Parameter Block Definitions Continued

Block Title	Parameter (Number) Selection (Value)	Parameter Name and Description
RTC FEATURES (Continued)	**MSG1 DATE/TIME** (3611) **MSG 2 DATE/TIME** (3612)	Preset Value: 01 January 2000, 00:00:00 Preset Value: 01 January 2000, 00:00:00 Range: 01 January 2000, 00:00:00 - 31 December 2063, 23:59:59
		Date and Time for RTC message 1. See Chapter 12.
		Date and Time for RTC message 2. See Chapter 12.
	RTC COUNTER MAX (3630)	Preset Value: 0 Range: 00000 - 99999
		See Chapter 12.
	DST SELECT (3631)	Preset Value: 0 Range: 0 - 2
	Off (0)	Daylight Saving Time select. DST not used.
	U.S.A (1)	Daylight Saving Time select. DST for U.S.A.
	E.U. (2)	Daylight Saving Time select. DST for E.U.
		See Chapter 12.

Chapter 8

Customizing Your Application

Manually Tuning the Control
In some applications the drive cannot be accurately auto tuned. In these cases, it is necessary to calculate the values needed to tune the drive and manually enter these calculated parameter values. In case the autotune feature cannot be used, enter the motor rated and magnetizing current parameters as described below and execute “Calc Motor Model”. Use the current proportional, current integral and speed gains calculated after this step as the starting point for manual fine-tuning.

Motor Mag Amps Parameter
This parameter is located in the Level 2, Motor Data Block. This parameter is normally entered using the nameplate data (motor no load amps) or auto tuned. If no other data is available, set Motor Mag Amps parameter to about 40% of the motor rated current stated on the nameplate.
The following procedure should be used for setting the Motor Mag Amps parameter with the motor coupled to the load:
1. Adjust the Motor Mag Amps parameter to 40% of the motor nameplate full load current rating.
2. Give the controller a speed command input of 80% of the Base Speed on motor nameplate.
3. Observe the Motor Rated Volt parameter on the keypad Diagnostic display. Ideally, it should be 80% of motor nameplate voltage. By raising the Motor Mag Amps parameter value, the motor voltage will increase proportionally. By reducing the Motor Mag Amps parameter value, the motor voltage will decrease proportionally.
4. While the motor is running, adjust the Motor Mag Amps parameter until the display indicates the proper voltage (80% of motor rated).

Electrical Slip Frequency Parameter
This parameter is located in the Level 2, Motor Data Block. The slip frequency may be calculated from nameplate data or auto tuned.

$$\text{Fslip} = \text{Rated Freq} - [\,(\text{Rated RPM} \times \text{Number of Motor Poles}) / 120\,]$$

Current Prop Gain Parameter
This parameter is located in the Level 1, Motor Control Block. The value is set at the factory and is recommended to be changed with Auto Tune or “Calc Motor Model”. Do not attempt to change the value manually.

Current Int Gain Parameter
The Current Int Gain parameter located in the Level 1 Motor Control Block is factory set and is suitable for most applications.

Speed Prop Gain Parameter
The Speed Prop Gain parameter located in the Level 1 Motor Control Block is factory set to 5. This gain may be increased or decreased to suit the application. Increasing the Speed Prop Gain parameter will result in faster response, excessive proportional gain will cause overshoot and ringing. Decreasing the Speed Prop Gain parameter will cause slower response and decrease overshoot, ringing, and possibly instability resulting in overcurrent faults.

Speed Int Gain Parameter
The Speed Int Gain parameter in the Level 1 Motor Control Block is set to 10 Hz and may be set at any value. See also, PI Controller later in this section. Setting the Speed Int Gain parameter to 0Hz removes integral compensation that results in a proportional rate loop. This selection is for systems where overshoot must be avoided and stiffness (ability of the controller to maintain commanded speed with varying torque loads) is not required.
Increasing values of the Speed Int Gain parameter increases the stiffness of the controller. Typical setting is 10 Hz. If the Speed Prop Gain parameter and the Speed Int Gain parameter are set too high, an overshoot condition can occur.
To manually tune the control, the following procedure is used with the load coupled to the motor:
1. Set the speed Integral Gain parameter = 0 (remove integral gain).
2. Increase the Speed Prop Gain parameter setting until adequate response to step speed commands is attained.
3. Increase the Speed Integral Gain parameter setting to increase the stiffness of the drive. Note: It is convenient to monitor speed step response with a strip chart recorder or storage oscilloscope connected to J1A-6 or -7 with Level 1, Output Block Analog Out #1 or #2 set to ABS SPEED, 0 VDC = zero speed. See Chapter 5 for a discussion of analog outputs. Additionally, the scope function within Mint WorkBench is a good tool to use while tuning the drive speed loop.

PI Controller
Both the current and rate control loops are of the Proportional plus Integral type. If “E” is defined to be the error signal,
E = Command - Feedback
then the PI controller operated on “E” as
$\text{Output} = (Kp * E) + (Ki \int E\,dt)$
where Kp is the proportional gain of the system and Ki is the integral gain of the system.
The transfer function (output /E) of the controller using 1/s (Laplace Operator) to denote the integral,
$\text{Output}/E = Kp + Ki / s = Kp\,(s + Ki/Kp) / s$.
The second equation shows that the ratio of Ki/Kp is a frequency in radians/sec. In the Baldor AC Vector Control, the integral gain has been redefined to be,
$KI = (Ki / Kp) / (2\pi)$ Hz,
and the transfer function is,
$\text{Output}/E = Kp\,(s + 2\pi KI) / s$.
The integral gain is a frequency (in Hz) and should be set to about 1/10 of the bandwidth of the control loop.
The proportional gain sets the open loop gain of the system, the bandwidth (speed of response) of the system.
If the system electrical noise is excessive, the most likely cause is that the proportional gain is set too high.

Chapter 9
Troubleshooting

The VS1SP continuously monitors its status and operation. When a fault occurs, the event and drive status is captured to help you troubleshoot problems. The following are designed to help in troubleshooting:

- LEDs on the keypad indicate status (Stop, FWD, REV, Jog)
- Fault Codes displayed on the keypad display as they occur
- A log of these faults and the time each occurred is kept in the Event Log
- A trace log for each event stored in the Event log

9.1 Event Log

From the Menu display screen, select Event Log and press enter. If an error is displayed during operation, press the “Help” key to learn more about the error. If more than one error was logged, access the Event Log and examine each error Entry at the time of the event to learn more about the error.

Action	Description	Display	Comments
S	A S	STATUS FWD LOCAL 159.5V 600RPM 6.2A 20.00HZ DIAG 600r MAIN	
		STATUS BASIC PARAMS ADVANCED PROG EVENT LOG DIAGNOSTICS DIAG BACK	▲ ▼ G
	Displays error name, Entry # and time the error occurred. LOW INITIAL BUS 0 Date Time Entry # SS 0-9	EV. LOG STOP LOCAL LOW INITIAL BUS 0 4-Jul-06 09:35:00 STATUS TRACE	▲ ▼ S

Trace

Trace is used to display control conditions present at the time the fault occurred. Input states, Output states, various voltage and current values etc. can be viewed to help understand the cause of the fault condition. Each event in the Event log has its own Fault Trace displays that were captured when that event occurred. Scroll through the event log to the event you wish to investigate.

Trace Displays

Action	Description	Display	Comments
Event Log Display	Press ▲ or ▼ to scroll to the event you want to investigate.	EV. LOG STOP LOCAL LOW INITIAL BUS 3 4-Jul-06 09:42:00 STATUS TRACE	Press F2 (or press Enter) to show the fault Trace for the event.
Fault Trace Display	The Fault Latch word is displayed. 0x exadecimal 0b Binary	EV. LOG FAULT TRACE FAULT LATCH 0x0000 STATUS T0003 BACK	Press ▲ or ▼ to view next entry. This is a hex value. The T0003 indicates the Fault Trace for event 3 of the event log is displayed.

FAULT LATCH Word Interpretation

Hexadecimal	Binary	Description
0000	0000 0000 0000 0000	No Fault
0001	0000 0000 0000 0001	Motor Phase U upper Transistor
0002	0000 0000 0000 0010	Motor Phase U lower Transistor
0004	0000 0000 0000 0100	Motor Phase V lower Transistor
0008	0000 0000 0000 1000	Motor Phase V upper Transistor
0010	0000 0000 0001 0000	Motor Phase W lower Transistor
0020	0000 0000 0010 0000	Motor Phase W upper Transistor
0040	0000 0000 0100 0000	Brake Desaturation Fault
0080	0000 0000 1000 0000	Brake IGBT Fault
0100	0000 0001 0000 0000	Not Used
0200	0000 0010 0000 0000	Not Used
0400	0000 0100 0000 0000	Ground Fault
0800	0000 1000 0000 0000	Over Current Fault (Active Low)
1000	0001 0000 0000 0000	Pulse by Pulse fault on Motor Phase 1
2000	0010 0000 0000 0000	Pulse by Pulse fault on Motor Phase 2
4000	0100 0000 0000 0000	Pulse by Pulse fault on Motor Phase 3
8000	1000 0000 0000 0000	Inverter Desaturation Fault

Trace Displays Continued

Action	Description	Display	Comments
	A	EV. LOG FAULT TRACE ALARMLATCH 0x0000 STATUS T0003 BACK	▲ ▼

ALARM LATCH Word Interpretation

Hexadecimal	Binary	Description
0000	0000 0000 0000 0000	No Alarm
0001	0000 0000 0000 0001	Fan Alarm
0002	0000 0000 0000 0010	Motor Over Temperature
0004	0000 0000 0000 0100	Phase Loss
0008	0000 0000 0000 1000	Line Loss
0010	0000 0000 0001 0000	Line Sag
0020	0000 0000 0010 0000	Power Supply Alarm
0040	0000 0000 0100 0000	Not Used
0080	0000 0000 1000 0000	Powerbase in pulse-by-pulse limiting
0100	0000 0001 0000 0000	Not Used
0200	0000 0010 0000 0000	Not Used
0400	0000 0100 0000 0000	Not Used
0800	0000 1000 0000 0000	Not Used
1000	0001 0000 0000 0000	Not Used
2000	0010 0000 0000 0000	Not Used
4000	0100 0000 0000 0000	Not Used
8000	1000 0000 0000 0000	Not Used

Trace Displays Continued

Action	Description	Display	Comments
	A	EV. LOG FAULT TRACE ADC CURRENT REF 1.501 V STATUS T0003 BACK	▲ ▼
		EV. LOG FAULT TRACE 24 V REF 25.7 V STATUS T0003 BACK	▲ ▼
		EV. LOG FAULT TRACE USER INPUTS 100000000 STATUS T0003 BACK	▲ ▼
		EV. LOG FAULT TRACE DIGITAL OUTPUTS 00010010 STATUS T0003 BACK	▲ ▼

Digital Output Display		Description
Hexadecimal	Binary	
00	0000 0000	No Fault
01	0000 0001	Actual Speed is less than Zero Speed Band
02	0000 0010	Main SCR enable (active low)
04	0000 0100	Dynamic Brake active
08	0000 1000	Soft start (pre-charge) relay active
10	0001 0000	Relay Output 2 (J3-28, 29, 30) active
20	0010 0000	Relay Output 1 (J3-25, 26, 27) active
40	0100 0000	Digital Output 2 (J2-19, 20) active
80	1000 0000	Digital Output 1 (J2-17, 18) active

Trace Displays Continued

Action	Description	Display	Comments
Fault Trace Display	Next is the voltage present at Analog Input 1.	EV. LOG FAULT TRACE ANA INPUT 1 0.0 V STATUS T0003 BACK	Press ▲ or ▼ to view next entry.
Fault Trace Display	Next is the voltage present at Analog Input 2.	EV. LOG FAULT TRACE ANA INPUT 2 0.0 V STATUS T0003 BACK	Press ▲ or ▼ to view next entry.
Fault Trace Display	Next is the Speed Reference Setting.	EV. LOG FAULT TRACE SPEED REF 60.00 Hz STATUS T0003 BACK	Press ▲ or ▼ to view next entry.
Fault Trace Display	Next is the AC output current on phase 1.	EV. LOG FAULT TRACE PH1 CURRENT 0.0 A STATUS T0003 BACK	Press ▲ or ▼ to view next entry.
Fault Trace Display	Next is the AC output current on phase 2.	EV. LOG FAULT TRACE PH2 CURRENT 0.0 A STATUS T0003 BACK	Press ▲ or ▼ to view next entry.
Fault Trace Display	Next is the AC output current on phase 3.	EV. LOG FAULT TRACE PH3 CURRENT 0.0 A STATUS T0003 BACK	Press ▲ or ▼ to view next entry.
Fault Trace Display	Next is the Motor Current.	EV. LOG FAULT TRACE MOTOR CURRENT 0.0A STATUS T0003 BACK	Press ▲ or ▼ to view next entry.
Fault Trace Display	Next is the Motor Torque.	EV. LOG FAULT TRACE MOTOR TORQUE 0.0 NM STATUS T0003 BACK	Press ▲ or ▼ to view next entry.

Trace Displays Continued

Action	Description	Display	Comments
Fault Trace Display	Next is the Motor □oltage.	EV. LOG FAULT TRACE MOTOR VOLTS 0.0V STATUS T0003 BACK	Press ▲ or ▼ to view next entry.
Fault Trace Display	Next is the Motor Speed.	EV. LOG FAULT TRACE MOTOR SPEED 0 RPM STATUS T0003 BACK	Press ▲ or ▼ to view next entry.
Fault Trace Display	Next is □us □oltage.	EV. LOG FAULT TRACE BUS VOLTAGE 0.0 V	Press ▲ or ▼ to view next entry.
Fault Trace Display	The control heatsin□te□ perature.	EV. LOG FAULT TRACE DRIVE TEMP 27.3℃ STATUS T0003 BACK	Press ▲ or ▼ to view next entry.
Fault Trace Display	The fault code for the event.	EV. LOG FAULT TRACE FAULT LATCH 0x0000 STATUS T0003 BACK	Press▲ or ▼ to view next entry.
Fault Trace Display	The alar□ code for the event.	EV. LOG FAULT TRACE ALARM LATCH 0x0000 STATUS T0003 BACK	Press ▲ or ▼ to view next entry.
Fault Trace Display		EV. LOG END OF FAULT TRACE STATUS BACK	Press □nter or □2 to return to the event log.

9.2 Diagnostic Information

After power up, select the Diagnostic Menu to see information from the diagnostic displays.

Action	Description	Display	Comments
Press Menu	□isplays top level □enu options.	STATUS BASIC PARAMS ADVANCED PROG EVENT LOG DIAGNOSTICS STATUS BACK	Press ▲ or ▼ to □ove cursor over the □□IA□N□STICS□selection. Press □nter to view diagnostic infor□ation.
Press ▶ to display next group.	□isplays active operating □ode settings.	DIAG STOP LOCAL OPERATING MODE Keypad Speed V/F Control EV. LOG 0.00r MAIN	
Press ▶ to display next group.	□it display of digital inputs□ outputs and the voltage present at the internal 2□□supply ter□inals. Note□□xa□ple display shows that the drive ena□le ter□inal □2□□□is on and that Relay □ut 2 is on.	DIAG STOP LOCAL DIGITAL I/O INPUTS 100000000 OUTPUTS 0001 USER 24V 24.9V EV. LOG 0.00r MAIN	Press ▶ or ◀ to go to the next or previous □iagnostic screen. Press □2 to return to previous □enu.
Press ▶ to display next group.	Output Frequency, % Feedforward % Setpoint, % Feedback	DIAG STOP LOCAL PROC CONTROL PID 0.00HZ 0.0FF 0.0SP 0.0FB EV. LOG 0.00r MAIN	Press ▶ or ◀ to go to the next or previous □iagnostic screen. Press □2 to return to previous □enu. Note: This screen does not appear unless P#1401 is set to Process Control.
□iagnostic □isplay	□isplays software version□hp□ volts and A□ p□□olt ratings.	DIAG STOP LOCAL IHH-1.22 RATED HP 3HP RATED VOLTS 240.0V RATED A/V 4.0A/V EV. LOG 0.00r MAIN	Press ▶ or ◀ to go to the next or previous □iagnostic screen. Press □2 to return to previous □enu.
Press ▶ to display next group.		DIAG STOP LOCAL IHH-1.22 RATED CURRENT 9.6A RATED PK CU 16.8A EV. LOG 0.00r MAIN	Press ▶ or ◀ to go to the next or previous □iagnostic screen. Press □2 to return to previous □enu.
Press ▶ to display next group.	□isplays□ Power □ase I□ nu□ □er □□□ir□ware version □P□A □r□ware version	DIAG STOP LOCAL POWER BASE VERSION ID 0x000A2003 EE VER 0x00000001 FPGA VER 0x00000A02 EV. LOG 0.00r MAIN	Press ▶ or ◀ to go to the next or previous □iagnostic screen. Press □2 to return to previous □enu. □x□□exadeci□al □□□□inary
Press ▶ to display next group.	□isplays real ti□e cloc□values □date and ti□e□and total run ti□e since installation. Press □NT□Rto set date and ti□e.	DIAG STOP LOCAL REAL TIME CLOCK Jan 1, 2009 22:07:35 RUN TIMER 474.1HR EV. LOG 0.00r MAIN	Press ▶ or ◀ to go to the next or previous □iagnostic screen. Press □2 to return to previous □enu.

Diagnostic Information Continued

Action	Description	Display	Comments
Press ▶ to display next group.	□isplays energy cost □□ased on para□ eter □23□□value□.	DIAG STOP LOCAL ENERGY EST POWER 0.00KW EST ENERGY 0.0KWH EST COST 0.0$ EV. LOG 0.00r MAIN	Press ▶ or ◀ to go to the next or previous □iagnostic screen. Press □2 to return to previous □enu. Press □1 to go to Status screen.
Press ▶ to display next group.	□iagnostic Analog Input values display.	DIAG STOP LOCAL ANALOG INPUTS ANA IN1 1.3v ANA IN2 0.0v EV. LOG 0.00r MAIN	Press ▶ or ◀ to go to the next or previous □iagnostic screen. Press □2 to return to previous □enu.
Press ▶ to display next group.	□iagnostic Analog □utput values display.	DIAG STOP LOCAL ANALOG OUTPUTS ANA OUT1 0.0V ANA OUT2 0.0V EV. LOG 0.00r MAIN	Press ▶ or ◀ to go to the next or previous □iagnostic screen. Press □2 to return to previous □enu.
Press ▶ to display next group.	□iagnostic installed □ption Card identi□cation display.	DIAG STOP LOCAL OPTION BOARDS OPTION 1 ETHERNET OPTION 2 NONE FEEDBACK NONE EV. LOG 0.00r MAIN	Press ▶ or ◀ to go to the next or previous □iagnostic screen. Press □2 to return to previous □enu. Press □1 to go to Status screen.
Press ▶ to display next group.	□isplays □eypad software version.	DIAG STOP LOCAL KEYPAD VERSION KEYPAD SOF 1.1X EV. LOG 0.00r MAIN	
Press ▶ to display next group.	□isplays Co□ posite Reference values.	DIAG STOP LOCAL COMPOSITE REF COMPONENT A 0.00% COMPONENT B 0.00% REFERENCE 0.00% EV. LOG 0.00r Alarm	
Press ▶ to display next group.	□C □us □oltage □rive □eatsin□Te□ perature □ □rive □verload □re□ aining□	DIAG STOP LOCAL DRIVE BUS VOLTAGE 333.9V DRIVE TEMP 26.1C DRIVE O/L L 100.0% EV. LOG 0.00r Alarm	Press ▶ or ◀ to go to the next or previous □iagnostic screen. Press □2 to return to previous □enu.
Press ▶ to display next group.	Motor □oltage Motor Current □ Motor □verload □re□ aining□	DIAG STOP LOCAL MOTOR MOTOR VOLTAGE 333.9V MOTOR CURR 4.8A MOTOR O/L L 100.0% EV. LOG 0.00r Alarm	Press ▶ or ◀ to go to the next or previous □iagnostic screen. Press □2 to return to previous □enu.

9.3 Fault Messages

Table 9-1 Fault Messages (Alphabetical by Keypad Text)

Keypad Text	Type	Fault Number	Description
AC Input High	Fault	69	Check AC Input Line Voltage.
ADC Calibr Fault	Fault	57	ADC Calibration Voltages Out of Range. Check analog input wiring for noise. If problem persists, contact factory for further assistance.
Apply Oil/Lub	Alarm	84	Triggered from RTC Module.
Aux Filter Setup	Alarm	51	Incorrect setup. Filter Source should be set to "Raw Speed" when destination is set to SpeedLoop.
Brake Over Temp	Alarm	97	Dynamic brake has overheated, check sizing or increase ohms setting for brake.
Brk Desat	Fault	65	Dynamic brake de-saturation has occurred. Check that dynamic brake resistor is properly connected to R1 and R2.
Bus Transient	Fault	95	Transient causing unbalanced bus capacitor voltage; cycle power to reset fault. A line surge or bus capacitor failure has resulted in an unbalanced voltage condition as determined by a bus voltage monitoring circuit.
Change Filter(s)	Alarm	83	Triggered from RTC Module.
Clean Filter(s)	Alarm	82	Triggered from RTC Module.
Configuration	Fault	2	Some drive feature or option has failed initial startup tests; parameter(s) out of range after download of improper parameter file settings.
Control EE	Fault	27	Problem reading EEPROM on the control board, contact Baldor for service.
Control EE	Fault	29	Problem writing fault log to control board EEPROM, contact Baldor for service.
Control EE	Fault	31	Problem writing the header record to the control board EEPROM, contact Baldor for service.
Control EE	Fault	32	Problem writing a parameter to the control board EEPROM, contact Baldor for service.
Conv Over Temp	Alarm	98	Converter has overheated, decrease loading; check for proper air flow; check for elevated ambient temperature.
Current Ref	Fault	15	Reference volt for current readings out of tolerance, contact Baldor for service.
Current Sense	Fault	12	Motor current sensor(s) out of tolerance; cycle power to drive; if problem persists contact factory.
DC Bus High	Fault	19	DC Bus V over 405/810/1000V for 230V/460V/575V units. Check for high input line voltage; increase decel rates; check for correct brake resistor on R1/R2.
DC Bus Low	Alarm	20	DC Bus V below 220/440/550V for 230V/460V/575V units. Check for low input line voltage; increase accel rate; verify B+ to B- voltage; verify proper brake resistor.
DC Pk Overvolt	Fault	63	Bus peak voltage rating exceeded. Check AC input lines; sizing of dynamic brake; insure that input does not have power factor correction capacitors or other source of transients.
Desaturation	Fault	7	Output current exceeds desaturation limit. Check motor and connections for short circuit; verify proper motor load; increase acc/dec; check for conductive debris inside drive.
Download	Fault	54	Parameter download from keypad or network has failed. Verify parameter set compatibility.
Drive Disabled	Alarm	66	Motion command given with drive disabled. Check drive enable input.
Drive Enabled	Alarm	67	Drive enabled during parameter download. Drive must remain disabled until completion of parameter download.
Drive Low Temp	Fault	76	Heat sink Temperature is lower than allowed. Space heater may be required in cabinet.
Drive Over Tmp	Alarm	21	Heatsink temp exceeded 85/95^0 C. Verify ambient does not exceed 45°C. Clean fans and heatsink. Add cabinet cooling if ambient is too high.

Table 9-1 Fault Messages (Continued)

Keypad Text	Type	Fault Number	Description
Dyn Brake Desat	Fault	36	Dynamic braking current limit exceeded. Check for shorted braking resistor circuit or for brake resistor with an ohmic value below the allowed limit for the drive. Check for a short between R1 or R2 and B-.
Excess Faults/Hr	Alarm	79	The allowed number of faults/hour has been exceeded.
External Trip	Fault	22	J1-16 is open. Check remote connection on J1-16. Occurs only when external fault parameter is turned ON.
Fan Loss	Alarm	62	Fan circuit is seeing low current or over current. Verify that fan is not blocked and is connected properly.
Flt Log Mem Fail	Fault	28	Problem reading fault log from control board EEPROM, contact Baldor for service.
Following Error	Fault	18	Speed error beyond Set Speed Band parameter. Verify motor is not overloaded; increase Set Speed Band.
Ground Fault	Fault	8	Ground currents in output of control. Due to shorts to ground or excessive leakage current to ground. Disconnect motor, meg motor for insulation leakage to ground; check motor leads for shorts to ground; replace motor leads with lower capacitance cable or shorten leads if possible; consider the usage of load reactor.
High Line	Alarm	102	Power grid voltage too high, check power base rating, check input lines.
IGBT Thermal	Fault	94	IGBT thermal overload. Check motor loading. Allow time to cool.
Internal Config	Fault	35	An internal firmware configuration occurred, contact Baldor for service.
Line Loss	Alarm	37	All 3 input phases lost. Check input circuit breaker, fuses or input contacts.
Line Regen	Fault	34	This fault code is not used, if it occurs contact Baldor for service.
Line Sag	Alarm	64	All 3 phase input lines have sagged below 70% of nominal. Check input line quality; check line impedance; check for excessive loading on power system.
Logic Supply	Fault	9	Internal logic power supply has dropped below 24V threshold. Replace Power Supply.
Low Initial Bus	Fault	11	Bus volt below 200/400/500V on 230/460/575V units at power up. Check input line voltage; check for proper resistor on R1/R2; check for open circuit on TH1-TH2 Terminals.
Low Line	Alarm	101	Power grid voltage too low. Check power base rating; check input connections; ensure input voltage is within drive specification.
Lower U Gate	Fault	40	Transistor #1 failed to fire or misfired. Verify IGBT is not shorted. Verify no debris has fallen into drive. Check wiring between drive and motor. Verify motor windings are not shorted.
Lower V Gate	Fault	42	Transistor #2 failed to fire or misfired. Verify IGBT is not shorted. Verify no debris has fallen into drive. Check wiring between drive and motor. Verify motor windings are not shorted.
Lower W Gate	Fault	44	Transistor #3 failed to fire or misfired. Verify IGBT is not shorted. Verify no debris has fallen into drive. Check wiring between drive and motor. Verify motor windings are not shorted.
Macro Cmd Failed	Fault	93	Macro command execution failure. Verify that macro file is correct.
Macro Cmd Inval	Fault	92	Macro command found is invalid. Verify that macro file is correct.
Macro Read	Fault	90	Macro record read failed. Recompile file and download to drive again.
Macro Rec Length	Fault	91	Macro record length is invalid. Recompile file and download to drive again.
Memory	Fault	49	Option card problem, memory failure, contact Baldor for service.
Motor Overload	Fault	23	Motor thermal connection at TH1-TH2 open circuit. Motor overheated due to excess load; Ohm connections at TH1-TH2.
Motor Overload	Fault	80	Motor overloaded. Check motor load. Verify motor rated amps parameter.
Motor Ovrtmp	Alarm	61	Motor has overheated. Check motor cooling system or blocked air flow; check thermal switch on TH1-TH2 circuit; reduce load on motor.
Network Timeout	Fault	48	Forced network fault. Loss of network communications; watchdog timer expired; user program timing problems.

Table 9-1 Fault Messages (Continued)

Keypad Text	Type	Fault Number	Description
New Base ID	Fault	5	Control board detected new or a different power base. Press RESET to clear. Factory settings will be restored. Verify all settings and setup custom parameters.
No Fault	Fault	0	No Fault Exists.
NV memory Fail	Fault	30	Problem writing a parameter to the control board EEPROM, contact Baldor for service.
Opt1 Protocol	Alarm	77	Invalid protocol selected for optional communication card 1. Select a protocol supported by the expansion board that is installed or replace board with a board that supports the desired protocol.
Opt2 Protocol	Alarm	78	Invalid protocol selected for optional communication card 2. Select a protocol supported by the expansion board that is installed or replace board with a board that supports the desired protocol.
Option Board	Fault	50	Option board not recognized or is not supported. Verify proper firmware version is being used. Download latest firmware from www.baldor.com and install in drive.
Option Not Found	Alarm	74	Option Board for the feature requested is not installed. Verify slot location for expansion board to support desired feature; install appropriate option board for requested feature.
Over Current	Fault	6	Motor current exceeded peak limit. Check motor connections and motor load; increase acc/dec times; verify correct motor data settings; verify proper tuning.
Over Speed	Fault	59	Rotor speed over 110% maximum speed limit. Verify proper drive tuning; ensure drive is not being overhauled by excessive high-speed regenerative load.
Overload - 1 Min	Fault	16	Motor current exceeded 150% for 1 minute. Check motor load. Extend acc/dec times. Verify proper motor data and drive tuning.
Overload - 3 Sec	Fault	17	Motor current exceeded 175% for 3 seconds. Check motor load and resize motor and drive as needed. Extend acc/dec times. Verify proper motor data and drive tuning. Change setting of "Overload" parameter (P2206) to "Foldback" to allow current to automatically limit to a lower level prior to the 3 second time limit.
Param Checksum	Fault	4	Cycle power. If no change, load Factory Settings.
Parameter	Fault	55	Parameters momentarily locked. Wait 30 seconds, try again.
PB Power Supply	Alarm	68	Power Base Logic Power Supply below acceptable operating levels.
PCB Over Temp	Alarm	96	Powerbase signal interface PCB board is over heating, reduce loading or contact Baldor for service.
PF Setup	Alarm	73	Pulse Follower Option Board Setup. Check Master PPR, Receive, Transmit Ratio and Input Type.
Ph1 (L1) Loss	Alarm	109	Loss of phase 1 (L1), check power grid or wiring connections.
Ph1 Pulse	Fault	45	Phase 1 current limiting via pulse by pulse method; check motor spiking loads, chattering contacts, loose connections.
Ph2 (L2) Loss	Alarm	110	Loss of phase 2 (L2), check power grid or wiring connections.
Ph2 Pulse	Fault	46	Phase 2 current limiting via pulse by pulse method; check motor spiking loads, chattering contacts, loose connections.
Ph3 (L3) Loss	Alarm	111	Loss of phase 3 (L3), check power grid or wiring connections.
Ph3 Pulse	Fault	47	Phase 3 current limiting via pulse by pulse method; check motor spiking loads, chattering contacts, loose connections.
Phase Loss	Alarm	38	Single input phase lost. Check input circuit breaker, fuses or input contacts. Excessive line notching occurring.
PLC Mode Trip	Fault	81	PLC Mode Trip. PLC action has generated this trip. Check input defined in PLC mode for fault trip. Check PLC program logic.
Power Base	Fault	10	Should occur in conjunction with other faults to indicate that fault was generated by the power base circuitry. This is useful in trouble-shooting to understand that the fault was detected by the power base electronics.

Table 9-1 Fault Messages (Continued)

Keypad Text	Type	Fault Number	Description
Powerbase EE	Fault	26	Communication error between control board and power base memory. Cycle power. If problem persists, contact factory for assistance.
Powerbase FPGA	Fault	52	Power base communication loss or incompatible firmware. Cycle power. If problem persists, contact factory.
Pre-charge Fault	Fault	60	Dynamic Brake miswired; AC Input too low; input impedance too high (soft line); Bus Caps shorted or Input Single Phasing. Check motor thermal lead connections to TH1-TH2.
Reac Over Temp	Alarm	99	Reactor has overheated, decrease loading; decrease wire length; verify drive ambient temperature is less than 45°C; verify proper air flow and system cooling capability.
Regen R or PWR	Fault	25	Brake resistor power rating exceeded. Check resistor ratings; extend decel times; increase size of braking kit.
RTC Alarm	Alarm	89	Triggered from RTC Module.
SCR1 No Fire	Alarm	103	Phase loss due to SCR1 (L1 upper) not firing. Verify SCR gate leads properly connected.
SCR2 No Fire	Alarm	104	Phase loss due to SCR2 (L1 lower) not firing. Verify SCR gate leads properly connected.
SCR3 No Fire	Alarm	105	Phase loss due to SCR3 (L2 upper) not firing. Verify SCR gate leads properly connected.
SCR4 No Fire	Alarm	106	Phase loss due to SCR4 (L2 lower) not firing. Verify SCR gate leads properly connected.
SCR5 No Fire	Alarm	107	Phase loss due to SCR5 (L3 upper) not firing. Verify SCR gate leads properly connected.
SCR6 No Fire	Alarm	108	Phase loss due to SCR6 (L3 lower) not firing. Verify SCR gate leads properly connected.
Sense 1 TA	Alarm	100	Temperature of converter bridge detected by power interface board is too low or too high. Verify drive ambient temperature is between -10°C and 45°C. Verify proper air flow and system cooling capability. Verify proper termination of temperature sensors within drive.
Ser Coolant Sys	Alarm	87	Triggered from RTC Module.
Ser Heating Sys	Alarm	88	Triggered from RTC Module.
Service Drive	Alarm	86	Triggered from RTC Module.
Service Motor	Alarm	85	Triggered from RTC Module.
Soft Version	Fault	33	This fault code is not used. If it occurs, contact Baldor for service.
SPI Timeout	Fault	3	Comms Error between control board and power board. Remove power from drive, verify proper grounding and bonding techniques. Re-apply power. If persists, contact Baldor.
Torque Proving	Fault	24	Failed to read current in all 3 motor phases. Check motor connections or open motor contacts.
U Fiber COM	Fault	113	Detects a broken or unplugged fiber (F or F1) between the signal interface board and the master gate drive board for the U-Phase. If the signal is off for more than 5 mS, the fault will occur.
Unknown	Fault	1	This fault should not occur. Contact Baldor for service.
Upper U Gate	Fault	39	Transistor #1 failed to fire or misfired. Verify IGBT is not shorted. Verify no debris has fallen into drive. Check wiring between drive and motor. Verify motor windings are not shorted.
Upper V Gate	Fault	41	Transistor #2 failed to fire or misfired. Verify IGBT is not shorted. Verify no debris has fallen into drive. Check wiring between drive and motor. Verify motor windings are not shorted.
Upper W Gate	Fault	43	Transistor #3 failed to fire or misfired. Verify IGBT is not shorted. Verify no debris has fallen into drive. Check wiring between drive and motor. Verify motor windings are not shorted.

Table 9-1 Fault Messages (Continued)

Keypad Text	Type	Fault Number	Description
User 24V	Fault	14	User 24V supply out of tolerance. Measure 24V supply using a digital multi-meter at terminals J1-23 and J1-24. If voltage is not correct, remove all external control connections and repeat measurement to determine if problem is with external connections or with the power supply.
User Ref	Fault	13	User analog input reference out of tolerance. Check connections for proper shielding and grounding; check for excessive noise on analog signals. If problem persists, contact Baldor for service.
V Fiber COM	Fault	115	Detects a broken or uplugged fiber (F or F1) between the signal interface board and the master gate drive board for the V-Phase. If the signal is off for more than 5 mS, the fault will occur.
W Fiber COM	Fault	117	Detects a broken or uplugged fiber (F or F1) between the signal interface board and the master gate drive board for the W-Phase. If the signal is off for more than 5 mS, the fault will occur.

9.4 Electrical Noise Considerations

All electronic devices are vulnerable to significant electronic interference signals (commonly called “Electrical Noise”). At the lowest level, noise can cause intermittent operating errors or faults. From a circuit standpoint, 5 or 10 millivolts of noise may cause detrimental operation. For example, analog speed and torque inputs are often scaled at 5 to 10VDC maximum with a typical resolution of one part in 1,000. Thus, noise of only 5 mV represents a substantial error.
At the extreme level, significant noise can cause damage to the drive. Therefore, it is advisable to prevent noise generation and to follow wiring practices that prevent noise generated by other devices from reaching sensitive circuits. In a control, such circuits include inputs for speed, torque, control logic, and speed and position feedback, plus outputs to some indicators and computers.

Relay and Contactor Coils
Among the most common sources of noise are the coils of contactors and relays. When these highly inductive coil circuits are opened, transient conditions often generate spikes of several hundred volts in the control circuit. These spikes can induce several volts of noise in an adjacent wire that runs parallel to a control-circuit wire. Figure 9-1 illustrates noise suppression for AC and DC relay coils.

Figure 9-1 AC and DC Coil Noise Suppression

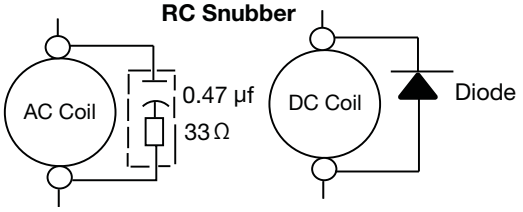

Wires between Controls and Motors
Output leads from a typical 460VAC drive controller contain rapid voltage rises created by power semiconductors switching 650V in less than a microsecond, 1,000 to 16,000 times a second. These noise signals can couple into sensitive drive circuits. If shielded pair cable is used, the coupling is reduced by nearly 90%, compared to unshielded cable. Even input AC power lines contain noise and can induce noise in adjacent wires. In some cases, line reactors may be required. To prevent induced transient noise in signal wires, all motor leads and AC power lines should be contained in rigid metal conduit, or flexible conduit. Do not place line conductors and load conductors in same conduit. Use one conduit for 3 phase input wires and another conduit for the motor leads. The conduits should be grounded to form a shield to contain the electrical noise within the conduit path. Signal wires, even ones in shielded cable, should never be placed in the conduit with motor power wires.

Special Drive Situations
For severe noise situations, it may be necessary to reduce transient voltages in the wires to the motor by adding load reactors. Load reactors are installed between the control and motor. Line and Load Reactors are typically 3% reactance and are designed for the frequencies encountered in PWM drives. For maximum benefit, the reactors should be mounted in the drive enclosure with short leads between the control and the reactors.

Control Enclosures
Motor controls mounted in a grounded enclosure should also be connected to earth ground with a separate conductor to ensure best ground connection. Often grounding the control to the grounded metallic enclosure is not sufficient. Usually painted surfaces and seals prevent solid metallic contact between the control and the panel enclosure. Likewise, conduit should never be used as a ground conductor for motor power wires or signal conductors.

Special Motor Considerations
Motor frames must also be grounded. As with control enclosures, motors must be grounded directly to the control and plant ground with as short a ground wire as possible. Capacitive coupling within the motor windings produces transient voltages between the motor frame and ground. The severity of these voltages increases with the length of the ground wire. Installations with the motor and control mounted on a common frame, and with heavy ground wires less than 10 ft. (3m) long, rarely have a problem caused by these motor-generated transient voltages.

Analog Signal Wires
Analog signals generally originate from speed and torque controls, plus DC tachometers and process controllers. Reliability is often improved by the following noise reduction techniques:

- Use twisted-pair shielded wires with the shield grounded at the drive end only.
- Route analog signal wires away from power or control wires (all other wiring types).
- Cross power and control wires at right angles (90°) to minimize inductive noise coupling.

Chapter 10
PLC Mode Description

10.1 Overview

PLC functionality is selected by setting Level 1, Input Setup block, Operating Mode parameter P1401 to PLC. PLC mode allows 2-Wire and 3-Wire operating modes to be created using a selection of conditions, logical operators and desired actions. PLC Mode parameters are located in Level 3, PLC block parameters P3401 through P3443.
Simply stated, for each logical statement choose two input conditions from Table 10-1, one logical operation from Table 10-2 and one action from Table 10-3. These 30 logical statements are evaluated every 10 milliseconds, in order from P3401 to 3430. For each statement Condition 1 and Condition 2 are evaluated to True or False, the Logical Operator is applied and the final outcome is either True or False. If True the Action is taken; if False the Alternate Action is taken. Conditions, operators and actions are pre-defined and so cannot be changed.

10.2 Configuration Parameters

The PLC program is contained within 30 statements, PLC CONFIG 1 (P3401) through PLC CONFIG 30 (P3430). Each statement has the same 32 bit word format and structure as the example given in Figure 10-1. If P3401-P3430 are not programmed, the PLC Mode will do nothing. It is also possible to program them so that the motor will not move. This can happen, for instance, if no Forward/Reverse Enables are programmed.

Figure 10-1 Example PLC Configuration Parameters

Parameter Number Format = DDD.CCC.BBB.AAA

Where:
DDD = bits 31-24 Byte 3
CCC = bits 23-16 Byte 2
BBB = bits 15-8 Byte 1
AAA = bits 7-0 Byte 0

Example: P3401 = 051.000.000.020

051 = Digital Input 2 (from Table 10-1)
000 = OR (from Table 10-2)
000 = False (from Table 10-1)
020 = Forward (from Table 10-3)

Parameter No.	Hex Byte 3	Hex Byte 2	Hex Byte 1	Hex Byte 0
P3401 - 3430	Condition ID MSD (Table 10-1)	Logical Operator ID (Table 10-2)	Condition ID (Table 10-1)	Action ID LSD (Table 10-3)

A configuration parameter may be disabled (turned off) by setting bit 23 in its configuration word. This is the same as setting the most significant bit of byte 2 (the logical operator ID field). If any field within any of these parameters is invalid, it is ignored at run time. Only one runtime version exists at a time. The runtime version in effect is the one defined by the parameter table active at the time the drive was placed in Remote Mode.
To switch runtime PLC versions perform the following operations:
1. Disable the drive.
2. At the keypad, select “Local” mode.
3. Select the desired parameter table.
4. Enable the drive.
5. At the keypad, select “Remote” mode.

If a parameter table is switched while the drive is enabled the run time PLC version is not affected.

10.3 Comparator Function

Comparator parameters provide a way to monitor real-time signals within the drive and apply them to the PLC Mode’s logic. They may be used on the condition definition side of the PLC Mode’s logic. Parameters P3431 and P3433 hold parameter numbers (i.e. they point to other parameters, see Monitor and RTC chapter in this manual for these values). P3432 and P3434 hold percents that are applied against P3431 and P3433 maximums, together they provide all that is needed for the following comparison equations:
If |Value of P3431| ≤ (P3432/100)*(Max of P3431) then True or
If |Value of P3433| ≤ (P3434/100)*(Max of P3433) then True

In a sense P3431 and P3433 may be viewed as holding addresses for other parameters.
For example: If P3431 = 5 (selects parameter 5 which is Motor Volts = 230V) and P3432=20% then Comparator A is true if |P5| = (20/100)*230 ≤ 46V. But if the voltage exceeds 46V, Comparator A is false.
If P3433 = 6 (selects parameter 6 Motor Current = 10 Amps) then Comparator B is true if |P6| ≤ 1 Amp. Any parameter (see Monitor and RTC chapter in this manual for these values) can be used in a comparator.
Note: Don’t use P3431 and P3433 since this would create a circular reference and the comparator would fail.

A and B are defined as follows:
A = (Value of Parameter P3431) / (Max of Parameter P3431)
B = (Value of Parameter P3433) / (Max of Parameter P3433)
Then, A & B are signals with the following properties: $-1 \leq A \leq 1$ and $-1 \leq B \leq 1$.
A and B are normalized signals derived from parameters pointed to by P3431 and P3433.

Comparator A
Comparator A is used in Condition 76 and checks the following relationship for true or false:
If $| A - P3435/100 | \leq P3432/100$
Alternatively, another way of writing the same relation is as follows:
If $(P3435 - P3432)/100 \leq A \leq (P3432 + P3435)/100$
Thus, Comparator A provides a way to determine if a parameter is within a specific range. For example, if P3431=5 (Motor Volts with Max=230V) and P3432=20% and P3435=0% then Comparator A would be true so long as $|P5| \leq 46V$ or $|A| \leq 0.20$. That is, motor voltage is monitored and so long as it remains below 46 Volts, the outcome of Comparator A would be True, but if it were to go above 46 Volts, the output of Comparator A would be False.

Comparator B
Comparator B is used in Condition 77 and checks the following relationship for true or false:
If $| B - P3436/100 | \leq P3434/100$
Alternatively, another way of writing the same relation is as follows:
If $(P3436 - P3434)/100 \leq B \leq (P3436 + P3434)/100$
Thus, Comparator B provides a way to determine if a parameter is within a specific range. For example, if P3433=6 (Motor Current with Max=10Amps) and P3434=10% and P3436=50% then Comparator B would be true so long as: $4 \text{ Amps} \leq P6 \leq 6 \text{ Amps}$ OR $0.4 \leq B \leq 0.60$. That is, motor current is monitored and so long as it remains within 1 Amp of 5 Amps the outcome of Comparator B would be True, but if it were to go above 6 Amps or below 4 Amps the output of Comparator B would be False.

Less than
Less than, Condition 88, uses the following equation: If A<B then True else False For example, if P3431=103 (Analog Input 1 Reference with Max=100%) and P3433=104 (Analog Input 2 Reference with Max=100%) then Condition 88 would be true so long as P103<P104 or so long as Analog Input 1 Reference is less than Analog Input 2 Reference.

Equal
Equal, Condition 89, uses the following equation: If A=B then True else False For example, if P3431=103 (Analog Input 1 Reference with Max=100%) and P3433=104 (Analog Input 2 Reference with Max=100%) then Condition 89 would be true so long as P103=P104 or so long as Analog Input 1 Reference is equal to Analog Input 2 Reference.

Greater than
Greater than, Condition 90, uses the following equation: If A>B then True else False For example, if P3431=103 (Analog Input 1 Reference with Max=100%) and P3433=104 (Analog Input 2 Reference with Max=100%) then
Condition 90 would be true so long as P103>P104 or so long as Analog Input 1 Reference is greater than Analog Input 2 Reference.

10.4 Timers

The PLC Mode uses four general purpose timers: Timer A (P3440), B (P3441), C (P3442) and D (P3443) with units of seconds and resolution of 10ms or 100 counts/sec. They may be used in PLC control and logic statements as defined in the Conditions and Actions Tables. In general there are actions to start and stop the timers as well as conditions to test their contents.
P113, P114, P117 and P118 are read/write monitor parameters that reflect the current state of timers A through D. Since they may be written, they can be used to start a timer by writing zero to it or to stop a timer by writing max counts.
For example, set P3440 to 1.5 sec then upon Timer A timeout,
P113 = 150 counts = (1.5 sec) x (100 counts/sec)
Starting timer A also starts P113 ramping from 0 to 150 in 1.5 seconds.
Set P3441 to 10 seconds and start Timer B, P114 then ramps from 0 to 1000 in 10 sec.
These monitor parameters may also be inputs to the Composite Reference block to generate timed ramps or other complex reference signals.

Table 10-1 PLC Conditions

ID	Description
0	False - This condition is always False
1	True - This condition is always True
2	Reserved (Workbench - Digital Input)
3	Reserved (Workbench - Hard Forward Limit)
4	Reserved (Workbench - Hard Reverse Limit)
5	Reserved (Workbench - Soft Forward Limit)
6	Reserved (Workbench - Soft Reverse Limit)
7	Reserved (Workbench - Move Statue)
8	Reserved (Workbench - Idle)
9	Reserved (Workbench - Position achieved)
10	Reserved (Workbench - At target position)
11	Reserved (Workbench - In Idle Position Window)
12	Reserved (Workbench - Following Error Fatal)
13	Reserved (Workbench - Following Error Warning)
14	At Speed - If the measured speed of the rotor is within the At Speed Band (P1506) of the reference then this condition is True.
15	Reserved - (Workbench - Velocity Error)
16	Velocity Setpoint Minimum - If the measured absolute speed is below the Minimum Output Speed (P2002) then this condition is True.
17	Velocity Setpoint Maximum- If the measured absolute speed is above the Maximum Output Speed (P2003) then this is True.
18	Reserved
19	Motor Overload - If the motor's I^2T algorithm has exceeded its integral limit this condition is True.
20	Drive Overload - If the drive's I^2T algorithm has exceeded its integral limit this condition is True.
21	Motor Direction - If rotor speed is positive this condition is True.
22	Command Direction - If speed demand is positive this condition is True.
23	Ready - If soft start is complete, drive hardware enable is on and there are no errors this condition is True.
24	Drive On - If the drive is ready and producing PWM to the motor this condition is True.
25	Fault - If the drive is faulted for any reason this condition is True.
26	Motor Over Temp Trip - If the motor's over temperature trip input has occurred then this condition is True.
27	Drive Over Temp Trip - If the drive's over temperature trip input has occurred then this condition is True.
28	Drive Over Temp Warning - If the drive's temperature has exceeded that defined for the drive then this condition is True.
29	Reserved (Workbench - home status)
50	Digital Input 1 (J2-9) - If digital input 1 is high this condition is true. (Level sensitive)
51	Digital Input 2 (J2-10) - If digital input 2 is high this condition is true. (Level sensitive)
52	Digital Input 3 (J2-11) - If digital input 3 is high this condition is true. (Level sensitive)
53	Digital Input 4 (J2-12) - If digital input 4 is high this condition is true. (Level sensitive)
54	Digital Input 5 (J2-13) - If digital input 5 is high this condition is true. (Level sensitive)
55	Digital Input 6 (J2-14) - If digital input 6 is high this condition is true. (Level sensitive)
56	Digital Input 7 (J2-15) - If digital input 7 is high this condition is true. (Level sensitive)
57	Digital Input 8 (J2-16) - If digital input 8 is high this condition is true. (Level sensitive). When J2-16 is used in PLC Program, Set P2201=OFF to avoid an external trip condition.
58	Drive Run - If the drive is on and has a forward or reverse command this condition is True.
59	Stop - If motion status is stopped this condition is True.
60	Jog - If jog mode is active this condition is True.

Table 10-1 PLC Conditions Continued

ID	Description
61	Accelerating - If absolute speed demand is accelerating this condition is True.
62	Constant Speed - If absolute speed demand is constant this condition is True.
63	Decelerating - If absolute speed demand is decelerating this condition is True.
64	At Zero Speed - If absolute speed demand is below the Zero Speed Set Point (P1505) this condition is True.
65	At Set Speed - If absolute speed demand is above Set Speed Point (P1507) this condition is True.
66	Motor Over Current - If motor RMS current is above the Overload Set Point (P1508) this condition is True.
67	Motor Under Current - If motor RMS current is below the Underload Set Point (P1509) this condition is True.
68	Keypad Control - If the drive is under keypad control this condition is True.
69	Dynamic Brake - If the drive's dynamic brake is on this condition is True.
70	Frequency Foldback - If the drive is in frequency foldback this condition is True.
71	Alarm - If an alarm is active this condition is True.
72	Forward - If the drive has a forward command this condition is True.
73	Reverse - If the drive has a reverse command this condition is True.
74	Process PID Error - If the absolute value of Process PID Error is less than the Process PID Error Tolerance (P2606) this condition is True.
75	Sleep Mode - If the drive's sleep algorithm has put the drive to sleep this condition is True.
76	Comparator A - Monitors a parameter and returns True if the parameter is less than a predefined setpoint. NOTE: See chapter on PLC Comparator Parameters.
77	Comparator B - Monitors a parameter and returns True if the parameter is below a predefined setpoint. NOTE: See chapter on PLC Comparator Parameters.
78	Parameter Table 1 - If parameter table 1 is active then this condition is True.
79	Parameter Table 2 - If parameter table 2 is active then this condition is True.
80	Parameter Table 3 - If parameter table 3 is active then this condition is True.
81	Parameter Table 4 - If parameter table 4 is active then this condition is True.
82	Digital Output 1- If digital output 1 is On this condition is True.
83	Digital Output 2- If digital output 2 is On this condition is True.
84	Relay Output 1 - If relay output 1 is On this condition is True.
85	Relay Output 2 - If relay output 2 is On this condition is True.
86	Timer A - True if Timer A has expired.
87	Timer B - True if Timer B has expired.
88	Less Than (<) - Monitors two parameters (A & B) and returns True if A<B else False is returned.
89	Equal (=) - Monitors two parameters (A & B) and returns True if A=B else False is returned.
90	Greater Than (>) - Monitors two parameters (A & B) and returns True if A>B else False is returned.
91	Timer C - True if Timer C has expired else it is False.
92	Timer D - True if TImer D has expired else it is False.
100	Logical Variable A - Logical variable A is tested for True/False
101	Logical Variable B - Logical variable B is tested for True/False
102	Logical Variable C - Logical variable C is tested for True/False
103	Logical Variable D - Logical variable D is tested for True/False
104	Logical Variable E - Logical variable E is tested for True/False
105	Logical Variable F - Logical variable F is tested for True/False
106	Logical Variable G - Logical variable G is tested for True/False
107	Logical Variable H - Logical variable H is tested for True/False
108	Logical Variable I – Logical variable I is tested for True/False
109	Logical Variable J - Logical variable J is tested for True/False
150	Heater - If the trickle current heater is running then this condition is True else it is False.

Table 10-2 PLC Logical Operators

ID	Description
0	OR - Performs logical OR operation on input conditions
1	AND - Performs logical AND operation on input conditions
2	XOR - Performs logical XOR operation on input conditions
3	NOR - Performs logical NOR operation on input conditions
4	NAND - Performs logical NAND operation on input conditions

Table 10-3 PLC Actions

ID	Description
0	Digital Output 1 - If the input condition is True then Digital Output 1 (J2-17,18) will be active otherwise it is inactive. NOTE: Digital output 1 must have been set to “PLC” using P1501
1	Digital Output 2 - If the input condition is True then Digital Output 2 (J2-19,20) will be active otherwise it is inactive. NOTE: Digital output 2 must have been set to “PLC” using P1502
2	Relay Output 1 - If the input condition is True then Relay Output 1 (J3-25,26,27) will be active otherwise it is inactive. NOTE: Relay output 1 must have been set to “PLC” using P1503
3	Reserved (Workbench - Fault)
4	Drive Enable/Disable - If the condition is True then the drive is capable of producing power. If the condition is False the drive is disabled. NOTE: If not programmed, J2-8 alone enables the drive. NOTE: The drive's hardware enable input (J2-8) must be is active for this action.
5	Jog Reverse - If the condition is True then the motor will jog in the reverse direction at the speed set by P1201 if jogging is enabled. NOTE: If both jog forward and reverse are active the motor stops
6	Jog Forward - If the condition is True then the motor will jog in the forward direction at the speed set by P1201 if jogging is enabled. NOTE: If both jog forward and reverse are active the motor stops
7	Reserved (Workbench - Hold)
8	Stop Enable/Disable - If the input condition is True the motor is stopped.
9	Reserved (Workbench - Error Deceleration)
10	Reserved (Workbench - Cancel)
11	Reserved (Workbench - Disable)
12	Reserved (Workbench - Forced Abort)
13	Reserved (Workbench - Fast Gear)
18	Jog Enable - Allows jogging if True else jogging is disabled.
19	Fault - If the input condition is True a “PLC Fault” is triggered. If using J2-16 to generate a PLC Fault Condition, P2201 must be set to “OFF” to avoid a conflict with external trip.
20	Forward Enable/Disable - If the input condition is True forward motion is enabled otherwise it is disabled.
21	Reverse Enable/Disable - If the input condition is True reverse motion is enabled otherwise it is disabled.
22	Acc/Dec Group Select - If the input condition is True then Acc/Dec group 2 is selected otherwise group 1 is selected. NOTE: If this action is not programmed Group 1 is active by default.
23	Reset - If the input condition is True a reset request is issued. NOTE: This action is edge triggered on a False to True transition. NOTE: Pre-existing faults/alarms may or may not be cleared.
24	Preset Speed/Analog - If the input condition is True then the Preset Speed Select Table Index sets the speed reference from the Preset Speeds (P1001-P1015) else the Command Source (P1402) selects the speed reference. NOTE: If this action is not programmed P1402 is always active. NOTE: If the Preset Speed Select Table Index is not programmed then P1001 is used.
25	Preset Speed Select Table Index Bit 0 - If the input condition is True then bit 0 of the Preset Speed Select Table Index is set else it is reset. NOTE: If this action is not programmed then bit 0 is reset.
26	Preset Speed Select Table Index Bit 1 - If the input condition is True then bit 1 of the Preset Speed Select Table Index is set else it is reset. NOTE: If this action is not programmed then bit 1 is reset.
27	Preset Speed Select Table Index Bit 2 - If the input condition is True then bit 2 of the Preset Speed Select Table Index is set else it is reset. NOTE: If this action is not programmed then bit 2 is reset.

Table 10-3 PLC Actions Continued

ID	Description
28	Preset Speed Select Table Index Bit 3 - If the input condition is True then bit 3 of the Preset Speed Select Table Index is set else it is reset. NOTE: If this action is not programmed then bit 3 is reset.
29	Process PID Enable/Disable - If the input condition is True then the Process PID is active otherwise it is inactive. NOTE: The Process PID is automatically set to inactive during keypad control or while jogging.
30	Keypad - If the input condition is True then forward/reverse and stop commands along with the keypad's local speed reference control the drive. The keypad is disabled by default.
31	Electronic Pot - If the input condition is True the Electronic Pot sets the speed reference otherwise it is not active. The pot is disabled by default.
32	Decrease Electronic Pot Speed Reference - If the input condition is True the Electronic Pot speed reference is increased else has no affect. NOTE: E-Pot is non-volatile. NOTE: E-Pot is unipolar so direction is determined by forward/reverse commands.
33	Increase Electronic Pot Speed Reference - If the input condition is True the Electronic Pot speed reference is decreased else has no affect. NOTE: E-Pot is non-volatile. NOTE: E-Pot is unipolar so direction is determined by forward/reverse commands.
34	Parameter Table Select Enable - If the input condition is True enables parameter table selection through the parameter table select index, else parameter table selection is disabled.
35	Parameter Table Select Index Bit 0 - If the input condition is True then bit 0 of the Parameter Table Select Index is set else it is reset. NOTE: If this action is not programmed then bit 0 is reset. NOTE: This index sets the active parameter table.
36	Parameter Table Select Index Bit 1 - If the input condition is True then bit 1 of the Parameter Table Select Index is set else it is reset. NOTE: If this action is not programmed then bit 1 is reset. NOTE: This index sets the active parameter table.
37	Relay Output 2 - If the input condition is True then Relay Output 2 (J3-28,29,30) will be active otherwise it is inactive. NOTE: Relay Output 2 must have been set to “PLC” using P1504.
38	Torque/Speed Mode - If the input condition is True then the drive controls torque else it controls speed. Default is speed control. NOTE: For V/F, torque control is not supported and is ignored.
39	Seed E-Pot - If the condition is true, the current speed reference is seeded into the E-Pot speed reference. Otherwise, it is not seeded. NOTE: E-Pot must not be the active speed reference for seeding to occur.
40	Logical Variable A - If the input condition is True then logical variable A is set else reset.
41	Logical Variable B - If the input condition is True then logical variable B is set else reset.
42	Logical Variable C - If the input condition is True then logical variable C is set else reset.
43	Logical Variable D - If the input condition is True then logical variable D is set else reset.
44	Logical Variable E - If the input condition is True then logical variable E is set else reset.
45	Logical Variable F - If the input condition is True then logical variable F is set else reset.
46	Logical Variable G - If the input condition is True then logical variable G is set else reset.
47	Logical Variable H - If the input condition is True then logical variable H is set else reset.
48	Logical Variable I - If the input condition is True then logical variable I is set else reset.
49	Logical Variable J - If the input condition is True then logical variable J is set else reset.
50	Start Timer A - If the input condition is True zero Timer A else count up to a timeout.
51	Stop Timer A - If the input condition is True, set Timer A= P3440 counts else do nothing.
52	Start Timer B - If the input condition is True, set Timer B= 0 else count up to a timeout.
53	Stop Timer B - If the input condition is True, set Timer B= P3441 counts else do nothing.
54	Start Timer C - If the input condition is True, set Timer C= 0 else count up to a timeout.
55	Stop Timer C - If the input condition is True, set Timer C= P3442 counts else do nothing.
56	Start Timer D - If the input condition is True, set Timer D= 0 else count up to a timeout.
57	Stop Timer C - If the input condition is True, set Timer D= P3443 counts else do nothing.
58	Pulse Start Timer A – If the input condition is True and timer A has expired then restarts timer A.
59	Pulse Start Timer B – If the input condition is True and timer B has expired then restarts timer B.
60	Pulse Start Timer C – If the input condition is True and timer C has expired then restarts timer C.
61	Pulse Start Timer D – If the input condition is True and timer D has expired then restarts timer D.

Table 10-3 PLC Actions Continued

ID	Description
69	Reset PLC – If the input condition is True then a PLC reset is performed. All timers are expired and all logical variables are set to FALSE. Comparators are not affected.
70-99	Jump 0-29 – If the input condition is True then a jump from the current rung number to the specified rung number is performed. Skipped rungs are not executed. Only forward jumps are allowed. Jumps from high to lower rungs or jumps to the same rung number result in an error.
150	Heater - If the input condition is true then trickle current heating is enabled else it is disabled.

Table 10-4 Preset Speed Select Index

ID of PLC Actions				Description
28	27	26	25	
0	0	0	0	Preset Speed 1 (P1001) Selected
0	0	0	1	Preset Speed 2 (P1002) Selected
0	0	1	0	Preset Speed 3 (P1003) Selected
0	0	1	1	Preset Speed 4 (P1004) Selected
0	1	0	0	Preset Speed 5 (P1005) Selected
0	1	0	1	Preset Speed 6 (P1006) Selected
0	1	1	0	Preset Speed 7 (P1007) Selected
0	1	1	1	Preset Speed 8 (P1008) Selected
1	0	0	0	Preset Speed 9 (P1009) Selected
1	0	0	1	Preset Speed 10 (P1010) Selected
1	0	1	0	Preset Speed 11 (P1011) Selected
1	0	1	1	Preset Speed 12 (P1012) Selected
1	1	0	0	Preset Speed 13 (P1013) Selected
1	1	0	1	Preset Speed 14 (P1014) Selected
1	1	1	0	Preset Speed 15 (P1015) Selected
1	1	1	1	Zero Speed (Not Defined) Selected

Table 10-5 Parameter Table Select Index

ID of PLC Actions		Description
36	35	
0	0	Parameter Table 1 (P52 set to T1) Selected
0	1	Parameter Table 2 (P52 set to T2) Selected
1	0	Parameter Table 3 (P52 set to T3) Selected
1	1	Parameter Table 4 (P52 set to T4) Selected

10.5 PLC Mode as Standard Run 2-Wire Mode

This example shows how the PLC Mode may operate as the Standard Run 2-Wire Mode.
These parameter values are entered from the keypad.

Initialization:

Parameter	Value	Comment
P1401	PLC	PLC operating mode selected

PLC Mode configuration parameters:

Parameter Number	Parameter Dec Value	Byte 3 Condition	Byte 2 Logic	Byte 1 Condition	Byte 0 Action
P3401	050.000.000.020	Input 1 (50)	OR (0)	False (0)	Forward (20)
P3402	051.000.000.021	Input 2 (51)	OR (0)	False (0)	Reverse (21)
P3403	052.000.053.018	Input 3 (52)	OR (0)	Input 4 (53)	Jog Enable (18)
P3404	052.000.000.006	Input 3 (52)	OR (0)	False (0)	Jog Forward (6)
P3405	053.000.000.005	Input 4 (53)	OR (0)	False (0)	Jog Reverse (5)
P3406	054.000.000.022	Input 5 (54)	OR (0)	False (0)	Acc/Dec Group (22)
P3407	055.000.000.024	Input 6 (55)	OR (0)	False (0)	Presets/Analog (24)
P3408	056.000.000.023	Input 7 (56)	OR (0)	False (0)	Reset (23)
P3409	057.003.000.019	Input 8 (57)	NOR (3)	False (0)	Fault (19)

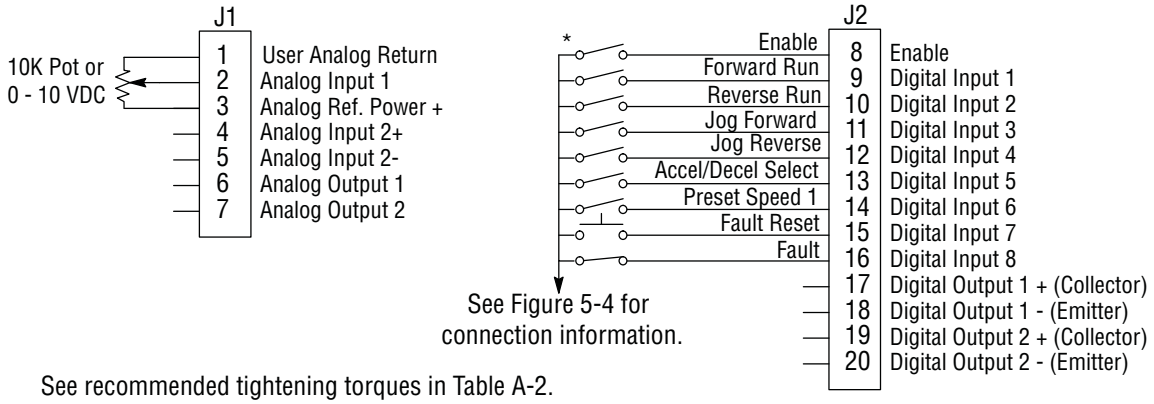

See recommended tightening torques in Table A-2.

*Note: Remove factory jumper from J2-8 and J3-24 before connecting switch at J2-8.

The Parameter Dec Value column can be used when entering the PLC configuration parameters at the keypad (parameters are shown as decimal long values - byte3.byte2.byte1.byte0).
For this mode Enable is active.
Note that Preset Speed 1 is active so the Preset Speed Select Table Index need not be programmed since it automatically follows action 24 (Presets/Analog)
Jog is enabled anytime input 3 or 4 is on while these same inputs set the direction for jog.
The Fault action is programmed to trigger whenever digital input 8 goes low.

10.6 PLC Mode as 15 Preset Speed Mode

This example shows how the PLC Mode creates the 15 Preset Speed Mode.

Initialization:

Parameter	Value	Comment
P1401	PLC	PLC operating mode selected

PLC Mode configuration parameters:

Parameter Number	Parameter Dec Value	Byte 3 Condition	Byte 2 Logic	Byte 1 Condition	Byte 0 Action
P3401	050.000.000.020	Input 1 (50)	OR (0)	False (0)	Forward (20)
P3402	051.000.000.024	Input 2 (51)	OR (0)	False (0)	Reverse (21)
P3403	001.000.000.035	True (1)	OR (0)	False (0)	Presets/Analog (24)
P3404	052.000.000.025	Input 3 (52)	OR (0)	False (0)	Preset Tbl Bit 0 (25)
P3405	053.000.000.026	Input 4 (53)	OR (0)	False (0)	Preset Tbl Bit 1 (26)
P3406	054.000.000.027	Input 5 (54)	OR (0)	False (0)	Preset Tbl Bit 2 (27)
P3407	055.000.000.028	Input 6 (55)	OR (0)	False (0)	Preset Tbl Bit 3(28)
P3408	052.001.053.040	Input 3 (52)	AND (1)	Input 4 (53)	Variable A (40)
P3409	054.001.055.041	Input 5 (54)	AND (1)	Input 6 (55)	Variable B (41)
P3410	100.001.101.023	A (100)	AND (1)	B (101)	Reset (23)
P3411	056.000.000.022	Input 7 (56)	OR (0)	False (0)	Acc/Dec Group (22)
P3412	057.003.000.019	Input 8 (57)	NOR (3)	False (0)	Fault (19)

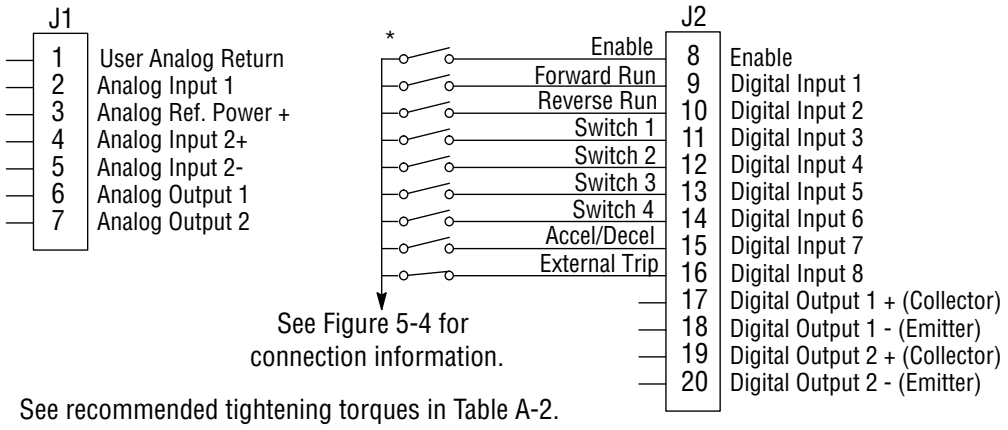

*Note: Remove factory jumper from J2-8 and J3-24 before connecting switch at J2-8.

The Parameter Dec Value column can be used when entering the PLC configuration parameters at the keypad (parameters are shown as decimal long values - byte3.byte2.byte1.byte0).
For this mode Enable is active.
Note that Preset Speed 1 is active so the Preset Speed Select Table Index need not be programmed since it automatically follows action 24 (Presets/Analog).
Jog is enabled anytime input 3 or 4 is on while these same inputs set the direction for jog.
The Fault action is programmed to trigger whenever digital input 8 goes low.

10.7 PLC Mode as Process PID Mode

This example shows how the PLC Mode rendered as the Process PID Mode.

Initialization:

Parameter	Value	Comment
P1401	PLC	PLC operating mode selected

PLC Mode configuration parameters:

Parameter Number	Parameter Dec Value	Byte 3 Condition	Byte 2 Logic	Byte 1 Condition	Byte 0 Action
P3401	050.000.000.020	Input 1 (50)	OR (0)	False (0)	Forward (20)
P3402	051.000.000.021	Input 2 (51)	OR (0)	False (0)	Reverse (21)
P3403	001.000.000.034	True (1)	OR (0)	False (0)	Param Table Select (34)
P3404	052.000.000.035	Input 3 (52)	OR (0)	False (0)	Table Select Bit 0 (35)
P3405	053.000.000.038	Input 4 (53)	OR (0)	False (0)	Torque/Speed (38)
P3406	054.000.000.029	Input 5 (54)	OR (0)	False (0)	PID (29)
P3407	055.000.000.018	Input 6 (55)	OR (0)	False (0)	Jog Enable (18)
P3408	055.000.000.006	Input 6 (55)	OR (0)	False (0)	Jog Forward (6)
P3409	056.000.000.023	Input 7 (56)	OR (0)	False (0)	Reset (23)
P3410	057.003.000.019	Input 8 (57)	NOR (3)	False (0)	Fault (19)

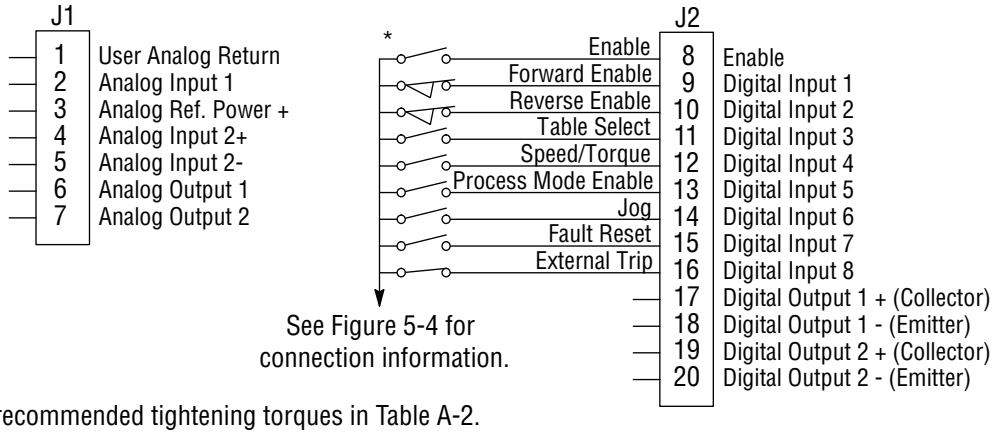

See recommended tightening torques in Table A-2.

*Note: Remove factory jumper from J2-8 and J3-24 before connecting switch at J2-8.

The Parameter Dec Value column can be used when entering the PLC configuration parameters at the keypad (parameters are shown as decimal long values - byte3.byte2.byte1.byte0).
For this mode Enable is active.
The unconditional True statement P3403 enables parameter table select (Table 10-5) at all times.
The Fault action is programmed to trigger whenever digital input 8 goes low.

10.8 PLC Mode as a Modified Process PID Mode

This example shows how the PLC Mode as a modified Process PID Mode.

Initialization:

Parameter	Value	Comment
P1401	PLC	PLC operating mode selected
P1501	PLC	Digital Output 1 Set by PLC Mode Logic
P3431	10	Comparator A monitors absolute speed demand (P10)
P3432	20%	Comparator A's constant (12 Hz for 60 Hz max)
P3440	3.00 sec	Timer A set for 3 seconds

PLC Mode configuration parameters:

Parameter Number	Parameter Dec Value	Byte 3 Condition	Byte 2 Logic	Byte 1 Condition	Byte 0 Action
P3401	076.000.000.040	Comp A (76)	OR (0)	False (0)	A (40)
P3402	050.000.000.020	Input 1 (50)	OR (0)	False (0)	Forward (20)
P3403	051.000.000.021	Input 2 (51)	OR (0)	False (0)	Reverse (21)
P3404	100.000.000.038	A (100)	OR (0)	False (0)	Torque/Speed (38)
P3405	053.002.100.029	Input 4 (53)	XOR (2)	A (100)	PID (29)
P3406	054.000.055.018	Input 5 (54)	OR (0)	Input 6 (55)	Jog Enable (18)
P3407	054.000.000.006	Input 5 (54)	OR (0)	False (0)	Jog Forward (6)
P3408	055.000.000.005	Input 6 (55)	OR (0)	False (0)	Jog Reverse (5)
P3409	056.000.000.023	Input 7 (56)	OR (0)	False (0)	Reset (23)
P3410	057.000.000.050	Input 8 (57)	OR (0)	False (0)	Start Timer (50)
P3411	086.000.000.019	Timer A (86)	OR (0)	False (0)	Fault (19)

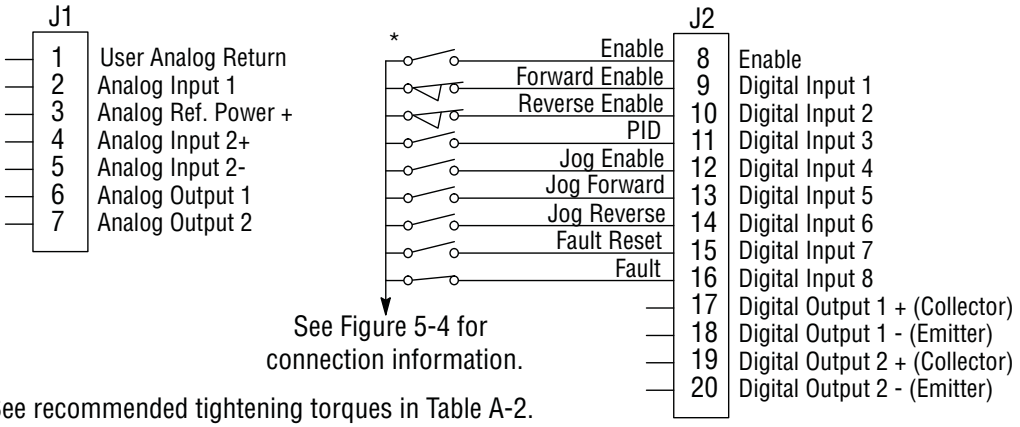

See recommended tightening torques in Table A-2.

*Note: Remove factory jumper from J2-8 and J3-24 before connecting switch at J2-8.

The Parameter Dec Value column can be used when entering the PLC configuration parameters at the keypad (parameters are shown as decimal long values - byte3.byte2.byte1.byte0).
For this mode Enable is active.
Use of logical variables A, B, C or D allows for complex PLC logic.
Variable "A" is set based on the outcome of a comparator and then used as an input condition for the torque/speed select and PID actions.

Note that P3401 is programmed to set logical variable “A” before it is used since statements are executed in order from P3401 through P3410.
Either input 5 or 6 enable jog and they also set jog direction as in P3407 and P3408.
Speed mode is active above 12 Hz but torque mode is active when less than 12Hz.
The PID becomes active above 12 Hz if input 4 is ON.
The PID becomes active at less than 12 Hz when input 4 is OFF.
The Fault action is programmed to trigger after a three second delay following digital input 8 going low.
Timer A is used to implement this action.
Normally P3410 continuously resets Timer A when digital input 8 is high.
If digital input 8 goes low then high in less than three seconds no fault action occurs since Timer A is reset before it has a chance to timeout.
If digital input 8 goes low and stays low for at least 3 seconds then Timer A does timeout and a fault occurs.

Chapter 11
Composite Reference Description

11.1 Overview

This reference is mathematically computed from any two valid drive parameters. Once configured, it can provide a signal to drive the speed loop, torque loop or process PID. In addition, this reference can drive all existing operating modes including the PLC Mode. Composite Ref can be referenced to any valid input:

P1402 - Command Source
P2603 - Process PID Feedback Source
P2310 - Auxiliary Filter Source
P1418 -Torque Feedforward Source
P1415 - Current Limit Source
P2604 - Process PID Setpoint Source

Mathematical operations are performed at each stage in its development providing the ability to add, subtract, multiply or divide any two parameters to form a complex internal reference source. This reference source can influence the operation of all existing operating modes including PLC Mode. The Composite Reference Parameter Block is programmed in the Level 3, Composite REF parameters.

Figure 11-1 Composite Reference Generator Block Diagram

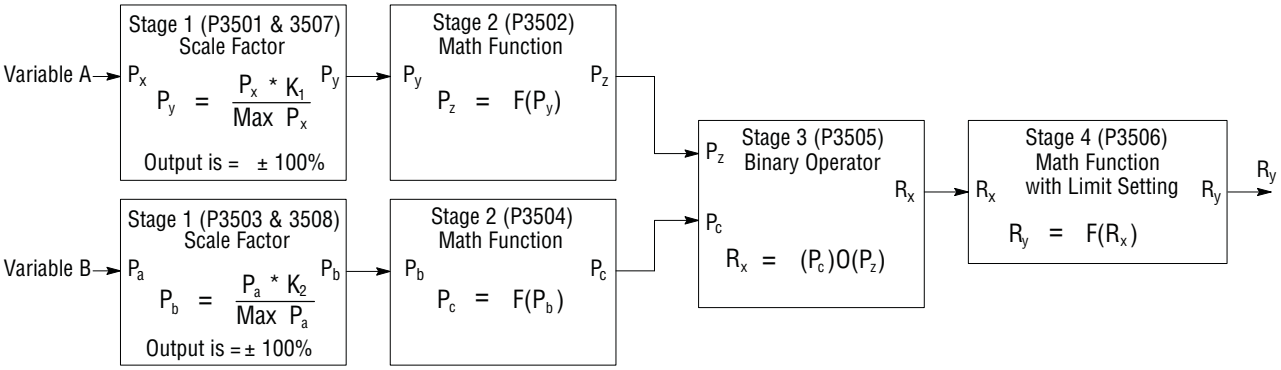

Table 11-1 Math Functions (P3506)

ID	Function	Description	Notes
0	0	Zero[1]	1. Zero Function, F(x) = 0 2. Identity Function, F(x) = x 3. Where, |x| is the absolute value function: |x|= x for x ≥ 0 |x|=-x for x < 0 4. The ramp generator is computed as follows: 0.0 ⟶ 1.0 for x > 0 Constant output for x = 0 0.0 ⟶ -1.0 for x < 0 With time period equal to 1.0/(|x|•100) Sec 5. The frequency generator is computed as follows: y = Ramp(x) Freq(x) = Sin(2πy) With output frequency equal to |x|•100 Hz
1	X	Identity[2]	
2	| X |	Absolute Value[3]	
3	1/X	Inversion	
4	X^2	Square	
5	√(|X|)	Square Root[3]	
6	Sin(x)	Sine	
7	Cos(x)	Cosine	
8	Ramp(x)	Ramp Generator[4]	
9	Freq(x)	Frequency Generator[5]	

Table 11-2 Binary Operator Selection Parameter (P3505)

ID	Function	Description	Notes
0	+	Sum	1. Y = Max(x, y) provides the maximum 2. Y = Min(x, y) provides the minimum
1	-	Difference	
2	•	Multiply	
3	/	Divide	
4	Max	Maximum[1]	
5	Min	Minimum[2]	

Table 11-3 Composite Reference Parameters

Stage	P#	Description
1	3501 & 3503	Scale Factor - Monitor a parameter number (Variable A or B) and scales the value into percentage of maximum value for use by the next stage. As an example, P3501=5 Motor Voltage (assume its maximum is 230V) is monitored and internally 20% is computed for P5= 46 V or 10% for P5=23 V. Likewise, with P3503=11 then Speed Demand (assume its maximum is 60 Hz) is monitored and 50% is output when P11=30 Hz or –50% when P11= -30 Hz. P3501 or P3503 can be can be set to any valid drive parameter number. If either is set to an invalid parameter number Py=0% or Pb=0%. P3501 or P3503 only point to a valid parameter number in the active parameter table, never a parameter outside the active table. Switching parameter tables with the drive enabled causes the Composite Reference to be redefined by the parameter values in the new active parameter table.
2 & 4	3502, 3504 & 3506	Math Function - These parameters select the mathematical functions to be applied at the second and fourth stage of the Composite Reference's derivation. Refer to Table 11-1.
3	3505	Operator - This parameter provides the mathematical operation to be performed at the third stage of the Composite Reference derivation. Refer to Table 11-2 .
1	3507 & 3508	These parameters provide a way to scale up or down the percentage calculation of the first stage. They range from -1000.00 to 1000.00 with default 1.00. Normally, the defaults work so these parameters need not be changed. A simple example of their use is: A 5A motor is connected to a 15A (peak) drive. When the motor is at rated amps only 5/15 or 33.3% is passed on to stage 2, but by setting P3507=3.00, 100% is passed on allowing full use of the motor’s current.

11.2 Composite Reference Examples

The following table gives examples of the kinds of Composite References that may be developed.

Table 11-4 Examples

Composite Reference Parameters								Description
P3501	P3502	P3503	P3504	P3505	P3506	P3507	P3508	
P103	Identity	P104	Identity	Sum	Identity	0.5	0.5	Average of Analog Inputs 1&2: $R_y = (A_1+A_2)/2$
P103	Identity	P104	Freq	Multiply	Identity	1.0	1.0	Signal Generator with Magnitude set by A1 and Frequency by A_2: $R_y = A_1 \times Freq(A_2)$
P103	Identity	P104	Identity	Divide	Identity	1.0	1.0	Ratio of Analog Inputs 1&2: $R_y = A_1/A_2$
P102	Square	P104	Square	Difference	Square Root	1.0	1.0	Square Root of Difference of Squares of Process Error and Analog2: $R_y = \sqrt{(\lvert P_e^2 - A_2^2 \rvert)}$

Chapter 12
Monitor and RTC Description

12.1 Monitor Parameters (P0001 to P0818)

Monitor parameters can be viewed using the WorkBench software. Most are read only (P0001) but some (P0052) can be written as well.

Table 12-1 Monitor Parameters Descriptions

P#	Type	Name	Unit	Help
1		SOFTWARE VERSION		Software Version. - Drive firmware version number
2		LOC/REM STATUS		Local/Remote Status. - Source of run/stop commands. Local for keypad or Remote for terminal block
3		DRIVE STATUS		Drive Enable Status. - 0 for disabled, 1 for enabled
4		MOTION STATUS		Motion Status. - Status: stopped, forward, reverse, bipolar, sleep, homing, etc.
5		MOTOR VOLTS	V	Motor Volts. - Estimated line-to-line drive output RMS voltage
6		MOTOR CURRENT	A	Motor Current. - Measured motor RMS current
7		MOTOR ABS SPEED	RPM	Motor Absolute Speed. - Estimated rotor speed
9		SPEED REF	Hz	Speed Reference. - Setpoint speed for motor. Command source parameter determines the source
10		ABS SPEED DEMAND	Hz	Absolute Speed Demand. - Absolute speed output from Speed Profiler.
11		SPEED DEMAND	Hz	Speed Demand. - Signed speed output from Speed Profiler
12		ABS MOTOR FREQ	Hz	Absolute Motor Frequency. - Estimated motor electrical frequency
13		MOTOR FREQ	Hz	Motor Frequency. - Signed motor frequency
14		DRIVE TEMP	°C	Drive Temperature. - Measured temperature of drive heat sink
15		BUS VOLTAGE	V	Bus Voltage. - Measured bus voltage. DC bus high fault occurs above 400/820V DC
16		OVERLOAD LEFT	%	Overload Remaining. - Current overload count remaining until overload fault/foldback occurs
17		INPUTS		Digital Inputs. - State of terminal block digital inputs. Off/On indicated by 0/1
18		OUTPUTS		Digital Outputs. - State of the terminal block digital/relay outputs. Off/On indicated by 0/1
19		RATED HP	HP	Rated Horsepower. - Drive rated horsepower
20		RATED CURRENT	A	Rated Current. - Nominal/derated drive continuous RMS current rating
21		RATED PK CURRENT	A	Rated Peak Current. - Nominal/de-rated drive peak, short term, current rating
22		RATED VOLTS	V	Rated Voltage. - Nominal voltage rating of drive
23		ACTIVE FAULTS		Active Faults. - Number of active / simultaneous drive faults
24		ACTIVE FLT CODE		Active Fault Code. - Currently active drive fault code number
25		PROC FEEDFORWARD	%	FF Process Feedforward. - Process PID feed forward signal
26		PROC SETPOINT	%	SP Process Setpoint. - Process PID set point signal
27		PROC FEEDBACK	%	FB Process Feedback. - Process PID feedback signal
28		ADC USER REF	V	ADC User Reference. - Hardware ADC reference voltage for analog inputs
29		ADC CURR REF	V	ADC Current Reference. - Hardware ADC reference voltage for currents
30		USER 24V	V	User 24V. - Measured, internally supplied 24V for I/O
31		MOTOR TORQUE	NM	Motor Torque. - Estimated motor torque from measured currents and motor model
32		AUTO-TUNE PROG	%	Auto-Tune Progress. - Estimated progress of auto-tune test

Table 12-1 Monitor Parameters Descriptions Continued

P#	Type	Name	Unit	Help
33		LINE VOLTAGE	V	Line Voltage. - Estimated drive input line-to-line RMS voltage
34		RATED A/V	V	Rated Amps/Volt. - Nominal drive current scaling set at the factory
35		MOTOR POLES		Motor Poles. - Calculated /entered number of motor poles
36		RUN TIMER	HR	Run Timer. - Accumulated drive run (non-idle) time in hours
37		ACTIVE ALARMS		Active Alarms. - Number of currently active /simultaneous alarms
38		ACT ALARM CODE		Active Alarm Code. - Currently active alarm code
39		ANA IN1	V	Analog Input 1. - Measured value of analog input #1 on terminal input J1-2 and J1-1
40		ANA IN2	V	Analog Input 2. - Measured value of analog input #2 on terminal input J1-4 and J1-5
41		ANA OUT1	V	Analog Output 1. - Estimated value of analog output #1 on terminal J1-6
42		ANA OUT2	V	Analog Output 2. - Estimated value of analog output #2 on terminal J1-7
43		OPTION1		Option 1. - Option board detected in option slot #1 (left slot)
44		OPTION2		Option 2. - Option board detected in option slot #2 (right slot)
46		DATE AND TIME		Current Date and Time. - Real time clock current reading
47		DST STATUS		DST Status. - Daylight Saving Time status: 0=Not Active 1=Active
48		MOTOR OVERLOAD REMAINING	%	Current overload count remaining until a motor overload fault/overload occurs
49		LAST MOTOR OVERLOAD REMAINING	%	Last reading of motor overload left before power down
50		LAST DRIVE OVERLOAD REMAINING	%	Last reading of drive overload left before power down
52		ACTIVE PARAM TBL		Active Parameter Table. – Parameter table currently in use on the drive
53		EE VER		Power Base EEPROM Rev. - Power base EEPROM parameter revision number. Set by factory
54		FPGA VER		Power Base FPGA Rev. - Power base FPGA revision control number. Set by factory
55		ACC/DEC DEMAND	Hz/SEC	Accel/Decel Demand. - Current ramp rate used by the velocity profiler
56		ID CURRENT		ID Current. - D axis measured current proportional to motor flux
57		ID DEMAND	A	ID Demand. - D axis demand current proportional to motor flux
58		IQ CURRENT	A	IQ Current. - Q axis measured current proportional to motor torque
59		IQ DEMAND	A	IQ Demand. - Q demand current proportional to motor torque
60		POWER FACTOR		Power Factor. - Ratio of (real power)/(apparent power)
61		PHASE 1 CURRENT	A	Phase 1(U) Current. - Phase U current
62		PHASE 2 CURRENT	A	Phase 2(V) Current. - Phase V current
63		PHASE 3 CURRENT	A	Phase 3(W) Current. - Phase W current
64		VD DEMAND	V	VD Demand. - D axis voltage demand for setting up motor flux
65		VQ DEMAND	V	VQ Demand. - Q axis voltage demand for setting up motor torque
66		ELECTRICAL ANGLE	°	Electrical Angle. - Electrical angle used to develop phased voltages to the motor
67		MOTOR SPEED	RPM	Motor Speed. - Current speed of the motor
68		AT TEST DESC		Autotune Test Description. - Description of current autotuning state
69	R/W	APP LAYER ERROR		Application Layer Error. Application layer error code number. The last error that occurred

Table 12-1 Monitor Parameters Descriptions Continued

P#	Type	Name	Unit	Help
70		USB TRANSACTIONS		USB Transactions. Total number of USB transactions since start up
71		USB ERRORS		USB Errors. Total number of USB errors since start up
72		TSK STATUS		Task Status. Runtime task overrun status. Bits correspond to tasks that have overrun their time limit
73		TSK ID		Task ID. First task that overran its time slot
74		TSK COUNT		Task Count. Total number of overruns for the first task to overrun its time slot
75		Kp PACKETS		Keypad Packets. Total number of processed keypad packets
76		Kp T-GAPS		Keypad Gaps. Total number of keypad inter-packet time gap errors
77		Kp NAKs		Keypad NAKs. Total number of NAKs sent. High word are received NAKs low word is transmitted NAKs
78		EST POWER	kW	Estimated Power. - Drive power output estimated from measured current and voltages. Units: KW
79		EST ENERGY	kWH	Estimated Energy. - Delivered by drive. Estimated from measured current and voltages. Units: kHW
80		EST COST	$	Estimated Cost. - Cost of output energy delivered. Estimated from cost of kWH unit parameter
81	R/W	ACCESS KEY		Access Key. - Parameter security access key. Contact Baldor to decode the key code
82	R/W	KEYPAD SOFT VER		Keypad Software Version. - Keypad software version string
83		AUTOTUNE TEST RE		Autotune test result. Use keypad back/forward keys to review results on the keypad
84		AUTOTUNE TEST RE		Autotune test result. Use keypad back/forward keys to review results on the keypad
85		CMD TYPE		Command Type. Operating mode input signal command type
86		FPGA READ ERRORS		FPGA Read Errors. Number of errors when reading FPGA since start up
87		FPGA WRITE ERROR		FPGA Write Errors. Number of errors when writing to FPGA since start up
88		FPGA ALARM REG		FPGA Alarm Register. Alarm Latch|Alarm Status of Powerbase FPGA
89		REFRESH REQUEST		Refresh Request. - Refresh parameter list request from drive to host
90		PHASE 1 VOLTAGE	V	Phase 1(U) Voltage. - Phase U RMS voltage
91		PHASE 2 VOLTAGE	V	Phase 2(V) Voltage. - Phase V RMS voltage
92		PHASE 3 VOLTAGE	V	Phase 3(W) Voltage. - Phase W RMS voltage
93		CUSTOM UNITS	CUSTOM	Custom Units. - Shows production rates according to custom units.
98		LV TEST FEEDBACK		LV test feedback. - Gives feedback on state of test
99		LV TEST FE STATE		Front End State. -Gives feedback on state of front end
100		ID		Power Base ID. - Power Base ID Number. Set by factory
102		PROC ERROR	%	ER Process Error. - Process PID error signal
103		ANA1 REF	%	Analog Input 1 Reference. - Reference generated from analog input 1
104		ANA2 REF	%	Analog Input 2 Reference. - Reference generated from analog input 2
105		COMPOSITE REF	%	Composite Reference. - Reference generated composite reference parameter block.
107	R/W	RTC EDGE COUNTER		RTC Edge Counter. - General purpose date/time edge counter used in Real Time Clock Features.
108	R/W	RTC OUTPUTS		RTC Virtual Outputs. - Outputs set by the RTC and mapped to real outputs if enabled.
109	R/W	RTC MSG STATUS		RTC Message Status. - Individual bits are mapped to RTC message when set

Table 12-1 Monitor Parameters Descriptions Continued

P#	Type	Name	Unit	Help
110		LAST POWERDOWN		Last Drive Power Down Date. - The date and time the drive was last turned off.
111		COMPONENT A	%	Component A of Composite Reference. - First part of the composite reference signal.
112		COMPONENT B	%	Component B of Composite Reference. - First part of the composite reference signal.
113	R/W	PLC TIMER A		PLC Mode Timer A Counter. - General purpose timer/counter in 10ms clock ticks.
114	R/W	PLC TIMER B		PLC Mode Timer B Counter. - General purpose timer/counter in 10ms clock ticks.
115		ENC POS FB SPEED	%	Speed reference set by Pulse Follower EXB.
116		MACRO STATUS		ID number of last executed macro (none if no macros have been executed).
117	R/W	PLC Timer C		PLC Mode Timer C Counter- General purpose timer/counter in 10ms clock ticks.
118	R/W	PLC Timer D		PLC Mode Timer D Counter - General purpose timer/counter in 10ms clock ticks.
201		LOC SPEED REF	Hz	Local Speed Reference. - Local speed reference from keypad. Reference can be entered in Hz or RPM
202		E-POT SPEED REF	Hz	E-Pot Speed Ref. - Electronic pot speed reference
301		FAULT LOG TIME		Fault Log Time. Time stamp for fault log entries
302		FAULT LOG MSG		Fault Log Message.
503		OPT1 ANA IN1	V/mA	Option 1 Analog Input 1. Option board 1 analog input 1
504		OPT1 ANA IN2	V/mA	Option 1 Analog Input 2. Option board 1 analog input 2
505		OPT2 ANA IN1	V/mA	Option 2 Analog Input 1. Option board 2 analog input 1
506		OPT2 ANA IN2	V/mA	Option 2 Analog Input 2. Option board 2 analog input 2
507		OPT1 ANA OUT1	V/mA	Option 1 Analog Output 1. Option board 1 analog output 1
508		OPT1 ANA OUT2	V/mA	Option Board 1 Analog Output 2. Option 1 analog output 2
509		OPT2 ANA OUT1	V/mA	Option 2 Analog Output 1. Option board 2 analog output 1
510		OPT2 ANA OUT2	V/mA	Option 2 Analog Output 2. Option board 2 analog output 2
511		TX CNTS	CNT	PF Tx Counts. PF transmitted accumulated position in encoder pulses per revolution
512		TX REVS	REVS	PF Tx Revolutions. PF transmitted accumulated revolutions since power up. Encoder PPR parameter sets the revolution count
513		RX CNTS	CNT	PF Rx Counts. PF received accumulated position in encoder pulses per revolution
514		RX REVS		PF Rx Revolutions. PF received accumulated revolutions since power up. Encoder PPR parameter sets the revolution count
515		OPT1 CONFIG1		Option Card 1 Configuration Word 1. Slot 1 option card's general purpose config data from its EE
516		OPT1 CONFIG2		Option Card 1 Configuration Word 2. Slot 1 option card's general purpose config data from its EE
517		OPT1 CONFIG3		Option Card 1 Configuration Word 3. Slot 1 option card's general purpose config data from its EE
518		OPT1 CONFIG4		Option Card 1 Configuration Word 4. Slot 1 option card's general purpose config data from its EE
519		OPT2 CONFIG1		Option Card 2 Configuration Word 1. Slot 2 option card's general purpose config data from its EE
520		OPT2 CONFIG2		Option Card 2 Configuration Word 2. Slot 2 option card's general purpose config data from its EE

Table 12-1 Monitor Parameters Descriptions Continued

P#	Type	Name	Unit	Help
521		OPT2 CONFIG3		Option Card 2 Configuration Word 3. Slot 2 option card's general purpose config data from its EE
522		OPT2 CONFIG4		Option Card 2 Configuration Word 4. Slot 2 option card's general purpose config data from its EE
530		OPT1 FIRMWARE		Option Card 1 Firmware Version. Option card 1 firmware version string
531		OPT2 FIRMWARE		Option Card 2 Firmware Version. Option card 2 firmware version string
532		OPT1 CONFIG		Option Card 1 Configuration Status. Slot 1 option card's configuration status
533		OPT2 CONFIG		Option Card 2 Configuration Status. Slot 2 option card's configuration status
534		OPT1 RUN STATUS		Option Card 1 Runtime Status. Slot 1 option card's run time status
535		OPT2 RUN STATUS		Option Card 2 Runtime Status. Slot 2 option card's run time status
536		OPT1 ANA1 REF	%	Option Card 1 Analog Input 1 Reference. Reference generated from analog input 1 on option card 1
537		OPT1 ANA2 REF	%	Option Card 1 Analog Input 2 Reference. Reference generated from analog input 2 on option card 1
538		OPT2 ANA1 REF	%	Option Card 2 Analog Input 1 Reference. Reference generated from analog input 1 on option card 2
539		OPT2 ANA2 REF	%	Option Card 2 Analog Input 2 Reference. Reference generated from analog input 2 on option card 2
801		FAULT LATCH		Fault Latch. Fault trace signal: powerbase fault active high latch
802		ALARM LATCH		Alarm Latch. Fault trace signal: powerbase alarm active high latch
803		ADC CURRENT REF	V	ADC Current Reference. Fault trace signal: ADC 1.5V current reference
804		24V REF	V	24V Reference. Fault trace signal: 24v reference
807		USER INPUTS		User Digital Inputs. Fault trace signal: user digital inputs
806		DIGITAL OUTPUTS		Digital Outputs. Fault trace signal: all digital outputs
807		ANA INPUT 1	V	Analog Input 1. Fault trace signal: analog input 1
808		ANA INPUT 2	V	Analog Input 2. Fault trace signal: analog input 2
809		SPEED REF	Hz	Speed Reference. Fault trace signal: speed reference
810		PH1 CURRENT	A	Phase 1(U) Current. Fault trace signal: motor phase 1 current
811		PH2 CURRENT	A	Phase 2(V) Current. Fault trace signal: motor phase 2 current
812		PH3 CURRENT	A	Phase 3(W) Current. Fault trace signal: motor phase 3 current
813		MOTOR CURRENT	A	Motor Current. Fault trace signal: motor instantaneous RMS current
814		MOTOR TORQUE	NM	Motor Torque. Fault trace signal: motor instantaneous torque
815		MOTOR VOLTS	V	Motor Voltage. Fault trace signal: instantaneous voltage to motor
816		MOTOR SPEED	RPM	Motor Speed. Fault trace signal: motor instantaneous rotor speed
817		BUS VOLTAGE	V	Bus Voltage. Fault trace signal: instantaneous bus voltage
818		DRIVE TEMP	°C	Drive Temperature. Fault trace signal: drive temperature

12.2 Real Time Clock (RTC) Overview

Action Module

Action Module parameters P3601 - 3602 set the actions to be scheduled. Action 2 takes priority over action 1 should both be scheduled to trigger within the same second. So, if action 1 turns on output 1 and action 2 turns off output 1 and they both trigger on the same seconds tick, then output 1 will appear as though to never turn on.

As a rule, once an action is taken it is latched until it is reset by another action.

Action Module selections are shown in Table 12-2.

Figure 12-1 RTC Features

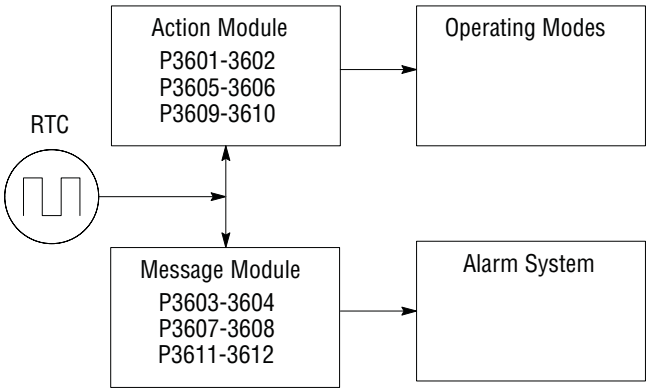

Table 12-2 Actions (P3601 & 3602)

ID	ACTION	DESCRIPTION
0	None	No action assigned. Default setting.
1	Digital Output 1 On	Digital output 1 is turned on. P1501 set to RTC
2	Digital Output 1 Off	Digital output 1 is turned off. P1501set to RTC
3	Digital Output 2 On	Digital output 2 is turned on. P1502 set to RTC
4	Digital Output 2 Off	Digital output 2 is turned off. P1502 set to RTC
5	Relay Output 1 On	Relay output 1 is turned on. P1503 set to RTC
6	Relay Output 1 Off	Relay output 1 is turned off. P1503 set to RTC
7	Relay Output 2 On	Relay output 2 is turned on. P1504 set to RTC
8	Relay Output 2 Off	Relay output 2 is turned off. P1504 set to RTC
9	Increment P107	Increments the RTC counter parameter
10	Decrement P107	Decrements the RTC counter parameter
11	Reset P107	Resets the RTC counter parameter
12	Digital Output 1 On with Inc	Performs digital I/O with P107 increment
13	Digital Output 1 Off with Inc	Performs digital I/O with P107 increment
14	Digital Output 1 On with Dec	Performs digital I/O with P107 decrement
15	Digital Output 1 Off with Dec	Performs digital I/O with P107 decrement
16	Digital Output 1 On with Reset	Performs digital I/O with P107 reset
17	Digital Output 1 Off with Reset	Performs digital I/O with P107 reset
18	Relay Output 1 On with Inc	Performs digital I/O with P107 increment
19	Relay Output 1 Off with Inc	Performs digital IO with P107 increment
20	Relay Output 1 On with Dec	Performs digital IO with P107 decrement
21	Relay Output 1 Off with Dec	Performs digital IO with P107 decrement
22	Relay Output 1 On with Reset	Performs digital IO with P107 reset
23	Relay Output 1 Off with Reset	Performs digital IO with P107 reset

Level 1, Output Setup Block parameters P1501-P1504 select the digital/relay output functions. P107 is the RTC counter parameter.

Message Module (P3603 - 3604)
Message Module parameters P3603 - 3604 set the messages to be scheduled. Message selections are shown in Table 12-3.

Table 12-3 RTC Message 1&2 Parameters (P3603 & P3604)

ID	ACTION	DESCRIPTION
0	None (default)	No message active
1	Clean Filter(s)	Time to do periodic cleaning of filter(s)
2	Change Filter(s)	Time to change out the filter(s)
3	Apply Oil/Lubricate	Apply oil and/or lubricant necessary areas of the system
4	Service Motor	Check motor cables, encoder, clean motor etc.
5	Service Drive	Check drive cables, clean panels and keypad display etc.
6	Service Coolant System	Check coolant pressures/levels, check for leaks, top off as needed
7	Service Heating System	Check for gas leaks, clean filters, blowers and connections
8	RTC Alarm	Generic real-time clock alarm

RTC Action/Message Qualifier Parameters (P3605-P3608)
Qualifier parameters shown in Table 12-4 set the interval of time of the actions and messages selected.

Table 12-4 Action/Message Qualifier Parameters (P3605 – P3608)

ID	QUALIFIERS	DESCRIPTION
0	Once	Action/Message is scheduled once to occur on the date and time entered.
1	Second	Action/Message is scheduled every second. Starting on the date and time entered and repeated every second thereafter.
2	Minute	Action/Message is scheduled every minute. Starting on the date and time entered and repeated every minute thereafter at the same seconds into the minute specified in the start date and time.
3	Hourly	Action/Message is scheduled hourly. Starting on the date and time entered and repeated every hour thereafter at the same minutes and seconds into the hour as specified in the start date and time.
4	Daily	Action/Message is scheduled Daily. Starting on the date and time entered and repeated every day thereafter at the same hour, minutes and seconds specified in the start date and time. If the day specified does not exist for that month the action/message is skipped.
5	Monthly	Action/Message is scheduled monthly. Starting on the date and time entered and repeated every month thereafter on the same day, hour, minutes and seconds specified in the start date and time.
6	Yearly	Action/Message is scheduled yearly. Starting on the date and time entered and repeated every year thereafter on the same month, day, hour, minutes and seconds in the start date and time.

RTC Schedule Date Parameters (P3609-P3612)
To each action and message there is an associated start date and time. For Action 1 (P3609) is used; for Action 2 (P3610) and for Messages 1 & 2 (P3611 and P3612) are used respectively.
The internal date and time parameter format is shown in Table 12-5.

Table 12-5 Date and Time Format (P0046)

Bits	31-26	25-22	21-17	16	15-12	11-6	5-0
Fields	Year (00-63)	Month (1-12)	Day (1-31)	Hour Bit 5	Hour Bits 4-0 (0-23)	Minutes (0-59)	Seconds (0-59)

RTC Counter and Maximum Count Parameters (P107 and P3630)
Monitor parameter P107 is a general purpose RTC Counter that can be assigned as the target of a RTC action. This parameter may be incremented, decremented or reset by RTC actions.
Parameter number P3630 sets the maximum for P107, so that: -P3630 ≤ P107 ≤ P3630.
The comparators A&B of the PLC Operating Mode along with the Composite Reference make use of the maximum setting of a parameter for internal scaling of their operations.

RTC Daylight Saving Time Parameter (P3631)
P3631 has three settings: OFF, U.S.A (United States of America) and E.U. (European Union).
Setting it to OFF disables the DST Feature. Setting it to USA enable Daylight Saving Time for US customers. Setting it to EU enables Daylight Saving Time for Europe based countries.

Power Cycles and RTC Edit Changes
The RTC acts like an alarm clock during power cycles, edit changes and DST (Daylight Saving Time) updates. After power up, even though an action/message would have occurred during the power down period no action/message is issued, that action/message is lost. The next regularly scheduled action/message will trigger on the next regularly occurring clock edge after power up.
Likewise if the RTC is advanced by some time-offset due to editing or DST action/messages may be lost. For example, digital output 1 is scheduled to turn on at 1:00 PM daily. At 12:15:00 PM the clock is changed to 1:15:00 PM advancing it an hour.
The output will not turn on that day since its triggering edge never occurs.
On the other hand, if the clock is receded by one hour, that is, changed at 1:30:00 PM to 12:30:00 PM then two triggers for digital output 1 on will have been generated that day since the RTC will have passed through 1:00 PM twice. Furthermore, if an active RTC message is not acknowledged by an operator and power is cycled that message persists after the cycle. The operator must acknowledge an RTC message even if power is cycled. The same is NOT true for outputs. RTC controlled digital outputs and relays are reset at power up.

RTC Scheduling Examples
The following table gives examples of the kinds scheduled events that may be programmed.

Table 12-6 Scheduled Events Examples

	Action 1	Action 2	Message 1	Message 2
P3601	Digital Out 1 ON			
P3602		Digital Out 1 OFF		
P3603			Change Filters	
P3604				Service Heating System
P3605	Daily			
P3606		Daily		
P3607			Monthly	
P3608				Yearly
P3609	3-Feb-07 01:00:00			
P3610		3-Feb-07 02:00:00		
P3611			10-Jan-06 13:30:00	
P3612				10-Jul-06 13:30:00

For this example assume the drive is in Standard Run Two Wire operating mode with digital output 1 wired to FWD. The drive would then run daily for one hour from 1:00 AM to 2:00 AM starting February 3, 2007. The same drive is scheduled for monthly and yearly service. Filters are to be changed on the tenth of every month after lunch starting January 10, 2006. In addition, once a year on the 10 of July the heating system is serviced after lunch as well.
RTC messages 1&2 are not logged but must be acknowledged before they are cleared.

RTC Keypad Screens
The following templates shows how these parameters are displayed on the keypad.

	Keypad Screen										
Line 1	Program							Parameter Block Name			
Line 2	Parameter Name										
Line 3	Parameter List Text[1]									Qualifier[1]	
Line 4	Month[1]		Day[1]	,	Year[1]		Hour[1]	:	Minutes[1]	:	Seconds[1]
Line 5	A	Parameter Number						B			

Note 1: Field is editable.
Line 1 holds the screen's name and parameter block name. Line 2 holds a parameter name. Line 3 holds list parameter text and the scheduling qualifier. Line 4 holds the date and time. And line 5 holds the A-Function Key name, a parameter number and the B-Function Key name.

Example one:

	Keypad Screen										
Line 1	Prog								RTC		
Line 2	ACTION 1										
Line 3	Digital Output 1 ON									Daily	
Line 4	July		04		2006		01	:	00	:	00
Line 5	Diag	C3601T1						Back			

Action	Description	Display	Comments
At the Level 3 Programming enu select TC FEAT ES	At the rst menu " TC ACT N 1" press ENTE .	RTC Action Action Date & Time Action Qualifier EDIT RTC FEATURES RTC ACTION 1 None Once Jul 04, 2006 01:00:00 MAX F0201 RESET	Press ▲ or ▼ to change value. Press ▶ or ◀ to move cursor to Action uali er. Press ▲ or ▼ to change value. Press ▶ or ◀ to move cursor to Date Time. Press ENTE when nished and save the new value. See TC chapter of this manual for additional details.
Press ▶ to go to the next TC screen.	Each TC parameter can be changed by using the procedure described for TC ACT N 1.	EDIT RTC FEATURES RTC ACTION 2 None Once Jul 04, 2006 01:00:00 MAX F0201 RESET	Press ▲ or ▼ to change value. Press ▶ or ◀ to move cursor to Action uali er. Press ▲ or ▼ to change value. Press ▶ or ◀ to move cursor to Date Time. Press ENTE when nished and save the new value. See TC chapter of this manual for additional details.

Example two:

	Keypad Screen										
Line 1	Prog								RTC		
Line 2	MESSAGE 1										
Line 3	Change Filter(s)									Monthly	
Line 4	Jul		17		2010		13	:	30	:	00
Line 5	Diag	C3603T1						Back			

Appendix A
Technical Specifications

A.1 VS1SP Specifications

Table A-1 VS1SP Specifications

Input Ratings	Voltage	120	240	240	480	600
	Voltage Range	95-130	180-264	180-264	340-528	515-660
	Phase	Single Phase (1-3 HP only)		Three Phase (single phase with derating)★		
	Frequency	50/60Hz ±5%				
	Impedance	1% minimum from mains connection (3% minimum for AA frame drives)				

Output Ratings	Horsepower	¾-3 HP, 3PH output @ 120/240VAC, 1PH input ¾-500 HP @ 480VAC, 3PH input ¾-60 HP @ 240VAC, 3PH input ¾-300 HP @ 600VAC, 3PH input
	Overload Capacity	Constant Torque (Heavy Duty) = 150% for 60 seconds, 175% for 3 seconds Variable Torque (Normal Duty) = 115% for 60 seconds
	Frequency	0-500Hz
	Voltage	0 to maximum input voltage (RMS)

Protective Features	Vector Trip	Missing control power, over current, over voltage, under voltage, motor over speed, over temperature (motor or control), output shorted or grounded, motor overload
	Stall Prevention	Over voltage suppression, over current suppression
	External Output	LED trip condition indicators, 4 assignable logic outputs, 2 assignable analog outputs
	Short Circuit	Phase to phase, phase to ground
	Electronic Motor Overload	Meets UL508C (I^2T)

Environmental Conditions	Temperature	-10 to 45°C (-10°C to 40°C for B-Frame NEMA 4X Drive) Derate 3% per degree C above 45 to 55°C maximum ambient temperature (40°C to 50°C for B-Frame NEMA 4X Drive)
	Cooling	Forced air
	Enclosure	NEMA 1, IP20 (-1, -1T, -1B); NEMA 4X, IP66 (-4B), indoor mounting only **Note:** NEMA 4X/IP66 is not available in frame sizes C, D, E and F as a stock product but can be supplied as part of a packaged drive.
	Altitude	Sea level to 3300 Feet (1000 Meters) Derate 2% per 1000 Feet (303 Meters) above 3300 Feet
	Humidity	10 to 90% RH Non-Condensing (NEMA1); to 100% (NEMA 4X)
	Shock	1G
	Vibration	0.5G at 10Hz to 60Hz
	Transportation Storage Temperature	-30°C to +65°C
	Duty Cycle	1.0

★**Note**: H2D, H2E, and H2F-Frame drives are not permitted to be applied in single-phase input applications. Additionally, the H2B-Frame NEMA 4X drive is not designed for single-phase input power.

Table A-1 VS1SP Specifications

Keypad Display	Display	LCD Graphical 128x64 Pixel
	Keys	14 key membrane with tactile feedback
	Functions	Output status monitoring Digital speed control Parameter setting and display Diagnostic and Fault log display Motor run and jog Local/Remote toggle
	LED Indicators	Forward run command Reverse run command Stop command Jog active
	Remote Mount	200 feet (60.6m) maximum from control (NEMA 4X requires purchase of separate keypad.)
	Trip	Separate message and trace log for each trip, last 10 trips retained in memory

Control Specifications	Control Method	Microprocessor controlled PWM output, selectable encoderless vector or V/Hz inverter
	PWM Frequency	Adjustable 1.5-5kHz STD, 5-16 kHz quiet
	Speed Setting	±5 VDC, 0-5 VDC ±10 VDC, 0-10 VDC, 4-20 mA, 0-20 mA; digital (keypad), Serial Comms/USB 2.0, and Modbus RTU standard
	Accel/Decel	0-3600 seconds
	Motor Matching	Automatic tuning to motor with manual override
	PC Setup Software	Mint WorkBench software available using USB2.0 port for commissioning wizard, firmware download, parameter viewer, scope capture and cloning
	Velocity Loop Bandwidth	Adjustable to 180 Hz (Control only)
	Current Loop Bandwidth	Adjustable to 1200 Hz (Control only)
	Maximum Output Frequency	500 Hz
	Quiet PWM Frequency Version	Full rating 5-8 kHz PWM frequency, Adjustable to 16 kHz with linear derating (between 8 - 16kHz) of 50% at 16 kHz 600VAC controls do not allow operation above 5kHz (Size C only)
	Standard PWM Frequency Version	Full rating 1.5-2.5 kHz PWM frequency, Adjustable to 5 kHz with linear derating (between 2.5 - 5kHz) of 20% (240VAC) at 5 kHz Adjustable to 5 kHz with linear derating (between 2.5 - 5kHz) of 25% (480/600VAC) at 5 kHz
	Selectable Operating Modes	Keypad Standard Run 2 Wire Standard Run 3 Wire 15 Preset Speeds Fan Pump 2Wire Fan Pump 3Wire Process Control 3 SPD ANA 2Wire 3 SPD ANA 3Wire Electronic Pot 2Wire Electronic Pot 3Wire Network Profile Run Bipolar Pulse Follower PLC

Table A-1 VS1SP Specifications

Differential Analog Input	Common Mode Rejection	40 db
	Full Scale Range	±5VDC, ±10VDC, 4-20 mA and 0-20 mA
	Resolution	11 bits + sign
	Input Impedance	80 kOhms (Volt mode); 500 Ohms (Current mode)

Single Ended Analog Input	Full Scale Range	0 - 10 VDC
	Resolution	11 bits
	Input Impedance	80 kOhms

Analog Outputs	Analog Outputs	2 Assignable
	Full Scale Range	AOUT1 (0-5V, 0-10V, 0-20mA or 4-20mA), AOUT2 (±5V, ±10V)
	Source Current	1 mA maximum (volt mode), 20mA (current mode)
	Resolution	9 bits + sign

Digital Inputs	Opto-isolated Inputs	8 Assignable, 1 dedicated input (Drive Enable)
	Rated Voltage	10 - 30 VDC (closed contacts std)
	Input Impedance	4.71 kOhms
	Leakage Current	10 µA maximum
	Update Rate	16 msec

Digital Outputs (2 Opto Outputs)	Rated Voltage	5 to 30VDC
	Maximum Current	60 mA Maximum
	ON Voltage Drop	2 VDC Maximum
	OFF Leakage Current	0.1 A Maximum
	Output Conditions	31 Conditions (see Output Setup Block parameter table, Chapter 7)

Digital Outputs (2 Relay Outputs)	Rated Voltage	5 to 30VDC or 240VAC
	Maximum Current	5A Maximum non-inductive
	Output Conditions	31 Conditions (see Output Setup Block parameter table, Chapter 7)

Diagnostic Indications:

Current Sense Fault
Ground Fault
Instantaneous Over Current
Overload
Line Power Loss
Microprocessor Failure
Over temperature (Motor or Control)
Over speed
Regeneration (DB) Overload
Soft Start Fault
Under Voltage
Ready
Parameter Loss
Overload
Overvoltage
Torque Proving
Following Error
PWR Base Fault
Logic Power Fault

Note: All specifications are subject to change without notice

A.2 Specifications for Terminal Block Tightening Torque

Table A-2 Terminal Tightening Torque Specifications

Catalog No.	Tightening Torque											
	Power TB1		B+/R1; B+; B-; or R2		Ground		TH1 and TH2 D1 and D2 (E and F-Frames Only)		Control J1, J2, P3		Control J3	
	In-lbs	N-M	In-lbs	N-M	In-lbs	N-M	In-lbs	N-M	In-lbs	N-M	In-lbs	N-M
VS1SP21-1B,4B,5B	12	1.36	12	1.36	12	1.36	4	0.45	2	0.23	5	0.56
VS1SP22-1B,4B,5B	12	1.36	12	1.36	12	1.36	4	0.45	2	0.23	5	0.56
VS1SP23-1B,4B,5B	12	1.36	12	1.36	12	1.36	4	0.45	2	0.23	5	0.56
VS1SP25-1B,4B,5B	12	1.36	12	1.36	12	1.36	4	0.45	2	0.23	5	0.56
VS1SP27-1B,4B,5B	12	1.36	12	1.36	12	1.36	4	0.45	2	0.23	5	0.56
VS1SP210-1B,4B,5B	35	4	35	4	35	4	4	0.45	2	0.23	5	0.56
VS1SP215-1B,4B,5B	35	4	35	4	35	4	4	0.45	2	0.23	5	0.56
VS1SP220-1B,4B,5B	35	4	35	4	35	4	4	0.45	2	0.23	5	0.56
VS1SP225-1B	35	4	35	4	35	4	4	0.45	2	0.23	5	0.56
VS1SP230-1B	35	4	35	4	35	4	4	0.45	2	0.23	5	0.56
VS1SP240-1B	35	4	35	4	35	4	4	0.45	2	0.23	5	0.56
VS1SP250-1B	180	20.3	80	9.1	80	9.1	6	0.68	2	0.23	5	0.56
VS1SP260-1B	180	20.3	80	9.1	80	9.1	6	0.68	2	0.23	5	0.56
VS1SP41-1B,4B,5B	12	1.36	12	1.36	12	1.36	4	0.45	2	0.23	5	0.56
VS1SP42-1B,4B,5B	12	1.36	12	1.36	12	1.36	4	0.45	2	0.23	5	0.56
VS1SP43-1B,4B,5B	12	1.36	12	1.36	12	1.36	4	0.45	2	0.23	5	0.56
VS1SP45-1B,4B,5B	12	1.36	12	1.36	12	1.36	4	0.45	2	0.23	5	0.56
VS1SP47-1B,4B,5B	12	1.36	12	1.36	12	1.36	4	0.45	2	0.23	5	0.56
VS1SP410-1B,4B,5B	12	1.36	12	1.36	12	1.36	4	0.45	2	0.23	5	0.56
VS1SP415-1B,4B,5B	12	1.36	12	1.36	12	1.36	4	0.45	2	0.23	5	0.56
VS1SP420-1B,4B,5B	12	1.36	12	1.36	12	1.36	4	0.45	2	0.23	5	0.56
VS1SP425-1B,4B,5B	12	1.36	12	1.36	12	1.36	4	0.45	2	0.23	5	0.56
VS1SP430-1B	35	4	35	4	35	4	4	0.45	2	0.23	5	0.56
VS1SP440-1B	35	4	35	4	35	4	4	0.45	2	0.23	5	0.56
VS1SP450-1B	35	4	35	4	35	4	4	0.45	2	0.23	5	0.56
VS1SP460-1B	180	20.3	80	9.1	50	5.6	6	0.68	2	0.23	5	0.56
VS1SP475-1B	180	20.3	80	9.1	50	5.6	6	0.68	2	0.23	5	0.56
VS1SP4100-1B	180	20.3	80	9.1	50	5.6	6	0.68	2	0.23	5	0.56
VS1SP4125-1B	180	20.3	80	9.1	50	5.6	6	0.68	2	0.23	5	0.56
VS1SP4150-1	275	31.1	120	13.6	50	5.6	6	0.68	2	0.23	5	0.56
VS1SP4200-1	275	31.1	120	13.6	50	5.6	6	0.68	2	0.23	5	0.56
VS1SP4250-1	* 192	* 21.7	120	13.6	50	5.6	6	0.68	2	0.23	5	0.56
VS1SP4300-1	600	69	120	13.6	375	43	6	0.68	2	0.23	5	0.56
VS1SP4350-1	600	69	120	13.6	375	43	6	0.68	2	0.23	5	0.56
VS1SP4400-1	600	69	120	13.6	375	43	6	0.68	2	0.23	5	0.56
VS1SP4450-1	600	69	120	13.6	375	43	6	0.68	2	0.23	5	0.56
VS1SP4500-1	600	69	120	13.6	375	43	6	0.68	2	0.23	5	0.56

* VS1SP4250-1 Power Terminals are 3/8–16 studs.

Table A-2 Terminal Tightening Torque Specifications (Continued)

Catalog No.	Tightening Torque											
	Power TB1		B+/R1; B+; B-; or R2		Ground		TH1 and TH2 D1 and D2 (E and F-Frames Only)		Control J1, J2, P3		Control J3	
	In-lbs	N-M	In-lbs	N-M	In-lbs	N-M	In-lbs	N-M	In-lbs	N-M	In-lbs	N-M
VS1SP51-1B,4B,5B	12	1.36	12	1.36	12	1.36	4	0.45	2	0.23	5	0.56
VS1SP52-1B,4B,5B	12	1.36	12	1.36	12	1.36	4	0.45	2	0.23	5	0.56
VS1SP53-1B,4B,5B	12	1.36	12	1.36	12	1.36	4	0.45	2	0.23	5	0.56
VS1SP55-1B,4B,5B	12	1.36	12	1.36	12	1.36	4	0.45	2	0.23	5	0.56
VS1SP57-1B,4B,5B	12	1.36	12	1.36	12	1.36	4	0.45	2	0.23	5	0.56
VS1SP510-1B,4B,5B	12	1.36	12	1.36	12	1.36	4	0.45	2	0.23	5	0.56
VS1SP515-1B,4B,5B	12	1.36	12	1.36	12	1.36	4	0.45	2	0.23	5	0.56
VS1SP520-1B,4B,5B	12	1.36	12	1.36	12	1.36	4	0.45	2	0.23	5	0.56
VS1SP525-1B,4B,5B	12	1.36	12	1.36	12	1.36	4	0.45	2	0.23	5	0.56
VS1SP530-1B	35	4	35	4	35	4	4	0.45	2	0.23	5	0.56
VS1SP540-1B	35	4	35	4	35	4	4	0.45	2	0.23	5	0.56
VS1SP550-1B	35	4	35	4	35	4	4	0.45	2	0.23	5	0.56
VS1SP560-1B	180	20.3	80	9.1	50	5.6	6	0.68	2	0.23	5	0.56
VS1SP575-1B	180	20.3	80	9.1	50	5.6	6	0.68	2	0.23	5	0.56
VS1SP5100-1B	180	20.3	80	9.1	50	5.6	6	0.68	2	0.23	5	0.56
VS1SP5125-1B	180	20.3	80	9.1	50	5.6	6	0.68	2	0.23	5	0.56
VS1SP5150-1	275	31.1	120	13.6	50	5.6	6	0.68	2	0.23	5	0.56
VS1SP5200-1	275	31.1	120	13.6	50	5.6	6	0.68	2	0.23	5	0.56
VS1SP5250-1	275	31.1	120	13.6	50	5.6	6	0.68	2	0.23	5	0.56
VS1SP5300-1	275	31.1	120	13.6	50	5.6	6	0.68	2	0.23	5	0.56
VS1SP61-1B,4B,5B	12	1.36	12	1.36	12	1.36	4	0.45	2	0.23	5	0.56
VS1SP62-1B,4B,5B	12	1.36	12	1.36	12	1.36	4	0.45	2	0.23	5	0.56
VS1SP63-1B,4B,5B	12	1.36	12	1.36	12	1.36	4	0.45	2	0.23	5	0.56

A.3 Identifying the Drive by Model Number

Each drive can be identified by its model number, as shown in Figure A-1. The model number is on the shipping label and the drive nameplate. The model number includes the drive and any options. Drive model numbers for the VS1SP drive are provided in Tables A-3 and A-4.

Figure A-1 Drive Identification

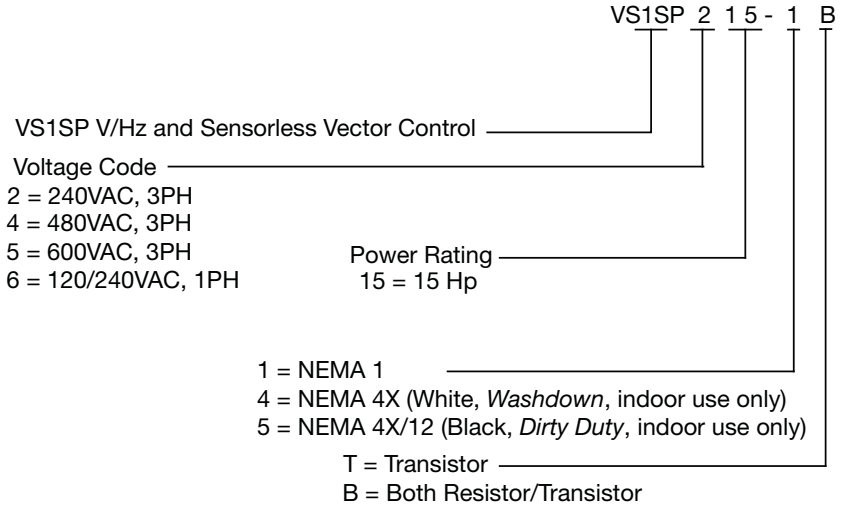

A.4 Storage Guidelines

If you need to store the drive, follow these recommendations to prolong drive life and performance:

- Store the drive within an ambient temperature range of -30°C to +65°C.
- Store the drive within a relative humidity range of 0% to 90%, non-condensing.
- Do not expose the drive to a corrosive atmosphere.

A.5 VS1SP Drive Ratings, Model Numbers and Frame Sizes

Similar VS1SP drive sizes are grouped into frame sizes to simplify re-ordering and dimensioning. Refer to Figure A-2 for the dimensions of each frame size.
Table A-3 provides VS1SP drive ratings, model numbers and frame sizes.

Table A-3 Drive Ratings, Model Numbers and Frame Sizes – Standard 2.5 kHz PWM

Catalog No.	Input Volt	Frame Size	Standard 2.5 kHz PWM									
			Constant Torque					Variable Torque				
			Input Amp	Output				Input Amp	Output			
				HP	KW	IC	IP		HP	KW	IC	IP
VS1SP21-1B,4B,5B	240	AA	4.2	1	0.75	4.2	7.4	6.8	2	1.5	6.8	7.8
VS1SP22-1B,4B,5B	240	AA	6.8	2	1.5	6.8	11.9	9.6	3	2.2	9.6	11
VS1SP23-1B,4B,5B	240	AA	9.6	3	2.2	9.6	16.8	15.2	5	3.7	15.2	17.5
VS1SP25-1B,4B,5B	240	AA	15.2	5	3.7	15.2	26.6	22	7 1/2	5.6	22	25.3
VS1SP27-1B,4B,5B	240	AA	22	7 1/2	5.6	22	38.5	22	7 1/2	5.6	22	32.2
VS1SP210-1B,4B,5B	240	B	28	10	7.5	28	49	42	15	11	42	48.3
VS1SP215-1B,4B,5B	240	B	42	15	11	42	74	54	20	15	54	62
VS1SP220-1B,4B,5B	240	B	54	20	15	54	95	68	25	18.7	68	78
VS1SP225-1B	240	C	68	25	18.7	68	119	80	30	22.4	80	92
VS1SP230-1B	240	C	80	30	22.4	80	140	104	40	30	104	120
VS1SP240-1B	240	C	104	40	29	104	182	104	40	30	104	120
VS1SP250-1B	240	D	130	50	37	130	228	154	50	37	154	177
VS1SP260-1B	240	D	154	60	44	154	270	154	50	37	154	177
VS1SP41-1B,4B,5B	480	AA	2.1	1	0.75	2.1	3.7	3.4	2	1.5	3.4	3.9
VS1SP42-1B,4B,5B	480	AA	3.4	2	1.5	3.4	6.0	4.8	3	2.2	4.8	5.5
VS1SP43-1B,4B,5B	480	AA	4.8	3	2.2	4.8	8.4	7.6	5	3.7	7.6	8.8
VS1SP45-1B,4B,5B	480	AA	7.6	5	3.7	7.6	13.3	11	7 1/2	5.6	11	12.7
VS1SP47-1B,4B,5B	480	AA	11	7 1/2	5.6	11	19.3	14	10	7.5	14	16.1
VS1SP410-1B,4B,5B	480	AA	14	10	7.5	14	24.5	14	10	7.5	14	16.1
VS1SP415-1B,4B,5B	480	B	21	15	11	21	37	27	20	15	27	33.8
VS1SP420-1B,4B,5B	480	B	27	20	15	27	47	34	25	18.5	34	42.5
VS1SP425-1B,4B,5B	480	B	34	25	18.5	34	60	40	30	22	40	50
VS1SP430-1B	480	C	40	30	22	40	70	52	40	30	52	60
VS1SP440-1B	480	C	52	40	30	52	91	65	50	37	65	75
VS1SP450-1B	480	C	65	50	37	65	114	77	60	45	77	89
VS1SP460-1B	480	D	77	60	44	77	135	96	75	56	96	110
VS1SP475-1B	480	D	96	75	56	96	168	124	100	75	124	143
VS1SP4100-1B	480	D	124	100	75	124	217	156	125	93	156	179
VS1SP4125-1B	480	D	156	125	93	156	273	156	125	93	156	179

Note: IC=Continuous Current Rating; IP=Peak Current Capability

Table A-3 Drive Ratings, Model Numbers and Frame Sizes – Standard 2.5 kHz (Continued)

Catalog No.	Input Volt	Frame Size	Standard 2.5 kHz PWM									
			Constant Torque					Variable Torque				
			Input Amp	Output				Input Amp	Output			
				Hp	KW	IC	IP		HP	KW	IC	IP
VS1SP4150-1	480	E	180	150	112	180	315	240	200	149	240	276
VS1SP4200-1	480	E	240	200	149	240	420	302	250	187	302	347
VS1SP4250-1	480	E	302	250	187	302	529	361	300	224	361	415
VS1SP4300-1	480	F	361	300	224	361	632	414	350	261	414	476
VS1SP4350-1	480	F	414	350	261	414	725	477	400	298	477	549
VS1SP4400-1	480	F	477	400	298	477	835	534	450	336	534	614
VS1SP4450-1	480	F	534	450	336	534	935	590	500	373	590	679
VS1SP4500-1	480	F	590	500	373	590	1033	650	550	410	650	748
VS1SP51-1B,4B,5B	600	AA	1.7	1	0.75	1.7	3.0	2.7	2	1.5	2.7	3.1
VS1SP52-1B,4B,5B	600	AA	2.7	2	1.5	2.7	4.7	3.9	3	2.2	3.9	4.5
VS1SP53-1B,4B,5B	600	AA	3.9	3	2.2	3.9	6.8	6.1	5	3.7	6.1	7.0
VS1SP55-1B,4B,5B	600	AA	6.1	5	3.7	6.1	10.7	9	7 1/2	5.6	9	10.4
VS1SP57-1B,4B,5B	600	AA	9	7 1/2	5.6	9	15.8	11	10	7.5	11	12.7
VS1SP510-1B,4B,5B	600	AA	11	10	7.5	11	19.3	11	10	7.5	11	12.7
VS1SP515-1B,4B,5B	600	B	17	15	11	17	30	22	20	15	22	25.3
VS1SP520-1B,4B,5B	600	B	22	20	15	22	39	27	25	18.5	27	31
VS1SP525-1B,4B,5B	600	B	27	25	18	27	47	32	30	22	32	36.8
VS1SP530-1B	600	C	32	30	22	32	56	41	40	30	41	51
VS1SP540-1B	600	C	41	40	30	41	72	52	50	37	52	60
VS1SP550-1B	600	C	52	50	37	52	91	62	60	45	62	71
VS1SP560-1B	600	D	62	60	44	62	109	77	75	56	77	89
VS1SP575-1B	600	D	77	75	56	77	135	99	100	75	99	114
VS1SP5100-1B	600	D	99	100	75	99	173	125	125	93	125	144
VS1SP5125-1B	600	D	125	125	93	125	219	144	150	112	144	166
VS1SP5150-1	600	E	144	150	112	144	252	192	200	149	192	221
VS1SP5200-1	600	E	192	200	149	192	336	242	250	187	242	278
VS1SP5250-1	600	E	242	250	187	242	424	289	300	220	289	332
VS1SP5300-1	600	E	289	300	220	289	506	289	300	220	289	332
VS1SP61-1B,4B,5B	120	AA	12	1	0.75	4.2	7.4	20	2	1.5	6.8	8.5
	240	AA	6.3	1	0.75	4.2	7.4	10.2	2	1.5	6.8	8.5
VS1SP62-1B,4B,5B	120	AA	20	2	1.5	6.8	11.9	30	3	2.2	9.6	12
	240	AA	10.2	2	1.5	6.8	11.9	14.4	3	2.2	9.6	12
VS1SP63-1B,4B,5B	120	AA	30	3	2.2	9.6	16.8	30	3	2.2	9.6	12
	240	AA	14.4	3	2.2	9.6	16.8	14.4	3	2.2	9.6	12

Note: IC=Continuous Current Rating; IP=Peak Current Capability

Table A-4 Drive Ratings, Model Numbers and Frame Sizes – Quiet 8.0 kHz PWM

Catalog No.	Input Volt	Size	Quiet 8.0 kHz PWM									
			Constant Torque					Variable Torque				
			Input Amp	Output				Input Amp	Output			
				HP	KW	IC	IP		HP	KW	IC	IP
VS1SP21-1B,4B,5B	240	AA	4.2	1	0.75	4.2	7.4	4.2	1	0.75	4.2	4.8
VS1SP22-1B,4B,5B	240	AA	4.2	1	0.75	4.2	7.4	6.8	2	1.5	6.8	7.8
VS1SP23-1B,4B,5B	240	AA	6.8	2	1.5	6.8	11.9	9.6	3	2.2	9.6	11.0
VS1SP25-1B,4B,5B	240	AA	9.6	3	2.2	9.6	16.8	15.2	5	3.7	15.2	17.5
VS1SP27-1B,4B,5B	240	AA	15.2	5	3.7	15.2	26.6	22	7 1/2	5.6	22	25.3
VS1SP210-1B,4B,5B	240	B	22	7 1/2	5.6	22	39	28	10	7.5	28	32
VS1SP215-1B,4B,5B	240	B	28	10	7.5	28	49	42	15	11	42	48
VS1SP220-1B,4B,5B	240	B	42	15	11	42	74	54	20	15	54	62
VS1SP225-1B	240	C	54	20	15	54	95	68	25	18.7	68	78
VS1SP230-1B	240	C	68	25	18.7	68	119	80	30	22.4	80	92
VS1SP240-1B	240	C	80	30	22.4	80	140	104	40	30	104	120
VS1SP250-1B	240	D	104	40	29	104	182	130	50	37	130	167
VS1SP260-1B	240	D	130	50	37	130	228	154	60	44	154	177
VS1SP41-1B,4B,5B	480	AA	2.1	1	0.75	2.1	3.7	2.1	1	0.75	2.1	2.4
VS1SP42-1B,4B,5B	480	AA	2.1	1	0.75	2.1	3.7	3.4	2	1.5	3.4	3.9
VS1SP43-1B,4B,5B	480	AA	3.4	2	1.5	3.4	6.0	4.8	3	2.2	4.8	5.5
VS1SP45-1B,4B,5B	480	AA	4.8	3	2.2	4.8	8.4	7.6	5	3.7	7.6	8.8
VS1SP47-1B,4B,5B	480	AA	7.6	5	3.7	7.6	13.3	11	7 1/2	5.6	11	12.7
VS1SP410-1B,4B,5B	480	AA	11	7 1/2	5.6	11	19.3	14	10	7.5	14	17.5
VS1SP415-1B,4B,5B	480	B	14	10	7.5	14	24.5	21	15	11	21	24.2
VS1SP420-1B,4B,5B	480	B	21	15	11	21	36.8	27	20	15	27	31
VS1SP425-1B,4B,5B	480	B	27	20	15	27	47	34	25	18.5	34	39
VS1SP430-1B	480	C	34	25	18.7	34	60	40	30	22	40	46
VS1SP440-1B	480	C	40	30	22.4	40	70	52	40	30	52	60
VS1SP450-1B	480	C	40	30	22.4	40	70	52	40	30	52	60
VS1SP460-1B	480	D	65	50	37	65	114	77	60	44	77	89
VS1SP475-1B	480	D	77	60	44	77	135	96	75	56	96	110
VS1SP4100-1B*	480	D	96	75	56	96	168	124	100	75	124	143
VS1SP4125-1B*	480	D	124	100	75	124	217	156	125	93	156	179
VS1SP4150-1	480	E	156	125	93	156	273	180	150	112	180	225
VS1SP4200-1	480	E	180	150	112	180	315	240	200	149	240	300
VS1SP4250-1	480	E	180	150	112	180	315	240	200	149	240	300
VS1SP4300-1	480	F	240	200	149	240	420	302	250	186	302	347
VS1SP4350-1	480	F	302	250	186	302	529	361	300	224	361	415
VS1SP4400-1	480	F	361	300	224	361	632	414	350	261	414	476
VS1SP4450-1	480	F	414	350	261	414	725	477	400	298	477	549
VS1SP4500-1	480	F	477	400	298	477	835	534	450	336	534	614
VS1SP51-1B,4B,5B	600	AA	1.3	0.75	0.56	1.3	2.3	1.7	1	0.75	1.7	2.0
VS1SP52-1B,4B,5B	600	AA	1.7	1	0.75	1.7	3.0	2.7	2	1.5	2.7	3.1
VS1SP53-1B,4B,5B	600	AA	2.7	2	1.5	2.7	4.7	3.9	3	2.2	3.9	4.5

***Note:** Quiet rating for these drives is at 5KHz PWM
Note: IC =Continuous current rating, IP= Peak Current Capability

Table A-4 Drive Ratings, Model Numbers and Frame Sizes – Quiet 8.0 kHz PWM (Continued)

Catalog No.	Input Volt	Size	Quiet 8.0 kHz PWM									
			Constant Torque					Variable Torque				
			Input Amp	Output				Input Amp	Output			
				HP	KW	IC	IP		HP	KW	IC	IP
VS1SP55-1B,4B,5B	600	AA	3.9	3	2.2	3.9	6.8	6.1	5	3.7	6.1	7.0
VS1SP57-1B,4B,5B	600	AA	6.1	5	3.7	6.1	10.7	9	7.5	5.6	9	10.4
VS1SP510-1B,4B,5B	600	AA	9	7.5	5.6	9	15.8	9	7.5	5.6	9	10.4
VS1SP515-1B	600	B	11	10	7.5	11	19.3	17	15	11	17	19.6
VS1SP515-4B,5B	600	B	11	10	7.5	11	19.3	11	10	7.5	11	13.8
VS1SP520-1B	600	B	17	15	11	17	30	22	20	15	22	25
VS1SP520-4B,5B	600	B	11	10	7.5	11	19.3	11	10	7.5	11	13.8
VS1SP525-1B	600	B	22	20	15	22	39	27	25	18.5	27	31
VS1SP525-4B,5B	600	B	11	10	7.5	11	19.3	11	10	7.5	11	13.8
VS1SP530-1B	600	C										
VS1SP540-1B	600	C										
VS1SP550-1B	600	C										
VS1SP560-1B*	600	D	52	50	37	52	91	62	60	44	62	71
VS1SP575-1B*	600	D	62	60	44	62	109	77	75	56	77	89
VS1SP5100-1B*	600	D	77	75	56	77	135	99	100	75	89	114
VS1SP5125-1B*	600	D	99	100	75	99	173	125	125	93	125	144
VS1SP5150-1*	600	E	125	125	93	125	219	144	150	112	144	166
VS1SP5200-1*	600	E	144	150	112	144	252	192	200	149	192	221
VS1SP5250-1*	600	E	192	200	150	192	336	242	250	187	242	278
VS1SP5300-1*	600	E	192	200	150	192	336	242	250	187	242	278
VS1SP61-1B,4B,5B	120	AA	10	0.75	0.56	3.2	6.4	12	1	0.75	4.2	5.3
	240	AA	4.8	0.75	0.56	3.2	6.4	6.3	1	0.75	4.2	5.3
VS1SP62-1B,4B,5B	120	AA	12	1	0.75	4.2	8.4	20	2	1.5	6.8	8.5
	240	AA	6.3	1	0.75	4.2	8.4	10.2	2	1.5	6.8	8.5
VS1SP63-1B,4B,5B	120	AA	20	2	1.5	6.8	13.6	30	3	2.2	9.6	12
	240	AA	10.2	2	1.5	6.8	13.6	14.4	3	2.2	9.6	12

***Note:** Quiet rating for these drives is at 5KHz PWM
Note: IC=Continuous current rating; IP=Peak Current Capability

A.6 VS1SP Terminal Wire Gauge Specification

Table A-5 specifies the wire gauge allowed for each terminal in the drives.

Table A-5 Terminal Wire Gauge Specification

Catalog Number	Power AWG Min-Max	B+/R1, R2 & B- AWG Min-Max	Ground AWG Min-Max	TH1/TH2 D1/D2 (E and F-Frames Only) AWG Min-Max	Control J1, J2 & P3 AWG Min-Max	Control J3 AWG Min-Max
VS1SP21-1B,4B,5B	18-6	18-6	18-6	24-14	30-14	28-12
VS1SP22-1B,4B,5B	18-6	18-6	18-6	24-14	30-14	28-12
VS1SP23-1B,4B,5B	18-6	18-6	18-6	24-14	30-14	28-12
VS1SP25-1B,4B,5B	18-6	18-6	18-6	24-14	30-14	28-12
VS1SP27-1B,4B,5B	18-6	18-6	18-6	24-14	30-14	28-12
VS1SP210-1B,4B,5B	18-6	18-6	18-6	24-14	30-14	28-12
VS1SP215-1B,4B,5B	18-6	18-6	18-6	24-14	30-14	28-12
VS1SP220-1B,4B,5B	18-6	18-6	18-6	24-14	30-14	28-12
VS1SP225-1B	8-1	8-1	8-1	24-14	30-14	28-12
VS1SP230-1B	8-1	8-1	8-1	24-14	30-14	28-12
VS1SP240-1B	8-1	8-1	8-1	24-14	30-14	28-12
VS1SP250-1B	14-3/0	14-2/0	(4) 14-2/0	26-10	30-14	28-12
VS1SP260-1B	14-3/0	14-2/0	(4) 14-2/0	26-10	30-14	28-12
VS1SP41-1B,4B,5B	18-6	18-6	18-6	24-14	30-14	28-12
VS1SP42-1B,4B,5B	18-6	18-6	18-6	24-14	30-14	28-12
VS1SP43-1B,4B,5B	18-6	18-6	18-6	24-14	30-14	28-12
VS1SP45-1B,4B,5B	18-6	18-6	18-6	24-14	30-14	28-12
VS1SP47-1B,4B,5B	18-6	18-6	18-6	24-14	30-14	28-12
VS1SP410-1B,4B,5B	18-6	18-6	18-6	24-14	30-14	28-12
VS1SP415-1B,4B,5B	18-6	18-6	18-6	24-14	30-14	28-12
VS1SP420-1B,4B,5B	18-6	18-6	18-6	24-14	30-14	28-12
VS1SP425-1B,4B,5B	18-6	18-6	18-6	24-14	30-14	28-12
VS1SP430-1B	8-1	8-1	8-1	24-14	30-14	28-12
VS1SP440-1B	8-1	8-1	8-1	24-14	30-14	28-12
VS1SP450-1B	8-1	8-1	8-1	24-14	30-14	28-12
VS1SP460-1B	14-3/0	14-2/0	(4) 14-2/0	26-10	30-14	28-12
VS1SP475-1B	14-3/0	14-2/0	(4) 14-2/0	26-10	30-14	28-12
VS1SP4100-1B	14-3/0	14-2/0	(4) 14-2/0	26-10	30-14	28-12
VS1SP4125-1B	14-3/0	14-2/0	(4) 14-2/0	26-10	30-14	28-12
VS1SP4150-1	(2) 1/0 – 250 kcmil	(4) 14-2/0	(4) 14-2/0	26-10	30-14	28-12
VS1SP4200-1	(2) 1/0 – 250 kcmil	(4) 14-2/0	(4) 14-2/0	26-10	30-14	28-12
VS1SP4250-1	* (2) 1/0 – 250 kcmil	(4) 14-2/0	(4) 14-2/0	26-10	30-14	28-12
VS1SP4300-1	(2) 2 – 600 kcmil	(4) 6–3/0	(4) 2/0-500 kcmil	22-10	30-14	28-12
VS1SP4350-1	(2) 2 – 600 kcmil	(4) 6–3/0	(4) 2/0-500 kcmil	22-10	30-14	28-12
VS1SP4400-1	(2) 2 – 600 kcmil	(4) 6–3/0	(4) 2/0-500 kcmil	22-10	30-14	28-12

***** Power Connections for VS1SP4250-1 are via 3/8–16 studs.

Table A-5 Terminal Wire Gauge Specification Continued

Catalog Number	Power AWG Min-Max	B+/R1, R2 & B- AWG Min-Max	Ground AWG Min-Max	TH1/TH2 D1/D2 (E and F-Frames Only) AWG Min-Max	Control J1, J2 & P3 AWG Min-Max	Control J3 AWG Min-Max
VS1SP4450-1T	(2) 2 – 600kcmil	(4) 6–3/0	(4) 2/0-500kcmil	22-10	30-14	28-12
VS1SP4500-1	(2) 2 – 600kcmil	(4) 6–3/0	(4) 2/0-500kcmil	22-10	30-14	28-12
VS1SP51-1B,4B,5B	18-6	18-6	18-6	24-14	30-14	28-12
VS1SP52-1B,4B,5B	18-6	18-6	18-6	24-14	30-14	28-12
VS1SP53-1B,4B,5B	18-6	18-6	18-6	24-14	30-14	28-12
VS1SP55-1B,4B,5B	18-6	18-6	18-6	24-14	30-14	28-12
VS1SP57-1B,4B,5B	18-6	18-6	18-6	24-14	30-14	28-12
VS1SP510-1B,4B,5B	18-6	18-6	18-6	24-14	30-14	28-12
VS1SP515-1B,4B,5B	18-6	18-6	18-6	24-14	30-14	28-12
VS1SP520-1B,4B,5B	18-6	18-6	18-6	24-14	30-14	28-12
VS1SP525-1B,4B,5B	18-6	18-6	18-6	24-14	30-14	28-12
VS1SP530-1B	8-1	8-1	8-1	24-14	30-14	28-12
VS1SP540-1B	8-1	8-1	8-1	24-14	30-14	28-12
VS1SP550-1B	8-1	8-1	8-1	24-14	30-14	28-12
VS1SP560-1B	14-3/0	14-2/0	(4) 14-2/0	26-10	30-14	28-12
VS1SP575-1B	14-3/0	14-2/0	(4) 14-2/0	26-10	30-14	28-12
VS1SP5100-1B	14-3/0	14-2/0	(4) 14-2/0	26-10	30-14	28-12
VS1SP5125-1B	14-3/0	14-2/0	(4) 14-2/0	26-10	30-14	28-12
VS1SP61-1B,4B,5B	18-6	18-6	18-6	24-14	30-14	28-12
VS1SP62-1B,4B,5B	18-6	18-6	18-6	24-14	30-14	28-12
VS1SP63-1B,4B,5B	18-6	18-6	18-6	24-14	30-14	28-12
VS1SP5150-1	(2) 1/0 - 250 kcmil	(4) 14 - 2/0	(4) 14-2/0	26-10	30-14	28-12
VS1SP5200-1	(2) 1/0 - 250 kcmil	(4) 14 - 2/0	(4) 14-2/0	26-10	30-14	28-12
VS1SP5250-1	(2) 1/0 - 250 kcmil	(4) 14 - 2/0	(4) 14-2/0	26-10	30-14	28-12
VS1SP5300-1	(2) 1/0 - 250 kcmil	(4) 14 - 2/0	(4) 14-2/0	26-10	30-14	28-12

A.7 Drive Dimensions and Weights

Figure A-2 Drive Dimensions and Weights

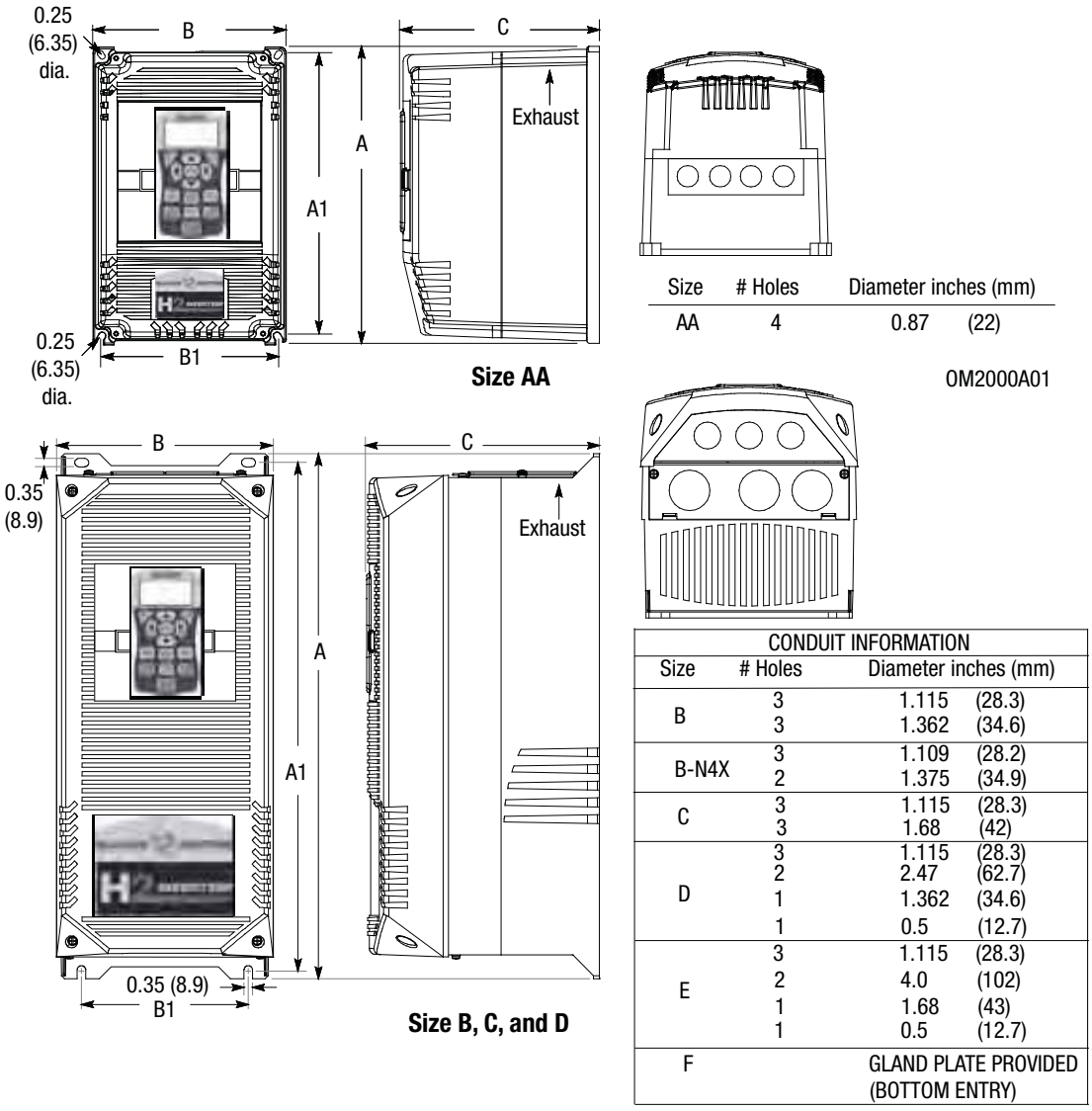

Size	Dimensions inches (mm)						Weight
	Outside			Mounting			
	Height (A)	Width (B)	Depth (C)	Height (A1)	Width (B1)	Width (B2)	lb (kg)
AA	12.27 (311)	7.97 (202)	8.21 (208)	11.75 (298)	7.38 (187)	-	20 (9.1)
B	18.00 (457)	9.10 (231)	9.75 (248)	17.25 (438)	7.00 (178)	-	30 (13.6)
B-N4X	17.50 (444)	10.73 (273)	10.47 (266)	16.50 (419)	7.88 (200	9.76 248)	
C	22.00 (559)	9.10 (231)	9.75 (248)	21.25 (540)	7.00 (178)	-	60 (27.2)
D	28.00 (711)	11.50 (292)	13.00 (330)	27.25 (692)	9.50 (241)	-	120 (54.4)
E	42.81 (1087)	18.75 (476)	16.05 (407)	39.75 (1010)	15.75 (400)	-	250 (113.4)
F**	86.56 (2199)	31.78 (807)	24.59 (625)	FLOOR MOUNT		-	915 (415)*

*VS1SP4300-1 weighs 825 lbs. (374kg); all other models are 915 lbs. (415kg).
**Frame Size F drives are supplied as standard for bottom entry of conduits. Top entry styles are available in a wider cabinet.

Figure A-2 Drive Dimensions and Weights Continued

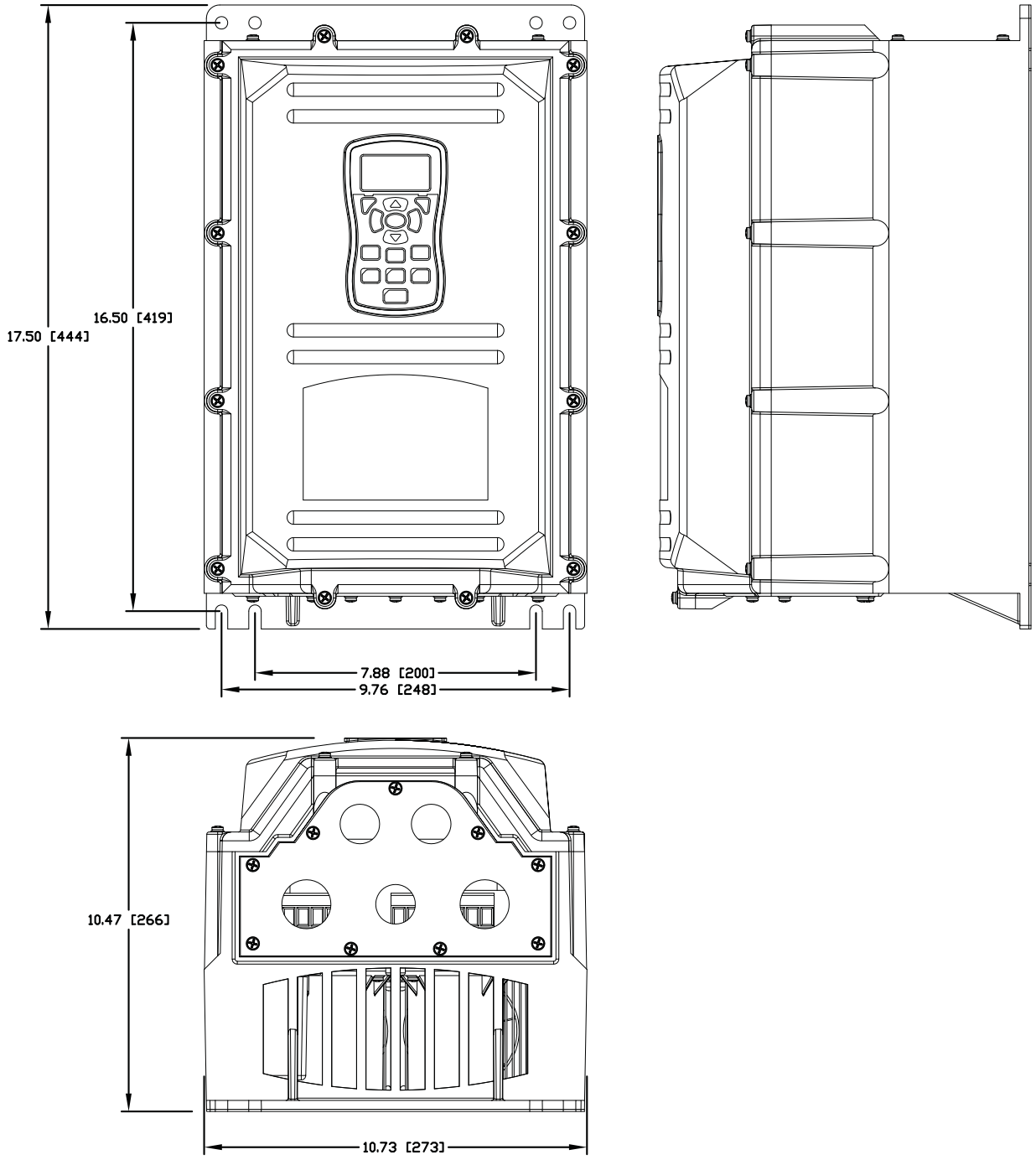

OM2000A11

Size B NEMA 4X

Figure A-2 Drive Dimensions and Weights Continued

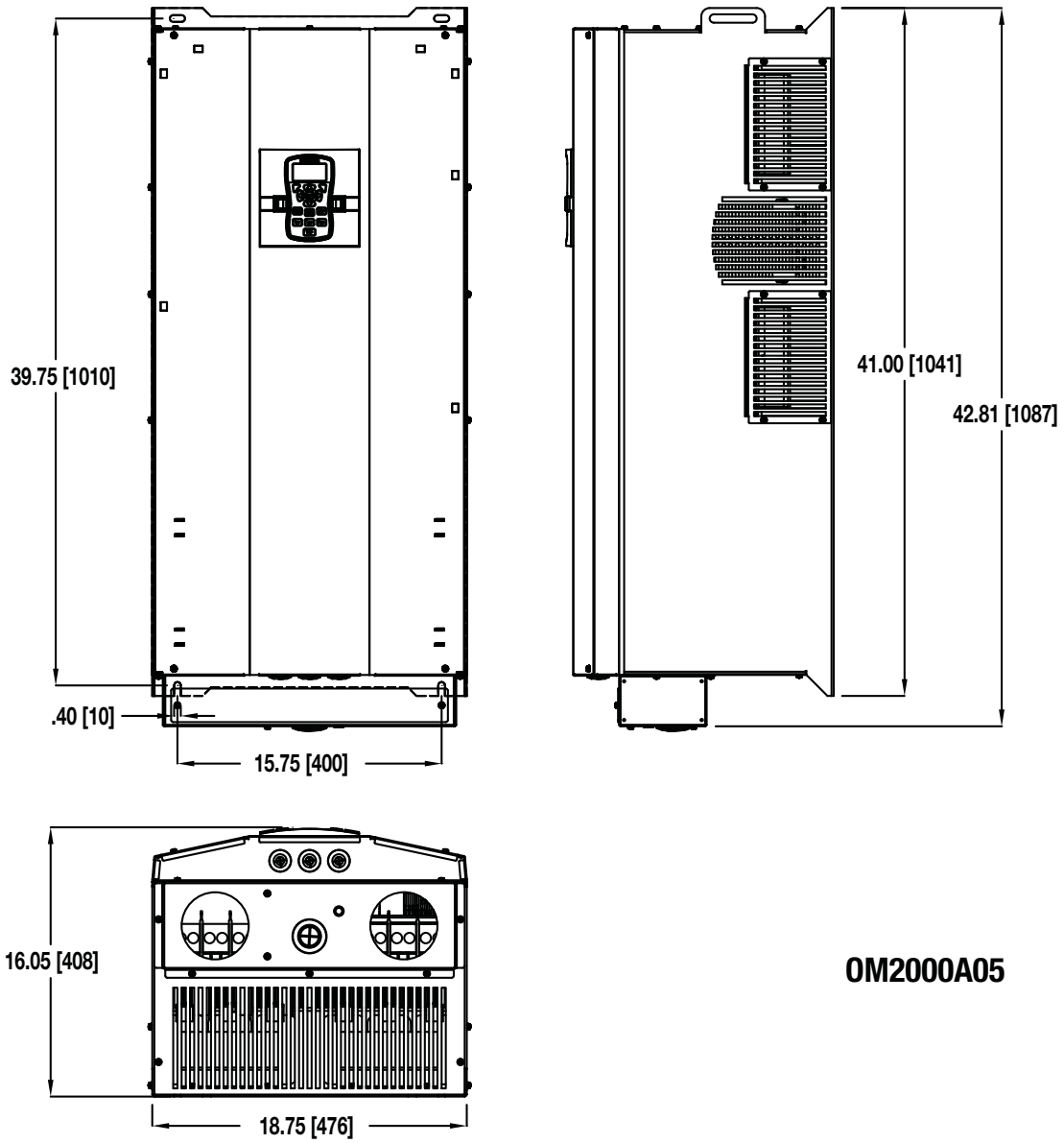

Size E

Figure A-2 Drive Dimensions and Weights Continued

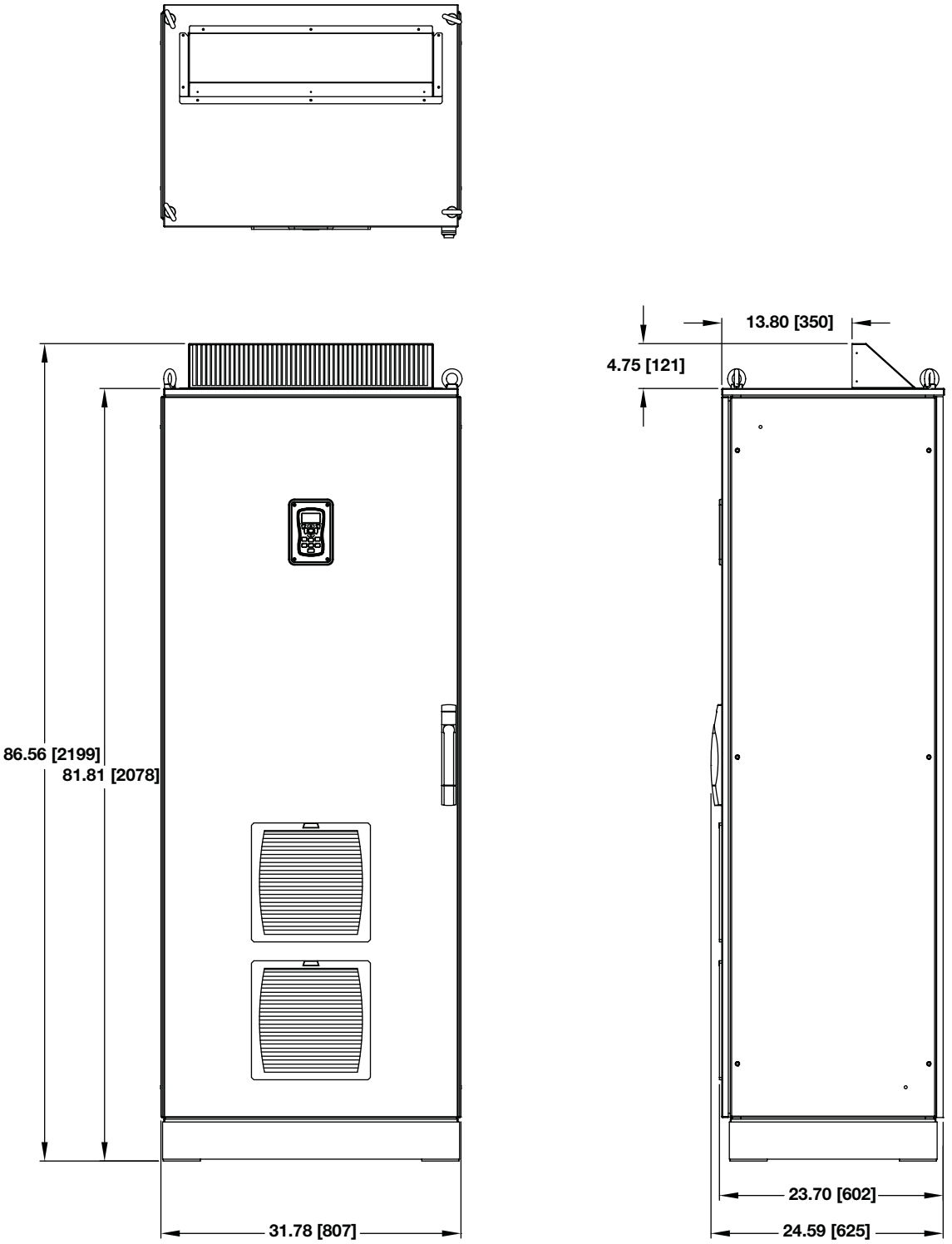

Size F

Appendix B
Parameter Tables

B.1 Level 1 Parameters (Advanced Prog, Level 1 Blocks)

All parameters displayed in this appendix are Parameter Table 1 (T1) factory set values. Setting parameter P2103 to yes will load these values into all four parameter tables. Level 1 & 2 parameters are secured by security access code (P2107).

Table B-1 Parameter Block Values Level 1

Block Title	Parameter	P#	Adjustable Range	Factory	User Setting
PRESET SPEEDS	PRESET SPEED 1	1001	0 - MAX Speed Hz	1	
	PRESET SPEED 2	1002	0 - MAX Speed Hz	2	
	PRESET SPEED 3	1003	0 - MAX Speed Hz	3	
	PRESET SPEED 4	1004	0 - MAX Speed Hz	4	
	PRESET SPEED 5	1005	0 - MAX Speed Hz	5	
	PRESET SPEED 6	1006	0 - MAX Speed Hz	6	
	PRESET SPEED 7	1007	0 - MAX Speed Hz	7	
	PRESET SPEED 8	1008	0 - MAX Speed Hz	8	
	PRESET SPEED 9	1009	0 - MAX Speed Hz	9	
	PRESET SPEED 10	1010	0 - MAX Speed Hz	10	
	PRESET SPEED 11	1011	0 - MAX Speed Hz	11	
	PRESET SPEED 12	1012	0 - MAX Speed Hz	12	
	PRESET SPEED 13	1013	0 - MAX Speed Hz	13	
	PRESET SPEED 14	1014	0 - MAX Speed Hz	14	
	PRESET SPEED 15	1015	0 - MAX Speed Hz	15	
RAMP RATES	ACCEL TIME 1	1101	0.0 to 3600.0 Seconds	3.0	
	START S-ACC 1	1102	0.0 to 100.0%	0.0	
	END S-ACC 1	1103	0.0 to 100.0%	0.0	
	DECEL TIME 1	1104	0.0 to 3600.0 Seconds	3.0	
	START S-DEC 1	1105	0.0 to 100.0%	0.0	
	END S-DEC 1	1106	0.0 to 100.0%	0.0	
	ACCEL TIME 2	1107	0.0 to 3600.0 Seconds	3.0	
	START S-ACC 2	1108	0.0 to 100.0%	0.0	
	END S-ACC 2	1109	0.0 to 100.0%	0.0	
	DECEL TIME 2	1110	0.0 to 3600.0 Seconds	3.0	
	START S-DEC 2	1111	0.0 to 100.0%	0.0	
	END S-DEC 2	1112	0.0 to 100.0%	0.0	
	PL DEC TIME	1113	0.0 to 3600.0 Seconds	1.0	
JOG SETTINGS	JOG SPEED	1201	0 - MAX Speed Hz	7	
	JOG ACCEL TIME	1202	0.0 to 3600.0 Seconds	10.0	
	JOG START S-ACC	1203	0.0 to 100.0%	0.0	
	JOG END S-ACC	1204	0.0 to 100.0%	0.0	
	JOG DECEL TIME	1205	0.0 to 3600.0 Seconds	10.0	
	JOG START S-DEC	1206	0.0 to 100.0%	0.0	
	JOG END S-DEC	1207	0.0 to 100.0%	0.0	
	JOG FORWARD	1209	0-Off 1-On	1	
	JOG REVERSE	1210	0-Off 1-On	1	

Table B-1 Parameter Block Values Level 1 (Cont.)

Block Title	Parameter	P#	Adjustable Range	Factory	User Setting
KEYPAD SETUP	STOP KEY	1301	0-Off (Keypad Stop inactive in remote). 1-On (Keypad Stop active in remote).	1	
	STOP MODE	1302	0-Regen 1-Coast	0	
	RUN FORWARD	1303	0-Off 1-On	1	
	RUN REVERSE	1304	0-Off 1-On	1	
	SWITCH ON FLY (LOCAL REMOTE KEY)	1305	0-Off 1-On	0	
	LOCAL HOT START	1306	0-Off 1-On	0	
	SPEED INCREMENT	1307	1 to 1800 RPM or 0.01 to 60 Hz	1	
	INIT LOCAL SPEED	1308	0-Zero 1-Last Speed 2-Set Speed	0	
	SET SPEED	1309	0 - MAX Speed	1	
	PARAMS TO KEYPAD	1310	0-Off 1-On	0	
	DOWNLOAD SELECT	1311	0-All 1-Motor 2-Other	0	
	KEYPAD TO PARAMS	1312	0-No 1-Yes	0	
	KEYPAD CONTRAST	1313	0 - 100% (0=dimmest, 100=brightest)	50	
	BACKLIGHT	1314	0-Off 1-On	1	
	[1] LOC TORQUE MODE	1315	0-Off 1-On	0	
	[1] LOC TORQUE REF	1316	-100.00 to 100.00%	0.00	
INPUT SETUP	OPERATING MODE	1401	0-Keypad 1-Standard Run 2Wire 2-Standard Run 3Wire 3-15 Preset Speeds 4-Fan & Pump 2Wire 5-Fan & Pump 3Wire 6-Process Control 7-3Spd Ana 2Wire 8-3Spd Ana 3Wire 9-E-Pot 2Wire 10-E-Pot 3Wire 11-Network 12-Profile Run 14-Bipolar 15-Pulse Follower 16-PLC	0	

[1] Only available or active in Open Vector mode. Ignore these parameters for V/F mode.

Table B-1 Parameter Block Values Level 1 (Cont.)

Block Title	Parameter	P#	Adjustable Range	Factory	User Setting
INPUT SETUP (Continued)	COMMAND SOURCE	1402	0-None 1-Analog In1 2-Analog In2 3-Keypad 4-Network 5-Composite Ref 6-Opt1 Ana In1 7-Opt1 Ana In2 8-Opt2 Ana In1 9-Opt2 Ana In2 10-EXB Pulse Foll	1	
	ANA IN1 TYPE	1403	0-None 1-Potentiometer	1	
	ANA IN1 INVERT	1404	0-Off 1-On	0	
	ANA IN1 GAIN	1405	0.0% to 300.0%	100.0	
	ANA IN1 OFFSET	1406	-100.0% to 100.0%	0.0	
	ANA IN1 FILTER	1407	0 (No Filter) to 6 (Max Filter)	0	
	ANA IN2 TYPE	1408	0-None 1-(-10V to +10V) 2-(-5V to +5V) 3-(4 to 20mA) 4-(0 to 20mA) 5-(0 to 10V) 6-(0 to 5V)	1	
	ANA IN2 INVERT	1409	0-Off 1-On	0	
	ANA IN2 GAIN	1410	0.0% to 300.0%	100.0	
	ANA IN2 OFFSET	1411	-100.0% to 100.0%	0.0	
	ANA IN2 D.BAND	1412	0.0% to 75.0%	0.0	
	ANA IN2 FILTER	1413	0 (No Filter) to 6 (Max Filter)	0	
	EXT. CUR LIMIT **[1]**	1414	0-Off 1-On	0	
	CURR LMT SOURCE **[1]**	1415	0-None 1-Analog In1 2-Analog In2 3-Keypad 4-Composite Ref 5-Opt1 Ana In1 6-Opt1 Ana In2 7-Opt2 Ana In1 8-Opt2 Ana In2 9-Network	0	
	SLEEP MODE	1416	0-Off 1-On	0	
	CMD SLEEP BAND	1417	0.00 to 100.00%	0.00	
	TORQUE FF SRC **[1]**	1418	0-None 1-Analog In1 2-Analog In2 3-Keypad 4-Composite Ref 5-Opt1 Ana In1 6-Opt1 Ana In2 7-Opt2 Ana In1 8-Opt2 Ana In2	0	

[1] Only available or active in Open Vector mode. Ignore these parameters for V/F mode.

Table B-1 Parameter Block Values Level 1 (Cont.)

Block Title	Parameter	P#	Adjustable Range	Factory	User Setting
OUTPUT SETUP	DIGITAL OUTPUT 1	1501	0-Drive Run 1-Drive Ready 2-Drive On 3-Drive Stopped 4-Jog 5-Accelerate 6-Constant Speed 7-Decelerate 8-At Zero Speed 9-At Speed 10-At Set Speed 11-Curr Overload 12-Curr Underload 13-I^2T Overload 14-Keypad Control 15-Dynamic Brake 16-Foldback 17-Fault 18-Alarm 19-Command Forward 20-Command Reverse 21-Motor Forward 22-Motor Reverse 23-Process Error 24-Network 25-At Position 26-In Motion 27-PLC 28-RTC 29-Powered Up 30-Par Tbl Switch 31-Heater	1	
	DIGITAL OUTPUT 2	1502		8	
	RELAY OUTPUT 1	1503		9	
	RELAY OUTPUT 2	1504		17	
	ZERO SPD SET PT	1505	0 - MAX Speed	6.00	
	AT SPD BAND	1506	0 - MAX Speed	2.00	
	SET SPEED POINT	1507	0 - MAX Speed	60.0	
	OVERLOAD SET PT	1508	0.0 - 200.0%	150.0	
	UNDERLOAD SET PT	1509	0.0 - 200.0%	50.0	
	ANA OUT1 TYPE	1510	0-(0 to +10V) 1-(0 to 5V) 2-(4mA to 20mA) 3-(0mA to 20mA)	0	

Table B-1 Parameter Block Values Level 1 (Cont.)

Block Title	Parameter	P#	Adjustable Range	Factory	User Setting
OUTPUT SETUP (Continued)	ANALOG OUT1 SIGNAL	1511	0-Speed Ref 1-Speed Demand 2-ACC/DEC 3-Motor Current 4-Mag Current 5-Mag Curr Cmd 6-Load Current 7-Load Curr Cmd 8-Power Factor 9-Ph1 Current 10-Ph2 Current 11-Ph3 Current 12-Motor Voltage 13-VD Demand 14-VQ Demand 15-Bus Voltage 16-Est. Abs Torque 17-Est. Torque 18-Control Temp 19-Analog In1 20-Analog In2 21-Opt1 Ana In1 22-Opt1 Ana In2 23-Opt2 Ana In1 24-Opt2 Ana In2 25-Proc Feedforward 26-Proc Feedback 27-Proc Setpoint 28-Electric Angle 29-Abs Speed 30-Velocity 31-Network 32-Composite Ref 33-Power (kW) 34-Calibrate	29	
	ANALOG OUT2 SIGNAL	1514		3	
	ANA OUT1 GAIN	1512	0.0 - 500.0%	100.0	
	ANA OUT2 TYPE	1513	0-(+/-5V) 1-(+/-10V)	1	
	ANA OUT2 GAIN	1515	0.0 - 500.0%	100.0	
	CAL ANA OUT	1516	-100.0% to 100.0%	0.0	
MOTOR CONTROL	CONTROL TYPE	1601	0-V/F Control 1-Open Vector	0	
	CNTL BASE SPEED **[3]**	1602	0 - MAX Speed	Motor Rated Speed (P2403)	
	CNTL BASE VOLT **[2] [3]**	1611	0 - Drive Rated Voltage	CALC	
	STATIC BOOST **[2] [3]**	1612	0.0 - 15.0%	0.0	
	DYN BOOST CUTIN **[2] [3]**	1613	6.00 - 60.00 Hz	30.00	
	DYNAMIC BOOST **[2] [3]**	1614	0.0 - 10.0%	0.0	
	V/F EFFICIENCY **[2] [3]**	1615	0-Off 1-On	0	
	V/F PROFILE **[2] [3]**	1616	0.0 - 100.0%	0	
	CUSTOM V/F CURVE **[2] [3]**	1617	0-Off 1-3 Point 2-7 Point	0	
	3 POINT VOLTAGE **[2] [3]**	1618	0.0 - 100.0%	50.0	

[2] Only available or active in V/F mode. Ignore these parameters for Open Vector mode.
[3] Motor related parameters (see parameter P1311).

Table B-1 Parameter Block Values Level 1 (Cont.)

Block Title	Parameter	P#	Adjustable Range	Factory	User Setting
MOTOR CONTROL (Continued)	3 POINT FREQ **[2] [3]**	1619	0.00 - MAX Speed	30.00	
	SLIP COMP ENABLE **[2] [3]**	1620	0-Off 1-On	0	
	7 POINT FREQ 1 **[2] [3]**	1621	0 - MAX Speed	10	
	7 POINT VOLT 1 **[2] [3]**	1622	0.0 - 100.0%	16.7	
	7 POINT FREQ 2 **[2] [3]**	1623	0 - MAX Speed	20	
	7 POINT VOLT 2 **[2] [3]**	1624	0.0 - 100.0%	33.3	
	7 POINT FREQ 3 **[2] [3]**	1625	0 - MAX Speed	30	
	7 POINT VOLT 3 **[2] [3]**	1626	0.0 - 100.0%	50.0	
	7 POINT FREQ 4 **[2] [3]**	1627	0 - MAX Speed	40	
	7 POINT VOLT 4 **[2] [3]**	1628	0.0 - 100.0%	66.7	
	7 POINT FREQ 5 **[2] [3]**	1629	0 - MAX Speed	50	
	7 POINT VOLT 5 **[2] [3]**	1630	0.0 - 100.0%	83.3	
	CURR PROP GAIN **[1] [3]**	1633	0 - 150.00	CALC	
	CURR INT GAIN **[1] [3]**	1634	0.0 - 3000.00 Hz	150.00	
	SPEED PROP GAIN **[1] [3]**	1635	0.0 - 1000.0	5.00	
	SPEED INT GAIN **[1] [3]**	1636	0.00 - 1000.00 Hz	10.00	
	SPEED DIFF GAIN **[1] [3]**	1637	0.00 - 1.00	0.00	
	A.S. PROP GAIN **[1]**	1639	0.0 - 255.0	10.0	
	A.S. INT GAIN **[1]**	1640	0.00 - 200.00 Hz	50.0	
	MOTOR Xm **[1] [3]**	1641	0.00 - 1000.00 Ohms	CALC	
	MOTOR R1 **[3]**	1642	0.00 - 1000.00 Ohms	0	
	MOTOR X1 **[1] [3]**	1643	0.000 - 1000.000 Ohms	CALC	
	ROTOR TIME CONST **[3]**	1644	0.000 - 60.000 seconds	CALC	
	MOTOR R2 **[1] [3]**	1645	0 - 1000 Ohms	CALC	
	MOTOR X2 **[1] [3]**	1646	0-1000 Ohms	CALC	
	TRICKLE HEAT AMPS	1678	0.0 - 50.0% of Motor Rated Amps	0.0	
COMMUNI-CATION	BAUD RATE	1701	0-9600 1-19200 2-38400 3-56000 4-115200	1	
	PARITY	1702	0-None 1-Odd 2-Even	0	
	STOP BITS	1703	0-One 1-Two	0	
	DRIVE ADDRESS	1704	1 - 247	1	
	OPTION CARD RESET	1705	0-Off 1-Slot 1 2-Slot 2 3-Slots 1 & 2	0	
	SECURITY DEFAULT	1706	0-No 1-Yes	0	
	BROWSER USER ID	1707	ASCII user ID for the Ethernet Web Brower Option Board	baldor	

[1] Only available or active in Open Vector mode. Ignore these parameters for V/F mode.
[2] Only available or active in V/F mode. Ignore these parameters for Open Vector mode.
[3] Motor related parameters (see parameter P1311).

Table B-1 Parameter Block Values Level 1 (Cont.)

Block Title	Parameter	P#	Adjustable Range	Factory	User Setting
COMMUNI-CATION (Continued)	BROWSER USER ID	1708	ASCII user ID for the Ethernet Web Brower Option Board	baldor	
	BROWSER PASSWORD	1709	Password for the Ethernet Web Brower Option Board	baldor	
	BROWSER PASSWORD	1710	Password for the Ethernet Web Brower Option Board	baldor	

B.2 Level 2 Parameters (Advanced Prog, Level 2 Blocks)

Table B-2 Parameter Block Values Level 2

Block Title	Parameter	P#	Adjustable Range	Factory	User Setting
DRIVE LIMITS	OPERATING ZONE **[3]**	2001	0-Std Const Torq 1-Std Var Torq 2-Quiet Const Torq 3-Quiet Var Torq	0	
	MIN OUTPUT SPEED **[3]**	2002	0 - MAX Speed Hz	0	
	MAX OUTPUT SPEED **[3]**	2003	10 - 500 Hz	Rated Motor Speed	
	PWM FREQUENCY **[3]**	2004	1500 to 16000 Hz	2500	
	CURR RATE LIMIT **[1] [3]**	2005	0.000 - 10.000 seconds	0.004	
	PEAK CURR LEVEL **[3]**	2006	0 - Peak Rated Current	CALC	
	REGEN TORQ LIMIT **[3]**	2007	0.0 - Drive Rated Peak Current in amps	CALC	
	REGEN ADJUST **[2] [3]**	2008	0 - 500 Hz/Sec	0	
DRIVE CONFIGURE	SPEED UNITS	2101	0-Hz 1-RPM	0	
	LANGUAGE SELECT	2102	0-English 1-Other (Spanish, German, Italian, French, or Portuguese)	0	
	FACTORY SETTINGS	2103	0-No 1-Yes	0	
	SECURITY	2105	0-Off 1-Local 2-Network 3-Total	0	
	ACCESS TIMEOUT	2106	1.0 - 600.0 seconds	5.0	
	ACCESS CODE	2107	0 - 9999	9999	
	ACTIVE PARAM TBL	0052	0-T1 1-T2 2-T3 3-T4	0	
	CLEAR FAULT LOG	2108	0-No 1-Yes	0	
	DEAD TIME COMP **[2]**	2109	0 to 100.0%	100.0	
	POWER INPUT	2110	0-Single Phase 1-Common Bus Slave 2-Three Phase 3-Common Bus Master	2	
	BUS VOLT FILTER **[2]**	2111	0.10 - 1000.00 Hz	10.00	
	EXECUTE MACRO	2112	0-No 1-M1 2-M2 3-M3 4-M4 5-M5	0	
	UNDO MACRO	2113	0-No 1-Yes	0	

[1] Only available or active in Open Vector mode. Ignore these parameters for V/F mode.
[2] Only available or active in V/F mode. Ignore these parameters for Open Vector mode.
[3] Motor related parameters (see parameter P1311).

Table B-2 Parameter Block Values Level 2 (Cont.)

Block Title	Parameter	P#	Adjustable Range	Factory	User Setting
DRIVE CONFIGURE (Continued)	TORQ ENABLE SEQ	2114	0-Torque on Enable 1-Torque on Command	0	
DRIVE PROTECT	EXTERNAL TRIP	2201	0-Off 1-On	0	
	FOLLOWING ERROR **[1]**	2202	0-Off 1-On	0	
	TORQUE PROVING **[1]**	2203	0-Off 1-On	0	
	FOLDBACK GAIN **[2] [3]**	2205	0.000 - 10.000	0.010	
	OVERLOAD	2206	0-Fault 1-Foldback 2-Hold	0	
	OVERLOAD TRIGGER **[2] [3]**	2207	0.0 - 100.0%	50.0	
	SINGLE PHASING **[4]**	2209	0-Derate 1-Fault	1	
	OVER TEMPERATURE	2210	0-Derate 1-Fault	1	
	PWR DOWN OPTIONS	2211	0-Fault 1-Ride Through	0	
	CNTL STP BUS LVL	2212	200 to 800V	CALC	
	CNTL STOP DELAY	2213	0 to 3600.0 seconds	1.0	
	Kp RIDE THROUGH	2214	0 to 1000.0000	10.0000	
	Ki RIDE THROUGH	2215	0 to 1000.0000	0	
MISCELLA-NEOUS	AUTO RESTART	2301	0-Manual 1-At Power Up 3-Both	1	
	RESTARTS/HOUR	2302	0 - 10	3	
	RESTART DELAY	2303	0 - 3600 seconds	3	
	PWM TECHNIQUE	2304	0-Space Vector 1-Sine Triangle	1	
	COST OF ENERGY	2305	0.00 - 99999.00$/KWH	0.10	
	RESET ENERGY	2306	0-No 1-Yes	0	
	FILTER TYPE	2309	0-None 1-Low Pass 2-High Pass 3-Notch	0	
	FILTER SOURCE	2310	0-None 1-Raw Speed 2-Torque 3-Analog In1 4-Analog In2 5-Composite Ref 6-Opt1 Ana In1 7-Opt1 Ana In2 8-Opt2 Ana In1 9-Opt2 Ana In2	0	

[1] Only available or active in Open Vector mode. Ignore these parameters for V/F mode.
[2] Only available or active in V/F mode. Ignore these parameters for Open Vector mode.
[3] Motor related parameters (see parameter P1311).
[4] Not available for size AA controls.

Table B-2 Parameter Block Values Level 2 (Cont.)

Block Title	Parameter	P#	Adjustable Range	Factory	User Setting
MISCELLA-NEOUS (Continued)	FILTER DESTINATION	2311	0-None 1-Speed Loop 2-Torque Loop 3-Speed FFWD 4-Process FBK 5-Process FFWD 6-Process SP	0	
	FILTER CUTOFF	2312	0.00 - 1000.00 Hz	0.00	
	NOTCH CNTR FREQ	2313	0.00 - 500.00 Hz	0.00	
	NOTCH BAND	2314	0.00 - 200.00 Hz	0.00	
MOTOR DATA	MOTOR RATED VOLT **[3]**	2401	0 - 1000 Volts	CALC	
	MOTOR RATED AMPS **[3]**	2402	0 - MAX AMPS	CALC	
	MOTOR RATED SPD **[3]**	2403	0 - 30000 RPM	1754	
	MOTOR RATED FREQ **[3]**	2404	10.00 - 500.00	60.00	
	MOTOR MAG AMPS **[3]**	2405	0 - 90% MAX AMPS	CALC	
	INSTABILITY FREQ **[2] [3]**	2406	0.00 - 500.00 Hz	0.00	
	STABILITY GAIN **[2] [3]**	2407	0.000 - 10.000	0.000	
	ELEC SLIP FREQ **[3]**	2412	0.000 - 20.000 Hz	CALC	
	CALC MOTOR MODEL	2414	0-No 1-Yes	0	
	REVERSE ROTATION **[3]**	2415	0-Off 1-On	0	
	MOTOR RATED HP **[3]**	2416	0 - 4 times Drive Rated HP	CALC	
BRAKE ADJUST	RESISTOR OHMS **[3]**	2501	0 - 255.0 Ohms	CALC	
	RESISTOR WATTS **[3]**	2502	0 - 999999 W	CALC	
	RESISTOR TTC **[3]**	2503	20 - 3600 seconds	CALC	
	DC BRAKE VOLTS **[2]**	2504	0 - 20.00%	0.00	
	DC BRAKE TRIGGER **[2]**	2505	0.00 - 50.0 Hz	0.00	
	BRAKE ON STOP **[2]**	2506	0-Off 1-On	0	
	BRAKE ON REVERSE **[2]**	2507	0-Off 1-On	0	
	STOP BRAKE TIME **[2]**	2508	0.0 - 60.0 seconds	0.0	
	BRAKE ON START **[2]**	2509	0-Off 1-On	0	
	START BRAKE TIME **[2]**	2510	0.0 - 60.0 seconds	0.0	
PROCESS CONTROL	PROCESS TYPE	2601	0-None 1-Forward Acting 2-Reverse Acting	0	
	SETPOINT ADJ LIM	2602	0.0 - 100.0%	10.0	

[2] Only available or active in V/F mode. Ignore these parameters for Open Vector mode.
[3] Motor related parameters (see parameter P1311).

Table B-2 Parameter Block Values Level 2 (Cont.)

Block Title	Parameter	P#	Adjustable Range	Factory	User Setting
PROCESS CONTROL (Continued)	PROCESS FEEDBACK	2603	0-None 1-Setpoint Cmd 2-Local Speed Ref 3-Analog In1 4-Analog In2 5-Network 6-Composite Ref 7-Opt1 Ana In1 8-Opt1 Ana In2 9-Opt2 Ana In1 10-Opt2 Ana In2	0	
	SETPOINT SOURCE	2604		0	
	SETPOINT COMMAND	2605	-100.0% to +100.0%	0.0	
	PROC ERR TOL	2606	0.0 - 100.0%	10.0	
	PROC PROP GAIN	2607	0.0000 - 9999.9990	1.0000	
	PROC INTG GAIN	2608	0.0000 - 9999.9990	0.0000	
	PROC INTG CLAMP	2609	0.0 - 100.0%	100.0	
	PROC DIFF GAIN	2610	0.0000 - 9999.9990	0.0000	
	PROFILE ADJUST	2611	0-Off 1-On	0	
	PROFILE ADJ BAND	2612	0.0 - 200.0%	50.0	
	PROC SLEEP BAND	2613	0.0 - 100.0%	0.0	
	PROC OUT FILTER	2614	0.0 - 100.0 seconds	0.00	
	PROC OUT OFFSET	2615	-100.0 to 100.0%	0.0	
	PROC OUT GAIN	2616	0.0 - 200.0%	100.0	
SKIP FREQUENCY	SKIP FREQ 1	2701	0 - MAX Speed Hz	0.00	
	SKIP BAND 1	2702	0 - MAX Speed Hz	0.00	
	SKIP FREQ 2	2703	0 - MAX Speed Hz	0.00	
	SKIP BAND 2	2704	0 - MAX Speed Hz	0.00	
	SKIP FREQ 3	2705	0 - MAX Speed Hz	0.00	
	SKIP BAND 3	2706	0 - MAX Speed Hz	0.00	
SYNCHRO START	SYNC START FWD	2801	0-Off 1-On	0	
	SYNC START REV	2802	0-Off 1-On	0	
	SYNC AT MAX FREQ	2803	0-Off 1-On	1	
	SYNCHRO SCAN V/F	2804	1.0 - 25.0%	10.0% V/F / 10% Open Vector	
	SYNC SETUP TIME	2805	0.5 - 10.0 seconds	0.20 V/F / 0.10 Open Vector	
	SYNC SCAN TIME	2806	0.5 - 10.0 seconds	2.0 V/F / 0.50 Open Vector	
	SYNC RECOVER	2807	0.1 - 10.0 seconds	1.0 V/F / 0.10 Open Vector	

Table B-2 Parameter Block Values Level 2 (Cont.)

Block Title	Parameter	P#	Adjustable Range	Factory	User Setting
AUTO TUNE	ANA OFFSET TRIM	2901	0-No 1-Yes	0	
	ONE-STEP TUNING **[1]**	2902	0-No 1-Yes	0	
	STATOR R1 TUNE	2903	0-No 1-Yes	0	
	MEASURE Xm (ROT) **[1]**	2904	0-No 1-Yes	0	
	MEASURE LEAKAGE **[1]**	2905	0-No 1-Yes	0	
	CUR. LOOP TUNE **[1]**	2906	0-No 1-Yes	0	
	FLUX CUR. TUNE **[1]**	2907	0-No 1-Yes	0	
[1] Only available or active in Open Vector mode. Ignore these parameters for V/F mode.					

B.3 Level 3 Parameters (Advanced Prog, Level 3 Blocks)

Table B-3 Parameter Block Values Level 3

Block Title	Parameter	P#	Adjustable Range	Factory	User Setting
PROFILE RUN	NUMBER OF CYCLES	3001	0 - 255	0	
	PR RESTART MODE	3002	0-Restart 1-Continue	0	
	SPEED CURVE 1	3003	0-FWD-Group1 1-REV-Group1 2-FWD-Group2 3-REV-Group2	0	
	PROFILE TIME 1	3004	0 - 65535.00 seconds	0.00	
	SPEED CURVE 2	3005	0-FWD-Group1 1-REV-Group1 2-FWD-Group2 3-REV-Group2	0	
	PROFILE TIME 2	3006	0 -65535.00 seconds	0.00	
	SPEED CURVE 3	3007	0-FWD-Group1 1-REV-Group1 2-FWD-Group2 3-REV-Group2	0	
	PROFILE TIME 3	3008	0 - 65535.00 seconds	0.00	
	SPEED CURVE 4	3009	0-FWD-Group1 1-REV-Group1 2-FWD-Group2 3-REV-Group2	0	
	PROFILE TIME 4	3010	0 - 65535.00 seconds	0.00	
	SPEED CURVE 5	3011	0-FWD-Group1 1-REV-Group1 2-FWD-Group2 3-REV-Group2	0	
	PROFILE TIME 5	3012	0 - 65535.00 seconds	0.00	
	SPEED CURVE 6	3013	0-FWD-Group1 1-REV-Group1 2-FWD-Group2 3-REV-Group2	0	
	PROFILE TIME 6	3014	0 - 65535.00 seconds	0.00	
	SPEED CURVE 7	3015	0-FWD-Group1 1-REV-Group1 2-FWD-Group2 3-REV-Group2	0	
	PROFILE TIME 7	3016	0 - 65535.00 seconds	0.00	
PULSE FOLLOWER	MASTER PPR **[3]**	3101	50 - 20000 counts	1024	
	INPUT VOLTS	3102	0-5V 1-12V	0	
	INPUT TYPE	3103	0-None 1-Quadrature 2- Speed	1	
	TRACK MODE	3104	0-Velocity Following	0	
	INCREMENT STEP	3105	1 - 1024	1	
	RX RATIO INPUT **[3]**	3106	1 - 1048576	1024	
	RX RATIO OUT 1 **[3]**	3107	1 - 1048576	1024	
	RX RATIO OUT 2 **[3]**	3108	1 - 1048576	1024	
[3] Motor related parameters (see parameter P1311).					

Table B-3 Parameter Block Values Level 3 (Cont.)

Block Title	Parameter	P#	Adjustable Range	Factory	User Setting
PULSE FOLLOWER (Continued)	RX RATIO OUT 3 **[3]**	3109	1 - 1048576	1024	
	RX RATIO OUT 4 **[3]**	3110	1 - 1048576	1024	
	OUTPUT TYPE	3111	0-Quadrature 1-Speed	0	
	TX RATIO INPUT **[3]**	3112	1 - 1048576	1:1024	
	TX RATIO OUTPUT **[3]**	3113	1 - 20000	1024	
	SAVE RX OUT RATI **[3]**	3114	0-No 1-Yes	0	
CUSTOM UNITS	MAX DEC PLACES	3201	0 - 5	1	
	VALUE AT SPEED	3202	0.0 - 9999999.0 (X.X; YRPM)	0.0: 0	
	UNITS OF MEASURE	3203	ASCII & Graphics Characters	Cust	
PLC MODE	PLC LOCK	3400	0-Off 1-On	0	
	PLC CONFIG 1	3401	0 to 255.255.255.255	000.128.000.000	
	PLC CONFIG 2	3402	0 to 255.255.255.255	000.128.000.000	
	PLC CONFIG 3	3403	0 to 255.255.255.255	000.128.000.000	
	PLC CONFIG 4	3404	0 to 255.255.255.255	000.128.000.000	
	PLC CONFIG 5	3405	0 to 255.255.255.255	000.128.000.000	
	PLC CONFIG 6	3406	0 to 255.255.255.255	000.128.000.000	
	PLC CONFIG 7	3407	0 to 255.255.255.255	000.128.000.000	
	PLC CONFIG 8	3408	0 to 255.255.255.255	000.128.000.000	
	PLC CONFIG 9	3409	0 to 255.255.255.255	000.128.000.000	
	PLC CONFIG 10	3410	0 to 255.255.255.255	000.128.000.000	
	PLC CONFIG 11	3411	0 to 255.255.255.255	000.128.000.000	
	PLC CONFIG 12	3412	0 to 255.255.255.255	000.128.000.000	
	PLC CONFIG 13	3413	0 to 255.255.255.255	000.128.000.000	
	PLC CONFIG 14	3414	0 to 255.255.255.255	000.128.000.000	
	PLC CONFIG 15	3415	0 to 255.255.255.255	000.128.000.000	
	PLC CONFIG 16	3416	0 to 255.255.255.255	000.128.000.000	
	PLC CONFIG 17	3417	0 to 255.255.255.255	000.128.000.000	
	PLC CONFIG 18	3418	0 to 255.255.255.255	000.128.000.000	
	PLC CONFIG 19	3419	0 to 255.255.255.255	000.128.000.000	
	PLC CONFIG 20	3420	0 to 255.255.255.255	000.128.000.000	
	PLC CONFIG 21	3421	0 to 255.255.255.255	000.128.000.000	
	PLC CONFIG 22	3422	0 to 255.255.255.255	000.128.000.000	
	PLC CONFIG 23	3423	0 to 255.255.255.255	000.128.000.000	
	PLC CONFIG 24	3424	0 to 255.255.255.255	000.128.000.000	
	PLC CONFIG 25	3425	0 to 255.255.255.255	000.128.000.000	
	PLC CONFIG 26	3426	0 to 255.255.255.255	000.128.000.000	
	PLC CONFIG 27	3427	0 to 255.255.255.255	000.128.000.000	
	PLC CONFIG 28	3428	0 to 255.255.255.255	000.128.000.000	
	PLC CONFIG 29	3429	0 to 255.255.255.255	000.128.000.000	
	PLC CONFIG 30	3430	0 to 255.255.255.255	000.128.000.000	

[3] Motor related parameters (see parameter P1311).

Table B-3 Parameter Block Values Level 3 (Cont.)

Block Title	Parameter	P#	Adjustable Range	Factory	User Setting
PLC MODE (Continued)	COMPARE A PARAM	3431	00000 to 10000	0	
	COMPARE A CONST1	3432	0.00 to 100.00%	0.00	
	COMPARE A CONST2	3433	0.00 to 100.00%	0.00	
	COMPARE B PARAM	3434	00000 to 10000	0	
	COMPARE B CONST1	3435	0.00 to 100.00%	0.00	
	COMPARE B CONST2	3436	0.00 to 100.00%	0.00	
	TIMER A DURATION	3440	0.00 to 999999.00 seconds	0.00	
	TIMER B DURATION	3441	0.00 to 999999.00 seconds	0.00	
	TIMER C DURATION	3442	0.00 to 999999.00 seconds	0.00	
	TIMER D DURATION	3443	0.00 to 999999.00 seconds	0.00	
COMPOSITE REF	PARAM A NUMBER	3501	00000 to 10000	0	
	PARAM A FUNCTION	3502	0-Zero 1-Identitiy 2-Absolute Value 3-Invert 4-Square 5-Square Root 6-Sine 7-Cosine 8-Ramp Generator 9-Freq Generator	0	
	PARAM B NUMBER	3503	00000 to 10000	0	
	PARAM B FUNCTION	3504	0-Zero 1-Identitiy 2-Absolute Value 3-Invert 4-Square 5-Square Root 6-Sine 7-Cosine 8-Ramp Generator 9-Freq Generator	0	
	OPERATOR	3505	0-Sum 1-Difference 2-Multiply 3-Divide 4-Maximum 5-Minimum	0	
	FUNCTION	3506	0-Zero 1-Identitiy 2-Absolute Value 3-Invert 4-Square 5-Square Root 6-Sine 7-Cosine 8-Ramp Generator 9-Freq Generator	1	
	PARAM A GAIN	3507	-1000.000 to 1000.000	1.00	
	PARAM B GAIN	3508	-1000.000 to 1000.000	1.00	

Table B-3 Parameter Block Values Level 3 (Cont.)

Block Title	Parameter	P#	Adjustable Range	Factory	User Setting
RTC FEATURES (Real Time Clock)	RTC ACTION 1	3601	0-None 1-D.Out1 On 2-D.Out1 Off 3-D.Out2 On 4-D.Out2 Off 5-R.Out1 On 6-R.Out1 Off 7-R.Out2 On 8-R.Out2 Off 9-Increment 10-Decrement 11-Reset 12-D.Out1 On/IncP107 13-D.Out1 Off/IncP107 14-D.Out1 On/DecP107 15-D.Out1 Off/DecP107 16-D.Out1 On/Reset 17-D.Out1 Off/Reset 18-R.Out1 On/IncP107 19-R.Out1 Off/IncP107 20-R.Out1 On/DecP107 21-R.Out1 Off/DecP107 22-R.Out1 On/Reset 23-R.Out1 Off/Reset	0	
	RTC ACTION 2	3602		0	
	RTC MESSAGE 1	3603	0-None 1-Clean Filter 2-Change Filter 3-Apply Oil/Lube 4-Service Motor 5-Service Drive 6-Service Coolant 7-Service Heating 8-RTC Alarm	0	
	RTC MESSAGE 2	3604		0	
	ACT1 QUALIFIER	3605	0-Once 1-Second 2-Minute 3-Hourly 4-Daily 5-Monthly 6-Yearly	0	
	ACT2 QUALIFIER	3606		0	
	MSG1 QUALIFIER	3607		0	
	MSG2 QUALIFIER	3608		0	
	ACT1 DATE/TIME	3609	01 January 2000, 00:00:00 - 31 December 2063, 23:59:59	01 January 2000, 00:00:00	
	ACT2 DATE/TIME	3610	01 January 2000, 00:00:00 - 31 December 2063, 23:59:59	01 January 2000, 00:00:00	
	MSG1 DATE/TIME	3611	01 January 2000, 00:00:00 - 31 December 2063, 23:59:59	01 January 2000, 00:00:00	
	MSG2 DATE/TIME	3612	01 January 2000, 00:00:00 - 31 December 2063, 23:59:59	01 January 2000, 00:00:00	
	RTC COUNTER MAX	3630	00000 - 99999	0	
	DST SELECT	3631	0-Off 1-U.S.A. 2-E.U.	0	

Appendix C
CE Guidelines

C.1 Outline

This section provides general information regarding recommended methods of installation for CE compliance. It is not intended as an exhaustive guide to good practice and wiring techniques. It is assumed that the installer of the VS1SP is sufficiently qualified to perform the task, and is aware of local regulations and requirements. Baldor products that meet the EMC directive requirements are indicated with a “CE” mark. A duly signed CE declaration of conformity is available from Baldor.

C.2 EMC - Conformity and CE Marking

The information contained herein is for your guidance only and does not guarantee that the installation will meet the requirements of the Electromagnetic Compatibility Directive 2004/108/EC or the Low Voltage Directive 2006/95/EC. The purpose of the EEC directives is to state a minimum technical requirement common to all the member states within the European Union. In turn, these minimum technical requirements are intended to enhance the levels of safety both directly and indirectly.

Council directive 2004/108/EC relating to Electro Magnetic Compliance (EMC) indicates that it is the responsibility of the system integrator to ensure that the entire system complies with all relative directives at the time of installing into service. Motors and controls are used as components of a system, per the EMC directive. Hence all components, installation of the components, interconnection between components, and shielding and grounding of the system as a whole determines EMC compliance.

The CE mark informs the purchaser that the equipment has been tested and complies with the appropriate standards. It rests upon the manufacturer or his authorized representative to ensure the item in question complies fully with all the relative directives in force at the time of installing into service, in the same way as the system integrator previously mentioned. Remember that it is the instructions of installation and the product that should comply with the directive.

Note that this drive is commercial in design. It is not intended to be used on a low-voltage public network which supplies domestic premises. In a domestic environment, this product may cause radio interference in which case supplementary mitigation may be required.

Wiring of Shielded (Screened) Cables

Figure C-1

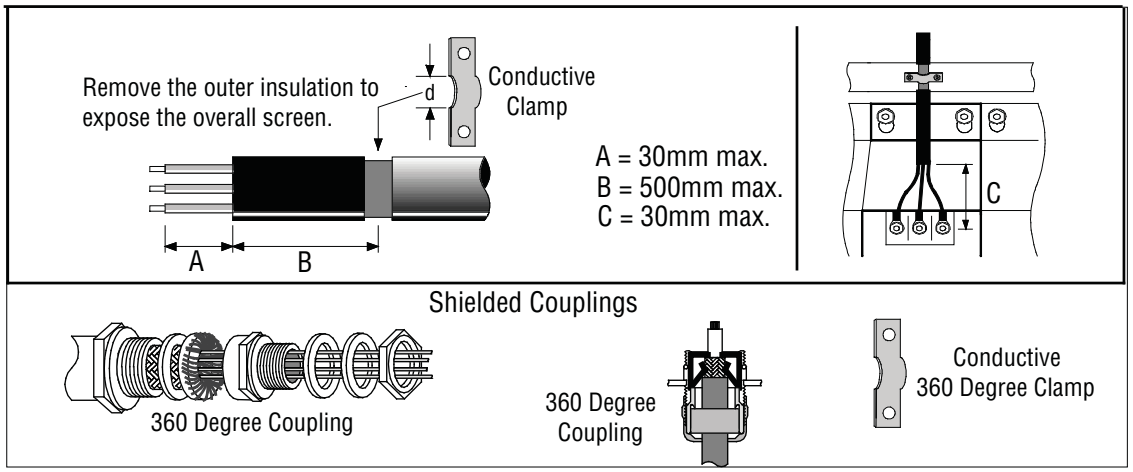

C.3 EMC Installation Options

When installed for Class A or Class B operation, the control is compliant with EN55011 (1991)/ EN55022 (1994) for radiated emissions as described.

C.4 Grounding for Wall Mounting (Class A) also see Chapter 4

Top cover must be installed.

- A single-star point (earth) is required.
- The protective earth connection (PE) to the motor must be run inside the screened cable or conduit between the motor and control and be connected to the protective earth terminal at the control.
- The internal/external AC supply filter must be permanently earthed.
- The signal/control cables must be screened.

C.5 Grounding for Enclosure Mounting (Class B) also see Chapter 4

- The unit is installed for Class B operation when mounted inside an enclosure that has 10dB attenuation from 30 to 100MHz (typically the attenuation provided by a metal cabinet with no opening greater than 0.15m), using the recommended AC supply filter and having met all cable requirements.

Note: Radiated magnetic and electric fields inside the cubicle will be high and components installed inside must be sufficiently immune.

- The control, external filter and associated equipment are mounted onto a conducting, metal panel. Do not use enclosures that use insulating mounting panels or undefined mounting structures. Cables between the control and motor must be screened or in conduit and terminated at the control.

C.6 Use of CE Compliant Components

The following points should be considered:
- Using CE approved components will not guarantee a CE compliant system!
- The components used in the drive, installation methods used, materials selected for interconnection of components are important.
- The installation methods, interconnection materials, shielding, filtering and earthing / grounding of the system as a whole will determine CE compliance.
- The responsibility of CE mark compliance rests entirely with the party who offers the end system for sale (such as an OEM or system integrator).

C.7 EMC Wiring Technique

Figure C-2

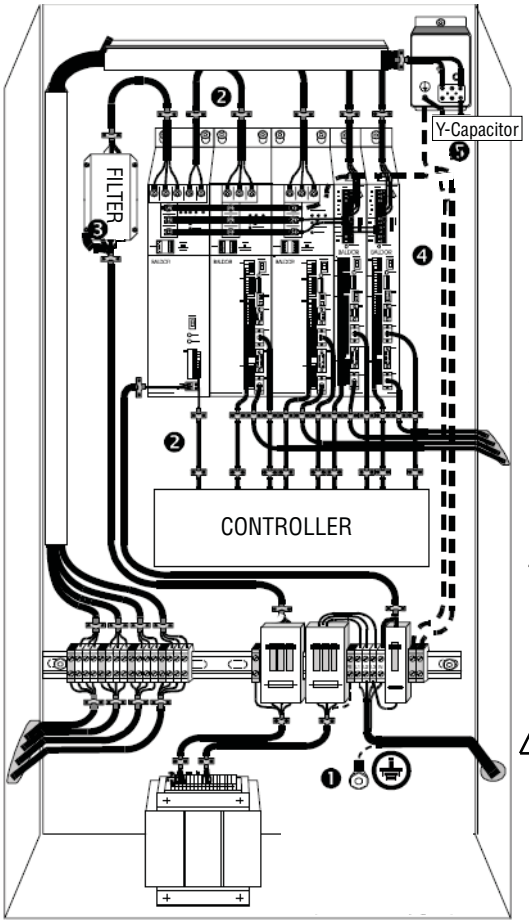

1 CABINET
The drawing shows an electroplated zinc coated enclosure, which is connected to ground. This enclosure has the following advantages:
- All parts mounted on the back plane are connected to ground.
- All shield (screen) connections are connected to ground.
Within the cabinet there should be a spatial separation between power wiring (motor and AC power cables) and control wiring.

2 SCREEN CONNECTIONS
All connections between components must use shielded cables. The cable shields must be connected to the enclosure. Use conductive clamps to ensure good ground connection. With this technique, a good ground shield can be achieved.

3 EMC - FILTER
The EMI or main filter should be mounted next to the power supply (here BPS). For the connection to and from the main filter, screened cables should be used. The cable screens should be connected to screen clamps on both sides. (Exception: Analog Command Signal).
Note: EMC compliance testing was conducted on representative drives of each frame size using Schaffner FN3258 and FN351 series filters.

4 GROUNDING (EARTH)
For safety reasons (VDE0160), all Baldor components must be connected to ground with a separate wire. The diameter of the wire must be at minimum AWG#6 (10mm^2). Ground connections (dashed lines) must be made from the central ground to the regen resistor enclosure and from the central ground to the Shared Power Supply.

⚠ Minimum size of the protective earthing conductor shall comply with the local safety regulation for high protective earthing conductor current equipment.

5 Y-CAPACITOR
The connection of the regeneration resistor can cause RFI (radio frequency interference) to be very high. To minimize RFI, a Y-capacitor is used. The capacitor should only be connected between the dynamic brake resistor housing and terminal pin R1.

Attention: The drawing shows only the principle of an EMC wiring. The installation shown can be different to any national standard (e.g. VDE).

C.8 EMC Installation Instructions

To ensure electromagnetic compatibility (EMC), the following installation instructions should be completed. These steps help to reduce interference.
Consider the following:

- Grounding of all system elements to a central ground point
- Shielding of all cables and signal wires
- Filtering of power lines

A proper enclosure should have the following characteristics:

A) All metal conducting parts of the enclosure must be electrically connected to the back plane. These connections should be made with a grounding strap from each element to a central grounding point. [1]
B) Keep the power wiring (motor and power cable) and control wiring separated. If these wires must cross, be sure they cross at 90 degrees to minimize noise due to induction.
C) The shield connections of the signal and power cables should be connected to the screen rails or clamps. The screen rails or clamps should be conductive clamps fastened to the cabinet. [2]
D) The cable to the regeneration resistor must be shielded. The shield must be connected to ground at both ends.
E) The location of the AC mains filter has to be situated close to the drive so the AC power wires are as short as possible.
F) Wires inside the enclosure should be placed as close as possible to conducting metal, cabinet walls and plates. It is advised to terminate unused wires to chassis ground. [1]
G) To reduce ground current, use at least a 10mm^2 (6 AWG) solid wire for ground connections.

[1] Grounding in general describes all metal parts which can be connected to a protective conductor, e.g. housing of cabinet, motor housing, etc. to a central ground point. This central ground point is then connected to the main plant (or building) ground.
[2] Or run as twisted pair at minimum.

Example Cable Screens Grounding

Figure C-3

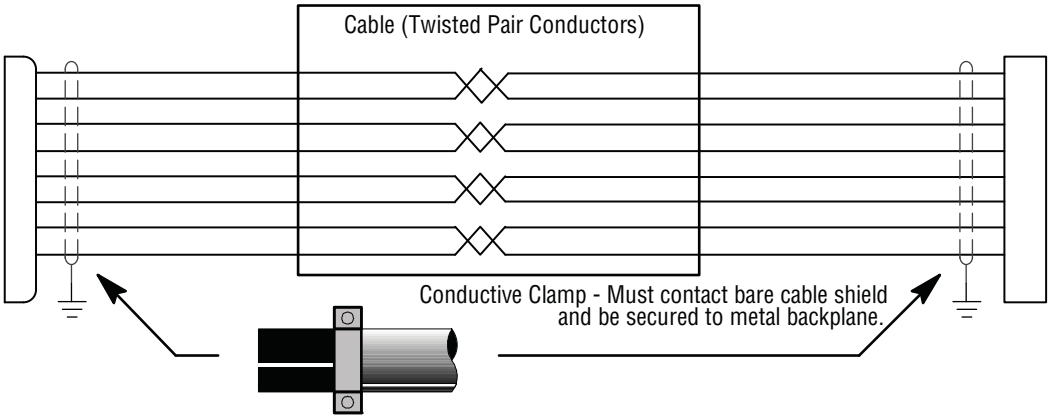

Appendix D
Options and Kits

D.1 Dynamic Braking (DB) Hardware

Whenever a motor is abruptly stopped or forced to slow down quicker than if allowed to coast to a stop, the motor becomes a generator. This energy appears on the DC Bus of the control and must be dissipated using dynamic braking hardware. Dynamic braking resistors are completely assembled and mounted in a NEMA 1 enclosure. A listing of available RGA assemblies is provided in Table D-1. Select the braking resistor that has correct ohm value for the control and adequate continuous watts capacity to meet load requirements.

Table D-1 Dynamic Braking Resistor Assemblies (RGA)

Input Volts	HP	Total* Ohms	Continuous Rated Watts						
			600	1200	2400	4800	6400	9600	14200
230	1-7.5	20	RGA620	RGA1220	RGA2420				
	10-20	6		RGA1206	RGA2406	RGA4806			
	25-40	4		RGA1204	RGA2404	RGA4804			
	50-60	2				RGA4802	RGA6402	RGA9602	RGA14202
460	1-3	120	RGA6120	RGA12120	RGA24120				
	5-10	60	RGA660	RGA1260	RGA2460	RGA4860			
	15-25	20	RGA620	RGA1220	RGA2420	RGA4820			
	30-50	10		RGA1210	RGA2410	RGA4810			
	60-125	4		RGA1204	RGA2404	RGA4804	RGA6404	RGA9604	RGA14204
	150-500	2				RGA4802	RGA6402	RGA9602	RGA14202
575	1-3	120	RGA6120	RGA12120	RGA24120				
	5-10	60	RGA660	RGA1260	RGA2460	RGA4860			
	15-25	30	RGA630	RGA1230	RGA2430	RGA4830			
	30	24		RGA1224	RGA2424	RGA4824			
	40-125	14				RGA4814	RGA6414		
	150-300	4				RGA4804	RGA6404	RGA9604	RGA14204

***Note:** Total Ohms column indicates the minimum resistance that the output transistors can drive. For example, if the Total Ohms column indicates 6 ohms and a 6 ohm resistor is unavailable, an 8 ohm can be used but not a 4 ohm resistor.

D.2 Expansion Boards

Baldor offers a wide variety of plug-in expansion boards for their Controls. Expansion boards allow a control to be compatible with various inputs and outputs. Each control can accept up to two expansion boards. Chapter 3 of this manual describes the locations of the connectors for these expansion boards.

Table D-2 Expansion Board Descriptions

Catalog Number	Description
EXBHH001A01	Ethernet Server Expansion Board Uses standard RJ-45 female terminal for Ethernet connection. Provides easy connection to any PC based Web Browser that has an Ethernet connection. Allows you to quickly access all drive parameters for setup and review. Download parameter values, operating conditions, and fault log data for review and archive.
EXBHH003A01	Isolated Input Expansion Board Contains 9 isolated inputs, jumper configurable for 90-130 VAC. All inputs must be the same voltage. One side of all inputs is common. This board replaces all the opto inputs on the main control board. Uses screw terminals for connection.
EXBHH005A01	High resolution analog input/output board Allows two inputs with up to 16 bits resolution. DC inputs: ±10V, 0-10V, ±5V, 0-5V, with 300 microvolt resolution. Current inputs: 4-20mA, with 0.6 microamps resolution. Input — Resolution ±10V — 16 bit 0 - 10V — 15 bit ±5V — 15 bit 0 - 5V — 14 bit 0 - 20mA — 15 bit 4 - 20mA — 15 bit Both the 0-10V and 4-20mA inputs may be inverted to 10-0V and 20-4mA. Two outputs, each with ±10VDC, 0-10VDC or 4-20mA with inverting capability. These are in addition to the two analog outputs on the main control board (4 total). Uses screw terminals for connection.
EXBHH007A01	Master Pulse Reference / Isolated Pulse Follower Jumper selection of the following modes: 1. Accepts a 5VDC or 12VDC quadrature pulse train input or pulse and direction input to use as a master reference. 2. Re-transmits the input pulse train at 5VDC for ratios from 1:20 up to 65535:1. (Scaled output). 3. Can be used as a auxiliary encoder input to the control. 4. A CANopen port with an RJ-45 female connector for adding an additional I/O breakout box or CAN HMI terminal.
EXBHH013A02	DeviceNet / EtherNet IP / Modbus-TCP Communications Expansion Board Allows connection to DeviceNet Communications Bus. Allows connection to EtherNet/IP Communications Bus. Allows connection to Modbus-TCP Communications Bus. Uses screw terminals for DeviceNet connection.
EXBHH014A02	PROFIBUS-DP Expansion Board Allows connection to PROFIBUS-DP Communications Bus. Uses 9-pin D-shell for connection.
EXBHH015A01	BACnet Expansion Board Allows connection to a BACnet Communications Network. Uses screw terminals for connection.
EXBHH016A01	LonWorks Communications Expansion Board Allows connection to a LonWorks Communications Bus. Uses plug-in terminals for connection.
EXBHH017A01	Metasys N2 Communications Expansion Board Allows connection to or N2 communications network. Uses screw terminals for connection.

D.3 Keypad Extension Cable

For the convenience of our customers, we offer a connector plug/cable assembly. This assembly provides the connectors from the keypad to the control for remote keypad operation.

CAUTION: **Only use cables manufactured by Baldor. Cables purchased from other sources may not be properly wired and may damage the control or keypad and void the warranty.**

Table D-3 Keypad Extension Cable Selection

Catalog Number	Length
CBLHH015KP	5 ft (1.5m)
CBLHH030KP	10 ft (3.0m)
CBLHH046KP	15 ft (4.6m)
CBLHH061KP	20 ft (6.1m)
CBLHH091KP	30 ft (9.1m)
CBLHH152KP	50 ft (15.2m)
CBLHH229KP	75 ft (22.9m)
CBLHH305KP	100 ft (30.5m)
CBLHH457KP	150 ft (45.7m)
CBLHH610KP	200 ft (61.0m)

D.4 Optional Remote Keypad Installation

The keypad may be remotely mounted using optional Baldor keypad extension cable (refer to Table D-3). When the keypad is properly mounted to a NEMA Type 4X enclosure, it retains the Type 4X rating. The mounting/drill template is located in Appendix E of this manual.

CAUTION: **Only use cables manufactured by Baldor. Cables purchased from other sources may not be properly wired and may damage the control or keypad and void the warranty.**

Tools Required:

- Center punch, tap handle, screwdrivers (Phillips and straight)
- #27 drill bit
- 1-3/8” standard knockout punch
- RTV Sealant
- (3) 6-32x3/8” screws
- (3) #6 Flat Washers

Mounting Instructions: For clearance mounting holes

1. Locate a flat 4” wide x 5.5” minimum high mounting surface. Material should be sufficient thickness (14 gauge minimum).
2. Place the template on the mounting surface or mark the holes as shown on the template (ensure template is not distorted due to reproduction).
3. Accurately center punch the 3 mounting holes and the large knockout.
4. Drill three #27 clearance holes.
5. Locate the 1-3/8” knockout center and punch using the manufacturers instructions.
6. Debur knockout and mounting holes making sure the panel stays clean and flat.
7. Apply RTV to the three #27 clearance holes.
8. Assemble the keypad to the panel. Use 6-32 screws and flat washers.
9. From the inside of the panel, apply RTV over each of the three mounting screws. Cover a 3/4” area around each screw making sure to completely encapsulate the screw head and washer.
10. Route the keypad cable into the control and connect to P2 of the control board, Figure D-1.

Figure D-1 Connector Locations

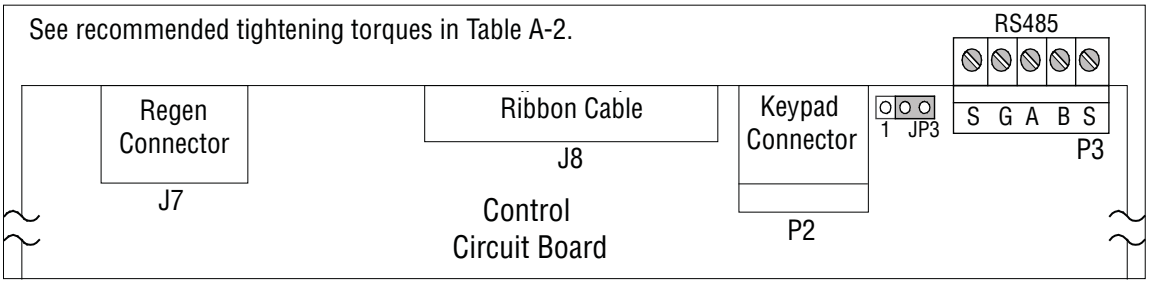

Appendix E
Remote Keypad Mounting Template

E.1 Remote Keypad Mounting Template

Figure E-1

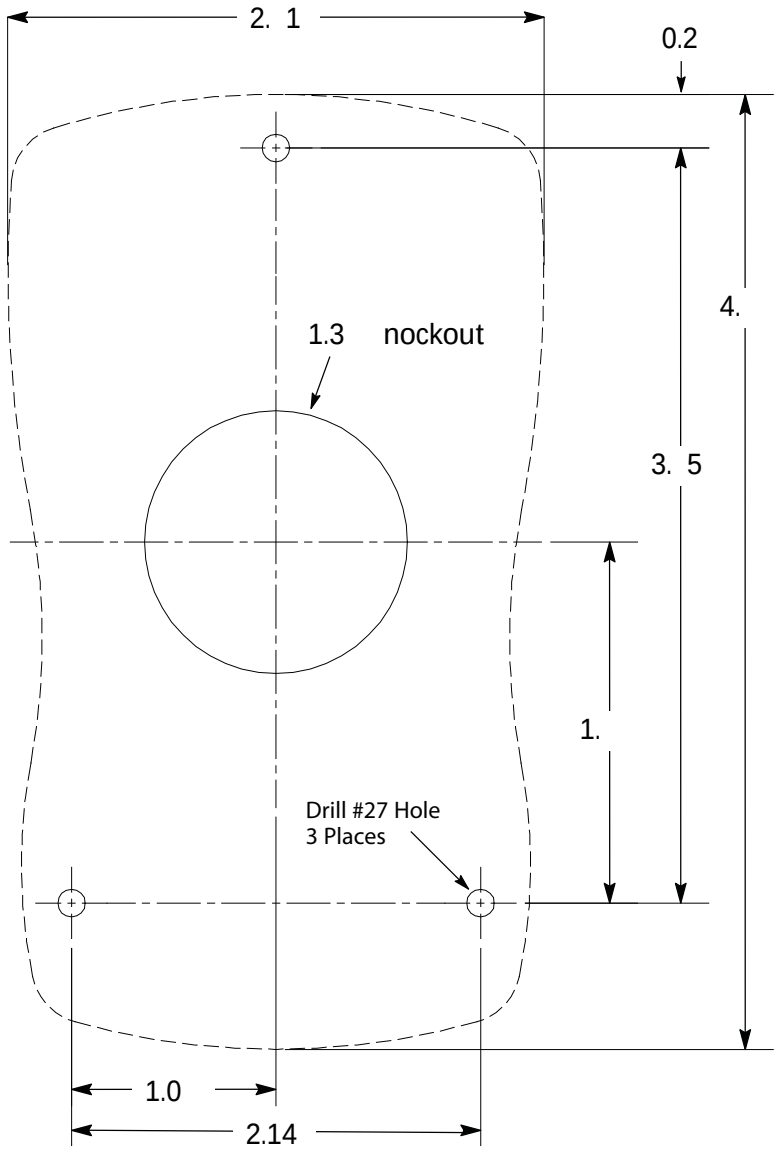

P0030A00

Note: Template may be distorted due to reproduction.

Baldor Sales Offices

UNITED STATES

ARIZONA
PHOENIX
4211 S 43RD PLACE
PHOENIX, AZ 85040
PHONE: 602-470-0407
FAX: 602-470-0464

ARKANSAS
CLARKSVILLE
1001 COLLEGE AVENUE
CLARKSVILLE, AR 72830
PHONE: 479-754-9108
FAX: 479-754-9205

CALIFORNIA
LOS ANGELES
6480 FLOTILLA STREET
COMMERCE, CA 90040
PHONE: 323-724-6771
FAX: 323-721-5859

HAYWARD
21056 FORBES AVENUE
HAYWARD, CA 94545
PHONE: 510-785-9900
FAX: 510-785-9910

COLORADO
DENVER
3855 FOREST STREET
DENVER, CO 80207
PHONE: 303-623-0127
FAX: 303-595-3772

CONNECTICUT
WALLINGFORD
65 SOUTH TURNPIKE ROAD
WALLINGFORD, CT 06492
PHONE: 203-269-1354
FAX: 203-269-5485

FLORIDA
TAMPA/PUERTO RICO/ VIRGIN ISLANDS
3906 EAST 11TH AVENUE
TAMPA, FL 33605
PHONE: 813-248-5078
FAX: 813-247-2984

GEORGIA
ATLANTA
62 TECHNOLOGY DRIVE
ALPHARETTA, GA 30005
PHONE: 770-772-7000
FAX: 770-772-7200

ILLINOIS
CHICAGO
340 REMINGTON BLVD.
BOLINGBROOK, IL 60440
PHONE: 630-296-1400
FAX: 630-226-9420

INDIANA
INDIANAPOLIS
5525 W. MINNESOTA STREET
INDIANAPOLIS, IN 46241
PHONE: 317-246-5100
FAX: 317-246-5110

IOWA
DES MOINES
1800 DIXON STREET, SUITE C
DES MOINES, IA 50316
PHONE: 515-263-6929
FAX: 515-263-6515

MARYLAND
BALTIMORE
6660 SANTA BARBARA RD.
SUITES 22-24
ELKRIDGE, MD 21075
PHONE: 410-579-2135
FAX: 410-579-2677

MASSACHUSETTS
BOSTON
6 PULLMAN STREET
WORCESTER, MA 01606
PHONE: 508-854-0708
FAX: 508-854-0291

MICHIGAN
DETROIT
5993 PROGRESS DRIVE
STERLING HEIGHTS, MI 48312
PHONE: 586-978-9800
FAX: 586-978-9969

MINNESOTA
MINNEAPOLIS
21080 134TH AVENUE NORTH
ROGERS, MN 55374
PHONE: 763-428-3633
FAX: 763-428-4551

MISSOURI
ST LOUIS
13678 LAKEFRONT DRIVE
EARTH CITY, MO 63045
PHONE: 314-373-3032
FAX: 314-373-3038

KANSAS CITY
1501 BEDFORD AVENUE
NORTH KANSAS CITY, MO 64116
PHONE: 816-587-0272
FAX: 816-587-3735

NEW YORK
AUBURN
ONE ELLIS DRIVE
AUBURN, NY 13021
PHONE: 315-255-3403
FAX: 315-253-9923

NORTH CAROLINA
GREENSBORO
1220 ROTHERWOOD ROAD
GREENSBORO, NC 27406
PHONE: 336-272-6104
FAX: 336-273-6628

OHIO
CINCINNATI
2929 CRESCENTVILLE ROAD
WEST CHESTER, OH 45069
PHONE: 513-771-2600
FAX: 513-772-2219

CLEVELAND
8929 FREEWAY DRIVE
MACEDONIA, OH 44056
PHONE: 330-468-4777
FAX: 330-468-4778

OKLAHOMA
TULSA
7170 S. BRADEN, SUITE 140
TULSA, OK 74136
PHONE: 918-366-9320
FAX: 918-366-9338

OREGON
PORTLAND
20393 SW AVERY COURT
TUALATIN, OR 97062
PHONE: 503-691-9010
FAX: 503-691-9012

PENNSYLVANIA
PHILADELPHIA
1035 THOMAS BUSCH
MEMORIAL HIGHWAY
PENNSAUKEN, NJ 08110
PHONE: 856-661-1442
FAX: 856-663-6363

PITTSBURGH
159 PROMINENCE DRIVE
NEW KENSINGTON, PA 15068
PHONE: 724-889-0092
FAX: 724-889-0094

TENNESSEE
MEMPHIS
4000 WINCHESTER ROAD
MEMPHIS, TN 38118
PHONE: 901-365-2020
FAX: 901-365-3914

TEXAS
DALLAS
2920 114TH STREET SUITE 100
GRAND PRAIRIE, TX 75050
PHONE: 214-634-7271
FAX: 214-634-8874

HOUSTON
10355 W. LITTLE YORK ROAD
SUITE 300
HOUSTON, TX 77041
PHONE: 281-977-6500
FAX: 281-977-6510

UTAH
SALT LAKE CITY
2230 SOUTH MAIN STREET
SALT LAKE CITY, UT 84115
PHONE: 801-832-0127
FAX: 801-832-8911

WISCONSIN
MILWAUKEE
1960 SOUTH CALHOUN ROAD
NEW BERLIN, WI 53151
PHONE: 262-784-5940
FAX: 262-784-1215

INTERNATIONAL SALES
FORT SMITH, AR
P.O. BOX 2400
FORT SMITH, AR 72902
PHONE: 479-646-4711
FAX: 479-648-5895

CANADA
EDMONTON, ALBERTA
4053-92 STREET
EDMONTON, ALBERTA T6E 6R8
PHONE: 780-434-4900
FAX: 780-438-2600

TORONTO
OAKVILLE, ONTARIO
2750 COVENTRY ROAD
OAKVILLE, ONTARIO L6H 6R1
PHONE: 905-829-3301
FAX: 905-829-3302

MONTREAL, QUEBEC
5155 J-ARMAND BOMBARDIER
SAINT-HUBERT, QUÉBEC
CANADA J3Z 1G4
PHONE: 514-933-2711
FAX: 514-933-8639

VANCOUVER, BRITISH COLUMBIA
1538 KEBET WAY
PORT COQUITLAM,
BRITISH COLUMBIA V3C 5M5
PHONE 604-421-2822
FAX: 604-421-3113

WINNIPEG, MANITOBA
54 PRINCESS STREET
WINNIPEG, MANITOBA R3B 1K2
PHONE: 204-942-5205
FAX: 204-956-4251

AUSTRALIA
UNIT 3, 6 STANTON ROAD
SEVEN HILLS, NSW 2147, AUSTRALIA
PHONE: (61) (2) 9674 5455
FAX: (61) (2) 9674 2495

UNIT 8, 5 KELLETTS ROAD
ROWVILLE, VICTORIA, 3178 AUSTRALIA
PHONE: (61) (3) 9753 4355
FAX: (61) (3) 9753 4366

EL SALVADOR
RESIDENCIAL PINARES DE SUIZA
POL. 15 #44,
NVA. SAN SALVADOR, EL SALVADOR
PHONE: +503 2288-1519
FAX: +503 2288-1518

CHILE
LUIS THAYER OJEDA 166,
OF 402 - PROVIDENCIA
SANTIAGO, CHILE
PHONE: +56 2 964-3210

CHINA
160 SONG SHENG ROAD
SONGJIANG INDUSTRY ZONE
SHANGHAI 201613, CHINA
PHONE: +86 21 5760 5335
FAX : +86 21 5760 5336

GERMANY
HERMANN-HEINRICH-GOSSEN-STRASSE 3
KÖLN, D-50858 GERMANY
PHONE: +49 2234 37941-0
FAX: +49 2234 3794164

DIESELSTRASSE 22
KIRCHHEIM, D-85551
MUNICH, GERMANY
PHONE: +49 89 90508-0
FAX: +49 89 9050886

INDIA
OFFICE NO 517 & 518,
5TH FLOOR, SIDDHARTH TOWERS,
CTS NO. 421 (1), SURVEY NO 12,
KOTHRUD, PUNE 411 038,
MAHARASHTRA, INDIA
PHONE: + 91 20 25 45 27 17
FAX: + 91 20 25 45 27 19

INDONESIA
TALAVERA OFFICE PARK,
28TH FLOOR, SUITE M18
JI. T.B. SIMATUPANG, KAV. 22-26
CILANDAK, JAKARTA SELATAN, 12430
INDONESIA
PHONE: +62 21 75 999 879
FAX: + 62 21 75 999 878

ITALY
VIA SOTTOBISIO 30
CH-6828 BALERNA
SWITZERLAND
PHONE: +41 91 683 6161
FAX: +41 91 630 2633

JAPAN
DIA BLDG 802,
2-21-1 TSURUYA-CHO,
KANAGAWA-KU
YOKOHAMA, 221-0835, JAPAN
PHONE: 81-45-412-4506
FAX: 81-45-412-4507

KOREA
RM#1715, SUSEO TOWER, 725,
SUSEO-DONG, GANGNAM-GU,
SEOUL 135-757 KOREA
PHONE: (82) 2 2226 9369
FAX: (82) 2 2226 9368

MEXICO
LEON, GUANAJUATO
KM. 2.0 BLVD. AEROPUERTO
LEÓN 37545, GUANAJUATO, MÉXICO
PHONE: +52 477 761 2030
FAX: +52 477 761 2010

MIDDLE EAST & NORTH AFRICA
VSE INTERNATIONAL CORP.
3233 N ARLINGTON HEIGHTS ROAD
SUITE 100W
ARLINGTON HEIGHTS, IL 60004 USA
PHONE: 847 590 5547
FAX: 847 590 5587

PANAMA
AVE. RICARDO J. ALFARO
EDIFICIO SUN TOWERS MALL
PISO 2, LOCAL 55
CIUDAD DE PANAMÁ, PANAMÁ
PHONE: +507 236-5155
FAX: +507 236-0591

SINGAPORE
18 KAKI BUKIT ROAD 3, #03-09
ENTREPRENEUR BUSINESS CENTRE
SINGAPORE 415978
PHONE: (65) 6744 2572
FAX: (65) 6747 1708

SWITZERLAND
POST FACH 73
SCHUETZENSTRASSE 59
FEUERTHALEN, CH-8245
SWITZERLAND
PHONE: +41 52 647 4700
FAX: +41 52 659 2394

TAIWAN
1F, NO 126 WENSHAN 3RD STREET,
NANTUN DISTRICT,
TAICHUNG CITY 408
TAIWAN R.O.C
PHONE: (886) 4 238 04235
FAX: (886) 4 238 04463

UNITED KINGDOM
6 BRISTOL DISTRIBUTION PARK
HAWKLEY DRIVE
BRISTOL BS32 0BF U.K.
PHONE: +44 1454 850000
FAX: +44 1454 859001

VENEZUELA
AV. ROMA. QTA EL MILAGRO. URB.
CALIFORNIA NORTE
CARACAS, 1070
VENEZUELA
PHONE/FAX: +58 212 272 7343
MOBILE: +58 414 114 8623

!764-1011*

P.O. Box 2400, Fort Smith, AR 72902-2400 U.S.A., Ph: (1) 479.646.4711, Fax (1) 479.648.5792, International Fax (1) 479.648.5895
Baldor - Dodge
6040 Ponders Court, Greenville, SC 29615-4617 U.S.A., Ph: (1) 864.297.4800, Fax: (1) 864.281.2433
www.baldor.com

© Baldor Electric Company
All Rights Reserved. Printed in USA.
MN764
10/11

BALDOR

VS1SP

Please consult the VS1SP Installation and Operation Manual, MN764, before operating the drive.
Also, please read the precautionary and warning statements in the Safety Notice, Paragraph 1.2, in MN764.

Frame Size AA 1-Phase Input Drives

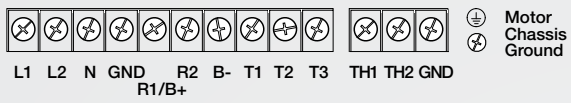

Frame Size AA 3-Phase Input Drives

Frame Size B and C Drives

Frame Size D Drives

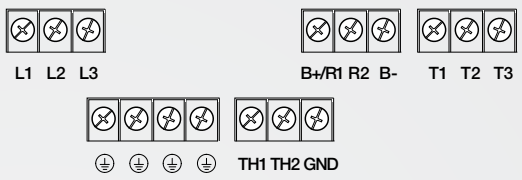

Frame Size E Drives

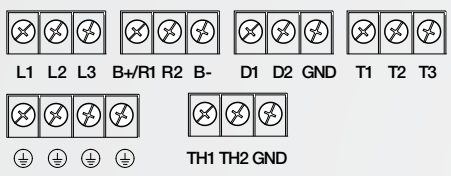

Frame Size F Drives

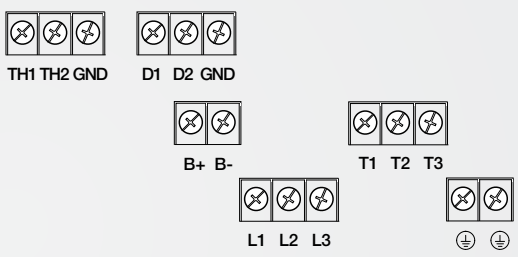

NOTE
Note: See instruction manual MN764 for important information regarding AC power wiring and fusing.

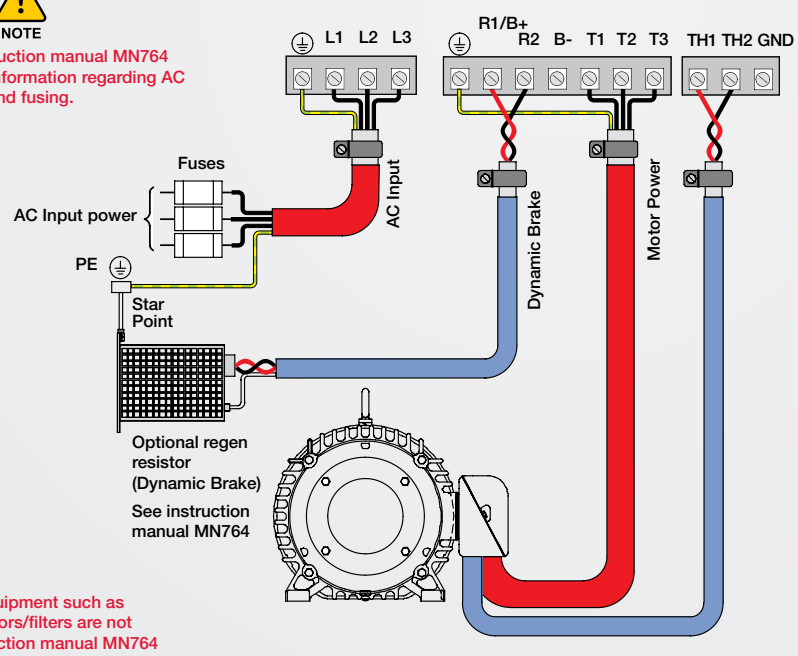

NOTE
Note: See instruction manual MN764 for important information regarding motor and output reactors.

Thermostat and control leads must be in separate conduits.

Note: Optional equipment such as input/output reactors/filters are not shown. See instruction manual MN764

Analog I/O Jumper Settings		
Type	ANAIN2 JP1	ANAOUT1 JP2
Voltage	1	1
Current	1	1

Digital Input Jumper Settings		
Function	Internal supply	External supply
Active high	JP6 ENP INP; JP5 EPN DFT	JP6 ENP INP; JP5 EPN DFT
Active low	JP6 ENP INP; JP5 EPN DFT	JP6 ENP INP; JP5 EPN DFT

Communications Termination jumper
120 ohm termination JP3 1
No termination 1
JP3 1
RS485
S G A B S
P3

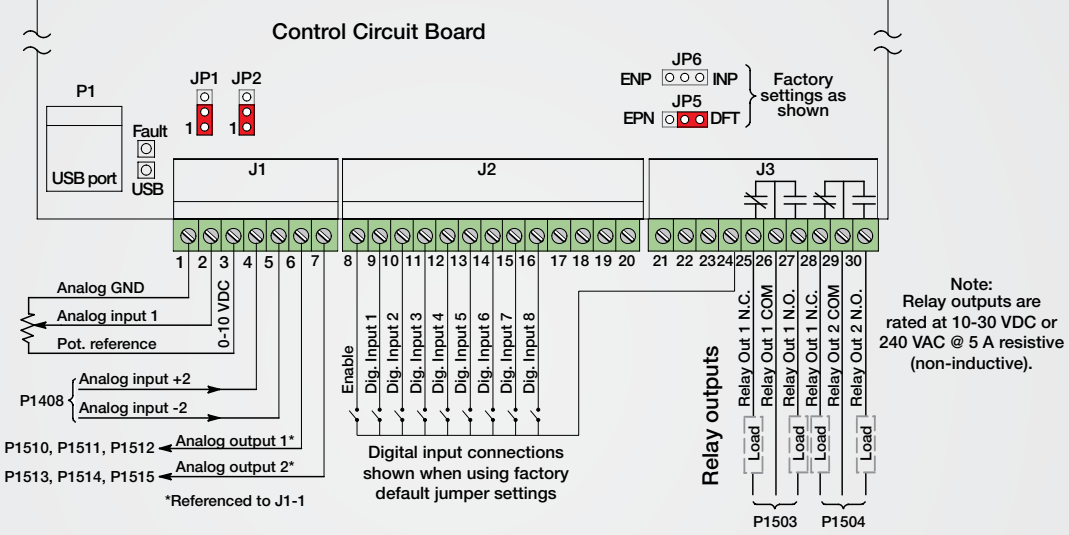

Note: Relay outputs are rated at 10-30 VDC or 240 VAC @ 5 A resistive (non-inductive).

Digital Outputs

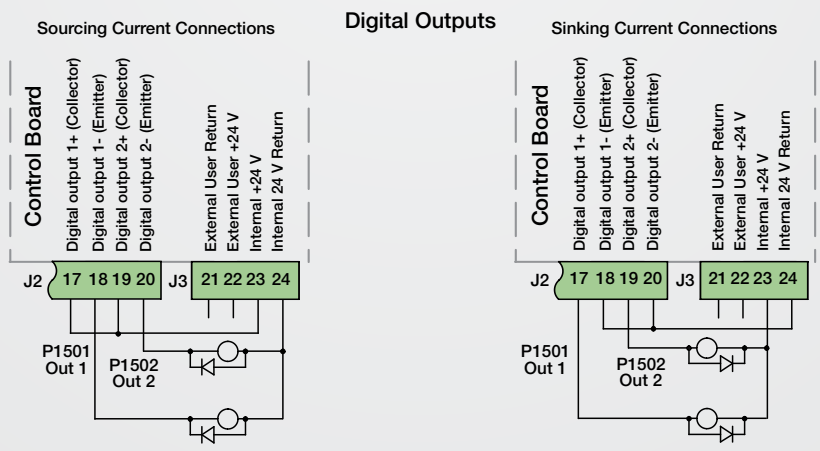

Note: Digital outputs are rated at 24 VDC @ 60 mA resistive (non-inductive).

Keypad Components

The keypad is used to program the control parameters, to operate the motor and to monitor the status and outputs of the control by accessing the display options, the diagnostic menus and the fault log. Additionally, drive parameters can be stored in the keypad for future retrieval.

Display Features

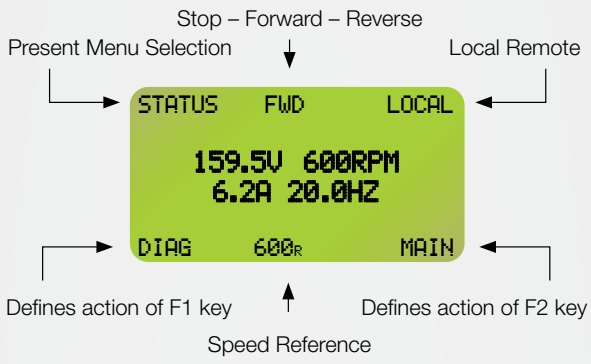

Indicator Lights:
(On when indicated Key is active)

FWD & REV: Green light indicator.

STOP: Red light indicator

JOG: Jog Speed Selected Green light indicator

Display Diagnostics –
I/O Status
I/O Function configuration
Modified Parameters
Control Operation Data
Custom Units
Fault Display – 10 Faults with Time Stamp

F2 – Clears faults or undo parameter edit changes or function indicated by text displayed directly above key.

▲ Up Arrow ◀ Left Arrow
▼ Down Arrow ▶ Right Arrow

Moves cursor to select menu choices.

LOCAL/REMOTE – Switches between local and remote modes.

HELP – Provides help at each display screen, setup parameter and fault. Press to view/close help information.

JOG – Initiates Jog mode. Press FWD or REV for motion. Only in local mode.

FWD – When pressed, initiates a forward direction run command.

Indicator Lights – (on indicated key)
STOP key with red light indicator.
FWD key with green light indicator.
REV key with green light indicator.
JOG key with green light indicator.

Keypad Display – Displays status Information during Local or Remote operation. It also displays information during parameter setup and fault or Diagnostic information.

F1 – Alternates or "toggles" between the last two menu choices or function indicated by text displayed directly above key.

ENTER – Press ENTER to save parameter value changes. In the display mode the ENTER key is used to directly set the local speed reference. It is also used to select other operations when prompted by the keypad display.

MENU/ESC – Selects the menu display when viewing status. The following menu items are shown: Status, Basic Params, Advanced Prog, Event Log, Diagnostics and Display Options. Backs up one level for other screens.

REV – When pressed, initiates a reverse direction run command.

STOP – Initates a stop command. Note: Pressing the stop key twice in succession will immediately disable the drive placing the motor in a coast stop condition.

Auto Tuning Procedures for Open Vector and V/F Control

(Note: All procedures require that load be decoupled from motor shaft. See details below if this is not possible.

For Open Vector Control Type:

1) Press MENU.
Scroll to BASIC PARAMS.
Press ENTER.

At this point the display shows CONTROL TYPE F1601, – the default value is "V/F Control" – press ENTER to change the setting to Open Vector C1601, – press ENTER.

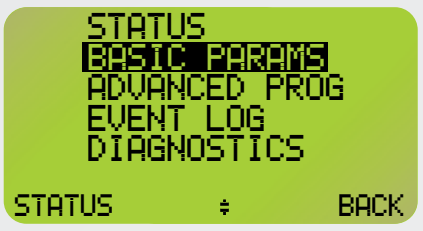

2) Press the DOWN Arrow key and enter values from the motor nameplate for each of the following "MOTOR DATA" parameters. Press ENTER to begin editing – after each value is programmed, press ENTER then DOWN arrow for the next item.

- MOTOR RATED HP
- MOTOR RATED VOLT
- MOTOR RATED AMPS
- MOTOR MAG AMPS*
- MOTOR RATED SPD
- MOTOR RATED FREQ

*If this is not shown on the motor nameplate, use the formula:

MOTOR MAG AMPS = 0.4 X MOTOR RATED AMPS.

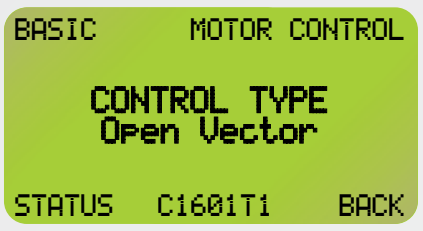

3) CALC MOTOR MODEL – press ENTER – select "Yes" – press ENTER

4) After CALC MOTOR MODEL is complete, Press F2 to exit MOTOR DATA and BASIC PARAMS to return to the MENU.

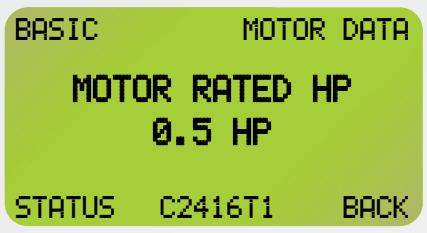

5) ENABLE DRIVE, (close J2-8 – J3-24 circuit).

6) Scroll to ADVANCED PROG – press ENTER.

7) Scroll to LEVEL 2 BLOCKS – press ENTER

8) Scroll to AUTO TUNE – press ENTER.

9) Skip ANA OFFSET TRIM – Scroll to ONE-STEP TUNING – press ENTER – select "Yes" – press ENTER. The ONE-STEP TUNING will take approx. 3-4 minutes to complete.

10) After the static portion of AUTO TUNE is complete, the display will alternately show STATIC TEST DONE – ROTARY FOLLOW and PRESS ENTER FOR FLUX CUR TUNE. Select one of the following:

a) if the motor is coupled to the load, press F2 to exit AUTO TUNING

b) If the motor is not coupled to the load, press ENTER to begin rotation tuning. The first test is "FOR FLUX CUR TUNE" – press ENTER.

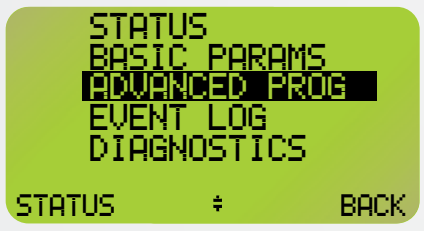

11) After "FLUX CUR TUNE" TEST PASSED – press ENTER for "MEASURE Xm(ROT)"

12) After "MEASURE Xm(ROT)" TEST PASSED – press ENTER for "END OF TEST".

13) PRESS F2 three times to return to MENU – press F1 to show STATUS display.

14) Couple motor to load and run " SPEED LOOP TUNE" to get a better response or manually tune the speed loop using Speed Prop Gain (P1635), Speed Int Gain (P1636) and Speed Diff Gain (P1637)

OPEN VECTOR AUTO TUNE COMPLETE

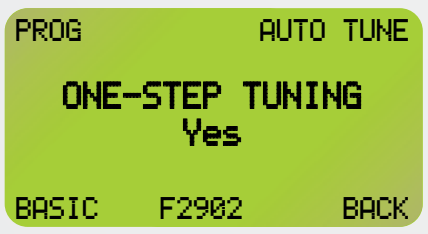

For V/F Control Type:

1) Press MENU.
Scroll to BASIC PARAMS.
Press ENTER.

At this point the display shows CONTROL TYPE F1601, – the default value is "V/F Control" – If needed, press ENTER to change the setting to V/F Control C1601, – press ENTER.

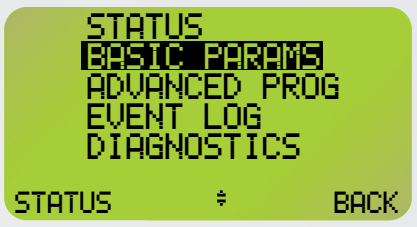

2) Press the DOWN Arrow key and enter values from the motor nameplate for each of the following "MOTOR DATA" parameters. Press ENTER to begin editing – after each value is programmed, press ENTER then DOWN arrow for the next item.

- MOTOR RATED HP
- MOTOR RATED VOLT
- MOTOR RATED AMPS
- MOTOR MAG AMPS*
- MOTOR RATED SPD
- MOTOR RATED FREQ

*If this is not shown on the motor nameplate, use the formula:

MOTOR MAG AMPS = 0.4 X MOTOR RATED AMPS.

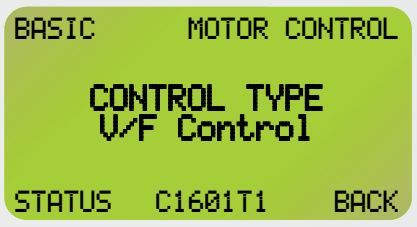

3) CALC MOTOR MODEL – press ENTER – select YES – press ENTER

4) After CALC MOTOR MODEL is complete, Press F2 to exit MOTOR DATA and BASIC PARAMS to return to the MENU.

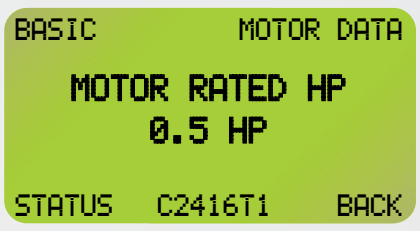

5) ENABLE DRIVE, (close J2-8 – J3-24 circuit).

6) Scroll to ADVANCED PROG – press ENTER.

7) Scroll to LEVEL 2 BLOCKS – press ENTER

8) Scroll to AUTO TUNE – press ENTER.

9) Skip ANA OFFSET TRIM – Scroll to STATOR R1 TUNE – press ENTER – select "Yes" – Press ENTER. After STATOR R1 TUNE is complete – (TEST PASSED), press ENTER to END (This is a static tune, motor will not rotate).

10) PRESS F2 three times to return to MENU – press F1 to show STATUS display.

V/F CONTROL AUTO TUNE COMPLETE

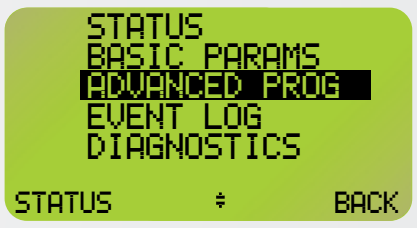

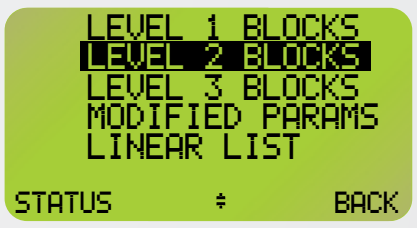

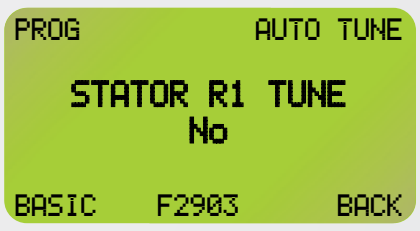

CD-ROM

The CD-ROM, which is inserted in the cover, contains the user manual of the SPX25 and SPX32 hose pumps. The CD-ROM also contains a replacement instruction for the pump hose. This replacement instruction is only for users that are familiar with the replacement procedures in the user manual.

System requirements

The program on CD-ROM requires a PC with the following minimum system requirements:

- Pentium I 100 MHz
- 64 MB internal memory
- 256 colors

The following software must be installed on the PC:

- Adobe Acrobat Reader
- Internet Explorer

How to use the CD-ROM

1 Put the CD-ROM in the CD drive.
2 Close the CD drive.
The CD-ROM will start automatically.
3 Wait until the various language versions appear on screen.
4 Select the required language (click 1x with the left mouse button).
The program Adobe Acrobat Reader will automatically start and the required user manual appears on screen.

Shortcuts

In the left margin you will find the various chapters and paragraphs. These can be accessed directly by clicking on the required chapter or paragraph.
In the text you will find hyperlinks to chapters or paragraphs. These hyperlinks are linked with the required chapters or paragraphs. By clicking a shortcut the required chapter or paragraph appears on screen.

Hose pump series
SPX25 and SPX32

Manual

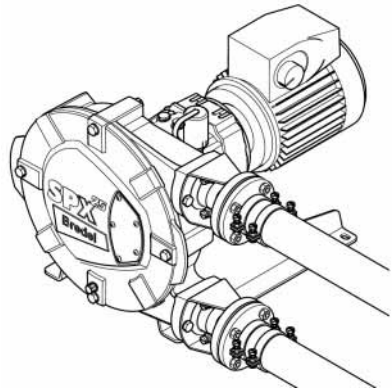

© 2010 Watson-Marlow Bredel B.V.

All rights reserved.
The information provided herein may not be reproduced and/or published in any form, by print, photoprint, microfilm or any other means whatsoever (electronically or mechanically) without the prior written authorization of Watson-Marlow Bredel B.V.

Information within this manual is subject to change without notice. Neither Watson-Marlow Bredel B.V. nor any other representatives will be liable for damages arising out of or in connection with the use of this manual. This is a comprehensive limitation of liability that applies to all damages of any kind, including (without limitation) compensatory, direct, indirect or consequential damages, loss of data, income or profit, loss of or damage to property and claims of third parties

Watson-Marlow Bredel B.V. is providing this manual and its contents on an "as is" basis and makes no representations or warranties of any kind with respect to this manual or its contents. Watson-Marlow Bredel B.V. disclaims all such representations and warranties. In addition Watson-Marlow Bredel B.V. does not represent or warrant that the information accessible via this manual is accurate, complete or current.

Names, trade names, brands, etc. used by Watson-Marlow Bredel B.V. may not, as per the legislation concerning the protection of trade names, be considered as available.

CONTENTS

1 GENERAL

1.1 How to use this manual 8
1.2 Original instructions 8
1.3 Other supplied documentation 8
1.4 Service and support 8
1.5 Used products and the environment 9

2 SAFETY

2.1 Pictograms 10
2.2 Intended use 10
2.3 Use in potentially explosive atmospheres 11
2.4 Responsibility 11
2.5 Qualification of the user 11
2.6 Regulations and instructions 12

3 WARRANTIES

4 DESCRIPTION

4.1 Identification of the product 14
4.1.1 Identification of the product 14
4.1.2 Identification of the pump 14
4.1.3 Identification of the gearbox 14
4.1.4 Identification of the electric motor 15
4.1.5 Identification of the frequency controller 15
4.1.6 Identification of the pump hose 15
4.2 Construction of the pump 16
4.3 Operation of the pump 17
4.4 Pump hose 18
4.4.1 General 18
4.4.2 Hose compression force adjustment (shimming) 20
4.4.3 Lubrication and cooling 20
4.5 Gearbox 20
4.6 Electric motor 21
4.7 Motor frequency controller 21
4.8 Available options 21

5 INSTALLATION
5.1 Unpacking ... 22
5.2 Inspection ... 22
5.3 Installation conditions ... 22
5.3.1 Ambient conditions ... 22
5.3.2 Set-up ... 22
5.3.3 Pipework ... 23
5.3.4 Variable Frequency Drive ... 25
5.4 Lifting and moving the pump ... 26
5.5 Placing the pump ... 26

6 COMMISSIONING
6.1 Preparations ... 27
6.2 Commissioning ... 28

7 MAINTENANCE
7.1 General ... 29
7.2 Maintenance and periodic inspections ... 29
7.3 Cleaning pump hose ... 31
7.4 Changing lubricant ... 32
7.5 Changing oil in gearbox ... 32
7.6 Replacing pump hose ... 33
7.6.1 Removing pump hose ... 33
7.6.2 Cleaning the pump head ... 36
7.6.3 Fitting the pump hose ... 37
7.7 Exchanging replacement parts ... 40
7.7.1 General ... 40
7.7.2 Replacing pressing shoes ... 40
7.7.3 Replacing seal ring, bearings and wear ring ... 42
7.8 Adjusting hose compression force (shimming) ... 46
7.9 Fitting options ... 48
7.9.1 Fitting a high-level float switch ... 48
7.9.2 Fitting a high and low level float switch ... 49
7.9.3 Fitting revolution counter ... 50

8 STORAGE
8.1 Hose pump ... 52
8.2 Pump hose ... 52

9 TROUBLESHOOTING

10 SPECIFICATIONS

10.1 Pump head 58
10.1.1 Performance 58
10.1.2 Materials 59
10.1.3 Surface treatment 60
10.1.4 Lubricant table pump 60
10.1.5 Weights 61
10.1.6 Torque figures 62
10.1.7 Shims specifications 64
10.2 Lubricant table gearbox 65
10.3 Gearbox 67
10.4 Electric motor 67
10.5 Frequency controller 67
10.6 Parts list 68
10.6.1 Overview 68
10.6.2 Cover assembly 69
10.6.3 Rotor assembly 70
10.6.4 Pump housing assembly 71
10.6.5 Support assembly 72
10.6.6 Flange assembly 73
10.6.7 Lubricants 74

1 GENERAL

1.1 How to use this manual

This manual is intended as a reference book by means of which qualified users are able to install, commission and maintain the hose pumps mentioned on the front cover.

1.2 Original instructions

The original instructions for this manual have been written in English. Other language versions of this manual are a translation of the original instructions.

1.3 Other supplied documentation

Documentation of components such as electric motors, gearboxes, etc. is normally not included in this manual. But if additional documentation is supplied, you must follow the instructions in this additional documentation.

1.4 Service and support

For information with respect to specific adjustments, installation, maintenance or repair jobs which fall beyond the scope of this manual, contact your Watson-Marlow Bredel representative. Make sure you have the following data at hand:

- Serial number hose pump
- Article number pump hose
- Article number gearbox
- Article number electric motor
- Article number frequency controller

You will find these data on the identification plates or stickers of the pump head, the pump hose, the gearbox and the electric motor. Refer to § 4.1.1.

1.5 Used products and the environment

	CAUTION Always observe the local rules and regulations with respect to processing (non reusable) parts of the hose pump.

Inquire with your local government about the possibilities for reuse or environment friendly processing of packaging materials, (contaminated) lubricant and oil.

2 SAFETY

2.1 Pictograms

In this manual the following symbols are used:

⚠	**WARNING** Procedures which, if not carried out with the necessary care, may result in serious damage to the hose pump or in serious bodily harm.

⚠	**CAUTION** Procedures which, if not carried out with the necessary care, may result in serious damage to the hose, the pump, the surrounding area or the environment.

ℹ	Remarks, suggestions and advice.

Ex	**WARNING** Procedures, remarks, suggestions or advice, which refer to use in potentially explosive atmospheres in accordance with the ATEX Directive 94/9/EC.

2.2 Intended use

The hose pump is exclusively designed for pumping suitable products in defined applications.
The manufacturer cannot be held responsible for damage or harm resulting from misapplication or negligence. If you want to change the application of your hose pump from its originally intended service, contact your Watson-Marlow Bredel representative first to confirm suitability.

2.3 Use in potentially explosive atmospheres

The *pump head* and *gearbox* mentioned in this manual are suitable for use in a potentially explosive atmosphere. The pumps mentioned meet the requirements as stated in the European Directive 94/9/EC (ATEX Directive).
The pumps belong to:

- Group II Appliances, category 2 GD c k T4

2.4 Responsibility

The manufacturer does not accept any responsibility for damage or harm caused by not (strictly) observing the safety regulations and instructions in this manual and the also supplied documentation, or by negligence during installation, use, maintenance and repair of the hose pumps mentioned on the front cover. Depending on the specific working conditions or accessories used, additional safety instructions can be required.
Immediately contact your Watson-Marlow Bredel representative, if you noticed a potential danger while using your hose pump.

⚠	**WARNING** The user of the hose pump is always fully responsible for observing the local valid safety regulations and directives. Observe these safety regulations and directives when using the hose pump.

2.5 Qualification of the user

The installation, use and maintenance of the hose pump is only reserved for well trained and qualified users. Temporary staff and persons in training may only use the hose pump under the supervision and responsibility of well trained and qualified users.

2.6 Regulations and instructions

- Everyone who will work with the hose pump must be familiar with the content of this manual and observe the instructions carefully.
- The user must ensure that this manual, as well as all other documentation relating to pump components, is made readily accessible to anyone who is expected to work with or service the hose pump.

3 WARRANTIES

The manufacturer offers a 2-year warranty on proper workmanship of all parts of the hose pump. Exclusion is made for normal wear and tear of consumables, such as pump hoses, lubricant, hose clamps, pressing shoes, ball bearings, wear ring, and seals, or parts which have been misused or damaged through negligence.

This manufacturer's warranty is null and void for any user who has substituted the parts of an alternate manufacturer into a Watson-Marlow Bredel hose pump.

Damaged parts may be returned to the manufacturer for warranty analysis. If failure was determined caused by faulty workmanship, the manufacturer will repair or replace the faulty component.
The parts must be accompanied by a fully completed and signed health and safety form, as present in the back of this manual. The form must be applied to the outside of the shipping carton.
Parts which have been contaminated or which have been corroded by chemicals or other substances, which can pose a health risk, must be cleaned before they are returned to the manufacturer. Furthermore, it should be indicated on the health and safety form, which specific cleaning procedure has been followed, and it should be indicated that the equipment has been decontaminated. The safety form is required at all items, even if the parts have not been used.

Warranties purporting to be on behalf of Watson-Marlow Bredel B.V. made by any person, including representatives of Watson-Marlow Bredel B.V., its subsidiaries, or its distributors, which do not accord with the terms of this warranty shall not be binding upon Watson-Marlow Bredel B.V. unless expressly approved in writing by a Director or Manager of Watson-Marlow Bredel B.V.

4 DESCRIPTION

4.1 Identification of the product

4.1.1 Identification of the product

The hose pump can be identified based on the identification plates or stickers on:

A: Pump head
B: Gearbox
C: Electric motor
D: Pump hose
E: Frequency controller (option)

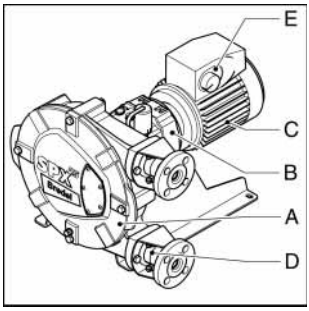

4.1.2 Identification of the pump

The identification plate on the pump head contains the following data:

A: Pump model
B: Serial number

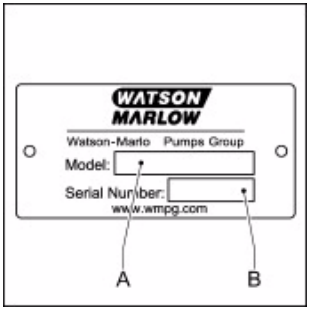

4.1.3 Identification of the gearbox

The identification plate on the gearbox contains the following data:

A: Article number
B: Serial number
C: Type number
D: Reduction
E: Number of revolutions per minute
F: Oil type upon delivery

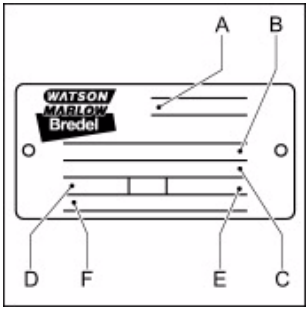

4.1.4 Identification of the electric motor

The identification plate on the electric motor contains the following data:

A: Type number
B: Serial number
C: Article number
D: Mains
E: Frequency
F: Speed
G: Power
H: Power factor
I: Current

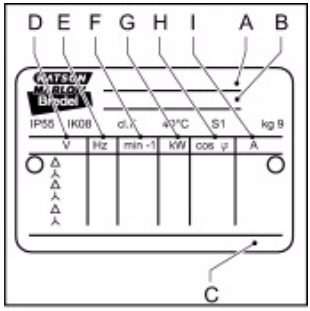

4.1.5 Identification of the frequency controller

The identification plate on the Watson-Marlow Bredel Variable Frequency Drive (VFD) contains the following data:

A: Article number

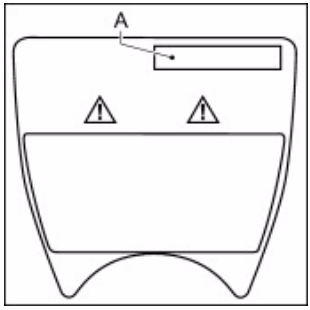

4.1.6 Identification of the pump hose

The identification sticker on the pump hose contains the following data:

A: Reorder number
B: Internal diameter
C: Type of material of inner liner
D: Maximum permissible working pressure
E: Production code

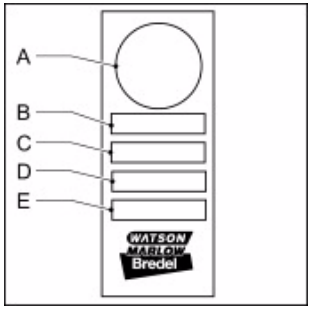

4.2 Construction of the pump

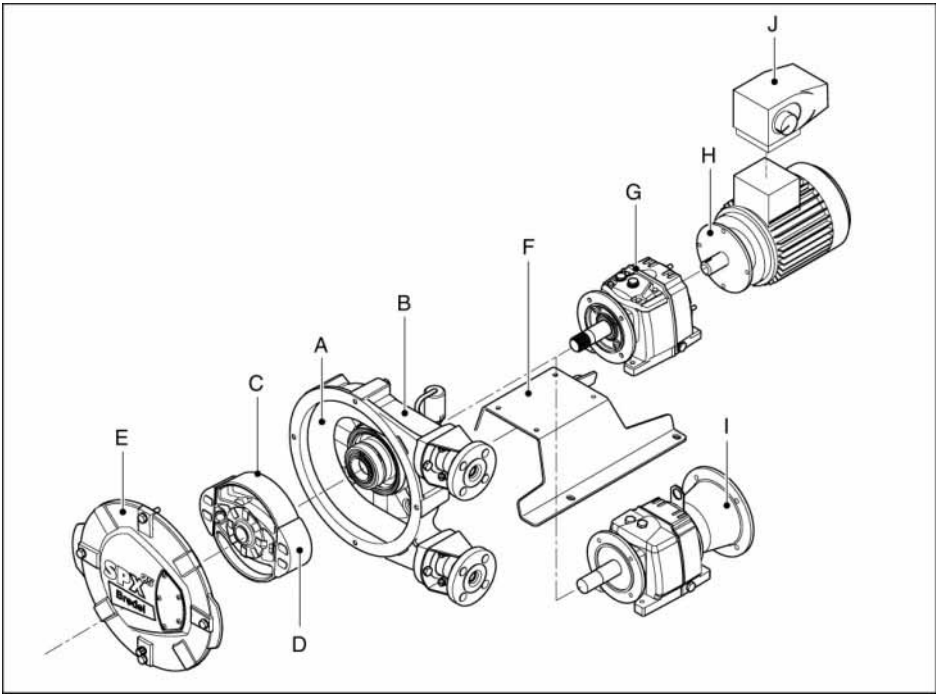

A: Pump hose
B: Pump housing
C: Rotor
D: Pressing shoes
E: Cover
F: Support
G: Gearbox
H: Electric motor
I: Adapter without motor (option)
J: Frequency controller (option)

4.3 Operation of the pump

The heart of the pump head consists of a specially constructed pump hose (A), which lies at the inside of the pump housing (B) against the track. Both ends of the hose are connected to the suction and discharge lines by means of a flange construction (C). A bearing-mounted rotor (D) with two facing pressing shoes (E) is in the center of the pump head.

In phase 1 the lower pressing shoe compresses the pump hose by the rotational movement of the rotor, forcing the fluid through the hose. As soon as the pressing shoe has passed, the hose recovers to its original shape due to the mechanical properties of the material.

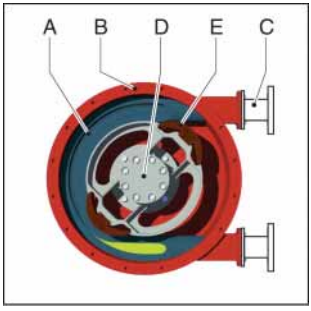

In phase 2 the product is drawn into the hose by the (continuous) turning motion of the rotor.

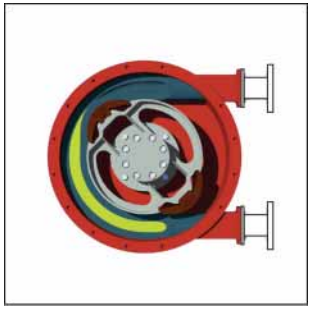

In phase 3, the second pressing shoe will subsequently compress the pump hose. Due to the continuous rotating movement of the rotor not only new product is sucked in, but also the already present product is pressed out by the pressing shoe. When the first pressing shoe runs from the pump hose, the second pressing shoe has already closed the pump hose and the product is prevented from flowing back. This method of liquid displacement is also known as the "positive displacement principle".

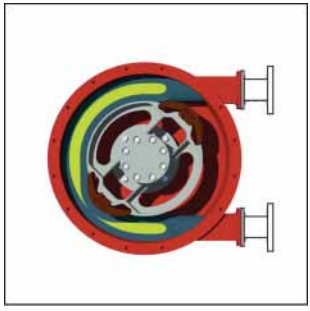

4.4 Pump hose

4.4.1 General

The pump hose is made of special rubbers, reinforced with nylon cords and is constructed as follows:

A: Outer extruded layer made of natural rubber
B: Four nylon reinforcement layers
C: Inner extruded liner

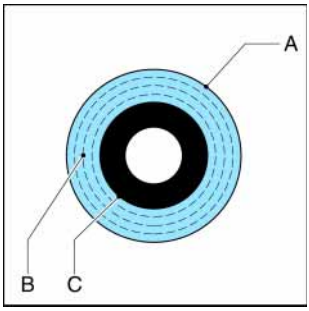

The pump hose liner material should be chemically resistant with the product to be pumped. Dependent on the specific requirements of your application a corresponding pump hose must be selected. For each pump model various hose types are available.
The material of the inner liner of the pump hose determines the hose type. Each hose type is marked by a unique color code.

Hose type	Material	Color code
NR	Natural rubber	Purple
NBR	Buna N	Yellow
EPDM	EPDM	Red
CSM	Hypalon©	Blue

Natural Rubber*
Always the first choice hose. A highly dynamic material, which has excellent abrasion resistance and mechanical strength, and is generally resistant to diluted acids and alcohols.
Max. liquid temperature 80 °C (175 °F).
Min. temperature -20 °C (-5 °F).

Buna N*
A highly abrasion proof and wear resistant material that is generally resistant to oils, fats, alkaline, and detergents. Suitable for a wide range of food handling and meets FDA and 3A standards.
Max. liquid temperature 80 °C (175 °F).
Min. temperature -10 °C (15 °F).

EPDM*

Good chemical resistance especially to concentrated acids, ketones, and alcohols.
Max. liquid temperature 90 °C (195 °F).
Min. temperature -10 °C (15 °F).
Consult Watson-Marlow Bredel technical services for details on higher temperature operation, up to 90 °C with EPDM.

Hypalon© *

Good chemical resistance for strong oxidizing products like concentrated acids and oxygen generating substances.
Max. liquid temperature 80 °C (175 °F).
Min. temperature -10 °C (15 °F)
Consult Watson-Marlow Bredel technical services for RPM limitations when using Hypalon©.

i	* Consult your Watson-Marlow Bredel representative for more detailed information about the chemical and temperature resistance of pump hoses.

The Watson-Marlow Bredel pump hoses have been carefully machined, therefore there are minimum tolerances in wall thickness. This is very important to guarantee the correct compression of the pump hose, because:

- When the compression is too high, it creates a too high load of the pump and pump hose, which may result in a reduction of the life of the pump hose and bearings.
- When the compression is too low this will result in high velocity backflow (slip). Backflow results in a reduction of pump performance, hydraulic efficiency, and negatively impact the life of the pump hose.

4.4.2 Hose compression force adjustment (shimming)

In order to achieve optimal life of the pump hose, the compression force of the pump hose can be adjusted by placing a number of shims under the pressing shoes. The shims (A) are fitted between the rotor (B) and the pressing shoe (C). The number of shims will vary for each discharge pressure situation.

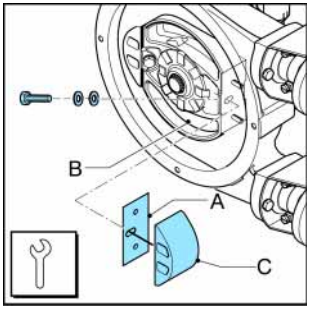

The paragraph 7.8 describes how to select and install the shims.

4.4.3 Lubrication and cooling

The pump head, in which the rotor and pump hose can be found, is filled with Watson-Marlow Bredel Genuine Hose Lubricant. This lubricant lubricates the movement between the hose and the pressing shoes and dissipates the generated heat via the pump housing and the cover.

The lubricant is food grade. Refer to § 10.1.4 for the required quantity and NSF registration.

ℹ	Consult your Watson-Marlow Bredel representative for lubrication recommendations when operating the hose pump below 2 rpm.

4.5 Gearbox

The hose pump types described in this manual use co-axial gearbox units.
The gearboxes are fitted with a foot rest. The outgoing shaft has been fitted with a spline.

4.6 Electric motor

If the electric motor has been standard supplied by the manufacturer, it is an integrated standardized squirrel-cage motor. Refer to § 10.3 for specifications. If the pump is to be used in potentially explosive atmospheres, contact your Watson-Marlow Bredel representative.

4.7 Motor frequency controller

Refer to the also supplied documentation of the supplier and § 10.5. If the pump is to be used in potentially explosive atmospheres, contact your Watson-Marlow Bredel representative.

4.8 Available options

The following options are available for the hose pump:

- High (lubricant) level float switch
- Low (lubricant) level float switch
- Revolution counter
- Epoxy pressing shoes
- Stainless steel 316 flanges, flange brackets, hose clamps, supporting and mounting articles
- Special configuration for use in potentially explosive atmospheres.

i	The high level float switch is mandatory for use in potentially explosive atmospheres. If the pump is to be used in potentially explosive atmospheres, contact your Watson-Marlow Bredel representative.

5 INSTALLATION

5.1 Unpacking

When unpacking carefully follow the instructions as given on the packaging or on the hose pump.

5.2 Inspection

Check that your delivery is correct and check it for any transport damage. Refer to § 4.1.1. Report any damage immediately to your Watson-Marlow Bredel representative.

5.3 Installation conditions

5.3.1 Ambient conditions

Make sure that the hose pump is in an area where the ambient temperature during operation is not lower than -20 °C (-4 °F) and not higher than +45 °C (+113 °F). Note that some motors may not be suitable for this entire range of temperature. Consult your motor manufacturer's documentation for suitability of the motor in your ambient conditions.

5.3.2 Set-up

- The pump materials and protective layers are suitable for indoor set-up and a protected outdoor set-up. Under certain conditions the pump is suitable for limited outdoor set-up or a salty or aggressive atmosphere. Consult your Watson-Marlow Bredel representative for more information.
- Make sure that the floor surface is horizontal and has a maximum slope of 1 mm per meter (0.012" per foot). Bolt the pump down using the mounting points provided.
- Make sure that there is sufficient room around the pump to carry out the necessary maintenance activities.

- Make sure that the room is sufficiently ventilated, so that the heat developed by the pump and drive can be discharged. Keep some distance between the ventilation cover of the electric motor and wall to enable the supply of necessary cooling air.
- A qualified electrician who is fully conversant with the appropriate regulations should connect the electric motor.
- Motor wiring: Follow the guidelines issued by the motor manufacturer. A current overload relay should be fitted to a contact breaker. Connect the motor in accordance with the manufacturer's instructions. When a thermal protection switch is fitted in the motor, the leads will be found in the motor terminal box. They should be connected to stop the pump if the switch changes state.
- A qualified electrician who is fully conversant with the appropriate regulations should connect liquid level switches and/or revolution counter.

5.3.3 Pipework

When determining and connecting suction and discharge lines consider the following points:

- **Do** keep delivery and suction lines as short and direct as possible.
- Keep the piping at a minimum equal to or greater than the bore size of the pump. Increase the bore size of the pipe work when the duty fluid has a high velocity or inertia. This will help keep friction and impulse losses to a minimum. Where critical velocities are a concern consult your Watson-Marlow Bredel representative.
- **Do** limit the presence of sharp bends in the process lines. Make sure that the radius of any bends is as large as possible (R=4d to 5d). It is recommended to use Y-connections instead of T-connections.

- Consult your Watson-Marlow Bredel representative for recommendations on mounting pulsation dampening devices. A pulsation dampener and/or inlet pulse accumulator may be necessary if the relative density and pump speed is high and the line lengths are long.
- The self-priming and positive displacement nature of peristaltic pumps means that valves are not required. If for whatever reason, valves are fitted into the system, they must have a straight fluid path and cause minimum restriction to flow in the pumping circuit. Note that check valves directly in the process stream may increase pulsation and negatively impact hose life.
- For ease of hose changing and some pulsation suppression, it is recommended to use a segment of flexible hose between the pump flange and hard piping of the suction and/or discharge line. A segment of three quarters (3/4) of the pump hose length for the flexible pipe work is recommended. Watson-Marlow Bredel also recommends installing an isolation valve and pipe-drain in the suction and discharge pipe work to allow fluid isolation and drainage from the pump during maintenance. Following these recommendations will help minimize process fluid exposure by maintenance personnel.
- For the flexible hoses select compatible materials and ensure the installation is suited for the design pressure of the system.
- Prevent any possibilities of exceeding the maximum working pressure of the hose pump. Refer to § 10.1.1. If necessary install a pressure

relief valve or shutdown switch. Consult your Watson-Marlow Bredel representative for more detailed information.

⚠	**CAUTION** Consider the maximum permissible working pressure on the discharge side. Exceeding the maximum working pressure may lead to serious damage to the pump.

- Make sure that the maximum forces on the flanges are not exceeded. The permissible loads are given in the following table.

Maximum permissible loads on the pump flange			
Force	**Unit**	**SPX25**	**SPX32**
F1	N	600	600
	lbf	135	135
F2	N	500	500
	lbf	112	112
F3	N	200	200
	lbf	45	45

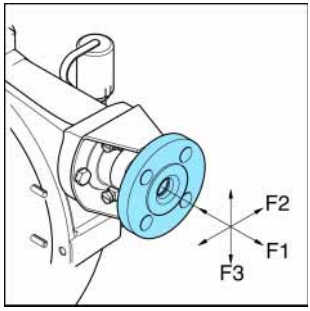

5.3.4 Variable Frequency Drive

⚠	**WARNING** A Watson-Marlow Bredel VFD that is fitted *without the control switch* starts automatically when power is applied.

If the hose pump is fitted with a Watson-Marlow Bredel Variable Frequency Drive (VFD), consider the following points:

- Take precautions so the motor does not re-start automatically after an unscheduled stop.
  In the event of a power or mechanical failure, the Watson-Marlow Bredel VFD controls the motor to stop. When the cause of the failure is

removed, the motor can restart automatically. The automatic restart is dangerous to certain installations of the pump.

- All control cables outside the enclosure must be shielded and have a cross sectional area between 0.22 and 1 mm^2. The shielding must be connected to earth at both ends.

5.4 Lifting and moving the pump

For lifting and moving the *pump head*, it has been fitted with a lifting strip. This lifting strip (A) is fitted on the rear of the pump head. For the weights, refer to § 10.1.5.

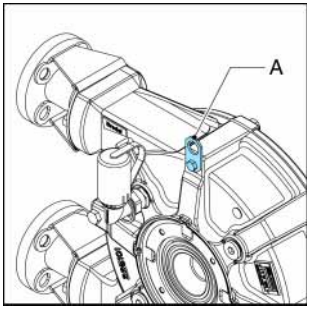

The complete hose pump, i.e. pump head, gearbox and electric motor, must be lifted using the lifting strip of the pump head plus additional support using suitably rated straps or slings (A). For the weights, refer to § 10.1.5.

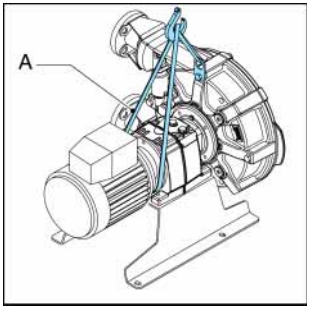

⚠	**WARNING** If the pump is to be lifted ensure that all standard lifting practices are adhered to and carried out by qualified personnel only.

5.5 Placing the pump

Position the pump on a horizontal surface. Use suitable anchor bolts to attach the pump to the floor surface.

	SPX25	SPX32
Thread	7/16-14 UNC	7/16-14 UNC

6 COMMISSIONING

6.1 Preparations

⚠	**WARNING** A Watson-Marlow Bredel VFD that is fitted *without the control switch* starts automatically when power is applied.

⚠	**WARNING** Disconnect and lock the power supply to the pump drive before any work is carried out. Wait two minutes to make sure that the capacitors have discharged. This is necessary when the motor is fitted with a Variable Frequency Drive (VFD) and has single phase power supply.

1. Connect the electric motor and, if present, the frequency controller in conformance with the locally applicable rules and regulations. Refer to § 5.3.4. Have the electrical installation work be carried out by qualified personnel.

2. Check that the lubricant level is above the minimum level line in the inspection window. If necessary refill Watson-Marlow Bredel Genuine Hose Lubricant via the breather/vent plug. See also § 7.4.

3. Check the rotation of the rotor. The rotational direction of the rotor must match the configuration of suction and discharge piping.

4. Check that the correct number of shims corresponds with your application. Refer to § 10.1.7.
   For adjusting the compression force of the hose, refer to § 7.8.

6.2 Commissioning

1. Connect the pipework. Make sure that there are no obstructions such as closed valves.

2. Switch on the hose pump.

3. Check the rotation of the rotor.

4. Check the capacity of the hose pump. If the capacity differs from your specification, follow the instructions in chapter 9 or consult your Watson-Marlow Bredel representative.

5. Check the capacity range of the frequency controller. In case of any deviations consult the documentation of the supplier.

6. Check the hose pump in accordance with points 2 to 4 of the maintenance table from § 7.2.

7 MAINTENANCE

7.1 General

⚠	**WARNING** Disconnect and lock the power supply to the pump drive before any work is carried out. Wait two minutes to make sure that the capacitors have discharged. This is necessary when the motor is fitted with a Watson-Marlow Bredel Variable Frequency Drive (VFD) and has single phase power supply.

⚠	**WARNING** Only use original Watson-Marlow Bredel parts when maintaining the hose pump. Watson-Marlow Bredel cannot guarantee correct operation and any consequential damage that occurs from the use of non-original Watson-Marlow Bredel components. See also chapters 2 and 3.

7.2 Maintenance and periodic inspections

The following diagram shows the maintenance and periodic inspections that need to be carried out on the hose pump to guarantee an optimal safety, operation and life of the pump.

Point	Action	To be carried out	Remark
1	Check the lubricant level.	Before startup of the pump and on a scheduled interval during operation.	Make sure that the lubricant level is above the minimum level line in the inspection window. If necessary refill the lubricant. See also § 7.4.
2	Check the pump head for any leakage of lubricant around the cover, the flanges and the rear of the pump head.	Before startup of the pump and on a scheduled interval during operation.	See § 9.
3	Check the gearbox on any leakage.	Before startup of the pump and on a scheduled interval during operation.	In case of leakage consult your Watson-Marlow Bredel representative.
4	Check pump for deviating temperature or strange noises.	On a scheduled interval during operation.	See § 9.
5	Check pressing shoes for excessive damage.	When replacing the pump hose.	See § 7.6.
6	Internal cleaning of the pump hose.	Cleaning of the system or product change.	See § 7.3.
7	Replacing pump hose.	Preventive, this means after 75% of the hose life of the first hose.	See § 7.6.
8	Changing lubricant.	After every 2nd hose change or after 5,000 service hours, whichever comes first or after hose rupture.	See § 7.4
9	Changing oil in gearbox.	Refer to lubricant table in § 10.2.	See § 7.5.
10	Replacing pump seal.	If necessary.	See § 7.7.3.
11	Replacing wear ring.	If necessary.	See § 7.7.3.

Point	Action	To be carried out	Remark
12	Replacing pressing shoes.	Wear on the running surface.	See § 7.7.2.
13	Replacing bearings.	If necessary.	See § 7.7.3.
		In potentially explosive atmospheres preventive after 20,000 hrs. service or when damage is suspected.	See § 7.7.2. Exclusively applicable in potentially explosive atmospheres (Group II Appliances, category 2 GD c k T4).
14	Cleaning the hose pump.	In potentially explosive (dust) atmospheres, the dust must be removed regularly.	Exclusively applicable in potentially explosive atmospheres (Group II Appliances, category 2 GD c k T4).

7.3 Cleaning pump hose

Running the pump with clean water can clean the inside of the pump hose. If a cleaning fluid is added to the water, attention must be given to its compatibility with the hose liner material, and also the temperature at which the cleaning procedure will be performed. Sometimes a cleaning sponge can be very helpful.
With many products, it is necessary to clean the pump hose immediately once the pump is stopped to avoid sedimentation and/or hardening of the product within the hose that can cause damage upon restart.

7.4 Changing lubricant

1. Place a tray (A) under the drain plug in the cover of the pump. Remove the drain plug (B). Catch the lubricant from the pump housing in the tray. Position the drain plug and tighten it firmly.

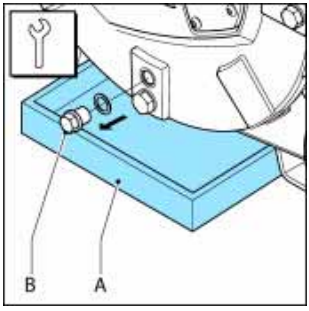

2. The pump housing can be filled with lubricant via the breather/vent (A) on the rear of the pump housing. For this purpose remove the breather cap (B) and position a funnel (C) in the breather. In order to facilitate the filling with lubricant the breather cap (D) on the rear of the pump housing can be removed. Pour the lubricant in the pump housing via the funnel.

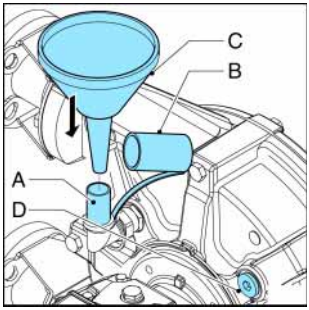

3. Keep on pouring until the lubricant level has risen at least until just above the minimum level line in the inspection window.

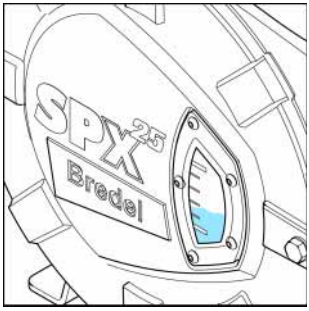

i	For the required quantity of lubricant, refer to § 10.1.4.

7.5 Changing oil in gearbox

1. Isolate the pump from the electrical supply.

2. Remove plug (A) and let the oil run out of the gearbox.

3. The plug (A) is magnetically loaded. In this way metal particles in the oil are pulled to the plug. Clean the plug and remove any metal particles if necessary. Check that the sealing ring is not damaged and replace it if necessary. Place the plug back in the gearbox and tighten it firmly.

4. Remove level plug (B) and filling plug (C) and position a funnel in the hole and fill the gearbox with oil until the oil just comes out of the level plug hole (B). Wait shortly to let out any entrapped air. Place plug (B) and filling plug (C) back and tighten them firmly.

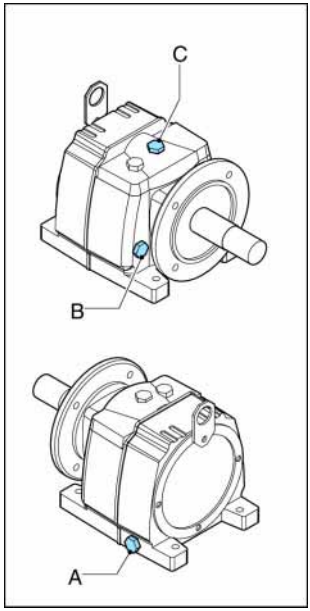

ℹ	For the required lubricant, refer to § 10.2.

⚠	**WARNING** To prevent damage to the gears, do not operate the pump unless proper volume of oil is filled into the gearbox.

5. Switch on the electrical supply to the pump.

7.6 Replacing pump hose

7.6.1 Removing pump hose

⚠	**CAUTION** For all weight and torque adjustment, please refer to the technical information section at the rear of this manual.

1. Isolate the pump from the electrical supply.

2. Close any shut-off valves in both the suction and discharge line to minimize product loss.

3. Place a tray (A) under the drain plug in the bottom of the pump head. The tray must be large enough to contain the lubricant, possibly contaminated with product fluid, from the pump head. Remove the drain plug (B). Catch the lubricant from the pump housing in the tray. Check that the breather vent mounted on the rear is not obscured. Position the drain plug and tighten it firmly.

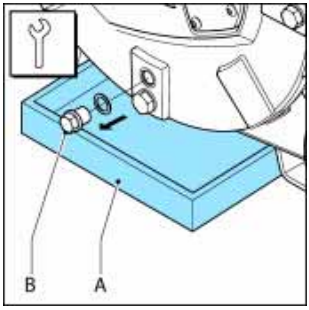

4. Loosen the retaining bolts (A) of both the suction and discharge line (B). Disconnect the suction and discharge lines.

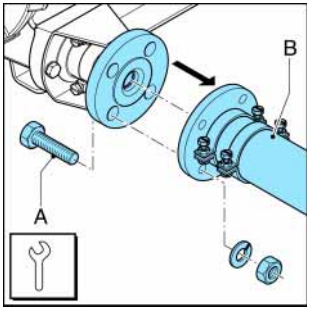

5. Loosen hose clamp (A) of both the inlet and outlet ports by loosening retaining bolt (B).

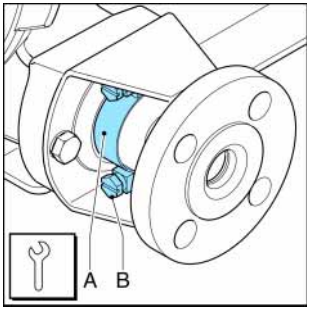

6. Pull the insert (B) from the hose and remove the flanges (A). Carry out this procedure both for the inlet and outlet ports.

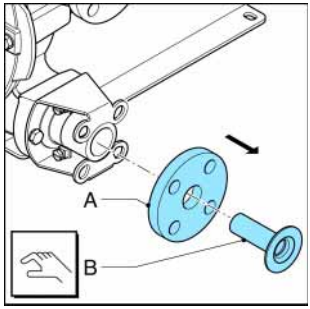

7. Loosen the retaining bolts (A) of the flange bracket (B) and remove the bolts. Slide the flange bracket and the hose clip (C) off the hose. Carry out this procedure both for the inlet and outlet ports.

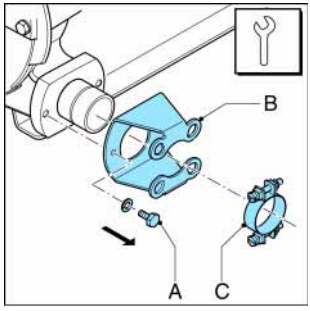

8. Slide off the sealing ring (A). Check that the sealing ring is not deformed or damaged and replace it if necessary. Carry out this procedure both for the inlet and outlet ports.

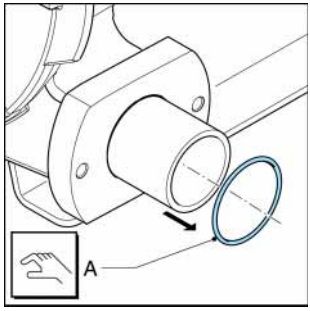

9. Switch on the electrical supply.

⚠	**WARNING** Removal of the hose is a powered process and requires rotation of the pump. Ensure body and tools are clear from moving parts prior to proceeding with hose removal.

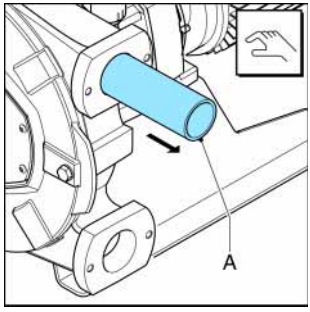

10. Power out the hose (A) from the pump chamber by jogging the drive motor.

⚠	**WARNING** During jogging the drive: - Do not stand in front of the pump ports. - Do not try to guide the hose by hand.

7.6.2 Cleaning the pump head

1. Isolate the pump from the electrical supply.

2. Remove the cover (B) by loosening the retaining bolts (A).

3. Check the sealing ring (C) and replace it if necessary.

4. Rinse the pump head with clean water and remove all residues. Make sure that no rinsing water remains in the pump head.

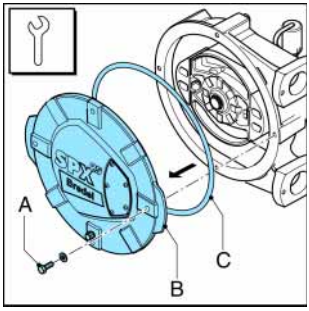

5. Check the pressing shoes for wear or damage and replace them if necessary. Refer to § 7.7.2. Also see the maintenance diagram in § 7.2.

⚠	**CAUTION** When the pressing shoes are worn the compression force of the hose decreases. If the compression force is too low, this results in a loss of capacity by the backflow of the liquid to be pumped. Backflow results in a reduction of the life of the pump hose.

6. Replace the cover and fasten the retaining bolts with the correct torque. Refer to § 10.1.6.

7. Switch on the electrical supply to the pump.

7.6.3 Fitting the pump hose

⚠	**WARNING** Fitting the pump hose is a powered process and requires pump rotation. Ensure the pump cover is properly fitted and that body and tools are clear from moving parts.

⚠	**WARNING** For all weight and torque adjustment, please refer to the technical information section at the rear of this manual.

1. Clean the (new) pump hose on the outside and fully lubricate it with Watson-Marlow Bredel Genuine Hose Lubricant.

2. Turn on the pump and note the direction of the pump rotation.

3. Fit the pump hose (A) via one of the ports – whichever is the suction based on rotation direction. Feed the hose into the port and allow the pressing shoe to draw the hose in the pump housing. The rotor will move the hose.

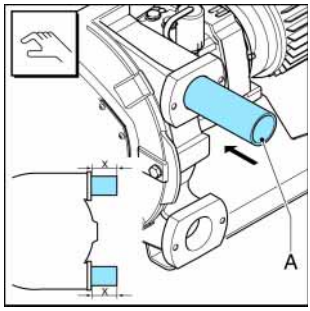

⚠	**WARNING** During jogging the drive: - Do not stand in front of the pump ports. - Do not try to guide the hose by hand.

4. Stop the motor when the hose sticks out equally from both sides of the pump housing.

5. First fit the inlet port. Fit the sealing ring.
Before mounting, check that the sealing ring (A) is not deformed or damaged and replace it if necessary.

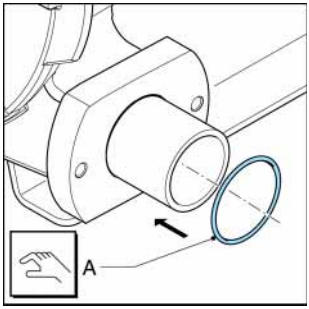

6. Before fitting check that the hose clamp is not damaged and replace it if necessary. Slide the flange bracket (B) and the hose clamp (C) over the hose together. Align the holes in the flange bracket with the ones at the front of the port. Position the two retaining bolts (A) and tighten them until they are approx. 5 mm (3/16”) from the port, so that the gap between the flange bracket and the port remains.

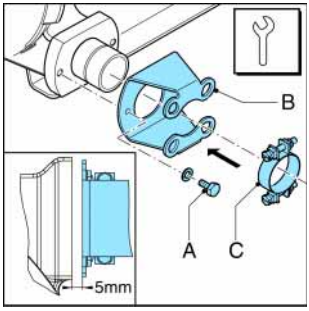

7. Slide insert (B) in flange (A) and press the insert in the hose. If necessary lubricate the insert with Watson-Marlow Bredel Genuine Hose Lubricant in order to simplify mounting. Make sure that the holes in flange (A) are aligned with the holes in flange bracket (C). Check that the insert is in the correct place. If the insert is not positioned correctly the product to be pumped may leak or the lubricant may leak.

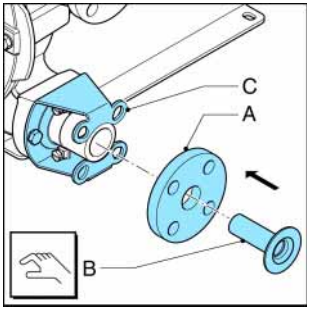

8. Fit the suction line (B) and the retaining bolts (A). Tighten the retaining bolts with the correct torque. Refer to § 10.1.6.

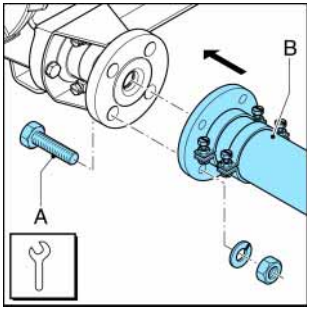

9. Turn the rotor in such a way that the hose (A) is pressed firmly against the flange surface (B).

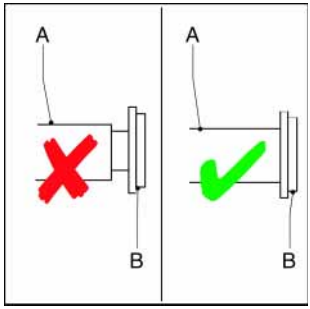

10. Now fully tighten the retaining bolts (A) of the flange bracket (B). Make sure the bolts are tightened with the correct torque. Refer to § 10.1.6.

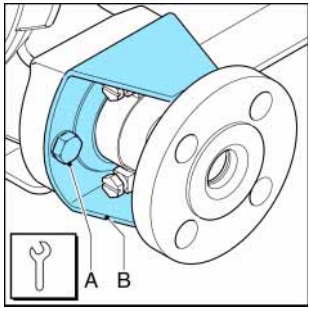

11. Position hose clamp (A) against O-ring chamber of the flange bracket (B) and fasten the retaining bolt. Make sure the bolts are tightened with the correct torque. Refer to § 10.1.6.

12. Now fit the other port. For this port proceed in the same way as described above for the inlet port.

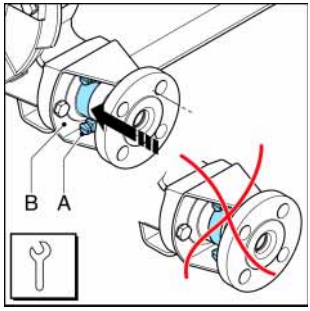

13. Fill the pump housing with Watson-Marlow Bredel Genuine Hose Lubricant. Refer to § 7.4.

7.7 Exchanging replacement parts

7.7.1 General

⚠	**CAUTION** Items may be heavy. For all weight and torque adjustments for replacement procedures under this section, please refer to the technical information in chapter 10.

7.7.2 Replacing pressing shoes

1. Jog the motor until the pressing shoe (B) is positioned between the inlet and outlet port (A).

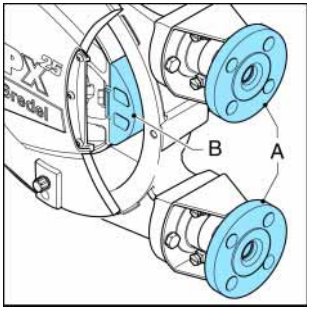

2. Isolate the pump from the electrical supply.

3. Place a tray (A) under the drain plug in the cover of the pump. Remove the drain plug (B). Catch the lubricant from the pump housing in the tray. Position the drain plug and tighten it firmly.

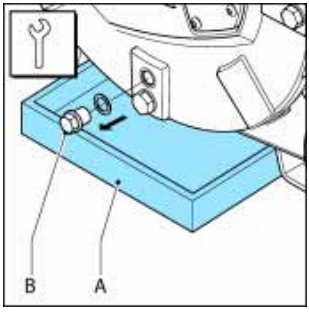

4. Remove the cover (A) by loosening the four retaining bolts (B).

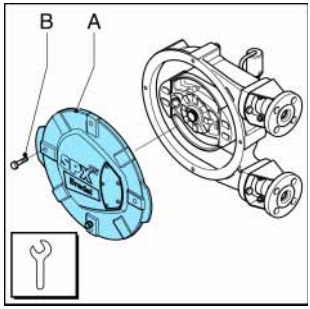

5. Loosen the retaining bolt (A) of the pressing shoe (B) and remove the shoe. Remove the shims (C) if present.

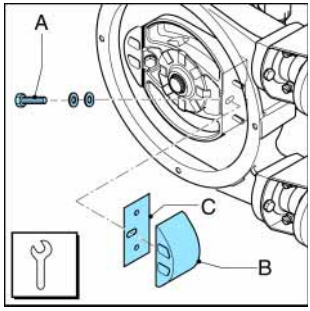

6. Fit the removed shims (C) again. Position the (new) pressing shoe (B), check that the Nord-Lock® rings (D) have been positioned correctly and tighten the retaining bolt(s) (A) a few turns. Refer to § 10.1.6.

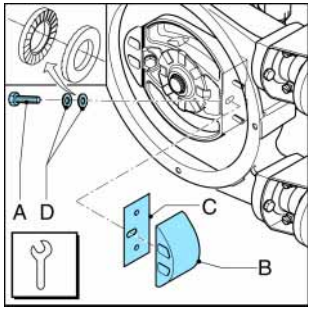

7. Check the gasket (C) for damage and replace if necessary. Refit the cover (B). Make sure that the 4 bolts (A) are refitted and that they are tightened in the correct order, diagonally opposite each other. Refer to § 10.1.6.

8. Switch on the electrical supply.

9. Jog the motor until the second pressing shoe is positioned between the inlet and outlet port.

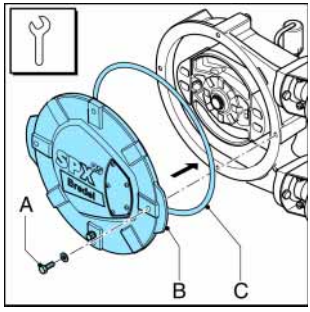

10. Isolate the pump from the electrical supply.

11. Repeat the procedure for removing and fitting this second pressing shoe by repeating steps 4 through 8.

12. Refill the lubricant. Refer to § 7.4.

7.7.3 Replacing seal ring, bearings and wear ring

1. Remove the pump hose. Refer to § 7.6.1.

2. Isolate the pump from the electrical supply.

3. Remove the cover (B) by loosening the retaining bolts (A).

4. Check the sealing ring (C) and replace it if necessary.

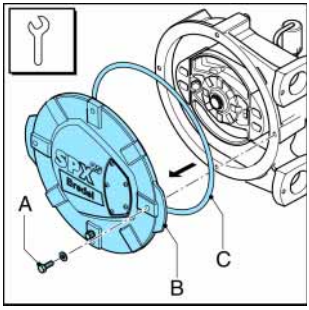

5. Loosen the retaining bolt (A) of both pressing shoes (B). Remove the shims (C) if present.

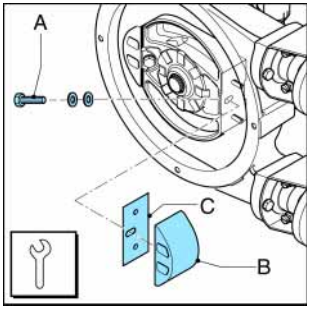

6. Use two crow bars to remove the rotor (A). Position both crow bars behind the recesses (B) in the rotor and push the rotor from the hub.

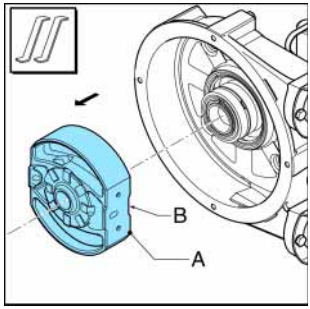

7. Remove the retaining circlip (A) with the correct tool.

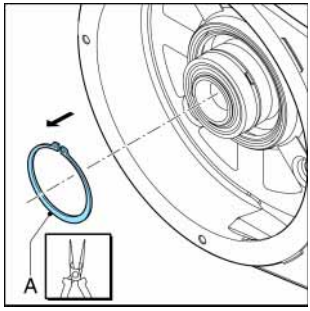

8. Remove the bearings (A) with the correct tool, the spacer ring (B) and the retaining circlip (C).

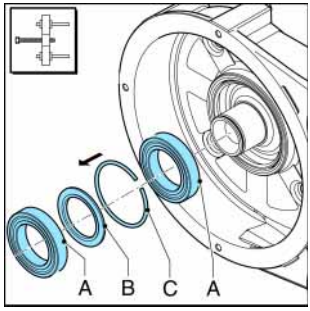

9. Remove the seal (A). Clean and degrease the bore.

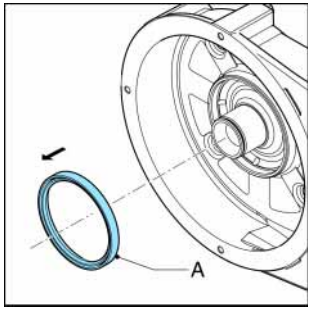

10. Fit a new seal (A) using a wooden block and hammer. Carefully hit the seal crosswise and with equal strength in the bore until it touches the hub. The seal must be fitted in the correct orientation (B). Make sure that the open side points to the pump cover.

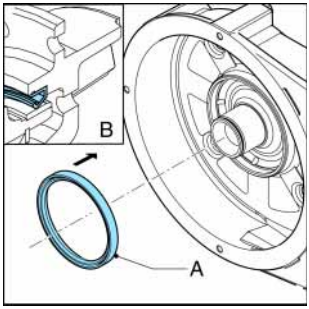

11. Support the rotor with wooden blocks at 90° to the spokes, with the ring (A) facing down. Position a suitable punch against the rear of the glued wear ring. Prevent damage to the wear ring seat or other parts.

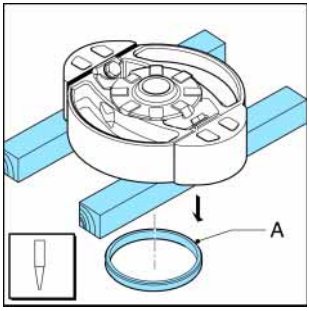

12. Turn the rotor over. Make sure that the seats of the new wear ring (A) and rotor are clean, dry and free of grease. Apply Loctite® type 641 or 603 both on the rotor and the wear ring. Position the new wear ring with the tapered edge facing up. Use a plastic hammer to fit the ring on the rotor until it touches the rotor completely.

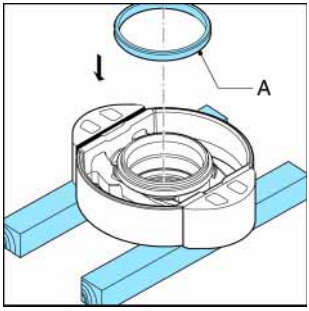

13. Check that the hub is clean and free of grease. Fit the bearings and the rings now.
The bearings are placed on the hub with a slight interference fit. Use a pressing tool to press the bearings on the hub.

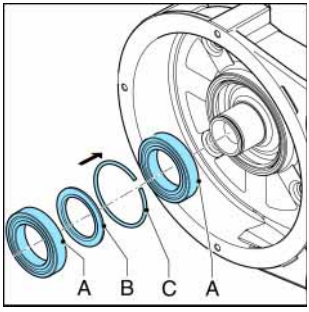

14. Mount the retaining circlip (A).

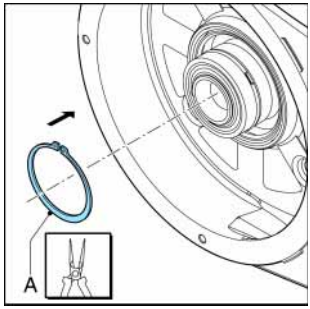

15. Fit rotor (A). The rotor is placed on the bearings with a loose fit. Press the rotor on the hub until it sticks.

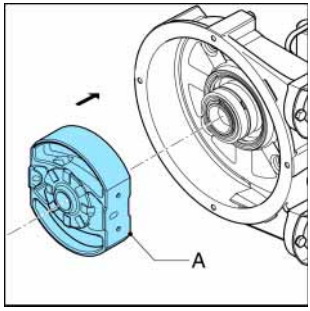

16. Fit the removed shims (C) again. Position the (new) pressing shoe (B), check that the Nord-Lock® rings (D) have been positioned correctly and tighten the retaining bolt(s) (A) a few turns. Refer to § 10.1.6.

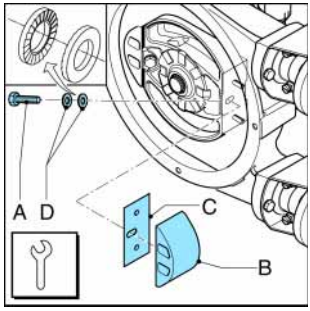

17. Check the gasket (C) for damage and replace if necessary. Refit the cover (B). Make sure that the 4 bolts (A) are refitted and that they are tightened in the correct order, diagonally opposite each other. Refer to § 10.1.6.

18. Switch on the electrical supply to the pump.

19. Fit the (new) pump hose. Refer to § 7.6.3.

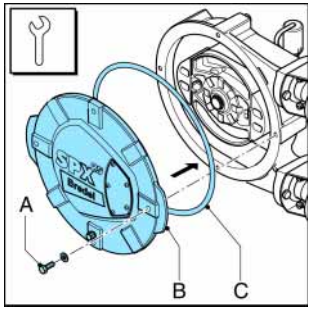

7.8 Adjusting hose compression force (shimming)

Remove the pump cover before fitting and removing shims. In order to determine the correct number of shims for your specific application refer to § 10.1.7.

⚠	**CAUTION** Too many shims, this means a too high compression force on the pump hose, will create a too high load on the pump head and pump hose, which may result in a reduction of the life of the pump hose and bearings.

⚠	**CAUTION** Too few shims, this means a too low compression force on the pump hose, create a loss of yield and slip or backflow. Backflow results in a reduction of the life of the pump hose.

1. Jog the motor until the pressing shoe (B) is positioned between the inlet and outlet port (A).

2. Isolate the pump from the electrical supply.

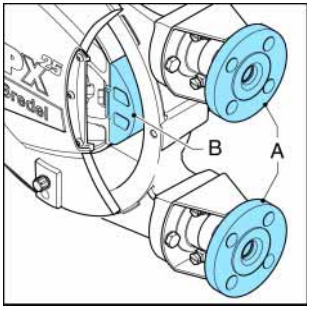

3. Place a tray (A) under the drain plug in the cover of the pump. Remove the drain plug (B). Catch the lubricant from the pump housing in the tray. Position the drain plug and tighten it firmly.

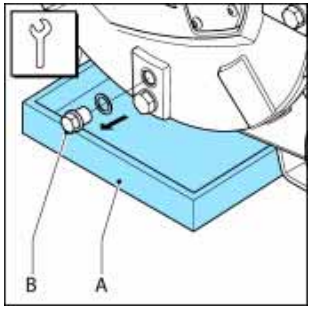

4. Remove the cover (B) by loosening the retaining bolts (A).

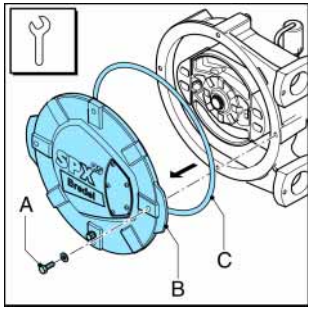

5. Loosen the retaining bolt (A) of the pressing shoe (B). Fit the shims (C) or remove them, until the correct number of shims is present. Refer to § 10.1.7.
Fasten the retaining bolt of the pressing shoe with the correct torque. Refer to § 10.1.6.

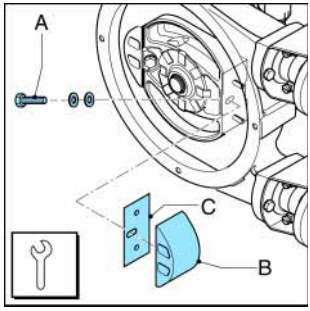

6. Refit the cover (B). Check the gasket (C) for damage and replace if necessary. Make sure that all bolts (A) are refitted and that they are tightened in the correct order, diagonally opposite each other. Refer to § 10.1.6.

7. Switch on the electrical supply.

8. Jog the rotor until the second pressing shoe is positioned between the inlet and outlet port.

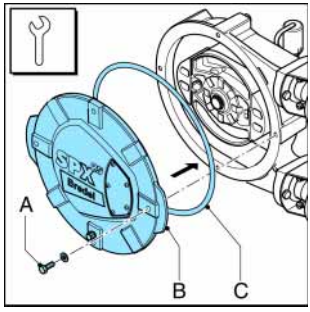

9. Isolate the pump from the electrical supply.

10. Repeat the procedure for this pressing shoe by repeating steps 4, 5, 6 and 7.

11. Refill the lubricant via the breather. Refer to § 7.4.

7.9 Fitting options

7.9.1 Fitting a high-level float switch

Switch rating: 230 VAC, 2 A, max. power load 40 VA.

1. Remove the standard breather (B) on the rear of the pump, by removing it from crimp connector (A).

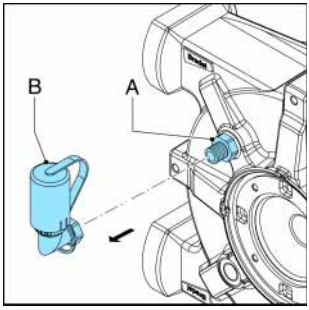

2. Slide the standard breather cap (A) from breather (B).

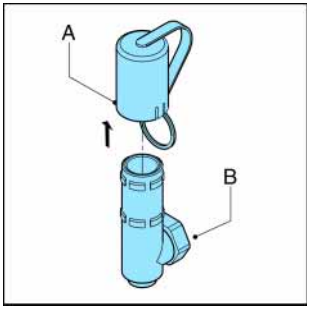

3. Replace the standard breather cap with the breather cap with high level float switch (A) and slide it over breather (B).

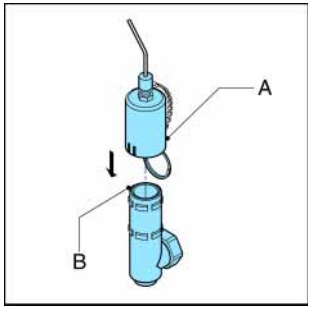

4. Mount the breather (B) on the rear of the pump, by mounting it on crimp connector (A).

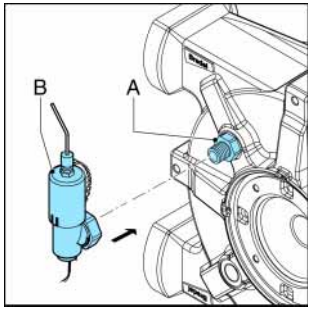

5. Connect the high-level float switch to the auxiliary power circuit via the 1.5 meter long PVC cable (2 x 0.24 mm^2). Bear in mind that the electrical contact of the float switch is normally closed (NC). When the lubricant level is (too) high the contact will open.

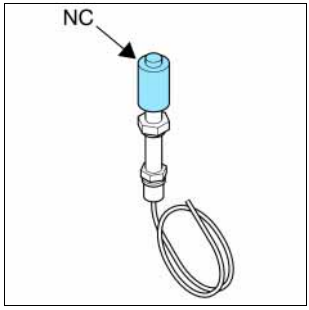

Specifications	
Voltage:	Max. 230 V AC/DC
Current:	Max. 2 A
Power:	Max. 40 VA

i	Where the floater is constructed to stop the equipment, operating has to be arranged so that the stop function locks-out, preventing the equipment from being re-started without re-setting. Check if the floater is mounted with the NC sign at the top.

7.9.2 Fitting a high and low level float switch

Switch rating: 230 VAC, 2 A, max. power load 40 VA.

1. If the pump is filled with lubricant this must be removed first. Place a tray (A) under the drain plug in the cover of the pump. Remove the drain plug (B). Catch the lubricant from the pump housing in the tray. Position the drain plug and tighten it firmly.

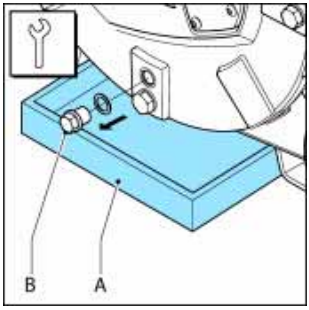

2. Remove the plugs (A) and (B) on the rear of the pump head.
   Position the quick couplings (C) and (D) in both openings.
   Clamp both connection tubes (E) and (F) on the riser pipe (G) and the quick links (C, D).

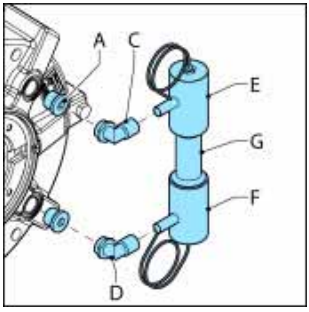

3. Connect the high and low-level float switch to the electrical supply. Bear in mind that the electrical contact of the float switch is normally closed (NC).
   This means that:
   - the contact of the high level float switch opens at a (too) high lubricant level;
   - the contact of the low level float switch opens at a (too) low lubricant level.

4. Make sure the lubricant returns to the prescribed level. Refer to § 7.4.

7.9.3 Fitting revolution counter

1. Fit the inductive sensor (A) in stop (B) and adjust it to dimension "X" as indicated in the table below. Tighten the adjusting nuts with a torque of 25 Nm (220 lbf in).

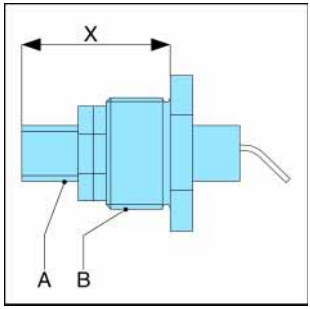

Dimension "X" ± 0.1 mm	
SPX25	**SPX32**
26 mm	28.5 mm

2. Remove stop (A) which is on the horizontal center line at the rear of the pump housing. Check that the sealing ring (B) is not damaged and replace it if necessary.

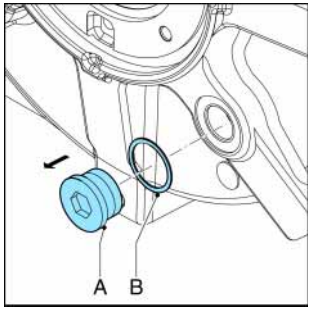

3. Fit the stop with the inductive sensor (A) together with sealing ring (B) on the pump housing.

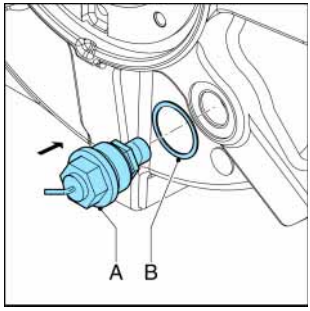

4. Connect the sensor via the 2 meter long PVC cable (3 x 0.34 mm^2).

Specifications	
Voltage:	10...30 VDC
Current:	Max. 200 mA

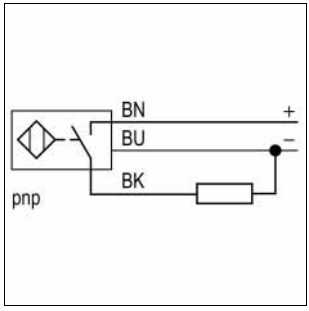

5. Make sure the lubricant returns to the prescribed level. Refer to § 7.4.

8 STORAGE

8.1 Hose pump

- Store the hose pump or pump parts in a dry area. Make sure that the hose pump or pump parts are not exposed to temperatures lower than -40 °C (-104 °F) or higher than +70 °C (158 °F).
- Cover the openings of the inlet and outlet ports.
- Prevent corrosion of untreated parts. For this purpose use the correct protection or packaging means.
- After a long period of standstill or storage (i.e. pump is idle for a period of longer than one continuous month), the static load on the pump hose may cause permanent deformation, which will reduce the life of the pump hose and may cause difficulty in starting.
  To prevent deformation of the hose, pump motor should be jogged on a monthly basis to allow repositioning of the shoe on the hose.
  If motor jogging is not possible and long term shutdown is expected, remove a pressing shoe and turn the rotor so far that the second pressing shoe is in front of the inspection window. In this way there is no load put on the pump hose. When startup is again expected, replace the pressing shoes, the proper number of shims, and the lubricant.

8.2 Pump hose

- Store the pump hose in a cool and dark room. After 2 years the hose material will age, which will reduce the life of the hose.

9 TROUBLESHOOTING

⚠	**WARNING** Disconnect and lock the power supply to the pump drive before any work is carried out. Wait two minutes to make sure that the capacitors have discharged. This is necessary when the motor is fitted with a frequency controller and has single phase power supply.

If the hose pump does not function (correctly), consult the following checklist to see if you can remedy the error yourself. If this is not the case, contact your Watson-Marlow Bredel representative.

Problem	Possible cause	Correction
Failure to operate.	No voltage.	Check that the supply power switch is on.
		Check the electrical supply is available at the pump.
		Check current limit of electrical source to pump.
	Stalled rotor.	Check that hose and lubricant are loaded properly and pressing shoes are shimmed properly.
	Lubricant level monitoring system has been activated.	Check that the lubricant level monitoring system has stopped the pump. Check the lubricant level and proper functioning of the level switch(es).

Problem	Possible cause	Correction
High pump temperature.	Non-standard hose lubricant used.	Consult the Watson-Marlow Bredel representative for the correct lubricant.
	Low lubricant level.	Add Watson-Marlow Bredel Genuine Hose Lubricant. For the required amount of lubricant refer to § 10.1.4.
	Product temperature too high.	Consult the Watson-Marlow Bredel representative about the maximum temperature range of the product.
	Internal friction on the hose caused by blocked or poor suction characteristics.	Check pipework/valves for blockages. Ensure that the suction pipework is as short as possible and that the diameter is large enough.
	Over-shimming of the pump rotor shoes.	Consult the diagram. Refer to § 10.1.7. Remove excess shims.
	High pump speed.	Reduce pump speed to a minimum. Consult with your Watson-Marlow Bredel pump representative for advice on optimum pump speeds.

Problem	Possible cause	Correction
Low capacity / pressure.	Shut-off valve in the suction line (partly) closed.	Fully open the shut-off valve.
	Under shimming of the pressing shoes.	Check shimming. Refer to § 10.1.7. Fit the correct number of shims.
	Hose failure or badly worn hose.	Replace hose. Refer to § 7.6.
	Partial blockage of the suction line or too little product on the suction side.	Ensure that the suction line is clear of blockages and that sufficient product is available.
	Connections and hose clamps not correctly mounted, which allows the pump to draw in air.	Tighten connections and hose clamps.
	You are starving the pump because the speed is too high for your suction pressure.	Consult your Watson-Marlow Bredel representative for a recommendation.
Vibration of the pump and pipework.	Suction and discharge lines are not secured correctly.	Check and secure pipework.
	High pump speed with long suction and discharge lines or high relative density or a combination of these factors.	Reduce pump speed. Reduce the line lengths on both suction and discharge where possible. Consult your Watson-Marlow Bredel representative for a recommendation.
	Too narrow diameter of suction and/or discharge line.	Increase the diameter of the suction/discharge lines.

Problem	Possible cause	Correction
Short hose life.	Chemical attack of the hose.	Check the compatibility of the hose material with the product to be pumped. Consult your Watson-Marlow Bredel representative for correct hose selection.
	High pump speed.	Reduce pump speed.
	High discharge pressures.	It is recommended that the pressure on the discharge of the pump does not exceed 1600 kPa (232 psi). Check that the discharge line is not blocked, the shut-off valves are fully opened and the pressure relief valve functions properly (if present in the discharge line).
	High product temperature.	Consult your Watson-Marlow Bredel representative for correct hose selection.
	High pulsations.	Restructure the discharge and inlet conditions.
Hose pulled into the pump.	Insufficient or no hose lubricant in the pump head.	Add extra lubricant. Refer to § 7.4.
	Incorrect lubricant: no Watson-Marlow Bredel Genuine Hose Lubricant in the pump head.	Consult the Watson-Marlow Bredel representative for the correct lubricant.
	Extremely high inlet pressure - larger than 300 kPa (43.5 psi).	Reduce the inlet pressure.

Problem	Possible cause	Correction
Lubricant leakage at flange bracket.	Hose blocked by an incompressible object in the hose. The hose cannot be compressed and will be pulled into the pump housing.	Remove hose, check for blockages and replace if necessary.
	Bolts of flange bracket loose.	Tighten to the specified torque settings. Refer to § 10.1.6.
	Bolts of hose clamps loose.	Tighten to the specified torque settings. Refer to § 10.1.6.
Leakage from the rear of the pump housing "Buffer zone".	Damaged sealing ring.	Replace sealing ring.

10 SPECIFICATIONS

10.1 Pump head

10.1.1 Performance

Description	Unit	SPX25	SPX32
Max. capacity, continuous	m^3/h	1.80	3.25
	GPM	7.92	14.31
Max. capacity, intermittently *	m^3/h	2.88	5.25
	GPM	12.68	23.12
Capacity per revolution	l/rev	0.300	0.625
	Gal/rev	0.079	0.165
Max. permissible discharge	kPa	1600	
	PSI	232	
Permissible ambient temperature	°C	-20 to +45	
	°F	-4 to +113	
Permissible product temperature	°C	-10 to +80	
	°F	+14 to +176	
Sound level on 1 m	dB(A)	70	

* Intermitted duty: "Let the pump stand still to cool down for at least 1 hour after 2 hours of operation".

10.1.2 Materials

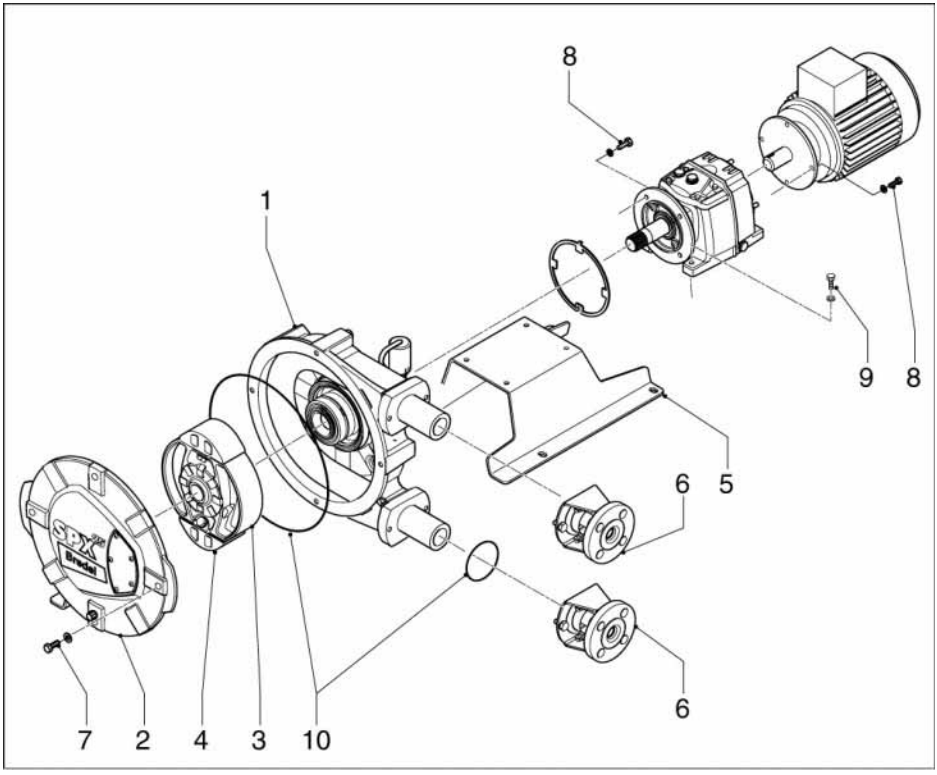

Pos	Description	Material
1	Pump housing	Cast-iron
2	Cover	Cast-iron
3	Pump rotor	Cast-iron
4	Pressing shoe	Aluminum
5	Pump support	Mild steel, galvanized*
6	Flange bracket	Mild steel, galvanized*
7	Mounting material of pump cover	Mild steel, galvanized*
8	Mounting material of drive system	Mild steel, galvanized*
9	Mounting material of pump support	Mild steel, galvanized*
10	Seals	Neoprene or Nitrile

* Available in Stainless Steel upon request.

10.1.3 Surface treatment

- After surface preparation, one layer of two-component acrylate is used for surface protection. Standard color is RAL 3011, however other colors are optional. Contact your Watson-Marlow Bredel representative for details on surface treatment.
- All galvanized parts, exclusive of mounting articles, have been provided with an electrolytic zinc layer of 15 - 20 microns.

10.1.4 Lubricant table pump

	Unit	SPX25	SPX32
Lubricant	-	Watson-Marlow Bredel Genuine Hose Lubricant	Watson-Marlow Bredel Genuine Hose Lubricant
Required quantity	Liters	2	3.5
	Gallons	0.5	0.9

Watson-Marlow Bredel Genuine Hose Lubricant is registered at NSF: NSF Registration N° 123204; Category Code H1. See also: www.NSF.org/USDA.

The relative density of Watson-Marlow Bredel Genuine Hose Lubricant is 1.245.

i	Should you require additional information with respect to the safety data sheet, consult your Watson-Marlow Bredel representative.

10.1.5 Weights

Description	Weight [kg/lbs]			
	SPX25		SPX32	
Pump head	39	86	58.5	129
Flange connection (2x), without inserts	3.72	8	5.52	12.2
Stainless steel insert (2x)	0.26	0.6	0.36	0.8
Hose	2	4.4	3	6.6
Lubricant	2.5	5.5	4.4	9.7
Sub total pump head	**47.5**	**104.5**	**71.8**	**158.3**
Pump support	5.7	12.6	7.1	15.7
Mounting material gearbox-pump head	0.3	0.7	0.3	0.7
Gearbox (model B3-B5)	15.5	34.2	21	46.3
Electric motor	17.3	38.1	25.7	56.7
Varmeca	3	6.6	3	6.6
Total weight of unit	**89.3**	**196.9**	**128.9**	**284.2**
Pump cover (with inspection window)	9.4	20.7	12.5	27.6
Rotor	5.4	11.9	8.3	18.3
Pressing shoe	0.4	0.9	0.7	1.5

10.1.6 Torque figures

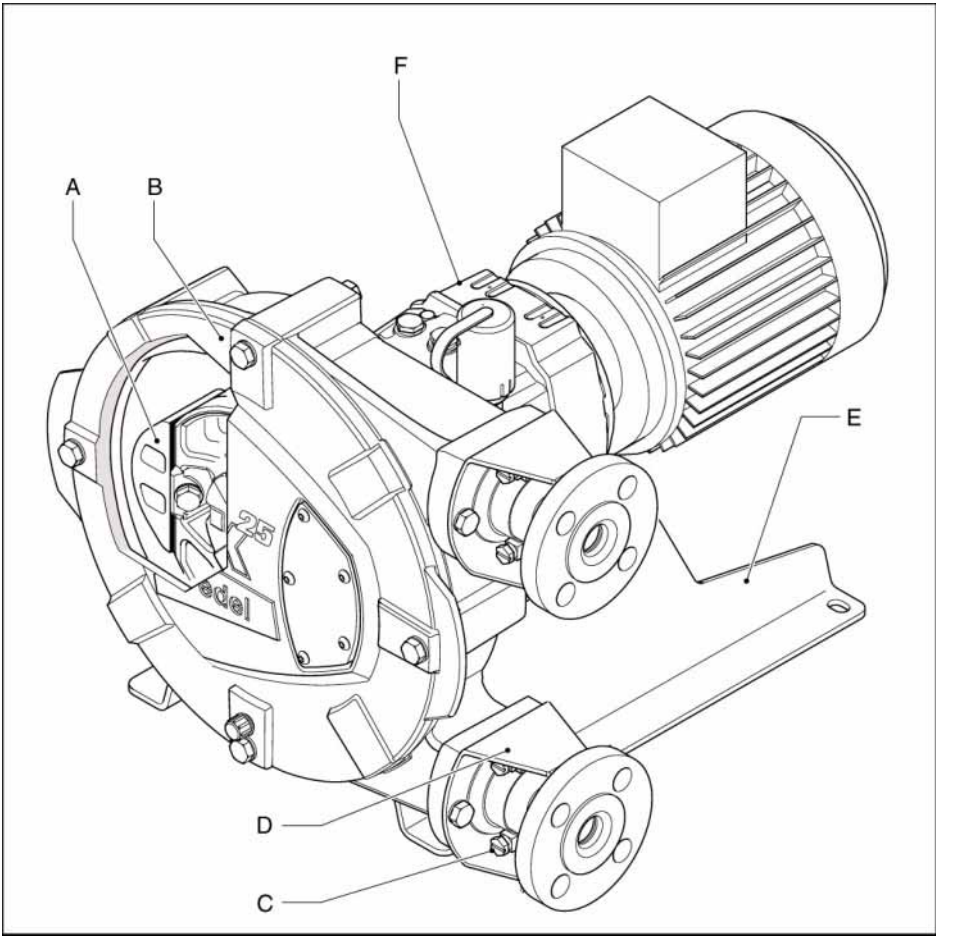

Pos	Description	Unit	SPX25	SPX32
A	Pressing shoe	Nm	64	64
		lbs	566	566
B	Cover	Nm	50	50
		lbs	442	442
C	Hose clamp	Nm	25	25
		lbs	220	220

Pos	Description	Unit	SPX25	SPX32
D	Flange bracket	Nm	50	50
		lbs	442	442
E	Support	Nm	25	85
		lbs	221	752
F	Gearbox	Nm	25	50
		lbs	221	442

Pos	Description	Thread, A/F	
		SPX25	SPX32
A	Pressing shoe	M10 17 mm	M10 17 mm
B	Cover	M10 17 mm	M10 17 mm
C	Hose clamp	M8 13 mm	M8 13 mm
D	Flange bracket	M10 17 mm	M10 17 mm
E	Support	M8 13 mm	M12 19 mm
F	Gearbox	M8 13 mm	M10 13 mm

10.1.7 Shims specifications

- When the temperatures are above 60 °C (140 °F) always use one shim less than indicated in the diagrams.
- Always round up the number of shims.

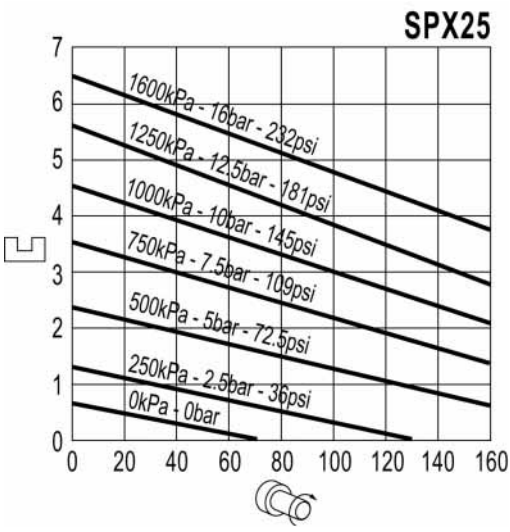

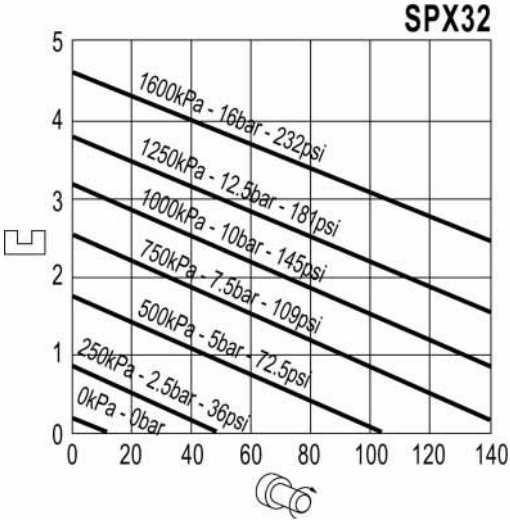

10.2 Lubricant table gearbox

Below is an overview of some of the recommended lubricants for the *co-axial gearbox*. In the majority of the cases, a mineral oil ISO VG 220 is recommended. In case of extreme ambient temperatures or a relatively wide range of ambient temperatures, a synthetic oil is recommended. Contact your Watson-Marlow Bredel representative for advice.

Recommended lubricants for the Watson-Marlow Bredel co-axial gearboxes			
Oil type	Mineral oil	Synthetic oil	
Change oil every	5000 hours	20,000 hours	
Ambient temperature	-10 °C to +40 °C	-40 °C to +80 °C	-30 °C to +60 °C
	14 °F to 104 °F	-40 °F to 176 °F	-22 °F to 140 °F
DIN (ISO)	CLP (CC)	CLP HC	CLP HC
ISO, NLGI	VG220	VG220	VG150
Mobil	Mobilgear 630	Mobil SHC 630	Mobil SHC 629
Shell	Shell Omala 220	Shell Omala 220 HD	
Klüber	Klüberoil GEM 1-220	Klübersynth GH4-220	Klübersynth EG 4-150
Aral	Aral Degol BG 220	Aral Degol PAS220	
BP	BP Energol GR-XP 220		
Tribol	Tribol 1100/220	Tribol 1510/220	
Texaco	Meropa 220	Pinnacle EP220	Pinnacle EP150
Optimol	Optigear BM 220	Optigear Synthetic A220	
Fuchs	Renolin CLP 220	Renolin Unisyn CLP220	

Recommended lubricants for the Watson-Marlow Bredel co-axial gearboxes			
Oil type	Synthetic oil		
Change oil every	20,000 hours		
Ambient temperature	-30 °C to -10 °C	-30 °C to +60 °C	-30 °C to +40 °C
	-22 °F to 14 °F	-22 °F to 140 °F	-22 °F to 104 °F
DIN (ISO)	CLP HC	HCE	E
ISO, NLGI	VG32	VG460	VG460
		Foodgrade*	Biology**
Mobil	Mobil SHC 624		
Shell		Shell Cassida Fluid GL 460	
Klüber	Klüber-Summit HySyn FG32	Klüber oil 4UH1-460	Klüberbio CA2-460
Aral		Aral Eural Gear 460	Aral Degol BAB 460
Texaco	Cetus PAO 46		
Optimol		Optileb GT 460	Optisynt BS460

* For use in the foodstuffs industry. Meets the requirements of the USDA (United States Department of Agriculture): lubricant is suited for unforeseen contact with foodstuffs.

** Lubricant for use in agricultural areas and nature reserves.

10.3 Electric motor

Standard electric motor design is an enclosed three-phase asynchronous motor. A thermal safety device to prevent motor overload is optional.

Protection class	IP55/IK08
Insulation class	F
Increase in temperature	Within class B
Voltage/frequency	230/400 V - 3 phases - 50 Hz

i	In case of doubt about the local applicable regulations for the drive connection, contact your Watson-Marlow Bredel representative.

10.4 Gearbox

Co-axial gearbox with helical gears. Standard as a 2 and 3 stage version.

Mounting position	IM 2001 (IM B35) foot flange gearbox with splined shaft in horizontal position.
Motor adapter	Electric motor has been integrated in the gearbox housing, by which the smallest possible dimension is achieved.
Optional motor adapter	Adapters in conformance with IEC-B5 or NEMA TC.

10.5 Frequency controller

The frequency controller has been preprogrammed and only needs to be connected to the mains.

RFI filter	Integrated RFI filter B (industrial applications).
Control	Rotary knob for setting the speed and the keys for starting forward, stop and starting reverse.
Protection class	IP65
Mains power supply	There are 3 types available; the choice depends on the local electricity grid: • 200-240 V ± 10%; 50/60 Hz ± 5%; 1 ph • 200-240 V ± 10%; 50/60 Hz ± 5%; 3 ph • 400-480 V ± 10%; 50/60 Hz ± 5%; 3 ph

10.6 Parts list

10.6.1 Overview

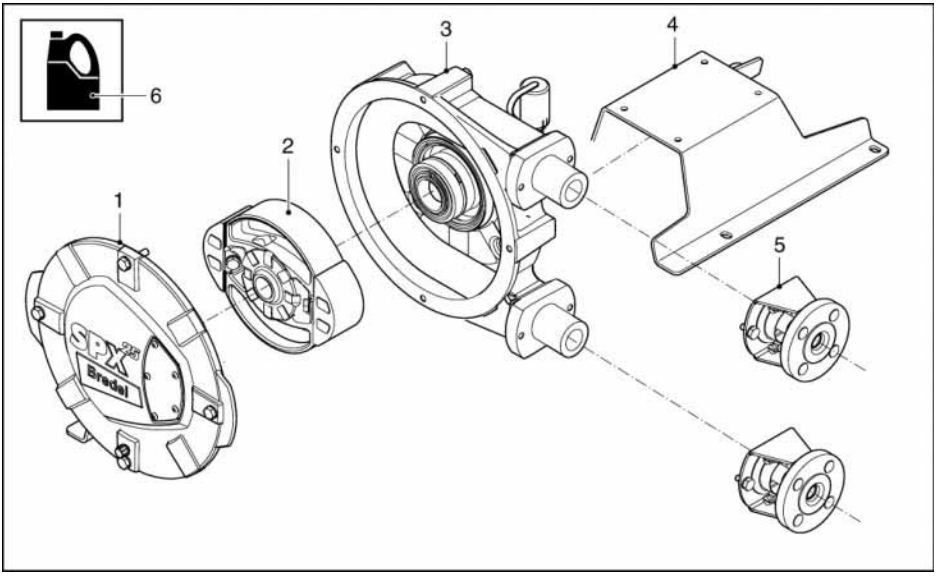

Pos.	Description
1	Cover assembly. Refer to § 10.6.2.
2	Rotor assembly. Refer to § 10.6.3.
3	Pump housing assembly. Refer to § 10.6.4.
4	Pump support assembly. Refer to § 10.6.5.
5	Flange assembly. Refer to § 10.6.6.
6	Lubricants. Refer to § 10.6.8.

10.6.2 Cover assembly

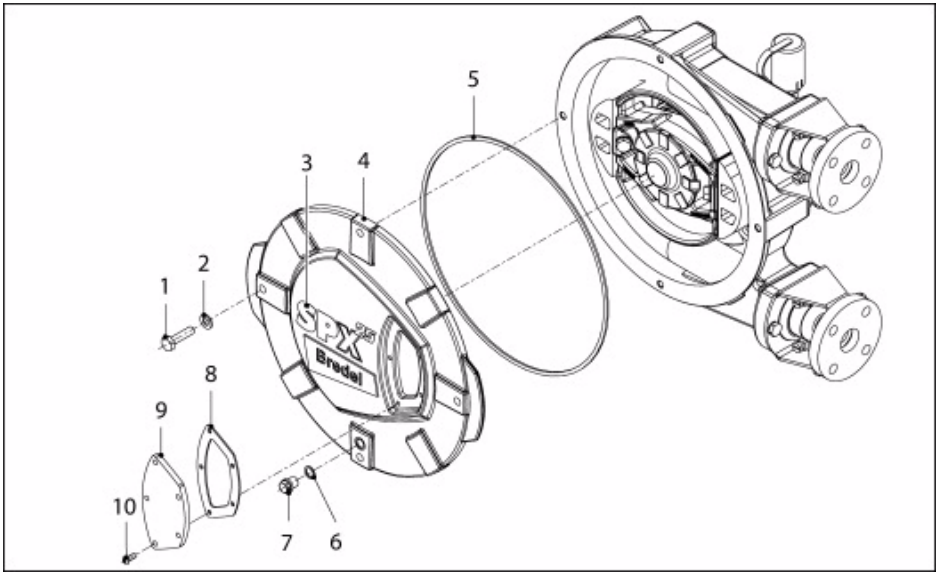

Pos.	Qty.	Description	Product codes for parts of pump type	
			SPX25	SPX32
1	4	Bolt, hex. head	F101058	F101058
2	4	Washer	F322013	F322013
3	1	Sticker	225238	232238
4	1	Cover	225102	232102
5	1	Quad ring	225123	232123
6	1	Gasket	F342019	F342019
7	1	Drain cap	F911502	F911502
8	1	Gasket	225156	232156
9	1	Inspection window	225155	232155
10	5	Round head screw	F552036	
	6			F552036

10.6.3 Rotor assembly

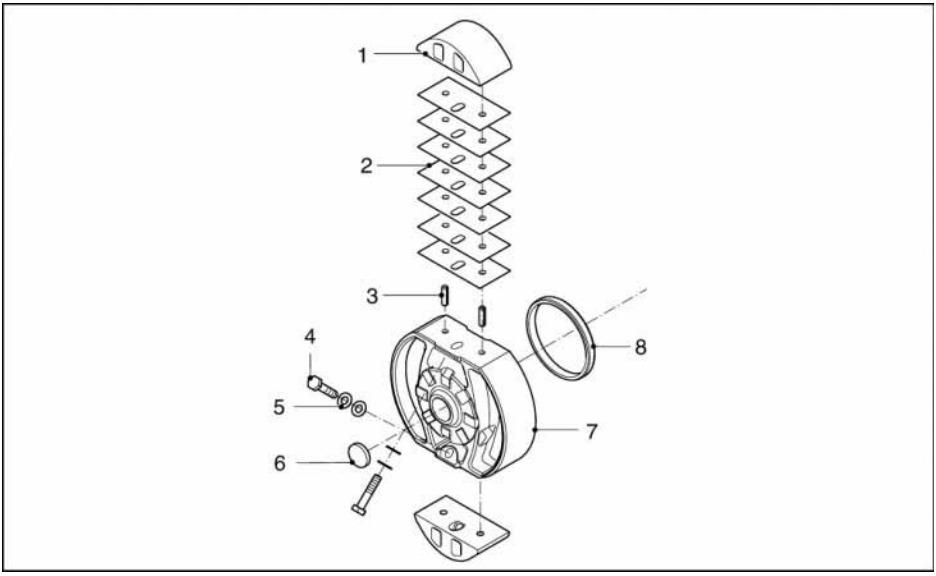

Pos.	Qty.	Description	Product codes for parts of pump type	
			SPX25	SPX32
1	2	Pressing shoe	225110	232110
2	14	Shim	225107	
	10			232107
3	4	Spiral clamping bush	F415084	F415084
4	2	Bolt, hex. head	F101060	F101060
5	2	Nord-Lock ring	F349006	F349006
6	1	Sealing cap	S417007	S417007
7	1	Rotor	225103	232103
8	1	Wear ring	29120202	29120202

10.6.4 Pump housing assembly

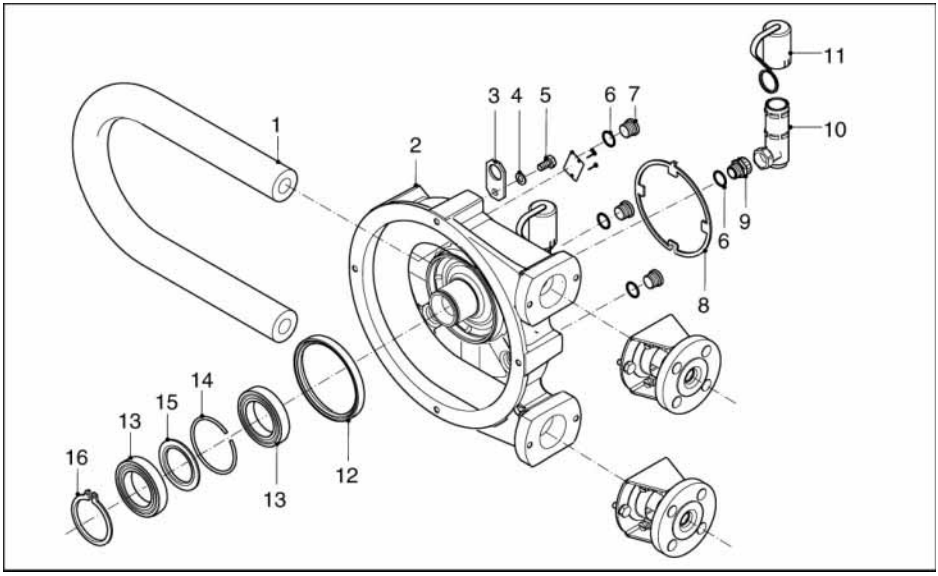

Pos.	Qty.	Description	Product codes for parts of pump type	
			SPX25	SPX32
1	1	NR	025020	032020
	1	NBR	025040	032040
	1	CSM	025070	032070
	1	EPDM	025075	032075
2	1	Pump housing	225101	232101
3	1	Lifting strip	29065361	29065361
4	1	Washer, Spring Lock	F336012	F336012
5	1	Bolt	F111096	F111096
6	4	Gasket	F342027	F342027
7	3	Stop	F901004	F901004
8	1	Seal	225114	232114
9	1	Crimp connector	F602504	F602504
10	1	Breather	29095146	29095146
11	1	Breather cap	29065223	29065223
12	1	Seal	S212411	S212411

Pos.	Qty.	Description	Product codes for parts of pump type	
			SPX25	SPX32
13	2	Bearing	B141260	B141260
14	1	Retaining circlip	29095297	29095297
15	1	Spacer ring	29085201	29085201
16	1	Retaining circlip	F343049	F343049

10.6.5 Support assembly

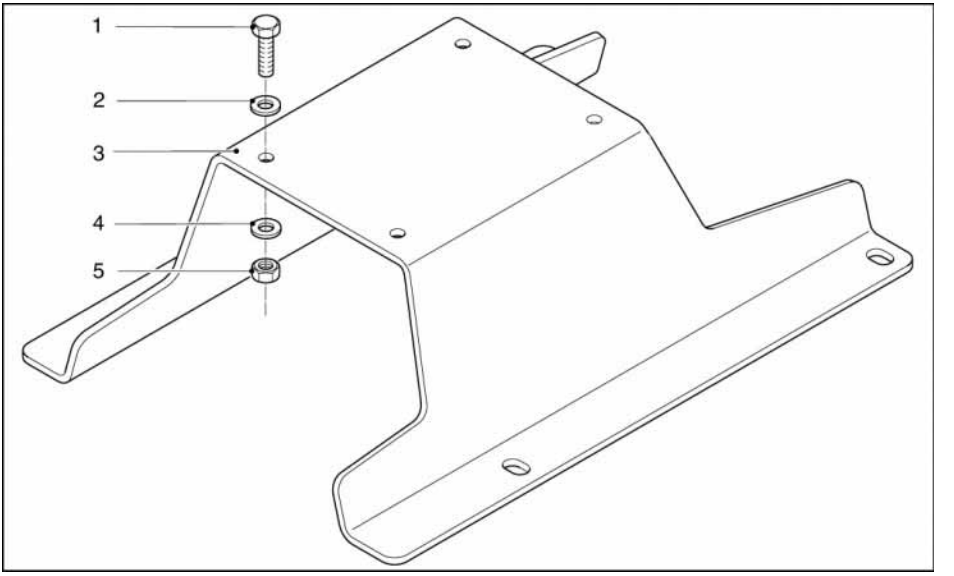

Pos.	Qty.	Description	Product codes for parts of pump type	
			SPX25	SPX32
1	4	Bolt	F101038	F101080
2	4	Washer	F322012	F322015
3	1	Pump support	225106	232106
4	4	Spring washer	F336011	F336013
5	4	Nut	F301006	F301008

10.6.6 Flange assembly

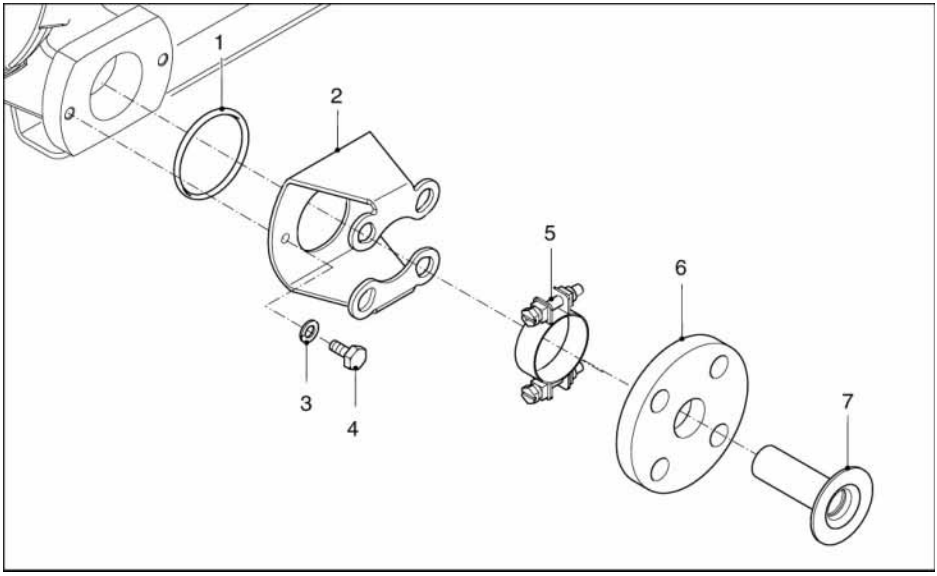

Pos.	Qty.	Description	Product codes for parts of pump type	
			SPX25	SPX32
1	2	O-ring	S112231	S112271
2	2	Flange bracket, Steel	225197	232197
	2	Flange bracket, SS	225197A	232197A
3	4	Washer, Spring Lock	F336012	F336012
4	4	Bolt	F111096	F111096
5	2	Hose clamp	C122005	C122005
6	2	Flange, DIN Steel	025198	032198
	2	Flange, DIN SS	025199	032199
	2	Flange, ANSI Steel	025198A	032198A
	2	Flange, ANSI SS	025199A	032199A
7	2	Insert Stainless steel	025186	032186
	2	Insert, PVC	025187	032187
	2	Insert, PP	025189	032189
	2	Insert PVDF	025190	032190

10.6.7 Revolution counter assembly

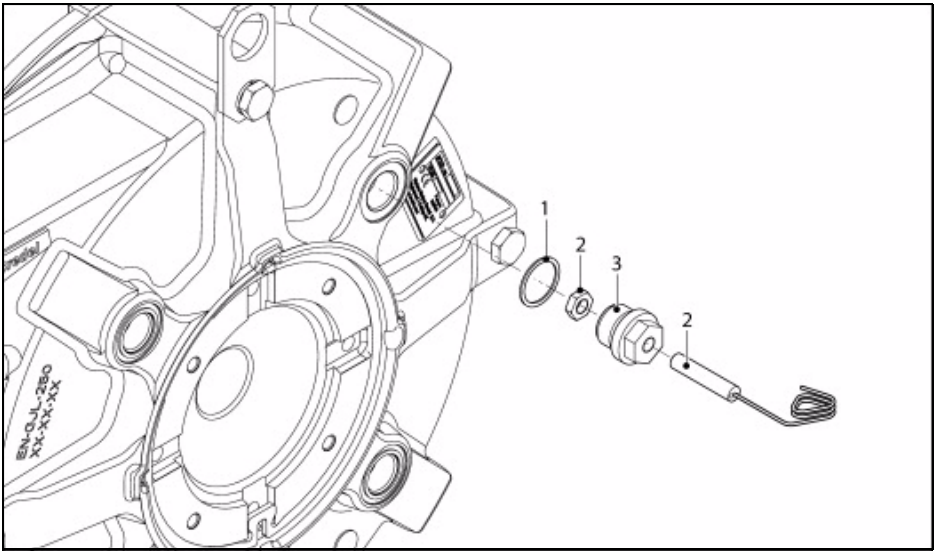

Pos.	Qty.	Description	Product codes for parts of pump type	
			SPX25	SPX32
1	1	Gasket	F342027	F342027
2	1	Revolution counter	29040462	29040462
3	1	Adapter	29027248	29027248

10.6.8 Lubricants

Pos.	Qty.	Description	Product codes for parts of pump type	
			SPX25	SPX32
1	1	2 l (0.5 gal) can Watson-Marlow Bredel Genuine Hose Lubricant	902143	-
	1	3 l (0.8 gal) can Watson-Marlow Bredel Genuine Hose Lubricant	-	908143

11 SAFETY FORM

Product Use and Decontamination Declaration

In compliance with the **Health & Safety Regulations**, the user is required to declare those substances that have been in contact with the item(s) you are returning to Watson-Marlow Bredel B.V. or any of its subsidiaries or distributors. Failure to do so will cause delays in servicing the item or in issuing a response. Therefore, **please complete this form** to make sure we have the information before receipt of the item(s) being returned. A completed copy must be attached to **the outside of the packaging** containing the item(s). You, the user, are responsible for cleaning and decontaminating the item(s) before returning them.

Please complete a separate Decontamination Certificate for each item returned. **RGA no** .....

1 Company ....

Address ....

Postal code.....

Telephone ..... Fax number .....

2 Product .....

2.1 Serial Number .....

2.2 Has the Product been used?

YES ☐ NO ☐

If yes, please complete all the following paragraphs.

If no, please complete paragraph 5 only

3 Details of substances pumped

3.1 Chemical Names

a) .....

b) .....

c) .....

d) .....

3.2 Precautions to be taken in handling these substances:

a) .....

b) .....

c) .....

d) .....

3.3 Action to be taken in the event of human contact:

a) .....

b) .....

c) .....

d) .....

3.4 Cleaning fluid to be used if residue of chemical is found during servicing;

a) .....

b) .....

c) .....

d) .....

4 I hereby confirm that the only substances(s) that the equipment specified has pumped or come into contact with are those named, that the information given is correct, and the carrier has been informed if the consignment is of a hazardous nature.

5 Signed .....

Name .....

Position .....

Date .....

Note:

To assist us in our servicing please describe any fault condition you have witnessed.

.....

.....

.....

.....

.....

Watson-Marlow Pumps Group
37 Upton Technology Park
Wilmington, MA 01887
USA
Telephone: 800 - 282 - 8823
978 - 658 - 6168
Fax: 978 - 658 - 0041

Internet: www.wmpg.com
E-mail: support@wmpg.us

NEN-EN-ISO 9001:2000

© 2010 Watson-Marlow Bredel B.V.

29210307 TS 02-021-E

SENSAPHONE®

REMOTE MONITORING SOLUTIONS

400 & 800 Series

Expand the Capabilities of your Sensaphone

2.8K Temperature Sensor

Designed to monitor air temperature in a clean, indoor, environment. Sensing range depends on product. Check back page for Sensaphone product compatibility. Does not come with wire.

FGD-0100 2.8K Temperature Sensor $20.00

2.8K Weatherproof Temperature

Small, sealed, general purpose temperature probe for indoor or outdoor use. Sensing range depends on product. Check back page for Sensaphone product compatibility. Comes with 12 feet of wire.

FGD-0101 2.8K Weatherproof Temperature $30.00

2.8K Temp Sensor in Glass Bead Vial

Ideal for cold storage temperature monitoring, the glass bead vial will buffer any momentary fluctuations that may cause a preliminary alarm dial out such as defrost cycles, opening of doors, and fans circulating air.

FGD-0107 2.8K Temperature Sensor in Glass Bead Vial..... $55.00

Temp° Alert

Wall mount, mechanical temperature sensor to detect if air temperature is too high or too low. Alarm limits are adjustable from -30° to 130° F. Works with all Sensaphone products. Does not come with wire.

FGD-0022 Temp ° Alert $65.00

Humidistat

Wall mount humidity sensor to detect high or low humidity levels. Alarm limits are adjustable from 10% to 60% RH. Multiple sensors may be wired to a single input. Works with all Sensaphone products. Does not come with wire.

FGD-0027 Humidistat $40.00

PowerOut Alert MODEL PS-110

A compact power outage monitoring device to detect power failures. Easily plugs into any 110 VAC receptacle outlet for operation. Works with all Sensaphone products. Comes with 15 feet of wire.

FGD-0054 Power-Out Alert MODEL PS-110 ..... $59.00

Magnetic Reed Switch

The magnetic reed switch may be used with all Sensaphone models to detect any unauthorized entry or intrusion. They are usually installed on doors and windows to detect their opening and closing. Several magnetic reed switches may be wired in series.

FGD-0006 Magnetic Reed Switch $10.00

Spot Water Detection Sensor

The water detection sensor can be used with all Sensahone models to detect the presence of water on a horizontal surface. Independently powered by internal lithium batteries. The batteries should last for approximately 3-5 years. When the batteries start to run down, the sensor will automatically cause an alarm dial out when no water is present. Multiple sensors can be wired in series to a single input.

FGD-0013 Spot Water Detection Sensor..... $90.00

Zone Water Detector

For use in detecting the presence of water on a floor or in a false ceiling. Comes with 10' of WaterRope cable to cover a larger area than the FGD-0013 water sensor. Up to three WaterRopes can be cascaded from a single sensor for even greater coverage. Works with all Sensaphone products. Comes with 25 feet of wire.

FGD-0056 Zone Water Detector $135.00

FGD-0063 Additional 10' of Water Rope $70.00

Infra-Red Motion Detector

The passive infra-red motion detector can be used with all Sensaphone models to monitor the movement of warm bodies in a specific area. It will cause an alarm if motion is detected. It's range of detection covers approximately forty feet of area. Multiple sensors can be wired in series to a single output.

FGD-0007 Infa-Red Motion Detector $79.00

Smoke Detector 120VAC

This photoelectric smoke alarm is powered by a hard wired 120VAC connection and provides an alarm output to trigger a Sensaphone alarm dial out. Works with all Sensaphone products. Does not come with wire.

FGD-0049 Smoke Detector 120VAC $55.00

FGD-0049-B Smoke Detector w/battery backup $65.00

Float Switch

Side mounted float switch that is effective in level control applications in small tanks where it is more convenient to install a level switch through the sidewall of the tank. Can be set to normally open or closed.

FGD-0222 Float Switch $39.00

Multi-Point Wireless I/O

This matched transmitter and receiver accepts two contacts and one 4-20mA signal and replicates them up to 5 miles away (line of sight). Perfect for connecting distant equipment to your Sensaphone.

FGD-0205 Multi-Point Wireless I/O $1,250.00

Accessory Wire

50ft. of 22-gauge shielded wire for connecting sensors to your Sensaphone.

FGD-0010 Accessory Wire $6.00

Surge Suppressor

Protects Sensaphone products from high voltage surges through AC power and telephone lines. Particularly important in areas of high lightening activity. Works with all Sensaphone products except the SAT4D.

FGD-0067 Surge Suppressor $19.00

Dual Setback Thermostat

For use with the Model 400 and 800, this is a "setback" thermostat with a LCD readout that has a programmable "home" and "away" temperature setting.

FGD-0064 Dual Setback Thermostat $69.00

XFR-0024 Power Supply for Dual Setback Thermostat $6.00

Bluetooth Cell Phone Interface

The XLink is simply a wireless link between a cell phone and a Sensaphone. The XLink allows the Sensaphone to dial and receive calls using any cell phone with Bluetooth technology. Perfect for access where a land line isn't available, the XLink is a must.

FGD-0230 Bluetooth Cell Phone Interface $119.00

A complete accessory specification sheet is available for all sensors and accessories. A complete parts list is available upon request or at www.sensaphone.com. All specifications subject to change.

SENSAPHONE®
901 TRYENS ROAD
ASTON, PA 19014
PH: 610-558-2700
F: 610-558-0222
WWW.SENSAPHONE.COM

Distributed By:

LIT-1003 © SENSAPHONE 5/2010

PHONETICS, INC. d.b.a. SENSAPHONE

NOTICE OF
WARRANTY DISCLAIMER OR LIMITATION, INDEMNIFICATION TERMS AND/OR LIMITATION OF LIABILITY

PLEASE CAREFULLY READ THIS NOTICE, ANY LICENSE AGREEMENT, ANY LIMITED WARRANTY, AND ANY OTHER AGREEMENT WITH SENSAPHONE BEFORE INSTALLATION OF SOFTWARE AND/OR USING THE PRODUCT OR SERVICE.

THE ENCLOSED DOCUMENTS CONTAIN SENSAPHONE'S STANDARD TERMS AND CONDITIONS. WHERE PERMITTED BY THE APPLICABLE LAW, BY KEEPING YOUR SENSAPHONE PRODUCT BEYOND THIRTY (30) DAYS AFTER THE DATE OF DELIVERY, YOU FULLY ACCEPT THE TERMS AND CONDITIONS SET FORTH IN THE ENCLOSED DOCUMENTS.

IN ADDITION, WHERE PERMITTED BY THE APPLICABLE LAW, YOUR INSTALLATION OF THE SOFTWARE AND/OR USE OF THE PRODUCT OR SERVICES CONSTITUTES FULL ACCEPTANCE OF THE TERMS AND CONDITIONS OF THE LICENSE AGREEMENT AND/OR WARRANTY CONTAINED HEREIN, AND IN THE PRODUCT MANUAL, AND THE USE OF ANY SENSAPHONE WEB SITE. THESE MAY INCLUDE WARRANTY DISCLAIMERS, WARRANTY LIMITATIONS, INDEMNIFICATION TERMS AND LIMITATIONS OF LIABILITY. IF YOU DO NOT AGREE TO THE TERMS AND CONDITIONS OF ANY LICENSE AGREEMENT, WRITTEN WARRANTY, WEB SITE OR OTHER AGREEMENT WITH SENSAPHONE, THEN YOU SHOULD NOT USE THE PRODUCT AND SHOULD RETURN IT TO THE SELLER FOR A REFUND OF THE PURCHASE PRICE.

IT MAY BE POSSIBLE FOR YOU TO USE A WEB SITE PROVIDED BY SENSAPHONE IN CONNECTION WITH ITS PRODUCT(S) OR SERVICES. IF YOU DO AGREE TO USE SUCH WEB SITE(S), THEN YOUR USE OF THE WEB SITE MAY BE GOVERNED BY SIMILAR LIMITATIONS, EXCLUSIONS OR INDEMNIFICATION TERMS DESCRIBED ABOVE. YOU MUST READ THE TERMS AND CONDITIONS ON SUCH WEB SITE BEFORE USE, AND AGREE TO THEM, AS YOUR USE OF THE WEB SITE WILL BIND YOU TO THOSE TERMS AND CONDITIONS.

APPLICABLE LAW MAY LIMIT THE EXTENT TO WHICH YOUR RETENTION, INSTALLATION OR USE CONSTITUTES ACCEPTANCE OF THE TERMS AND CONDITIONS DESCRIBED HEREIN AND AS TO THE ENFORCEABILITY OF LIMITATIONS UPON OR EXCLUSIONS OF WARRANTIES, INDEMNIFICATION TERMS, AND UPON LIMITATIONS OF LIABILITY.

ALL TERMS AND CONDITIONS IN ANY AGREEMENT, WARRANTY AND/OR LICENSE WITH SENSAPHONE ARE EXPRESSLY SUBJECT TO THE LAWS OF THE STATE OF DELAWARE, WITHOUT REGARD TO ITS CHOICE OF LAW PRINCIPLES.

THIS NOTICE IS INTENDED TO BRING THE EXISTENCE OF THE TERMS AND CONDITIONS OF THE ENCLOSED DOCUMENTS TO YOUR ATTENTION AND TO DIRECT YOU TO READ THE TERMS AND CONDITIONS OF THOSE DOCUMENTS. IT IS THE SPECIFIC LANGUAGE OF THOSE TERMS AND CONDITIONS THAT WILL CONTROL THE PARTIES' RELATIONSHIP, RATHER THAN THE GENERAL LANGUAGE OF THIS NOTICE.

SENSAPHONE® 400/800 Series Warranty

1 YEAR LIMITED WARRANTY

PLEASE READ THIS WARRANTY CAREFULLY BEFORE USING THE PRODUCT.

THIS LIMITED WARRANTY CONTAINS SENSAPHONE'S STANDARD TERMS AND CONDITIONS. WHERE PERMITTED BY THE APPLICABLE LAW, BY KEEPING YOUR SENSAPHONE PRODUCT BEYOND THIRTY (30) DAYS AFTER THE DATE OF DELIVERY, YOU FULLY ACCEPT THE TERMS AND CONDITIONS SET FORTH IN THIS LIMITED WARRANTY.

IN ADDITION, WHERE PERMITTED BY THE APPLICABLE LAW, YOUR INSTALLATION AND/OR USE OF THE PRODUCT CONSTITUTES FULL ACCEPTANCE OF THE TERMS AND CONDITIONS OF THIS LIMITED WARRANTY (HEREINAFTER REFERRED TO AS "LIMITED WARRANTY OR WARRANTY"). IF YOU DO NOT AGREE TO THE TERMS AND CONDITIONS THIS WARRANTY, INCLUDING ANY LIMITATIONS OF WARRANTY, INDEMNIFICATION TERMS OR LIMITATION OF LIABILITY, THEN YOU SHOULD NOT USE THE PRODUCT AND SHOULD RETURN IT TO THE SELLER FOR A REFUND OF THE PURCHASE PRICE. THE LAW MAY VARY BY JURISDICTION AS TO THE APPLICABILITY OF YOUR INSTALLATION OR USE ACTUALLY CONSTITUTING ACCEPTANCE OF THE TERMS AND CONDITIONS HEREIN AND AS TO THE APPLICABILITY OF ANY LIMITATION OF WARRANTY, INDEMNIFICATION TERMS OR LIMITATIONS OF LIABILITY.

1. **WARRANTOR**: In this Warranty, Warrantor shall mean "Dealer, Distributor, and/or Manufacturer."

2. **ELEMENTS OF WARRANTY**: This Product is warranted to be free from defects in materials and craftsmanship with only the limitations and exclusions set out below.

3. **WARRANTY AND REMEDY**: One-Year Warranty — In the event that the Product does not conform to this warranty at any time during the time of one year from original purchase, warrantor will repair the defect and return it to you at no charge.

This warranty shall terminate and be of no further effect at the time the product is: (1) damaged by extraneous cause such as fire, water, lightning, etc. or not maintained as reasonable and necessary; or (2) modified; or (3) improperly installed; or (4) misused; or (5) repaired or serviced by someone other than Warrantors' authorized personnel or someone expressly authorized by Warrantor's to make such service or repairs; (6) used in a manner or purpose for which the product was not intended; or (7) sold by original purchaser.

LIMITED WARRANTY, LIMITATION OF DAMAGES AND DISCLAIMER OF LIABILITY FOR DAMAGES: THE WARRANTOR'S OBLIGATION UNDER THIS WARRANTY IS LIMITED TO REPAIR OR REPLACEMENT OF THE PRODUCT, AT THE WARRANTOR'S OPTION AS TO REPAIR OR REPLACEMENT. IN NO EVENT SHALL WARRANTORS BE LIABLE OR RESPONSIBLE FOR PAYMENT OF ANY INCIDENTAL, CONSEQUENTIAL, SPECIAL AND/OR PUNITIVE DAMAGES OF ANY KIND, INCLUDING BUT NOT LIMITED TO ANY LABOR COSTS, PRODUCT COSTS, LOST REVENUE, BUSINESS INTERRUPTION LOSSES, LOST PROFITS, LOSS OF BUSINESS, LOSS OF DATA OR INFORMATION, OR FINANCIAL LOSS, FOR CLAIMS OF ANY NATURE, INCLUDING BUT NOT LIMITED TO CLAIMS IN CONTRACT, BREACH OF WARRANTY OR TORT, AND WHETHER OR NOT CAUSED BY WARRANTORS' NEGLIGENCE. IN THE EVENT THAT IT IS DETERMINED IN ANY ADJUDICATION THAT THE LIMITED WARRANTIES OF REPAIR OR REPLACEMENT ARE INAPPLICABLE, THEN THE PURCHASER'S SOLE REMEDY SHALL BE PAYMENT TO THE PURCHASER OF THE ORIGINAL COST OF THE PRODUCT, AND IN NO EVENT SHALL WARRANTORS BE LIABLE OR RESPONSIBLE FOR PAYMENT OF ANY INCIDENTAL, CONSEQUENTIAL, SPECIAL AND/OR PUNITIVE DAMAGES OF ANY KIND, INCLUDING BUT NOT LIMITED TO ANY LOST REVENUE, BUSINESS INTERRUPTION LOSSES, LOST PROFITS, LOSS OF BUSINESS, LOSS OF DATA OR INFORMATION, OR FINANCIAL LOSS, FOR CLAIMS OF ANY NATURE, INCLUDING BUT NOT LIMITED TO CLAIMS IN CONTRACT, BREACH OF WARRANTY OR TORT, AND WHETHER OR NOT CAUSED BY WARRANTORS' NEGLIGENCE.

WITHOUT WAIVING ANY PROVISION IN THIS LIMITED WARRANTY, IF A CIRCUMSTANCE ARISES WHERE WARRANTORS ARE FOUND TO BE LIABLE FOR ANY LOSS OR DAMAGE ARISING OUT OF MISTAKES, NEGLIGENCE, OMISSIONS, INTERRUPTIONS, DELAYS, ERRORS OR DEFECTS IN WARRANTORS' PRODUCTS OR SERVICES, SUCH LIABILITY SHALL NOT EXCEED THE TOTAL AMOUNT PAID BY THE CUSTOMER FOR WARRANTORS' PRODUCT AND SERVICES OR $250.00, WHICHEVER IS GREATER. YOU HEREBY RELEASE WARRANTORS FROM ANY AND ALL OBLIGATIONS, LIABILITIES AND CLAIMS IN EXCESS OF THIS LIMITATION.

INDEMNIFICATION AND COVENANT NOT TO SUE: YOU WILL INDEMNIFY, DEFEND AND HOLD HARMLESS WARRANTORS, THEIR OWNERS, DIRECTORS, OFFICERS, EMPLOYEES, AGENTS, SUPPLIERS OR AFFILIATED COMPANIES, AGAINST ANY AND ALL CLAIMS, DEMANDS OR ACTIONS BASED UPON ANY LOSSES, LIABILITIES, DAMAGES OR COSTS, INCLUDING BUT NOT LIMITED TO DAMAGES THAT ARE DIRECT OR INDIRECT, INCIDENTAL, SPECIAL OR CONSEQUENTIAL, AND INCLUDING ATTORNEYS FEES AND LEGAL COSTS, THAT MAY RESULT FROM THE INSTALLATION, OPERATION, USE OF, OR INABILITY TO USE WARRANTORS' PRODUCTS AND SERVICES, OR FROM THE FAILURE OF THE WARRANTORS' SYSTEM TO REPORT A GIVEN EVENT OR CONDITION, WHETHER OR NOT CAUSED BY WARRANTORS' NEGLIGENCE.

YOU AGREE TO RELEASE, WAIVE, DISCHARGE AND COVENANT NOT TO SUE WARRANTORS, THEIR OWNERS, DIRECTORS, OFFICERS, EMPLOYEES, AGENTS, SUPPLIERS OR AFFILIATED COMPANIES, FOR ANY AND ALL LIABILITIES POTENTIALLY ARISING FROM ANY CLAIM, DEMAND OR ACTION BASED UPON ANY LOSSES, LIABILITIES, DAMAGES OR COSTS, INCLUDING BUT NOT LIMITED TO DAMAGES THAT ARE DIRECT OR INDIRECT, INCIDENTAL, SPECIAL OR CONSEQUENTIAL, AND INCLUDING ATTORNEYS FEES AND LEGAL COSTS, THAT MAY RESULT FROM THE INSTALLATION, OPERATION, USE OF, OR INABILITY TO USE WARRANTORS' PRODUCTS AND SERVICES, OR FROM THE FAILURE OF THE WARRANTORS' SYSTEM TO REPORT A GIVEN EVENT OR CONDITION, WHETHER OR NOT CAUSED BY WARRANTORS' NEGLIGENCE, EXCEPT AS NECESSARY TO ENFORCE THE EXPRESS TERMS OF THIS LIMITED WARRANTY.

EXCLUSIVE WARRANTY: THE LIMITED WARRANTY OR WARRANTIES DESCRIBED HEREIN CONSTITUTE THE SOLE WARRANTY OR WARRANTIES TO THE PURCHASER. ALL IMPLIED WARRANTIES ARE EXPRESSLY DISCLAIMED, INCLUDING: THE WARRANTY OF MERCHANTABILITY AND THE WARRANTY OF FITNESS FOR A PARTICULAR USE AND THE WARRANTY OF FITNESS FOR A PARTICULAR PURPOSE AND THE WARRANTY OF NON-INFRINGEMENT AND/OR ANY WARRANTY ARISING FROM A COURSE OF DEALING, USAGE, OR TRADE PRACTICE.

It must be clear that the Warrantors are not insuring your premises or business or guaranteeing that there will not be damage to your person or property or business if you use this Product. You should maintain insurance coverage sufficient to provide compensation for any loss, damage, or expense that may arise in connection with the use of products or services, even if caused by Warrantors' negligence. The warrantors assume no liability for installation of the Product and/or interruptions of the service due to strikes, riots, floods, fire, and/or any cause beyond Seller's control, further subject to the limitations expressed in any License Agreement or other Agreement provided by Warrantors to purchaser.

The agreement between the Warrantors and the Purchaser, including but not limited to the terms and conditions herein shall not be governed by the Convention for the International Sale of Goods. Where applicable, the Uniform Commercial Code as adopted by the State of Delaware shall apply.

4. **PROCEDURE FOR OBTAINING PERFORMANCE OF WARRANTY**: In the event that the Product does not conform to this warranty, the Product should be shipped or delivered freight prepaid to a Warrantor with evidence of original purchase.

5. **LEGAL REMEDIES AND DISCLAIMER**: Some jurisdictions may not allow, or may place limits upon, the exclusion and/or limitation of implied warranties, incidental damages and/or consequential damages for some types of goods or products sold to consumers and/or the use of indemnification terms. Thus, the exclusions, indemnification terms and limitations set out above may not apply, or may be limited in their application, to you. If the implied warranties can not be excluded, and the applicable law permits limiting the duration of implied warranties, then the implied warranties herein are to be limited to the same duration as the applicable written warranty or warranties herein. The warranty or warranties herein may give you specific legal rights that will depend upon the applicable law. You may also have other legal rights depending upon the law in your jurisdiction.

6. **CHOICE OF FORUM AND CHOICE OF LAW**: In the event that a dispute arises out of or in connection with this Limited Warranty, then any claims or suits of any kind concerning such disputes shall only and exclusively be brought in either the Court of Common Pleas of Delaware County, Pennsylvania or the United States District Court for the Eastern District of Pennsylvania.

Regardless of the place of contracting or performance, this Limited Warranty and all questions relating to its validity, interpretation, performance and enforcement shall be governed by and construed in accordance with the laws of the State of Delaware, without regard to the principles of conflicts of law.

Effective date 05/01/2004

PHONETICS, INC. d.b.a. SENSAPHONE
901 Tryens Road
Aston, PA 19014
Phone: 610.558.2700 Fax: 610.558.0222
www.sensaphone.com

Dynasonics®

Economical, Non-Invasive Flow Meter

Badger Meter

TFXL Ultrasonic Transit Time

Clamp-On Ultrasonic Flow Meter for Liquids

The Series TFXL ultrasonic flow meter clamps onto the outside of a pipe and does not contact the internal liquid. This advanced product provides instantaneous rate and accumulated flows along with 4-20 mA and pulse outputs. Compact integral mount systems can accommodate pipes/tubing two inches (DN 50 mm) and smaller. Remote mount systems are also available for pipe/tubing sizes 1/2 inch (DN 15 mm) and higher.

Features

- Measures liquids with small amounts of suspended solids or aeration (e.g., surface water, sewage).
- Bi-directional flow measurement system. Totalizer options include forward, reverse and net total.
- ULTRALINK software utility enables in-field flow meter configuration, calibration and troubleshooting, via laptop PC.
- Compact enclosure uses large, easy-to-read digital display.

Benefits

- Reduced material costs: clamp-on sensor eliminates the need for in-line flanges, pipe fittings, strainers, and filters.
- Reduced installation time: may be installed and fully operational within minutes. No need to break into pipelines.
- Reduced maintenance costs: with no moving parts, there is nothing on the TFXL to wear down – no repair kits or replacement parts are needed.
- Easy retrofit: with three standard outputs (4-20 mA, TTL pulse, and simulated turbine frequency), the TFXL drops easily into existing DCS and flow monitoring systems.
- Reduced down-time: installation may be performed on full pipes. No need to shut the process down for installation or maintenance.

Principle of Operation

Transit time flow meters utilize two transducers which function as both ultrasonic transmitters and receivers. The flow meters operate by alternately transmitting and receiving a frequency modulated burst of sound energy between the two transducers. The burst is first transmitted in the direction of fluid flow and then against fluid flow. Since sound energy in a moving liquid is carried faster when it travels in the direction of fluid flow (downstream) than it does when it travels against fluid flow (upstream), a differential in the times of flight will occur. The sound's time of flight is accurately measured in both directions and the difference in time of flight calculated. The liquid velocity (V) inside the pipe can be related to the difference in time of flight (dt) through the following equation: V = K*D*dt, where K is a constant and D is the distance between the transducers.

Transit-Time Ultrasonic Measurement

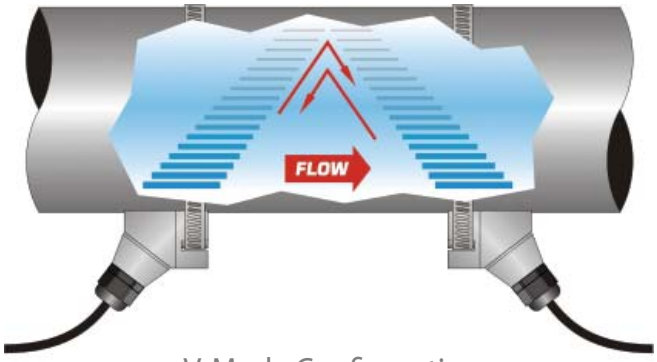

V-Mode Configuration
Transit Time

Remote Mount or Integral Mount Encoders

Installation Options

The optimum mounting location for the Series TFXL ultrasonic flow meter is a full pipe with at least 10 straight pipe diameters upstream and five pipe diameters downstream with no flow disturbances. Mount the flow meter or remote transducers onto a horizontal pipe with transducers located at approximately a 45-degree angle on the side of the pipe. On vertical pipes with upward flow, the transducers can be mounted in any radial orientation.

Integral Mount

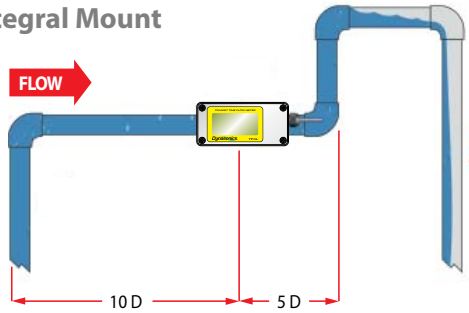

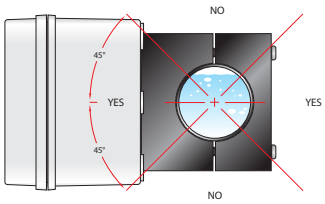

Head-on view of pipe

Remote Mount—Small Pipe

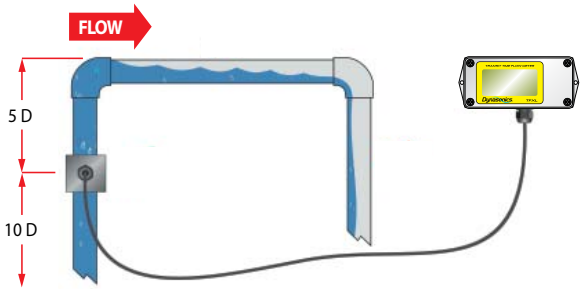

Remote Mount—Large Pipe

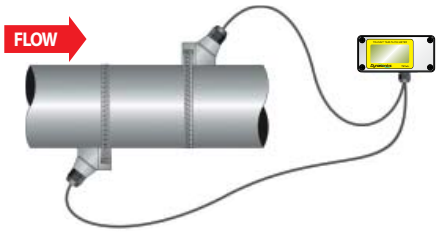

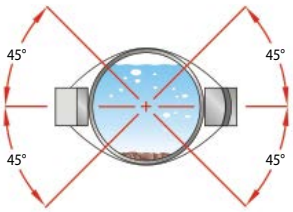

Head-on view of pipe

Hazardous Locations

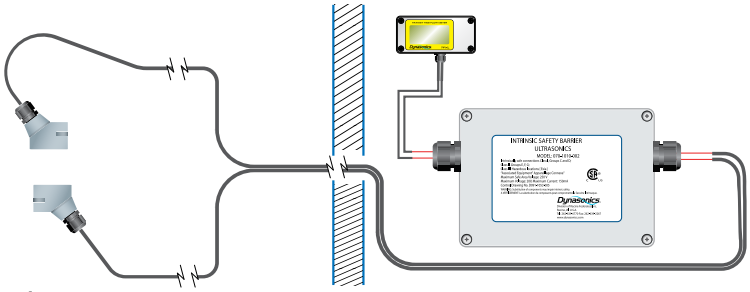

Mounting Locations and Orientation

Part Number Construction

Integral System 1/2…2 in. (12…50 mm)

Part Number: DTFXL □ - □ □ □ - N □

Display Options
1) ABS enclosure – No display
2) ABS enclosure – Rate & Totalizer display

Output
1) 4-20 mA & TTL Pulse
3) Totalizer Pulse

Connector Options
N) 1/2" Conduit Hole (2)
A) Water-tight Cable Clamp(2)
C) 4-Pin (male) Brad Harrison® Micro-Change® Connector
D) 1/2" Flexible Conduit Connectors (2)

Options
N) None
C) CPVC Transducer Material (Integral- mount Options Only)
F) I.S. DTTN Transducer (Remote Option X Only)

Pipe Size
A) 1/2" ANSI Pipe (DN 15)
B) 3/4" ANSI Pipe (DN 20)
C) 1" ANSI Pipe (DN 25)
D) 1-1/4" ANSI Pipe (DN 32)
E) 1-1/2" ANSI Pipe (DN 40)
F) 2" ANSI Pipe (DN 50)
G) 1/2" Copper
H) 3/4" Copper
I) 1" Copper
J) 1-1/4" Copper
K) 1-1/2" Copper
L) 2" Copper
M) 1/2" Tubing
N) 3/4" Tubing
P) 1" Tubing
Q) 1-1/4" Tubing
R) 1-1/2" Tubing
S) 2" Tubing

Remote System 1/2 in. and larger (12 mm and larger)

A system consists of one DTFXL part number and a choice of one large or small pipe transducer part number.

DTFXL □ - □ □ □ - N N

System Size
X) Large Pipe
Y) Small Pipe

Select Options from Integral System Table

Standard Pipe Transducer
Pipes larger than 2" (DN 50 mm)

DTT □-□□□-□ □□□-□

Piping Environment
N) Standard: 250° F (121° C) Max. Temp.
L) Large Pipe: 250° F (121° C) Max. Temp.
H) High Temp: 350° F (176° C) Max. Temp.

Cable Length
020) 20 feet (6 m)
050) 50 feet (15 m)
100) 100 feet (30 m)

Transducer Options
N) None
S) Submersible (IP68)
A) Flexible armored
P) BNC Connectors

Conduit Length
000) 0 feet (0 m)
020) 20 feet (6 m)
050) 50 feet (15 m)
100) 100 feet (30 m)

Area Options
N) None
F) Class I, Div. 1, Groups C & D w/I.S. barrrier
P) Portable w/ I.S. barrier

Small Pipe Transducer
Pipes 1/2…2" (12…50 mm)

DTT □-□□-□□□-□□□□

Piping Environment
S) Standard: 185° F 185° F (85° C) (PVC, Ultem®)
C) High Temp: 250° F (121° C) (CPVC, Ultem®)

Nominal Pipe Size
D) 1/2″
F) 3/4″
G) 1″
H) 1-1/4″
J) 1-1/2″
L) 2″

Pipe Type
P) ANSI Pipe
C) Copper Pipe
T) Tubing

Cable Length
020) 20 ft. (6.1 m)
050) 50 ft. (15 m)
100) 100 ft. (30 m)

Conduit Type
N) None
A) Flexible Armored
P) BNC Connectors

Conduit Length
000) 0 ft. (0 m)
020) 20 ft. (6.1 m)
050) 50 ft. (15 m)
100) 100 ft. (30 m)

Specifications

Liquid Types	Most clean liquids or liquids containing small amounts of suspended solids
Power Requirements	11-28VDC @ 0.25A
Protection	Reverse polarity, surge suppression
Velocity	0.1…40 fps (0.03…12 mps)
Inputs/Outputs	**4-20mA Output (Standard Output)** Resolution: 12-bit for all outputs Power: Source Insertion loss: 5V Max. Loop impedance: 900 Ohms Max. Isolation: Can share ground common with power supply isolated from piping system **Totalizer Pulse** Operation: Normal state high; pulses low with display total increments Pulse duration: 30mSec min. Source/sink: 2 mA max. Logic: 5 VDC **Turbine Frequency Output/TTL—Pulse Output (Switch selectable)** Type: Non-grounded referenced AC/ground referenced square wave Amplitude: 500mVpp min. /5 VDC Frequency range: 0…1,000Hz Duty cycle: 50% ± 10%
Display	Type: 2 line x 8 character LCD Rate: 8 maximum digits with lead zero blanking Total: 8 maximum digits with exponential multipliers from –1…6
Units	Engineering units: Feet, gallons, ft^3, million-gal, barrels (liquid & oil), acre-feet. lbs, meters, m^3, liters, million-liters, kg Rate: second, minute, hour, day
Enclosure – Rating: Dimensions:	NEMA 3 (Type 3) ABS, PVC and Ultem® (integral system), brass or SS hardware 3"W x 2.5" H x 6" D (75 mm x 63 mm x 150 mm)
Transducer Type:	Clamp-on, uses time of flight ultrasonics
Ambient Temperature:	General purpose: –40° F…185° F (–40° C…85° C); Hazardous locations integral mount: 0° F…105° F (–20° C…40° C); Hazardous locations DTTN: –40° F…185° F (–40° C…85° C)
Transducer Ratings:	DTTN/DTTC: NEMA 6* (IP 67), CPVC, Ultem, Nylon cord grip, PVC cable jacket; –40…250° F (–40…121° C) Construction DTTN: NEMA 6P* (IP 68) option, CPVC, Ultem, Nylon cord grip, Polyethylene cable jacket; –40…250° F (–40…121° C) DTTH: NEMA 6* (IP 67), PTFE, Vespel®, Nickel-plated brass cord grip, PFA cable jacket; –40…350° F (–40…176° C) DTTS: NEMA 6* (IP 67), PVC, Ultem, Nylon cord grip, PVC cable jacket; –40…185° F (–40…85° C) *NEMA 6 units: to a depth of 3 ft. (1 m) for 30 days max. NEMA 6P units: to a depth of 100 ft. (30 m) seawater equivalent density indefinitely.
Pipe/Tubing Sizes:	1/2" (12 mm) and larger
Pipe/Tubing Materials:	Carbon steel, stainless steel, copper and plastic
Accuracy:	DTTN/DTTH ±1% of reading at rates >1 FPS (0.3 MPS), ±0.01 FPS (±0.003 MPS) at rates lower than 1 FPS; DTTS/DTTC 1" and larger units ±1% of reading from 10-100% of measuring range, ±0.01 FPS (±0.003 MPS) at rates lower than 10% of measuring range; ¾" and smaller units ±1% FS. Refer to the Dimensional Specifications page for applicable measuring ranges for each DTTS/DTTN transducer models.
Repeatability:	±0.5% of reading
Response Time:	0.3…30 seconds, adjustable
Certifications:	**All TFXL Models** General Requirements: UL 61010-1 and CSA C22.2 No. 61010-1 Hazardous Locations: Class I Div. 2 Groups C&D T4 to UL 1604 and CSA 22.2 No. 213 **DTTN Transducer and IS Barrier (-F option)** Hazardous Location Designation: Class I Div 1, Groups C & D; T5 Intrinsically Safe Exia Process Control Equipment: CSA C22.2 No. 142 Intrinsically Safe Equipment: CSA C22.2 No. 157 Intrinsically Safe & Associated Apparatus: UL913 Energy Management Equipment: UL916
ULTRALINK™ Utility:	Software utility, requires serial communication cable Windows 2000, Windows XP, Windows Vista®, and Windows® 7 compatible

Dimensions:

Inches (mm)

Integral System

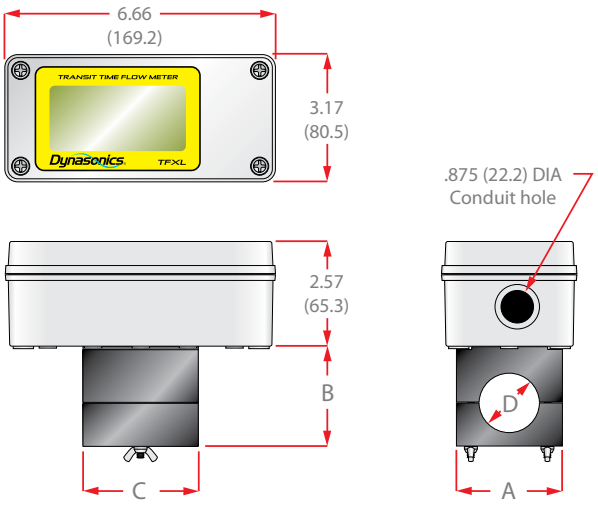

U-Bolt Connections (ANSI & Copper 2 inch Models)

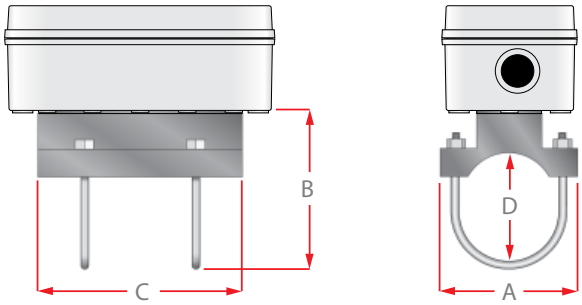

DTTS and DTTC Transducers

PIPE SIZE	PIPE MATERIAL	A	B	C	D	MEASURING RANGE
1/2"	ANSI/DN	2.46 (62.5)	2.36 (59.9)	2.66 (67.6)	0.84 (21.3)	2…38 gpm 8…144 lpm
	Copper	2.46 (62.5)	2.36 (59.9)	3.33 (84.6)	0.63 (15.9)	1.8…27 gpm 7…102 lpm
	Tubing	2.46 (62.5)	2.28 (57.9)	3.72 (94.5)	0.50 (12.7)	1.5…18 gpm 6…68 lpm
3/4"	ANSI/DN	2.46 (62.5)	2.57 (65.3)	2.66 (67.6)	1.05 (26.7)	2.75…66 gpm 10…250 lpm
	Copper	2.46 (62.5)	2.50 (63.5)	3.56 (90.4)	0.88 (22.2)	2.5…54 gpm 10…204 lpm
	Tubing	2.46 (62.5)	2.50 (63.5)	3.56 (90.4)	0.75 (19.0)	2.5…45 gpm 10…170 lpm
1"	ANSI/DN	2.46 (62.5)	2.92 (74.2)	2.86 (72.6)	1.32 (33.4)	3.5…108 gpm 13…409 lpm
	Copper	2.46 (62.5)	2.87 (72.9)	3.80 (96.5)	1.13 (28.6)	3.5…95 gpm 13…360 lpm
	Tubing	2.46 (62.5)	2.75 (69.9)	3.80 (96.5)	1.00 (25.4)	3.5…85 gpm 13…320 lpm
1-1/4"	ANSI/DN	2.80 (71.0)	3.18 (80.8)	3.14 (79.8)	1.66 (42.2)	5…186 gpm 19…704 lpm
	Copper	2.46 (62.5)	3.00 (76.2)	4.04 (102.6)	1.38 (34.9)	4.5…152 gpm 17…575 lpm
	Tubing	2.46 (62.5)	3.00 (76.2)	4.04 (102.6)	1.25 (31.8)	4…136 gpm 15…514 lpm
1-1/2"	ANSI/DN	3.02 (76.7)	3.42 (86.9)	3.33 (84.6)	1.90 (48.3)	6…250 gpm 23…946 lpm
	Copper	2.71 (68.8)	2.86 (72.6)	4.28 (108.7)	1.63 (41.3)	5…215 gpm 19…814 lpm
	Tubing	2.71 (68.8)	3.31 (84.1)	4.28 (108.7)	1.50 (38.1)	5…200 gpm 19…757 lpm
2"	ANSI/DN	3.70 (94.0)	3.42 (86.9)*	5.50 (139.7)	2.375 (60.3)*	8…420 gpm 30…1590 lpm
	Copper	3.70 (94.0)	3.38 (85.9)*	5.50 (139.7)	2.125 (54.0)*	8…375 gpm 30…1419 lpm
	Tubing	3.21 (81.5)	3.85 (98.0)	4.75 (120.7)	2.00 (50.8)	8…365 gpm 30…1381 lpm

*Varies due to U-bolt configuration

Remote System

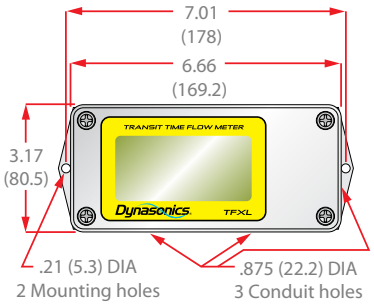

DTTN/DTTH
Pipes larger than 2" (50 mm)

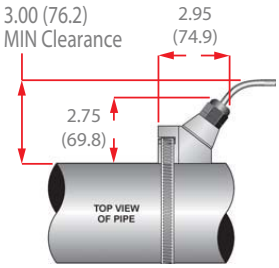

DTTS/DTTC
Pipes/Tubing ½" to 2"
(12 mm to 50 mm)

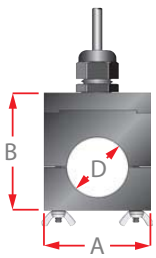

DTTS/DTTC U-Bolt Connections
ANSI/DN & Copper 2" (50 mm) Models

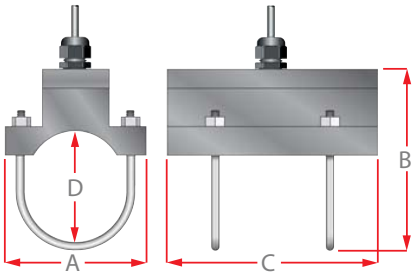

Trademarks appearing in this document are the property of their respective entities.
Due to continuous research, product improvements and enhancements, Badger Meter reserves the right to change product or system specifications without notice, except to the extent an outstanding contractual obligation exists. © 2012 Badger Meter, Inc. All rights reserved.

info@dynasonics.com | www.dynasonics.com | www.badgermeter.com

Phone: 262-639-6770 | Fax: 262-639-2267

The Americas | Badger Meter | 4545 West Brown Deer Rd | PO Box 245036 | Milwaukee, WI 53224-9536 | 800-876-3837 | 414-355-0400
México | Badger Meter de las Americas, S.A. de C.V. | Pedro Luis Ogazón N°32 | Esq. Angelina N°24 | Colonia Guadalupe Inn | CP 01050 | México, DF | México | +52-55-5662-0882
Europe, Middle East and Africa | Badger Meter Europa GmbH | Nurtinger Str 76 | 72639 Neuffen | Germany | +49-7025-9208-0
Czech Republic | Badger Meter Czech Republic s.r.o. | Maříkova 2082/26 | 621 00 Brno, Czech Republic | +420-5-41420411
Slovakia | Badger Meter Slovakia s.r.o. | Racianska 109/B | 831 02 Bratislava, Slovakia | +421-2-44 63 83 01
Asia Pacific | Badger Meter | 80 Marine Parade Rd | 21-04 Parkway Parade | Singapore 449269 | +65-63464836
China | Badger Meter | Rm 501, N° 11 Longyue Apartment | N° 180 Longjin Rd, Jiuting Songjiang District | Shanghai, China | 201615 | +86-21-5763 5412

06-TTM-BR-00404-EN (August, 2012)

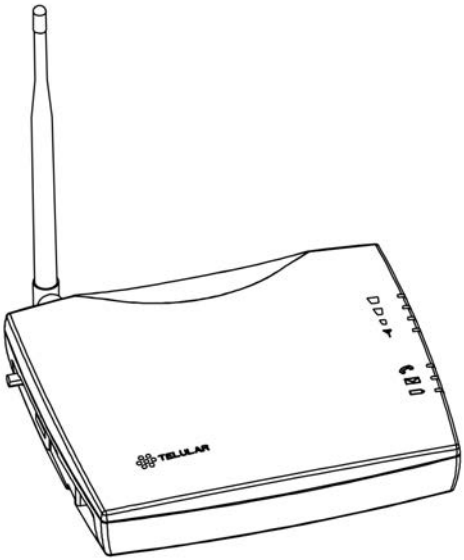

Phonecell® SX5T CDMA2000® 1XRTT

Fixed Wireless Terminal

SX5T-535C DUAL-BAND 800/1900 MHZ CDMA

USER MANUAL

Quick Connection Diagram

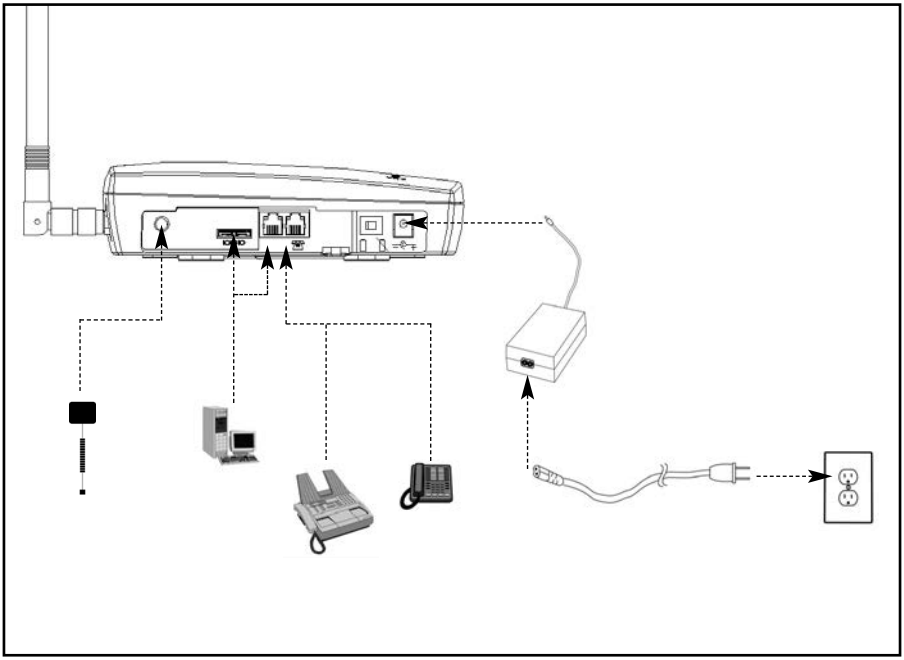

SX5T Fixed Wireless Terminal

CONTENTS

Phonecell® SX5T CDMA FWT

Spike Antenna

Power Supply or BBU

AC Power Cord

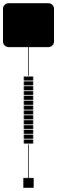

GPS Antenna (Optional)

Before installing the **Phonecell® SX5T**, carefully remove the contents from the shipping carton and check for evidence of shipping damage. **If damage is found, contact your Authorized Telular Distributor or shipping agent immediately**.

SAFE OPERATION INSTRUCTIONS

IMPORTANT! Before installing or operating this product, read the ***SAFETY INFORMATION*** section on page 30 of this manual.

- Install the unit indoors.
- Install the unit on a hard, flat surface for proper ventilation.
- Do not expose the unit to rain or moisture.
- Do not place the unit on or close to sources of heat.

PLEASE SEE THE *IMPORTANT NOTICES* AND *SAFETY INFORMATION* SECTIONS OF THIS MANUAL FOR IMPORTANT INFORMATION ON USE AND INDEMNIFICATION. FOR WARRANTY INFORMATION, PLEASE SEE THE *LIMITED COMMERCIAL WARRANTY* CARD WHICH WAS PACKAGED WITH YOUR DEVICE.

IMPORTANT NOTICES

TERMS AND CONDITIONS FOR USE OF PHONECELL® PRODUCTS ("Product")

These Terms and Conditions are a legal contract between you and Telular Corporation for the title to and use of the Product. BY RETAINING AND USING THE PRODUCT AFTER RECEIPT OF IT, YOU AGREE TO THE TERMS AND CONDITIONS INCLUDING WARRANTY DISCLAIMERS, LIMITATIONS OF LIABILITY AND INDEMNIFICATION PROVISIONS BELOW. IF YOU DO NOT AGREE TO THE TERMS AND CONDITIONS, DO NOT USE THE PRODUCT AND IMMEDIATELY RETURN THE UNUSED PRODUCT FOR A COMPLETE REFUND. You agree to accept sole responsibility for any misuse of the Product by you; and, in addition, any negligent or illegal act or omission of your or your agents, contractors, servants, employees, or other users of the Product so long as the Product was obtained from you, in the use and operation of the Product.

INDEMNIFICATION OF TELULAR CORPORATION ("TELULAR")

YOU SHALL INDEMNIFY, DEFEND AND HOLD HARMLESS TELULAR FOR ANY OF THE COST, INCLUDING REASONABLE ATTORNEYS' FEES, AND FROM CLAIMS ARISING OUT OF YOU, YOUR CLIENTS' OR OTHER THIRD PARTIES' USE OR OPERATION OF THE PRODUCT: (i) FOR MISUSE OR IN A MANNER NOT CONTEMPLATED BY YOU AND TELULAR OR INCONSISTENT WITH THE PROVISIONS OF THIS MANUAL; (ii) IN AN ILLEGAL MANNER OR AGAINST PUBLIC POLICY; (iii) IN A MANNER SPECIFICALLY UNAUTHORIZED IN THIS MANUAL; (iv) IN A MANNER HARMFUL OR DANGEROUS TO THIRD PARTIES; (v) FROM CLAIMS BY ANYONE RESPECTING PROBLEMS, ERRORS OR MISTAKES OF THE PRODUCT; OR (vi) COMBINATION OF THE PRODUCT WITH MATERIAL, MODIFICATION OF THE PRODUCT OR USE OF THE PRODUCT IN AN ENVIRONMENT NOT PROVIDED, OR PERMITTED, BY TELULAR IN WRITING. THE PARTIES SHALL GIVE EACH OTHER PROMPT NOTICE OF ANY SUCH COST OR CLAIMS AND COOPERATE, EACH WITH THE OTHER, TO EFFECTUATE THIS INDEMNIFICATION, DEFENSE AND HOLD HARMLESS.

Telular Corporation

Corporate Headquarters

647 North Lakeview Parkway

Vernon Hills, Illinois 60061, USA

Contact Customer Support

Tel: 1-800-229-2326 Fax: 1-678-945-7758

Email: support@telular.com http://www.telular.com

Part Number 56035301

©2006 Telular Corporation, All Rights Reserved

Table of Contents

Quick Connection Diagram ii
Safe Operation Instructions iii
Important Notices iii
Setup 1
Connecting an SX5T Model With a Power Supply 1
Emergency Batteries 2
Connecting an SX5T Model With a BBU (Backup Battery Unit) 3
SX5T Location and Installation 4
Wall Mounting 4
GPS Antenna Mounting 5
Direct Connection: Phone, Fax and Data 6
Connection via Wall Jacks 6
Getting to Know Your SX5T 7
LED Status Indicators 7
Important Dial Tones 8
Using the SX5T 9
Making Calls 9
Receiving Calls 9
Ending Calls 9
Using In-Call Features 9
Accessing Your Voicemail 10
Making a Three-Way Call 10
Using Call Forwarding 10
Adjusting Your Phone's Settings 11
Volume Level 11
Entering Configuration Mode 11
Changing the Lock Code 11
Audio Line Level 12
Auto-Send Delay 12
Frequently Dialed Numbers (Zero Delay Dialing) 12
Call Barring 12
Hotline 13
One-Minute Alert 13
TTY Use 13
Voicemail Number 14
One-Touch Voicemail Retrieval 14
Restore User Defaults 14
Using Additional Hardware Devices 15
Using an External Answering Machine 15
Setting Up Data Transfer for a Digital Video Recorder (DVR) or Satellite Receiver 15
Using a Fax Machine With Your SX5T 15
Sending/Receiving Circuit Switched Data 16
Windows XP/Windows 2000 Setup for Data & PC Fax 17
Windows 98 Setup for Data & PC Fax 23
Sending/Receiving a PC Fax 27
Sending/Receiving 1X Data 28
SX5T Troubleshooting 29
Conformance Statements 30
Safety Information 30

Setup

Connecting an SX5T Model With a Power Supply

Your SX5T has either a Power Supply (part #74007301) or a Battery Backup Unit (BBU; part #74006803). If your unit uses a Power Supply, please follow the instructions below to connect the SX5T to your AC power. If it uses a BBU, please see ***Connecting an SX5T Model With a BBU*** on page 3.

To connect an SX5T model with a Power Supply:

1. Connect the barrel connector of the power supply to the AC power input receptacle of the SX5T - ***see Figure 1***.
2. Plug the AC power cord into the power supply.
3. Plug the AC power cord into the AC Power outlet.

Hint:	If there are no emergency batteries in the SX5T, it will only power on if the AC/Battery switch is in the AC power position - *see Figure 3* on page 2 for a detailed view.

4. Check the cellular signal strength and move the unit until you achieve the best signal possible - see ***LED Status Indicators*** on page 7 for more information.

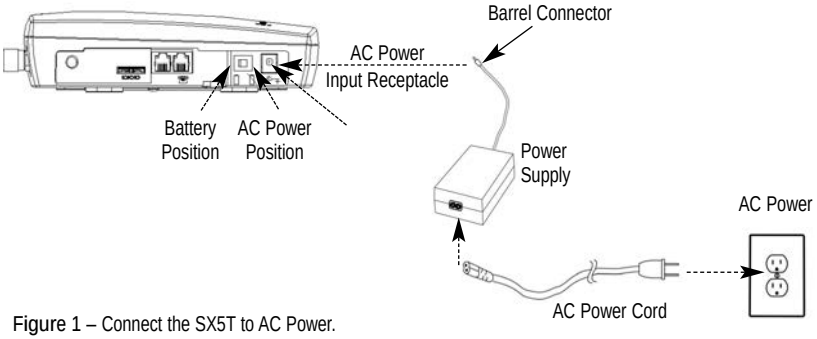

Figure 1 – Connect the SX5T to AC Power.

Note:	SX5T DC input is 7.1 volts ± 5%. Barrel connector is 3.5mm O.D. x 1.5mmI.D.

Emergency Batteries

If your SX5T has a Power Supply, you may install emergency batteries to power the device in the event of a power outage. **Do not install emergency batteries if your SX5T has a BBU.** The SX5T will not automatically switch to battery if AC power fails; you must flip the AC/Battery switch to battery operation - ***see Figure 3***.

To install emergency batteries:

1. Remove the battery access door screw located on the bottom of the unit - ***see Figure 2***.
2. Press the battery access door tabs and remove the battery access door.
3. Install 4 "AA" alkaline batteries (not supplied) - ***see Figure 2***.
4. Reinstall the battery access door using the screw.

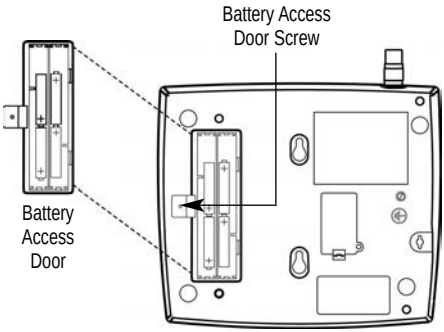

WARNING!

Only "AA" alkaline batteries should be used with the Phonecell® SX5T. Use of any other batteries may result in fire and/or other damage to the unit.

Figure 2 – SX5T battery installation.

Note:	If you use rechargeable "AA" batteries with the SX5T, they must be recharged externally (the unit will not recharge them automatically).

Battery Operation

SX5T models with Power Supplies will not automatically switch from AC to battery upon loss of AC power. The AC/Battery switch must be changed manually - ***see Figure 3***. Battery power will provide up to 3.5 hours of standby or up to one hour of talk time, depending on the SX5T model.

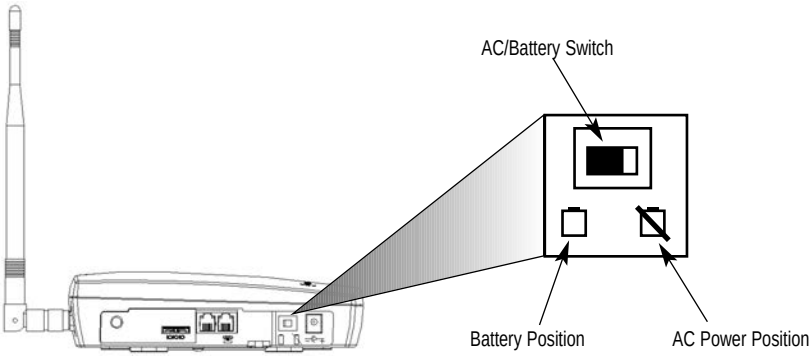

Figure 3 – SX5T AC/Battery switch.

Connecting an SX5T Model With a BBU (Backup Battery Unit)

Your SX5T has either a Power Supply (part #74007301) or a Battery Backup Unit (BBU; part #74006803).

If your model has a BBU, it is shipped with the battery disconnected to prevent if from being prematurely drained. **The BBU must not be connected to a SX5T or to AC power when you connect or replace the battery. Connecting the wrong wires to the battery terminals may cause severe damage to the device.**

To connect an SX5T model with a BBU:

1. Make sure the BBU is disconnected from the SX5T and the AC power cord.
2. Unlatch the battery compartment cover by using a coin to rotate its latch to the open position.
3. Remove the cover.
4. Connect the black wire (**-**) in the battery compartment to the black terminal (-) on the battery - ***see Figure 4***.
5. Connect the red wire (**+**) in the battery compartment to the red terminal (**+**) on the battery - ***see Figure 4***.
6. Insert the battery into the battery compartment.
7. Reattach the compartment cover and secure it with the cover latch.
8. Insert the barrel connector of the Power Supply and Battery Backup Unit's cord into the SX5T's Power Input - ***see Figure 1*** on page 1.
9. Connect the AC power cord to the Power Supply and Battery Backup Unit, then plug it into a power outlet - ***see Figure 1*** on page 1.
10. Press the Battery Power Switch on the BBU to the **ON** (**|** / right) position**.**
11. Slide the Power Switch on the SX5T to the **ON** (right) position**.**
12. Check the cellular signal strength and move the unit until you achieve the best signal possible - see ***LED Status Indicators*** on page 7 for more information.

Figure 4 – Connecting the battery.

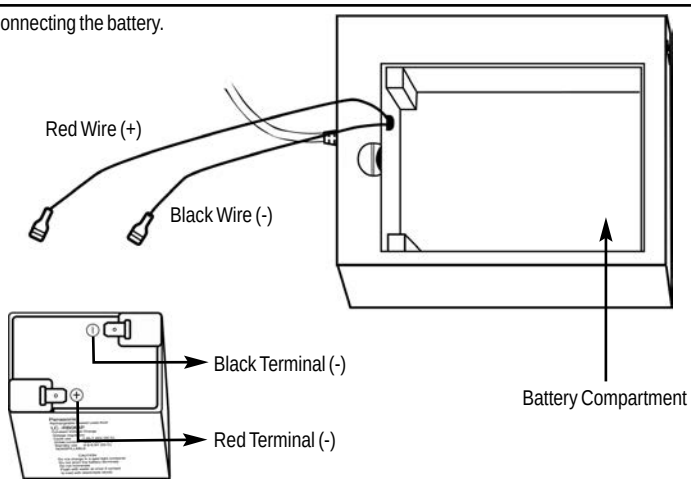

SX5T Location and Installation

The SX5T comes with a standard spike antenna (TNC) - ***see Figure 5***. For optimal signal strength, choose a location that is above ground and as close to windows (or exterior walls) as possible - ***see Figure 6***. Place the unit where you receive the best signal strength possible. (Cellular signal strength is displayed by the Received Signal Strength Indicator [RSSI] LEDs on the unit - see ***LED Status Indicators*** on page 7 for more information.)

1. Connect the antenna to the terminal - ***see Figure 7***.
2. Finger-tighten the antenna. Do not over-tighten the antenna.

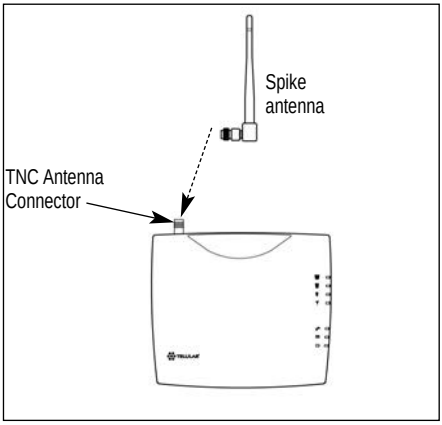

Figure 5 – SX5T antenna connection.

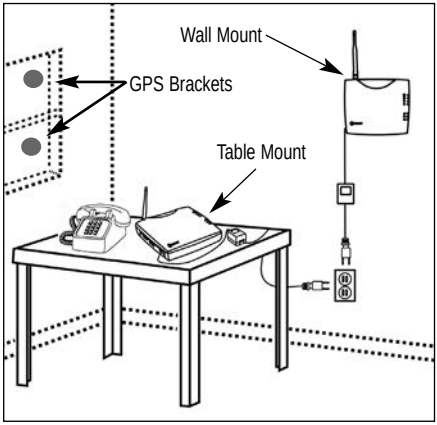

Figure 6 – Typical SX5T installations.

Wall Mounting

1. Mark two hole locations 98.5 mm (3-7/8 inches) vertically apart and drill two holes into the wall.
2. Install the screws (not supplied) into the wall, leaving a gap (approximately 3 mm (1/8 inch)) between screw head and wall.
3. Align the mounting holes with the screws and mount the SX5T onto the screws - ***see Figures 7 and 8***.

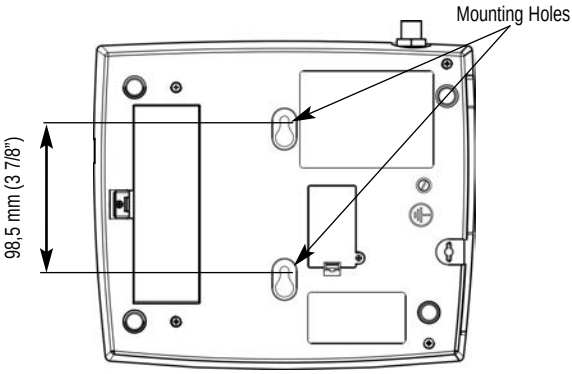

Figure 7 – SX5T mounting holes.

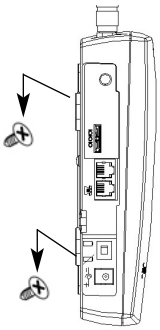

Figure 8 – Mount the SX5T onto the screws.

GPS Antenna Mounting

To satisfy the FCC's Enhanced 911 (E-911) Phase II mandate, SX5T-535C models distributed in the USA include a GPS antenna with a mounting bracket and suction cups. The GPS antenna uses satellite technology during emergency calls to automatically report your location to a 911 dispatcher within 50-100 meters in most cases. For this feature to function, you must properly mount the GPS antenna on a window as described below in addition to the standard antenna used for cellular system operation.

1. Mount the bracket on a window with good line of sight (no obstructions to the sky) using the suction cups. A small amount of water or petroleum jelly applied to the window surface of the suction cups will improve their long-term adhesion to the window - ***see Figure 6*** on page 4.
2. Place the antenna on the topside center of the bracket. The bracket is tilted to aim the antenna out the window and toward the sky.
3. Connect the antenna to the GPS Connector on the side panel of the SX5T - ***see Figure 9***.

Note:	Installation of the GPS antenna is not required for normal operation of the SX5T. Since E-911 service may not be available in all areas, 911 or other emergency calls may not automatically provide a location. **You must be prepared to provide an address during any emergency calls.**

Figure 9 – Connectors

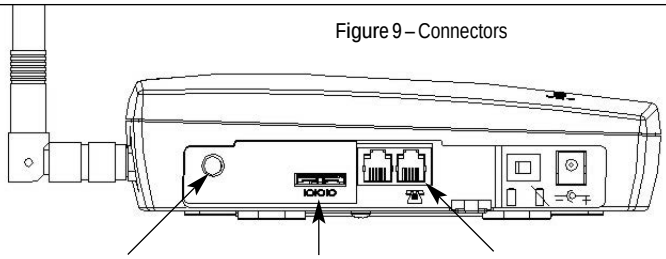

Direct Connection: Phone, Fax and Data

1. Connect a phone to either of your SX5T's phone (RJ11) jacks using a standard telephone cord - ***see Figure 9*** on page 5.
2. If desired, connect your SX5T's other phone (RJ11) jack to a second telephone or a fax machine using a standard telephone cord - ***see Figure 9*** on page 5.
3. If desired, connect a computer to the SX5T. You may either:
   - Use a Telular serial cable (part #1L01A042 or 81025801) to connect the computer's serial port to the SX5T's data port;
   - Or use a standard telephone cord to connect the computer's modem out port to either of the SX5T's phone (RJ11) jacks.

   Contact your service provider to determine what wireless data transfer services are available. For more information on data connections, see ***Windows XP/Windows 2000 Setup for Data & PC Fax*** on page 17 or ***Windows 98 Setup for Data & PC Fax*** on page 23.

Connection via Wall Jacks

If you do not have local phone service, you may use your SX5T to provide a connection to your wireless service for devices that are plugged into your wall jacks.

1. Connect either of your SX5T's phone (RJ11) jacks to any wall jack using a standard telephone cord - ***see Figure 9*** on page 5.

Important:	DO NOT CONNECT YOUR SX5T TO A WALL JACK IF YOU HAVE OUTSIDE SERVICE (I.E., A DIAL TONE) AT YOUR WALL JACK. Your SX5T will not function properly and may become damaged if outside phone service has not been disconnected.

2. If desired, connect your SX5T's other phone (RJ11) jack to a telephone or fax machine using a standard telephone cord - ***see Figure 9*** on page 5.
3. Connect additional phones, a fax machine and/or a computer modem to any available wall jacks. Contact your service provider to determine what wireless data transfer services are available.

Getting to Know Your SX5T

LED Status Indicators

The LED indicators are activated when the SX5T is powered on. The following tables describe the modes and operation of the indicators.

Note:	If you are getting no service, contact your service provider for more information.

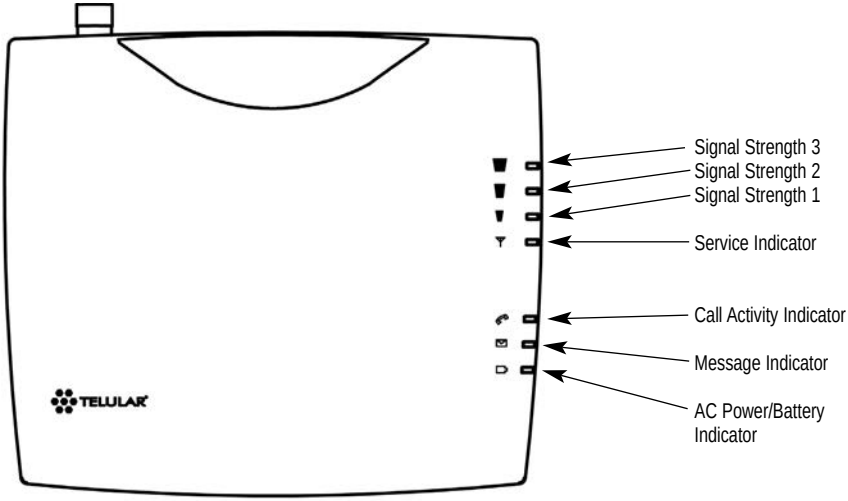

Service Indicator

LED Color	Activity	Description
Green	Continuous	Full Service
Amber	Continuous or Flashing (network dependent)	Roaming
Red	Continuous	No Service*

**Contact your service provider to verify that service has been activated.*

Signal Strength Indicator (Received Signal Strength Indicator – RSSI)

Signal Strength LEDs	Activity	Cellular Signal Strength
Signal Strength 1 (RSSI 1)	Continuous	Poor
Signal Strength 2 (RSSI 2)	Flashing	Fair
	Continuous	Good
Signal Strength 3 (RSSI 3)	Flashing	Very Good
	Continuous	Best

Call Activity Indicator

LED Color	Activity	Description
Green	Flashing (phone will also be ringing)	Incoming call
Green	Continuous	In an active call
Green	Fast Flashing	Processing data call
Amber	Continuous	Programming Mode

Message Indicator

LED Color	Activity	Description
Green	Flashing	New voicemail

AC Power/Battery Indicator

Color	Activity	Description
Green	Continuous	AC power applied
Amber	Continuous	Battery level good (battery switch on)
Amber/Green	Alternating	Battery level poor (battery switch on)

Important Dial Tones

You may hear these tones through the receiver when your phone is off-hook:

Steady Tone (dial tone): Service – Indicates that your phone is ready for use.

Fast Beeping Tone: No Service – Indicates that there is no service available.

Short Tone: Call Waiting – During an active call, a short tone indicates that you have another incoming call.

Pulsed Dial Tone, followed by a Steady Dial Tone: Voicemail – Indicates that you have a new voicemail message.

Using the SX5T

Once you have installed and activated your SX5T, you'll be ready to make and receive calls, set up voicemail, and send and receive faxes. This section explains how to use the features of the SX5T for all your communications.

Making Calls

To make a call:

1. Pick up the telephone handset. (The phone is now "off-hook.")
2. Listen for a dial tone. (If you hear a No Service tone [fast beeping], hang up and try again. If the No Service tone continues, contact your service provider to verify that cellular service is available.)
3. Dial a phone number. (When you have finished dialing, the call will be sent automatically.)

Tip:	Pressing the **Flash** key or pressing and releasing the switch-hook after dialing a number will send the call immediately.

Receiving Calls

- When the telephone rings, pick up the handset and begin talking.

Ending Calls

- When you are finished with a call, hang up the phone by placing the handset back on the telephone cradle or by pressing the **Off** or **End** button.

Using In-Call Features

To place a call on hold:

- During a call, press the **Flash** key on your handset (if your phone doesn't have a **Flash** key, press and release the switch-hook).
  - If you hang up your phone when a call is on hold, the call will be disconnected.

To retrieve a call on hold:

- Press the **Flash** key on your phone (or press and release the switch-hook).

To answer a call waiting call:

- When you're on an active call and a new incoming call arrives, you will hear a short tone on your phone. To place the current call on hold and answer the incoming call, press the **Flash** key on your phone (or press and release the switch-hook). (To switch between calls, simply repeat the process.)

To answer a call when you are dialing or with the phone off the hook:

- If a call comes in while you are dialing or when you have the phone off the hook, you will hear a call waiting tone on your phone. To answer the incoming call, press the **Flash** key on your phone (or press and release the switch-hook).

Note:	Call Hold and Call Waiting are not available with all service providers. These services may not be available if you are using your SX5T in a roaming area. To determine these services' availability in your area, contact your service provider.

Accessing Your Voicemail

With your SX5T, you have two options for accessing your voicemail account from your phone: **One-Touch Voicemail Retrieval** and **Direct Dial**. (For more information about your voicemail settings, see ***Voicemail Number*** and ***One-Touch Voicemail Retrieval*** on page 14. For information about your voicemail service, please contact your service provider.)

To access your voicemail using One-Touch Voicemail Retrieval:

- Press and hold the 1 button on any home phone for two seconds.

To access your voicemail using Direct Dial:

1. Dial your phone number.
2. Follow the voice prompts to retrieve your messages.

Note:	If your phone doesn't support a continuous tone (i.e., if you only hear a short tone when you press and hold a key), One-Touch Voicemail Retrieval will not work on your phone. To access your voicemail, you will have to use the Direct Dial method of voicemail retrieval. You may also use the Direct Dial method to retrieve your voicemail from any other phone.

Clearing Your Voicemail Indicator

- The message light on your SX5T will flash when you have a new voicemail message. The indicator should clear after you have listened to all of your new messages. If your voicemail message indicator does not clear (or if you just want to clear it manually), press # * 1 0 5 #.

Making a Three-Way Call

Your SX5T supports three-way calling, if it is supported by your service provider.

To make a three-way call:

1. Place or answer a call on your phone.
2. Once you have established the connection with the first caller, press **Flash**, enter the second number you wish to call, then press **Flash** again. (This puts the first caller on hold and dials the second number.)
3. When you're connected to the second party, press **Flash** again to begin your three-way call.

If one of the people you called hangs up during your call, you and the remaining caller stay connected. If you initiated the call and are the first to hang up, all three callers are disconnected.

Note:	Certain cellular systems may use a different method to connect three-way calls. Please contact your service provider for more information.

Using Call Forwarding

Call Forwarding lets you forward all your incoming calls to another phone number. You can continue to make calls from your phone when Call Forwarding is activated.

To activate call forwarding, contact your service provider for instructions.

Adjusting Your Phone's Settings

Volume Level

If the volume level on your phone's receiver is too high or too low during a call, you can adjust the levels using the telephone keypad.

To increase the phone's volume level:

- Press # * 8 .

To decrease the phone's volume level:

- Press # * 3 .

Note:	The SX5T volume setting allows you to adjust the volume three levels from the default setting. The adjusted volume setting remains in effect for future calls until it is manually changed. When the SX5T's power is turned Off and On, the default mid-range volume setting is restored.

Entering Configuration Mode

Many device configuration settings require you to enter Configuration Mode – the device's programming mode – before you may input the commands.

To enter Configuration Mode:

- Press # * 0 * **<lock code>** # .

You will hear a steady tone indicating that you have entered Configuration Mode. When you press any additional key, the tone will stop.

If you correctly enter a configuration sequence for any of the settings listed, the steady tone will return and the SX5T will have accepted the new setting. If you do not enter a valid sequence, you will hear three brief ascending tones followed by the steady tone (at which point you may re-enter your configuration settings).

Note:	You may change multiple settings during a single Configuration Mode session. If you enter an incorrect sequence during a Configuration Mode session, only the setting you were entering will need to be re-entered; all previous changes will be retained.

To exit Configuration Mode, simply hang up the phone.

Changing the Lock Code

Your SX5T is preconfigured with a lock code for use in entering Configuration Mode and to use with the Call Barring feature. **The default lock code is the last four digits of the phone number.** (If no number is programmed, the default is 0000).

You may use Configuration Mode to change your lock code to any 4-digit number.

To change the Lock Code:

- From Configuration Mode, press # * 1 4 3 * **<old lock code>** * **<new lock code>** * **<new lock code>** # .

  (For example, to change the default lock code from 0000 to 5555, press # * 1 4 3 * 0 0 0 0 * 5 5 5 5 * 5 5 5 5 # .)

Audio Line Level

If using # * 8 and # * 3 does not provide satisfactory volume options for you (see ***Volume Level*** on page 11), you may adjust your phone system's audio line level.

To adjust your phone system's audio line level:

- From Configuration Mode, press # * 6 9 * **<0, 1,** or **2>** # .

  0 = Low

  1 = Normal (default)

  2 = High

Auto-Send Delay

The auto-send delay is the amount of time the SX5T waits to dial after you make an entry on the phone keypad. The default setting is 3 seconds and the valid range is 2-20 seconds.

To change the auto-send delay:

- From Configuration Mode, press # * 1 1 * **< 2 - 20>** # , where you enter a number between 2 and 20 seconds. (For example, if you want the auto send delay to be five seconds, press # * 1 1 * 5 # .)

Frequently Dialed Numbers (Zero Delay Dialing)

If you dial a phone number twice and stay connected for at least 15 seconds, the SX5T will remember that phone number in the future and automatically send it without the auto-send delay whenever you subsequently dial the number. This feature is enabled by default.

To enable Zero Delay Dialing (default setting):

- From Configuration Mode, press # * 2 1 * 1 # .

To disable Zero Delay Dialing:

- From Configuration Mode, press # * 2 1 * 0 # .

Call Barring

To avoid inadvertent service charges, you may enable your device's Call Barring feature to bar all outgoing calls (except emergency calls).

To enable Call Barring:

- From Configuration Mode, press # * 1 4 2 * 1 * **<lock code>** # .

To disable Call Barring (default setting):

- From Configuration Mode, press # * 1 4 2 * 0 * **<lock code>** # .

Hotline

The Hotline feature allows you to program the SX5T to automatically dial a specific phone number after a selected timeout delay whenever you take the phone off-hook.

To program the Hotline phone number:

- From Configuration Mode, press # * 1 1 8 * **<phone #>** # , where **<phone #>** is the phone number you want to dial automatically.

To enable the Hotline feature:

- From Configuration Mode, press # * 1 1 7 * 1 * **<1 - 8>** # , where **<1 - 8>** equals the selected timeout delay, in seconds.

  (For example, if you wanted the phone to wait five seconds before dialing the hotline number, you would press # * 1 1 7 * 1 * 5 # from configuration mode.)

To disable the Hotline feature (default setting):

- From Configuration Mode, press # * 1 1 7 * 0 * 1 # .

One-Minute Alert

You can keep track of your in-call duration by configuring your SX5T to sound a short beep at one-minute intervals during active calls.

To enable One-Minute Alerts:

- From Configuration Mode, press # * 9 9 * 1 # .

To disable One-Minute Alerts (default):

- From Configuration Mode, press # * 9 9 * 0 # .

TTY Use

A TTY device (also known as a TDD or Text Telephone) is a telecommunications device that allows people who are deaf, hard of hearing, or who have speech or language disabilities to communicate by telephone.

Your SX5T is compatible with select TTY devices. Please check with the manufacturer of your TTY device to ensure that it supports digital wireless transmission.

To establish TTY service, contact your cellular service provider.

To set your phone's TTY mode:

- From Configuration Mode, press # * 1 3 9 * **<0** or **3>** # , where **<0** or **3>** are as follows:

  0 = TTY Off

  3 = TTY Always

Voicemail Number

You can use Configuration Mode to set the default voicemail number for your SX5T.

Note:	The voicemail settings for your SX5T should have been configured prior to purchase. The instructions for Voicemail Number and One-Touch Voicemail Retrieval are mainly for your reference.

To set the default voicemail number:

- From Configuration Mode, press # * 1 0 1 * **<voicemail number>** # .

  For example, to set 555-123-4567 as your voicemail number, you would press # * 1 0 1 * 5 5 5 1 2 3 4 5 6 7 # .

If your voicemail access number includes a special character, such as an asterisk (*) or a pound sign (#), you can program it by adding an extra asterisk in front of the special character. Please refer to the examples below:

To set *86 as the default voicemail number:

- From Configuration Mode, press # * 1 0 1 * * * 8 6 # .

To set #86 as the default voicemail number:

- From Configuration Mode, press # * 1 0 1 * * # 8 6 # .

One-Touch Voicemail Retrieval

You can configure your SX5T to connect to your voicemail box using one-touch voicemail retrieval, allowing you to retrieve messages by pressing and holding 1 . (One-Touch Voicemail Retrieval is enabled by default.)

To enable One-Touch Voicemail Retrieval (default setting):

- From Configuration Mode, press # * 1 4 8 * 1 # .

To disable One-Touch Voicemail Retrieval:

- From Configuration Mode, press # * 1 4 8 * 0 # .

Note:	If your phone doesn't support a continuous tone (i.e., if you only hear a short tone when you press and hold a key), One-Touch Voicemail Retrieval will not work on your phone. To access your voicemail, you will have to use the Direct Dial method of voicemail retrieval (see page 10). For more information about retrieving voicemail, see *Accessing Your Voicemail* on page 10. For information about your voicemail service, please contact your service provider.

Restore User Defaults

To restore your SX5T to its default settings after changing configuration settings:

- From Configuration Mode, press # * 1 0 7 * **<0** or **1>** # , where **0 = Keep Current Settings** and **1 = Restore to Default Settings**.

Using Additional Hardware Devices

Using an External Answering Machine

The SX5T can be used with an external answering machine in place of voicemail. If you plan to use an external answering machine, be sure your service provider has not activated voicemail on your account.

Setting Up Data Transfer for a Digital Video Recorder (DVR) or Satellite Receiver

The SX5T can be configured to dial out over your phone line so that a Digital Video Recorder (DVR) or a satellite receiver can send and receive the data required for its operation. Your DVR or satellite receiver must also be configured to tell the SX5T that it needs to send data. You must insert the prefix # * 2 # before the phone number that the DVR or satellite receiver dials. Consult your DVR or satellite receiver manual or provider if you need further assistance with this feature.

Note:	Contact your service provider to confirm the availability of data transfer service on your wireless account.

Using a Fax Machine With Your SX5T

Your SX5T supports sending and receiving faxes with a fax machine. You can connect your fax machine to an existing wall phone (RJ11) jack or into either phone (RJ11) jack of the SX5T. In order to send or receive a fax, the SX5T must be placed in fax mode, as it cannot automatically detect an incoming fax. (This is standard procedure for faxing over wireless networks.) **You must disable any "turbo" fax modes or other non-standard transmission modes on your fax machine.** Consult your fax machine's manual for more information.

The SX5T has two fax modes: **1-time fax mode** and **Always fax mode**.

- **1-time fax mode** will allow you to send or receive one fax, after which the SX5T will automatically return to voice mode.
- **Always fax mode** will keep the SX5T in fax mode until it is set back to voice mode.

Note:	Contact your service provider to confirm the availability of fax service on your wireless account. Fax machines must use Group 3 facsimile protocol, transmitting at 9.6 kbps to14.4 kbps.

To send a fax (1-time fax mode):

1. Lift up the fax machine handset or press the **Fax** button.
2. Press # * 1 #, then dial the fax number.
3. Press **Start** on the fax machine.

To receive a fax (1-time fax mode):

1. Set your fax machine to connect after the minimum number of rings allowed.
2. Press # * 1 #.
3. Notify the sender that you are prepared to receive the fax.

To set your device to "Always fax mode":

- Press # * 5 #.

To make one voice call while in "Always fax mode":

- Press # * 4 #.

To return your device to voice mode (default setting):

- Press # * 7 #.

Sending/Receiving Circuit Switched Data

A PC with a serial or phone (RJ11) connection to the SX5T can send and receive circuit switched data using the SX5T. Check with your service provider to see if your account supports circuit switched data transfer.

Set Your Computer's Port and Modem Speeds for Circuit Switched Data

To send or receive circuit switched data, you need to set the port and modem speeds your computer uses for the SX5T to 115200 bps. See **Windows XP/2000 Setup** (page 17) or **Windows 98 Setup** (page 23) for details. This is the communication speed between the computer and SX5T; actual data transfer rates will be slower.

Choose Data Mode

1. To receive one data transfer, enter **Data Next Call** mode. Press # * 2 #.
   Your SX5T will treat the next incoming call as data, then return to normal operation.
   If you are using an RJ11 port to receive the data, you may skip the remaining steps.

2. To receive data indefinitely, enter **Data Always** mode. Press # * 6 #.

   (Your SX5T will treat all incoming calls as data. To resume receiving voice calls, you must switch back to **Voice** mode: Press # * 7 #. If you wish to make a single voice call while remaining in Data Always mode, press # * 4 #.)

   If you are using an RJ11 port to receive the fax, you may skip the remaining steps.

3. To send circuit switched data, set the Data Port and Baud Rate, then follow your service provider's directions for sending circuit switched data. Whenever your software asks you what modem to use, select the **Standard 19200 Modem**.

   (For Windows XP and Windows 2000, you can start by opening **Control Panel > Network and Dial Up Connections**, then double-clicking on **Make New Connection** to start the Network Connection Wizard.)

   (For Windows 98, you can start by running **Dial-Up Networking** and double-clicking on **Make New Connection**.)

Choose the SX5T's Data Port

1. Enter Configuration Mode – Press # * 0 * **<lock code>** #.
2. Select **Data Port** – Press # * 1 1 3 * 0 * 0 #.

   – OR –

   Select **RJ11 Port** – Press # * 1 1 3 * 1 * 0 #.

3. If you selected **Data Port**, select which Data port to use.
   Select **Serial** by pressing # * 1 3 5 * 0 #.

Set the SX5T's Baud Rate for Circuit Switched Data

1. Enter Configuration Mode – Press # * 0 * **<lock code>** #.
2. Select Baud Speed 115200 – Press # * 1 3 6 * 5 #.

Note:	If you take the phone off-hook while sending or receiving circuit switched data via serial cable, you will hear a busy tone; the data transmission/reception will not be disrupted.
	If you take the phone off-hook while sending or receiving circuit switched data using an RJ11 phone jack connection, the fax data transmission/reception may be disrupted.

Windows XP/Windows 2000 Setup for Data & PC Fax

Contact your service provider to determine data/PC fax service availability, then follow these steps.

1. Connect and Select Data Ports.

Serial Connection – default setting (Allows PC Fax, 1X Data and Circuit Switched Data)

- Use a Telular serial cable (part #1L01A042 or 81025801) to connect the computer's serial port to the SX5T's data port.
- Enter Configuration Mode.
  Press # * 0 * **<lock code>** #.
- Set the SX5T Data Port to Serial.
  Press # * 1 3 5 * 0 #.

Modem/Phone Connection (Allows PC Fax and Circuit Switched Data)

- Use a standard telephone cord to connect the computer's modem out port to either of the SX5T's phone (RJ11) jacks.
- Enter Configuration Mode.
  Press # * 0 * **<lock code>** #.
- Set the SX5T Data Port to RJ11.
  Press # * 1 1 3 * 1 * 0 #.

2. Set Baud Speed.

- Enter Configuration Mode.
  Press # * 0 * **<lock code>** #.
- For fax, set speed to 19200. Press # * 1 3 6 * 2 #.
- For data, set speed to 115200. Press # * 1 3 6 * 5 #.

3. Install the SX5T as a new modem by opening the **Start > Settings > Control Panel > Phone and Modem Options > Modems** tab.

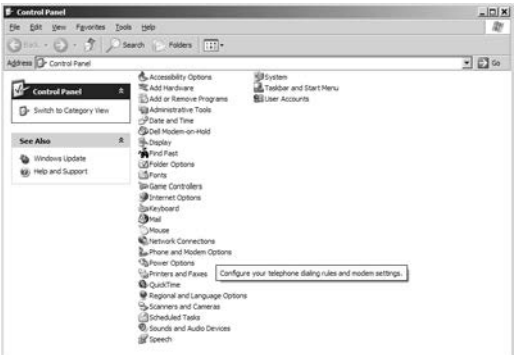

4. Click on **Add…**.

5. Click on **Don't detect my modem; I will select it from a list** and click **Next**.

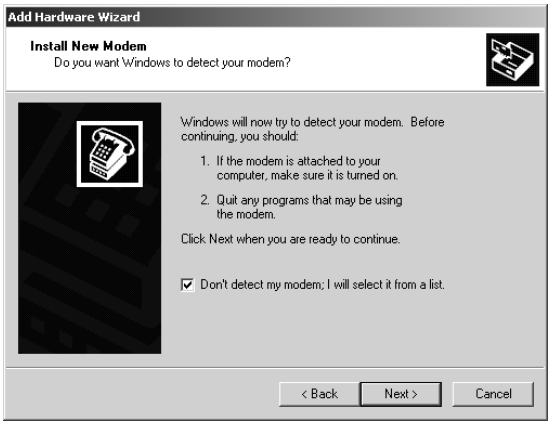

6. Select **Standard 19200 bps modem** and click **Next**.

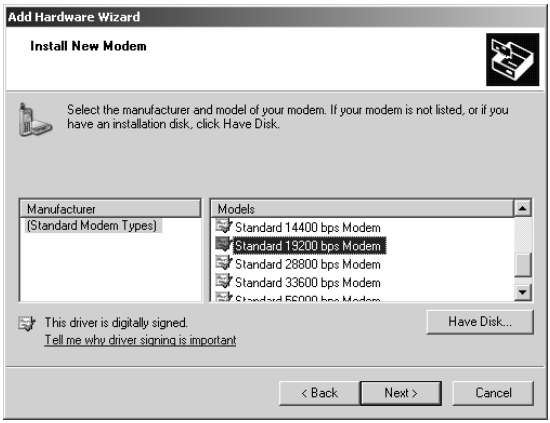

7. Select the COM port to use (if a COM port does not display, all COM ports are currently allocated).

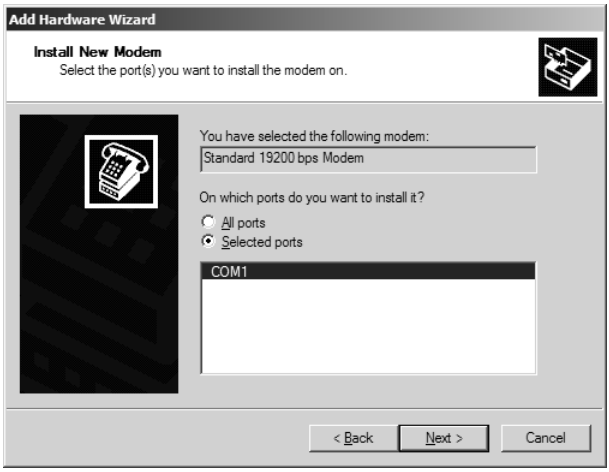

8. Click **Finish**.

9. Configure the SX5 modem interface using the **Start > Settings > Control Panel > Phone and Modem Options > Modems** tab.

10. Select the **19200 bps Modem** and click on **Properties**.
11. Select the **Modem** tab.
12. Change the Maximum port speed to 115200 (19200 when faxing) and click **OK**.

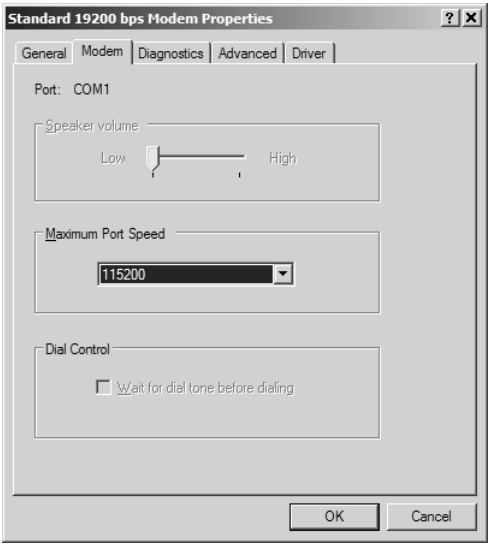

13. Configure the Serial or Phone (RJ11) port using the **Control Panel > System >Hardware > Device Manager > Ports** tab.

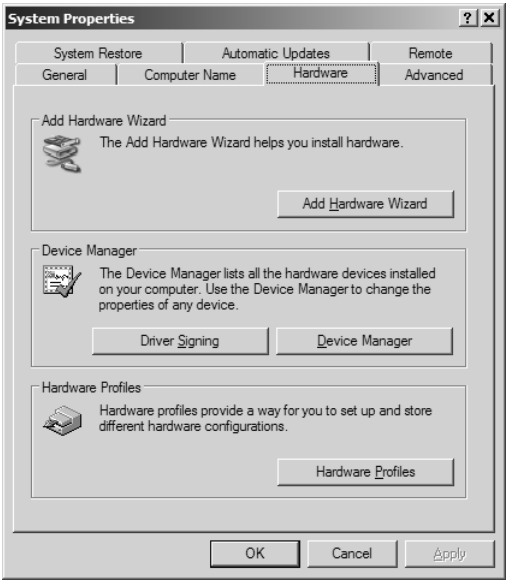

14. Select the port used for the SX5T and right click on it. Select **Properties** from the resulting pop-up menu.

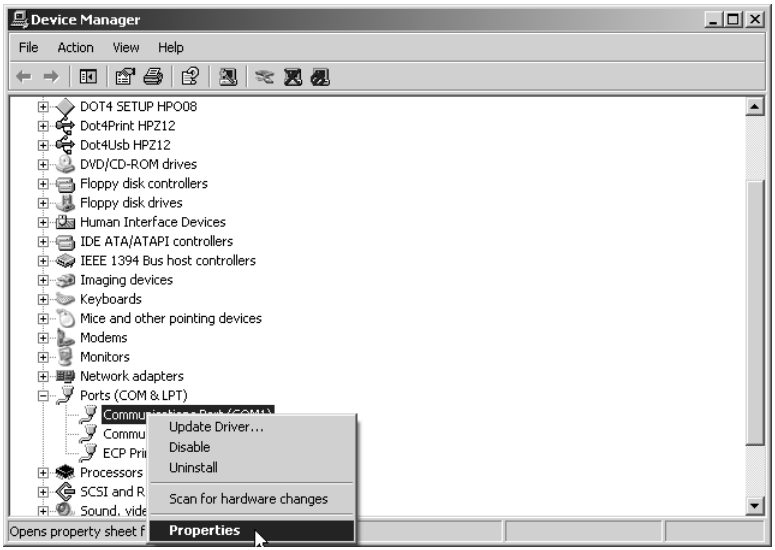

15. Click on the **Port Settings** tab.

16. Use these settings:

Bits per second: 115200 (19200 when faxing)

Data bits: 8

Parity: None

Stop bits: 1

Flow control: Hardware

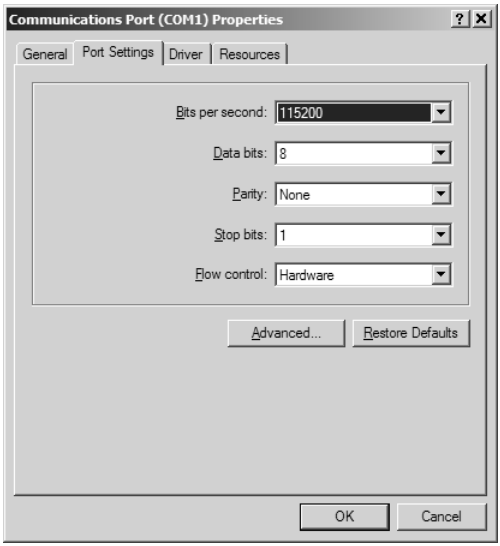

17. You may now send or receive data and PC faxes. See **Sending/Receiving a PC Fax** (page 27), **Sending/Receiving 1X Data** (page 28), or **Sending/Receiving Circuit Switched Data** (page 16) for details.

Windows 98 Setup for Data & PC Fax

Contact your service provider to determine data/PC fax service availability, then follow these steps.

1. Connect and Select Data Ports.

   Serial Connection – default setting (Allows PC Fax, 1X Data and Circuit Switched Data)

   - Use a Telular serial cable (part #1L01A042 or 81025801) to connect the computer's serial port to the SX5T's data port.
   - Enter Configuration Mode.
     Press # * 0 * **<lock code>** #.
   - Set the SX5T Data Port to Serial.
     Press # * 1 3 5 * 0 #.

   Modem/Phone Connection (Allows PC Fax and Circuit Switched Data)

   - Use a standard telephone cord to connect the computer's modem out port to either of the SX5T's phone (RJ11) jacks.
   - Enter Configuration Mode.
     Press # * 0 * **<lock code>** #.
   - Set the SX5T Data Port to RJ11.
     Press # * 1 1 3 * 1 * 0 #.

Note:	The SX5T supports data transfer over serial and modem/phone (RJ11) connections for Windows 98 PCs.

2. Set Baud Speed.
   - Enter Configuration Mode.
     Press # * 0 * **<lock code>** #.
   - For fax, set speed to 19200. Press # * 1 3 6 * 2 #.
   - For data, set speed to 115200. Press # * 1 3 6 * 5 #.

3. Install the SX5T as a new modem by opening the **Start > Settings > Control Panel** then clicking on the **Modems** phone icon.

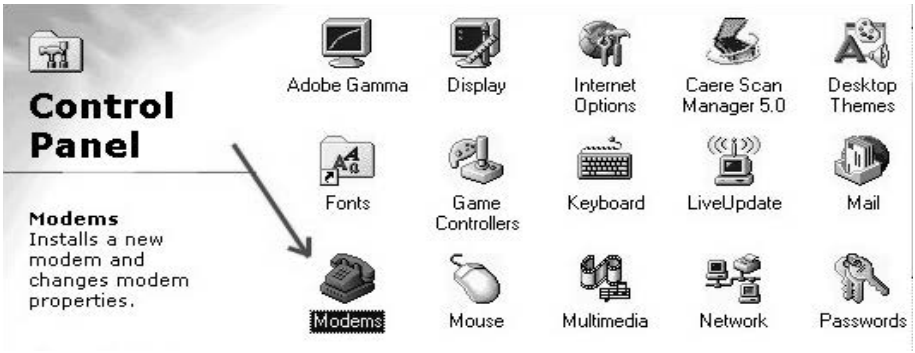

4. Select **Standard 19200 bps Modem** and click on **Properties**.

5. Select the appropriate COM port and Maximum speed of **115,200 bps** for data and **19,200 bps** for PC Fax.

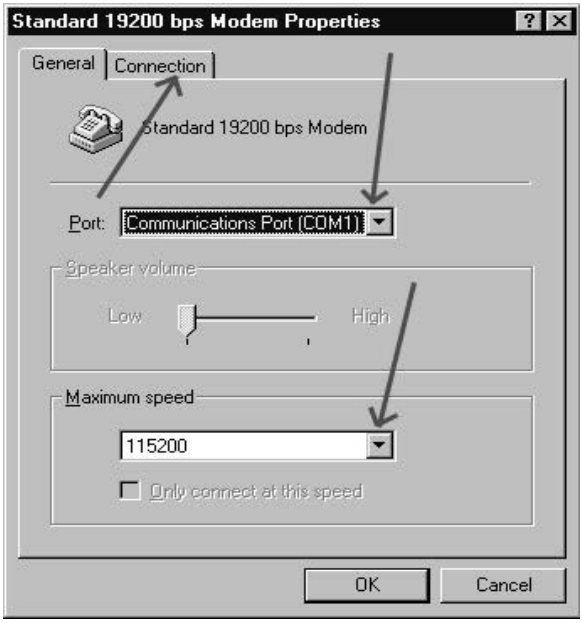

6. Select the **Connection** tab.

7. Set **Connection Preferences** to Data bits = 8, Parity = None and Stop bits = 1, then click **Advanced**.

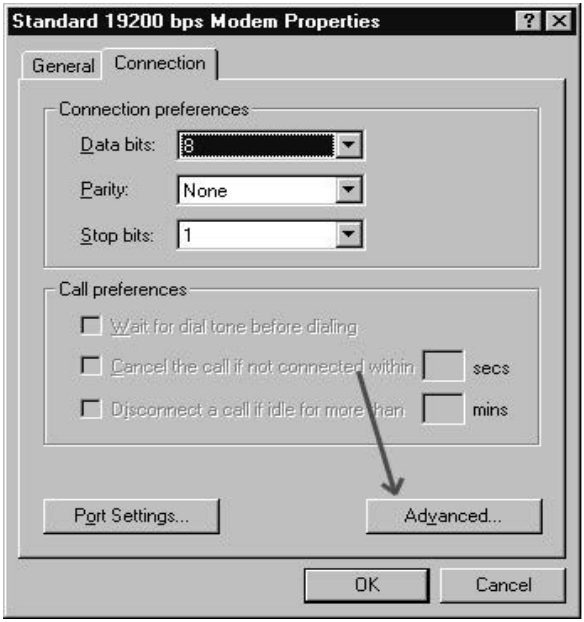

8. Check the box for **Use Control Flow**, then click on **Hardware (RTS/CTS)**, and then select **OK**.

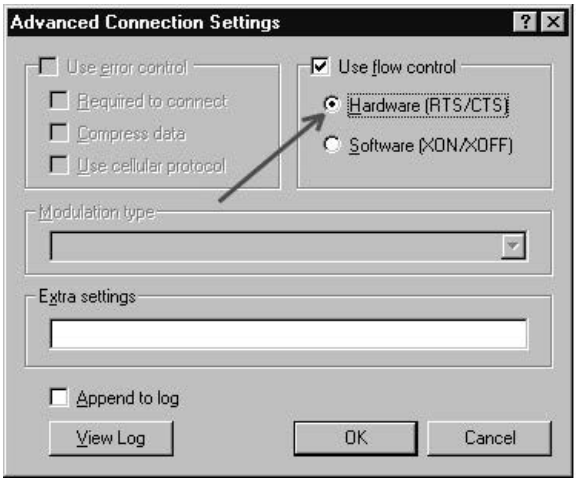

9. Click on **OK**.

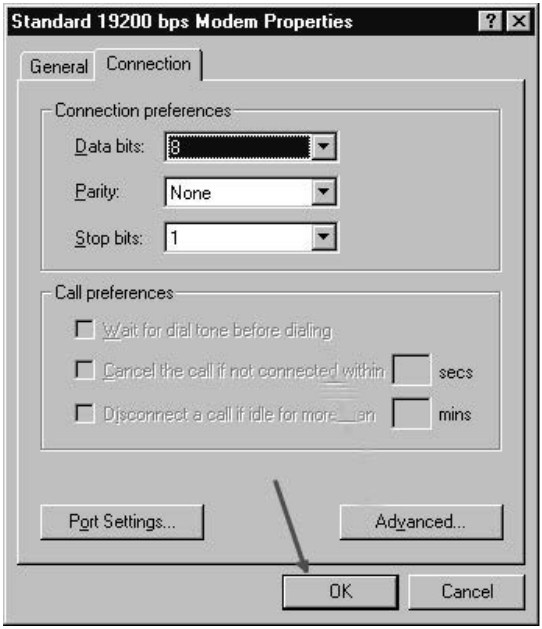

10. Click on **Close**.

11. You may now send or receive data and PC faxes. See **Sending/Receiving a PC Fax** (page 27), **Sending/Receiving 1X Data** (page 28), or **Sending/Receiving Circuit Switched Data** (page 16) for details.

Sending/Receiving a PC Fax

A PC with a serial or phone (RJ11) connection to the SX5T can send and receive faxes using the SX5T. Your account with your service provider must support circuit switched data transfer for the SX5T's PC fax function to work.

Set Your Computer's Port and Modem Speeds for PC Fax

To send or receive faxes, you need to set the port and modem speeds your computer uses for the SX5T to 19200 bps. See **Windows XP/2000 Setup** (page 1717) or **Windows 98 Setup** (page 23) for details.

Choose Fax Mode

1. To receive one fax, enter **Fax Next Call** mode. Press # * 1 #.
   Your SX5T will treat the next incoming call as a fax, then return to normal operation.
   If you are using an RJ11 port to receive the fax, you may skip the remaining steps.
2. To receive faxes indefinitely, enter **Fax Always** mode. Press # * 5 #.

   (Your SX5T will treat all incoming calls as faxes. To resume receiving voice calls, you must switch back to **Voice** mode: Press # * 7 #. If you wish to make a single voice call while remaining in Fax Always mode, press # * 4 #.)

   If you are using an RJ11 port to receive the fax, you may skip the remaining steps.
3. To send a PC fax, set the Fax Port and Baud Rate, then use your computer's fax software to dial the receiving fax machine's number. Whenever your software asks you what modem to use, select the **Standard 19200 Modem**.

Choose the SX5T's Fax Port

1. Enter Configuration Mode – Press # * 0 * **<lock code>** #.
2. Select **Data Port** – Press # * 6 7 * 0 #.

   – OR –

   Select **RJ11 Port** – Press # * 6 7 * 1 #.
3. If you selected Data Port, select which Data port to use.
   Select **Serial** by pressing # * 1 3 5 * 0 #.

Set the SX5T's Baud Rate for PC Fax

1. Enter Configuration Mode – Press # * 0 * **<lock code>** #.
2. Select **Baud Speed 19200** – Press # * 1 3 6 * 2 #.

Note:	If you take the phone off-hook while sending or receiving a PC fax via serial cable, you will hear a busy tone; the fax data transmission or reception will not be disrupted.
	If you take the phone off-hook while sending or receiving a PC fax using an RJ11 phone jack connection, the fax data transmission/reception may be disrupted.

Sending/Receiving 1X Data

A PC with a serial connection to the SX5T can send and receive 1X data using the SX5T; a PC with a phone (RJ11) connection cannot. Check with your service provider to see if your account supports 1X data transfer.

Set Your Computer's Port and Modem Speeds for 1X Data

To send or receive circuit switched data, you need to set the port and modem speeds your computer uses for the SX5T to 115200 bps. See **Windows XP/2000 Setup** (page 17) or **Windows 98 Setup** (page 23) for details. This is the communication speed between the computer and SX5T; actual data transfer rates will be slower.

Choose the SX5T's Data Port

1. Enter Configuration Mode – Press # * 0 * **<lock code>** # .
2. Select Data Port.
   Select **Serial** by pressing # * 1 3 5 * 0 # .

Set the SX5T's Baud Rate for 1X Data

1. Enter Configuration Mode – Press # * 0 * **<lock code>** # .
2. Select **Baud Speed 115200** – Press # * 1 3 6 * 5 # .

To Send or Receive 1X Data

Follow your service provider's directions for sending and receiving 1X data. Whenever your software asks you what modem to use, select the **Standard 19200 Modem**.

For **Windows XP** and **Windows 2000**, you can start by opening **Control Panel > Network and Dial Up Connections**, then double-clicking on **Make New Connection** to start the Network Connection Wizard.

For **Windows 98**, you can start by running **Dial-Up Networking** and double-clicking on **Make New Connection**.

Note:	If you take the phone off-hook during a 1X data session, you will hear a busy tone; data transfer will not be disrupted.

Tip:	You can receive incoming voice calls on the SX5T during a dormant data session (a session becomes dormant after a period of inactivity determined by the network). When you are in an active data session (you are sending and receiving data), all incoming calls go to your voicemail.

SX5T Troubleshooting

Telephone Service is Not Working (Cannot make or receive calls)

- Make sure the SX5T powered on properly.
- Make sure any equipment that is externally connected to the SX5T is connected correctly.
- Test any externally connected equipment on a known system to verify its operation.
- Do you have the antenna connected? If not, connect the antenna.
- Is service established with a service provider? If so, is there any service provider issue? Your service may be disconnected or not functioning properly. Contact your service provider if you think this is the problem.

Unable to Receive Calls

- Is the handset on the cradle? If not, place the handset on the cradle and try again.
- Is the SX5T making a loud repetitive tone? This is the ROH (Receiver Off Hook) tone. Your handset may be off hook. Hang up and try again.
- Is the SX5T set for Fax Only or Data Only operation? If so, press # * 7 # to return to voice mode.

Unable to Make Calls

- If you do not hear standard dial tone when your phone is off hook, then your service has a problem. Contact your service provider if you think this is the problem.
- Do you have telephone extensions connected to the SX5T? If so, confirm that none of the extensions is off hook.
- Is the SX5T set for Fax Only or Data Only operation? If so, press # * 7 # to return to voice mode.

Unable to Send or Receive Analog Fax Calls

- Do you have fax service on your wireless account? Contact your service provider for more information.
- Do you have good signal strength? If your signal strength is low it may affect faxing. Try repositioning the unit or obtaining a directional high gain external antenna.

No Power

- Is the power supply connected to the unit? Make sure power is available and that the power supply is properly connected to the SX5T.
- If the SX5T is properly connected to the power supply, check to make sure the AC/Battery switch is in the correct position (see ***Battery Operation*** on page 2).
- If the power supply is connected but the unit still has no power, make sure power is being delivered to the power supply. Check your breaker and contact your power company. Power may be off at your location.

Conformance Statements

The SX5T 800/1900 MHz models are in conformance with all applicable FCC requirements.

FCC Part 15/Part 22/Part 24 Class B Compliance

This Phonecell® SX5T model has been tested and found to comply with the limits for a Class B digital device, pursuant to Part 15, Part 22 and Part 24 of the FCC rules. Changes or modifications not expressly approved by Telular Corporation will void your authority to operate the equipment per FCC part 15 paragraph 15.21.These limits are designed to provide reasonable protection against harmful interference in a residential installation. This equipment generates, uses and can radiate radio frequency energy and, if not installed and used in accordance with the instructions, may cause harmful interference to radio communications. However, there is no guarantee that interference will not occur in a particular installation. If this equipment does cause harmful interference to radio or television reception, which can be determined by turning the equipment OFF and ON, the user is encouraged to try to correct the interference by one or more of the following measures:

- Reorient or relocate the antenna.
- Increase the separation between the equipment and the terminal.
- Connect the equipment into an outlet on a circuit different from that to which the terminal is connected.
- Consult your Authorized Telular Distributor or an experienced radio/TV technician for help.

Safety Information

The Phonecell® SX5T functions as both a radio transmitter and receiver. When it is ON, the SX5T receives and sends out radio frequency (RF) energy. The SX5T CDMA unit operates in the frequency ranges of 824 MHz to 894 MHz and / or 1850 MHz to 1910 MHz. When you use the SX5T, the cellular system handling your call controls the power level at which the unit transmits.

Exposure to RF (Radio Frequency) Energy

In 1991, the Institute of Electrical and Electronics Engineers (IEEE), and in 1992, the American National Standards Institute (ANSI), updated the 1982 ANSI Standard for safety levels with respect to human exposure to RF energy. After reviewing the available body of research, more than 120 scientists, engineers and physicians from universities, government health agencies and industry developed this updated Standard. In March, 1993, the U.S. Federal Communications Commission (FCC) proposed the adoption of this updated Standard.

The design of the Telular Phonecell® SX5T complies with this updated Standard. Of course, if you want to limit RF exposure even further than the updated ANSI Standard, you may choose to control the duration of your calls and operate your phone in the most power-efficient manner.

Safe Operation Requirement

The Phonecell® SX5T must be either wall mounted or desk mounted and should not be operated when any person is within 20 cm (8 inches) of the antenna.

Temperature Environment

Operating Temperature: From -10°C to +50°C ; Up to 95% relative humidity (non-condensing).

Storage Temperature: From -40°C to +60°C; Up to 95% relative humidity (non-condensing).

Antenna Care and Replacement

Do not use the Phonecell® SX5T with a damaged antenna. If a damaged antenna comes into contact with the skin, a minor burn may result. Replace a damaged antenna immediately. Use only a Telular-approved antenna. Unauthorized antennas, modifications, or attachments could damage the Phonecell® SX5T.

Driving

Check the laws and regulations on the use of cellular products in the areas where you drive. Some jurisdictions prohibit use of a cellular device while driving a vehicle. Even if your jurisdiction does not have such a law, we strongly suggest that, for safety reasons, the driver use extreme caution when operating the cellular device while the vehicle is in motion. Always obey the law.

Exposure to Electronic Devices

Most modern electronic equipment is shielded from RF energy. However, RF energy from cellular devices may affect inadequately shielded electronic equipment. RF energy may affect improperly installed or inadequately shielded electronic operating and entertainment systems in motor vehicles. Check with the manufacturer or its representative to determine if these systems are adequately shielded from external RF energy. You should also check with the manufacturer of any equipment that has been added to your vehicle.

Consult the manufacturer of any personal medical devices (such as pacemakers, hearing aids, etc.) to determine if they are adequately shielded from external RF energy. Turn the Phonecell® SX5T OFF in health care facilities when any regulations posted in the areas instruct you to do so. Hospitals or health care facilities may be using equipment that could be sensitive to external RF energy.

Aircraft

Turn OFF the Phonecell® SX5T before boarding any aircraft.

- Use it on the ground only with crew permission.
- Do not use it in the air.

To prevent possible interference, U.S. Federal Aviation Administration (FAA) regulations require you to have permission from a crew member to use your cellular phone (or any other cellular product) while the plane is on the ground. To prevent interference with aircraft systems, FCC regulations prohibit using your cellular device while the plane is in the air.

Children

To prevent damage to the unit, do not allow children to play with the Phonecell® SX5T.

Blasting Areas

Construction crews often use remote control RF devices to set off explosives. Therefore, to avoid interfering with blasting operations, turn the Phonecell® SX5T OFF when in a "blasting area" or in areas posted: "Turn off two-way radio."

Potentially Explosive Atmospheres

Turn the Phonecell® SX5T OFF when in any area with a potentially explosive atmosphere. It is rare, but the Phonecell® SX5T or its accessories could generate sparks. Sparks in such areas could cause an explosion or fire resulting in bodily injury or even death.

Areas with a potentially explosive atmosphere are often, but not always, clearly marked. They include fueling areas such as gas stations; below deck on boats; fuel or chemical transfer or storage facilities; areas where the air contains chemicals or particles, such as grain, dust, or metal powders; and any other area where you would normally be advised to turn off your vehicle engine.

Do not transport or store flammable gas, liquid or explosives in the area of the Phonecell® SX5T or accessories.

Vehicles using liquefied petroleum gas (such as propane or butane) must comply with the National Fire Protection Standard (FPA-58). For a copy of this standard, contact the National Fire Protection Association, One Batterymarch Park, Quincy, MA 02269, Attn: Publications Sales Division.

Patents

Telular Corporation products are protected and manufactured under one or more of the following U.S. patents and related international patents and patents pending relating thereto:

4,658,096	4,737,975	4,775,997	4,868,519	4,922,517	5,134,651
5,361,297	5,469,494	5,046,085	5,715,296	6,775,522	6,778,824
6,785,517.					

Trademarks

Telular Corporation owns the following registered trademarks: TELULAR and design, TELULAR, CELJACK, MAXJACK, TELCEL, HEXAGON LOGO, PHONECELL, CELSERV, TELGUARD, CPX, and AXCELL.

Licensed by QUALCOMM Incorporated under one or more of the following Patents:

4,901,307	5,490,165	5,056,109	5,504,773	5,101,501	5,778,338
5,506,865	5,109,390	5,511,073	5,228,054	5,535,239	5,710,784
5,267,261	5,544,196	5,267,262	5,568,483	5,337,338	5,659,569
5,600,754	5,414,796	5,657,420	5,416,797.		

CDMA2000® is a registered trademark of the Telecommunications Industry Association (TIA-USA).

647 North Lakeview Parkway
Vernon Hills, Illinois 60061, USA
Tel: 847-247-9400 • Fax: 847-247-0021
http://www.telular.com

©2006 Telular Corporation, all rights reserved.

Part Number 56035301

WATSON MARLOW Bredel PUMPS

Engineering and Technical Data

SPX25
High Performance Hose Pumps

Features and Benefits

- *Can run dry continuously*
- *Most suitable for handling shear sensitive products*
- *Accurate (±1%) dosing (metering) capabilities*
- *Smooth liquid passage without valves, dead corners, or glands*
- *The material to be pumped does not contact mechanical parts or seals*
- *Easy maintenance, low cost, short down time*
- *Only one wearing part: the hose*
- *Easily and completely cleanable*
- *Easily adjustable and reversible rotation*
- *Suitable for high viscosity and densities*
- *No metal contact or valves*
- *Safe for use in explosive environments*
- *No internal back flow (slip)*
- *Designed to pump liquids containing particles (abrasion is no restriction)*
- *Self priming to 95% vacuum*
- *Patented direct coupled design with rotor-supporting twin-bearing hub integrated into the pumphead and unique buffer zone to provide protective barrier between pumphead and gearmotor*
- *Ultra compact footprint with flanged helical gearing: no coupling or drive alignment required*
- *Optional integral VFD with user friendly speed pot and fwd/off/rev push buttons*
- *Two year comprehensive warranty*

Performance Chart

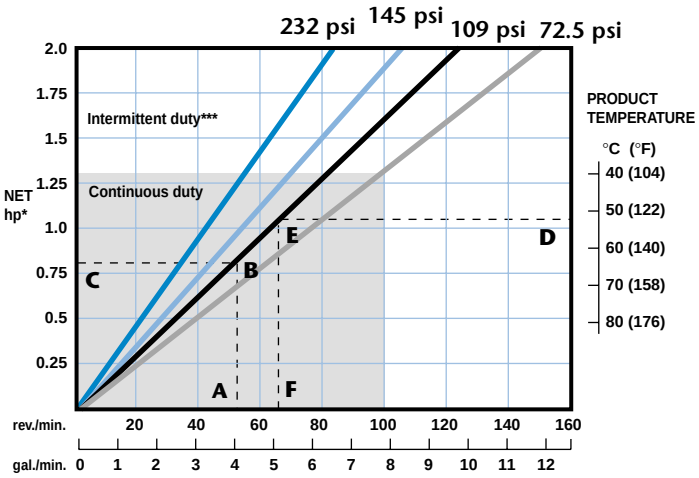

How to calculate speed/horsepower

A Flow required, indicates pump speed
B Calculated discharge pressure
C Horsepower required
D Fluid temperature
E Calculated discharge pressure
F Maximum recommended pump speed**

* Minimum starting torque 1,600 in-lbs based on starting unloaded at atmospheric discharge pressure. Starting torque can be 2-3X running torque if starting under the load of higher discharge pressures. ** For maximum hose life, speed point (A) should be lower than temperature adjusted speed point (F). See example points (A) thru (F). ***Intermittent duty = 2 hrs max continuous running, 1 hr stop before restart.

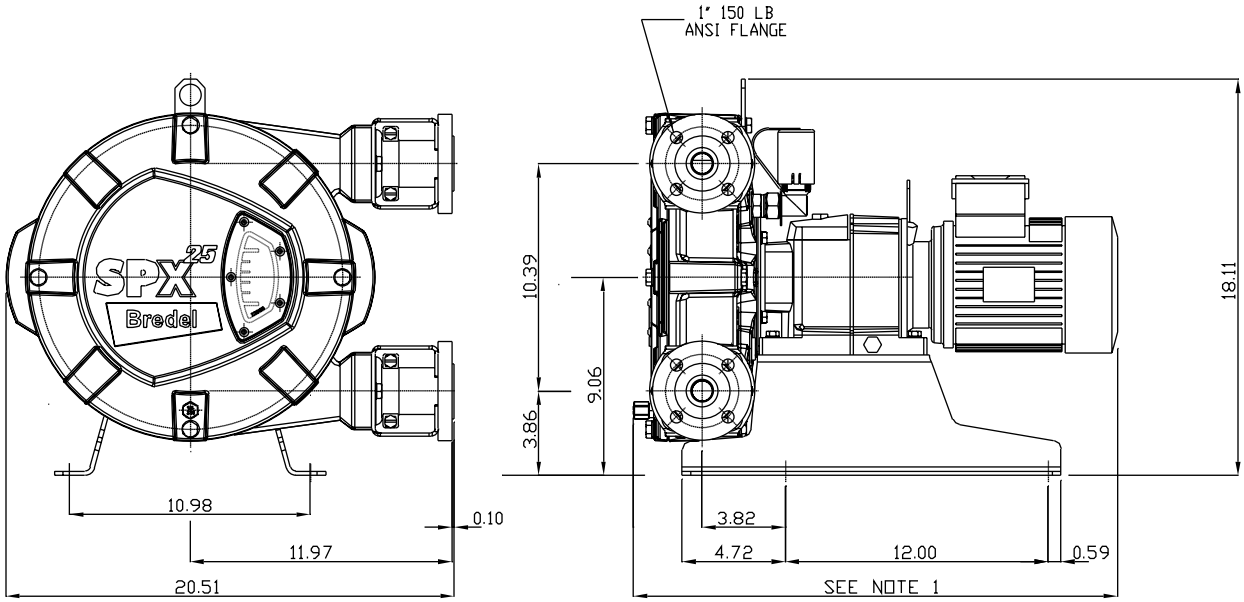

Notes:

1. Dimension is dependent on selection of gearbox and/or motor
2. All dimensions in inches

SPX25
High Performance Hose Pumps

Technical Specifications

Displacement: 0.079 gal/rev

Supply: 115/230 single phase or 230/460 three phase or 575V three phase

Operating Speeds: up to 100 rpm continuous up to 140 rpm intermittent

Fluid Temperature Range*: -4° to 175°F

Ambient Temperature Range:** -4° to 113°F

Hose Lubricant Required: 0.53 gallons

Flow Range: up to 11 gpm

Discharge Pressure: up to 232 psi

Suction Pressure: 28ft. lift to 55 psi

Available Hose Materials: Natural Rubber, BUNA N, EPDM, Hypalon

Available Insert Materials: Polypropylene, 316SS, PVDF, PVC

Fittings: 1" 150# Flange

Optional High Level Hose Leak Sensor: NO or NC: 1A max, 250V max, 50VA max

When installing, allow min 40" linear clearance from ports to facilitate hose changing

Materials of Construction

Pumphead: Cast Iron
Rotor: Cast iron
Bearing Hub: Cast Iron
Shoes: Aluminum or Epoxy
Shims: 316SS
Cover: Cast Iron
Flanges and Flange Brackets: Galvanized steel or 316SS
Support Frame: Galvanized steel or 316SS
Hardware: Zinc plated steel or 316SS
Hose Clamps: Galvanized Steel or 316SS
Shaft: Alloy steel
Seals: Buna

*Consult Watson-Marlow Bredel for lower or higher temperature operation

**Allowable ambient temperature is based on pump capabilities and may be further limited by gearmotor ambient capabilities

The information contained in this document is believed to be correct, but Watson-Marlow Bredel Pumps accepts no liability for any errors it contains, and reserves the right to alter specifications without notice.

Watson-Marlow Bredel Pumps
37 UPTON TECHNOLOGY PARK, WILMINGTON, MA 01887-1018
TEL: 800-282-8823, 978-658-6168 / FAX: 978-658-0041
http://www.watson-marlow.com

Antenna Installation Guide

NMO Mount Antenna

Features:

- Vehicle use
- Easy to install
- Permanent installation
- Requires antenna adapter (sold separately)
- Compatible with Wilson Electronics Signal Booster (sold separately)

Wilson® Electronics, Inc.

Wilson Electronics Signal Boosters Amplify Coverage

When used in conjunction with your antenna, a Wilson Signal Booster can improve your cell phone and laptop data card coverage area up to 50 miles. Wilson Electronics manufactures a wide range of wireless and direct-connection Signal Boosters for mobile or in-building use. See your dealer for details or visit www.wilsonelectronics.com.

How It Works

Wilson Electronics NMO Mount antenna will collect the cell tower signal and send it through the cable to a signal booster or directly to the cell phone or cellular data card. When the cell phone or cellular data card transmits, the signal is transferred to a signal booster or directly to the antenna and broadcast back to the cell tower. See the back cover for information on Wilson Electronics Signal Boosters. An external adapter is required to connect the cell phone or cellular data card to the antenna.

The external adapter is cell phone/data card-specific and may be purchased through a local retailer. Refer to Wilson Electronics Adapter Guide to identify the right adapter for your cell phone or cellular data card. The Adapter Guide is available through a local retailer. It is also available on our web site, www.WilsonElectronics.com, or you may call Technical Support at 866-294-1660.

Installing optional NMO Mounts

For installing ¾ in NMO:
(Part# 901102)

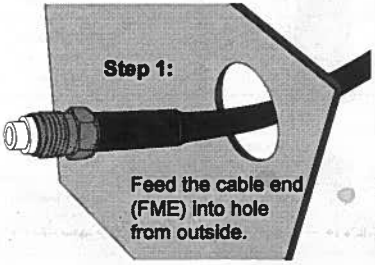

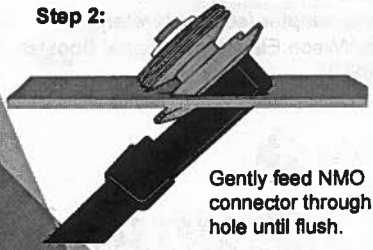

For installing the NMO Trunk Mount Antenna (sold separately): (Part# 901101)

1. Select a location on the trunk or the hood for mounting the antenna.
2. Slide the trunk mount bracket on the trunk or hood lip in the selected location, and tighten the two set screws on the bottom lip underneath the trunk or hood lip with the Allen wrench provided.
3. Route the cable between the mount and phone location.
4. Screw the antenna coil into place.

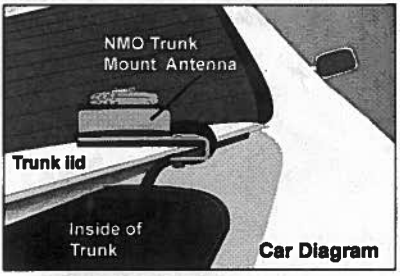

Contact Wilson Electronics Technical Support with any questions at 866-294-1660
Or email: tech@wilsonelectronics.com Hours: 7am to 6pm MST.

Installing the NMO Mount Antenna

1. Select a location for mounting the antenna. The best location would be centered on the vehicle roof, although other locations are acceptable.

2. Roof mount only: For mounting the antenna to the roof of your vehicle, use Wilson Electronics part #901102 (3/4") or #901103 (3/8"), which must be purchased separately (A). Drill a hole in the desired location for mounting. The size of the hole should be 3/8" or 3/4", depending on the type of mount purchased.

3. The plastic washer (B) should be placed over the threads of the NMO mount (A). From the inside of the vehicle, insert the threaded portion of the mount up through the hole in the vehicle.

4. From the top of the vehicle, screw the threaded nut (C) onto the mount threads coming up through the roof and tighten until secure.

5. The black rubber washer (D) should now be positioned around the threaded nut.

6. Working from the inside of the vehicle, securely route and position the cable provided with your mount to your signal booster or cell phone.

7. Screw the NMO antenna assembly (E) into place on top of the vehicle.

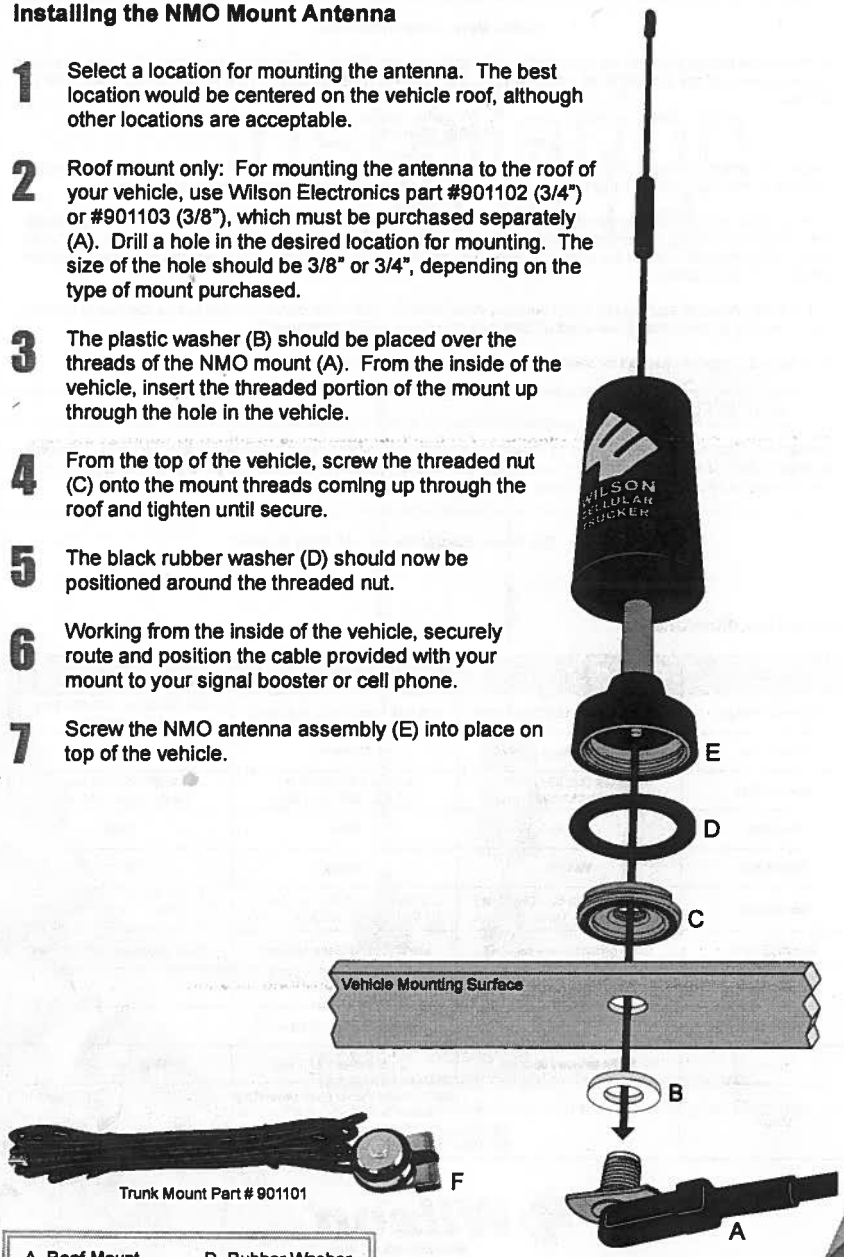

Trunk Mount Part # 901101

¾ NMO Part #901103
Shown above.

A. Roof Mount	D. Rubber Washer
B. Plastic Washer	E. NMO Antenna
C. Threaded Nut	F. Trunk Mount

Contact Wilson Electronics Technical Support with any questions at 866-294-1660
Or email: tech@wilsonelectronics.com Hours: 7am to 6pm MST.

30-Day Money-Back Guarantee

All Wilson Electronics products are protected by Wilson Electronics 30-day money-back guarantee. If, for any reason, the performance of any product is not acceptable, simply return the product directly to the reseller with a dated proof of purchase.

90-Day Warranty

Wilson Electronics antennas are warranted for ninety (90) days against defects in workmanship and/or materials. Warranty cases may be resolved by returning the product directly to the reseller with a dated proof of purchase.

Antennas may also be returned directly to the manufacturer at the consumer's expense, with a dated proof of purchase and a Returned Material Authorization (RMA) number supplied by Wilson Electronics. Wilson Electronics shall, at its option, either repair or replace the product. Wilson Electronics will pay for delivery of the repaired or replaced product back to the original consumer.

This warranty does not apply to any signal boosters determined by Wilson Electronics to have been subjected to misuse, abuse, neglect, or mishandling that alters or damages physical or electronic properties.

RMA numbers may be obtained by phoning Technical Support at 866-294-1660.

Disclaimer: The information provided by Wilson Electronics, Inc. is believed to be complete and accurate. However, no responsibility is assumed by Wilson Electronics, Inc. for any business or personal losses arising from its use, or for any infringements of patents or other rights of third parties that may result from its use.

Copyright © 2011 Wilson Electronics, Inc. All rights reserved.

Antenna Specifications

Part Number	301104	301112	304203
Frequency Range	806-894 MHz / 1850-1990 MHz	806-894 MHz / 1850-1990 MHz	806-894 MHz / 896-939 MHz 1850 - 1990 MHz
Impedance	50 ohms	50 ohms	50 ohms
Antenna Gain	4.9 dBi 806-894 MHz / 5.9 dBi 1850-1990 MHz	4.9 dBi 806-894 MHz / 5.9 dBi 1850-1990 MHz	4.9 dBi 806-894 MHz / 5.9 dBi 1850-1990 MHz
Radiation	Omni	Omni	Omni
Polarization	Vertical	Vertical	Vertical
Wavelength	1.0 Wavelength 806-894 MHz / 2.1 Wavelength 1850-1990 MHz	1.0 Wavelength 806-894 MHz / 2.1 Wavelength 1850-1990 MHz	1.0 Wavelength 806-894 MHz / 1.1 Wavelength 896-939 MHz / 2.25 Wavelength 1850-1990 MHz
Ground Plane	Metal ground plane required	Metal ground plane required	Metal ground plane required
Connector	FME-Female	FME-Female	FME - Female
Material	Whip - Stainless Steel		
Height	13.88 inches / 35.3 cm	13.25 inches / 33.7 cm	13.88 inches / 35.3 cm
Mount	***NMO Mount Types*** **(sold separately)** Trunk Mount (14' RG-58 Coax) Part# 901101 3/8" Hole - Roof Mount (14' RG-58 Coax) Part# 901103 3/4" Hole - Roof Mount (14' RG-58 Coax) Part# 901102		

Wilson® Electronics, Inc.

3301 East Deseret Drive, St. George, UT 84790
For additional Technical Support visit www.WilsonElectronics.com
www.twitter.com/WilsonCellular www.facebook.com/WilsonCellular
Phone: 866-294-1660 Fax: 435-656-2432

Part# 103040 AIG NMO 016 / 02.01.11

APPENDIX E
VENDOR CONTACT INFORMATION

SYSTEM CONTACT LIST

Extraction Pump Manufacturer
Watson-Marlow Bredel Pumps: Model SPX25
37 Upton Technology Park
Wilmington, MA 01887-1018
TEL: 800-282-8823, 978-658-6168
FAX: 978-658-0041
http://www.watson-marlow.com

System Construction Contractor
Matt Murphy
Western Mass Environmental
93 Wayside Avenue
West Springfield, MA 01089
Toll Free: (866) 662-2622;
Fax (413) 787-2646
Email: info@westernmassenv.com
http://www.westernmassenv.com/

Heat Trace Thermostat & Control System
Pentair Thermal Controls (formerly Tyco Thermal Controls)
7433 Harwin Drive
Houston, TX 77036
Tel: 800-545-6258
Tel: 800-545-6258
Fax: 800-527-5703
Fax: 650-474-7711
http://us.thermal.pentair.com/

Flow Meter Manufacturer
Dynasonics
8635 Washington Avenue
Racine, WI 53406 USA
Telephone: 800.535.3569
262.639.6770
Fax: 800.732.8354
262.639.2267
http://www.dynasonics.com/products/tfxl.php

DAPL Tank Manufacturer
PolyProcessing
161 McGhee Rd.
Winchester, VA 22603
Tel: 1.866.590.6845
866.590.6845
sales@polyprocessing.com