Engineering a Sustainable Future

EPA Region 1 RAC 2 Contract No. EP-S1-06-03

April 23, 2014
Nobis Project No. 80022

Via Electronic Submittal

U.S. Environmental Protection Agency, Region 1
Attention: Mr. Daniel Keefe, Task Order Project Officer
5 Post Office Square, Suite 100
Boston, Massachusetts 02109-3919

Subject: DNAPL Extraction System Construction Summary with O&M Manual
Nyanza Chemical Waste Dump Superfund Site – Operable Unit 2,
Ashland, Massachusetts
Remedial Action
Task Order No. 0022-RA-RA-0115

Dear Mr. Keefe:

Enclosed for your review is the DNAPL Extraction System Construction Summary for the Nyanza Chemical Waste Dump Superfund Site, Operable Unit 2, located in Ashland, Massachusetts. Also included as an Attachment to this summary is the Operations and Maintenance (O&M) Manual for the extraction system components.

Should you have any questions or comments, please contact me at (978) 703-6006, or ballen@nobiseng.com.

Sincerely,

NOBIS ENGINEERING, INC.

Boyd Allen III, P.G.
Associate / Senior Project Manager

Enclosure

c: File No. 80022/MA
Dave Buckley, MassDEP

SDMS Doc ID 555308

Nobis Engineering, Inc.
585 Middlesex Street
Lowell, MA 01851
T (978) 683-0891

DNAPL Extraction Construction Summary

Nyanza Chemical Waste Dump – Operable Unit 2
Ashland, Massachusetts

Remedial Action
EPA Task Order No. 0022-RA-RA-0115

REMEDIAL ACTION CONTRACT
No. EP-S1-06-03

FOR

US Environmental Protection Agency
Region 1

BY

Nobis Engineering, Inc.

Nobis Project No. 80022

April 2014

U.S. Environmental Protection Agency
Region 1
5 Post Office Square, Suite 100
Boston, Massachusetts 02109-3919

Nobis Engineering, Inc.
Lowell, Massachusetts
Concord, New Hampshire

Phone (800) 394-4182
www.nobisengineering.com

DNAPL Extraction Construction Summary

Nyanza Chemical Waste Dump – Operable Unit 2
Ashland, Massachusetts
Remedial Action
EPA Task Order No. 0022-RA-RA-0115

REMEDIAL ACTION CONTRACT
No. EP-S1-06-03

For

US Environmental Protection Agency
Region 1

By

Nobis Engineering, Inc.

Nobis Project No. 80022

April 2014

Boyd Allen III, P.G.
Senior Project Manager

Michelle Carbonneau
Staff Engineer

TABLE OF CONTENTS
DRAFT DNAPL EXTRACTION SYSTEM CONSTRUCTION SUMMARY
NYANZA CHEMICAL WASTE DUMP SUPERFUND SITE
ASHLAND, MASSACHUSETTS

SECTION **PAGE**

AC ACRONYMS AND ABBREVIATIONS AC-1

1.0 INTRODUCTION 1
1.1 Overview and Objectives 1

2.0 SITE DESCRIPTION AND HISTORY 1
2.1 Overall Site History 2
2.2 Summary of Remedial Investigation, Feasibility Study, Records of Decision, and Remedial Actions 3

3.0 OU2 ESD – SOURCE EXTRACTION OF DNAPL WITH POSSIBLE ENHANCEMENTS CONSTRUCTION 3
3.1 DNAPL Extraction System Evaluation 4
3.2 DNAPL Extraction System Design and Construction Subcontractor Selection 5
3.3 DNAPL Extraction System Construction 7
3.3.1 DNAPL Extraction System Construction Chronology 7
3.3.2 DNAPL Extraction System Construction Quality Control 9
3.3.3 DNAPL Extraction System Initial Startup and Shakedown 11
3.4 DNAPL Extraction System Operation and Maintenance Activities 13

4.0 DNAPL EXTRACTION SYSTEM CONTACT INFORMATION 13

5.0 REFERENCES 15

FIGURES

NUMBER

2-1 Site Locus
2-2 Site Features
3-1 Site Plan

APPENDICES

A Photo Log

TABLE OF CONTENTS (cont.)
DNAPL EXTRACTION SYSTEM CONSTRUCTION REMEDIAL ACTION REPORT
NYANZA CHEMICAL WASTE DUMP SUPERFUND SITE
ASHLAND, MASSACHUSETTS

ATTACHMENTS

1 Operations & Maintenance Manual

ACRONYMS AND ABBREVIATIONS

DNAPL	Dense Non-Aqueous Phase Liquid
EPA	U.S. Environmental Protection Agency
ESD	Explanation of Significant Differences
GAC	Granular Activated Carbon
GES	Groundwater & Environmental Services
HDPE	High-Density Polyethylene
MassDEP	Massachusetts Department of Environmental Protection
Nobis	Nobis Engineering, Inc.
Nyacol	Nano-Technologies, Inc.
O&M	Operations and Maintenance
OU2	Operable Unit 2
PVC	Polyvinyl Chloride
RA	Remedial Action
RD	Remedial Design
ROD	Record of Decision
RPM	Remedial Project Manager
Site	Nyanza Chemical Waste Dump Superfund Site
TO	Task Order
USACE	U.S. Army Corps of Engineers
WAC	Worcester Air Conditioning, LLC
XLPE	Cross-Linked Polyurethane

1.0 INTRODUCTION

A Dense Non-Aqueous Phase Liquid (DNAPL) extraction system to support source control Remedial Action (RA) was constructed at the Nyanza Chemical Waste Dump Superfund Site (Site). This Construction Report provides a summary of completed activities, including initial system evaluation and design, system construction, system startup and shakedown, and system operation and maintenance.

1.1 Overview and Objectives

Nobis Engineering, Inc. (Nobis) was contracted by the U.S. Environmental Protection Agency (EPA) under Remedial Action Contract No. EP-S1-06-03 Task Order (TO) 0022-RA-RA-0115 to set forth the framework and requirements for implementing the DNAPL portion of the RA in accordance with the objectives of the Conceptual Remedial Design (RD); and also to construct and implement the physical extraction of DNAPL from the deep aquifer, and possibly from shallow fractured bedrock, through the use of belt skimmers or a similar extraction method.

2.0 SITE DESCRIPTION AND HISTORY

The Site is located on the north side of Megunko Road in the Town of Ashland, Middlesex County, Massachusetts (Figure 2-1). The Town of Ashland is located 25 miles west-southwest of Boston, Massachusetts and 20 miles east-southeast of Worcester, Massachusetts.

The Site encompasses four areas of contamination: the whole 35-acre former Nyanza, Inc. property consisting of wetlands, the Megunko Hill area, and an industrial park along Megunko Road (Figure 2-2); groundwater contamination associated with past Site-related industrial activities (Operable Unit 2 or OU2); drainage ways between the former Nyanza Inc. property and the Sudbury River, consisting of the Eastern Wetland, Trolley Brook, and Outfall Creek/Lower Raceway; and a 26-mile stretch of the Sudbury River from the Site east to its confluence with the Assabet River in Concord, Massachusetts.

Commercial, industrial, and residential properties currently occupy the Site area. Additionally, an active rail service bisects the Site area. The Site area pertaining to this report includes groundwater contamination in downgradient areas affected by the presence of DNAPL in the overburden and shallow bedrock aquifer. The presence of this DNAPL may be related to now-

removed waste management infrastructure associated with past Nyanza, Inc. activities. These two DNAPL areas are located on opposite sides of the active rail line, which separates the Nyacol Nano-Technologies, Inc. (Nyacol) facility, and the Worcester Air Conditioning, LLC. (WAC) offices and shop. The Nyacol Facility is located at 211 Megunko Road, Ashland, Massachusetts. The WAC facility is located at 148 Pleasant St, Ashland, Massachusetts.

2.1 Overall Site History

From 1917 to 1978, several companies occupied the Site and manufactured textile dyes and dye intermediates, inorganic colloidal solids, and acrylic polymers. Nyanza, Inc. was the most recent dye manufacturing company to occupy the Site. It operated at the Site from 1965 until 1978. The former plant grounds are currently occupied by several industrial businesses, the largest of which is Nyacol Products, Inc.

Starting in 1917, several types of chemical wastes were disposed of in various locations on the Site property with most of these wastes deposited on Megunko Hill, which was used as an unsecured landfill. Wastes included partially treated process wastewater, chemical sludge from the wastewater treatment process, solid process wastes (e.g., chemical precipitate and filter cake) in drums, solvent recovery distillation residues in drums, and off-specification products. Process chemicals that could not be recycled or reused (including phenol, nitrobenzene, and mercuric sulfate) were also disposed of on the Site property. Over 45,000 tons of chemical sludge generated by wastewater treatment processes, along with spent solvents and other chemical wastes, were buried on the property. The area containing the largest amount of buried waste and exposed sludge was referred to as the Hill section.

Chemical wastes were also disposed of in the wetland areas. The Area G Wetland and Eastern Wetland received waste effluent discharge from various manufacturing operations. The portion of the Area C Wetland at the headwaters of Chemical Brook contained wastewater treatment sludge and possibly received overflow from an underground concrete wastewater vault that discharged into Chemical Brook (Figure 2-2).

Nyanza, Inc. and its predecessors originally discharged the dye waste stream to a concrete vault (or settling structure) adjacent to the main process building. The vault acted as a central sump for wastewater collection from the entire Nyanza operation, as well as from other waste

generating tenants housed nearby. This vault measured approximately 40 x 80 feet and was approximately 10 feet deep. The liquid occasionally overflowed via a pipe into Chemical Brook, which flowed into Trolley Brook and underground through Chemical Brook Culvert into Outfall Creek, and then into the Raceway that entered the wetlands along the Sudbury River. The vault was taken out of service in the 1960s or 1970s, but continued to be a source of groundwater contamination at the Site until its removal in 1988. Nyanza connected to the Metropolitan District Commission sewer collection system in March 1970.

2.2 Summary of Remedial Investigation, Feasibility Study, Records of Decision, and Remedial Actions

OU2 is a groundwater plume of organic contamination extending downgradient from Nyacol in a north/northeasterly direction toward the Sudbury River. The OU2 Record of Decision (ROD) was issued in 1991 as an interim remedy, with the intent to further evaluate the effectiveness of groundwater extraction and treatment to meet drinking water standards after an initial operational period of five years (EPA, 1991). Design of a treatment system was completed by 1992, and a pilot test of the system was initiated in 1994. During initial pilot-phase testing, DNAPL entered the pumping test well. The treatment system had not been designed to mitigate DNAPL; therefore, implementation of a groundwater treatment system was postponed. The U.S. Army Corps of Engineers (USACE) and its contractor conducted initial evaluations of the DNAPL, including feasibility analyses for various treatment techniques, as well as a conceptual design for an extraction system with off-site treatment/disposal (ICF, 2006).

The presence of DNAPL in the area, coupled with the establishment of a vapor intrusion pathway to indoor air caused EPA to issue an Explanation of Significant Differences (ESD) document in 2006 (EPA, 2006). The ESD documented these newly understood site conditions and consequently the need for a different remedial action approach than had been presented in the ROD.

3.0 OU2 ESD – SOURCE EXTRACTION OF DNAPL WITH POSSIBLE ENHANCEMENTS CONSTRUCTION

The ESD required the following revisions to the 1991 ROD:

- Extraction of DNAPL, to include off-site treatment and disposal of the extracted DNAPL with possible system enhancements;
- Performance of routine groundwater monitoring to assess any changes in plume concentrations and migration;
- Voluntary installation of vapor mitigation systems in approximately 40 to 50 structures (mostly homes);
- Voluntary performance of additional air testing at additional homes; and
- Installation of small-diameter monitoring wells or piezometers in the areas generally described above to determine the extent of the shallow groundwater plume more accurately.

With the exception of the DNAPL extraction, each of these required elements was implemented by December 2011.

3.1 DNAPL Extraction System Evaluation

According to Section B-1 of the ESD, the Source Extraction of DNAPL with Possible Enhancements generally prescribed a slow but continuous, or nearly continuous, extraction process matched closely to the DNAPL inflow rates (EPA, 2006). The extracted DNAPL was to be containerized in drums or tanks prior to off-site disposal.

In 2013, Nobis conducted an evaluation of several extraction methods, including submersible pumps, belt skimming, and peristaltic pumping (Nobis, 2013). The table below provides a summary of the extraction alternatives evaluation.

	Submersible Pump	Belt Skimmer	Peristaltic Pump
Technical Feasibility	●	-	○
Implementation Schedule	○	○	●
Environmental Impact	●	-	○
Cost	●	○	-

Notes:
● – Preferred alternative
○ – Viable alternative
- – Non-viable alternative

The submersible pump alternative was selected as the preferred extraction alternative as it proved to be the least costly and most feasible.

3.2 DNAPL Extraction System Design and Construction Subcontractor Selection

In the 2013 DNAPL Extraction System Evaluation Report, Nobis presented a conceptual design, which included the following elements:

- Extraction systems installed in monitoring wells MW-113A (WAC property), and MW/B-11 (Nyacol Property) (see Figure 3-1);
- Electronically controlled, compressed nitrogen-powered extraction systems utilizing 2-inch submersible extraction pumps;
- Aboveground product storage tank;
- Vapor phase activated carbon treatment;
- Extraction system alarm monitoring system via a wireless link; and
- Permanent extraction system enclosure.

A specification package with the above elements was prepared and issued to prospective bidders in April 2013. Based on the responses made by the various prospective bidders, Nobis awarded the subcontract to Groundwater and Environmental Services, Inc. (GES) on May 3, 2013. A preconstruction conference was conducted at the Site on May 31, 2013 to orient relevant technical staff to the Site and upcoming work.

Several system and enclosure design modifications were made in June 2013 and July 2013, after the preconstruction conference.

- Upgraded design from a double-walled high-density polyethylene (HDPE) storage tank to a double-walled 12-guage 304-stainless-steel storage tank of similar volume affixed with an armored sight-glass, and stainless-steel fittings.
    - This upgrade was necessary because of possible material incompatibilities with site contaminants.

- Upgraded the DNAPL extraction system transfer hose from nylon to pure Teflon.
    - This upgrade was necessary because of possible material incompatibilities with site contaminants.
- Upgraded the vapor vent hose from polyvinyl chloride (PVC) to cross-linked polyethylene (XLPE) with 304-stainless-steel camlock quick disconnects.
    - This upgrade was necessary due to possible material incompatibilities with site contaminants; it will also allow operations staff to perform activated carbon changeout more quickly while minimizing potential leaks.
- Addition of a high-high shutoff on the product storage tank.
    - This addition was necessary to provide a second layer of protection against system overflow or spillage.
- Upgrade of brass and Buna rubber fittings to 304-stainless-steel.
    - This upgrade was necessary because of possible material incompatibilities with site contaminants.
- Addition of a 304-stainless-steel drop tube with Teflon fittings inside the product storage tank.
    - This addition was necessary to minimize opening the storage tank during product removal operations. Using this drop tube, it reduces the chance of spills or releases as well as potential exposure time to vapors, during storage tank product removal.
- Addition of a spray-on type non-skid liner on the enclosure floor and around floor penetrations.
    - This addition was necessary to serve as secondary containment in the event that a release from the extraction or storage system were to occur.

- Addition of a crushed stone walkway from the stone pad at MW/B-11 to the paved portion of the Nyacol property.

    - This addition was necessary to provide safe access to the system enclosure at the Nyacol property for operations/maintenance staff.

3.3 DNAPL Extraction System Construction

Construction began on the DNAPL extraction and storage system with the May 31, 2013 preconstruction meeting at the Site. The DNAPL extraction and storage system underwent a phased construction process that included: site preparation; off-site system fabrication; and system delivery and setup. The primary subcontractors that performed the work are listed below.

- Prime Contractor – Nobis
- Principal Site Subcontractor – GES
- Site Preparation and Labor – Cyn Environmental Services, Inc.
- System Fabrication and Construction – Aquarep, Air Energy, Inc.
- Exterior Electrical Services – J&L Electric (Nyacol), Chipman Electric (WAC)

Throughout fabrication and construction, operations personnel at both the Nyacol and WAC manufacturing facilities were kept informed of project schedules and activities. Both facilities responded when requested to move staged materials, and were cooperative during the entire construction process.

3.3.1 DNAPL Extraction System Construction Chronology

Physical construction activities began on June 13, 2013. Two 10-foot by 12-foot by 8-inch deep excavations were made around monitoring wells MW-113A (WAC), and MW/B-11 (Nyacol) to provide bases onto which the two DNAPL extraction and storage system enclosures would be placed (Figure 3-1). The excavations were lined with non-woven geotextile fabric (for barrier and drainage purposes), and filled to grade with 0.75-inch washed crushed stone. The stone was leveled and compacted in preparation for later mobilization of the DNAPL extraction and storage

system enclosures (fabricated off-site). It was discovered shortly thereafter that the MW/B-11 pad had been installed mistakenly around the nearby monitoring well SB-600. On June 21, 2013, the appropriate excavation was made around MW/B-11, and a gravel walkway constructed to access the area. Photos of construction activities and the finished DNAPL extraction and storage system enclosures are shown in Appendix A.

Construction of the product storage tanks, system enclosures, and interior electrical systems began in late July 2013. Fabrication of these items occurred at Air Energy, Inc., a GES subcontractor, in their South Easton, Massachusetts facility. As discussed in Section 3.3.2 of this report, Nobis made regular progress visits to and quality control inspections of the fabrication shop during the off-site fabrication process.

Electrical supplies were established at the two system locations on August 26, 2013 (Nyacol) and August 28, 2013 (WAC). These supplies were connected to existing power drops at each of the facilities. Separate electric meters were installed to monitor each system's power consumption.

Off-site fabrication continued through August 2013. The equipment passed functionality tests during the August 29, 2013 shop fabrication visit and the completed extraction and storage system and enclosures were cleared for delivery to the Site.

On September 3, 2013, an access path was prepared at Nyacol to facilitate treatment system delivery on site. The stone pad also required additional compaction and grading prior to receiving the treatment system enclosure.

On the morning of September 4, 2013, the MW/B-11 treatment system (Nyacol) was transported on a flatbed trailer from the fabrication shop to the Site. An off-road fork truck lifted the system off the flatbed trailer, transported it, and placed it on the prepared crushed stone pad. Final electrical connections were made to the system circuit breaker box, and the compressed nitrogen system was prepared for operation.

Later on September 4, 2013, the MW-113A treatment system was delivered to the WAC site. An off-road fork truck lifted the system off the flatbed trailer, transported it and placed it on the

prepared crushed stone pad. Final electrical connections were made to the system circuit breaker box, and the compressed nitrogen system was prepared for operation.

On September 6, 2013, the two installed systems were tested for functionality and leaks. Further details regarding system construction quality control inspections and oversight are presented in Section 3.3.2 of this report.

On September 10 and 11, 2013, Nobis initiated system startup on the MW/B-11, and MW-113A systems, respectively. At the conclusion of the startup process, the systems entered the shakedown phase. Initial startup and shakedown details are described in Section 3.3.3 of this report.

3.3.2 DNAPL Extraction System Construction Quality Control

Nobis conducted periodic construction quality control inspections. These inspections were primarily conducted by the Resident Engineer either at the Site, or at the system fabrication shop. The following table summarizes the quality control inspections performed.

Inspection/Oversight Date	Location	Key Findings
June 13, 2103	Site – Ashland, MA	- Constructed foundation pads were verified to be level and well-compacted; - The pad constructed at MW/B-11 was inadvertently installed on SB-600; this will require rectification
June 21, 2013	Site – Ashland, MA	- Constructed foundation pad on MW/B-11; pad was level and compacted.
August 9, 2013	Fabrication shop – South Easton, MA	- Inspected the two stainless-steel storage tanks; both met requirements, and appeared to be in good condition; - Inspected the two system enclosures; construction is progressing in accordance with designs; - No deficiencies noted.
August 15, 2013	Fabrication shop – South Easton, MA	- Inspected the two stainless-steel storage tanks; one additional fitting was noted that was not presented on the design drawings. The fitting is an access into the interstitial space. - Process equipment received was inspected and met project requirements.

Inspection/Oversight Date	Location	Key Findings
August 22, 2013	Fabrication shop – South Easton, MA	- System enclosures were in the process of being painted: cladding – forest green, trim – white, interior – white. Each of these colors met project requirements. - The floor in each enclosure had been painted with a black ceramic sealing paint to act as a form of secondary containment. This paint met project requirements.
August 26, 2013	Site – Ashland, MA	- Installed an electrical service mast at the rear of the Nyacol facility. Service is 3-phase, 50 amp, 208/120 volt and was de-energized until final connections are made to the extraction system electrical panel. - Electric meter installed inside the Nyacol facility building. - Each of these elements met project requirements.
August 28, 2013	Site – Ashland, MA	- Installed an electrical service conduit through the interior of the Worcester Air Conditioning building to an exterior service mast at the rear of the facility. Service is 3-phase, 50 amp, 208/120 volt and was de-energized until final connections are made to the extraction system electrical panel. - Electric meter installed inside the facility building. - Each of these elements met project requirements.
August 29, 2013	Fabrication shop – South Easton, MA	- Two storage tanks were properly bolted to the enclosure floor and penetrations were sealed using caulking. - Construction of the two enclosures, including painting, interior electric, controllers, and autodialers was complete. - Functionality testing was performed on interior lighting, pump controllers, pumps, and system autodialers. Each was found to be functional. - Leak testing was performed by the fabricator and no leaks were detected.
September 3-6, 2013	Site – Ashland, MA	- An access path was prepared at the Nyacol Facility. - Constructed foundation pad at Nyacol was re-compacted and graded. Constructed pad was verified to be level. - Swale located in front of Nyacol facility was restored. - MW/B-11 and MW-113A were bailed to observe amount of DNAPL in monitoring wells. - Nitrogen tanks were delivered to the Site. - System enclosures were delivered to the Site and installed. Electrical connections were made to the system's circuit breaker boxes, and the compressed nitrogen system prepared for operation. Extraction system installed in both wells. Extraction pump and leak testing was also performed. - Systems were tested by GES and witnessed by Nobis on September 6, 2013. Nobis accepted both systems on September 6, 2013.

3.3.3 DNAPL Extraction System Initial Startup and Shakedown

Initial start-up of both systems began on September 9, 2013. The system at Nyacol was brought online on September 10, 2013. The system at WAC was brought online on September 11, 2013. After initial system startup on September 10 and 11, 2013, Nobis performed system shakedown tests to adjust system settings to maximize DNAPL product recovery and minimize groundwater volume. Optimizing DNAPL extraction is achieved by modifying pump intake settings and pumping frequency/cycling as discussed in the O&M Manual (Attachment 1).

Twenty-four system shakedown Site visits were made between September 12, 2013 and January 29, 2014. Site visits were made on the following days: September 12, 13, 18, and 25, 2013; October 2, 3, 4, 9, 16, 23, 28, and 30, 2013; November 6, 12, 18, and 27, 2013; December 4, 12, 18 and 20, 2013; and January 6, 15, 23, and 29, 2014. During these visits, operational inefficiencies were observed and corrected. Major issues observed during this shakedown period are described below.

On November 12, 2013, the DNAPL recovery system at both the Nyacol and WAC facilities were identified to be non-operational. Discussions with subcontractors and equipment manufacturers determined that the valve inside the Model C100M pump controller was non-functional likely due to a freezing issue.

GES and their subcontractor, Aquarep, came on-site to verify and correct the issue on November 18, 2013 and November 27, 2013, respectively. Because the pump controllers were rated to withstand temperatures as low as 14°F, the freezing issue was thought to be due to cold temperatures in the nitrogen gas line. As the gas is released under pressure from the tank, it quickly expands in the line thus lowering the temperature. These cooled vapors were reaching the pump controller valve causing the valve to freeze at the lower temperatures. On November 27, 2013, Aquarep increased the length of the existing nitrogen gas line by installing more 3/8-inch Duraflex tubing. This additional tubing was installed between the nitrogen tank regulator and the pump controller inside each of the heated sheds. The additional tubing was designed to allow the nitrogen gas enough time to warm up and adjust to ambient temperature, before reaching the pump controller. Additionally, a quick-connect valve was installed to discharge exhaust vapors from the pump to the atmosphere.

Despite the fixes, the WAC and Nyacol systems were again found to be inoperable during the December 4, 2013 and December 12, 2013 site visits, respectively. Again, the pump controller valve had failed due to freezing. Aquarep came to the site on December 18, 2013 to install a heated structure around the pump controller on each shed. The heated structure at the Nyacol Facility was installed and operational on December 18, 2013. The heated structure at the WAC Facility was installed on December 18, 2013 but was not operational until December 20, 2013.

On January 6, 15, and 23, 2014, an alarm condition was activated at WAC, which caused the treatment system to shut down; however, no condition at the site warranted an alarm. Aquarep was notified of the issue and returned to the Site on January 29, 2014. Aquarep rewired the connections between the pump controller and autodialer, and this solved the issue. The system was operational on January 29, 2014.

On January 23, 2014, the tubing inside the WAC shed was observed to be frozen. Insulation was installed below the shed floor around the monitoring well standpipe to eliminate outside drafts from coming inside the shed. Insulation was also installed at the Nyacol shed on February 13, 2014. Visual observations on February 4 and 13, 2014 indicated that the downhole tubing in both recovery wells continued to be frozen. To mitigate this situation, intrinsically safe heat tape will be acquired and installed around the downhole lines inside the monitoring well casing as well as conveyance tubing inside the shed.

On January 29, 2013, adjustments were made to the Nyacol and WAC piping systems. The exhaust from the quick connect valve was identified to have potential contaminant concentrations, that could escape, untreated, to the atmosphere. To prevent any contaminant releases, the exhaust piping from the quick connect valve was re-plumbed and re-connected to the vapor-phase granular activated carbon (GAC) unit. Additionally, a ball valve was installed on the effluent line of the vapor-phase GAC unit to permit more accurate readings of contaminant concentrations at the GAC unit effluent sample port.

At Nyacol, a DNAPL/water emulsion has been pumped to the system storage tank. Through observations and jar testing, no clear separation between the DNAPL and water has been identified. Of the total liquid volume in the storage tank, approximately 55 percent is the

DNAPL/water emulsion. At WAC, DNAPL has been identified in the storage tank. Of the total liquid volume in the storage tank, approximately 20 percent is DNAPL product.

3.4 DNAPL Extraction System Operation and Maintenance Activities

A system operations and maintenance (O&M) manual was prepared for the DNAPL extraction system and is found in Attachment 1. The O&M manual describes the recommended procedures to operate and properly maintain the extraction and storage systems. The O&M manual includes system specifications as well as the manufacturers' operations manuals for each of the major system components.

4.0 DNAPL EXTRACTION SYSTEM CONTACT INFORMATION

Contact information for the major parties involved with this project is as follows:

United States Environmental Protection Agency

Mr. Daniel Keefe, (RPM)
U.S. EPA
Massachusetts Superfund Section
5 Post Office Square
Boston, Massachusetts 02109
Telephone – (617) 918-1327

Massachusetts Department of Environmental Protection

Mr. David Buckley
MassDEP
One Winter Street
Boston, Massachusetts 02108
Telephone – (617) 556-1184

Contractor

Mr. Boyd Allen III, P.G., Senior Project Manager
Nobis Engineering, Inc.
585 Middlesex Street
Lowell, Massachusetts 01851
Telephone – (978) 683-0891

Installation Subcontractor

Mr. Brian Horan, Senior Project Manager
GES, Inc.
364 Littleton Road, Suite 4
Westford, Massachusetts 01886
Telephone – (800) 221-6119 ext. 3241

5.0 REFERENCES

EPA, 1991. EPA Superfund Record of Decision. Nyanza Chemical Waste Dump, EPA ID: MAD990685422, OU 02, Ashland, MA. Environmental Protection Agency, September 23, 1991.

EPA, 2006. Explanation of Significant Differences. Nyanza Chemical Waste Dump Superfund Site Operable Unit 2, Ashland, Massachusetts. Environmental Protection Agency, September 28, 2006.

ICF Consulting, Inc. 2006. Draft Conceptual Design for DNAPL Extraction System, Nyanza Chemical Waste Dump Superfund Site, Operable Unit II, Ashland, Massachusetts. September 12.

Nobis, 2013. DNAPL Extraction System Evaluation Report (Report) for the Nyanza Chemical Waste Dump Superfund Site, Operable Unit II (Nyanza OU2) located in Ashland, Massachusetts (Site). April 2013

FIGURES

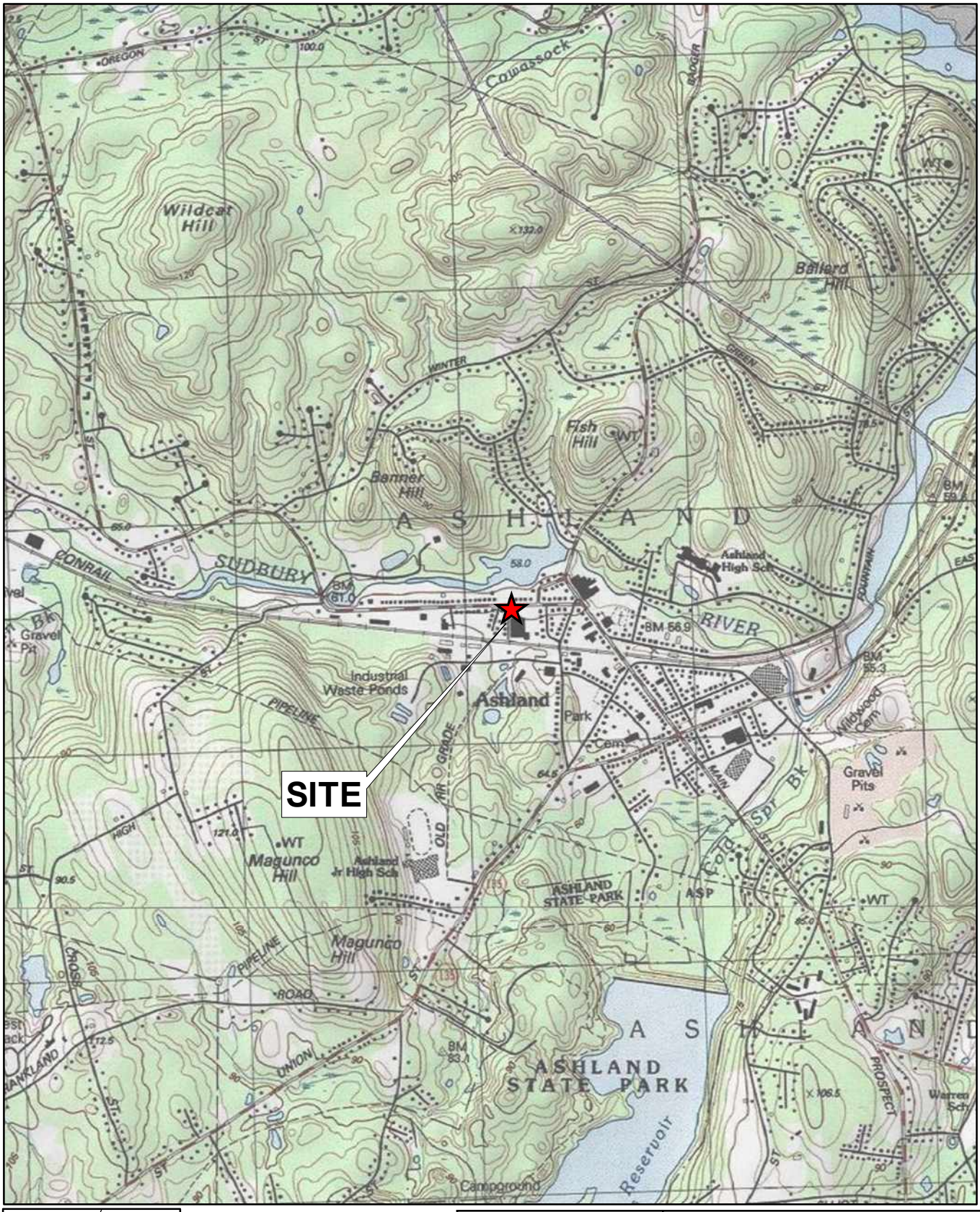

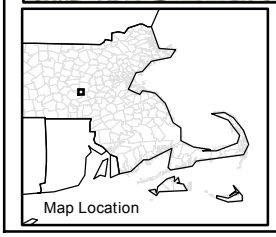

USGS Topographic Map
Ashland, Massachusetts
Revised 1982

0 500 1,000 2,000
Feet
1 inch = 2,000 feet

N

Nobis
Engineering a Sustainable Future
Nobis Engineering, Inc.
18 Chenell Drive
Concord,NH 03301
T(603) 224-4182
www.nobiseng.com
Client-Focused, Employee-Owned

FIGURE 2-1

SITE LOCUS PLAN
NYANZA CHEMICAL WASTE DUMP
SUPERFUND SITE - OPERABLE UNIT II
ASHLAND, MASSACHUSETTS

PREPARED BY: JH	CHECKED BY: BA
PROJECT NO. 80022.09	DATE: FEBRUARY 2014

Path: R:\80000 Task Orders\80022 Nyanza OU2\Technical Data (TD)\GIS\Fig_1-1_Nyanza_Locus.mxd Date Printed: 2/19/2014

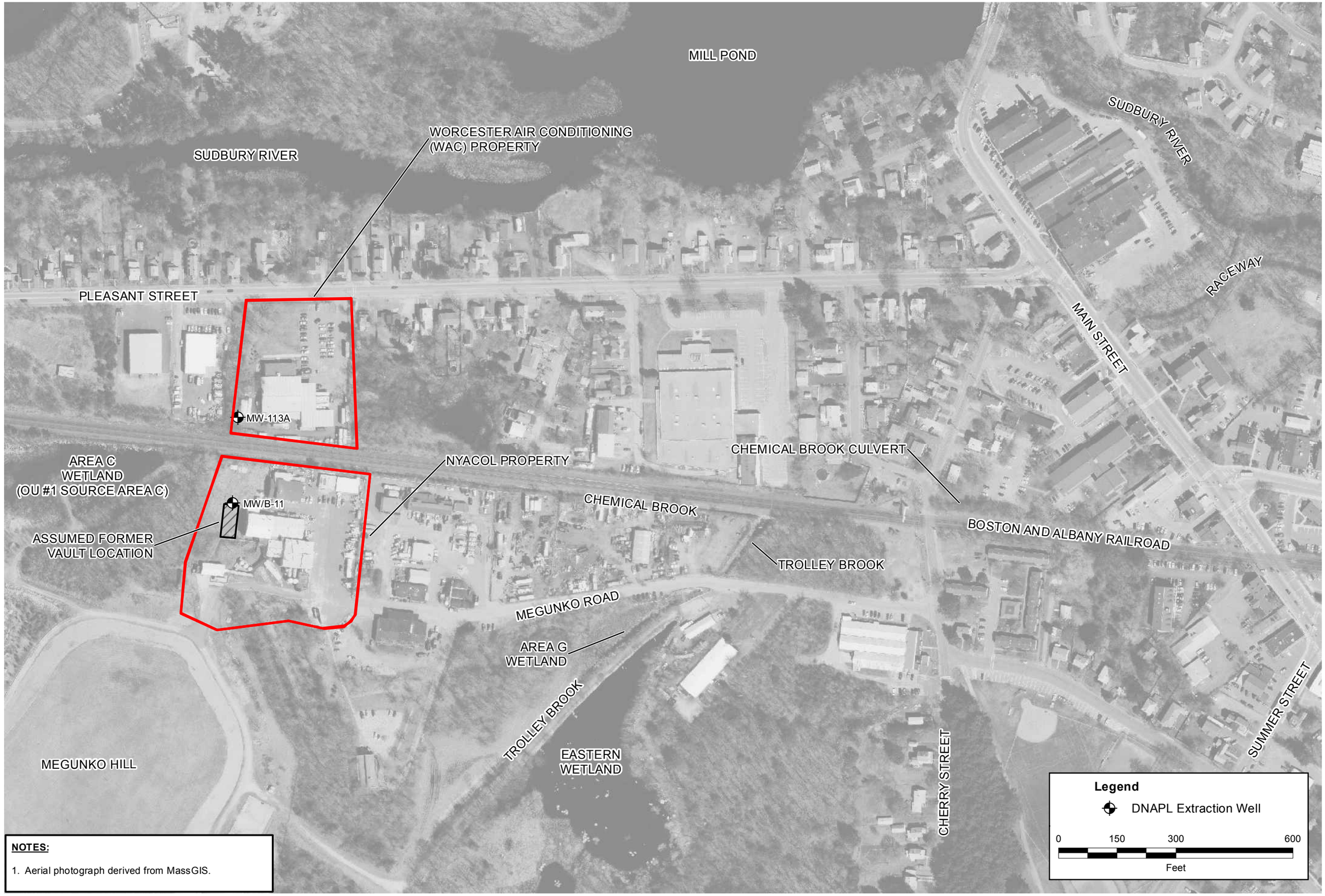

N

NOTES:

1. Aerial photograph derived from MassGIS.

DATE: FEBRUARY 2014
PROJECT NO. 80022

PREPARED BY: JH
CHECKED BY: BA

Nobis
Engineering a Sustainable Future
Nobis Engineering, Inc.
18 Chenell Drive
Concord, NH 03301
T(603) 224-4182
www.nobiseng.com
Client-Focused, Employee-Owned

NYANZA CHEMICAL WASTE DUMP
SUPERFUND SITE
OPERABLE UNIT II
ASHLAND, MASSACHUSETTS

SITE FEATURES

FIGURE
2-2

Path: R:\80000 Task Orders\80022 Nyanza OU2\Technical Data (TD)\GIS\Maps\DNAPL Construction Report\Fig_2-2_Site_Features.mxd Date Printed: 2/24/2014

Notes:

1. Aerial photograph derived from MassGIS.
2. Location of site features depicted hereon is approximate and given for illustrative purposes only.

Legend

- DNAPL Recovery Well
- Former Site Structures
- Property Lines

0 25 50 100
Feet
1 inch = 100 feet

N

Nobis
Engineering a Sustainable Future
Nobis Engineering, Inc.
585 Middlesex Street
Lowell, MA 01851
T(978) 683-0891
www.nobiseng.com
Client-Focused, Employee-Owned

FIGURE 3-1

NYANZA CHEMICAL WASTER DUMP
SUPERFUND SITE
OPERABLE UNIT II
ASHLAND, MASSACHUSETTS
SITE PLAN

PREPARED BY: JH	CHECKED BY: BA
PROJECT NO. 80022.09	DATE: FEBRUARY 2014

Path: R:\80000 Task Orders\80022 Nyanza OU2\Technical Data (TD)\GIS\Maps\DNAPL Construction Report\Fig_3-1_Nyanza_Site_Plan.mxd Date Printed: 2/20/2014

APPENDICES

Date: 8/9/13	**Location:** Air Energy Inc.
Description: DNAPL storage tanks – fittings and access port visible on top.	

Date: 8/9/13	**Location:** Air Energy Inc.
Description: DNAPL storage tanks – sight glass and drain fittings	

Date: 8/9/13	**Location:** Air Energy Inc.
Description: DNAPL storage tanks – Access port and fittings on top.	

Date: 8/9/13	**Location:** Air Energy Inc
Description: Structures – under construction	

Date: 8/9/13	**Location:** Air Energy Inc.
Description: Structure- view of roof under construction	

Date: 8/9/13	**Location:** Air Energy Inc
Description: Structure - interior	

Date: 8/9/13	**Location:** Air Energy Inc.
Description: Structure – threshold of doorway 12 inches from ground.	

Date: 8/9/13	**Location:** Air Energy Inc
Description: Rough cut out for well access.	

Date: 8/9/13	**Location:** Air Energy Inc
Description: Structure – lifting lugs on steel frame visible.	

Date: 8/15/13	**Location:** Air Energy Inc.
Description: Building Interior.	

Date: 8/15/13	**Location:** Air Energy Inc.
Description: Interior - Well access location with raised boards to maintain containment.	

Date: 8/15/13	**Location:** Air Energy Inc.
Description: Building Entry – Raised board for containment visible.	

Date: 8/15/13	**Location:** Air Energy Inc.
Description: Second Building – Interior being painted.	

Date: 8/15/13	**Location:** Air Energy Inc
Description: Building Exterior	

Date: 8/15/13	**Location:** Air Energy Inc.
Description: Building Exterior	

Date: 8/15/13	**Location:** Air Energy Inc
Description: Vapor phase carbon vessels	

Date: 8/22/13	**Location:** Air Energy Inc.
Description: Interior of WAC structure	

Date: 8/22/13	**Location:** Air Energy Inc.
Description: Exterior of structure – painting completed	

Date: 8/22/13	**Location:** Air Energy Inc.
Description: Interior of WAC facility structure	

Date: 8/22/13	**Location:** Air Energy Inc.
Description: Interior of Nyacol facility structure	

Date: 8/22/13	**Location:** Air Energy Inc
Description: Testing setup for level switches, alarms and Sensaphone autodialer	

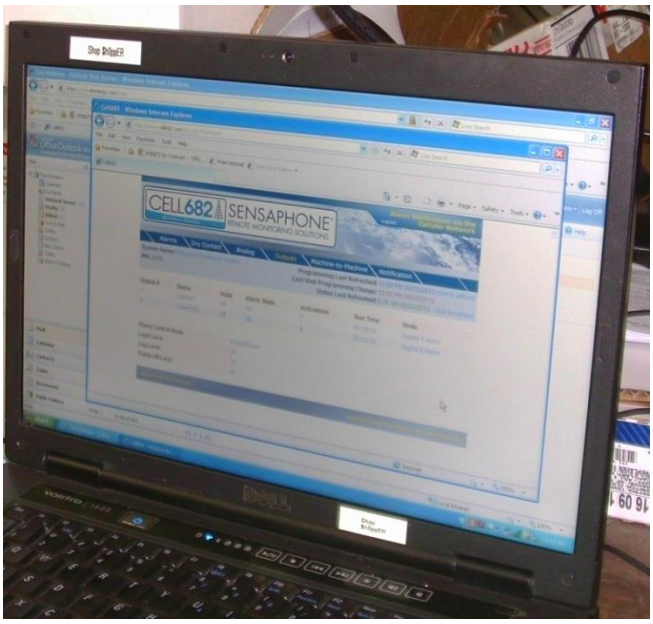

Date: 8/22/13	**Location:** Air Energy Inc.
Description: Sensaphone user interface displayed on a laptop computer	

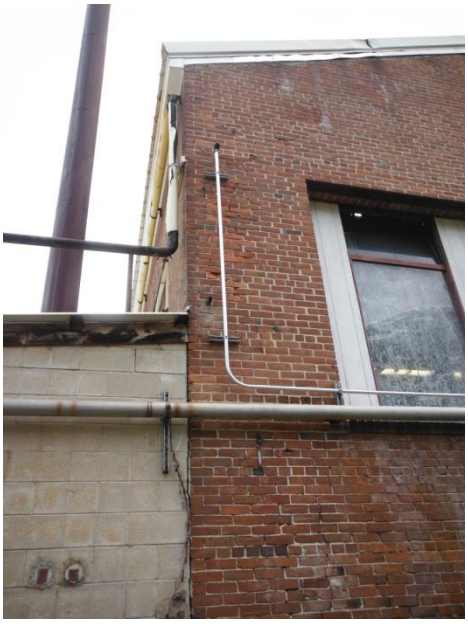

Date: 8/26/13	**Location:** Nyanza Superfund Site - Nyacol Facility
Description: New electric service mast	

Date: 8/26/13	**Location:** Nyanza Superfund Site - Nyacol Facility
Description: Nyacol facility with new service mast. Gravel access way and pad.	

Date: 8/26/13	**Location:** Nyanza Superfund Site - Nyacol Facility
Description: Conduit being installed on west wall of Nyacol facility	

Date: 8/26/13	**Location:** Nyanza Superfund Site - Nyacol Facility.
Description: Approximate location conduit will penetrate brick wall	

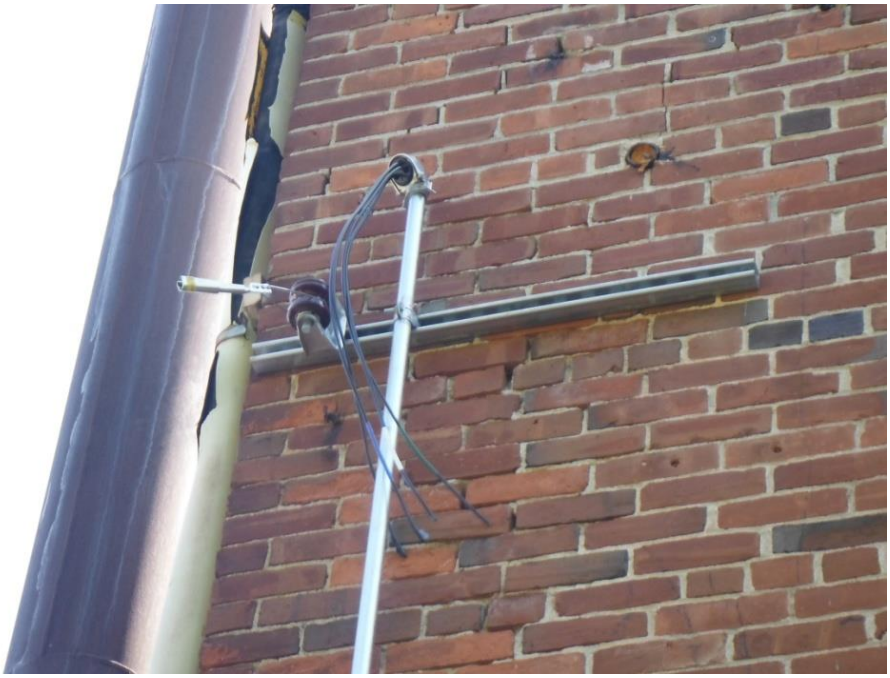

Date: 8/28/13	**Location:** Nyanza Superfund Site - Nyacol Facility
Description: New electric service mast	

Date: 8/28/13	**Location:** Nyanza Superfund Site - Nyacol Facility

Description: Routing of conduit on exterior of Nyacol facility.

Date: 8/28/13	**Location:** Nyanza Superfund Site - Nyacol Facility

Description: Conduit building penetration

Date: 8/28/13	**Location:** Nyanza Superfund Site - Nyacol Facility.

Description: Proposed access route for installation; Materials obstructing corner

Date: 8/28/13	**Location:** Nyanza Superfund Site – WAC Facility.
Description: View of approximate location of gravel pad for DNAPL Extraction System	

Date: 8/28/13	**Location:** Nyanza Superfund Site – WAC Facility.
Description: View of WAC facility from gravel pad with materials obstructing access.	

Date: 8/29/13	**Location:** Air Energy Inc.
Description: Interior of WAC structure	

Date: 8/29/13	**Location:** Air Energy Inc.
Description: Interior tank connections	

Date: 8/29/13	**Location:** Air Energy Inc.
Description: Structure exterior – electrical service, pump controller, auto-dialer	

Date: 8/29/13	**Location:** Air Energy Inc.
Description: Structure exterior – pump controller	

Date: 8/29/13	**Location:** Air Energy Inc
Description: Structure exterior – Heater contactors, thermostats, 120v outlet	

Date: 8/29/13	**Location:** Air Energy Inc.
Description: Recovery Pump	

Date: 9/3/13	**Location:** Nyacol Facility
Description: Restored swale	

Date: 9/3/13	**Location:** Nyacol Facility
Description: Removal of gravel pathway to reuse gravel for leveling pad	

Date: 9/3/13	**Location:** Nyacol Facility.
Description: Re-leveling and compacting of gravel pad	

Date: 9/4/13	**Location:** Nyacol Facility
Description: Fork truck access way	

Date: 9/4/13	**Location:** Nyacol Facility
Description: Lifting system into place	

Date: 10/16/13	**Location:** Nyacol Facility
Description: System Layout of Nyacol Shed	

Date: 10/16/13	**Location:** Nyacol Facility

Description: MW/B-11 at Nycaol Facility

Date: 10/16/13	**Location:** Worcester Air Conditioning Facility

Description: Electrical Control Panel and Pump Controller Panel

Date: 10/16/13	**Location:** Worcester Air Conditioning Facility
Description: MW-113A at Worcester Air Conditioning Facility	

ATTACHMENT 1

QED
Environmental Systems

PULSE PUMP®

PNEUMATIC PUMPING SYSTEMS

Patent No. 5147185

Installation and Operation Manual

P/N 35750 6-16-11

PULSE PUMP®

PNEUMATIC PUMPING SYSTEMS

The Pulse Pump system from *QED Environmental Systems* can be used in many different applications and in various configurations. The simplest system would consist of a controller, well cap, tubing, exhaust valve, and pump. Many options are available, including floating layer inlets and on/off level control. Pumps are available in a wide range of sizes and materials.

Included in this manual are individual product sheets showing connector configurations, connection options (typically 1/4" and 1/8" NPT) and operation instructions. You will also find system configuration diagrams which show an overall view of how a typical Pulse Pump system interconnects.

DANGER!

When the Pulse Pump pneumatic pumping system is used, care should be taken to ensure the controller is located in a well ventilated area away from sources of an open flame, sparks and extreme heat.

As in all situations, failure to take adequate precautions may result in catastrophic injury or death.

AIR SYSTEM RECOMMENDATIONS

To insure reliable operation of your Pulse Pump system, your air supply needs to deliver clean, dry air to all system components. Local, experienced compressor suppliers can work with you to meet our suggested specifications.

Recommended Pressure (at the components):	100 P.S.I.
Maximum Pressure:	125 P.S.I.
Minimum Pressure:	60 P.S.I.
Air Flow Rate:	2.5 S.C.F.M. at 100 P.S.I.
Air Quality:	10 Micron filtration Less than 10 P.P.M. of oil Dew point 20 degrees Fahrenheit below minimum operating temperature, (especially for northen climate installations).

If you have any questions concerning your system or available options, please contact us at *1-800-624-2026* (in Michigan: (734) 995-2547).

INDEX

Page

Pulse Pump Installation Guidelines

Control Modules

Mounting diagram
L360 Pulse Sender Connections
L360 Operation
Optimizing Your Pump Using The L360 Timers
L370 Level Controller Connections/Operation
L375 Level Controller Connection/Operation
L380 Well Master Remote Well Level Controller Connection/Operation
L600 Remote Well Operator Connection/Operation
L354 Combination Remote Well Operator/Exhaust Valve Connection/Operation
Model 35694 Weather-Tight Module Enclosure

PUMPS

Pump Connectors
Pump Technical Data And Speci cation Sheets:
- LP1001 PVC Pump
- LP1201 Te on Pump
- LP1301 Stainless Steel/Te on Pump
- LP1401 Bras Pump
- LP1602 ELIMINA TOR Stainless Steel/Nylon Bladder Pump
- LP1610 ELIMINA TOR Stainless Steel/Te on Bladder Pump
- LP1650 SLEEPER Horizontal Pumping Pump
- LP1702 BIG ELIMINA TOR Stainless Steel/Nylon Bladder Pump
- LP1705 BIG ELIMINA TOR Stainless Steel/Te on Bladder Pump
- LP4600 High Flow PVC Pump
- LP4700 High Flow Stainless Steel/Te on Pump
- 999 SLIDER High Flow Incline Remediation Pump

Bubbler Tubes
Bubbler Tube Extensions
Floating Layer Adapters

E AUST A ES

L350/L351 Connections
L353 Connections
L355/L356 Connections
L358 Connections

ASIC SYSTEM DIAGRAMS

System "A" Single pump, Total Fluids, Continuous Pumping
System "B" Single Controller, Multiple Pumps, Total Fluids, Continuous Pumping
System "C" Single Pump, Total Fluids, Level Controlled
System "D" Single Controller, Multiple Pumps, Total Fluids, Level Controlled

PU SE PUMP WARRANTY IN ORMATION

PUMP INSTA ATION

[illegible]

[illegible]

[illegible]

MODU E MOUNTING DIAGRAM

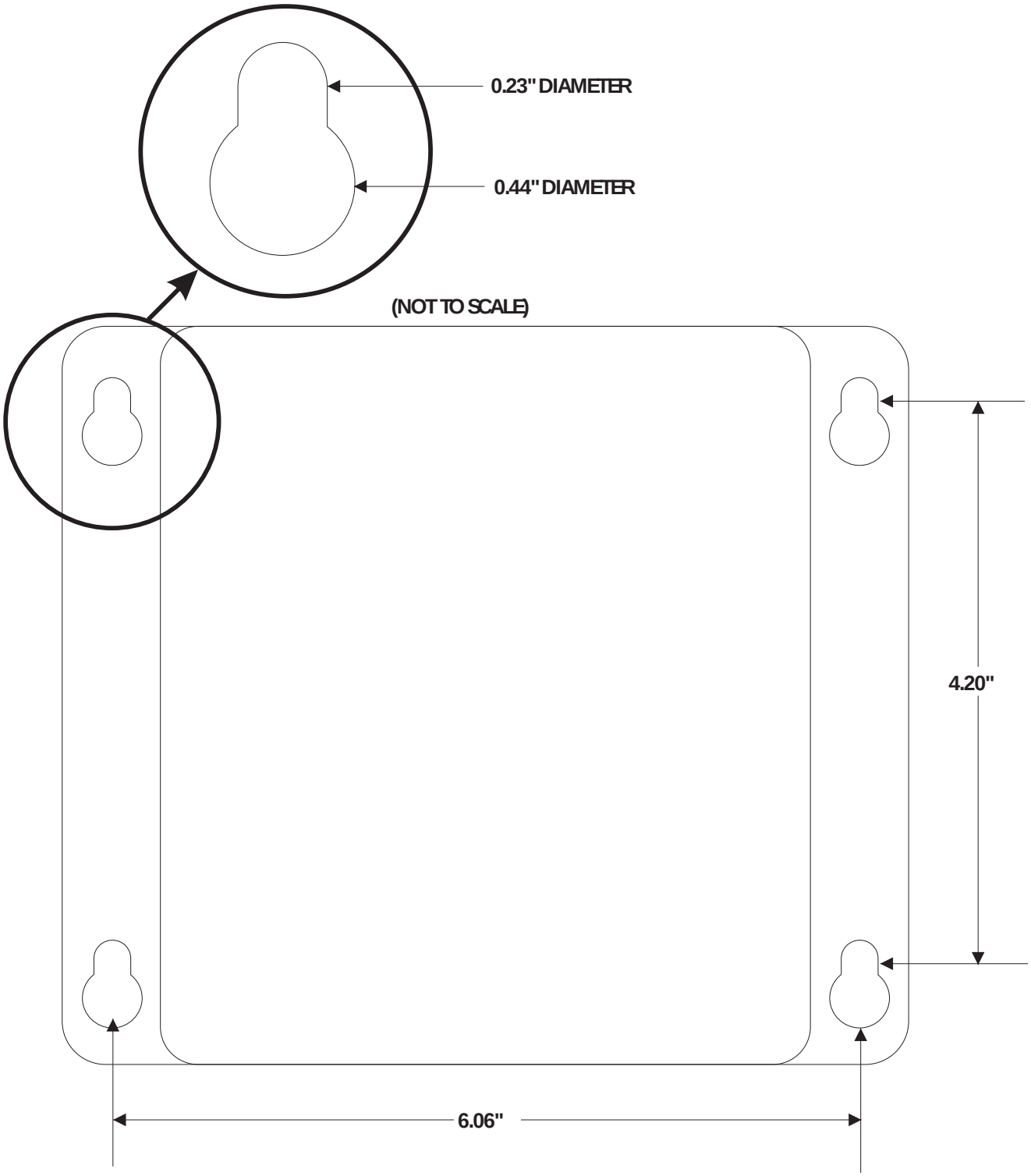

PU SE SENDER MODE CONNECTIONS

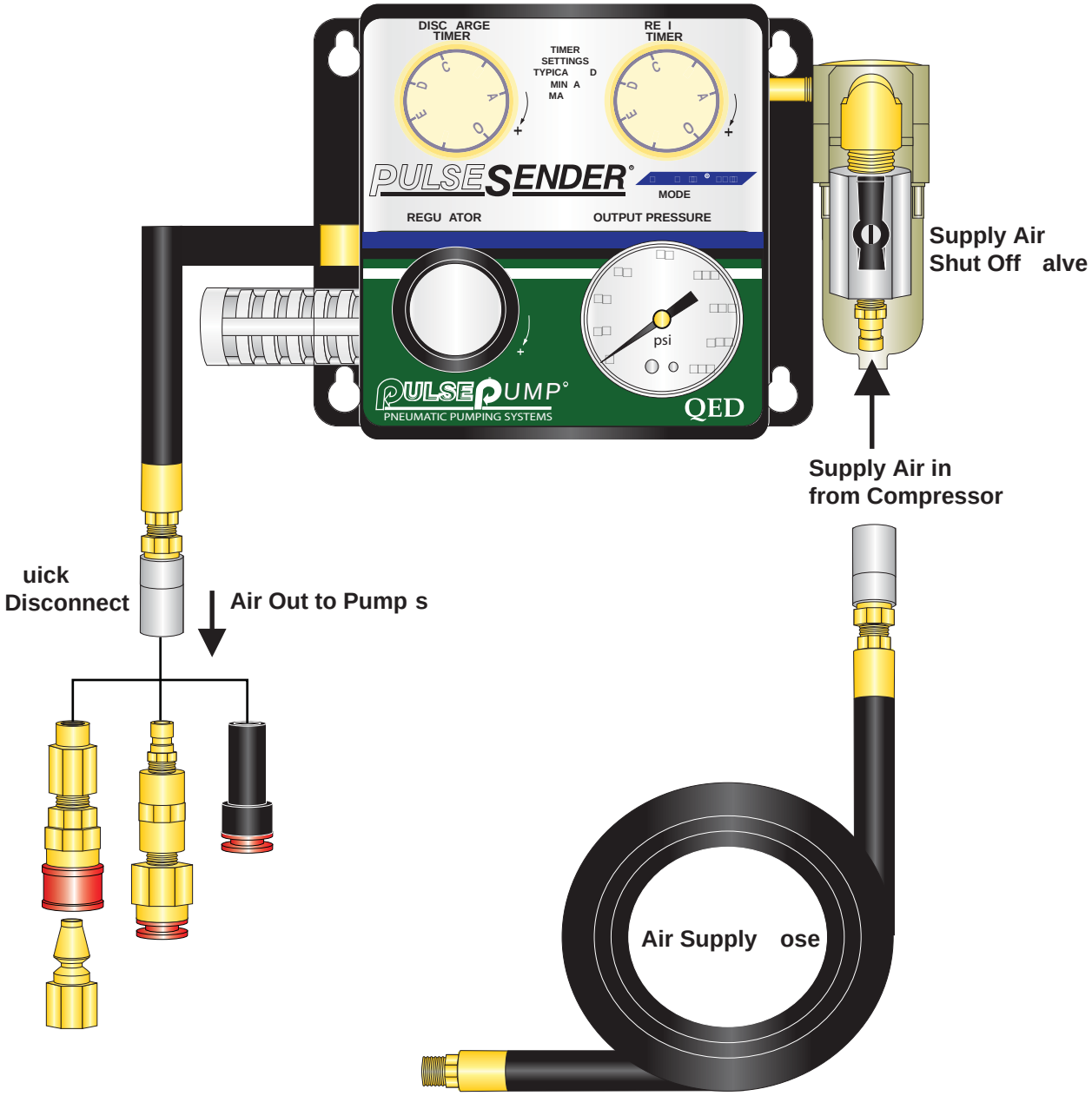

. [illegible]

. [illegible] **SUPP Y AIR S UT O A E** [illegible] **O** [illegible]

. [illegible] **SUPP Y AIR IN** [illegible]

. **Connect AIR OUT TO PUMPS** [illegible]

. [illegible] **SUPP Y AIR S UT O A E** [illegible] **ON** [illegible]

. [illegible] **Timer Settings for ED Product Only ladder Pumps** [illegible] **Table** [illegible] **OW RATE OPTIMI ATION** [illegible]

PU SE SENDER MODE OPERATION

Timer Settings for ED Product Only ladder Pumps

[illegible] ON [illegible] O [illegible] ON [illegible] O [illegible] ON [illegible] O [illegible] ON [illegible]

[illegible]

Product Recovered [illegible]	[illegible]	ON Time Seconds	O Time Seconds

[illegible] ON [illegible] ON [illegible]

[illegible]

Timer Settings for other ED pumps

TA E

P M e	I e De	2 e ge e D a ge	Re	e ge e D a ge	Re	0 e ge e D a ge	Re
LP 00	10	2.0	0.8	2.0	0.6	1.9	0.4
	25	3.2	1.3	3.1	1.0	3.1	0.7
	50	7.5	2.1	7.4	1.6	7.3	1.3
	100	15.6	4.1	15.5	3.3	15.3	2.7
LP 30 LP 602 LP 6 0 LP 6 0	10	1.3	1.7	1.3	1.2	1.3	0.9
	25	2.0	2.4	2.0	1.7	2.0	1.3
	50	4.3	3.5	4.3	2.6	4.3	2.1
	100	8.7	6.1	8.6	4.9	8.6	4.1
LP 40	10	1.1	2.6	1.1	1.7	1.1	1.2
	25	1.6	3.0	1.6	2.1	1.6	1.6
	50	3.7	3.9	3.7	2.9	3.7	2.3
	100	7.7	6.3	7.7	5.0	7.6	4.1
LP 02 LP 0 LP4600 LP4 00 SL6000	10	3.6	3.3	3.6	2.1	3.6	1.5
	25	5.7	3.9	5.7	2.6	5.7	1.9
	50	14.8	5.0	14.8	3.5	14.7	2.7
	100	32.0	7.4	31.8	5.6	31.5	4.4

[illegible]

OW RATE OPTIMIZATION

The purpose of optimizing flow ra es creat maximum flow rates and pump efficiency at the pump's operating conditions. To accomplish this, both the refill and discharge times on the pump controller must be optimized.

Pu e Pump and cyc can be max um your system. Pumping conditions, such as the depth of the pump, the amount of submergence of the pump s inlet, or the recovery rate of the well, the performance of the pump. Adjustable cycle timers on the Pulse Pump controller let you tune your system to your site.

To optimize your pump s flow rate follow the following steps

1. et the refill time on the controller at 15 seconds. et the discharge time at 1 second your well depth under 50 set at 3 seconds your dep 51 100 a dep 100' set the discharge timer at 5 seconds. With these settings, it should 5- 5 cycles to purge the air from the discharge line depending on the pump' depth. If liquid fails to discharge after 15 cycles, begin increasing the discharge time (as discussed in step 2 be w . When liquid begins to low from dischar e , measu amount of liquid being discharged per cycle. At this point volume measured is probab less than the full internal volume of the well development pump which is 1.15 liters

2. Begin i crease the discharge time slightly in about 1/2 second increments allowing the pump to cycle 3-5 times between each adjustment. Repeat this operation until air can be de ct d coming up through the discharge line in the form of bubbles. The amount of be g d cha ed per cyc at po t shou be close to the full internal volume of the pump (1.15 liters). If air and wa r begin to burst out of the discharge line, it means that the pump discharge time is set too long. Decrease the discharge time and repeat the initial procedure with using smaller time increment (i.e. 1 4 sec. s. 1 sec The Discharge time of the pump should now be optimized.

3. Now beg to dec ase about 1 second pump cyc 3 imes be een each adjustment. Repeat this operation until ai can be de ec d coming through the d charge line in the form of air bubbles. The amount of liquid being discharged per cycle at this point should still be close to the full internal volume of the pump (1.15 liters). If air and water begin to burst out of the discharge line hard it means that your refill time is too short. Increase the refill time and repeat the initial procedures this time with smaller time increments (i.e. 1/2 sec. s. 1 sec and shou now be .

NOTE The best of low rates are obtained when the pump submergence is 10' or more. Partial submergence of the well development pump will severely lower pumps efficiency and flow rates.

Alpha Pump odel	Internal olume allons	Internal olume iters
P	0.17	0.65
P	0.17	0.65
P	0.09	0.35
P	0.09	0.35
P	0.01	.045
P P	0.05	0.18
P P	.528	2.00
P	0.05	0.18
P P	0.92	3.50
S Slider Pump	1.30	4.92

E E MATE E E CONTRO ER

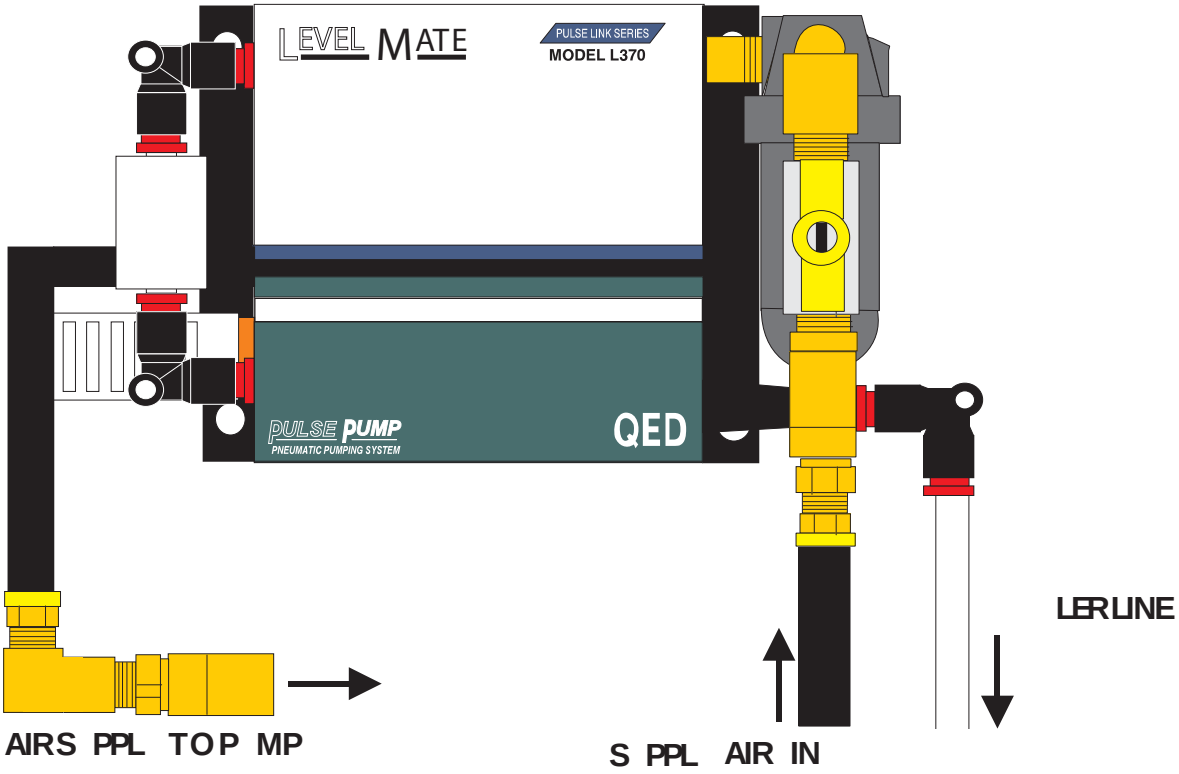

CONNECTION

[illegible]

[illegible]

[illegible]

[illegible]

[illegible]

NOTE [illegible]

OPERATION

[illegible]

E E MATE MODE E E CONTRO ER

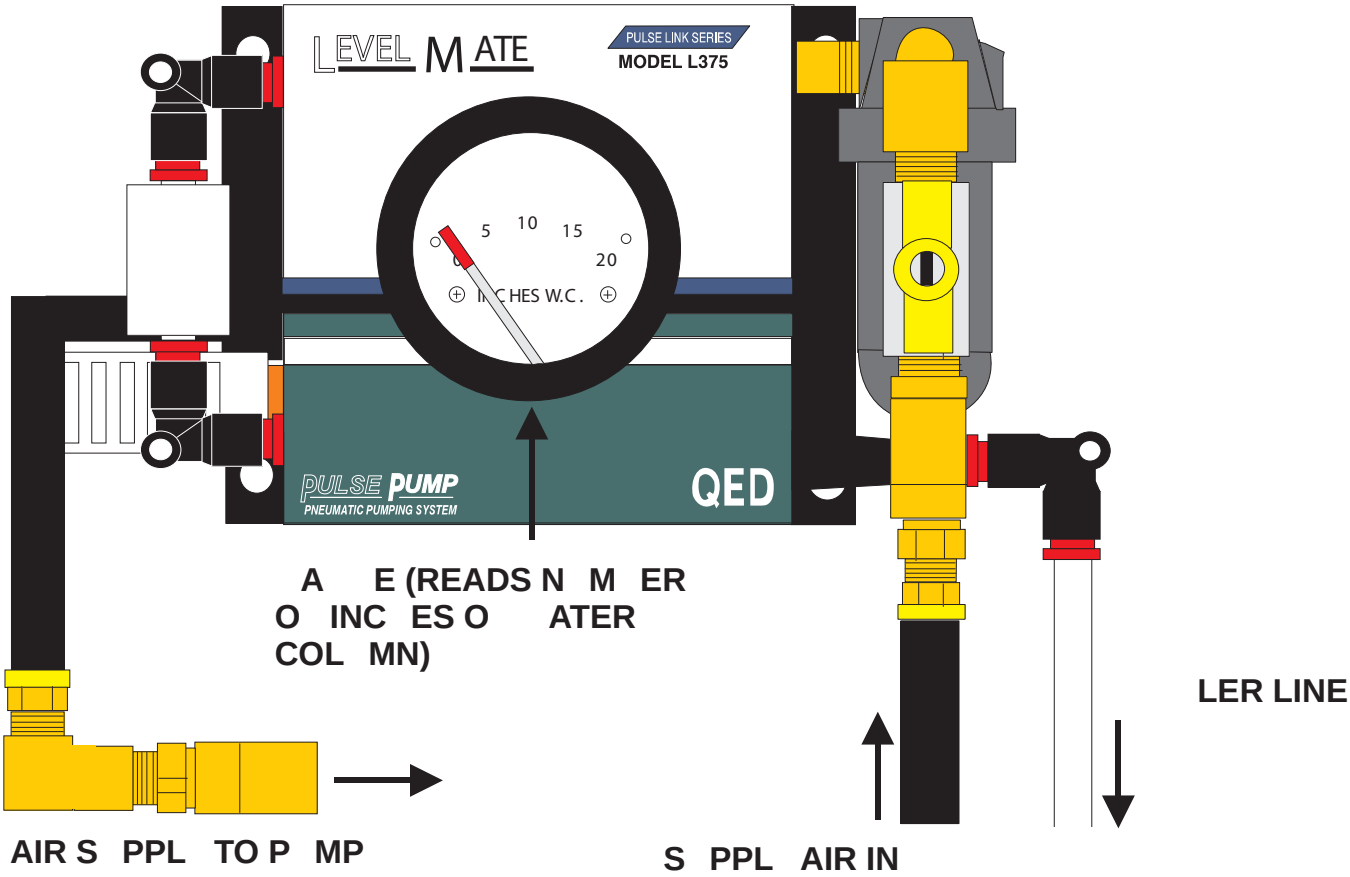

Connection

[illegible]

[illegible]

[illegible]

[illegible]

[illegible]

NOTE [illegible]

Operation

[illegible]

[illegible]

WE MASTER MODE REMOTE E E CONTRO ER

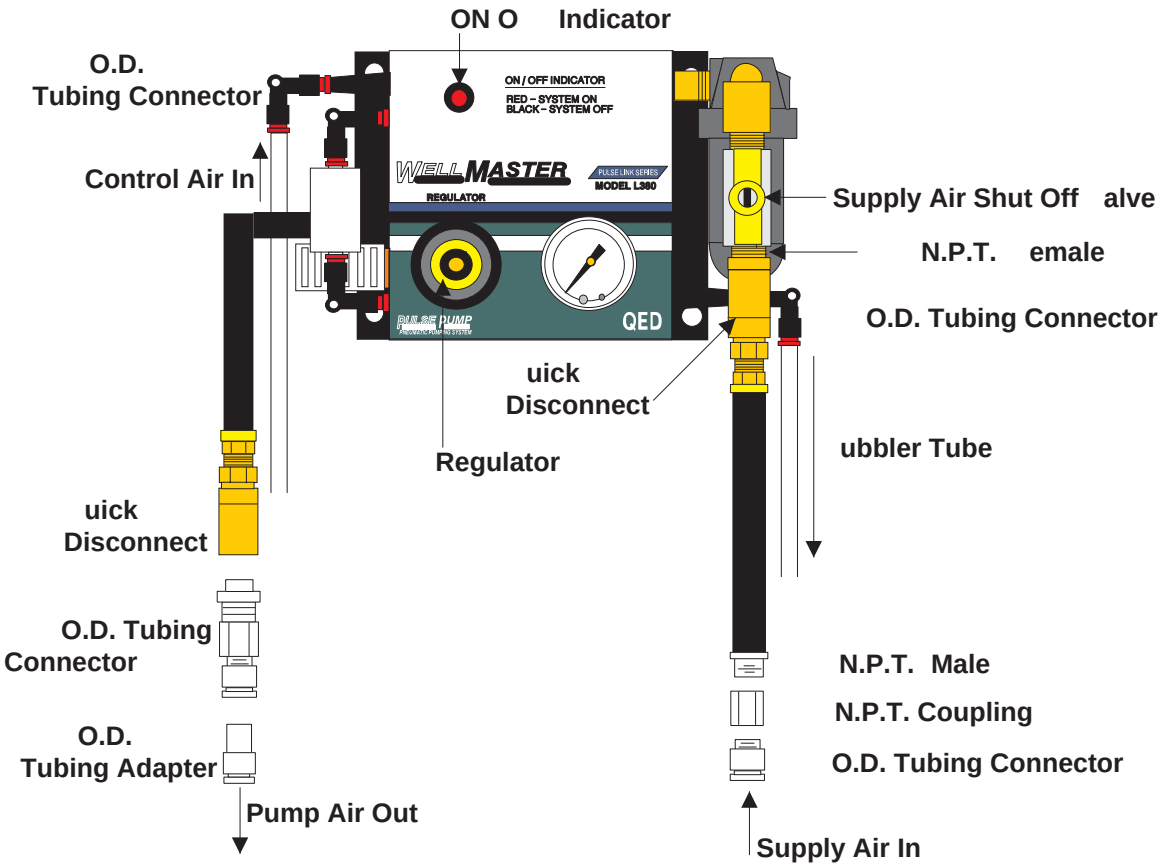

Connection

[illegible]

[illegible]

[illegible]

[illegible]

[illegible]

[illegible]

[illegible]

Operation

1. Turn "**S PPL AIRS TO AL E**" to the "**ON**" position. (Make sure the rest of your system is fully connected before this, as the pump/controller may start discharging.)

2. Turn the **L3 0** "**RE LATOR**" clockwise for maximum ow. (If a particular well has a low recovery rate or you desire a lower pumping rate, decrease air pressure by turning the "**RE LATOR**" counterclockwise.)3. When the **L3 0** is operating, the "**ON O INDICATOR**" will be **RED**; when the **L3 0** is o , the indicator will be **LAC** .

REMOTE WE OPERATOR

Connection

[illegible]

[illegible]

[illegible]

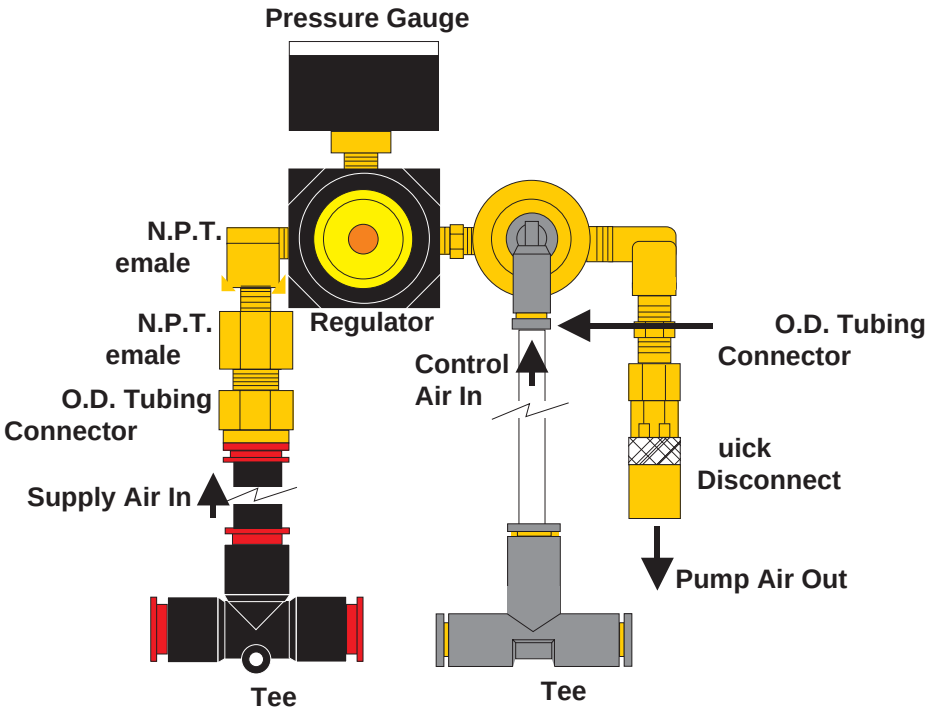

Operation

[illegible]

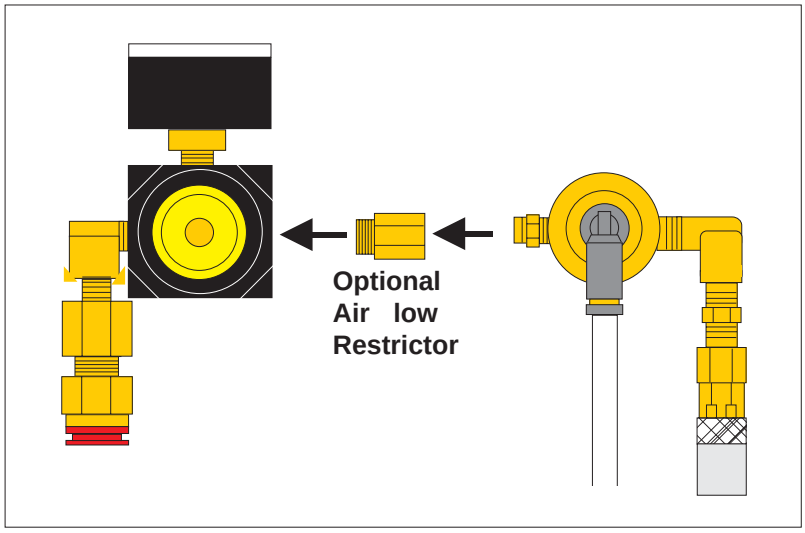

NOTE [illegible]

Connection

[illegible]

[illegible]

[illegible]

[illegible]

Operation

[illegible]

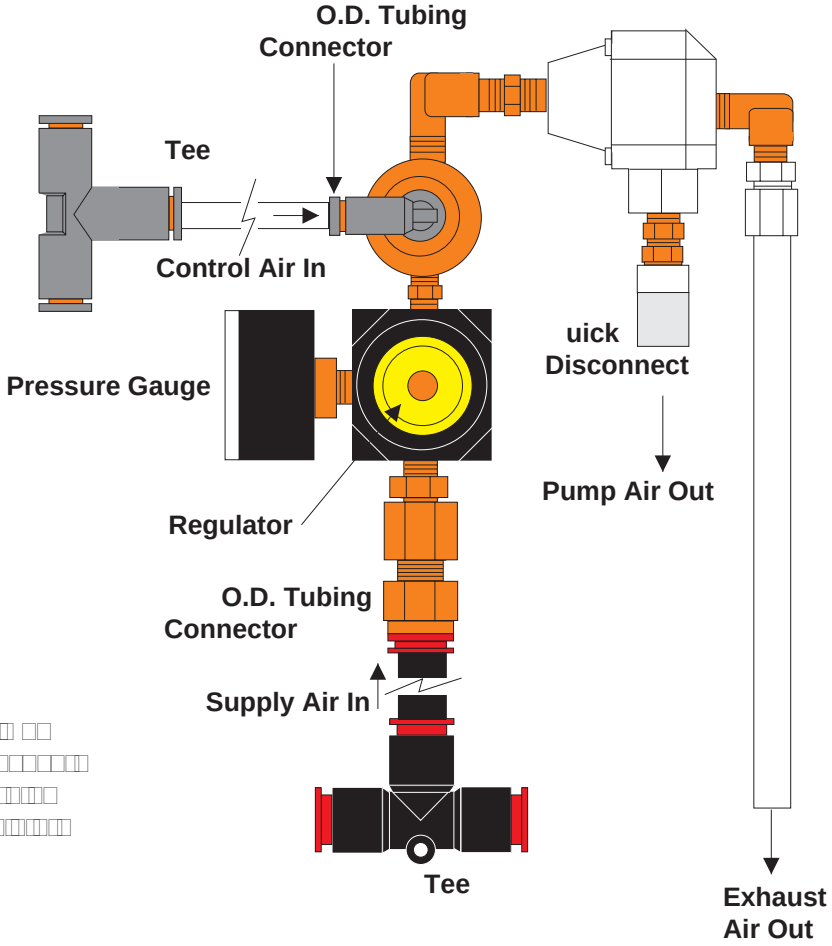

MODE WEAT ER TIG T MODU E ENC OSURE

a e e a a a 4" g e.

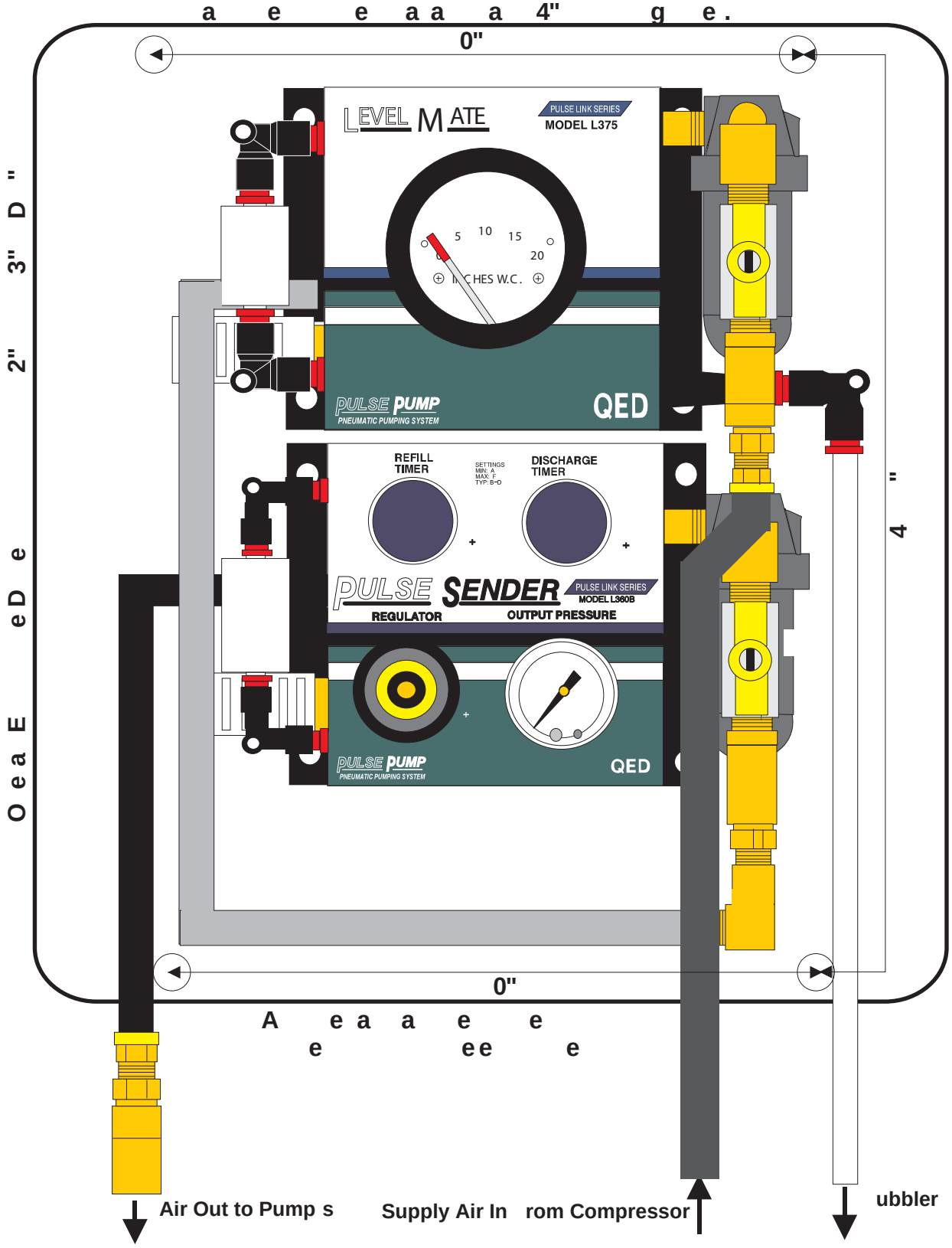

A e a a e e
e ee e

[illegible]

[illegible]

[illegible]

PUMP CONNECTORS

Stainless Steel Compression Type ittings

[illegible] ***NOTE:*** [illegible]

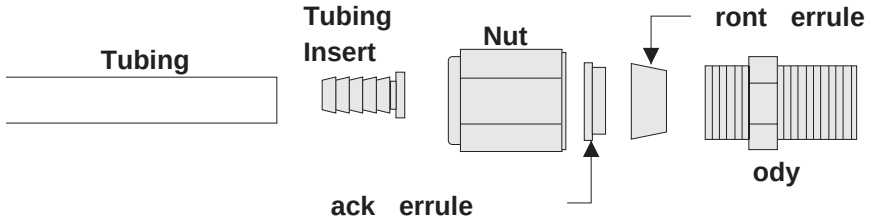

Installation

[illegible]

arb And Clamp Type ittings

[illegible]

Installation

[illegible]

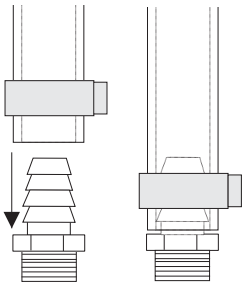

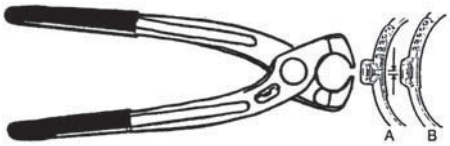

[illegible]

Polypropylene Compression Type ittings

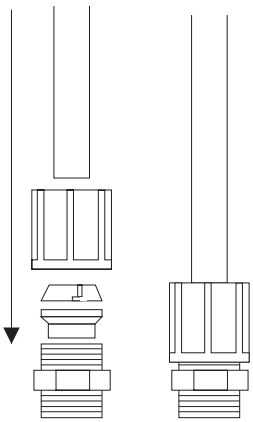

Installation

[illegible]

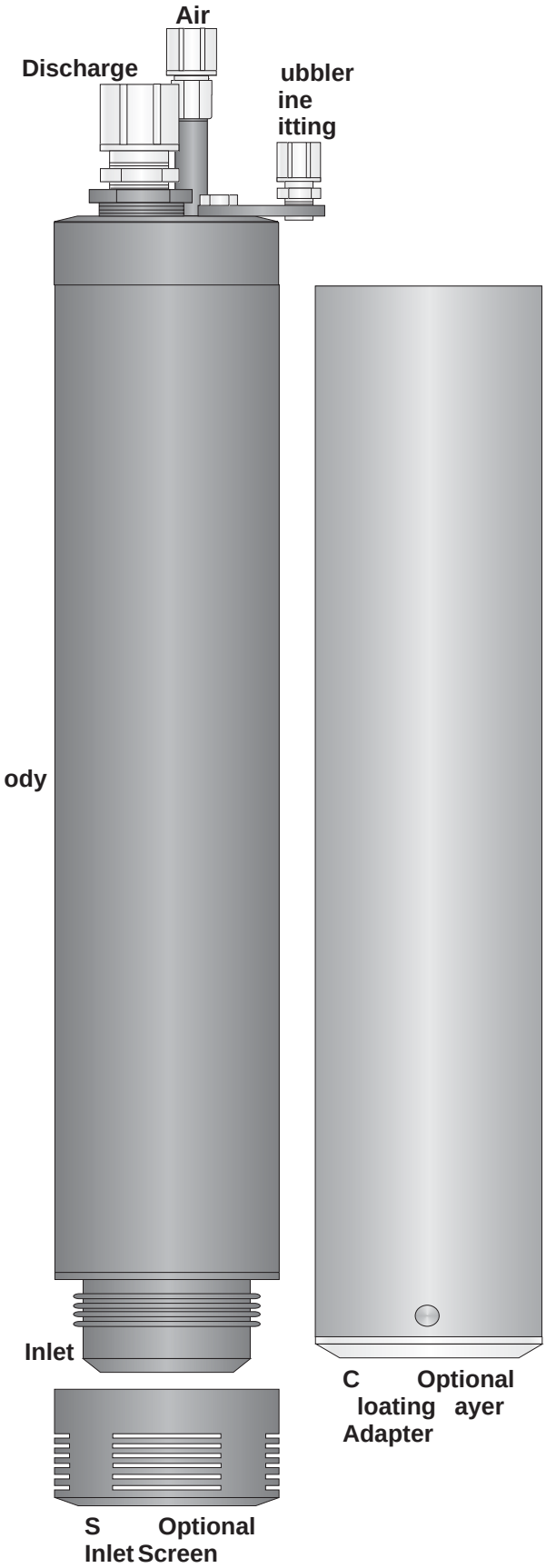

Pump Type

Materials

Dimensions

Pump O.D.

ength

ength w Screen

Weight

ittings

Pump olume

ITERS	MI I ITERS	GA ONS	OUNCES
.		.	.

Maximum ift

PUMP OW RATES AT

PUMP OW RATES AT P.S.I. . ar

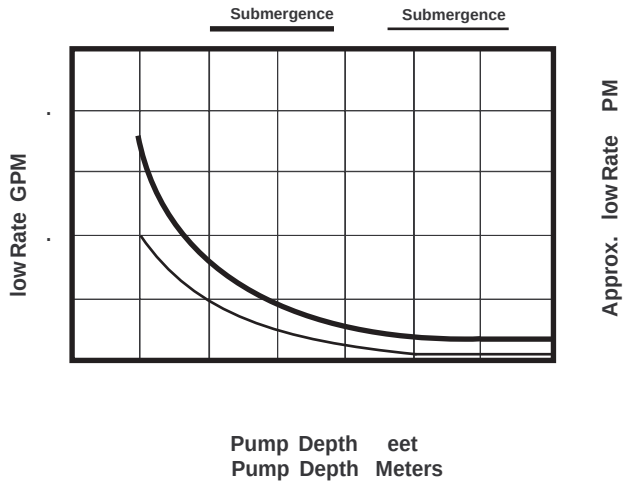

ACCESSORIES

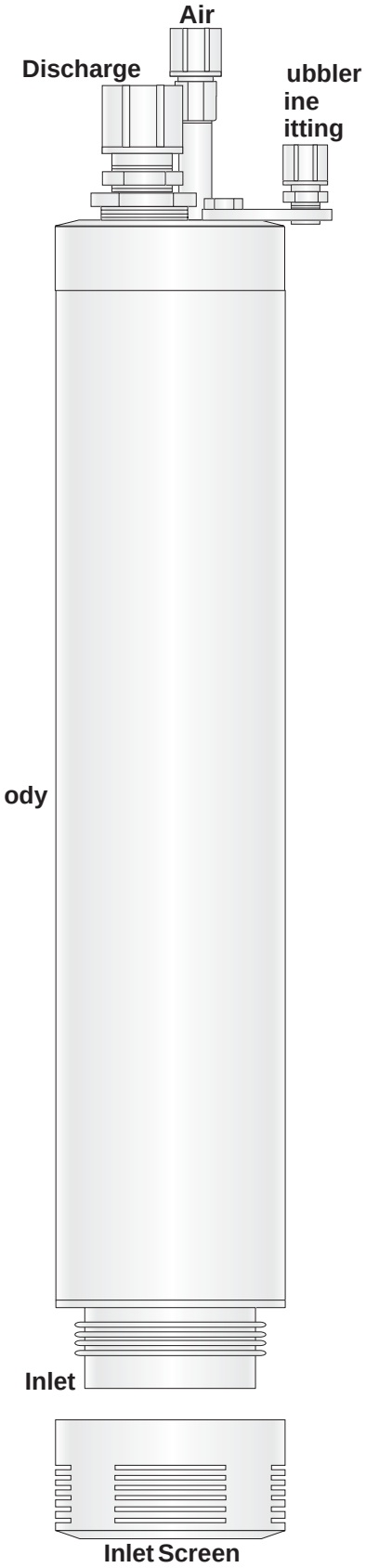

Pump Type

[illegible]

Materials

[illegible]

Dimensions

Pump O.D. [illegible]

ength [illegible]

ength w Screen [illegible]

Weight [illegible]

ittings

[illegible]

Pump olume

ITERS	MI I ITERS	GA ONS	OUNCES
.		.	.

Maximum ift

[illegible]

PUMP OW RATES AT

PUMP OW RATES AT P.S.I. . ar

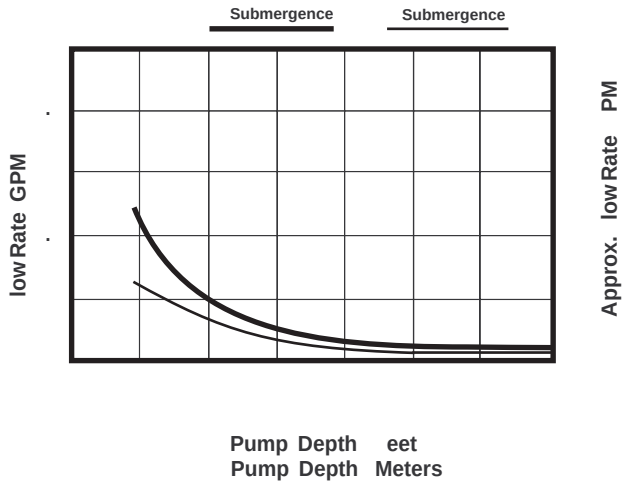

ACCESSORIES

[illegible]

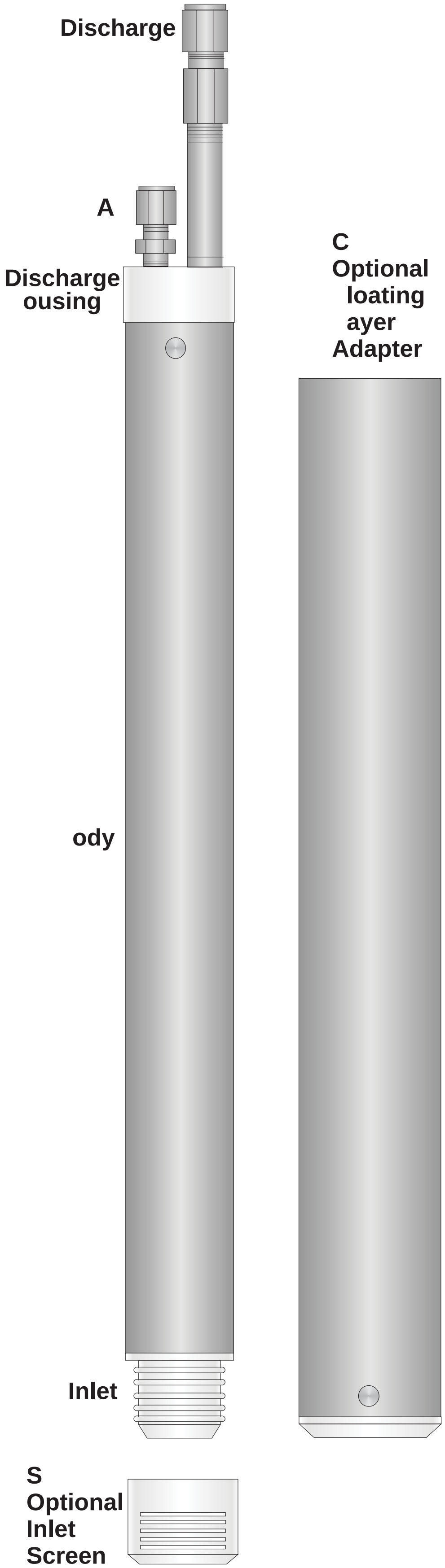

Pump Type
[illegible]

Materials
[illegible]

Dimensions
[illegible]

ittings
[illegible]

Pump olu e

[illegible]	[illegible]	[illegible]	[illegible]
[illegible]	[illegible]	[illegible]	[illegible]

[illegible]

PUMP OW RATES AT
[illegible]

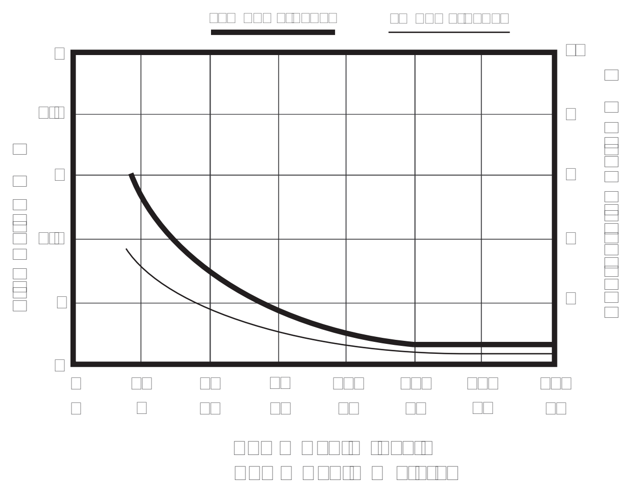

ACCESSORIES
[illegible]

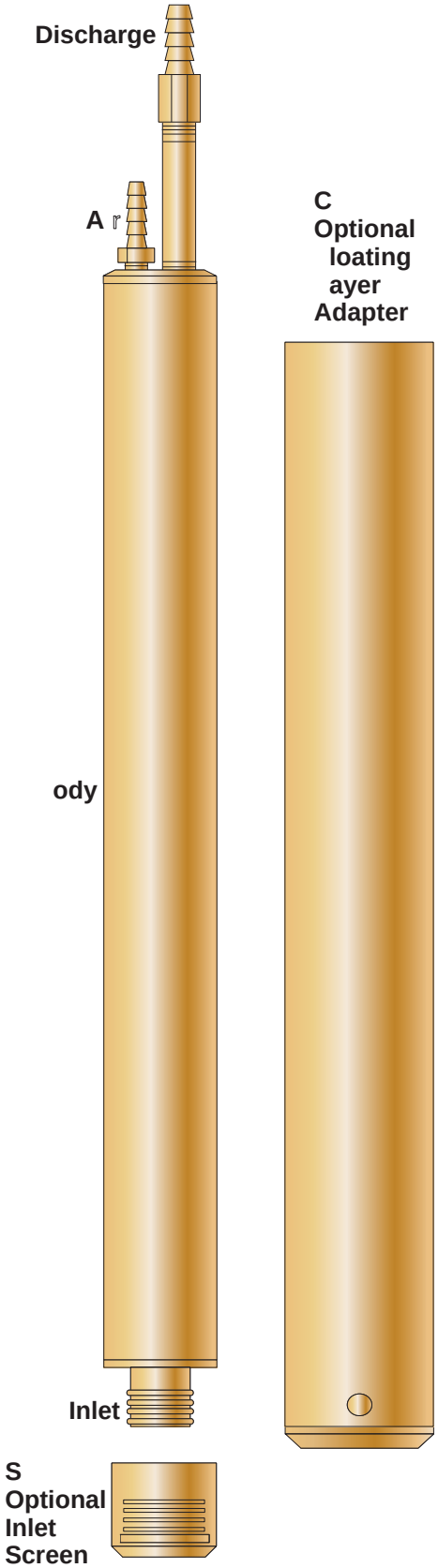

Pump Type

[illegible]

Materials

[illegible]

Dimensions

[illegible]

ittings

[illegible]

Pump olu e

[illegible]	[illegible]	[illegible]	[illegible]
▪		▪	▪

[illegible]

PUMP OW RATES AT

[illegible]

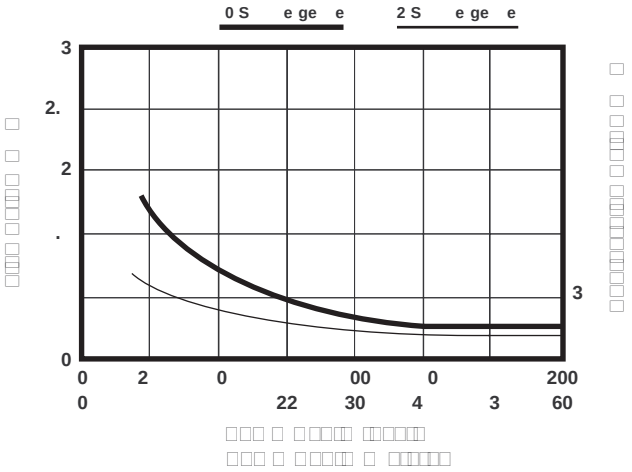

ACCESSORIES

[illegible]

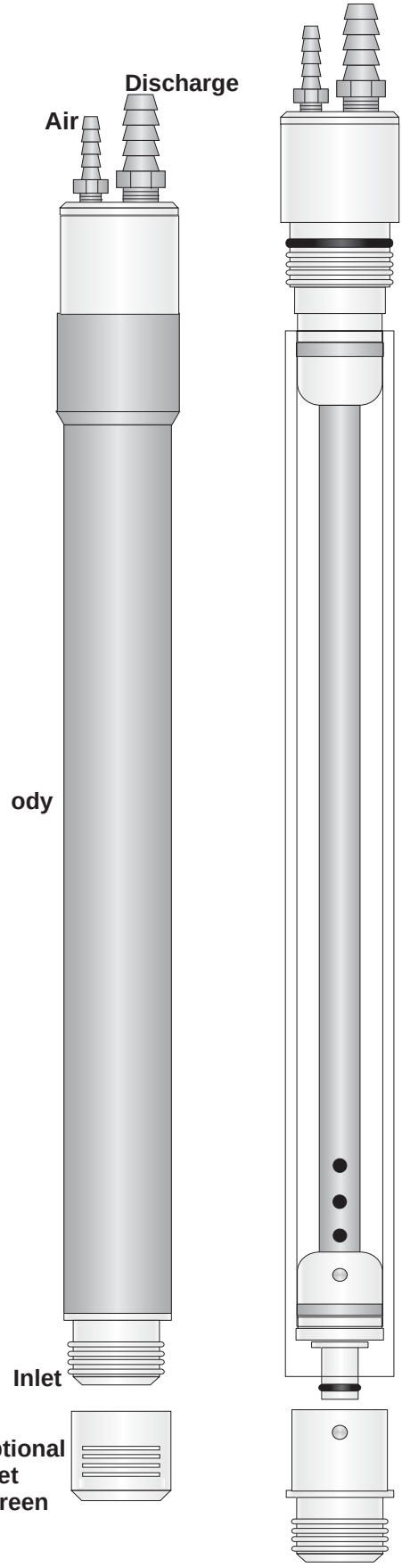

Pump Type

[illegible]

Materials

[illegible]

Dimensions

Pump O.D. [illegible]

ength [illegible]

ength w Screen [illegible]

Weight [illegible]

ittings

[illegible]

Pump olume

ITERS	MI I ITERS	GA ONS	OUNCES
.		.	.

Maximum ift [illegible]

PUMP OW RATES AT

PUMP OW RATES AT P.S.I. . ar

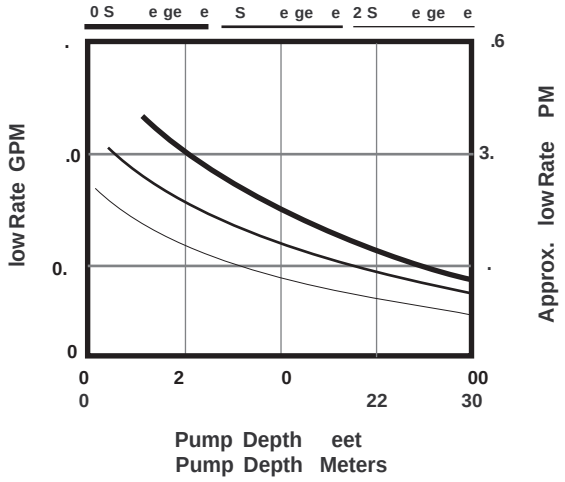

ACCESSORIES

[illegible]

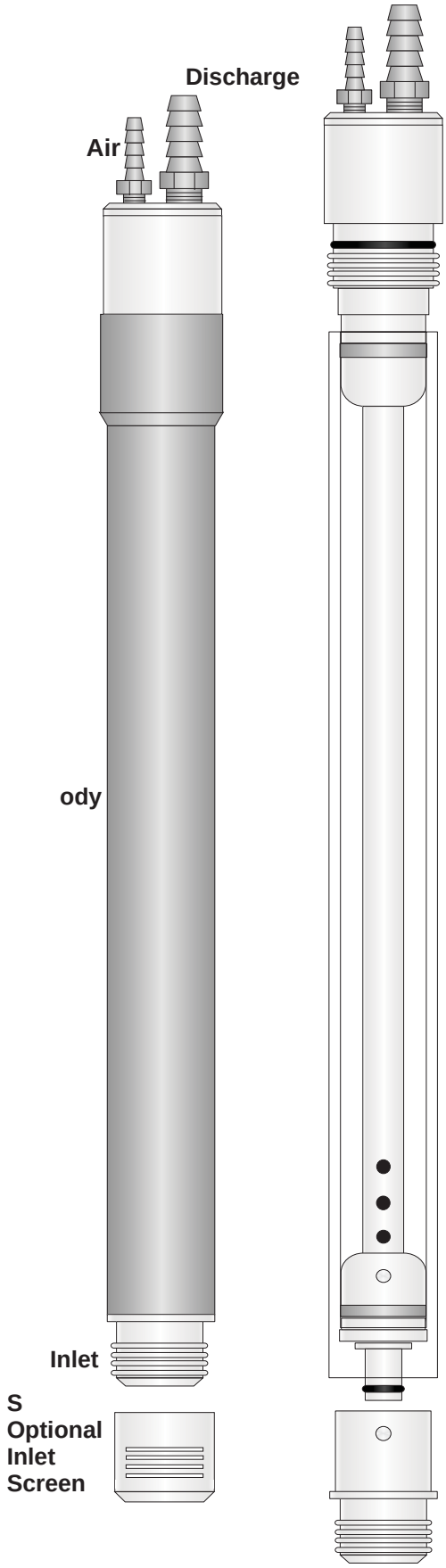

Pump Type

[illegible]

Materials

[illegible]

Dimensions

Pump O.D. [illegible]

ength [illegible]

ength w Screen [illegible]

Weight [illegible]

ittings

[illegible]

Pump olume

ITERS	MI I ITERS	GA ONS	OUNCES
.		.	.

Maximum ift

[illegible]

PUMP OW RATES AT

PUMP OW RATES AT P.S.I. . ar

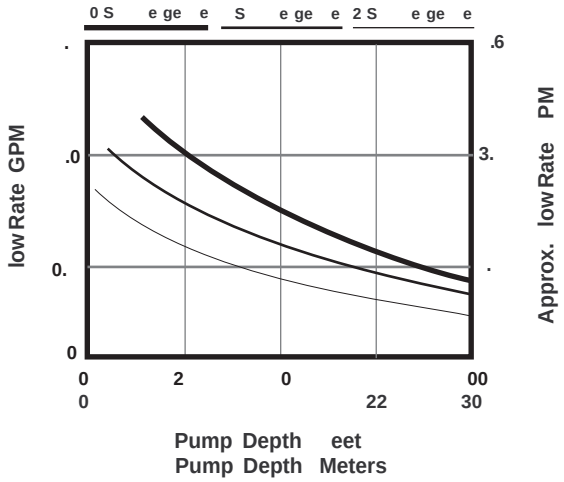

ACCESSORIES

[illegible]

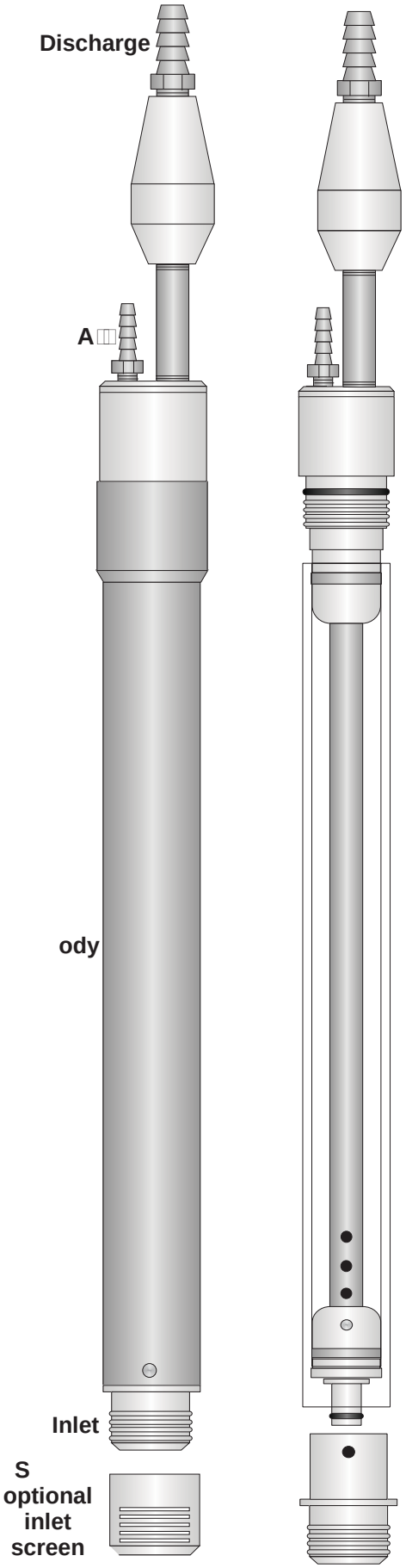

Pump Type

Materials

Dimensions

ittings

Pump olume

iters	Milliliters	Gallons	Ounces

Maximum ift

Pump low Rates At

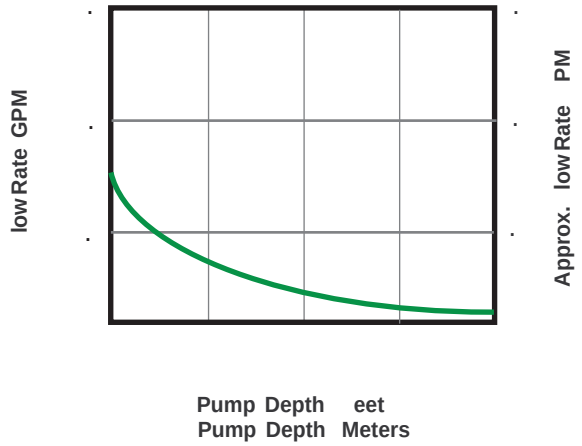

Accessories

S

C

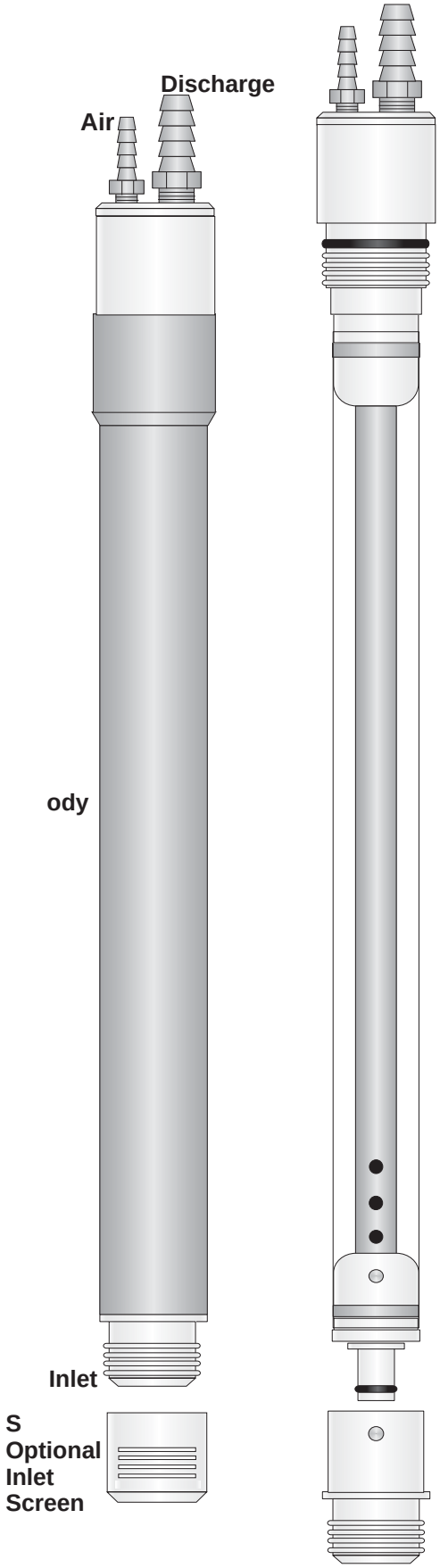

Pump Type

[illegible]

Materials

[illegible]

Dimensions

Pump O.D. [illegible]

ength [illegible]

ength w Screen [illegible]

Weight [illegible]

ittings

[illegible]

Pump olume

ITERS	MI I ITERS	GA ONS	OUNCES
		.	.

Maximum ift

[illegible]

PUMP OW RATES AT

PUMP OW RATES AT P.S.I. . ar

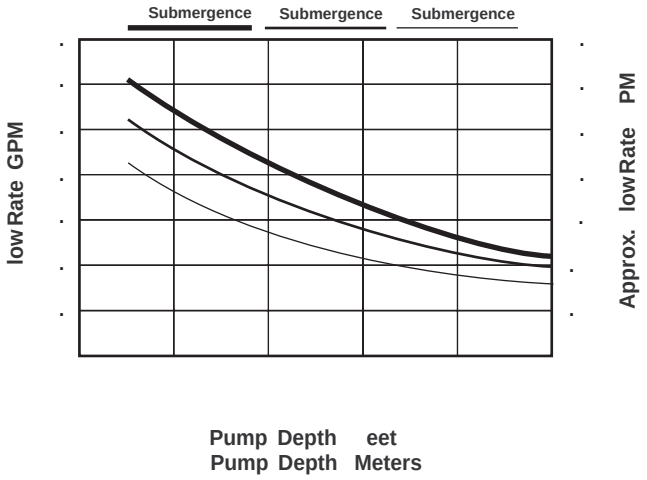

ACCESSORIES

[illegible]

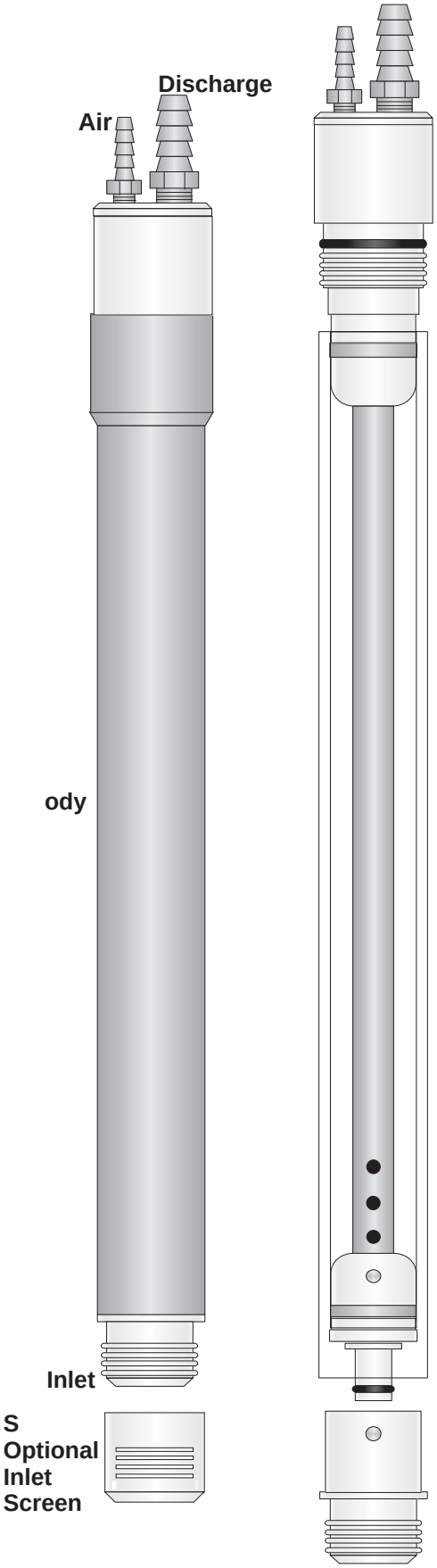

Pump Type

[illegible]

Materials

[illegible]

Dimensions

Pump O.D. [illegible]

ength [illegible]

ength w Screen [illegible]

Weight [illegible]

ittings

[illegible]

Pump olume

ITERS	MI I ITERS	GA ONS	OUNCES
		.	.

Maximum ift

[illegible]

PUMP OW RATES AT

PUMP OW RATES AT P.S.I. . ar

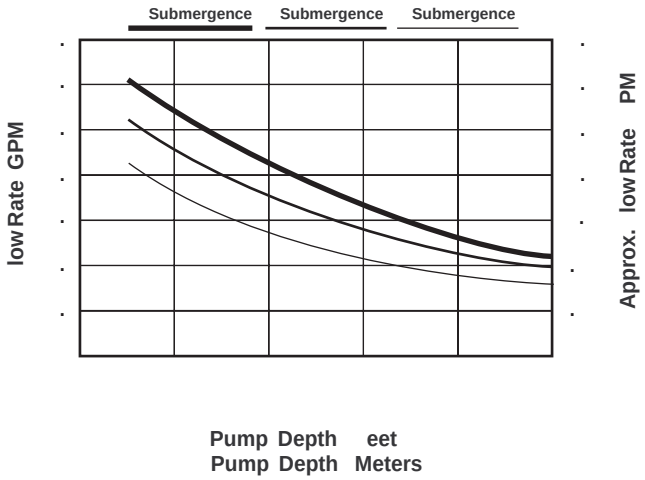

ACCESSORIES

[illegible]

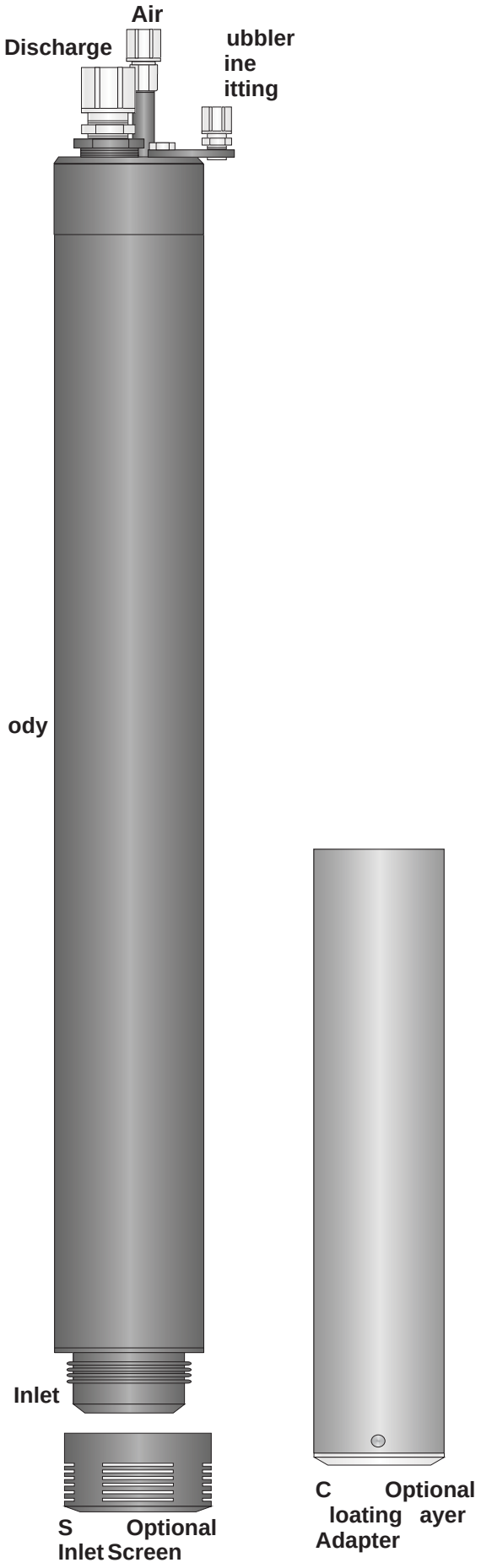

Pump Type

[illegible]

Materials

[illegible]

Dimensions

Pump O.D. [illegible]

ength [illegible]

ength w S reen [illegible]

Weight [illegible]

ittings

[illegible]

Pump olume

ITERS	MI I ITERS	GA ONS	OUNCES
.		.	.

Maximum ift

[illegible]

PUMP OW RATES AT

PUMP OW RATES AT P.S.I. . ar

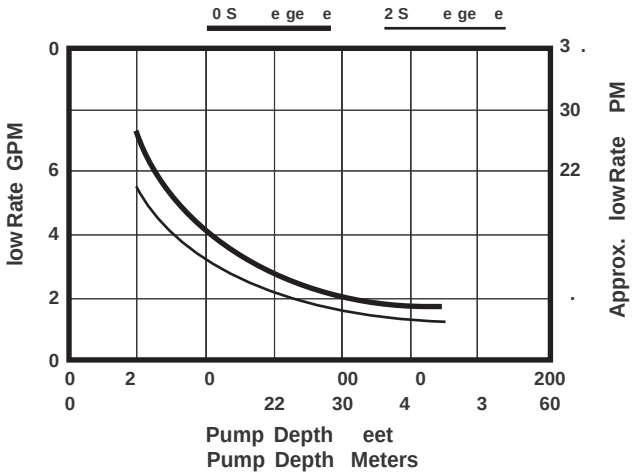

ACCESSORIES

[illegible]

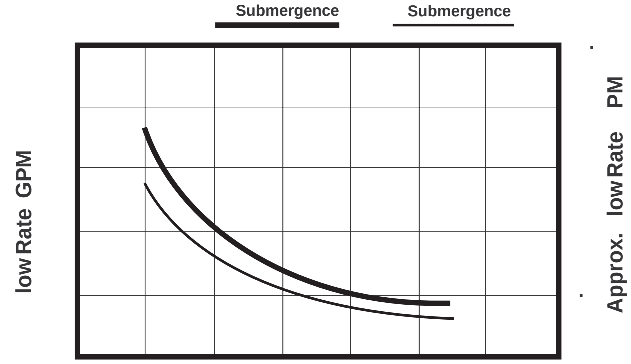

PULSE PUMP® Model P Technical Data Specifications

Air
Discharge
ubbler
ine
itting
ody
Inlet
Inlet Screen

C Optional
loating ayer
Adapter

Pump Type

Positive Air Displacement

Materials

Body - 316 tainless teel
ousings and Che k Ba ls Teflon
O-R ngs - iton

Dimensions

Pump O.D. 3. (7.6 cm)
ength 41 (104. cm)
ength w Screen 41 1 (104.7 cm)
Weight 10 bs. (4.5 kg)

ittings

tainless teel Compression Type
Air- 1/2" O.D. (12.77 mm)
Discharge - 3/4" O D. (19 mm)
Bubbler Tube - 1/4" O.D. (6.3 mm)

Pump olume

ITERS	MI I ITERS	GA ONS	OUNCES
.		.	.

Maximum ift 200 Feet 60 m)

PUMP OW RATES AT

PUMP OW RATES AT P.S.I. . ar

Submergence
Submergence
low Rate GPM
Approx. low Rate PM
Pump Depth eet
Pump Depth Meters

ACCESSORIES

/ C1001 F oat ng ayer Adapter

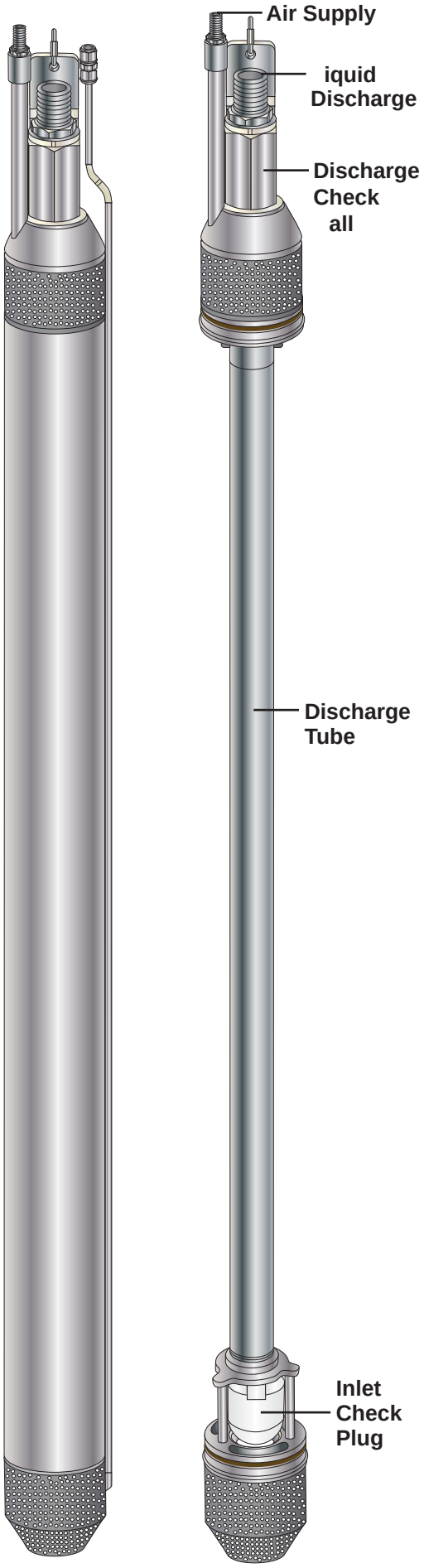

Pump Type

Dimensions

Materials

ittings

Tubing

Maximum Pump Stroke

Operating Pressure Range

Maximum ift

Maximum Drawdown on slope

Maximum low Rate at t . m Pump Depth with ft . m Submergence

Cap Si es

Pump olume

iters	Milliliters	Gallons	Ounces
.		.	.

Typical Application

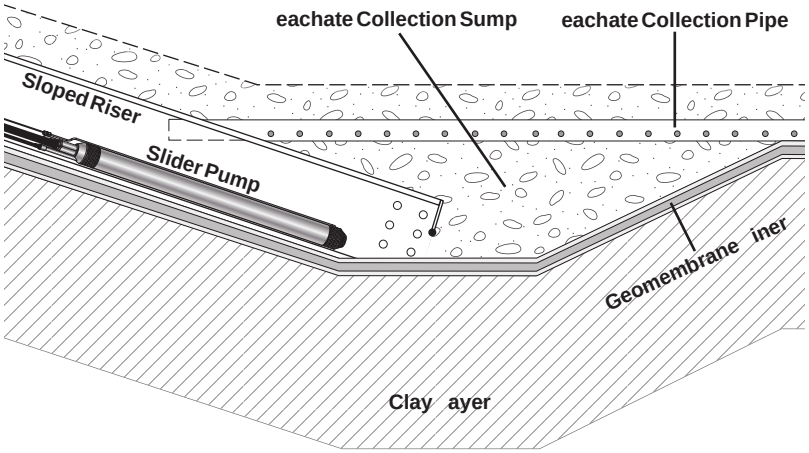

Accessories

U ER TU ES

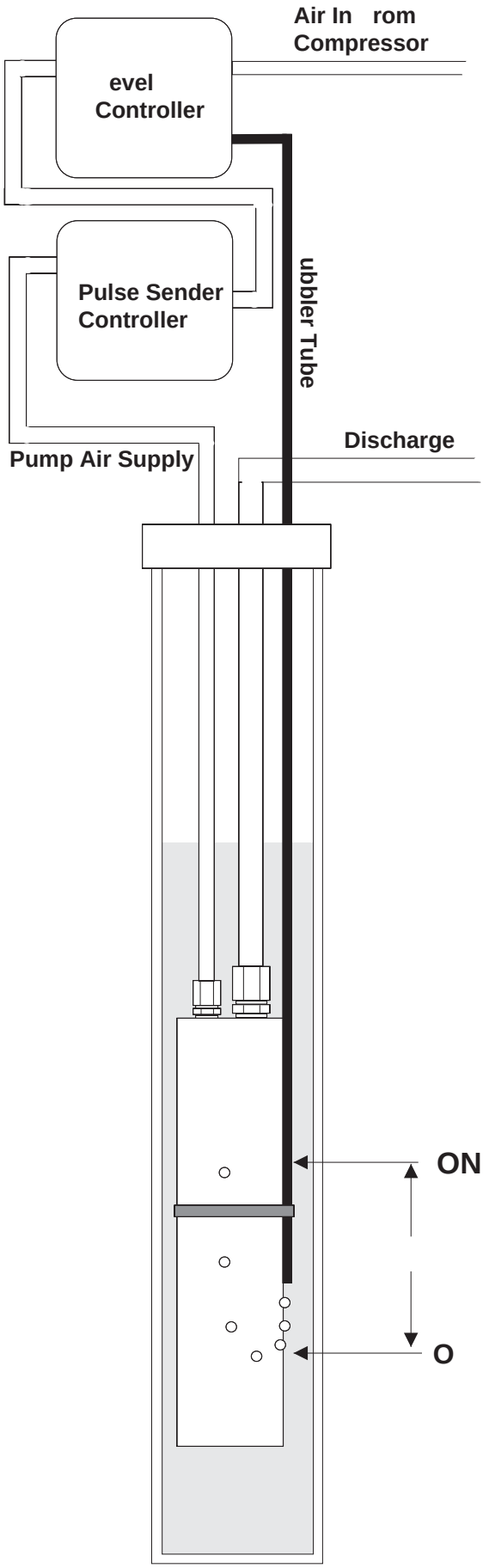
Air In rom
Compressor
evel
Controller
Pulse Sender
Controller
ubbler Tube
Discharge
Pump Air Supply
ON
O

U ER TU E E TENSIONS

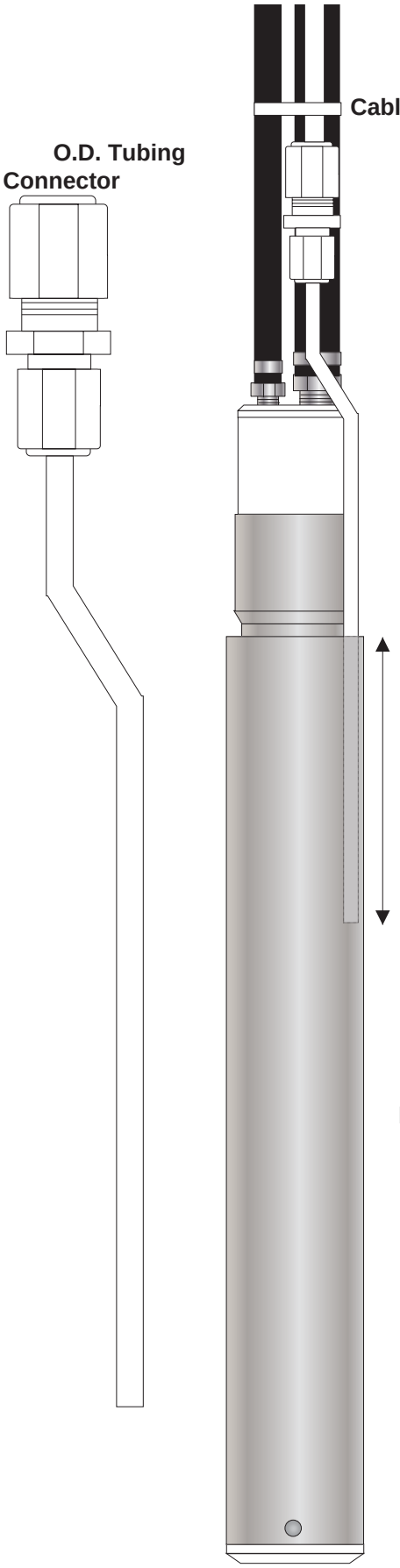

Models **Stainless Steel** **rass**

Connection

[illegible]

[illegible]

[illegible]

OATING AYER ADAPTERS

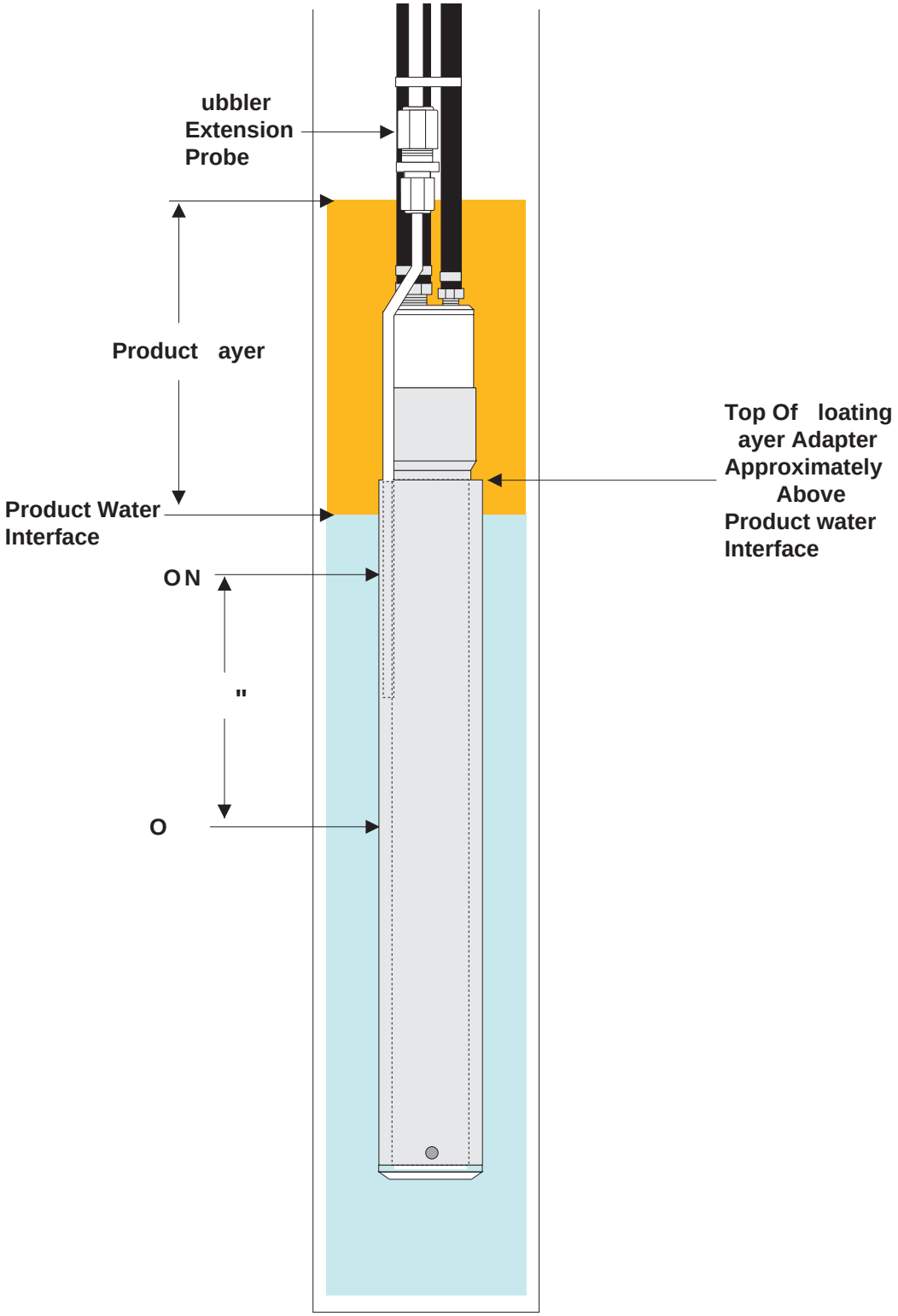

E AUST A ES

Models

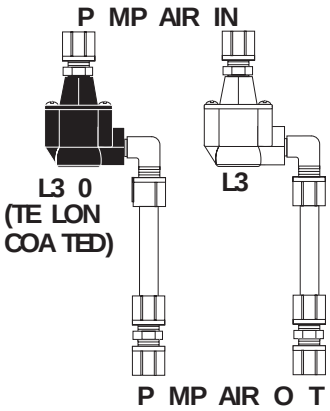

Connection

[illegible]

Model External Pump Exhaust alve

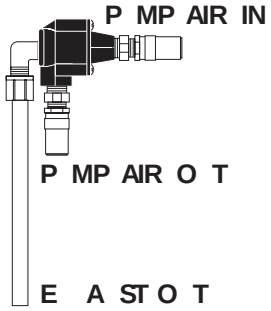

Connection

[illegible]

Models

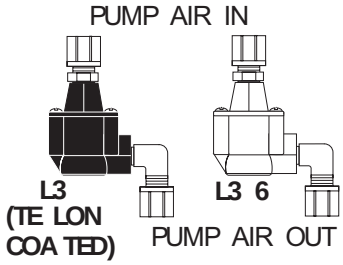

Connection

[illegible]

Model

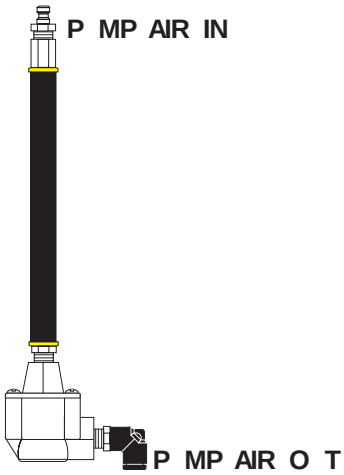

Connection

[illegible]

PULSE PUMP®

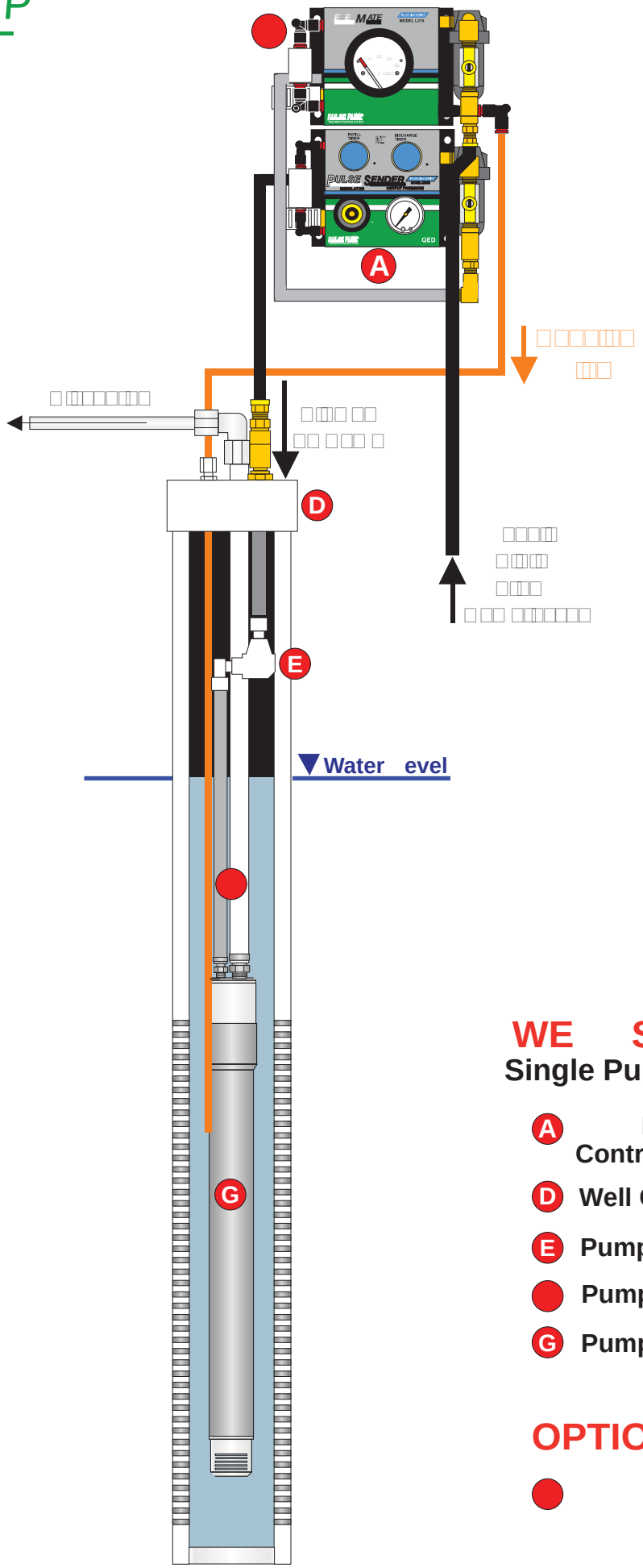

WE SYSTEM A

Single Pump Total luids

- A Pulse Sender Controller
- D Well Cap
- E Pump Exhaust alve
- Pump Tubing
- G Pump

OPTIONS

- or evel Mate

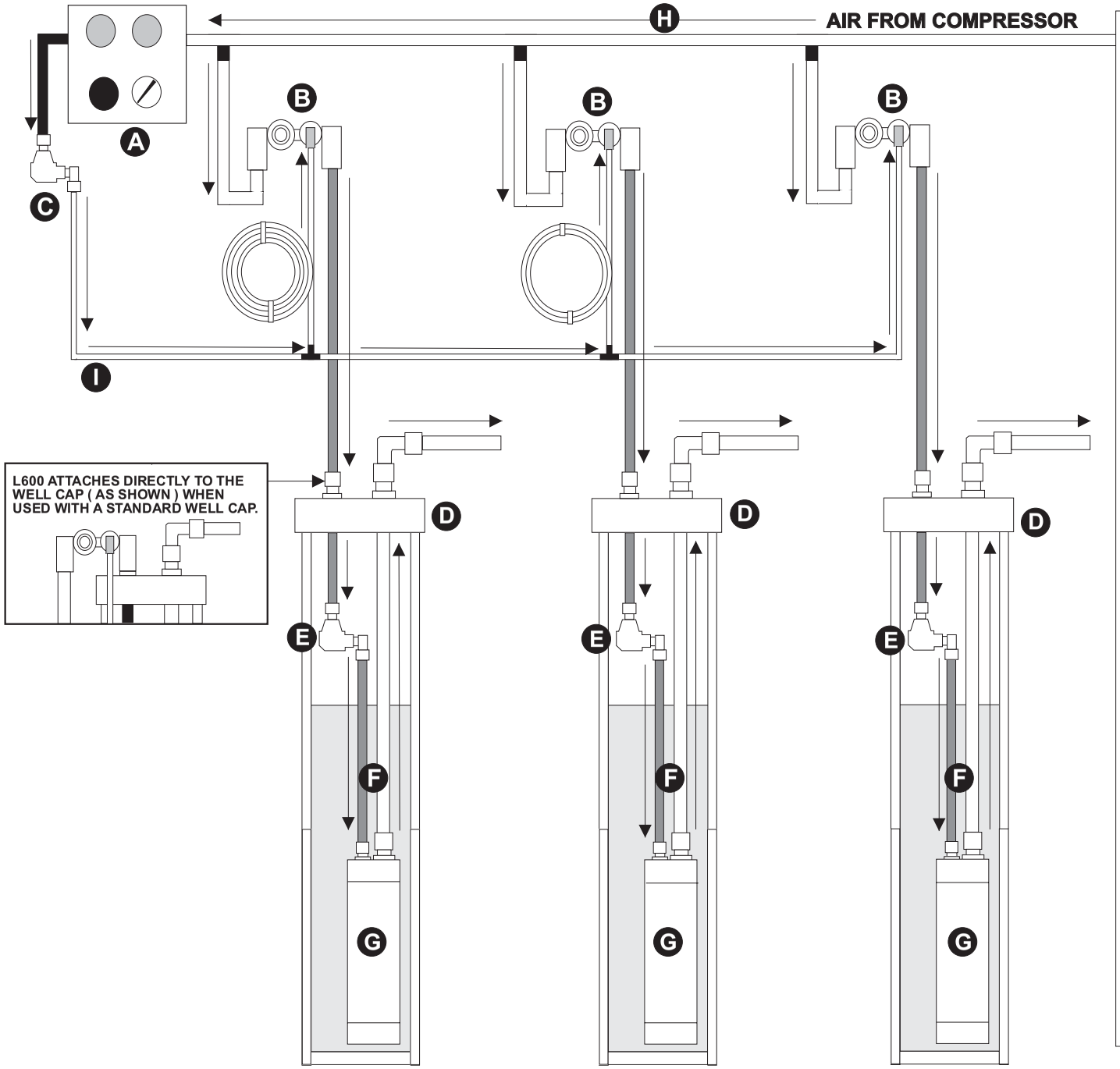

WELL SYSTEM "B"

Single Controller
Multiple Pumps
Total Fluids
Continuos Pumping

- **A** L360 Controller
- **B** L360 Remote Well Level Controller
- **C** Controller Exhaust Valve
- **D** Well Cap
- **E** Pump Exhaust Valve
- **F** Pump Tubing
- **G** Pump
- **H** 1/2" Air Supply Tubing
- **I** 1/4" Logic Tubing

OPTIONS:

Pump Inlet Screen
Floating Layer Adapter
Module Enclosure
Cycle Counter
Filter Package

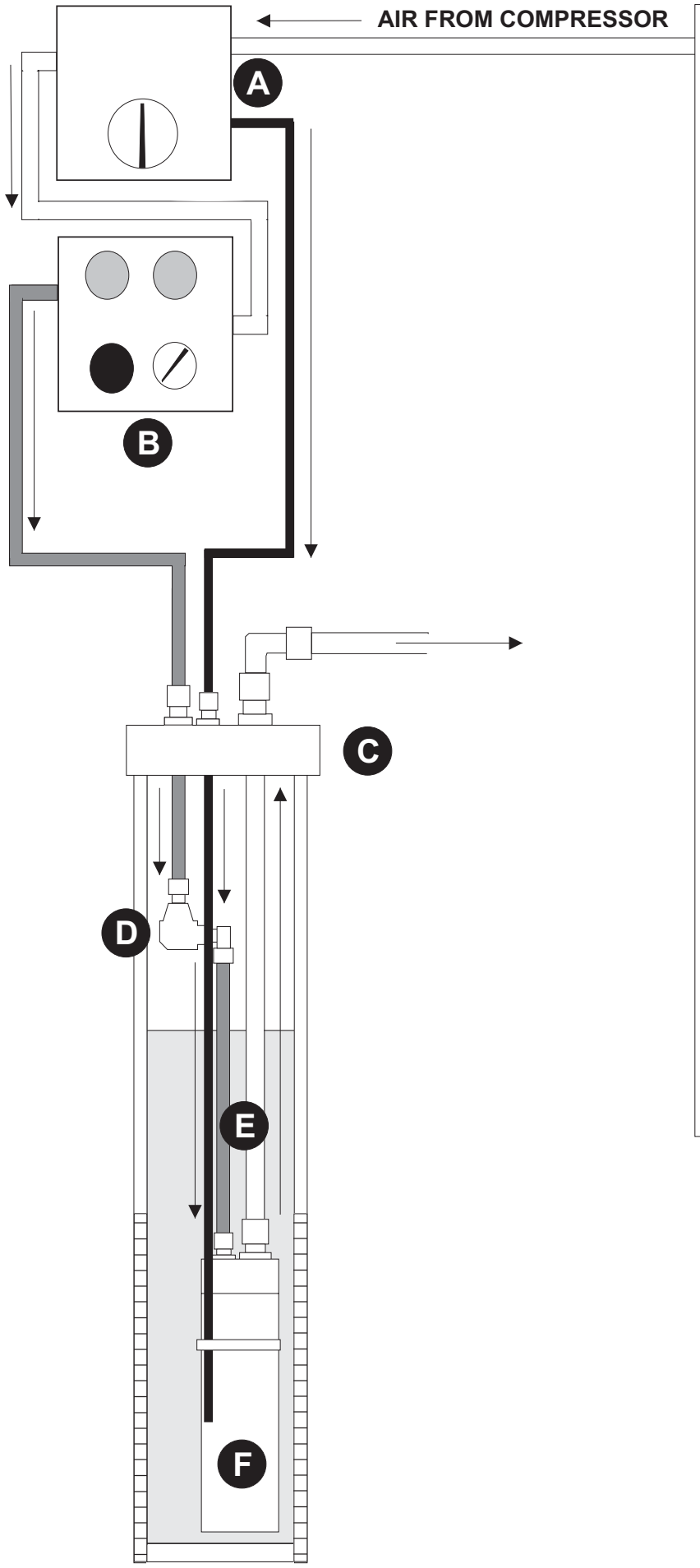

WELL SYSTEM "C"

Single Pump
Total Fluids
Level controlled

- **A** L370-L375 Level Controller
- **B** L360 Pulse Sender Controller
- **C** Well Cap
- **D** Pump Exhaust Valve
- **E** Pump Tubing
- **F** Pump

OPTIONS:

Pump Inlet Screen
Floating Layer Adapter

Module Enclosure

Cycle Counter

Filter Package

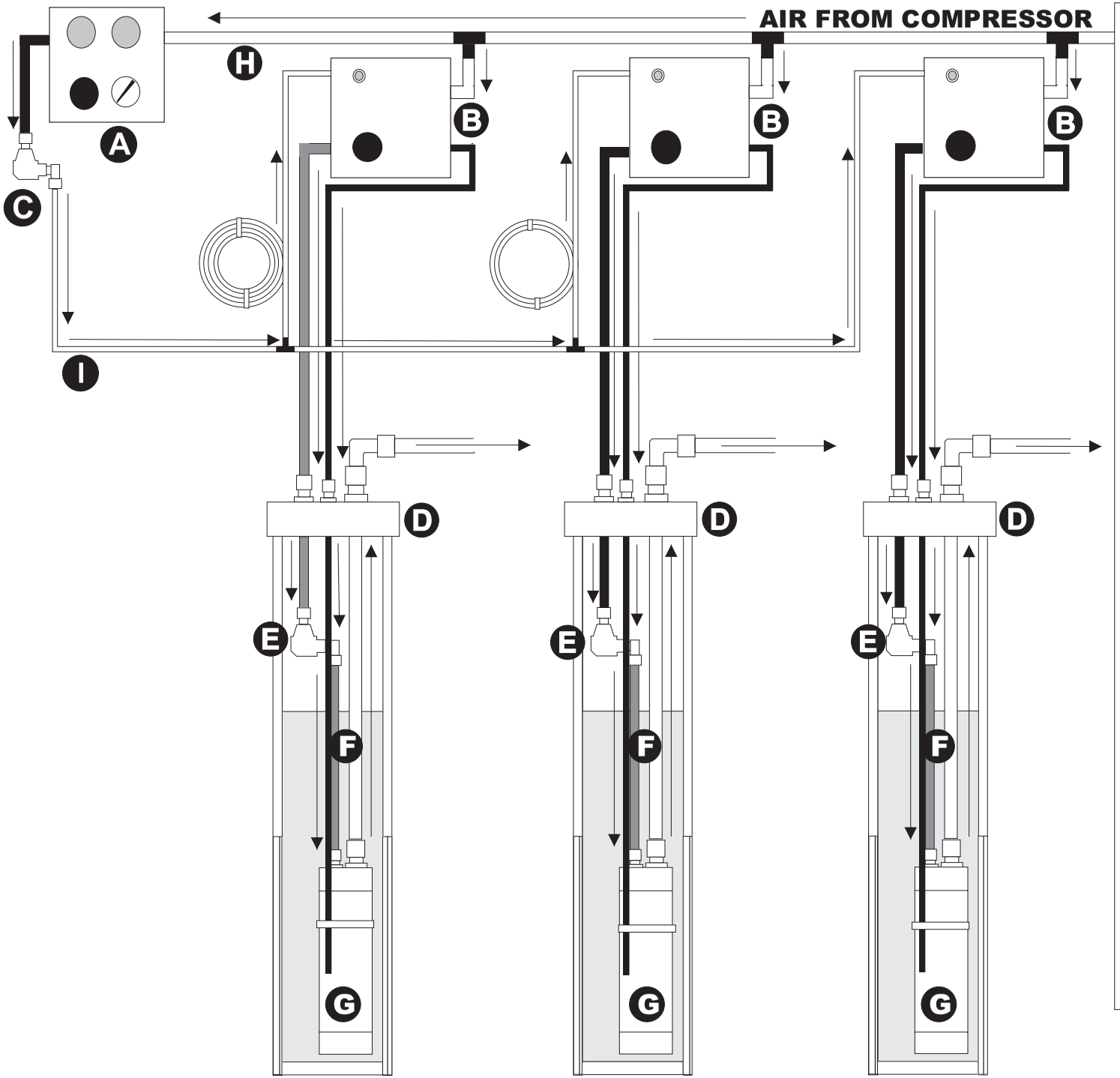

WELL SYSTEM "D"

Single Controller
Multiple Pumps
Total Fluids
Level controlled

- **A** L360 Controller
- **B** L380 Remote Well Level Controller
- **C** Controller Exhaust Valve
- **D** Well Cap
- **E** Pump Exhaust Valve
- **F** Pump Tubing
- **G** Pump
- **H** 1/2" Air Supply Tubing
- **I** 1/4" Logic Tubing

OPTIONS:

Pump Inlet Screen
Floating Layer Adapter

Module Enclosure

Cycle Counter

Filter Package

WARRANTY IN ORMATION

[illegible]

[illegible]

[illegible]

WARRANTY IN ORMATION

to select materials to fit the Buyer's

conform to published QED specifications

hereby is repaired or modified by persons

or serial number or other sufficient description

ED Environmental Systems Inc.
ackson Rd.
Ann Arbor, MI

Telephone

Canada
ax

QED
Environmental Systems

Model C100M Pump Controller

Installation & Operation Manual

P/N 95230 Rev 4-25-13

P.O. Box 3726 Ann Arbor, MI 48106-3726 USA
1-800-624-2026 FAX (734) 995-1170
info@qedenv.com www.qedenv.com

Table of Contents

Safety Issues ..... Page 2

C100 Terminology ..... Page 3

Controller Settings ..... Page 4

Function Keys ..... Page 5

C100 Battery ..... Page 6

Tank-Full Shut Off and On/Off Level Control ..... Page 7

System Installation Overview ..... Pages 8-12

Controller Installation ..... Page 13

Single Pump Installation ..... Page 14

Troubleshooting ..... Page 15

On/Off Level Control Kit Model CTRLSW ..... Pages 1□-1□

External Solar Panel, Part# 38110 ..... Page 1□

Specifications ..... Pages 1□-□□

Warranty ..... Pages 2□-2□

General Warnings

Some QED pumping devices are designed to pump floating hydrocarbonsfrom groundwater recovery wells. The recovered product is frequently flammable and vapors may be explosive if exposed to heat, flame, or sparks. ***When any of the pneumatic pumping systems are used care should be taken to ensure that any venting of pump drive air, potentially mixed with the explosive vapors within the pump, is located in a well ventilated area away from sources of open flame, sparks and extreme heat. As in all situations failure to take adequate precautions may result in catastrophic injury or death.*** Protection for eyes, hands, and person should be worn when working with the pumps to avoid injury from contact with hazardous fluids. Tubing used with these systems should be routed in a manner that prevents damage due to chaffing, cutting, or crushing.

Do not apply compressed drive air to the system unless all safety precautions are followed.

C100M Controller Warnings

The C100M is a solar powered timer and valve that has an onboard battery pack for operation during the night and on days with marginal sunlight. The C100M is CSA approved instrinsically safe for Class 1, Group C and D use. The general warning for venting of pump drive air needs to be followed with the C100M as it will vent potentially explosive pump drive air during operation (venting at, or near the C100M is not a problem). The C100M is also NEMA4 rated for use in environments or in situations where the device might be exposed to rain or water spray. The C100M includes an optional AC adapterto allow use inside where there is insufficient light for charging. ***When the controller is used with the AC adapter, the unit is not instrinsically safe***. Use of the AC charger will require that the controller be mounted ***at least*** 3 feet above the ground and ***at least*** 25 feet horizontally from sources of combustible vapors and liquids (i.e. exhaust valve).

If the rechargeable batteries need to be replaced, they should be replaced only with batteries supplied by QED. ***If replacement batteries other than QED batteries are used in the C100M, the "intrinsically safe" certification will be voided.***

If the C100M should shut down due to a low power situation, (low battery voltage, low sunlight) once sufficient power is available (either by plugging the AC adapter, increase in sunlight, new batteries or other power supply) the C100M will resume cycling automatically. ***The default setting for the controller is to be enabled once adequate power is supplied***. When servicing any equipment controlled by the C100M, at a minimum, disconnect the air source from the controller to prevent unintentional cycling.

C100M Terminology

Refill Time: This is the time that the pump is venting and fluid is entering the pump. No pressure is being applied to the pump at this time.

Discharge Time: This is the time that pressure is being applied to the pump to discharge the fluid from the pump.

On Time: This is the time that the system is on: the system is "AWAKE" and is cycling according to the settings of the Refill and Discharge times.

Off Time: This is the time that the system is off: the system is "SLEEPING" and not cycling.

System Enabled: This turns the system on and enables the timing sequences to start.

System Disabled: This turns the system off and disengages the timing sequences.

Default Times

Default times are maintained even when the unit is low power disabled. The C100 unit comes with the following default times:

Refill: 5 minutes

Discharge: 30 seconds

OnTime: 4 hours

Off Time: 1 second

Controller settings

The C100M has three basic controls available that affect pump operation:

Refill time setting:

The refill time settings determines how long the pump will fill. This time needs to be longer when there is less pump submergence (fluid level above the pump). The refill time is settable from 1 second to 99 hours, 59 minutes and 59 seconds.

Discharge time setting:

The discharge time setting determines how long the pump will discharge. This time needs to be longer when the pump is deeper, when the pump is pumping against a higher back-pressure (a pressure header or pumping uphill), and when the fluid has a high viscosity and flows slowly. The discharge time is settable from 1 second to 99 hours, 59 minutes, and 59 seconds.

Pump supply pressure setting:

The filter-regulator attached to the controller is used to raise or lower the air pressure applied to the pump during a discharge cycle. For most applications this is set at the fully clock-wise position to deliver full compressor supply pressure to the pump. If the pump discharge is too high for your particular application, this pressure may be decreased to slow the flow from the pump during a discharge cycle. However, if the pressure is decreased it often becomes necessary to increase the discharge time slightly to offset the decrease in flow and to help maintain full pump discharge.

The C100M Controller features an additional control option to set an awake or sleep mode. This option can be used to schedule the system operation over a one or more day period. For example, the controller can be set to cycle for one hour and "sleep" or stop cycling for 6 hours, which would then repeat. This feature is useful in cases when there is a slow recharge rate in the well.

Function Keys

The **"TIME"** button displays and allows the setting of the following times:

First push: This displays and allows the setting of the Refill time.

Second push: This displays and allows the setting of the Discharge time.

Third push: This displays and allows the setting of the System On time.

Fourth push: This displays and allows the setting of the System Off time.

To adjust the time settings use the ◀ ▶ ▲ ▼ keys.
(A minimum time setting of 1 second is required for all of these times, ie 00:00:01)

The time on the display reads hours, minutes, and seconds. The time display will look like this: 00:00:00

Hours **Minutes** **Seconds**

Pressing the ◀ ▶ key moves the cursor to the desired hour, minute, or second.

Pressing the ▲ key increases the number.

Pressing the ▼ key decreases the number.

If changing the Refill or Discharge times, pressing the **"GO TO"** key will start a new time cycle starting with the Refill time. The next time cycle automatically uses the new time. For example, if after changing the Refill time, pressing the **"GO TO"** key will start the newtime cycle starting with the new Refill time.

If changing the System On or System Off times, pressing the **"GO TO"** key will start a new time cycle starting with the System Off time. The next cycle automatically uses the new time. For example, if after changing the System Off time, pressing the **"GO TO"** key will start the new time cycle starting with the new System Off time.

C100M Battery

Prior to initial installation, remove the paper tab between the battery and the battery terminal

WARNING: The batteries will be drained and possibly damaged if the C100M is stored in this "enabled" mode for an extended period of time

While the unit will charge itself to self-start under full sunlight charging conditions, it is recommended that the unit be charged overnight (***or least 12 hours***) before being placed into field service for the first time.

When the C100M's battery gage reads LOW, the C100M goes to OFF cycle (or SLEEP) and keeps the unit in the OFF cycle until the battery gage reads OK.

Whenever the C100M has been stored in a discharged or DEAD battery state for an extended period of time (more than 2 weeks) jump-starting charging may be required for operation.

Battery operation time is affected by the following items:

- Initial charge, a minimum of 12 hours is recommended.
- Time of year (there is less daylight in the winter)
- Weather (cloudy days vs sunny days) the time of day (when the sun is low on the horizon it has less energy to charge the battery), and temperature (colder reduces battery capacity).
- Valve cycle frequency (as the valve cycles more, it drains more energy from the battery)

A C100M controller used in a typical hydrocarbon skimming application, where cycle times are long (greater than 30 seconds each) will have no problem maintaining the battery charge with the built in solar panel. As cycle times become shorter (as is typical with Alpha style pumps), it may be necessary to use an external solar panel or the AC adapter to maintain the battery's charge. The following is a general guide line for cycle times and battery life:

Cycle per Minutes	Cycle Length in Seconds	Run Days*	Recommendations
6	5 refill, 5 discharge	2.6	Use AC Adapter
3	10 refill, 10 discharge	4.3	Use AC Adapter or External Solar Panel
1.5	20 refill, 20 discharge	6.3	Use Built In or External Solar Panel
1	30 refill, 30 discharge	7.3	Use Built in Solar Panel
Default	300 refill, 30 discharge	12	Use Built in Solar Panel

*With a completely charged battery and no charging going to the battery.

Rechargeable Batteries

It is recommended that replacement batteries are fully charged using commercially available chargers for these batteries before installing them on the C100M unit. This is to ensure that the two battery cells are matched in terms of cell voltage and charge status so they will function properly in the series cell pack configuration of the C100M unit.
CAUTION: ***DO NOT*** use any primary, non rechargeable battery in the C100M unit. If charged, these batteries will swell and rupture causing damage and possible injury to equipment operators. Also, ***DO NOT*** use Lithium or Lithium Ion type batteries in the C100M unit. The Lithium batteries have a higher voltage (3 Vdc per cell) and use different charging methods than used in the C100M unit.

Tank Full Shutoff

This feature is designed to be used with QED's Tank High Level Shutoff Kit, QED Model CTRTFO. The Tank Full Shutoff uses a normally closed float switch installed at a high tank position in your tank. It is designed to stop pump and controller operation when the level in the collection tank exceeds the upper limit defined by the float switch location. When high levels are detected, the C100M controller will discontinue pump operation and Disable the controller, and will remain in a **"Tank Full"** and **"System Disable"** mode until both are reset. The **"Tank Full"** condition will be shown on the display of the controller as a **"T"** in the upper right hand corner of the display. When this condition is detected, the tank level must be lowered enough to deactivate the switch and the controller must be reset to resume normal operation. First the **"Tank Full"** switch has to be reset by pushing the ◀ ▶ key. Then the controller needs to be enabled. Pressing the **"GO TO"** key three times will take you to the Disable/Enable screen. Once the QED Model CTRTFO is installed, any disconnection or breaks in the switch cable will also cause a **"Tank Full"** and **"System Disable"** response.

If the QED Model CTRTFO is not being used, then there is a jumper wire in place inside the controller, which disables this feature.

On/Off Level Control

This feature is designed to be used with QED's On/Off Level Control Kit, Model CTRLSW. The On/Off Level Control switch uses a normally closed float switch which is designed to stop pump operation when the level of the liquid being pumped falls below the limit defined by the float switch location and resume pumping automatically when the liquid level rises again and activates the float switch. A "Level Off" condition will be shown as a **"L"** in the lower right hand corner of the display.

Air Supply

(See Air Supply Overview sheet for more details)

Controller

(See Controller Overview sheet for more details)

Well

(See Well Overview sheet for more details)

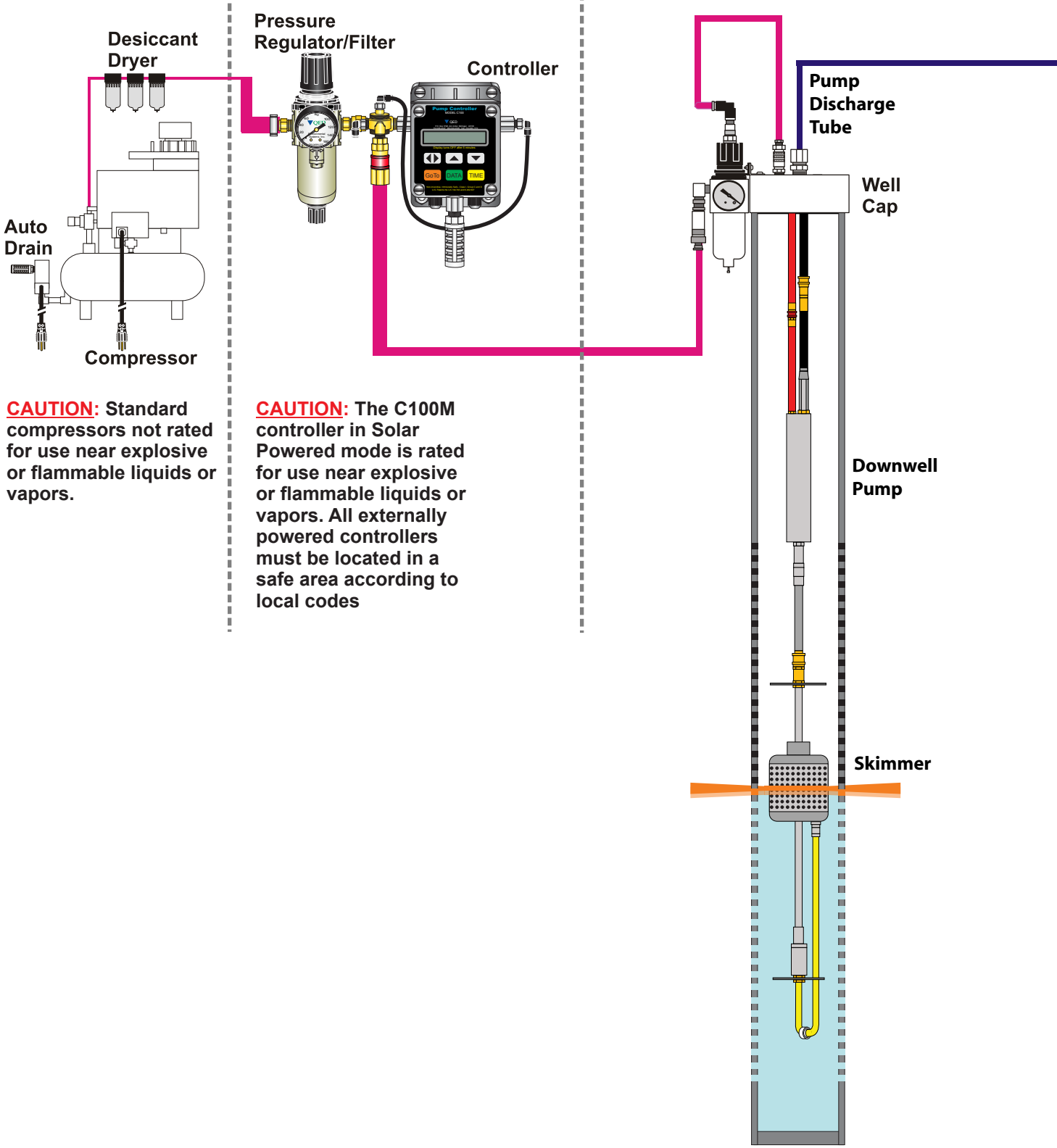

CAUTION: Standard compressors not rated for use near explosive or flammable liquids or vapors.

CAUTION: The C100M controller in Solar Powered mode is rated for use near explosive or flammable liquids or vapors. All externally powered controllers must be located in a safe area according to local codes

Air Supply Overview

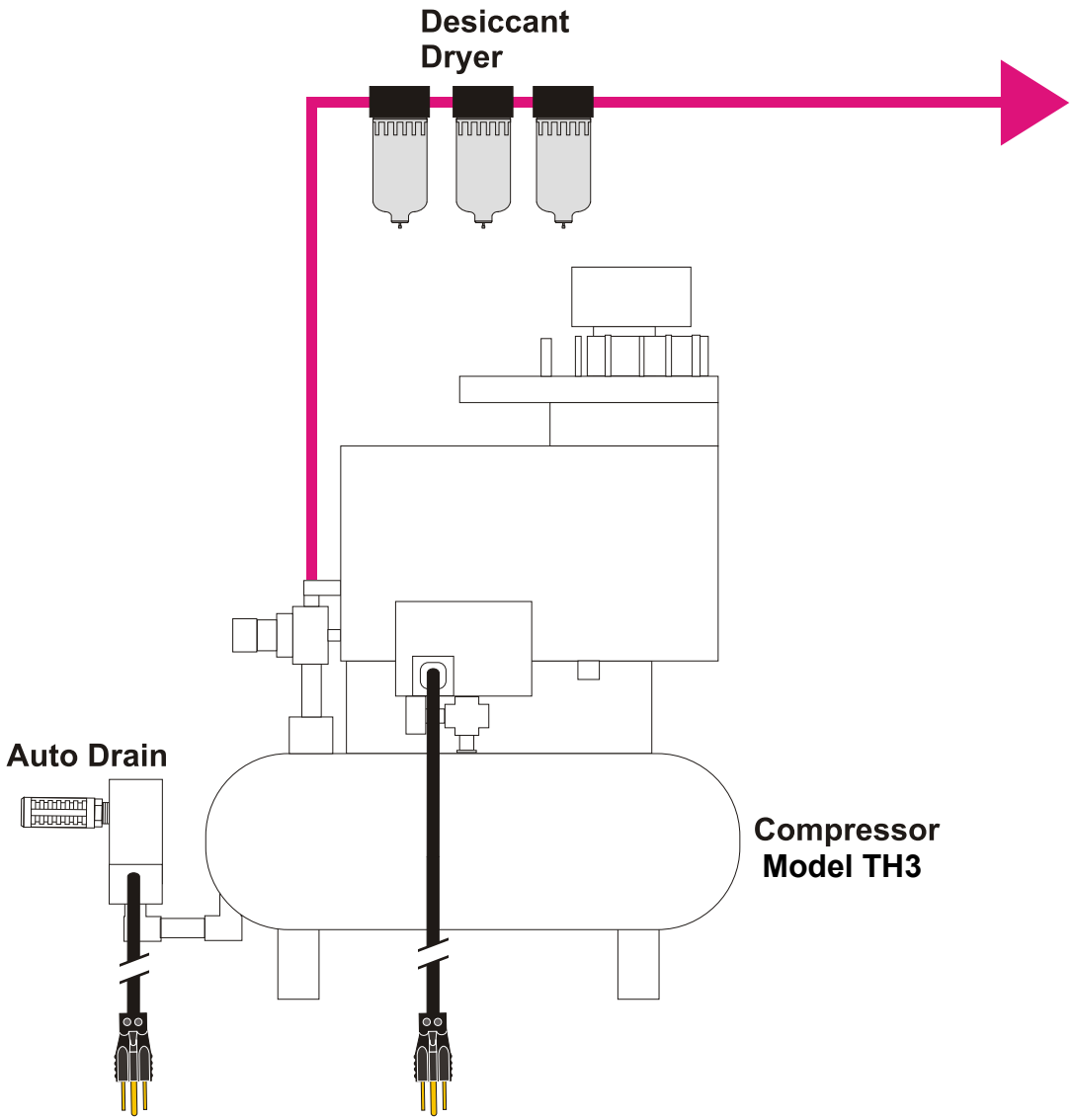

Installation guidelines - refer to individual equipment manuals for detailed information

1. Choose compressor location which is away from potential sources of flammable or explosive liquids or vapors.

2. Model TH3 compressor is equipped with a 3 prong grounded power plug and requires a 115 V AC, 15 A, 60 Hz power supply. The auto drain unit has a separate 3 prong grounded power plug and requires a 120 V AC, .08 A, 60 Hz power supply.

3. Install auto drain onto compressor tank, fasten desiccant dryer to nearby wall or other vertical surface, and connect compressor output to desiccant dryer with supplied black nylon tubing.

Controller Overview

Installation guidelines - refer to individual equipment manuals for detailed information

Controller Options:

Model C100M - Solar powered mode, Requires that solar power panel on controller top be exposed to unobstructed sunlight

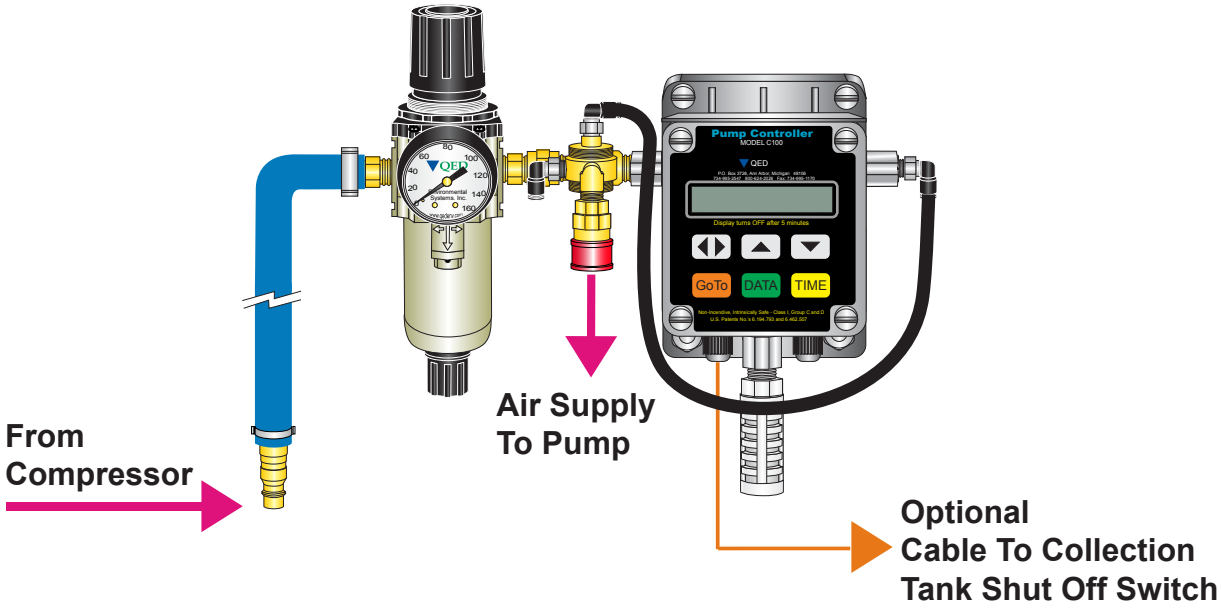

Model C100M - Powered by external power adapter, 110V AC input (**Not rated for use near explosive or flammable liquids or vapors**), VDC output.

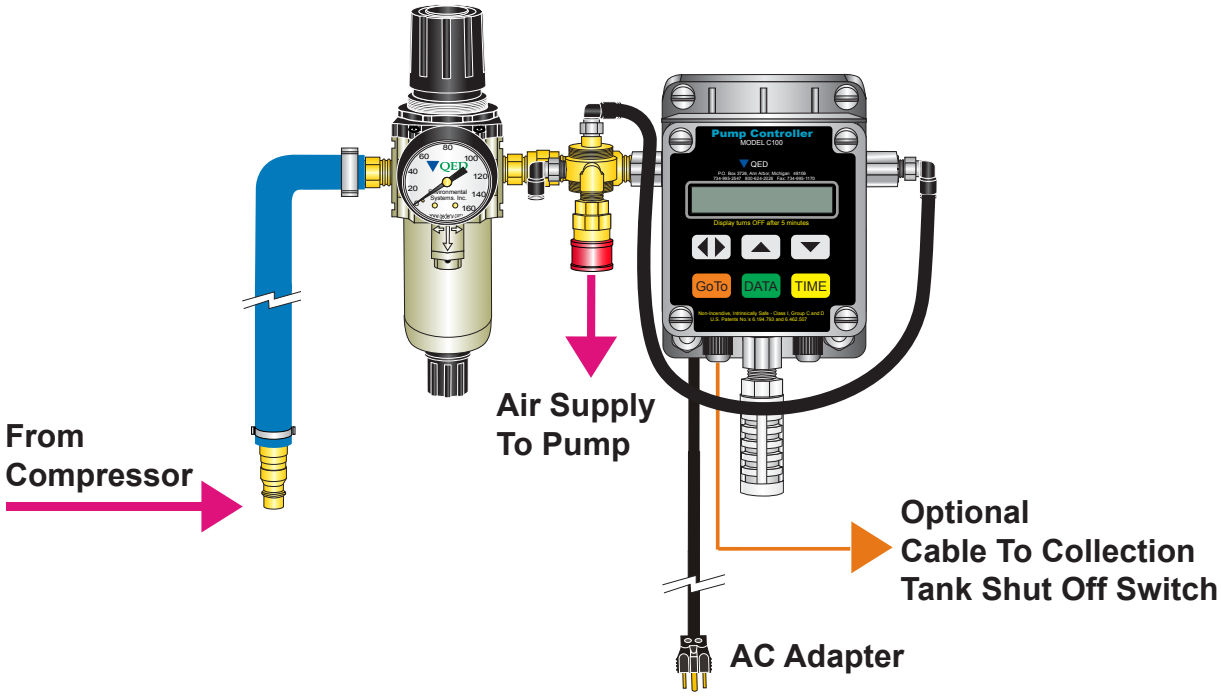

Controller Overview

Installation guidelines - refer to individual equipment manuals for detailed information

C100M Controller Operating Multiple Pumps

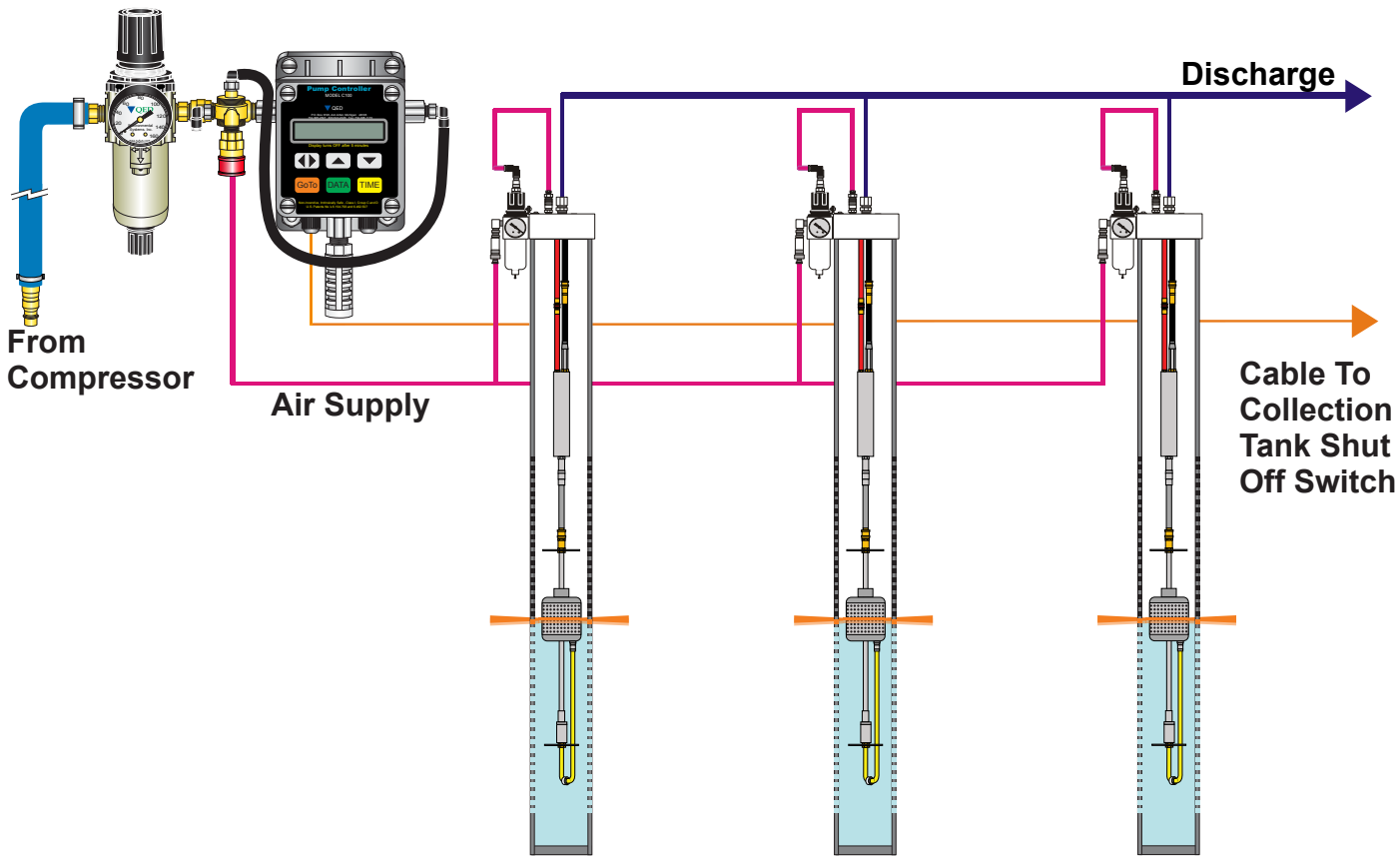

C100M Controller Vacuum Well Installation

When using the C100M to control a pump in a well that is under vacuum, the pilot air exhaust needs to be referenced to the well cap/flange. Referencing is accomplished by connecting 1/4” O.D. tubing between the pilot air exhaust “presloc” fitting and the vacuum reference fitting on the well cap/flange.

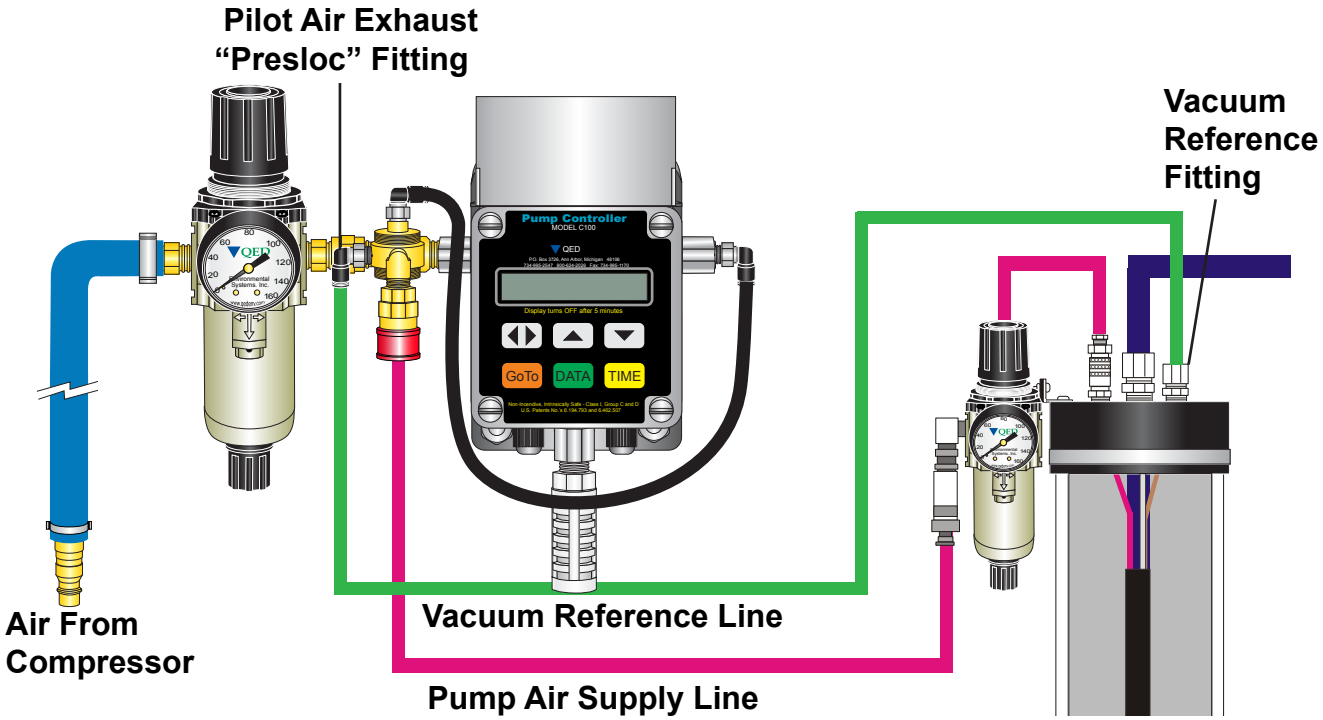

C100M Controller Installation

The top diagram (below) shows the C100M in outdoor use mode. The C100M is located near or at the recovery well in an area that receives sunlight. The bottom diagram (below) shows optional AC adapter use with the C100M. Use of the AC adapter makes the C100M unsafe for use in explosive environments. See the *Safety Section* in this manual for more information.

C100M in Solar Charge Mode

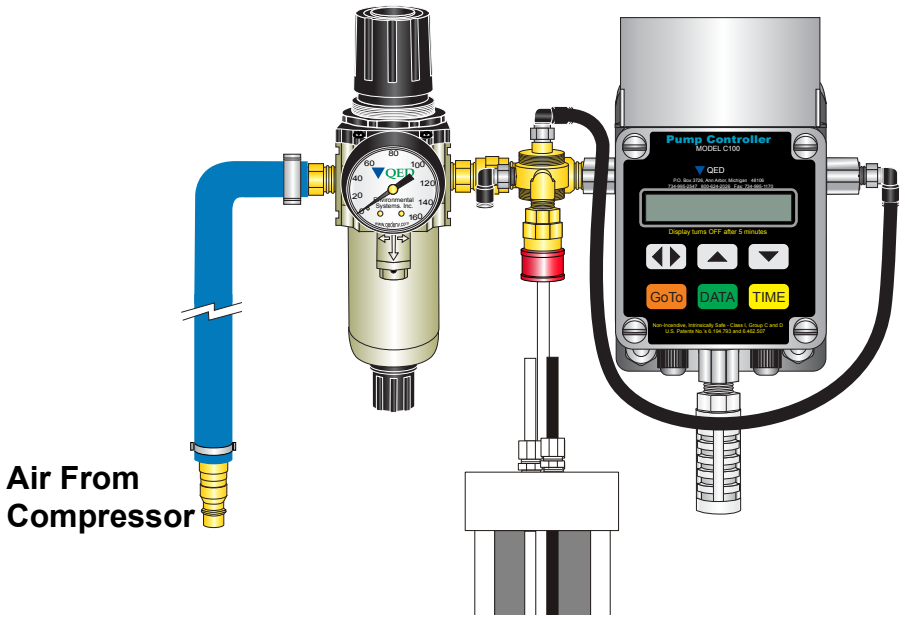

C100M When Used W/ Optional AC Adapter

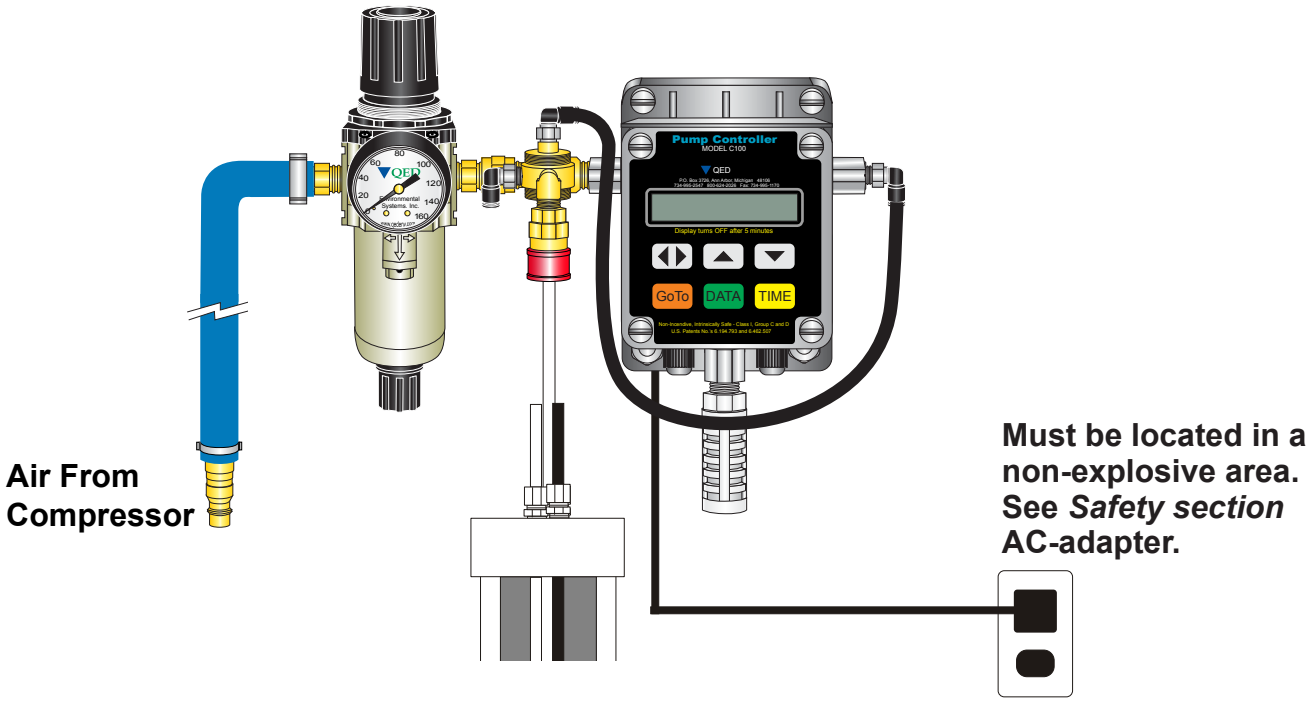

Single Pump Installation

The drawing below shows a single pump being controlled by a single controller. The drawing shows C100M controller use.

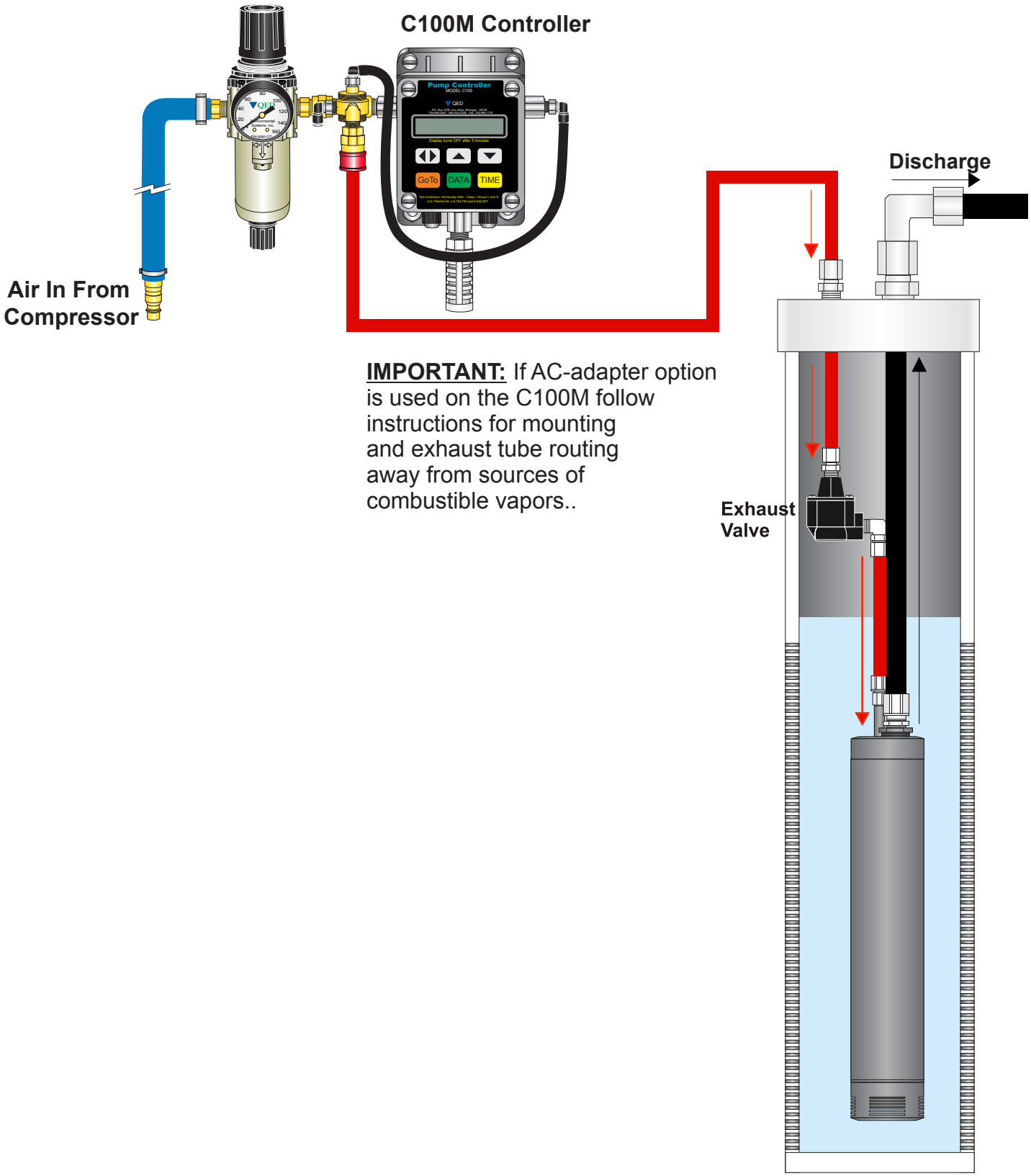

IMPORTANT: If AC-adapter option is used on the C100M follow instructions for mounting and exhaust tube routing away from sources of combustible vapors..

Troubleshooting

Use the following troubleshooting table to assist in troubleshooting the C100M:

Symptom	Possible Cause	Action/Fix
Won't turn on.	Bad batteries or failed faceplate.	Make sure all wires are securely connected
		If in Solar mode, with direct sunlight or 60 watt light, remove batteries. Does it turn on? If yes, batteries are bad. If no, replace faceplate.
		If using in AC mode, remove batteries. Does it turn on? If yes, replace batteries. If no, check voltage of outlet and AC adapter. If no voltage, replace/repair as needed. If voltage is good, replace faceplate.
Valve not cycling.	Low or dead batteries.	See above.
	Controller not enabled.	Enable.
	Cold Weather - Freezing.	Warm the valve.
	Valve is stuck / Panel not sending proper signal to switch valve.	Make sure valve connector is securely connected to panel.
		If available, switch faceplates with a known working C100M to determine whether valve or panel issue.
Continuous air to pump.	Valve is stuck in discharge.	Disconnect the 5/32" tubing on the C100M - If air cycles on/off with controller replace the 3-way valve, if air doesn't cycle, valve is not cycling, see above.
3-way valve constantly exhausting air.	3-way valve has failed.	Replace 3-way valve

WARNING: This equipment is designed to be used only with the QED Model C100M Controller and in accordance with the following installation and operation instructions. Serious personal injury, fire or explosion could result from misuse of this product!

Equipment Description

The Level Control Switch option is designed to stop pump operation when the level in the pumped well or sump drops below the limit defined by the float switch location and resume pumping automatically when the liquid level rises again and activates the float switch. When low levels are detected, the C100M will discontinue pump operation and will enter a "Level Off" condition.

This system is designed for safe use with flammable liquids, when used in accordance with these instructions. Alteration, misuse, connection to other pump controllers or equipment, or introduction of other electrical power sources could cause serious personal injury, fire, or explosion when used with or near flammable liquids.

Part No.	Description
800021	Level Switch, normally closed, w/100' cable
800011	Strain relief for switch cable at tank, 1/2" MPT

SAFETY WARNING: *This switch should only be used with the QED Model C100M Controller and connected as shown. The cable should be protected from abrasion and damage and isolated from other sources of electrical power. Failure to do so may cause personal injury, fire, or explosion.*

Installation Procedure

1. Locate well or sump to be pumped and the mounting location of the C100M controller, and identify the intended cable path between them, and ensure that the cable will be protected and be of sufficient length.
2. Install the Level Control Switch in the well using the 800011 Strain Relief (1/2" MPT), in the wellhead or cap. Lower the switch to the desired liquid control level in the well, then tighten the 800021 Strain Relief nut.
3. Route the cable from the switch to the C100M controller, including through all conduits, connectors and restraint devices.

DIAGRAM 1

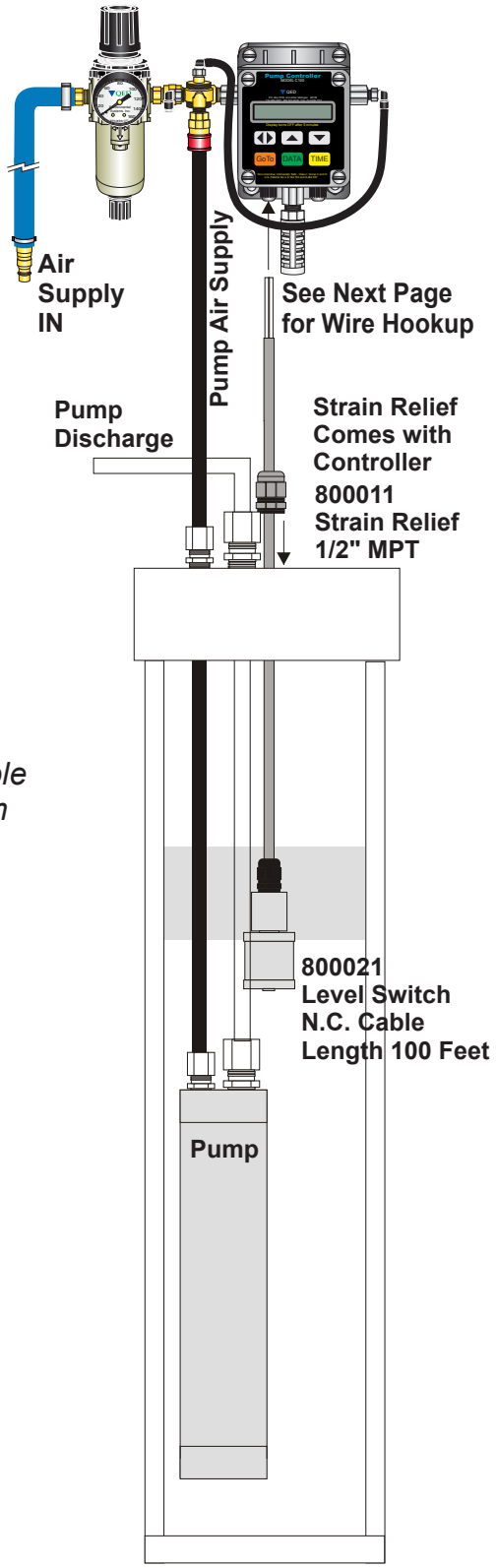

Installation Procedure Continued...

4. Unscrew the four knurled screws on the front cover of the C100M panel. Remove the front panel and disconnect the two electrical plug connectors joining the front panel to the base of the C100M, observing their orientation for reconnecting later. (The terminal orientation inside the front panel will be as shown in Diagram 1).

5. Remove the cable strain relief connector nut from the bottom, right side of the C100M Controller, and pass the cable end up through the connector and through the bottom of the C100M, leaving approximately 1 ft. of cable to allow ease of completion of connections. Loosely install the connector nut.

6. Separate the two conductors for approximately 2", stripping the cable insulation back 3/8-1/2".

7. Connect the cable wires to the C100M by sliding them into the terminal screws marked 1 and 2, then tightening the screws. It does not matter which wire is connected to terminal 1 or 2- no polarity orientation is required (shown in diagram 2).

NOTE: The jumper wire between terminals 4 and 5 should remain in place, unless the "Tank Full Shutoff Kit" is also installed. If so, follow all instructions for the Tank Full Shutoff Kit.

8. Reconnect the C100M front panel electrical connectors to the matching plugs inside the C100M housing, and reinstall the C100M front panel by threading in the 4 knurled corner screws.

9. Tighten the cable strain relief nut on the bottom of the C100M housing.

10. Verify successful installation and system function. Manually raise the float above the liquid level and observe that the C100M responds with a "Level Off" condition.

DIAGRAM 1
C100M with no switches as shipped

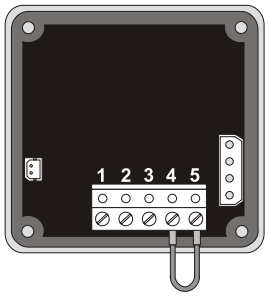

When connecting, breaking 4 & 5 will disable

DIAGRAM 2
ON/OFF Level Shutoff

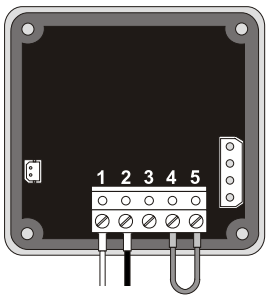

1. Connect leads from level switch to terminals #1 and #2.
2. Jumper remains connected between #4 and #5.

No polarity so wires can be connected to either terminal.

DIAGRAM 3
Tank High Level Shutoff Installation With ON/OFF Level Switch

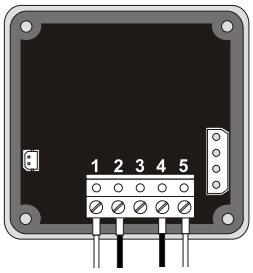

1. Remove jumper wire from terminals #4 and #5.
2. Connect tank switch leads to terminals #4 and #5.
3. Connect level switch leads to terminals #1 and #2.

No polarity so wires can be connected to either terminal.

External Solar Panel

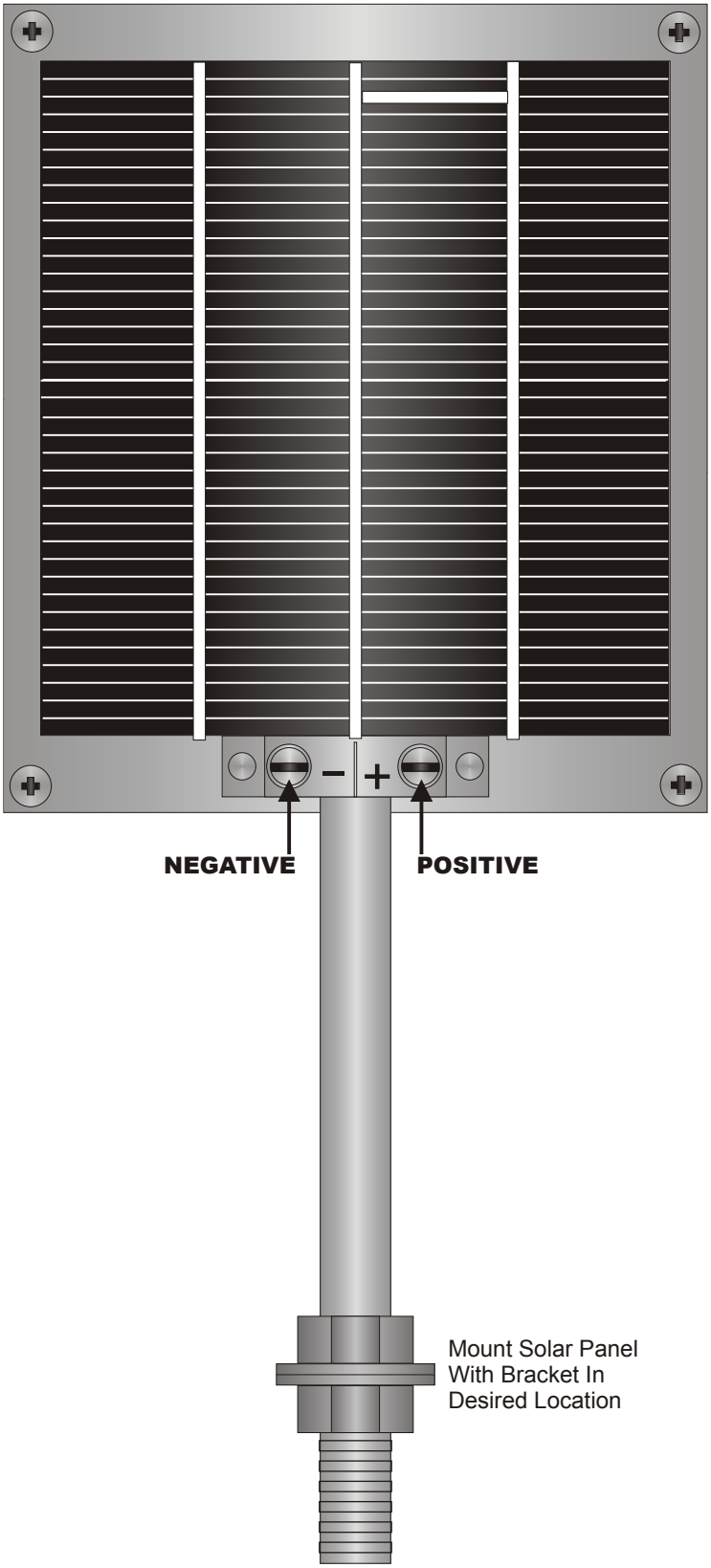

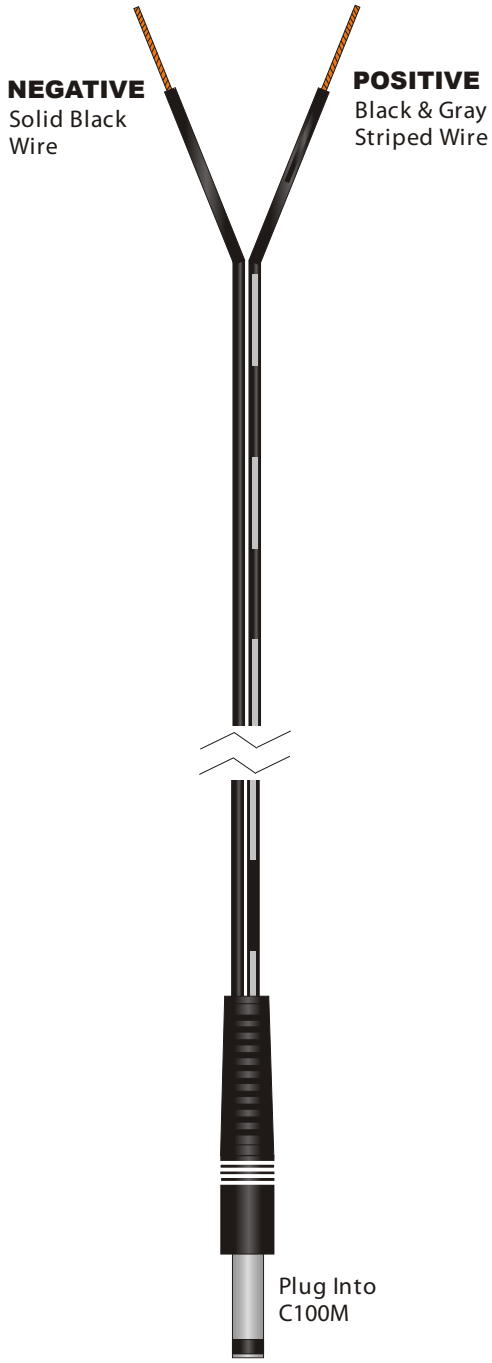

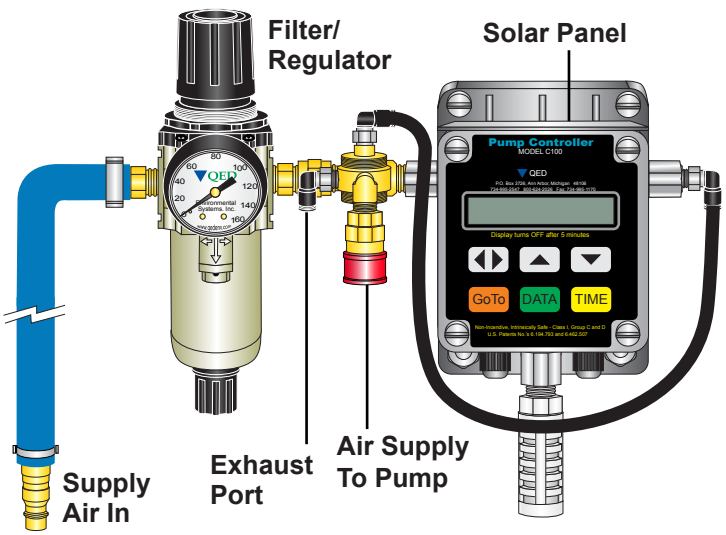

Control Keys:

GoTo — Allows manual toggling of valve and system ON & OFF cycles. Also allows enabling & disabling of system.

DATA — Multi screen key to sequentially display well status, battery status, solar panel voltage, ON/OFF and system valve.

TIME — Allows system counts and time sums, and valve time settings.

Set Keys:

Left/right cursor key

Up or add key.

Down or subtract key.

NOTE:

Display turns off after five minutes of non activity. Press any key to turn display

Controller Type:

Solar/Electrical/Pneumatic

Enclosure:

Dimensions - 3.5" (8.9 cm) **W** x 3.65" (9.3 cm) **H** x 3.5" (8.9 cm) **D**

Weight - 6 LBS. (6.4 kg)

Type - Fiber reinforced thermoplastic NEMA 4X & UL 508

Power:

Solar - Shatterproof solar panel on enclosure top, with backup battery pack with. CSA compliance, intrinsically safe, class 1, division 1, group C & D

C100M is CSA rated intrinsically safe when used in solar mode

110 VAC - Power converter plugs in to standard 110 VAC outlet and supplies 3 VDC,(300 milliamp) to connector plug in enclosure bottom.3-24 VDC external power supply (C100 batteries must be removed and polarity must be correct.

C100M is not rated intrinsically safe when used with 110 VAC power converter or external DC source.

Temperature:

Operating - □□°F to 1□□°F (-□□°C to □□°C)

Display:

Type - LCD display, 16 character alphanumeric w/ temperature compensated contrast and power off control

Window - Non-glare, double hardened optical acrylic

Pneumatic Control:

Type - Latching solenoid w/ dual port manifold

Pressure - 100 P.S.I. (690 kPa) maximum

***Introduction*-** The C100M electronic/pneumatic controller provides basic refill/discharge air valve cycling to operate QED pneumatic pumps and an ON/OFF timer to allow pump scheduling. Two independent timers maximize system operation flexibility. A built-in solar charging system maintains 24 hour-365 day operation for most sites. CSA approved for intrinsically safe operation near hydrocarbon vapors. Intuitive keypad makes for easy system setup and operation.

Key Menu Sequences:

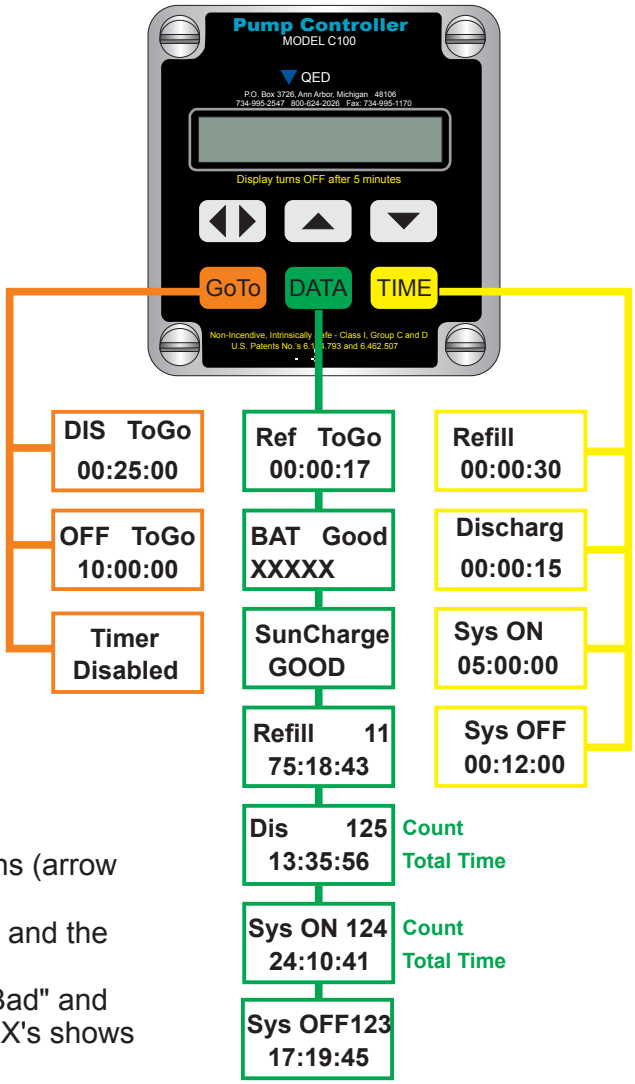

***Go To Key (orange)*-** Key press runs through 3 status/option screens (◀▶ Key Used).
Dis/Ref ToGo- Shows current valve status (pump discharge or refill) and the time left in that mode. pressing the ◀▶ key causes the valve to immeadiately go to the next mode and begin timing down.
System ON/OFF- Shows if the system is ON (awake) or OFF (in sleep mode) and the time left in that mode. Pressing the ◀▶ key causes the system to immediately go to the next mode and begin timing down.
Timer Disabled- Shows if the system is disabled or enabled. Pressing the ◀▶ key causes the system to immediately go to the next mode. System disabled can be used to override system timers during pump maintenance.

***Data Key (green)*-** Key press runs through 7 status screens (arrow keys not used).
Dis/Ref ToGo- Default screen, shows current valve status and the time left in that mode.
Bat Good/Bad XXXX- Shows battery status as "Good"/ "Bad" and shows a bar-graph of X's indicating battery strength, (less X's shows lower strength).
***Sun Charge Good/Bad*-** indicates if sun charge has been sufficient to maintain battery charge for this system's power use (depends on time settings & valve cycle frequency).
Refill - Shows count of refill cycles and total system refill time (sum of all refill times).
Discharge - Shows count of discharge cycles and total system discharge time (sum of all discharge times).
Sys ON - Shows count of system ON cycles and total system ON time.
Sys OFF - Shows count of system OFF cycles and total system OFF time.

Time Key (yellow) - Key press through 4 option screens (◀▶,▲,▼, keys used).
Refill - Sets refill time, ◀▶ moves to hours, minutes, seconds position and ▲▼ keys increase or decrease time settings. Range: 0 seconds to 99 Hours: 59 Minutes: 59 Seconds.
Discharge - Sets discharge time, ◀▶ moves to hours, minutes, seconds position and ▲▼ keys increase or decrease time settings. Range: 0 seconds to 59 Hours: 59 Minutes: 59 Seconds.
System ON - Sets system ON, or awake time, ◀▶ moves to hours, minutes, seconds position and ▲▼ keys increase or decrease time settings. Range: 0 seconds to 99 Hours: 59 Minutes: 59 Seconds.
System OFF - Sets system Off, or sleep mode time, ◀▶ moves to hours, minutes, seconds position and ▲▼ keys increase or decrease time settings. Range: 0 seconds to 99 Hours: 59 Minutes: 59 Seconds.

Warranty

QED Environmental Systems, Inc. (QED) warrants to the original purchaser of its products that, subject to the limitations and conditions provided below, the products,materials and/or workmanship shall reasonably conform to descriptions of the products and shall be free of defects in materials andworkmanship. Any failure of the products to conform to this warranty will be remedied by QED in the manner provided herein.

This warranty shall be limited to the duration and the conditions set forth below. All warranty durations are calculated from the original date of purchase.

1. Liquid contacting equipment (including pumps), tubing, liquid contacting supplies and flow totalization equipment are warranted for 1 year.
2. Control devices, control device mounting, and surface air supply hose are warranted for 1 year.
3. Separately sold parts and spare parts kits are warranted for ninety (90) days.
4. Repairs performed by QED are warranted for ninety (90) days from date of repair or for the full term of the original warranty, whichever is longer.

Buyer's exclusive remedy for breach of said warranty shall be as follows: if, and only if, QED is notified in writing within the applicable warranty period of the existence of any such defects in the said products, and QED upon examination of any such defects, shall find the same to be within the term of and covered by the warranty running from QED to buyer, QED will, at its option, as soon as reasonably possible, replace or repair any such product, without charge to the buyer. If QED for any reason, cannot repair a product covered hereby within four (4) weeks after receipt of the original Purchaser's/Buyer's notification of a warranty claim, then QED's sole responsibility shall be, at its option, either replace the defective product with a comparable new unit at no charge to the buyer, or to refund the full purchase price.

In no event shall such allegedly defective products be returned to QED without its consent, and QED's obligations of repair,replacement or refund are conditioned upon the Buyer's return of the defective product to QED.

IN NO EVENT SHALL QED ENVIRONMENTAL SYSTEMS, INC. BE LIABLE FOR CONSEQUENTIAL OR INCIDENTAL DAMAGES FOR BREACH OF SAID WARRANTY.

The foregoing warranty does not apply to major subassemblies and other equipment, accessories, and other parts manufactured by others, and such other parts, accessories, and equipment are subject only to the warranties, if any, supplied by their respective manufacturers. QED makes no warranty concerning products or accessory, QED will give reasonable assistance to Buyer in obtaining from the respective manufacturer whatever adjustment is reasonable in light of the manufacturer's own warranty.

*THE FOREGOING WARRANTY IS IN LIEU OF ALL OTHER WARRANTIES, EXPRESSED, IMPLIED OR STATUTORY (INCLUDING BUT NOT LIMITED TO THE WARRANTIES OF MERCHANTABILITY AND FITNESS FOR A PARTICULAR PURPOSE), WHICH OTHER WARRANTIES ARE EXPRESSLY EXCLUDED HEREBY,*and of any other obligations or liabilities on the part of QED, and QED neither assumes nor authorizes any person to assume for it any other obligation or liability in connection with said products, materials and/or workmanship.

It is understood and agreed that QED shall in no event be liable for incidental or consequential damages resulting from its breach of any of the terms of this agreement, nor for special damages, nor for improper selection of any product described or referred to for a particular application.

This warranty will be void in the event of unauthorized disassembly of component assemblies. Defects in any equipment that result from abuse, operation in any manner

outside the recommended procedures, use and applications other than for intended use,or exposure to chemical or physical environment beyond the designated limits of materials and construction will also void this warranty.

Chemical attack to liquid contacting equipment and supplies shall not be covered by this warranty. A range of materials is available from QED and it is the Buyer's responsibility to select materials to fit the Buyer's application. QED will only warrant that the supplied liquid contacting materials will conform to published QED specifications and generally accepted standards for that particular material.

QED shall be released from all obligations under all warranties if any product covered hereby is repaired or modified by persons other than QED's service personnel unless such repair by others is made with the written consent of QED. If any product covered hereby is actually defective within the terms of this warranty, Purchaser must contact QED for determination of warranty coverage. If the return of a component is determined to be necessary, QED will authorize the return of the component, at owner's expense. If the product proves not to be defective within the terms of this warranty, then all costs and expenses in connection with the processing of the Purchaser's claim and all costs for repair,parts and labor as authorized by owner hereunder shall be borne by the Purchaser.

The original Purchaser's sole responsibility in the instance of a warranty claim shall be tonotify QED of the defect, malfunction, or other manner in which the terms of this warranty are believed to be violated. You may secure performance of obligations hereunder by contacting the Customer Service Department of QED and:

1. Identifying the product involved (by model or serial number or other sufficient description that will allow QED to determine which product is defective).
2. Specifying where, when, and from whom the product was purchased.
3. Describing the nature of the defect or malfunction covered by this warranty.
4. Sending the malfunctioning component, after authorization by QED to:

QED Environmental Systems Inc.
2355 Bishop Circle West
Dexter, MI 48130

Telephone: 1-734-995-2547
1-800-624-2026

QED Environmental Systems

P.O. Box 3726
Ann Arbor, MI 48106-3726

Tel: 734-995-2547 / 800-624-2026
Fax: 734-995-1170
Email: info@qedenv.com
www.qedenv.com

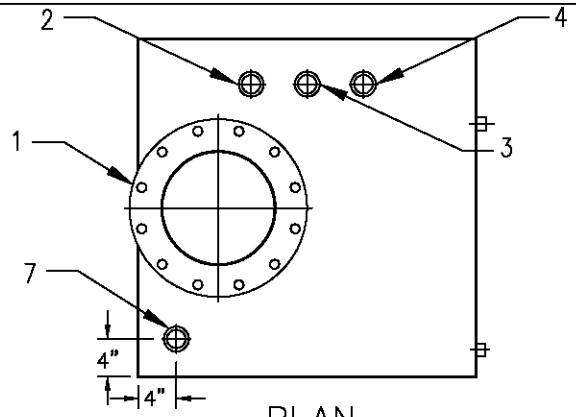

PLAN

ITEM	QTY	DESCRIPTION
1	1	12" I.D. ACCESS MANWAY
2	1	2" FNPT LEVEL PORT
3	1	2" FNPT FILL PORT
4	1	2" FNPT VENT PORT
5	1	1" FNPT DRAIN
6	2	1" FNPT SIGHT GLASS PORTS
7	1	2" FNPT PUMP OUT PORT
8	1	2" I.D. 304SS DIP TUBE

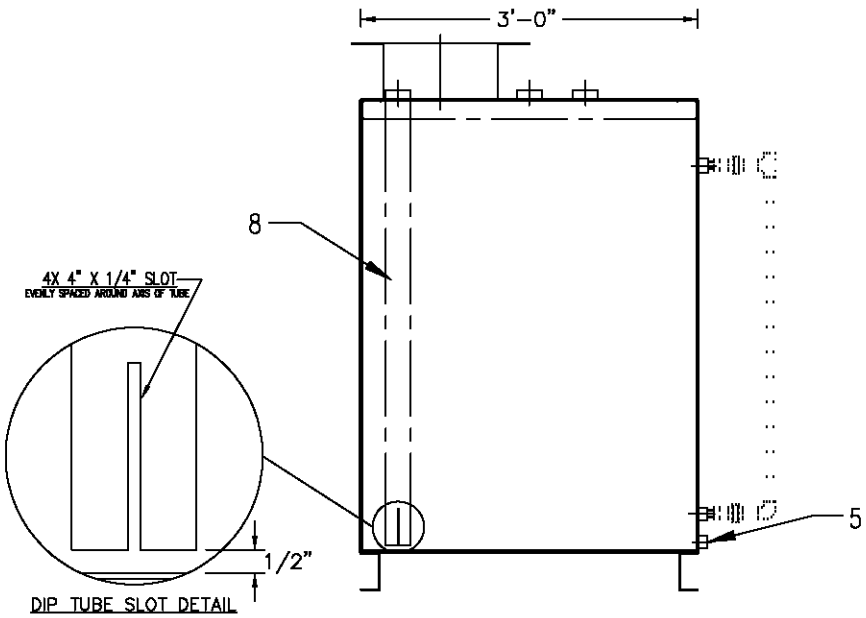

ELEVATION

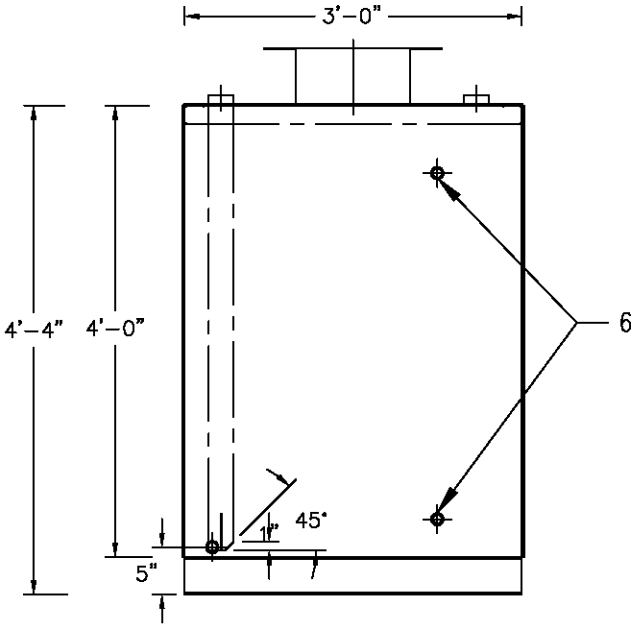

RIGHT SIDE VIEW

NOTES

1. MATERIAL: 12 GAUGE 304SS.
2. GASKET: VITON.
3. HARDWARE: 18-8 STAINLESS STEEL

REV.	DESCRIPTION	DATE	INIT.

HYDRO QUIP. INC.

Water Treatment Systems

270 GALLON DOUBLE-WALL COLLECTION TANK

DRN. BY: TRA

CHKD.BY:

PROJECT:

DATE: 7/12/13

REF:

FILE: AGM-3SSDW

SCALE: 9/16" = 1'

THIS DRAWING IS PROPERTY OF HYDRO QUIP INC. AND MUST NOT BE COPIED, LOANED OR DISTRIBUTED WITHOUT WRITTEN PERMISSION.

REV: A

New England Rubber, Inc.
55 Commercial Circle
Dedham, MA 02026
Phone: 781-329-4120 • **Fax:** 781-329-8560
E-Mail: bconnors@newenglandrubber.com • **Website:** www.newenglandrubber.com

New England Rubber > Hose and Metal Hose > Industrial Rubber Hose > Chemical Industrial Rubber Hoses > T505OG - Acid - Chemical S&D 240 PSI - XLPE Hose > Item # T505OG200X100

Item # T505OG200X100, XLPE Tube Chemical Hose

larger image

Application :
Suction and transfer service for a variety of chemicals and solvents. Will handle 90% of existing chemicals.
Cover :
Green EPDM - abrasion and ozone resistant.
Reinforcement :
High tensile textile cords and 4 highly flexible steel helix wires.
Tube :
Transparent XLPE (cross-linked polyethylene).
Temperature Range :
Normal recommended operating temperature is -4ºF (-20ºC) to 150ºF (+65ºC)
Branding :
ALFAGOMMA - ITALY T505 16 BAR (240 PSI) - XLPE CHEMICAL - S & D (in orange letters).
Coupling Suggestions :
Cam and groove and combination nipples, preferably stainless steel, attached with bands.
Warning :
Before using chemical hoses consult chemical resistance chart or consult factory.

Kuriyama offers a full line of Quick-Acting couplings, pin lug shank couplings and combination nipples. Refer to current Kuriyama-Couplings™ and Accessories Catalog for type and pricing.

Specifications · Care, Maintenance, and Storage

Specifications

Legend Notes	Click on question mark icons (?)for additional information.
Temperature	-4 to 150 ºF -20 to 65 ºC
Brand	Alfagomma®
Series	T505OG
Nominal I.D.	2 in
Nominal O.D.	2.560 in 65.0 mm
Approx. Wt. per Pkg. (lbs.)	103.0
Min. Bend Radius	16 1/4 in

Standard Length	100 ft
Cover	Green, EPDM
Tube	Transparent XLPE
Application / Material Conveyed	Agricultural Fertilizers/Chemical Solutions Chemical/Solvent Transfer
Packaging	Coils
Max. Working Pressure	240 PSI

Care, Maintenance, and Storage

Hose has a limited life and the user must be alert to signs of impending failure, particularly when the conditions of service include high working pressures and/or the conveyance or containment of hazardous materials,

GENERAL CARE AND MAINTENANCE OF HOSE

Hose should not be subjected to any form of abuse in service. It should be handled with reasonable care. Hoses should not be dragged over sharp or abrasive surfaces unless specifically designed for such service. Care should be taken to protect hose from severe end loads for which the hose or hose assembly were not designed. Hose should be used at or below its rated working pressure; any changes in pressure should be made gradually so as to not subject the hose to excessive surge pressures. Hose should not be kinked or be run over by equipment. In handling large size hose, dollies should be used whenever possible; slings or handling rigs, properly placed, should be used to support heavy hose used in oil suction and dis charge service.

STORAGE

Rubber hose products in storage can be affected adversely by temperature, humidity, ozone, sunlight, oils, solvents, corrosive liquids and fumes, in sects, rodents and radioactive materials.

The appropriate method for storing hose depends to a great extent on its size (diameter and length), the quantity to be stored, and the way in which it is packaged. Hose should not be piled or stacked to such an extent that the weight of the stack creates distortions on the lengths stored at the bot tom. Since hose products vary considerably in size, weight, and length, it is not practical to establish definite recommendations on this point. Hose having a very light wall will not support as much load as could a hose having a heavier wall or hose having a wire reinforcement. Hose which is shipped in coils or bales should be stored so that the coils are in a horizontal plane.

Whenever feasible, rubber hose products should be stored in their original shipping containers, especially when such containers are wooden crates or cardboard cartons which provide some protection against the deteriorating effects of oils, solvents, and corrosive liquids; shipping containers also afford some protection against ozone and sunlight.

Certain rodents and insects will damage rubber hose products, and ad equate protection from them should be provided.

The ideal temperature for the storage of rubber products ranges from 50° to 70°F (10-20°C) with a maximum limit of 100°F (38°C). If stored below 32°F (0°C), some rubber products become stiff and would require warming before being placed in service. Rubber products should not be stored near sources of heat, such as radiators, base heaters, etc., nor should they be stored under conditions of high or low humidity.

To avoid the adverse effects of high ozone concentration, rubber hose products should not be stored near electrical equipment that may generate ozone or be stored for any lengthy period in geographical areas of known high ozone concentration. Exposure to direct or reflected sunlight - even through windows - should also be avoided. Uncovered hose should not be stored under fluorescent or mercury lamps which generate light waves harmful to rubber.

Storage areas should be relatively cool and dark, and free of dampness and mildew. Items should be stored on a first-in, first-out basis, since even under the best conditions, an unusually long shelf life could deteriorate certain rubber products.

Print Back

Dixon / Boss-Lock Type A Adapters

female NPT x male adapter

Feature:

- [illegible] See ratings on page 23.

356T6 aluminum

aluminum hard coat

brass

Size	*356T6 Aluminum* [illegible]	*Aluminum Hard Coat* [illegible]	*Brass* [illegible]
[illegible]"	***50-A-AL*** [2]	---	***50-A-BR***
[illegible]" x [illegible]"	***7550-A-AL*** [2]	---	***7550-A-BR***
[illegible]"	***75-A-AL*** [2]	---	***75-A-BR***
[illegible]"	***100-A-AL*** [2]	---	***100-A-BR***
[illegible]"	***125-A-AL***	---	***125-A-BR***
[illegible]"	***150-A-AL***	***150-A-ALH***	***150-A-BR***
2"	***200-A-AL***	***200-A-ALH***	***200-A-BR***
2½"	***250-A-AL***	---	***250-A-BR***
[illegible]"	***300-A-AL***	***300-A-ALH***	***300-A-BR***
4"	***400-A-AL***	***400-A-ALH***	***400-A-BR***
[illegible]"	***500-A-AL***	---	***500-A-BR***
6"	***600-A-AL***	***600-A-ALH***	***600-A-BR***
[illegible]" DIX	***800-A-AL*** [illegible]	---	---
[illegible]" BL	***801-A-AL*** [illegible]	---	---

[illegible] Boss-Lock cam and groove couplings *do not interchange in the 8" and ½" sizes.*
[2] [illegible] 6061-T6 aluminum

unplated iron

plated iron

316 stainless

Size	*Unplated Iron* [illegible]	*Plated Iron* [illegible]	*316 Stainless Steel* [illegible]
½"	---	---	***50-A-SS***
¾" x ½"	---	---	***7550-A-SS***
¾"	---	***75-A-PM***	***75-A-SS***
1"	---	***100-A-PM***	***100-A-SS***
1¼"	---	---	***125-A-SS***
1½"	***150-A-MI***	***150-A-PM***	***150-A-SS***
2"	~~***200-A-MI***~~	~~***200-A-PM***~~	***200-A-SS***
2½"	---	---	***250-A-SS***
3"	***300-A-MI***	***300-A-PM***	***300-A-SS***
4"	***400-A-MI***	***400-A-PM***	***400-A-SS***
5"	***500-A-MI***	---	***500-A-SS***
6"	---	***600-A-PM***	***600-A-SS***

King Crimp Style Domestic Cam and Groove

Only use the crimp style shanks with the crimp style sleeves and ferrules.
Due to differences in dimensions and tolerances for safety reasons, do not interchange other manufacturer's products with Dixon products.

Dixon Type C Couplers

female coupler x hose shank

Features:

- Finger rings are not supplied on 1" Dixon couplings.
- All couplers are supplied with safety clips.
- Couplers are supplied standard with a Buna-N gasket. Other gasket types are available on pages 62-64.

Hose ID	*356T6 Aluminum*	*Brass*	*316 Stainless Steel*	*Unplated Iron*
1"	***100-C-AL***	***100-C-BR***	***100-C-SS***	---
1½"	***150-C-AL***	***150-C-BR***	***150-C-SS***	---
2"	***200-C-AL***	***200-C-BR***	***200-C-SS***	---
3"	***300-C-AL***	***300-C-BR***	***300-C-SS***	---
4"	***400-C-AL***	***400-C-BR***	***400-C-SS***	***400-C-MI***
NEW 6"	***600-C-AL***	***600-C-BR***	***600-C-SS***	***600-C-MI***

EZ Boss-Lock Type C Couplers

female coupler x hose shank

Features:

- Couplers are supplied standard with a Buna-N gasket. Other gasket types are available on pages 62-64.

Hose ID	*316 Stainless Steel*
1"	***RC100EZCR***
1¼"	***RC125EZCR***
1½"	***RC150EZCR***
2"	***RC200EZCR***
3"	***RC300EZCR***
4"	***RC400EZCR***
6"	***RC600EZCR***

Under no circumstances should the EZ Boss-Lock cam arms be used on any fitting not specifically designed for their use. See pages 22 and 60 for further specifications.

Type E Adapters

male adapter x hose shank

Hose ID	*356T6 Aluminum*	*Brass*	*316 Stainless Steel*		*Unplated Iron*
1"	***100-E-AL***	***100-E-BR***	***100-E-SS***	**$51.00**	---
1½"	***150-E-AL***	***150-E-BR***	***150-E-SS***	**68.90**	---
2"	***200-E-AL***	***200-E-BR***	***200-E-SS***	**71.60**	---
3"	***300-E-AL***	***300-E-BR***	***300-E-SS***	**132.90**	---
4"	***400-E-AL***	***400-E-BR***	***400-E-SS***	**278.00**	***400-E-MI***
NEW 6"	***600-E-AL***	***600-E-BR***	***600-E-SS***	**538.00**	***600-E-MI***

Pressure rating is based on the seal of the mating part. See ratings on page 23.

Dixon / Boss-Lock Type F Adapters

male NPT x male adapter

- [illegible] See ratings on page 23.

356T6 aluminum

aluminum hard coat

brass

Size	*356T6 Aluminum* [illegible]	*Aluminum Hard Coat* [illegible]	*Brass* [illegible]
[illegible]"	***50-F-AL***	---	***50-F-BR***
[illegible]" x [illegible]"	***7550-F-AL***	---	***7550-F-BR***
[illegible]"	***75-F-AL***	---	***75-F-BR***
[illegible]"	***100-F-AL***	---	***100-F-BR***
[illegible]"	***125-F-AL***	---	***125-F-BR***
[illegible]"	***150-F-AL***	***150-F-ALH***	***150-F-BR***
2"	***200-F-AL***	***200-F-ALH***	***200-F-BR***
2½"	***250-F-AL***	---	***250-F-BR***
[illegible]"	***300-F-AL***	***300-F-ALH***	***300-F-BR***
4"	***400-F-AL***	***400-F-ALH***	***400-F-BR***
[illegible]"	***500-F-AL***	---	---
6"	***600-F-AL***	***600-F-ALH***	***600-F-BR***
[illegible]" DIX	***800-F-AL*** [illegible]	---	---
[illegible]" BL	***801-F-AL*** [illegible]	---	---

[illegible] Boss-Lock cam and groove couplings *do not interchange in the 8" and ½" sizes*.

unplated iron

plated iron

316 stainless

Size	*Unplated Iron* [illegible]	*Plated Iron* [illegible]	*316 Stainless Steel* [illegible]
½"	---	---	***50-F-SS***
¾" x ½"	---	---	***7550-F-SS***
¾"	---	***75-F-PM***	***75-F-SS***
1"	---	***100-F-PM***	***100-F-SS***
1¼"	---	---	***125-F-SS***
1½"	***150-F-MI***	***150-F-PM***	***150-F-SS***
2"	~~***200-F-MI***~~	~~***200-F-PM***~~	***200-F-SS***
2½"	---	---	***250-F-SS***
3"	***300-F-MI***	***300-F-PM***	***300-F-SS***
4"	***400-F-MI***	***400-F-PM***	***400-F-SS***
6"	---	***600-F-PM***	***600-F-SS***

CELL682 Wireless Alarms

SENSAPHONE®
REMOTE MONITORING SOLUTIONS

Sensaphone CELL682 Users Manual

Version 1.4

LIT-0171

CELL682 Wireless Alarms

SENSAPHONE®
REMOTE MONITORING SOLUTIONS

USER'S MANUAL

VERSION 1.4

SENSAPHONE®
REMOTE MONITORING SOLUTIONS

Every effort has been made to ensure that the information in this document is complete, accurate and up-to-date. Sensaphone assumes no responsibility for the results of errors beyond its control. Sensaphone also cannot guarantee that changes in equipment made by other manufacturers, and referred to in this manual, will not affect the applicability of the information in this manual.

Copyright © 2010 Sensaphone

First Edition, version 1.4, April 2013

Written and produced by Sensaphone

Please address comments on this publication to:

Sensaphone

901 Tryens Road

Aston, PA 19014

Sensaphone is a registered trademark of Sensaphone.

IMPORTANT SAFETY INSTRUCTIONS

Your Cell682 has been carefully designed to give you years of safe, reliable performance. As with all electrical equipment, however, there are a few basic precautions you should take to avoid hurting yourself or damaging the unit:

• Read the installation and operating instructions in this manual carefully. Be sure to save it for future reference.

• Read and follow all warning and instruction labels on the product itself.

• To protect the Cell682 from overheating, make sure all openings on the unit are not blocked. Do not place on or near a heat source, such as a radiator or heat register.

• Do not use your Cell682 near water, or spill liquid of any kind into it.

• Be certain that your power source matches the rating listed on the AC power transformer. If you're not sure of the type of power supply to your facility, consult your dealer or local power company.

• Do not allow anything to rest on the power cord. Do not locate this product where the cord will be abused by persons walking on it.

• Do not overload wall outlets and extension cords, as this can result in the risk of fire or electric shock.

• Never push objects of any kind into this product through ventilation holes as they may touch dangerous voltage points or short out parts that could result in a risk of fire or electric shock.

• To reduce the risk of electric shock, do not disassemble this product, but return it to Sensaphone Customer Service or another approved repair facility when any service or repair work is required. Opening or removing covers may expose you to dangerous voltages or other risks. Incorrect reassembly can cause electric shock when the unit is subsequently used.

• If anything happens that indicates that your Cell682 is not working properly or has been damaged, unplug it immediately and follow the procedures in the manual for having it serviced. Return the unit for servicing under the following conditions:

1. The power cord or plug is frayed or damaged.
2. Liquid has been spilled into the product or it has been exposed to water.
3. The unit has been dropped, or the enclosure is damaged.
4. The unit doesn't function normally when you're following the operating instructions.

CAUTION: To reduce the risk of fire or injury to persons, read and follow these instructions:

1. Replace the battery only with the same or equivalent type recommended by the manufacturer.
2. Do not dispose of the battery in a fire. The cell may explode. Check with local codes for possible special disposal instructions.
3. Do not open or mutilate the battery. Released electrolyte is corrosive and may cause damage to the eyes or skin. It may be toxic if swallowed.
4. Exercise care in handling battery in order not to short the battery with conducting materials such as rings, bracelets, and keys. The battery or conductor may overheat and cause burns.

FCC REQUIREMENTS

This equipment has been tested and found to comply with the limits for a Class B digital device, pursuant to Part 15 of the FCC rules. These limits are designed to provide reasonable protection against harmful interference in a residential installation. This equipment generates, uses and can radiate radio frequency energy, and if not installed and used in accordance with the instructions, may cause harmful interference to radio communications. However, there is no guarantee that interference will not occur in a particular installation. If this equipment does cause harmful interference to radio or television reception, which can be determined by turning the equipment off and on, the user is encouraged to try to correct the interference by one or more of the following measures:

- Reorient or relocate the receiving antenna.
- Increase the separation between the equipment and the receiver.
- Connect the equipment into an outlet on a circuit different from that to which the receiver is connected.
- Consult the dealer or an experienced radio/TV technician help.

This device complies with Part 15 of the FCC Rules. Operation is subject to the following two conditions: 1) this device may not cause harmful interference, and 2) this device must accept any interference received, including interference that may cause undesired operation.

If you experience trouble with the Cell682, or you need information on obtaining service or repairs, please contact:

Sensaphone
901 Tryens Road
Aston, PA 19014
Phone: 610.558.2700
FAX: 610.558.0222

2 YEAR LIMITED WARRANTY

PLEASE READ THIS WARRANTY CAREFULLY BEFORE USING THE PRODUCT.

THIS LIMITED WARRANTY CONTAINS SENSAPHONE'S STANDARD TERMS AND CONDITIONS. WHERE PERMITTED BY THE APPLICABLE LAW, BY KEEPING YOUR SENSAPHONE PRODUCT BEYOND THIRTY (30) DAYS AFTER THE DATE OF DELIVERY, YOU FULLY ACCEPT THE TERMS AND CONDITIONS SET FORTH IN THIS LIMITED WARRANTY.

IN ADDITION, WHERE PERMITTED BY THE APPLICABLE LAW, YOUR INSTALLATION AND/OR USE OF THE PRODUCT CONSTITUTES FULL ACCEPTANCE OF THE TERMS AND CONDITIONS OF THIS LIMITED WARRANTY (HEREINAFTER REFERRED TO AS "LIMITED WARRANTY OR WARRANTY"). IF YOU DO NOT AGREE TO THE TERMS AND CONDITIONS THIS WARRANTY, INCLUDING ANY LIMITATIONS OF WARRANTY, INDEMNIFICATION TERMS OR LIMITATION OF LIABILITY, THEN YOU SHOULD NOT USE THE PRODUCT AND SHOULD RETURN IT TO THE SELLER FOR A REFUND OF THE PURCHASE PRICE. THE LAW MAY VARY BY JURISDICTION AS TO THE APPLICABILITY OF YOUR INSTALLATION OR USE ACTUALLY CONSTITUTING ACCEPTANCE OF THE TERMS AND CONDITIONS HEREIN AND AS TO THE APPLICABILITY OF ANY LIMITATION OF WARRANTY, INDEMNIFICATION TERMS OR LIMITATIONS OF LIABILITY.

1. **WARRANTOR**: IN THIS WARRANTY, WARRANTOR SHALL MEAN "DEALER, DISTRIBUTOR, AND/OR MANUFACTURER."

2. **ELEMENTS OF WARRANTY**: THIS PRODUCT IS WARRANTED TO BE FREE FROM DEFECTS IN MATERIALS AND CRAFTSMANSHIP WITH ONLY THE LIMITATIONS AND EXCLUSIONS SET OUT BELOW.

3. **WARRANTY AND REMEDY**: TWO-YEAR WARRANTY — IN THE EVENT THAT THE PRODUCT DOES NOT CONFORM TO THIS WARRANTY AT ANY TIME DURING THE TIME OF TWO YEARS FROM ORIGINAL PURCHASE, WARRANTOR WILL REPAIR THE DEFECT AND RETURN IT TO YOU AT NO CHARGE.

THIS WARRANTY SHALL TERMINATE AND BE OF NO FURTHER EFFECT AT THE TIME THE PRODUCT IS: (1) DAMAGED BY EXTRANEOUS CAUSE SUCH AS FIRE, WATER, LIGHTNING, ETC. OR NOT MAINTAINED AS REASONABLE AND NECESSARY; OR (2) MODIFIED; OR (3) IMPROPERLY INSTALLED; OR (4) MISUSED; OR (5) REPAIRED OR SERVICED BY SOMEONE OTHER THAN WARRANTORS' AUTHORIZED PERSONNEL OR SOMEONE EXPRESSLY AUTHORIZED BY WARRANTOR'S TO MAKE SUCH SERVICE OR REPAIRS; (6) USED IN A MANNER OR PURPOSE FOR WHICH THE PRODUCT WAS NOT INTENDED; OR (7) SOLD BY ORIGINAL PURCHASER.

LIMITED WARRANTY, LIMITATION OF DAMAGES AND DISCLAIMER OF LIABILITY FOR DAMAGES: THE WARRANTOR'S OBLIGATION UNDER THIS WARRANTY IS LIMITED TO REPAIR OR REPLACEMENT OF THE PRODUCT, AT THE WARRANTOR'S OPTION AS TO REPAIR OR REPLACEMENT. IN NO EVENT SHALL WARRANTORS BE LIABLE OR RESPONSIBLE FOR PAYMENT OF ANY INCIDENTAL, CONSEQUENTIAL, SPECIAL AND/OR PUNITIVE DAMAGES OF ANY KIND, INCLUDING BUT NOT LIMITED TO ANY LABOR COSTS, PRODUCT COSTS, LOST REVENUE, BUSINESS INTERRUPTION LOSSES, LOST PROFITS, LOSS OF BUSINESS, LOSS OF DATA OR INFORMATION, OR FINANCIAL LOSS, FOR CLAIMS OF ANY NATURE, INCLUDING BUT NOT LIMITED TO CLAIMS IN CONTRACT, BREACH OF WARRANTY OR TORT, AND WHETHER OR NOT CAUSED BY WARRANTORS' NEGLIGENCE. IN THE EVENT THAT IT IS DETERMINED IN ANY ADJUDICATION THAT THE LIMITED WARRANTIES OF REPAIR OR REPLACEMENT ARE INAPPLICABLE, THEN THE PURCHASER'S SOLE REMEDY SHALL BE PAYMENT

TO THE PURCHASER OF THE ORIGINAL COST OF THE PRODUCT, AND IN NO EVENT SHALL WARRANTORS BE LIABLE OR RESPONSIBLE FOR PAYMENT OF ANY INCIDENTAL, CONSEQUENTIAL, SPECIAL AND/OR PUNITIVE DAMAGES OF ANY KIND, INCLUDING BUT NOT LIMITED TO ANY LOST REVENUE, BUSINESS INTERRUPTION LOSSES, LOST PROFITS, LOSS OF BUSINESS, LOSS OF DATA OR INFORMATION, OR FINANCIAL LOSS, FOR CLAIMS OF ANY NATURE, INCLUDING BUT NOT LIMITED TO CLAIMS IN CONTRACT, BREACH OF WARRANTY OR TORT, AND WHETHER OR NOT

CAUSED BY WARRANTORS' NEGLIGENCE.

WITHOUT WAIVING ANY PROVISION IN THIS LIMITED WARRANTY, IF A CIRCUMSTANCE ARISES WHERE WARRANTORS ARE FOUND TO BE LIABLE FOR ANY LOSS OR DAMAGE ARISING OUT OF MISTAKES, NEGLIGENCE, OMISSIONS, INTERRUPTIONS, DELAYS, ERRORS OR DEFECTS IN WARRANTORS' PRODUCTS OR SERVICES, SUCH LIABILITY SHALL NOT EXCEED THE TOTAL AMOUNT PAID BY THE CUSTOMER FOR WARRANTORS' PRODUCT AND SERVICES OR $250.00, WHICHEVER IS GREATER. YOU HEREBY RELEASE WARRANTORS FROM ANY AND ALL OBLIGATIONS, LIABILITIES AND CLAIMS IN EXCESS OF THIS LIMITATION.

INDEMNIFICATION AND COVENANT NOT TO SUE: YOU WILL INDEMNIFY, DEFEND AND HOLD HARMLESS WARRANTORS, THEIR OWNERS, DIRECTORS, OFFICERS, EMPLOYEES, AGENTS, SUPPLIERS OR AFFILIATED COMPANIES, AGAINST ANY AND ALL CLAIMS, DEMANDS OR ACTIONS BASED UPON ANY LOSSES, LIABILITIES, DAMAGES OR COSTS, INCLUDING BUT NOT LIMITED TO DAMAGES THAT ARE DIRECT OR INDIRECT, INCIDENTAL, SPECIAL OR CONSEQUENTIAL, AND INCLUDING ATTORNEYS FEES AND LEGAL COSTS, THAT MAY RESULT FROM THE INSTALLATION, OPERATION, USE OF, OR INABILITY TO USE WARRANTORS' PRODUCTS AND SERVICES, OR FROM THE FAILURE OF THE WARRANTORS' SYSTEM TO REPORT A GIVEN EVENT OR CONDITION, WHETHER OR NOT CAUSED BY WARRANTORS' NEGLIGENCE.

YOU AGREE TO RELEASE, WAIVE, DISCHARGE AND COVENANT NOT TO SUE WARRANTORS, THEIR OWNERS, DIRECTORS, OFFICERS, EMPLOYEES, AGENTS, SUPPLIERS OR AFFILIATED COMPANIES, FOR ANY AND ALL LIABILITIES POTENTIALLY ARISING FROM ANY CLAIM, DEMAND OR ACTION BASED UPON ANY LOSSES, LIABILITIES, DAMAGES OR COSTS, INCLUDING BUT NOT LIMITED TO DAMAGES THAT ARE DIRECT OR INDIRECT, INCIDENTAL, SPECIAL OR CONSEQUENTIAL, AND INCLUDING ATTORNEYS FEES AND LEGAL COSTS, THAT MAY RESULT FROM THE INSTALLATION, OPERATION, USE OF, OR INABILITY TO USE WARRANTORS' PRODUCTS AND SERVICES, OR FROM THE FAILURE OF THE WARRANTORS' SYSTEM TO REPORT A GIVEN EVENT OR CONDITION, WHETHER OR NOT CAUSED BY WARRANTORS' NEGLIGENCE, EXCEPT AS NECESSARY TO ENFORCE THE EXPRESS TERMS OF THIS LIMITED WARRANTY.

EXCLUSIVE WARRANTY: THE LIMITED WARRANTY OR WARRANTIES DESCRIBED HEREIN CONSTITUTE THE SOLE WARRANTY OR WARRANTIES TO THE PURCHASER. ALL IMPLIED WARRANTIES ARE EXPRESSLY DISCLAIMED, INCLUDING: THE WARRANTY OF MERCHANTABILITY AND THE WARRANTY OF FITNESS FOR A PARTICULAR USE AND THE WARRANTY OF FITNESS FOR A PARTICULAR PURPOSE AND THE WARRANTY OF NON-INFRINGEMENT AND/OR ANY WARRANTY ARISING FROM A COURSE OF DEALING, USAGE, OR TRADE PRACTICE.

IT MUST BE CLEAR THAT THE WARRANTORS ARE NOT INSURING YOUR PREMISES OR BUSINESS OR GUARANTEEING THAT THERE WILL NOT BE DAMAGE TO YOUR PERSON OR PROPERTY OR BUSINESS IF YOU USE THIS PRODUCT. YOU SHOULD MAINTAIN INSURANCE COVERAGE SUFFICIENT TO PROVIDE COMPENSATION FOR ANY LOSS, DAMAGE, OR EXPENSE THAT MAY ARISE IN CONNECTION WITH THE USE OF PRODUCTS OR SERVICES, EVEN IF CAUSED BY WARRANTORS' NEGLIGENCE. THE WARRANTORS ASSUME NO LIABILITY FOR INSTALLATION OF THE PRODUCT AND/

OR INTERRUPTIONS OF THE SERVICE DUE TO STRIKES, RIOTS, FLOODS, FIRE, AND/OR ANY CAUSE BEYOND SELLER'S CONTROL, FURTHER SUBJECT TO THE LIMITATIONS EXPRESSED IN ANY LICENSE AGREEMENT OR OTHER AGREEMENT PROVIDED BY WARRANTORS TO PURCHASER.

THE AGREEMENT BETWEEN THE WARRANTORS AND THE PURCHASER, INCLUDING BUT NOT LIMITED TO THE TERMS AND CONDITIONS HEREIN SHALL NOT BE GOVERNED BY THE CONVENTION FOR THE INTERNATIONAL SALE OF GOODS. WHERE APPLICABLE, THE UNIFORM COMMERCIAL CODE AS ADOPTED BY THE STATE OF DELAWARE SHALL APPLY.

4. **PROCEDURE FOR OBTAINING PERFORMANCE OF WARRANTY**: IN THE EVENT THAT THE PRODUCT DOES NOT CONFORM TO THIS WARRANTY, THE PRODUCT SHOULD BE SHIPPED OR DELIVERED FREIGHT PREPAID TO A WARRANTOR WITH EVIDENCE OF ORIGINAL PURCHASE.

5. **LEGAL REMEDIES AND DISCLAIMER**: SOME JURISDICTIONS MAY NOT ALLOW, OR MAY PLACE LIMITS UPON, THE EXCLUSION AND/OR LIMITATION OF IMPLIED WARRANTIES, INCIDENTAL DAMAGES AND/OR CONSEQUENTIAL DAMAGES FOR SOME TYPES OF GOODS OR PRODUCTS SOLD TO CONSUMERS AND/OR THE USE OF INDEMNIFICATION TERMS. THUS, THE EXCLUSIONS, INDEMNIFICATION TERMS AND LIMITATIONS SET OUT ABOVE MAY NOT APPLY, OR MAY BE LIMITED IN THEIR APPLICATION, TO YOU. IF THE IMPLIED WARRANTIES CAN NOT BE EXCLUDED, AND THE APPLICABLE LAW PERMITS LIMITING THE DURATION OF IMPLIED WARRANTIES, THEN THE IMPLIED WARRANTIES HEREIN ARE TO BE LIMITED TO THE SAME DURATION AS THE APPLICABLE WRITTEN WARRANTY OR WARRANTIES HEREIN. THE WARRANTY OR WARRANTIES HEREIN MAY GIVE YOU SPECIFIC LEGAL RIGHTS THAT WILL DEPEND UPON THE APPLICABLE LAW. YOU MAY ALSO HAVE OTHER LEGAL RIGHTS DEPENDING UPON THE LAW IN YOUR JURISDICTION.

6. **CHOICE OF FORUM AND CHOICE OF LAW**: IN THE EVENT THAT A DISPUTE ARISES OUT OF OR IN CONNECTION WITH THIS LIMITED WARRANTY, THEN ANY CLAIMS OR SUITS OF ANY KIND CONCERNING SUCH DISPUTES SHALL ONLY AND EXCLUSIVELY BE BROUGHT IN EITHER THE COURT OF COMMON PLEAS OF DELAWARE COUNTY, PENNSYLVANIA OR THE UNITED STATES DISTRICT COURT FOR THE EASTERN DISTRICT OF PENNSYLVANIA.

REGARDLESS OF THE PLACE OF CONTRACTING OR PERFORMANCE, THIS LIMITED WARRANTY AND ALL QUESTIONS RELATING TO ITS VALIDITY, INTERPRETATION, PERFORMANCE AND ENFORCEMENT SHALL BE GOVERNED BY AND CONSTRUED IN ACCORDANCE WITH THE LAWS OF THE STATE OF DELAWARE, WITHOUT REGARD TO THE PRINCIPLES OF CONFLICTS OF LAW.

Effective date 05/01/2004

PHONETICS, INC. d.b.a. SENSAPHONE

901 Tryens Road

Aston, PA 19014
Phone: 610.558.2700 Fax: 610.558.0222
www.sensaphone.com

TABLE OF CONTENTS

IMPORTANT SAFETY INSTRUCTIONS 3
FCC REQUIREMENTS 4

CHAPTER 1: INTRODUCTION 13
CELL682 DIAGRAM 14
QUICK START 15
CELL682 WEB PAGE 15
TECHNICAL SUPPORT 16

CHAPTER 2: INSTALLATION 17
OPERATING ENVIRONMENT. 17
ACTIVATING YOUR CELL682 17
MOUNTING THE CELL682 (NEMA-4X HOUSING) 17
LOCKING THE NEMA 4X ENCLOSURE. 18
ANTENNA INFORMATION 19
CONNECTING THE POWER SUPPLY 19
CONNECTING THE BATTERY 20
WIRING PROCEDURE 20
GROUNDING 21
WIRING SENSORS TO DRY CONTACT INPUTS. 21
WIRING SENSORS TO ANALOG INPUTS. 23
WIRING RECOMMENDATIONS 24

CHAPTER 3: SOFTWARE INSTALLATION. 27
INSTALLING AND STARTING THE SOFTWARE. 27
ACTIVATING YOUR CELL682 27
CHECKING WIRELESS SIGNAL STRENGTH 29
CELL682 WEB PAGE 30

CHAPTER 4: INPUT PROGRAMMING 31
ALARM STATES 31
DRY CONTACT INPUTS 32
DRY CONTACT PROGRAMMING 32
ANALOG INPUTS 34
ANALOG INPUTS PROGRAMMING 35

CHAPTER 5: OUTPUT PROGRAMMING 38
SETTING THE OUTPUT NAME 38
CONFIGURING THE OUTPUT OPERATING MODE. 39
SWITCHING THE OUTPUT 39
OUTPUT STATUS & STATISTICS 39

CHAPTER 6: PUMP CONTROL. 41
HOW IT WORKS—FLOAT SWITCHES. 41
HOW IT WORKS—ANALOG LEVEL SENSOR 42
INSTALLATION RECOMMENDATIONS 42
PROGRAMMING FOR PUMP CONTROL. 43
OUTPUT WIRING. 44

CHAPTER 7: MACHINE-TO-MACHINE CONTROL 45
LOCAL OUTPUT CONTROL 46
IMPORTANT INFORMATION AND WARNINGS 46
SAMPLE APPLICATION. 47

CHAPTER 8: ALARM NOTIFICATION 49
HOW DOES NOTIFICATION WORK 49
VOICE PHONE CALL 49
INTERNET E-MAIL 51
ALPHANUMERIC PAGER 52
TEXT MESSAGING TO CELL PHONES. 53
ALARM ACKNOWLEDGMENT VIA E-MAIL. 57
ADDITIONAL INFORMATION. 57

CHAPTER 9: OPERATION 59
PART ONE: ALARM NOTIFICATION AND ACKNOWLEDGMENT. 59
TIER DELAY 60
ALARM ACKNOWLEDGMENT 61
ALARM ACKNOWLEDGMENT—TEXT MESSAGE TO CELL PHONE 62
PART TWO: STATUS REQUEST 62

CHAPTER 10: CELL682 WEB PAGE 64
STATUS REFRESH. 64
PROGRAMMING REFRESH. 64
PROGRAMMING VIA THE WEB PAGE 64

SWITCHING OUTPUTS VIA THE WEB PAGE 65
ALARM ACKNOWLEDGEMENT HISTORY 65

CHAPTER 11: TESTING THE CELL682 66
NOTIFICATION TESTING 66
INPUT TESTING 66
OUTPUT TESTING 67
CONTROL PROGRAMMING 67
PUMP CONTROL 67

APPENDIX A: CHECKING YOUR CELL682 FOR PROPER OPERATION. 69

APPENDIX B: TROUBLESHOOTING 70

APPENDIX C: THERMISTOR TABLE. 74
10K THERMISTOR DATA. 74
2.8K THERMISTOR DATA 74

APPENDIX D: CELL682 SPECIFICATIONS 75
ENVIRONMENTAL INPUTS. 75
RELAY OUTPUTS 75
LED INDICATORS. 75
POWER SUPPLY. 75
ENVIRONMENTAL. 75
PHYSICAL: CELL682 UNIT IN NEMA-4 ENCLOSURE 75

APPENDIX E: REPLACING THE BACKUP BATTERY. 76

APPENDIX F: OPTIONAL ACCESSORIES. 78

APPENDIX G: RETURNING YOUR CELL682 FOR REPAIR. 79

Test Log 80

CHAPTER 1: INTRODUCTION

Congratulations on your purchase of the Cell682 by Sensaphone.

The Cell682 is a powerful monitoring, alarm, and control system. Its built-in wireless technology means you won't need a telephone line to communicate with the unit. It can monitor and control your environment and equipment using eight dry contact inputs, six analog inputs, built-in power failure detection, and two relay outputs. It can perform simplex or duplex alternating pump control using a level transducer or float switches. The unit can also perform machine-to-machine control among multiple Cell682 devices. Up to 8 machine-to-machine control algorithms can be configured per device so that input conditions on one Cell682 can logically control outputs on another using simple, fill-in-the-blank, comparison programming. The unit features several communication options including: voice telephone call, e-mail, and text messaging. You can also request a status report from any e–mail compatible device. The Cell682 is fully programmable via the included Cell682 Software package for Windows or through the unit's web page at www.Cell682.com. Activation of a wireless messaging plan required.

The Cell682 will produce a web page of input and output status and alarm acknowledgement history that can be viewed at **www.cell682.com**. You can also program the unit or control outputs from the web page. The Cell682 is the ultimate choice for remote monitoring and control where telephone lines are non-existent or too expensive. Applications include pump houses, cable TV huts, remote equipment rooms, and tower light monitoring.

On the front of the unit are LED indicators to show the operating status (Power, Battery OK, In-Range, Registered, Alarm, and Outputs). All programming is stored in nonvolatile memory so that all programming is retained even without power. A complete status report of all monitored conditions can be retrieved via e-mail for viewing on a computer or text messaging device. The Cell682.com web page can be updated on demand to allow viewing of the current conditions at the site from any internet-connected computer. The unit comes in a plastic NEMA-4X enclosure with internal rechargeable battery backup, power supply and antenna.

FEATURES

- 8 Dry Contact Inputs: NO, NC, Pulse Count, Equipment Run-Time
- 6 Analog Inputs: 2.8K and 10K Thermistor (temperature), or 4–20mA
- 2 Relay Outputs: 20 different automatic and manual modes
- Local Logic Control
- Machine-to-Machine Control among Cell682 units
- Duplex and Simplex Pump Control
- Wireless Alarm Message Delivery via Voice, E-mail, or text message.
- Status & Programming via web page
- NEMA 4X enclosure and Battery Backup

CELL682 DIAGRAM

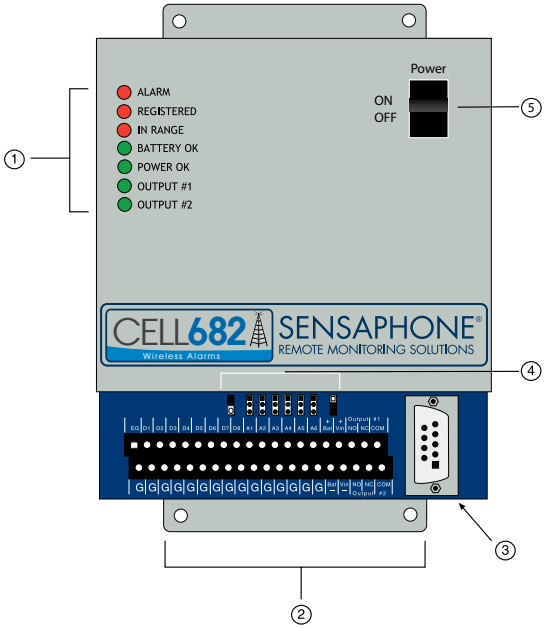

1. LEDs
2. Terminal blocks
3. RS-232 DCE
4. Jumpers for Temperature or 4–20mA settings
5. Power On, Off switch

QUICK START

When installing and programming a Cell682 there are several steps required for all installations. Listed below are those required for a typical installation and start-up of the Cell682.

1) Confirm wireless coverage for the installation site. The CELL682 uses GSM cellular providers such as T-Mobile and AT&T. You can check "data" coverage using their respective websites or contact Sensaphone technical support and we'll check it for you.
2) Activate a wireless service plan for the unit. Contact Sensaphone and have your serial number available. This is required for the unit to operate. Activation enables access to your unit via the CELL682 website, as well as provides for notification of alarms via e-mail and voice phone call.
3) Install the unit in an area that provides good cellular reception. An optional external antenna with 16' cable is available, if necessary.
4) Attach the antenna to the top of the enclosure and plug-in the power supply. Connect the black battery wire (taped to the inside of the enclosure) to the (BAT -) terminal.
5) Once the unit powers-up, make sure the In Range and Registered LED's are lit.
6) Configure the input jumpers, if necessary, and connect the sensors to the terminal strip.
7) Verify status on the web site. (the PIN number is the last four digits of the serial number and the default password is "cell682").

CELL682 WEB PAGE

Your CELL682 is accessible via the Internet at www.CELL682.com. Simply enter your PIN and password (default is cell682) and you will be logged in to the web page for your device. Your PIN is the last 4 digits of your serial number. Be sure to change your password for security purposes. To see the current values click the Status Refresh link and in about 2 minutes you will see the current input and output values displayed on the page. You can make programming changes and even control the relay outputs from the web page. If any programming was performed using a direct connection to the serial port of the CELL682, then be sure to click the Programming Refresh link on the web page, so that you will be viewing the latest programming in the device..

TECHNICAL SUPPORT

This instruction manual will help you install and program the Cell682 properly. Be sure to read it completely before beginning the installation process. If there are any questions or problems that arise upon installation or operation, please contact our Technical Support team:

SENSAPHONE®
901 Tryens Road
Aston, PA 19014
Phone: 610.558.2700
FAX: 610.558.0222
support@sensaphone.com

CHAPTER 2: INSTALLATION

OPERATING ENVIRONMENT

The Cell682 should be mounted and operated in a clean, dry environment. The unit must communicate to the wireless network, so care must be taken not to install the unit inside a metal cabinet or other location that will prevent the unit from receiving a radio signal unless the antenna can be relocated to a location free of obstruction. The unit is microprocessor-controlled and, as a result, should not be installed near devices that generate strong electromagnetic fields. Such interference is typically generated by power switching equipment such as motors, contactors, or variable frequency drives. Where this is unavoidable, mount the unit in a separate, grounded steel enclosure with an external antenna (see Appendix F: Accessories). A poor operating environment may result in unwanted system resets and/or system lockup. The temperature range the unit can operate in is -22°F to 140°F (-30°C to 60°C).

WARNING: Attach the antenna before applying power to the Cell682. Never remove the antenna while the unit is powered on.

ACTIVATING YOUR CELL682

Your Cell682 device *must* be activated on the wireless network before you can send or receive messages *and* before any local programming is performed for the first time.

To activate your Cell682 device, fill out the registration form included with the package and follow the instructions, or contact your sales representative with the device serial number.

Your Cell682 is activated when the “In Range” and “Registered” LEDs are lit.

MOUNTING THE CELL682 (NEMA-4X HOUSING)

Locate a suitable mounting location for the Cell682 enclosure that provides good radio reception and convenient wiring to your equipment and power. On the top and bottom of the housing are mounting tabs to attach the unit to a wall. The mounting surface should be sturdy enough to support 10 lbs. The unit should be mounted using four #10-32 bolts where appropriate, or four #10 tapping screws. (The screw kit for the Cell682 includes (4) #10-32 screws, (4) #10-32 nuts, and (4) #10 lockwashers). When mounting the unit to a wall, make sure the mounting screws fully engage a solid member (for example, a stud) of the support structure. Mount the Cell682 in an upright position so that you can easily connect wires to the terminal strips. The dimensions of the NEMA-4x enclosure are: 12.1” x 8.0” x 5.5” / 30.7 x 20.3 x 13.9cm. See Figure 1.

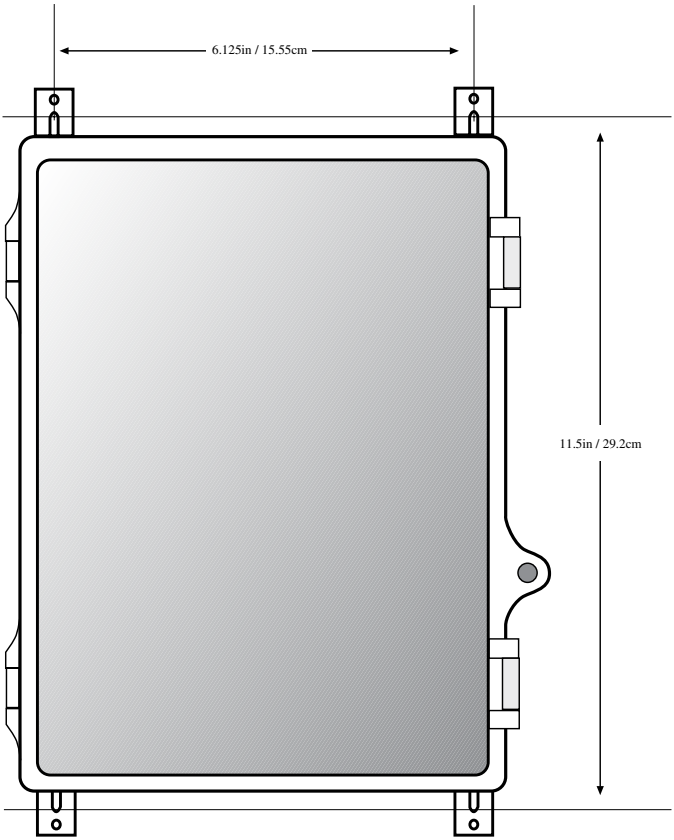

Figure 1: NEMA-4 Mounting diagram

LOCKING THE NEMA 4X ENCLOSURE

The Cell682 enclosure can be locked by installing a small padlock through the loop on the front door of the enclosure. See Figure 2.

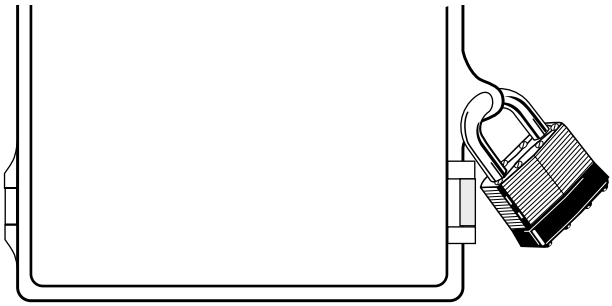

Figure 2: Locking the NEMA-4x enclosure

ANTENNA INFORMATION

The Cell682 comes with a unity-gain antenna designed specifically for the frequency range required. In order to comply with FCC RF exposure, the external antenna must be mounted in a location where people will never come within 20cm of the antenna. The gain of the antenna may not exceed 0dBi. For optimum antenna performance, there should be no metal objects within close proximity of the antenna.

> **WARNING:** Do not over-tighten the antenna on the Cell682; this may cause permanent damage to the device.

The antenna must be connected before the device is powered up.

CONNECTING THE POWER SUPPLY

The Cell682 requires a 18VDC power supply to operate. This power supply will charge the internal 12V battery and provide the necessary power to transmit messages over the wireless network.

WARNING: Do not substitute supplies with lower capacity.

Connect the positive terminal of the Power Supply to the **+Vin** terminal on the Cell682.

Connect the negative terminal of the Power Supply to the **-Vin** terminal on the Cell682.

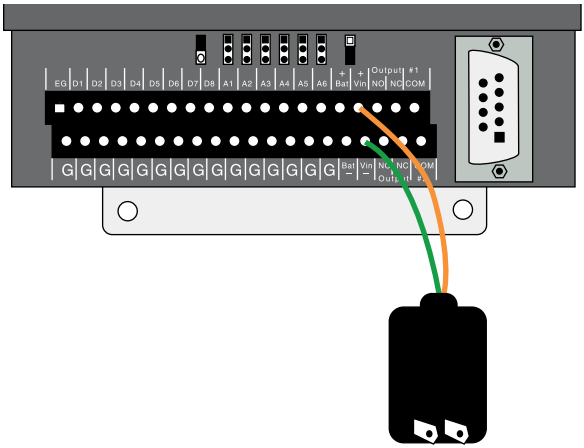

Figure 3: Power Supply Wiring

CONNECTING THE BATTERY

The CELL682 contains an internal 12V rechargeable battery that must be wired to the terminal strip at the time of installation (see procedure below). The battery will power the system for several hours in the event of a power failure. The unit incorporates circuitry to maintain the proper charge for a 12V gel-cell battery whenever the power supply is plugged-in. The unit also includes special circuitry to prevent the battery from being damaged in the event of an extended power outage. The battery should provide approximately 3-5 years of service life before needing replacement depending on temperature and the number of charge/discharge cycles.

WIRING PROCEDURE

Connect the positive terminal of the battery (red wire) to the + **Bat** terminal on the Cell682.

Connect the negative terminal of the battery (black wire) to the – **Bat** terminal on the Cell682.

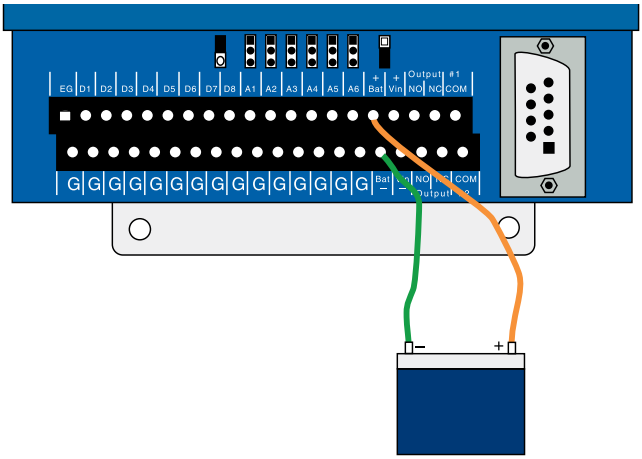

Figure 4: Battery connection

The battery is considered low at 12.0V and the Battery LED will blink at this voltage level. If main power is less than 7.0V and the battery voltage reaches 11V, the battery LED will go out and the unit will go into hibernation mode (a low-power mode in which the unit shuts down). The unit will return to its regular operating mode when either the main power is restored or the battery voltage rises above 11.5V. If the battery voltage continues to fall below 10.5V, the unit will disconnect the battery to prevent deep discharge damage to the battery. The unit will not reconnect the battery until the battery voltage rises above 12.5V.

GROUNDING

Connect a #14AWG copper wire to the earth ground terminal (marked "EG") on the left end of the terminal strip and connect the other end to a ground rod or metal cold water pipe *(See Figure 6)*. It is extremely important that the earth ground connection be as short as possible. The ground rod should have sufficient depth to provide a low impedance connection to earth. This connection is required for the surge/lightning protection circuits to function properly.

NOTE: Proper earth grounding of the Cell682 is required for warranty coverage.

Ground rods can typically be found at local electrical supply houses and/or hardware stores. You MUST contact your state "Call before you dig" hotline at least *two* days before you install your ground rod, to insure that it is safe to install the ground rod in a chosen area.

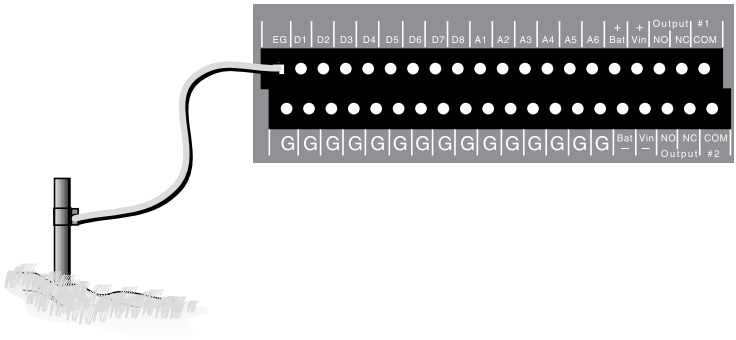

Figure 5: Grounding the Cell682

WIRING SENSORS TO DRY CONTACT INPUTS

The Cell682 has 8 Dry Contact inputs that can be used to monitor Normally Open (N.O.) or Normally Closed (N.C.) sensors. In addition, they can also be used for pulse counting and equipment run-time accumulation. When used for pulse count or run time functions, the unit will count the pulse (or accumulate time) when the input changes to the opposite of its normal state.

Dry contact sensors are wired to the terminals labeled D1 through D8. The corresponding Ground terminals are located on the lower level terminal strip. The input type is programmed within the Cell682 Software or website.

WARNING: Do not use sensors, switches, or relays that supply any voltage or current to the Cell682.

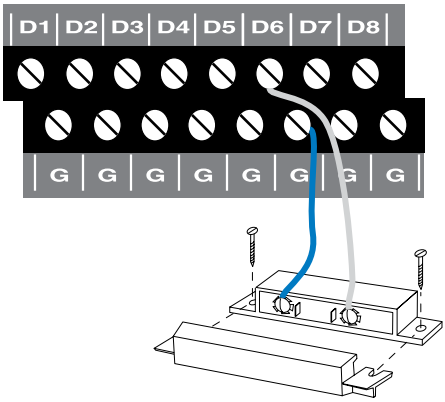

Figure 6: Sensor connected to a dry contact input]

Any N.O. or N.C. sensor can be attached to the Cell682 using 18–24 gauge wire. For distances of 1000' or more, use heavier gauge wire. When running wire outdoors it is recommended that shielded cable be used. Connect the shield to a good earth ground or metallic cold water pipe. The total resistance of the circuit cannot be greater than 100 ohms. Use wire appropriate for the application. See the wire length recommendations, later in this chapter.

The Cell682 may have more than one sensor connected to the same terminal, however, the normal condition for each sensor on the same terminal must be identical (either all N.O. or all N.C.).

NORMALLY CLOSED SENSORS

To wire more than one normally closed sensor on one input, they must be connected in series. Connect a lead from the first sensor to one of the Dry Contact Inputs on the terminal strip. Next, take the other lead from the first sensor and connect it to one lead from the next sensor. Continue connecting sensors end-to-end until you have connected all of your sensors. Take the second lead from your last sensor and connect it to the ground screw on the Cell682 terminal strip. See Figure 7.

Multiple N.C. inputs are typically magnetic reed switches to monitor the security of windows and doors.

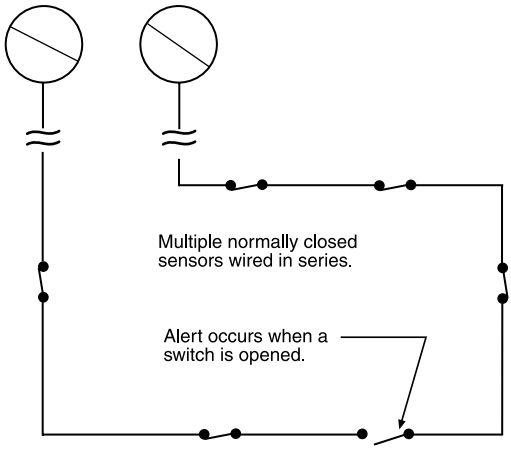

Figure 7: Connecting multiple N.C. sensors to one input terminal

NORMALLY OPEN SENSORS

To wire several normally open sensors to one Dry Contact input, connect them in parallel. To do this, take one lead from each sensor and attach it one of the Dry Contact Input terminals. Then take the second lead from each sensor and attach it to the corresponding ground terminal. See Figure 8.

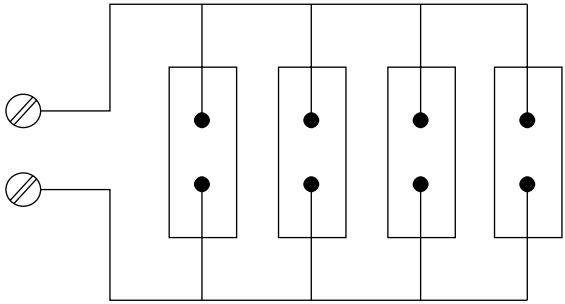

Figure 8: Connecting multiple N.O. sensors to one input terminal

WIRING SENSORS TO ANALOG INPUTS

The Cell682 has 6 Analog inputs that can be used to monitor 2.8K or 10K Thermistors (temperature) or 4–20mA transducers. Analog transducers are wired to the terminals labeled A1 through A6. The corresponding Ground terminals are located on the lower level terminal strip. The input must be configured by setting the corresponding jumper in either the Temperature or 4–20mA position. See figure below:

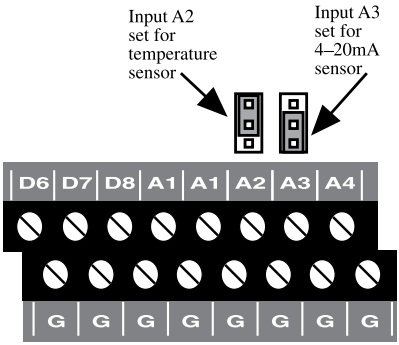

Figure 9: Input A2 configured for temp, A3 configured for 4-20mA

Temperature: The unit will accept 2.8K or 10K thermistors. These should be wired to an Analog Input terminal and the adjacent ground terminal. For compatible thermistors check the accessory list or thermistor data in the appendices. 10K Thermistor temperature range: -60ºF to 175ºF (-51ºC to 79ºC).

4–20mA: A 4–20mA transducer requires you to have an external DC power supply for the transducer. Connect the positive wire of your transducer to the positive terminal of your DC power supply. Connect the negative terminal of the transducer to an Analog Input terminal on the Cell682. Connect the negative terminal from your power supply to the adjacent ground terminal on the Cell682.

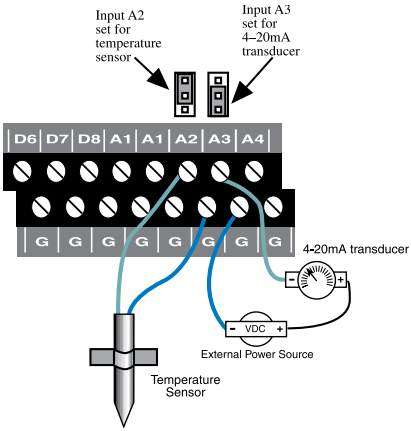

Figure 10: A thermistor and a 4–20mA transducer connected to the unit

WIRING RECOMMENDATIONS

The Cell682 will work fine in indoor environments using unshielded cable. When wiring will be subject to long lengths (>100') or if run outdoors, it is highly recommended that shielded cable be used and that the shield be connected to an earth

ground. This is particularly important for sensor wires that are run in conduit with other noise-generating conductors, such as 60Hz AC. It is strongly recommended that input wiring be run in a conduit separated from AC power or output wiring. When wire runs are long or are in close proximity to large power consuming, power generating, or power switching equipment, it is highly recommended that shielded wire be used.

Also, be sure to use the appropriate gauge wire based on the distance and sensor type. See chart below:

Wire Gauge	Thermistor	NO/NC Contact & 4–20mA
#24	250’	1000’
#22	500’	2000’
#20	1000’	4000’

When preparing wire for connection to the terminal blocks, strip 1⁄4” of insulation from the conductor (see figure below).

Figure 11: Wire stripped for connection

NOTE: All wiring should comply with Section 17 of the UL requirements.

LED INDICATORS

The LEDs provide on-site alarm and status information. Listed below are descriptions of how the LEDs work.

ALARM:

LED Off: No alarms

LED Blinking: Unacknowledged alarm exists

LED On: Acknowledged alarm exists

REGISTERED:

LED Off: Not registered (unit not activated)

LED Blinking: Cell682 is sending or receiving messages

LED On: Registered

IN RANGE:

LED Off: Not in range of wireless network

LED On: In range of wireless network

BATTERY OK:

LED Off: No Battery

LED Blinking: Battery condition low

LED On: Battery OK

POWER OK:

LED Off: Power is Off

LED Blinking slow: Power very low (unit hibernating)

LED Blinking fast: Power is low

LED On: Power is OK

OUTPUT #1:

LED Off: Output Relay #1 is off.

LED On: Output Relay #1 is on.

OUTPUT #2:

LED Off: Output Relay #2 is off.

LED On: Output Relay #2 is on.

CHAPTER 3: SOFTWARE INSTALLATION

This section describes how to install and configure the Cell682 Programming Software for your computer.

INSTALLING AND STARTING THE SOFTWARE

Minimum requirements:

- Microsoft Windows™ 2000, XP, Vista, or 7
- CD-ROM drive
- Serial Port (or USB-to-serial adapter)Installation

The Cell682 Programming Software is easy to install. Make sure that all Windows applications are closed before attempting to run Setup. If you encounter problems during installation, please call Sensaphone Technical Support at 610-558-2700. The Cell682 Software will install to a directory named *C:\Program Files\Cell682*, unless you choose to change the directory name.

1. Start Windows.
2. Insert the Cell682 CD-ROM. The installation program should run automatically. Follow the prompts as directed.

If the software does not install automatically, then click the *Windows Start* button, and select *Run*, then type in d:\setup.exe. Click *OK*. Follow the prompts as directed.

3. Reboot your computer when the installation is complete.

ACTIVATING YOUR CELL682

Your Cell682 device *must* be registered on the wireless network before you can send or receive messages *and* before any local programming is performed for the first time.

To activate your Cell682 device, fill out the registration form included with the package and follow the instructions, or contact your sales representative with the device serial number.

Your Cell682 is activated when the “In Range” and “Registered” LEDs are lit.

Note: The *Registered* LED will blink when the Cell682 is sending or receiving messages.

CONNECTING LOCALLY

The Cell682 Software will allow you to connect with the unit to view status and program it. First, connect a serial cable to a serial port on your computer. Connect the other end to the 9-pin RS-232 connector on the Cell682. Run the Cell682 Software. The following screen will appear.

Figure 1: First-Run Unit Information form

Click the *New* button to set-up a new Cell682 unit. The *Edit Cell682 Unit* screen will appear (see right).

Figure 2: Edit Cell682 Unit

Enter the PIN, Name, Description, and Comm Port settings for this unit. The PIN is the last four digits of the serial number. The unit Name can be up to 20 characters, the Description can be up to 30 characters. Click *OK*. Now click the *Connect* button and the software should connect and start downloading the programming from the unit.

Figure 3: Programming Download in progress

If this was a new unit (factory default settings) the Name you entered on the edit screen will automatically be copied into the unit. After downloading the programming, the main Cell682 window will appear (see next page).

Figure 4: Main Cell682 Window: System Tab

This is a good time to enter a new Password. The Password, while not required for local access, is required for all remote communication. The password can be up to 8 characters. Click *Apply* when finished.

CHECKING WIRELESS SIGNAL STRENGTH

The Cell682 performs all of its communication over the wireless network, so it is very important that there be sufficient signal strength at the installation site. You can check the received signal strength from within the Cell682 software while connected through the serial port. Login to your Cell682 and then click on Help then About from the main menu. A list of items will appear about the Software Version, Firmware Version, etc… the last item is called Signal Quality. In order for the Cell682 to operate properly this number must be greater than 10. A higher number is better. Values typically range from 0 to 50. See the sample screen below:

Figure 5: System Information Window

If your Signal Quality value is less than 10 you must either relocate/reposition the unit to improve its ability to communicate with the wireless network or add an

external antenna that can be installed in a better location. Contact Sensaphone technical support for assistance.

CELL682 WEB PAGE

You can view status and change settings in your Cell682 via the internet. This makes it possible to manage your unit from anywhere in the world. See Chapter 10 for detailed information on using the web page.

HOW IT WORKS

You can perform CELL682 programming using either the CELL682 Software or the webpage. Generally, if you are at the unit's location it's faster to perform the programming using the software while directly connected to the device. Alternatively you can program the unit remotely using the CELL 682 web page. The PIN number of your unit is the last 4 digits of the unit's serial number. The default password for the web page is "cell682". You should change this password for security purposes.

If you performed programming using the CELL 682 software then you must click the Programming Refresh link on the web page to have those programming changes updated on the website. To get just the current status of the Inputs and Outputs, you should click the Status Refresh Link. This will retrieve the latest input status from your unit. It may take a few minutes for this process to complete.

CHAPTER 4: INPUT PROGRAMMING

The Cell682 features 8 dry contact inputs and 6 analog inputs. The analog inputs are configurable as temperature or 4–20mA. The contact inputs can be used with Normally Open (NO) or Normally Closed (NC) sensors. The analog inputs can be used with 2.8K or 10K thermistors for temperature monitoring (available from Sensaphone) or any 4–20mA transducer. The monitored temperature range is -60° to 175° F (-51° to 79° C). See page 20 for 2.8K range. Programmable table values can be entered when using 4–20mA transducers to scale the reading to the appropriate units of measure.

Note: It is highly recommended that if you make any programming changes locally (at the unit via the serial port) after your web page has been initialized, that you click the *Programming Refresh* Link on the web page soon thereafter. This is to ensure that the information you are viewing on the web page is up to date. This will also ensure that the alarm log information displayed on the web page is accurate.

ALARM STATES

Each Dry Contact or Analog input is monitored based on the programming parameters that define the input type and the alarm limits for each input. Based on this programming all inputs will always be in one of four *Alarm States*: Normal, Alarm, Unacknowledged Alarm, or Normal-Unacknowledged. Each of these alarm states is defined below:

A "**Normal**" alarm state means that an input is either:

a) Within the programmed alarm limits.

b) A Normally Open input is open, or a Normally Closed input is closed.

c) An input is beyond its limits or is opposite of its programmed normality, but has not yet met its programmed alarm *Recognition Time*.

An input that is in an "**Alarm**" state means that:

a) The selected input is currently beyond its programmed alarm limits or is opposite of its programmed normality.

b) The selected input has exceeded the programmed recognition time.

c) The alarm has been acknowledged.

An input that is in an "**Unacknowledged Alarm**" state means that:

a) The selected input is currently beyond its programmed alarm limits or is opposite of its programmed normality.

b) The selected input has exceeded the programmed recognition time.

c) The alarm has not been acknowledged.

An input that is in a "**Normal** but **Unacknowledged**" state means that:

a) The selected input is within its programmed alarm limits.

b) A Normally Open input is open, or a Normally Closed input is closed.

c) A prior alarm on the selected input has not yet been acknowledged.

DRY CONTACT INPUTS

The 8 dry contact inputs can be programmed for normally open (NO) or normally closed (NC) operation. In addition, you can have the Cell682 count the number of times the input changes state (pulse count) and maintain the amount of time that the input is in the opposite state (Run Time). Click on the *Dry Contact* Tab to display the main status screen.

Figure 1: Dry Contact tab

This screen displays the current status of all 8 dry contact inputs. If any of the inputs were in alarm the *Alarm State* column would display the word "Alarm." If the alarm was unacknowledged, the Alarm State would say "Alarm;Unack" and a button would appear at the bottom of the screen to acknowledge the alarm.

DRY CONTACT PROGRAMMING

Click the input name to bring up the properties screen for the selected input. The following screen will appear:

Figure 2: Dry Contact properties

If a dry contact changes from its Normal state to the opposite state for the duration of the programmed recognition time, the input will go into alarm. Note that it must be a continuous change to be recognized as an alarm. Once an alarm trips, the unit will begin its notification sequence (unless you are online through the serial port, in which case you can acknowledge the alarm directly and cancel the notification process). Listed below are definitions for each of the parameters for programming the dry contact inputs.

CONFIGURING THE INPUT NAME

The input *Name* is used to describe the condition being monitored. It can be up to 20 characters.

INPUT ENABLE/DISABLE

A channel must be *Enabled* for the input to be read by the Cell682. When a channel is enabled its status will appear on the status screen and on the web page.

CONFIGURING THE INPUT TYPE

The input *Type* can be either Normally Open or Normally Closed. When an input changes from its normal condition to the opposite condition, the Pulse Count (if enabled) will increment, the Run Timer (if enabled) will start running, and the Alarm Recognition timer will start running (if alarms are enabled).

CONFIGURING THE RUN TIMER

The *Run Timer* can be used to track how long an input condition has existed. This can be useful for monitoring pump or generator run times. The value can be preset by clicking on the run time value on the lower right part of the screen.

CONFIGURING THE PULSE COUNTER

The *Pulse Counter* can be used to track how many times a contact closure has changed state. Other possibilities include: measuring rainfall from a tipping bucket rain gauge or measuring liquid flow from a pulsed output flow gauge. The maximum value of the Pulse Counter (after the multiplier is applied) is 2 billion. Minimum Pulse Width for Pulse Count: 50ms.

The *Pulse Count Multiplier* allows you to make each pulse equate to a greater value. For example, suppose a flow gauge outputs a single pulse for every 100 gallons. By setting the *Pulse Count Multiplier* to 100 the Pulse Count value now becomes the actual total number of gallons measured by the gauge. The range of values for the Pulse Count Multiplier is 1 to 65,535.

ALARM ENABLE/DISABLE

The *Enable Alarms* checkbox activates the alarm processing functions for the selected channel. When the input exceeds the the programmed alarm limits and exceeds the programmed recognition time the notification process begins.

ALARM ON RETURN-TO-NORMAL

The Cell682 has the capability to notify you when an input (that had previously gone into alarm) returns to normal. When checked, *Alarm on Return-to-Normal* initiates this notification.

ALARM RECOGNITION TIME

The *Recognition Time* is the time required for a fault condition to qualify as an alarm event. The sensor/channel must remain beyond the limits or in a fault condition continuously for this entire period of time in order to become an alarm. The range of values is 0–32,767 seconds.

ALARM RESET TIME

The *Reset Time* is the time allowed for an acknowledged alarm's fault condition to be corrected before the Cell682 resets (reactivates) the alarm and begins the message delivery process all over again. The minimum reset time is 30 minutes, the maximum is 32,767 minutes.

ANALOG INPUTS

The 6 analog inputs can be programmed for 2.8K or 10K thermistor (temperature in degrees Fahrenheit or Celsius) or 4–20mA transducer. The Cell682 will maintain the minimum and maximum values reached for each channel. When 4–20mA is selected you can enter table low and high values to correlate the 4mA and 20mA signals to actual values for your application. Click on the Analog Inputs Tab to display the main status screen.

Figure 3: Analog Inputs tab

This screen displays the current status of all 6 analog inputs. If any of the inputs were in alarm the *Alarm State* column would display the word "Alarm." If the alarm was unacknowledged the Alarm State would say "Alarm Unack" and a button would appear at the bottom of the screen to acknowledge the alarm.

ANALOG INPUTS PROGRAMMING

Figure 4: Analog Inputs Properties

CONFIGURING THE INPUT NAME

The input Name is used to describe the condition being monitored. It can be up to 20 characters.

CONFIGURING THE INPUT TYPE

The input Type can be temperature 2.8K (°F/°C), 10K (°F/°C), or 4–20mA. Select the type to match your sensor.

Note: Be sure to put the input jumper in the correct position.

INPUT ENABLE/DISABLE

A channel must be Enabled for the input to be read by the Cell682. When a channel is enabled its status will appear on the status screen and on the web page. Select the type of analog input from the pulldown menu.

SETTING TABLE LIMITS

When 4–20mA is selected, you can enter table low and high values to correlate the 4mA and 20mA signals to actual values for your application. For example, suppose you're using a 4–20mA transducer to measure the depth of water in a 15 foot well. Simply enter a Table Low value of 0 and a Table High value of 15 and the Cell682 will scale the input to read between 0 and 15 feet.

<u>Programmable range</u>

Table Low/High: -16,300 to 16,300

<u>Default settings</u>

Table Low value: 0

Table High value: 100

CALIBRATION

To compensate for minor variances in sensor accuracy, an offset may be programmed for each analog input. For example, if the above input were sensing temperature and was reading 3 degrees too low, then the calibration would be set at 3 as shown above, to obtain an accurate reading. Only Analog-type inputs can be calibrated.

ALARM ENABLE/DISABLE

The Enable Alarms checkbox activates the alarm processing functions for the selected channel. When the input exceeds the the programmed low or high alarm limits and exceeds the programmed recognition time the notification process begins.

ALARM ON RETURN-TO-NORMAL

The Cell682 has the capability to notify you when an input (that had previously gone into alarm) has returned to normal, that is, returns to within the programmed alarm limits. When checked, Alarm on Return-to-Normal initiates this notification.

SETTING THE ALARM LIMITS

Each analog input has a programmable Low and High Alarm limit. When the input value goes beyond the programmed alarm limits for the duration of the recognition time, the Cell682 will go into alarm and initiate the alarm notification process.

Programmable range

Alarm Low/High: -16,300 to 16,300

Default settings

Alarm Low value: 0

Alarm High value: 100

ALARM RECOGNITION TIME

The Recognition Time is the time required for a fault condition to qualify as an alarm event. The sensor/channel must remain beyond the programmed limits continuously for this entire period of time in order to become an alarm. The range of values is 0–32,767 seconds.

ALARM RESET TIME

The Reset Time is the time allowed for an acknowledged alarm's fault condition to be corrected before the Cell682 resets (reactivates) the alarm and begins the message delivery process all over again. The minimum reset time is 30 minutes, the maximum is 32,767 minutes.

POWER INPUT

Power monitoring is a built-in function. The unit will go into alarm when the power level drops below 11.75V for the programmed recognition time. In this state the Power LED will blink.

BATTERY INPUT

Battery monitoring is a built-in function. The unit will go into alarm when the battery level drops below 12.0V for the programmed recognition time. In this state the Battery LED will blink.

SPECIAL FUNCTION INPUTS

When the Cell682 is used for Pump Control, several of the inputs are dedicated to a specific task depending on whether *Dry Contact* or *Analog Level* is selected as the Pump Control method. The tables below identify which inputs are used and what function they serve. Refer to the Pump Control chapter for more information.

<u>Dry Contact Fill/Drain Pump Control</u>

Dry Contact Input #6 – Lead pump float switch

Dry Contact Input #7 – Lag pump float switch

Dry Contact Input #8 – All pumps off float switch

<u>Analog Level Fill/Drain Pump Control</u>

Analog Input #6 – connect to analog (4–20mA) level sensor

CHAPTER 5: OUTPUT PROGRAMMING

The Cell682 has two relay outputs capable of switching up to 0.3A at 120VAC, or 1.0A at 24VDC. The outputs can be controlled in a number of ways both automatically and manually. Some examples are listed below:

- Each relay can be manually turned on or off through the PC software or via the Cell682 web page.
- Either relay can be set to turn on when a particular alarm occurs.
- Either relay can be set to turn on when any alarm occurs.
- Either relay can be set to turn on when any digital or any analog alarm occurs.
- One or both relays can be programmed to operate in pump control mode (simplex/duplex) for fill or drain applications.
- A relay can be controlled automatically based on Dry Contact or Analog input values using greater-than, less-than, or equal-to statements *(See Chapter 7: Machine-to-Machine Control)*.
- A relay may also be controlled by another Cell682 unit using machine-to-machine control. This allows the Cell682 to be used for distant pump/well control applications.

Figure 1: Outputs tab

SETTING THE OUTPUT NAME

To set up the relay outputs, click on the *Outputs* tab. Next, click on the Name for Output 1 (blue) to bring up the *Output 1 Properties* screen. Enter a name for the output which describes the device that the output will be controlling.

Figure 2: Output Properties screen

CONFIGURING THE OUTPUT OPERATING MODE

Click the drop-down arrow and select the operating *mode* for the output. You can have the relay automatically turn on for a variety of alarm conditions, either individual alarms or if any alarm occurs. When set to turn ON automatically on an Alarm condition, it will remain ON until the alarm is acknowledged. If you will be controlling the output manually or via a machine-to-machine command, select *Manual* mode. If you will be using the output for fill or drain pump control, select *Pump Control*. For simplex pump control set only one output to Pump Control mode; for duplex pump control set both outputs to Pump Control mode. See Chapter 6 for more information on pump control programming.

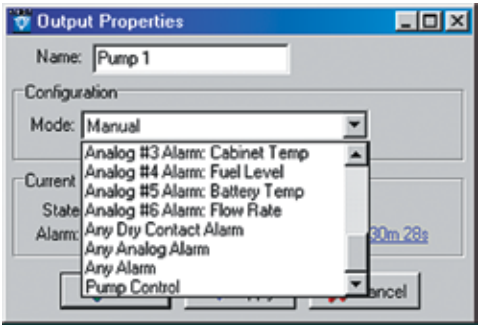

Figure 3: Output Operating mode

SWITCHING THE OUTPUT

To manually turn an output on, click on the current state (On or Off) and select the new state, then click *OK*. See the following screen.

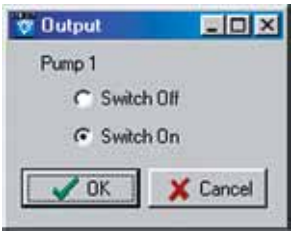

Figure 4: Output manual select

OUTPUT STATUS & STATISTICS

The Cell682 software will display the current state of the output as well as the number of times the relay has turned on, the total time the relay has been on (cumulative), and the alarm status of the output (valid in pump control mode only). This information can be useful for monitoring how often a device (pump,

machine, generator, ...) has been activated and for how long. These values can be reset and/or preset by clicking on the displayed value and entering a new one.

CHAPTER 6: PUMP CONTROL

The Cell682 can be used in Fill or Drain pump control applications using either float switches or an analog level transducer. When used with Float Switches, dry contact inputs #6-8 have a dedicated special function (see below):

Pump Control using Float Switches

Dry Contact Input #6 – Lead pump float switch

Dry Contact Input #7 – Lag pump float switch

Dry Contact Input #8 – Pumps-off float switch

When performing pump control using an analog level transducer (4–20mA), analog input #6 is designated as the well level input.

Note: Only normally-open float switches can be used for pump control (e.g. the switch is open when no water is present).

HOW IT WORKS—FLOAT SWITCHES

When performing drain pump control using float switches, three floats are required: Lead, Lag, and Pumps-Off (see Fig 1). The Lead float determines when to turn on the first pump. If the first pump is unable to bring the level below the Pumps-Off float, then the Lag float will close, turning on the second pump. When the level drops below the Pumps-Off float, both pumps are turned off. If any of the floats get stuck (i.e. the lead and pumps-off floats closed, or the lag and pumps-off floats closed) then both pumps will be turned on and an alarm will be tripped on the output or outputs in question. In duplex mode, the Cell682 will automatically alternate between the two pumps to facilitate uniform run time between the two.

If only one relay output is set to pump-control mode, then simplex control is performed. In Simplex mode only the Lead float (Dry Contact #6) and Pumps-Off float (Dry Contact #8) are required. Either output relay can be used in simplex mode.

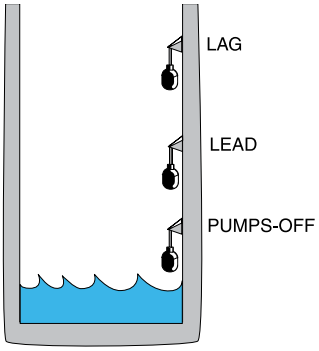

Figure 1: Float positions for a drain application

In a Fill application, the Lag and Pumps-Off floats would change position as shown below:

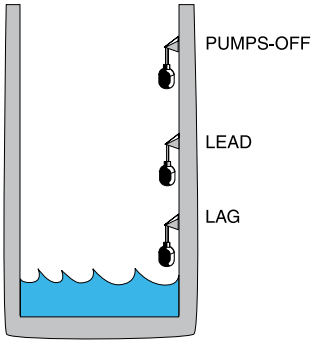

Fig 2. Float positions for a Fill application

In this case, the pumps are attempting to keep the well full. When the well is full all three floats are closed. If the level drops below the Lead float, then the first pump will turn on. If the level rises above the Pumps-Off float then the pump will turn off. If the level continues to fall below the Lag float, then the 2nd pump will turn on. Both pumps will remain on until the Pumps-Off float closes. If only one relay output is set to pump-control mode, then simplex control is performed. In Simplex mode only the Lead float (Dry Contact #6) and Pumps-Off float (Dry Contact #8) are required. Either output relay can be used in simplex mode.

HOW IT WORKS—ANALOG LEVEL SENSOR

When performing pump control with an analog level sensor, the Lead, Lag, and Pumps-Off levels are programmed into the Cell682 software. The unit then measures the actual level on Analog Input #6 and turns on the appropriate relay outputs. If both outputs are set to Pump Control mode, then alternating duplex control will be performed. If only one output is set, then Simplex control will be performed. The analog level sensor must be a 4–20mA transducer that is selected and calibrated based on the depth of the well. The specified output of the transducer must be entered into the Table Range settings for Analog Input #6.

INSTALLATION RECOMMENDATIONS

Be sure to install and wire the Cell682 and associated equipment in accordance with all local codes and regulations. Adhere to Standard Practice/Best Practice policies when installing and wiring any control system. Be sure to include hand-operated switches to disconnect power on all pumps/equipment to insure worker safety when installing and servicing equipment.

PROGRAMMING FOR PUMP CONTROL

To program the unit for Pump Control, click on the Outputs tab.

Figure 2: Output properties showing pump control

Next, click on the Pump Control link. This will bring up the pump mode setup screen. Next, select the type of pump control you want to do:

- Drain Analog Level
- Drain Dry Contact Floats
- Fill Analog Level
- Fill Dry Contact Floats

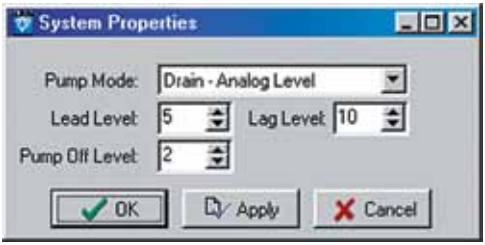

Figure 3: Pump Mode—Analog programming

If you select one of the Analog modes, you will have to fill in the Lead, Lag, and Pumps-Off fields. In Dry Contact Float mode these fields are disabled. Enter the appropriate values and click OK or Apply.

Next, click on the output to use for Pump Control. Click the drop-down box and scroll to the bottom to select Pump Control. Click OK or Apply. This will activate the Pump Control logic. Make sure all input devices and equipment are operational and ready for use. For test purposes you may wish to use hand operated switches to manually control the pumps and simply watch the system LEDs to see if the Cell682 is functioning properly. If you are using “duplex” pump control, select the other output and set it for Pump Control mode also. After verifying that the unit is functioning properly, move your hand-operated pump switches to “Auto” and verify that the Cell682 is properly controlling the system.

OUTPUT WIRING

The output relays on the Cell682 are for low current control signals (0.3A 120VAC/1.0A 24VDC maximum).

DO NOT directly connect the power for the pumps to these relays—THIS WILL PERMANENTLY DAMAGE THE Cell682.

Use the Cell682 outputs to control intermediate motor contactors/relays that will switch actual power to the pumps.

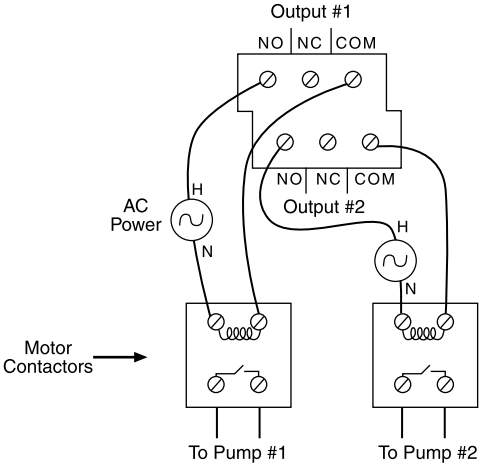

Figure 4: Output wiring to two pumps

CHAPTER 7: MACHINE-TO-MACHINE CONTROL

The Machine-to-Machine Control feature allows you to control outputs of other Cell682 units (or outputs within the same unit) based on input conditions. For example, you can switch an output on a Cell682 unit several miles away if an input on a different unit is greater than a specified value. The output being controlled must be set to manual mode. Up to 8 machine-to-machine control events can be configured per Cell682 unit. Note that when an input condition causes an output to change state, a separate event must be programmed to make the output change back. For example, if you program output #1 to turn on when input #5 is greater than 60, the output will **not** turn off when the input drops below 60. A separate event must be programmed to make the output turn off when the input is less than 60.

To program Machine-to-Machine Control click on the Machine-to-Machine Tab. The following screen will appear:

Figure 1: Machine-to-Machine tab

The 8 peer-to-peer events are listed in the window to the left. Clicking on each one will display a description of the control event programmed for each. To program a new peer-to-peer event click on the first unused (Disabled) peer event and click the *Edit* button. The following screen will appear:

Figure 2: Peer-to-peer Edit screen

Click the down arrow in the *Input Trigger* field to select the input that will initiate the event. If you select a Dry Contact input, you can have the event occur when the selected input goes from *Open-to-Closed* or *Closed-to-Open*. If you select an Analog input you can have the event occur if the input is *equal-to*, *greater-than*, or *less-than* a specified value.

Enter a value for the comparison (range: -16,300 to 16,300).

Note: Peer-to-peer events are triggered as soon as the input meets the trigger conditions. There is no recognition time applied in this case. Also, peer-to-peer events will not be executed while you are on line locally.

Next, enter the *PIN* and *Password* of the Cell682 unit whose output you want to switch. Select the output number and action (either ON or OFF). Click *Apply* or *OK* when finished. Remember, the target output must be set to manual mode, otherwise the command will be ignored. If the password is wrong the command will be ignored as well.

LOCAL OUTPUT CONTROL

You can perform control logic using the same inputs and outputs on a single Cell682 unit. If you want to switch an output on the same Cell682 as the input, then simply enter the unit's own PIN (a password is not required in this case). The output must be set to *manual* mode. Local output control does not use any airtime and also executes instantly (as long as there are no preceding peer-to-peer events that must communicate with a different Cell682 device).

IMPORTANT INFORMATION AND WARNINGS

- It may take several minutes for the peer-to-peer command to reach the destination Cell682.
- Peer-to-peer commands are processed in a sequential, non-predetermined order. This means that if more than one command is triggered, the subsequent commands must wait until the currently processed command is finished. If two peer-to-peer commands are triggered simultaneously that affect the same output, the order of the processing cannot be guaranteed.
- Both the source and destination Cell682 devices must be powered on and operational for peer-to-peer commands to operate correctly.
- If the unit is in the middle of alarm processing, peer-to-peer commands may be delayed while alarms are being sent.
- Peer-to-peer commands are not processed while logged in with the PC software. The user should log off and the serial cable should be unplugged during normal operation to ensure that peer-to-peer commands are properly processed.

- Setting peer-to-peer trigger values too close can cause output oscillations. Peer-to-peer commands are an advanced feature and should be well thought out. Do not use them for critical applications where the risk is unacceptable.
- All peer-to-peer control actions will use a wireless message packet.

SAMPLE APPLICATION

Suppose you had a well and a pump which were several miles apart. When the pump runs, it fills the well. Your goal is to maintain a certain level in the well. If you place one Cell682 unit at each location you can have two peer-to-peer events accomplish your goal. In addition, you can use the Cell682 inputs to monitor other key items such as:

- Well level too low
- Well level too high
- Pump failure
- Power failure
- Generator on
- Temperature

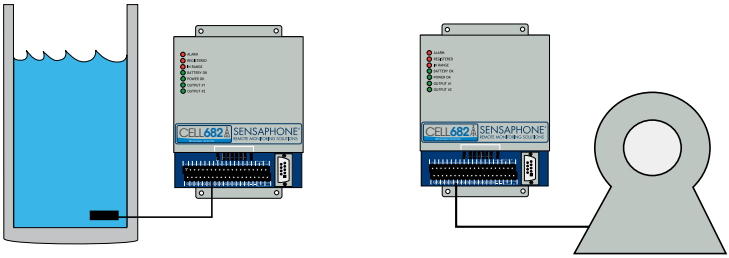

Figure 3: Well and Pump Control via Machine-to-Machine Commands

Let's suppose the well level is 25' and you need to maintain the level between 5' and 20'. The first thing you would need is a level transducer in the well. Next, program your two machine-to-machine events into the Cell682 located at the well. The first would be to turn ON the pump if the level is *Less-Than* 5'. The second event would be to turn the pump OFF if the level is *Greater-Than* 20'. Consider the rate at which the well fills when the pump is running, in order to account for the machine-to-machine command delay time between the Cell682 units. Also note that machine-to-machine control is completely independent of alarm processing, so you can also trip high or low-level alarms based on the well level.

Figure 4: Turn Pump On if Level is Less than 5 feet

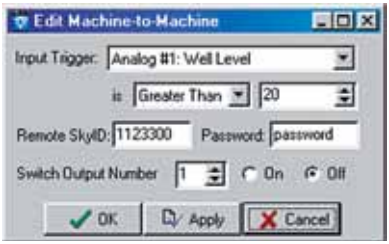

Figure 5: Turn Pump Off is Level is Greater than 20 feet

CHAPTER 8: ALARM NOTIFICATION

The Cell682 can deliver alarm message notifications by voice phone call, internet e-mail, and text messaging to various messaging devices and cell phones. A total of 24 notification destinations can be programmed to be contacted in the event of an alarm. The unit also lets you to set an escalation level for each destination, allowing you to have a group of people contacted first (tier 1) and, if the alarm is not acknowledged, a second group of people (tier 2) contacted. You can program up to 24 tier levels of destinations and include a programmable delay time between each tier.

HOW DOES NOTIFICATION WORK

Once an alarm occurs, the Cell682 will begin sending its alarm message to the programmed destinations. The unit will start with destinations at tier 1. Once the *Tier Delay* expires, the unit will start sending alarm messages to destinations in the next tier. The *Tier Delay* time begins as soon as the alarm occurs, so if it were programmed to 60 minutes, the next tier would start receiving alarm messages one hour after the alarm occurred. The Cell682 will send its alarm message to each destination until it receives acknowledgment, or it will automatically acknowledge the alarm after all destinations have been sent the message or when the last tier delay time has expired.

Note: If you are logged in through the serial port, no alarms will be sent until you log off and disconnect the serial cable. If you acknowledge the alarm through the software before logging off, no alarm messages will be sent. This can be useful for performing on-site maintenance or testing the system. If you are not logged on through the serial port the alarm messages will be sent immediately, one at a time.

VOICE PHONE CALL

The Cell682 can send alarm messages via a voice telephone call. It does this without having a telephone line connected to the unit. When an alarm message is sent as a voice call the number is dialed from the Cell682 Messaging Service Center. The message is spoken from a computer that will customize the message based on the programming in your Cell682 including the programmed *Unit Name*, *PIN*, and *Input Name*. To program a Voice destination, click on the *Alarm Notification* tab.

Figure 1: Alarm Notification

This screen provides a list of the programmed alarm destinations. To program or change a destination's information, click on the name of the person to edit (or select *unused* for a new entry) and then click the *Edit* button. The *Edit Destination* screen will appear:

Figure 2: Contact Edit for Voice Call

Enter the name for this destination (up to 14 characters) and in the *Type* field select *Voice*. In the *Phone #* field enter the area code and telephone number. A sample alarm telephone call is shown below:

"CELL682 Alarm Message"

"Low/High temperature alarm at "*Unit Name*",

"Pin number xxxx",

"*input name*", is "xx" degrees "Fahrenheit/Celsius",

"Level crossed limit of "xx" degrees"

"To acknowledge press 1"

Example:

CELL682 Alarm Message

High temperature alarm at "Jim's Ice Cream"

Pin Number "1234"

"Freezer #5" is 38 degrees Fahrenheit

Level crossed limit of 36 degrees

To acknowledge press 1

To acknowledge the alarm your must press 1 on a touch-tone telephone when prompted. The system will reply with “alarm acknowledged” when it receives your acknowledgment. The message will be repeated 3 times so you have 3 chances to acknowledge the alarm during the call. If the the alarm is not acknowledged the system will hang up, wait a few minutes, and then call again. The system will call up to 3 times per telephone number.

INTERNET E-MAIL

The Cell682 can send alarm messages to internet e-mail addresses. The alarm message will comprise information from within your Cell682 including the programmed *Unit Name*, and *Input Name*. To program an e-mail destination, click on the *Alarm Notification* tab.

Figure 3: Alarm Notification

This screen provides a list of the programmed alarm destinations. To program or change a destination’s information, click on the name of the person to edit (or select *unused* for a new entry) and then click the *Edit* button. The *Edit Destination* screen will appear:

Figure 4: Destination Edit for E-mail

Enter the name for this destination (up to 14 characters) and in the *Type* field select *Internet E-mail*. In the *To:* field enter the e-mail address (up to 34 characters).

Warning: Before entering an e-mail address into the Cell682, be sure to test the address first, using your computer and standard email software. Verify that the address is working and that the message is delivered.

A sample e-mail alarm message is shown below:

```
To: derek@mycompany.com
From: 1234@cell682.com
High Temperature ALARM at "Jim's Ice Cream"
Cell682 #1234
"Freezer #5" is now 38 Deg F
Level crossed limit of 36 Deg F
To acknowledge send 1202
```

ALPHANUMERIC PAGER

The Cell682 can send alarm messages to your alphanumeric pager or mobile text messaging device. The message will be sent to an e-mail address for your pager based on your paging provider and your pin number. The provider-format list below will instruct you on how to enter the e-mail address for your particular service provider. The alarm message will comprise information from within your Cell682 including the programmed *Unit Name* and *Input Name*. To program an e-mail destination click on the *Alarm Notification* tab.

Figure 5: Alarm Notification

This screen provides a list of the programmed alarm destinations. To program or change a destination's information, click on the name of the person to edit (or select *unused* for a new entry) and then click the *Edit* button. The *Destination Edit* screen will appear:

Figure 6: Destination Edit for Alphapager

Enter the name for this destination (up to 14 characters) and in the *Type* field select *Internet E-mail*. In the *To:* field enter the e-mail address as described in the list below (up to 34 characters).

Warning: Before entering an e-mail address into the Cell682, be sure to test the address first, using your computer and standard email software. Verify that the address is working and that the message is delivered.

TEXT MESSAGING TO CELL PHONES

The Cell682 can send alarm messages to your wireless cellular telephone. The message will be sent to an e-mail address for your cell phone based on your cellular provider and your telephone number. The cell-provider/format list below will instruct you on how to enter the e-mail address for your particular service provider. The alarm message will be composed of information from within your Cell682 including the programmed *Unit Name* and *Input Name*. To program an e-mail destination, click on the *Alarm Notification* tab.

Figure 7: Alarm Notification

This screen provides a list of the programmed alarm destinations. To program or change a destination's information, click on the name of the person to edit (or select *unused* for a new entry) and then click the *Edit* button. The *Edit Destination* screen will appear:

Figure 8: Destination Edit for Cell Phone

Enter the name for this destination (up to 14 characters) and in the *Type* field select *Internet E-mail*. In the *To:* field enter the e-mail address as described in the list below (up to 34 characters).

Warning: Before entering an e-mail address into the Cell682, be sure to test the address first, using your computer and standard email software. Verify that the address is working and that the message is delivered.

Cellular Provider	E-mail Address Format
3 River Wireless	xxxxxxxxx@sms.3rivers.net
Advantage Communications	xxxxxxxxx@advantagepaging.com
AirVoice	xxxxxxxxx@mmode.com
Airtouch Pagers	xxxxxxxxx@airtouch.net
Airtouch Pagers	xxxxxxxxx@airtouchpaging.com
Airtouch Pagers	xxxxxxxxx@alphapage.airtouch.com
Airtouch Pagers	xxxxxxxxx@myairmail.com
AllTel	xxxxxxxxx@message.alltel.com
Alltel PCS	xxxxxxxxx@message.alltel.com
Alltel	xxxxxxxxx@alltelmessage.com
Ameritech Paging	xxxxxxxxx@pageapi.com
Arch Pagers (PageNet)	xxxxxxxxx@archwireless.net
Arch Pagers (PageNet)	xxxxxxxxx@epage.arch.com
AT&T	xxxxxxxxx@txt.att.net
Bell South (Blackberry)	xxxxxxxxx@bellsouthtips.com
Bell South Mobility	xxxxxxxxx@blsdcs.net
Bell South	xxxxxxxxx@blsdcs.net
Bell South	xxxxxxxxx@sms.bellsouth.com
Bell South	xxxxxxxxx@wireless.bellsouth.com
Bluegrass Cellular	xxxxxxxxx@sms.bluecell.com
Boost Mobile	xxxxxxxxx@myboostmobile.com
Boost	xxxxxxxxx@myboostmobile.com
CallPlus	xxxxxxxxx@mmode.com
Carolina Mobile Communications	xxxxxxxxx@cmcpaging.com
Cellular One East Coast	xxxxxxxxx@phone.cellone.net
Cellular One PCS	xxxxxxxxx@paging.cellone-sf.com
Cellular One South West	xxxxxxxxx@swmsg.com
Cellular One West	xxxxxxxxx@mycellone.com
Cellular One	xxxxxxxxx@message.cellone-sf.com

Cellular One . . . . . xxxxxxxxx@mobile.celloneusa.com
Cellular One . . . . . xxxxxxxxx@sbcemail.com
Cellular South . . . . . xxxxxxxxx@csouth1.com
Central Vermont Communications . . . . . xxxxxxxxx@cvcpaging.com
CenturyTel . . . . . xxxxxxxxx@messaging.centurytel.net
Cingular (GSM) . . . . . xxxxxxxxx@cingularme.com
Cingular (TDMA) . . . . . xxxxxxxxx@mmode.com
Cingular Wireless . . . . . xxxxxxxxx@mobile.mycingular.net
Cingular . . . . . xxxxxxxxx@cingularme.com
Communication Specialists. . . . . xxxxxxx@pageme.comspeco.net
Cook Paging . . . . . xxxxxxxxx@cookmail.com
Corr Wireless Communications . . . . . xxxxxxxxx@corrwireless.net
Dobson Communications Corporation . . . . . xxxxxxxxx@mobile.dobson.net
Dobson-Alex Wireless /
Dobson-Cellular One . . . . . xxxxxxxxx@mobile.cellularone.com
Edge Wireless . . . . . xxxxxxxxx@sms.edgewireless.com
GCS Paging . . . . . xxxxxxxxx@webpager.us
GTE . . . . . xxxxxxxxx@gte.pagegate.net
GTE . . . . . xxxxxxxxx@messagealert.com
Galaxy Corporation . . . . . xxxxxxxxx@sendabeep.net
GrayLink / Porta-Phone. . . . . xxxxxxxxx@epage.porta-phone.com
Houston Cellular. . . . . xxxxxxxxx@text.houstoncellular.net
Inland Cellular Telephone . . . . . xxxxxxxxx@inlandlink.com
JSM Tele-Page . . . . . xxxxxxxxx@jsmtel.com
Lauttamus Communication. . . . . xxxxxxxxx@e-page.net
MCI Phone . . . . . xxxxxxxxx@mci.com
MCI . . . . . xxxxxxxxx@pagemci.com
Metro PCS . . . . . xxxxxxxxx@metropcs.sms.us
Metro PCS . . . . . xxxxxxxxx@mymetropcs.com
MetroPCS. . . . . xxxxxxxxx@mymetropcs.com
Metrocall 2-way . . . . . xxxxxxxxx@my2way.com
Metrocall . . . . . xxxxxxxxx@page.metrocall.com
Midwest Wireless . . . . . xxxxxxxxx@clearlydigital.com
Mobilecom PA . . . . . xxxxxxxxx@page.mobilcom.net
Mobilfone. . . . . xxxxxxxxx@page.mobilfone.com
Morris Wireless . . . . . xxxxxxxxx@beepone.net

NPI Wireless . . . . . xxxxxxxxx@npiwireless.com
Nextel . . . . . xxxxxxxxx@messaging.nextel.com
Nextel . . . . . xxxxxxxxx@page.nextel.com
Ntelos . . . . . .xxxxxxxxx@pcs.ntelos.com
Omnipoint . . . . . xxxxxxxxx@omnipoint.com
Omnipoint . . . . . xxxxxxxxx@omnipointpcs.com
OnlineBeep . . . . . xxxxxxxxx@onlinebeep.net
PCS One . . . . . xxxxxxxxx@pcsone.net
Pacific Bell . . . . . xxxxxxxxx@pacbellpcs.net
PageMart . . . . . xxxxxxxxx@pagemart.net
PageOne NorthWest . . . . . xxxxxxxxx@page1nw.com
Pioneer / Enid Cellular . . . . . xxxxxxxxx@msg.pioneerenidcellular.com
Price Communications . . . . . xxxxxxxxx@mobilecell1se.com
ProPage . . . . . xxxxxxxxx@page.propage.net
Public Service Cellular . . . . . xxxxxxxxx@sms.pscel.com
Qualcomm . . . . . name@pager.qualcomm.com
Qwest . . . . . xxxxxxxxx@qwestmp.com
RAM Page. . . . . xxxxxxxxx@ram-page.com
ST Paging . . . . . pin@page.stpaging.com
Safaricom . . . . . xxxxxxxxx@safaricomsms.com
Satelindo GSM . . . . . xxxxxxxxx@satelindogsm.com
Satellink . . . . . xxxxxxxxx.pageme@satellink.net
Simple Freedom . . . . . xxxxxxxxx@text.simplefreedom.net
Skytel Pagers . . . . . xxxxxxxxx@ email.skytel.com
Skytel Pagers . . . . . xxxxxxxxx@skytel.com
Smart Telecom . . . . . xxxxxxxxx@mysmart.mymobile.ph
Southern LINC. . . . . xxxxxxxxx@page.southernlinc.com
Southwestern Bell . . . . . xxxxxxxxx@email.swbw.com
Sprint PCS . . . . . xxxxxxxxx@messaging.sprintpcs.com
Sprint . . . . . xxxxxxxxx@sprintpaging.com
SunCom . . . . . xxxxxxxxx@tms.suncom.com
Surewest Communications . . . . . xxxxxxxxx@mobile.surewest.com
T-Mobile . . . . . xxxxxxxxx@tmomail.net
TIM . . . . . xxxxxxxxx@timnet.com
TSR Wireless . . . . . xxxxxxxxx@alphame.com
TSR Wireless . . . . . xxxxxxxxx@beep.com

Teletouch . . . . . xxxxxxxxx@pageme.teletouch.com
Telus . . . . . xxxxxxxxx@msg.telus.com
The Indiana Paging Co . . . . . xxxx@pager.tdspager.com
Triton . . . . . xxxxxxxxx@tms.suncom.com
US Cellular . . . . . xxxxxxxxx@email.uscc.net
USA Mobility. . . . . xxxxxxxxx@mobilecomm.net
Unicel . . . . . xxxxxxxxx@utext.com
Verizon PCS . . . . . xxxxxxxxx@myvzw.com
Verizon Pagers . . . . . xxxxxxxxx@myairmail.com
Verizon . . . . . .xxxxxxxxx@vtext.com
Virgin Mobile. . . . . xxxxxxxxx@vmobl.com
Virgin Mobile. . . . . xxxxxxxxx@vxtras.com
WebLink Wireless . . . . . xxxxxxxxx@pagemart.net
West Central Wireless . . . . . xxxxxxxxx@sms.wcc.net
Western Wireless. . . . . xxxxxxxxx@cellularonewest.com
Wyndtell . . . . . xxxxxxxxx@wyndtell.com

ALARM ACKNOWLEDGMENT VIA E-MAIL

An alarm message received via e-mail can be acknowledged by simply selecting "reply" to the original message, as long as the original message is contained in the reply. If not, simply reply with the 4-digit acknowledgment code provided at the end of the message. Once received, this will cancel alarm message delivery to all destinations configured with higher tier levels, and the web page History will show that you have acknowledged the alarm.

ADDITIONAL INFORMATION

You can use tier escalation to organize the destination delivery. Set each destination to its own tier level and set the delay to **two** minutes. In this case a new message will be sent every two minutes to the next tier level.

Rearranging the destination order can be done simply by changing the Tier Levels.

CHAPTER 9: OPERATION

After installation and programming have been completed, the Cell682 is fully operational. This chapter explains how the Cell682 operates.

PART ONE: ALARM NOTIFICATION AND ACKNOWLEDGMENT

There are 3 stages to a complete alarm event: 1) Alarm Recognition, 2) Alarm Notification, and 3) Acknowledgment.

Note that not all fault conditions will go through each stage. For example, some may not meet the recognition time.

ALARM RECOGNITION

1) The Cell682 monitors 8 dry contact inputs, 6 analog inputs, main power, and battery backup. When the status of an input changes or exceeds user-programmed limits, it causes a fault condition.
2) If the fault condition lasts long enough to meet its programmed recognition time, the fault condition becomes an alarm and the Cell682 begins the alarm notification sequence.

ALARM NOTIFICATION

The Cell682 can send alarms via Voice phone call, E-mail, Alphanumeric pager, or Text message to wireless (cell) phone.

DIALOUT NOTE: CALL PROGRESS

The Cell682 monitors call progress when dialing out in voice mode. If it dials out and encounters a busy signal or no answer it will wait about a minute and try again up to 3 times. If the call is answered by an answering machine or voice mail system the alarm message will likely be recorded , however, since the alarm was not acknowledged the system will make additional calls.

ALARM NOTIFICATION—VOICE

When dialing out to a destination programmed as “voice,” the Cell682 waits for the phone to be answered, then recites its identification message, then the message identifying the input that has gone into alarm.

Below is an example of what the Cell682 would say during a typical ‘voice’ notification:

```
CELL682 Alarm Message
High temperature alarm at “Jim’s Ice Cream”
Pin Number “1234”
“Freezer #5” is 38 degrees Fahrenheit
Level crossed limit of 36 degrees
To acknowledge press 1 Alarm Notification—E-mail
```

When sending an alarm message via e-mail the Cell682 will compose a text message based on the Unit's name, PIN, Input name, Input type, current value, and alarm limit (where applicable). A sample alarm message is shown below:

To: derek@mycompany.com
From: 1520@cell682.com

Contact ALARM at Oak Station CELL682#1520
Contact 1 Security is in alarm
To acknowledge send 1202

ALARM NOTIFICATION–ALPHANUMERIC PAGER

When sending an alarm message to an Alphanumeric pager, the Cell682 leaves a text message on the display of the pager. A sample is shown below:

Low 4-20ma ALARM at Sensaphone Cell682 #250
2 Water Level is now 21
Level crossed limit of 20
To acknowledge send 2002

ALARM NOTIFICATION—TEXT MESSAGE TO CELL PHONE

When sending an alarm text message to a cell phone the Cell682 leaves a message on the display of the phone. A sample is shown below

Low 4-20mA ALARM at Sensaphone Cell682 #250
2 Water Level is now 21
Level crossed limit of 20
To acknowledge send 2002

TIER DELAY

You can group destinations into tiers and then program a delay time until the next tier gets called. This allows you to contact your primary personnel first and, if necessary, escalate the calling to the next level. Up to 24 tiers can be configured. The Cell682 will start sending alarm messages to all destinations programmed in Tier 1. If the alarm is acknowledged, it will halt the notification process for that alarm and no additional alarm messages will be delivered. If all of the Tier 1 destinations have been sent the alarm message and no acknowledgement was received, the unit will wait the programmed *Tier Delay Time* and then start sending the alarm to the destinations in the next Tier. An example is described below:

Tier 1 destinations:	Tier 2 destinations:	Tier 3 destinations:
Chuck	Janet	Morton
Mary	George	Zach
Sue	Ron	Tony
Derek	Jason	
Dave	Carmen	

Tier Delay Time: 60 minutes

An alarm occurs at 8:00pm

The Cell682 starts sending alarm messages to members of Tier 1.

No one acknowledges the alarm.

At 9:00pm the Tier delay has expired and the unit begins to send alarm messages to members of Tier 2.

At 9:30pm the Cell682 receives an acknowledgement message and the unit stops the notification process.

The people in Tier 3 do not get contacted.

ALARM ACKNOWLEDGMENT

Acknowledging an alarm will halt the alarm notification process to the destination being called and also to destinations set to higher tier levels. Voice notification alarms must be acknowledged during the original phone call. E-mail, Alphanumeric pager, and Cell phone alarms can be acknowledged by replying back to the original alarm message or by sending the unit a message with the alarm acknowledgment code. The sections below detail the procedure to acknowledge an alarm.

ALARM ACKNOWLEDGMENT—VOICE NOTIFICATION

CELL682 Alarm Message

High temperature alarm at “Jim’s Ice Cream” <unit name>

Pin Number “1234”

“Freezer #5” <input name> is 38 degrees Fahrenheit

Level crossed limit of 36 degrees

To acknowledge press 1

To acknowledge the alarm you must press “1” when prompted. The Cell682 will respond by saying: “Alarm acknowledged”. If the Touch-Tone acknowledgment code is not received the Cell682 will say “error, not acknowledged” and repeat the message 2 more times. If no acknowledgment is received the system will wait a few minutes and then call again. The system will call up to 3 times per telephone number.

Note: An alarm cannot be acknowledged using a pulse (rotary) telephone.

ALARM ACKNOWLEDGMENT—ALPHANUMERIC PAGER

When sending an alarm message to an Alphanumeric pager, the Cell682 leaves a text message on the display of the pager. If you have a two-way alphanumeric pager you can acknowledge the alarm by replying to the original message with the alarm acknowledgement code. For example, if the acknowledgement code was 1503, you would simply reply back with "1503." If you do not have a two-way pager then you can send the Cell682 an e-mail using either a computer or a cell phone. The e-mail address of your Cell682 is PIN@cell682.com, where you would substitute the word PIN with your PIN number. In the message area simply send the unit the alarm acknowledgement code.

ALARM ACKNOWLEDGMENT—TEXT MESSAGE TO CELL PHONE

When sending an alarm message to a cell phone the Cell682 leaves a text message on the display of the phone. You can acknowledge the alarm by sending an email reply back to the Cell682 with the alarm acknowledgement code. For example, if your alarm acknowledgement code was 1107, you would simply reply back with "1107." Alternatively you can send the Cell682 an e-mail using a computer. The e-mail address of your Cell682 is PIN@cell682.com, where you would substitute the word PIN with your PIN number. In the message area simply send the alarm acknowledgement code.

ALARM ACKNOWLEDGMENT—AUTOMATIC

The Cell682 will acknowledge an alarm itself (automatically) if all of the destinations have been contacted and no acknowledgement was received.

PART TWO: STATUS REQUEST

You can request a status report from your Cell682 by sending it a command via e-mail. When the unit receives the command it will assemble a status report and send it back to the originating e-mail address. Only inputs that are *enabled* will be included in the report. If alarm monitoring is not enabled for a particular input, its status will be displayed as *disabled*. To request the status report you need the unit's password and PIN. The e-mail format to request a status report is shown below:

To: *PIN*@cell682.com {replace *PIN* with your unit's PIN number}
Subject:
Message:
p *password* {replace *password* with your unit's password}
gst

A sample e-mail Status Report is shown below:

D1: Pump 1 Run 243:33:12 1591 OK
D2: Pump 2 Run 012:30:00 1295 OK
D3: High Water 000:00:00 0 OK
D4: Door sensor 000:00:00 0 Alarm
D5: Pump 1 fault 000:00:00 0 OK
D6: Pump 2 fault 000:00:00 0 OK
D7: Gen. Run 000:57:49 2 Disabled
D8: Low Fuel 000:00:00 0 OK
A1: Well Level 16 OK
A2: Outside Temp 78 F Disabled
A3: Cabinet Temp 86 F OK
A4: Fuel Level 38 OK
A5: Battery Temp 81 F OK
A6: Flow Rate 33 OK
B: Battery 13.50v OK
P: Power 16.82v OK
O1: Pump 1 On 015:54:44 1573 OK
O2: Pump 2 Off 012:30:00 1295 OK

CHAPTER 10: CELL682 WEB PAGE

The Cell682 Web Page is where you can check status, make programming changes, and even control outputs from any internet connected computer.

Once the Cell682 is installed and turned on you can go to *www.Cell682.com*, enter your *PIN* and *Password (default password is cell682)*, and click *Login*. The web page for your Cell682 will be displayed. The web page presents a view of the system which is very similar to the Cell682 PC Software, except for the fact that it is a snapshot of information from a specific point in time—it is not updating in real-time. To retrieve the latest values you must click either the *Status Refresh or Programming Refresh* links. For security purposes be sure to change your password.

Note: It is highly recommended that if at any time you make any programming changes locally (at the unit via the serial port) that you click the *Programming Refresh* link on the web page soon thereafter, to ensure that the information you are viewing is up to date. This will also ensure that the alarm history information will also be accurate.

STATUS REFRESH

You can retrieve the latest input and output values by clicking the *Status Refresh* link. This will send a message to the Cell682 requesting the latest input and output status information. When the unit receives the request it will immediately send back a reply. During this waiting period the web page will display the input and output values in green italics until the updated information returns. At the top of the screen is a time-stamp which indicates the date and time of the last update.

PROGRAMMING REFRESH

The *Programming Refresh* command will refresh all Cell682 programming as well as input/output status. You only need to click this button if you believe that programming changes may have occurred locally, at the unit, and you want to refresh the information on the web server.

PROGRAMMING VIA THE WEB PAGE

You can change any parameter in your Cell682 from the web page, just as you would using the Cell682 PC Software. All programmable items will appear as Blue links. For the inputs you can click on any item for that channel and the respective programming screen will appear. If you change an item and click *OK*, the change will be sent to your unit. This will take a few minutes to process.

Similarly you can change Output programming, Notification programming, and Machine-to-machine programming.

SWITCHING OUTPUTS VIA THE WEB PAGE

To switch an output, Login to the web page and click *Outputs*. Next, click on the Output number you want to switch. On the programming screen, locate the *State* field and select On or Off, then click OK. The command to switch the output will be sent to your unit. Note that this may take 1–2 minutes.

ALARM ACKNOWLEDGEMENT HISTORY

An alarm history log is available on the web page to provide details on alarms that have occurred and whom acknowledged them. The log can be queried by entering a start and end date range, or by selecting one of the *QuickDates* options. Note that the time stamps appearing on the web page do not indicate when the alarm occurred, but rather the time that they were received by the web server.

CHAPTER 11: TESTING THE CELL682

It is extremely important that you test the system after installation to make sure that it is working properly and that all programming is correct. In addition, it is highly recommended that you test and/or verify proper operation on a weekly basis to ensure that the system continues to function as required. *(See Appendix A.)* The following items should be tested:

- Notification to all destinations to make sure that each one is programmed correctly and that the messages are actually delivered.
- Input testing to make sure that the system is reading them correctly and that when a fault occurs the system responds appropriately.
- Output testing to make sure they are wired correctly and that they switch on and off when instructed.
- Control programming—Local control, Machine-to-machine, or Pump control—to make sure that the system is functioning properly, as required for your application.

NOTIFICATION TESTING

Create an alarm and confirm that all destinations receive the alarm message. This can be done by forcing an input into alarm, by temporarily adjusting an alarm limit, or by changing the normality of a Dry Contact input. The Alarm LED on the front of the unit will begin blinking when an alarm has occurred. Be sure to disconnect from the serial port after creating the alarm, otherwise the notifications will not be sent. After confirming that all notification messages were delivered, correct the alarm condition and/or adjust your programming as required.

INPUT TESTING

Check the current value of all of the programmed Dry Contact and Analog Inputs. Make sure that the values being displayed are correct.

For Dry Contact inputs, momentarily reverse the input condition to verify that the unit recognizes the change of state. For example, if you have a normally open sensor connected to Dry Contact #1, force that sensor closed and verify that the unit displays the value as closed.

For analog inputs, verify that the input reading matches the entity being measured. For example, for temperature inputs confirm that the unit is reporting the correct temperature.

For 4–20mA inputs, confirm that the level or value being displayed in the Cell682 matches the actual conditions being measured.

OUTPUT TESTING

Confirm that the power limitations of the outputs will not be exceeded. The Cell682 outputs are rated for a maximum of 0.3A at 120VAC or 1.0A at 24VDC. Test the outputs by switching them on and off manually and confirming that the device being controlled turns on and off. The Output LEDs on the front of the unit should also turn on and off.

CONTROL PROGRAMMING

For applications that utilize control programming it is important to test all scenarios that may affect system operation. This means you should test your system under normal operating conditions as well as abnormal (or failure) conditions to make sure that you have designed your system to operate under the worst-case scenario.

Note that Local and Machine-to-Machine control will not execute while you are connected locally.

To test Local control operation, force input conditions as necessary to activate the output(s). Confirm that the input-to-output control logic is executing properly. Test each programmed control algorithm separately to make sure that each one is functioning as desired.

To test Machine-to-Machine control, force input conditions as necessary to activate the output(s) on your remote Cell682 device(s). Confirm that the outputs on the remote unit(s) have turned on or off as instructed. Test each programmed control algorithm separately to make sure they are all functioning. Have the system go through a complete automated control cycle of your system to confirm that the unit and its programming are operating as intended.

PUMP CONTROL

To test Pump Control using float switches, force the float switch inputs open or closed as necessary, to make the output(s) turn on or off. In a Drain application the first pump would turn on if the Pumps-Off and Lead float switches were closed. The second pump would turn on if the Lag float switch also closed. Both pumps would then turn off when all three float switches opened. In a fill application, the first pump would turn on when the Pumps-Off and Lead floats opened. The second pump would turn on when the Lag float also opens. Both Pumps would turn off when all three floats closed.

To test Pump Control using a level transducer you can temporarily force the input level to a certain value by adjusting the calibration for the Analog Input.

In a drain application, force the input to be above the Lead level and the first pump should turn on. If you then set the input above the Lag level, the second pump should also turn on. Setting the input below the Pumps-Off setting will turn both pumps off. In a fill application, setting the input below the lead level will turn the first pump on. Setting the input below the Lag level will turn on the second pump. Setting the input above the pumps-Off level will turn off both pumps.

Once you have confirmed that the Cell682 is controlling the system properly, allow the system to operate automatically. Observe a complete Drain or Fill cycle and verify that the system is operating as required.

APPENDIX A: CHECKING YOUR CELL682 FOR PROPER OPERATION

We recommend that you test your Cell682 weekly to be sure it is functioning properly. This will ensure that when a problem arises the Cell682 will be ready to alert the appropriate personnel. A blank Test Log is included at the back of this manual.

There are several tests to be performed:

1. Request a Status Report from the unit by sending it an e-mail message and verifying the reply. This will test the unit's ability to receive and send a message. It will also verify that all of the inputs are reading properly, the alarm conditions are OK, the electricity is on, and the battery is OK.
2. Create an alarm on each input by tripping all connected sensors. This will verify that each input is being recognized by the unit and that it is programmed properly.

Temperature sensors: Heat or cool the sensor.

Motion sensors: Have someone walk in front of the sensor.

Door and window sensors: Open the door or window.

Water sensors: Apply a small amount of water beneath the sensor or use a wet towel and touch it to the sensor probes.

Humidity sensors: Raise the humidity around the sensor by holding a cup of very hot water beneath it.

4–20mA Transducers: Verify that the Cell682 is reading the proper level by measuring the monitored quantity using alternative methods.

Allow the unit to send its alarm message to all programmed contacts. This will make sure that the Cell682 is programmed properly. It will also prepare personnel to respond appropriately when they receive a call from the Cell682.

3. Test the battery by unplugging the AC adapter and making sure that the Cell682 continues to function. Check the LEDs to make sure that the Power LED starts to blink and the Battery LED glows steadily. Keep the AC adapter unplugged so that a Power Failure alarm occurs. Allow the unit to send its alarm message to all programmed contacts while running on battery backup. Plug in the AC adapter after the unit has finished sending all of its messages.
4. If you require assistance, contact Sensaphone Technical Support at (610) 558-2700.

APPENDIX B: TROUBLESHOOTING

I CAN'T COMMUNICATE WITH MY UNIT LOCALLY.

- Make sure you have entered the proper PIN.
- Make sure the cable is connected from your computer to the Cell682.
- Make sure you have the right Com port selected (*typically 1 or 2*).
- Make sure the unit is receiving power.

I CAN'T ACCESS MY UNIT ON THE WEB PAGE.

- Have you entered the proper *PIN* and *Password*? The default password is "cell682"

WHY IS THE 'IN RANGE' LED OFF?

- If the unit is not within range of the wireless network the LED will not turn on.
- It typically takes 1-2 minutes from power-up for the Cell682 to recognize the wireless network and turn on the LED.
- Make sure the unit is receiving power.

WHY IS THE 'REGISTERED' LED OFF?

- If the IN RANGE LED is lit but the REGISTERED LED is not, then the unit is not activated yet.
- Make sure the unit is receiving power.

WHY IS THE 'BATTERY OK' LED OFF?

- There is no battery connected.
- The battery voltage is low.

WHY IS THE 'POWER OK' LED OFF?

- The main power has failed and the unit is running batteries.
- The voltage at the Vin terminals is low.

WHY IS THE 'ALARM' LED BLINKING?

- There is an unacknowledged alarm.

WHY IS THE 'ALARM' LED ON?

- There is an alarm but it has been acknowledged.

WHY WON'T THE UNIT SEND ME ALARM MESSAGES?

- The Cell682 will not send any alarm messages if you are connected locally.
- There are no destinations programmed.
- None of the destinations are enabled.
- The unit is not activated on the wireless network
- The destinations are not programmed correctly.
- There are no unacknowledged alarms.

MY UNIT WON'T MAKE A VOICE CALL.

- The telephone number is programmed incorrectly.
- The Cell682 will not send any alarm messages if you are connected locally.
- There are no destinations programmed.
- None of the destinations are enabled.
- The unit is not activated on the wireless network
- There are no unacknowledged alarms.

MY UNIT WON'T SEND A TEXT MESSAGE TO MY CELL PHONE OR ALPHANUMERIC PAGER.

- The Destination is programmed incorrectly. You must use the e-mail address format for your cellular or paging provider as specified in chapter 8.
- The Destination type is set incorrectly. It should be set to Internet E-mail Address.
- The Cell682 will not send any alarm messages if you are connected locally.
- There are no destinations programmed.
- None of the destinations is enabled.
- The unit is not activated on the wireless network
- There are no unacknowledged alarms.

WHY DOES THE UNIT CALL PEOPLE EVEN AFTER I ACKNOWLEDGED THE ALARM?

- When an alarm occurs the unit will begin to sequentially broadcast all alarm messages for the first Tier. Depending on how quickly they get dispatched from the messaging center its possible for additional calls to be made even after the alarm has been acknowledged. Once the message is received at the messaging center it will be called regardless of acknowledgement.

MY UNIT WON'T EXECUTE A LOCAL MACHINE-TO-MACHINE COMMAND.

- Machine-to-machine commands will not execute while you are connected locally.
- The output you are trying to switch is not set to manual mode.
- The input condition for the machine-to-machine command is not being met.

MY UNIT WON'T EXECUTE A REMOTE MACHINE-TO-MACHINE COMMAND.

- Machine-to-machine commands will not execute while you are connected locally.
- The output on the remote unit you are trying to switch is not set to manual mode.
- The input condition for the machine-to-machine command is not being met.
- The PIN and Password for the remote unit is programmed incorrectly.

MY CELL682 ISN'T DISPLAYING THE CORRECT VALUE FROM MY 4–20MA TRANSDUCER.

- The analog input jumper isn't set to the 4–20mA position.
- The analog input "type" isn't set to 4–20mA in the software.
- The transducer is not wired correctly.
- The transducer is not calibrated for the desired measurement range.
- The analog input table values aren't programmed to the calibrated range of the transducer.
- The transducer is not compatible with single-ended inputs therefore an isolation device is required.

MY TEMPERATURE SENSOR ISN'T DISPLAYING THE CORRECT VALUE.

- The analog input jumper isn't set to the Temperature position.
- The analog input "type" isn't set to Temperature in the software
- The temperature sensor isn't a compatible 2.8K or 10K thermistor.
- The temperature sensor isn't wired correctly.

WHY DON'T THE VALUES DISPLAYED ON THE WEB PAGE MATCH THE VALUES DISPLAYED IN THE CELL682 SOFTWARE?

- The web page displays a snapshot of the values at a particular moment in time. It does not display real-time values, as is the case when connected locally through the Cell682 software.
- Click the Status Update button on the web page to retrieve a current snapshot.

WHY CAN'T I GET PUMP CONTROL TO WORK?

- The Output(s) are not set to Pump Control mode.
- The Pump Control parameters are programmed incorrectly.
- The level transducer is not wired to analog input #6.
- The level transducer is not reading the proper values.

- The float switches are not wired to Dry Contact inputs #6, #7, and #8.
- The float switches are not Normally Open.
- The Lead, Lag, and Pumps-Off float switches are not wired to the proper inputs.

APPENDIX C: THERMISTOR TABLE

10K THERMISTOR DATA

Degrees Celsius	Resistance (Ohms)
-30	135.2K
-20	78.91K
-10	47.54
0	29.49K
10	18.79K
20	12.25K
30	8,194
40	5,592
50	3,893
60	2,760
70	1,990

2.8K THERMISTOR DATA

Degrees Celsius	Resistance (Ohms)
-50	187,625
-40	94,206
-30	49,549
-20	27,180
-10	15,491
0	9,142
10	5,572
20	3,498
30	2,256
40	1,491
50	1,009
60	697
70	490
80	351

APPENDIX D: CELL682 SPECIFICATIONS

ENVIRONMENTAL INPUTS

Number of Dry Contact Inputs: 8

Dry Contact Input Types: N.O./N.C. contact, pulse count, equipment run time

Dry Contact Input Electrical Characteristics: 47KΩ to 5V

Number of Analog Inputs: 6

Analog Input Types: 2.8K thermistor (-100°F to 124°F / -80°C to 55°C), 10K thermistor (-60°F to 175°F / -51°C to 79°C) and 4–20mA (-16,300 to 16,300)

Analog Input Electrical Characteristics: 22KΩ to 2.5V (temperature) and 250 Ohms to ground (4–20mA)

Input Connector: terminal block

A/D Converter Resolution: 10 bits ±2 LSB

Input Protection: Metal Oxide Varistors and fast acting diode clamps

RELAY OUTPUTS

Number of Relay Outputs: 2

Rating: 0.3A 120VAC / 1.0A 24VDC Maximum

Type: SPDT Form-C Latching

Relay Output Connector: terminal block

LED INDICATORS

Function: Alarm, Radio Registered, Radio In Range, Battery OK, Power OK, Output#1, Output #2

POWER SUPPLY

Power Supply: 18VDC 800mA power transformer

Power Consumption: 50mA typical, 700mA burst (radio transmit)

Power Protection: Metal Oxide Varistor

Battery Backup/Charger: Compatible with 12V sealed gel-cell, 2.2AH

ENVIRONMENTAL

Operating Temperature: -22° to 140°F (-30° to 60°C)

Operating Humidity: 0 to 90% RH non-condensing

Storage Temperature: -22° to 158°F (-30° to 70°C)

PHYSICAL: CELL682 UNIT IN NEMA-4 ENCLOSURE

Dimensions: 12”h x 8”w x 6”d (30.5 x 20.3 x 15.2 cm)

Weight: 8 lbs. (2.7kg)

Specifications subject to change without notice.

APPENDIX E: REPLACING THE BACKUP BATTERY

The back-up battery will provide about 3–5 years of service life depending on usage and temperature. After 5 years (or when backup time is insufficient) the battery should be replaced. Replacement batteries can be ordered from Sensaphone. To replace the battery, follow the instructions below:

1. Disconnect the red battery wire and cover the bare wire with insulating electrical tape.
2. Disconnect the black battery wire and cover the bare wire with insulating electrical tape.
3. Unplug the power transformer.
4. Loosen the compression wiring connectors and allow 6-10" of cable slack to come into the enclosure. This will make it easier to turn the panel over.
5. Remove the four screws securing the Cell682 housing to the back panel and carefully remove the Cell682.
6. Remove the connectors from the battery by carefully pulling and wiggling the connectors from the battery tabs.
7. Remove the screws holding the battery bracket and remove the bracket.
8. Dispose of/recycle the old battery following local recycling regulations for lead batteries.
9. Insert the new replacement battery into the slot and replace the bracket. Secure the bracket with the two screws.
10. Attach the battery connector at the end of the BLACK wire to the -(negative) terminal of the new battery.
11. Attach the battery connector at the end of the RED wire to the +(positive) terminal of the new battery.
12. Place the Cell682 over the four metal stand-offs and re-attach the four screws.
13. Readjust the cables through the compression connectors and secure the fittings.
14. Plug the power transformer into the outlet.
15. Connect the Black battery wire to the "BAT -" terminal.

16. Connect the Red battery wire to the “BAT +” terminal.

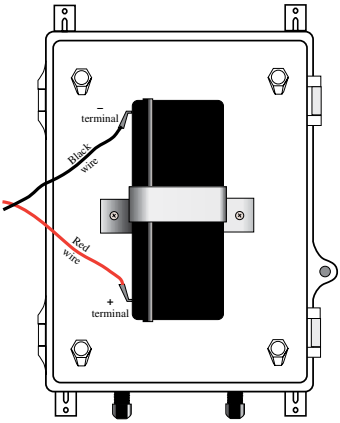

Figure 1: Battery placement

APPENDIX F: OPTIONAL ACCESSORIES

The sensors and accessories listed below are available from Sensaphone and represent the most commonly used devices. Other dry contact sensors or 4–20mA transducers, designed for more specialized applications, may also be used. Commercial or industrial electrical supply houses can provide devices to monitor virtually any condition. For further information, contact a Sensaphone Sales Associate toll-free at 1-877-373-2700.

PART . . . . . .PART/NUMBER DESCRIPTION

FGD-0006 . . . . . Magnetic Reed Switch

FGD-0007 . . . . . Passive Infra-Red Detector

FGD-0010 . . . . . 50' 2-conductor #22AWG shielded accessory Cable

FGD-0013 . . . . . Spot Water Detector

FGD-0022 . . . . . Temp° Alert

FGD-0027 . . . . . Humidistat

FGD-0049 . . . . . Smoke Detector with Built-in Relay

FGD-0052 . . . . . Humidity Transmitter

FGD-0054 . . . . . Power-Out Alert™

FGD-0056 . . . . . Zone Water Detector w/Water Rope

FGD-0063 . . . . . 10' additional Water Rope for FGD-0056

FGD-0067 . . . . . Surge Suppressor

FGD-0101 . . . . . 2.8K Weatherproof Temperature Probe

FGD-0102 . . . . . 10K Weatherproof Temperature Probe

FGD-0104 . . . . . 10K Outdoor Air Weatherproof Temperature Sensor

FGD-0205 . . . . . Multipoint Wireless I/O System

FGD-CELL-ANT . Outdoor GSM Antenna with 16' Cable

APPENDIX G: RETURNING YOUR CELL682 FOR REPAIR

In the event that the Cell682 does not function properly, we suggest that you do the following:

1. Record your observations regarding the Cell682's malfunction.
2. Call Sensaphone Technical Support toll-free at 1-877-373-2700 or e-mail support@sensaphone.com prior to sending the unit to Sensaphone for repair. Our product support specialists are able to diagnose and correct many unit setup and programming problems over the phone.

If the unit must be sent to Sensaphone for servicing, please do the following:

1. Unplug the power supply, disconnect the battery, and disconnect all wiring.
2. Carefully pack the unit to avoid damage in transit. Use the original container (if available) or a sturdy shipping box.
3. To avoid shipping delays, you must include the following information:

   a) Your name, address and telephone number.

   b) A note explaining the problem.
4. Ship your package to the address below:

   SERVICE DEPARTMENT

   Sensaphone.

   901 Tryens Road

   Aston, PA 19014
5. Ship prepaid and insured via UPS or US Mail to ensure a traceable shipment with recourse for damage or replacement.

Test Log

Date	Inputs	Dialout	Call-In	Battery		Tested By
	Pass ☐ Fail ☐	Pass ☐ Fail ☐	Pass ☐ Fail ☐	Pass ☐ Fail ☐	Pass ☐ Fail ☐	
	Pass ☐ Fail ☐	Pass ☐ Fail ☐	Pass ☐ Fail ☐	Pass ☐ Fail ☐	Pass ☐ Fail ☐	
	Pass ☐ Fail ☐	Pass ☐ Fail ☐	Pass ☐ Fail ☐	Pass ☐ Fail ☐	Pass ☐ Fail ☐	
	Pass ☐ Fail ☐	Pass ☐ Fail ☐	Pass ☐ Fail ☐	Pass ☐ Fail ☐	Pass ☐ Fail ☐	
	Pass ☐ Fail ☐	Pass ☐ Fail ☐	Pass ☐ Fail ☐	Pass ☐ Fail ☐	Pass ☐ Fail ☐	
	Pass ☐ Fail ☐	Pass ☐ Fail ☐	Pass ☐ Fail ☐	Pass ☐ Fail ☐	Pass ☐ Fail ☐	
	Pass ☐ Fail ☐	Pass ☐ Fail ☐	Pass ☐ Fail ☐	Pass ☐ Fail ☐	Pass ☐ Fail ☐	
	Pass ☐ Fail ☐	Pass ☐ Fail ☐	Pass ☐ Fail ☐	Pass ☐ Fail ☐	Pass ☐ Fail ☐	
	Pass ☐ Fail ☐	Pass ☐ Fail ☐	Pass ☐ Fail ☐	Pass ☐ Fail ☐	Pass ☐ Fail ☐	
	Pass ☐ Fail ☐	Pass ☐ Fail ☐	Pass ☐ Fail ☐	Pass ☐ Fail ☐	Pass ☐ Fail ☐	
	Pass ☐ Fail ☐	Pass ☐ Fail ☐	Pass ☐ Fail ☐	Pass ☐ Fail ☐	Pass ☐ Fail ☐	
	Pass ☐ Fail ☐	Pass ☐ Fail ☐	Pass ☐ Fail ☐	Pass ☐ Fail ☐	Pass ☐ Fail ☐	
	Pass ☐ Fail ☐	Pass ☐ Fail ☐	Pass ☐ Fail ☐	Pass ☐ Fail ☐	Pass ☐ Fail ☐	
	Pass ☐ Fail ☐	Pass ☐ Fail ☐	Pass ☐ Fail ☐	Pass ☐ Fail ☐	Pass ☐ Fail ☐	
	Pass ☐ Fail ☐	Pass ☐ Fail ☐	Pass ☐ Fail ☐	Pass ☐ Fail ☐	Pass ☐ Fail ☐	
	Pass ☐ Fail ☐	Pass ☐ Fail ☐	Pass ☐ Fail ☐	Pass ☐ Fail ☐	Pass ☐ Fail ☐	
	Pass ☐ Fail ☐	Pass ☐ Fail ☐	Pass ☐ Fail ☐	Pass ☐ Fail ☐	Pass ☐ Fail ☐	
	Pass ☐ Fail ☐	Pass ☐ Fail ☐	Pass ☐ Fail ☐	Pass ☐ Fail ☐	Pass ☐ Fail ☐	
	Pass ☐ Fail ☐	Pass ☐ Fail ☐	Pass ☐ Fail ☐	Pass ☐ Fail ☐	Pass ☐ Fail ☐	
	Pass ☐ Fail ☐	Pass ☐ Fail ☐	Pass ☐ Fail ☐	Pass ☐ Fail ☐	Pass ☐ Fail ☐	

Date	Inputs	Dialout	Call-In	Battery		Tested By
	Pass ☐ Fail ☐	Pass ☐ Fail ☐	Pass ☐ Fail ☐	Pass ☐ Fail ☐	Pass ☐ Fail ☐	
	Pass ☐ Fail ☐	Pass ☐ Fail ☐	Pass ☐ Fail ☐	Pass ☐ Fail ☐	Pass ☐ Fail ☐	
	Pass ☐ Fail ☐	Pass ☐ Fail ☐	Pass ☐ Fail ☐	Pass ☐ Fail ☐	Pass ☐ Fail ☐	
	Pass ☐ Fail ☐	Pass ☐ Fail ☐	Pass ☐ Fail ☐	Pass ☐ Fail ☐	Pass ☐ Fail ☐	
	Pass ☐ Fail ☐	Pass ☐ Fail ☐	Pass ☐ Fail ☐	Pass ☐ Fail ☐	Pass ☐ Fail ☐	
	Pass ☐ Fail ☐	Pass ☐ Fail ☐	Pass ☐ Fail ☐	Pass ☐ Fail ☐	Pass ☐ Fail ☐	
	Pass ☐ Fail ☐	Pass ☐ Fail ☐	Pass ☐ Fail ☐	Pass ☐ Fail ☐	Pass ☐ Fail ☐	
	Pass ☐ Fail ☐	Pass ☐ Fail ☐	Pass ☐ Fail ☐	Pass ☐ Fail ☐	Pass ☐ Fail ☐	
	Pass ☐ Fail ☐	Pass ☐ Fail ☐	Pass ☐ Fail ☐	Pass ☐ Fail ☐	Pass ☐ Fail ☐	
	Pass ☐ Fail ☐	Pass ☐ Fail ☐	Pass ☐ Fail ☐	Pass ☐ Fail ☐	Pass ☐ Fail ☐	
	Pass ☐ Fail ☐	Pass ☐ Fail ☐	Pass ☐ Fail ☐	Pass ☐ Fail ☐	Pass ☐ Fail ☐	
	Pass ☐ Fail ☐	Pass ☐ Fail ☐	Pass ☐ Fail ☐	Pass ☐ Fail ☐	Pass ☐ Fail ☐	
	Pass ☐ Fail ☐	Pass ☐ Fail ☐	Pass ☐ Fail ☐	Pass ☐ Fail ☐	Pass ☐ Fail ☐	
	Pass ☐ Fail ☐	Pass ☐ Fail ☐	Pass ☐ Fail ☐	Pass ☐ Fail ☐	Pass ☐ Fail ☐	
	Pass ☐ Fail ☐	Pass ☐ Fail ☐	Pass ☐ Fail ☐	Pass ☐ Fail ☐	Pass ☐ Fail ☐	
	Pass ☐ Fail ☐	Pass ☐ Fail ☐	Pass ☐ Fail ☐	Pass ☐ Fail ☐	Pass ☐ Fail ☐	
	Pass ☐ Fail ☐	Pass ☐ Fail ☐	Pass ☐ Fail ☐	Pass ☐ Fail ☐	Pass ☐ Fail ☐	
	Pass ☐ Fail ☐	Pass ☐ Fail ☐	Pass ☐ Fail ☐	Pass ☐ Fail ☐	Pass ☐ Fail ☐	
	Pass ☐ Fail ☐	Pass ☐ Fail ☐	Pass ☐ Fail ☐	Pass ☐ Fail ☐	Pass ☐ Fail ☐	
	Pass ☐ Fail ☐	Pass ☐ Fail ☐	Pass ☐ Fail ☐	Pass ☐ Fail ☐	Pass ☐ Fail ☐	

Date	Inputs		Dialout		Call-In		Battery				Tested By
	Pass ☐	Fail ☐	Pass ☐	Fail ☐	Pass ☐	Fail ☐	Pass ☐	Fail ☐	Pass ☐	Fail ☐	
	Pass ☐	Fail ☐	Pass ☐	Fail ☐	Pass ☐	Fail ☐	Pass ☐	Fail ☐	Pass ☐	Fail ☐	
	Pass ☐	Fail ☐	Pass ☐	Fail ☐	Pass ☐	Fail ☐	Pass ☐	Fail ☐	Pass ☐	Fail ☐	
	Pass ☐	Fail ☐	Pass ☐	Fail ☐	Pass ☐	Fail ☐	Pass ☐	Fail ☐	Pass ☐	Fail ☐	
	Pass ☐	Fail ☐	Pass ☐	Fail ☐	Pass ☐	Fail ☐	Pass ☐	Fail ☐	Pass ☐	Fail ☐	
	Pass ☐	Fail ☐	Pass ☐	Fail ☐	Pass ☐	Fail ☐	Pass ☐	Fail ☐	Pass ☐	Fail ☐	
	Pass ☐	Fail ☐	Pass ☐	Fail ☐	Pass ☐	Fail ☐	Pass ☐	Fail ☐	Pass ☐	Fail ☐	
	Pass ☐	Fail ☐	Pass ☐	Fail ☐	Pass ☐	Fail ☐	Pass ☐	Fail ☐	Pass ☐	Fail ☐	
	Pass ☐	Fail ☐	Pass ☐	Fail ☐	Pass ☐	Fail ☐	Pass ☐	Fail ☐	Pass ☐	Fail ☐	
	Pass ☐	Fail ☐	Pass ☐	Fail ☐	Pass ☐	Fail ☐	Pass ☐	Fail ☐	Pass ☐	Fail ☐	
	Pass ☐	Fail ☐	Pass ☐	Fail ☐	Pass ☐	Fail ☐	Pass ☐	Fail ☐	Pass ☐	Fail ☐	
	Pass ☐	Fail ☐	Pass ☐	Fail ☐	Pass ☐	Fail ☐	Pass ☐	Fail ☐	Pass ☐	Fail ☐	
	Pass ☐	Fail ☐	Pass ☐	Fail ☐	Pass ☐	Fail ☐	Pass ☐	Fail ☐	Pass ☐	Fail ☐	
	Pass ☐	Fail ☐	Pass ☐	Fail ☐	Pass ☐	Fail ☐	Pass ☐	Fail ☐	Pass ☐	Fail ☐	
	Pass ☐	Fail ☐	Pass ☐	Fail ☐	Pass ☐	Fail ☐	Pass ☐	Fail ☐	Pass ☐	Fail ☐	
	Pass ☐	Fail ☐	Pass ☐	Fail ☐	Pass ☐	Fail ☐	Pass ☐	Fail ☐	Pass ☐	Fail ☐	
	Pass ☐	Fail ☐	Pass ☐	Fail ☐	Pass ☐	Fail ☐	Pass ☐	Fail ☐	Pass ☐	Fail ☐	
	Pass ☐	Fail ☐	Pass ☐	Fail ☐	Pass ☐	Fail ☐	Pass ☐	Fail ☐	Pass ☐	Fail ☐	
	Pass ☐	Fail ☐	Pass ☐	Fail ☐	Pass ☐	Fail ☐	Pass ☐	Fail ☐	Pass ☐	Fail ☐	
	Pass ☐	Fail ☐	Pass ☐	Fail ☐	Pass ☐	Fail ☐	Pass ☐	Fail ☐	Pass ☐	Fail ☐	

Date	Inputs	Dialout	Call-In	Battery		Tested By
	Pass ☐ Fail ☐	Pass ☐ Fail ☐	Pass ☐ Fail ☐	Pass ☐ Fail ☐	Pass ☐ Fail ☐	
	Pass ☐ Fail ☐	Pass ☐ Fail ☐	Pass ☐ Fail ☐	Pass ☐ Fail ☐	Pass ☐ Fail ☐	
	Pass ☐ Fail ☐	Pass ☐ Fail ☐	Pass ☐ Fail ☐	Pass ☐ Fail ☐	Pass ☐ Fail ☐	
	Pass ☐ Fail ☐	Pass ☐ Fail ☐	Pass ☐ Fail ☐	Pass ☐ Fail ☐	Pass ☐ Fail ☐	
	Pass ☐ Fail ☐	Pass ☐ Fail ☐	Pass ☐ Fail ☐	Pass ☐ Fail ☐	Pass ☐ Fail ☐	
	Pass ☐ Fail ☐	Pass ☐ Fail ☐	Pass ☐ Fail ☐	Pass ☐ Fail ☐	Pass ☐ Fail ☐	
	Pass ☐ Fail ☐	Pass ☐ Fail ☐	Pass ☐ Fail ☐	Pass ☐ Fail ☐	Pass ☐ Fail ☐	
	Pass ☐ Fail ☐	Pass ☐ Fail ☐	Pass ☐ Fail ☐	Pass ☐ Fail ☐	Pass ☐ Fail ☐	
	Pass ☐ Fail ☐	Pass ☐ Fail ☐	Pass ☐ Fail ☐	Pass ☐ Fail ☐	Pass ☐ Fail ☐	
	Pass ☐ Fail ☐	Pass ☐ Fail ☐	Pass ☐ Fail ☐	Pass ☐ Fail ☐	Pass ☐ Fail ☐	
	Pass ☐ Fail ☐	Pass ☐ Fail ☐	Pass ☐ Fail ☐	Pass ☐ Fail ☐	Pass ☐ Fail ☐	
	Pass ☐ Fail ☐	Pass ☐ Fail ☐	Pass ☐ Fail ☐	Pass ☐ Fail ☐	Pass ☐ Fail ☐	
	Pass ☐ Fail ☐	Pass ☐ Fail ☐	Pass ☐ Fail ☐	Pass ☐ Fail ☐	Pass ☐ Fail ☐	
	Pass ☐ Fail ☐	Pass ☐ Fail ☐	Pass ☐ Fail ☐	Pass ☐ Fail ☐	Pass ☐ Fail ☐	
	Pass ☐ Fail ☐	Pass ☐ Fail ☐	Pass ☐ Fail ☐	Pass ☐ Fail ☐	Pass ☐ Fail ☐	
	Pass ☐ Fail ☐	Pass ☐ Fail ☐	Pass ☐ Fail ☐	Pass ☐ Fail ☐	Pass ☐ Fail ☐	
	Pass ☐ Fail ☐	Pass ☐ Fail ☐	Pass ☐ Fail ☐	Pass ☐ Fail ☐	Pass ☐ Fail ☐	
	Pass ☐ Fail ☐	Pass ☐ Fail ☐	Pass ☐ Fail ☐	Pass ☐ Fail ☐	Pass ☐ Fail ☐	
	Pass ☐ Fail ☐	Pass ☐ Fail ☐	Pass ☐ Fail ☐	Pass ☐ Fail ☐	Pass ☐ Fail ☐	

Date	Inputs	Dialout	Call-In	Battery		Tested By
	Pass ☐ Fail ☐	Pass ☐ Fail ☐	Pass ☐ Fail ☐	Pass ☐ Fail ☐	Pass ☐ Fail ☐	
	Pass ☐ Fail ☐	Pass ☐ Fail ☐	Pass ☐ Fail ☐	Pass ☐ Fail ☐	Pass ☐ Fail ☐	
	Pass ☐ Fail ☐	Pass ☐ Fail ☐	Pass ☐ Fail ☐	Pass ☐ Fail ☐	Pass ☐ Fail ☐	
	Pass ☐ Fail ☐	Pass ☐ Fail ☐	Pass ☐ Fail ☐	Pass ☐ Fail ☐	Pass ☐ Fail ☐	
	Pass ☐ Fail ☐	Pass ☐ Fail ☐	Pass ☐ Fail ☐	Pass ☐ Fail ☐	Pass ☐ Fail ☐	
	Pass ☐ Fail ☐	Pass ☐ Fail ☐	Pass ☐ Fail ☐	Pass ☐ Fail ☐	Pass ☐ Fail ☐	
	Pass ☐ Fail ☐	Pass ☐ Fail ☐	Pass ☐ Fail ☐	Pass ☐ Fail ☐	Pass ☐ Fail ☐	
	Pass ☐ Fail ☐	Pass ☐ Fail ☐	Pass ☐ Fail ☐	Pass ☐ Fail ☐	Pass ☐ Fail ☐	
	Pass ☐ Fail ☐	Pass ☐ Fail ☐	Pass ☐ Fail ☐	Pass ☐ Fail ☐	Pass ☐ Fail ☐	
	Pass ☐ Fail ☐	Pass ☐ Fail ☐	Pass ☐ Fail ☐	Pass ☐ Fail ☐	Pass ☐ Fail ☐	
	Pass ☐ Fail ☐	Pass ☐ Fail ☐	Pass ☐ Fail ☐	Pass ☐ Fail ☐	Pass ☐ Fail ☐	
	Pass ☐ Fail ☐	Pass ☐ Fail ☐	Pass ☐ Fail ☐	Pass ☐ Fail ☐	Pass ☐ Fail ☐	
	Pass ☐ Fail ☐	Pass ☐ Fail ☐	Pass ☐ Fail ☐	Pass ☐ Fail ☐	Pass ☐ Fail ☐	
	Pass ☐ Fail ☐	Pass ☐ Fail ☐	Pass ☐ Fail ☐	Pass ☐ Fail ☐	Pass ☐ Fail ☐	
	Pass ☐ Fail ☐	Pass ☐ Fail ☐	Pass ☐ Fail ☐	Pass ☐ Fail ☐	Pass ☐ Fail ☐	
	Pass ☐ Fail ☐	Pass ☐ Fail ☐	Pass ☐ Fail ☐	Pass ☐ Fail ☐	Pass ☐ Fail ☐	
	Pass ☐ Fail ☐	Pass ☐ Fail ☐	Pass ☐ Fail ☐	Pass ☐ Fail ☐	Pass ☐ Fail ☐	
	Pass ☐ Fail ☐	Pass ☐ Fail ☐	Pass ☐ Fail ☐	Pass ☐ Fail ☐	Pass ☐ Fail ☐	
	Pass ☐ Fail ☐	Pass ☐ Fail ☐	Pass ☐ Fail ☐	Pass ☐ Fail ☐	Pass ☐ Fail ☐	

REVISIONS			
REV.	DESCRIPTION	DATE	APPR.
1	ADD STATEMENT NOT IN COMPLIANCE WITH MASSACHUSETTS BUILDING CODE TO ASPHALT SINGLES ON A 3–12 PITCH ROOF	5/13/13	PRS
2	CHANGE ROOF PITCH FROM 3–12 TO 2–12; CHANGE ROOF SHEATHING FROM 1/2" TO 5/8"; ADD 12' OVERHANG ON SHORT SIDE OF SHED AND 6" OVER–HANG ON HIGH SIDE OF SHED	6/5/13	PRS
3	MIRROR ROOF SLOPE FROM RIGHT OT LEFT TO LEFT TO RIGHT	7/12/13	PRS

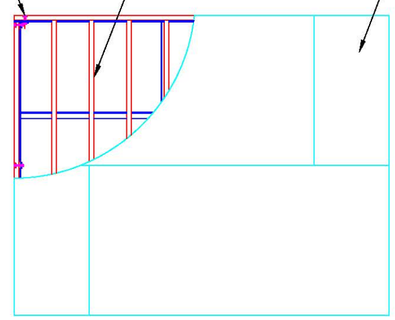

FLOOR DETAIL

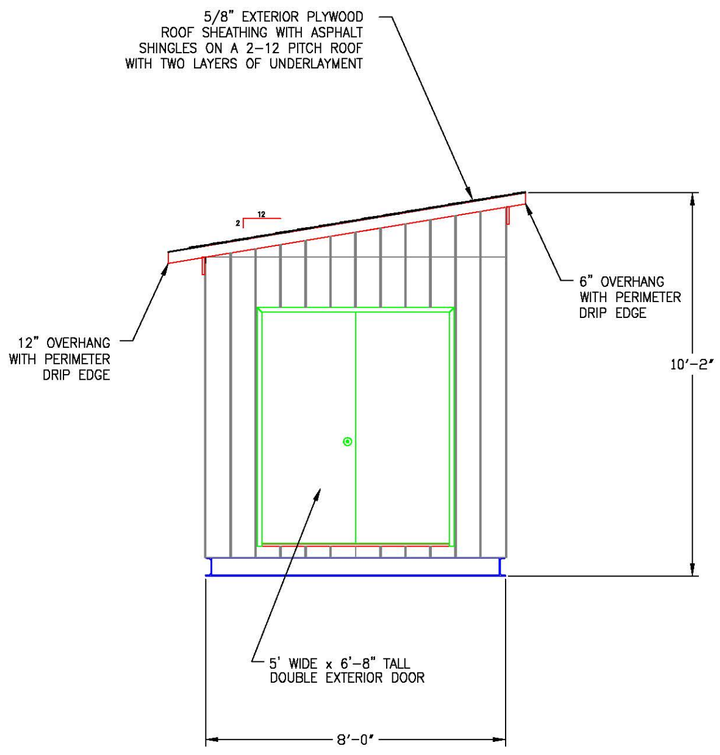

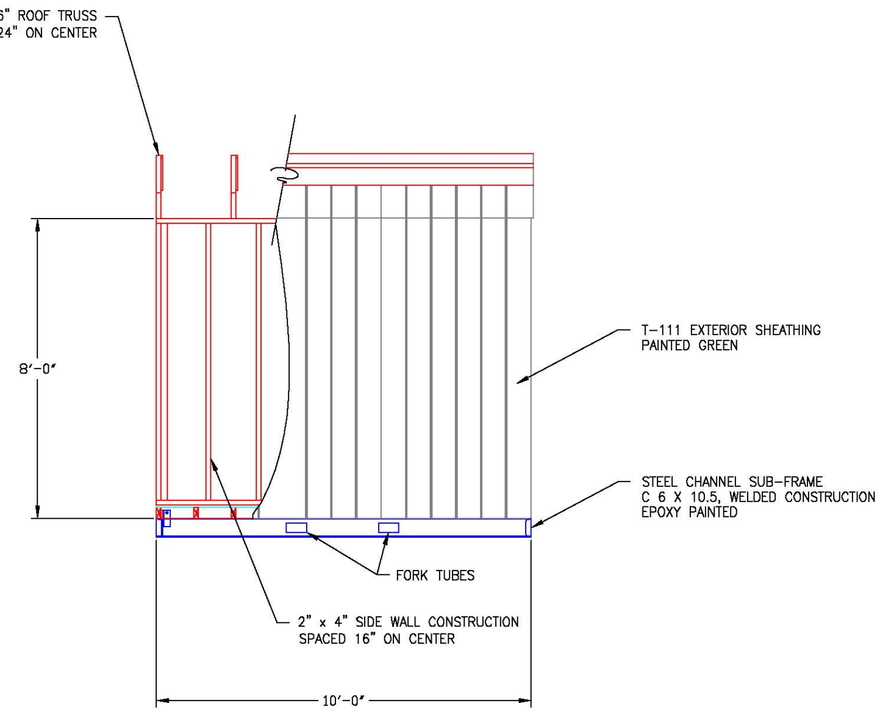

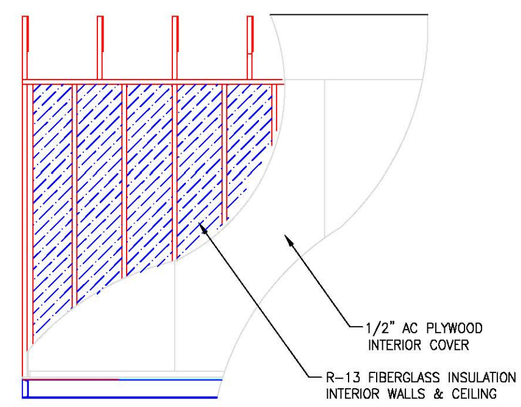

INTERIOR WALL DETAIL

CONFIDENTIALITY NOTE:
The information contained in this drawing is intended for use only by Air Energy, Incorporated. The information is confidential and any copying, distribution or dissemination without the consent of Air Energy, Incorporated is strictly prohibited.

AIR ENERGY, INCORPORATED
6 Norfolk Avenue South Easton, Massachusetts 02375
Phone (508) 230–9445 Fax (508) 230–9446

TITLE
WOODEN FRAME SHED DETAIL

DRWN BY	DATE				
PRS	5/7/2013				
CHK BY	DATE			MODEL NO.	
APPR BY	DATE	SCALE 1"=40"	SIZE C	DWG NO.	SHEET 1 OF 1 / REV 3

SCHLAGE
STRONG HAS A NAME.™

Plymouth Door Knob

Bright Brass - Plymouth

Keyed Entrance Lock
Model Number: F51 PLY 505

Features | Specifications

- Resistant to pick and bump security attacks, certified as meeting ANSI Grade 2 standards
- Easy 3-step installation, only a screwdriver needed
- Quality materials and construction for exceptional security
- Lifetime finish and mechanical guarantee (Oil-Rubbed Bronze is only a mechanical guarantee)
- Quality finishes coordinate with plumbing and lighting
-

- Applications: Residential single- and multi-family doors
- Certifications: ANSI A156.2, 1996, Series 4000 Grade 2
- U.L. Listed: Locks for up to three-hour fire doors available
- Keying: 5-pin tumbler C keyway with two nickel silver keys
- Door thickness range: 1-3/8" to 1-3/4" (35mm-44mm) standard
- Backset: Universal latch standard, fits either 2-3/8" (60mm) or 2-3/4" (70mm) backsets. 5" (127mm) backset available
- ADA compliant: No

Enter Postal Code

Shop the Schlage Store

Related Products

Handleset
View

Keypad Deadbolt
View

Deadbolt
View

Please read and save these instructions. ***Read carefully before attempting to assemble, install, operate or maintain the product described. Protect yourself and others by observing all safety information. Failure to comply with instructions could result in personal injury and/or property damage! Retain instructions for future reference.***

Dayton® Hazardous Location Direct-Drive Exhaust Fans

Description

Dayton hazardous location exhaust fans are designed for ventilating spaces containing flammable or explosive vapors, gases, or dusts as defined under Article 500 of the National Electrical Code (NEC). Mount in vertical or horizontal position. Construction includes galvanized steel frame, pre-punched mounting holes, hazardous location ball bearings, and spark-resistant aluminum propeller. Motor is explosion-proof, fan-cooled enclosure with Class B insulation (if marked on motor). All fans have a maximum ambient temperature of 104ºF (if marked on motor) and are UL/cUL Listed Standard 1203, NEC Class I, Groups C and D; NEC Class II, Groups F and G (Model 10E020 Groups E, F and G).

Dayton Electric Mfg. Co. certifies that the fans shown herein are licensed to bear the AMCA seal. The ratings shown are based on tests and procedures performed in accordance with AMCA Publication 211 and AMCA Publication 311 and comply with the requirements of the AMCA Certified Ratings Program.

c UL us LISTED
E197939

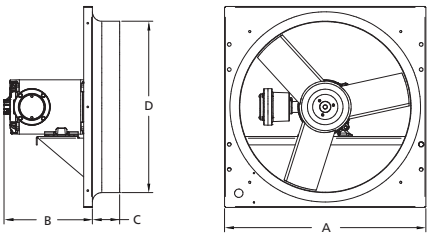

Figure 1 — Panel Fan Dimensions

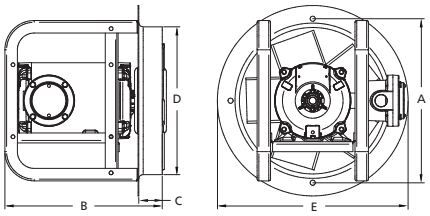

Figure 2 — Ring Fan Dimensions

Unpacking

1. Inspect for any damage that may have occurred during transit.
2. Shipping damage claim must be filed with carrier.
3. Check all bolts, screws, set-screws, etc. for looseness that may have occurred during transit. Retighten as required. Rotate propeller by hand to be sure it turns freely.

Dimensions and Specifications

Model	Prop. Dia.	Shaft Dia.	A	B	C	D	E	Blades	Recommended Wall Opening: Direct to Wall	Recommended Wall Opening: Wall Collar, Wall Collar & Guard, or Wall Housing
PANEL FANS (See Figure 1)										
10D995, 10D996	12"	5/8"	16"	9½"	3"	12¼"	—	5	14½ x 14½"	17¼ x 17¼"
10D997, 10D998	16	5/8	20	9½	3¼	16½	—	3	18½ x 18½	21¼ x 21¼
10D999	18	5/8	22	9½	3⅛	18½	—	3	20½ x 20½	23¼ x 23¼
10E001	18	5/8	22	11	3⅛	18½	—	3	20½ x 20½	23¼ x 23¼
10E002, 10E003	20	5/8	24	11½	3¾	20½	—	3	22½ x 22½	25⅝ x 25⅝
10E004, 10E005, 10E006	24	5/8	28	11½	3⅞	24½	—	3	26½ x 26½	29⅝ x 29⅝
10E007	24	5/8	28	12	3⅞	24½	—	3	26½ x 26½	29⅝ x 29⅝
RING FANS (See Figure 2)										
10E008, 10E009	12"	5/8	14⅞"	13½"	2"	12½"	16¼"	5	13½" Dia.	—
10E010, 10E011	16	5/8	18⅞	13½	2	16½	20¼	3	17½	—
10E012, 10E013	18	5/8	20⅞	13½	2	18½	22¼	3	19½	—
10E014, 10E015	20	5/8	23	13½	2	20½	24¼	3	21½	—
10E016, 10E017, 10E018, 10E019	24	5/8	26⅞	13½	2	24½	28¼	3	25½	—
10E020	30	5/8	32	17½	2	30½	34¼	3	31½	—

Form 5S7003

Printed in U.S.A.
04632
Version 0

474904
Rev. 1, November 2011

Dayton®

ENGLISH
ESPAÑOL
FRANÇAIS

Dayton® Hazardous Location Direct-Drive Exhaust Fans

ENGLISH

Performance

Model 1-PHASE 115/208-230	Model 3-PHASE 208-230/460	Prop. Dia.	HP	Motor RPM	Sones @ 0.000" SP @ 5Ft.	CFM Air Delivery @ Static Pressure Shown 0.000"	0.125"	0.250"	0.375"	0.500"
PANEL FANS										
10D995	**10D996**	12"	1/4	1750	13.4	1347	1262	1142	947	604
10D997	**10D998**	16	1/4	1750	14.1	2476	2288	2061	1769	1350
10D999	**10E001**	18	1/3	1750	19.1	3168	2912	2612	2219	1599
10E002	**10E003**	20	1/2	1750	23	4557	4254	3919	3542	3101
10E004	**10E006**	24	1/2	1750	26	5669	4946	4010	2963	1906
10E005	**10E007**	24	3/4	1750	28	6317	5851	5314	4729	4117
RING FANS										
10E008	**10E009**	12"	1/4	1725	13.6	1147	999	803	682	—
10E010	**10E011**	16	1/4	1750	17.0	2153	1943	1713	1366	1125
10E012	**10E013**	18	1/4	1750	21	2371	2089	1756	1423	1088
10E014	**10E015**	20	1/4	1750	23	2429	2074	1744	1341	1098
10E016	**10E018**	24	1/3	1750	30	3837	3305	2637	1970	—
10E017	**10E019**	24	1/2	1750	26	5669	4946	4010	2963	1906
10E020	**—**	30	3/4	1140	28	8153	7515	6804	5957	4956

Performance certified is for installation type A: Free inlet, Free outlet. Performance ratings do not include the effects of appurtenances (accessories). Speed (RPM) shown is nominal. Performance is based on actual speed of test. The sound ratings shown are loudness values in fan sones at 5 ft. (1.5 m) in a hemispherical free field calculated per AMCA Standard 301. Values shown are for installation type A: Free inlet hemispherical sone levels.

General Safety Information

⚠ DANGER ***Do not depend on any switch as the sole means of disconnecting power when installing or servicing the fan. Always disconnect, lock and tag power source before installing or servicing. Failure to disconnect power source can result in fire, shock or serious injury. Units with thermally protected motors, motor will restart without warning after thermal protector trips. Do not touch operating motor, it may be hot enough to cause injury.***

⚠ DANGER ***Do not place any body parts or objects in fan, motor openings or drives while motor is connected to power source.***

1. Read and follow all instructions and cautionary markings. Make sure electrical power source conforms to requirements of equipment and local codes.
2. Fans should be assembled, installed and serviced by a qualified technician. Have all electrical work performed by a qualified electrician.
3. Follow all local electrical and safety codes in the United States and Canada, as well as the National Electrical Code (NEC) and the Occupational Safety and Health Act (OSHA) in the United States. Ground motor in accordance with NEC Article 250 (grounding). Follow the Canadian Electric Code (CEC) in Canada.
4. All moving parts should be guarded.

⚠ CAUTION ***To reduce the risk of injury to persons, observe the following:***

OSHA requires OSHA complying guards when fan is installed within 7 feet of floor or working level.

UL/cUL Standards require OSHA complying guards when fan is installed within 8 feet of floor or working level.

5. Make certain that the power source conforms to the requirements for the equipment.

Installation

⚠ WARNING ***Installation, troubleshooting and parts replacement is to be performed only by qualified personnel.***

⚠ CAUTION ***If gases, other than clean air, are to be exhausted using the fan, then the user bears the responsibility of determining that the fan is appropriate and safe for the application.***

Models 10D995 thru 10D999, 10E001 thru 10E020

Installation (Continued)

⚠ WARNING ***Not for use where paint residue can accumulate on motor.***

⚠ CAUTION ***To reduce the risk of ignition of hazardous atmospheres, disconnect the fan from the supply circuit before opening. Keep the motor tightly closed with in operation.***

WALL MOUNTING

1. Move fan to the desired location and determine the method by which the fan is to be mounted.

NOTE: Wall opening size and propeller-to-shutter distance are two important dimensions for fan installation.

2. Cut an appropriate sized hole in the wall using the Dimensions table on page 1.

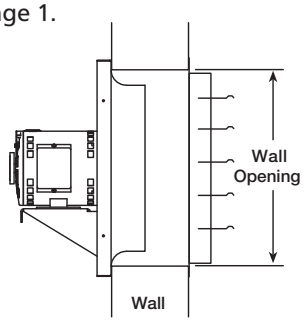

Figure 3 — Direct to Wall Installation

NOTE: Panel fans mounted to the wall require a different opening size than those mounted in collars or housings.

3. The fan should be securely mounted within a rigid framework to prevent flexing or movement of the fan frame during operation. The fan frame should be equally supported on all sides within the framework and caution should be taken to avoid twisting of the fan frame during installation.

NOTE: Allowing the fan frame to flex or move during operation will create harmful vibrations which may damage the unit.

4. Fans should be mounted in opening with 1/4" clearance around perimeter. Framing should be secured to building structure utilizing corrosion resistant fasteners (by others). Fasteners should be used in all pre-punched mounting holes.
5. Install remaining components (shutter, intake guard, etc.).
6. Check all fasteners and set screws for tightness.
7. Rotation direction of the propeller should be checked by momentarily turning the unit on. Rotation should be in the same direction as the rotation decal affixed to the unit. For 3-phase installations, fan rotation can be reversed by interchanging any two of the three electrical leads. For single phase installations follow the wiring diagram located on the motor.

ELECTRICAL CONNECTION

NOTE: Refer to motor nameplate for wiring procedures. Refer to switch manufacturer for installation and wiring procedures.

1. Motor and fan must be securely grounded (bare metal) to a suitable electric ground, such as a grounded water pipe or ground wire system.

⚠ WARNING ***Comply with all local and national safety codes including the National Electrical Code (NEC) and National Fire Protection Act (NFPA).***

NOTE: Motor and switch must be classified as hazardous for fan to be suitable for use in hazardous environments. Installation must be performed by a qualified personnel with suitable motor and disconnect for application.

2. Wire motor for desired voltage per wiring diagram on motor.
3. Wire control switches at ground level.
4. Before activating fan, inspect to be sure that there are no obstructions or debris that would interfere with the propeller.

Operation

1. Before starting up or operating your new Dayton fan, check all fasteners for tightness. In particular, check set screws in propeller hub.

   While in the OFF position, or before connecting the fan to power, turn the fan propeller by hand to be sure it is not striking the orifice or any obstacle.
2. Start the fan up and shut it off immediately to check rotation of the propeller with directional arrow in the motor compartment.
3. When the fan is started, observe the operation and check for any unusual noises.
4. Motor amperage should be checked to avoid overloading of the motor. With the system in full operation measure current input to the motor and compare with the nameplate rating to determine if the BHP is operating under safe load conditions. See performance on page 2.
5. Keep inlets and approaches to fan clean and free from obstruction.

ENGLISH

Dayton® Hazardous Location Direct-Drive Exhaust Fans

ENGLISH

Maintenance

⚠ WARNING ***Always disconnect, lock and tag power source before installing or servicing. Failure to disconnect power source can result in fire, shock or serious injury.***

⚠ CAUTION ***Uneven cleaning of the propeller will produce an out of balance condition that will cause vibration in the fan.***

1. Depending on the usage and severity of the contaminated air, a regularly scheduled inspection for cleaning the fan propeller, housing and surrounding areas should be established.
2. Check for unusual noises when fan is running.
3. Periodically inspect and tighten set-screws.
4. Follow motor manufacturer's instructions for motor lubrication.

Troubleshooting Chart

Symptom	Possible Cause(s)	Corrective Action
Fan inoperative	1. Blown fuse or breaker 2. Incorrectly wired 3. Electricity turned off	1. Replace or repair 2. Shut power OFF and check wiring for proper connections 3. Contact local power company
Airflow - Reversed air Airflow - Too much air	1. Propeller rotation reversed 2. Insufficient static pressure	1. Reverse motor rotation, rewire motor 2. Check static pressure calculation
Excessive noise or vibration	1. Foreign material inside bearing 2. Loose propeller 3. Fan not securely anchored	1. Replace bearing 2. Tighten set screws or taper bushing screws 3. Secure properly
Motor overloads or overheats	1. Incorrect propeller rotation 2. Over/Under line voltage	1. Check motor wiring 2. Contact Power Company

LIMITED WARRANTY

DAYTON ONE-YEAR LIMITED WARRANTY. *DAYTON® HAZARDOUS LOCATION DIRECT-DRIVE EXHAUST FANS, MODELS COVERED IN THIS MANUAL, ARE WARRANTED BY DAYTON ELECTRIC MFG. CO. (DAYTON) TO THE ORIGINAL USER AGAINST DEFECTS IN WORKMANSHIP OR MATERIALS UNDER NORMAL USE FOR ONE YEAR AFTER DATE OF PURCHASE. ANY PART WHICH IS DETERMINED TO BE DEFECTIVE IN MATERIAL OR WORKMANSHIP AND RETURNED TO AN AUTHORIZED SERVICE LOCATION, AS DAYTON DESIGNATES, SHIPPING COSTS PREPAID, WILL BE, AS THE EXCLUSIVE REMEDY, REPAIRED OR REPLACED AT DAYTON'S OPTION. FOR LIMITED WARRANTY CLAIM PROCEDURES, SEE "PROMPT DISPOSITION" BELOW. THIS LIMITED WARRANTY GIVES PURCHASERS SPECIFIC LEGAL RIGHTS WHICH VARY FROM JURISDICTION TO JURISDICTION.*

LIMITATION OF LIABILITY. *TO THE EXTENT ALLOWABLE UNDER APPLICABLE LAW, DAYTON'S LIABILITY FOR CONSEQUENTIAL AND INCIDENTAL DAMAGES IS EXPRESSLY DISCLAIMED. DAYTON'S LIABILITY IN ALL EVENTS IS LIMITED TO AND SHALL NOT EXCEED THE PURCHASE PRICE PAID.*

WARRANTY DISCLAIMER. *A DILIGENT EFFORT HAS BEEN MADE TO PROVIDE PRODUCT INFORMATION AND ILLUSTRATE THE PRODUCTS IN THIS LITERATURE ACCURATELY; HOWEVER, SUCH INFORMATION AND ILLUSTRATIONS ARE FOR THE SOLE PURPOSE OF IDENTIFICATION, AND DO NOT EXPRESS OR IMPLY A WARRANTY THAT THE PRODUCTS ARE MERCHANTABLE, OR FIT FOR A PARTICULAR PURPOSE, OR THAT THE PRODUCTS WILL NECESSARILY CONFORM TO THE ILLUSTRATIONS OR DESCRIPTIONS. EXCEPT AS PROVIDED BELOW, NO WARRANTY OR AFFIRMATION OF FACT, EXPRESSED OR IMPLIED, OTHER THAN AS STATED IN THE "LIMITED WARRANTY" ABOVE IS MADE OR AUTHORIZED BY DAYTON.*

Technical Advice and Recommendations, Disclaimer. *Notwithstanding any past practice or dealings or trade custom, sales shall not include the furnishing of technical advice or assistance or system design. Dayton assumes no obligations or liability on account of any unauthorized recommendations, opinions or advice as to the choice, installation or use of products.*

Product Suitability. *Many jurisdictions have codes and regulations governing sales, construction, installation, and/or use of products for certain purposes, which may vary from those in neighboring areas. While attempts are made to assure that Dayton products comply with such codes, Dayton cannot guarantee compliance, and cannot be responsible for how the product is installed or used. Before purchase and use of a product, review the product applications, and all applicable national and local codes and regulations, and be sure that the product, installation, and use will comply with them.*

Certain aspects of disclaimers are not applicable to consumer products; e.g., (a) some jurisdictions do not allow the exclusion or limitation of incidental or consequential damages, so the above limitation or exclusion may not apply to you; (b) also, some jurisdictions do not allow a limitation on how long an implied warranty lasts, consequently the above limitation may not apply to you; and (c) by law, during the period of this Limited Warranty, any implied warranties of implied merchantability or fitness for a particular purpose applicable to consumer products purchased by consumers, may not be excluded or otherwise disclaimed.

Prompt Disposition. *A good faith effort will be made for prompt correction or other adjustment with respect to any product which proves to be defective within limited warranty. For any product believed to be defective within limited warranty, first write or call dealer from whom the product was purchased. Dealer will give additional directions. If unable to resolve satisfactorily, write to Dayton at address below, giving dealer's name, address, date, and number of dealer's invoice, and describing the nature of the defect. Title and risk of loss pass to buyer on delivery to common carrier. If product was damaged in transit to you, file claim with carrier.*

Manufactured for Dayton Electric Mfg. Co.

Dayton®

Por favor lea y guarde estas instrucciones. ***Léalas cuidadosamente antes de tratar de montar, instalar, operar o dar mantenimiento al producto aquí descrito. Protéjase usted mismo y a los demás observando toda la información de seguridad. ¡El no cumplir con las instrucciones puede ocasionar daños, tanto personales como a la propiedad! Guarde estas instrucciones para referencia en el futuro.***

Dayton® Ventiladores Aspirantes de Transmisión Directa para Lugares Peligrosos

Descripción

Los ventiladores aspirantes para lugares peligrosos de Dayton están diseñados para ventilar espacios que contengan vapores, gases o polvos inflamables o explosivos, según se define en el Artículo 500 de National Electrical Code (NEC). El equipo se monta en posición vertical u horizontal. La fabricación incluye un marco de acero galvanizado, orificios de montaje preperforados, rodamientos de bolas para lugares peligrosos y una hélice de aluminio resistente a las chispas. El motor es resistente a las explosiones, con caja enfriada con ventilador con aislamiento Clase B (si está marcado en el motor). Todos los ventiladores tienen una temperatura ambiente máxima de 40 °C (104 °F) (si está marcado en el motor) y cuentan con clasificación UL/cUL norma 1203, NEC Clase I, Grupos C y D; NEC Clase II, Grupos F y G (para el modelo 10E020, Grupos E, F y G).

Dayton Electric Mfg. Co. certifica que los ventiladores que aquí se muestran tienen licencia para llevar el sello AMCA. Los niveles que se muestran se basan en pruebas y procedimientos realizados según la Publicación 211 y 311 de AMCA y cumplen los requisitos del Programa Certified Ratings de AMCA.

c UL US LISTED
E197939

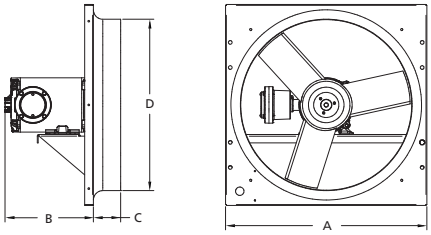

Figura 1 — Dimensiones del Ventilador de Panel

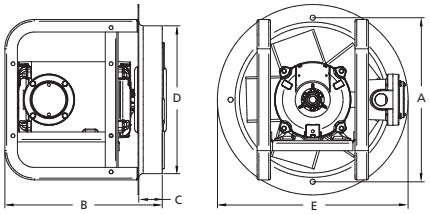

Figura 2 — Dimensiones del Ventilador de Anillo

Desembalaje

1. Revise si existen daños que se hayan producido durante el transporte.
2. Se debe presentar una queja por daños de transporte a la empresa de transporte.
3. Compruebe que ninguno de los pernos, tornillos, tornillos de fijación, etc. se haya soltado durante el transporte. Vuelva a apretarlos, según sea necesario. Gire la hélice manualmente para asegurarse de que gire libremente.

ESPAÑOL

Dimensiones y Especificaciones

Modelo	Diá. de la Hélice	Diá. del Eje	A	B	C	D	E	Paletas	Abertura Recomendada en la Pared: Directo en la Pared	Abertura Recomendada en la Pared: Collar de Pared, Collar de Pared y Protección o Carcasa de Pared
VENTILADORES DE PANEL (Consulte la Figura 1)										
10D995, 10D996	30,5 cm	1,6 cm	40,6 cm	24,1 cm	7,6 cm	31,1 cm	—	5	36,8 x 36,8 cm	43,8 x 43,8 cm
10D997, 10D998	40,6	1,6	50,8	24,1	8,3	41,9	—	3	47,0 x 47,0	54,0 x 54,0
10D999	45,7	1,6	55,9	24,1	7,9	47,0	—	3	52,1 x 52,1	59,1 x 59,1
10E001	45,7	1,6	55,9	27,9	7,9	47,0	—	3	52,1 x 52,1	59,1 x 59,1
10E002, 10E003	50,8	1,6	61,0	29,2	9,5	52,1	—	3	57,2 x 57,2	65,1 x 65,1
10E004, 10E005, 10E006	61,0	1,6	71,1	29,2	9,8	62,2	—	3	67,3 x 67,3	75,2 x 75,2
10E007	61,0	1,6	71,1	30,5	9,8	62,2	—	3	67,3 x 67,3	75,2 x 75,2
VENTILADORES DE ANILLO (Consulte la Figura 2)										
10E008, 10E009	30,5 cm	1,6 cm	37,8 cm	34,3 cm	5,1 cm	31,8 cm	41,3 cm	5	34,3 cm de diá.	—
10E010, 10E011	40,6	1,6	47,9	34,3	5,1	41,9	51,4	3	44,5	—
10E012, 10E013	45,7	1,6	53,0	34,3	5,1	47,0	56,5	3	49,5	—
10E014, 10E015	50,8	1,6	58,4	34,3	5,1	52,1	61,6	3	54,6	—
10E016, 10E017, 10E018, 10E019	61,0	1,6	68,3	34,3	5,1	62,2	71,8	3	64,8	—
10E020	76,2	1,6	81,3	44,5	5,1	77,5	87,0	3	80,0	—

Formulario 5S7003

Impreso en EE. UU.
04632
Versión 0

474904
Mod. 1 de noviembre de 2011

Dayton®

Dayton® Ventiladores Aspirantes de Transmisión Directa para Lugares Peligrosos

Rendimiento

Modelo Monofásico 115/208-230	Modelo Trifásicos 208-230/460	Hélice Diá.	HP	RPM del Motor	Sonios @ 0,000" SP a 5 pies	Suministro de Aire en CFM a la Presión Estática que se Muestra 0,000"	0,125"	0,250"	0,375"	0,500"
VENTILADORES DE PANEL										
10D995	**10D996**	30,5 cm	1/4	1750	13,4	1347	1262	1142	947	604
10D997	**10D998**	40,6	1/4	1750	14,1	2476	2288	2061	1769	1350
10D999	**10E001**	45,7	1/3	1750	19,1	3168	2912	2612	2219	1599
10E002	**10E003**	50,8	1/2	1750	23	4557	4254	3919	3542	3101
10E004	**10E006**	61,0	1/2	1750	26	5669	4946	4010	2963	1906
10E005	**10E007**	61,0	3/4	1750	28	6317	5851	5314	4729	4117
VENTILADORES DE ANILLO										
10E008	**10E009**	30,5 cm	1/4	1725	13,6	1147	999	803	682	—
10E010	**10E011**	40,6	1/4	1750	17,0	2153	1943	1713	1366	1125
10E012	**10E013**	45,7	1/4	1750	21	2371	2089	1756	1423	1088
10E014	**10E015**	50,8	1/4	1750	23	2429	2074	1744	1341	1098
10E016	**10E018**	61,0	1/3	1750	30	3837	3305	2637	1970	—
10E017	**10E019**	61,0	1/2	1750	26	5669	4946	4010	2963	1906
10E020	**—**	76,2	3/4	1140	28	8153	7515	6804	5957	4956

El rendimiento certificado es para instalaciones de tipo A: Entrada y salida libre. El rendimiento efectivo no incluye los efectos de aditamentos (accesorios). La velocidad (RPM) que se muestra es nominal. El rendimiento se basa en la velocidad real de la prueba. El nivel de ruido que se muestra corresponde a valores de intensidad sonora en sonios del ventilador a 1,5 m (5 pies) de distancia en un campo hemisférico libre según la norma 301 de AMCA. Los valores que se muestran son para instalaciones de tipo A: Niveles de sonios hemisféricos de entrada libre.

ESPAÑOL

Información de Seguridad General

⚠ PELIGRO ***No dependa de ningún interruptor como el único medio para desconectar la energía al momento de instalar o de realizar mantenimiento al ventilador. Siempre desconecte, bloquee y etiquete la fuente de energía antes de instalar o realizar mantenimiento. Si no se desconecta la fuente de energía, se puede provocar un incendio, descargas eléctricas o lesiones graves. En las unidades con motores con protección térmica, el motor volverá a arrancar sin advertencia después de que se active el protector térmico. No toque el motor mientras esté en funcionamiento, podría estar lo suficientemente caliente como para provocar lesiones.***

⚠ PELIGRO ***No coloque partes del cuerpo ni objetos en el ventilador, o en los orificios o las transmisiones del motor mientras éste se encuentre conectado a la fuente de energía.***

1. Lea y siga todas las instrucciones y marcas de precaución. Asegúrese de que la fuente de energía eléctrica cumpla los requisitos del equipo y los códigos locales.
2. Un técnico calificado debe realizar el montaje, la instalación y el mantenimiento de los ventiladores. Un electricista calificado debe realizar todo el trabajo eléctrico.
3. Respete todos los códigos eléctricos y de seguridad locales de los Estados Unidos y Canadá, así como también, el National Electrical Code (NEC) y la Ley de Seguridad y Salud Ocupacionales (OSHA, por sus siglas en inglés) de los Estados Unidos. Conecte el motor a tierra de acuerdo con el Artículo 250 de NEC (conexión a tierra). Respete el Código Eléctrico Canadiense (CEC, por sus siglas en inglés) en Canadá.
4. Se debe proteger todas las partes móviles.

⚠ PRECAUCION ***Para reducir el riesgo de lesiones a las personas, respete lo siguiente:***

OSHA exige protectores que cumplan la norma de OSHA cuando el ventilador se instale a 2,1 m (7 pies) del piso o al nivel de trabajo.

Las normas UL/cUL exigen protectores que cumplan la norma de OSHA cuando el ventilador se instale a 2,4 m (8 pies) del piso o al nivel de trabajo.

5. Asegúrese de que la fuente de energía esté en conformidad con los requisitos del equipo.

Instalación

⚠ ADVERTENCIA ***Sólo personal calificado debe realizar la instalación, la solución de problemas y el reemplazo de partes.***

⚠ PRECAUCION ***Si se aspirarán otros gases que no sean aire limpio con el ventilador, entonces el usuario tendrá la responsabilidad de determinar y el ventilador es adecuado y seguro para la aplicación.***

Modelos 10D995 a 10D999, 10E001 a 10E020

Instalación (Continuación)

⚠ ADVERTENCIA ***No usar donde los residuos de pintura se puedan acumular en el motor.***

⚠ PRECAUCION ***Para reducir el riesgo de encendido de atmósferas peligrosas, desconecte el ventilador del circuito de suministro antes de abrirlo. Mantenga el motor firmemente cerrado cuando esté en funcionamiento.***

MONTAJE DE PARED

1. Mueva el ventilador a la ubicación deseada y determine el método mediante el cual se montará el ventilador.

NOTA: El tamaño de la abertura en la pared y la distancia de la hélice a la persiana son dos dimensiones importantes para la instalación del ventilador.

2. Perfore un orificio del tamaño adecuado en la pared con la tabla de dimensiones de la página 1.

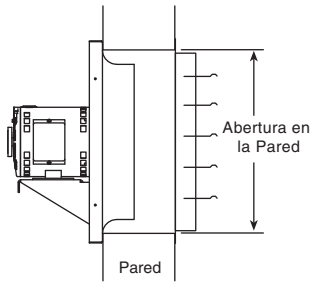

Figura 3 — Instalación Directa en la Pared

NOTA: Los ventiladores de panel que se montan en la pared requieren un tamaño diferente de abertura de aquellos que se montan en collares o carcasas.

3. El ventilador se debe montar con firmeza dentro de un armazón rígido a fin de evitar la flexión o el movimiento del bastidor del ventilador durante su funcionamiento. El bastidor del ventilador se debe apoyar de forma uniforme en todos los lados del armazón y se debe tener cuidado de evitar girar el bastidor del ventilador durante la instalación.

NOTA: Si se permite que el bastidor del ventilador se flexione o mueva durante el funcionamiento, se crearán vibraciones dañinas que pueden dañar la unidad.

4. Los ventiladores se deben montar en aberturas con una holgura de 6,5 mm (1/4 pulg.) alrededor del perímetro. El bastidor se debe fijar a la estructura del edificio con sujetadores resistentes a la corrosión (proporcionados por terceros). Se deben usar sujetadores en todos los orificios de montaje preperforados.
5. Instale los componentes restantes (persiana, protector de entrada, etc.).
6. Compruebe que todos los sujetadores y tornillos de fijación estén apretados.
7. Se debe comprobar la dirección de giro de la hélice encendiendo momentáneamente la unidad. El giro de la hélice debe ser en la misma dirección que indica la calcomanía de giro adherida a la unidad. Para instalaciones trifásicas, el giro del ventilador se puede invertir intercambiando dos de los tres conductores eléctricos. Para instalaciones monofásicas siga el diagrama del cableado que se encuentra en el motor.

CONEXIÓN ELÉCTRICA

NOTA: Consulte la placa de identificación del motor para conocer los procedimientos de cableado. Consulte al fabricante del interruptor para obtener los procedimientos de instalación y cableado.

1. El motor y el ventilador deben estar conectados a tierra de manera segura (en metal desnudo) en una conexión eléctrica a tierra adecuada, como una tubería de agua subterránea o un sistema de cable de conexión a tierra.

⚠ ADVERTENCIA ***Respete todos los códigos se seguridad locales y nacionales, entre los que se encuentran el National Electrical Code (NEC) y la Ley Nacional de Protección Contra Incendios (NFPA, por sus siglas en inglés).***

NOTA: El motor y el interruptor se deben clasificar como peligrosos para su uso con ventiladores en ambientes peligrosos. La instalación la debe realizar personal calificado con un motor y desconexión correctos para la aplicación.

2. Conecte el motor en el voltaje deseado según el diagrama de cableado del motor.
3. Conecte los interruptores de control al nivel del suelo.
4. Antes de activar el ventilador, inspeccione para asegurarse de que no existan obstrucciones ni suciedad que pudiese interferir con la hélice.

Funcionamiento

1. Antes de arrancar u operar el nuevo ventilador Dayton, revise que estén apretados todos los sujetadores. En particular, revise los tornillos de fijación en el cubo de la hélice.

   Mientras se encuentre en la posición OFF (Apagado) o antes de conectar el ventilador a la energía, gire la hélice del ventilador con la mano para asegurarse de que no entre en contacto con el orificio o cualquier obstáculo.
2. Encienda el ventilador y apáguelo inmediatamente para revisar el giro de la hélice con la flecha direccional en el compartimiento del motor.
3. Al arrancar el ventilador, observe el funcionamiento y la presencia de cualquier ruido anormal.
4. Se debe verificar el amperaje del motor para evitar sobrecargarlo. Con el sistema a pleno funcionamiento, mida la entrada de corriente hacia el motor y compárela con la de la placa de identificación para determinar si el BHP funciona en condiciones de carga seguras. Consulte el rendimiento de la página 2.
5. Mantenga las entradas y las vías de acceso al ventilador limpias y libres de obstrucciones.

Dayton® Ventiladores Aspirantes de Transmisión Directa para Lugares Peligrosos

Mantenimiento

⚠ ADVERTENCIA ***Siempre desconecte, bloquee y etiquete la fuente de energía antes de instalar o realizar mantenimiento. Si no se desconecta la fuente de energía, se puede provocar un incendio, descargas eléctricas o lesiones graves.***

⚠ PRECAUCION ***La limpieza desigual de la hélice producirá una condición fuera de equilibrio que provocará vibraciones en el ventilador.***

1. Dependiendo del uso y la densidad del aire contaminado, se debe establecer un programa de inspección regular para limpiar la hélice del ventilador, la carcasa y las áreas circundantes.
2. Cuando esté funcionando el ventilador, revise si existen ruidos anormales.
3. Inspeccione de manera periódica y apriete los tornillos de fijación.
4. Siga las instrucciones del fabricante del motor para su lubricación.

Tabla de Solución de Problemas

Síntoma	Causas Posibles	Medida Correctiva
No funciona el ventilador	1. Se quemó un fusible o cortacircuitos	1. Reemplácelo o repárelo
	2. Se conectó incorrectamente	2. Corte la energía y revise que el cableado esté conectado correctamente
	3. Se cortó la electricidad	3. Comuníquese con la compañía local de electricidad
Flujo de aire está invertido	1. El giro de la hélice está invertido	1. Invierta el giro del motor y vuelva a conectar el motor
Flujo de aire es demasiado	2. Presión estática insuficiente	2. Compruebe el cálculo de la presión estática
Ruido o vibración excesiva	1. Materiales extraños dentro del rodamiento	1. Reemplace el rodamiento
	2. La hélice está suelta	2. Apriete los tornillos de fijación o los tornillos de los bujes cónicos
	3. El ventilador no anclado con firmeza	3. Fíjelo bien
Sobrecarga o sobrecalentamiento del motor	1. Giro incorrecto de la hélice	1. Revise el cableado del motor
	2. Voltaje de línea excesivo o deficiente	2. Comuníquese con la compañía de electricidad

ESPAÑOL

GARANTÍA LIMITADA

GARANTÍA LIMITADA DE UN AÑO DAYTON. *DAYTON® VENTILADORES ASPIRANTES DE TRANSMISIÓN DIRECTA PARA LUGARES PELIGROSOS, LOS MODELOS INCLUIDOS EN ESTE MANUAL, TIENEN GARANTÍA DE DAYTON ELECTRIC MFG. CO. (DAYTON) POR DEFECTOS DE FABRICACIÓN O MATERIALES DURANTE SU USO NORMAL DURANTE UN AÑO A PARTIR DE LA FECHA DE COMPRA. TODA PIEZA QUE SE DEMUESTRE QUE TENGA DEFECTOS DE MATERIAL O DE MANO DE OBRA Y SE DEVUELVA A UN LUGAR DE SERVICIO TÉCNICO AUTORIZADO, DESIGNADO POR DAYTON, COSTOS DE TRANSPORTE PREPAGADOS, SERÁ COMO RECURSO EXCLUSIVO, REPARADA O REEMPLAZADA SEGÚN EL CRITERIO DE DAYTON. POR DEMANDA DE GARANTÍA LIMITADA, VER DISPOSICIÓN INMEDIATA A CONTINUACIÓN. ESTA GARANTÍA LIMITADA LE DA AL COMPRADOR DERECHOS LEGALES ESPECÍFICOS QUE VARÍAN DE UNA JURISDICCIÓN A OTRA.*

RESTRICCIÓN DE RESPONSABILIDAD. *HASTA DONDE LO PERMITA LA LEGISLACIÓN PERTINENTE, DAYTON NIEGA EXPRESAMENTE SU RESPONSABILIDAD EN DAÑOS DE INDIRECTOS O EMERGENTES. LA RESPONSABILIDAD DE DAYTON EN TODOS LOS CASOS SE LIMITA AL PRECIO DE COMPRA Y NO DEBE EXCEDER ÉSTE.*

DENEGACIÓN DE GARANTÍA. *SE HA HECHO UN GRAN ESFUERZO POR PROPORCIONAR INFORMACIÓN SOBRE EL PRODUCTO E ILUSTRAR LOS PRODUCTOS DE MANERA PRECISA EN ESTE DOCUMENTO; SIN EMBARGO, TAL INFORMACIÓN E ILUSTRACIONES TIENEN EL ÚNICO PROPÓSITO DE IDENTIFICACIÓN, Y NO EXPRESA NI IMPLICA UNA GARANTÍA DE QUE LOS PRODUCTOS SEAN DE BUENA CALIDAD, O QUE SE ADAPTEN E UN PROPÓSITO EN ESPECIAL, NI QUE LOS PRODUCTOS ESTÉN NECESARIAMENTE DE ACUERDO CON LAS ILUSTRACIONES O DESCRIPCIONES. CON EXCEPCIÓN DE LO QUE SE DETALLA A CONTINUACIÓN, NINGUNA GARANTÍA NI AFIRMACIÓN DE HECHO, EXPRESA O IMPLÍCITA, APARTE DE LO QUE SE INCLUYE EN LA "GARANTÍA LIMITADA" ESTÁ HECHA O AUTORIZADA POR DAYTON.*

Asesoría Técnica y Recomendaciones, Exención de Responsabilidad. *No obstante las prácticas, tratos o costumbre del oficio anteriores, las ventas no incluirán asesoría o asistencia técnica, o el diseño del sistema. Dayton no asume obligaciones ni responsabilidades debido a recomendaciones, opiniones o asesorías no autorizadas en cuanto a la elección, la instalación o el uso de productos.*

Aptitud del Producto. *Muchas jurisdicciones tienen códigos y ordenanzas que regulan las ventas, la construcción, la instalación, ylo el uso de productos para ciertos propósitos, que pueden variar con respecto a los de las áreas vecinas. Si bien se hacen intentos para garantizar que los productos Dayton cumplan tales códigos, Dayton no garantiza su cumplimiento y no puede ser responsable por la manera en que se instalen o usen los productos. Antes de la compra y del uso de un producto, revise sus aplicaciones y todos los códigos, y reglamentos nacionales y locales pertinentes, y asegúrese de que el producto, su instalación y su uso estén en conformidad con ellos.*

Ciertos aspectos de la denegación no se aplican a productos del consumidor; por ej., (a) algunas jurisdicciones no permiten la exclusión o la limitación de daños accidentales o resultantes, por lo que la limitación o exclusión mencionadas anteriormente, pueden no aplicarse a usted; (b) además, algunas jurisdicciones no permiten una limitación sobre la duración de una garantía implícita, en consecuencia, la limitación mencionada anteriormente puede no aplicarse a usted; y (c) por ley, durante el período de esta Garantía Limitada, cualquier garantía implícita de comerciabilidad o aptitud para un propósito en particular que se aplique a productos del consumidor adquiridos por consumidores, no puede ser excluída ni rechazada.

Disposición Inmediata. *Se realizará un esfuerzo de buena fe para corregir o realizar otros ajustes de manera oportuna con respecto a cualquier producto que se demuestra que tenga defectos dentro de la garantía limitada. En caso de existir un producto con fallas dentro de la garantía limitada, escriba o llame al distribuidor a quien le compró el producto. Éste le indicará qué hacer. Si el problema no se resuelve de manera satisfactoria, escriba a Dayton a la dirección que figura a continuación, indicando nombre del distribuidor, dirección, fecha y número de la factura del distribuidor, y describa la naturaleza de la falla. Título y riesgo de pérdida pasan al comprador en la entrega a la compañía de transporte. Si el producto se dañó durante el transporte, presente el reclamo al transporte.*

Fabricado para Dayton Electric Mfg. Co.

Dayton®

Veuillez lire et conserver ces instructions. ***Lisez avec attention avant d'essayer d'assembler, d'installer, d'utiliser ou d'entretenir le produit décrit. Pour votre protection et celle des autres, respectez toutes les informations de sécurité. Toute infraction à ces instructions peut provoquer des blessures corporelles et des dommages matériels ! Conservez ces instructions pour consultation ultérieure.***

Ventilateurs d'extraction à entraînement direct pour zone dangereuse Dayton®

Description

Les ventilateurs d'extraction à entraînement direct pour zone dangereuse Dayton sont conçus pour la ventilation d'espaces contenant des vapeurs, gaz ou poussières inflammables ou explosifs en vertu de l'Article 500 du National Electrical Code (NEC). Ils se posent en position verticale ou horizontale. Ils comportent un bâti en acier galvanisé, des trous de fixation prépoinçonnés, des roulements à billes pour zones dangereuses et une hélice en aluminium anti-étincelles. Le moteur est dans une enceinte antidéflagrante refroidie par ventilateur avec isolation de Classe B (si cela est marqué sur le moteur). Tous les ventilateurs sont conçus pour une température ambiante maximale de 40 °C (104 °F) (si cela est marqué sur le moteur) et sont homologués UL/cUL, norme 1203, NEC Classe I, Groupes C et D; NEC Classe II, Groupes F et G (modèle 10E020 Groupes E, F et G).

Dayton Electric Mfg. Co. certifie que les ventilateurs décrits aux présentes sont autorisés à porter le sceau de l'AMCA. Les caractéristiques indiquées ici reposent sur des essais et procédures effectués conformément à la Publication 211 et à la Publication 311 de l'AMCA et répondent aux exigences du programme de certification des caractéristiques de l'AMCA.

c UL us LISTED
E197939

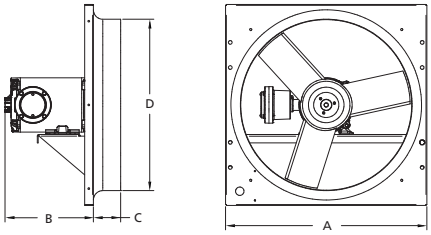

Figure 1 — Dimensions du ventilateur sur panneau

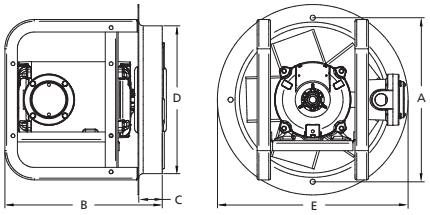

Figure 2 — Dimensions du ventilateur sur couronne

Déballage

1. Vérifier l'absence de tout dommage éventuellement causé par le transport.
2. Les réclamations pour dommages dus au transport sont à adresser au transporteur.
3. Vérifier que les boulons, vis, vis de calage, etc. ne se sont pas desserrés durant le transport. Resserrer le cas échéant. Actionner l'hélice à la main pour s'assurer qu'elle tourne librement.

Dimensions et caractéristiques

Modèle	Dia. pales	Dia. arbre	A	B	C	D	E	Pales	Ouverture murale conseillée — Direct sur mur	Ouverture murale conseillée — Manchon mural, manchon mural et grille ou caisson mural
VENTILATEURS SUR PANNEAU (voir Figure 1)										
10D995, 10D996	30,5 cm	1,6 cm	40,6 cm	24,1 cm	7,6 cm	31,1 cm	—	5	36,8 x 36,8 cm	43,8 x 43,8 cm
10D997, 10D998	40,6	1,6	50,8	24,1	8,3	41,9	—	3	47,0 x 47,0	54,0 x 54,0
10D999	45,7	1,6	55,9	24,1	7,9	47,0	—	3	52,1 x 52,1	59,1 x 59,1
10E001	45,7	1,6	55,9	27,9	7,9	47,0	—	3	52,1 x 52,1	59,1 x 59,1
10E002, 10E003	50,8	1,6	61,0	29,2	9,5	52,1	—	3	57,2 x 57,2	65,1 x 65,1
10E004, 10E005, 10E006	61,0	1,6	71,1	29,2	9,8	62,2	—	3	67,3 x 67,3	75,2 x 75,2
10E007	61,0	1,6	71,1	30,5	9,8	62,2	—	3	67,3 x 67,3	75,2 x 75,2
VENTILATEURS SUR COURONNE (voir Figure 2)										
10E008, 10E009	30,5 cm	1,6 cm	37,8 cm	34,3 cm	5,1 cm	31,8 cm	41,3 cm	5	34,3 cm de diá.	—
10E010, 10E011	40,6	1,6	47,9	34,3	5,1	41,9	51,4	3	44,5	—
10E012, 10E013	45,7	1,6	53,0	34,3	5,1	47,0	56,5	3	49,5	—
10E014, 10E015	50,8	1,6	58,4	34,3	5,1	52,1	61,6	3	54,6	—
10E016, 10E017, 10E018, 10E019	61,0	1,6	68,3	34,3	5,1	62,2	71,8	3	64,8	—
10E020	76,2	1,6	81,3	44,5	5,1	77,5	87,0	3	80,0	—

FRANÇAIS

Form 5S7003

Imprimé aux États-Unis
04632
Version 0

474904
Rév. 1, Novembre 2011

Dayton®

Ventilateurs d'extraction à entraînement direct pour zone dangereuse Dayton®

Performances

Modèle MONOPHASÉ 115/208-230 V	Modèle TRIPHASÉ 208-230/460 V	Dia. pales	HP	Moteur tr/min	Sones à 0,000" SP à 5 pi	Débit d'air (pi³/min) à la pression statique indiquée 0,000"	0,125"	0,250"	0,375"	0,500"
VENTILATEURS SUR PANNEAU										
10D995	**10D996**	12"	1/4	1750	13,4	1347	1262	1142	947	604
10D997	**10D998**	16	1/4	1750	14,1	2476	2288	2061	1769	1350
10D999	**10E001**	18	1/3	1750	19,1	3168	2912	2612	2219	1599
10E002	**10E003**	20	1/2	1750	23	4557	4254	3919	3542	3101
10E004	**10E006**	24	1/2	1750	26	5669	4946	4010	2963	1906
10E005	**10E007**	24	3/4	1750	28	6317	5851	5314	4729	4117
VENTILATEURS SUR COURONNE										
10E008	**10E009**	12"	1/4	1725	13,6	1147	999	803	682	—
10E010	**10E011**	16	1/4	1750	17,0	2153	1943	1713	1366	1125
10E012	**10E013**	18	1/4	1750	21	2371	2089	1756	1423	1088
10E014	**10E015**	20	1/4	1750	23	2429	2074	1744	1341	1098
10E016	**10E018**	24	1/3	1750	30	3837	3305	2637	1970	—
10E017	**10E019**	24	1/2	1750	26	5669	4946	4010	2963	1906
10E020	**—**	30	3/4	1140	28	8153	7515	6804	5957	4956

Valeurs certifiées pour une installation de type A : admission libre, refoulement libre. Les valeurs indiquées ne tiennent pas compte des effets des équipements connexes (accessoires). La vitesse (tr/min) indiquée est nominale. Valeurs basées sur la vitesse effective lors de l'essai. Les données acoustiques indiquées sont des valeurs de sonie exprimées en sones ventilateur à 1,5 m (5 pieds) en champ libre hémisphérique calculés selon la norme AMCA 301. Valeurs indiquées pour une installation de type A : niveaux de sonie hémisphérique à l'admission libre.

Informations générales sur la sécurité

⚠ DANGER ***Ne pas dépendre d'un interrupteur comme unique moyen de coupure de l'alimentation lors de l'installation ou de l'entretien de l'appareil. Pour écarter les risques d'incendie, de choc électrique ou de blessure grave, veiller à toujours débrancher, verrouiller et étiqueter la source de courant avant l'installation ou l'entretien. Sur les modèles équipés d'un moteur à protection thermique, le moteur redémarre sans avertir après le déclenchement de la protection thermique. Ne pas toucher le moteur en marche, il peut être assez chaud pour causer des lésions.***

⚠ DANGER ***Ne pas placer de parties du corps ni d'objets dans le ventilateur, les ouvertures du moteur ou l'entraînement si l'appareil est raccordé à une source de courant.***

1. Lire et respecter toutes les instructions et marques de mise en garde. S'assurer que la source d'alimentation est conforme aux exigences pour le matériel et à la réglementation en vigueur.
2. Les ventilateurs doivent être assemblés, posés et entretenus par un technicien qualifié. Confier tous les travaux d'électricité à un électricien qualifié.
3. Respecter tous les codes d'électricité et de sécurité en vigueur aux États-Unis et au Canada, ainsi que le National Electrical Code (NEC) et l'Occupational Safety and Health Act (OSHA) aux États-Unis. Mettre le moteur à la terre conformément à l'Article 250 (mise à la terre) du NEC. Au Canada, respecter le Code canadien de l'électricité.
4. Toutes les pièces en mouvement doivent être protégées.

⚠ ATTENTION ***Pour réduire le risque de blessure corporelle, respecter ce qui suit :***

L'OSHA exige des protections agréées OSHA lorsque l'appareil est posé à moins de 2,1 m (7 pi) du niveau du sol ou de travail.

Les normes UL/cUL exigent des protections agréées OSHA lorsque l'appareil est posé à moins de 2,4 m (8 pi) du niveau du sol ou de travail.

5. S'assurer que la source d'alimentation est conforme aux exigences pour le matériel.

Pose

⚠ AVERTISSEMENT ***La pose, le dépannage et le remplacement de pièces doivent être effectués exclusivement par du personnel qualifié.***

⚠ ATTENTION ***Si des gaz autres que de l'air propre doivent être évacués au moyen de ce ventilateur, alors l'utilisateur a pour responsabilité de déterminer si le ventilateur est adapté et sûr pour l'application considérée.***

FRANÇAIS

Modèles 10D995 à 10D999, 10E001 à 10E020

Pose (suite)

⚠ AVERTISSEMENT ***Ne pas utiliser aux endroits où des résidus de peinture peuvent s'accumuler sur le moteur.***

⚠ ATTENTION ***Pour réduire le risque d'inflammation dans les atmosphères dangereuses, débrancher le ventilateur du circuit d'alimentation avant de l'ouvrir. Garder le moteur hermétiquement fermé lorsqu'il est en marche.***

POSE MURALE

1. Amener le ventilateur à l'emplacement souhaité et déterminer par quelle méthode il doit être monté.

REMARQUE : La taille de l'ouverture murale et la distance hélice-persiennes sont deux dimensions importantes pour la pose du ventilateur.

2. Découper une ouverture de taille adaptée dans le mur en se basant sur la table Dimensions à la page 1.

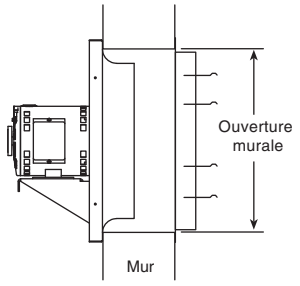

Figure 3 — Pose murale directe

REMARQUE : Les ventilateurs sur panneau posés au mur nécessitent une ouverture de taille différente que ceux posés dans des manchons ou caissons.

3. Le ventilateur doit être solidement fixé à l'intérieur d'une ossature pour éviter tout mouvement ou flexion du cadre de ventilateur durant la marche. Le cadre de ventilateur doit être soutenu de façon uniforme sur tous les côtés à l'intérieur de l'ossature. Par ailleurs, prendre garde à éviter toute torsion du cadre de ventilateur durant la pose.

REMARQUE : La flexion ou le déplacement du cadre de ventilateur durant la marche produit des vibrations dommageables pour l'appareil.

4. Le ventilateur doit être posé dans l'ouverture avec un espacement de 6,5 mm (1/4 po) sur le périmètre. L'encadrement doit être fixé à la structure du bâtiment à l'aide de vis anticorrosion (non fournies). Les vis doivent être posées à travers tous les trous de fixation prépoinçonnés.
5. Poser le reste des éléments (persiennes, grille d'admission, etc.).
6. Vérifier le bon serrage de toute la visserie.
7. Vérifier le sens de rotation de l'hélice en mettant brièvement l'appareil en marche. Le sens de rotation doit être celui indiqué sur l'autocollant apposé sur l'appareil. Sur les installations triphasées, le sens de rotation peut être inversé par l'inversion de deux quelconques des trois fils électriques. Pour les installations monophasées, suivre le schéma de câblage figurant sur le moteur.

RACCORDEMENT ÉLECTRIQUE

REMARQUE : Voir le câblage sur la plaque signalétique du moteur. Se reporter aux procédures de pose et de câblage du fabricant de commutateur.

1. Le moteur et le ventilateur doivent être solidement reliés à la terre (métal nu) via une masse électrique adaptée, telle qu'une conduite d'eau reliée à la terre ou un circuit de terre.

⚠ AVERTISSEMENT ***Respecter tous les codes de sécurité en vigueur, notamment le National Electrical Code (NEC) et le National Fire Protection Act (NFPA).***

REMARQUE : Le moteur et le commutateur doivent être classés « milieux dangereux » pour que le ventilateur soit utilisable dans des milieux dangereux. La pose doit être effectuée par du personnel qualifié, avec un moteur et un sectionneur adaptés pour l'application considérée.

2. Câbler le moteur pour la tension souhaitée conformément au schéma de câblage sur le moteur.
3. Câbler les commutateurs de commande au niveau du sol.
4. Avant d'activer le ventilateur, vérifier qu'il n'y a aucune obstruction ni débris susceptibles d'entraver l'hélice.

Fonctionnement

1. Avant de démarrer et d'utiliser le nouveau ventilateur Dayton, vérifier le bon serrage de toute la visserie. En particulier, contrôler les vis de calage du moyeu d'hélice.

   En position Arrêt, ou avant de brancher l'alimentation du ventilateur, tourner l'hélice à la main pour s'assurer qu'elle ne heurte pas l'orifice ni aucun autre obstacle.
2. Démarrer le ventilateur et l'arrêter immédiatement pour vérifier que le sens de rotation de l'hélice correspond à la flèche dans le compartiment du moteur.
3. Lorsque le ventilateur est en marche, observer son fonctionnement et vérifier l'absence de bruits inhabituels.
4. Vérifier l'intensité consommée par le moteur pour éviter sa surcharge. Le système étant pleinement en marche, mesurer l'intensité de courant vers le moteur et la comparer à l'intensité nominale figurant sur la plaque signalétique pour vérifier s'il fonctionne dans des conditions de charge admissibles. Voir les performances à la page 2.
5. Garder les ouvertures d'admission et les approches du ventilateur propres et non obstruées.

Ventilateurs d'extraction à entraînement direct pour zone dangereuse Dayton®

Entretien

⚠ AVERTISSEMENT ***Pour écarter les risques d'incendie, de choc électrique ou de blessure grave, veiller à toujours débrancher, verrouiller et étiqueter la source de courant avant l'installation ou l'entretien.***

⚠ AVERTISSEMENT ***Un nettoyage irrégulier de l'hélice produit un déséquilibrage qui provoque des vibrations du ventilateur.***

1. En fonction de l'utilisation et du degré de saleté de l'air, il convient d'établir un contrôle à intervalles réguliers pour le nettoyage de l'hélice, du caisson et des surfaces avoisinantes.
2. Vérifier l'absence de bruits inhabituels durant la marche du ventilateur.
3. Contrôler et resserrer régulièrement toute la visserie.
4. Suivre les instructions du fabricant du moteur concernant sa lubrification.

Dépannage

Symptôme	Cause(s) possible(s)	Action corrective
Le ventilateur ne fonctionne pas	1. Fusible grillé ou disjoncteur ouvert	1. Changer ou réparer
	2. Mauvais câblage	2. Couper l'alimentation et contrôler le bon raccordement des câbles
	3. Électricité coupée	3. Communiquer avec la compagnie d'électricité
Écoulement d'air inversé	1. L'hélice tourne à l'envers	1. Inverser la rotation du moteur, recâbler le moteur
Débit d'air excessif	2. Pression statique insuffisante	2. Vérifier les calculs de pression statique
Bruit ou vibration excessifs	1. Matières étrangères dans un palier	1. Changer le palier
	2. Hélice desserrée	2. Serrer les vis de calage ou les vis de bague conique
	3. Ventilateur pas solidement ancré	3. Fixer correctement
Surcharge ou surchauffe du moteur	1. Rotation incorrecte de l'hélice	1. Contrôler le câblage du moteur
	2. Sur- ou sous-tension secteur	2. Communiquer avec la compagnie d'électricité

GARANTIE LIMITÉE

GARANTIE LIMITEE DE UN AN DE DAYTON. *LES MODÈLES VENTILATEURS D'EXTRACTION À ENTRAÎNEMENT DIRECT POUR ZONE DANGEREUSE DAYTON® COUVERTS DANS CE MANUEL SONT GARANTIS À L'UTILISATEUR D'ORIGINE PAR DAYTON ELECTRIC MFG. CO. (DAYTON), CONTRE TOUT DÉFAUT DE FABRICATION OU DE MATÉRIAUX, LORS D'UNE UTILISATION NORMALE, ET CELA PENDANT UN AN APRÈS LA DATE D'ACHAT. TOUTE PIÈCE, DONT LES MATÉRIAUX OU LA MAIN D'OUVRE SERONT JUGÉS DÉFECTUEUX, ET QUI SERA RENVOYÉE PORT PAYÉ, À UN CENTRE DE RÉPARATION AUTORISÉ PAR DAYTON, SERA, À TITRE DE SOLUTION EXCLUSIVE, SOIT RÉPARÉE, SOIT REMPLACÉE PAR DAYTON. POUR LE PROCÉDÉ DE RÉCLAMATION SOUS GARANTIE LIMITÉ, REPORTEZ-VOUS À LA CLAUSE DE « DISPOSITION PROMPTE » CI-DESSOUS. CETTE GARANTIE LIMITÉE DONNE AUX ACHETEURS DES DROITS LÉGAUX SPÉCIFIQUES QUI VARIENT DE JURIDICTION À JURIDICTION.*

LIMITES DE RESPONSABILITÉ. *LA RESPONSABILITÉ DE DAYTON, DANS LES LIMITES PERMISES PAR LA LOI, POUR LES DOMMAGES INDIRECTS OU FORTUITS EST EXPRESSEMENT DÉNIÉE. DANS TOUS LES CAS LA RESPONSABILITÉ DE DAYTON EST LIMITÉE ET NE DÉPASSERA PAS LA VALEUR DU PRIX D'ACHAT PAYÉ.*

DÉSISTEMENT DE GARANTIE. *DE DILIGENTS EFFORTS SONT FAITS POUR FOURNIR AVEC PRÉCISION LES INFORMATIONS ET ILLUSTRATIONS DES PRODUITS DÉCRITS DANS CETTE BROCHURE ; CEPENDANT, DE TELLES INFORMATIONS ET ILLUSTRATIONS SONT POUR LA SEULE RAISON D'IDENTIFICATION, ET N'EXPRIMENT NI N'IMPLIQUENT QUE LES PRODUITS SONT COMMERCIALISABLES, OU ADAPTABLES À UN BESOIN PARTICULIER, NI QUE CES PRODUITS SONT NÉCESSAIREMENT CONFORMES AUX ILLUSTRATIONS OU DESCRIPTIONS. SAUF POUR CE QUI SUIT, AUCUNE GARANTIE OU AFFIRMATION DE FAIT, ÉNONCÉE OU IMPLICITE, AUTRE QUE CE QUI EST ÉNONCÉ DANS LA « GARANTIE LIMITÉE » CI-DESSUS N'EST FAITE OU AUTORISÉE PAR DAYTON.*

Désistement sur les conseils techniques et les recommandations. *Peu importe les pratiques ou négociations antérieures ou les usages commerciaux, les ventes n'incluent pas l'offre de conseils techniques ou d'assistance ou encore de conception de système. Dayton n'a aucune obligation ou responsabilité quant aux recommandations non autorisées, aux opinions et aux suggestions relatives au choix, à l'installation ou à l'utilisation des produits.*

Conformité du produit. *De nombreuses juridictions ont des codes et règlements qui gouvernent les ventes, constructions, installations et/ou utilisations de produits pour certains usages qui peuvent varier par rapport à ceux d'une zone voisine. Bien que Dayton essaie de s'assurer que ses produits s'accordent avec ces codes, Dayton ne peut garantir cet accord, et ne peut être jugée responsable pour la façon dont le produit est installé ou utilisé. Avant l'achat et l'usage d'un produit, revoir les applications de ce produit, ainsi que tous les codes et règlements nationaux et locaux applicables, et s'assurer que le produit, son installation et son usage sont en accord avec eux.*

Certains aspects de désistement ne sont pas applicables aux produits pour consommateur ; ex : (a) certaines juridictions ne permettent pas l'exclusion ou la limitation des dommages indirects ou fortuits et donc la limitation ou exclusion ci-dessus peut ne pas s'appliquer dans le cas présent ; (b) également, certaines juridictions n'autorisent pas de limitations de durée de la garantie implicite, en conséquence, la limitation ci-dessus peut ne pas s'appliquer dans le cas présent ; et (c) par force de loi, pendant la période de cette Garantie Limitée, toutes garanties impliquées de commerciabilité ou d'adaptabilité à un besoin particulier applicables aux produits de consommateurs achetés par des consommateurs, peuvent ne pas être exclues ni autrement désistées.

Disposition prompte. *Un effort de bonne foi sera fait pour corriger ou ajuster rapidement tout produit prouvé défectueux pendant la période de la garantie limitée. Pour tout produit considéré défectueux pendant la période de garantie limitée, contacter tout d'abord le concessionnaire où l'appareil a été acheté. Le concessionnaire doit donner des instructions supplémentaires. S'il est impossible de résoudre le problème de façon satisfaisante, écrire à Dayton à l'adresse ci-dessous, en indiquant le nom et l'adresse du concessionnaire, la date et le numéro de la facture du concessionnaire, et en décrivant la nature du défaut. Le titre et le risque de perte passent à l'acheteur au moment de la livraison par le transporteur. Si le produit a été endommagé pendant le transport, une réclamation doit être faite auprès du transporteur.*

Fabriqué pour Dayton Electric Mfg. Co.

Dayton®

FRANÇAIS

VENTSORB®

Description

VENTSORB canisters, each containing 180 pounds of activated carbon, are ideal for low-flow air purification applications at industrial and municipal facilities. These economical adsorption systems control small volume organic contaminants and/or odorous gas emissions from:

- Storage tank vents
- Reactor vents
- API separator vents
- Sludge thickener tanks at waste treatment plants
- Sewer gas vents, wet stations, and weir boxes at chemical and municipal waste treatment plants
- Chemical plant wastewater holding tanks
- Laboratory hood exhausts
- Landfills
- Air-stripper off-gases

The 55-gallon VENTSORB canisters contain all the elements found in a full-scale adsorption system vessel: activated carbon, inlet connection and distributor, and an outlet connection for the purified air stream.

Features

VENTSORB canisters offer industrial and municipal users several important features and benefits including:

- Effective treatment to remove a variety of vapor phase organic contaminants and odor-causing compounds
- Continuous treatment at varying flow rates and concentrations
- Simple installation and operation
- Flexibility to be installed in series or multiple units in parallel
- Supplied with activated carbon selected specifically for the application
- Practical disposal option: pre-approved spent carbon canisters may be returned to Calgon Carbon Corporation for safe carbon reactivation
- Low cost per unit makes carbon treatment economical

Specifications	VENTSORB
Vessel	Open head steel canister
Max. Operating Pressure	4 psig
Cover	Removable steel cover, 12 gauge bolt ring
Internal Coating	Heat-cured phenolic epoxy
External Coating	Baked enamel white
Temperature	140°F (60°C) Continuous 180°F (82°C) intermittent
Inlet	2" FNPT
Outlet	2" FNPT
Max Flow	100 cfm (2.83m3/min)
Carbon	180 lbs. AP4-60, BPL 4x10, or VPR
Ship Weight	219 lbs. (99.4 kg)

Applications

Chemical, petrochemical, food, pulp and paper, and many other industrial plants, along with municipal sewage treatment facilities, are frequent users of VENTSORB for continuous control of vented emissions. Examples of user applications include:

Storage Tank Vents

VENTSORB is widely used to control evaporative losses vented from storage tanks. Typically these vapors are emitted during tank filling and emptying. In one application, a glycerin manufacturer uses the canisters to purify ambient air drawn into the storage tanks during product transfer. The adsorption process helps prevent contamination of the company's glycerin product. The VENTSORB units provide greater than six months of service for this application.

Reactor Vents

A pesticide manufacturer is using multiple VENTSORB on five reactor vessels to control trace amounts of odorous methylamine and diethylamine (by-products of a caustic scrubbing process). Each VENTSORB unit handles a 30 cfm air stream containing 15 ppm of amine vapors. The units provide greater than three months of service for this application.

API Separator Vents

A major refinery uses VENTSORB units to control odorous emissions from settling basins where oil is separated from wastewater that is discharged in condensate, blow-down, or drain systems. For this application, API separators are covered and vented to comply with local air pollution control regulations. The air stream is pulled through two VENTSORB units operating in parallel configuration at 100 cfm.

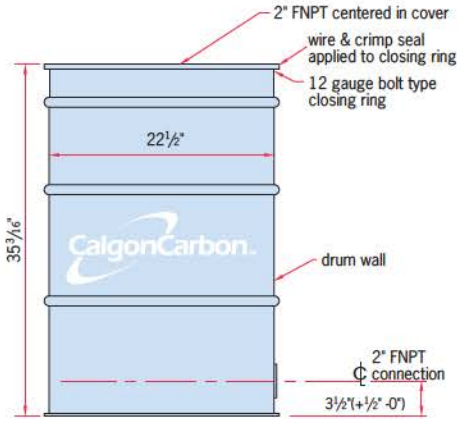

Installation

VENTSORB canisters are shipped ready for installation. Each canister is self-supporting and should be placed on a level, accessible area as near as possible to the emission source. Installation is simple, requiring just a flexible hose or pipe to connect the vent to the 2-inch FNPT bottom inlet of the canister.

If the VENTSORB will be vented directly to outside air, a U-shaped outlet pipe or rain hat (such as a pipe tee) is recommended to prevent precipitation from entering the unit.

VENTSORB canisters operate from a continuous suction across the vent. The suction can be produced by a blower or by using the positive pressure inside the tank or process vessel. In many cases, the pressure or surge of pressure within the tank or vessel is sufficient to overcome the pressure drop across the canister, eliminating the need for a blower. Please consult the pressure drop data in this bulletin for more information.

Maximum recommended air flow through a VENTSORB is 100 cfm. If higher flows are encountered, plant operators should install two or more canisters in parallel configuration. When VENTSORB canisters are used to control vapors from organic solvent storage tanks, the following precautions are recommended:

- A safety relief valve must be provided. This protects the storage tank should the VENTSORB become plugged or blocked in any fashion. Such a vent would open in an emergency situation, thereby relieving pressure.
- Under appropriate conditions a flame arrestor and/or backflow preventor must be installed as shown in this bulletin's storage tank installation drawing. This prevents backflow of air through the VENTSORB when the storage tank is empty.
- Pre-wetting the carbon helps dissipate excessive heat that may be caused by high organic compound concentration (>0.5 to 1.0 Vol.%).

If VENTSORB canisters are used to control organic emissions from air-strippers or other high moisture content air streams, Calgon Carbon Corporation recommends that humidity in the air stream be reduced to under 50 percent. Lower humidity optimizes adsorptive capacity of the carbon. In addition, for similar applications that generate a condensate, Calgon Carbon Corporation recommends installation of a drain on the inlet piping.

Safety Considerations

While complying with recommended installation instructions, plant operators should also be aware of these additional heat-related safety considerations:

- When in contact with activated carbon, some types of chemical compounds, such as those from the ketone and aldehyde families, and some organic acids or organic sulfur compounds, may react on the carbon surface causing severe exotherms or temperature excursions. **If you are unaware or unsure of the reaction of an organic compound on activated carbon, appropriate tests should be performed before placing a VENTSORB in service.**

Typical VENTSORB Installation at Storage Tank

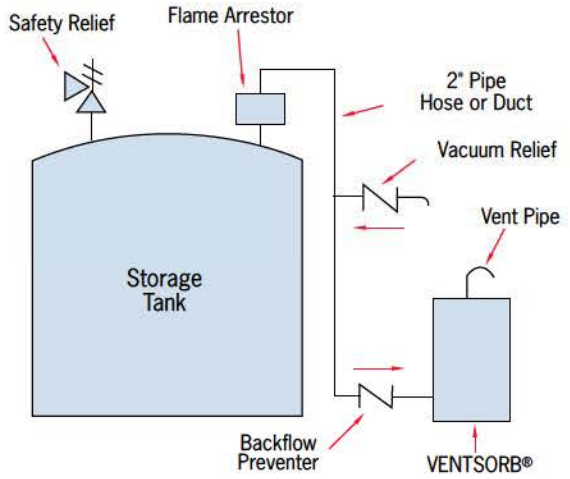

- Heat of adsorption can lead to severe temperature excursions at high concentrations of organic compounds. Heating may be controlled by diluting the inlet air, by time weighting the inlet concentration to allow heat to dissipate, or by pre-wetting the carbon.
- **Do not use VENTSORB with STI-X carbon in petrochemical or chemical industry applications.**
- ST1-X carbon can liberate heat by reacting chemically with oxygen. To prevent heat within a vessel, the carbon must not be confined without adequate air flow to dissipate the heat. In situations where there is insufficient or disrupted air flow through the vessel, the chemical reaction can be prevented by sealing the inlet and outlet connections to the vessel.

Return of VENTSORB

Arrangements should be made at the time of purchase to return canisters containing spent carbon. Calgon Carbon Corporation can provide instructions on how to sample the spent carbon and arrange for carbon acceptance testing. The spent carbon is reactivated by Calgon Carbon Corporation, and all of the contaminants are thermally destroyed. Calgon Carbon Corporation will not accept VENTSORB canisters for landfill, incineration, or other means of disposal.

VENTSORB cannot be returned to the company unless the carbon acceptance procedure has been completed, an acceptance number provided, and the return labels (included with the unit at the time of purchase) are attached. VENTSORB must be drained and inlet/outlet connections must be plugged prior to return to Calgon Carbon Corporation.

Safety Considerations

For temperatures greater than 140°F, Calgon Carbon recommends that personnel protection be provided. The form of protection is determined per the end user's specific plant practices and standards. Also note that at elevated temperatures, the paint may discolor.

Pressure Drop

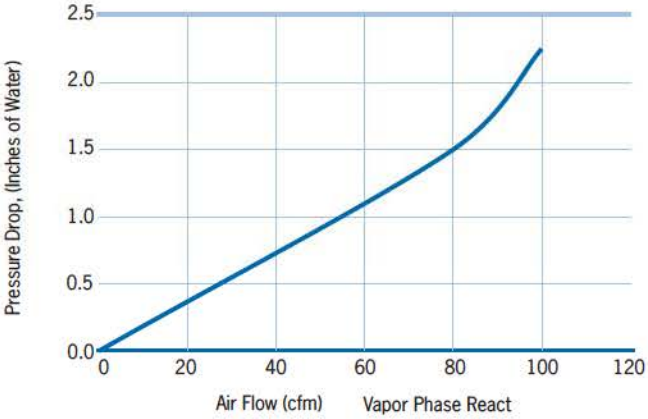

Pressure drop through a VENTSORB unit is a function of the process air flow as shown in the graph. A VENTSORB canister can handle up to 100 cfm at a pressure drop of less than 2.5 inches of water column. If higher flows or lower pressure drop is needed, multiple canisters may be installed in parallel operation. The maximum canister pressure should not exceed 4 psig.

Safety Message

Wet activated carbon preferentially removes oxygen from air. In closed or partially closed containers and vessels, oxygen depletion may reach hazardous levels. If workers are to enter a vessel containing carbon, appropriate sampling and work procedures for potentially low oxygen spaces should be followed, including all applicable federal and state requirements.

Calgon Carbon Air Purification Systems

VENTSORB is specifically designed for a variety of small applications. Calgon Carbon Corporation offers a wide range of carbon adsorption systems and services for a range of flow rates and carbon usages to meet specific applications.

Carbon Life Estimate

This table lists the theoretical adsorption capacities for several compounds. The adsorption capacity for nonpolar organic compounds increases with the boiling point, molecular weight, and concentration of the air contaminant. Estimate the life of a VENTSORB canister for other organic compounds by matching them with compounds of similar boiling points and molecular weight in this table. Low molecular weight (less than 50) and/or highly polar compounds such as formaldehyde, methane, ethanol, etc. will not be readily adsorbed at low concentrations.

Note: The standard VENTSORB canister contains 180 pounds of AP4-60 carbon. When removing hydrogen sulfide and mercaptans from moist air vented from sewage operations, greater efficiency will be achieved by using a VENTSORB canister which contains specially impregnated STI-X carbon. A VENTSORB containing STI-X carbon can remove up to 40 pounds of hydrogen sulfide and 15 pounds of methyl mercaptan.

Theoretical Capacities*

Pounds Adsorbed per VENTSORB at Given Concentration of Contaminant **

	Approximate Boiling Point (°C)	Molecular Weight	Lbs. @ 10 ppm	Lbs. @ 100 ppm	Lbs. @ 1,000 ppm
Acrylonitrile	77.3	53.1	8	15	26
Benzene	80.1	78.1	14	22	34
n-Butane	-0.5	58.1	7	10	16
Carbon Tetrachloride	76.8	153.8	45	60	78
Dichloroethylene -1,1	31.7	97.0	16	25	38
Methylene Chloride	40.2	84.9	4	9	19
Freon 114	3.8	170.9	16	26	40
n-Hexane	68.7	86.2	21	27	34
Styrene	145.2	104.1	47	56	65
Toluene	110.6	92.1	35	43	51
Trichloroethylene	87.2	131.4	32	47	67

* Theoretical capacity based on 70° F, 1 atm pressure, less than 50 percent humidity, and 180 pounds of carbon using isotherm data for AP4-60 carbon.

** This information has been generated using Calgon Carbon's proprietary predictive model.
There is no expressed or implied warranty regarding the suitability or applicability of results.

Making Water and Air Safer and Cleaner

www.calgoncarbon.com

Corporate Headquarters
Calgon Carbon Corporation
500 Calgon Carbon Drive
Pittsburgh, PA USA 15205
800.422.7266
412.787.6700
412.787.6713 Fax

www.calgoncarbon.com

European Operations
Chemviron Carbon Corporation
Zoning Industriel C de Feluy
B-7181 Feluy, Belgium
+ 32 (0) 64 51 18 11
+ 32 (0) 64 54 15 91 Fax

Asia Operations
Calgon Carbon Asia Pte Ltd.
9 Temasek Boulevard
#26-02 Suntec Tower Two
Singapore 038989
+65 6221 3500
+65 6221 3554 Fax

Your local representative

Copyright© 2012 Calgon Carbon Corporation, all rights reserved.

INSTALLATION & MAINTENANCE INSTRUCTIONS

[illegible]
Also refer to figures '1' and '2' on page 4 - Nameplate general layouts.

- [illegible]
- [illegible]
- [illegible]
- [illegible]
- [illegible]
- [illegible]

Caution: Always ensure that the system is at atmospheric pressure and there is no ignitable vapour present that could flash when either installing or maintaining a unit.

Installation

[illegible]

[illegible]

[illegible]

[illegible]	[illegible]	[illegible]	[illegible]
Rev.	**Description**	**Issued By**	**Date**

[illegible]	**Installation & Maintenance Instructions for In-Line Deflagration Flame Arresters (ATEX)**	Elmac Technologies® Innovative Safety Solutions [illegible]	
[illegible]	[illegible]	[illegible]	
[illegible]	[illegible]	[illegible]	
[illegible]	[illegible]	[illegible] **ETL-00044** [illegible]	[illegible] **1**

[illegible]

[illegible]

Maintenance

1. **Maintenance and inspection is the responsibility of the customer and not of Elmac Technologies Limited.**

[illegible]

[illegible] **Element assemblies can be heavy and will require adequate equipment and manpower to prevent injury when handling.**

[illegible]

[illegible] **To ensure a gas tight seal, element gaskets should be replaced every time the flame arrester body is loosened or dismantled for element maintenance and must be replaced exactly as originally fitted.**

[illegible]	[illegible]	[illegible]	[illegible]
Rev.	**Description**	**Issued By**	**Date**

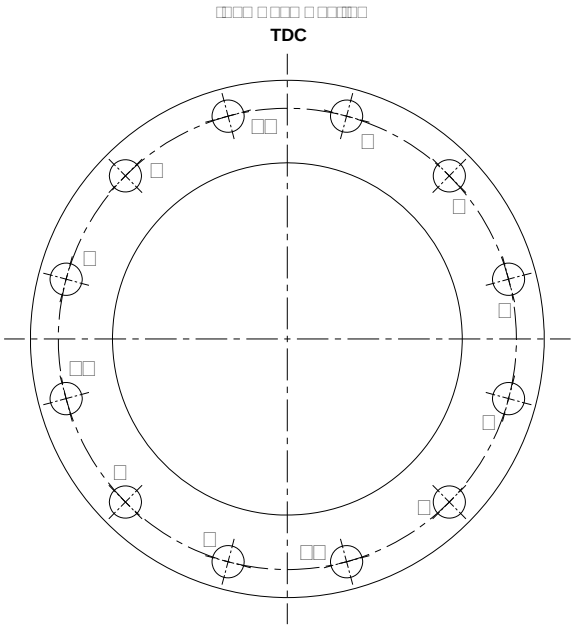

Elmac Technologies Limited - Operating Instructions
REQUIREMENTS [illegible] BS EN 1287[illegible], AT[illegible]X [illegible] 94[illegible] & P[illegible]E[illegible]SURE EQU[illegible]MENT DI[illegible]ECT[illegible]E [illegible]ED) 97[illegible]/[illegible]

Always use the new gaskets supplied with spare elements and ensure that mating faces are clean. Some Elmac elements are designed to fit several types of flange so it is important to centralise the element between the flanges before tightening up fasteners. Fasteners should be well lubricated with general purpose grease and tightened to the torque settings as tabulate below and using the torquing sequence also detailed below. **Excessive or uneven torquing can cause permanent damage to gaskets and housings.**

Torque Settings & Sequence:-

Bolt Size	Socket/Spanner Size (mm)	Torque settings - Nm (lbf.ft)			
		Step 1	Step 2	Step 3	Full Torque
M12	19	40Nm (30lbf.ft)	[illegible]/[illegible].	N/A.	70Nm (51lbf.ft)
M16	24	50Nm (37lbf.ft)	[illegible]/[illegible].	N/A.	100Nm (73lbf.ft)
M20	30	50Nm (37lbf.ft)	100Nm (73lbf.ft)	N/A.	140Nm (103lbf.ft)
M24	36	50Nm (37lbf.ft)	100Nm (73lbf.ft)	150Nm (110lbf.ft)	200Nm (147lbf.ft)
M27	41	50Nm (37lbf.ft)	100Nm (73lbf.ft)	150Nm (110lbf.ft)	200Nm (147lbf.ft)
M30	46	50Nm (37lbf.ft)	110Nm (81lbf.ft)	170Nm (125lbf.ft)	220Nm (162lbf.ft)
M33	50	70Nm (51lbf.f[illegible])	140Nm (103lbf.f[illegible])	210Nm [illegible]154lbf ft)	280Nm (206lb[illegible].ft)
M36	55	70Nm (51lbf.ft)	160Nm (118lbf.ft)	240Nm (177lbf.ft)	300Nm (221lbf.ft)

[illegible]op Dead [illegible])
TDC
11
1
7
5
3
9
10
4
6
8
2
12

Torquing Sequence

Base[illegible] on [illegible] above [illegible]. Ho[illegible]eve[illegible] [illegible] number of [illegible]ho[illegible]s

Rev.	Description	Issued By	Date
[illegible]	F[illegible]st Issue [illegible]new documen[illegible] [illegible]number w[illegible]th [illegible]go[illegible]s & [illegible]onta[illegible]t [illegible]) [illegible]	D[illegible]G[illegible]enough	24.09[illegible]08

Description:	**Installation & Maintenance Instructions for In-Line Deflagration Flame Arresters (ATEX)**		Elmac Technologies Innovative Safety Solutions [illegible] [illegible]intshi[illegible]e, Un[illegible]ted [illegible]ing[illegible]om CH8 9DP
Drawn By: D[illegible]Greenough	Dat[illegible]: 24[illegible]09[illegible]8		
Che[illegible]ked By [illegible] N[illegible]Webb	[illegible]: 24.09[illegible]08		
[illegible]	[illegible] the pr[illegible]pert[illegible] of Elm[illegible]c [illegible]echnol[illegible]gies L[illegible]d. The i[illegible]ormati[illegible]n [illegible] issued on the unde[illegible]a[illegible]ding t[illegible]at [illegible] wr tte[illegible] consent of E[illegible]mac Te[illegible]hnolog[illegible]es [illegible].	Document No. **ETL-00044** Page 3 of 4	Revision **1**
Fa[illegible]: +44 (0) 1352 717 642			
[illegible]			
Web[illegible]ht p[illegible]/ www.[illegible]l[illegible]a[illegible]echno[illegible]gi[illegible]s.com			

ETL-00044 Page 3 of 4

[illegible]

IN THE EVENT OF ANY QUERY PLEASE CONTACT OUR TECHNICAL SALES DEPARTMENT

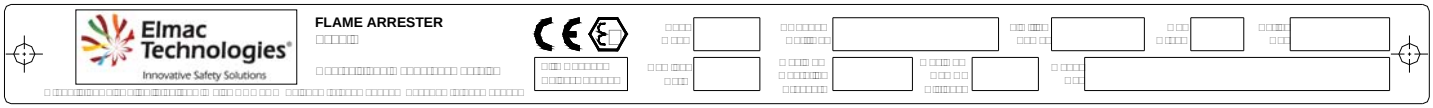

[illegible]

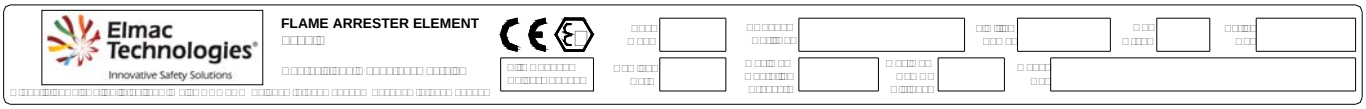

[illegible]

Rev.	Description	Issued By	Date
[illegible]	[illegible]	[illegible]	[illegible]

[illegible]	**Installation & Maintenance Instructions for In-Line Deflagration Flame Arresters (ATEX)**	Elmac Technologies® Innovative Safety Solutions [illegible]	
[illegible]	[illegible]	[illegible]	
[illegible]	[illegible]	[illegible]	
[illegible]	[illegible]	[illegible] **ETL-00044** [illegible]	[illegible] **1**

TPI Hazardous Location Wall Convector FEP18201RA - 1800W 208V

Product Information

HAZARDOUS LOCATION WALL CONVECTOR HEATERS – SINGLE PHASE
1800 Watt Heater – 208V
Ideal for use in Class 1, Group B, C & D and Division 1 & 2 hazardous locations up to 536°F. Single phase, hazardous location convector heaters are made with heavy duty 16 gauge steel. Cabinet has a textured gray epoxy powder coat finish. These electric convection heaters offer bottom in, front out air flow. Wall mounted convection heaters include stainless steel cartridge element inserted into aluminum finned copper sheath. These convection wall heaters include wall mounting bracket. Requires 9” minimum clearance from bottom of heater to floor. Cabinet heater measures 9”W x 18”H. Hazardous location heaters should not be operated in room ambients exceeding 104° F. NEMA 4 rated. UL listed. 1 Year Limited Warranty.

Product Specifications

BRAND	TPI
LENGTH INCHES	34
WIDTH INCHES	9
HEIGHT INCHES	18
WEIGHT LBS	50
COLOR	Gray
CONSTRUCTION	Powder Coated Steel
BTU	6143
VOLTAGE	208
AMPS	8.7
WATTS	1800
APPROVAL	UL Listed

DNAPL Operation and Maintenance Plan

Nyanza Chemical Waste Dump – Operable Unit 2
Ashland, Massachusetts

Remedial Action
EPA Task Order No. 0022-RA-RA-0115

REMEDIAL ACTION CONTRACT
No. EP-S1-06-03

FOR

US Environmental Protection Agency
Region 1

BY

Nobis Engineering, Inc.

Nobis Project No. 80022

April 2014

U.S. Environmental Protection Agency
Region 1
5 Post Office Square, Suite 100
Boston, Massachusetts 02109-3919

Nobis Engineering, Inc.
Lowell, Massachusetts
Concord, New Hampshire

Phone (800) 394-4182
www.nobisengineering.com

DNAPL Operation and Maintenance Plan

Nyanza Chemical Waste Dump – Operable Unit 2
Ashland, Massachusetts
Remedial Action
EPA Task Order No. 0022-RA-RA-0115

REMEDIAL ACTION CONTRACT
No. EP-S1-06-03

For

US Environmental Protection Agency
Region 1

By

Nobis Engineering, Inc.

Nobis Project No. 80022

April 2014

Boyd Allen III, P.G.
Senior Project Manager

Michelle Carbonneau
Staff Engineer

TABLE OF CONTENTS
DNAPL OPERATION AND MAINTENANCE PLAN
NYANZA CHEMICAL WASTE DUMP SUPERFUND SITE – OU2
ASHLAND, MASSACHUSETTS

SECTION **PAGE**

AC ACRONYMS AC-1

1.0 INTRODUCTION 4
1.1 Purpose of O&M Plan 4
1.2 Organization of Plan 4
1.3 Site History and Background 5
1.4 General Description of DNAPL Extraction System 6
1.5 Health and Safety Considerations 6
1.6 Chemicals of Concern 7

2.0 DESCRIPTION AND DETAILED OPERATION OF DNAPL EXTRACTION SYSTEM 8
2.1 Extraction System 9
2.1.1 Major Components 9
2.1.2 Process Descriptions 11
2.1.3 Operations and Process Control 12
2.1.4 Operating Problems and Troubleshooting 14
2.1.5 DNAPL and Optimization of DNAPL Product 15
2.2 Storage System 15
2.2.1 Major Component 16
2.2.2 Process Description 16
2.2.3 Operations and Process Control 16
2.2.4 Operating Problems and Troubleshooting 17
2.3 Ventilation System 18
2.3.1 Major Components 18
2.3.2 Process Description 19
2.3.3 Operations and Process Control 19
2.3.4 Operating Problems and Troubleshooting 19
2.4 Process Control System 20
2.4.1 Major Components 20
2.4.2 Process Description 20
2.4.3 Operations and Process Control 21
2.4.4 Operating Problems and Troubleshooting 21
2.5 Startup Procedures 21
2.6 Shutdown Procedures 22

3.0 BUILDING AND GROUNDS 22
3.1 Heating System 22
3.2 Lighting System 23
3.3 Exhaust System 23
3.4 Electric Power Systems 24
3.5 Communication System 25

TABLE OF CONTENTS (cont.)
DNAPL OPERATION AND MAINTENANCE PLAN
NYANZA CHEMICAL WASTE DUMP SUPERFUND SITE – OU2
ASHLAND, MASSACHUSETTS

SECTION **PAGE**

3.6 Grounds 25

4.0 OPERATION AND MAINTENANCE REQUIREMENTS 25
4.1 Definitions 25
4.2 Operation and Maintenance Objectives 26
4.3 Routine Operation and Maintenance Activities 26
4.4 Non-Routine Maintenance 27
4.5 Housekeeping 27

5.0 RECORDS MANAGEMENT 28
5.1 Importance of Records 28
5.2 O&M Record Maintenance 29
5.3 Process Operations and Records 29
5.4 Records of Emergency Conditions 30

6.0 REFERENCES 30

TABLES

NUMBER

1-1 Contact Information
1-2 Emergency Contacts
1-3 Chemicals of Concern
1-4 March 2014 DNAPL Analytical Results
2-1 Well Construction Details and Information
2-2 Alarm Conditions
2-3 Auto-Dialed Telephone Numbers

FIGURES

NUMBER

1-1 Site Locus Plan
1-2 Site Plan

TABLE OF CONTENTS (cont.)
DNAPL OPERATION AND MAINTENANCE PLAN
NYANZA CHEMICAL WASTE DUMP SUPERFUND SITE – OU2
ASHLAND, MASSACHUSETTS

APPENDICES

A Manufacturer's Operation and Maintenance Manuals
B Process and Instrumentation Diagrams
C Health and Safety
D DNAPL Extraction System Layout
E Extraction Well Construction Logs
F Operation and Maintenance Forms
G Maintenance Schedule

1.0 INTRODUCTION

This Operation and Maintenance (O&M) Plan was prepared by Nobis Engineering, Inc. (Nobis) under the United States Environmental Protection Agency (EPA) Region I Remedial Action Contract 2, No. EP-S1-06-03, EPA Task Order No. 0022-RA-RA-0115. This O&M Plan was prepared for the Dense Non-Aqueous Phase Liquid (DNAPL) Extraction Systems at the Nyanza Chemical Waste Dump Superfund Site, Operable Unit 2 located in Ashland, Massachusetts (Site). Refer to Table 1-1 and Table 1-2 for Site personnel and emergency contact information, respectively.

1.1 Purpose of O&M Plan

This O&M Plan is intended to provide instruction and guidance for successful operation of the DNAPL Extraction System at the Site. The DNAPL Extraction System recovers DNAPL from wells MW/B-11 and MW-113A. The information contained herein is intended to familiarize personnel with the O&M of the DNAPL Extraction System. This plan is not intended to take the place of the equipment manufacturers' O&M manuals (Appendix A). This plan should be considered a tool that outlines safe and proper operation of the DNAPL Extraction System. This O&M Plan should be updated periodically when changes are made to extraction system components or operation.

1.2 Organization of Plan

This O&M Plan is organized into the following sections:

- Section 1.0 Introduction – Provides a brief overview of the Site, DNAPL Extraction System, and O&M Plan.

- Section 2.0 Description and Detailed Operation of the DNAPL Extraction System – Provides instructions for the operation and control of the equipment, including descriptions of each unit process, process operations and control instructions, and guidance on trouble-shooting the equipment.

- Section 3.0 Building and Grounds – Discusses the O&M of the DNAPL Extraction System buildings and grounds.

- Section 4.0 O&M Requirements – Describes the O&M program for the extraction and treatment equipment.

- Section 5.0 Records Management – Details the record-keeping requirements for the DNAPL Extraction System.

- Section 6.0 References – Identifies the reference material used to prepare this O&M Manual.

Tables, Figures, and Appendices are included as attachments to this O&M Manual.

1.3 Site History and Background

The former Nyanza facility is located on the north side of Megunko Road in the Town of Ashland, Middlesex County, Massachusetts (Figure 1-1). The Town of Ashland is located 25 miles west-southwest of Boston, and 20 miles east-southeast of Worcester, Massachusetts. The Site includes downgradient areas affected by shallow and deep groundwater contamination plumes located north and east of the former Nyanza facility and areas of contaminated sediment located in the Sudbury River.

In 1994, DNAPL was discovered at the Worcester Air Conditioning (WAC) property, north of the Nyacol facility and across the railroad right of way (Figure 1-2). Potential DNAPL sources at the Site include:

- The former concrete "vault" adjacent to the main processing building of Nyanza, Inc., and used for solids separation prior to effluent discharge;
- Two previously-used lined lagoons south of Megunko Road;
- Two former settling ponds (1 and 2) south of Megunko Road between the lined lagoons and Trolley Brook;
- The former landfill on Megunko Hill;
- The former Chemical Brook; and
- Area E (the lower industrial area between Megunko Road and the railroad tracks).

Two groundwater monitoring wells, MW-113A and MW/B-11 (Figure 1-2), previously exhibited evidence of DNAPL, including a measured DNAPL thickness of 4.4 feet. However, the measured thickness within the individual well casings is likely different from any DNAPL thickness in the formation. The wells are approximately 220 feet apart on opposite sides of the railroad tracks. MW-113A is located at the WAC Property at 148 Pleasant Street in Ashland, MA. MW/B-11 is located at the Nyacol Corporation at 211 Megunko Road in Ashland, MA. Both MW-113A and MW/B-11 are in the general vicinity of the former disposal vault, which is believed to be the primary source of the DNAPL (Figure 1-2).

1.4 General Description of DNAPL Extraction System

The purpose of the DNAPL Extraction Systems is to recover DNAPL within the wells and encourage the DNAPL to flow toward MW-113A and MW/B-11 for extraction and disposal. The process components of the DNAPL Extraction System are shown graphically on the Process and Instrumentation diagrams (Appendix B). These process components include the following:

- Extraction System – Two existing wells, MW-113A and MW/B-11 located in known DNAPL source areas [Nobis, 2013] at the WAC Property and Nyacol Facility (Figure 1-2). Each well is equipped with a submersible pneumatic recovery pump to extract DNAPL and pump it to the storage system at the surface.

- Storage System – Storage tanks (one at each well) collect the recovered DNAPL until off-site waste disposal is coordinated.

- Ventilation System – Vapor-phase granular activated carbon (GAC) units treat off-gases from the storage system; and

- Process Control System – Includes a pump controller to adjust pumping cycles and frequency and an auto-dialer to communicate with operations personnel during alarm conditions.

1.5 Health and Safety Considerations

Effective and compliant health and safety practices are necessary to protect on-Site personnel and the local community during the DNAPL Extraction System O&M activities. The current Site-

specific Health and Safety Plan (HASP) is included as a separate document and is pertinent to Nobis Employees and their subcontractors only (Appendix C). This HASP should be updated periodically when changes are made to facility operations or any changes in O&M personnel. Any HASP changes need to be compliant with 29 CFR 1910.120, prior to initiating O&M work. Personnel must understand the health and safety risks present at the Site and implement HASP requirements.

As detailed in the HASP, select O&M tasks may require upgrading to Level B personal protective equipment (supplied air respirator equipment) based on real-time air monitoring results and air monitoring action levels identified in the HASP. For other O&M tasks, the Operator may require upgrading to Level C PPE (air purifying respirator).

In addition, lockout/tagout procedures are a key requirement for safe O&M of the DNAPL Extraction System. A site-specific lockout/tagout program is specified in the HASP. Compliance with lockout/tagout procedures is performed to provide safe and compliant operation of the DNAPL Extraction System.

The procedures and practices established in this O&M Plan and the HASP address likely situations encountered during O&M of the DNAPL Extraction System. However, such procedures and practices are not intended to serve as a substitute for common sense, or for safety practices and procedures recommended by equipment vendors and material suppliers. In addition, unusual and unforeseeable conditions and circumstances may arise during DNAPL Extraction System O&M. The HASP and this O&M Plan do not cover every unusual or unforeseen condition or circumstance. Therefore, supplemental safety protocols may need to be developed and implemented if activities are conducted that are not discussed in this O&M Plan or HASP. This O&M Manual and HASP should be updated periodically when any changes are made to facility operations or O&M personnel.

A brief summary of the Chemicals of Concern are described in Table 1-3, and in the following section, 1.6.1 Chemicals of Concern.

1.6 Contaminants of Concern

Below is a summary of the Chemicals of Concern.

The compounds detected in the free phase DNAPL are similar to the compounds used in the manufacturing of chemical dyes, a past manufacturing activity at the Nyanza Site. The DNAPL is dark brown/black in color with a very strong almond-like odor. Analytical results for groundwater indicated the primary constituents included 1,4-dichlorobenzene, nitrobenzene, chlorobenzene, trichloroethene (TCE), trichlorobenzenes, and minimal amounts of petroleum-related hydrocarbons. Table 1-4 identifies March 2014 DNAPL analytical results at MW-113A and DNAPL/water emulsion at MW/B-11.

DNAPL is likely present in the soils at the zone of interest (mainly silty sands and fine sands) and may have migrated vertically downward into deeper individual bedrock fractures. However, the relative volume of DNAPL in these fractures is likely to be significantly less than the volume that has accumulated at the bedrock surface. DNAPL may also have sorbed into the matrix of the intact rock by chemical diffusion, either at the top surface of the bedrock or adjacent to fractures. Although this can be a significant long-term source as the sorbed DNAPL is released to adjacent and interstitial water, the low porosity of intact granite (about 1.1%) is small compared to typical porosities of overburden or of fractured bedrock. The volume of sorbed DNAPL also is apt to be smaller compared to the volumes of free product in soil pores and rock fractures. The focus of the DNAPL recovery effort is to identify and remove recoverable volumes of DNAPL. It is premature to attempt to measure, quantify, or eliminate DNAPL sorbed into the rock matrix before free phase DNAPL in contact with the surfaces of the rock has been eliminated.

Air monitoring equipment was used during intrusive activities to monitor the ambient air conditions in the work zone for worker health and safety. A photoionization detector registered VOC (volatile organic compound) concentrations at less than 1 part per million by volume (ppmv).

2.0 DESCRIPTION AND DETAILED OPERATION OF DNAPL EXTRACTION SYSTEM

This section provides a detailed description of the operation and control of the DNAPL Extraction System process equipment. Where applicable, the information presented herein for each process component is supplemented with additional O&M instructions obtained from the

equipment manufacturer's O&M manual. Sections 2.1 through 2.4 present the major components, description, process control, and troubleshooting guidelines for the extraction, storage, ventilation, and process control systems. A layout of the DNAPL Extraction System describing the locations of the process components is provided in Appendix D.

2.1 Extraction System

This section is divided into sub-sections describing the major components, process description, operations and process control, and operating problems and trouble-shooting of the extraction system. Figure 1-2 shows extraction well locations. Additional extraction system components are presented in Appendix D.

2.1.1 Major Components

The extraction system consists of extraction wells, recovery pumps, pump controllers, air system, and extraction piping. Component names and IDs refer to names and numbering in the Process and Instrumentation diagrams (Appendix B).

Extraction Wells – The existing monitoring wells, MW-113A and MW/B-11, were retrofitted as extraction wells. Historically, these wells have shown measurable thicknesses of DNAPL. Both wells are screened in bedrock in the highest hydration yield fractures. Well construction details are provided in Table 2-1. Soil boring and well construction logs are included in Appendix E.

MW-113A and MW/B-11 are two-inch wells constructed of PVC and stainless steel, respectively. MW-113A is screened from 46 feet below ground surface (ft bgs) to 51 ft bgs. The screen begins 3 feet below the bedrock surface (43 ft bgs) and has a 4-foot sump below the bottom of the screen. MW/B-11 is screened from 11.3 ft bgs to 21.3 ft bgs; the screen begins 2.5 feet below the bedrock surface (9 ft bgs) and has a 2-foot sump below the screen.

Casing	2-inch diameter Stainless Steel or PVC
Screen	Stainless Steel, 0.010-inch slot size

Recovery Pumps – Each extraction well is equipped with a submersible pneumatic recovery pump. The recovery pumps are operated to maximize capture of the DNAPL while remaining within the pump manufacturer's recommended operating range.

Type	Positive Air Displacement, QED Pulse Pump LP1301
Component ID	RP-101
Materials	316 Stainless Steel (body). Teflon (housings and check balls), Viton (O-ring)
Dimensions	1.66-inch (pump outer diameter OD), 23-inch (Length), 24-inch (length with screen), 2 pounds (weight), 0.010-inch (screen mesh)
Internal Volume	0.09 gallons
Discharge	½-inch product hose
Pressure Requirements	100 pounds per square inch (psi), 125 psi (maximum) and 60 psi (minimum)
Compressed Gas Flow Rate	2.5 standard cubic feet per minute at 100 psi
Compressed Gas Quality	10 micron filtration, less than 10 parts per million of oil, dew point 20 degrees Fahrenheit below minimum operating temperature

Pump Controllers – Pump controllers determine cycle settings and frequency of the recovery-pump cycles. Each recovery pump has its own controller.

Type	QED C100M Pump Controller
Dimensions	3.5-inch (width), 3.65-inch (height), 3.5-inch (deep), 6-pounds (weight)
Enclosure	Fiber reinforced thermoplastic NEMA 4X and UL 508
Operating Temperature	14°F to 122°F
Power Sources	110 volt alternating current (AC) Adapter (WAC Site) and External Solar Panel (Nyacol Site)
Intrinsically Safe Mode	Intrinsically safe only in solar power mode. Not intrinsically safe using AC or external DC (direct current) source.

Compressed Gas System – Each pump requires a nitrogen gas supply. A nitrogen gas Material Safety Data Sheet (MSDS) is located in Appendix C.

Type	Nitrogen Gas Cylinder with 2-Stage Regulator
Tank Size	"J" Tank
Capacity	2500 psi (maximum)
Component ID	T-101
Discharge	3/8-inch air hose

Extraction Tubing – ½-inch product solid Teflon tubing carries recovered fluids to the Storage System (Section 2.2).

Additional Components – Additional system components including pressure indicators, pressure regulators, exhaust valves, and float switches are considered part of the extraction system.

2.1.2 Process Descriptions

Both extraction wells are equipped with one positive air displacement recovery pump, set near the bottom of the well to recover DNAPL. Pneumatic operation of each of the recovery pumps is managed by electronic pump controllers (one per pump). The pump controllers operate by cycling pneumatic pressure from the nitrogen cylinder to the pumps at pre-set intervals. The pressure displaces DNAPL within the pump, bringing it to the surface and into the storage system (see Section 2.2 of this manual). As the pneumatic pressure relaxes, check balls seat and prevent backflow and siphoning, thus allowing the pump to refill with DNAPL. Filling and discharge intervals, as well as pumping frequency, are set by operations personnel to maximize DNAPL recovery and minimize groundwater recovery.

The recovery pump controllers are powered using an AC adapter at the WAC facility and solar power panel at the Nyacol facility (Section 3.4). Each pump controller contains backup rechargeable batteries. In the case of power failure, the backup batteries will be the main source of power for the pump controllers. If the backup battery power is exhausted, the pump controllers will shut down. In this situation, once power is restored, pump controller settings and frequency will be restored to manufacturer's default settings. They will need to be adjusted to Site-specific settings.

2.1.3 Operations and Process Control

Operations and process control of the recovery pump and air system are afforded only through the pump controllers. A high-level float switch in the storage system (tank) will shut off recovery pumps when the switch is closed. Additionally, a separate high-high level float switch in the storage tank will disable power to the pump controllers when the switch is closed.

The operations personnel have the following responsibilities:

- Determine mode of operation for the recovery pumps;
- Start and stop the recovery pumps at the pump controllers;
- Adjust recovery pump frequency for desired DNAPL flow;
- Adjust recovery pump settings for desired DNAPL flow;
- Readjust recovery pump cycle during freezing weather temperatures to keep recovery lines from freezing;
- Observe recovery pump operation and confirm operational status;
- Observe air system and extraction tubing to confirm the absence of leaks;
- Check pneumatic pressure of the nitrogen cylinder, nitrogen discharge, and feed pressure to the pump controller. The pneumatic pump requires a minimum pressure of 60 psi. Replace cylinder before pressure drops to 60 psi;
- Verify that the nitrogen cylinders are secured upright and in good condition;

- Verify sufficient pressure remains in backup cylinder. Two nitrogen cylinders are available at each Site. When one of the cylinders is near empty, change over to second cylinder. At this time, nitrogen tank vendor should be contacted to remove the used cylinder and replace it with new full nitrogen tank; and

- Monitor PID readings in shed.

The pneumatic pump controllers are located outside the treatment sheds in a mounted, heated waterproof box. This heated box protects the pump controller from the outside elements as well as warms the pump controller and its valves to allow DNAPL extraction in cold weather. The frequency and settings of the pumping cycles can be modified using the Model C100M Pump Controller. The system can be set for optimal DNAPL extraction by modifying the following settings:

- Refill Time – The amount of time the fluid in the extraction well is entering the pump chamber. During this time, the pump is also discharging the remaining nitrogen from the pump chamber out through the exhaust valve.

- Discharge Time – The amount of time the nitrogen gas will be applied to discharge fluid collected in the pump to the storage tank.

- System On – Time the system will be operational.

- System Off – Time system will be off between pumping cycles.

Using the pump controllers, the following information can be obtained:

- Remaining Time Off – The time before the next pumping cycle.
- Refill Total – The total amount of time the system extracted fluids from the extraction well.
- Discharge Total – The total amount of time the system discharged nitrogen gas to the pump allowing fluid to collect in the storage tank.
- On Total – The total time the system has been operational.
- Off Total – The total time the system has not been operational.

Additional details on the operation and control of the recovery pump and controller are provided in manufacturers manuals in Appendix A.

2.1.4 Operating Problems and Troubleshooting

Modifying pumping frequency and pump settings are required to optimize DNAPL extraction. Settings for each pump need to be adjusted as new conditions are observed in the extraction well. For example, these conditions could include limited DNAPL removal or nitrogen being observed in discharge line. A longer refill time and a shorter discharge time, as well as a longer period of time between pumping cycles, may allow for more DNAPL recovery. If nitrogen gas is observed in the discharge line, a shorter discharge time may be required.

Limited or no flow rate observed could be attributed to the following issues:

- Pump settings are not appropriate and settings need to be adjusted on recovery pump controller.

- Recovery pump controller is not working correctly. Refer to manufacturer's manuals (Appendix A) for additional details on troubleshooting pump controller.

- Nitrogen tank empty. Check nitrogen tank pressure levels and change nitrogen tank, if necessary.

- Pump malfunction. If a recovery pump malfunction is suspected, remove pump from extraction well and check the following:

    - Inspect intake screens on the pump to ensure they are not clogged. If the screen is clogged, remove screen and clean. May need to set recovery pump higher in extraction well to prevent clogging issues.

    - Inspect pump air and discharge tubing. Ensure that the tubing is intact and is not leaking, especially at the pump tubing connections. Replace tubing if a problem is identified.

- Clean check balls and seats in pump. Ensure that the check balls seat properly and are not leaking.

- Check pump controller valves for freezing. Pump valves may have become frozen due to cold temperatures. Ensure heater in pump controller structure is working property. If pump valves are frozen, warm up suspected pump valves area.

- Frozen recovery tubing. In freezing conditions, liquid remaining in recovery tubing between purge cycles may freeze. During freezing temperature conditions, change purge cycle to evacuate all liquid out of tubing.

  - Increase heat inside building to above 32°C.

Operations personnel are trained in performing programming changes to the recovery pump and pump controller. Typical pump controller troubleshooting scenarios are presented in Appendix A. Additional support is available directly from the manufacturer (Table 1-1).

2.1.5 DNAPL and Optimization of DNAPL Product

DNAPL has been observed at both the Nycaol and WAC facilities. At the Nyacol it takes the form of a DNAPL/water emulsion. Through observations and jar testing of the system storage tank, no clear separation between the DNAPL and water has been identified. Approximately 55 percent of the total liquid volume in the storage tank is DNAPL/water emulsion. At WAC the DNAPL occurs in a separate product phase. Approximately 20 percent of the total liquid volume in the storage tank is DNAPL product. Optimizing DNAPL extraction is achieved by modifying pump intake settings and pumping frequency/cycling as discussed in Section 2.1.4.

2.2 Storage System

This section is divided into sub-sections describing the major component, process description, operations and process control, and operating problems and trouble-shooting of the storage system. The tank drawings are presented in Appendix A and the location of the storage system is presented in Appendix D.

2.2.1 Major Component

The major component of the storage system is a dual-walled storage tank.

Dual-Walled Storage Tank – Each DNAPL Extraction System is equipped with a double-walled stainless steel storage tank. The tanks are connected to ventilation systems (Section 2.3) to prevent off-gassing of VOCs from the stored DNAPL.

Type	Double-Walled Collection Tank
Component ID	T-102
Material	Stainless Steel
Volume	270 gallons

2.2.2 Process Description

Discharged DNAPL from the extraction system is directed to the storage system (T-102) via ½-inch diameter tubing. The system stores recovered DNAPL until it is transported to off-site disposal. The storage system consists of a double-walled 270-gallon stainless steel storage tank that is vented to the ventilation system (Section 2.3). It is not under vacuum. A sight-glass is installed to monitor fluid levels in the tank.

2.2.3 Operations and Process Control

There are no controls at the storage system, but alarm float switches are located within the tank. There are two alarm flow switches: a high-level float switch and a high-high-level float switch. If the high-level float switch is active, the recovery pump at the Site will be disabled and an autodialer alarm will be activated. When the autodialer is acknowledged, the recovery pump will enable itself and continue to pump at the frequency and settings directed by the pump controller. If the high-high level float switch is activated, the recovery pump at the Site will be disabled permanently, until a tank cleanout has been performed. An autodialer alarm will be activated during this latter alarm condition, but acknowledging this alarm will not enable the system.

Operations personnel have the following responsibilities:

- Observe and measure DNAPL and other liquid levels in the collection tank's sight glass;
- Check interstitial space of the tank to ensure the primary wall is not leaking; and
- Observe tank connections and associated piping for signs of leaks and/or corrosion.

Tank contents should be removed if the high-level alarm is activated. The procedures for removal of the tank contents are as follows:

- Shut down extraction system;
- Open 2-inch pump-out port on top of storage tank;
- Connect pump-out hose to camlock fitting at pump-out port;
    - Fitting of pump-out hose at camlock fitting will depend on equipment provided by storage tank disposal vendor.
- Open Vapor Phase Carbon Inlet sample port to allow air into storage tank as DNAPL is being pumped out;
- Pump tank contents as required;
- Disconnect pump-out hose;
- Close pump-out port and Vapor Phase Carbon Inlet sample port; and
- Use absorbent pads/materials to clean any drips/spills/residuals on floors and/or equipment.

Waste disposal documentation should be maintained and distributed as described in Section 5 of this manual.

Additional details on the storage system are provided in Appendix A.

2.2.4 Operating Problems and Troubleshooting

Typically there are no operating problems associated with the storage system.

2.3 Ventilation System

This section is divided into sub-sections describing the major components, process description, operations and process control, and operating problems and trouble-shooting of the ventilation system. The locations of the ventilation system components are presented in Appendix D.

2.3.1 Major Components

The major components of the ventilation system are a flame arrestor, vapor-phase GAC unit, and vent pipe.

Flame Arrestor – The storage system (Section 2.2) is equipped with a flame arrestor to prevent propagation of flames in potential vapor mixtures (Groups I, IIA, and IIB3).

Type	Elmac Technologies DFBE-050-2DGS-EN.60-N
Material	Carbon and stainless steel
Temperature	-20 to 60 degrees Celsius (˚C)
Pressure	0.8 to 1.6 bars
Hose Type	Alfagomma Chemical Hose
Hose Diameter	2-inches
Hose Pressure	240 psi (maximum)

Vapor Phase GAC – Vapors from the storage system (Section 2.2) are passively treated using a vapor-phase GAC unit.

Type	Calgon Carbon Ventsorb Unit
Component ID	VGAC-201
Vessel	55-gallon open head steel canister
Temperature	60˚C (maximum)
Pressure	4 psi, gauge (maximum)
Flow	100 cubic feet per minute (maximum)

Vent Pipe – Once vapors are treated in the GAC unit, they are passively vented to the atmosphere. A 2-inch flexible hose carries vapors to the roof where they are vented through a 2-inch diameter, schedule 10 black iron pipe.

Various Components – Additional piping components including pressure indicators, sample ports, fittings, and a backflow preventer are part of the ventilation system.

2.3.2 Process Description

The off-gas stream from the storage system requires treatment (GAC) prior to discharge to the atmosphere. The storage system (Section 2.2) is sealed. Accumulated gases within the storage system passively flow to and through the GAC unit. After exiting the GAC unit, treated vapors are vented to the atmosphere through a vent pipe located at the top of the DNAPL Extraction System building.

2.3.3 Operations and Process Control

The ventilation system operates passively, so there are no controls.

The operations personnel have the following responsibilities:

- Collect VOC readings at the GAC influent and effluent sample ports (Appendix B);
- Confirm removal of VOCs by GAC unit (influent concentrations greater than effluent concentration) using the carbon effluent sample port. Effluent concentrations measured with a PID are not to exceed 25 ppmv. If readings exceed 25 ppmv, the GAC unit needs to be replaced; and
- Observe ventilation system connections, associated piping, and vent pipe for signs of leaks or corrosion.

Additional details on the operation of the ventilation system are provided in Appendix A.

2.3.4 Operating Problems and Troubleshooting

Typically, there are no operating problems associated with the ventilation system. However, operations personnel may observe a breakthrough occurring at the GAC unit (effluent VOC concentrations higher than influent concentrations). Additionally, if effluent VOC concentrations exceed 25 ppmv, a GAC change-out is required. If either of these situations occurs, operations

personnel should collect an additional VOC reading to confirm. Once confirmed, the DNAPL Extraction System should be shut down and a GAC unit change-out should be coordinated immediately, to limit any DNAPL Extraction System downtime.

2.4 Process Control System

This section is divided into sub-sections describing the major components, process description, operations and process control, and operating problems and trouble-shooting of the process control system. The location of the process control system is presented in Appendix D.

2.4.1 Major Components

The process control system consists of a Sensaphone Cell682 autodialer mounted at each of the DNAPL Extraction Systems and process instrumentation including level indicators and temperature switches.

The primary functions of the autodialer are to: 1) receive and notify operations personnel of alarms; and 2) maintain an alarm history record of alarm conditions.

2.4.2 Process Description

The autodialer, which identifies emergency and alarm conditions in the DNAPL Extraction System, is the primary process control system component. Possible alarm conditions are presented in Table 2-2. During an alarm condition, the autodialer uses a cellular telephone signal to dial a pre-programmed series of telephone numbers automatically. The autodialer also will send text messages of alarm conditions. Upon connecting successfully to a telephone number, the autodialer indicates the alarm channel is activated and identifies the alarm condition. If the alarm is not acknowledged, the autodialer will proceed to dial the next telephone number in the pre-programmed series. Refer to Appendix A for instructions on pre-programming telephone numbers using the computer/autodialer interface. Each autodialer is password protected. O&M personnel and EPA have access to autodialer passwords.

If the autodialer is activated while operations personnel are off-Site, applicable personnel should report to the Site, as necessary. The condition requiring an immediate response is a high-level condition or a high-high level condition in the storage tank. A response time within 24 hours is

required for these emergency conditions. If a power outage occurs, operation and maintenance personnel should report to the Site within 24 hours. Once power is restored to the system (if using DC power), the system will be enabled and pump controller settings and frequency will need to be adjusted. Reporting is required for all off-Site autodialer alarms or emergency conditions, using the forms in Appendix F.

A complete list of auto-dialed phone numbers and associated personnel is provided in Table 2-3. The operations personnel are responsible for maintaining this list over time as revisions become necessary.

2.4.3 Operations and Process Control

Details on the operation and control of the autodialer are provided in Appendix A. The general control of the DNAPL Extraction System is performed by each individual unit process and is explained in Sections 2.1.3, 2.2.3, and 2.3.3.

2.4.4 Operating Problems and Troubleshooting

Typically, there are no operating problems associated with the autodialer. Operations personnel are trained in performing minor programming changes to the process control system. Typical troubleshooting scenarios are presented in Appendix A. Additional support is available directly from the manufacturer (Table 1-1).

2.5 Startup Procedures

The following steps may be required, either in full or in part, prior to DNAPL extraction system startup, after major equipment replacement and/or retrofit. These steps are typically not required for routine operations and maintenance.

A complete startup is performed when the DNAPL extraction system has undergone complete shutdown, as described in Section 2.6. This includes turning on all the power to the pump controller and shed, as well as opening the nitrogen gas tank. Using the breaker panel, place all breakers into the ‘ON’ position. Open the nitrogen tank valve and ensure the nitrogen gas is flowing. Adjust pump controller settings and enable system by placing pump controller in the ‘ENABLE’ mode.

2.6 Shutdown Procedures

The method and degree of DNAPL Extraction Systems shutdown will be dictated by the purpose of the shutdown event. There are two levels of shutdown that can be selected, either limited shutdown or complete shutdown, as described in the paragraphs below.

Limited Shutdown – Disable the pump using the pump controller. This requires putting the pump controller in the 'DISABLE' mode. Since the recovery pump is controlled using the pump controller, no pump cycles will start with the pump controller disabled.

Complete Shutdown – A complete shutdown is performed when the DNAPL extraction system will be off for an extended period of time. This requires shutting down all the power to the pump controller and shed, as well as turning off the nitrogen tank gas. Using the breaker panel, place all breakers into the completely closed position and turn the nitrogen tank valve closed.

3.0 BUILDING AND GROUNDS

The DNAPL Extraction Systems at the WAC and Nyacol locations are fully enclosed within their own green wooden shed structure (Appendix D). Each building is secured with a lock and key. There is a secondary containment structure built within each shed, in the event of a leak or spill of fluids in the shed. The buildings are outfitted with heating, lighting, exhaust, electric power, insulation, and communication systems. Building maintenance tasks performed by operations personnel should be recorded on the O&M Site Visit form (Appendix F). This allows operations personnel to track and record when maintenance tasks have been completed. A description of the building maintenance tasks is presented in the following sections.

3.1 Heating System

An enclosure heater provides heat to the building during periods of cold weather. A thermostat independently controls the operation of the heater. The heater is an intrinsically safe heater rated for operation within a Class I, Division II hazardous environment. Additional details on the heating system include the following:

Type	TPI Hazardous Location Wall Convector Heater – Single Phase
Component ID	EH-301
Power	1,800 watts (W)

The operation of the heating system is the responsibility of the operations personnel (Appendix G). Additional details on the operation of the heating system are provided in Appendix A.

3.2 Lighting System

A lighting system provides light to the interior of the building. The lighting system is intrinsically safe and rated for operation within a Class I, Division II hazardous environment. Additional details on the lighting system include the following:

Type	Incandescent Light Fixture (2)
Component ID	ILF-301
Power	150 W

The operations personnel are responsible for maintaining the lighting system in good working order and replacing bulbs, as necessary (Appendix G).

3.3 Exhaust System

An exhaust system prevents potentially hazardous breathing conditions from developing within the DNAPL Extraction System building. The exhaust system pushes air in one direction, from within the building to the outside. A temperature switch independently controls the operation of the exhaust system. The exhaust system is intrinsically safe and rated for operation within a Class I, Division II hazardous environment.

Type	Dayton Hazardous Location Direct-Drive Exhaust Fan
Component ID	EVF-301
Motor	¼ horsepower

The operation of the exhaust system is the responsibility of the operations personnel (Appendix G). Additional details on the Exhaust fan are provided in Appendix A.

3.4 Electric Power Systems

The DNAPL Extraction System requires power for the DNAPL recovery operations and for the building support systems. Primary recovery operations power requirements include pumps, controllers, and autodialer. Primary building support power requirements are heating, lighting, and exhaust systems.

At the WAC facility, a dedicated electrical service is provided from the existing electrical panel inside the WAC facility to power the DNAPL Extraction System. An electrical meter is located on the shed exterior to monitor electrical usage. The operations personnel are responsible for the maintenance after the meter.

At the Nyacol property, a solar panel, mounted on the building's roof, powers the DNAPL Extraction System controller. The solar panel is connected to an onboard battery pack for controller operations during the night and on days with marginal sunlight. Electrical service for shed lighting and heating is supplied from an existing electrical panel located within a Nyacol building. An electrical meter on the shed exterior monitors electricity usage. The operations personnel are responsible for the maintenance of the solar panel.

No emergency power (backup generator) system is in place for the DNAPL Extraction System at either the WAC or Nyacol locations. The autodialer has a back-up battery power source that provides short-term back-up power to the autodialer during temporary power losses. The pump controllers as well have rechargeable batteries in the event of a power failure. However, provisions must be made by the operations personnel during extended cold weather period power outages to provide temporary heat for the DNAPL Extraction System to prevent exposed lines and valves from freezing. Use of a backup generator or some type of heating system may be used, only if it is intrinsically safe for the DNAPL Extraction System.

The operation of the electrical systems is the responsibility of the operations personnel (Appendix G). Additional details on the operation of the solar panel and autodialer backup battery are provided in Appendix A.

3.5 Communication System

Cellular telephone communication is provided at the DNAPL Extraction Systems. There are two cellular telephone lines in use at the Site and include the following:

- One line for the WAC property autodialer; and
- One line for the Nyacol property autodialer.

The operation of the communication system is the responsibility of the operations personnel. However, no maintenance tasks are anticipated.

3.6 Grounds

In order to prevent slips, trips, and falls, operations personnel should maintain regular and emergency access routes for staff, deliveries, pick-ups, and O&M activities during the year. The operations personnel are responsible for coordinating with the property owners any mowing and snow removal within the vicinity of the system housings and applicable walkways.

4.0 OPERATION AND MAINTENANCE REQUIREMENTS

This section is intended to aid operations personnel in the successful O&M of the DNAPL Extraction System. These sections do not provide the complete O&M procedures required for specific equipment. For specific maintenance information and guidance, operations personnel are directed to the manufacturers' O&M manuals (Appendix A).

4.1 Definitions

Maintenance at the Site can be broken down into the following categories:

- **Routine Operation and Maintenance –** includes regular visits to the Site to monitor operations. Maintenance is preventative and conducted on a scheduled basis. Routine operation and maintenance is part of the regular work schedule. It evaluates system performance, enhances the life and performance of equipment, and reduces process shutdown conditions resulting from equipment failure.

- **Non-Routine Maintenance –** is necessary to correct any malfunctioning equipment or potential condition(s) of failure discovered as a result of periodic monitoring, routine maintenance activities, or equipment failure. This also includes maintenance related to startup and shutdown events.

4.2 Operation and Maintenance Objectives

DNAPL Extraction System O&M is performed to accomplish the following objectives:

- Provide for safe operation of the DNAPL Extraction System;
- Maintain specified operating conditions of the equipment;
- Collect and evaluate physical and chemical data to determine system effectiveness;
- Modify the operation of the DNAPL Extraction System, as needed; and
- Maintain compliance with regulatory requirements, such as off-site transportation and disposal of DNAPL.

4.3 Routine Operation and Maintenance Activities

Routine O&M of the DNAPL Extraction System is performed for system performance evaluation and protection of human health and the environment. Operations personnel performing the O&M tasks conduct the following activities:

- Observe DNAPL Extraction System and confirm it is operational;
- Operate the recovery pumps and check for blockage or clogging;
- Monitor recovery rates and frequencies periodically to optimize the recovery rates;
- Record and track total volume of DNAPL recovered;
- Observe extraction, storage, and ventilation system piping and check for leaks and signs of corrosion;
- Inspect DNAPL in the storage tank and schedule off-site disposal as needed;
- Monitor vapor-phase carbon vessel performance and schedule change-outs, as needed;
- Monitor air system (nitrogen tank, T-101) level and refill the tank, as needed;
- Inspect the solar panel for any damage and confirm operational;

- Complete the O&M Site Visit form (Appendix F); and
- Complete the routine maintenance activities (Appendix G).

A maintenance schedule has been prepared for the DNAPL Extraction System and is presented in Appendix G. The maintenance schedule was prepared based on review of the individual equipment O&M manuals (Appendix A) and operations experience at the Site since startup of the DNAPL Extraction System. The maintenance schedule should be considered a “living” document and should be updated by operations personnel, as needed.

Routine O&M activities must be recorded on the O&M Site Visit form (Appendix F).

4.4 Non-Routine Maintenance

On occasion, operations personnel will need to perform non-routine maintenance to correct malfunctioning equipment or potential failure condition(s) discovered as a result of routine O&M activities or equipment failure. Operations personnel may be needed for corrective maintenance outside of normal hours of operation to investigate a problem and make or arrange for necessary repairs. Operations personnel need to identify, evaluate, and correct any failed equipment or system failures that are not routine, foreseeable, or anticipated, but become necessary due to acts of nature, defective equipment, power surges/failures, or other causes that are beyond the reasonable control of operations personnel resulting in the equipment or system not fulfilling its intended function.

Similar to routine O&M, non-routine maintenance must be recorded on the O&M Site Visit form (Appendix F).

4.5 Housekeeping

The general care of the buildings and grounds is an area of preventive maintenance often given a position of secondary importance. However, good housekeeping practices go a long way toward promoting public confidence and support. They prevent unnecessary odors and give the DNAPL Extraction System a clean and pleasing appearance. Care and cleanliness also help in promoting overall safety. In general, always clean up an area immediately after a mess has been made.

A fifty-five gallon drum is available at each site for disposal of non-hazardous materials. Non-hazardous materials include contaminated PPE and spill response materials. Coordination with an approved vendor to remove and replace drums is required for Site operations and maintenance.

5.0 RECORDS MANAGEMENT

The following subsections discuss the importance of records, how records should be maintained, and the different types of records that should be maintained to document system operations and maintenance.

5.1 Importance of Records

Maintaining accurate records of performance is an integral part of effective DNAPL Extraction System operations. Clear documentation of operations events and experiences provides a record of compliance with performance requirements and helps to address future operational situations. Complete records are necessary to document procedures; but, most importantly, records should be used as a basis for system operation and for interpreting system performance.

Records also provide an excellent check on the timing of maintenance procedures. The DNAPL Extraction System requires periodic maintenance (Section 4.3). Adequate records note when service was last performed and when the time for service approaches. Therefore, a schedule can be maintained and O&M procedures will not be overlooked or forgotten.

The significant details of weekly Site visits also have an important historical value in that they form a running account of the DNAPL Extraction System operation. Accurate records also provide a basis for the design of future changes or expansions of the DNAPL Extraction System. In the event of legal questions in connection with the DNAPL Extraction System operations, accurate and complete records would be required as evidence of the actual events that occurred. Thus, records and their proper maintenance are essential.

5.2 O&M Record Maintenance

Records of any type will be carefully preserved and filed so that they can be located rapidly. The operator will be responsible to store any records. Additionally, paper records will be scanned into electronic format and stored with project documents on a secure server. Electronic files will be available to operations personnel for reference and use; in addition, copies of records will be maintained in the office for back-up and quality assurance review.

Records will be retained as long as they may be useful, with due consideration given to the historical value of some types of data. Any data that might be used as a basis of design for DNAPL Extraction System expansion or for new construction should be kept indefinitely. Results of laboratory analyses will be kept indefinitely.

Records will be made at the time the data are obtained, by those personnel directly making the particular measurements. Responsibility for proper filing, care, and use of records will rest with the operations personnel. The DNAPL Extraction System records are owned by EPA and will not be removed or purged without prior approval. These records will be provided to EPA upon request.

5.3 Process Operations and Records

Proper operation and control of the DNAPL Extraction System entails 1) routine O&M schedules to be followed by the operations personnel, and 2) the maintenance of O&M Site Visit forms (hard copy or electronic copy). These data sheets indicate what has happened, what has been accomplished, and the results of the operational tests.

In carrying out specified activities, input to the O&M Site Visit form (Appendix F) should be a routine practice. Emphasis should be placed on noting unusual conditions, since the sources of operational difficulties can often be determined from information recorded on these sheets. Specific O&M of the equipment is described in Sections 2.0 and 4.0 of this O&M Manual. Routine O&M and non-routine maintenance performed for each piece of equipment will be recorded on the O&M Site Visit form.

Records should be maintained and used as a basis for DNAPL Extraction System operations and for the interpretation of DNAPL Extraction System performance. Operational data also can

provide a valuable basis for future modifications to the DNAPL Extraction System. For ease of communication among operations personnel, process equipment should be identified with component ID numbers. Accurate and complete information describing the operations will also be of value to management and administrative personnel.

5.4 Records of Emergency Conditions

A record of emergency conditions affecting the treatment system should be maintained. These emergency records might include records of deteriorated effluent conditions, major equipment failures, and power failures. Any emergency condition that occurs should be documented on the O&M Site Visit form (Appendix F) at a minimum.

6.0 REFERENCES

Nobis Engineering, Inc. (Nobis), 2013. DNAPL Extraction System Evaluation, Nyanza Chemical Waste Dump – Operable Unit 2, Ashland Massachusetts. April.

TABLES

Table 1-1
Contact Information
Nyanza Chemical Waste Dump Superfund Site – OU2
Ashland, Massachusetts

Company Name	Applicable Personnel	Project Role	Contact Information
Project Team Contact Information			
Air Energy, Inc.	Bob Bennett	System Fabricator	Direct: (508) 230-9445
Groundwater & Environmental Services, Inc.	Brian Horan	System Installer	Direct: 800-221-6119 Ext. 3241 bhoran@gesonline.com
Nobis Engineering, Inc.	Michelle Carbonneau	Operations Lead	Direct: 978-703-6024 Cell: 774-230-9372 mcarbonneau@nobiseng.com
	Tom Bobowski	Corporate Health and Safety Officer	Direct: (603) 724-6239 Cell: (603) 731-7993 tbobowski@nobiseng.com
	Boyd Allen	Project Manager	Direct: (978) 703-6006 Cell: (603) 770-3272 ballen@nobiseng.com
Manufacturer Contact Information			
QED Environmental Systems	N/A	Vendor (Recovery Pump and Controller)	(800) 624-2026
Sensaphone	N/A	Vendor (Autodialer)	Technical Support (877) 373-2700 support@sensaphon.com

Table 1-2
Emergency Contacts
Nyanza Chemical Waste Dump Superfund Site – OU2
Ashland, Massachusetts

AGENCY	TELEPHONE
Police Department	911 or (508) 881-1212
Ambulance Service	911 or (508) 881-2323
Fire Department	911 or (508) 881-2323
U.S. EPA Region 1 – Dan Keefe	(617) 918-1327
Massachusetts DEP – Dave Buckley	(617) 556-1184
Massachusetts DEP Emergency Response	(888) 304-1133
National Poison Control Center	(800) 222-1222
Dig Safe System, Inc.	(800) DIG-SAFE
MetroWest Medical Center	(508) 383-1000
Nobis Project Manager, Boyd Allen	(603) 224-4182 (main) (978) 703-6006 (direct)
Nobis FOL and SSO, Michelle Carbonneau (note: FOL and SSO may change throughout project)	(603) 513-7322 (main)
Nobis Engineering, Inc., Concord Office	(800) 394-4182
Health and Safety Manager, Tom Bobowski	(603) 224-4182 (main) (603) 731-7993 (Cell)
Site Location: Nyanza Chemical Waste Dump Ashland, Massachusetts	
Nyacol Products Inc. – Wayne Sarabara	211 Megunko Road (508) 881 2220 x232 (main) (508) 561 9822 (cell)
Worcester Air Conditioning – Peter Masionis	148 Pleasant Street (508) 400 1245 (main)

Table 1-3
Chemicals of Concern
Nyanza Chemical Waste Dump Superfund Site – OU2
Ashland, Massachusetts

Chemical of Concern	Primary Hazard	Percent of Total	Permissible Exposure Limits (PELs)
Nitrobenzene	Toxic	28.0%	1 ppm
Chlorobenzene	Toxic	12.8%	75 ppm
Trichloroethene (TCE)	Irritant	7.1%	50 ppm
1,2,4-Trichlorobenzene	Toxic, Irritant	0.9%	REL-C = 5 ppm
m-Dichlorobenzene	Toxic, Irritant	40.0%	NE
o-Dichlorobenzene	Toxic, Irritant	1.7%	PEL C-50 ppm
p-Dichlorobenzene	Toxic, Irritant	9.5%	75 ppm
Vinyl Chloride*	Toxic	Below Detection Limit	1 ppm PEL C = 5 ppm

Note: Represented as Dense, Non-Aqueous Phase Liquid (DNAPL) compounds based on chemical analyses of recovered product from MW-113A collected on March 11, 2014
ppm = parts per million; mg/m^3 = milligram per cubic meter
PEL = Permissible Exposure Limit
REL = Recommended Exposure Limit
PELs are based on an 8-Hour Time Weighted Average (TWA).
C – indicates the ceiling level for the PEL or REL (National Institute for Occupational Safety and Health (NIOSH))
NA – not applicable
NE – not established

Table 1-4
March 2014 DNAPL Analytical Results
Nyanza Chemical Waste Dump Superfund Site
Ashland, Massachusetts

Sample Location	MW-113A			MW/B11		
Sample Date	03/11/2014			03/11/2014		
Lab Sample ID	14C0375-03			14C0375-02		
	Units	Value	Qualifier	Units	Value	Qualifier
FLASHPOINT						
[illegible]	[illegible]	[illegible]		[illegible]	[illegible]	
RCRA 8 Metals						
[illegible]	[illegible]	[illegible]	[illegible]	[illegible]	[illegible]	
[illegible]	[illegible]	[illegible]	[illegible]	[illegible]	[illegible]	
[illegible]	[illegible]	[illegible]	[illegible]	[illegible]	[illegible]	[illegible]
[illegible]	[illegible]	[illegible]		[illegible]	[illegible]	
[illegible]	[illegible]	[illegible]	[illegible]	[illegible]	[illegible]	
[illegible]	[illegible]	[illegible]	[illegible]	[illegible]	[illegible]	[illegible]
[illegible]	[illegible]	[illegible]	[illegible]	[illegible]	[illegible]	[illegible]
[illegible]	[illegible]	[illegible]		[illegible]	[illegible]	
VOCs						
[illegible]	[illegible]	[illegible]	[illegible]	[illegible]	[illegible]	[illegible]
[illegible]	[illegible]	[illegible]	[illegible]	[illegible]	[illegible]	[illegible]
[illegible]	[illegible]	[illegible]	[illegible]	[illegible]	[illegible]	[illegible]
[illegible]	[illegible]	[illegible]	[illegible]	[illegible]	[illegible]	[illegible]
[illegible]	[illegible]	[illegible]	[illegible]	[illegible]	[illegible]	[illegible]
[illegible]	[illegible]	[illegible]	[illegible]	[illegible]	[illegible]	[illegible]
[illegible]	[illegible]	[illegible]	[illegible]	[illegible]	[illegible]	[illegible]
[illegible]	[illegible]	[illegible]	[illegible]	[illegible]	[illegible]	[illegible]
[illegible]	[illegible]	[illegible]	[illegible]	[illegible]	[illegible]	[illegible]
[illegible]	[illegible]	[illegible]		[illegible]	[illegible]	
[illegible]	[illegible]	[illegible]	[illegible]	[illegible]	[illegible]	[illegible]
[illegible]	[illegible]	[illegible]	[illegible]	[illegible]	[illegible]	[illegible]
[illegible]	[illegible]	[illegible]	[illegible]	[illegible]	[illegible]	[illegible]
[illegible]	[illegible]	[illegible]	[illegible]	[illegible]	[illegible]	[illegible]
[illegible]	[illegible]	[illegible]	[illegible]	[illegible]	[illegible]	[illegible]
[illegible]	[illegible]	[illegible]		[illegible]	[illegible]	
[illegible]	[illegible]	[illegible]	[illegible]	[illegible]	[illegible]	[illegible]
[illegible]	[illegible]	[illegible]	[illegible]	[illegible]	[illegible]	[illegible]
[illegible]	[illegible]	[illegible]	[illegible]	[illegible]	[illegible]	[illegible]
[illegible]	[illegible]	[illegible]		[illegible]	[illegible]	
[illegible]	[illegible]	[illegible]	[illegible]	[illegible]	[illegible]	[illegible]
[illegible]	[illegible]	[illegible]		[illegible]	[illegible]	
[illegible]	[illegible]	[illegible]	[illegible]	[illegible]	[illegible]	[illegible]
[illegible]	[illegible]	[illegible]	[illegible]	[illegible]	[illegible]	[illegible]
[illegible]	[illegible]	[illegible]	[illegible]	[illegible]	[illegible]	[illegible]
[illegible]	[illegible]	[illegible]	[illegible]	[illegible]	[illegible]	[illegible]
[illegible]	[illegible]	[illegible]	[illegible]	[illegible]	[illegible]	[illegible]
[illegible]	[illegible]	[illegible]	[illegible]	[illegible]	[illegible]	[illegible]
[illegible]	[illegible]	[illegible]	[illegible]	[illegible]	[illegible]	[illegible]
[illegible]	[illegible]	[illegible]	[illegible]	[illegible]	[illegible]	[illegible]
[illegible]	[illegible]	[illegible]	[illegible]	[illegible]	[illegible]	[illegible]
[illegible]	[illegible]	[illegible]	[illegible]	[illegible]	[illegible]	[illegible]
[illegible]	[illegible]	[illegible]	[illegible]	[illegible]	[illegible]	[illegible]
[illegible]	[illegible]	[illegible]	[illegible]	[illegible]	[illegible]	[illegible]

Table 1-4
March 2014 DNAPL Analytical Results
Nyanza Chemical Waste Dump Superfund Site
Ashland, Massachusetts
Page 2 of 4

Sample Location	MW-113A			MW/B11		
Sample Date	03/11/2014			03/11/2014		
Lab Sample ID	14C0375-03			14C0375-02		
	Units	Value	Qualifier	Units	Value	Qualifier
BROMOFORM	mg/Kg	14,000	U	µg/L	1,000	U
BROMOMETHANE	mg/Kg	5,800	U	µg/L	5,000	U
CARBON DISULFIDE	mg/Kg	29,[illegible]00	U	µg/L	5,000	U
CARBON TETRACHLORIDE	mg/Kg	2,900	U	µg/L	1,000	U
CHLOROBENZENE	mg/Kg	96,[illegible]00		µg/L	47,000	
[illegible]	[illegible]	[illegible]	U	[illegible]	[illegible]	[illegible]
CHLOROETHANE	mg/Kg	5[illegible]00	U	µg/L	2[illegible]00	U
CHLOROFORM	mg/Kg	5,800	U	µg/L	2,000	U
CHLOROMETHANE	mg/Kg	14,[illegible]00	U	µg/L	2,000	U
CIS-1,2-DICHLOROETHYLENE	mg/Kg	2,900	U	µg/L	1,000	U
CIS-1,3-DICHLOROPROPENE	mg/Kg	1,400	U	µg/L	400	U
DIBROMOMETHANE	mg/Kg	2,900	U	µg/L	1,000	U
DICHLORODIFLUOROMETHANE	mg/Kg	14,[illegible]00	U	µg/L	2,000	U
DIETHYL ETHER	mg/Kg	5,800	U	µg/L	2,000	U
DIISOPROPYL ETHER	mg/Kg	1,400	U	µg/L	500	U
ETHYLBENZENE	mg/Kg	2,900	U	µg/L	1,000	U
HEXACHLOROBUTADIENE	mg/Kg	14,[illegible]00	U	µg/L	500	U
ISOPROPYLBENZENE	mg/Kg	2,900	U	µg/L	1,000	U
M/P-XYLENE	mg/Kg	5,800	U	µg/L	2,000	U
METHYL TERT-BUTYL ETHER (MTBE)	mg/Kg	2,900	U	µg/L	1,000	U
[illegible]	[illegible]	[illegible]	U	[illegible]	[illegible]	[illegible]
NAPHTHALENE	mg/Kg	5,800	U	µg/L	2,000	U
N-BUTYLBENZENE	mg/Kg	5,800	U	µg/L	1,000	U
N-PROPYLBENZENE	mg/Kg	2[illegible]00	U	µg/L	1[illegible]00	U
O-XYLENE	mg/Kg	2,900	U	µg/L	1,000	U
P-ISOPROPYLTOLUENE	mg/Kg	2,900	U	µg/L	1,000	U
SEC-BUTYLBENZENE	mg/Kg	2,900	U	µg/L	1,000	U
STYRENE	mg/Kg	2,900	U	µg/L	1,000	U
TERT-AMYLMETHYL ETHER	mg/Kg	1,400	U	µg/L	500	U
TERT-BUTYLBENZENE	mg/Kg	2,900	U	µg/L	1,000	U
TERT-BUTYLETHYL ETHER	mg/Kg	1,400	U	µg/L	500	U
TETRACHLOROETHYLENE	mg/Kg	2,900	U	µg/L	1,000	U
TETRAHYDROFURAN	mg/Kg	12,[illegible]00	U	µg/L	2,000	U
TOLUENE	mg/Kg	2,900	U	µg/L	1,000	U
TRANS-1,2-DICHLOROETHYLENE	mg/Kg	2,900	U	µg/L	1,000	U
[illegible]	[illegible]	[illegible]	U	[illegible]	[illegible]	[illegible]
TRICHLOROETHYLENE	mg/Kg	53,[illegible]00		µg/L	11,000	
TRICHLOROFLUOROMETHANE	mg/Kg	14,[illegible]00	U	µg/L	2,000	U
VINYL CHLORIDE	mg/Kg	5,800	U	µg/L	2,000	U
SVOCs						
1,2,4,5-TETRACHLOROBENZENE	mg/Kg	0.[illegible]6	U	µg/L	500	U
1,2,4-TRICHLOROBENZENE	mg/Kg	9,600		µg/L	1,100	
1,2-DICHLOROBENZENE	mg/Kg	340,000		µg/L	59,[illegible]00	
1,2-DIPHENYLHYDRAZINE (AZOBENZENE)	mg/Kg	0.[illegible]6	U	µg/L	500	U

MA-3816-2014 Nobis Engineering, Inc.

Table 1-4
March 2014 DNAPL Analytical Results
Nyanza Chemical Waste Dump Superfund Site
Ashland, Massachusetts
Page 3 of 4

Sample Location	MW-113A			MW/B11		
Sample Date	03/11/2014			03/11/2014		
Lab Sample ID	14C0375-03			14C0375-02		
	Units	Value	Qualifier	Units	Value	Qualifier
1,3-DICHLOROBENZENE	mg/Kg	16,[illegible]00		µg/L	2,300	
1,4-DICHLOROBENZENE	mg/Kg	75,[illegible]00		µg/L	14,000	
1-METHYLNAPHTHALENE	mg/Kg	0.[illegible]8	U	µg/L	250	U
2,4,5-TRICHLOROPHENOL	mg/Kg	0.[illegible]6	U	µg/L	500	U
2,4,6-TRICHLOROPHENOL	mg/Kg	0.[illegible]6	U	µg/L	500	U
[illegible]	[illegible]	0[illegible]	U	µ[illegible]	5[illegible]	[illegible]
2[illegible] ETHYLPHENOL	mg/Kg	0[illegible]6	U	µg/L	500	U
2,4-DINITROPHENOL	mg/Kg	0.7	U	µg/L	500	U
2,4-DINITROTOLUENE	mg/Kg	0.[illegible]6	U	µg/L	500	U
2,6-DICHLOROPHENOL	mg/Kg	0.[illegible]1	U	µg/L	500	U
2,6-DINITROTOLUENE	mg/Kg	0.[illegible]6	U	µg/L	500	U
2-CHLORONAPHTHALENE	mg/Kg	0.36	U	µg/L	500	U
2-CHLOROPHENOL	mg/Kg	0.[illegible]6	U	µg/L	500	U
2-METHYLNAPHTHALENE	mg/Kg	0.[illegible]8	U	µg/L	250	U
2-NITROANILINE	mg/Kg	0.[illegible]6	U	µg/L	500	U
2-NITROPHENOL	mg/Kg	0.[illegible]6	U	µg/L	500	U
3,3'-DICHLOROBENZIDINE	mg/Kg	0.[illegible]8	U	µg/L	500	U
3-NITROANILINE	mg/Kg	0.[illegible]6	U	µg/L	500	U
4,6-DINITRO-2-METHYLPHENOL	mg/Kg	0.[illegible]6	U	µg/L	500	U
4-BROMOPHENYL PHENYL ETHER	mg/Kg	0.[illegible]6	U	µg/L	500	U
[illegible]	[illegible]	0[illegible]	U	[illegible]	5[illegible]	[illegible]
4-CHLOROANILINE	mg/Kg	0.7	U	µg/L	500	U
4-CHLOROPHENYLPHENYL ETHER	mg/Kg	0.36	U	µg/L	500	U
4[illegible]	mg/Kg	0[illegible]6	U	µg/L	500	U
4-NITROPHENOL	mg/Kg	0.7	U	µg/L	500	U
ACENAPHTHENE	mg/Kg	0.[illegible]8	U	µg/L	250	U
ACENAPHTHYLENE	mg/Kg	0.[illegible]8	U	µg/L	250	U
ACETOPHENONE	mg/Kg	0.[illegible]6	U	µg/L	500	U
ANILINE	mg/Kg	0.[illegible]6	U	µg/L	5300	
ANTHRACENE	mg/Kg	0.[illegible]8	U	µg/L	250	U
BENZIDINE	mg/Kg	0.7	U	µg/L	1000	U
BENZO(A)ANTHRACENE	mg/Kg	0.[illegible]8	U	µg/L	250	U
BENZO(A)PYRENE	mg/Kg	0.[illegible]8	U	µg/L	250	U
BENZO(B)FLUORANTHENE	mg/Kg	0.[illegible]8	U	µg/L	250	U
BENZO(G,H,I)PERYLENE	mg/Kg	0.18	U	µg/L	250	U
[illegible]	[illegible]	0[illegible]	U	µ[illegible]	2[illegible]	[illegible]
BENZOIC ACID	mg/Kg	1.1	U	µg/L	500	U
BENZYL ALCOHOL	mg/Kg	0.[illegible]1	U	µg/L	500	U
[illegible]HENYL	[illegible]	0[illegible]1	U	µg/L	1000	[illegible]
BIS(2-CHLOROETHOXY)METHANE	mg/Kg	0.[illegible]6	U	µg/L	500	U
BIS(2-CHLOROETHYL)ETHER	mg/Kg	0.[illegible]6	U	µg/L	500	U
BIS(2-CHLOROISOPROPYL)ETHER	mg/Kg	0.[illegible]6	U	µg/L	500	U
BIS(2-ETHYLHEXYL)PHTHALATE	mg/Kg	0.[illegible]6	U	µg/L	500	U
BUTYLBENZYLPHTHALATE	mg/Kg	0.[illegible]6	U	µg/L	500	U

MA-3816-2014 Nobis Engineering, Inc.

Table 1-4
March 2014 DNAPL Analytical Results
Nyanza Chemical Waste Dump Superfund Site
Ashland, Massachusetts
Page 4 of 4

Sample Location	MW-113A			MW/B11		
Sample Date	**03/11/2014**			**03/11/2014**		
Lab Sample ID	**14C0375-03**			**14C0375-02**		
	Units	**Value**	**Qualifier**	**Units**	**Value**	**Qualifier**
CARBAZOLE	mg/Kg	0.[illegible]8	U	µg/L	500	U
CHRYSENE	mg/Kg	0.[illegible]8	U	µg/L	250	U
DIBENZ(A,H)ANTHRACENE	mg/Kg	0.[illegible]8	U	µg/L	250	U
DIBENZOFURAN	mg/Kg	0.[illegible]6	U	µg/L	250	U
DIETHYLPHTHALATE	mg/Kg	0.[illegible]6	U	µg/L	500	U
[illegible]	[illegible]	0[illegible]	U	[illegible]	5[illegible]	[illegible]
DI-N-BUTYLPHTHALATE	mg/Kg	0.[illegible]6	U	µg/L	500	U
DI-N-OCTYLPHTHALATE	mg/Kg	0.[illegible]1	U	µg/L	500	U
FLUORANTHENE	mg/Kg	0.[illegible]8	U	µg/L	250	U
FLUORENE	mg/Kg	0.[illegible]8	U	µg/L	250	U
HEXACHLOROBENZENE	mg/Kg	0.[illegible]6	U	µg/L	500	U
HEXACHLOROBUTADIENE	mg/Kg	0.[illegible]6	U	µg/L	500	U
HEXACHLOROCYCLOPENTADIENE	mg/Kg	0.[illegible]6	U	µg/L	500	U
HEXACHLOROETHANE	mg/Kg	0.[illegible]6	U	µg/L	500	U
INDENO(1,2,3-CD)PYRENE	mg/Kg	0.[illegible]8	U	µg/L	250	U
ISOPHORONE	mg/Kg	0.36	U	µg/L	500	U
M/P-CRESOL	mg/Kg	0.[illegible]6	U	µg/L	500	U
NAPHTHALENE	mg/Kg	0.[illegible]8	U	µg/L	250	U
NITROBENZENE	mg/Kg	210,[illegible]00		µg/L	110,000	
N-NITROSODIMETHYLAMINE	mg/Kg	0.36	U	µg/L	500	U
[illegible]	[illegible]	0[illegible]	U	[illegible]	5[illegible]	[illegible]
N-NITROSODIPHENYLAMINE	mg/Kg	0.[illegible]6	U	µg/L	500	U
O-CRESOL	mg/Kg	0.[illegible]6	U	µg/L	500	U
PENTACHLORONITROBENZENE	mg/Kg	0.[illegible]6	U	µg/L	500	U
PENTACHLOROPHENOL	mg/Kg	0.[illegible]6	U	µg/L	500	U
PHENANTHRENE	mg/Kg	0.[illegible]8	U	µg/L	250	U
PHENOL	mg/Kg	0.[illegible]6	U	µg/L	500	U
PYRENE	mg/Kg	0.[illegible]8	U	µg/L	250	U
PYRIDINE	mg/Kg	0.[illegible]6	U	µg/L	250	U
Reactivity						
REACTIVE CYANIDE	mg/Kg	3.9	U	mg/L	3.9	U
REACTIVE SULFIDE	mg/Kg	19	U	mg/L	20	U
pH						
pH	pH Units	6.7		pH Units	7.3	

Notes:

1. U = Not detected above the lab reporting limits.
2. NT = Not tested.
3. The analytical results from MW-113A, characterize the DNAPL. Samples were collected directly from the on-site storage tank.
4. The analytical results from MW-B/11, characterize the DNAPL/water emulsion. Samples were collected directly from the on-site storage tank.

MA-3816-2014 Nobis Engineering, Inc.

Table 2-1
Well Construction Details and Information
Nyanza Chemical Waste Dump Superfund Site – OU2
Ashland, Massachusetts

Well No.	Diameter (Inches)	Construction Materials	Screened Geologic Unit	Depth to Bedrock (ft bgs)	Total Depth (ft bgs)	Screen Size and Interval Depths
MW/B-11	2	SS	BR	9	23.5	0.010 inch slotted (11.25 - 21.25 ft bgs)
MW [illegible]13A	2	PVC Schedule 40	BR	43	56	0.010 inch slotted (46-51 ft bgs)

Notes:

ft bgs – feet below ground surface
SS – Stainless Steel
PVC – Polyvinyl Chloride
BR – Bedrock

MA-3816-2014 Nobis Engineering, Inc.

Table 2-2
Alarm Conditions
Nyanza Chemical Waste Dump Superfund Site – OU2
Ashland, Massachusetts

Alarm No.	Alarm Designation
1	High Level Alarm
2	High-High Level Alarm
3	Power Outage

Table 2-3
Auto-Dialed Telephone Numbers
Nyanza Chemical Waste Dump Superfund Site – OU2
Ashland, Massachusetts

Designation No.	Operations Personnel	Telephone Number
1	Michelle Carbonneau Treatment Operations Lead	(774) 230-9372
2	Jeff Brunelle Field Operations Lead	(603) 508-0084
3	Boyd Allen Project Manager	(978) 703-6006

FIGURES

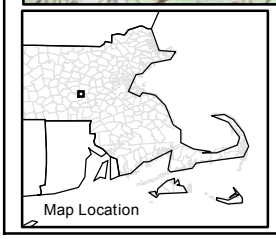

USGS Topographic Map
Ashland, Massachusetts
Revised 1982

0 500 1,000 2,000
Feet
1 inch = 2,000 feet

N

Nobis
Engineering a Sustainable Future
Nobis Engineering, Inc.
18 Chenell Drive
Concord,NH 03301
T(603) 224-4182
www.nobiseng.com
Client-Focused, Employee-Owned

FIGURE 1-1

SITE LOCUS PLAN
NYANZA CHEMICAL WASTE DUMP
SUPERFUND SITE - OPERABLE UNIT II
ASHLAND, MASSACHUSETTS

PREPARED BY: JH	CHECKED BY: JM
PROJECT NO. 80022.09	DATE: JULY 2013

Path: R:\80000 Task Orders\80022 Nyanza OU2\Technical Data (TD)\GIS\Maps\2012 GW Summary Report\Fig_1-1_Nyanza_Locus.mxd Date Printed: 7/24/2013

Notes:

1. Aerial photograph derived from ESRI, accessed in 2013.

2. Location of all features is approximate. Map is for reference purposes only. Nobis Engineering, Inc. makes no warranties, representations - expressed or implied - relating to the completeness, accuracy, or reliability of the data shown.

Legend

- DNAPL Recovery Well
- Former Site Structures
- Property Lines

0 40 80 160
Feet

N

FIGURE 1-2

NYANZA CHEMICAL WASTE DUMP
SUPERFUND SITE
OPERABLE UNIT II
ASHLAND, MASSACHUSETTS

SITE PLAN

Nobis
Engineering a Sustainable Future
Nobis Engineering, Inc.
18 Chenell Drive
Concord,NH 03301
T(603) 224-4182
www.nobiseng.com
Client-Focused, Employee-Owned

DATE: JANUARY 2014
PROJECT NO. 80022.09
PREPARED BY: JH
CHECKED BY: MC

Path: R:\80000 Task Orders\80022 Nyanza OU2\Technical Data (TD)\GIS\Fig_1-2_Nyanza_Step_Drill_Boring.mxd Date Printed: 1/8/2014

APPENDIX A

Appendix A: Manufacturer's Operation and Maintenance Manuals

SEE SEPARATE FILE

- Pulse Pump Installation and Operation Manual
- Model C100M Pump Controller Installation and Operation Manual
- 270 Gallon Double Wall Collection Tank Shop Drawing
- XLPE Tube Chemical Hose Specifications
- Dixon / Boss-Lock Type A Adapters
- Dixon Type C Couplers
- Dixon / Boss- Lock Type F Adapters
- Sensaphone Cell682 Users Manual
- Wooden Frame Shed Detail Shop Drawing
- Schlage Door Knob Specifications
- Dayton Hazardous Location Direct-Drive Exhaust Fans Operating Instructions and Parts Manual
- CalgonCarbon VENTSORB Specifications
- Elmac Technologies Limited, Operating Instructions
- TPI Hazardous Location Wall Convector Heaters Specifications

APPENDIX B

Appendix B: Process & Instrument Diagrams

- [illegible]
- [illegible]

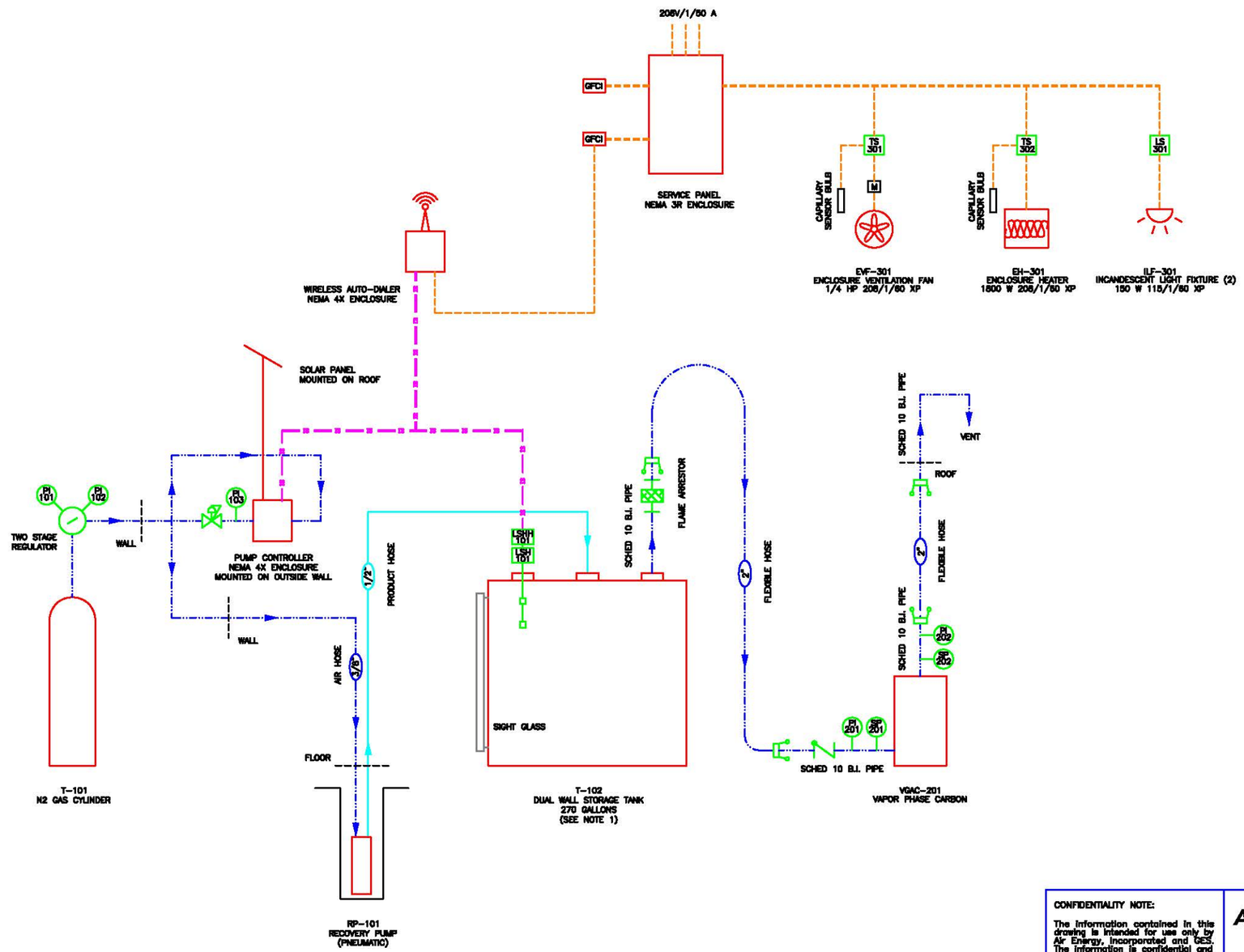

NOTE:

1. 12" MANWAY & 2" PUMP OUT PORT NOT SHOWN FOR CLARITY.

LEGEND

GFCI	GROUND FAULT CIRCUIT INTERRUPTER
LS	LIGHT SWITCH
LSH	LEVEL SWITCH HIGH
LSHH	LEVEL SWITCH HIGH HIGH
M	MOTOR
PI	PRESSURE INDICATOR
SP	SAMPLE PORT
TS	TEMPERATURE SWITCH
	CAM LOCK FITTING
	CHECK VALVE
	PRESSURE REGULATOR
	UNION
	WIRELESS ANTENNA
	AIR LINE
	CONTROL LINE
	INTRINSICALLY SAFE LINE
	PRODUCT LINE

ALARM

1. STORAGE TANK HIGH LEVEL
2. STORAGE TANK HIGH HIGH LEVEL

REV.	DESCRIPTION	DATE	APPR.
2	GENERAL REVISION	7/24/13	PRS
1	CHANGE VOLTAGE FROM 230/3/60 TO 208/1/50 A	5/13/13	PRS

REVISIONS

CONFIDENTIALITY NOTE:

The information contained in this drawing is intended for use only by Air Energy, Incorporated and GES. The information is confidential and any copying, distribution or dissemination without the consent of Air Energy Incorporated is strictly prohibited.

DRWN BY PRS DATE 5/5/2013
CHK BY DATE
APPR BY DATE

AIR ENERGY, INCORPORATED
6 Norfolk Avenue – South Easton, Massachusetts
(Phone) 508-230-9445 / (Fax) 508-230-9446

TITLE
DNAPL EXTRACTION TREATMENT SYSTEM
PROCESS & INSTRUMENTATION DIAGRAM NYACOL SITE

GROUNDWATER & ENVIRONMENTAL SERVICES
NYANZA SUPERFUND SITE – ASHLAND, MA

SERIAL NO. 33320-S44

SCALE	SIZE	DWG NO.	SHEET	REV
N/A	C	33320-S44-P1	1 OF 1	2

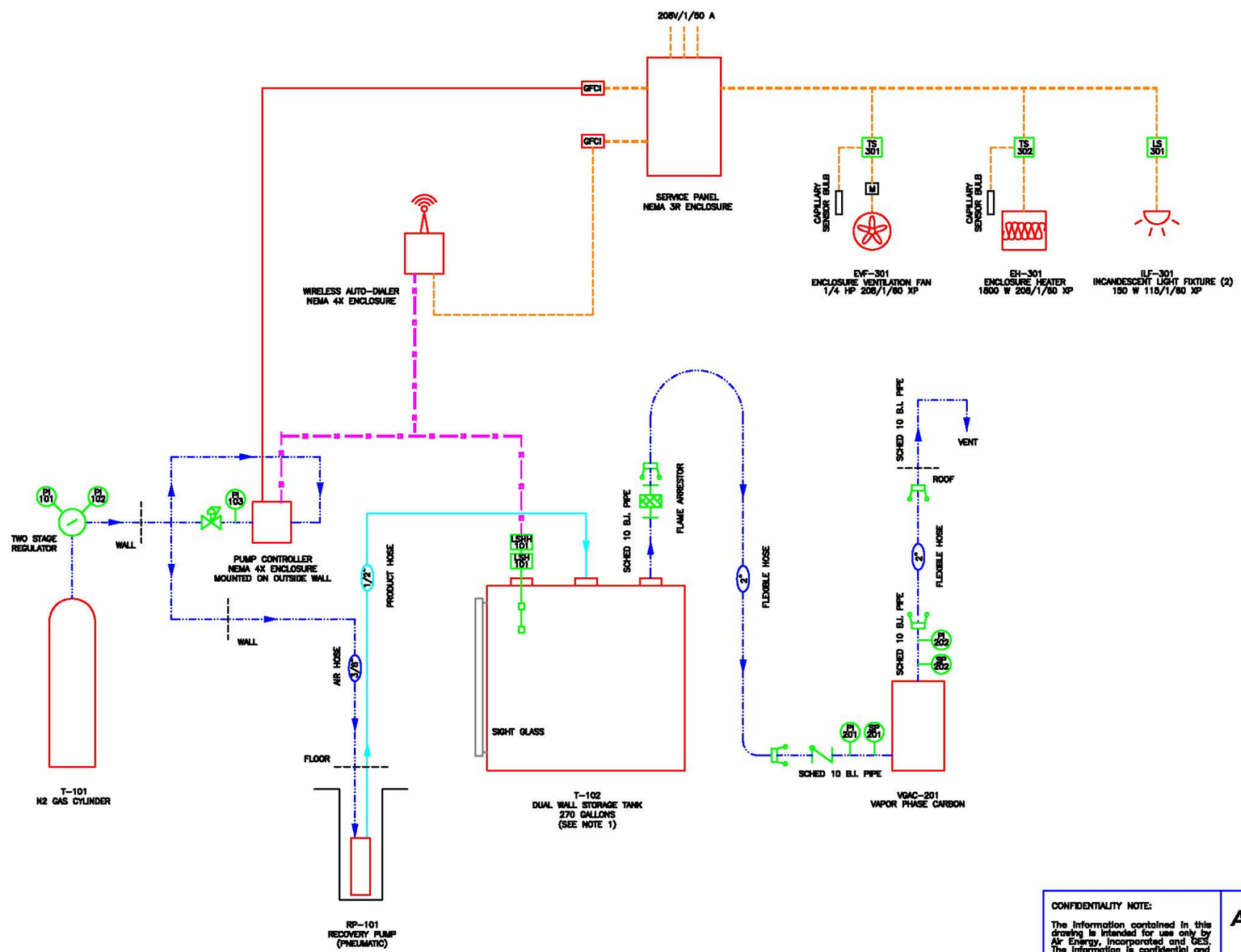

LEGEND

GFCI	GROUND FAULT CIRCUIT INTERRUPTER
LS	LIGHT SWITCH
LSH	LEVEL SWITCH HIGH
M	MOTOR
PI	PRESSURE INDICATOR
SP	SAMPLE PORT
TS	TEMPERATURE SWITCH
	CAM LOCK FITTING
	CHECK VALVE
	PRESSURE REGULATOR
	UNION
	WIRELESS ANTENNA
	AIR LINE
	CONTROL LINE
	INTRINSICALLY SAFE LINE
	PRODUCT LINE

ALARM

1. STORAGE TANK HIGH LEVEL
2. STORAGE TANK HIGH HIGH LEVEL

NOTE:

1. 12" MANWAY & 2" PUMP OUT PORT NOT SHOWN FOR CLARITY.

REV.	DESCRIPTION	DATE	APPR.
2	GENERAL REVISION	7/24/13	PRS
1	CHANGE VOLTAGE FROM 230/3/60 TO 208/1/50 A	5/13/13	PRS

REVISIONS

CONFIDENTIALITY NOTE:

The information contained in this drawing is intended for use only by Air Energy, Incorporated and GES. The information is confidential and any copying, distribution or dissemination without the consent of Air Energy Incorporated is strictly prohibited.

DRWN BY PRS DATE 5/5/2013

CHK BY DATE

APPR BY DATE

AIR ENERGY, INCORPORATED

6 Norfolk Avenue – South Easton, Massachusetts
(Phone) 508-230-9445 / (Fax) 508-230-9446

TITLE
DNAPL EXTRACTION TREATMENT SYSTEM
PROCESS & INSTRUMENTATION DIAGRAM WAC SITE

GROUNDWATER & ENVIRONMENTAL SERVICES
NYANZA SUPERFUND SITE – ASHLAND, MA

SERIAL NO. 33320-S44

SCALE	SIZE	DWG NO.	SHEET	REV
N/A	C	33320-S44-P2	1 OF 1	2

APPENDIX C

Appendix C: Health and Safety

- [illegible]
- [illegible]

Health and Safety Plan

Nyanza Chemical Waste Dump, Operable Unit 2
Ashland, Massachusetts

Remedial Action
EPA Task Order No. 0022-RA-RA-0115

REMEDIAL ACTION CONTRACT
No. EP-S1-06-03

FOR

US Environmental Protection Agency
Region 1

BY

Nobis Engineering, Inc.

Nobis Project No. 80022

July 2012

U.S. Environmental Protection Agency
Region 1
5 Post Office Square, Suite 100
Boston, Massachusetts 02109-3919

Nobis Engineering, Inc.
Lowell, Massachusetts
Concord, New Hampshire

Phone (800) 394-4182
www.nobisengineering.com

Health and Safety Plan

Nyanza Chemical Waste Dump, Operable Unit 2
Ashland, Massachusetts
Remedial Action
EPA Task Order No. 0022-RA-RA-0115

REMEDIAL ACTION CONTRACT
No. EP-S1-06-03

For
US Environmental Protection Agency
Region 1

By
Nobis Engineering, Inc.

Nobis Project No. 80022

July 2012

Thomas S. Bobowski, P.E., P.G., C.G.
Corporate Health and Safety Officer

Jeff McCullough, P.E.
Senior Project Manager

TABLE OF CONTENTS
HEALTH AND SAFETY PLAN
NYANZA CHEMICAL WASTE DUMP, OPERABLE UNIT 2
ASHLAND, MASSACHUSETTS

SECTION **PAGE**

1.0 INTRODUCTION 1

2.0 PROJECT ORGANIZATION AND RESPONSIBILITIES 5

3.0 CONTINGENCY/EMERGENCY ACTION PLAN 8

4.0 HAZARD/RISK ANALYSIS 15

5.0 STANDARD WORK PRACTICES 19

6.0 PERSONAL PROTECTIVE EQUIPMENT 20

7.0 MONITORING REQUIREMENTS 20

TABLE OF CONTENTS (cont.)
HEALTH AND SAFETY PLAN
NYANZA CHEMICAL WASTE DUMP, OPERABLE UNIT 2
ASHLAND, MASSACHUSETTS

SECTION **PAGE**

[illegible]

8.0 DECONTAMINATION 22
[illegible]

9.0 MEDICAL SURVEILLANCE 24
[illegible]

10.0 SITE CONTROL 25
[illegible]

11.0 EMERGENCY PLANNING 28
[illegible]

12.0 TRAINING 32
[illegible]

13.0 LOGS, REPORTS, AND RECORD KEEPING 34
[illegible]

TABLE OF CONTENTS (cont.)
HEALTH AND SAFETY PLAN
NYANZA CHEMICAL WASTE DUMP, OPERABLE UNIT 2
ASHLAND, MASSACHUSETTS

SECTION **PAGE**

[illegible]

[illegible]

14.0 STANDARD SAFETY PROCEDURES FOR SPECIFIC OPERATIONS 34

15.0 SITE HEALTH AND SAFETY PLAN CERTIFICATION.....35

16.0 EMERGENCY INFORMATION 36

[illegible]

17.0 ACTIVITY HAZARD ANALYSIS (AHA).....39

[illegible]

18.0 ACCIDENT AND INJURY REPORTING.....45

[illegible]

19.0 BIOLOGICAL HAZARDS SAFETY PROGRAM.....53

[illegible]

20.0 WEATHER HAZARDS SAFETY PROGRAM 55

[illegible]

21.0 HAZARD COMMUNICATION PROGRAM 58

[illegible]

TABLE OF CONTENTS (cont.)
HEALTH AND SAFETY PLAN
NYANZA CHEMICAL WASTE DUMP, OPERABLE UNIT 2
ASHLAND, MASSACHUSETTS

SECTION **PAGE**

22.0 CHEMICAL HAZARDS EXPOSURE 64

23.0 PERSONAL PROTECTION EQUIPMENT PROGRAM 67

24.0 RESPIRATOR PROTECTION PROGRAM 74

TABLE OF CONTENTS (cont.)
HEALTH AND SAFETY PLAN
NYANZA CHEMICAL WASTE DUMP, OPERABLE UNIT 2
ASHLAND, MASSACHUSETTS

SECTION **PAGE**

25.0 HEARING CONSERVATION PROGRAM 78

26.0 ELECTRICAL SAFETY PROGRAM 79

27.0 LOCKOUT/TAGOUT PROGRAM 79

28.0 CONFINED SPACE SAFETY PROGRAM.....85

TABLE OF CONTENTS (cont.)
HEALTH AND SAFETY PLAN
NYANZA CHEMICAL WASTE DUMP, OPERABLE UNIT 2
ASHLAND, MASSACHUSETTS

SECTION **PAGE**

29.0 OVERHEAD AND UNDERGROUND UTILITIES 91

30.0 EXCAVATION SAFETY PROGRAM 95

31.0 HEAVY EQUIPMENT AND VEHICLE TRAFFIC SAFETY PROGRAM 99

32.0 HAND AND POWER TOOL SAFETY PROGRAM 99

33.0 FALL PROTECTION PROGRAM 100

34.0 LADDER SAFETY PROGRAM 102

35.0 MEDICAL DATA SHEETS 105

36.0 FIELD SITE SAFETY INSPECTION FORM 106

TABLE OF CONTENTS (cont.)
HEALTH AND SAFETY PLAN
NYANZA CHEMICAL WASTE DUMP, OPERABLE UNIT 2
ASHLAND, MASSACHUSETTS

SECTION **PAGE**

[illegible]
[illegible]
[illegible]
[illegible]

TABLES

[illegible]
[illegible]

FIGURES

[illegible]
[illegible]

APPENDICES

[illegible]
[illegible]

1.0 INTRODUCTION

1.1 Purpose

This Site Specific Health and Safety Plan (HASP), prepared by Nobis Engineering, Inc. (Nobis) presents health and safety procedures designed to minimize potential risks of harm to Nobis personnel and subcontract personnel performing activities associated with environmental investigation activities.

This HASP was developed based on knowledge of existing and potential hazards that are currently anticipated for the operations to be conducted and is based upon the Work Plan prepared by Nobis and a review of available site information. This HASP has been prepared to conform to pertinent Occupational Safety and Health Administration (OSHA) and State requirements. The OSHA Standard 29 CFR 1910.120 - "*Hazardous Waste Operations and Emergency Response*" (HAZWOPER) is the primary compliance document to be followed.

This HASP applies to all project team personnel, including field personnel from Nobis and authorized site visitors who may potentially be exposed to safety and/or health hazards associated with the activities described in Section 1.3 of this HASP.

This HASP will be reviewed and approved prior to issuance by the Nobis Corporate Health and Safety Officer. It is the responsibility of the Project Manager to make this HASP available to all project field personnel, subcontractors, and authorized site visitors. At least one copy of the HASP will be available on the Site at all times, in a readily accessible location, during the field phase of the project. Emergency information including directions and a map to the closest hospital is included in Sections 3 and 16.

1.2 Site Description

The Nyanza Chemical Waste Dump Superfund Site (Site) is located in Ashland, Massachusetts. The Site was used as a dye manufacturing facility from the 1910s until 1978. EPA has completed various soil and sediment removal activities at the Site and is currently studying the downstream portions of the Sudbury River. The focus of this Statement of Work is on Operable Unit (OU) 2, which addresses groundwater related concerns.

1.3 Site History

The Nyanza Site is located on Megunko Road in Ashland, Massachusetts, approximately 22 miles west of Boston (Figure 1). From 1917 to 1978, the Site was used to produce textile dyes, intermediates, and other products. The Site was formerly the location of Nyanza, Inc. which operated from 1965 to 1978 before its bankruptcy in 1978. Before 1965, various chemical manufacturing intermediates were located at this Site. The Site was listed on the EPA NPL in 1983, and comprises three distinct areas: (1) the 35-acre former Nyanza, Inc. property (Property) which consists of the wetlands, the Megunko Hill area, and the industrial area along Megunko Road; (2) drainage ways between the Property and the Sudbury River, consisting of the Eastern Wetland, Trolley Brook, Outfall Creek, and the Lower Raceway; and (3) a 33-mile stretch of the Sudbury River down to its confluence with the Assabet River in Concord.

The areas that potentially contributed to the presence of DNAPL at Nyanza include an onsite concrete "vault" adjacent to the main processing building of Nyanza, Inc., two lined lagoons south of Megunko Road, two settling ponds (Pond 1 and Pond 2) south of Megunko Road between the lined lagoons and Trolley Brook, the dump on Megunko Hill, Chemical Brook, and Area E in the lower industrial area between Megunko Road and the railroad tracks.

OU II includes a ground water plume of organic contamination that extends from the former Nyanza Inc. property in a north-northeasterly direction towards the Sudbury River. DNAPL was discovered in 1994, during the startup of a pump test for a pilot test ground water treatment system in the area of Worcester Air Conditioning. As a result of the discovery of DNAPL, the pilot-scale groundwater treatment system was not tested and the full-scale design was postponed. In 1998, ground water monitoring was initiated on a semi-annual basis and continued until 2004. Elevated contaminant concentrations of volatile organic compounds (VOCs), semi volatile organic compounds (SVOCs) and metals (including mercury) are present in ground water plumes which extend from the north to the northeast of Megunko Hill, with plume migration towards and discharging into the Sudbury River.

Overburden conditions at the Site include mainly silty fine sand and sandy silt (corresponding to glaciolacustrine sediment) with fine to coarse sands and gravel/cobbles found at some locations (corresponding to glaciofluvial sediment). Overburden thickness in the zone of interest is generally between 14 and 58 feet.

The underlying bedrock is a Milford Granite of Lower Paleozoic to Precambrian age. Most of the Milford Granite in the Framingham Quadrangle is petrologically classified as quartz monzonite, a granitic rock with roughly sub-equal amounts of sodic and potassium feldspars and quartz. Previous bedrock cores taken at Nyanza range texturally from fine-grained porphyritic to medium/coarse-grained equigranular. Pink orthoclase, sodic plagioclase, quartz, and biotite comprise the dominant minerals and give the rock a pink and light gray-white color. In general, the Milford Granite is unfoliated. The top 15 to 20 feet of bedrock is slightly too highly fractured and/or weathered.

The water table occurs in the overburden and is typically encountered from one to seven feet below ground surface (bgs).

1.4 Scope of Work

Nobis employees will oversee a series of sequenced borings conducted to determine if recoverable product is present in the vicinity of the former vault area at the Nyacol property. Up to 6 soil bedrock borings will be advanced to a minimum of 15 feet into bedrock (top of bedrock is estimated at 30 feet below ground surface [bgs]). See Figure 9-1 for soil boring locations.

Borings will be advanced through the overburden by a sonic drill rig using 6-inch casing. Soil samples will be collected using a 4-inch sample barrel advanced ahead of the 6-inch casing in 5 foot increments.

Borings will be advanced into bedrock using a five-foot NX core barrel. Five-foot runs of NX core will be advanced, recovered, and stored in core boxes. Cores will be collected until competent bedrock is encountered (as identified by the rig geologist) or until the boring is advanced 20-feet into bedrock, whichever comes first.

Possibly four 2-inch diameter stainless steel monitoring wells will be installed in the boreholes advanced during the drilling program. Monitoring well locations will be determined in the field based by the Nobis rig geologist based on boring observations, soil screening results, and the presence of NAPL.

Following completion of each boring not completed as a monitoring well, the open borehole will be abandoned with a slurry grout by filling the borehole from the bottom to the surface.

Nobis will oversee three borings advanced in the vicinity of existing monitoring wells (MW-305A, MW-405A, and MW-405B) to replace the existing, damaged wells. No sampling or bedrock coring will be necessary for these three wells.

Nobis will oversee the decommissioning of the existing monitoring wells selected for replacement.

Nobis will oversee the development of the newly installed monitoring wells and up to 50 existing monitoring wells (see attached Figure 8-1). Redevelopment shall consist of pumping out of accumulated sediment using a down-hole pump, followed by low volume pumping and surging using an inertial pump and a surge block to clear remaining fines.

Following new monitoring well installations at Nyacol and well redevelopment, periodic groundwater monitoring will occur at the Site on a semi-annual basis. Approximately 50 wells will be sampled using low-flow techniques and samples collected for VOC, SVOC, general chemistry and dissolved gases analyses. Sampling events will occur in the spring and fall from 2012 to 2015.

Based on the results of the drilling program, possibly four DNAPL Extraction Wellhead System will be installed at the Site. Three wells will be located on the Nyacol property and one well will be located at MW-113A. Each system will consist of pneumatic pump, system controls and alarm, 55-gallon drum for DNAPL storage, vapor-phase carbon treatment, and wellhead enclosure, with its own electrical power supply. Following construction, Nobis personnel will perform weekly O&M site visits and have subcontractors perform periodic carbon changeouts and DNAPL disposal.

The Nobis field activities for this project will include the following:

- Mobilization and preparation, including tree removal, fence repair, access agreements, and establishment of site facilities.
- Oversight of subcontractor on-site activities.
- Soil borings, drilling, and sampling.
- Well development and groundwater and DNAPL sampling.

- Decontamination of equipment and personnel.
- Oversight of DNAPL extraction system construction and start up.
- O&M of DNAPL system; weekly site visits and inspections.
- Demobilization.

1.5 Specific Health and Safety Concerns

Site specific health and safety concerns such as biological irritants, stinging/biting insects, irregular terrain, and ultraviolet (UV) exposure are anticipated, subject to seasonal variability; temperature appropriate to the season.

The portion of the site where work will be performed for the DNAPL investigation is located on the south side of the train tracks on a flat, grassy area.

The potential for contact to contaminated soil, free product, and groundwater exists. During intrusive activities, proper precautions should be taken to limit equipment and personnel exposure. Proper equipment and personnel decontamination standard operating procedures should be followed to limit the spread of contaminants off site.

Contaminants are present in subsurface soils and groundwater. During intrusive activities and groundwater sampling there is the opportunity for exposure to contaminated subsurface materials and groundwater.

2.0 PROJECT ORGANIZATION AND RESPONSIBILITIES

This section was developed to help define responsibilities for site safety and health for Nobis and subcontractor employees conducting on-site activities. Key project personnel and positions are listed below including the EPA.

Key Project Personnel and Positions

Project Personnel	Project Positions
Dan Keefe	EPA Task Order Project Officer
Dave Buckley	MADEP Project Manager
Jeff McCullough, P.E.	Nobis Project Manager (PM)

Tom Bobowski	Nobis Corporate Health and Safety Officer (CHSO)
Jeff Brunelle	Nobis Field Operations Leader (FOL) and Site Health and Safety Officer (SHSO)

The following is an outline of Nobis project personnel responsibilities:

2.1 Project Manager

The Project Manager is responsible for the development, coordination, and technical performance of project tasks. Specific responsibilities include:

- Oversight of, and communicating with, the CHSO, SHSO, FOL and field personnel (all defined below);
- Ensuring the completion of all tasks required in accordance with the task order;
- Adhering to the established project schedule;
- Providing all required submittals to appropriate personnel;
- Providing information to the EPA regarding progress;
- Supporting the EPA in public communication as needed; and
- Assuring technical accuracy, product quality, regulatory compliance, the health and safety of project personnel, and overall management of employees working on his/her project.

2.2 Corporate Health and Safety Officer

Nobis' CHSO has the overall responsibility for implementing Nobis' health and safety program and ensuring adequate resources are available to administer the health and safety requirements of this contract and task order. Specific responsibilities include:

- Reviewing and approving the HASP;
- Serving as the primary contact to review safety and health measures that may arise;
- Approving revised or new safety protocols for field operations;
- Coordinating revisions to the HASP with the SHSO;
- Assisting in the investigation of major accidents;
- Selecting proper personal protective equipment (PPE) for planned Site activities; and

- Conducting periodic inspections for compliance with the HASP.

2.3 Site Health and Safety Officer

The SHSO is responsible for ensuring that all elements of the HASP are implemented and enforced on-site. Specific responsibilities include the following:

- Ensuring that all on-site personnel have received and read the HASP and completed the HASP sign-off sheet;
- Ensuring that all personnel have attended a briefing apprising them of the HASP contents and potential Site hazards prior to working on-site;
- Ensuring that sufficient PPE and monitoring instrumentation are available, as required by the HASP, and is utilized by field teams;
- Directing and coordinating safety and health monitoring activities;
- Conducting and documenting daily safety meetings;
- Monitoring compliance with the HASP;
- Notifying the CHSO of all incident/accident investigations;
- Reviewing and maintaining incident/accident report forms;
- Determining to upgrade or downgrade PPE;
- Ensuring that monitoring instruments are calibrated;
- Reporting to PM and CHSO to provide summaries of health and safety related issues; and
- Maintaining safety and health field log books.

2.4 Field Operations Leader

The FOL is responsible for ensuring compliance with the Site work, regulatory compliance, quality, and the safety of employees working on the Site. Specific responsibilities include:

- Coordination of subcontractors;
- Maintaining the project schedule;
- Maintaining frequent communication with the PM and CHSO;
- Maintaining a high level of health and safety awareness among field personnel.

2.5 Field Personnel

It is the responsibility of the field personnel to follow the HASP and to perform their work in a safe and responsible manner. Specific responsibilities include:

- Attending pre-entry briefing regarding HASP contents and potential site hazards;
- Read HASP prior to start of on-site work and signing acknowledgement that they have read and understand the HASP contents;
- Attend daily health and safety briefing;
- Reporting unsafe working conditions to the FOL, SHSO, and the CHSO;
- Immediately reporting accidents and incidents to the FOL or SHSO;
- Complying with the HASP and requests of the FOL, SHSO, and the CHSO; and
- Using required controls and safety devices, including PPE.

2.6 Subcontractor Personnel

The subcontractors that perform work for Nobis under their HASP are responsible for the health and safety of their employees. Subcontractor personnel will perform on-site activities in accordance with their site-specific HASP and will also review and sign the Nobis HASP. If there is a discrepancy between the subcontractor's HASP and the Nobis HASP, resolution of the approach will be required prior to conducting site work. In general, the more protective approach for employees and/or subcontractor personnel will be followed.

3.0 CONTINGENCY/EMERGENCY ACTION PLAN

3.1 Introduction

This section has been developed as part of a planning effort to direct and guide field personnel in the event of an emergency. In the event of an emergency which cannot be mitigated using onsite resources, personnel will evacuate to a safe place of refuge and the appropriate emergency response agencies will be notified. It has been determined that the majority of potential emergency situations would be better supported by outside emergency responders. Workers who are ill or who have suffered a non-serious injury may be transported by site personnel to nearby medical facilities, provided that such transport does not aggravate or further endanger the welfare of the injured/ill person. The emergency response agencies listed in this plan are capable of providing the most effective response, and as such, will be designated as

the primary responders. These agencies are located within a reasonable distance from the area of site operations. The Project Manager will be notified any time outside response agencies are contacted. This Emergency Action Plan conforms to the requirements of 29 CFR 1910.38(a), as allowed in 29 CFR 1910.120(l) (1) (ii).

Nobis and subcontractor personnel will, as appropriate, provide the following emergency action measures:

- Initial stage fire fighting support and prevention;
- Initial spill control and containment measures and prevention;
- Removal of personnel from emergency situations;
- Initial medical support for injuries or illnesses requiring basic first aid; and
- Site control and security measures as necessary.

3.2 Emergency Planning

It is anticipated that emergencies resulting from chemical, physical, or fire hazards are unlikely given the nature of site activities. Nonetheless, to minimize and eliminate the potential for any emergency situations, emergency planning activities will include the following (which are the responsibility of the FOL):

- Coordinating with local Emergency Response personnel, as appropriate;
- Notifying local fire protection, emergency services and electric utility personnel of scheduled field events and site activities, as appropriate;
- Establishing and maintaining information at the project staging area (support zone) for easy access in the event of an emergency. This information will include the following:
    - Chemical Inventory of chemicals used onsite with Material Safety Data Sheets (MSDS).
    - Onsite personnel medical records (Medical Data Sheets).
    - A log book identifying personnel onsite each day.
    - Hospital route maps with directions (these should also be placed in each site vehicle).
    - Emergency Notification – phone numbers.

The SHSO/FOL will be responsible for the following tasks:

- Identifying a chain of command for emergency action.
- Educating site workers on the hazards and control measures associated with planned activities at the site;
- Periodically performing practice drills to ensure site workers are familiar with incidental response measures; and
- Providing the necessary equipment to safely accomplish identified tasks.

3.3 Emergency Recognition and Prevention

3.3.1 Recognition

It is anticipated that emergency situations that may be encountered during site activities will generally be recognized by visual observation. To adequately recognize chemical exposures site personnel must have a clear knowledge of signs and symptoms of exposure associated with site contaminants. Tasks to be performed at the site, potential hazards associated with those tasks and the recommended control methods are discussed in detail in Section 4.0.

Additionally, early recognition of hazards will be supported by periodic site surveys to identify any situation predisposed to an emergency. The FOL will be responsible for performing surveys of work areas prior to initiating site operations and periodically while operations are being conducted. Site personnel will be responsible for reporting and taking protective measures against recognized hazardous situations. Where potential hazards exist, control measures will be initiated to prevent adverse effects to human health and the environment.

If the FOL determines that control measures are not sufficient to eliminate the hazard, site personnel will withdraw from the site and notify the appropriate response agencies listed below:

Emergency Contacts
Nyanza Chemical Waste Dump Superfund Site
Ashland, Massachusetts

AGENCY	TELEPHONE
Police Department	911 or (508) 881-1212
Ambulance Service	911 or (508) 881-2323
Fire Department	911 or (508) 881-2323
U.S. EPA Region 1 – Dan Keefe	(617) 918-1327
Massachusetts DEP – Dave Buckley	(617) 556-1184
Massachusetts DEP Emergency Response	(888) 304-1133
National Poison Control Center	(800) 222-1222
Dig Safe System, Inc.	(800) DIG-SAFE
MetroWest Medical Center	(508) 383-1000
Nobis Project Manager, Jeff McCullough	(603) 224-4182 (main) (603) 724-6238 (direct)
Nobis FOL and SSO, Jeff Brunelle (note: FOL and SSO may change throughout project)	(978) 683-0891 (main) (603) 508-0084 (cell)
Nobis Engineering, Inc., Concord Office	(800) 394-4182
Health and Safety Manager, Tom Bobowski	(603) 224-4182 (main) (603) 731-7993 (Cell)
Site Location Nyanza Chemical Waste Dump Nyacol Facility Megunko Road Ashland, Massachusetts	

3.3.2 Prevention

Nobis and subcontractor personnel will minimize the potential for emergencies by following this HASP, the Health and Safety Manual, and applicable OSHA regulations.

3.4 Evacuation Routes, Procedures, and Places of Refuge

The Nyacol gatehouse, located on the east side of the Site at Megunko Road, will be the place of refuge or emergency assembly point.

An evacuation will be initiated whenever recommended hazard controls are insufficient to protect the health, safety, or welfare of site workers. Specific examples of conditions that may initiate an evacuation include, but are not limited to severe weather conditions, fire or explosion, and evidence of personnel overexposure to potential site contaminants.

Evacuation procedures will be discussed during the pre-activities training session, prior to the initiation of project tasks. Evacuation routes from the Site and safe places of refuge are dependent upon the location at which work is being performed and the circumstances under which and evacuation is required. Additionally, site location and meteorological conditions (i.e., wind speed and direction) may dictate evacuation routes. As a result, assembly points will be selected and communicated to the workers relative to the site location where work is being performed. Evacuation should take place in an upwind direction from the Site.

In the event of an emergency requiring evacuation, personnel will immediately stop activities and report to the designated safe place of refuge unless doing so would pose additional risks. This location will allow Site personnel to exit the Site safely in case of emergency. Safe places of refuge will be identified prior to the commencement of the site activities by the SHSO/FOL and will be conveyed to personnel as part of the pre-activities briefing session. This information will be reiterated during safety meetings. Whenever possible, the safe place of refuge will also serve as the telephone communications point for that area.

During an evacuation, personnel will remain at the refuge location until directed otherwise by the SHSO/FOL or the on-site Incident Commander of the Emergency Response Team. The SHSO/FOL will perform a head count at this location to account for and to confirm the location of site personnel. The SHSO/FOL will document the names of personnel onsite (on a daily

basis) in the site Health and Safety Logbook and the Site sign-in sheet. This information will be utilized to perform the head count in the event of an emergency.

3.5 Emergency Alerting and Action/Response Procedures

Nobis and subcontractor personnel will likely be working in close proximity to each other during planned site activities. Site personnel will initiate emergency notification to onsite personnel by voice commands, hand signals, vehicle horns, or line of site communication to alert site personnel of an emergency. When project tasks are performed simultaneously on different sites, radios will be used to communicate emergency situations and request assistance.

The Fire Department will provide rescue services, if needed, during confined space entry operations. The Fire Department will be notified prior to confined space entry. The details for notification must be documented in the permit. Confined space entry is not anticipated for this scope of work.

If an emergency warranting evacuation occurs, the following procedures are to be initiated:

- Initiate the evacuation via appropriate and/or available communication method (hand signals, voice commands, etc.);
- Report to the designated refuge point;
- Once non-essential personnel are evacuated, appropriate response procedures will be enacted to control the situation; and
- Describe to the SHSO/FOL (serving as the Incident Coordinator) pertinent incident details.

In the event that site personnel cannot mitigate the hazardous situation, the SHSO/FOL will enact emergency notification procedures to secure additional assistance in the following manner:

Notify pertinent emergency contacts listed in Table 3-1, as appropriate, and report the incident. Give the emergency operator the location of the emergency, the type of emergency, the number of injured, and a brief description of the incident. Stay on the phone and follow the instructions given by the operator. The operator will then notify and dispatch the proper emergency response agencies.

Emergency response personnel will be immediately notified of unaccounted personnel. The SHSO will document daily the names of Nobis and subcontractor personnel on site in the log book. This information will be used to take the headcount in the event of an emergency.

3.6 Emergency Contacts

Prior to initiating field activities, personnel will be thoroughly briefed on the emergency procedures to be followed in the event of an accident. Table 3-1 provides a list of emergency contacts and their associated telephone numbers. This table must be posted where it is readily available to site personnel. Facility maps should also be posted showing potential evacuation routes and designated meeting areas.

3.7 Emergency Route to Hospital

Directions to:

Framingham Union Hospital
115 Lincoln Street
Framingham, Massachusetts

Start at Town Hall (101 Main Street) and turn right on Main Street (0.4 mi). Turn left onto Union Street/MA-135 (2.9 mi). Turn left onto Concord Street/MA-126 (0.1 mi). Make a slight left on Union Avenue (0.3 mi) and then turn right onto Beach St. Immediately turn left onto Lincoln Street and the MetroWest Medical Center is located at 115 Lincoln Street.

A hospital route map and directions is attached.

3.8 Decontamination Procedures/Emergency Medical Treatment

During any site evacuation, decontamination procedures will be performed only if doing so does not further jeopardize the welfare of site workers. Decontamination will be delayed if the incident warrants immediate evacuation.

Site personnel will perform removal of personnel from emergency situations and may provide initial medical support for injury/illnesses requiring only first-aid level support. Medical attention

above that level will require assistance and support from the designated emergency response agencies.

3.9 Injury and Illness Reporting

All injuries, illnesses, accidents, and automobile collisions will be reported using the forms in Section 18. Any pertinent information regarding allergies to medications or other special conditions will be provided to medical service personnel by the victim or other party that the victim may designate. This information is listed on the optional Medical Data Sheets filed onsite. If an exposure to hazardous materials has occurred, provide hazard information from Table 4-1 or 4-2 to medical service personnel. As soon as possible the EPA contact must be informed of any incident or accident that requires medical attention.

3.10 Personal Protective Equipment and Emergency Equipment

A first-aid kit, bottles of disposable eyewash solution, and a fire extinguisher will be maintained in the Nobis or subcontractor Site vehicle and shall be immediately available for use in the event of an emergency. First aid will only be administered by personnel holding current certification. At least one first aid kit supplied with equipment to protect against bloodborne pathogens should be available on site if personnel are certified to administer first aid.

4.0 HAZARD/RISK ANALYSIS

This section presents information regarding known and suspected chemical or physical hazards associated with the work areas, tasks and operations described in Section 1.3 of this HASP. Any additional activities must be communicated to the SHSO for inclusion into this plan. This evaluation is based solely on the currently available information. As new data becomes available or Site tasks are modified, this HASP may need to be modified accordingly.

4.1 Chemical Hazards

The degree of hazard potential(s) posed to on-site personnel depends not only on where work will be conducted but also upon the task or tasks being performed. The tasks scheduled generally can be grouped into two categories, non-intrusive and intrusive activities. Non-intrusive activities such as site reconnaissance and oversight activities will be of lesser concern to worker health. Intrusive activities are associated with excavation and drilling activities among

other activities. Hazards associated with oversight activities include the potential for exposure to site contaminants via inhalation of airborne particulates and direct dermal contact.

4.1.1 Site Contaminants of Concern

Below is a summary of the Contaminants of Concern by exposure matrix:

Site Soil/Bedrock – Dense Non-Aqueous Phase Liquid (DNAPL) is likely present in the soils at the zone of interest (mainly silty sands and fine sands) and may have migrated vertically downward into deeper individual bedrock fractures; however, the relative volume of DNAPL in these fractures is likely to be significantly less than the volume that has accumulated at the bedrock surface. DNAPL may also have sorbed into the matrix of the intact rock, either at the top surface of the bedrock or adjacent to fractures. Although this can be a significant long-term source as the sorbed DNAPL is released to interstitial water, the low porosity of intact granite (about 1.1%) is small compared to typical porosities of overburden or of fractured bedrock. The volume of sorbed DNAPL is also apt to be small compared to the volumes of free product in soil pores and rock fractures. The focus of the DNAPL recovery effort is to identify and remove recoverable volumes of DNAPL. It would be premature to attempt to measure, quantify, or eliminate DNAPL sorbed into the rock matrix before the DNAPL in contact with the surfaces of the rock has been eliminated.

Groundwater – The compounds detected in the free phase DNAPL are similar to the compounds used in the manufacturing of chemical dyes, consistent with the past manufacturing activities at the Nyanza Site. The DNAPL is dark brown/black in color with a very strong almond-like odor. Analytical results for groundwater indicated the primary constituents included dichlorobenzene, nitrobenzene, chlorobenzene, trichloroethene (TCE), trichlorobenzenes, and minimal amounts of petroleum-related hydrocarbons. Vinyl chloride was detected in several monitoring wells during the January 2011 sampling round – with the highest concentration (460 ppb) at MW-203A.

Air – Air sampling has not been conducted in the remedial action area. There will be air monitoring equipment utilized during intrusive activities to monitor the ambient air conditions. Previous monitoring was conducted for the vapor intrusion activities. VOCs were detected at

concentrations <1.0 ppm using a PID meter. VOCs will be measured using a MiniRAE 2000 PID meter during site activities and by using a Draeger tube for detection of Vinyl Chloride.

Table 4-1
Chemicals of Concern (DNAPL Compounds) as recorded in a September, 2006 Report entitled: *Nyanza Conceptual Design* by ICF International.

Chemical of Concern	Primary Hazard	Percent of Total	Permissible Exposure Limits (PELs)
Nitrobenzene	Toxic	28.0%	1 ppm
Chlorobenzene	Toxic	10.3%	75 ppm
Trichloroethene (TCE)	Irritant	3.5%	50 ppm
1,2,4-Trichlorobenzene	Toxic, Irritant	2.4%	REL-C = 5 ppm
m-Dichlorobenzene	Toxic, Irritant	10.6%	NE
o-Dichlorobenzene	Toxic, Irritant		PEL C-50 ppm
p-Dichlorobenzene	Toxic, Irritant		75 ppm
Vinyl Chloride*	Toxic		1 ppm PEL C = 5 ppm

Note: ppm = parts per million; mg/m^3 = milligram per cubic meter
PELs are based on an 8-Hour Time Weighted Average (TWA).
C – indicates the ceiling level for the PEL or REL (NIOSH)
NA – not applicable
NE – not established
* Groundwater sample only

4.1.2 Other Chemicals to be Brought On Site

In addition to site constituents, exposure to material brought onto the site may occur during the performance of some site activities.

Table 4-2
Substances Brought on Site

Product / Chemical Name	Chemical Hazards	MSDS Attached (YES or NO)
Eye saline	Irritant at high exposure	Yes
Calibration Solution – pH 4	Irritant	Yes
Calibration Solution – pH 7	Irritant	Yes
Calibration Solution – pH 10	Irritant	Yes

Product / Chemical Name	Chemical Hazards	MSDS Attached (YES or NO)
Hydrochloric Acid	Burns, corrosive, fatal if swallowed	Yes
Isobutylene	None	Yes
Isopropyl Alcohol	Flammable, irritant	Yes
Liquinox	Inhalation/Ingestion	No
Methanol	Flammable, irritant	Yes
Nitric Acid	Burns, corrosive, fatal if swallowed	Yes
Sulfuric Acid	Burns, corrosive, fatal if swallowed	Yes
Spray Paint		No

Current Material Safety Data Sheets (MSDSs) will be provided in this Health and Safety Plan. Hazard Communication training on these materials will be included in site safety meetings as necessary.

4.2 Physical Hazards

Most physical hazards can be avoided if identified and proper precautions are taken. The hazards found below summarize those associated with most construction-type projects. However, each specific site location, equipment, site personnel, weather condition, and type of work preformed may pose additional hazards that are not listed below. Measures should be taken to identify these hazards and action taken to eliminate the hazard or proper control measures implemented.

- Crushing or Struck By
- Slips / Trips / Falls
- Electrical Hazards
- Vehicle and Equipment Accidents
- Weather Hazards
- Overhead and Underground Utilities
- Fires
- Cuts / Punctures
- Sprains / Strains
- Hand and Power Tool Hazards
- Biological Hazards

5.0 STANDARD WORK PRACTICES

Activity Hazard Analyses (AHAs), located as Section 17, serve as the primary portion of the HASP which identifies the tasks that are to be performed as part of the scope of work. The AHAs will be modified and incorporated into this document as new or additional tasks are performed at the site. The anticipated hazards, recommended control measures, air-monitoring recommendations, required PPE, and decontamination measures for each site task are discussed in detail. The AHAs and the associated control measures shall be changed if the scope of work, contaminants of concern or other conditions change.

Using the AHAs, site personnel can determine which hazards are associated with each task and at each site, and what associated control measures are necessary to minimize potential exposure or injuries related to those hazards. The AHAs also assist field team members in determining which PPE and decontamination procedures to use based on proper air monitoring techniques and site-specific conditions.

The following standard work practices will apply to all Nobis and subcontractor personnel as applicable to the work being performed at this site.

5.1 General Requirements (All Tasks)

Eating, drinking, chewing gum or tobacco, taking medication, and smoking are prohibited within the exclusion zones, or any location where there is a possibility of contact with site contamination. Eating should generally be conducted inside vehicles, or outside of the site fence. Smoking should only be conducted outside of the site fence, if necessary.

Personnel on Site for the activities described in this HASP will remain in communication with other on a routine basis if not working in the same area. The use of radios or active cell phones or routine check-ins is permitted tools to remain in contact with others not in line of sight. Cell phone reception at the site is weak and intermittent and should not be relied upon for emergency communication.

6.0 PERSONAL PROTECTIVE EQUIPMENT

The Activity Hazard Analyses explain the personal protective equipment for every specific activity. These are located in Section 17.

This section presents requirements for the use of PPE for each of the activities being conducted for this project. This section includes anticipated levels of protection for each activity.

Primary Activity	Level of Protection
Mobilization and preparation	Level D
Tree removal and fence repair	Level D
Soil Borings and Drilling	Level D/Level C
Well Development and Groundwater Sampling	Level D/Level C
Decontamination of equipment and personnel	Level D/Level C
DNAPL Extraction System Install Oversight	Level D
DNAPL System O&M	Level D
Demobilization	Level D

The SSHO may require Level D to be upgraded to Modified Level D. Modified Level D is defined as Level D work clothes with Tyvek for splash protection and nitrile gloves must be worn at times when contact with soil cuttings, DNAPL, and/or groundwater have potential dermal contact.

7.0 MONITORING REQUIREMENTS

The Activity Hazard Analyses explain the monitoring requirements for every specific activity. These are located in Section 17. This section presents additional requirements for the use of real-time air monitoring instruments during site activities involving potential for exposure to site contaminants. It establishes the types of instruments to be used, the frequency of which they are to be used, techniques for their use, action levels for upgrading/downgrading levels of protection, and methods for instrument maintenance and calibration.

7.1 Instruments and Use

Air monitoring using a PID (10.6 eV) will be conducted on-site in the breathing zone of high risk workers during subsurface explorations and other activities deemed necessary by the SSHO to determine the presence and absence of total organic vapors, gases, and ionizable organic compounds. The PID will be calibrated and operated as outlined in the Nobis Standard Operating Procedures and project QAPP. The PID meter will detect as low as 1 ppm; however, it will not delineate the actual compound. A Draeger tube for the detection of Vinyl Chloride will be used.

7.2 Action Levels

The following action levels will apply to this project in the support zone:

Chemical of Concern	Primary Hazard	Maximum Site Airborne Concentration	Permissible Exposure Limits (PELs)	Action Level (using a PID meter)
Vinyl Chloride	Toxic	NA	1 ppm	1 ppm
Nitrobenzene	Toxic	NA	1 ppm	1 ppm
Chlorobenzene	Toxic	NA	75 ppm	1 ppm
Trichloroethene (TCE)	Irritant	Unknown	50 ppm	1 ppm
1,2,4-Trichlorobenzene	Toxic, Irritant	NA	5 ppm	1 ppm
m-Dichlorobenzene	Toxic, Irritant	NA	NE	1 ppm
o-Dichlorobenzene	Toxic, Irritant	NA	50 ppm	1 ppm
p-Dichlorobenzene	Toxic, Irritant	NA	75 ppm	1 ppm

Notes: ppm = parts per million; mg/m^3 = milligram per cubic meter
PELs are based on an 8-Hour Time Weighted Average (TWA).
Action Levels are based on OSHA exposure limits where available otherwise based on NIOSH exposure limits.
NA – not applicable
NE – not established

In the exclusion zone, all PID meter readings greater than 1 ppm in the breathing zone will be confirmed using the real-time Draeger tubes for Vinyl Chloride. The Ceiling Limit for vinyl chloride is 15 minutes at 5 ppm. If vinyl chloride is confirmed in the breathing zone above 1 ppm for 5 minutes with Draeger tube, all work will stop at that location. This is required because the OSHA PEL for vinyl chloride is 1 ppm but it cannot be removed with organic vapor

cartridges. If NO vinyl chloride is present and PID readings exceed 1 ppm up to a maximum of 5 ppm in the breathing zone, upgrade to Level C half-face respirators equipped with organic vapor cartridges. This is required since nitrobenzene may be present and has an OSHA PEL of 1 ppm but nitrobenzene (and other VOCs) can be removed with organic vapor cartridges. If PID readings in the breathing zone are in the range of 5 ppm to 25 ppm and NO vinyl chloride is present, upgrade to Level C full-face respirators equipped with organic vapor cartridges. It is noted Full face respirators equipped with organic vapor cartridges may be used above 5 ppm assuming NO vinyl chloride is present and up to a maximum of 25 ppm. The change-out schedule for organic vapor cartridges is 8 hours or each full work day whichever is earlier.

PID readings in the breathing zone above 25 ppm or the presence of vinyl chloride above 1 ppm in excess of 5 minutes will require an upgrade to Level B supplied air respiratory protection. Consequently all work must stop at that location until appropriate equipment, training, and HASP update is conducted for Level B work.

If an upgrade is determined to be necessary in the exclusion zone, monitoring will be performed to delineate the limits of the exclusion zone. All Nobis employees working in the support zone will deploy to an area that is upwind on the site activities to the maximum extent practicable.

7.3 Engineering Alternatives

Engineering controls will be the preferred methods of maintaining respiratory safety during site activities. Measures will be taken to minimize the potential for dust/fugitive emission generation as necessary, including; wetting/watering of the area as needed and covering soil stockpiles when not being added to or removed.

In addition, a fan may be deployed to deflect vapors from the breathing zone. Deployment of the fan and continued use of this engineering control will be at the discretion of the SSHO. Monitoring of the breathing zone while the fan is in use will be in accordance with procedures described in Section 7.2.

8.0 DECONTAMINATION

This section describes the steps site personnel will follow to prevent the spread of Site contaminants into areas that may affect unprotected, unsuspecting site personnel, or the public.

It includes requirements for decontamination of personnel, sampling equipment, and heavy equipment.

Nobis will be responsible for maintaining a sufficient supply of equipment required to decontaminate and clean sampling equipment, including, but not limited to, the following items:

- Plastic trash barrels;
- Liners for trash barrels;
- Wash basins;
- Alconox™ detergent concentrate;
- Hand pump sprayers;
- Long handled soft bristle brushes;
- Large sponges
- Cleaning wipes for respirators
- Bench or stool(s)
- Stepladder(s)
- Liquid detergent and paper towels
- Plastic trash bags
- Supplies/equipment to construct the decontamination pads
- All necessary hosing, connections, etc., to collect and transport decontamination fluids

8.1 Personnel Decontamination

The decontamination of personnel and their protective clothing will be performed in three stages.

- Stage 1 includes removing contamination from reusable protective clothing and/or disposable clothing. These efforts will involve washing and rinsing these items in a sequence that begins at the highest level to the lowest level (i.e., from the head down towards the feet).

- Stage 2 will include removal of protective clothing, discarding disposable clothing into a sealed bag labeled “Contaminated clothing” and/or storing reusable protective clothing in the contamination reduction zone. Stage 2 efforts involve a structured, segregated

process carefully removing PPE items beginning with the outermost item and progressing inward.

- Stage 3 will consist of workers washing their hands and face with potable water and soap before performing any type of hand-to-mouth activity.

8.2 Sampling Equipment Decontamination

Soil sampling equipment will be decontaminated with a potable water Liquinox wash and a potable water rinse. Groundwater sampling equipment and tubing will be rinsed with deionized water or other procedures as specified in the Site Specific Quality Assurance Program Plan (QAPP).

8.3 Heavy Equipment Decontamination

Required decontamination of heavy equipment will be accomplished using high pressure water or other means approved by the SSHO and Remediation Manager. A Nobis representative will inspect heavy equipment prior to being released from the site. Decontamination fluids generated will be contained and disposed of as described in the QAPP and Phase-Specific Task Plans.

9.0 MEDICAL SURVEILLANCE

9.1 Requirements for Nobis Personnel

All Nobis personnel participating in field activities within the exclusion zones at a hazardous waste operations site under 29 CFR 1910.120 will have had a physical examination meeting the requirements of the Nobis medical surveillance program and federal law. They will be deemed medically qualified to perform hazardous waste site work. Respiratory protection may be required for specific operations covered under this HASP. Documentation for medical clearances will be maintained by the Corporate Safety Officer.

9.2 Requirements for Subcontractors

Subcontractors are required to obtain a medical evaluation and supply documentation that they are medically fit to perform hazardous waste site work and to wear respiratory protection, if necessary. The medical evaluation must be properly completed and signed by a health care

professional in accordance with OSHA requirements. Proof of medical clearance (medical evaluation) and health and safety training must be provided by subcontractors to Nobis prior to any on-site activities.

10.0 SITE CONTROL

This section describes the steps site personnel will follow to prevent the spread of Site contaminants into areas that may affect unprotected, unsuspecting site personnel, or the public. It includes requirements for decontamination of personnel, sampling equipment, and heavy equipment.

10.1 Site Work Zones

In general, a three zone approach will be used during work at this site; exclusion zone, contamination reduction zone, and support zone. The immediate work area, where contact with site hazards is possible, shall be deemed the exclusion zone. Access to the exclusion zone will be limited, as determined by the SSHO, to only those individuals who:

- are authorized to be on-site by Nobis and EPA;
- possess the required health and safety training certifications and necessary documentation of medical monitoring; and
- are properly protected against the anticipated site hazards.

10.1.1 Exclusion Zone

The Exclusion Zone (EZ) is the area where remedial and other construction activities occur and where contaminants may be encountered (e.g., excavation, proximal to drill equipment, proximal to groundwater sampling, wellhead extraction system). Only authorized, trained, and qualified personnel with the appropriate personal protective equipment shall be admitted. Personnel entering the EZ must use the buddy system.

Work activities within the EZ pose the greatest potential for hazardous exposures to personnel. The SM shall be responsible for controlling the access points and preventing entry by unauthorized personnel. The EZ will be clearly marked with flagging, fencing, barricade tape, traffic cones, or other indicators to limit access.

Every effort will be made to physically demarcate the exclusion area using banner tape, barricades, fencing and/or signs. The exclusion area will be large enough to ensure protection of persons outside of the area. The SSHO or appointed designee will be responsible for keeping unauthorized persons from entering the exclusion area.

10.1.2 Contamination Reduction Zone

The Contamination Reduction Zone (CRZ) is the area where equipment and personnel are decontaminated when exiting the EZ. Personnel will remove and/or decontaminate personal protective equipment (PPE) and place it in plastic bags or other appropriate containers. Site vehicles and equipment will also be decontaminated in the CRZ. The CRZ will consist of a means of washing PPE, site vehicles, and equipment; containers for liquids, solids, and PPE; first-aid supplies, and a fire extinguisher.

10.1.3 Support Zone

The Support Zone (SZ) is the clean area in which the possibility of encountering hazardous materials or conditions is minimal. Therefore, respiratory equipment is not necessary. Inside the SZ, the following will be available: an effective means of communication, first-aid supplies, fire extinguisher, drinking water, and other appropriate support equipment. The SZ shall also serve as the main point of contact for the visitor check-in and initiation of emergency services when necessary.

10.2 Communication

It is anticipated that site personnel will be working in close proximity during proposed field activities. In the event that site personnel are in isolated areas or are separated by significant distances, a supported means of communication between field crews will be utilized.

External communications will be accomplished utilizing cellular telephones located with Nobis on-site representative. External communication will primarily be used for the purpose of resource and emergency resource communications. Landline telephones are not available on the Site.

10.3 Site Visitors

Potential site visitors during the performance of the field work could include the following:

- Personnel invited to observe or participate in operations by Nobis.
- Regulatory personnel (i.e., EPA, MADEP, OSHA, etc.)
- Other authorized visitors

Non-EPA personnel working on this project are required to gain initial access by coordinating with the Nobis PM or designee and following established site access procedures.

Once access to the Site is obtained, personnel who require access to Nobis work sites (areas of ongoing operations) will be required to obtain permission from the FOL and the Nobis PM. Upon gaining access to the work site, site visitors wishing to observe operations in progress will be required to meet the minimum requirements as stipulated below.

- Site visitors will be routed to the FOL, who will sign them into the field logbook. Information to be recorded in the logbook/sign-in sheets will include the individuals name (proper identification required), who they represent, the purpose for the visit, and the arrival and departure times. The FOL is responsible for ensuring that site visitors are escorted.

- Site visitors will be required to produce the necessary information supporting clearance on to the site.

Once the site visitors have completed the above items they will be permitted to enter the site and applicable operational areas. Visitors are required to observe the protective equipment and site restrictions in effect at the work areas visited. Visitors not meeting the requirements as stipulated in this plan for site clearance will not be permitted to enter the site operational zones during planned activities. Any incidence of unauthorized site visitation will cause on-site activities to be terminated until that visitor can be removed. Removal of unauthorized visitors will be accomplished with support from the Site Contact, if necessary. At a minimum, the Site Contact will be notified of any unauthorized visitors.

10.4 Site Security

The first line of security will be provided by the Site gate restricting the general public. The second line of security will take place at the work site by referring interested parties to the FOL. Security at the work areas will be accomplished using field personnel. This is a multiple person operation, involving multiple work zones. Nobis personnel will retain complete control over active work zones.

The FOL will serve as the focal point for site personnel and interested parties and will serve as the primary enforcement contact.

11.0 EMERGENCY PLANNING

This section establishes procedures and provides information for use during a project emergency. Emergencies typically occur unexpectedly and quickly and require an immediate response; therefore, contingency planning and advanced training of staff are essential. Specific elements of emergency support procedures which are addressed in the following subsections include responsibilities, communications, local emergency support units, and preparation for medical emergencies, first aid for injuries, and record keeping, and emergency site evacuation procedures.

11.1 Responsibilities

11.1.1 Site Health and Safety Officer/Field Operations Leader

The Site Health and Safety Officer (SHSO) is responsible for ensuring that all personnel are evacuated safely and that machinery and processes are shut down or stabilized in the event of a stop work or evacuation. The SHSO is required to immediately notify the CHSO of any fatalities or catastrophes (three or more workers injured and hospitalized) so that the CHSO can notify OSHA within the required time frame (8 hours). The CHSO will be notified of all injuries, fires, spills, releases or equipment damage or automobile collisions within 24 hours of the incident. The SHSO also serves as the Emergency Coordinator.

11.1.2 Site Personnel

Site personnel are responsible for knowing the Emergency Response/Contingency Plan and the procedures contained therein. Personnel are expected to notify the Emergency Coordinator of impending or actual emergencies, and to cooperate fully once the Plan is enacted. All information obtained about an emergency shall be immediately communicated to the Emergency Coordinator.

An incident is an unplanned event, which results in any injury, fire, release, spill or equipment damage, or an event, which, under slightly different circumstances could have resulted in the above (near miss). All incidents must be reported to the SHSO immediately then to the CHSO.

11.2 Communications

The primary form of communication during an emergency between the Site and outside emergency response groups will be by cellular telephone located with on- site personnel. Prior to starting operations at the site, the emergency phone numbers will be posted in conspicuous locations throughout the site. Landline telephones are not available on-site.

11.2.1 On-Site Communications

During an emergency at the site, field personnel and the Emergency Coordinator will communicate on Site as required using two-way radio communications, as necessary. Two-way radios will be tested for charge and functionality before each use and will be charged as necessary.

11.2.2 Off-Site Communications

During an emergency at the site, field personnel and the Emergency Coordinator will communicate with off-site resources and response personnel using cellular telephone communications.

11.3 Spill Control

This section includes guidance on controlling spills from fuels, oils used in site machinery, and any decontamination process fluids.

11.3.1 Prevention and Containment

Nobis will attempt to control spills through the following use of engineering and work practice controls:

- Drums will be stored in designated locations with containment provided by drum-containment pallets. Drum storage areas will be barricaded or clearly marked to prevent drums from being struck by vehicles/equipment.

- Drums will be moved by the subcontractor using appropriate methods to minimize spillage or leaks.

- Incompatible chemicals will be segregated to prevent generating additional hazardous conditions in the event that a spill or release should occur.

- If rain is anticipated, storage drums and the drum-containment pallets will be covered with plastic sheeting to ensure adequate containment capacity is maintained.

- Pumps and hoses transferring hazardous materials will be continuously monitored while in operation. Hoses will be situated such that they are not in a high-traffic area. This will prevent accidental breakage by being run-over and also minimizes slips/trips/falls. All hoses will be drained of fluid when not in use.

- Drip pans or sorbent materials will be placed under pumps, hose connections, and nozzles to control small leaks.

- Precautions against overfilling containers will be taken.

- Safety cans and other small containers of hazardous materials in storage will be kept in flammable liquid storage cabinets, or other suitable enclosures.

11.3.2 Recognition

Site safety inspections will include the integrity of any secondary containment and storage containers. It will also include a visual inspection of areas and equipment for leaks and spills.

11.3.3 Response

The following procedures will be implemented in the event of a spill:

- Shut down transfer equipment. If the material is a flammable liquid, shut down other equipment in the area and remove all sources of ignition.

- Contain the spill with berms consisting of sorbent booms or earthen material placed with shovels or heavy equipment in the case of large spills. Special care is taken to protect drains and off-site pathways.

- For leaking tanks with secondary containment, assure the secondary containment volume is sufficient to accept the tank contents. Pump standing liquids into drums, if necessary.

- For leaking temporary tanks without secondary containment, plug the leak if it is safe to do so and employees are properly trained to complete the task. Otherwise, use berms to direct leak to an area where it can be absorbed or pumped. Immediately arrange to transfer tank contents into another tank or drums.

Any response activities beyond initial preventative actions (i.e., leak or equipment stoppage, migration prevention) will not be conducted by Nobis personnel or subcontracted personnel. These tasks will be directed to local emergency responders. Prior to initiating initial preventive actions, personnel will confirm appropriate PPE is available and used, and that it is safe for personnel to take action.

In the event of a site evacuation, the meeting point will be Nyacol gatehouse on the east side of the Site, at Megunko Road.

11.3.4 Reporting

All controlled on-site spills will be immediately reported to the CHSO, FOL, and SHSO. Large uncontrolled spills will require notification of local emergency response personnel and the EPA Regional Response Centers. The National Response Center and the MADEP will be notified as soon as possible if the spill exceeds the reporting quantities for the substance involved. The Emergency Coordinator is responsible for notifications and preparing the incident report.

11.3.5 Record Keeping

All health and safety data including accident investigations, daily health and safety logs, and the health and safety logbook will be maintained on-site until such time that it is relocated to the main project file. The data will be stored in the main project file from that point.

11.3.6 Material Safety Data Sheet Requirement

Nobis and subcontractor personnel will provide Material Safety Data Sheet (MSDS) for chemicals brought on-site. The contents of these documents will be reviewed by the SHSO with the user(s) of the chemical substances prior to any actual use or application or the substances on-site. The MSDSs will be maintained in a central location (i.e., on-site job trailer, if applicable) and will be available for anyone to review upon request. The SHSO will be responsible for implementing a site-specific Hazard Communication Program. This includes collection of MSDSs, creation and maintenance of an accurate Chemical Inventory Listing, addressing container labeling, and personnel training issues, and other aspects of Hazard Communication.

12.0 TRAINING

12.1 29 CFR 1910.120 (HAZWOPER)

In accordance with Nobis policy, and pursuant to 29 CFR 1910.120 all workers involved at a HAZWOPER site shall, at the time of job assignment, have received a minimum of 40 hours of initial safety and health training for hazardous waste site operations unless otherwise noted in the above reference. All employees must undergo 24-Hours of supervision before allowed to conduct site work unsupervised. In addition, site supervisors must complete an 8-Hour Supervisor Course. Employees that have completed the 40-Hour training must annually attend

an 8-Hour Refresher Course. As a minimum, the training shall have consisted of instruction on the topics outlined in 29 CFR 1910.120.

Nobis personnel and subcontractors shall provide documentation of the training to the SHSO prior to the start of work at the site.

12.2 First Aid/CPR

One Nobis personnel trained and certified in First Aid/CPR and blood-borne pathogens will be present on-site during the course of the project. Nobis does not mandate that employees trained in First Aid/CPR come to the aid of employees, subcontractors, or others, and each employee must make their own decision, if and when, to offer aid. However, employees should attempt to summon aid for the victim by calling “911” or other measures, but only when safe to do so. Do not place yourself, or others, in harm’s way to render assistance.

12.3 Air Purifying Respirator

Prior to using any respirator, all persons must have receive written approval from a medical doctor and successfully completed a respirator “fit test” for the same make, model, and size as the respirator they are using. All employees using a respirator must receive training in it proper use and maintenance.

12.4 Hazard Communication Training

Training in accordance with the Nobis Hazard Communication Program will be conducted, as part of the site-specific training and on an as needed basis during the life of the project. The training will include the following topics:

- MSDS;
- Hazardous materials labeling;
- Hazard awareness training for all employees; and
- Hazard Communications Written Program.

13.0 LOGS, REPORTS, AND RECORD KEEPING

The following is a summary of required health and safety logs, reports, and record keeping for a specific site.

13.1 Medical and Training Records

Medical and training records are kept by the employer. Verification of training and medical qualification must be provided to the SHSO by the subcontractor employer or Nobis records coordinator. The SHSO will keep a log of personnel meetings, appropriate training, and medical qualification for site work. The log will be kept in the project file. Medical records will be maintained in accordance with 29 CFR 1926.65, by the medical consultant for Nobis.

13.2 On-site Log

The SHSO or designee will keep a log of personnel on-site. A copy of these logs will be kept in the project files.

13.3 Accident/Injury Reports

All accidents and injuries shall be investigated by the Nobis. All work related injuries, illnesses, property damage accidents and near misses will be recorded and reported to the SHSO. The SHSO will report the incidents to the PM and the CHSO. Reporting shall take precedence over scheduled field activities. A copy of the forms is included in Section 18.

14.0 STANDARD SAFETY PROCEDURES FOR SPECIFIC OPERATIONS

Minimum safety procedures have been established for the various tasks commonly performed by Nobis. It should be emphasized that these are minimum standards that should be carefully reviewed in the context of the known hazards on a specific site. In many cases the protective measures called for will need to be upgraded to assure safe working conditions at specific locations.

15.0 SITE HEALTH AND SAFETY PLAN CERTIFICATION

A Safety Meeting is to be completed with all site workers prior to the start of work. All employees and subcontractors must review this HASP and be allowed to ask any questions that they may have concerning safety or health while working on the project. By their signature, the following undersigned certify that this HASP has been read, reviewed, or otherwise communicated to them. They further certify that they understand Nobis' policy of "Safety First" and will follow procedures described within this document for the protection, health, and safety of all persons entering upon this site.

Name	Company	Date

A copy of this HASP must be accessible to all workers. Workers who request a personal copy of any Material Safety Data Sheet (MSDS) must do so in writing. The written request should be transmitted immediately to the CHSO. The SHSO may communicate such requests by telephone or email. Copies of the requested MSDS(s) should be delivered to the person requesting the copy within 48 hours of receipt.

16.0 EMERGENCY INFORMATION

EMERGENCY NUMBERS	
Fire, Police, Ambulance:	**911**
Nearest Site Phone:	**TBD**
Nobis Cell Phone:	**603-508-0084**

If cell phone is used, signal strength must be checked. If signal is not strong enough to make a good connection, others means of emergency contact should be established.

Nobis Corporate Health & Safety Officer	
CHSO	**Tom Bobowski**
Office Phone:	**(603) 224-4182 / (800) 394-4182**
Direct Dial:	**(603) 724-6239**
Cell Phone:	**(603) 731-7993**
Principal	**Pete Delano**
Office Phone	(978) 703-6000 ext. 6000
Cell Phone	(978) 609-0891

Client Contacts:	**Dan Keefe, EPA (617) 918-1327**
Subcontractor(s) Contacts:	**To Be Determined**

HOSPITAL INFORMATION	
Hospital Name:	**Framingham Union Hospital**
Street Address:	**115 Lincoln Street**
City, State, Zip:	**Framingham, MA 01702**
Phone Number:	**508-383-1000**

16.1 Driving Directions and Hospital Map

START

Start out at the town hall on MAIN ST.

Turn RIGHT onto MAIN ST.

1.0 mi

Turn LEFT onto UNION ST/MA-135. Continue to follow MA-135.

3.0 mi

Turn LEFT onto MA-126/CONCORD ST.

2.0 mi

Turn SLIGHT LEFT onto UNION AVE.

3.0 mi

Turn RIGHT onto BEECH ST.

0.1 mi

Turn LEFT onto LINCOLN ST.

0.0 mi

END

End at 115 Lincoln St Framingham, MA 01702-6358

Estimated Time: 12 minutes Estimated Distance: 4.0 miles

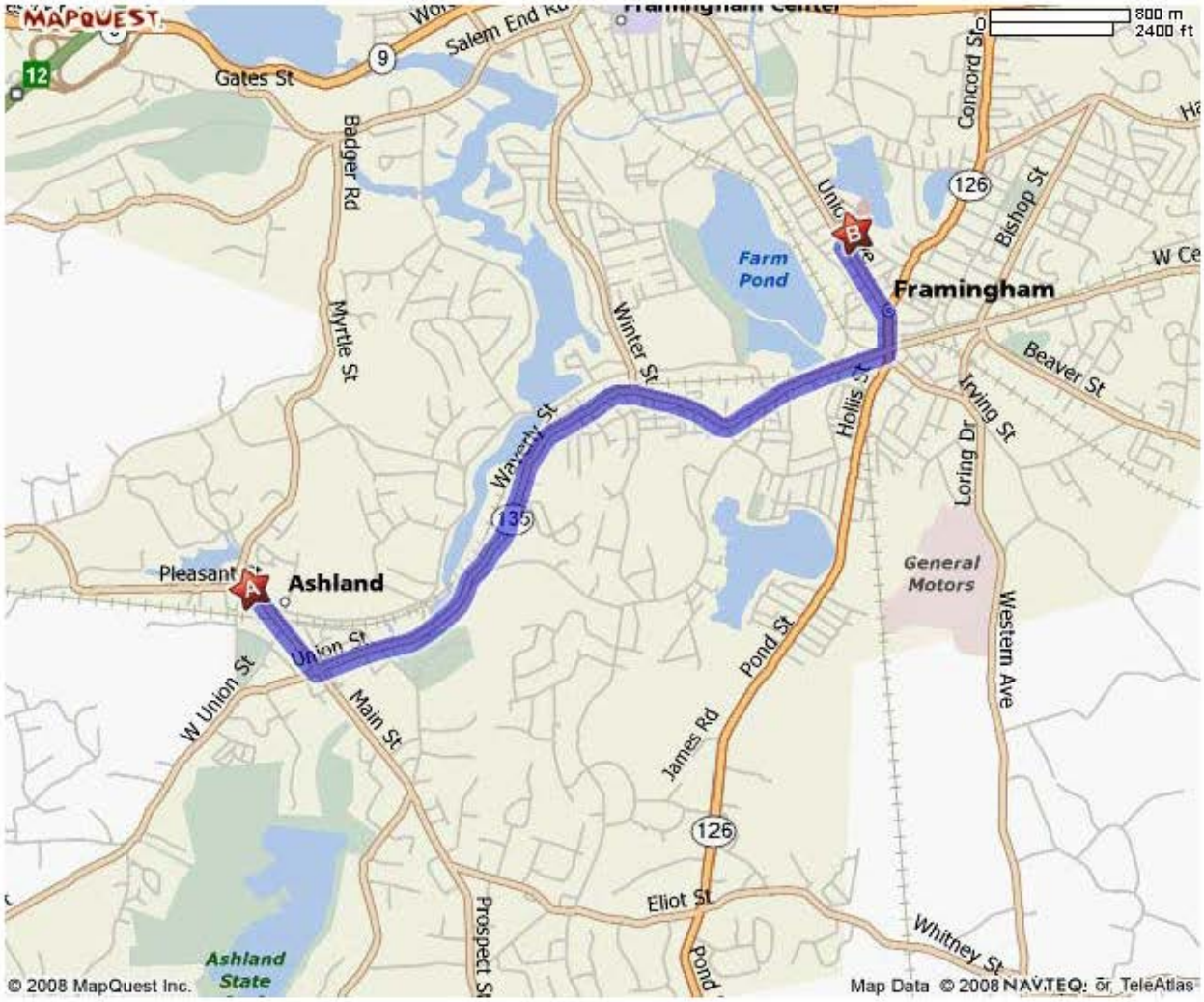
MAPQUEST
800 m
2400 ft
Salem End Rd
Gates St
Badger Rd
Myrtle St
Concord St
Bishop St
Farm Pond
Framingham
Winter St
Beaver St
Irving St
Hollis St
Loring Dr
Waverly St
Pleasant St
Ashland
Union St
W Union St
Main St
General Motors
Western Ave
Pond St
James Rd
Eliot St
Whitney St
Prospect St
Ashland State
© 2008 MapQuest Inc.
Map Data © 2008 NAVTEQ, or TeleAtlas

17.0 ACTIVITY HAZARD ANALYSIS (AHA)

Activity Hazard Analyses

17.1 Mobilization and Demobilization

Analysis Approved By: L. Bonk **Date:** January 2010

TASK	POTENTIAL HAZARDS	CONTROL MEASURES	AIR MONITORING	PERSONAL PROTECTIVE EQUIPMENT (PPE)	DECONTAMINATON PROCEDURES
Mobilization and Demobilization at a particular job site.	Exposure to Site Contaminants and Hazardous Materials brought on site	-Known or suspected contaminants are listed in the site specific Health and Safety Plan with the known permissible exposure limits. -Maintain Inventory of all hazardous materials brought on-site. -Maintain an up-to-date MSDS binder for all chemicals on-site. -Store materials in accordance MSDS -Don proper personal protective equipment (PPE) specified for the task. -Properly decontaminate heavy equipment, sampling, and monitoring equipment, supplies, and personnel between sampling points and prior to departing the site.	Air monitoring will not be required during mobilization and demobilization activities.	Mobilization and demobilization is intended to initiate and proceed in Level D protection as conditions or Site Safety Officer (SSO) indicates. <u>LEVEL D – Minimum requirements</u> -Standard field clothing (work shirt, long pants, of coveralls) -Steel toe safety shoes (ANSI Standard Z41) -Safety glasses (conforms to ANSI standard Z41) -Hardhat (conforms to ANSI Standard Z89.1) when overhead hazards are present -ANSI Class II vest on or near roadways during the day and ANSI Class III jacket after sunset. -Hearing protection for high noise areas such as heavy equipment or a groundwater treatment plant. -Gloves appropriate to handle hazardous materials. -Tyvek coveralls as needed. -Impermeable boot covers as needed.	<u>PERSONNEL DECONTAMINATION</u> Personnel decontamination will be performed within the site boundaries prior to personnel departing the site. This will prevent the transfer of contaminated medium off-site. -Wash and rinse outer protective equipment -Properly dispose of gloves, Tyvek, and boots -Wash hands and face <u>EQUIPMENT DECONTAMINATION</u> All equipment inspection and decontamination will be the responsibility of the Site Safety Officer.
	Slips/Trips/Falls	-Keep work areas free of debris/materials. -Wear proper fitting footwear. -Mark, identify, or barricade obstructions. -Walk carefully on uneven terrain. -Continuously evaluate areas for potential causes of slips/trips/falls.			
	Noise	-Hearing protection will be worn to protect the ears in areas of high-noise levels such as near a drill rig or in a groundwater treatment plant area.			
	Biological Hazards	-Be aware of biological hazards in work area. -Continuously evaluate work areas for biological hazards. -Avoid contact with animals and insects. -Avoid contact with poisonous plants. -Communicate potential hazards to co-workers.			
	Sharp Objects/Cuts	-Wear work gloves to prevent cuts to hands and arms. -Keep guards in place on all machinery.			
	Pulls/ Strains/Hernia	-Observe proper lifting/rigging techniques. -Mechanical devices will be utilized to reduce manual handling of materials.			
	Dropped Objects	-Steel toe boots meeting ANSI Standard Z41 will be worn. -Ground personnel will be instructed to stay clear of suspended loads. -Personnel will be instructed on proper rigging procedures. -All personnel will wear hard hats meeting ANSI Standard Z89.1. -Tools and equipment should be secured.			
	Dangerous weather conditions	-Review local weather reports. -Continuously check weather conditions. -Be aware of lightning in distance, comply with the 30/30 Rule. -Discontinue work if it appears that dangerous weather of lightning is approaching. -Communicate any potential dangerous weather conditions to co-workers. -Identify “safe areas” prior to field activities, if dangerous weather approaches. -In case of lightning, avoid water, open areas, tall trees, and tall metal objects.			
	Ambient Air Extremes	<u>Cold Stress</u> -Dress appropriately and in layers, wear proper gloves and hats. -If wet, immediately dry off, replace wet clothing and go to warm place if necessary. -Observe co-workers for signs of cold stress, frostbite, and hypothermia. -Communicate potential cold-related hazards to co-workers. <u>Heat Stress</u> -Observe co-workers for signs of heat stress. -Monitor environmental conditions and the employees. -Work break areas should be shaded or cooler than the work environment.			

17.2 Sampling of Groundwater and Soil

Analysis Approved By: L. Bonk **Date:** January 2010

TASK	POTENTIAL HAZARDS	CONTROL MEASURES	AIR MONITORING	PERSONAL PROTECTIVE EQUIPMENT (PPE)	DECONTAMINATON PROCEDURES
Sampling of Groundwater and Soil	Exposure to Site Contaminants and Hazardous Materials brought on site	-Known or suspected contaminants are listed in the site specific Health and Safety Plan with the known permissible exposure limits. -Maintain Inventory of all hazardous materials brought on-site. -Maintain an up-to-date MSDS binder for all chemicals on-site. -Store materials in accordance MSDS -Don proper personal protective equipment (PPE) specified for the task. -Properly decontaminate heavy equipment, sampling and monitoring equipment, supplies, and personnel between sampling points and prior to departing the site.	All monitoring activities will be performed by the Site Safety Officer (SSO) using a PID meter for volatile contaminants or other meter as warranted by site contaminants. Action levels for the site contaminants will be determined in advance and stated in the site specific Health and Safety Plan (HASP). SSO will regularly update Nobis personnel with readings and will modify activities if action levels are reached.	Sampling activity is intended to initiate and proceed in Level D protection as conditions or SSO indicate. <u>LEVEL D – Minimum requirements</u> -Standard field clothing (work shirt, long pants, of coveralls) -Steel toe safety shoes (ANSI Standard Z41) -Safety glasses (conforms to ANSI standard Z41) -Hardhat (conforms to ANSI Standard Z89.1) when overhead hazards are present -ANSI Class II vest on or near roadways during the day and ANSI Class III jacket after sunset. -Hearing protection for high noise areas such as heavy equipment or a groundwater treatment plant. -Gloves appropriate to handle hazardous materials. -Tyvek coveralls as needed. -Impermeable boot covers as needed.	<u>PERSONNEL DECONTAMINATION</u> Personnel decontamination will be performed within the site boundaries prior to personnel departing the site. This will prevent the transfer of contaminated medium off-site. -Wash and rinse of outer protective equipment -Properly dispose of gloves, Tyvek, and boots -Wash hands and face <u>EQUIPMENT DECONTAMINATION</u> All equipment inspection and decontamination will be the responsibility of the Site Safety Officer.
	Slips/Trips/Falls	-Keep work areas free of debris/materials. -Wear proper fitting footwear. -Mark, identify, or barricade obstructions. -Walk carefully on uneven terrain. -Continuously evaluate areas for potential causes of slips/trips/falls.			
	Noise	-Hearing protection will be worn to protect the ears in areas of high-noise levels such as near a drill rig or in a groundwater treatment plant area.			
	Biological Hazards	-Be aware of biological hazards in work area. -Continuously evaluate work areas for biological hazards. -Avoid contact with animals and insects. -Avoid contact with poisonous plants. -Communicate potential hazards to co-workers.			
	Sharp Objects/Cuts	-Wear work gloves to prevent cuts to hands and arms. -Keep guards in place on all machinery.			
	Pulls/Strains/Hernia	-Observe proper lifting/rigging techniques. -Mechanical devices will be utilized to reduce manual handling of materials.			
	Dropped Objects	-Steel toe boots meeting ANSI Standard Z41 will be worn. -Ground personnel will be instructed to stay clear of suspended loads. -Personnel will be instructed on proper rigging procedures. -All personnel will wear hard hats meeting ANSI Standard Z89.1. -Tools and equipment should be secured.			
	Dangerous Weather Conditions	-Review local weather reports. -Continuously check weather conditions. -Be aware of lightning in distance, comply with the 30/30 Rule. -Discontinue work if it appears that dangerous weather of lightning is approaching. -Communicate any potential dangerous weather conditions to co-workers. -Identify “safe areas” prior to field activities, if dangerous weather approaches. -In case of lightning, avoid water, open areas, tall trees, and tall metal objects.			
	Ambient Air Extremes	<u>Cold Stress</u> -Dress appropriately and in layers, wear proper gloves and hats. -If wet, immediately dry off, replace wet clothing and go to warm place if necessary. -Observe co-workers for signs of cold stress, frostbite, and hypothermia. -Communicate potential cold-related hazards to co-workers. <u>Heat Stress</u> -Observe co-workers for signs of heat stress. -Monitor environmental conditions and the employees. -Work break areas should be shaded or cooler than the work environment.			

17.3 Oversight of Drilling Operations (Soil Borings, Well Installations, and Well Decommissioning Activities)

Analysis Approved By: L. Bonk **Date:** January 2010

ACTIVITY	POTENTIAL HAZARDS	CONTROL MEASURES	AIR MONITORING	PERSONAL PROTECTIVE EQUIPMENT (PPE)	DECONTAMINATON PROCEDURES
Oversight of Drilling Operations (soil borings, well installations, and well decommissioning activities)	Exposure to site contaminants and hazardous materials brought on site	-Known or suspected contaminants are listed in the site specific Health and Safety Plan with the known permissible exposure limits. -Maintain Inventory of all hazardous materials brought on-site. -Maintain an up-to-date MSDS binder for all chemicals on-site. -Store materials in accordance MSDS -Don proper personal protective equipment (PPE) specified for the task. -Properly decontaminate heavy equipment, sampling and monitoring equipment, supplies, and personnel between sampling points and prior to departing the site.	Air monitoring activities will be performed during this task. All monitoring activities will be performed by the Site Safety Officer using a PID meter for volatile contaminants or other meter as warranted by site contaminants. Action levels for the site contaminants will be determined in advance and stated in the site specific Health and Safety Manual. The SSO will regularly update Nobis personnel and drilling crews with air monitor readings.	Drilling oversight is intended to proceed in Level D protection as determined by Site Safety Officer based upon site contaminants and other known hazards. If significant concentrations of contaminants are present, upgrades to Level C or Level B may be necessary. **LEVEL D – Minimum requirements** -Standard field clothing (work shirt and long pants) -Steel toe safety shoes (ANSI Standard Z41) -Safety glasses (conforms to ANSI standard Z41) -Hardhat (conforms to ANSI Standard Z89.1) if overhead hazards are present. -ANSI Class II vest on or near roadways during the day and ANSI Class III jacket after sunset. -Hearing protection for high noise areas such as heavy equipment or a groundwater treatment plant. -Tyvek coveralls as needed. -Tyvek boot covers as needed. -Gloves appropriate to handle hazardous materials. -Impermeable boot covers as needed.	PERSONNEL DECONTAMINATION Personnel decontamination will be performed within the site boundaries prior to personnel departing the site. This will prevent the transfer of contaminated medium off-site. -Wash and rinse outer protective equipment. -Properly dispose of gloves, Tyvek, and boots. -Wash hands and face. EQUIPMENT DECONTAMINATION All equipment inspection and decontamination will by the responsibility of the Site Safety Officer.
	Struck by/caught between heavy equipment	-Inspect equipment daily. -Experienced operators should be used to operate equipment. -Use all equipment according to operator's manual. -Ensure equipment backup alarms are operational. -Avoid equipment swing and blind areas. -Eye contact with operators shall be made before approaching equipment. -Personnel will understand and review hand signals. -Use seatbelts and Roll Over Protective Systems (ROPS).			
	Slips/Trips/Falls	-Keep work areas free of debris/materials. -Wear proper fitting footwear. -Mark, identify, or barricade obstructions. -Walk carefully on uneven terrain. -Continuously evaluate areas for potential causes of slips/trips/falls.			
	Noise	-Hearing Protection will be worn near a drill rig. -Hearing protection will be worn to protect the ears in areas of high-noise levels such as near air compressors or near treatment equipment.			
	Underground Hazards	-All underground utilities will be identified prior to excavation. -Dig Safe number(s) will be logged and documented. -Available as-builts will be reviewed prior to excavation. -A spotter will be used to watch for unidentified underground utilities.			
	Biological Hazards	-Be aware of biological hazards in work area. -Continuously evaluate work areas for biological hazards. -Avoid contact with animals and insects. -Avoid contact with poisonous plants. -Communicate potential hazards to co-workers.			
	Fire Protection	-Smoking is prohibited in all work zones. -A fire extinguisher will be located in all site vehicles and heavy equipment. -Fire extinguishers will be inspected when brought on-site -When working in areas where flammable vapors may be present, care must be taken with tools and equipment that may be sources of ignition. -Personnel will be aware in fire extinguisher handling only to be used as a tool to ensure evacuation.			
	Sharp Objects/Cuts	-Wear work gloves to prevent cuts to hands and arms. -Keep guards in place.			
	Pulls/Strains/Hernia	-Observe proper lifting/rigging techniques. -Mechanical devices will be utilized to reduce manual handling of materials. -Use the buddy system.			

17.3 Oversight of Drilling Operations (Soil Borings, Well Installations, and Well Decommissioning Activities)

Analysis Approved By: L. Bonk **Date:** January 2010

ACTIVITY	POTENTIAL HAZARDS	CONTROL MEASURES	AIR MONITORING	PERSONAL PROTECTIVE EQUIPMENT (PPE)	DECONTAMINATON PROCEDURES
Oversight of Drilling Operations (soil borings, well installations, and well decommissioning activities) (cont.)	Dropped Objects	-Steel toe boots meeting ANSI Standard Z41 will be worn. -Ground personnel will be instructed to stay clear of suspended loads. -Personnel will be instructed on proper rigging procedures. -All personnel will wear hard hats for overhead hazards. -Tools and equipment should be secured.	Air monitoring activities will be performed during this task. All monitoring activities will be performed by the Site Safety Officer using a PID meter for volatile contaminants or other meter as warranted by site contaminants. Action levels for the site contaminants will be determined in advance and stated in the site specific Health and Safety Manual. The SSO will regularly update Nobis personnel and drilling crews with air monitor readings.	Drilling oversight is intended to proceed in Level D protection as determined by Site Safety Officer based upon site contaminants and other known hazards. If significant concentrations of contaminants are present, upgrades to Level C or Level B may be necessary. **<u>LEVEL D – Minimum requirements</u>** -Standard field clothing (work shirt and long pants) -Steel toe safety shoes (ANSI Standard Z41) -Safety glasses (conforms to ANSI standard Z41) -Hardhat (conforms to ANSI Standard Z89.1) if overhead hazards are present. -ANSI Class II vest on or near roadways during the day and ANSI Class III jacket after sunset. -Hearing protection for high noise areas such as heavy equipment or a groundwater treatment plant. -Tyvek coveralls as needed. -Tyvek boot covers as needed. -Gloves appropriate to handle hazardous materials. -Impermeable boot covers as needed	<u>PERSONNEL DECONTAMINATION</u> Personnel decontamination will be performed within the site boundaries prior to personnel departing the site. This will prevent the transfer of contaminated medium off-site. -Wash and rinse outer protective equipment. -Properly dispose of gloves, Tyvek, and boots. -Wash hands and face. <u>EQUIPMENT DECONTAMINATION</u> All equipment inspection and decontamination will by the responsibility of the Site Safety Officer.
	Ambient Air Extremes	<u>Cold Stress</u> -Dress appropriately and in layers, wear proper gloves and hats. -If wet, immediately dry off, replace wet clothing and go to warm place if necessary. -Observe co-workers for signs of cold stress, frostbite, and hypothermia. -Communicate potential cold-related hazards to co-workers. -Provide warm areas for employees to rest. <u>Heat Stress</u> -Observe co-workers for signs of heat stress. -Monitor environmental conditions and the individual employees. -Provide plenty of water for employees' consumption. -Work break areas should be shaded or cooler than the work environment.			
	Hand/Power Tools	-Use all tools and equipment in accordance with manufacturers specifications -Inspect tools prior to use. -Remove broken or damaged tool. -Tools should be used for the intended purpose and properly guarded. -Wear proper safety glasses -All power tools will use a GFCI.			
	Dangerous Weather Conditions	-Review local weather reports. -Continuously check weather conditions. -Be aware of lightning in distance, comply with the 30/30 Rule. -Discontinue work if it appears that dangerous weather of lightning is approaching. -Communicate any potential dangerous weather conditions to co-workers. -Identify "safe areas" prior to field activities, if dangerous weather approaches. -In case of lightning, avoid water, open areas, tall trees, and tall metal objects.			
	Traffic Management	-Drilling is often in or beside roadways or in parking lots. -Drilling may have to be scheduled outside of rush hour or other high volume traffic times (e.g. lunch hour). -Traffic cones should be used to separate work areas from traffic. -Flaggers may be required in certain locations. -Police details may be required in certain high volume traffic locations. -Traffic control plans may be required in certain areas.			

17.4 Operations & Maintenance of Equipment

Analysis Approved By: L. Bonk **Date:** January 2010

TASK	POTENTIAL HAZARDS	CONTROL MEASURES	AIR MONITORING	PERSONAL PROTECTIVE EQUIPMENT (PPE)	DECONTAMINATON PROCEDURES
Operations and Maintenance of Equipment Systems (soil vapor extraction, groundwater treatment, among other remediation systems).	Exposure to Site Contaminants and Hazardous Materials brought on site	-Known or suspected contaminants are listed in the site specific Health and Safety Plan with the known permissible exposure limits. -Maintain Inventory of all hazardous materials brought on-site. -Maintain an up-to-date MSDS binder for all chemicals on-site. -Store materials in accordance MSDS -Don proper personal protective equipment (PPE) specified for the task. -Properly decontaminate heavy equipment, sampling and monitoring equipment, supplies, and personnel between sampling points and prior to departing the site.	Air monitoring will be at the discretion of the Site Safety Officer (SSO). All monitoring activities will be performed by the SSO using a meter appropriate for the anticipated site contaminants. SSO will regularly update Nobis personnel with readings and will modify activities if action levels are reached.	Operation and maintenance activities are intended to initiate and proceed in Level D protection. <u>LEVEL D – Minimum requirements</u> -Standard field clothing (work shirt, long pants, of coveralls) -Steel toe safety shoes (ANSI Standard Z41) -Safety glasses (conforms to ANSI standard Z41) -Hardhat (conforms to ANSI Standard Z89.1) when overhead hazards are present -ANSI Class II vest on or near roadways during the day and ANSI Class III jacket after sunset. -Hearing protection for high noise areas such as near heavy equipment or the treatment plant. -Gloves appropriate to handle hazardous materials or work gloves as appropriate.	Site contaminants are not anticipated as part of this task. Personal decontamination is not required.
	Struck by/caught between heavy equipment	-Inspect equipment daily. -Experienced operators should be used to operate equipment. -Use all equipment according to operators manual. -Ensure equipment backup alarms are operational. -Avoid equipment swing areas and blind sides. -Eye contact with operators shall be made before approaching equipment. -Personnel will understand and review hand signals. -Use seatbelts and Roll Over Protective Systems (ROPS).			
	Slips/Trips/Falls	-Keep work areas free of debris/materials. -Wear proper fitting footwear. -Mark, identify, or barricade obstructions. -Walk carefully on uneven terrain. -Continuously evaluate areas for potential causes of slips/trips/falls.			
	Noise	-Hearing protection will be worn to protect the ears in areas of high-noise levels. -Hearing protection should be worn when working for extended periods of time near the air compressors or in the treatment building while system is operating. -Hearing protection should be worn during treatment system start up. -Hearing protection should be worn when releasing pressure from any lines that are under pressure before O&M is performed.			
	Electrical Hazards	-Use Lock Out/Tag out procedures as identified in the site specific lock out/tag out schedule. -Avoid puddles -Wear insulated footwear when working on electrical components.			
	Compressed Air Equipment	-Power source to equipment should be locked/tagged out before attempting any operations and maintenance. -Residual compressed air should be released from air lines.			
	Fire Protection	-Smoking is prohibited in all work zones. -A fire extinguisher will be located on all site vehicles and heavy equipment. -Fire extinguishers will be inspected when brought on-site -When working in areas where flammable vapors may be present, care must be taken with tools and equipment that may be sources of ignition. -Personnel will be aware in fire extinguisher handling only to be used as a tool to ensure evacuation.			

17.4 Operations & Maintenance of Equipment

Analysis Approved By: L. Bonk **Date:** January 2010

TASK	POTENTIAL HAZARDS	CONTROL MEASURES	AIR MONITORING	PERSONAL PROTECTIVE EQUIPMENT (PPE)	DECONTAMINATON PROCEDURES
Operations and Maintenance of Equipment Systems (soil vapor extraction, groundwater treatment, among other remediation systems).	Sharp Objects/Cuts	-Wear work gloves to prevent cuts to hands and arms. -Keep guards in place.	Air monitoring will be at the discretion of the Site Safety Officer (SSO). All monitoring activities will be performed by the SSO using a meter appropriate for the anticipated site contaminants. SSO will regularly update Nobis personnel with readings and will modify activities if action levels are reached.	Operation and maintenance activities are intended to initiate and proceed in Level D protection. <u>LEVEL D – Minimum requirements</u> -Standard field clothing (work shirt, long pants, of coveralls) -Steel toe safety shoes (ANSI Standard Z41) -Safety glasses (conforms to ANSI standard Z41) -Hardhat (conforms to ANSI Standard Z89.1) when overhead hazards are present -ANSI Class II vest on or near roadways during the day and ANSI Class III jacket after sunset. -Hearing protection for high noise areas -Gloves appropriate to handle hazardous materials or work gloves as appropriate.	Site contaminants are not anticipated as part of this task. Personal decontamination is not required.
	Pulls, strains, hernia	-Observe proper lifting/rigging techniques. -Mechanical devices will be utilized to reduce manual handling of materials. -Use the buddy system.			
	Dropped objects	-Steel toe boots meeting ANSI Standard Z41 will be worn. -Ground personnel will be instructed to stay clear of suspended loads. -Personnel will be instructed on proper rigging procedures. -All personnel will wear hard hats meeting ANSI Standard Z89.1. -Tools and equipment should be secured.			
	Ambient Air Extremes	<u>Cold Stress</u> -Dress appropriately and in layers, wear proper gloves and hats. -If wet, immediately dry off, replace wet clothing and go to warm place if necessary. -Observe co-workers for signs of cold stress, frostbite, and hypothermia. -Communicate potential cold-related hazards to co-workers. <u>Heat Stress</u> -Observe co-workers for signs of heat stress. -Monitor environmental conditions and the employees. -Work break areas should be shaded or cooler than the work environment.			

Additional AHAs that may be pertinent to Site work are included in the Nobis Employee Health and Safety Manual. Refer to Nobis Employee Health and Safety Manual for addition AHA and safety information.

18.0 ACCIDENT AND INJURY REPORTING

18.1 Injury or Illness Reporting

The Occupational Safety and Health Administration (OSHA) regulations require recording of all job-related injuries or illnesses that require treatment beyond basic first aid or that result in either lost work time or require alteration of an employee's normal duties. Such injuries or illnesses are recorded in the OSHA 300 Log that Nobis is required to maintain.

Injuries or illnesses must be reported to the Site Safety Officer immediately and as a priority over other scheduled site activities. An injury and illness report shall then be filed with the Corporate Health and Safety Officer by the Site Safety Officer. A copy of this report should also be given to the Project Manager. If an injury or illness occurs in the office, the injured person should file a report with the Corporate Health and Safety Officer and a copy should be given to the injured person's supervisor. Injury and illness reports may also be submitted via the Nobis intranet site. Reports submitted via the intranet are routed directly to the Corporate Health and Safety Officer.

Site accidents that result in either a death or the hospitalization of three or more employees must be reported directly to OSHA within 8 hours. A Nobis Principal or the Corporate Health and Safety Officer will make this report to OSHA.

18.2 Accident Reporting

Nobis employees shall report all accidents including those that do not involve injuries. Such accidents shall be reported to the Site Safety Officer immediately and as a priority over other scheduled site activities. An accident report shall then be filed with the Corporate Health and Safety Officer by the Site Safety Officer. A copy of the accident report should also be given to the Project Manager. If an accident occurs in the office, the witness should file a report with the Corporate Health and Safety Officer. Accident reports may also be submitted via the Nobis intranet site. Reports submitted via the intranet are routed directly to the Corporate Health and Safety Officer.

18.3 Incident ("Near Hit") Reporting

In addition, as part of our ongoing program to prevent accidents, it shall be the policy of Nobis to identify potentially dangerous conditions before injuries or illnesses result. As an integral part of injury prevention, Nobis employees shall report not only injuries or accidents but also conditions that could have resulted in an injury or when a potential for injury or material loss is identified.

Such incidents shall be reported to the Site Safety Officer immediately and as a priority over other scheduled site activities. An incident report shall then be filed with the Corporate Health and Safety Officer by the Site Safety Officer. A copy of the incident report should also be given to the Project Manager. If an incident occurs in the office, the witness should file a report with the Corporate Health and Safety Officer. Incident reports may also be submitted via the Nobis intranet site. Reports submitted via the intranet are routed directly to the Corporate Health and Safety Officer.

18.4 Automobile Collision Reporting

Nobis employees may be involved in an automobile collision with their own personal vehicle, a Nobis-owned vehicle, or a leased vehicle. Collisions are to be reported immediately (from the scene, during the same day, or as soon as practicable).

- If the collision is with a personal vehicle while on company business, the employee should immediately notify their own insurance company and submit necessary paperwork with them. The Corporate Office Manager and Corporate Health and Safety Officer should also be given copies of this report.

- If the collision is with a Nobis-owned vehicle, the collision report below must be thoroughly filled out. The Corporate Office Manager and the Corporate Health and Safety Officer should be given copies of all collision forms. Copies of these forms are also in the glove compartment of each fleet vehicle.

- If the collision is with a leased vehicle, the rental company should be contacted immediately and all of their forms should be thoroughly filled out. The Corporate Office Manager and the Corporate Health and Safety Officer should be given copies of all collision forms.

18.5 Automobile Collision Procedures

- Call for medical aid if necessary.

- Call the police. All collisions, regardless of severity, must be reported to the police. If the driver cannot get to a phone, he should write a note giving location to a reliable passerby and ask him to notify the police.

- Complete the form located in each company vehicle glove compartment titled Automobile Incident Report or in the *Health and Safety Manual*. The form must be completed in full and signed by the Employee's Supervisor. Pertinent information to obtain includes: license number of other drivers; insurance company names and policy numbers of other vehicles; make, model, and year of other vehicles; date and time of collision; overall road and weather conditions; witnesses and occupants of the other vehicles, and any medical personnel who may arrive at the scene.

- Do not discuss the collision with anyone at the scene except the police. Do not accept any responsibility for the collision. Don't argue with anyone.

- Provide the other party with your name, address, driver's license number, and insurance information, which is located in the glove compartment of each company or leased vehicle.

- Immediately report the collision to the employee's supervisor, Corporate Office Manager, and Corporate Health and Safety Officer. Provide a copy of the Automobile Incident Report. There will be a formal review conducted on each collision to determine the cause and if and how the collision may have been prevented.

18.6 Employee Injury or Illness Report

This report must be completed by the Site Safety Officer and sent to the Corporate Health and Safety Officer as soon as possible. If the injury occurred in the office, the injured person will complete this report.				
Note: Whenever an Employee is Sent for Medical Treatment for any Work Related Injury or Illness, This Report **Must** Accompany that Individual.				
Name of Injured or Ill Employee:				
Home Address:				
Home Phone:				Date of Birth:
Age:	Sex:	Male: ☐	Female: ☐	Marital Status:
Social Security Number:				Date of Hire:
Employee's Job Title:				
Resource Center:				
Date of Injury or Date When Symptoms Began:				Time of Injury:
Time that Employee Began Work: _____				
Exact Location Where Injury Occurred / Or Where Symptoms Occur (including street, city, and state): _____				
Explain What Happened (include what the employee was doing at the time of the injury and how the injury occurred): _____				
Describe the injury or illness and the specific part of the body affected (i.e., laceration, right hand, third finger, second joint or skin rash): _____				
Object or substance that directly injured employee or contaminants of concern: _____				
Name and Address of the Physician (If medical attention was administered): _____				

EMPLOYEE INJURY OR ILLNESS REPORT (2 of 2 pages)

Please Attach The Physician's Written Return To Work Slip

Is the employee to lose at least one full day of work? _____

Is the employee assigned to restricted duty? _____

Number of days and hours employee usually works per week: _____

List all personal protective equipment employee was wearing and all safety devices in use at the time of the accident or illness: _____

Describe the preventive measures taken to avert a recurrence of this type of accident or illness: _____

Date when measures were implemented and by whom: _____

Name of Employee's Supervisor: _____

Name of Project Manager: _____

Name of Site Safety Officer: _____

Signature of Site Safety Officer: _____

Date of This Report: _____

I have read this report, and the contents as to how the accident/loss occurred are accurate to the best of my knowledge.

Signature: _____ Date: _____
(Injured or Ill Employee)

18.7 Accident or Incident Report

This report must be completed by the Site Safety Officer and sent to the Corporate Health and Safety Officer as soon as possible. If the accident or injury occurred in the office, the witness will complete this report.				
Name of Witness:				
Age:	Sex:	Male: ☐	Female: ☐	Date of Birth:
Social Security Number:				Date of Hire:
Date of Accident:				Time of Accident:
Exact Location Where Accident Occurred (including street, city, and state): _____				
Explain What Happened: _____				
List all personal protective equipment employees were wearing and all safety devices in use at the time of the accident: _____				
Describe the preventive measures taken to avert a recurrence of this type of accident: _____				
Date when measures were implemented and by whom: _____				
Name of Employee's Supervisor: _____				
Name of Project Manager: _____				
Name of Site Safety Officer: _____				
Signature of Site Safety Officer: _____				
Date of This Report: _____				
I have read this report, and the contents as to how the accident/loss occurred are accurate to the best of my knowledge.				
Signature: _____ (Witness)				Date: _____

18.8 Automobile Collision Report

Driver's Name:	Driver's License #:
Driver's Address, City & State:	
Vehicle Make/Model:	Vehicle Year:
Vin #:	Vehicle Plate/Tag #:

Date of Accident:	Date This Report Filed With Nobis Manager:
Was Report Filed: Yes ☐ No ☐	Was Another Vehicle Involved: Yes ☐ No ☐
Authority Contacted:	Police Report #:
Location Accident Occurred Including Street Name, City & State: _____	
Describe Accident:_____	
Was Anyone Injured: Yes ☐ No ☐	
Name, Address & Phone # of Injured Parties:_____	
Describe Damage to Your Vehicle:_____	
Describe if any damage done to any property (i.e. guard rails, house, lawn, etc): _____	
Other Driver's Name:	Other Driver's License #:
Other Driver's Address:	
Other Driver's Phone #:	Other Vehicle Make/Model:
Other Vehicle Year:	Other Vin #:
Other Vehicle Plate/Tag #:	
Other Driver's Insurance Company & Phone Number:	
Describe Damage To Other Vehicle: _____	

Witness #1 Name:	Witness #1 Phone #:
Witness #1 Address:	

AUTOMOBILE COLLISION REPORT (1 of 2 pages)

Witness #1 Statement: _____

_____

_____

_____

_____

Witness #2 Name:	Witness #2 Phone #:
Witness #2 Address:	

Witness #2 Statement: _____

_____

_____

_____

_____

If other witnesses, please add supplemental page with above information.

Employee:	Employee's Signature:	Date:

I have read this report, and the contents as to how the accident/loss occurred are accurate to the best of my knowledge.

Supervisor:	Supervisor's Signature:	Date:

I have read this report, and the contents as to how the accident/loss occurred are accurate to the best of my knowledge.

19.0 BIOLOGICAL HAZARDS SAFETY PROGRAM

During the course of any field project, there is a potential for Nobis employees to come in contact with several biological hazards such as insects, wild animals, and plants.

19.1 Insects

Insects, such as mosquitoes, ticks, bees, and wasps are prevalent at the site during certain times of the year. Any employee who is allergic to bee/wasp or other insect stings should inform the Site Safety Officer prior to starting work. If a bee/wasp sting occurs to an allergic individual they must be transported immediately to the nearest emergency room for treatment. Do not wait until allergic symptoms develop. The medical staff at the emergency room should be informed of the condition prior to arrival so that necessary steps may be taken to prepare for this type of medical emergency.

Ticks can transmit several diseases, including Lyme disease and Rocky Mountain Spotted Fever. Ticks adhere tenaciously to the skin or scalp. In high grass or weed areas, consideration should be given to taping pant legs to socks to prevent entry of ticks under clothing. Workers should perform self-examinations for the presence of ticks or symptoms related to tick-borne diseases.

Workers are encouraged to use insect repellent when working in areas where insects may be present. Light clothing and insect netting are helpful in reducing your chance of being bitten. Additional precautions can also be obtained by the use of protective chemicals such as DEET and/or Permethrin. Both of these chemicals can be obtained in spray form by contacting the Nobis Corporate Health and Safety Officer.

19.2 Ticks and Lyme Disease

Lyme disease is caused by infection from a deer tick that carries a bacterial spirochete. During the painless tick bite, the spirochete may be transmitted into the bloodstream, which could lead to the worker contracting Lyme disease. Early signs may include an expanding circular skin rash (bull's-eye), a flu-like illness, or joint pain. Symptoms can include a stiff neck, chills, fever, sore throat, headache, fatigue, or joint pain. Ticks are most active between May and October depending on temperature and weather conditions. In general, May and June are the most active months for deer ticks.

Scientific literature indicates that it may take up to three days, after the tick starts to feed, for the spirochete to be transmitted from the tick to its host (human). It is recommended that personnel check themselves and co-employees whenever in areas that could harbor deer ticks, wear light color clothing, and visually check themselves when coming from wooded or vegetated areas. A warm shower is recommended after returning from the field to help find attached ticks and wash off any unattached ticks. The Site Safety Officer and Nobis Corporate Health and Safety Officer should be contacted immediately if a deer tick bite is suspected. Place the tick into a clean dry vial or other suitable means that will preserve the tick for future identification.

19.3 Mosquitoes and West Nile Virus

West Nile Virus (WNV) is a mosquito-borne disease that can infect humans, birds, horses, and other mammals. In most humans, WNV infection can cause a mild flu like illness, or may cause no symptoms at all. However, in some cases, particularly among the elderly, it can cause severe neurological diseases such as encephalitis or meningitis.

From June through October wear protective clothing such as long pants and long sleeved shirts, particularly between dusk and dawn when mosquitoes are searching for a blood meal. Also, avoid shaded, bushy areas where mosquitoes like to rest. Limit outdoor evening activity, especially at dusk and dawn when mosquitoes are most active. Use of insect repellent containing DEET helps reduce exposure to mosquitoes.

19.4 Rodents

Rodents have the potential for exposure to microbiological hazards such as viruses, bacteria, and molds. Personnel shall avoid disturbing small rodent nesting areas and shall keep work areas free of food supplies that would attract mice. The liquid and solid excrement of field mice can carry the Hanta virus that can cause infection through inhalation of contaminated dusts.

19.5 Snakes

There are few poisonous snakes in New England. In rocky outcrops, one may find isolated communities of timber rattlesnakes. In parts of southern New England, copperheads may exist. The majority of snake species are not poisonous. The northern brown water snake is a

common and aggressive snake. However, it is not poisonous. All snakes should be avoided and there should be no attempts to catch or touch a snake.

19.6 Poisonous Plants

Plants such as poison ivy, poison oak, and poison sumac may be present at any site. Poison ivy is in the form of a vine while poison oak and poison sumac are bush-like. All of these plants can produce a delayed allergic reaction causing various levels of discomfort. The plant tissues have an oleoresin, which is active in live, dead, and dried plants during all seasons. The oleoresin may be carried through smoke, dust, contaminated clothing, and pet hair. Smoke is particularly harmful due to the smoke's ability to penetrate clothing and be inhaled into the throat and lungs. Workers should be trained during site-specific training and as part of a daily safety briefing with periodic reinforcement to recognize these plants and to minimize contact with them. If you suspect that you have been exposed, wash your hands with soap and water immediately, and before you touch any other part of your body, such as rubbing your eyes, or during use of the restroom.

20.0 WEATHER HAZARDS SAFETY PROGRAM

Lightning, ultraviolet radiation, heat, and cold stress are all hazards created by the weather. The following information will help you better prepare for these hazards.

20.1 Lightning

The potential for electrical storms with lightning can be a hazard during field operations. Field personnel should be aware of the forecasted weather during field operations and be alert to the potential for electrical storms. Even electrical storms with comparatively light rainfall may be dangerous. The National Oceanic and Atmospheric Administration (NOAA) recommend the 30/30 Rule to minimize the chance of injuries caused by lightning during a thunderstorm. NOAA describes the 30/30 Rule as: Safe shelter must be reached completely in all situations before a flash is 6 miles away or "30" seconds flash-to-bang. Work should not resume until "30" minutes have passed since the last lightning strike. The distance from a lightning strike can be estimated by utilizing the "flash-to-bang" method by counting the number of seconds between the time that the lightning flash is seen and the thunder is heard and applying the rule of five seconds per mile.

If caught in a storm, do not be an isolated tall object and do not be near an isolated tall object (e.g., a tree). Know where safe shelter is located and leave enough time to reach it. The best shelter is a substantial grounded building with plumbing and wiring. A structure with only a roof and supports and no plumbing or wiring such as a tent or gazebo is an ungrounded tall object and is very unsafe. A vehicle with a metal roof with the windows rolled up is not as safe as a grounded structure, but is much safer than no shelter or an ungrounded shelter.

20.2 Ultraviolet Radiation

Exposure to ultraviolet radiation (UV) from sunlight is the most persistent and pervasive hazard encountered by field personnel. All field operations, regardless of the season, have at least a potential for UV exposure. Long term UV exposure has been linked to premature skin aging, skin cancer, and cataracts. Field personnel should maintain awareness of UV exposure and be prepared to utilize hats, UV protective sunglasses, and sunscreen with a solar protection factor rating (SPF) of greater than 15.

20.3 Heat Stress

Heat stress can occur in environments where the ambient temperature is as low as 75°F depending on humidity, radiant heat, solar intensity, work schedules, employee's health, and use of personal protective equipment. Individual employees vary greatly in their ability to withstand heat stress. The most important factors for heat stress include physical conditioning, general health status, and acclimatization to heat environments, weight, job demands, and age. The classic symptoms and treatment of heat stress include:

- *Heat Rash* is due to blockage of sweat glands. This is often perceived as a tingling or burning sensation on the skin. Recommended treatment is removal to a cool environment. Cool showers and gentle drying may help.

- *Heat Cramps* is the occurrence of intense and painful cramps in the skeletal and abdominal muscles often caused by salt depletion due to heavy sweating. Prevention consists of maintaining adequate salt intake through a balanced diet. Supplemental fluids containing minerals may also help (such as fruit juices, Gatorade, etc.). Do not consume caffeine or alcoholic beverages.

- *Heat Exhaustion* is general feelings of fatigue culminating with circulatory insufficiency due to dehydration. The skin is wet and pale. Nausea and fainting may occur but the body temperature is not unusually elevated. Treatment consists of placing the patient in a cool environment and providing water.

- *Heat Stroke* is the failure of the temperature regulatory system. Medical attention is required immediately to avoid fatalities or possible brain damage. Symptoms of heat stroke include elevated body temperature (>104°F) often accompanied with hot, dry skin with decreased or no sweating. Treatment consists of immediate reduction of body core temperature (ice, water, fanning) and immediate medical attention.

When heat stress conditions are suspected, it is important to monitor environmental conditions and the employees. Impervious work clothing interferes with man's primary cooling mechanism: evaporative cooling of sweat. As the sweat cannot evaporate, heat storage and elevated body temperature could be expected at much lower ambient temperatures, probably better correlated with work level and intensity than ambient temperature.

The most common and universally applicable control for management of heat stress involves adjustment of workloads and work rest scheduling. Work break areas should be shaded or cooler than the work environment. Cool, potable water should be immediately available. Mineral supplemented water (e.g., Gatorade) may be found more acceptable to employees under hot conditions. Once acclimatized, employees are generally able to obtain adequate minerals (and salt) from a well balanced diet.

Extreme conditions of temperature, humidity, or impervious protective clothing warrant provision of additional cooling measures (e.g., fans, field showers, and possibly artificially cooled suits).

20.4 Cold Stress

Exposure to cold environments can result in reduced mental alertness, confusion, irritability, and loss of consciousness. These effects are due to a lowering of the body's core temperature and can occur even if exposure is to air (or water) above freezing temperature (32°F). Bodily extremities are at risk of frost bite when temperatures in the work environment are below freezing. The classic symptoms and treatment of cold stress include:

- *Frostbite* is the freezing of skin or deeper tissues. The skin looks waxy and white, gray, yellow, or bluish. Move the victim out of the cold. Hold the frostbitten area with your hands to warm it. Warm the frostbitten area in lukewarm water. Seek medical attention for severe cases.

- *Hypothermia* is the result of a drop in core body temperature. The shivering may be uncontrollable and the victim may seem apathetic, confused, or irrational. The victim may be lethargic or clumsy. The skin is cool and pale. Get the victim out of the cold and remove any wet clothing. Have the victim lie down and cover with blankets. Seek medical care even in mild cases.

To prevent cold stress provide appropriate clothing (including face, hand and foot coverings), schedule periodic warm-up breaks in heated shelters, and carefully monitor employees. Work in temperatures below freezing requires special protection of extremities through face and head covers, insulated gloves, and boots. Undergarments should also be breathable to encourage sweat evaporation. Special weaves of synthetic or wool socks encourage wicking away of sweat from inner to outer layers.

Periodic warm-up breaks in heated shelters should be scheduled for work below 20°F. The frequency of breaks should be increased, and the duration between breaks should be shortened as temperature decreases, wind chill increases, or employee's exhibit symptoms of cold stress.

21.0 HAZARD COMMUNICATION PROGRAM

21.1 Purpose

This document serves as the Nobis Hazard Communication Program for chemicals. It provides detailed safety guidelines and instructions for receipt, use, and storage of chemicals at Nobis offices and job site locations by employees and contractors.

21.2 Responsibilities

21.2.1 Safety Committee

- Ensure compliance with this program.
- Conduct immediate corrective action for deficiencies found in the program.

- Maintain an effective Hazard Communication training program.
- Make this plan available to affected employees.

21.2.2 Corporate Health and Safety Officer

- Maintain a list of hazardous chemicals using the identity that is referenced on the Material Safety Data Sheets (MSDS).
- Monitor the effectiveness of the program.
- Conduct an annual audit of the program.
- Monitor employee training to ensure effectiveness.
- Ensure MSDSs are available as required.
- Monitor facility for proper use, storage, and labeling of chemicals.
- Provide information concerning health effects and exposure symptoms listed on MSDSs.

21.2.3 Project Managers

- Comply with all requirements of the program including purchasing proper equipment.
- Provide specific chemical safety training for assigned employees.
- Ensure chemicals are properly used, stored, and labeled.

21.2.4 Site Safety Officers

- Ensure only the minimum amount of chemicals is kept in the offices and at job locations.
- Ensure up to date MSDSs are readily accessible to all employees.
- Ensure all containers are properly labeled and that labels are not removed or defaced.
- Ensure all shipped chemical containers are properly labeled and packaged.

21.2.5 Employees

- Comply with chemical safety requirements of this program.
- Report any problems with storage or use of chemicals.
- Immediately report spills of chemicals.
- Use only those chemicals for which they have been trained.
- Use chemicals only for specific assigned tasks and in the proper manner.

21.3 Training Requirements

Some chemicals are explosive, corrosive, flammable, or toxic. Other chemicals are relatively safe to use and store but may become dangerous when they interact with other substances. To avoid injury and/or property damage, persons who handle chemicals in any area must understand the hazardous properties of the chemicals. Before using a specific chemical, safe handling methods and health hazards must always be reviewed. Project Managers are responsible for ensuring that the equipment needed to work safely with chemicals is accessible and maintained for all employees.

21.3.1 Initial Orientation Training

All new employees shall receive safety orientation training covering the elements of the HAZCOM Program as required by their specific job duties. This training will consist of:

- Location of the written Hazard Communication Program.
- Location of the list of chemicals used in the workplace.
- Methods used to detect the presence or release of a hazardous chemical in the workplace.
- The specific physical and health hazard of all chemicals in the workplace.
- Specific control measures for protection from physical or health hazards.
- Explanation of the chemical labeling system.
- Location and use of MSDSs.

21.3.2 Job Specific Training

Employees will receive on the job training from their supervisor, Project Manager, site safety officer or other designee. This training will cover the proper use, inspection, and storage of necessary personal protective equipment and chemical safety training for the specific chemicals they will be using or will be working around.

21.3.3 Non-Routine Tasks

Non-routine tasks are defined as working on, near, or with unlabeled piping, unlabeled containers of an unknown substance, confined space entry where a hazardous substance may be present and/or a one-time task using a hazardous substance differently than intended

(example: using a solvent to remove stains from tile floors). The following steps must be implemented:

- Hazard determination.
- Determine precautions such as engineering controls, administrative controls, or personal protective equipment.
- Specific training for this non-routine task.
- Perform task.

21.4 Chemical Use and Labeling

21.4.1 General Chemical Safety

Assume all chemicals are hazardous. The following general safety rules shall be observed when working with chemicals:

- Read and understand the Material Safety Data Sheets (MSDS).
- Keep the work area clean and orderly.
- Use the necessary safety equipment.
- Carefully label every container with the identity of its contents and hazard warnings.
- Store incompatible chemicals in separate areas.
- Substitute less toxic materials whenever possible.
- Limit the volume of flammable material to the minimum needed for operation periods.
- Provide means of containing the material if containers should break or spill contents.
- Maintain the smallest inventory of chemicals to meet immediate needs.
- Periodically review stock of chemicals on hand.
- Ensure that storage areas, or equipment containing large quantities of chemicals, are secure from accidental spills.
- Rinse emptied bottles that contain chemicals before disposal.
- Recycle unused laboratory chemicals wherever possible.
- *DO NOT* place hazardous chemicals in garbage receptacles.
- *DO NOT* pour chemicals onto the ground.
- *DO NOT* dispose of chemicals through the storm drain system.
- *DO NOT* dispose of chemicals down sinks.

21.4.2 Container Labels

It is extremely important that all containers of chemicals are properly labeled and the following requirements apply:

- All containers will have the appropriate label, tag or marking prominently displayed that indicates the identity, safety, and major health hazards.

- Portable containers which contain a small amount of chemical need not be labeled if they are used immediately, but they must be under the strict control of the employee using the product.

- All warning labels must be maintained in a legible condition and not be defaced.

21.5 Chemical Transportation and Storage

21.5.1 Off-Site Use or Transportation of Chemicals

An MSDS will be available to employees for each chemical used off site. All State and Federal Department of Transportation Regulations will be followed including use of certified containers, labeling, and marking, securing of containers and employee training.

21.5.2 Chemical Storage

The separation of chemicals (solids or liquids) during storage is necessary to reduce the possibility of unwanted chemical reactions caused by accidental mixing. Explosives should be stored separately outdoors. Use either distance or barriers to isolate chemicals into the following groups:

- Flammable Liquids: Store in approved flammable storage cabinets.
- Acids: Store separately from bases, oxidizers, and flammable liquids.
- Bases: Do not store bases with acids or any other materials.

Chemicals are not to be stored in the same refrigerator used for food storage. Incompatible chemicals should not be stored together. A label on the door must appropriately identify

refrigerators used for storing chemicals. Flammable liquids are not allowed to be stored in any electrical refrigeration device.

21.6 Chemical Emergencies and Spills

In case of an emergency, implement the Emergency Action Plan:

- Evacuate people from the area.
- Isolate the area.
- If the material is flammable, turn off ignition and heat sources.
- Only personnel specifically trained in emergency response are permitted to participate in chemical emergency procedures beyond those required to evacuate the area.

21.7 Material Safety Data Sheet Information

Material Safety Data Sheets are compiled by the chemical manufacturer to provide additional information concerning safe use of the product. Each MSDS provides:

- Common name and chemical name of the material.
- Name, address, and phone number of the manufacturer.
- Emergency phone numbers for immediate hazard information.
- Date the MSDS was last updated.
- List of hazardous ingredients.
- Chemical hazards of the material.
- Information for identification of chemical and physical properties.
- Fire and/or explosion Information.
- Material flash point, auto-ignition temperature and upper/lower flammability limits.
- Proper fire extinguishing agents to be used.
- Fire fighting techniques.
- Any unusual fire or explosive hazards such as conditions and other materials that can cause reactions with the chemical and dangerous substances that can be produced when the chemical reacts.
- Engineering controls required for safe product use.
- Personal protective equipment required for use of product.
- Safe storage requirements and guidelines.

- Safe handling procedures.
- Permissible Exposure Limit (PEL) and Threshold Limit Value (TLV).
- Acute or chronic symptoms of exposure.
- Main routes of entry into the body.
- Cancer causing properties if any.
- Emergency and First Aid treatments.
- Spill and leak clean up techniques.
- Personal Protective Equipment to be used during cleanup.
- Disposal of waste & cleanup material.

21.7.1 Employee Use of Material Safety Data Sheet

- Know the location of the MSDS.
- Understand the major points for each chemical.
- Check MSDS when more information is needed or questions arise.
- Be able to quickly locate the emergency information on the MSDS.
- Follow the safety practices provided on the MSDS.

21.7.2 Contractors

All outside contractors are required to follow the requirements of this program. Nobis will provide contractors information on:

- Precautions to be taken to protect contractor employees.
- Potential exposure to hazardous substances.
- Chemicals used in or stored in areas where they will be working.
- Location and availability of Material Safety Data Sheets.
- Recommended Personal Protective Equipment.
- Labeling system for chemicals.

22.0 CHEMICAL HAZARDS EXPOSURE

Chemical exposures can cause illness and injury due to both acute and chronic toxic effects. Acute effects manifest themselves in a time frame ranging from seconds to days. Chronic

effects occur only after repeated long-term exposures. A single chemical may have both acute and chronic toxic effects that vary depending on the level, time, and route of exposure.

Toxicological effects can be further described on the basis of the mechanisms by which they affect the human body:

- Carcinogenic substances cause cancer or malignant tumors.
- Mutagenic substances alter DNA, causing reproductive mutations.
- Teratogenic substances cause birth defects.
- Asphyxiants interfere with the body's ability to absorb oxygen.
- Immunotoxins poison the immune system.
- Neurotoxins poison the nervous system.
- Corrosives destroy body tissues.
- Irritants cause tissue irritation.
- Sensitizers initiate allergic reactions.
- Systemic Toxins effect the functioning of cells in one or more body systems.

Exposure to hazardous chemicals can result from:

- Inhalation: chemicals enter the body by way of the lungs.
- Absorption: chemicals are absorbed through the skin.
- Ingestion: chemicals enter the body by being swallowed.
- Injection: chemicals enter through a puncture wound, such as a nail or splinter.

In addition to toxicological effects, chemicals present on a site may create risks of physical injury as a result of burns, explosion, or freezing.

Major routes of exposure:

- Organic solvents are generally quite volatile; therefore, inhalation is the primary route of entry into the body. Many organic solvents are also readily absorbed through the skin.
- Gasoline is also quite volatile (inhalation hazard) and contains components which are readily absorbed through the skin.

- Ingestion exposure is possible for all contaminants if sanitation practices are poorly maintained.

Symptoms of Exposure/Potential Health Effects:

- The symptoms of exposure to organic solvents include dizziness, loss of coordination, confusion, headache, nausea, abdominal pain, and general malaise. Symptoms may be very mild or severe depending on the degree of chemical toxicity and magnitude of exposure. Severe over-exposure can cause loss of consciousness (fainting) and may result in potentially serious health effects.

- Specific organic solvents may differ from one another in their toxicological properties but, as a group, organic solvents are associated with the following health effects: Skin contact can result in drying, cracking, and irritation of the skin. Short-term heavy exposure or repeated low-level exposures may result in liver, kidney, neurological, circulatory, respiratory, or reproductive damage. In addition, certain organic solvents are classified as mutagens, teratogens, and/or carcinogens.

- Gasoline is considered generally less toxic than many organic solvents, but, in high doses can cause similar health effects. Furthermore, gasoline contains certain very toxic components such as benzene (a carcinogen).

To prevent exposure to any hazardous material, engineering controls, administrative controls, or personal protective equipment should be utilized. Engineering controls which physically eliminate the hazardous substance are the preferred method. Administrative controls which remove or substantially reduce the risk of exposure are second choice. In the third and final choice is personal protective equipment.

Some examples of engineering controls are: ventilation, remote operation, and personnel enclosures. Administrative controls are training programs and standard operating procedures. Personal protective equipment is clothing or respirators.

23.0 PERSONAL PROTECTION EQUIPMENT PROGRAM

Nobis shall assure that personnel protection equipment (PPE) is available to and used by employees assigned to particular activities. The specific Activity Hazard Analysis shall include a specification for the minimum level of PPE to be used for each anticipated task.

Each article of PPE is designed to protect the worker against specific hazards. It is important to identify the hazards in a task and work area to select the PPE that will provide an effective defense.

PPE protects against:

- Impact (head, feet, bones)
- Sharp objects (skin, eyes)
- Penetration (head, skin, feet)
- Heat (skin, entire body)
- Cold (skin, entire body)
- Noise (ears)
- Harmful dust (eyes, respiratory system)
- Light radiation (eyes)
- Falling objects (head, feet, bones)
- Pinch points (fingers, hands)
- Flying objects (eyes)
- Chemicals (skin, respiratory system, eyes)

Maintaining adequate supplies of PPE shall be the primary responsibility of the Technical Field Equipment Manager. This PPE includes nitrile gloves, work gloves, tyvek suits, boot covers, safety glasses, sun shield safety glasses, ear plugs, hard hats, and traffic vests. Specialized PPE will be ordered on a per project basis.

Employees are expected to provide their own steel toe boots, long pants, long sleeve shirts, outerwear (including cold weather gloves), rain gear, and prescription eyewear. To assist with purchasing this clothing, Nobis Engineering, Inc. will provide $100.00 per year per field employee.

Selection of the appropriate PPE is a complex process which should take into consideration a variety of factors. Key factors involved in this process are identification of the hazards, or suspected hazards; their routes of potential exposure to employees (inhalation, skin absorption, ingestion, and eye or skin contact); and the performance of the PPE materials (and seams) in providing a barrier to these hazards. The amount of protection provided by PPE is material-hazard specific. That is, protective equipment materials will protect well against some hazardous substances and poorly, or not at all, against others. The manufacturer is the most knowledgeable source about the PPE that they sell. This is particularly the case with gloves. To determine the most adequate glove for a hazardous substance, employees should always verify the permeation rates with the manufacturer. Most manufacturers have detailed web sites to assist with this process.

The durability of PPE materials, such as tear strength and seam strength, should be considered in relation to the employee's tasks. The effects of PPE in relation to heat stress and task duration are a factor in selecting and using PPE. In some cases layers of PPE may be necessary to provide sufficient protection, or to protect expensive PPE inner garments, suits, or equipment.

The more that is known about the hazards at the site, the easier the job of PPE selection becomes. As more information about the hazards and conditions at the site becomes available, the Site Safety Officer can make decisions to up-grade or down-grade the level of PPE protection to match the tasks at hand.

Employees shall be trained on:

- PPE selection based upon site hazards.
- PPE use and limitations of the equipment.
- PPE maintenance and storage.
- PPE decontamination and disposal.
- PPE proper fitting.
- PPE donning and doffing procedures.
- PPE inspection procedures prior to, during, and after use.
- Evaluation of the effectiveness of the PPE program.

- Limitations during temperature extremes, heat stress, and other appropriate medical considerations.

Obtaining and maintaining adequate types and amounts of PPE for specific job sites shall be the responsibility of the Site Safety Officer in consultation with the Project Manager. This PPE includes respirators with appropriate cartridges, fall arrest equipment, chemical-resistant gloves, aprons, chemically resistant suits, goggles, face shields, and personal flotation devices. It should be noted that on many, if not most Nobis job sites, the Project Engineer assumes the responsibilities of the Site Safety Officer when a separate Site Safety Officer is not assigned. The Project Engineer then has the primary responsibility of obtaining and using appropriate PPE for the site as defined by this Manual or a site specific Health and Safety Plan.

23.1 Chemically Resistant Clothing

- Normal white Tyvek® coveralls are acceptable for many hazardous waste sites so long as there is a minimal risk of liquid splash.

- If liquids are a concern, upgrade to poly-coated Tyvek®. Be aware of compatibility issues for polyethylene coatings with anticipated site chemicals, especially if free product oils, fuels, or solvents may be present.

- Hooded Tyvek® is essential for sampling at sites where friable asbestos is present.

23.2 Foot Protection

- Foot protection should be worn at all times whenever a potential for foot injury exist at a work site. Foot protection must be worn when entering new sites as well as sites that are known to contain hazards. Heavy leather boots with toe and shank protection should be considered minimal protection whenever walking on surfaces that might pose a danger.

- Safety toe footwear is worn to prevent crushed toes when working around heavy equipment or falling objects.

- Soles should be slip-resistant and puncture-resistant.

- Chemical protective boot covers are also required to protect against chemical contamination when chemical hazards are known or anticipated to be present.

23.3 Glove Materials

- Gloves should fit snugly.
- Employees should wear the right glove for the right job.
- Nitrile surgical gloves offer a minimal level of protection for handling soil or water samples with minimal levels of contamination.
- Latex surgical gloves offer levels of chemical resistance comparable to nitrile surgical gloves but are less resistant to tears and punctures.
- If soil or groundwater showing evidence of contamination is encountered, over gloves should be used in addition to the surgical gloves.
- In cold weather, polypropylene liners used under gloves offer a measure of warmth while still allowing for reasonable chemical protection.
- Be sure to check the chemical compatibility of glove materials with known site contaminants when selecting PPE, especially if free product hazardous materials are likely to be present. Manufacturer's websites are the best sources of information.

23.4 Eye Protection

- Eye protection with side shields (ANSI Z-87.1 approved) must be worn in active work areas. In particular, eye protections should be worn when using hand or power tools.
- Chemical splash goggles shall be worn when handling liquid chemicals.

23.5 Hearing Protection

- Hearing protection shall be used whenever heavy equipment operations (including drilling) are taking place unless site monitoring has demonstrated that noise levels do not exceed 85 decibels on a time weighted eight hour average. Hearing protection shall also be required during other tasks associated with high noise levels, such as power equipment use.

- Either ear plugs or ear muffs may be used, at the discretion of the worker and the Site Safety Officer.

- In selecting the appropriate hearing protection, consider compatibility with other equipment. For example, ear muffs may interfere with hard hats or prevent proper respirator fit.

- Disposable ear plugs are preferred at sites where equipment decontamination is a concern as non-disposable ear muffs may be difficult to thoroughly decontaminate.

23.6 HAZWOPER Levels A, B, C, and D

23.6.1 Level A Protection

- Positive pressure, full face-piece self-contained breathing apparatus (SCBA), or positive pressure supplied air respirator with escape SCBA, approved by the National Institute for Occupational Safety and Health (NIOSH)
- Totally-encapsulating chemical-protective suit
- Coveralls (1)
- Long underwear (1)
- Gloves, outer, chemical-resistant
- Gloves, inner, chemical-resistant
- Boots, chemical-resistant, steel toe and shank
- Hard hat (under suit) (1)
- Disposable protective suit, gloves and boots (depending on suit construction, may be worn over totally-encapsulating suit)

23.6.2 Level B Protection

- Positive pressure, full-face piece self-contained breathing apparatus (SCBA), or positive pressure supplied air respirator with escape SCBA (NIOSH approved)
- Hooded chemical-resistant clothing (overalls and long-sleeved jacket; coveralls; one or two-piece chemical-splash suit; disposable chemical-resistant overalls)
- Coveralls (1)
- Gloves, outer, chemical-resistant
- Gloves, inner, chemical-resistant
- Boots, outer, chemical-resistant steel toe and shank

- Boot-covers, outer, chemical-resistant (disposable) (1)
- Hard hat (1)
- Face shield (1)

23.6.3 Level C Protection

- Full-face or half-mask, air purifying respirators (NIOSH approved)
- Hooded chemical-resistant clothing (overalls; two-piece chemical-splash suit; disposable chemical-resistant overalls)
- Coveralls (1)
- Gloves, outer, chemical-resistant
- Gloves, inner, chemical-resistant
- Boots (outer), chemical-resistant steel toe and shank (1)
- Boot-covers, outer, chemical-resistant (disposable) (1)
- Hard hat (1)
- Escape mask (1)
- Face shield (1)

23.6.4 Level D Protection

- Coveralls
- Gloves (1)
- Boots/shoes, chemical-resistant steel toe and shank
- Boots, outer, chemical-resistant (disposable) (1)
- Safety glasses or chemical splash goggles (1)
- Hard hat (1)
- Escape mask (1)
- Face shield (1)

Footnote (1) Optional, as applicable.

23.7 The Types of Hazards for Levels A, B, C, and D Protection

23.7.1 Level A – Protection Should Be Used When:

A. The hazardous substance has been identified and requires the highest level of protection for skin, eyes, and the respiratory system based on either the measured (or potential for) high concentration of atmospheric vapors, gases, or particulates; or the site operations and work functions involve a high potential for splash, immersion, or exposure to unexpected vapors, gases, or particulates of materials that are harmful to skin or capable of being absorbed through the skin;

B. Substances with a high degree of hazard to the skin are known or suspected to be present, and skin contact is possible; or

C. Operations must be conducted in confined, poorly ventilated areas, and the absence of conditions requiring Level A has not yet been determined.

23.7.2 Level B – Protection Should Be Used When:

A. The type and atmospheric concentration of substances have been identified and require a high level of respiratory protection, but less skin protection;

B. The atmosphere contains less than 19.5 percent oxygen; or

C. The presence of incompletely identified vapors or gases is indicated by a direct-reading organic vapor detection instrument, but vapors and gases are not suspected of containing high levels of chemicals harmful to skin or capable of being absorbed through the skin.

Note: This involves atmospheres with Immediately Dangerous to Life and Health (IDLH) concentrations of specific substances that present severe inhalation hazards and that do not represent a severe skin hazard; or that do not meet the criteria for use of air-purifying respirators.

23.7.3 Level C – Protection Should Be Used When:

A. The atmospheric contaminants, liquid splashes, or other direct contact will not adversely affect or be absorbed through any exposed skin;
B. The types of air contaminants have been identified, concentrations measured, and an air-purifying respirator is available that can remove the contaminants; and
C. All criteria for the use of air-purifying respirators are met.

23.7.4 Level D – Protection Should Be Used When:

A. The atmosphere contains no known hazard; and
B. Work functions preclude splashes, immersion, or the potential for unexpected inhalation of or contact with hazardous levels of any chemicals.

Note: As stated before, combinations of personal protective equipment other than those described for Levels A, B, C, and D protection may be more appropriate and may be used to provide the proper level of protection.

24.0 RESPIRATOR PROTECTION PROGRAM

A respirator is a protective face piece, hood, or helmet that is designed to protect the wearer against a variety of harmful airborne agents or oxygen deficient air. Respirators will be provided by Nobis when engineering controls or administrative controls cannot lower the contaminants beneath the permissible exposure limits. Respirators will be used when necessary to protect the health of the employee.

24.1 Requirements for Medical Clearance

In order to use a respirator for any project, the employee must first have a letter of certification from qualified medical personnel stating that they are able to use a respirator. As part of the medical surveillance, medical personnel will review a respirator questionnaire and perform a pulmonary function test as appropriate. Any Nobis employee that is required to wear a respirator or elects to wear a respirator must be included in the Respiratory Protection Program explained in this section.

24.2 Respirator Fit Test Protocol

Individuals who use a respirator on a regular basis will be assigned a full or half face respirator (as appropriate to individual duties) for personal use. Nobis personnel are authorized to use only respirators of the brand, model, and size for which they have been test fitted.

Employees who may be required to use a respirator shall be fit tested for the particular type of respirator. Normally, this fit test is performed by the medical provider at the time of the annual medical surveillance physical. Fit tests must be performed at least on an annual basis.

One of the following conditions will invalidate a “pass” fit test:

1. A body weight gain or loss of ten pounds or more.
2. Facial surgery
3. Dental work effecting face shape.
4. Facial injury or illness affecting face shape.
5. Facial hair

24.3 Respirator Selection

Respirator selection for a particular job site should be performed using appropriate technical guidance for the contaminants present. The Project Manager, Site Safety Officer, and Corporate Health and Safety Officer will review the site contaminants and possible exposures and will decide upon the correct respirator and respirator cartridges as part of the activity hazard analysis. All respirators, filters, and cartridges will be certified by the National Institute of Occupational Safety and Health (NIOSH). In general, Nobis uses air purifying respirators with disposable cartridges.

Chemical and physical properties of the contaminant, as well as the toxicity and concentration of the hazardous material and the amount of oxygen present, must be considered in selecting the proper respirators. The nature and extent of the hazard, work rate, area to be covered, mobility, work requirements and conditions, as well as the limitations and characteristics of the available respirators also are selection factors. These factors will all be examined as part of the site specific activity hazard analysis.

Nobis does not currently own or use respiratory protection equipment suitable for use at sites where respiratory protection in the form of airlines or self-contained breathing apparatus (SCBA) is required. Consult with the Corporate Health and Safety Officer if respiratory protection other than air purifying respirators is anticipated as a site work requirement.

24.4 Respirator Training

Respirator training will be required at least annually. The training will include at a minimum:

1. The nature of the respiratory hazard.
2. Engineering and administrative controls being used to mitigate the respiratory hazard.
3. Why the respirator is necessary and how improper fit, use, or maintenance can compromise its protective effect.
4. Limitations and capabilities of the respirator.
5. Effective use in emergency situations.
6. How to inspect, put on and remove, use and check the seals.
7. Maintenance and storage.
8. Recognition of medical signs and symptoms that may limit or prevent effective use.
9. General requirements of OSHA's respirator standard, 29 CFR 1910.134.

The employee will be trained by the Site Safety Officer or other knowledgeable person. Each employee is required to perform a user seal check each time before use. In addition, Nobis employees using respirators will have either HAZWOPER training and/or asbestos training.

24.5 Worksite-specific Procedures

Nobis employees do not work in areas that are Immediately Dangerous to Life and Health (IDLH). Respirators are normally worn for the following site specific projects: asbestos sampling, asbestos project monitoring, intrusive activities where soil or groundwater vapors are occasionally above the permissible exposure limit, and handling investigative derived waste.

The cartridges will be changed according to the manufacturer's recommendation for each particular contaminant.

24.6 Respirator Use, Cleaning, Maintenance, and Repair

The individual assigned a respirator will have full responsibility for proper maintenance and storage of the respirator. After each use, respirators should be washed with mild soap and warm water, and dried with a lint free cloth. The respirator should be disinfected with a disinfectant solution. Do not use organic solvents or alcohol as these may degrade the respirator rubber components.

Remove used cartridges and dispose of them properly before storing the respirator. Respirators should be thoroughly dried before being stored. Respirators should be stored in a resealable plastic bag away from direct sunlight, damaging chemicals, or temperature extremes. Respirators should not be stacked for storage or placed where other equipment is likely to be placed on top of the respirator. Minor repairs may be made by the user according to manufacturer's instructions and using only manufacturer's approved replacement parts. All manufacturers' specific procedures will be followed.

Prior to each use:

- Inspect the face piece for pliability, cracks, or any signs of deterioration.
- Inspect the headbands for elasticity.
- Be sure the appropriate canister is securely in place.
- Perform positive and negative pressure fit tests.

24.7 Work Area Surveillance

Inspection of the work area must be periodically conducted and documented to ensure the chosen level of respiratory protection is appropriate to site conditions. Surveillance is accomplished through visual inspection and site monitoring with appropriate contaminant monitoring equipment. The Site Safety Officer is responsible for providing ongoing surveillance of the site conditions.

24.8 Respirator Protection Program Evaluation

The Corporate Health and Safety officer will routinely audit sites where employees are using respirators. Based upon observations and questions of the employees, the program effectiveness will be evaluated on at least an annual basis.

25.0 HEARING CONSERVATION PROGRAM

The Nobis Hearing Conservation Program is to prevent hearing loss from on the job noise exposure. It is administered by the Corporate Health and Safety Officer. The OSHA hearing conservation regulation requires employers to monitor noise exposure levels in a way that accurately identifies employees exposed to noise at or above 85 decibels (dB) averaged over 8 working hours, or an 8-hour time weighted average (TWA). The noise exposure measurement must include all continuous, intermittent, and impulsive noise within an 80 dB to 130 dB range and must be taken during a typical work situation. Employers must repeat monitoring whenever changes occur that may increase noise exposure.

Noise is a potential hazard associated with the operation of heavy equipment including drill rigs, power tools, pumps, and generators. It is usually safe to assume that if you need to shout to be heard at an arm length, the noise level is at 85 dB or above. Engineering controls should be utilized whenever possible to reduce noise levels below the 85 dB level at any site. In some cases, the control is simply moving farther away from the equipment making the noise. Nobis personnel rarely need to operate equipment and are normally only observing operations.

If engineering controls are not possible during field operations, appropriate personal protective equipment will be worn. Personnel working within 25 feet of heavy equipment are required to use hearing protective devices (plugs or muffs) and will be trained by the Site Safety Officer in their use.

If Nobis employees must operate or participate in operations with loud noise levels, appropriate noise monitoring will need to occur. The Site Safety Officer should notify the Corporate Safety Officer if noise metering is warranted at a particular field site. Sound level meters are checked and calibrated to ensure that the measurements are accurate. Calibration procedures are unique to specific instruments.

As part of Nobis' medical surveillance program, audiometric testing is normally conducted. Any standard threshold shift equal to or greater than allowed within the OSHA regulation will immediately be investigated and actions taken to mitigate the cause.

26.0 ELECTRICAL SAFETY PROGRAM

Electrical equipment used on-site may pose a hazard to workers. Whenever possible, Nobis will use low-voltage equipment with ground-fault interrupters and watertight, corrosion-resistant connecting cables to help minimize this hazard. Never operate electrical equipment while standing in water. A qualified electrician must inspect electrical equipment that has gotten wet before energizing it.

Extension cords should be used for temporary uses only. They must be appropriate for the location and task. They should not be stepped on or squeezed under doors. They should not be wet. They should not be stapled or suspended from wires. Worn or frayed cords are prohibited.

All lamps for general illumination should be protected from accidental contact or breakage. Temporary lighting must be on its own circuit.

No employee shall be permitted to work in the proximity of any part of an electrical power circuit unless the person is protected against electric shock by de-energizing the circuit and grounding it, or it has been locked and tagged out. All electrical wiring and equipment shall be in good working order and be intrinsically safe if potentially explosive environments and atmospheres may be present.

27.0 LOCKOUT/TAGOUT PROGRAM

27.1 Purpose of a Lockout/Tagout Program

The purpose of the Lockout/Tagout Program is to control exposure to hazardous energy. Any work to be performed in an area where there is a possibility for the presence of energy to be released in an uncontrolled manner, a site specific Lockout/Tagout schedule should be created and followed. This program establishes the minimum requirements for isolation of both kinetic and potential electrical, chemical, thermal, hydraulic and pneumatic and gravitational energy prior to equipment repair, adjustment, or removal. Reference: OSHA Standard 29 CFR 1910.147.

27.2 Definitions

Authorized (Qualified) Employees are the only ones allowed to lockout or tagout equipment, machinery, circuits, or devices. Whether an employee is considered to be qualified will depend upon various circumstances in the workplace. An employee who is undergoing on-the-job training and who, in the course of such training, has demonstrated an ability to perform duties safely at his or her level of training and who is under the direct supervision of a qualified person, is considered to be "qualified" for the performance of those duties. Only qualified employees are authorized to remove a lockout or tagout device that they themselves attached. Authorized and/or qualified employees shall not remove or render inoperative a lockout or tagout device that they have not personally attached.

Affected Employees are those employees who operate machinery or equipment upon which lockout or tagout is required under this program. Training of these individuals will be less stringent in that it will include the purpose and use of the lockout procedures. Affected Employees may not attempt to remove or render inoperative any lockout/tagout device(s) from machinery, systems, equipment, circuits, or devices.

Other Employees are identified as those that do not fall into the authorized or affected employee category. Essentially, it will include all other employees anticipated to be at, near, or pass through an area where a lockout or tagout device is being utilized. These employees will be provided instruction in what the program is and instructed not to touch any machine or equipment, or remove or render inoperative any protective devices when they see that it has been locked or tagged out.

27.3 Training

Only trained, authorized, and qualified employees will repair, replace, or adjust machinery, equipment, or processes. All authorized employees will be trained in the use of the lockout/tagout procedures to the level necessary for the safety of themselves and others. The training may be conducted by the Nobis' Corporate Health & Safety Officer, qualified employee, or outside services prior to the utilization of the lockout/tagout procedure and at least annually thereafter as part of an annual inspection.

The training will consist of the following:

- Review of general procedures.
- Review of specific procedures for equipment and processes.
- Location and use of specific procedures.
- Procedures when questions arise.

Affected employees will be instructed to the level necessary to educated them in the use and limitations of the lockout/tagout program. Emphases will be placed on the reason that lockout/tagout is necessary for the safety of employees and that they may not attempt to remove locks, locking devices, or tags from machinery, equipment, circuits or devices under any circumstance. Only trained, authorized, and qualified employees may repair, replace, and adjust machinery, equipment, circuits, or devices covered under the Nobis lockout/tagout policy.

27.4 Preparation for Lock and Tag Out Procedures

A lockout/tagout evaluation must be conducted to locate and identify all energy sources to verify which switches, valves, and plugs, etc. supply energy to machinery, systems, and equipment. A lockout/tagout procedure must be developed for each piece of equipment and machinery. This procedure must describe the energy sources, location of disconnects, type of disconnects, special hazards, and special safety procedures. The procedure will be reviewed and updated whenever a failure occurs in the protection of employees, there is a question as to its effectiveness, or any modification to the equipment has been performed.

27.5 Routine Maintenance and Machine Adjustments

Lockout/tagout procedures are not required if equipment must be operating for proper adjustment. This rare exception may be used only by trained, authorized, and qualified employees when specific procedures have been developed to safely avoid hazards. All consideration shall be made to prevent the need for an employee to break the plane of a normally guarded area of the equipment by use of body parts, tools, or other devices.

27.6 Locks, Hasps, and Tags

Lockout/tagout equipment may be assigned to a specific authorized employee, system, or device. All locks will be keyed differently. In some cases, more than one lock, hasp, or tag are needed to completely de-energize equipment and machinery. The need for additional locks

should be identified during the development of the lockout/tagout procedures. All locks and hasps shall be uniquely identifiable to be used by a specific employee, system, or device.

27.7 General Lock and Tagout Procedures

Before working on, repairing, adjusting or replacing machinery and equipment, the following procedures will be utilized to place the machinery and equipment in a neutral or zero energy state.

27.8 Preparation for Shutdown

Before authorized or affected employees turn off a machine or piece of equipment, the authorized employee will have knowledge of the type and magnitude of the energy, the hazards of the energy to be controlled, and the means to control the energy.

Notify all affected employees that the machinery, equipment, or process will be out of service.

27.9 Machine or Equipment Shutdown

The machine or equipment will be turned or shut down using the specific procedures for that specific machine. An orderly shutdown will be utilized to avoid any additional or increased hazards to employees as a result of equipment de-energization. If the machinery, equipment or process is in operation, follow normal stopping procedures (depress stop button, open toggle switch, etc.). Move switch or panel arms to “Off” or “Open” positions and close all valves or other energy isolating devices so that the energy source(s) is disconnected or isolated from the machinery, system, or device.

27.10 Machine or Equipment Isolation

All energy control devices that are needed to control the energy to the machine, system, or device will be physically located and operated in such a manner as to isolate the machine, system, or equipment from the energy source.

27.11 Lockout or Tagout Device Application

Authorized employees will affix lockout devices to energy isolating devices. Lockout devices will be affixed in a manner that will hold the energy isolating devices in the “safe” or “off” position.

Where a lockout device cannot be utilized, a proper tagout may be used, if approved by the Nobis Corporate Health and Safety Officer by affixing the tagout in such a manner that will clearly state that the operation or the movement of energy isolating devices from the “safe” or “off” positions is prohibited. The tagout devices will be attached to the same point a lock would be attached. If the tag cannot be affixed at that point, the tag will be located as close as possible to the device in a position that will be immediately obvious to anyone attempting to operate the device. Lockout and tagout all energy devices by use of hasps, chains, valve covers, etc. with individually-maintained locks.

27.12 Stored Energy

Following the application of the lockout or tagout devices to the energy isolating devices, all potential or residual energy will be relieved, disconnected, restrained, and otherwise rendered safe. Where the re-accumulation of stored energy to a hazardous energy level is possible, verification of isolation will be continued until the maintenance or servicing is complete. Release stored energy (capacitors, springs, elevated members, rotating fly-wheels, and hydraulic/air/gas/steam systems) must be relieved or restrained by grounding, repositioning, blocking and/or bleeding the system.

27.13 Verification of Isolation

Prior to starting work on machines or equipment that have been locked or tagged out, the authorized employees will verify that isolation or de-energization of the machine or equipment have been accomplished. After assuring that no employee will be placed in danger, test all lockouts and tagouts by following the normal start up procedures (depress start button, etc.).

Caution: After test, replace controls in neutral or off position.

27.14 Extended Lockout/Tagout

When the workday includes multiple shifts, should the shift change before the machinery or equipment can be restored to service, the lockout and tagout must remain. If the task is reassigned to the next shift, those employees must lockout and tagout before the previous shift may remove their lock(s) and tag(s).

27.15 Release from Lockout/Tagout

Before lockout or tagout devices are removed and the energy restored to the machine or equipment, the following actions will be taken:

- The work area will be thoroughly inspected to ensure that nonessential items have been removed and that machine or equipment components are operational.

- The work area will be checked to ensure that all employees have been safely positioned or removed. Before the lockout or tagout devices are removed, the affected employees will be notified that the lockout or tagout devices are being removed.

- Each lockout or tagout device will be removed from each energy isolating device, by the employee who applied the device.

27.16 Lockout/Tagout Procedure for Electrical Plug-Type Equipment

This procedure covers all electrical plug-type equipment such as battery chargers, some product pumps, office equipment, powered hand tools, powered bench tools, lathes, fans, etc. When working on, repairing, or adjusting the above equipment, the following procedures must be utilized to prevent accidental or sudden startup:

- Unplug electrical equipment from wall socket or in-line socket.
- Attach “Do Not Operate” tag and plug box and lock on the end of the power cord. An exception is granted to not lock and tag the plug if the cord and plug remain in the exclusive control of the employee working on, adjusting, or inspecting the equipment.
- Test equipment to assure power source has been removed by depressing the “start” or on” switch.
- Perform required operations.
- Replace all guards removed.
- Remove plug box and lock and tag.
- Inspect power cord and socket before plugging equipment into power source. Any defects must be repaired before placing the equipment back in service.

27.17 Lockout/Tagout Procedures Involving More Than One Employee

If more than one employee is assigned to a task requiring a lockout and tagout, each employee must place a separate lockout/tagout device on the energy isolating device(s).

27.18 Management's Removal of Lock and Tag Out

Only the employee that places the lockout/tagout device on the machinery, equipment, or processes may remove their lockout/tagout device. However, should the employee leave the facility before removing his/her lock and tag, the Project Manager or Corporate Health and Safety Officer must be notified and approval given to remove the lockout/tagout device. The Project Manager or Corporate Health and Safety Officer must be assured that all tools have been removed, all guards have been replaced, and all employees are free from any hazard before the lockout/tagout devices are removed and the machinery, equipment or process are returned to service. Notification of the employee who placed the lockout/tagout device is required prior to removal.

27.19 Contractors

Contractors, working on company property and equipment must use this lockout/tagout procedure, or other Nobis approved procedure, while servicing or maintaining equipment, machinery, or processes.

Example:

28.0 CONFINED SPACE SAFETY PROGRAM

28.1 Definition of a Confined Space

A Confined Space is space which exhibits the following characteristics:

- Has limited or restricted means of entry or exit;
- Is large enough and so configured that a person can enter a portion or all of his body;
- Is not designed for continuous occupancy.

Confined spaces can subject personnel to the accumulation of toxic or flammable contaminants, contain physical hazards, or have oxygen deficient atmospheres. Confined spaces include, but are not limited to: storage tanks, process vessels, bins, boilers, ventilation or exhaust ducts, sewers, underground utilities vaults, tunnels, pipelines, and open-top spaces more than 4 feet in depth such as pits, trenches, tubs, vaults, and vessels. Refer to OSHA 29 CFR 1910.146 for specific information on confined spaces.

NOTE: Nobis employees are not authorized to enter any confined space or to assist as a rescuer or attendant unless properly trained in accordance with OSHA requirements and approved by Nobis' Corporate Health & Safety Officer.

28.2 Permit Required Confined Space

A competent person trained in proper identification of a confined space must make the determination of a Permit-Required Confined Space. A permit required confined space is a confined space that:

- May contain a hazardous or potentially hazardous atmosphere.
- May contain a material which can engulf an entrant.
- May contain walls that converge inward or floors that slope downward and taper into a smaller area which could trap or asphyxiate an entrant.
- May contain other serious physical hazards such as unguarded machines or exposed live wires.
- Must be identified by the employer who must inform exposed employees of the existence and location of such spaces and their hazards.

A permit must be obtained <u>before</u> working in any permit required confined space. The permit will be issued by the Site Safety Officer (Entry Supervisor) and will acknowledge that:

- The confined space has been secured from any endangering power sources. This includes, but is not limited to: air, steam, electricity, hydraulics, or springs.

- Any lines exiting or entering the confined space have been properly blinded, disconnected, plugged, or double blocked and bled to prevent any potential flow into the confined space.

- Any confined space to be entered shall be tested for atmospheric conditions, oxygen content, and combustibles prior to entry, and emptied, cleaned, purged, and/or ventilated, as appropriate.

- Required personal protective equipment must be worn at all times while working in confined spaces. Each situation will be evaluated and the equipment required for that job will be designated.

28.3 Securing Equipment

- Secure confined space from all energy sources such as compressed air, steam, electrical, pneumatic, hydraulic, or thermal with the objective being "Zero Energy State (ZES)." Equipment is to be shut down; power sources disengaged, locked out, and tagged properly. All electrical motors are to be tested at their on-off switch.

- Any steam tracing or vessel jackets must be depressurized, drained and vented, and any valves locked and tagged appropriately (i.e., inlet closed, outlet open).

- All lines exiting or entering into the confined space must be blinded or plugged at the nearest flange to the confined space, or be physically disconnected with the ends covered, or have a double block valve with open bleeder in-place. Blinds must be of the same compatible material as the process equipment being blinded or an inert shield provided on the process side of the flange.

- All valves leading to disconnected lines must be tagged with a "DANGER - DO NOT OPERATE" tag.

- The equipment must be purged or flushed as required to remove contaminants, as necessary.

- If an oxygen deficient, combustible, or other hazardous atmosphere is detected within the confined space during pre-entry testing, air ventilation must be provided by the use of air movers. The confined space must be vented with uncontaminated air for at least one hour before retesting and/or entry.

28.4 Atmospheric Testing

All confined spaces must be considered a permit required confined space until the testing for oxygen, flammability, and toxicity levels have been completed and determined to be safe. During occupancy of the confined space atmospheric testing shall be performed at regular intervals and recorded on the permit. Refer to 29 CFR 1910.146 Appendix B for procedures for atmospheric testing.

28.4.1 Oxygen

The oxygen content must be within normal atmosphere 19.5% to 23.5% range before entering. At any time when the oxygen level varies from this range, employees must exit the confined space, the work situation re-evaluated, and a new permit issued.

28.4.2 Flammable Vapors

A combustible meter test must be made before entry into any confined space. An area shall not be entered if the meter shows more than 10% of the lower explosive limit.

28.4.3 Toxicity

Toxicity test must be made on any confined space known to or suspected of containing toxic substances. The atmosphere shall contain less than the Time Weighted Average or ceiling limit of any containment.

Testing should be performed in the sequence listed above.

28.5 Personal Protective Equipment

The following required personal protection equipment must be worn in any confined space that is determined to be a permit required confined space:

- Saranex (or other chemically resistant cover-alls), rubber boots and gloves are required in any confined space that has previously had corrosive or toxic substances in it, when it cannot be verified that it is free of potential exposure to personnel.

- In all confined spaces, a hardhat and safety glasses/chemical goggles are required as minimum protection.

- Persons working in a confined space are required to wear a safety harness with attached lifeline unless the Site Safety Officer has determined that it is unnecessary and/or it creates an additional hazard.

- Air supplied breathing apparatus will only be used in extreme cases where all other alternate methods of providing a safe working atmosphere have been exhausted.

28.6 Illumination

- Temporary lighting utilized in confined areas shall be low voltage (12V) maximum explosion-proof design with heavy-duty cords, fittings, and insulation maintained in good condition.

- Portable (battery powered) lighting of no more than 12 volts maximum shall be on hand outside the confined space for utilization in a power failure. These shall be capable of providing illumination for a minimum of one hour.

28.7 Electrical Power Tools

- Extension cords supplying 120 volt electrical power to tools being used within a confined space or wet area shall be protected by a ground fault circuit interrupter located outside the confined space opening.

28.8 Ingress and Egress

- A safe means of ingress and egress must be maintained at all times while a confined space is occupied. If ladders are utilized, they must be kept in place and be tied off at the top.

- The area immediately around an opening to a confined space shall be barricaded in such a manner to ensure immediate access.

28.9 Barriers

- Barriers shall be erected immediately surrounding the permit space to ensure that all pedestrian or vehicle traffic is restricted and the entrants are protected from external hazards including objects falling into the confined space.

28.10 Attendants

A minimum of one person shall be stationed at the confined space opening and will not leave while it is occupied. The major responsibility is to oversee the safety of the confined space entrant and summon additional emergency help if needed. He must be continually aware of changing conditions both inside and outside the confined space and alert personnel inside of emergency actions to be taken. In particular, responsibilities include:

- Inspection of all respiratory apparatus, safety equipment, and PPE to be used or worn.
- Knowing the hazards that may be faced during entry including all warning signs and symptoms.
- Remaining in visual or verbal contact with the inside worker at all times. Radio communication will be used if visual or verbal contact cannot be maintained.
- Remaining in attendance until replaced by another qualified attendant.
- Monitoring activities inside and outside the confined space to determine that it is safe for entrants to remain in the space.
- Maintaining an immediate means of summoning rescue and emergency services.
- Not entering a confined space to render aid until additional help has been called and has arrived at the point-of-entry.
- Maintaining training in the duties of his assignment and in the emergency rescue procedures and equipment in accordance with current OSHA regulations.

- Following the requirements of a confined space entry permit as written.

28.11 Entrants

Personnel who enter a confined space are responsible for the following:

- Inspection of all respiratory apparatus, safety equipment, and PPE to be used or worn.
- Knowing the hazards, mode of exposure, signs, and symptoms of exposure to hazards.
- Wearing the designated respiratory apparatus, safety equipment, and PPE.
- Communicating with the attendant as necessary on all matters related to the confined space. In particular, notifying the attendant of previously undetected/unknown hazards which could cause harm or injury to team personnel.
- Knowing all emergency response procedures.
- Maintaining training in the duties of his assignment.
- Exiting from a confined space when an evacuation is ordered, warning signs are noted, or an alarm is activated.
- Following the requirements of a confined space entry permit as written.

29.0 OVERHEAD AND UNDERGROUND UTILITIES

29.1 Overhead Utilities

Overhead utilities may create an electrical hazard on a site. Assume that all overhead wires are energized at lethal voltages. Never assume that a wire is safe to touch even if it is down or appears to be insulated.

In general, a minimum separation of 10-feet from overhead electrical utilities should be maintained between equipment appendages such as drill rig derricks and excavator arms. Spotters will be utilized when locating equipment and when operating excavators and similar equipment. Equipment shall not be erected, used, dismantled, altered, or moved such that they or any conductive material handled on them might come closer to exposed and energized power lines than as follows:

ELECTRICAL TRANSMISSION LINE CLEARANCE REQUIREMENTS	
VOLTAGE	**MINIMUM DISTANCE**
Less than 50 kilovolts	4 feet
50 kilovolts to 345 kilovolts	10 feet
More than 345 kilovolts	10 feet plus 0.4 inches (1.0 cm) for each 1 kilovolt over 345 kilovolts

Equipment and materials may be closer to power lines than specified above where such clearance is necessary for performance of work, and only after the utility company, or electrical system operator, has been notified of the need to work closer and the utility company, or electrical system operator, has de-energized the lines, relocated the lines, or installed protective coverings to prevent accidental contact with the lines.

29.2 Underground Utilities

Underground utilities include: gas lines, steam lines, electrical lines, potable water, wastewater, telecommunications, and other manufacturing process lines (chemical, compressed air, among others). Dig Safe will be notified prior to all intrusive activities. Intrusive activities will not commence prior to the Dig Safe clearance time. Dig Safe clearance does not include private utilities and does not guarantee that no underground utilities are present. Site utility plans and as-built plans should be obtained and carefully reviewed whenever possible. On-site personnel should be consulted whenever possible for additional information. Site workers should maintain a high state of vigilance prior to and during all intrusive activities. Indications of potential undocumented buried utilities such as pipes or conduits and trench depressions should be investigated and identified or avoided if identification is not possible.

29.3 The Dig Safe System

Both Federal and State Laws require contractors to notify appropriate utility companies before digging, trenching, blasting, demolishing, boring, backfilling, grading, landscaping, or other earth moving operations. Dig Safe is a no cost system, required by the laws and funded by member companies, which allows contractors to notify the appropriate utilities with one telephone call or one Web form submittal. Dig Safe offers a toll free number, 1-888-DIG-SAFE (344-7233) for this notification in each New England state except Connecticut. The Connecticut number is 1-800-922-4455. Notification may also be made by submitting the required information over the Internet at www.digsafe.com.

Dig Safe should be notified no less than 72 hours prior to the scheduled start of work. Site excavation and/or boring locations must be pre-marked before the utilities visit the site. The locations of the proposed activities should be marked with white paint on paved and other hard surfaces and by white marked stakes or white flags for other surfaces.

When a call arrives at the Dig Safe Center, an operator will ask for the following information:

Nobis I.D. No. In NH, MA, ME, RI, VT: 19119; In CT, 03905

State: _____

Location: _____

Nearest Cross Street: _____

Type of Work: _____

Extent of Work: _____

Name of Caller: _____ Title: _____

Start Date: _____ Start Time: _____

Phone: _____ Best Call Back Time: _____

Company: _____

Remarks: _____

Excavator/Boring Company: _____

Area Pre-marked: _____

The information is entered into a computer system, which then notifies the member companies maintaining underground utilities in the area of the excavation. Underground facilities will be marked or staked by the member companies. The caller will be given a listing of the member utilities that will be notified, a date and time that the site will be cleared, and a Dig Safe Number to acknowledge their call. The work must be started within 30 days of the phone call, fax, or Internet notification. Long duration jobs must be re-cleared every 27 days to ensure that the site remains within the 30-day window. This is necessary because subsurface utilities may be installed or modified during the course of a long-duration project.

The following color-coding is used for facility marking:

- Red ≡ Electric Power Lines
- Yellow ≡ Gas, Oil, Steam, Petroleum or Gaseous Material
- Orange ≡ Communication, Alarm, or Signal Lines -CATV
- Blue ≡ Potable Water
- Green ≡ Sewer and Drain Lines
- Purple ≡ Reclaimed Water, Irrigation and Slurry Lines
- Pink ≡ Temporary service markings
- White ≡ Proposed Excavation

As noted above, proposed excavation should be marked in white.

The Dig Safe Center records all incoming and outgoing messages and operates Monday through Friday, 0600 to 1800. Off-hours coverage is provided for emergencies only.

Dig Safe should not be called for locating and marking underground facilities for project engineering and design, such as preliminary engineering surveys. It should also NOT be used for miscellaneous requests to relocate, lower, or remove facilities. Damage to underground facilities should be reported to the owners of the damaged facilities.

29.4 Alternate and Additional Sources and Considerations

It is important to remember that Dig Safe clearance means only that the member utilities have marked their facilities. Not all utilities are members of Dig Safe. Most utility companies do not mark on private property; markings are only up to the point where utilities leave the right of way and enter the property. Regardless of whether the companies mark only up to the property line or onto the property, private utility extensions may be on site that will not be located and marked. Additionally, there are companies and municipalities that do not participate in the Dig Safe system. It is, therefore, important to carefully review site utility and/or as-built plans whenever they are available. Contacting the town engineer's office and/or the department of public works to inquire about or confirm the existence of other public and private utilities is recommended. Whenever possible, individuals familiar with the site should be consulted. During on-site activities, personnel should be alert to indications that unmarked utilities may be present. Conduits and pipes entering the ground, catch basins, and light poles not serviced by overhead lines are some indicators that buried utilities may be present. If these indications do

not have associated markings and are not shown on site plans, the situation should be clarified before activities proceed.

There are also private locating companies that can perform utility mark out on private properties such as On-Target and Central Locating. These private locating companies are specific to the local, therefore refer to appropriate references. A fee is typically charged by the private companies.

30.0 EXCAVATION SAFETY PROGRAM

30.1 Purpose

Excavation and trenching are among the most hazardous construction operations. This program outlines procedures and guidelines for the protection of Nobis employees working in and around excavations and trenches. This program requires compliance with OSHA Standards described in Subpart P of CFR 1926.650 for the construction industry.

It is the responsibility of each Project Manager and Site Safety Officer to implement and maintain the procedures and steps set forth in this program. Each employee involved with excavation and trenching work is responsible to comply with all applicable safety procedures and requirements of this program. The following sections are intended to supplement the OSHA Excavation Standard 1926.650. In the event of a conflict between this program and the OSHA Excavation Standard, the Standard shall govern.

30.2 General Requirements

Before any work is performed and before any employees enter the excavation, a number of items must be checked and assured:

- Before any excavation, underground installations must be determined. This can be accomplished by contacting the local “one-call’ center for the area (Dig Safe System) and the local utility companies. All underground utility locations must be documented on the proper forms.

- All overhead hazards (surface encumbrances) that create a hazard to employees must be removed or supported to eliminate the hazard.

- If the excavation is to be over 20 feet deep, it must be designed by a registered professional engineer who is registered in the state where work will be performed.

- Adequate protective systems will be utilized to protect employees. This can be accomplished through sloping, shoring, or shielding.

- The worksite must be analyzed in order to design adequate protection systems and prevent cave-ins.

- There must be an excavation safety plan developed to protect employees.

- Workers must be supplied with and wear any personal protective equipment deemed necessary to assure their protection.

- All spoil piles will be stored a minimum of 2 feet from the sides of the excavation.

- The spoil pile must not block the safe means of egress.

- If a trench or excavation is 4 feet or deeper, stairways, ramps, or ladders will be used as a safe means of access and egress. For trenches, the employee must not have to travel any more than 25 feet of lateral travel to reach the stairway, ramp, or ladder.

- No employee will work in an excavation where water is accumulating unless adequate measures are used to protect the employees.

- Excavations and trenches 4 feet or deeper that have the potential for toxic substances or hazardous atmospheres will be tested at least daily. If the atmosphere is inadequate, protective systems will be utilized.

- If work is in or around traffic, employees must be supplied with and wear high visibility reflective vests. Signs and barricades must be utilized to ensure the safety of employees, vehicular traffic, and pedestrians.

30.3 Competent Person Requirements

A competent person is defined as: One who is capable of identifying existing and predictable hazards in the surroundings or working conditions, which are unsanitary, hazardous, or dangerous to employees, and who has authorization to take prompt corrective measures to eliminate them. It is Nobis policy that only the Corporate Health and Safety Officer with the approval of a Nobis principal can designate the Competent Person for a particular job. This designation will be made after a review of their prior training and experience.

The responsibilities of a Competent Person are:

- Inspect all excavations and trenches daily, prior to employee exposure or entry, and after any rainfall, soil change, or any other time needed during the shift.
- The competent person must take prompt measures to eliminate any and all hazards.
- Have a thorough understanding of the applicable safety standards and any other data provided.
- Assure the proper locations of underground installations or utilities, and that the proper utility companies have been contacted.
- Conduct soil classification tests and reclassify soil after any condition changes.
- Determine adequate protective systems (sloping, shoring, or shielding systems) for employee protection.
- Conduct air monitoring for potential hazardous atmospheres.
- Conduct daily and periodic inspections of excavations and trenches.
- Approve design of structural ramps, if used.

30.4 Excavation Safety Plan

A written excavation safety plan is required when braced or shored excavations are required or for excavations greater than 20 feet deep. This plan is to be developed to the level necessary to assure compliance with the OSHA Excavation Safety Standard and state and local safety standards. The written excavation safety plan must include:

- Utilization of the local Dig Safe system.
- Determination of locations of all underground utilities.
- Consideration of confined space atmosphere potential.

- Proper soil protection systems and personal protective equipment and clothing.
- Determination of soil composition and classification.
- Determination of surface and subsurface water.
- Depth of excavation and length of time it will remain open.
- Proper adherence to all OSHA Standards, this excavation and trenching safety program, and any other coinciding safety programs.

30.5 Excavation Protection Systems

The three basic protective systems for excavations and trenches are: sloping and benching, shoring, and shielding. The protective systems shall have the capacity to resist without failure all loads that are intended or could reasonably be expected to be applied to or transmitted to the system. Every employee in an excavation shall be protected from cave-ins by an adequate protective system. Exceptions to using protective systems are:

- Excavations are made entirely in stable rock.
- Excavations are less than 4 feet deep and declared safe by a competent person.

30.6 Inspections

Daily inspection of excavations, the adjacent areas, and protective systems shall be made by the Competent Person for evidence of a situation that could result in a cave-in, indications of failure of protective systems, hazardous atmospheres, or other hazardous conditions. All inspections shall be conducted by the Competent Person prior to the start of work and as needed throughout the shift. Inspections will be made after every rainstorm or any other increasing hazard. All documented inspections will be kept on file in the jobsite safety files with any observed deficiencies forwarded to the Corporate Health and Safety Officer.

30.7 Training

The Competent Person(s) must be trained in accordance with the OSHA Excavation Standard, and all other programs that may apply (Hazard Communication, Confined Space, Respiratory Protection Program, among other programs), and must demonstrate a thorough understanding and knowledge of the programs and the hazards associated. All other employees working in and around the excavation must be trained in the recognition of hazards associated with

trenching and excavating. This training will be conducted on an as needed basis normally by Nobis staff.

31.0 HEAVY EQUIPMENT AND VEHICLE TRAFFIC SAFETY PROGRAM

Nobis employees are not authorized to operate cranes, forklifts, powered industrial trucks, front end loaders, drill rigs, bulldozers, or any heavy equipment other than the company pickup trucks without receiving specific training. Trained subcontractors or other contractors may operate such equipment. At no time should a Nobis employee attempt to operate the equipment owned by another company. In some instances, Nobis employees can receive training to operate a specific piece of rented equipment for a specific job site. This will be handled on a case by case basis.

Operators will be trained and experienced in the use and maintenance of the equipment they are operating. Equipment will be inspected on a daily basis to identify any worn or damaged parts, and/or unsafe conditions. Any unsafe equipment will be removed from service until safety defects can be corrected. Equipment operators will not leave their machine unattended while it is running. All equipment will have electronic backup alarms. Each site should have, at a minimum, a five (5) lb ABC fire extinguisher. No vehicles or equipment are to be operated in a careless or unsafe manner.

Injuries may occur while working with or adjacent to such equipment. Workers being struck by vehicles or mobile equipment lead to many work zone fatalities or injuries. Work zones need traffic controls identified by signs, cones, barrels, and barriers. Considerations for controlling the movement of personnel and equipment in a construction area are vitally important to any project. Drivers, employees on foot, and pedestrians must be able to see and understand the proper routes. For some projects, a professional traffic control company will need to be hired. Eye contact with the operator with an acknowledgement of understanding must be accomplished prior to moving into the “strike range” of any equipment.

32.0 HAND AND POWER TOOL SAFETY PROGRAM

Hand and power tools may be used for various site activities. There are hazards associated with tools. These include the actions of drilling or cutting and the power sources of tools. Procedures for using hand and power tools are as follows:

- Keep your work area clean, dry, and well lit.
- The proper tool and size shall be used for each job.
- Tools shall be operated in accordance with the manufacturer's instructions (if you cannot find the instructions, look them up on the manufacturer's website).
- Tools should be inspected daily for defects and proper working condition (clean, sharp, oiled, adjusted, loose parts, among other items.)
- Tools shall be kept clean.
- Tools shall be carried in proper sheath, belt, bag, or box with sharp points down.
- Persons using power tools shall be trained in their use. Prior to operation of a power tool, the employee must read and understand the operation manual or have adequate on the job training.
- Know how to turn off a power tool before turning it on. Power tools are designed to do work that an employee cannot do alone. They are stronger than an employee and must be controlled to be used effectively.
- Do not remove or disable any guards or safety devices from power tools.
- Ground Fault Circuit Interrupters (GFCI) must be utilized on all electrical equipment used outdoors or in water saturated areas.
- Only tools and electrical extension cords in good condition shall be used.
- Never carry a tool by the hose or cord.
- Keep cords and hoses away from heat, oil, water, and sharp edges.
- Non-sparking tools shall be used in hazardous areas.
- Keep good footing and maintain good balance when using power tools.
- Dress correctly. Do not wear clothing or jewelry that will get entangled.
- Wear hearing protection as appropriate for the task and duration of the task. A chain saw or power saw requires hearing protection.
- Proper eye protection is critical when using hand and power tools. At a minimum, safety glasses will be required during site operations. Where appropriate, side shields or full-face shields will be utilized in addition to the glasses.

33.0 FALL PROTECTION PROGRAM

Falls are the leading cause of fatalities in the construction industry. Nobis employees are often present at construction sites and other field sites where there are potentials for falls. It is

important to identify all potential tripping and fall hazards before work starts. Look for fall hazards such as unprotected floor openings/edges, shafts, skylights, stairwells, and roof openings/edges.

OSHA CFR 1926.501 (Subpart M) requires fall protection, in part, for:

- Unprotected sides and edges
- Hoist areas
- Holes
- Ramps, runways, and other walkways
- Excavations
- Dangerous Equipment
- Roofing work on low-sloped roofs
- Work on steep roofs
- Wall openings
- Walking and working surfaces not otherwise addressed.

Each employee on a walking or working surface with an unprotected side or edge which is 6 feet or more above a lower level shall be protected from falling by the use of guardrail systems, safety net systems, or personal fall arrest systems. Guardrails shall be strong enough to restrain someone who may fall against them—200 pounds of force. Guardrails should have a top rail, mid-rail, and toe board. In general, Nobis employees will not use safety net systems. Barricades around fall hazards (holes, manholes, trenches) should be sufficiently far away from the edge of the opening.

Railings should be provided for every flight of stairs having 4 or more risers. Use handrails when going up or down stairs. This requirement also applies to job trailers.

If a Nobis employee is required to wear a personal fall protection harness, they will need additional training and guidance on selection, wear, and use.

34.0 LADDER SAFETY PROGRAM

Nobis employees are occasionally required to bring a portable ladder to a job site or use one in the offices. If portable ladders are not used correctly, employees can have accidents. Falls from ladders can cause injuries ranging from sprains to death. OSHA establishes ladder regulations at CFR 1926.1050 (Subpart X).

Ladder accidents usually are caused by improper selection, care, or use, not by manufacturing defects. Some of the more common hazards involving ladders, such as instability, electrical shock, and falls, can be predicted and prevented. Prevention requires proper planning, correct ladder selection, good work procedures, and adequate ladder maintenance.

34.1 Prevention Tips

- Do not hand-carry loads on a ladder.
- Maintain three points of contact with the ladder at all times to minimize the risk of slips and falls.
- Do not try reaching so far that you lose your balance; move the ladder.
- When ascending or descending a ladder, the user shall face the ladder.
- There should be no obstructions within 7 inches behind the ladder.
- There should be no obstructions within 30 inches on the climbing side.
- Do not stand on the ladder's top three rungs.
- The top or top step of a stepladder shall not be used as a step.
- The base should be spaced 1 foot away for every 4 feet it reaches up (see figure below).
- Ladders used to reach a walking surface or roof must extend at least 3 feet beyond the roof line.

- Secure side rails at the top to a rigid support and use a grab device when a 3 foot extension is not possible.

- Use only ladders that comply with OSHA design standards.

- Extension ladders need both locks holding to prevent overloading a rail.

- Step ladders should be securely spread open. Never use a folding step ladder in an unfolded position.

- Before each use inspect ladders for cracked or broken parts such as rungs, steps, side rails, feet, and locking components.

- Do not apply more weight on the ladder than it is designed to support.

- Ladders are to be kept free of oil, grease, wet paint, and other slipping hazards.

- The area around the top and bottom of the ladder must be kept clear.

- Ladders shall not be used on slippery surfaces unless secured or provided with slip-resistant feet to prevent accidental displacement. Slip-resistant feet shall not be used as a substitute for care in placing, lashing, or holding a ladder that is used upon slippery surfaces including, but not limited to, flat metal or concrete surfaces that are constructed so they cannot be prevented from becoming slippery.

- Ladders placed in any location where they can be displaced by workplace activities or traffic, such as in passageways, doorways, or driveways shall be secured to prevent accidental displacement, or a barricade shall be used to keep the activities or traffic away from the ladder.

- Ladders shall not be moved, shifted, or extended while occupied.

- Ladders shall have nonconductive side rails if they are used where the employee or the ladder could contact exposed energized electrical equipment.

- Ladders shall be inspected by a competent person for visible defects on a periodic basis and after any occurrence that could affect their safe use.

- Portable ladders with structural defects, such as, but not limited to, broken or missing rungs, cleats, or steps, broken or split rails, corroded components, or other faulty or defective components, shall either be immediately marked in a manner that readily identifies them as defective, or be tagged with "Do Not Use" or similar language, and shall be withdrawn from service until repaired.

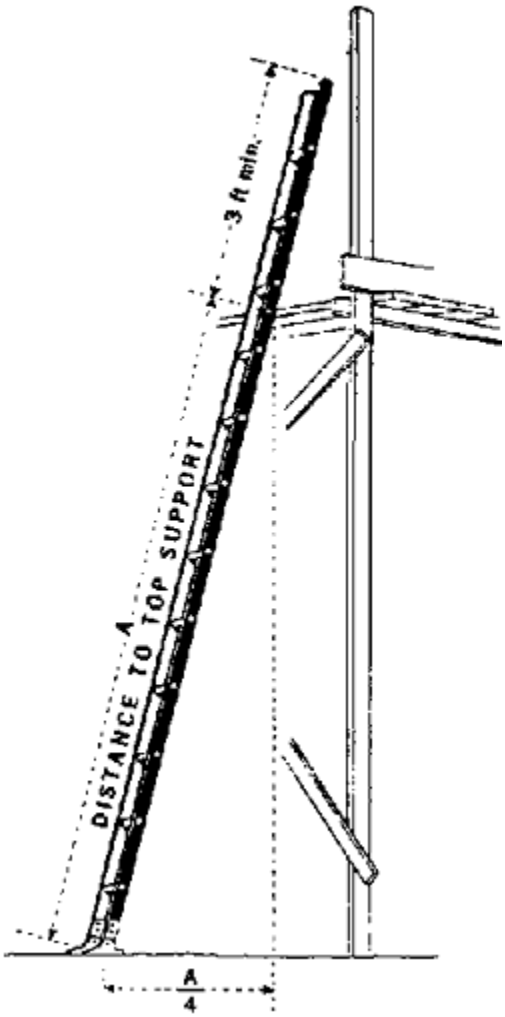

35.0 MEDICAL DATA SHEETS

This Medical Data Sheet must be completed by all on-site personnel and kept in the Health and Safety Log Book maintained in the Site office trailer during the conduct of site operations. This data sheet will accompany any personnel when medical assistance is needed or if transport to hospital facilities is required.

Project: _____

Name: _____ Home Telephone: _____

Address: _____

DOB: _____ Height: _____ Weight: _____

Emergency contact and telephone: _____

Drug or other allergies: _____

Particular sensitivities: _____

Do you wear contacts? _____

Provide a list of previous illnesses or exposure to hazardous chemicals: _____

_____

_____

_____

What medications are you presently using? _____

Do you have any medical restrictions? _____

Name, Address, and Phone Number of personal physician: _____

_____

_____

36.0 FIELD SITE SAFETY INSPECTION FORM

Site Name:	
Job Number :	
Client:	
Project Manager:	
Site Safety Officer:	
Location:	
Safety Inspector:	
Date:	
Nobis personnel on site	Nobis site responsibilities
Subcontractors on site	Subcontractors site responsibilities
Site Major Activities:	
Weather:	
Signature of Auditor:	

Summarized Action Items from Checklist Below:

36.1 Personnel Training

Y = Yes, N = No, N/A = Not Applicable

1)		Nobis personnel on site have 40 hr. HAZWOPER training?
2)		Nobis Site Safety Officer has 8 hr. HAZWOPER supervisor training?
3)		Nobis personnel have 8 hr. HAZWOPER Refresher training?
4)		One Nobis person has current CPR & First Aid training?
5)		Nobis personnel are in the medical surveillance program as required?
6)		Nobis personnel have current respirator fit tests as required?
7)		Nobis personnel have respirator use training as required?
8)		Nobis personnel have Hazard Communication training?
9)		Nobis personnel have environmental hazards training?
10)		Nobis personnel have confined space training as required?
11)		Nobis personnel have lock/out tag/out training as required?
12)		Nobis personnel have fall protection training as required?
13)		Nobis personnel have excavation safety training as required?
14)		Nobis personnel have hot work training as required?
15)		Nobis personnel have hearing conservation training as required?
16)		Nobis personnel have all necessary training for personal protective equipment in use?
17)		Nobis personnel have appropriate training for other hazards on site?

36.2 On-Site Training

1)		All personnel received the Site Specific Health and Safety Plan?
2)		Initial site safety plan meeting held and documented before work begins?
3)		Daily safety meeting documented?
4)		Question and answer time available to all site personnel?
5)		All employees instructed in hazardous materials handling practices?
6)		MSDSs available for all hazardous materials?
7)		Emergency telephone numbers posted?
8)		Emergency routes designated?
9)		Emergency plan reviewed with all persons?

36.3 Medical and First Aid

1)		First Aid Kits accessible and identified?
2)		Emergency eye/safety washes available?
3)		First Aid Kits inspected weekly?

36.4 Personal Protective Equipment

1)		All equipment meets ANSI criteria?
2)		Levels of protection established?
3)		Site control zones (Exclusion, CRZ, and Support) are clearly designated?
4)		Adequate quantities of gloves available in several sizes?
5)		Tyvek coverings available?
6)		All employees wearing long pants and steel toed boots?
7)		Employees wearing hard hats as required?
8)		Employees wearing safety glasses as required?
9)		Employees wearing reflective traffic vests as required?
10)		Defective safety equipment tagged out?
11)		Safety instrumentation maintained and calibrated?
12)		Maintenance and calibration logs up to date?
13)		Personal flotation devices (PFD) worn when working near or over water bodies 3 feet in depth?

36.5 Decontamination

1)		Decon system set up on site?
2)		The Decon system is used according to the safety plan?
3)		Contamination reduction corridor clearly delineated within the CRZ?
4)		Appropriate waste receptacles available for all waste?
5)		Receptacles properly closed at end of day?
6)		All decontamination liquids properly contained and disposed of?
7)		All wastes disposed of according to approved plan?
8)		All personnel received Decon training?
9)		All reusable personal protective gear deconned and disinfected at least daily?

36.6 Fire Prevention/Protection

1)		Fire extinguishers appropriate for fire hazard potential?
2)		Fire extinguishers checked before each shift?
3)		Fire extinguishers inspected yearly by outside vendor?
4)		Locations and use of fire extinguishers known by all personnel?
5)		Fire alarm is established and workers aware of the sound of the alarm?
6)		Smoking restricted to designated area only?
7)		Are smoking materials properly extinguished and disposed of (no butts)?
8)		Fire lanes established, clearly designated, and maintained?
9)		Flammable/combustible liquid dispensing transfer systems grounded and bonded?
10)		Is there proper flammable materials storage?
11)		Are combustible materials segregated from ignition sources?
12)		Hot work permits been issued as required?

36.7 Ladders, Walking, and Working Surfaces

1)		Access ways, stairs, ramps, and ladders free of ice, mud, snow, or debris?
2)		No ladders exceed maximum extended length?
3)		No ladders used in passageways, doors, or driveways?
4)		Broken or damaged ladders tagged out?
5)		Metal ladders prohibited in electrical service?
6)		Ladder safety feet positioned correctly?
7)		Stairways, floors, and wall openings guarded?
8)		Elevated work areas guard railed or safety chained?
9)		Toe boards on overhead work surfaces?
10)		Mobile offices/labs have fixed stairs and handrails?
11)		Work areas kept free of debris and equipment?
12)		Tools and other equipment are stored away from walkways, roads, or driveways where they cannot trip site personnel?
13)		Overhead hazards are noted, communicated to all, and labeled as needed?

36.8 Excavations and Confined Spaces

1)		Dig Safe inspections performed before excavation or drilling? Dig Safe ticket obtained?
2)		Excavations sloped, shored or benched to prevent cave-ins?
3)		All excavations are inspected and approved by a competent person?
4)		The competent person is approved by the Corporate Health and Safety Officer?

5)		Guardrails or fences placed around excavations near walkways or roads?
6)		Excavations locations lighted/or otherwise made visible at night?
7)		Ladders available in trenches more than 4 feet deep and at a minimum of 25 foot horizontal intervals?
8)		All excavated material, personnel, and heavy equipment are at least 24 inches from the edge of all excavations?
9)		Employees are aware of all confined spaces on site?
10)		Confined space entry permit procedure in place and communicated to all?
11)		Employees trained as confined space attendants and entrants?
12)		Confined space attendants and entrants approved by Corporate Health and Safety Officer?
13)		Local fire department notified of confined space entrances?
14)		Confined spaces have proper lighting?
15)		Confined spaces tested for oxygen?
16)		Confined spaces tested for flammable gases and toxic gases?
17)		Communication available inside to out?
18)		No flammables or combustibles in confined spaces?
19)		A safety line is available for confined space entrances?
20)		Appropriate harnesses are available?
21)		Continuous monitoring for oxygen, explosivity, and toxicity?
22)		Monitoring instruments are properly calibrated?
23)		Maintenance and inspection logs are available for all equipment?
24)		Confined space isolated from electrical/mechanical activation by following lock out/tag out proceedings?
25)		Confined space isolated from any raw materials/chemical lines by disconnecting or blanking these lines?

36.9 Motor Vehicles/Heavy Equipment

1)		Vehicles inspected before each use?
2)		Operators licensed for equipment used?
3)		Unsafe equipment tagged out and reported?
4)		All safety appliances/guards in place?
5)		Equipment is shut down for fueling?
6)		Equipped with back-up alarms or spotter used if 360 degree visibility restricted?
7)		Loads are secure before transport?
8)		Roads and structures inspected for load capacity per vehicle weights?
9)		Riders prohibited on heavy equipment?

36.10 Slings and Chains

1)		Slings, chains, and rigging rated for intended use and inspected per OSHA. Documentation of inspection in daily log?
2)		Damaged slings, chains, or rigging tagged out and reported?
3)		Employees are instructed to keep clear of suspended loads?

36.11 Electrical

1)		Warning signs indicate the presence and location of high voltage equipment, 250 V or greater, present and location?
2)		Electrical equipment and wiring properly guarded?
3)		Electrical lines, extension cords, and cables guarded and properly maintained?
4)		Extension cords kept dry-- out of puddles and rain?
5)		Damaged equipment tagged out?
6)		Underground Electrical lines located and indicated?
7)		Overhead electrical lines de-energized or elevated work platforms, work areas, booms or ladders erected so no contact can occur with electrical lines?
8)		A positive electrical lock-out system is used whenever work is done on or in electric equipment or electrically activated equipment?

36.12 Hand and Power Tools

1)		Guards and safety devices in place and used?
2)		Inspected before each use?
3)		Tagged out if defective?
4)		Eye protection areas identified and protection worn?
5)		Non sparking tools available?

36.13 Welding and Cutting

1)		Fire extinguishers present at all welding and cutting operations?
2)		Confined spaces, tanks, pipelines, tested before welding or cutting?
3)		Hot work permitting system in use?
4)		Proper helmets and shields (including proper tint for UV protection) used?
5)		Equipment is properly grounded?
6)		Fuel gas and O2 gas cylinders stored at least 20 feet apart?
7)		Cylinders are stored upright and secured?
8)		Only trained welders permitted?

36.14 Compressed Gas Cylinders/Pressurized Lines

1)		Breathing air cylinders charged only to prescribed pressure?
2)		No other gas system can be mistaken for breathing air?
3)		Cylinders segregated appropriately in controlled, protected, but well ventilated areas?
4)		Smoking prohibited in storage areas?
5)		Cylinders stored upright and secured?
6)		Cylinders caps in place when stored (not in use) or when cylinders moved?
7)		Fuel gas and O2 minimum 20 feet apart when stored?
8)		Pressurized air or waterlines are securely connected?
9)		All site personnel know never to step across a pressurized line?
10)		Gas or other hazardous lines are labeled appropriately?

36.15 Site Safety Management

1)		Copies of contracts with client and sub-contractors are readily obtainable? Nobis' role regarding site health and safety responsibilities clear to the Site Safety Officer?
2)		Site Safety Officer understand their responsibilities for sub-contractors' conformance with all OSHA and other health and safety requirements?
3)		Sub-contractors have provided approved copies of their safety plan or have signified their intent to conform to Nobis' site specific health and safety plan?
4)		If a Nobis employee is working alone, they have initiated a safety call program as required?
5)		If multiple Nobis employees are at a site, it is clear to all who the Site Safety Officer is?
6)		Site Safety Officer has adequate knowledge of site hazards and mitigation measures?
7)		Site Safety Officer knows what to do in the event of an OSHA inspection?
8)		Site Safety Officer knows how to report accidents, incidents, and illnesses?
9)		Site Safety Officer has copies of (or can readily obtain) medical clearance letters and medical emergency forms for all Nobis employees?
10)		Site Safety Officer has copies of (or can readily obtain) medical clearance letters and training records for subcontractors?

Additional Comments:

FIGURES

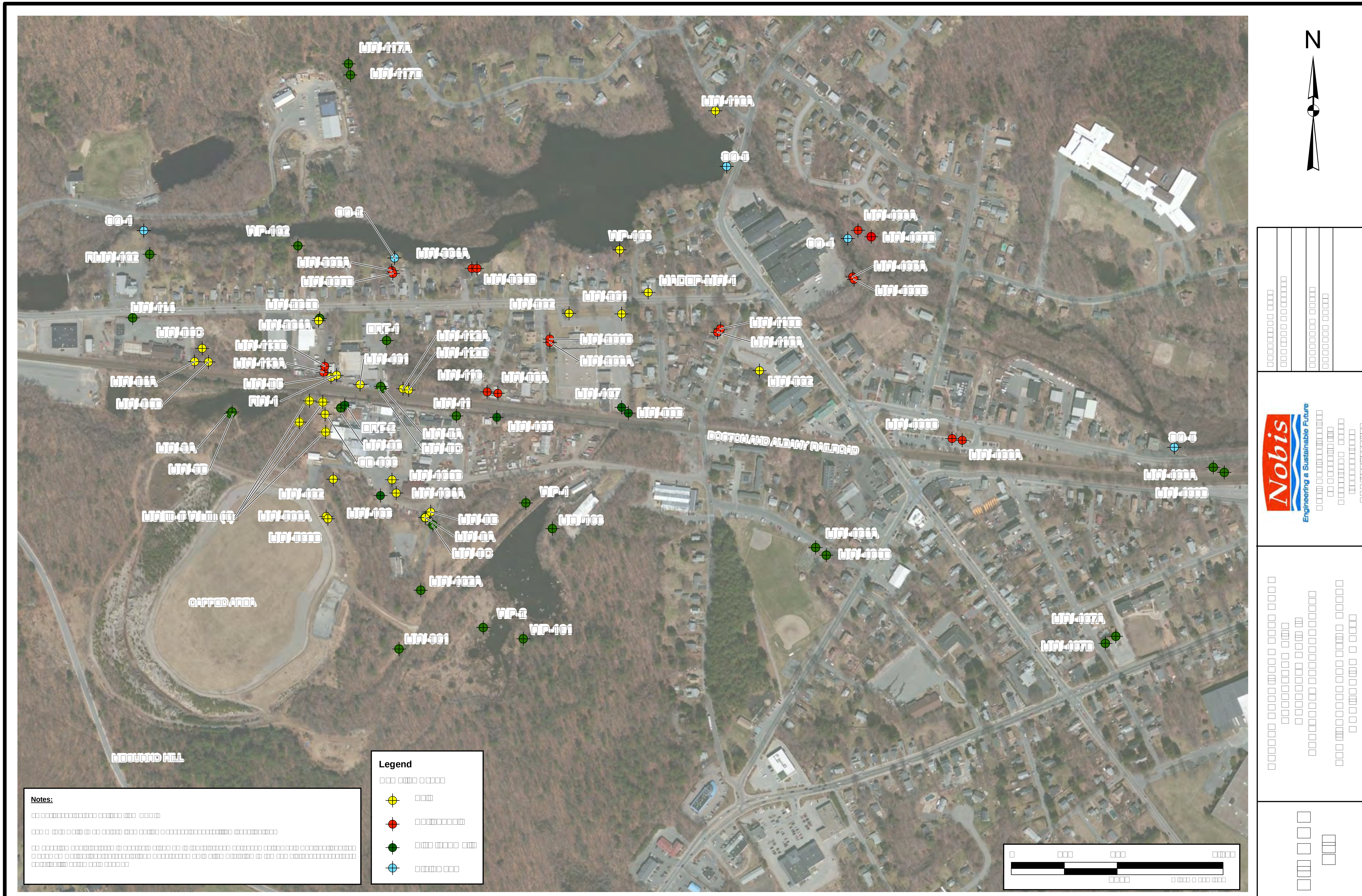
N
Legend
Notes:
Nobis
Engineering a Sustainable Future

Notes:

Legend

Nobis
Engineering a Sustainable Future

Path:
Date Printed:

APPENDIX A

APPENDIX A

CONTAMINANTS OF CONCERN SITE INFORMATION

Table 3-4
January 2011 Groundwater Analytical Results - Anions
Nyanza Chemical Waste Dump Superfund Site
Ashland, Massachusetts

Sample Location											
Sample ID											
Sample Date & Time											
Chemical Name											

Sample Location											
Sample ID											
Sample Date & Time											
Chemical Name											

Sample Location									
Sample ID									
Sample Date & Time									
Chemical Name									

Notes:

Table 3-3
January 2011 Groundwater Analytical Results - Total Metals Analysis
Nyanza Chemical Waste Dump Superfund Site
Ashland, Massachusetts

		Sample Location:	P-1	RW-1	B-5	MW-4A	MW-4B	MW-06A	MW-08	RMW-102
		Sample ID:	P-01-011111A	RW-01-011110A	B-05-011110A	MW-403A-011811A	MW-403B-011811A	MW-06A-011911A	MW-08-011911A	RMW-102-011711A
		Sample Date & Time:	1/11/2011 2:55:00 PM	1/11/2011 10:50:00 AM	1/11/2011 11:40:00 AM	1/18/2011 12:00:00 PM	1/18/2011 12:20:00 PM	1/19/2011 10:50:00 AM	1/19/2011	1/17/2011 11:50:00 AM
Chemical Name	**GW-1**	**MCL**								
Aluminum			990	11000	440 U	2400	1700	5700	520	670
ANTIMONY	6	6	35	20 U	20 U	20 U	20 U	20 U	42	20 U
ARSENIC	10	10	20 U	20 U	20 U	20 U	20 U	170	20 U	20 U
Barium	2000	2000	94	82	29	25	49	110	110	20 U
Beryllium	4	4	8 U	8 U	8 U	8 U	8 U	8 U	8 U	8 U
Cadmium	5	5	10 U	10 U	10 U	10 U	10 U	10 U	10 U	10 U
Calcium			24000	50000	53000	5400	52000	26000	100000	7400
CHROMIUM	100	100	20 U	20 U	20 U	20 U	20 U	68	20 U	20 U
Cobalt			20 U	35	33	20 U	20 U	20 U	20 U	20 U
Copper		1300	97	42	20 U	20 U	20 U	21	39	20 U
Iron			790	24000	10000	3400	4100	91000	1800	1000
LEAD	15	15	20 U	20 U	20 U	20 U	20 U	20 U	20 U	20 U
Magnesium			2100	8200	4500	1500	12000	4000	4100	1300
Manganese			80 U	2200	1600	50	450	360	240	490
MERCURY	2	2	8	1.1	0.64	0.91	0.86	0.5 U	6.5	0.2 U
NICKEL	100		20 U	22	20 U	20 U	20 U	20 U	20 U	20 U
Potassium			3500	8200	5600	1500	3000	6400	10000	2000
Selenium	50	50	40 U	40 U	40 U	20 U	20 U	20 U	20 U	20 U
Silver	100		10 U	10 U	10 U	10 U	10 U	10 U	10 U	10 U
Sodium			59000	94000	110000	4600	52000	51000	190000	57000
THALLIUM	2	2	40 U	40 U	40 U	40 U	40 U	40 U	40 U	20 U
Vandium	30		20 U	22	20 U	20 U	20 U	24	20 U	20 U
Zinc	5000		39	59	63	20 U	26	36	100	20 U

Notes:

1. All concentrations listed in micrograms per liter (µg/L).
2. U = below detection limit
3. GW-1 = MCP Category GW-1 Standards (310 CMR 40.0974(2)
4. MCL = Maximum Containment Level: EPA's National Primary Drinking Water Regulations, updated May 2009.

Table 3-3
January 2011 Groundwater Analytical Results - Total Metals Analysis
Nyanza Chemical Waste Dump Superfund Site
Ashland, Massachusetts

		Sample Location:	MW-103	WP-105	MW-107	MW-107	MW-112A	MW-113A	MW-113B	MW-115A
		Sample ID:	MW-103-011411A	WP-105-012111A	DUP-02-011811A	MW-107-011811A	MW-112A-012011A	MW-113A-011111A	MW-113B-011111A	MW-115A-011310A
		Sample Date & Time:	1/14/2011 10:50:00 AM	1/21/2011 11:10:00 AM	1/18/2011 1:20:00 PM	1/18/2011 12:25:00 PM	1/20/2011 11:10:00 AM	1/11/2011 2:40:00 PM	1/11/2011 3:20:00 PM	1/13/2011 1:30:00 PM
Chemical Name	**GW-1**	**MCL**								
Aluminum			310	220 U	350	280	150	860	1900	1200
ANTIMONY	6	6	20 U	40 U	20 U	20 U	20 U	20 U	20 U	80 U
ARSENIC	10	10	20 U	80 U	20 U	20 U	20 U	20 U	20 U	80 U
Barium	2000	2000	20 U	58	20 U	20 U	20 U	30	41	80 U
Beryllium	4	4	8 U	16 U	8 U	8 U	8 U	8 U	8 U	32 U
Cadmium	5	5	10 U	20 U	10 U	10 U	10 U	10 U	10 U	40 U
Calcium			7800	15000	50000	48000	24000	28000	61000	95000
CHROMIUM	100	100	20 U	40 U	20 U	20 U	75	20 U	25	80 U
Cobalt			20 U	40 U	20 U	20 U	20 U	20 U	20 U	80 U
Copper		1300	20 U	40 U	20 U	20 U	20 U	78	20 U	80 U
Iron			4100	4000	22000	21000	10000	1500	4100	85000
LEAD	15	15	20 U	40 U	20 U	20 U	20 U	20 U	20 U	80 U
Magnesium			1100	3700	4300	4100	3900	2400	3100	30000
Manganese			390	950	1200	1200	1500	93	700	9100
MERCURY	2	2	0.2 U	0.5 U	0.2 U	0.2 U	0.5 U	1.2	1.6	0.2 U
NICKEL	100		20 U	40 U	20 U	20 U	47	20 U	22	80 U
Potassium			1900	2400	4700	4600	4500	3900	4000	13000
Selenium	50	50	40 U	40 U	20 U	20 U	20 U	40 U	40 U	160 U
Silver	100		10 U	20 U	10 U	10 U	10 U	10 U	10 U	40 U
Sodium			14000	64000	340000	330000	260000	31000	91000	1000000
THALLIUM	2	2	40 U	40 U	40 U	40 U	40 U	40 U	40 U	80 U
Vandium	30		20 U	40 U	20 U	20 U	20 U	20 U	20 U	80 U
Zinc	5000		22	40 U	20 U	20 U	20 U	330	63	630

Notes:

1. All concentrations listed in micrograms per liter (µg/L).
2. U = below detection limit
3. GW-1 = MCP Category GW-1 Standards (310 CMR 40.0974(2)
4. MCL = Maximum Containment Level: EPA's National Primary Drinking Water Regulations, updated May 2009.

Table 3-3
January 2011 Groundwater Analytical Results - Total Metals Analysis
Nyanza Chemical Waste Dump Superfund Site
Ashland, Massachusetts

		Sample Location:	MW-201	MW-202	MW-202	MW-203A	MW-203B	MW-204A	MW-302	MW-304A
		Sample ID:	MW-201-011011A	DUP-01-011011A	MW-202-011011A	MW-203A-011011A	MW-203B-011110A	MW-204A-011411A	MW-302-011411A	MW-304A-011711A
		Sample Date & Time:	1/10/2011 1:35:00 PM	1/10/2011 1:30:00 PM	1/10/2011 12:55:00 PM	1/10/2011 1:50:00 PM	1/11/2011 10:45:00 AM	1/14/2011 10:30:00 AM	1/14/2011 10:50:00 AM	1/17/2011 11:55:00 AM
Chemical Name	**GW-1**	**MCL**								
Aluminum			220 U	4700	5700	1100 U	440 U	1500	2800	450
ANTIMONY	6	6	40 U	60 U	60 U	200 U	40 U	20 U	60 U	80 U
ARSENIC	10	10	40 U	60 U	60 U	200 U	72	20 U	60 U	80 U
Barium	2000	2000	40 U	60 U	60 U	200 U	23	32	60 U	80 U
Beryllium	4	4	16 U	24 U	24 U	80 U	16 U	8 U	24 U	32 U
Cadmium	5	5	20 U	30 U	30 U	100 U	20 U	10 U	30 U	40 U
Calcium			33000	22000	22000	330000	32000	39000	83000	620000
CHROMIUM	100	100	40 U	60 U	60 U	200 U	31	130	60 U	80 U
Cobalt			56	60 U	60 U	200 U	40 U	20 U	100	80 U
Copper		1300	40 U	250	310	200 U	40 U	20 U	60 U	80 U
Iron			25000	29000	34000	180000	82000	49000	46000	3800
LEAD	15	15	40 U	60 U	60 U	200 U	40 U	20 U	60 U	80 U
Magnesium			9100	8600	8800	120000	9400	6300	15000	150000
Manganese			4400	3200	3200	21000	4100	2900	4400	43000
MERCURY	2	2	0.2 U	0.96	1.2	0.2 U	0.2 U	0.24	0.2 U	0.27
NICKEL	100		40 U	60 U	60 U	200 U	40 U	**160**	79	80 U
Potassium			5600	6200	6200	39000	6000	5600	10000	16000
Selenium	50	50	80 U	120 U	120 U	400 U	80 U	40 U	120 U	80 U
Silver	100		20 U	30 U	30 U	100 U	20 U	10 U	30 U	40 U
Sodium			360000	620000	620000	3500000	430000	130000	660000	1400000
THALLIUM	2	2	40 U	60 U	60 U	200 U	80 U	40 U	60 U	160
Vandium	30		40 U	60 U	60 U	200 U	40 U	20 U	60 U	80 U
Zinc	5000		40 U	60 U	60 U	200 U	40 U	25	180	80 U

Notes:

1. All concentrations listed in micrograms per liter (µg/L).
2. U = below detection limit
3. GW-1 = MCP Category GW-1 Standards (310 CMR 40.0974(2)
4. MCL = Maximum Containment Level: EPA's National Primary Drinking Water Regulations, updated May 2009.

Table 3-3
January 2011 Groundwater Analytical Results - Total Metals Analysis
Nyanza Chemical Waste Dump Superfund Site
Ashland, Massachusetts

		Sample Location:	MW-304B	MW-305B	MW-306	RMW-403A	RMW-403B	MW-406A	MW-406B
		Sample ID:	MW-304B-011711A	MW-305B-012111A	MW-306-012111A	RMW-403A-012011A	RMW-403B-011911A	MW-406A-011311A	MW-406B-011311A
		Sample Date & Time:	1/17/2011 11:40:00 AM	1/21/2011 10:50:00 AM	1/21/2011 11:00:00 AM	1/20/2011 10:45:00 AM	1/19/2011 11:05:00 AM	1/13/2011 12:00:00 PM	1/13/2011 12:10:00 PM
Chemical Name	**GW-1**	**MCL**							
Aluminum			110 U	2000	1800	19000	220	1000	450
ANTIMONY	6	6	20 U	20 U	20 U	20 U	20 U	20 U	20 U
ARSENIC	10	10	20 U	20 U	20 U	20 U	20 U	20 U	20 U
Barium	2000	2000	35	50	130	220	42	320	120
Beryllium	4	4	8 U	8 U	8 U	8 U	8 U	8 U	8 U
Cadmium	5	5	10 U	10 U	10 U	10 U	10 U	10 U	10 U
Calcium			270000	11000	21000	28000	34000	95000	42000
CHROMIUM	100	100	20 U	20 U	20 U	20 U	20 U	20 U	20 U
Cobalt			20 U	20 U	20 U	20 U	22	27	20 U
Copper		1300	20 U	20 U	20 U	75	20 U	20 U	20 U
Iron			6100	1600	11000	9900	26000	2000	1200
LEAD	15	15	20 U	20 U	20 U	26	20 U	20 U	20 U
Magnesium			110000	1400	6300	4800	6600	16000	9300
Manganese			31000	230	2700	1800	4500	860	1400
MERCURY	2	2	0.2 U	0.5 U	0.5 U	0.5 U	0.5 U	0.2 U	0.2 U
NICKEL	100		20 U	20 U	20 U	20 U	20 U	20 U	20 U
Potassium			18000	2100	4000	4500	5600	2700	5100
Selenium	50	50	20 U	20 U	20 U	20 U	20 U	40 U	40 U
Silver	100		10 U	10 U	10 U	11 U	10 U	10 U	10 U
Sodium			240000	27000	20000	87000	90000	47000	120000
THALLIUM	2	2	110	40 U	40 U	40 U	40 U	40 U	40 U
Vandium	30		20 U	20 U	20 U	20 U	20 U	20 U	20 U
Zinc	5000		37	53	59	77	20 U	22	20 U

Notes:

1. All concentrations listed in micrograms per liter (µg/L).
2. U = below detection limit
3. GW-1 = MCP Category GW-1 Standards (310 CMR 40.0974(2)
4. MCL = Maximum Containment Level: EPA's National Primary Drinking Water Regulations, updated May 2009.

Table 3-2
January 2011 Groundwater Analytical Results - SVOCs
Nyanza Chemical Waste Dump Superfund Site
Ashland, Massachusetts

		Sample Location:	[illegible]	[illegible]	[illegible]	[illegible]	[illegible]	[illegible]	[illegible]	[illegible]	[illegible]	[illegible]	[illegible]	[illegible]	[illegible]	[illegible]	[illegible]	[illegible]	[illegible]
		Sample ID:	[illegible]	[illegible]	[illegible]	[illegible]	[illegible]	[illegible]	[illegible]	[illegible]	[illegible]	[illegible]	[illegible]	[illegible]	[illegible]	[illegible]	[illegible]	[illegible]	[illegible]
		Sample Date & Time:	[illegible]	[illegible]	[illegible]	[illegible]	[illegible]	[illegible]	[illegible]	[illegible]	[illegible]	[illegible]	[illegible]	[illegible]	[illegible]	[illegible]	[illegible]	[illegible]	[illegible]
Chemical Name	**GW-1**	**GW-2**																	
[illegible]			[illegible]	[illegible]	[illegible]	[illegible]	[illegible]	[illegible]	[illegible]	[illegible]	[illegible]	[illegible]	[illegible]	[illegible]	[illegible]	[illegible]	[illegible]	[illegible]	[illegible]
[illegible]	[illegible]	[illegible]	[illegible]	[illegible]	[illegible]	[illegible]	[illegible]	[illegible]	[illegible]	[illegible]	[illegible]	[illegible]	[illegible]	[illegible]	[illegible]	[illegible]	[illegible]	[illegible]	[illegible]
[illegible]	[illegible]	[illegible]	[illegible]	*2050*	[illegible]	[illegible]	[illegible]	[illegible]	[illegible]	[illegible]	[illegible]	[illegible]	[illegible]	[illegible]	[illegible]	*15000*	[illegible]	[illegible]	[illegible]
[illegible]	[illegible]	[illegible]	[illegible]	[illegible]	[illegible]	[illegible]	[illegible]	[illegible]	[illegible]	[illegible]	[illegible]	[illegible]	[illegible]	[illegible]	[illegible]	[illegible]	[illegible]	[illegible]	[illegible]
[illegible]	[illegible]	[illegible]	[illegible]	*470*	*406*	[illegible]	[illegible]	[illegible]	[illegible]	[illegible]	[illegible]	[illegible]	[illegible]	[illegible]	[illegible]	*3300*	[illegible]	[illegible]	[illegible]
[illegible]			[illegible]	[illegible]	[illegible]	[illegible]	[illegible]	[illegible]	[illegible]	[illegible]	[illegible]	[illegible]	[illegible]	[illegible]	[illegible]	[illegible]	[illegible]	[illegible]	[illegible]
[illegible]			[illegible]	[illegible]	[illegible]	[illegible]	[illegible]	[illegible]	[illegible]	[illegible]	[illegible]	[illegible]	[illegible]	[illegible]	[illegible]	[illegible]	[illegible]	[illegible]	[illegible]
[illegible]			[illegible]	[illegible]	[illegible]	[illegible]	[illegible]	[illegible]	[illegible]	[illegible]	[illegible]	[illegible]	[illegible]	[illegible]	[illegible]	[illegible]	[illegible]	[illegible]	[illegible]
[illegible]	[illegible]	[illegible]	[illegible]	[illegible]	[illegible]	[illegible]	[illegible]	[illegible]	[illegible]	[illegible]	[illegible]	[illegible]	[illegible]	[illegible]	[illegible]	[illegible]	[illegible]	[illegible]	[illegible]
[illegible]	[illegible]	[illegible]	[illegible]	[illegible]	[illegible]	[illegible]	[illegible]	[illegible]	[illegible]	[illegible]	[illegible]	[illegible]	[illegible]	[illegible]	[illegible]	[illegible]	[illegible]	[illegible]	[illegible]
[illegible]	[illegible]	[illegible]	[illegible]	[illegible]	[illegible]	[illegible]	[illegible]	[illegible]	[illegible]	[illegible]	[illegible]	[illegible]	[illegible]	[illegible]	[illegible]	[illegible]	[illegible]	[illegible]	[illegible]
[illegible]	[illegible]	[illegible]	[illegible]	[illegible]	[illegible]	[illegible]	[illegible]	[illegible]	[illegible]	[illegible]	[illegible]	[illegible]	[illegible]	[illegible]	[illegible]	[illegible]	[illegible]	[illegible]	[illegible]
[illegible]	[illegible]	[illegible]	[illegible]	[illegible]	[illegible]	[illegible]	[illegible]	[illegible]	[illegible]	[illegible]	[illegible]	[illegible]	[illegible]	[illegible]	[illegible]	[illegible]	[illegible]	[illegible]	[illegible]
[illegible]	[illegible]	[illegible]	[illegible]	[illegible]	[illegible]	[illegible]	[illegible]	[illegible]	[illegible]	[illegible]	[illegible]	[illegible]	[illegible]	[illegible]	[illegible]	[illegible]	[illegible]	[illegible]	[illegible]
[illegible]	[illegible]	[illegible]	[illegible]	[illegible]	[illegible]	[illegible]	[illegible]	[illegible]	[illegible]	[illegible]	[illegible]	[illegible]	[illegible]	[illegible]	[illegible]	[illegible]	[illegible]	[illegible]	[illegible]
[illegible]	[illegible]	[illegible]	[illegible]	[illegible]	[illegible]	[illegible]	[illegible]	[illegible]	[illegible]	[illegible]	[illegible]	[illegible]	[illegible]	[illegible]	[illegible]	[illegible]	[illegible]	[illegible]	[illegible]
[illegible]	[illegible]	[illegible]	[illegible]	[illegible]	[illegible]	[illegible]	[illegible]	[illegible]	[illegible]	[illegible]	[illegible]	[illegible]	[illegible]	[illegible]	[illegible]	[illegible]	[illegible]	[illegible]	[illegible]
[illegible]	[illegible]	[illegible]	[illegible]	[illegible]	[illegible]	[illegible]	[illegible]	[illegible]	[illegible]	[illegible]	[illegible]	[illegible]	[illegible]	[illegible]	[illegible]	[illegible]	[illegible]	[illegible]	[illegible]
[illegible]	[illegible]	[illegible]	[illegible]	[illegible]	[illegible]	[illegible]	[illegible]	[illegible]	[illegible]	[illegible]	[illegible]	[illegible]	[illegible]	[illegible]	[illegible]	[illegible]	[illegible]	[illegible]	[illegible]
[illegible]	[illegible]	[illegible]	[illegible]	[illegible]	[illegible]	[illegible]	[illegible]	[illegible]	[illegible]	[illegible]	[illegible]	[illegible]	[illegible]	[illegible]	[illegible]	[illegible]	[illegible]	[illegible]	[illegible]
[illegible]	[illegible]	[illegible]	[illegible]	[illegible]	[illegible]	[illegible]	[illegible]	[illegible]	[illegible]	[illegible]	[illegible]	[illegible]	[illegible]	[illegible]	[illegible]	[illegible]	[illegible]	[illegible]	[illegible]
[illegible]	[illegible]	[illegible]	[illegible]	[illegible]	[illegible]	[illegible]	[illegible]	[illegible]	[illegible]	[illegible]	[illegible]	[illegible]	[illegible]	[illegible]	[illegible]	[illegible]	[illegible]	[illegible]	[illegible]
[illegible]	[illegible]	[illegible]	[illegible]	[illegible]	[illegible]	[illegible]	[illegible]	[illegible]	[illegible]	[illegible]	[illegible]	[illegible]	[illegible]	[illegible]	[illegible]	[illegible]	[illegible]	[illegible]	[illegible]
[illegible]	[illegible]	[illegible]	[illegible]	[illegible]	[illegible]	[illegible]	[illegible]	[illegible]	[illegible]	[illegible]	[illegible]	[illegible]	[illegible]	[illegible]	[illegible]	[illegible]	[illegible]	[illegible]	[illegible]
[illegible]	[illegible]	[illegible]	[illegible]	[illegible]	[illegible]	[illegible]	[illegible]	[illegible]	[illegible]	[illegible]	[illegible]	[illegible]	[illegible]	[illegible]	[illegible]	[illegible]	[illegible]	[illegible]	[illegible]
[illegible]	[illegible]	[illegible]	[illegible]	[illegible]	[illegible]	[illegible]	[illegible]	[illegible]	[illegible]	[illegible]	[illegible]	[illegible]	[illegible]	[illegible]	[illegible]	[illegible]	[illegible]	[illegible]	[illegible]
[illegible]	[illegible]	[illegible]	[illegible]	[illegible]	[illegible]	[illegible]	[illegible]	[illegible]	[illegible]	[illegible]	[illegible]	[illegible]	[illegible]	[illegible]	[illegible]	[illegible]	[illegible]	[illegible]	[illegible]
[illegible]	[illegible]	[illegible]	[illegible]	[illegible]	[illegible]	[illegible]	[illegible]	[illegible]	[illegible]	[illegible]	[illegible]	[illegible]	[illegible]	[illegible]	[illegible]	[illegible]	[illegible]	[illegible]	[illegible]
[illegible]	[illegible]	[illegible]	[illegible]	[illegible]	[illegible]	[illegible]	[illegible]	[illegible]	[illegible]	[illegible]	[illegible]	[illegible]	[illegible]	[illegible]	[illegible]	[illegible]	[illegible]	[illegible]	[illegible]
[illegible]	[illegible]	[illegible]	[illegible]	[illegible]	[illegible]	[illegible]	[illegible]	[illegible]	[illegible]	[illegible]	[illegible]	[illegible]	[illegible]	[illegible]	[illegible]	[illegible]	[illegible]	[illegible]	[illegible]
[illegible]	[illegible]	[illegible]	[illegible]	[illegible]	[illegible]	[illegible]	[illegible]	[illegible]	[illegible]	[illegible]	[illegible]	[illegible]	[illegible]	[illegible]	[illegible]	[illegible]	[illegible]	[illegible]	[illegible]
[illegible]	[illegible]	[illegible]	[illegible]	[illegible]	[illegible]	[illegible]	[illegible]	[illegible]	[illegible]	[illegible]	[illegible]	[illegible]	[illegible]	[illegible]	[illegible]	[illegible]	[illegible]	[illegible]	[illegible]
[illegible]	[illegible]	[illegible]	[illegible]	[illegible]	[illegible]	[illegible]	[illegible]	[illegible]	[illegible]	[illegible]	[illegible]	[illegible]	[illegible]	[illegible]	[illegible]	[illegible]	[illegible]	[illegible]	[illegible]
[illegible]	[illegible]	[illegible]	[illegible]	[illegible]	[illegible]	[illegible]	[illegible]	[illegible]	[illegible]	[illegible]	[illegible]	[illegible]	[illegible]	[illegible]	[illegible]	[illegible]	[illegible]	[illegible]	[illegible]
[illegible]	[illegible]	[illegible]	[illegible]	[illegible]	[illegible]	[illegible]	[illegible]	[illegible]	[illegible]	[illegible]	[illegible]	[illegible]	[illegible]	[illegible]	[illegible]	[illegible]	[illegible]	[illegible]	[illegible]
[illegible]	[illegible]	[illegible]	[illegible]	[illegible]	[illegible]	[illegible]	[illegible]	[illegible]	[illegible]	[illegible]	[illegible]	[illegible]	[illegible]	[illegible]	[illegible]	[illegible]	[illegible]	[illegible]	[illegible]
[illegible]	[illegible]	[illegible]	[illegible]	[illegible]	[illegible]	[illegible]	[illegible]	[illegible]	[illegible]	[illegible]	[illegible]	[illegible]	[illegible]	[illegible]	[illegible]	[illegible]	[illegible]	[illegible]	[illegible]
[illegible]	[illegible]	[illegible]	[illegible]	[illegible]	[illegible]	[illegible]	[illegible]	[illegible]	[illegible]	[illegible]	[illegible]	[illegible]	[illegible]	[illegible]	[illegible]	[illegible]	[illegible]	[illegible]	[illegible]
[illegible]	[illegible]	[illegible]	[illegible]	[illegible]	[illegible]	[illegible]	[illegible]	[illegible]	[illegible]	[illegible]	[illegible]	[illegible]	[illegible]	[illegible]	[illegible]	[illegible]	[illegible]	[illegible]	[illegible]
[illegible]	[illegible]	[illegible]	[illegible]	[illegible]	[illegible]	[illegible]	[illegible]	[illegible]	[illegible]	[illegible]	[illegible]	[illegible]	[illegible]	[illegible]	[illegible]	[illegible]	[illegible]	[illegible]	[illegible]
[illegible]	[illegible]	[illegible]	[illegible]	[illegible]	[illegible]	[illegible]	[illegible]	[illegible]	[illegible]	[illegible]	[illegible]	[illegible]	[illegible]	[illegible]	[illegible]	[illegible]	[illegible]	[illegible]	[illegible]
[illegible]	[illegible]	[illegible]	[illegible]	[illegible]	[illegible]	[illegible]	[illegible]	[illegible]	[illegible]	[illegible]	[illegible]	[illegible]	[illegible]	[illegible]	[illegible]	[illegible]	[illegible]	[illegible]	[illegible]
[illegible]	[illegible]	[illegible]	[illegible]	[illegible]	[illegible]	[illegible]	[illegible]	[illegible]	[illegible]	[illegible]	[illegible]	[illegible]	[illegible]	[illegible]	[illegible]	[illegible]	[illegible]	[illegible]	[illegible]
[illegible]	[illegible]	[illegible]	[illegible]	[illegible]	[illegible]	[illegible]	[illegible]	[illegible]	[illegible]	[illegible]	[illegible]	[illegible]	[illegible]	[illegible]	[illegible]	[illegible]	[illegible]	[illegible]	[illegible]
[illegible]	[illegible]	[illegible]	[illegible]	[illegible]	[illegible]	[illegible]	[illegible]	[illegible]	[illegible]	[illegible]	[illegible]	[illegible]	[illegible]	[illegible]	[illegible]	[illegible]	[illegible]	[illegible]	[illegible]
[illegible]	[illegible]	[illegible]	[illegible]	[illegible]	[illegible]	[illegible]	[illegible]	[illegible]	[illegible]	[illegible]	[illegible]	[illegible]	[illegible]	[illegible]	[illegible]	[illegible]	[illegible]	[illegible]	[illegible]
[illegible]	[illegible]	[illegible]	[illegible]	[illegible]	[illegible]	[illegible]	[illegible]	[illegible]	[illegible]	[illegible]	[illegible]	[illegible]	[illegible]	[illegible]	[illegible]	[illegible]	[illegible]	[illegible]	[illegible]
[illegible]	[illegible]	[illegible]	[illegible]	[illegible]	[illegible]	[illegible]	[illegible]	[illegible]	[illegible]	[illegible]	[illegible]	[illegible]	[illegible]	[illegible]	[illegible]	[illegible]	[illegible]	[illegible]	[illegible]
[illegible]	[illegible]	[illegible]	[illegible]	[illegible]	[illegible]	[illegible]	[illegible]	[illegible]	[illegible]	[illegible]	[illegible]	[illegible]	[illegible]	[illegible]	[illegible]	[illegible]	[illegible]	[illegible]	[illegible]
[illegible]	[illegible]	[illegible]	[illegible]	[illegible]	[illegible]	[illegible]	[illegible]	[illegible]	[illegible]	[illegible]	[illegible]	[illegible]	[illegible]	[illegible]	[illegible]	[illegible]	[illegible]	[illegible]	[illegible]
[illegible]	[illegible]	[illegible]	[illegible]	[illegible]	[illegible]	[illegible]	[illegible]	[illegible]	[illegible]	[illegible]	[illegible]	[illegible]	[illegible]	[illegible]	[illegible]	[illegible]	[illegible]	[illegible]	[illegible]
[illegible]	[illegible]	[illegible]	[illegible]	[illegible]	[illegible]	[illegible]	[illegible]	[illegible]	[illegible]	[illegible]	[illegible]	[illegible]	[illegible]	[illegible]	[illegible]	[illegible]	[illegible]	[illegible]	[illegible]
[illegible]	[illegible]	[illegible]	[illegible]	[illegible]	[illegible]	[illegible]	[illegible]	[illegible]	[illegible]	[illegible]	[illegible]	[illegible]	[illegible]	[illegible]	[illegible]	[illegible]	[illegible]	[illegible]	[illegible]

Table 3-2
January 2011 Groundwater Analytical Results - SVOCs
Nyanza Chemical Waste Dump Superfund Site
Ashland, Massachusetts

		Sample Location:	[illegible]	[illegible]	[illegible]	[illegible]	[illegible]	[illegible]	[illegible]	[illegible]	[illegible]	[illegible]	[illegible]	[illegible]	[illegible]	[illegible]	[illegible]	[illegible]	[illegible]
		Sample ID:	[illegible]	[illegible]	[illegible]	[illegible]	[illegible]	[illegible]	[illegible]	[illegible]	[illegible]	[illegible]	[illegible]	[illegible]	[illegible]	[illegible]	[illegible]	[illegible]	[illegible]
		Sample Date & Time:	[illegible]	[illegible]	[illegible]	[illegible]	[illegible]	[illegible]	[illegible]	[illegible]	[illegible]	[illegible]	[illegible]	[illegible]	[illegible]	[illegible]	[illegible]	[illegible]	[illegible]
Chemical Name	**GW-1**	**GW-2**																	
[illegible]			[illegible]	[illegible]	[illegible]	[illegible]	[illegible]	[illegible]	[illegible]	[illegible]	[illegible]	[illegible]	[illegible]	[illegible]	[illegible]	[illegible]	[illegible]	[illegible]	[illegible]
[illegible]	[illegible]	[illegible]	[illegible]	[illegible]	[illegible]	[illegible]	[illegible]	[illegible]	[illegible]	[illegible]	[illegible]	[illegible]	[illegible]	[illegible]	[illegible]	[illegible]	[illegible]	[illegible]	[illegible]
[illegible]	[illegible]		[illegible]	[illegible]	[illegible]	[illegible]	[illegible]	[illegible]	[illegible]	[illegible]	[illegible]	[illegible]	[illegible]	[illegible]	[illegible]	[illegible]	[illegible]	[illegible]	[illegible]
[illegible]			[illegible]	[illegible]	[illegible]	[illegible]	[illegible]	[illegible]	[illegible]	[illegible]	[illegible]	[illegible]	[illegible]	[illegible]	[illegible]	[illegible]	[illegible]	[illegible]	[illegible]
[illegible]			[illegible]	[illegible]	[illegible]	[illegible]	[illegible]	[illegible]	[illegible]	[illegible]	[illegible]	[illegible]	[illegible]	[illegible]	[illegible]	[illegible]	[illegible]	[illegible]	[illegible]
[illegible]			[illegible]	[illegible]	[illegible]	[illegible]	[illegible]	[illegible]	[illegible]	[illegible]	[illegible]	[illegible]	[illegible]	[illegible]	[illegible]	[illegible]	[illegible]	[illegible]	[illegible]
[illegible]	[illegible]		[illegible]	[illegible]	[illegible]	[illegible]	[illegible]	[illegible]	[illegible]	[illegible]	[illegible]	[illegible]	[illegible]	[illegible]	[illegible]	[illegible]	[illegible]	[illegible]	[illegible]
[illegible]			[illegible]	[illegible]	[illegible]	[illegible]	[illegible]	[illegible]	[illegible]	[illegible]	[illegible]	[illegible]	[illegible]	[illegible]	[illegible]	[illegible]	[illegible]	[illegible]	[illegible]
[illegible]	[illegible]		[illegible]	[illegible]	[illegible]	[illegible]	[illegible]	[illegible]	[illegible]	[illegible]	[illegible]	[illegible]	[illegible]	[illegible]	[illegible]	[illegible]	[illegible]	[illegible]	[illegible]
[illegible]	[illegible]	[illegible]	[illegible]	[illegible]	[illegible]	[illegible]	[illegible]	[illegible]	[illegible]	[illegible]	[illegible]	[illegible]	[illegible]	[illegible]	[illegible]	[illegible]	[illegible]	[illegible]	[illegible]
[illegible]	[illegible]	[illegible]	[illegible]	[illegible]	[illegible]	[illegible]	[illegible]	[illegible]	[illegible]	[illegible]	[illegible]	[illegible]	[illegible]	[illegible]	[illegible]	[illegible]	[illegible]	[illegible]	[illegible]
[illegible]			[illegible]	[illegible]	[illegible]	[illegible]	[illegible]	[illegible]	[illegible]	[illegible]	[illegible]	[illegible]	[illegible]	[illegible]	[illegible]	[illegible]	[illegible]	[illegible]	[illegible]
[illegible]			[illegible]	[illegible]	[illegible]	[illegible]	[illegible]	[illegible]	[illegible]	[illegible]	[illegible]	[illegible]	[illegible]	[illegible]	[illegible]	[illegible]	[illegible]	[illegible]	[illegible]
[illegible]			[illegible]	[illegible]	[illegible]	[illegible]	[illegible]	[illegible]	[illegible]	[illegible]	[illegible]	[illegible]	[illegible]	[illegible]	[illegible]	[illegible]	[illegible]	[illegible]	[illegible]
[illegible]			[illegible]	[illegible]	[illegible]	[illegible]	[illegible]	[illegible]	[illegible]	[illegible]	[illegible]	[illegible]	[illegible]	[illegible]	[illegible]	[illegible]	[illegible]	[illegible]	[illegible]
[illegible]	[illegible]		[illegible]	[illegible]	[illegible]	[illegible]	[illegible]	[illegible]	[illegible]	[illegible]	[illegible]	[illegible]	[illegible]	[illegible]	[illegible]	[illegible]	[illegible]	[illegible]	[illegible]
[illegible]	[illegible]	[illegible]	[illegible]	[illegible]	[illegible]	[illegible]	[illegible]	[illegible]	[illegible]	[illegible]	[illegible]	[illegible]	[illegible]	[illegible]	[illegible]	[illegible]	[illegible]	[illegible]	[illegible]
[illegible]			[illegible]	[illegible]	[illegible]	[illegible]	[illegible]	[illegible]	[illegible]	[illegible]	[illegible]	[illegible]	[illegible]	[illegible]	[illegible]	[illegible]	[illegible]	[illegible]	[illegible]
[illegible]	[illegible]		[illegible]	[illegible]	[illegible]	[illegible]	[illegible]	[illegible]	[illegible]	[illegible]	[illegible]	[illegible]	[illegible]	[illegible]	[illegible]	[illegible]	[illegible]	[illegible]	[illegible]
[illegible]			[illegible]	[illegible]	[illegible]	[illegible]	[illegible]	[illegible]	[illegible]	[illegible]	[illegible]	[illegible]	[illegible]	[illegible]	[illegible]	[illegible]	[illegible]	[illegible]	[illegible]
[illegible]			[illegible]	[illegible]	[illegible]	[illegible]	[illegible]	[illegible]	[illegible]	[illegible]	[illegible]	[illegible]	[illegible]	[illegible]	[illegible]	[illegible]	[illegible]	[illegible]	[illegible]
[illegible]			[illegible]	[illegible]	[illegible]	[illegible]	[illegible]	[illegible]	[illegible]	[illegible]	[illegible]	[illegible]	[illegible]	[illegible]	[illegible]	[illegible]	[illegible]	[illegible]	[illegible]
[illegible]			[illegible]	[illegible]	[illegible]	[illegible]	[illegible]	[illegible]	[illegible]	[illegible]	[illegible]	[illegible]	[illegible]	[illegible]	[illegible]	[illegible]	[illegible]	[illegible]	[illegible]
[illegible]			[illegible]	[illegible]	[illegible]	[illegible]	[illegible]	[illegible]	[illegible]	[illegible]	[illegible]	[illegible]	[illegible]	[illegible]	[illegible]	[illegible]	[illegible]	[illegible]	[illegible]
[illegible]			[illegible]	[illegible]	[illegible]	[illegible]	[illegible]	[illegible]	[illegible]	[illegible]	[illegible]	[illegible]	[illegible]	[illegible]	[illegible]	[illegible]	[illegible]	[illegible]	[illegible]
[illegible]			[illegible]	[illegible]	[illegible]	[illegible]	[illegible]	[illegible]	[illegible]	[illegible]	[illegible]	[illegible]	[illegible]	[illegible]	[illegible]	[illegible]	[illegible]	[illegible]	[illegible]
[illegible]			[illegible]	[illegible]	[illegible]	[illegible]	[illegible]	[illegible]	[illegible]	[illegible]	[illegible]	[illegible]	[illegible]	[illegible]	[illegible]	[illegible]	[illegible]	[illegible]	[illegible]
[illegible]			[illegible]	[illegible]	[illegible]	[illegible]	[illegible]	[illegible]	[illegible]	[illegible]	[illegible]	[illegible]	[illegible]	[illegible]	[illegible]	[illegible]	[illegible]	[illegible]	[illegible]
[illegible]			[illegible]	[illegible]	[illegible]	[illegible]	[illegible]	[illegible]	[illegible]	[illegible]	[illegible]	[illegible]	[illegible]	[illegible]	[illegible]	[illegible]	[illegible]	[illegible]	[illegible]
[illegible]			[illegible]	[illegible]	[illegible]	[illegible]	[illegible]	[illegible]	[illegible]	[illegible]	[illegible]	[illegible]	[illegible]	[illegible]	[illegible]	[illegible]	[illegible]	[illegible]	[illegible]
[illegible]			[illegible]	[illegible]	[illegible]	[illegible]	[illegible]	[illegible]	[illegible]	[illegible]	[illegible]	[illegible]	[illegible]	[illegible]	[illegible]	[illegible]	[illegible]	[illegible]	[illegible]
[illegible]			[illegible]	[illegible]	[illegible]	[illegible]	[illegible]	[illegible]	[illegible]	[illegible]	[illegible]	[illegible]	[illegible]	[illegible]	[illegible]	[illegible]	[illegible]	[illegible]	[illegible]
[illegible]			[illegible]	[illegible]	[illegible]	[illegible]	[illegible]	[illegible]	[illegible]	[illegible]	[illegible]	[illegible]	[illegible]	[illegible]	[illegible]	[illegible]	[illegible]	[illegible]	[illegible]
[illegible]			[illegible]	[illegible]	[illegible]	[illegible]	[illegible]	[illegible]	[illegible]	[illegible]	[illegible]	[illegible]	[illegible]	[illegible]	[illegible]	[illegible]	[illegible]	[illegible]	[illegible]
[illegible]			[illegible]	[illegible]	[illegible]	[illegible]	[illegible]	[illegible]	[illegible]	[illegible]	[illegible]	[illegible]	[illegible]	[illegible]	[illegible]	[illegible]	[illegible]	[illegible]	[illegible]
[illegible]			[illegible]	[illegible]	[illegible]	[illegible]	[illegible]	[illegible]	[illegible]	[illegible]	[illegible]	[illegible]	[illegible]	[illegible]	[illegible]	[illegible]	[illegible]	[illegible]	[illegible]
[illegible]			[illegible]	[illegible]	[illegible]	[illegible]	[illegible]	[illegible]	[illegible]	[illegible]	[illegible]	[illegible]	[illegible]	[illegible]	[illegible]	[illegible]	[illegible]	[illegible]	[illegible]
[illegible]			[illegible]	[illegible]	[illegible]	[illegible]	[illegible]	[illegible]	[illegible]	[illegible]	[illegible]	[illegible]	[illegible]	[illegible]	[illegible]	[illegible]	[illegible]	[illegible]	[illegible]

Notes: [illegible]

[illegible] *Italic* [illegible]

Table 3-2
January 2011 Groundwater Analytical Results - SVOCs
Nyanza Chemical Waste Dump Superfund Site
Ashland, Massachusetts

Sample Location:			[illegible]	[illegible]	[illegible]	[illegible]	[illegible]	[illegible]	[illegible]	[illegible]	[illegible]	[illegible]	[illegible]	[illegible]	[illegible]	[illegible]
Sample ID:			[illegible]	[illegible]	[illegible]	[illegible]	[illegible]	[illegible]	[illegible]	[illegible]	[illegible]	[illegible]	[illegible]	[illegible]	[illegible]	[illegible]
Sample Date & Time:			[illegible]	[illegible]	[illegible]	[illegible]	[illegible]	[illegible]	[illegible]	[illegible]	[illegible]	[illegible]	[illegible]	[illegible]	[illegible]	[illegible]
Chemical Name	**GW-1**	**GW-2**														
[illegible]			[illegible]	[illegible]	[illegible]	[illegible]	[illegible]	[illegible]	[illegible]	[illegible]	[illegible]	[illegible]	[illegible]	[illegible]	[illegible]	[illegible]
[illegible]	[illegible]	[illegible]	[illegible]	[illegible]	[illegible]	[illegible]	[illegible]	[illegible]	[illegible]	[illegible]	[illegible]	[illegible]	[illegible]	[illegible]	[illegible]	[illegible]
[illegible]	[illegible]	[illegible]	[illegible]	[illegible]	*2265*	[illegible]	[illegible]	[illegible]	[illegible]	[illegible]	[illegible]	[illegible]	[illegible]	[illegible]	[illegible]	[illegible]
[illegible]	[illegible]	[illegible]	[illegible]	[illegible]	[illegible]	[illegible]	[illegible]	[illegible]	[illegible]	[illegible]	[illegible]	[illegible]	[illegible]	[illegible]	[illegible]	[illegible]
[illegible]	[illegible]	[illegible]	[illegible]	*201*	*428*	[illegible]	[illegible]	[illegible]	[illegible]	[illegible]	[illegible]	[illegible]	[illegible]	[illegible]	[illegible]	[illegible]
[illegible]			[illegible]	[illegible]	[illegible]	[illegible]	[illegible]	[illegible]	[illegible]	[illegible]	[illegible]	[illegible]	[illegible]	[illegible]	[illegible]	[illegible]
[illegible]			[illegible]	[illegible]	[illegible]	[illegible]	[illegible]	[illegible]	[illegible]	[illegible]	[illegible]	[illegible]	[illegible]	[illegible]	[illegible]	[illegible]
[illegible]			[illegible]	[illegible]	[illegible]	[illegible]	[illegible]	[illegible]	[illegible]	[illegible]	[illegible]	[illegible]	[illegible]	[illegible]	[illegible]	[illegible]
[illegible]	[illegible]	[illegible]	[illegible]	[illegible]	[illegible]	[illegible]	[illegible]	[illegible]	[illegible]	[illegible]	[illegible]	[illegible]	[illegible]	[illegible]	[illegible]	[illegible]
[illegible]	[illegible]	[illegible]	[illegible]	[illegible]	[illegible]	[illegible]	[illegible]	[illegible]	[illegible]	[illegible]	[illegible]	[illegible]	[illegible]	[illegible]	[illegible]	[illegible]
[illegible]	[illegible]	[illegible]	[illegible]	[illegible]	[illegible]	[illegible]	[illegible]	[illegible]	[illegible]	[illegible]	[illegible]	[illegible]	[illegible]	[illegible]	[illegible]	[illegible]
[illegible]	[illegible]	[illegible]	[illegible]	[illegible]	[illegible]	[illegible]	[illegible]	[illegible]	[illegible]	[illegible]	[illegible]	[illegible]	[illegible]	[illegible]	[illegible]	[illegible]
[illegible]	[illegible]	[illegible]	[illegible]	[illegible]	[illegible]	[illegible]	[illegible]	[illegible]	[illegible]	[illegible]	[illegible]	[illegible]	[illegible]	[illegible]	[illegible]	[illegible]
[illegible]	[illegible]	[illegible]	[illegible]	[illegible]	[illegible]	[illegible]	[illegible]	[illegible]	[illegible]	[illegible]	[illegible]	[illegible]	[illegible]	[illegible]	[illegible]	[illegible]
[illegible]			[illegible]	[illegible]	[illegible]	[illegible]	[illegible]	[illegible]	[illegible]	[illegible]	[illegible]	[illegible]	[illegible]	[illegible]	[illegible]	[illegible]
[illegible]			[illegible]	[illegible]	[illegible]	[illegible]	[illegible]	[illegible]	[illegible]	[illegible]	[illegible]	[illegible]	[illegible]	[illegible]	[illegible]	[illegible]
[illegible]			[illegible]	[illegible]	[illegible]	[illegible]	[illegible]	[illegible]	[illegible]	[illegible]	[illegible]	[illegible]	[illegible]	[illegible]	[illegible]	[illegible]
[illegible]	[illegible]	[illegible]	[illegible]	[illegible]	[illegible]	[illegible]	[illegible]	[illegible]	[illegible]	[illegible]	[illegible]	[illegible]	[illegible]	[illegible]	[illegible]	[illegible]
[illegible]	[illegible]	[illegible]	[illegible]	[illegible]	[illegible]	[illegible]	[illegible]	[illegible]	[illegible]	[illegible]	[illegible]	[illegible]	[illegible]	[illegible]	[illegible]	[illegible]
[illegible]			[illegible]	[illegible]	[illegible]	[illegible]	[illegible]	[illegible]	[illegible]	[illegible]	[illegible]	[illegible]	[illegible]	[illegible]	[illegible]	[illegible]
[illegible]			[illegible]	[illegible]	[illegible]	[illegible]	[illegible]	[illegible]	[illegible]	[illegible]	[illegible]	[illegible]	[illegible]	[illegible]	[illegible]	[illegible]
[illegible]			[illegible]	[illegible]	[illegible]	[illegible]	[illegible]	[illegible]	[illegible]	[illegible]	[illegible]	[illegible]	[illegible]	[illegible]	[illegible]	[illegible]
[illegible]			[illegible]	[illegible]	[illegible]	[illegible]	[illegible]	[illegible]	[illegible]	[illegible]	[illegible]	[illegible]	[illegible]	[illegible]	[illegible]	[illegible]
[illegible]	[illegible]		[illegible]	[illegible]	[illegible]	[illegible]	[illegible]	[illegible]	[illegible]	[illegible]	[illegible]	[illegible]	[illegible]	[illegible]	[illegible]	[illegible]
[illegible]			[illegible]	[illegible]	[illegible]	[illegible]	[illegible]	[illegible]	[illegible]	[illegible]	[illegible]	[illegible]	[illegible]	[illegible]	[illegible]	[illegible]
[illegible]			[illegible]	[illegible]	[illegible]	[illegible]	[illegible]	[illegible]	[illegible]	[illegible]	[illegible]	[illegible]	[illegible]	[illegible]	[illegible]	[illegible]
[illegible]			[illegible]	[illegible]	[illegible]	[illegible]	[illegible]	[illegible]	[illegible]	[illegible]	[illegible]	[illegible]	[illegible]	[illegible]	[illegible]	[illegible]
[illegible]			[illegible]	[illegible]	[illegible]	[illegible]	[illegible]	[illegible]	[illegible]	[illegible]	[illegible]	[illegible]	[illegible]	[illegible]	[illegible]	[illegible]
[illegible]			[illegible]	[illegible]	[illegible]	[illegible]	[illegible]	[illegible]	[illegible]	[illegible]	[illegible]	[illegible]	[illegible]	[illegible]	[illegible]	[illegible]
[illegible]	[illegible]	[illegible]	[illegible]	[illegible]	[illegible]	[illegible]	[illegible]	[illegible]	[illegible]	[illegible]	[illegible]	[illegible]	[illegible]	[illegible]	[illegible]	[illegible]
[illegible]			[illegible]	[illegible]	[illegible]	[illegible]	[illegible]	[illegible]	[illegible]	[illegible]	[illegible]	[illegible]	[illegible]	[illegible]	[illegible]	[illegible]
[illegible]			[illegible]	[illegible]	[illegible]	[illegible]	[illegible]	[illegible]	[illegible]	[illegible]	[illegible]	[illegible]	[illegible]	[illegible]	[illegible]	[illegible]
[illegible]			[illegible]	[illegible]	[illegible]	[illegible]	[illegible]	[illegible]	[illegible]	[illegible]	[illegible]	[illegible]	[illegible]	[illegible]	[illegible]	[illegible]
[illegible]			[illegible]	[illegible]	[illegible]	[illegible]	[illegible]	[illegible]	[illegible]	[illegible]	[illegible]	[illegible]	[illegible]	[illegible]	[illegible]	[illegible]
[illegible]	[illegible]		[illegible]	[illegible]	[illegible]	[illegible]	[illegible]	[illegible]	[illegible]	[illegible]	[illegible]	[illegible]	[illegible]	[illegible]	[illegible]	[illegible]
[illegible]	[illegible]	[illegible]	[illegible]	[illegible]	[illegible]	[illegible]	[illegible]	[illegible]	[illegible]	[illegible]	[illegible]	[illegible]	[illegible]	[illegible]	[illegible]	[illegible]
[illegible]			[illegible]	[illegible]	[illegible]	[illegible]	[illegible]	[illegible]	[illegible]	[illegible]	[illegible]	[illegible]	[illegible]	[illegible]	[illegible]	[illegible]
[illegible]			[illegible]	[illegible]	[illegible]	[illegible]	[illegible]	[illegible]	[illegible]	[illegible]	[illegible]	[illegible]	[illegible]	[illegible]	[illegible]	[illegible]
[illegible]	[illegible]		[illegible]	[illegible]	[illegible]	[illegible]	[illegible]	[illegible]	[illegible]	[illegible]	[illegible]	[illegible]	[illegible]	[illegible]	[illegible]	[illegible]
[illegible]			[illegible]	[illegible]	[illegible]	[illegible]	[illegible]	[illegible]	[illegible]	[illegible]	[illegible]	[illegible]	[illegible]	[illegible]	[illegible]	[illegible]
[illegible]			[illegible]	[illegible]	[illegible]	[illegible]	[illegible]	[illegible]	[illegible]	[illegible]	[illegible]	[illegible]	[illegible]	[illegible]	[illegible]	[illegible]
[illegible]			[illegible]	[illegible]	[illegible]	[illegible]	[illegible]	[illegible]	[illegible]	[illegible]	[illegible]	[illegible]	[illegible]	[illegible]	[illegible]	[illegible]
[illegible]	[illegible]		[illegible]	[illegible]	[illegible]	[illegible]	[illegible]	[illegible]	[illegible]	[illegible]	[illegible]	[illegible]	[illegible]	[illegible]	[illegible]	[illegible]
[illegible]	[illegible]		[illegible]	[illegible]	[illegible]	[illegible]	[illegible]	[illegible]	[illegible]	[illegible]	[illegible]	[illegible]	[illegible]	[illegible]	[illegible]	[illegible]
[illegible]	[illegible]		[illegible]	[illegible]	[illegible]	[illegible]	[illegible]	[illegible]	[illegible]	[illegible]	[illegible]	[illegible]	[illegible]	[illegible]	[illegible]	[illegible]
[illegible]	[illegible]		[illegible]	[illegible]	[illegible]	[illegible]	[illegible]	[illegible]	[illegible]	[illegible]	[illegible]	[illegible]	[illegible]	[illegible]	[illegible]	[illegible]
[illegible]	[illegible]		[illegible]	[illegible]	[illegible]	[illegible]	[illegible]	[illegible]	[illegible]	[illegible]	[illegible]	[illegible]	[illegible]	[illegible]	[illegible]	[illegible]
[illegible]			[illegible]	[illegible]	[illegible]	[illegible]	[illegible]	[illegible]	[illegible]	[illegible]	[illegible]	[illegible]	[illegible]	[illegible]	[illegible]	[illegible]
[illegible]			[illegible]	[illegible]	[illegible]	[illegible]	[illegible]	[illegible]	[illegible]	[illegible]	[illegible]	[illegible]	[illegible]	[illegible]	[illegible]	[illegible]

Table 3-2
January 2011 Groundwater Analytical Results - SVOCs
Nyanza Chemical Waste Dump Superfund Site
Ashland, Massachusetts
Page 4 of 4

Sample Location:			[illegible]	[illegible]	[illegible]	[illegible]	[illegible]	[illegible]	[illegible]	[illegible]	[illegible]	[illegible]	[illegible]	[illegible]	[illegible]	[illegible]
Sample ID:			[illegible]	[illegible]	[illegible]	[illegible]	[illegible]	[illegible]	[illegible]	[illegible]	[illegible]	[illegible]	[illegible]	[illegible]	[illegible]	[illegible]
Sample Date & Time:			[illegible]	[illegible]	[illegible]	[illegible]	[illegible]	[illegible]	[illegible]	[illegible]	[illegible]	[illegible]	[illegible]	[illegible]	[illegible]	[illegible]
Chemical Name	**GW-1**	**GW-2**														
[illegible]			[illegible]	[illegible]	[illegible]	[illegible]	[illegible]	[illegible]	[illegible]	[illegible]	[illegible]	[illegible]	[illegible]	[illegible]	[illegible]	[illegible]
[illegible]	[illegible]	[illegible]	[illegible]	[illegible]	[illegible]	[illegible]	[illegible]	[illegible]	[illegible]	[illegible]	[illegible]	[illegible]	[illegible]	[illegible]	[illegible]	[illegible]
[illegible]	[illegible]		[illegible]	[illegible]	[illegible]	[illegible]	[illegible]	[illegible]	[illegible]	[illegible]	[illegible]	[illegible]	[illegible]	[illegible]	[illegible]	[illegible]
[illegible]			[illegible]	[illegible]	[illegible]	[illegible]	[illegible]	[illegible]	[illegible]	[illegible]	[illegible]	[illegible]	[illegible]	[illegible]	[illegible]	[illegible]
[illegible]			[illegible]	[illegible]	[illegible]	[illegible]	[illegible]	[illegible]	[illegible]	[illegible]	[illegible]	[illegible]	[illegible]	[illegible]	[illegible]	[illegible]
[illegible]			[illegible]	[illegible]	[illegible]	[illegible]	[illegible]	[illegible]	[illegible]	[illegible]	[illegible]	[illegible]	[illegible]	[illegible]	[illegible]	[illegible]
[illegible]	[illegible]		[illegible]	[illegible]	[illegible]	[illegible]	[illegible]	[illegible]	[illegible]	[illegible]	[illegible]	[illegible]	[illegible]	[illegible]	[illegible]	[illegible]
[illegible]	[illegible]		[illegible]	[illegible]	[illegible]	[illegible]	[illegible]	[illegible]	[illegible]	[illegible]	[illegible]	[illegible]	[illegible]	[illegible]	[illegible]	[illegible]
[illegible]			[illegible]	[illegible]	[illegible]	[illegible]	[illegible]	[illegible]	[illegible]	[illegible]	[illegible]	[illegible]	[illegible]	[illegible]	[illegible]	[illegible]
[illegible]	[illegible]	[illegible]	[illegible]	[illegible]	[illegible]	[illegible]	[illegible]	[illegible]	[illegible]	[illegible]	[illegible]	[illegible]	[illegible]	[illegible]	[illegible]	[illegible]
[illegible]	[illegible]	[illegible]	[illegible]	[illegible]	[illegible]	[illegible]	[illegible]	[illegible]	[illegible]	[illegible]	[illegible]	[illegible]	[illegible]	[illegible]	[illegible]	[illegible]
[illegible]			[illegible]	[illegible]	[illegible]	[illegible]	[illegible]	[illegible]	[illegible]	[illegible]	[illegible]	[illegible]	[illegible]	[illegible]	[illegible]	[illegible]
[illegible]			[illegible]	[illegible]	[illegible]	[illegible]	[illegible]	[illegible]	[illegible]	[illegible]	[illegible]	[illegible]	[illegible]	[illegible]	[illegible]	[illegible]
[illegible]			[illegible]	[illegible]	[illegible]	[illegible]	[illegible]	[illegible]	[illegible]	[illegible]	[illegible]	[illegible]	[illegible]	[illegible]	[illegible]	[illegible]
[illegible]			[illegible]	[illegible]	[illegible]	[illegible]	[illegible]	[illegible]	[illegible]	[illegible]	[illegible]	[illegible]	[illegible]	[illegible]	[illegible]	[illegible]
[illegible]	[illegible]		[illegible]	[illegible]	[illegible]	[illegible]	[illegible]	[illegible]	[illegible]	[illegible]	[illegible]	[illegible]	[illegible]	[illegible]	[illegible]	[illegible]
[illegible]	[illegible]		[illegible]	[illegible]	[illegible]	[illegible]	[illegible]	[illegible]	[illegible]	[illegible]	[illegible]	[illegible]	[illegible]	[illegible]	[illegible]	[illegible]
[illegible]	[illegible]	[illegible]	[illegible]	[illegible]	[illegible]	[illegible]	[illegible]	[illegible]	[illegible]	[illegible]	[illegible]	[illegible]	[illegible]	[illegible]	[illegible]	[illegible]
[illegible]	[illegible]	[illegible]	[illegible]	[illegible]	[illegible]	[illegible]	[illegible]	[illegible]	[illegible]	[illegible]	[illegible]	[illegible]	[illegible]	[illegible]	[illegible]	[illegible]
[illegible]			[illegible]	[illegible]	[illegible]	[illegible]	[illegible]	[illegible]	[illegible]	[illegible]	[illegible]	[illegible]	[illegible]	[illegible]	[illegible]	[illegible]
[illegible]	[illegible]	[illegible]	[illegible]	[illegible]	[illegible]	[illegible]	[illegible]	[illegible]	[illegible]	[illegible]	[illegible]	[illegible]	[illegible]	[illegible]	[illegible]	[illegible]
[illegible]			[illegible]	[illegible]	[illegible]	[illegible]	[illegible]	[illegible]	[illegible]	[illegible]	[illegible]	[illegible]	[illegible]	[illegible]	[illegible]	[illegible]
[illegible]	[illegible]		[illegible]	[illegible]	[illegible]	[illegible]	[illegible]	[illegible]	[illegible]	[illegible]	[illegible]	[illegible]	[illegible]	[illegible]	[illegible]	[illegible]
[illegible]			[illegible]	[illegible]	[illegible]	[illegible]	[illegible]	[illegible]	[illegible]	[illegible]	[illegible]	[illegible]	[illegible]	[illegible]	[illegible]	[illegible]
[illegible]			[illegible]	[illegible]	[illegible]	[illegible]	[illegible]	[illegible]	[illegible]	[illegible]	[illegible]	[illegible]	[illegible]	[illegible]	[illegible]	[illegible]
[illegible]			[illegible]	[illegible]	[illegible]	[illegible]	[illegible]	[illegible]	[illegible]	[illegible]	[illegible]	[illegible]	[illegible]	[illegible]	[illegible]	[illegible]
[illegible]			[illegible]	[illegible]	[illegible]	[illegible]	[illegible]	[illegible]	[illegible]	[illegible]	[illegible]	[illegible]	[illegible]	[illegible]	[illegible]	[illegible]
[illegible]			[illegible]	[illegible]	[illegible]	[illegible]	[illegible]	[illegible]	[illegible]	[illegible]	[illegible]	[illegible]	[illegible]	[illegible]	[illegible]	[illegible]
[illegible]			[illegible]	[illegible]	[illegible]	[illegible]	[illegible]	[illegible]	[illegible]	[illegible]	[illegible]	[illegible]	[illegible]	[illegible]	[illegible]	[illegible]
[illegible]	[illegible]	[illegible]	[illegible]	[illegible]	[illegible]	[illegible]	[illegible]	[illegible]	[illegible]	[illegible]	[illegible]	[illegible]	[illegible]	[illegible]	[illegible]	[illegible]
[illegible]			[illegible]	[illegible]	[illegible]	[illegible]	[illegible]	[illegible]	[illegible]	[illegible]	[illegible]	[illegible]	[illegible]	[illegible]	[illegible]	[illegible]
[illegible]			[illegible]	[illegible]	[illegible]	[illegible]	[illegible]	[illegible]	[illegible]	[illegible]	[illegible]	[illegible]	[illegible]	[illegible]	[illegible]	[illegible]
[illegible]			[illegible]	[illegible]	[illegible]	[illegible]	[illegible]	[illegible]	[illegible]	[illegible]	[illegible]	[illegible]	[illegible]	[illegible]	[illegible]	[illegible]
[illegible]			[illegible]	[illegible]	[illegible]	[illegible]	[illegible]	[illegible]	[illegible]	[illegible]	[illegible]	[illegible]	[illegible]	[illegible]	[illegible]	[illegible]
[illegible]			[illegible]	[illegible]	[illegible]	[illegible]	[illegible]	[illegible]	[illegible]	[illegible]	[illegible]	[illegible]	[illegible]	[illegible]	[illegible]	[illegible]
[illegible]			[illegible]	[illegible]	[illegible]	[illegible]	[illegible]	[illegible]	[illegible]	[illegible]	[illegible]	[illegible]	[illegible]	[illegible]	[illegible]	[illegible]
[illegible]			[illegible]	[illegible]	[illegible]	[illegible]	[illegible]	[illegible]	[illegible]	[illegible]	[illegible]	[illegible]	[illegible]	[illegible]	[illegible]	[illegible]
[illegible]	[illegible]		[illegible]	[illegible]	[illegible]	[illegible]	[illegible]	[illegible]	[illegible]	[illegible]	[illegible]	[illegible]	[illegible]	[illegible]	[illegible]	[illegible]
[illegible]			[illegible]	[illegible]	[illegible]	[illegible]	[illegible]	[illegible]	[illegible]	[illegible]	[illegible]	[illegible]	[illegible]	[illegible]	[illegible]	[illegible]
[illegible]	[illegible]		[illegible]	[illegible]	[illegible]	[illegible]	[illegible]	[illegible]	[illegible]	[illegible]	[illegible]	[illegible]	[illegible]	[illegible]	[illegible]	[illegible]
[illegible]	[illegible]	[illegible]	[illegible]	[illegible]	[illegible]	[illegible]	[illegible]	[illegible]	[illegible]	[illegible]	[illegible]	[illegible]	[illegible]	[illegible]	[illegible]	[illegible]
[illegible]	[illegible]		[illegible]	[illegible]	[illegible]	[illegible]	[illegible]	[illegible]	[illegible]	[illegible]	[illegible]	[illegible]	[illegible]	[illegible]	[illegible]	[illegible]
[illegible]			[illegible]	[illegible]	[illegible]	[illegible]	[illegible]	[illegible]	[illegible]	[illegible]	[illegible]	[illegible]	[illegible]	[illegible]	[illegible]	[illegible]
[illegible]			[illegible]	[illegible]	[illegible]	[illegible]	[illegible]	[illegible]	[illegible]	[illegible]	[illegible]	[illegible]	[illegible]	[illegible]	[illegible]	[illegible]

Notes: [illegible]
[illegible] *Italic* [illegible]

Table 3-1
January 2011 Groundwater Analytical Results - VOCs
Nyanza Chemical Waste Dump Superfund Site
Ashland, Massachusetts

		Sample Location	[illegible]	[illegible]	[illegible]	[illegible]	[illegible]	[illegible]	[illegible]	[illegible]	[illegible]	[illegible]	[illegible]	[illegible]	[illegible]	[illegible]	[illegible]	[illegible]
		Sample ID	[illegible]	[illegible]	[illegible]	[illegible]	[illegible]	[illegible]	[illegible]	[illegible]	[illegible]	[illegible]	[illegible]	[illegible]	[illegible]	[illegible]	[illegible]	[illegible]
		Sample Date & Time	[illegible]	[illegible]	[illegible]	[illegible]	[illegible]	[illegible]	[illegible]	[illegible]	[illegible]	[illegible]	[illegible]	[illegible]	[illegible]	[illegible]	[illegible]	[illegible]
Chemical Name	**GW-1 Standard**	**GW-2 Standard**																
[illegible]	[illegible]	[illegible]	[illegible]	[illegible]	[illegible]	[illegible]	[illegible]	[illegible]	[illegible]	[illegible]	[illegible]	[illegible]	[illegible]	[illegible]	[illegible]	[illegible]	[illegible]	[illegible]
[illegible]	[illegible]	[illegible]	[illegible]	[illegible]	[illegible]	[illegible]	[illegible]	[illegible]	[illegible]	[illegible]	[illegible]	[illegible]	[illegible]	[illegible]	[illegible]	[illegible]	[illegible]	[illegible]
[illegible]	[illegible]	[illegible]	[illegible]	[illegible]	[illegible]	[illegible]	[illegible]	[illegible]	[illegible]	[illegible]	[illegible]	[illegible]	[illegible]	[illegible]	[illegible]	[illegible]	[illegible]	[illegible]
[illegible]			[illegible]	[illegible]	[illegible]	[illegible]	[illegible]	[illegible]	[illegible]	[illegible]	[illegible]	[illegible]	[illegible]	[illegible]	[illegible]	[illegible]	[illegible]	[illegible]
[illegible]	[illegible]	[illegible]	[illegible]	[illegible]	[illegible]	[illegible]	[illegible]	[illegible]	[illegible]	[illegible]	[illegible]	[illegible]	[illegible]	[illegible]	[illegible]	[illegible]	[illegible]	[illegible]
[illegible]	[illegible]	[illegible]	[illegible]	[illegible]	[illegible]	[illegible]	[illegible]	[illegible]	[illegible]	[illegible]	[illegible]	[illegible]	[illegible]	[illegible]	[illegible]	[illegible]	[illegible]	[illegible]
[illegible]	[illegible]	[illegible]	[illegible]	[illegible]	[illegible]	[illegible]	[illegible]	[illegible]	[illegible]	[illegible]	[illegible]	[illegible]	[illegible]	[illegible]	[illegible]	[illegible]	[illegible]	[illegible]
[illegible]			[illegible]	[illegible]	[illegible]	[illegible]	[illegible]	[illegible]	[illegible]	[illegible]	[illegible]	[illegible]	[illegible]	[illegible]	[illegible]	[illegible]	[illegible]	[illegible]
[illegible]			[illegible]	[illegible]	[illegible]	[illegible]	[illegible]	[illegible]	[illegible]	[illegible]	[illegible]	[illegible]	[illegible]	[illegible]	[illegible]	[illegible]	[illegible]	[illegible]
[illegible]			[illegible]	[illegible]	[illegible]	[illegible]	[illegible]	[illegible]	[illegible]	[illegible]	[illegible]	[illegible]	[illegible]	[illegible]	[illegible]	[illegible]	[illegible]	[illegible]
[illegible]			[illegible]	[illegible]	[illegible]	[illegible]	[illegible]	[illegible]	[illegible]	[illegible]	[illegible]	[illegible]	[illegible]	[illegible]	[illegible]	[illegible]	[illegible]	[illegible]
[illegible]	[illegible]	[illegible]	[illegible]	**75.2**	[illegible]	[illegible]	[illegible]	[illegible]	[illegible]	[illegible]	[illegible]	[illegible]	[illegible]	[illegible]	[illegible]	**280**	[illegible]	[illegible]
[illegible]			[illegible]	[illegible]	[illegible]	[illegible]	[illegible]	[illegible]	[illegible]	[illegible]	[illegible]	[illegible]	[illegible]	[illegible]	[illegible]	[illegible]	[illegible]	[illegible]
[illegible]			[illegible]	[illegible]	[illegible]	[illegible]	[illegible]	[illegible]	[illegible]	[illegible]	[illegible]	[illegible]	[illegible]	[illegible]	[illegible]	[illegible]	[illegible]	[illegible]
[illegible]	[illegible]	[illegible]	[illegible]	[illegible]	[illegible]	[illegible]	[illegible]	[illegible]	[illegible]	[illegible]	[illegible]	[illegible]	[illegible]	[illegible]	[illegible]	[illegible]	[illegible]	[illegible]
[illegible]	[illegible]	[illegible]	[illegible]	**1300**	**1100**	[illegible]	[illegible]	[illegible]	[illegible]	[illegible]	[illegible]	[illegible]	[illegible]	[illegible]	[illegible]	***26000***	***22000***	[illegible]
[illegible]	[illegible]	[illegible]	[illegible]	[illegible]	[illegible]	[illegible]	[illegible]	[illegible]	[illegible]	[illegible]	[illegible]	[illegible]	[illegible]	[illegible]	[illegible]	[illegible]	[illegible]	[illegible]
[illegible]	[illegible]	[illegible]	[illegible]	[illegible]	[illegible]	[illegible]	[illegible]	[illegible]	[illegible]	[illegible]	[illegible]	[illegible]	[illegible]	[illegible]	[illegible]	[illegible]	[illegible]	[illegible]
[illegible]			[illegible]	[illegible]	[illegible]	[illegible]	[illegible]	[illegible]	[illegible]	[illegible]	[illegible]	[illegible]	[illegible]	[illegible]	[illegible]	[illegible]	[illegible]	[illegible]
[illegible]	[illegible]	[illegible]	[illegible]	**60.7**	**48.4**	[illegible]	[illegible]	[illegible]	[illegible]	[illegible]	[illegible]	[illegible]	[illegible]	[illegible]	[illegible]	**870**	**720**	[illegible]
[illegible]			[illegible]	[illegible]	[illegible]	[illegible]	[illegible]	[illegible]	[illegible]	[illegible]	[illegible]	[illegible]	[illegible]	[illegible]	[illegible]	[illegible]	[illegible]	[illegible]
[illegible]	[illegible]	[illegible]	[illegible]	***318.9***	***253***	[illegible]	[illegible]	[illegible]	[illegible]	[illegible]	[illegible]	[illegible]	**74**	**75**	[illegible]	***5800***	***4800***	**27**
[illegible]	[illegible]	[illegible]	[illegible]	[illegible]	[illegible]	[illegible]	[illegible]	[illegible]	[illegible]	[illegible]	[illegible]	[illegible]	[illegible]	[illegible]	[illegible]	[illegible]	[illegible]	[illegible]
[illegible]			[illegible]	[illegible]	[illegible]	[illegible]	[illegible]	[illegible]	[illegible]	[illegible]	[illegible]	[illegible]	[illegible]	[illegible]	[illegible]	[illegible]	[illegible]	[illegible]
[illegible]	[illegible]	[illegible]	[illegible]	[illegible]	[illegible]	[illegible]	[illegible]	[illegible]	[illegible]	[illegible]	[illegible]	[illegible]	[illegible]	[illegible]	[illegible]	[illegible]	[illegible]	[illegible]
[illegible]			[illegible]	[illegible]	[illegible]	[illegible]	[illegible]	[illegible]	[illegible]	[illegible]	[illegible]	[illegible]	[illegible]	[illegible]	[illegible]	[illegible]	[illegible]	[illegible]
[illegible]			[illegible]	[illegible]	[illegible]	[illegible]	[illegible]	[illegible]	[illegible]	[illegible]	[illegible]	[illegible]	[illegible]	[illegible]	[illegible]	[illegible]	[illegible]	[illegible]
[illegible]			[illegible]	[illegible]	[illegible]	[illegible]	[illegible]	[illegible]	[illegible]	[illegible]	[illegible]	[illegible]	[illegible]	[illegible]	[illegible]	[illegible]	[illegible]	[illegible]
[illegible]			[illegible]	[illegible]	[illegible]	[illegible]	[illegible]	[illegible]	[illegible]	[illegible]	[illegible]	[illegible]	[illegible]	[illegible]	[illegible]	[illegible]	[illegible]	[illegible]
[illegible]	[illegible]	[illegible]	[illegible]	[illegible]	[illegible]	[illegible]	[illegible]	[illegible]	[illegible]	[illegible]	[illegible]	[illegible]	[illegible]	[illegible]	[illegible]	[illegible]	[illegible]	[illegible]
[illegible]	[illegible]	[illegible]	[illegible]	[illegible]	[illegible]	[illegible]	[illegible]	[illegible]	[illegible]	[illegible]	[illegible]	[illegible]	[illegible]	[illegible]	[illegible]	[illegible]	[illegible]	[illegible]
[illegible]			[illegible]	[illegible]	[illegible]	[illegible]	[illegible]	[illegible]	[illegible]	[illegible]	[illegible]	[illegible]	[illegible]	[illegible]	[illegible]	[illegible]	[illegible]	[illegible]
[illegible]	[illegible]	[illegible]	[illegible]	[illegible]	[illegible]	[illegible]	[illegible]	[illegible]	[illegible]	[illegible]	[illegible]	[illegible]	[illegible]	[illegible]	[illegible]	[illegible]	[illegible]	[illegible]
[illegible]	[illegible]	[illegible]	[illegible]	[illegible]	[illegible]	[illegible]	[illegible]	[illegible]	[illegible]	[illegible]	[illegible]	[illegible]	[illegible]	[illegible]	[illegible]	[illegible]	[illegible]	[illegible]
[illegible]			[illegible]	[illegible]	[illegible]	[illegible]	[illegible]	[illegible]	[illegible]	[illegible]	[illegible]	[illegible]	[illegible]	[illegible]	[illegible]	[illegible]	[illegible]	[illegible]
[illegible]	[illegible]	[illegible]	[illegible]	[illegible]	[illegible]	[illegible]	[illegible]	[illegible]	[illegible]	[illegible]	[illegible]	[illegible]	[illegible]	[illegible]	[illegible]	[illegible]	[illegible]	[illegible]
[illegible]	[illegible]	[illegible]	[illegible]	[illegible]	[illegible]	[illegible]	[illegible]	[illegible]	[illegible]	[illegible]	[illegible]	[illegible]	[illegible]	[illegible]	[illegible]	[illegible]	[illegible]	[illegible]
[illegible]	[illegible]	[illegible]	[illegible]	[illegible]	[illegible]	[illegible]	[illegible]	[illegible]	[illegible]	[illegible]	[illegible]	[illegible]	[illegible]	[illegible]	[illegible]	[illegible]	[illegible]	[illegible]
[illegible]	[illegible]	[illegible]	[illegible]	[illegible]	[illegible]	[illegible]	[illegible]	[illegible]	[illegible]	[illegible]	[illegible]	[illegible]	[illegible]	[illegible]	[illegible]	[illegible]	[illegible]	[illegible]
[illegible]	[illegible]	[illegible]	[illegible]	[illegible]	[illegible]	[illegible]	[illegible]	[illegible]	[illegible]	[illegible]	[illegible]	[illegible]	[illegible]	[illegible]	[illegible]	[illegible]	[illegible]	[illegible]
[illegible]	[illegible]	[illegible]	[illegible]	[illegible]	[illegible]	[illegible]	[illegible]	[illegible]	[illegible]	[illegible]	[illegible]	[illegible]	[illegible]	[illegible]	[illegible]	[illegible]	[illegible]	[illegible]
[illegible]	[illegible]	[illegible]	[illegible]	[illegible]	[illegible]	[illegible]	[illegible]	[illegible]	[illegible]	[illegible]	[illegible]	[illegible]	[illegible]	[illegible]	[illegible]	[illegible]	[illegible]	[illegible]
[illegible]	[illegible]	[illegible]	[illegible]	[illegible]	[illegible]	[illegible]	[illegible]	[illegible]	[illegible]	[illegible]	[illegible]	[illegible]	[illegible]	[illegible]	[illegible]	[illegible]	[illegible]	[illegible]
[illegible]	[illegible]	[illegible]	[illegible]	[illegible]	[illegible]	[illegible]	[illegible]	[illegible]	[illegible]	[illegible]	[illegible]	[illegible]	[illegible]	[illegible]	[illegible]	[illegible]	[illegible]	[illegible]
[illegible]	[illegible]	[illegible]	[illegible]	[illegible]	[illegible]	[illegible]	[illegible]	[illegible]	[illegible]	[illegible]	[illegible]	[illegible]	[illegible]	[illegible]	[illegible]	[illegible]	[illegible]	[illegible]
[illegible]	[illegible]	[illegible]	[illegible]	[illegible]	[illegible]	[illegible]	[illegible]	[illegible]	[illegible]	[illegible]	[illegible]	[illegible]	[illegible]	[illegible]	[illegible]	[illegible]	[illegible]	[illegible]
[illegible]	[illegible]	[illegible]	[illegible]	***502.3***	***374***	[illegible]	[illegible]	[illegible]	[illegible]	[illegible]	[illegible]	[illegible]	**170**	**170**	[illegible]	***16000***	***17000***	**190**
[illegible]			[illegible]	[illegible]	[illegible]	[illegible]	[illegible]	[illegible]	[illegible]	[illegible]	[illegible]	[illegible]	[illegible]	[illegible]	[illegible]	[illegible]	[illegible]	[illegible]
[illegible]	[illegible]	[illegible]	[illegible]	[illegible]	[illegible]	[illegible]	[illegible]	[illegible]	[illegible]	[illegible]	[illegible]	[illegible]	[illegible]	[illegible]	[illegible]	[illegible]	[illegible]	[illegible]
[illegible]			[illegible]	[illegible]	[illegible]	[illegible]	[illegible]	[illegible]	[illegible]	[illegible]	[illegible]	[illegible]	[illegible]	[illegible]	[illegible]	[illegible]	[illegible]	[illegible]
[illegible]	[illegible]	[illegible]	[illegible]	**91.2**	**99.3**	[illegible]	[illegible]	**96**	[illegible]	[illegible]	[illegible]	[illegible]	***170***	***180***	[illegible]	[illegible]	[illegible]	[illegible]

Table 3-1
January 2011 Groundwater Analytical Results - VOCs
Nyanza Chemical Waste Dump Superfund Site
Ashland, Massachusetts
Page 2 of 4

Sample Location			[illegible]	[illegible]	[illegible]	[illegible]	[illegible]	[illegible]	[illegible]	[illegible]	[illegible]	[illegible]	[illegible]	[illegible]	[illegible]	[illegible]	[illegible]	[illegible]
Sample ID			[illegible]	[illegible]	[illegible]	[illegible]	[illegible]	[illegible]	[illegible]	[illegible]	[illegible]	[illegible]	[illegible]	[illegible]	[illegible]	[illegible]	[illegible]	[illegible]
Sample Date & Time			[illegible]	[illegible]	[illegible]	[illegible]	[illegible]	[illegible]	[illegible]	[illegible]	[illegible]	[illegible]	[illegible]	[illegible]	[illegible]	[illegible]	[illegible]	[illegible]
Chemical Name	GW-1 Standard	GW-2 Standard																
[illegible]			[illegible]	[illegible]	[illegible]	[illegible]	[illegible]	[illegible]	[illegible]	[illegible]	[illegible]	[illegible]	[illegible]	[illegible]	[illegible]	[illegible]	[illegible]	[illegible]
[illegible]			[illegible]	[illegible]	[illegible]	[illegible]	[illegible]	[illegible]	[illegible]	[illegible]	[illegible]	[illegible]	[illegible]	[illegible]	[illegible]	[illegible]	[illegible]	[illegible]
[illegible]	[illegible]	[illegible]	[illegible]	[illegible]	[illegible]	[illegible]	[illegible]	[illegible]	[illegible]	[illegible]	[illegible]	[illegible]	[illegible]	[illegible]	[illegible]	[illegible]	[illegible]	[illegible]
[illegible]			[illegible]	[illegible]	[illegible]	[illegible]	[illegible]	[illegible]	[illegible]	[illegible]	[illegible]	[illegible]	[illegible]	[illegible]	[illegible]	[illegible]	[illegible]	[illegible]
[illegible]			[illegible]	[illegible]	[illegible]	[illegible]	[illegible]	[illegible]	[illegible]	[illegible]	[illegible]	[illegible]	[illegible]	[illegible]	[illegible]	[illegible]	[illegible]	[illegible]
[illegible]			[illegible]	[illegible]	[illegible]	[illegible]	[illegible]	[illegible]	[illegible]	[illegible]	[illegible]	[illegible]	[illegible]	[illegible]	[illegible]	[illegible]	[illegible]	[illegible]
[illegible]	[illegible]	[illegible]	[illegible]	[illegible]	[illegible]	[illegible]	[illegible]	[illegible]	[illegible]	[illegible]	[illegible]	[illegible]	[illegible]	[illegible]	[illegible]	[illegible]	[illegible]	[illegible]
[illegible]	[illegible]	[illegible]	[illegible]	[illegible]	[illegible]	[illegible]	[illegible]	[illegible]	[illegible]	[illegible]	[illegible]	[illegible]	[illegible]	[illegible]	[illegible]	[illegible]	[illegible]	[illegible]
[illegible]			[illegible]	[illegible]	[illegible]	[illegible]	[illegible]	[illegible]	[illegible]	[illegible]	[illegible]	[illegible]	[illegible]	[illegible]	[illegible]	[illegible]	[illegible]	[illegible]
[illegible]			[illegible]	[illegible]	[illegible]	[illegible]	[illegible]	[illegible]	[illegible]	[illegible]	[illegible]	[illegible]	[illegible]	[illegible]	[illegible]	[illegible]	[illegible]	[illegible]
[illegible]	[illegible]	[illegible]	[illegible]	[illegible]	[illegible]	[illegible]	[illegible]	[illegible]	[illegible]	[illegible]	[illegible]	[illegible]	[illegible]	[illegible]	[illegible]	[illegible]	[illegible]	[illegible]
[illegible]	[illegible]	[illegible]	[illegible]	[illegible]	[illegible]	[illegible]	[illegible]	[illegible]	[illegible]	[illegible]	[illegible]	[illegible]	[illegible]	[illegible]	[illegible]	[illegible]	[illegible]	[illegible]
[illegible]	[illegible]	[illegible]	[illegible]	[illegible]	[illegible]	[illegible]	[illegible]	[illegible]	[illegible]	[illegible]	[illegible]	[illegible]	[illegible]	[illegible]	[illegible]	[illegible]	[illegible]	[illegible]
[illegible]			[illegible]	[illegible]	[illegible]	[illegible]	[illegible]	[illegible]	[illegible]	[illegible]	[illegible]	[illegible]	[illegible]	[illegible]	[illegible]	[illegible]	[illegible]	[illegible]
[illegible]			[illegible]	[illegible]	[illegible]	[illegible]	[illegible]	[illegible]	[illegible]	[illegible]	[illegible]	[illegible]	[illegible]	[illegible]	[illegible]	[illegible]	[illegible]	[illegible]
[illegible]			[illegible]	[illegible]	[illegible]	[illegible]	[illegible]	[illegible]	[illegible]	[illegible]	[illegible]	[illegible]	[illegible]	[illegible]	[illegible]	[illegible]	[illegible]	[illegible]
[illegible]	[illegible]	[illegible]	[illegible]	[illegible]	[illegible]	[illegible]	[illegible]	[illegible]	[illegible]	[illegible]	[illegible]	[illegible]	[illegible]	[illegible]	[illegible]	[illegible]	[illegible]	[illegible]
[illegible]	[illegible]	[illegible]	[illegible]	[illegible]	[illegible]	[illegible]	[illegible]	[illegible]	[illegible]	[illegible]	[illegible]	[illegible]	[illegible]	[illegible]	[illegible]	[illegible]	[illegible]	[illegible]
[illegible]			[illegible]	[illegible]	[illegible]	[illegible]	[illegible]	[illegible]	[illegible]	[illegible]	[illegible]	[illegible]	[illegible]	[illegible]	[illegible]	[illegible]	[illegible]	[illegible]
[illegible]	[illegible]	[illegible]	[illegible]	[illegible]	[illegible]	[illegible]	[illegible]	[illegible]	[illegible]	[illegible]	[illegible]	[illegible]	[illegible]	[illegible]	[illegible]	[illegible]	[illegible]	[illegible]
[illegible]	[illegible]	[illegible]	[illegible]	[illegible]	[illegible]	[illegible]	[illegible]	[illegible]	[illegible]	[illegible]	[illegible]	[illegible]	[illegible]	[illegible]	[illegible]	[illegible]	[illegible]	[illegible]
[illegible]			[illegible]	[illegible]	[illegible]	[illegible]	[illegible]	[illegible]	[illegible]	[illegible]	[illegible]	[illegible]	[illegible]	[illegible]	[illegible]	[illegible]	[illegible]	[illegible]
[illegible]	[illegible]	[illegible]	[illegible]	***1500***	***1000***	[illegible]	**16**	**10**	**5.1**	[illegible]	[illegible]	[illegible]	***34***	***37***	**19**	***13000***	***8700***	***640***
[illegible]			[illegible]	[illegible]	[illegible]	[illegible]	[illegible]	[illegible]	[illegible]	[illegible]	[illegible]	[illegible]	[illegible]	[illegible]	[illegible]	[illegible]	[illegible]	[illegible]
[illegible]			[illegible]	[illegible]	[illegible]	[illegible]	[illegible]	[illegible]	[illegible]	[illegible]	[illegible]	[illegible]	[illegible]	[illegible]	[illegible]	[illegible]	[illegible]	[illegible]
[illegible]	[illegible]	[illegible]	[illegible]	[illegible]	[illegible]	[illegible]	[illegible]	[illegible]	[illegible]	[illegible]	[illegible]	[illegible]	[illegible]	[illegible]	[illegible]	[illegible]	[illegible]	[illegible]

Notes:

[illegible]
[illegible]
[illegible]
Bold [illegible]
Italic [illegible]
[illegible]

Table 3-1
January 2011 Groundwater Analytical Results - VOCs
Nyanza Chemical Waste Dump Superfund Site
Ashland, Massachusetts
Page 3 of 4

Sample Location			[illegible]	[illegible]	[illegible]	[illegible]	[illegible]	[illegible]	[illegible]	[illegible]	[illegible]	[illegible]	[illegible]	[illegible]	[illegible]	[illegible]	[illegible]	[illegible]	[illegible]
Sample ID			[illegible]	[illegible]	[illegible]	[illegible]	[illegible]	[illegible]	[illegible]	[illegible]	[illegible]	[illegible]	[illegible]	[illegible]	[illegible]	[illegible]	[illegible]	[illegible]	[illegible]
Sample Date & Time			[illegible]	[illegible]	[illegible]	[illegible]	[illegible]	[illegible]	[illegible]	[illegible]	[illegible]	[illegible]	[illegible]	[illegible]	[illegible]	[illegible]	[illegible]	[illegible]	[illegible]
Chemical Name	GW-1 Standard	GW-2 Standard																	
[illegible]	[illegible]	[illegible]	[illegible]	[illegible]	[illegible]	[illegible]	[illegible]	[illegible]	[illegible]	[illegible]	[illegible]	[illegible]	[illegible]	[illegible]	[illegible]	[illegible]	[illegible]	[illegible]	[illegible]
[illegible]	[illegible]	[illegible]	[illegible]	[illegible]	[illegible]	[illegible]	[illegible]	[illegible]	[illegible]	[illegible]	[illegible]	[illegible]	[illegible]	[illegible]	[illegible]	[illegible]	[illegible]	[illegible]	[illegible]
[illegible]	[illegible]	[illegible]	[illegible]	[illegible]	[illegible]	[illegible]	[illegible]	[illegible]	[illegible]	[illegible]	[illegible]	[illegible]	[illegible]	[illegible]	[illegible]	[illegible]	[illegible]	[illegible]	[illegible]
[illegible]			[illegible]	[illegible]	[illegible]	[illegible]	[illegible]	[illegible]	[illegible]	[illegible]	[illegible]	[illegible]	[illegible]	[illegible]	[illegible]	[illegible]	[illegible]	[illegible]	[illegible]
[illegible]	[illegible]	[illegible]	[illegible]	[illegible]	[illegible]	[illegible]	[illegible]	[illegible]	[illegible]	[illegible]	[illegible]	[illegible]	[illegible]	[illegible]	[illegible]	[illegible]	[illegible]	[illegible]	[illegible]
[illegible]	[illegible]	[illegible]	[illegible]	[illegible]	[illegible]	[illegible]	[illegible]	[illegible]	[illegible]	[illegible]	[illegible]	[illegible]	[illegible]	[illegible]	[illegible]	[illegible]	[illegible]	[illegible]	[illegible]
[illegible]	[illegible]	[illegible]	[illegible]	[illegible]	[illegible]	[illegible]	[illegible]	[illegible]	[illegible]	[illegible]	[illegible]	[illegible]	[illegible]	[illegible]	[illegible]	[illegible]	[illegible]	[illegible]	[illegible]
[illegible]			[illegible]	[illegible]	[illegible]	[illegible]	[illegible]	[illegible]	[illegible]	[illegible]	[illegible]	[illegible]	[illegible]	[illegible]	[illegible]	[illegible]	[illegible]	[illegible]	[illegible]
[illegible]			[illegible]	[illegible]	[illegible]	[illegible]	[illegible]	[illegible]	[illegible]	[illegible]	[illegible]	[illegible]	[illegible]	[illegible]	[illegible]	[illegible]	[illegible]	[illegible]	[illegible]
[illegible]			[illegible]	[illegible]	[illegible]	[illegible]	[illegible]	[illegible]	[illegible]	[illegible]	[illegible]	[illegible]	[illegible]	[illegible]	[illegible]	[illegible]	[illegible]	[illegible]	[illegible]
[illegible]	[illegible]	[illegible]	120	230	220	[illegible]	210	[illegible]	[illegible]	[illegible]	[illegible]	[illegible]	[illegible]	[illegible]	[illegible]	[illegible]	[illegible]	[illegible]	[illegible]
[illegible]			[illegible]	[illegible]	[illegible]	[illegible]	[illegible]	[illegible]	[illegible]	[illegible]	[illegible]	[illegible]	[illegible]	[illegible]	[illegible]	[illegible]	[illegible]	[illegible]	[illegible]
[illegible]			[illegible]	[illegible]	[illegible]	[illegible]	[illegible]	[illegible]	[illegible]	[illegible]	[illegible]	[illegible]	[illegible]	[illegible]	[illegible]	[illegible]	[illegible]	[illegible]	[illegible]
[illegible]	[illegible]	[illegible]	[illegible]	[illegible]	[illegible]	[illegible]	[illegible]	[illegible]	[illegible]	[illegible]	[illegible]	[illegible]	[illegible]	[illegible]	[illegible]	[illegible]	[illegible]	[illegible]	[illegible]
[illegible]	[illegible]	[illegible]	[illegible]	710	720	1500	700	[illegible]	[illegible]	1100	[illegible]	[illegible]	[illegible]	[illegible]	[illegible]	[illegible]	[illegible]	[illegible]	[illegible]
[illegible]	[illegible]	[illegible]	[illegible]	[illegible]	[illegible]	[illegible]	[illegible]	[illegible]	[illegible]	[illegible]	[illegible]	[illegible]	[illegible]	[illegible]	[illegible]	[illegible]	[illegible]	[illegible]	[illegible]
[illegible]	[illegible]	[illegible]	[illegible]	[illegible]	[illegible]	[illegible]	[illegible]	[illegible]	[illegible]	[illegible]	[illegible]	[illegible]	[illegible]	[illegible]	[illegible]	[illegible]	[illegible]	[illegible]	[illegible]
[illegible]			[illegible]	[illegible]	[illegible]	[illegible]	[illegible]	[illegible]	[illegible]	[illegible]	[illegible]	[illegible]	[illegible]	[illegible]	[illegible]	[illegible]	[illegible]	[illegible]	[illegible]
[illegible]	[illegible]	[illegible]	[illegible]	[illegible]	[illegible]	[illegible]	[illegible]	[illegible]	84	[illegible]	[illegible]	[illegible]	[illegible]	[illegible]	[illegible]	[illegible]	[illegible]	[illegible]	[illegible]
[illegible]			[illegible]	[illegible]	[illegible]	[illegible]	[illegible]	[illegible]	[illegible]	[illegible]	[illegible]	[illegible]	[illegible]	[illegible]	[illegible]	[illegible]	[illegible]	[illegible]	[illegible]
[illegible]	[illegible]	[illegible]	93	120	120	280	130	28.8	80.2	*220*	40	[illegible]	[illegible]	[illegible]	[illegible]	[illegible]	[illegible]	16	7.5
[illegible]	[illegible]	[illegible]	[illegible]	[illegible]	[illegible]	[illegible]	[illegible]	[illegible]	[illegible]	[illegible]	[illegible]	[illegible]	[illegible]	[illegible]	[illegible]	[illegible]	[illegible]	[illegible]	[illegible]
[illegible]			[illegible]	[illegible]	[illegible]	[illegible]	[illegible]	[illegible]	[illegible]	[illegible]	[illegible]	[illegible]	[illegible]	[illegible]	[illegible]	[illegible]	[illegible]	[illegible]	[illegible]
[illegible]	[illegible]	[illegible]	[illegible]	[illegible]	[illegible]	[illegible]	[illegible]	[illegible]	[illegible]	[illegible]	[illegible]	[illegible]	[illegible]	[illegible]	[illegible]	[illegible]	[illegible]	[illegible]	[illegible]
[illegible]			[illegible]	[illegible]	[illegible]	[illegible]	[illegible]	[illegible]	[illegible]	[illegible]	[illegible]	[illegible]	[illegible]	[illegible]	[illegible]	[illegible]	[illegible]	[illegible]	[illegible]
[illegible]			[illegible]	[illegible]	[illegible]	[illegible]	[illegible]	[illegible]	[illegible]	[illegible]	[illegible]	[illegible]	[illegible]	[illegible]	[illegible]	[illegible]	[illegible]	[illegible]	[illegible]
[illegible]			[illegible]	[illegible]	[illegible]	[illegible]	[illegible]	[illegible]	[illegible]	[illegible]	[illegible]	[illegible]	[illegible]	[illegible]	[illegible]	[illegible]	[illegible]	[illegible]	[illegible]
[illegible]			[illegible]	[illegible]	[illegible]	[illegible]	[illegible]	[illegible]	[illegible]	[illegible]	[illegible]	[illegible]	[illegible]	[illegible]	[illegible]	[illegible]	[illegible]	[illegible]	[illegible]
[illegible]			[illegible]	[illegible]	[illegible]	[illegible]	[illegible]	[illegible]	[illegible]	[illegible]	[illegible]	[illegible]	[illegible]	[illegible]	[illegible]	[illegible]	[illegible]	[illegible]	[illegible]
[illegible]	[illegible]	[illegible]	[illegible]	[illegible]	[illegible]	[illegible]	[illegible]	[illegible]	[illegible]	[illegible]	[illegible]	[illegible]	[illegible]	[illegible]	[illegible]	[illegible]	[illegible]	[illegible]	[illegible]
[illegible]	[illegible]	[illegible]	[illegible]	[illegible]	[illegible]	[illegible]	[illegible]	[illegible]	[illegible]	[illegible]	[illegible]	[illegible]	[illegible]	[illegible]	[illegible]	[illegible]	[illegible]	[illegible]	[illegible]
[illegible]			[illegible]	[illegible]	[illegible]	[illegible]	[illegible]	[illegible]	[illegible]	[illegible]	[illegible]	[illegible]	[illegible]	[illegible]	[illegible]	[illegible]	[illegible]	[illegible]	[illegible]
[illegible]	[illegible]	[illegible]	10	15.8	15.7	67.6	16	[illegible]	50.1	[illegible]	[illegible]	[illegible]	[illegible]	[illegible]	[illegible]	[illegible]	[illegible]	[illegible]	[illegible]
[illegible]			[illegible]	[illegible]	[illegible]	[illegible]	[illegible]	[illegible]	[illegible]	[illegible]	[illegible]	[illegible]	[illegible]	[illegible]	[illegible]	[illegible]	[illegible]	[illegible]	[illegible]
[illegible]			[illegible]	[illegible]	[illegible]	[illegible]	[illegible]	[illegible]	[illegible]	[illegible]	[illegible]	[illegible]	[illegible]	[illegible]	[illegible]	[illegible]	[illegible]	[illegible]	[illegible]
[illegible]	[illegible]	[illegible]	[illegible]	[illegible]	[illegible]	[illegible]	[illegible]	[illegible]	[illegible]	[illegible]	[illegible]	[illegible]	[illegible]	[illegible]	[illegible]	[illegible]	[illegible]	[illegible]	[illegible]
[illegible]	[illegible]	[illegible]	[illegible]	[illegible]	[illegible]	[illegible]	[illegible]	[illegible]	[illegible]	[illegible]	[illegible]	[illegible]	[illegible]	[illegible]	[illegible]	[illegible]	[illegible]	[illegible]	[illegible]
[illegible]	[illegible]	[illegible]	[illegible]	[illegible]	[illegible]	[illegible]	[illegible]	[illegible]	[illegible]	[illegible]	[illegible]	[illegible]	[illegible]	[illegible]	[illegible]	[illegible]	[illegible]	[illegible]	[illegible]
[illegible]			[illegible]	[illegible]	[illegible]	[illegible]	[illegible]	[illegible]	[illegible]	[illegible]	[illegible]	[illegible]	[illegible]	[illegible]	[illegible]	[illegible]	[illegible]	[illegible]	[illegible]
[illegible]	[illegible]	[illegible]	[illegible]	[illegible]	[illegible]	[illegible]	[illegible]	[illegible]	[illegible]	[illegible]	[illegible]	[illegible]	[illegible]	[illegible]	[illegible]	[illegible]	[illegible]	[illegible]	[illegible]
[illegible]	[illegible]	[illegible]	*400*	*710*	*710*	*3600*	*750*	[illegible]	*435.1*	*1200*	120	[illegible]	[illegible]	[illegible]	[illegible]	[illegible]	[illegible]	[illegible]	[illegible]
[illegible]			[illegible]	[illegible]	[illegible]	[illegible]	[illegible]	[illegible]	[illegible]	[illegible]	[illegible]	[illegible]	[illegible]	[illegible]	[illegible]	[illegible]	[illegible]	[illegible]	[illegible]
[illegible]	[illegible]	[illegible]	[illegible]	[illegible]	[illegible]	[illegible]	[illegible]	[illegible]	[illegible]	[illegible]	[illegible]	[illegible]	[illegible]	[illegible]	[illegible]	[illegible]	[illegible]	[illegible]	[illegible]
[illegible]			[illegible]	[illegible]	[illegible]	[illegible]	[illegible]	[illegible]	[illegible]	[illegible]	[illegible]	[illegible]	[illegible]	[illegible]	[illegible]	[illegible]	[illegible]	[illegible]	[illegible]
[illegible]	[illegible]	[illegible]	*130*	99	*100*	*110*	*170*	*145.2*	*214.2*	*450*	*170*	[illegible]	[illegible]	[illegible]	[illegible]	[illegible]	[illegible]	[illegible]	[illegible]

Table 3-1
January 2011 Groundwater Analytical Results - VOCs
Nyanza Chemical Waste Dump Superfund Site
Ashland, Massachusetts

Sample Location			[illegible]	[illegible]	[illegible]	[illegible]	[illegible]	[illegible]	[illegible]	[illegible]	[illegible]	[illegible]	[illegible]	[illegible]	[illegible]	[illegible]	[illegible]	[illegible]	[illegible]
Sample ID			[illegible]	[illegible]	[illegible]	[illegible]	[illegible]	[illegible]	[illegible]	[illegible]	[illegible]	[illegible]	[illegible]	[illegible]	[illegible]	[illegible]	[illegible]	[illegible]	[illegible]
Sample Date & Time			[illegible]	[illegible]	[illegible]	[illegible]	[illegible]	[illegible]	[illegible]	[illegible]	[illegible]	[illegible]	[illegible]	[illegible]	[illegible]	[illegible]	[illegible]	[illegible]	[illegible]
Chemical Name	**GW-1 Standard**	**GW-2 Standard**																	
[illegible]			[illegible]	[illegible]	[illegible]	[illegible]	[illegible]	[illegible]	[illegible]	[illegible]	[illegible]	[illegible]	[illegible]	[illegible]	[illegible]	[illegible]	[illegible]	[illegible]	[illegible]
[illegible]			[illegible]	[illegible]	[illegible]	[illegible]	[illegible]	[illegible]	[illegible]	[illegible]	[illegible]	[illegible]	[illegible]	[illegible]	[illegible]	[illegible]	[illegible]	[illegible]	[illegible]
[illegible]	[illegible]	[illegible]	[illegible]	[illegible]	[illegible]	[illegible]	[illegible]	[illegible]	[illegible]	[illegible]	[illegible]	[illegible]	[illegible]	[illegible]	[illegible]	[illegible]	[illegible]	[illegible]	[illegible]
[illegible]			[illegible]	[illegible]	[illegible]	[illegible]	[illegible]	[illegible]	[illegible]	[illegible]	[illegible]	[illegible]	[illegible]	[illegible]	[illegible]	[illegible]	[illegible]	[illegible]	[illegible]
[illegible]			[illegible]	[illegible]	[illegible]	[illegible]	[illegible]	[illegible]	[illegible]	[illegible]	[illegible]	[illegible]	[illegible]	[illegible]	[illegible]	[illegible]	[illegible]	[illegible]	[illegible]
[illegible]			[illegible]	[illegible]	[illegible]	[illegible]	[illegible]	[illegible]	[illegible]	[illegible]	[illegible]	[illegible]	[illegible]	[illegible]	[illegible]	[illegible]	[illegible]	[illegible]	[illegible]
[illegible]	[illegible]	[illegible]	[illegible]	[illegible]	[illegible]	[illegible]	[illegible]	[illegible]	[illegible]	[illegible]	[illegible]	[illegible]	[illegible]	[illegible]	[illegible]	[illegible]	[illegible]	[illegible]	[illegible]
[illegible]	[illegible]	[illegible]	[illegible]	[illegible]	[illegible]	[illegible]	[illegible]	[illegible]	[illegible]	[illegible]	[illegible]	[illegible]	[illegible]	[illegible]	[illegible]	[illegible]	[illegible]	[illegible]	[illegible]
[illegible]			[illegible]	[illegible]	[illegible]	[illegible]	[illegible]	[illegible]	[illegible]	[illegible]	[illegible]	[illegible]	[illegible]	[illegible]	[illegible]	[illegible]	[illegible]	[illegible]	[illegible]
[illegible]			[illegible]	[illegible]	[illegible]	[illegible]	[illegible]	[illegible]	[illegible]	[illegible]	[illegible]	[illegible]	[illegible]	[illegible]	[illegible]	[illegible]	[illegible]	[illegible]	[illegible]
[illegible]	[illegible]	[illegible]	[illegible]	[illegible]	[illegible]	[illegible]	[illegible]	[illegible]	[illegible]	[illegible]	[illegible]	[illegible]	[illegible]	[illegible]	[illegible]	[illegible]	[illegible]	[illegible]	[illegible]
[illegible]	[illegible]	[illegible]	[illegible]	[illegible]	[illegible]	[illegible]	[illegible]	[illegible]	[illegible]	[illegible]	[illegible]	[illegible]	[illegible]	[illegible]	[illegible]	[illegible]	[illegible]	[illegible]	[illegible]
[illegible]	[illegible]	[illegible]	[illegible]	[illegible]	[illegible]	[illegible]	[illegible]	[illegible]	[illegible]	[illegible]	[illegible]	[illegible]	[illegible]	[illegible]	[illegible]	[illegible]	[illegible]	[illegible]	[illegible]
[illegible]			[illegible]	[illegible]	[illegible]	[illegible]	[illegible]	[illegible]	[illegible]	[illegible]	[illegible]	[illegible]	[illegible]	[illegible]	[illegible]	[illegible]	[illegible]	[illegible]	[illegible]
[illegible]			[illegible]	[illegible]	[illegible]	[illegible]	[illegible]	[illegible]	[illegible]	[illegible]	[illegible]	[illegible]	[illegible]	[illegible]	[illegible]	[illegible]	[illegible]	[illegible]	[illegible]
[illegible]			[illegible]	[illegible]	[illegible]	[illegible]	[illegible]	[illegible]	[illegible]	[illegible]	[illegible]	[illegible]	[illegible]	[illegible]	[illegible]	[illegible]	[illegible]	[illegible]	[illegible]
[illegible]	[illegible]	[illegible]	[illegible]	[illegible]	[illegible]	[illegible]	[illegible]	[illegible]	[illegible]	[illegible]	[illegible]	[illegible]	[illegible]	[illegible]	[illegible]	[illegible]	[illegible]	[illegible]	[illegible]
[illegible]	[illegible]	[illegible]	[illegible]	[illegible]	[illegible]	[illegible]	[illegible]	[illegible]	[illegible]	[illegible]	[illegible]	[illegible]	[illegible]	[illegible]	[illegible]	[illegible]	[illegible]	[illegible]	[illegible]
[illegible]			[illegible]	[illegible]	[illegible]	[illegible]	[illegible]	[illegible]	[illegible]	[illegible]	[illegible]	[illegible]	[illegible]	[illegible]	[illegible]	[illegible]	[illegible]	[illegible]	[illegible]
[illegible]	[illegible]	[illegible]	[illegible]	[illegible]	[illegible]	[illegible]	[illegible]	[illegible]	[illegible]	[illegible]	[illegible]	[illegible]	[illegible]	[illegible]	[illegible]	[illegible]	[illegible]	[illegible]	[illegible]
[illegible]	[illegible]	[illegible]	[illegible]	[illegible]	[illegible]	[illegible]	[illegible]	[illegible]	[illegible]	[illegible]	[illegible]	[illegible]	[illegible]	[illegible]	[illegible]	[illegible]	[illegible]	[illegible]	[illegible]
[illegible]			[illegible]	[illegible]	[illegible]	[illegible]	[illegible]	[illegible]	[illegible]	[illegible]	[illegible]	[illegible]	[illegible]	[illegible]	[illegible]	[illegible]	[illegible]	[illegible]	[illegible]
[illegible]	[illegible]	[illegible]	*240*	*380*	*390*	*500*	*560*	*174.8*	*335.4*	*2000*	*120*	[illegible]	[illegible]	[illegible]	[illegible]	[illegible]	[illegible]	*88*	*35*
[illegible]			[illegible]	[illegible]	[illegible]	[illegible]	[illegible]	[illegible]	[illegible]	[illegible]	[illegible]	[illegible]	[illegible]	[illegible]	[illegible]	[illegible]	[illegible]	[illegible]	[illegible]
[illegible]			[illegible]	[illegible]	[illegible]	[illegible]	[illegible]	[illegible]	[illegible]	[illegible]	[illegible]	[illegible]	[illegible]	[illegible]	[illegible]	[illegible]	[illegible]	[illegible]	[illegible]
[illegible]	[illegible]	[illegible]	**2.3**	**2.4**	**3.5**	**460**	[illegible]	**15.2**	[illegible]	**65**	**5.8**	[illegible]	[illegible]	[illegible]	[illegible]	[illegible]	[illegible]	[illegible]	[illegible]

Notes:

[illegible] [illegible]
[illegible] [illegible]
[illegible] [illegible]
[illegible] **Bold** [illegible]
[illegible] ***Italic*** [illegible]
[illegible] [illegible]

APPENDIX B

APPENDIX B

MATERIAL SAFETY DATA SHEETS

- Isobutylene Gas
- Methanol
- Nitric Acid
- Sulfuric Acid
- Hydrochloric Acid
- Buffer Solution pH7
- Isopropyl alcohol
- Buffer Solution pH4
- YSI Oxygen Cal Solution
- Buffer Solution pH10

MSDS Number: **H3880** * * * * * *Effective Date:* ***11/21/08*** * * * * * *Supercedes:* ***01/19/06***

MSDS Material Safety Data Sheet

From: Mallinckrodt Baker, Inc.
222 Red School Lane
Phillipsburg, NJ 08865

Mallinckrodt CHEMICALS J.T.Baker

24 Hour Emergency Telephone: 908-859-2151
CHEMTREC: 1-800-424-9300

National Response in Canada
CANUTEC: 613-996-6666

Outside U.S. and Canada
Chemtrec: 703-527-3887

NOTE: CHEMTREC, CANUTEC and National Response Center emergency numbers to be used only in the event of chemical emergencies involving a spill, leak, fire, exposure or accident involving chemicals.

All non-emergency questions should be directed to Customer Service (1-800-582-2537) for assistance.

HYDROCHLORIC ACID, 33 - 40%

1. Product Identification

Synonyms: Muriatic acid; hydrogen chloride, aqueous
CAS No.: 7647-01-0
Molecular Weight: 36.46
Chemical Formula: HCl
Product Codes:
J.T. Baker: 5367, 5537, 5575, 5800, 5814, 5821, 5839, 5861, 5862, 5894, 5962, 5963, 5972, 5994, 6900, 7831, 9529, 9530, 9534, 9535, 9536, 9538, 9539, 9540, 9544, 9548, 9551
Mallinckrodt: 2062, 2515, 2612, 2624, 2626, 3861, 5583, 5587, H611, H613, H616, H987, H992, H999, V078, V628

2. Composition/Information on Ingredients

Ingredient	CAS No	Percent	Hazardous
Hydrogen Chloride	7647-01-0	33 - 40%	Yes
Water	7732-18-5	60 - 67%	No

3. Hazards Identification

Emergency Overview

POISON! DANGER! CORROSIVE. LIQUID AND MIST CAUSE SEVERE BURNS TO ALL BODY TISSUE. MAY BE FATAL IF SWALLOWED OR INHALED. INHALATION MAY CAUSE LUNG DAMAGE.

SAF-T-DATA(tm) Ratings (Provided here for your convenience)

Health Rating: 3 - Severe (Poison)
Flammability Rating: 0 - None
Reactivity Rating: 2 - Moderate
Contact Rating: 4 - Extreme (Corrosive)
Lab Protective Equip: GOGGLES & SHIELD; LAB COAT & APRON; VENT HOOD; PROPER GLOVES
Storage Color Code: White (Corrosive)

Potential Health Effects

Inhalation:
Corrosive! Inhalation of vapors can cause coughing, choking, inflammation of the nose, throat, and upper respiratory tract, and in severe cases, pulmonary edema, circulatory failure, and death.
Ingestion:
Corrosive! Swallowing hydrochloric acid can cause immediate pain and burns of the mouth, throat, esophagus and gastrointestinal tract. May cause nausea, vomiting, and diarrhea. Swallowing may be fatal.
Skin Contact:
Corrosive! Can cause redness, pain, and severe skin burns. Concentrated solutions cause deep ulcers and discolor skin.
Eye Contact:
Corrosive! Vapors are irritating and may cause damage to the eyes. Contact may cause severe burns and permanent eye damage.
Chronic Exposure:
Long-term exposure to concentrated vapors may cause erosion of teeth. Long term exposures seldom occur due to the corrosive properties of the acid.
Aggravation of Pre-existing Conditions:
Persons with pre-existing skin disorders or eye disease may be more susceptible to the effects of this substance.

4. First Aid Measures

Inhalation:
Remove to fresh air. If not breathing, give artificial respiration. If breathing is difficult, give oxygen. Get medical attention immediately.

Ingestion:
DO NOT INDUCE VOMITING! Give large quantities of water or milk if available. Never give anything by mouth to an unconscious person. Get medical attention immediately.
Skin Contact:
In case of contact, immediately flush skin with plenty of water for at least 15 minutes while removing contaminated clothing and shoes. Wash clothing before reuse. Thoroughly clean shoes before reuse. Get medical attention immediately.
Eye Contact:
Immediately flush eyes with plenty of water for at least 15 minutes, lifting lower and upper eyelids occasionally. Get medical attention immediately.

5. Fire Fighting Measures

Fire:
Extreme heat or contact with metals can release flammable hydrogen gas.
Explosion:
Not considered to be an explosion hazard.
Fire Extinguishing Media:
If involved in a fire, use water spray. Neutralize with soda ash or slaked lime.
Special Information:
In the event of a fire, wear full protective clothing and NIOSH-approved self-contained breathing apparatus with full facepiece operated in the pressure demand or other positive pressure mode. Structural firefighter's protective clothing is ineffective for fires involving hydrochloric acid. Stay away from ends of tanks. Cool tanks with water spray until well after fire is out.

6. Accidental Release Measures

Ventilate area of leak or spill. Wear appropriate personal protective equipment as specified in Section 8. Isolate hazard area. Keep unnecessary and unprotected personnel from entering. Contain and recover liquid when possible. Neutralize with alkaline material (soda ash, lime), then absorb with an inert material (e. g., vermiculite, dry sand, earth), and place in a chemical waste container. Do not use combustible materials, such as saw dust. Do not flush to sewer! US Regulations (CERCLA) require reporting spills and releases to soil, water and air in excess of reportable quantities. The toll free number for the US Coast Guard National Response Center is (800) 424-8802.

J. T. Baker NEUTRASORB® acid neutralizers are recommended for spills of this product.

7. Handling and Storage

Store in a cool, dry, ventilated storage area with acid resistant floors and good drainage. Protect from physical damage. Keep out of direct sunlight and away from heat, water, and incompatible materials. Do not wash out container and use it for other purposes. When diluting, the acid should always be added slowly to water and in small amounts. Never use hot water and never add water to the acid. Water added to acid can cause uncontrolled boiling and splashing. When opening metal containers, use non-sparking tools because of the possibility of hydrogen gas being present. Containers of this material may be hazardous when empty since they retain product residues (vapors, liquid); observe all warnings and precautions listed for the product.

8. Exposure Controls/Personal Protection

Airborne Exposure Limits:
For Hydrochloric acid:
- OSHA Permissible Exposure Limit (PEL):
5 ppm (Ceiling)
- ACGIH Threshold Limit Value (TLV):
2 ppm (Ceiling), A4 Not classifiable as a human carcinogen
Ventilation System:
A system of local and/or general exhaust is recommended to keep employee exposures below the Airborne Exposure Limits. Local exhaust ventilation is generally preferred because it can control the emissions of the contaminant at its source, preventing dispersion of it into the general work area. Please refer to the ACGIH document, *Industrial Ventilation, A Manual of Recommended Practices*, most recent edition, for details.
Personal Respirators (NIOSH Approved):
If the exposure limit is exceeded, a full facepiece respirator with an acid gas cartridge may be worn up to 50 times the exposure limit or the maximum use concentration specified by the appropriate regulatory agency or respirator supplier, whichever is lowest. For emergencies or instances where the exposure levels are not known, use a full-facepiece positive-pressure, air-supplied respirator. WARNING: Air purifying respirators do not protect workers in oxygen-deficient atmospheres.
Skin Protection:
Rubber or neoprene gloves and additional protection including impervious boots, apron, or coveralls, as needed in areas of unusual exposure to prevent skin contact.
Eye Protection:
Use chemical safety goggles and/or a full face shield where splashing is possible. Maintain eye wash fountain and quick-drench facilities in work area.

9. Physical and Chemical Properties

Appearance:
Colorless, fuming liquid.
Odor:
Pungent odor of hydrogen chloride.
Solubility:
Infinite in water with slight evolution of heat.
Density:
1.18
pH:
For HCL solutions: 0.1 (1.0 N), 1.1 (0.1 N), 2.02 (0.01 N)
% Volatiles by volume @ 21C (70F):
100

Boiling Point:
53C (127F) Azeotrope (20.2%) boils at 109C (228F)
Melting Point:
-74C (-101F)
Vapor Density (Air=1):
No information found.
Vapor Pressure (mm Hg):
190 @ 25C (77F)
Evaporation Rate (BuAc=1):
No information found.

10. Stability and Reactivity

Stability:
Stable under ordinary conditions of use and storage. Containers may burst when heated.
Hazardous Decomposition Products:
When heated to decomposition, emits toxic hydrogen chloride fumes and will react with water or steam to produce heat and toxic and corrosive fumes. Thermal oxidative decomposition produces toxic chlorine fumes and explosive hydrogen gas.
Hazardous Polymerization:
Will not occur.
Incompatibilities:
A strong mineral acid, concentrated hydrochloric acid is incompatible with many substances and highly reactive with strong bases, metals, metal oxides, hydroxides, amines, carbonates and other alkaline materials. Incompatible with materials such as cyanides, sulfides, sulfites, and formaldehyde.
Conditions to Avoid:
Heat, direct sunlight.

11. Toxicological Information

Inhalation rat LC50: 3124 ppm/1H; oral rabbit LD50: 900 mg/kg (Hydrochloric acid concentrated); investigated as a tumorigen, mutagen, reproductive effector.

--------\Cancer Lists\----------

Ingredient	---NTP Carcinogen--- Known	Anticipated	IARC Category
Hydrogen Chloride (7647-01-0)	No	No	3
Water (7732-18-5)	No	No	None

12. Ecological Information

Environmental Fate:
When released into the soil, this material is not expected to biodegrade. When released into the soil, this material may leach into groundwater.
Environmental Toxicity:
This material is expected to be toxic to aquatic life.

13. Disposal Considerations

Whatever cannot be saved for recovery or recycling should be handled as hazardous waste and sent to a RCRA approved waste facility. Processing, use or contamination of this product may change the waste management options. State and local disposal regulations may differ from federal disposal regulations. Dispose of container and unused contents in accordance with federal, state and local requirements.

14. Transport Information

Domestic (Land, D.O.T.)

Proper Shipping Name: HYDROCHLORIC ACID
Hazard Class: 8
UN/NA: UN1789
Packing Group: II
Information reported for product/size: 475LB

International (Water, I.M.O.)

Proper Shipping Name: HYDROCHLORIC ACID
Hazard Class: 8
UN/NA: UN1789
Packing Group: II
Information reported for product/size: 475LB

15. Regulatory Information

Risk and Safety Phrases:
Symbol: C
Risk: 34-37
Safety: (1/2-)26-45

--------\Chemical Inventory Status - Part 1\----------

Ingredient	TSCA	EC	Japan	Australia
Hydrogen Chloride (7647-01-0)	Yes	Yes	Yes	Yes
Water (7732-18-5)	Yes	Yes	Yes	Yes

--------\Chemical Inventory Status - Part 2\----------

Ingredient	Korea	--Canada-- DSL	NDSL	Phil.
Hydrogen Chloride (7647-01-0)	Yes	Yes	No	Yes
Water (7732-18-5)	Yes	Yes	No	Yes

--------\Federal, State & International Regulations - Part 1\----------

Ingredient	-SARA 302- RQ	TPQ	------SARA 313------ List	Chemical Catg.
Hydrogen Chloride (7647-01-0)	5000	500*	Yes	No
Water (7732-18-5)	No	No	No	No

--------\Federal, State & International Regulations - Part 2\----------

Ingredient	CERCLA	-RCRA- 261.33	-TSCA- 8(d)
Hydrogen Chloride (7647-01-0)	5000	No	No
Water (7732-18-5)	No	No	No

Chemical Weapons Convention: No TSCA 12(b): No CDTA: Yes
SARA 311/312: Acute: Yes Chronic: Yes Fire: No Pressure: No
Reactivity: No (Mixture / Liquid)

Australian Hazchem Code: 2R
Poison Schedule: None allocated.
WHMIS:
This MSDS has been prepared according to the hazard criteria of the Controlled Products Regulations (CPR) and the MSDS contains all of the information required by the CPR.

---

16. Other Information

NFPA Ratings: Health: **3** Flammability: **0** Reactivity: **1**
Label Hazard Warning:
POISON! DANGER! CORROSIVE. LIQUID AND MIST CAUSE SEVERE BURNS TO ALL BODY TISSUE. MAY BE FATAL IF SWALLOWED OR INHALED. INHALATION MAY CAUSE LUNG DAMAGE.
Label Precautions:
Do not get in eyes, on skin, or on clothing.
Do not breathe vapor or mist.
Use only with adequate ventilation.
Wash thoroughly after handling.
Store in a tightly closed container.
Remove and wash contaminated clothing promptly.
Label First Aid:
In case of contact, immediately flush eyes or skin with plenty of water for at least 15 minutes while removing contaminated clothing and shoes. Wash clothing before reuse. If swallowed, DO NOT INDUCE VOMITING. Give large quantities of water. Never give anything by mouth to an unconscious person. If inhaled, remove to fresh air. If not breathing, give artificial respiration. If breathing is difficult, give oxygen. In all cases get medical attention immediately.
Product Use:
Laboratory Reagent.
Revision Information:
No Changes.
Disclaimer:
****
Mallinckrodt Baker, Inc. provides the information contained herein in good faith but makes no representation as to its comprehensiveness or accuracy. This document is intended only as a guide to the appropriate precautionary handling of the material by a properly trained person using this product. Individuals receiving the information must exercise their independent judgment in determining its appropriateness for a particular purpose. MALLINCKRODT BAKER, INC. MAKES NO REPRESENTATIONS OR WARRANTIES, EITHER EXPRESS OR IMPLIED, INCLUDING WITHOUT LIMITATION ANY WARRANTIES OF MERCHANTABILITY, FITNESS FOR A PARTICULAR PURPOSE WITH RESPECT TO THE INFORMATION SET FORTH HEREIN OR THE PRODUCT TO WHICH THE INFORMATION REFERS. ACCORDINGLY, MALLINCKRODT BAKER, INC. WILL NOT BE RESPONSIBLE FOR DAMAGES RESULTING FROM USE OF OR RELIANCE UPON THIS INFORMATION.
****
Prepared by: Environmental Health & Safety
Phone Number: (314) 654-1600 (U.S.A.)

MATERIAL SAFETY DATA SHEET - CALIBRATION CHECK GAS

PRODUCT NAME: ISOBUTYLENE (1 PPM – 0.9%) IN AIR

MSDS NO: 248 **Version:3** **Date: August, 2010**

1. Chemical Product and Company Identification

Gasco Affiliates, LLC
320 Scarlett Blvd.
Oldsmar, FL 34677

TELEPHONE NUMBER: (800) 910-0051 **24-HOUR EMERGENCY NUMBER: 1-800-424-9300**
FAX NUMBER: (866) 755-8920
E-MAIL: info@gascogas.com

PRODUCT NAME: ISOBUTYLENE (1 PPM – 0.9%) IN AIR
CHEMICAL NAME: Isobutylene in air
COMMON NAMES/ SYNONYMS: None
TDG (Canada) CLASSIFICATION: 2.2
WHIMIS CLASSIFICATION: A

2. COMPOSITION/ INFORMATION ON INGREDIENTS

INGREDIENT	%VOLUME	PEL-OSHA	TLV-ACGIH	LD_{50} or LC_{50} Route/Species
Isobutylene FORMULA: C_4H_8	0.0001-0.9	N/A	N/A	N/A
Air FORMULA: Mixture	99.0 to 99.9999	N/A	N/A	N/A

3. HAZARDS IDENTIFICATION

EMERGENCY OVERVIEW

Release of this product may produce oxygen-deficient atmospheres (especially in confined spaces or other poorly ventilated environments); individuals in such atmospheres may be asphyxiated. Isobutylene may cause drowsiness and other central nervous system effects in high concentrations; however, due to the low concentration of this gas mixture, this is unlikely to occur.

ROUTE OF ENTRY:

Skin Contact	Skin Absorption	Eye Contact	Inhalation	Ingestion
No	No	No	Yes	No

HEALTH EFFECTS:

Exposure Limits	Irritant	Sensitization	Reproductive Hazard	Mutagen
Yes	No	No	No	No

Carcinogenicity: --NTP: No IARC: No OSHA: No

EYE EFFECTS:
N/A.

SKIN EFFECTS:
N/A.

INGESTION EFFECTS:
Ingestion unlikely. Gas at room temperature.

INHALATION EFFECTS:
Due to the small size of this cylinder, no unusual health effects from over-exposure are anticipated under normal routine use.

NFPA HAZARD CODES		HMIS HAZARD CODES		RATING SYSTEM
Health:	1	Health:	1	0= No Hazard
Flammability:	0	Flammability:	0	1= Slight Hazard
Reactivity:	0	Reactivity:	0	2= Moderate Hazard
				3= Serious Hazard
				4= Severe Hazard

4. FIRST AID MEASURES

EYES:
N/A

SKIN:
N/A

INGESTION:
Not required

INHALATION:
PROMPT MEDICAL ATTENTION IS MANDATORY IN ALL CASED OF OVEREXPOSURE. RESCUE PERSONNEL SHOULD BE EQUIPPED THE SELF-CONTAINED BREATHING APPARATUS. Victims should be assisted to an uncontaminated area and inhale fresh air. Quick removal from the contaminated area is most important. If breathing has stopped administer artificial resuscitation and supplemental oxygen. Further treatment should be symptomatic and supportive.

5. FIRE-FIGHTING MEASURES

These containers hold gas under pressure, with no liquid phase. If involved in a major fire, they should be sprayed with water to avoid pressure increases, otherwise pressures will rise and ultimately they may distort or burst to release the contents. The gases will not add significantly to the fire, but containers or fragments may be projected considerable distances - thereby hampering fire fighting efforts.

6. ACCIDENTAL RELEASE MEASURES

In terms of weight, these containers hold very little contents, such that any accidental release by puncturing etc. will be of no practical concern.

7. HANDLING AND STORAGE

Suck back of water into the container must be prevented. Do not allow backfeed into the container. Use only properly specified equipment which is suitable for this product, its supply pressure and temperature. Use only in well-ventilated areas. Do not heat cylinder by any means to increase rate of product from the cylinder. Do not allow the temperature where cylinders are stored to exceed 130°F (54°C).

8. EXPOSURE CONTROLS/PERSONAL PROTECTION

Use adequate ventilation for extended use of gas.

PRODUCT NAME: ISOBUTYLENE (1 PPM – 0.9%) IN AIR

9. PHYSICAL AND CHEMICAL PROPERTIES

PARAMETER:	VALUE:
Physical state	: Gas
Evaporation point	: N/A
pH	: N/A
Odor and appearance	: Colorless, odorless gas

10. STABILITY AND REACTIVITY

Stable under normal conditions. Expected shelf life 48 months.

11. TOXICOLOGICAL INFORMATION

No toxicological damage caused by this product.

12. ECOLOGICAL INFORMATION

No ecological damage caused by this product.

13. DISPOSAL INFORMATION

Do not discharge into any place where its accumulation could be dangerous. Used containers are acceptable for disposal in the normal waste stream as long as the cylinder is empty and valve removed or cylinder wall is punctured; but GASCO encourages the consumer to return cylinders.

14. TRANSPORT INFORMATION

	United States DOT	Canada TDG
PROPER SHIPPING NAME:	Compressed Gas N.O.S. (Isobutylene in Air)	Compressed Gas N.O.S. (Isobutylene in Air)
HAZARD CLASS:	2.2	2.2
IDENTIFICATION NUMBER:	UN1956	UN1956
SHIPPING LABEL:	NONFLAMMABLE GAS	NONFLAMMABLE GAS

15. REGULATORY INFORMATION

Isobutylene is listed under the accident prevention provisions of section 112(r) of the Clean Air Act (CAA) with a threshold quantity (TQ) of 10,000 pounds.

16. OTHER INFORMATION

This MSDS has been prepared in accordance with the Chemicals (Hazard Information and Packaging for Supply (Amendment) Regulation 1996. The information is based on the best knowledge of GASCO, and its advisors and is given in good faith, but we cannot guarantee its accuracy, reliability or completeness and therefore disclaim any liability for loss or damage arising out of use of this data. Since conditions of use are outside the control of the Company and its advisors we disclaim any liability for loss or damage when the product is used for other purposes than it is intended.

MSDS/S010/248/ August, 2010

MSDS Number: **I8840** * * * * * *Effective Date:* ***05/04/07*** * * * * * *Supercedes:* ***08/27/04***

MSDS Material Safety Data Sheet

From: Mallinckrodt Baker, Inc.
222 Red School Lane
Phillipsburg, NJ 08865

Mallinckrodt CHEMICALS J.T.Baker

24 Hour Emergency Telephone: 908-859-2151
CHEMTREC: 1-800-424-9300

National Response in Canada
CANUTEC: 613-996-6666

Outside U.S. and Canada
Chemtrec: 703-527-3887

NOTE: CHEMTREC, CANUTEC and National Response Center emergency numbers to be used only in the event of chemical emergencies involving a spill, leak, fire, exposure or accident involving chemicals.

All non-emergency questions should be directed to Customer Service (1-800-582-2537) for assistance.

ISOPROPYL ALCOHOL (90 - 100%)

1. Product Identification

Synonyms: 2-Propanol; sec-propyl alcohol; isopropanol; sec-propanol; dimethylcarbinol
CAS No.: 67-63-0
Molecular Weight: 60.10
Chemical Formula: (CH3)2 CHOH
Product Codes:
J.T. Baker: 0562, 5082, 9037, 9080, U298
Mallinckrodt: 0562, 3027, 3031, 3032, 3035, 3037, 3043, 4359, 6569, H604, H982, V555, V566, V681

2. Composition/Information on Ingredients

Ingredient	CAS No	Percent	Hazardous
Isopropyl Alcohol	67-63-0	90 - 100%	Yes
Water	7732-18-5	0 - 10%	No

3. Hazards Identification

Emergency Overview

WARNING! FLAMMABLE LIQUID AND VAPOR. HARMFUL IF SWALLOWED OR INHALED. CAUSES IRRITATION TO EYES AND RESPIRATORY TRACT. AFFECTS CENTRAL NERVOUS SYSTEM. MAY BE HARMFUL IF ABSORBED THROUGH SKIN. MAY CAUSE IRRITATION TO SKIN.

SAF-T-DATA(tm) Ratings (Provided here for your convenience)

Health Rating: 2 - Moderate
Flammability Rating: 3 - Severe (Flammable)
Reactivity Rating: 2 - Moderate
Contact Rating: 3 - Severe
Lab Protective Equip: GOGGLES & SHIELD; LAB COAT & APRON; VENT HOOD; PROPER GLOVES; CLASS B EXTINGUISHER
Storage Color Code: Red (Flammable)

Potential Health Effects

Inhalation:
Inhalation of vapors irritates the respiratory tract. Exposure to high concentrations has a narcotic effect, producing symptoms of dizziness, drowsiness, headache, staggering, unconsciousness and possibly death.
Ingestion:
Can cause drowsiness, unconsciousness, and death. Gastrointestinal pain, cramps, nausea, vomiting, and diarrhea may also result. The single lethal dose for a human adult = about 250 mls (8 ounces).
Skin Contact:
May cause irritation with redness and pain. May be absorbed through the skin with possible systemic effects.
Eye Contact:
Vapors cause eye irritation. Splashes cause severe irritation, possible corneal burns and eye damage.
Chronic Exposure:
Chronic exposure may cause skin effects.
Aggravation of Pre-existing Conditions:
Persons with pre-existing skin disorders or impaired liver, kidney, or pulmonary function may be more susceptible to the effects of this agent.

4. First Aid Measures

Inhalation:
Remove to fresh air. If not breathing, give artificial respiration. If breathing is difficult, give oxygen. Get medical attention.

Ingestion:
Give large amounts of water to drink. Never give anything by mouth to an unconscious person. Get medical attention.
Skin Contact:
Immediately flush skin with plenty of water for at least 15 minutes. Call a physician if irritation develops.
Eye Contact:
Immediately flush eyes with plenty of water for at least 15 minutes, lifting lower and upper eyelids occasionally. Get medical attention immediately.

5. Fire Fighting Measures

Fire:
Flash point: 12C (54F) CC
Autoignition temperature: 399C (750F)
Flammable limits in air % by volume:
lel: 2.0; uel: 12.7
Listed fire data is for Pure Isopropyl Alcohol.
Explosion:
Above flash point, vapor-air mixtures are explosive within flammable limits noted above. Contact with strong oxidizers may cause fire or explosion. Vapors can flow along surfaces to distant ignition source and flash back. Sensitive to static discharge.
Fire Extinguishing Media:
Water spray, dry chemical, alcohol foam, or carbon dioxide. Water spray may be used to keep fire exposed containers cool, dilute spills to nonflammable mixtures, protect personnel attempting to stop leak and disperse vapors.
Special Information:
In the event of a fire, wear full protective clothing and NIOSH-approved self-contained breathing apparatus with full facepiece operated in the pressure demand or other positive pressure mode.

6. Accidental Release Measures

Ventilate area of leak or spill. Remove all sources of ignition. Wear appropriate personal protective equipment as specified in Section 8. Isolate hazard area. Keep unnecessary and unprotected personnel from entering. Contain and recover liquid when possible. Use non-sparking tools and equipment. Collect liquid in an appropriate container or absorb with an inert material (e. g., vermiculite, dry sand, earth), and place in a chemical waste container. Do not use combustible materials, such as saw dust. Do not flush to sewer! If a leak or spill has not ignited, use water spray to disperse the vapors, to protect personnel attempting to stop leak, and to flush spills away from exposures.

J. T. Baker SOLUSORB® solvent adsorbent is recommended for spills of this product.

7. Handling and Storage

Protect against physical damage. Store in a cool, dry well-ventilated location, away from any area where the fire hazard may be acute. Outside or detached storage is preferred. Separate from incompatibles. Containers should be bonded and grounded for transfers to avoid static sparks. Storage and use areas should be No Smoking areas. Use non-sparking type tools and equipment, including explosion proof ventilation. Containers of this material may be hazardous when empty since they retain product residues (vapors, liquid); observe all warnings and precautions listed for the product. Small quantities of peroxides can form on prolonged storage. Exposure to light and/or air significantly increases the rate of peroxide formation. If evaporated to a residue, the mixture of peroxides and isopropanol may explode when exposed to heat or shock.

8. Exposure Controls/Personal Protection

Airborne Exposure Limits:
For Isopropyl Alcohol (2-Propanol):
-OSHA Permissible Exposure Limit (PEL):
400 ppm (TWA)

-ACGIH Threshold Limit Value (TLV):
200 ppm (TWA), 400 ppm (STEL), A4 - not classifiable as a human carcinogen.
Ventilation System:
A system of local and/or general exhaust is recommended to keep employee exposures below the Airborne Exposure Limits. Local exhaust ventilation is generally preferred because it can control the emissions of the contaminant at its source, preventing dispersion of it into the general work area. Please refer to the ACGIH document, *Industrial Ventilation, A Manual of Recommended Practices*, most recent edition, for details.
Personal Respirators (NIOSH Approved):
If the exposure limit is exceeded, a full facepiece respirator with organic vapor cartridge may be worn up to 50 times the exposure limit or the maximum use concentration specified by the appropriate regulatory agency or respirator supplier, whichever is lowest. For emergencies or instances where the exposure levels are not known, use a full-facepiece positive-pressure, air-supplied respirator. WARNING: Air purifying respirators do not protect workers in oxygen-deficient atmospheres.
Skin Protection:
Wear impervious protective clothing, including boots, gloves, lab coat, apron or coveralls, as appropriate, to prevent skin contact. Neoprene and nitrile rubber are recommended materials.
Eye Protection:
Use chemical safety goggles and/or a full face shield where splashing is possible. Maintain eye wash fountain and quick-drench facilities in work area.

9. Physical and Chemical Properties

Appearance:
Clear, colorless liquid.
Odor:
Rubbing alcohol.
Solubility:
Miscible in water.
Specific Gravity:

0.79 @ 20C/4C
pH:
No information found.
% Volatiles by volume @ 21C (70F):
100
Boiling Point:
82C (180F)
Melting Point:
-89C (-128F)
Vapor Density (Air=1):
2.1
Vapor Pressure (mm Hg):
44 @ 25C (77F)
Evaporation Rate (BuAc=1):
2.83

10. Stability and Reactivity

Stability:
Stable under ordinary conditions of use and storage. Heat and sunlight can contribute to instability.
Hazardous Decomposition Products:
Carbon dioxide and carbon monoxide may form when heated to decomposition.
Hazardous Polymerization:
Will not occur.
Incompatibilities:
Heat, flame, strong oxidizers, acetaldehyde, acids, chlorine, ethylene oxide, hydrogen-palladium combination, hydrogen peroxide-sulfuric acid combination, potassium tert-butoxide, hypochlorous acid, isocyanates, nitroform, phosgene, aluminum, oleum and perchloric acid.
Conditions to Avoid:
Heat, flames, ignition sources and incompatibles.

11. Toxicological Information

Oral rat LD50: 5045 mg/kg; skin rabbit LD50: 12.8 gm/kg; inhalation rat LC50: 16,000 ppm/8-hour; investigated as a tumorigen, mutagen, reproductive effector.

--------\Cancer Lists\----------

Ingredient	---NTP Carcinogen--- Known	Anticipated	IARC Category
Isopropyl Alcohol (67-63-0)	No	No	3
Water (7732-18-5)	No	No	None

12. Ecological Information

Environmental Fate:
When released into the soil, this material is expected to quickly evaporate. When released into the soil, this material may leach into groundwater. When released into the soil, this material may biodegrade to a moderate extent. When released to water, this material is expected to quickly evaporate. When released into the water, this material is expected to have a half-life between 1 and 10 days. When released into water, this material may biodegrade to a moderate extent. This material is not expected to significantly bioaccumulate. When released into the air, this material is expected to be readily degraded by reaction with photochemically produced hydroxyl radicals. When released into the air, this material is expected to have a half-life between 1 and 10 days. When released into the air, this material may be removed from the atmosphere to a moderate extent by wet deposition.
Environmental Toxicity:
The LC50/96-hour values for fish are over 100 mg/l. This material is not expected to be toxic to aquatic life.

13. Disposal Considerations

Whatever cannot be saved for recovery or recycling should be handled as hazardous waste and sent to a RCRA approved incinerator or disposed in a RCRA approved waste facility. Processing, use or contamination of this product may change the waste management options. State and local disposal regulations may differ from federal disposal regulations. Dispose of container and unused contents in accordance with federal, state and local requirements.

14. Transport Information

Domestic (Land, D.O.T.)

Proper Shipping Name: ISOPROPANOL
Hazard Class: 3
UN/NA: UN1219
Packing Group: II
Information reported for product/size: 200L

International (Water, I.M.O.)

Proper Shipping Name: ISOPROPANOL
Hazard Class: 3
UN/NA: UN1219
Packing Group: II
Information reported for product/size: 200L

15. Regulatory Information

--------\Chemical Inventory Status - Part 1\----------

Ingredient	TSCA	EC	Japan	Australia
Isopropyl Alcohol (67-63-0)	Yes	Yes	Yes	Yes
Water (7732-18-5)	Yes	Yes	Yes	Yes

--------\Chemical Inventory Status - Part 2\----------

Ingredient	Korea	--Canada-- DSL	NDSL	Phil.
Isopropyl Alcohol (67-63-0)	Yes	Yes	No	Yes
Water (7732-18-5)	Yes	Yes	No	Yes

--------\Federal, State & International Regulations - Part 1\----------

Ingredient	-SARA 302- RQ	TPQ	------SARA 313------ List	Chemical Catg.
Isopropyl Alcohol (67-63-0)	No	No	Yes	No
Water (7732-18-5)	No	No	No	No

--------\Federal, State & International Regulations - Part 2\----------

Ingredient	CERCLA	-RCRA- 261.33	-TSCA- 8(d)
Isopropyl Alcohol (67-63-0)	No	No	No
Water (7732-18-5)	No	No	No

Chemical Weapons Convention: No TSCA 12(b): No CDTA: Yes
SARA 311/312: Acute: Yes Chronic: Yes Fire: Yes Pressure: No
Reactivity: No (Mixture / Liquid)

Australian Hazchem Code: 2[S]2
Poison Schedule: None allocated.
WHMIS:
This MSDS has been prepared according to the hazard criteria of the Controlled Products Regulations (CPR) and the MSDS contains all of the information required by the CPR.

---

16. Other Information

NFPA Ratings: Health: **1** Flammability: **3** Reactivity: **0**
Label Hazard Warning:
WARNING! FLAMMABLE LIQUID AND VAPOR. HARMFUL IF SWALLOWED OR INHALED. CAUSES IRRITATION TO EYES AND RESPIRATORY TRACT. AFFECTS CENTRAL NERVOUS SYSTEM. MAY BE HARMFUL IF ABSORBED THROUGH SKIN. MAY CAUSE IRRITATION TO SKIN.
Label Precautions:
Keep away from heat, sparks and flame.
Keep container closed.
Use only with adequate ventilation.
Wash thoroughly after handling.
Avoid breathing vapor or mist.
Avoid contact with eyes, skin and clothing.
Label First Aid:
If swallowed, give large amounts of water to drink. Never give anything by mouth to an unconscious person. If inhaled, remove to fresh air. If not breathing, give artificial respiration. If breathing is difficult, give oxygen. In case of contact, immediately flush eyes or skin with plenty of water for at least 15 minutes. Remove contaminated clothing and shoes. Wash clothing before reuse. In all cases, get medical attention.
Product Use:
Laboratory Reagent.
Revision Information:
No Changes.
Disclaimer:
****
Mallinckrodt Baker, Inc. provides the information contained herein in good faith but makes no representation as to its comprehensiveness or accuracy. This document is intended only as a guide to the appropriate precautionary handling of the material by a properly trained person using this product. Individuals receiving the information must exercise their independent judgment in determining its appropriateness for a particular purpose. MALLINCKRODT BAKER, INC. MAKES NO REPRESENTATIONS OR WARRANTIES, EITHER EXPRESS OR IMPLIED, INCLUDING WITHOUT LIMITATION ANY WARRANTIES OF MERCHANTABILITY, FITNESS FOR A PARTICULAR PURPOSE WITH RESPECT TO THE INFORMATION SET FORTH HEREIN OR THE PRODUCT TO WHICH THE INFORMATION REFERS. ACCORDINGLY, MALLINCKRODT BAKER, INC. WILL NOT BE RESPONSIBLE FOR DAMAGES RESULTING FROM USE OF OR RELIANCE UPON THIS INFORMATION.
****
Prepared by: Environmental Health & Safety
Phone Number: (314) 654-1600 (U.S.A.)

MSDS Number: **M2015** * * * * * *Effective Date:* ***05/04/07*** * * * * * *Supercedes:* ***08/10/04***

MSDS **Material Safety Data Sheet**

From: **Mallinckrodt Baker, Inc.**
222 Red School Lane
Phillipsburg, NJ 08865

Mallinckrodt CHEMICALS J.T.Baker

24 Hour Emergency Telephone: 908-859-2151
CHEMTREC: 1-800-424-9300

National Response in Canada
CANUTEC: 613-996-6666

Outside U.S. and Canada
Chemtrec: 703-527-3887

NOTE: CHEMTREC, CANUTEC and National Response Center emergency numbers to be used only in the event of chemical emergencies involving a spill, leak, fire, exposure or accident involving chemicals.

All non-emergency questions should be directed to Customer Service (1-800-582-2537) for assistance.

METHYL ALCOHOL

1. Product Identification

Synonyms: Wood alcohol; methanol; carbinol
CAS No.: 67-56-1
Molecular Weight: 32.04
Chemical Formula: CH3OH
Product Codes:
J.T. Baker: 5370, 5595, 5794, 5811, 5842, 5869, 9049, 9063, 9065, 9066, 9067, 9069, 9070, 9071, 9073, 9076, 9077, 9091, 9093, 9096, 9097, 9098, 9263, 9822, 9830, V654, XL-319
Mallinckrodt: 3004, 3006, 3016, 3017, 3018, 3024, 3041, 3701, 4295, 5160, 8814, H080, H488, H603, H985, V079, V571

2. Composition/Information on Ingredients

Ingredient	CAS No	Percent	Hazardous
Methyl Alcohol	67-56-1	100%	Yes

3. Hazards Identification

Emergency Overview

POISON! DANGER! VAPOR HARMFUL. MAY BE FATAL OR CAUSE BLINDNESS IF SWALLOWED. HARMFUL IF INHALED OR ABSORBED THROUGH SKIN. CANNOT BE MADE NONPOISONOUS. FLAMMABLE LIQUID AND VAPOR. CAUSES IRRITATION TO SKIN, EYES AND RESPIRATORY TRACT. AFFECTS CENTRAL NERVOUS SYSTEM AND LIVER.

SAF-T-DATA(tm) Ratings (Provided here for your convenience)

Health Rating: 3 - Severe (Poison)
Flammability Rating: 3 - Severe (Flammable)
Reactivity Rating: 1 - Slight
Contact Rating: 3 - Severe (Life)
Lab Protective Equip: GOGGLES & SHIELD; LAB COAT & APRON; VENT HOOD; PROPER GLOVES; CLASS B EXTINGUISHER
Storage Color Code: Red (Flammable)

Potential Health Effects

Inhalation:
A slight irritant to the mucous membranes. Toxic effects exerted upon nervous system, particularly the optic nerve. Once absorbed into the body, it is very slowly eliminated. Symptoms of overexposure may include headache, drowsiness, nausea, vomiting, blurred vision, blindness, coma, and death. A person may get better but then worse again up to 30 hours later.
Ingestion:
Toxic. Symptoms parallel inhalation. Can intoxicate and cause blindness. Usual fatal dose: 100-125 milliliters.
Skin Contact:
Methyl alcohol is a defatting agent and may cause skin to become dry and cracked. Skin absorption can occur; symptoms may parallel inhalation exposure.
Eye Contact:
Irritant. Continued exposure may cause eye lesions.
Chronic Exposure:
Marked impairment of vision has been reported. Repeated or prolonged exposure may cause skin irritation.
Aggravation of Pre-existing Conditions:
Persons with pre-existing skin disorders or eye problems or impaired liver or kidney function may be more susceptible to the effects of the substance.

4. First Aid Measures

Inhalation:
Remove to fresh air. If not breathing, give artificial respiration. If breathing is difficult, give oxygen. Get medical attention immediately.
Ingestion:
Induce vomiting immediately as directed by medical personnel. Never give anything by mouth to an unconscious person. Get medical attention immediately.
Skin Contact:
Immediately flush skin with plenty of water for at least 15 minutes while removing contaminated clothing and shoes. Get medical attention. Wash clothing before reuse. Thoroughly clean shoes before reuse.
Eye Contact:
Immediately flush eyes with plenty of water for at least 15 minutes, lifting lower and upper eyelids occasionally. Get medical attention immediately.

---

5. Fire Fighting Measures

Fire:
Flash point: 12C (54F) CC
Autoignition temperature: 464C (867F)
Flammable limits in air % by volume:
lel: 6.0; uel: 36
Flammable Liquid and Vapor!
Explosion:
Above flash point, vapor-air mixtures are explosive within flammable limits noted above. Moderate explosion hazard and dangerous fire hazard when exposed to heat, sparks or flames. Sensitive to static discharge.
Fire Extinguishing Media:
Use alcohol foam, dry chemical or carbon dioxide. (Water may be ineffective.)
Special Information:
In the event of a fire, wear full protective clothing and NIOSH-approved self-contained breathing apparatus with full facepiece operated in the pressure demand or other positive pressure mode. Use water spray to blanket fire, cool fire exposed containers, and to flush non-ignited spills or vapors away from fire. Vapors can flow along surfaces to distant ignition source and flash back.

---

6. Accidental Release Measures

Ventilate area of leak or spill. Remove all sources of ignition. Wear appropriate personal protective equipment as specified in Section 8. Isolate hazard area. Keep unnecessary and unprotected personnel from entering. Contain and recover liquid when possible. Use non-sparking tools and equipment. Collect liquid in an appropriate container or absorb with an inert material (e. g., vermiculite, dry sand, earth), and place in a chemical waste container. Do not use combustible materials, such as saw dust. Do not flush to sewer! If a leak or spill has not ignited, use water spray to disperse the vapors, to protect personnel attempting to stop leak, and to flush spills away from exposures. US Regulations (CERCLA) require reporting spills and releases to soil, water and air in excess of reportable quantities. The toll free number for the US Coast Guard National Response Center is (800) 424-8802.

J. T. Baker SOLUSORB® solvent adsorbent is recommended for spills of this product.

---

7. Handling and Storage

Protect against physical damage. Store in a cool, dry well-ventilated location, away from any area where the fire hazard may be acute. Outside or detached storage is preferred. Separate from incompatibles. Containers should be bonded and grounded for transfers to avoid static sparks. Storage and use areas should be No Smoking areas. Use non-sparking type tools and equipment, including explosion proof ventilation. Containers of this material may be hazardous when empty since they retain product residues (vapors, liquid); observe all warnings and precautions listed for the product. Do Not attempt to clean empty containers since residue is difficult to remove. Do not pressurize, cut, weld, braze, solder, drill, grind or expose such containers to heat, sparks, flame, static electricity or other sources of ignition: they may explode and cause injury or death.

---

8. Exposure Controls/Personal Protection

Airborne Exposure Limits:
For Methyl Alcohol:
- OSHA Permissible Exposure Limit (PEL):
200 ppm (TWA)
- ACGIH Threshold Limit Value (TLV):
200 ppm (TWA), 250 ppm (STEL) skin
Ventilation System:
A system of local and/or general exhaust is recommended to keep employee exposures below the Airborne Exposure Limits. Local exhaust ventilation is generally preferred because it can control the emissions of the contaminant at its source, preventing dispersion of it into the general work area. Please refer to the ACGIH document, *Industrial Ventilation, A Manual of Recommended Practices*, most recent edition, for details. Use explosion-proof equipment.
Personal Respirators (NIOSH Approved):
If the exposure limit is exceeded and engineering controls are not feasible, wear a supplied air, full-facepiece respirator, airlined hood, or full-facepiece self-contained breathing apparatus. Breathing air quality must meet the requirements of the OSHA respiratory protection standard (29CFR1910.134). This substance has poor warning properties.
Skin Protection:
Rubber or neoprene gloves and additional protection including impervious boots, apron, or coveralls, as needed in areas of unusual exposure.
Eye Protection:
Use chemical safety goggles. Maintain eye wash fountain and quick-drench facilities in work area.

---

9. Physical and Chemical Properties

Appearance:
Clear, colorless liquid.
Odor:
Characteristic odor.
Solubility:
Miscible in water.
Specific Gravity:
0.8
pH:
No information found.
% Volatiles by volume @ 21C (70F):
100
Boiling Point:
64.5C (147F)
Melting Point:
-98C (-144F)
Vapor Density (Air=1):
1.1
Vapor Pressure (mm Hg):
97 @ 20C (68F)
Evaporation Rate (BuAc=1):
5.9

---

10. Stability and Reactivity

Stability:
Stable under ordinary conditions of use and storage.
Hazardous Decomposition Products:
May form carbon dioxide, carbon monoxide, and formaldehyde when heated to decomposition.
Hazardous Polymerization:
Will not occur.
Incompatibilities:
Strong oxidizing agents such as nitrates, perchlorates or sulfuric acid. Will attack some forms of plastics, rubber, and coatings. May react with metallic aluminum and generate hydrogen gas.
Conditions to Avoid:
Heat, flames, ignition sources and incompatibles.

---

11. Toxicological Information

Methyl Alcohol (Methanol) Oral rat LD50: 5628 mg/kg; inhalation rat LC50: 64000 ppm/4H; skin rabbit LD50: 15800 mg/kg; Irritation data-standard Draize test: skin, rabbit: 20mg/24 hr. Moderate; eye, rabbit: 100 mg/24 hr. Moderate. Investigated as a mutagen, reproductive effector.

--------\Cancer Lists\----------

Ingredient	---NTP Carcinogen--- Known	Anticipated	IARC Category
Methyl Alcohol (67-56-1)	No	No	None

---

12. Ecological Information

Environmental Fate:
When released into the soil, this material is expected to readily biodegrade. When released into the soil, this material is expected to leach into groundwater. When released into the soil, this material is expected to quickly evaporate. When released into the water, this material is expected to have a half-life between 1 and 10 days. When released into water, this material is expected to readily biodegrade. When released into the air, this material is expected to exist in the aerosol phase with a short half-life. When released into the air, this material is expected to be readily degraded by reaction with photochemically produced hydroxyl radicals. When released into air, this material is expected to have a half-life between 10 and 30 days. When released into the air, this material is expected to be readily removed from the atmosphere by wet deposition.
Environmental Toxicity:
This material is expected to be slightly toxic to aquatic life.

---

13. Disposal Considerations

Whatever cannot be saved for recovery or recycling should be handled as hazardous waste and sent to a RCRA approved incinerator or disposed in a RCRA approved waste facility. Processing, use or contamination of this product may change the waste management options. State and local disposal regulations may differ from federal disposal regulations. Dispose of container and unused contents in accordance with federal, state and local requirements.

---

14. Transport Information

Domestic (Land, D.O.T.)

Proper Shipping Name: METHANOL
Hazard Class: 3
UN/NA: UN1230
Packing Group: II
Information reported for product/size: 358LB

International (Water, I.M.O.)

Proper Shipping Name: METHANOL
Hazard Class: 3, 6.1
UN/NA: UN1230
Packing Group: II
Information reported for product/size: 358LB

15. Regulatory Information

--------\Chemical Inventory Status - Part 1\--------

Ingredient	TSCA	EC	Japan	Australia
Methyl Alcohol (67-56-1)	Yes	Yes	Yes	Yes

--------\Chemical Inventory Status - Part 2\--------

Ingredient	Korea	--Canada-- DSL	NDSL	Phil.
Methyl Alcohol (67-56-1)	Yes	Yes	No	Yes

--------\Federal, State & International Regulations - Part 1\--------

Ingredient	-SARA 302- RQ	TPQ	------SARA 313------ List	Chemical Catg.
Methyl Alcohol (67-56-1)	No	No	Yes	No

--------\Federal, State & International Regulations - Part 2\--------

Ingredient	CERCLA	-RCRA- 261.33	-TSCA- 8(d)
Methyl Alcohol (67-56-1)	5000	U154	No

Chemical Weapons Convention: No TSCA 12(b): No CDTA: No
SARA 311/312: Acute: Yes Chronic: Yes Fire: Yes Pressure: No
Reactivity: No (Pure / Liquid)

Australian Hazchem Code: 2PE
Poison Schedule: S6
WHMIS:
This MSDS has been prepared according to the hazard criteria of the Controlled Products Regulations (CPR) and the MSDS contains all of the information required by the CPR.

16. Other Information

NFPA Ratings: Health: **1** Flammability: **3** Reactivity: **0**
Label Hazard Warning:
POISON! DANGER! VAPOR HARMFUL. MAY BE FATAL OR CAUSE BLINDNESS IF SWALLOWED. HARMFUL IF INHALED OR ABSORBED THROUGH SKIN. CANNOT BE MADE NONPOISONOUS. FLAMMABLE LIQUID AND VAPOR. CAUSES IRRITATION TO SKIN, EYES AND RESPIRATORY TRACT. AFFECTS CENTRAL NERVOUS SYSTEM AND LIVER.
Label Precautions:
Avoid breathing vapor.
Avoid contact with eyes, skin and clothing.
Wash thoroughly after handling.
Keep container closed.
Use only with adequate ventilation.
Keep away from heat, sparks and flame.
Label First Aid:
If inhaled, remove to fresh air. If not breathing, give artificial respiration. If breathing is difficult, give oxygen. If swallowed, induce vomiting immediately as directed by medical personnel. Never give anything by mouth to an unconscious person. In case of contact, immediately flush eyes or skin with plenty of water for at least 15 minutes while removing contaminated clothing and shoes. Wash clothing before reuse. In all cases get medical attention immediately.
Product Use:
Laboratory Reagent.
Revision Information:
No Changes.
Disclaimer:
****
Mallinckrodt Baker, Inc. provides the information contained herein in good faith but makes no representation as to its comprehensiveness or accuracy. This document is intended only as a guide to the appropriate precautionary handling of the material by a properly trained person using this product. Individuals receiving the information must exercise their independent judgment in determining its appropriateness for a particular purpose. MALLINCKRODT BAKER, INC. MAKES NO REPRESENTATIONS OR WARRANTIES, EITHER EXPRESS OR IMPLIED, INCLUDING WITHOUT LIMITATION ANY WARRANTIES OF MERCHANTABILITY, FITNESS FOR A PARTICULAR PURPOSE WITH RESPECT TO THE INFORMATION SET FORTH HEREIN OR THE PRODUCT TO WHICH THE INFORMATION REFERS. ACCORDINGLY, MALLINCKRODT BAKER, INC. WILL NOT BE RESPONSIBLE FOR DAMAGES RESULTING FROM USE OF OR RELIANCE UPON THIS INFORMATION.

****

Prepared by: Environmental Health & Safety
Phone Number: (314) 654-1600 (U.S.A.)

MSDS Number: **N3660** * * * * * *Effective Date:* ***02/15/08*** * * * * * *Supercedes:* ***05/06/05***

MSDS Material Safety Data Sheet

From: **Mallinckrodt Baker, Inc.**
222 Red School Lane
Phillipsburg, NJ 08865

Mallinckrodt CHEMICALS J.T.Baker

24 Hour Emergency Telephone: 908-859-2151
CHEMTREC: 1-800-424-9300

National Response in Canada
CANUTEC: 613-996-6666

Outside U.S. and Canada
Chemtrec: 703-527-3887

NOTE: CHEMTREC, CANUTEC and National Response Center emergency numbers to be used only in the event of chemical emergencies involving a spill, leak, fire, exposure or accident involving chemicals.

All non-emergency questions should be directed to Customer Service (1-800-582-2537) for assistance.

NITRIC ACID, 50-70%

1. Product Identification

Synonyms: Aqua Fortis; Azotic Acid; Nitric Acid 50%; Nitric Acid 65%; nitric acid 69-70%
CAS No.: 7697-37-2
Molecular Weight: 63.01
Chemical Formula: HNO3
Product Codes:
J.T. Baker: 5371, 5796, 5801, 5826, 5856, 5876, 5896, 9597, 9598, 9600, 9601, 9602, 9603, 9604, 9606, 9607, 9608, 9610, 9616, 9617, 9670
Mallinckrodt: 1409, 2704, 2705, 2716, 6623, H862, H988, H993, H998, V077, V650

2. Composition/Information on Ingredients

Ingredient	CAS No	Percent	Hazardous
Nitric Acid	7697-37-2	50 - 70%	Yes
Water	7732-18-5	30 - 50%	No

3. Hazards Identification

Emergency Overview

POISON! DANGER! STRONG OXIDIZER. CONTACT WITH OTHER MATERIAL MAY CAUSE FIRE. CORROSIVE. LIQUID AND MIST CAUSE SEVERE BURNS TO ALL BODY TISSUE. MAY BE FATAL IF SWALLOWED OR INHALED. INHALATION MAY CAUSE LUNG AND TOOTH DAMAGE.

SAF-T-DATA(tm) Ratings (Provided here for your convenience)

Health Rating: 4 - Extreme (Poison)
Flammability Rating: 0 - None
Reactivity Rating: 3 - Severe (Oxidizer)
Contact Rating: 4 - Extreme (Corrosive)
Lab Protective Equip: GOGGLES & SHIELD; LAB COAT & APRON; VENT HOOD; PROPER GLOVES
Storage Color Code: White (Corrosive)

Potential Health Effects

Nitric acid is extremely hazardous; it is corrosive, reactive, an oxidizer, and a poison.

Inhalation:
Corrosive! Inhalation of vapors can cause breathing difficulties and lead to pneumonia and pulmonary edema, which may be fatal. Other symptoms may include coughing, choking, and irritation of the nose, throat, and respiratory tract.
Ingestion:
Corrosive! Swallowing nitric acid can cause immediate pain and burns of the mouth, throat, esophagus and gastrointestinal tract.
Skin Contact:
Corrosive! Can cause redness, pain, and severe skin burns. Concentrated solutions cause deep ulcers and stain skin a yellow or yellow-brown color.
Eye Contact:
Corrosive! Vapors are irritating and may cause damage to the eyes. Contact may cause severe burns and permanent eye damage.
Chronic Exposure:
Long-term exposure to concentrated vapors may cause erosion of teeth and lung damage. Long-term exposures seldom occur due to the corrosive properties of the acid.
Aggravation of Pre-existing Conditions:
Persons with pre-existing skin disorders, eye disease, or cardiopulmonary diseases may be more susceptible to the effects of this substance.

4. First Aid Measures

Immediate first aid treatment reduces the health effects of this substance.
Inhalation:
Remove to fresh air. If not breathing, give artificial respiration. If breathing is difficult, give oxygen. Call a physician.
Ingestion:
DO NOT INDUCE VOMITING! Give large quantities of water or milk if available. Never give anything by mouth to an unconscious person. Get medical attention immediately.
Skin Contact:
In case of contact, immediately flush skin with plenty of water for at least 15 minutes while removing contaminated clothing and shoes. Wash clothing before reuse. Thoroughly clean shoes before reuse. Get medical attention immediately.
Eye Contact:
Immediately flush eyes with plenty of water for at least 15 minutes, lifting lower and upper eyelids occasionally. Get medical attention immediately.

5. Fire Fighting Measures

Fire:
Not combustible, but substance is a strong oxidizer and its heat of reaction with reducing agents or combustibles may cause ignition. Can react with metals to release flammable hydrogen gas.
Explosion:
Reacts explosively with combustible organic or readily oxidizable materials such as: alcohols, turpentine, charcoal, organic refuse, metal powder, hydrogen sulfide, etc. Reacts with most metals to release hydrogen gas which can form explosive mixtures with air.
Fire Extinguishing Media:
Water spray may be used to keep fire exposed containers cool. Do not get water inside container.
Special Information:
Increases the flammability of combustible, organic and readily oxidizable materials. In the event of a fire, wear full protective clothing and NIOSH-approved self-contained breathing apparatus with full facepiece operated in the pressure demand or other positive pressure mode.

6. Accidental Release Measures

Ventilate area of leak or spill. Wear appropriate personal protective equipment as specified in Section 8. Isolate hazard area. Keep unnecessary and unprotected personnel from entering. Contain and recover liquid when possible. Neutralize with alkaline material (soda ash, lime), then absorb with an inert material (e. g., vermiculite, dry sand, earth), and place in a chemical waste container. Do not use combustible materials, such as saw dust. Do not flush to sewer! US Regulations (CERCLA) require reporting spills and releases to soil, water and air in excess of reportable quantities. The toll free number for the US Coast Guard National Response Center is (800) 424-8802.

J. T. Baker NEUTRASORB® acid neutralizers are recommended for spills of this product.

7. Handling and Storage

Store in a cool, dry, ventilated storage area with acid resistant floors and good drainage. Protect from physical damage. Keep out of direct sunlight and away from heat, water, and incompatible materials. Do not wash out container and use it for other purposes. When diluting, the acid should always be added slowly to water and in small amounts. Never use hot water and never add water to the acid. Water added to acid can cause uncontrolled boiling and splashing. Containers of this material may be hazardous when empty since they retain product residues (vapors, liquid); observe all warnings and precautions listed for the product.

8. Exposure Controls/Personal Protection

Airborne Exposure Limits:
-OSHA Permissible Exposure Limit (PEL):
2 ppm (TWA), 4 ppm (STEL)
-ACGIH Threshold Limit Value (TLV):
2 ppm (TWA); 4 ppm (STEL)

Ventilation System:
A system of local and/or general exhaust is recommended to keep employee exposures below the Airborne Exposure Limits. Local exhaust ventilation is generally preferred because it can control the emissions of the contaminant at its source, preventing dispersion of it into the general work area. Please refer to the ACGIH document, *Industrial Ventilation, A Manual of Recommended Practices*, most recent edition, for details.
Personal Respirators (NIOSH Approved):
If the exposure limit is exceeded, wear a supplied air, full-facepiece respirator, airlined hood, or full-facepiece self-contained breathing apparatus. Nitric acid is an oxidizer and should not come in contact with cartridges and canisters that contain oxidizable materials, such as activated charcoal. Canister-type respirators using sorbents are ineffective.
Skin Protection:
Wear impervious protective clothing, including boots, gloves, lab coat, apron or coveralls, as appropriate, to prevent skin contact.
Eye Protection:
Use chemical safety goggles and/or a full face shield where splashing is possible. Maintain eye wash fountain and quick-drench facilities in work area.

9. Physical and Chemical Properties

Appearance:
Colorless to yellowish liquid.
Odor:
Suffocating, acrid.
Solubility:
Infinitely soluble.
Specific Gravity:
1.41
pH:
1.0 (0.1M solution)
% Volatiles by volume @ 21C (70F):

100 (as water and acid)
Boiling Point:
122C (252F)
Melting Point:
-42C (-44F)
Vapor Density (Air=1):
2-3
Vapor Pressure (mm Hg):
48 @ 20C (68F)
Evaporation Rate (BuAc=1):
No information found.

10. Stability and Reactivity

Stability:
Stable under ordinary conditions of use and storage. Containers may burst when heated.
Hazardous Decomposition Products:
When heated to decomposition, emits toxic nitrogen oxides fumes and hydrogen nitrate. Will react with water or steam to produce heat and toxic and corrosive fumes.
Hazardous Polymerization:
Will not occur.
Incompatibilities:
A dangerously powerful oxidizing agent, concentrated nitric acid is incompatible with most substances, especially strong bases, metallic powders, carbides, hydrogen sulfide, turpentine, and combustible organics.
Conditions to Avoid:
Light and heat.

11. Toxicological Information

Nitric acid: Inhalation rat LC50: 244 ppm (NO2)/30M; Investigated as a mutagen, reproductive effector. Oral (human) LDLo: 430 mg/kg.

--------\Cancer Lists\----------

Ingredient	---NTP Carcinogen--- Known	Anticipated	IARC Category
Nitric Acid (7697-37-2)	No	No	None
Water (7732-18-5)	No	No	None

12. Ecological Information

Environmental Fate:
No information found.
Environmental Toxicity:
No information found.

13. Disposal Considerations

Whatever cannot be saved for recovery or recycling should be managed in an appropriate and approved waste facility. Although not a listed RCRA hazardous waste, this material may exhibit one or more characteristics of a hazardous waste and require appropriate analysis to determine specific disposal requirements. Processing, use or contamination of this product may change the waste management options. State and local disposal regulations may differ from federal disposal regulations. Dispose of container and unused contents in accordance with federal, state and local requirements.

14. Transport Information

Domestic (Land, D.O.T.)

Proper Shipping Name: NITRIC ACID
Hazard Class: 8
UN/NA: UN2031
Packing Group: II
Information reported for product/size: 6.5GL

International (Water, I.M.O.)

Proper Shipping Name: NITRIC ACID (WITH NOT MORE THAN 70% NITRIC ACID)
Hazard Class: 8
UN/NA: UN2031
Packing Group: II
Information reported for product/size: 6.5GL

15. Regulatory Information

--------\Chemical Inventory Status - Part 1\----------

Ingredient	TSCA	EC	Japan	Australia
Nitric Acid (7697-37-2)	Yes	Yes	Yes	Yes

```
Water (7732-18-5)                                Yes  Yes   Yes      Yes

--------\Chemical Inventory Status - Part 2\--------------------------------
                                                      --Canada--
Ingredient                                       Korea  DSL   NDSL  Phil.
---------------------------------------------    -----  ---   ----  -----
Nitric Acid (7697-37-2)                           Yes   Yes   No     Yes
Water (7732-18-5)                                 Yes   Yes   No     Yes

--------\Federal, State & International Regulations - Part 1\----------------
                                          -SARA 302-    ------SARA 313------
Ingredient                                RQ    TPQ     List  Chemical Catg.
---------------------------------------   ---   -----   ----  --------------
Nitric Acid (7697-37-2)                   1000  1000    Yes        No
Water (7732-18-5)                         No    No      No         No

--------\Federal, State & International Regulations - Part 2\----------------
                                                -RCRA-    -TSCA-
Ingredient                                CERCLA     261.33     8(d)
---------------------------------------   ------     ------    ------
Nitric Acid (7697-37-2)                   1000       No         No
Water (7732-18-5)                         No         No         No


Chemical Weapons Convention:  No     TSCA 12(b):  No     CDTA:  No
SARA 311/312:  Acute: Yes      Chronic: Yes  Fire: Yes Pressure: No
Reactivity: No          (Mixture / Liquid)
```

Australian Hazchem Code: 2PE
Poison Schedule: S6
WHMIS:
This MSDS has been prepared according to the hazard criteria of the Controlled Products Regulations (CPR) and the MSDS contains all of the information required by the CPR.

---

16. Other Information

NFPA Ratings: Health: **3** Flammability: **0** Reactivity: **0** Other: **Oxidizer**
Label Hazard Warning:
POISON! DANGER! STRONG OXIDIZER. CONTACT WITH OTHER MATERIAL MAY CAUSE FIRE. CORROSIVE. LIQUID AND MIST CAUSE SEVERE BURNS TO ALL BODY TISSUE. MAY BE FATAL IF SWALLOWED OR INHALED. INHALATION MAY CAUSE LUNG AND TOOTH DAMAGE.
Label Precautions:
Do not get in eyes, on skin, or on clothing.
Do not breathe vapor or mist.
Use only with adequate ventilation.
Wash thoroughly after handling.
Keep from contact with clothing and other combustible materials.
Do not store near combustible materials.
Store in a tightly closed container.
Remove and wash contaminated clothing promptly.
Label First Aid:
In case of contact, immediately flush eyes or skin with plenty of water for at least 15 minutes while removing contaminated clothing and shoes. Wash clothing before reuse. If swallowed, DO NOT INDUCE VOMITING. Give large quantities of water. Never give anything by mouth to an unconscious person. If inhaled, remove to fresh air. If not breathing, give artificial respiration. If breathing is difficult, give oxygen. In all cases get medical attention immediately.
Product Use:
Laboratory Reagent.
Revision Information:
No Changes.
Disclaimer:
****
Mallinckrodt Baker, Inc. provides the information contained herein in good faith but makes no representation as to its comprehensiveness or accuracy. This document is intended only as a guide to the appropriate precautionary handling of the material by a properly trained person using this product. Individuals receiving the information must exercise their independent judgment in determining its appropriateness for a particular purpose. MALLINCKRODT BAKER, INC. MAKES NO REPRESENTATIONS OR WARRANTIES, EITHER EXPRESS OR IMPLIED, INCLUDING WITHOUT LIMITATION ANY WARRANTIES OF MERCHANTABILITY, FITNESS FOR A PARTICULAR PURPOSE WITH RESPECT TO THE INFORMATION SET FORTH HEREIN OR THE PRODUCT TO WHICH THE INFORMATION REFERS. ACCORDINGLY, MALLINCKRODT BAKER, INC. WILL NOT BE RESPONSIBLE FOR DAMAGES RESULTING FROM USE OF OR RELIANCE UPON THIS INFORMATION.
****
Prepared by: Environmental Health & Safety
Phone Number: (314) 654-1600 (U.S.A.)

MSDS Number: **S8234** * * * * * *Effective Date:* ***11/09/07*** * * * * * *Supercedes:* ***02/04/05***

MSDS Material Safety Data Sheet

From: Mallinckrodt Baker, Inc.
222 Red School Lane
Phillipsburg, NJ 08865

Mallinckrodt CHEMICALS J.T.Baker

24 Hour Emergency Telephone: 908-859-2151
CHEMTREC: 1-800-424-9300

National Response in Canada
CANUTEC: 613-996-6666

Outside U.S. and Canada
Chemtrec: 703-527-3887

NOTE: CHEMTREC, CANUTEC and National Response Center emergency numbers to be used only in the event of chemical emergencies involving a spill, leak, fire, exposure or accident involving chemicals.

All non-emergency questions should be directed to Customer Service (1-800-582-2537) for assistance.

SULFURIC ACID, 52 - 100 %

1. Product Identification

Synonyms: Oil of vitriol; Babcock acid; sulphuric acid
CAS No.: 7664-93-9
Molecular Weight: 98.08
Chemical Formula: H2SO4 in H2O
Product Codes:
J.T. Baker: 5030, 5137, 5374, 5802, 5815, 5858, 5859, 5868, 5889, 5897, 5961, 5971, 5997, 6163, 6902, 9671, 9673, 9674, 9675, 9676, 9679, 9680, 9681, 9682, 9684, 9687, 9690, 9691, 9693, 9694
Mallinckrodt: 21201, 2468, 2876, 2878, 2879, 2900, 2904, 3780, 4222, 5524, 5557, H644, H850, H976, H996, V651, XL003

2. Composition/Information on Ingredients

Ingredient	CAS No	Percent	Hazardous
Sulfuric Acid	7664-93-9	52 - 100%	Yes
Water	7732-18-5	0 - 48%	No

3. Hazards Identification

Emergency Overview

POISON! DANGER! CORROSIVE. LIQUID AND MIST CAUSE SEVERE BURNS TO ALL BODY TISSUE. MAY BE FATAL IF SWALLOWED OR CONTACTED WITH SKIN. HARMFUL IF INHALED. AFFECTS TEETH. WATER REACTIVE. CANCER HAZARD. STRONG INORGANIC ACID MISTS CONTAINING SULFURIC ACID CAN CAUSE CANCER. Risk of cancer depends on duration and level of exposure.

SAF-T-DATA(tm) Ratings (Provided here for your convenience)

Health Rating: 4 - Extreme (Poison)
Flammability Rating: 0 - None
Reactivity Rating: 2 - Moderate
Contact Rating: 4 - Extreme (Corrosive)
Lab Protective Equip: GOGGLES & SHIELD; LAB COAT & APRON; VENT HOOD; PROPER GLOVES
Storage Color Code: White (Corrosive)

Potential Health Effects

Inhalation:
Inhalation produces damaging effects on the mucous membranes and upper respiratory tract. Symptoms may include irritation of the nose and throat, and labored breathing. May cause lung edema, a medical emergency.
Ingestion:
Corrosive. Swallowing can cause severe burns of the mouth, throat, and stomach, leading to death. Can cause sore throat, vomiting, diarrhea. Circulatory collapse with clammy skin, weak and rapid pulse, shallow respirations, and scanty urine may follow ingestion or skin contact. Circulatory shock is often the immediate cause of death.
Skin Contact:
Corrosive. Symptoms of redness, pain, and severe burn can occur. Circulatory collapse with clammy skin, weak and rapid pulse, shallow respirations, and scanty urine may follow skin contact or ingestion. Circulatory shock is often the immediate cause of death.
Eye Contact:
Corrosive. Contact can cause blurred vision, redness, pain and severe tissue burns. Can cause blindness.
Chronic Exposure:
Long-term exposure to mist or vapors may cause damage to teeth. Chronic exposure to mists containing sulfuric acid is a cancer hazard.
Aggravation of Pre-existing Conditions:
Persons with pre-existing skin disorders or eye problems or impaired respiratory function may be more susceptible to the effects of the substance.

4. First Aid Measures

Inhalation:
Remove to fresh air. If not breathing, give artificial respiration. If breathing is difficult, give oxygen. Call a physician immediately.
Ingestion:
DO NOT INDUCE VOMITING. Give large quantities of water. Never give anything by mouth to an unconscious person. Call a physician immediately.
Skin Contact:
In case of contact, immediately flush skin with plenty of water for at least 15 minutes while removing contaminated clothing and shoes. Wash clothing before reuse. Excess acid on skin can be neutralized with a 2% solution of bicarbonate of soda. Call a physician immediately.
Eye Contact:
Immediately flush eyes with gentle but large stream of water for at least 15 minutes, lifting lower and upper eyelids occasionally. Call a physician immediately.

---

5. Fire Fighting Measures

Fire:
Concentrated material is a strong dehydrating agent. Reacts with organic materials and may cause ignition of finely divided materials on contact.
Explosion:
Contact with most metals causes formation of flammable and explosive hydrogen gas.
Fire Extinguishing Media:
Dry chemical, foam or carbon dioxide. Do not use water on material. However, water spray may be used to keep fire exposed containers cool.
Special Information:
In the event of a fire, wear full protective clothing and NIOSH-approved self-contained breathing apparatus with full facepiece operated in the pressure demand or other positive pressure mode. Structural firefighter's protective clothing is ineffective for fires involving this material. Stay away from sealed containers.

---

6. Accidental Release Measures

Ventilate area of leak or spill. Wear appropriate personal protective equipment as specified in Section 8. Isolate hazard area. Keep unnecessary and unprotected personnel from entering. Contain and recover liquid when possible. Neutralize with alkaline material (soda ash, lime), then absorb with an inert material (e. g., vermiculite, dry sand, earth), and place in a chemical waste container. Do not use combustible materials, such as saw dust. Do not flush to sewer! US Regulations (CERCLA) require reporting spills and releases to soil, water and air in excess of reportable quantities. The toll free number for the US Coast Guard National Response Center is (800) 424-8802.

J. T. Baker NEUTRASORB® acid neutralizers are recommended for spills of this product.

---

7. Handling and Storage

Store in a cool, dry, ventilated storage area with acid resistant floors and good drainage. Protect from physical damage. Keep out of direct sunlight and away from heat, water, and incompatible materials. Do not wash out container and use it for other purposes. When diluting, always add the acid to water; never add water to the acid. When opening metal containers, use non-sparking tools because of the possibility of hydrogen gas being present. Containers of this material may be hazardous when empty since they retain product residues (vapors, liquid); observe all warnings and precautions listed for the product.

---

8. Exposure Controls/Personal Protection

Airborne Exposure Limits:
For Sulfuric Acid:
- OSHA Permissible Exposure Limit (PEL) -
1 mg/m3 (TWA)
- ACGIH Threshold Limit Value (TLV) -
0.2 mg/m3(T) (TWA) for sulfuric acid - A2 Suspected Human Carcinogen for sulfuric acid contained in strong inorganic mists.
Ventilation System:
A system of local and/or general exhaust is recommended to keep employee exposures below the Airborne Exposure Limits. Local exhaust ventilation is generally preferred because it can control the emissions of the contaminant at its source, preventing dispersion of it into the general work area. Please refer to the ACGIH document, *Industrial Ventilation, A Manual of Recommended Practices*, most recent edition, for details.
Personal Respirators (NIOSH Approved):
If the exposure limit is exceeded and engineering controls are not feasible, a full facepiece respirator with an acid gas cartridge and particulate filter (NIOSH type N100 filter) may be worn up to 50 times the exposure limit, or the maximum use concentration specified by the appropriate regulatory agency or respirator supplier, whichever is lowest. If oil particles (e.g. lubricants, cutting fluids, glycerine, etc.) are present, use a NIOSH type R or P particulate filter. For emergencies or instances where the exposure levels are not known, use a full-facepiece positive-pressure, air-supplied respirator. WARNING: Air purifying respirators do not protect workers in oxygen-deficient atmospheres. Where respirators are required, you must have a written program covering the basic requirements in the OSHA respirator standard. These include training, fit testing, medical approval, cleaning, maintenance, cartridge change schedules, etc. See 29CFR1910.134 for details.
Skin Protection:
Wear impervious protective clothing, including boots, gloves, lab coat, apron or coveralls, as appropriate, to prevent skin contact.
Eye Protection:
Use chemical safety goggles and/or a full face shield where splashing is possible. Maintain eye wash fountain and quick-drench facilities in work area.

---

9. Physical and Chemical Properties

Appearance:
Clear oily liquid.
Odor:
Odorless.
Solubility:
Miscible with water, liberates much heat.
Specific Gravity:
1.84 (98%), 1.40 (50%), 1.07 (10%)

pH:
1 N solution (ca. 5% w/w) = 0.3; 0.1 N solution (ca. 0.5% w/w) = 1.2; 0.01 N solution (ca. 0.05% w/w) = 2.1.
% Volatiles by volume @ 21C (70F):
No information found.
Boiling Point:
ca. 290C (ca. 554F) (decomposes at 340C)
Melting Point:
3C (100%), -32C (93%), -38C (78%), -64C (65%).
Vapor Density (Air=1):
3.4
Vapor Pressure (mm Hg):
1 @ 145.8C (295F)
Evaporation Rate (BuAc=1):
No information found.

10. Stability and Reactivity

Stability:
Stable under ordinary conditions of use and storage. Concentrated solutions react violently with water, spattering and liberating heat.
Hazardous Decomposition Products:
Toxic fumes of oxides of sulfur when heated to decomposition. Will react with water or steam to produce toxic and corrosive fumes. Reacts with carbonates to generate carbon dioxide gas, and with cyanides and sulfides to form poisonous hydrogen cyanide and hydrogen sulfide respectively.
Hazardous Polymerization:
Will not occur.
Incompatibilities:
Water, potassium chlorate, potassium perchlorate, potassium permanganate, sodium, lithium, bases, organic material, halogens, metal acetylides, oxides and hydrides, metals (yields hydrogen gas), strong oxidizing and reducing agents and many other reactive substances.
Conditions to Avoid:
Heat, moisture, incompatibles.

11. Toxicological Information

Toxicological Data:
Oral rat LD50: 2140 mg/kg; inhalation rat LC50: 510 mg/m3/2H; standard Draize, eye rabbit, 250 ug (severe); investigated as a tumorigen, mutagen, reproductive effector.
Carcinogenicity:
Cancer Status: The International Agency for Research on Cancer (IARC) has classified "strong inorganic acid mists containing sulfuric acid" as a known human carcinogen, (IARC category 1). This classification applies only to mists containing sulfuric acid and not to sulfuric acid or sulfuric acid solutions.

--------\Cancer Lists\----------

Ingredient	---NTP Carcinogen--- Known	Anticipated	IARC Category
Sulfuric Acid (7664-93-9)	No	No	None
Water (7732-18-5)	No	No	None

12. Ecological Information

Environmental Fate:
When released into the soil, this material may leach into groundwater. When released into the air, this material may be removed from the atmosphere to a moderate extent by wet deposition. When released into the air, this material may be removed from the atmosphere to a moderate extent by dry deposition.
Environmental Toxicity:
LC50 Flounder 100 to 330 mg/l/48 hr aerated water/Conditions of bioassay not specified; LC50 Shrimp 80 to 90 mg/l/48 hr aerated water /Conditions of bioassay not specified; LC50 Prawn 42.5 ppm/48 hr salt water /Conditions of bioassay not specified.
This material may be toxic to aquatic life.

13. Disposal Considerations

Whatever cannot be saved for recovery or recycling should be handled as hazardous waste and sent to a RCRA approved incinerator or disposed in a RCRA approved waste facility. Processing, use or contamination of this product may change the waste management options. State and local disposal regulations may differ from federal disposal regulations. Dispose of container and unused contents in accordance with federal, state and local requirements.

14. Transport Information

Domestic (Land, D.O.T.)

Proper Shipping Name: SULFURIC ACID (WITH MORE THAN 51% ACID)
Hazard Class: 8
UN/NA: UN1830
Packing Group: II
Information reported for product/size: 440LB

International (Water, I.M.O.)

Proper Shipping Name: SULFURIC ACID (WITH MORE THAN 51% ACID)
Hazard Class: 8
UN/NA: UN1830
Packing Group: II

Information reported for product/size: 440LB

15. Regulatory Information

--------\Chemical Inventory Status - Part 1\--------

Ingredient	TSCA	EC	Japan	Australia
Sulfuric Acid (7664-93-9)	Yes	Yes	Yes	Yes
Water (7732-18-5)	Yes	Yes	Yes	Yes

--------\Chemical Inventory Status - Part 2\--------

Ingredient	Korea	--Canada-- DSL	NDSL	Phil.
Sulfuric Acid (7664-93-9)	Yes	Yes	No	Yes
Water (7732-18-5)	Yes	Yes	No	Yes

--------\Federal, State & International Regulations - Part 1\--------

Ingredient	-SARA 302- RQ	TPQ	------SARA 313------ List	Chemical Catg.
Sulfuric Acid (7664-93-9)	1000	1000	Yes	No
Water (7732-18-5)	No	No	No	No

--------\Federal, State & International Regulations - Part 2\--------

Ingredient	CERCLA	-RCRA- 261.33	-TSCA- 8(d)
Sulfuric Acid (7664-93-9)	1000	No	No
Water (7732-18-5)	No	No	No

Chemical Weapons Convention: No TSCA 12(b): No CDTA: Yes
SARA 311/312: Acute: Yes Chronic: Yes Fire: No Pressure: No
Reactivity: Yes (Pure / Liquid)

Australian Hazchem Code: 2P
Poison Schedule: None allocated.
WHMIS:
This MSDS has been prepared according to the hazard criteria of the Controlled Products Regulations (CPR) and the MSDS contains all of the information required by the CPR.

16. Other Information

NFPA Ratings: Health: **3** Flammability: **0** Reactivity: **2** Other: **Water reactive**
Label Hazard Warning:
POISON! DANGER! CORROSIVE. LIQUID AND MIST CAUSE SEVERE BURNS TO ALL BODY TISSUE. MAY BE FATAL IF SWALLOWED OR CONTACTED WITH SKIN. HARMFUL IF INHALED. AFFECTS TEETH. WATER REACTIVE. CANCER HAZARD. STRONG INORGANIC ACID MISTS CONTAINING SULFURIC ACID CAN CAUSE CANCER. Risk of cancer depends on duration and level of exposure.
Label Precautions:
Do not get in eyes, on skin, or on clothing.
Do not breathe mist.
Keep container closed.
Use only with adequate ventilation.
Wash thoroughly after handling.
Do not contact with water.
Label First Aid:
In all cases call a physician immediately. In case of contact, immediately flush eyes or skin with plenty of water for at least 15 minutes while removing contaminated clothing and shoes. Wash clothing before re-use. Excess acid on skin can be neutralized with a 2% bicarbonate of soda solution. If swallowed, DO NOT INDUCE VOMITING. Give large quantities of water. Never give anything by mouth to an unconscious person. If inhaled, remove to fresh air. If not breathing, give artificial respiration. If breathing is difficult, give oxygen.
Product Use:
Laboratory Reagent.
Revision Information:
No Changes.
Disclaimer:
****
Mallinckrodt Baker, Inc. provides the information contained herein in good faith but makes no representation as to its comprehensiveness or accuracy. This document is intended only as a guide to the appropriate precautionary handling of the material by a properly trained person using this product. Individuals receiving the information must exercise their independent judgment in determining its appropriateness for a particular purpose. MALLINCKRODT BAKER, INC. MAKES NO REPRESENTATIONS OR WARRANTIES, EITHER EXPRESS OR IMPLIED, INCLUDING WITHOUT LIMITATION ANY WARRANTIES OF MERCHANTABILITY, FITNESS FOR A PARTICULAR PURPOSE WITH RESPECT TO THE INFORMATION SET FORTH HEREIN OR THE PRODUCT TO WHICH THE INFORMATION REFERS. ACCORDINGLY, MALLINCKRODT BAKER, INC. WILL NOT BE RESPONSIBLE FOR DAMAGES RESULTING FROM USE OF OR RELIANCE UPON THIS INFORMATION.
****
Prepared by: Environmental Health & Safety
Phone Number: (314) 654-1600 (U.S.A.)

Material Safety Data Sheet

[illegible]

[illegible]

[illegible]

[illegible]

[illegible]

[illegible]

[illegible]

[illegible]

[illegible]

[illegible]

[illegible]

[illegible]

[illegible]

Material Safety Data Sheet

[illegible]

[illegible]

[illegible]

[illegible]

[illegible]

[illegible]

[illegible]

[illegible]

[illegible]

[illegible]

[illegible]

[illegible]

[illegible]

Material Safety Data Sheet

[illegible]

[illegible]

[illegible]

[illegible]

[illegible]

[illegible]

MATERIAL SAFETY DATA SHEET
MASTER IRRITANT SOLIDS

Revision Number A96014C,
3/30/06

1. IDENTIFICATION OF THE SUBSTANCE/PREPARATION AND THE COMPANY/UNDERTAKING

Product name	YSI 5731 O2 Probe Solution
Synonyms	None
Chemical characterization	Inorganic salt with wetting agent.
Manufacturer, importer, supplier	YSI, Inc. 1700/1725 Brannum Lane Yellow Springs, OH 45387 USA
EMERGENCY TELEPHONE NUMBER	CHEMTREC: 1-800-424-9300

2. COMPOSITION/INFORMATION ON INGREDIENTS

CAS	Chemical Name	% Weight	ACGIH TWA	Acute toxicity	OSHA*	NTP*	IARC*
7447-40-7	Potassium chloride	99.9	None	NA	None	N/A	N/A
888-888-888	Kodak photo-flo 200	<0.1				N/A	N/A

* OSHA - PELs
* NTP - Report on Carcinogens - Known Carcinogens
* IARC - Group 1 (Carcinogenic to humans)

3. HAZARDS IDENTIFICATION

Emergency Overview: Product dust may be irritating to eyes, skin and respiratory system	

Eye contact	Contact with eyes may cause irritation.
Skin contact	Exposure can cause skin irritation.
Inhalation:	Dust from this product may cause respiratory irratation.
Ingestion:	No effects expected from normal use and minor amounts ingested. Ingestion of large amounts (over 1 tablespoon) may cause digestive system upset.
General advice	Seek medical attention if effects persist.
Principle Routes of Exposure	absorption, inhalation, and ingestion

4. FIRST AID MEASURES

General advice	• If exposure symptoms persist, seek medical attention.
Skin contact	• Wash off immediately with soap and plenty of water.
Eye contact	• In case of eye contact, remove contact lens and rinse immediately with plenty of water, also under the eyelids, for at least 15 minutes
Inhalation:	• Move to fresh air in case of accidental inhalation • If symptons persist seek medical attention.
Ingestion:	• Do not swallow. Rinse mouth with water and afterwards drink plenty of water. • For ingestion of large amounts induce vomiting if person is conscious. If conditions persist, seek medical attention.
Notes to physician	• Treat symptomatically
Protection of first-aiders	• Use necessary personal protective equipment
Aggravated Medical Conditions	• Users with skin conditions (eczema, psoriasis, etc.,) respiratory conditions (asthma, bronchitis, emphysema, etc.,) or with chemical sensitivities should take protective precautions.

5. FIRE-FIGHTING MEASURES

Flash point	Not applicable
Suitable extinguishing media	• Not applicable
Extinguishing media which must not be used for safety reasons	• Not applicable
Special exposure hazards arising from the substance or preparation itself, its combustion products, or released gases	• None
Specific hazabrds	
Special protective equipment for firefighters	• As in any fire, wear self-contained breathing apparatus pressure-demand, MSHA/NIOSH (approved or equivalent) and full protective gear
Specific methods	• No special protective measures against fire required
NFPA (National Fire Protection Association)	Health=1 (slight); Reactivity=0, fire=0, & Special = 0 (none)
HMIS (Hazardous Material Information System)	Health=1(slight); Reactivity=0, fire=0, & Special = 0 (none)

6. ACCIDENTAL RELEASE MEASURES

Personal precautions	• Ensure adequate ventilation
Environmental precautions	• No information available
Methods for cleaning up	• Pick up and transfer to properly labelled container for disposal. • After cleaning, flush away traces with water

7. HANDLING AND STORAGE

Handling

Technical measures/Precautions	• Use only in areas provided with adequate ventilation.
Safe handling advice	• Avoid contact with eyes. Wash hands immediately after contact to avoid hand-eye transfer. • Wear personal protective equipment

Storage

Technical measures/Precautions	• Keep in properly labelled containers • Keep containers tightly closed. Discard any material that may be contaminated.
Incompatible products	• Avoid strong acids, oxidizing agents.

8. EXPOSURE CONTROLS / PERSONAL PROTECTION

Engineering measures	• Ensure adequate ventilation, especially in confined areas • Ensure eyewash station is readily available
Personal protective equipment	
Hand protection	• Wear appropriate protective gloves
Eye protection	• Safety glasses with side-shields or full face shield.
Respiratory protection	• In case of insufficient ventilation, wear suitable respiratory equipment
Skin and body protection	• lightweight protective clothing
Hygiene measures	• Handle in accordance with good industrial hygiene and safety practice
Environmental exposure controls	• No information available

9. PHYSICAL AND CHEMICAL PROPERTIES

General Information

Form	Solid.
Appearance	White powder.
Odour	None.

Important Health Safety and Environmental Information

Boiling point/range	No information available
Flash point	None
Molecular Weight	74.55.
Vapour pressure	Not applicable.
Vapour density	Not applicable.
Water solubility	Infinitely soluable.
Specific Gravity	1.984.
Melting point/range	770°C

10. STABILITY AND REACTIVITY

Stability	Stable under normal conditions.
Materials to avoid	Incompatible with strong acids and oxidizing agents.
Hazardous decomposition products	none under normal use.
Polymerization	Polymerization does not occur.

11. TOXICOLOGICAL INFORMATION

Acute toxicity

Component Information

Product Information

Local effects	
Skin irritation	May cause skin irritation.
Eye irritation	Dust may cause eye irritation.
Inhalation:	Inhalation of dust may cause irritation of respiratory tissue.
Ingestion:	No effects expected from normal use and minor amounts ingested. Ingestion of large amounts (over 1 tablespoon) may cause digestive system upset.
Chronic toxicity	No information available.
Specific effects	
carcinogenic effects	No information available.
mutagenic effects	No information available.
Reproductive toxicity	No information available.
Target Organ Effects	No information available.

12. ECOLOGICAL INFORMATION

Ecotoxicity effects

Component Information

CAS	Chemical Name	% Weight	ACGIH TWA
7447-40-7	Potassium chloride	99.9	None
888-888-888	Kodak photo-flo 200	<0.1	

Product Information

Aquatic toxicity No information available.

Other information:

Ozone depletion potential; ODP; (R-11 = 1)	No information available.
Additional ecological information	No information available.
Mobility	No information available
Bioaccumulative potential	No information available
Ecotoxicity effects	No information available
Aquatic toxicity	No information available

13. DISPOSAL CONSIDERATIONS

Waste from residues / unused products	• Dispose of in accordance with local regulations
Contaminated packaging	• Empty containers should be rinsed and disposed of as appropriate for glass and plastic containers.

14. TRANSPORT INFORMATION

DOT Not regulated.
UN-No
Proper shipping name
Packing group
Subsidiary Risk
Description

15. REGULATORY INFORMATION

U.S. Inventories

CAS	Chemical Name	% Weight	ACGIH*
7447-40-7	Potassium chloride	99.9	N/A
888-888-888	Kodak photo-flo 200	<0.1	N/A

* ACGIH - Occupational Exposure Limits - STELs

International Inventories

CAS	Chemical Name	% Weight	EUOED*
7447-40-7	Potassium chloride	99.9	N/A
888-888-888	Kodak photo-flo 200	<0.1	N/A

* EUOED - EU Occupational Exposure Directive (98/24/EC) Indicative Occupational Exposure Limit Values (IOELV)

16. OTHER INFORMATION

Literary reference None.
Prepared By YSI, Inc. .

End of Safety Data Sheet

BOC GASES

MATERIAL SAFETY DATA SHEET

PRODUCT NAME: NITROGEN

1. Product and Company Identification

BOC Gases,
Division of,
The BOC Group, Inc.
575 Mountain Avenue
Murray Hill, NJ 07974

TELEPHONE NUMBER: (908) 464-8100
24-HOUR EMERGENCY TELEPHONE NUMBER:
CHEMTREC (800) 424-9300

BOC Gases
Division of
BOC Canada Limited
5975 Falbourne Street, Unit 2
Mississauga, Ontario L5R 3W6

TELEPHONE NUMBER: (905) 501-1700
24-HOUR EMERGENCY TELEPHONE NUMBER:
(905) 501-0802
EMERGENCY RESPONSE PLAN NO: 2-0101

PRODUCT NAME: NITROGEN
CHEMICAL NAME: Nitrogen
COMMON NAMES/SYNONYMS: Nitrogen, compressed; Nitrogen gas
TDG (Canada) CLASSIFICATION: 2.2
WHMIS CLASSIFICATION: A

PREPARED BY: Loss Control (908)464-8100/(905)501-1700
PREPARATION DATE: 6/1/95
REVIEW DATES: 06/18/04

2. Composition, Information on Ingredients

EXPOSURE LIMITS[1]:

INGREDIENT	% VOLUME	PEL-OSHA[2]	TLV-ACGIH[3]	LD_{50} or LC_{50} Route/Species
Nitrogen FORMULA: N_2 CAS: 7727-37-9 RTECS #: QW9700000	99.995 to 99.999	None Established	Simple Asphyxiant	Not Available

[1] Refer to individual state or provincial regulations, as applicable, for limits which may be more stringent than those listed here.
[2] As stated in 29 CFR 1910, Subpart Z (revised July 1, 1993)
[3] As stated in the ACGIH 2004 Threshold Limit Values for Chemical Substances and Physical Agents.

OSHA Regulatory Status: This material is classified as hazardous under OSHA regulations.

3. Hazards Identification

EMERGENCY OVERVIEW

Odorless, colorless, nonflammable gas. Simple Asphyxiant - This product does not contain oxygen and may cause asphyxia if released in a confined area. Maintain oxygen levels above 19.5%. Contents under pressure. Use and store below 125 °F.

ROUTE OF ENTRY:

Skin Contact	Skin Absorption	Eye Contact	Inhalation	Ingestion
No	No	No	Yes	No

HEALTH EFFECTS:

Exposure Limits	Irritant	Sensitization
No	No	No
Teratogen	Reproductive Hazard	Mutagen
No	No	No
Synergistic Effects None reported		

Carcinogenicity: -- NTP: No IARC: No OSHA: No

EYE EFFECTS: Contact with rapidly expanding gas near the point of release may cause frostbite.

SKIN EFFECTS: Contact with rapidly expanding gas near the point of release may cause frostbite with redness, skin color change to gray or white, and blistering.

INGESTION EFFECTS: No adverse effects anticipated.

INHALATION EFFECTS: Product is a simple asphyxiant. Effects of oxygen deficiency resulting from simple asphyxiants may include: rapid breathing, diminished mental alertness, impaired muscular coordination, faulty judgement, depression of all sensations, emotional instability, and fatigue. As asphyxiation progresses, nausea, vomiting, prostration, and loss of consciousness may result, eventually leading to convulsions, coma, and death.

Oxygen deficiency during pregnancy has produced developmental abnormalities in humans and experimental animals.

MEDICAL CONDITIONS AGGRAVATED BY EXPOSURE: None known.

POTENTIAL ENVIRONMENTAL EFFECTS: Not toxic to fish and wildlife.

4. First Aid Measures

EYES: None required for gas. If frostbite is suspected, flush eyes with cool water for 15 minutes and obtain immediate medical attention.

SKIN: None required for gas. For frostbite, immerse skin in lukewarm water. DO NOT USE HOT WATER. Obtain medical attention.

INGESTION: Ingestion is unlikely as product as a gas at room temperature.

INHALATION: PROMPT MEDICAL ATTENTION IS MANDATORY IN ALL CASES OF OVEREXPOSURE. RESCUE PERSONNEL SHOULD BE EQUIPPED WITH SELF-CONTAINED BREATHING APPARATUS. Victims should be assisted to an uncontaminated area and inhale fresh air. Quick removal from the contaminated area is most important. Unconscious persons should be moved to an uncontaminated area, and if breathing has stopped, administer artificial resuscitation and supplemental oxygen. Further treatment should be symptomatic and supportive.

5. Fire Fighting Measures

Conditions of Flammability: Nonflammable		
Flash point: None	Method: Not Applicable	Autoignition Temperature: None
LEL(%): None	UEL(%): None	
Hazardous combustion products: None		
Sensitivity to mechanical shock: None		
Sensitivity to static discharge: None		

FIRE AND EXPLOSION HAZARDS:
Nonflammable. Cylinder may vent rapidly or rupture violently from pressure when involved in a fire situation.

EXTINGUISHING MEDIA:
None required. Use as appropriate for surrounding materials.

FIRE FIGHTING INSTRUCTIONS: Firefighters should wear respiratory protection (SCBA) and full turnout or Bunker gear. Continue to cool fire-exposed containers until well after flames are extinguished.

6. Accidental Release Measures

Evacuate all personnel from affected area. Use appropriate protective equipment (See Section 8). Stop the flow of gas or remove cylinder to outdoor location if this can be done without risk. Ventilate enclosed areas. If leak is in container or container valve, contact the appropriate emergency telephone number listed in Section 1 or call your closest BOC location.

7. Handling and Storage

Electrical classification: Non-hazardous.

This gas mixture is noncorrosive and may be used with all common structural materials.

Use only in well-ventilated areas. Valve protection caps must remain in place unless container is secured with valve protection outlet piped to use point. Do not drag, slide or roll cylinders. Use a suitable hand truck for cylinder movement. Use a pressure reducing regulator when connecting cylinder to lower pressure piping or systems. Do not heat cylinder by any means to increase the discharge rate of product from the cylinder. Use a check valve or trap in the discharge line to prevent hazardous back flow into the cylinder. Protect cylinders from physical damage. Do not insert any object (i.e.: screwdriver) into valve cap openings as this can damage the valve causing leakage.

Store in cool, dry, well-ventilated area of non-combustible construction away from heavily trafficked areas and emergency exits. Do not allow the temperature where cylinders are stored to exceed 125°F (52°C). Cylinders should be stored upright and firmly secured to prevent falling or being knocked over. Use a "first in-first out" inventory system to prevent full cylinders being stored for excessive periods of time.

For additional recommendations, consult Compressed Gas Association Pamphlets P-1, G-10.1, P-8.1, P-8.2, P-9, P-16, P-18, and Safety Bulletin SB-2.

Never carry a compressed gas cylinder or a container of a gas in cryogenic liquid form in an enclosed space such as a car trunk, van or station wagon. A leak can result in a fire, explosion, asphyxiation or a toxic exposure.

8. Exposure Controls, Personal Protection

ENGINEERING CONTROLS:
Use local exhaust in combination with general ventilation as necessary to prevent accumulation of high concentrations and maintain air oxygen level at or above 19.5%.

EYE/FACE PROTECTION:
Safety goggles or glasses.

SKIN PROTECTION:
Protective gloves appropriate for the job.

RESPIRATORY PROTECTION:

11. Toxicological Information

SKIN AND EYE: Not expected to cause irritation.

INHALATION: Product is a simple asphyxiant. Maintain atmospheric oxygen at or above 19.5%.

OTHER: Oxygen deficiency during pregnancy has produced developmental abnormalities in humans and experimental animals.

12. Ecological Information

Product does not contain Class I or Class II ozone depleting substances. Not toxic. Will not bioconcentrate.

13. Disposal Considerations

Do not attempt to dispose of residual waste or unused quantities. Return in the shipping container PROPERLY LABELED, WITH ANY VALVE OUTLET PLUGS OR CAPS SECURED AND VALVE PROTECTION CAP IN PLACE to BOC Gases or authorized distributor for proper disposal.

14. Transport Information

PARAMETER	United States DOT	Canada TDG
PROPER SHIPPING NAME:	Nitrogen, compressed	Nitrogen, compressed
HAZARD CLASS:	2.2	2.2
IDENTIFICATION NUMBER:	UN 1066	UN 1066
SHIPPING LABEL:	NONFLAMMABLE GAS	NONFLAMMABLE GAS

15. Regulatory Information

SARA TITLE III NOTIFICATIONS AND INFORMATION
SARA TITLE III - HAZARD CLASSES:
Sudden Release of Pressure Hazard

SARA TITLE III - SECTION 313 SUPPLIER NOTIFICATION:
This product does not contain toxic chemicals subject to reporting requirements of section 313 of the Emergency Planning and Community Right-To-Know Act (EPCRA) of 1986 and of 40 CFR 372.

U.S. TSCA/Canadian DSL: All ingredients are listed on the U.S. Toxic Substances Control Act (TSCA) inventory or exempt from listing and on the Canadian Domestic Substance List (DSL).

California Proposition 65: This product does not contain ingredient(s) known to the State of California to cause cancer or reproductive toxicity.

Canadian Controlled Products Regulations: This product has been classified in accordance with the hazard criteria of the CPR and the MSDS contains all the information required by the CPR.

16. Other Information

NFPA HAZARD CODES		HMIS HAZARD CODES		RATINGS SYSTEM
Health:	0	Health:	0	0 = No Hazard
Flammability:	0	Flammability:	0	1 = Slight Hazard
Instability:	0	Physical Hazard:	3	2 = Moderate Hazard
				3 = Serious Hazard
				4 = Severe Hazard

Note: Ratings were assigned in accordance with Compressed Gas Association (CGA) guidelines as published in CGA Pamphlet P-19-2004, *CGA Recommended Hazard Ratings for Compressed Gases, 2nd Edition.*

ACGIH	American Conference of Governmental Industrial Hygienists
DOT	Department of Transportation
IARC	International Agency for Research on Cancer
NTP	National Toxicology Program
OSHA	Occupational Safety and Health Administration
PEL	Permissible Exposure Limit
SARA	Superfund Amendments and Reauthorization Act
STEL	Short Term Exposure Limit
TDG	Transportation of Dangerous Goods
TLV	Threshold Limit Value
WHMIS	Workplace Hazardous Materials Information System

Compressed gas cylinders shall not be refilled without the express written permission of the owner. Shipment of a compressed gas cylinder which has not been filled by the owner or with his/her (written) consent is a violation of transportation regulations.

DISCLAIMER OF EXPRESSED AND IMPLIED WARRANTIES:
Although reasonable care has been taken in the preparation of this document, we extend no warranties and make no representations as to the accuracy or completeness of the information contained herein, and assume no responsibility regarding the suitability of this information for the user's intended purposes or for the consequences of its use. Each individual should make a determination as to the suitability of the information for their particular purpose(s).

APPENDIX D

Appendix D: DNAPL Extraction System Layout

- [illegible]
- [illegible]

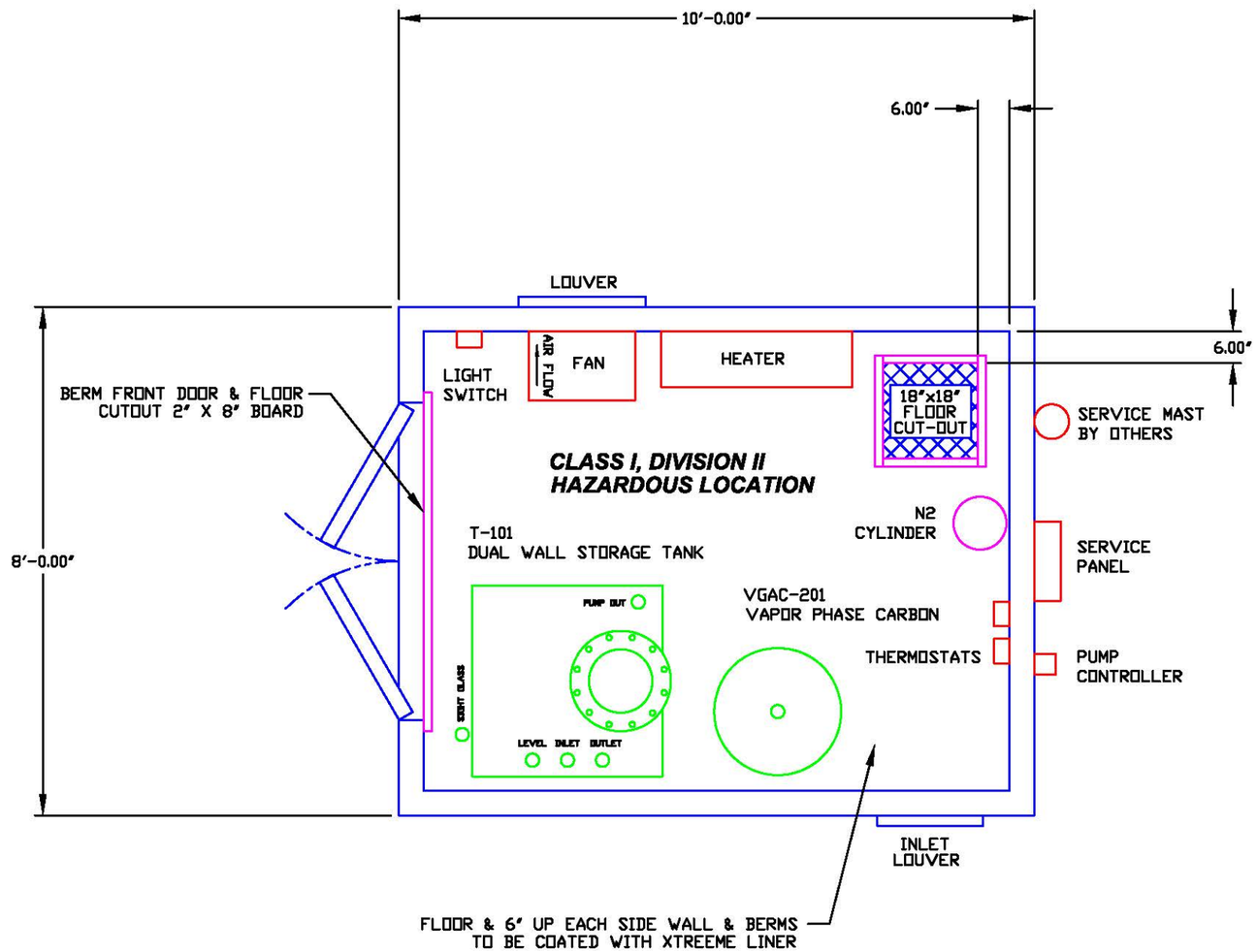

REVISIONS			
REV.	DESCRIPTION	DATE	APPR.
1	MOVE THE SERVICE MAST FROM THE SE CORNER OF THE SHED TO THE NE CORNER: MOVE THE SERVICE PANEL TO THE CENTER & THE PUMP CONTROLLER SOUTH OF THE SERVICE PANEL	5/13/13	PRS
2	MIRROR EQUIPMENT	7/12/13	PRS
3	RELOCATE FAN & THERMOSTATS: ADD BERM TO TO FRONT DOOR & FLOOR CUTOUT: ADD NOTE FOR FLOOR & WALL COATING	7/25/13	PRS

CONFIDENTIALITY NOTE:

The information contained in this drawing is intended for use only by Air Energy, Incorporated. The information is confidential and any copying, distribution or dissemination without the consent of Air Energy, Incorporated is strictly prohibited.

AIR ENERGY, INCORPORATED

6 Norfolk Avenue South Easton, Massachusetts 02375
Phone (508) 230-9445 Fax (508) 230-9446

TITLE
DNAPL EXTRACTION TREATMENT SYSTEM
SHED LAYOUT NYACOL SITE

GROUNDWATER & ENVIRONMENTAL SERVICES
NYANZA SUPERFUND SITE – ASHLAND, MA

SERIAL NO. 33320-S44

DRWN BY	DATE	SCALE	SIZE	DWG NO.	SHEET	REV
PRS	5/2/13	1"=30"	B	33320-S44-L1	1 OF 1	3

CHK BY DATE

APPR BY DATE

REVISIONS			
REV.	DESCRIPTION	DATE	APPR.
1	MOVE THE FAN FROM THE SW CORNER OF THE SHED TO THE NW CORNER	5/13/13	PRS
2	MIRROR EQUIPMENT	7/13/13	PRS
3	RELOCATE FAN & THERMOSTATS: ADD BERM TO TO FRONT DOOR & FLOOR CUTOUT: ADD NOTE FOR FLOOR & WALL COATING	7/25/13	PRS

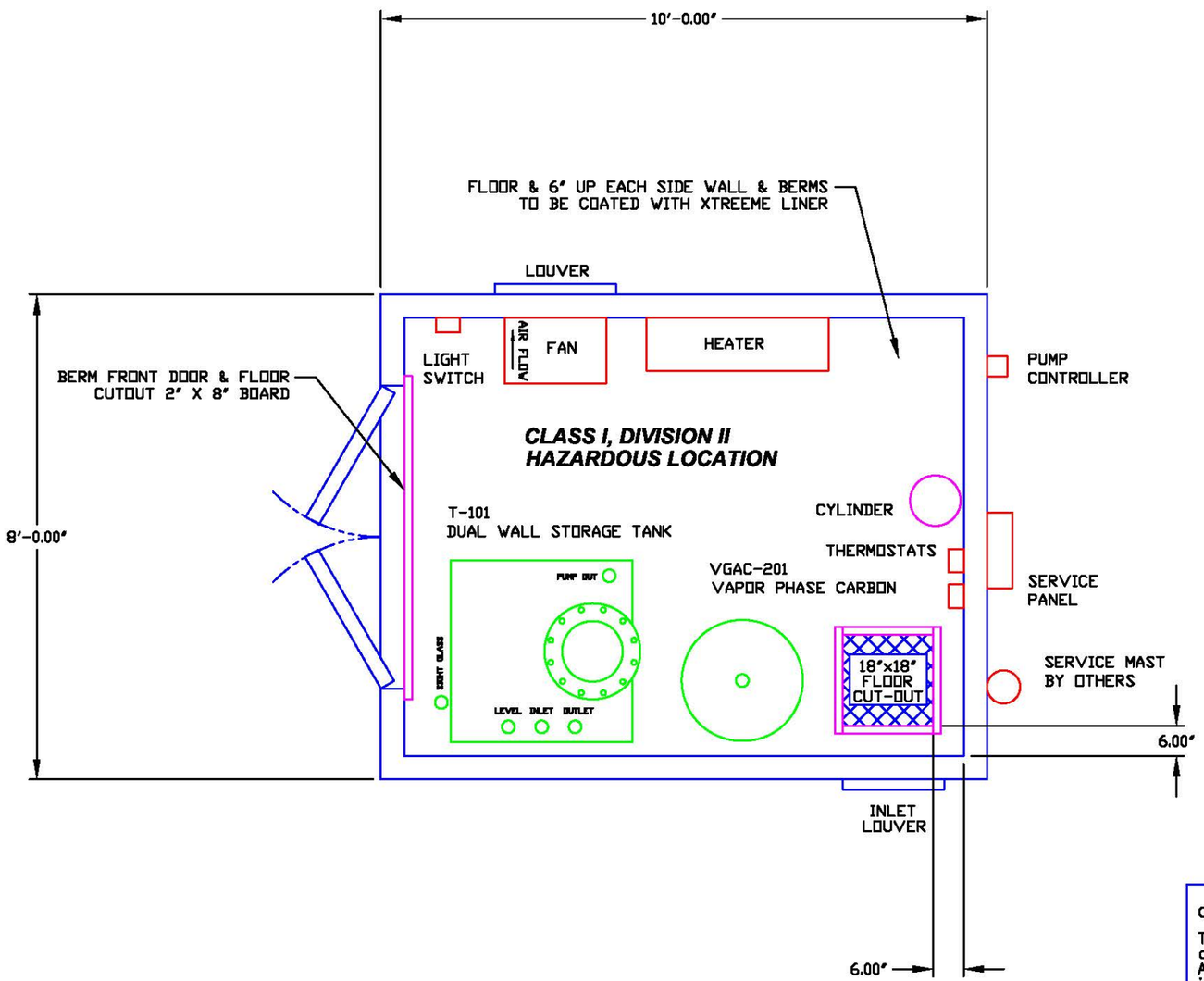

CONFIDENTIALITY NOTE:

The information contained in this drawing is intended for use only by Air Energy, Incorporated. The information is confidential and any copying, distribution or dissemination without the consent of Air Energy, Incorporated is strictly prohibited.

DRWN BY PRS	DATE 5/2/13
CHK BY	DATE
APPR BY	DATE

AIR ENERGY, INCORPORATED

6 Norfolk Avenue South Easton, Massachusetts 02375
Phone (508) 230-9445 Fax (508) 230-9446

TITLE

DNAPL EXTRACTION TREATMENT SYSTEM
SHED LAYOUT WAC SITE

GROUNDWATER & ENVIRONMENTAL SERVICES
NYANZA SUPERFUND SITE – ASHLAND, MA

SERIAL NO. 33320-S44

SCALE	SIZE	DWG NO.	SHEET	REV
1"=30"	B	33320-S44-L2	1 OF 1	3

APPENDIX E

Appendix E: Extraction Well Construction Logs

- [illegible]
- [illegible]

BORING LOG

Nobis — Engineering a Sustainable Future

Project: Nyanza Superfund Site OU2

Location: Ashland, Massachusetts

Nobis Project No.: 80022.07

Boring No.: **MW/B-11**

Boring Location: Between B-8 and SB-600

Checked by: J. McCullough

Date Start: July 23, 2012

Date Finish: July 23, 2012

Contractor: Major Drilling Group Int'l, Inc.

Driller: H. Huntoon

Nobis Rep.: J. Brunelle

Rig Type / Model: Geoprobe / 8140LS

Hammer Type:

Hammer Hoist:

Ground Surface Elev.:

Datum: N/A

	Drilling Method	Sampler
Type	Casing	Core Barrel
Size ID (in.)	6"	
Advancement	Sonic	Push

Groundwater Observations

Date	Time	Depth Below Ground (ft.)	Depth of Casing (ft.)	Depth to Bottom of Hole (ft.)	Stabilization Time

Depth (ft.)	Sample Type & No.	Rec (in.)	Depth (ft.)	Blows/ 6 in.	PID (ppm)	Drilling Rate (min/ft)	Ground Water	Stratum Elev. / Depth (ft.)	Sample Description and Remarks (Classification System: Modified ASTM)	Well Detail	Notes
1	S-1		0-9		0.4			FILL / 4.0	S-1A (18"): Tan, Well-graded Sand (SW). Moist.	Completed with 3' Standpipe	
2					1.2				S-1B (12"): Dark brown, Well-graded Sand with Silt and Gravel (SW-SM). Moist.		
3					0.8				S-1C (18"): Olive-brown, Well-graded Sand with Gravel (SW). Moist.		
4											
5					1.2			ORGANIC DEPOSITS / 6.0	S-1D (24"): Dark brownish-black, Sandy Organic Soil (OH). Moist to wet.	Grout to surface	
6											
7					5.8			SILT / 8.0	S-1E (24"): Black, Silt (ML), wet, changing to Well-Graded Sand with Gravel (SW). Wet. DNAPL odor detected.		
8					9.6 26						
9					30			GLACIAL TILL / 9.0	S-1F (12"): Gray, Silty Sand with Gravel (SM), 10% bedrock fragments. Dry.		
10	R-1	60	9-14			1		BEDROCK	R-1: Pink-gray Granite - quartz and biotite present. Igneous, coarse to medium grained, slightly foliated, slightly weathered at bedrock contact to fresh. Competent and strong. Wet. RQD = 55%.		
11						12					
12					0.7	14				000 Sand Filter Pack	
13						7			Fracture at 13.3', fracture zone at 14'. Moderately to intensely fractured.		
14					0.8	8					
15	R-2	60	14-19			2			R-2: Pink-gray Granite - quartz and biotite present. Igneous, coarse to medium grained, slightly foliated, slightly fractured and strong. Competent. Wet. RQD = 40%.	00 Sand Filter Pack	
16						4					
17						9				Screen	
18						11			Black product washed up through casing with drill water.		
19						10				Void Space	
20	R-3	60	19-24		3.6	26			R-3: Pink-gray Granite - quartz and biotite present. Igneous, coarse to medium grained, slightly foliated, slightly fractured and strong. Competent. Wet. RQD = 90%.		
21						10					
22					0	7			Granite vein intrusion (less biotite than rest of sample) from 19'-21.5'.		
23					0	10			Fractures at 17.9', 23.3', 23.6'.	Sump Bentonite Pellets Around Sump	
24					0.1			/ 23.5	Boring terminated at 23.5 feet.		
25											

Soil	Percentage	Non-Soil
trace	5 - 10	very few
little	10 - 20	few
some	20 - 35	several
and	35 - 50	numerous

NOTES:

Soil descriptions and gradation percentagesare based on visual classifications and should be considered approximate. Stratification lines are approximate boundaries between stratums; transitions may be gradual.

BOREHOLE LOG - NOBIS GINT DATA TEMPLATE OCT 7 2011.GDT - 10/30/12 13:33 - R:\80000 TASK ORDERS\80022 NYANZA OU2\TECHNICAL DATA (TD)\BORING LOGS\BORING LOGS - 8-27-12.GPJ

NYANZA II GROUNDWATER STUDY			BORING NO. B-113A
CLIENT REM III			PROJECT NO. 5331-03
CONTRACTOR ROCHESTER DRILLING CO.		DATE STARTED 3-22-88	COMPLETED 3-27-88
METHOD HSA & DRIVE CASING	CASING SIZE 6.8,6,5"	PI METER HNU 11.7 eV	PROTECTON LEVEL Mod C
ELEVATION 195.66 FT above MSL	SOIL DRILLED 43.0 FT	ROCK DRILLED 30.0 FT	W.L. BELOW GROUND 2.62 FT
LOGGED BY S. PINETTE & J. SNOWDEN	CHECKED BY JGA	DATE 10/12/88	PAGE 1 OF 2

DEPTH (FT)	HNU AMB.	SAMP.#	REF.SAMPLE	CLP	GC	INTERVAL(FT)	RECOVERY(FT)	SOIL\ROCK DESCRIPTION	SOIL CLASS	FIELD GC TOTALS (PPM)	BLOWS PER 6 INCHES					N	DEPTH (FT)	WELL DATA	COMMENTS
0	BG	S-1	X	N	N	0 to 2	1.0	SAND, silty fine, with trace coarse sand and fine gravel; gap graded; loose; moist; med. yellow brown; some mottling and black staining. FILL	SM		5	4	4	3	8				3" ID ST. PROTECTIVE CASING IN GROUT CEMENT
5	BG	S-2	X	N	Y	5 to 7	1.6	SAND, silty fine; over SAND, fine, with gravel; poorly graded; dense; wet; with some mottling; med. yellow-brown.	SM	ND	12	12	26	38	38				2" ID SS RISER
10	BG	S-3	X	N	Y	10 to 12	1.2	SAND, silty fine, with little clay; over SAND, med. to coarse, & GRAVEL, fine; moderately graded; medium dense; wet; med. yellowish brown to light olive brown.	SM SP GP	5	6	8	8	9	16				
15	BG	S-4	X	N	Y	15 to 17	1.6	SAND, fine to coarse, and GRAVEL, fine; interbedded with SAND, fine silty, with little gravel; well graded; medium dense; wet med. brown.	SP SM	0.7	14	9	6	40	15				
20	BG	S-5	X	N	Y	20 to 22	1.4	SAND, silty fine, with medium to coarse sand and gravel; well graded dense; wet; medium yellowish brown.	SM	1	22	18	18	18	36	21.0			BENTONITE PELLET SEAL
25	BG	S-6	X	N	Y	25 to 27	1.6	SAND, silty fine; over SAND, fine to coarse, with some fine gravel; widely graded; very dense; wet; medium yellowish brown.	SM SW	10	26	27	60	74	87				
30	BG	S-7	X	N	Y	30 to 32	0.8	SAND, silty fine, with some coarse sand and little gravel; well graded; very dense; wet; medium yellowish brown. GLACIAL LACUSTRINE\FLUVIAL	SM	395	21	17	16	22	33				
35	BG	S-8	X	N	Y	35 to 36.5	0.9	SAND, medium to coarse; poorly graded; very dense; wet; medium yellowish brown. GLACIAL FLUVIAL	SP	6	26	50	108		GR				
40	BG	S-9	N	N	N	40 to 40.1		Trace sample recovery. BEDROCK at 43.0'			120 --- .1'					44.0			BENTONITE PELLET SEAL
45																			

S = SPLIT SPOON R = ROCK BG = BACKGROUND GR = N VALUE > 100

NOTES:
1. Water level measurements were performed 6\7\88.
2. FIELD GC TOTALS include concentrations of all GC target compounds
3. ▒ Pattern denotes the CLP sample(s) interval.

NYANZA II GROUNDWATER STUDY	BORING NO. B-113A
CLIENT REM III	PROJECT NO. 5331-03
	PAGE 2 OF 2

DEPTH (FT)	HNU AMB.	SAMP.#	REF.SAMPLE	CLP GC	INTERVAL(FT) RECOVERY(FT)	SOIL\ROCK DESCRIPTION	SOIL CLASS	FIELD GC TOTALS (PPM)	BLOWS PER 6 INCHES	N	DEPTH (FT)	WELL DATA	COMMENTS
45						BEDROCK - 43.0'. Presumed Milford granite. For fracture evaluation, see Packer Test data for B-113A.					46.0		2" ID SS WELL SCREEN 5' LENGTH; 0.01" SLOT SIZE
50						Advance in bedrock: 43-46.3' 4.9" tricone bit 46.3-73' 3.9" tricone bit					51.0		
55											55.0		BENTONITE PELLET SEAL
60													GRADED SAND BACKFILL
65													
70													
						Bottom of Exploration 73.0'					73.0		
75													
80													
85													
90													

S = SPLIT SPOON R = ROCK BG = BACKGROUND

APPENDIX F

Appendix F: Operation and Maintenance Forms

- [illegible]
- [illegible]

Operation and Maintenance Form
Worcester Air Conditioning Facility
DNAPL Extraction System
Nyanza Superfund Site
Ashland, MA

Date:			
Operations Personnel:			
Other Personnel:			
Weather:			
Arrival Time:			
Departure Time:			
Site Security			
Facility Locked?	Yes/No		
Trespassing Evident?	Yes/No		
Ventilation System			
Odor in Facility Building?	Yes/No		
PID Reading of Facility Building	PPM		
Leak Inspection			
Any Leaks Identified?	Yes/No		
Autodialer			
Is Autodialer in Alarm?	Yes/No		
Extraction System			
Extraction System - Pump Controller Readings (Prior to Enabling System/Initial Reading)			
Current Time	□□:□□ □□/□□□□		
Remaining Time off	□□:□□ □□/□□□□		
Refill Total	□□:□□ □□/□□□□		
Discharge Total	□□:□□ □□/□□□□		
On Total	□□:□□ □□/□□□□		
Off Total	□□:□□ □□/□□□□		
System Enabled?	□□□□□		
Extraction System - Pump Controller Settings			
		Current Settings	***Modified Setting (if applicable)***
Refill	□□:□□ □□/□□□□		
Discharge	□□:□□ □□/□□□□		
System On	□□:□□ □□/□□□□		
System Off	□□:□□ □□/□□□□		
Extraction System - Nitrogen Tank Readings (After Enabling System/Final Reading)			
Nitrogen Tank (PI 101) Pressure	PSI		
Primary Regulator (PI 102) Pressure	PSI		
Secondary Regulator (PI 103) Pressure (Located Outside)	PSI		
Does Nitrogen Tank (PI 101) Need to be Replace? (below 1,000 PSI)	Yes/No		
Was Nitrogen Tank (PI 101) Replaced?	Yes/No		
Storage System			
		Initial Reading	***Final Reading (After Manually Pumping System)***
Is Liquid Visible in Sight Glass?	Yes/No		
Is Water Visible in Sight Glass?	Yes/No		
Is DNAPL Visible in Sight Glass?	Yes/No		
Approximate Height of Liquid in DNAPL Tank (T-102)	Inches		
Approximate Volume of Liquid Collected in DNAPL Tank (T-102) (5.35 gallons/inch)	GAL		
Ventilation System			
Vapor Phase Carbon Pressure (PI 201) Inlet	PSI		
Vapor Phase Carbon PID Reading (SP 201) Inlet	PPM		
Vapor Phase Carbon Pressure (PI 202) Outlet	PSI		
Vapor Phase Carbon PID Reading (SP 202) Outlet	PPM		
Extraction Well (Monthly)			
		Initial Reading	***Final Reading (After Manually Pumping System)***
Water Level	Feet		
Total Gallons Pumped	Gallons		
During System Operations			
Current Time	□□:□□ □□/□□□□		
Flow Visible?	□□□□□		
Nitrogen Gas Visible in tubing?	□□□□□		
Any Leaks Identified?	Yes/No		

Operation and Maintenance Form
Worcester Air Conditioning Facility
DNAPL Extraction System
Nyanza Superfund Site
Ashland, MA

System Operations
Status of DNAPL Extraction System (Conditions Observed or Concerns):
Description of Routine Maintenance Performed:
Description of Non-Routine Maintenance Performed:
Description of Any Emergency Conditions Observed:

Operation and Maintenance Form
Nyacol Facility
DNAPL Extraction System
Nyanza Superfund Site
Ashland, MA

Date:			
Operations Personnel:			
Other Personnel:			
Weather:			
Arrival Time:			
Departure Time:			
Site Security			
Facility Locked?	Yes/No		
Trespassing Evident?	Yes/No		
Ventilation System			
Odor in Facility Building?	Yes/No		
PID Reading of Facility Building	PPM		
Leak Inspection			
Any Leaks Identified?	Yes/No		
Autodialer			
Is Autodialer in Alarm?	Yes/No		
Extraction System			
Extraction System - Pump Controller Readings (Prior to Enabling System/Initial Reading)			
Current Time	□□□□□□□□		
Remaining Time off	□□□□□□□□		
Refill Total	□□□□□□□□		
Discharge Total	□□□□□□□□		
On Total	□□□□□□□□		
Off Total	□□□□□□□□		
System Enabled?	□□□□□		
Extraction System - Pump Controller Settings			
		Current Settings	***Modified Setting (if applicable)***
Refill	□□□□□□□□		
Discharge	□□□□□□□□		
System On	□□□□□□□□		
System Off	□□□□□□□□		
Extraction System - Nitrogen Tank Readings (After Enabling System/Final Reading)			
Nitrogen Tank (PI 101) Pressure	PSI		
Primary Regulator (PI 102) Pressure	PSI		
Secondary Regulator (PI 103) Pressure (Located Outside)	PSI		
Does Nitrogen Tank (PI 101) Need to be Replace? (below 1,000 PSI)	Yes/No		
Was Nitrogen Tank (PI 101) Replaced?	Yes/No		
Storage System			
		Initial Reading	***Final Reading (After Manually Pumping System)***
Is Liquid Visible in Sight Glass?	Yes/No		
Is Water Visible in Sight Glass?	Yes/No		
Is DNAPL Visible in Sight Glass?	Yes/No		
Approximate Height of Liquid in DNAPL Tank (T-102)	Inches		
Approximate Volume of Liquid Collected in DNAPL Tank (T-102) (5.35 gallons/inch)	GAL		
Ventilation System			
Vapor Phase Carbon Pressure (PI 201) Inlet	PSI		
Vapor Phase Carbon PID Reading (SP 201) Inlet	PPM		
Vapor Phase Carbon Pressure (PI 202) Outlet	PSI		
Vapor Phase Carbon PID Reading (SP 202) Outlet	PPM		
Extraction Well (Monthly)			
		Initial Reading	***Final Reading (After Manually Pumping System)***
Water Level	Feet		
Total Gallons Pumped	Gallons		
During System Operations			
Current Time	□□□□□□□□		
Flow Visible?	□□□□□		
Nitrogen Gas Visible in tubing?	□□□□□		
Any Leaks Identified?	Yes/No		

Operation and Maintenance Form
Nyacol Facility
DNAPL Extraction System
Nyanza Superfund Site
Ashland, MA

System Operations
Status of DNAPL Extraction System (Conditions Observed or Concerns):
Description of Routine Maintenance Performed:
Description of Non-Routine Maintenance Performed:
Description of Any Emergency Conditions Observed:

APPENDIX G

Appendix G: Maintenance Schedule

- [illegible]

Maintenance Schedule
Nyanza
DNAPL Extraction System
Nyanza Superfund Site
Ashland, Massachusetts

DATE:

EQUIPMENT NO.	EQUIPMENT DESCRIPTION	MAINTENANCE DESCRIPTION	FREQUENCY	COMMENTS
Extraction System				
[illegible]	[illegible]	[illegible]	[illegible]	
Storage System				
[illegible]	[illegible]	[illegible]	[illegible]	
		[illegible]	[illegible]	
		[illegible]	[illegible]	
Ventilation System				
[illegible]	[illegible]	[illegible]	[illegible]	
		[illegible]	[illegible]	
Process Control System				
[illegible]	[illegible]	[illegible]	[illegible]	
		[illegible]	[illegible]	
		[illegible]	[illegible]	
Miscellaneous Items				
[illegible]	[illegible]	[illegible]	[illegible]	
[illegible]	[illegible]	[illegible]	[illegible]	
		[illegible]	[illegible]	
[illegible]	[illegible]	[illegible]	[illegible]	
[illegible]	[illegible]	[illegible]	[illegible]	
[illegible]	[illegible]	[illegible]	[illegible]	
[illegible]	[illegible] *Nyacol Facility Only*	[illegible]	[illegible]	