Nobis
Engineering a Sustainable Future

EPA Region 1 RAC 2 Contract No. EP-S1-06-03

December 21, 2017
Nobis Project No. 80113

Via Electronic Submittal

U.S. Environmental Protection Agency, Region 1
Attention: Lynne Jennings
5 Post Office Square, Suite 100
Boston, Massachusetts 02109-3919

Subject: Transmittal of Final Quality Assurance Project Plan (QAPP)
Nyanza Chemical Waste Dump Superfund Site – Operable Unit 2,
Ashland, Massachusetts
Feasibility Study
Task Order No. 0113-RI-CO-0115

Dear Ms. Jennings:

Enclosed is the Final Quality Assurance Project Plan for the Nyanza Chemical Waste Dump Superfund Site, Operable Unit 2, located in Ashland, Massachusetts.

Should you have any questions or comments, please contact me at (603) 513-7331, or jvernon@nobiseng.com.

Sincerely,

NOBIS ENGINEERING, INC.

James H. Vernon

James H. Vernon, Ph.D.
Senior Hydrogeologist

Enclosure

c: File No. 80113/MA

SEMS Doc ID 100012879

Nobis Engineering, Inc.
18 Chenell Drive
Concord, NH 03301

Quality Assurance Project Plan

Nyanza Chemical Waste Dump OU2 Superfund Site
Ashland, Massachusetts

Feasibility Study
EPA Task Order No. 0113-RICO-0115

REMEDIAL ACTION CONTRACT
No. EP-S1-06-03

FOR

US Environmental Protection Agency
Region 1

BY

Nobis Engineering, Inc.

Nobis Project Number 80113

December 2017

U.S. Environmental Protection Agency

Region 1
5 Post Office Square, Suite 100
Boston, Massachusetts 02109 3919

Nobis Engineering, Inc.

Lowell, Massachusetts
Concord, New Hampshire

Phone (800) 394 4182
www.nobisengineering.com

TABLE OF CONTENTS
QUALITY ASSURANCE PROJECT PLAN
NYANZA CHEMICAL WASTE DUMP, OPERABLE UNIT 2
ASHLAND, MASSACHUSETTS

SECTION **PAGE**

AC ACRONYMS AC-1

1.0 TITLE AND APPROVAL PAGE 1

2.0 DOCUMENT OVERVIEW 2

3.0 DISTRIBUTION LIST AND PROJECT PERSONNEL SIGN-OFF SHEET 4
3.1 Distribution List 4

4.0 PROJECT ORGANIZATION 4
4.1 Project Organizational Chart 4
4.2 Communication Pathways 5
4.3 Personnel Responsibilities and Qualifications 6

5.0 PROJECT PLANNING/PROJECT DEFINITION 6
5.1 Project Scoping Meetings 7
5.2 Problem Definition 7
5.3 Site Description and History 7

6.0 PROJECT DESCRIPTION AND SCHEDULE 9
6.1 Project Overview 9
6.2 Project Schedule 10
6.3 Analytical Services 10

7.0 PROJECT QUALITY OBJECTIVES AND MEASUREMENT PERFORMANCE CRITERIA 11
7.1 Introduction 11
7.2 Project Data Quality Objectives 11
7.3 Measurement Performance Criteria 12
7.3.1 Precision 12
7.3.2 Accuracy 12
7.3.3 Representativeness 13
7.3.4 Completeness 13
7.3.5 Comparability 13
7.3.6 Sensitivity 14
7.3.7 Quantitation Limits 14

8.0 SAMPLING PROCESS DESIGN 15
8.1 Sampling Design Rationale 15
8.1.1 Monitoring Well Installation and Development 15
8.1.2 Hydrogeological Assessment 16
8.1.3 Groundwater Sampling 16
8.1.4 Indoor Air Sampling 17
8.1.5 Pilot Study Groundwater Sampling 17

TABLE OF CONTENTS (cont.)
QUALITY ASSURANCE PROJECT PLAN
NYANZA CHEMICAL WASTE DUMP, OPERABLE UNIT 2
ASHLAND, MASSACHUSETTS

SECTION **PAGE**

9.0 FIELD SAMPLING PROCEDURES AND REQUIREMENTS 17
9.1 Containers, Preservation, and Handling 18
9.2 Monitoring Well Installation and Development 19
9.3 Groundwater Sampling and Water Level Measurement Procedures 19
9.4 Indoor Air Procedures 20
9.5 Pilot Study Groundwater Sampling Procedures 20
9.6 Sampling SOP Modifications 21
9.7 Decontamination of Equipment 21
9.8 Field Equipment Calibration 21
9.9 Field Equipment Maintenance, Testing, and Inspection Requirements 22
9.10 Inspection and Acceptance Requirements for Supplies and Sample Containers 22

10.0 SAMPLE HANDLING, TRACKING AND CUSTODY REQUIREMENTS 22
10.1 Sample Collection Documentation 22
10.2 Sample Handling, Tracking, and Custody Procedures 23
10.2.1 Field Custody and Sampling Shipping Procedures 23
10.2.2 Laboratory Custody Procedures 25

11.0 FIELD ANALYTICAL METHOD REQUIREMENTS 25
11.1 Field Analytical Methods and Standard Operating Procedures 26
11.2 Field Analytical Method/Standard Operating Procedures Modifications 26
11.3 Calibration Procedures and Frequency 26
11.4 Field Analytical Instrument/Equipment Maintenance, Testing, and Inspection Requirements 27
11.5 Field Analytical Inspection and Acceptance Requirement for Supplies 27

12.0 FIXED LABORATORY ANALYTICAL METHOD REQUIREMENTS 27
12.1 Fixed Laboratory Analytical Methods and Standard Operating Procedures 28
12.2 Fixed Laboratory Analytical Method/Standard Operating Procedures Modifications 28
12.3 Fixed Laboratory Analytical Calibration Procedures 28
12.4 Fixed Laboratory Instrument Equipment Maintenance, Testing and Inspection 29
12.5 Fixed Laboratory Inspection and Acceptance Requirements for Supplies 29

13.0 QUALITY CONTROL REQUIREMENTS 29

14.0 DATA ACQUISITION REQUIREMENTS (NON-DIRECT MEASUREMENTS) 30

15.0 DOCUMENTATION, RECORDS, AND DATA MANAGEMENT 30

TABLE OF CONTENTS (cont.)
QUALITY ASSURANCE PROJECT PLAN
NYANZA CHEMICAL WASTE DUMP, OPERABLE UNIT 2
ASHLAND, MASSACHUSETTS

SECTION **PAGE**

15.1 Fixed Laboratory Data Package Deliverables 30
15.2 Electronic Data 31

16.0 ASSESSMENTS AND RESPONSE ACTIONS 31
16.1 Planned Assessments 32
16.2 Assessment Findings and Corrective Action Responses 33

17.0 QUALITY ASSURANCE MANAGEMENT REPORTS 34

18.0 VERIFICATION AND VALIDATION REQUIREMENTS 34

19.0 VERIFICATION AND VALIDATION PROCEDURES 35

20.0 DATA USABILITY/RECONCILIATION WITH PROJECT QUALITY OBJECTIVES 36

21.0 REFERENCES 37

TABLES

NUMBER

3-1 Distribution List
4-1 Personnel Responsibilities and Qualifications
6-1 Project Schedule
6-2 Chemical Analysis Information
6-3 Target Analyte List – Volatile Organic Compounds (VOCs) - Water
6-4 Target Analyte List – Metals - Water
6-5 Target Analyte List – Anions - Water
6-6 Target Analyte List – Dissolved Gases – Water
6-7 Target Analyte List – Oxygen Demand – Water
6-8 Target Analyte List – Volatile Organic Compounds (VOCs) – Indoor Air
6-9 Field and Quality Control Sample Summary
7-1 Measurement Performance Criteria
8-1 Survey Wells, Sampling Locations, and Sampling Rationale
9-1 Project Sampling SOP Reference
9-2 Sample Containers, Preservation, and Holding Time by Matrix and Analysis
10-1 Sample Identification System
11-1 Field Analytical Instrument Calibration
11-2 Field Analytical Instrument/Equipment Maintenance, Testing, and Inspection

TABLES (cont.)

12-1 Fixed Laboratory Analytical Method/SOP References
12-2 Fixed Laboratory Instrument Maintenance and Calibration
13-1 Fixed Laboratory Analytical QC Samples
15-1 Project Documentation and Records
17-1 QA Management Reports
18-1 Data Verification Process
18-2 Data Validation Summary

FIGURES

NUMBER

4-1 Project Organization
5-1 Site Locus Plan
5-2 Site Plan
8-1 Proposed Groundwater Sample Locations
8-2 Potential Vapor Intrusion Sampling Area

APPENDICES

A Field Sampling SOPs
B Laboratory SOPs

ACRONYMS

°C	degrees Centigrade
%	percent
%D	percent difference
%R	percent recovery
AR	air
bgs	below ground surface
BOD	biological oxygen demand
BR	bedrock
CA	corrective action
CAS	Chemical Abstract Service
CC	continuing calibration
CCB	continuing calibration blank
CCV	continuing calibration verification
CD	compact disc
CERCLA	Comprehensive Environmental Response, Compensation, and Liability Act
CLP	Contract Laboratory Program
CRQL	contract required quantitation limit
CVAA	cold vapor atomic absorption
DAS	Delivery of Analytical Services
DMC	deuterated monitoring compound
DNAPL	dense non-aqueous phase liquid
DPT	direct-push technology
DO	dissolved oxygen
DOC	dissolved organic carbon
DQI	data quality indicator
DQO	Data Quality Objective
DUP	duplicate sample
EB	equipment blank
EDD	electronic data deliverable
EDM	EXES Data Manager
EPA	Environmental Protection Agency
ERT	Environmental Response Team

ACRONYMS (cont.)

ESAT	Environmental Services Assistance Team
ESD	Explanation of Significant Differences
EXES	Electronic Data Exchange and Evaluation System
FOL	Field Operations Leader
FS	Feasibility Study
GW	groundwater
H_2SO_4	sulfuric acid
HCl	hydrochloric acid
HNO_3	nitric acid
IC	initial calibration
ICB	initial calibration blank
ICP-AES	inductively-coupled plasma-atomic emission spectrometry
ICP-MS	inductively-coupled plasma-mass spectrometry
ICV	initial calibration verification
IDW	Investigative Derived Waste
IS	internal standard
LCS	laboratory control sample
LCSD	laboratory control sample duplicate
LLCV	low-level calibration verification
MassDEP	Massachusetts Department of Environmental Protection
MCP	Massachusetts Contingency Plan
MDL	method detection limit
MNA	monitored natural attenuation
MPC	measurement performance criteria
MS	matrix spike
MSD	matrix spike duplicate
NA	not applicable
NE	New England
NERL	New England Regional Laboratory
Nobis	Nobis Engineering, Inc.
NPL	National Priorities List

ACRONYMS (cont.)

OB	overburden
OEME	Office of Environmental Measurement and Evaluation
ORP	oxidation-reduction potential
OSWER	Office of Solid Waste and Emergency Response
OU	Operable Unit
PAL	project action limit
PE	performance evaluation
PEL	Probable Effects Level
PID	photo-ionization detector
PM	Project Manager
PO	Project Officer
PPA4	Potentially Productive Aquifer 4
PVC	polyvinyl chloride
QA	Quality Assurance
QAPP	Quality Assurance Project Plan
QC	Quality Control
QL	quantitation limit
RAC	Remedial Action Contract
RAS	Routine Analytical Services
RI	Remedial Investigation
ROD	Record of Decision
RPD	relative percent difference
RRF	relative reference factor
RSCC	Regional Sample Control Coordinator
RSD	relative standard deviation
SDG	sample delivery group
SMO	Sample Management Office
SOP	Standard Operating Procedure
SOW	statement of work
SVOC	semi-volatile organic compound
TB	trip blank
TBD	to be determined

ACRONYMS (cont.)

TCE	trichloroethene
TEL	Threshold Effects Level
TO	Task Order
TOC	total organic carbon
TOPO	Task Order Project Officer
TPH	total petroleum hydrocarbons
VI	vapor intrusion
VOA	volatile organic analysis
VOC	volatile organic compound
WAC	Worcester Air Conditioning

1.0 TITLE AND APPROVAL PAGE

Site Name/Project Name:	Nyanza Chemical Waste Dump	Title:	QAPP
	Operable Unit 2	Revision Number:	0
		Revision Date:	December 2017
Site Location:	Ashland, Massachusetts	Page:	1 of 1

Document Title:	Quality Assurance Project Plan (QAPP)
	Feasibility Study
Lead Organization:	U.S. Environmental Protection Agency (EPA), Region 1
Preparer's Name and Organizational Affiliation:	Mr. Gary Glennon, Nobis Engineering Inc.
Preparer's Address and Telephone Number:	585 Middlesex Street
	Lowell, MA 01851; 978-703-6021
Preparation Date:	August 2017

Lead Organization's Project Manager:

December 21, 2017

Signature/Date

James H. Vernon, Ph.D. / Nobis Engineering Inc.

Printed Name/Organization

Lead Organization's Project QA Officer:

December 21, 2017

Signature/Date

Gary Glennon / Nobis Engineering Inc.

Printed Name/Organization

Approval Signature:

Signature/Date

Lynne Jennings / EPA Task Order Project Officer

Printed Name/Organization

Approval Authority

Other Approval Signatures:

Signature/Date

Nora Conlon, Ph.D. / EPA QAPP Coordinator/Reviewer

Printed Name/Organization

2.0 DOCUMENT OVERVIEW

Site Name/Project Name:	Nyanza Chemical Waste Dump, Operable Unit 2
Site Location:	Ashland, Massachusetts
Site Number/Code:	EPA ID# MAD990685422 / Site ID# 0100948
Operable Unit:	OU2
Contractor Name:	Nobis Engineering, Inc. (Nobis)
Contract Number:	EP-S1-06-03
Contract Title:	Remedial Action Contract (RAC 2)
Task Order Number:	0113-RICO-0115
Anticipated date of QAPP Implementation:	December 2017

1. **Guidance Used to Prepare QAPP:** EPA Requirements for QA Project Plans (QA/R-5), March 2001; EPA-New England Quality Assurance Project Plan Program Guidance, Revision 2, January 2010 (EPA-NE, 2010).

2. **EPA Program:** Comprehensive Environmental Response, Compensation, and Liability Act (CERCLA)/Superfund.

3. **Approval Entity:** EPA.

4. **QAPP Generic Program/Project Specific:** This document is a project specific QAPP, addressing sampling and analytical activities planned to study additional remedial alternatives for the contaminated groundwater plume and to evaluate the feasibility of implementing remedial alternatives at the site.

5. **Dates of Scoping Meetings That Were Held:** Informal telephone and email discussions regarding this QAPP were held between Nobis and EPA in June, July, and August 2017. The primary discussion topics were the list of existing wells to be sampled and the locations of the new monitoring wells. Other discussion topics included indoor air sampling locations and project scheduling. Overall project scoping meetings were held during the development of the WP and CE during May 2017. These included meetings on May 4, 2017, May 18, 2017, and May 25, 2017.

6. **Title of QAPP Documents and Approval Dates Written for Previous Site Work, If Applicable:**

Title	Approval Date
Quality Assurance Project Plan, Remedial Action, RFA# 08247	August 2008
Quality Assurance Project Plan Amendment 3	July 2012

7. **Organizational Partners (Stakeholders) and Connection with EPA and/or State:** Massachusetts Department of Environmental Protection (MassDEP). MassDEP has provided input on new well location and has shared monitoring data for OU1.

8. **Data Users:** EPA Task Order Project Officer (TOPO); MassDEP; Nobis Project Staff; Town of Ashland, Massachusetts (has occasionally requested project GIS files for their use).

9. **Document Control System:** Once approvals are provided by EPA, copies of the signed Title and Approval page will be distributed to Stakeholders listed in Table 3-1.

3.0 DISTRIBUTION LIST AND PROJECT PERSONNEL SIGN-OFF SHEET

In accordance with the EPA QAPP Guidance (EPA, 2001), this section documents the QAPP Distribution List and document control of the project-specific QAPP for the Nyanza Chemical Waste Dump, Operable Unit (OU) 2 (the Site) located in Ashland, Massachusetts.

3.1 Distribution List

The Distribution List (Table 3-1) documents who will receive copies of the approved QAPP. Typically, the final approved copies of the QAPP will be made available electronically via email or on compact disc (CD) in pdf format to those on the distribution list.

The document control number NH-4348-2017-D has been assigned to this document for tracking purposes. Individuals listed in Table 3-1 receiving a copy of the QAPP will be provided with all applicable revisions, addenda, and amendments. Those individuals in receipt of a controlled copy are responsible for removing all outdated material from circulation, and for distributing revised or additional material to update any copies within their organization.

A complete copy of the QAPP and any subsequent revisions will be maintained on file at Nobis in Lowell, Massachusetts and will be available to EPA upon request.

4.0 PROJECT ORGANIZATION

This section identifies the project team members and other key personnel participating in the project and describes their specific roles, responsibilities, and qualifications. This section also provides an explanation of the lines of authority, reporting relationships, and communication paths.

4.1 Project Organizational Chart

The key project personnel and responsibilities are listed in Table 4-1. The organizational chart presented as Figure 4-1, includes the names of the project contacts for each organization. Nobis is the prime contractor for all aspects of the Feasibility Study (FS), and all subcontractors will report directly to Nobis.

At a minimum, the anticipated subcontracted services include drilling services and well installation; well survey; investigation derived waste (IDW) disposal services; treatability studies; and Delivery of Analytical (DAS) laboratory services. Potential subcontractors are also identified in Figure 4-1.

4.2 Communication Pathways

The communication pathways are discussed in this section. Program level directions will be provided by the Nobis Program Manager and/or Nobis Deputy Program Manager to the Nobis Project Manager (PM), who will provide these directions to the technical team and Field Operations Leader (FOL). Additional program and technical direction may be provided by the Nobis Quality Assurance (QA) Officer, Lead Chemist, and Corporate Health and Safety Officer. Technical direction is communicated by the EPA TOPO to the Nobis PM. Communications between Nobis and EPA will be coordinated primarily between the PM and the TOPO. The EPA TOPO coordinates and receives input from the EPA Project Officer (PO), EPA QA Reviewer, and MassDEP with respect to the evaluation of the final Data Quality Objective (DQO) actions.

The FOL is the principal contact who provides communication and direction to the field technical staff and non-laboratory pool subcontractors. The FOL also provides information regularly concerning all field activities and status to the PM and communicates the sample shipping information to the Lead Chemist.

Nobis will not release Site-related information to entities outside of the project unless specifically directed to do so by EPA.

Dr. James Vernon, the Nobis PM, will serve as the primary point of contact for all project and field related issues. Mr. Gary Glennon, the Nobis Lead Chemist, will be the primary contact for all laboratory or data assessment and validation related issues. The FOL will oversee the field data collection activities and coordination with the on-site subcontractors.

Records of communication (i.e., letters, faxes, emails, telephone conversation logs, meeting minutes, etc.) to, or from Nobis will be maintained within the Nobis central project file.

4.3 Personnel Responsibilities and Qualifications

Roles and responsibilities for key Nobis Team individuals for this project are described in Table 4-1. The hierarchy of project personnel and subcontractors is shown in Figure 4-1. Nobis is the primary consultant to the Lead Organization (EPA) for this project, under the current RAC 2 contract. Subcontractors to Nobis will be used for activities including drilling services and well installation; well survey; IDW disposal services; and treatability studies. The EPA Office of Environmental Measurement and Evaluation (OEME) New England Regional Laboratory (NERL) and/or DAS laboratories will complete select analyses for volatile organic compounds (VOCs) in groundwater and indoor air samples and monitored natural attenuation (MNA) parameters in groundwater samples.

5.0 PROJECT PLANNING/PROJECT DEFINITION

The primary activities covered by this QAPP are:

- Groundwater Well Elevations – Completion of a synoptic round of water level measurements of three newly installed wells and existing wells in OU1 and OU2, a total of 87 wells.

- Monitoring Well Installation – Installation of three new monitoring wells in the downtown/Mill Pond area.

- Groundwater Sampling – Sampling of three new monitoring wells and 30 existing wells for VOCs. Select sampling of 10 wells for additional MNA parameters.

- Indoor Air Sampling – Sampling three air samples per structure in 20 structures for VOCs.

- Sampling and Data Evaluation Technical Memorandum – Preparation of a Technical Memorandum that presents the analytical data for groundwater and indoor air sampling, mapping sample locations and plotting data trends.

- Treatability Study – Collection of groundwater for use in bench scale and pilot scale testing and laboratory analysis for VOCs and other parameters (to be developed after initial sampling and well installation described above).

- Treatability Study Technical Memorandum – Preparation of a Technical Memorandum that summarizes the results of the bench scale and pilot scale treatability studies. This document will become part of the FS Report.

5.1 Project Scoping Meetings

One teleconference was held between Nobis and EPA on August 11, 2017 to discuss proposed new well locations. Sampling locations were discussed informally and by email in June, July, and August 2017.

5.2 Problem Definition

The project objectives are to study additional remedial alternatives for the contaminated groundwater plume and evaluate the feasibility of implementing the remedial alternatives identified. The overall goal is to provide the information necessary for EPA to write a well-supported Record of Decision (ROD) that, when implemented, will eliminate, reduce, or control risks to human health to the environment.

5.3 Site Description and History

The Site is in the Town of Ashland, Massachusetts (Figure 5-1). Figure 5-2 depicts the site plan. From 1917 to 1978, several companies operating at the Site produced textile dyes, dye intermediates, and other products. Solvents and other chemicals were used during operations and large volumes of industrial wastewater, sludge, and chemical wastes were generated. The discharges of these materials resulted in soil and groundwater contamination both on-site and off-site. The source of groundwater contamination is dense non-aqueous phase liquid (DNAPL) from the Site. Compounds detected in the recovered DNAPL are consistent with dye manufacturing operations and include VOCs such as trichloroethene (TCE), chlorobenzene, dichlorobenzenes, trichlorobenzenes, and nitrobenzene. From 1970 to 1978, some wastes were treated on-site and discharged to the Town of Ashland public sewer system. The facility was closed in 1978. In 1982, the Site was placed on the EPA National Priorities List (NPL). Since then, remediation has been conducted on-site, in adjacent

waterways and wetlands, and in surrounding wetlands and commercial areas. The focus of this project is OU2, which addresses concerns related to groundwater.

The original 1985 ROD for the Site, now referred to as the OU1 ROD, specified source control, including excavation and on-site capping of sludge and associated soil and sediment, and required further investigation of groundwater and possible additional source areas and wetlands. A second ROD issued in 1991 selected a management of migration remedy for groundwater (OU2). The 1991 ROD was written as an Interim Remedy to evaluate the effectiveness of groundwater extraction and treatment in meeting drinking water standards after an initial 5-year operational period.

EPA began design of a groundwater extraction and treatment system in 1992 in accordance with the 1991 ROD (interim ROD). In 1994, a pilot-scale treatment system was constructed. However, when the system operation began, DNAPL was discovered in an extraction well located on the northern portion of the Site. The presence of DNAPL raised concerns about the effectiveness of the planned extraction and treatment remedy. The treatment system was not designed to handle influent containing DNAPL. Thus, the pilot-scale treatment system was not tested and the full-scale design was postponed indefinitely.

A groundwater monitoring program was initiated in 1998 to assess plume migration and any changes in contaminant concentrations, as well as to determine if the DNAPL was an ongoing source of continued groundwater contamination. Approximately 30 wells were sampled on a semi-annual basis for VOCs, semi-volatile organic compounds (SVOCs), and metals. Elevated concentrations detected in both the overburden (shallow) and bedrock groundwater exceeded federal and state drinking water standards. The monitoring program continued through the fall of 2003.

Based on groundwater monitoring data, an indoor air sampling program was conducted between 1998 and 2004 to evaluate the risks to public health from groundwater contaminants volatilizing through soil gas into residential homes. These results indicated that the incremental cancer risks would exceed EPA's range of $1x10^{-6}$ to $1x10^{-4}$ for TCE in some of the residential homes and the Ashland Town Hall.

In 2006, EPA prepared an Explanation of Significant Differences (ESD) to the 1991 interim ROD. The ESD required extraction and off-site disposal of DNAPL, groundwater monitoring, installation

of vapor mitigation systems, additional indoor air testing, and installation of additional piezometers to evaluate the shallow groundwater plume.

In 2007, vapor mitigation systems were installed in 42 structures, and in 2013, DNAPL extraction systems were installed at MW/B-11 and MW-113A. From 2012 to 2015, semi-annual groundwater samples were collected and the data evaluated to determine feasibility of MNA to remediate the dissolved phase chlorinated VOC plume.

In 2014, the MassDEP issued a Groundwater Use and Value Determination for the Site. MassDEP identified one potentially productive aquifer (PPA4) which retained the potential future drinking water use designation based on hydrogeological characteristics. Data from PPA4 is evaluated in accordance with GW-1 and GW-2 standards. MassDEP plans to issue a revised Groundwater Use and Value Determination for the Site, which will include an update to PPA4 (the area with that designation will be reduced).

Nobis conducted a groundwater monitoring program from 2012 to 2015 to evaluate groundwater trends and determine the extent to which natural attenuation was occurring. The 2015 Groundwater Monitoring Report (Nobis, 2016) concluded that groundwater concentrations of chlorinated ethenes and benzenes, while decreasing in some areas, were not decreasing consistently and that aquifer conditions were not optimal for biodegradation. The report also noted that concentration trends for many wells were not statistically significant, and that additional groundwater data may help to resolve these trends.

6.0 PROJECT DESCRIPTION AND SCHEDULE

This section of the QAPP provides an overview of the general activities that will be performed and how and when they will be performed to meet the DQOs specified in Section 7.0.

6.1 Project Overview

The project objectives are to study additional remedial alternatives for the contaminated groundwater plume and evaluate the feasibility of implementing the remedial alternatives identified. The primary activities to achieve these objectives include installing three groundwater wells; completing a synoptic round of water level measurements for 87 wells; conducting groundwater sampling for 33 monitoring wells; completing indoor air sampling of 20 structures,

sampling three locations per structure; conducting bench scale and pilot scale treatability studies for a remediation alternative for the groundwater plume; analyzing four test wells during an expected five sampling events during the pilot test; and preparing Technical Memoranda for the initial groundwater and indoor air sampling and the bench and pilot treatability studies.

6.2 Project Schedule

The project schedule for these activities is presented on Table 6-1. If an event causes an impact to the schedule, the Nobis PM will notify the EPA TOPO immediately.

6.3 Analytical Services

Analytical data required for this project will be obtained using on-site measurements at the time samples are collected, and at off-site Contract Laboratory Program (CLP) Routine Analytical Services (RAS), OEME NERL, and DAS analytical laboratories. Table 6-2 provides a summary of analytical services and laboratories which will provide the services. Tables 6-3 through 6-8 identify the target analytes and associated project action limits (PALs) for each medium to be sampled and the quantitation limits that can be achieved by the proposed analytical methods.

EPA OEME NERL will analyze groundwater samples for VOCs and metals. CLP RAS laboratories will be utilized only as a backup means of analyses, if needed, for this project. The EPA OEME NERL laboratory will analyze groundwater samples for anions and indoor air samples for VOCs. The DAS laboratory, Eurofins Spectrum Analytical, Inc., located in Agawam, Massachusetts, will analyze groundwater samples for dissolved gases and oxygen demand parameters.

Refer to Section 12.0 for specific information pertaining to the analytical services required for this investigation.

Analytical methods were selected for use with the objective of achieving as many of the identified PALs as practical, considering the suspected contaminants of concern and the use of the data. Any analytes for which the proposed analytical methods do not achieve identified PALs, are highlighted in the Tables 6-3 through 6-8.

Table 6-9 defines the number of field sample and quality control (QC) samples to be collected and analyzed for each sampling event.

7.0 PROJECT QUALITY OBJECTIVES AND MEASUREMENT PERFORMANCE CRITERIA

This section describes project quality objectives and measurement performance criteria for measurement data in terms of precision, accuracy, representativeness, completeness, and comparability.

7.1 Introduction

QA objectives are qualitative and quantitative statements that specify the quality of data necessary for regulatory and/or project-specific requirements. The process of developing QA objectives for a given study helps to ensure that data generated are of adequate quality for the intended use. QA objectives may be expressed in terms of the precision, accuracy, representativeness, completeness, and comparability of the collected data.

The groundwater data obtained during this project are intended to provide additional information on the contaminants in the groundwater and to provide additional remedial alternatives for the contaminated groundwater plume. Groundwater data will be compared to applicable Massachusetts Contingency Plan (MCP) GW-1 and GW-2 standards. Additionally, a HHRA will be performed to evaluate risks associated with potential construction worker exposures to contaminants in Site groundwater.

The indoor air data obtained during this project are intended to provide information about vapor intrusion (VI) to buildings on-site. Indoor air data will be compared to applicable State criteria, including MCP residential threshold values. A VI screening evaluation will be performed to evaluate potential human exposures to contaminants in Site groundwater that may volatilize into indoor air at homes and businesses overlying the groundwater plume.

7.2 Project Data Quality Objectives

DQOs for the data collected under the investigations covered by this QAPP have been defined to ensure that the collected data will comply with EPA requirements.

Table 7-1 presents the DQOs for critical measurements in terms of precision and accuracy for all parameters analyzed for this investigation. Estimated accuracy is expressed as percent recovery, and estimated precision is expressed as a relative percent difference (for two values) or a standard deviation (for three or more values).

7.3 Measurement Performance Criteria

The measurement performance criteria are described in this section. The methods used to assess these criteria are presented in Table 7-1 and in this section.

7.3.1 Precision

In general, field duplicate samples will be collected at a rate of 1 per 20 samples, depending on method (see Table 7-1 and Table 13-1 for criteria). Field duplicates will provide a measure of field variability and sample homogeneity. Additionally, matrix spike (MS) and matrix spike duplicates (MSD) may be performed by the laboratory at a rate of one per 20 samples or once per sample delivery group (SDG) for organic parameters (see Table 13-2 for criteria) per matrix (groundwater). A laboratory duplicate will be performed once per 20 samples or once per SDG for metals, VOCs, and inorganics analyses (see Table 7-1 and Table 13-2 for criteria). Laboratory duplicates and matrix spike duplicates indicate laboratory variability and consistency. All precision data will be calculated using relative percent difference (RPD) determinations.

7.3.2 Accuracy

Method blanks, equipment blanks, and instrument blanks will be used to assess accuracy and bias (see Table 13-1 and Table 13-2 for criteria). For this project, equipment blanks will not be collected during groundwater or indoor air sampling activities because dedicated equipment will be used for collection. Calibration standards evaluate the continuing accuracy of the operating system (see Table 12-3 for criteria). Matrix spikes evaluate the accuracy of the preparation steps (see Table 13-2 for criteria). Laboratory control samples (LCS) and performance evaluation (PE) samples evaluate the accuracy of the complete analytical process (see Table 7-1 and Table 13-2 for criteria). This will include the non-CLP analyses by OEME. PE samples for the OEME analyses will be obtained from the EPA NE Performance Evaluation Chemist in accordance with Chapter 4 of the EPA New England Environmental Data Review Supplement for Regional Data Review Elements and Superfund Specific Guidance/Procedures, April 2013.

Percent recovery of known concentrations is used to monitor accuracy.

7.3.3 Representativeness

Representativeness is reflective of the design of the sampling program; representativeness is maximized by proper selection of sampling locations and collection of a sufficient number of samples. A representative sample should possess the same qualities or properties relevant to the investigation as the material under investigation. Section 8.0 addresses selection of representative sampling locations.

As a quantitative measure of representativeness, field duplicates will be collected and analyzed for all parameters in each matrix as specified in Tables 6-9 and 13-1. Field duplicate criteria are based on analytical method criteria and the EPA-NE data validation guidelines.

7.3.4 Completeness

Completeness is defined as a measure of the amount (percentage) of valid data obtained from a measurement system, field or laboratory, compared to the amount expected from the system. A target of 95 percent completeness for all field and laboratory data is planned for this project. Less than 100 percent may be a result of sample matrix issues, loss of sample, or inability to collect all planned sample points.

7.3.5 Comparability

Comparability addresses the confidence with which one data set can be compared to another. Use of appropriate sampling and analytical methods, chain-of-custody procedures, as well as adherence to strict QA/QC procedures, provide the basis for uniformity in sample collection and analysis activities. A quantitative measure of comparability in the laboratory can be measured with acceptable PE sample results. The PE samples will provide comparison of the laboratory performance to reference results for those parameters where PE samples are available.

7.3.6 Sensitivity

The CLP RAS laboratories, OEME, and DAS laboratories perform method detection limit (MDL) studies at least annually to determine their ability to detect the target analytes at the required quantitation limits. Quantitation limits are set at the lowest calibration point and based on method and sample matrix. See Section 7.3.7.

7.3.7 Quantitation Limits

Quantitation limits (QLs) are chosen to achieve PALs for the project. PALs for the project are based on the following:

Groundwater:

- MCP Method 1 Groundwater Standards, GW-1, November 2014.
- MCP Method 2 Groundwater Standards, GW-2, November 2014.

Indoor Air:

- MCP Vapor Intrusion Guidance, WSC-16-435, Residential Threshold Values, October 2016.

The target analytes, PALs, and laboratory QLs are included in Table 6-3 through Table 6-8. PALs that are not achievable with the listed QLs are highlighted in these tables. As laboratory QLs are based on published methods, the methods have been selected based on laboratory programs and available technology. The laboratory's method detection limits are typically three to five times lower than the project quantitation limits, and therefore, may provide valid but qualified results for reported data to achieve more of the PALs.

Even though some PALs are not achieved with low level CLP method for VOCs, groundwater samples will be analyzed by the low-level method rather than the trace level method because of historical high concentrations exceeding trace level ranges. Additionally, all analytes with QLs exceeding the PALs are not contaminants of concern (denoted by an asterisk on Table 6-3), except for vinyl chloride. Metals PALs can be achieved by performing inductively coupled plasma-mass spectrometry (ICP-MS) for antimony, arsenic, beryllium, thallium, and vanadium through the CLP program. All other metals will be analyzed by ICP-atomic emission spectroscopy (ICP-

AES). However, as the metals are proposed to be tested for MNA purposes, EPA OEME's reporting limits will be acceptable to identify key cations such as calcium, magnesium, iron, manganese, chromium, nickel, and zinc. The VOCs in indoor air achieve PALs for all contaminants of concern (denoted by an asterisk on Table 6-8).

8.0 SAMPLING PROCESS DESIGN

This section describes the sampling methodology of the field program and includes the specific information necessary to conduct the sampling components of field investigations. The sampling process design and rationale, including the sample locations, number of samples to be collected, and the sampling frequency are presented below.

8.1 Sampling Design Rationale

The objective of the field investigation and sampling program is to study additional remedial alternatives for the contaminated groundwater plume and evaluate the feasibility of implementing the remedial alternatives identified. The overall goal is to provide the information necessary for EPA to write a well-supported ROD that, when implemented, will eliminate, reduce, or control risks to human health to the environment. The subsections below describe the design of the various elements of the planned field investigation. Table 8-1 lists the sampling locations by media planned for this effort, the rationale for the proposed sampling, and the parameters which will be included for analysis.

8.1.1 Monitoring Well Installation and Development

Three 2-inch-diameter, schedule-40 polyvinyl chloride (PVC) monitoring wells will be installed to define the limits of the shallow overburden plume in the downtown/Mill Pond area. Monitoring wells will target the water table (estimated total depth of 15-20 feet below ground surface (bgs) for each well). All development groundwater will be allowed to infiltrate into the ground near the monitoring wells. Highly contaminated water is not anticipated in the area of these wells. Monitoring well locations are depicted in Figure 8-1 and are based partially on input from MassDEP as transmitted to Nobis by EPA.

The wells will be installed using direct push technique (DPT) drilling methods. Shallow overburden wells would be installed to a maximum depth of 15-20 feet bgs; well screens would be 10 feet long

and placed to span the estimated range in water table elevations. No analytical laboratory soil samples will be collected during the well installations; however, continuous soil samples will be obtained during drilling for field observations and to prepare geologic boring logs.

The newly installed monitoring wells will be developed and allowed equilibration time prior to performing groundwater sampling.

If any of the locations requested for monitoring well installation by EPA are on properties for which Nobis does not have a current access agreement, Nobis assumes that EPA will obtain and provide the needed access agreement(s).

8.1.2 Hydrogeological Assessment

The hydrogeological assessment includes directing a Massachusetts-licensed surveyor to obtain location and elevation data for the new wells and conducting a synoptic round of groundwater level measurements of the three new wells and the 84 existing wells, including water staff gauges and monitoring wells associated with OU1 on the landfill.

8.1.3 Groundwater Sampling

Existing wells have been selected for sampling to obtain additional VOC data based on criteria, including exceedances of GW-1 or GW-2 standards for chlorinated ethenes or chlorinated benzenes in the last 2 years (2014-2015) of MNA testing. These wells (30) are indicated as “selected to sample” with a “Y” in the appropriate column in Table 8-1. The three new shallow overburden wells will also be sampled for VOCs. The additional VOC data will be used to update groundwater statistics and to confirm plume configuration and stability. Of these wells, 10 will be sampled for additional parameters to support the evaluation of remedial alternatives: anions, dissolved gases, dissolved organic carbon (DOC)/ total organic carbon (TOC), chemical oxygen demand (COD), biological oxygen demand (BOD), and metals. Wells will be sampled using low-flow methods and the same pump configurations used in previous sampling rounds.

Nobis sought and received input from EPA as to the selection of existing wells to be sampled. One of the wells requested to be sampled by EPA is MW40MAIN. This well is not currently covered by any of the access agreements that Nobis has received. Nobis requests that EPA obtain permission from the property owner for Nobis to access this well if it has not already done

so. Nobis assumes that EPA will provide a written access agreement and owner or tenant contact information prior to the sampling event.

Associated QC samples, including field duplicates, MS/MSDs, and performance evaluation samples will be collected as appropriate for each SDG of samples collected and are summarized in Table 6-9.

8.1.4 Indoor Air Sampling

Nobis will collect indoor air samples from up to twenty structures on site by placing three 6-liter SUMMA® canisters within each structure, set for a 24-hour sample rate. Samples will be collected to provide data to complete a vapor intrusion assessment. Locations for indoor air sampling will be commercial and residential buildings in the downtown Ashland area and will be determined in consultation with EPA and MassDEP; the final list of properties to be sampled will also depend on owners' permission for access. The indoor air study area includes the properties above the GW-2 plume as depicted in Figure 8-2.

Associated QC samples, including field duplicates will be collected as appropriate for each SDG of samples collected and are summarized in Table 6-9.

8.1.5 Pilot Study Groundwater Sampling

A pilot-scale treatability study will be conducted in the vicinity of a groundwater hotspot (likely at the Worcester Air Conditioning (WAC) property, in an area with sufficient existing nearby wells for downgradient evaluation. An initial baseline sampling will be conducted of the four study wells prior to treatment. A QAPP addendum will be completed for the treatability study after the initial hydrogeological assessment and the remedial alternative screening for the FS are complete.

9.0 FIELD SAMPLING PROCEDURES AND REQUIREMENTS

Sampling procedures that will be used for the project are summarized in this section and in Table 9-1. Detailed standard operating procedures (SOPs) for field activities are included in Appendix A. These standardized protocols provide consistency between samplers; facilitate collection of accurate, precise, and representative data; and improve data comparability and usability.

9.1 Containers, Preservation, and Handling

The following sections on containers, preservation, and handling apply to the groundwater, indoor air, and pilot test sampling activities described in this QAPP.

Sample Containers

To ensure the integrity of the field samples, specific steps must be taken to minimize the potential for cross-contamination from the containers in which the samples are stored. Sample containers must be compatible with the analytes of interest. The sample containers required for the collection of the various analytical samples for the investigation are summarized in Table 9-2.

Nobis will procure adequate sample containers as described in subsequent sections for all analytical testing. All sample containers supplied will be Level 3, pre-cleaned in accordance with EPA guidance. Certificates of Analysis documenting lot approval will be provided with each shipment and retained in the project files. Any reuse of sample containers is expressly prohibited.

Sample Preservation and Holding Times

The purpose of sample preservation is to prevent or retard the degradation or transformation of target analytes in the field samples during transport and storage. Preservation efforts to ensure sample integrity will be initiated at the time of sampling and will continue until the analyses are performed. The required preservatives and holding times for specific analytical samples to be collected are indicated in Table 9-2. For those samples requiring chemical-preservation, the sample containers will be purchased pre-preserved.

After collection, all samples will be stored and shipped on ice to maintain sample temperature at 4°C ± 2°C. It is anticipated that samples to be submitted to the RAS laboratories will be shipped via FedEx service. Samples to be submitted to the OEME NERL and DAS laboratories will be transferred to laboratory representatives in the field or dropped off at laboratory locations. Sample management will be performed in the field in accordance with the Scribe Sample Documentation SOP DOC-002 (Appendix A). Sample shipment will be performed in accordance with the Sample Shipment SOP SH-001 (Appendix A). The recommended maximum holding times for analytical samples are indicated in Table 9-2; maximum holding times are calculated from the date and time of sample collection.

9.2 Monitoring Well Installation and Development

Monitoring wells will be installed using large core DPT methods to advance three shallow overburden monitoring wells in accordance with SOP SA-004 (Appendix A). The shallow overburden monitoring wells will be installed to an estimated depth of 15-20 feet. If necessary, well depths will be modified based on depth of groundwater at each location. Monitoring wells will be installed in accordance with the Monitoring Well and Piezometer Installation SOP HYD-001 (Appendix A). Although no analytical laboratory soil samples will be collected during the well installations, continuous soil samples will be obtained during drilling to perform field subsurface soil observations and prepare geologic boring logs. Lithologic descriptions of subsurface soils will be logged in the field and recorded in the log book by the field geologist in accordance with the Description and Identification of Soils SOP SA-001 (Appendix A). Soil will be field screened using a photo-ionization detector (PID) in accordance with the Vapor and Air Screening SOP FS-007 (Appendix A).

Overburden monitoring wells will be constructed of 2-inch diameter schedule-40 PVC with 10-ft of 0.010-inch slotted well screen. Screen lengths may be modified in the field based on groundwater conditions observed. Following installation, monitoring wells will be developed in general accordance with the Monitoring Well Development SOP HYD-004 (Appendix A), by surging and over-pumping to remove fines and establish groundwater flow into the well. All development groundwater will be allowed to infiltrate into the ground near the monitoring wells. Highly contaminated water is not anticipated near these wells.

9.3 Groundwater Sampling and Water Level Measurement Procedures

Prior to performing groundwater sampling, new and existing groundwater monitoring wells (a total of 87 wells) will be gauged to provide local potentiometric surface and potential groundwater flow information. Groundwater well gauging will be performed in accordance with the Groundwater Level Measurement SOP HYD-003 (Appendix A).

Once the synoptic groundwater measurement event is complete, groundwater samples (three new and 30 existing listed in Table 8-1 as “selected to sample”) will be collected utilizing the EPA low-flow groundwater sampling protocol in accordance with a the low-flow groundwater sampling SOP SA-003 (Appendix A).

The low-flow groundwater samples will be collected utilizing dedicated, disposable polyethylene tubing and peristaltic pumps. Bladder pumps or similar submersible pumps will be used if necessary at locations where peristaltic pumps cannot extract groundwater sufficiently against natural groundwater table head pressure.

Instrumentation utilized during the low-stress sample collection will include an In-Situ® SmarTroll water quality meter (or equivalent) and a LaMotte 2100q turbidimeter (or equivalent) to collect field parameters (e.g., temperature, specific conductivity, pH, dissolved oxygen, and turbidity) in accordance with EPA low-flow sampling protocol and the Field Measurement of Water Quality Parameters SOP SA-008 (Appendix A). Each of these instruments will be calibrated and checked for drift after each day's activities. All non-dedicated equipment will be thoroughly decontaminated in accordance with the Field Sampling Equipment Decontamination SOP FS-004 (Appendix A). Sample preservation requirements are specified in Table 9-2.

9.4 Indoor Air Procedures

Indoor air samples will be collected in accordance with SUMMA® Canister Sampling SOP ENV-029 (Appendix A). For collection of indoor air samples, a flow measuring device (a regulator set to limit flow to 15 mL/min) will be connected to the 6-Liter SUMMA® canister for collection of the laboratory sample. Prior to opening the SUMMA® canister valve, the time and initial vacuum pressure will be recorded, as well as the serial numbers of the canister, gauge, and critical orifice. The vacuum pressure will also be recorded immediately after opening the canister valve. Ambient air will be screened for VOCs using a PID. The sample will be collected over a twenty-four-hour duration at a desired flow rate of less than 15 mL/min, and the time and final vacuum pressure (ideally greater than zero) will be recorded just before closure of the SUMMA® canister valve.

9.5 Pilot Study Groundwater Sampling Procedures

Pilot study groundwater wells will be collected using the same methods as the groundwater sampling procedures listed in Section 9.3: low-flow groundwater sampling SOP SA-003; In-Situ® SmarTroll multi-meter (or equivalent) SOP FS-008, a LaMotte 2020™ Turbidimeter (or equivalent) SOP FS-006 to collect field parameters (e.g., temperature, specific conductivity, pH, dissolved oxygen, and turbidity) in accordance with EPA low-flow sampling protocol and the Field Measurement of Water Quality Parameters SOP SA-008 (Appendix A).

9.6 Sampling SOP Modifications

No method modifications are anticipated for this investigation. If major modifications to Nobis field sampling procedures become necessary, the EPA TOPO will be contacted for approval prior to implementation of the modifications. Any minor changes to the sampling SOPs will be documented in field logs as they become necessary. The documentation will include the reason for modification as well as the modifications themselves.

9.7 Decontamination of Equipment

Decontamination of equipment and sample collection tools will be completed in accordance with the Field Sampling Equipment Decontamination SOP FS-004 (Appendix A). All non-dedicated equipment utilized during this investigation will be thoroughly and completely decontaminated in between each use. In addition, the necessary field equipment blanks will be collected from each piece of equipment in accordance with the QA/QC requirements of the project. Field equipment blanks will evaluate the effectiveness of the cleaning and decontamination procedure utilized during the investigations. For this project, it is anticipated that all sampling equipment will be dedicated and decontamination and equipment blanks will not be required.

9.8 Field Equipment Calibration

Field instruments will be maintained in accordance with manufacturer's specifications and calibration information will be recorded in the field logbook and on field calibration sheets daily. A PID meter will be used during the monitoring well installation to monitor for health and safety purposes. The meters will be calibrated before the work day, during field activities when necessary, and will be calibration checked at the close of the field day per manufacturer's instructions. A SmarTroll multi-meter or equivalent will be used during groundwater monitoring well sampling to document monitoring water quality parameters. The SmarTroll will be calibrated in accordance with the Calibration of In-Situ SmarTroll SOP FS-008 and manufacturer's instructions. A LaMotte 2020 turbidimeter or equivalent will be utilized to monitor water sample turbidity and calibrated in accordance with manufacturer's recommendations and the Calibration of Turbidity Meters SOP FS-006. Both calibration SOPs are included in Appendix A.

9.9 Field Equipment Maintenance, Testing, and Inspection Requirements

Field instruments and equipment used for sample analysis will be serviced and maintained only by qualified personnel. Repairs, adjustments, routine maintenance, and calibrations made on-site will be documented in an appropriate logbook or data sheet that will be kept on file. The instrument maintenance and calibration records will clearly document the date, the description of the problems, the corrective action taken, the result, and who performed the work.

9.10 Inspection and Acceptance Requirements for Supplies and Sample Containers

Supplies (including sample containers) will be obtained from appropriate vendors and will be maintained in a clean condition, away from contaminant sources. Nobis will obtain certified-clean bottles for sampling from an approved vendor for organics and inorganics analyses. Certificates of analyses will be maintained in the project files for each lot of bottles utilized. The subcontract laboratory will be providing certified-clean containers to Nobis for the dissolved gases and oxygen demand analytical testing.

10.0 SAMPLE HANDLING, TRACKING AND CUSTODY REQUIREMENTS

The following sections describe the methods to document, handle, and track samples.

10.1 Sample Collection Documentation

A single bound field book will be maintained by the FOL to record Site activities. Field data sheets shall be completed by the field personnel and turned into the FOL after each day. All field documentation will be completed in indelible ink. Field sheets to be utilized are included in the SOPs in Appendix A.

The following items should be recorded on sample data sheets:

- Sampler name
- Sample collection method
- Information concerning sampling changes, scheduling modifications and change orders
- Details of sampling location

- Date and time of collection
- Field observations
- Any field measurements made
- Sample identification number(s)
- Sample preservation
- Documentation for IDW (e.g., contents and approximate volume of waste, disposal method)
- Documentation of any scope of work changes required by field conditions
- Signature and date (entered by personnel responsible for observations)

10.2 Sample Handling, Tracking, and Custody Procedures

This section describes procedures for sample handling, tracking, and custody procedures to be followed by Nobis' sampling personnel and the subcontracted laboratories. The primary objective of sample handling, tracking, and custody is to provide an accurate written record that can be used to trace the possession and handling of a sample from the moment of its collection through its analysis. A sample is considered to be in custody if it is in someone's physical possession, in someone's view, or kept in a secured area that can only be accessed by authorized personnel. Sample identification documents must be carefully prepared so that sample identification and chain-of-custody procedures can be maintained and sample disposition controlled. Sample identification documents shall include field notebooks, sample labels, custody seals, and chain-of-custody records.

10.2.1 Field Custody and Sampling Shipping Procedures

Each sample collected will be given a unique sample number. For samples bound for CLP RAS laboratories (if applicable), the Nobis Lead Chemist will assign sample numbers. For CLP organic samples, sample numbers in the form of Axxxx will be assigned. For CLP metals samples, sample numbers in the form of MAxxxx will be assigned. Nobis field staff then assigns the numbers to individual samples. These numbers afford EPA the ability to track samples across the agency.

Nobis also tracks samples that are sent to the DAS laboratories. Nobis assigns numbers in the format Dxxxx provided by EPA for their internal sample tracking system. In all cases, these numbers must appear on labels that are affixed to the appropriate sample containers. In addition

to the CLP RAS/DAS-assigned numbers, Nobis also utilizes a sample numbering system described below. OEME assigned samples will use the Nobis field sample number only.

To provide EPA personnel with information necessary to track samples, Nobis will be utilizing an EPA-provided sample documentation system known as Scribe (version 3.10). This software compels the user to enter required information needed to properly populate chains of custody, sample labels, and sample tags. Additionally, this software provides a mechanism by which Nobis may track samples and analyses internally. Sample identification numbers will be included on the chain-of-custody form to accompany each sample shipment submitted for laboratory analysis. Scribe procedures are outlined in Nobis SOP DOC-002 (Appendix A).

The field sampling personnel will be responsible for uniquely identifying, labeling, and packaging samples to preclude breakage during shipment. The sample numbering system is described in Table 10-1.

Chain-of-custody records provide documentation of the handling of each sample from the time of its collection to its destruction. Nobis will initiate custody of the samples in the field and, in-turn, transfer custody of the samples to the courier (as needed), and lastly to the laboratory. Chain-of-custody forms will be used for recording pertinent information about the types and numbers of samples collected and shipped for analysis.

The Nobis FOL or sample manager will be responsible for preparing and properly implementing the sample labeling and chain-of-custody process as soon as samples are collected in accordance with the requirements and procedures specified in User Manual for Scribe CLP Sampling (EPA, 2017). The general procedures are performed as described below.

A separate chain-of-custody will be prepared for each sample shipment, segregated by laboratory. The chain-of-custody will be signed and dated by the preparer and should additionally be signed and dated each time sample custody is transferred. The chain-of-custody will include the shipment carrier and the corresponding air bill number if applicable. Chain-of-custody forms will be placed in waterproof plastic bags and taped to the inside lid of each shipping container. The container will be sealed with chain-of-custody seals. The Lead Chemist will keep an electronic copy of the original chain-of-custody. The original chain-of-custody will accompany the sample shipment to the laboratory and be returned with the data package.

Samples will be packaged and shipped to the appropriate laboratory in accordance with the Sample Shipment SOP SH-001 (Appendix A).

10.2.2 Laboratory Custody Procedures

The laboratory chain-of-custody of the samples begins with sample receipt and continues through final disposition of the field samples and other analytical samples (e.g., extracts) generated during analysis.

A copy of applicable field chain-of-custody records will be maintained with each sample set. In addition, each laboratory will maintain chain-of-custody records which include: the unique laboratory sample identification number; date and time of collection, preparation and analysis; source of sample; analyses required; signatures of laboratory personnel relinquishing and receiving sample custody; and any other pertinent information.

For this project, custody of field samples will be relinquished to the OEME, CLP RAS (if applicable), and DAS subcontract analytical laboratories at the time of sample receipt. Specific procedures will be followed by the laboratories to ensure maintenance of an accurate written record that can be used to trace the possession and handling of a sample from the moment of its collection through its analysis and disposal and to ensure that the integrity of the sample is maintained throughout the analytical process.

The CLP RAS laboratories maintain chain-of-custody according to the CLP RAS program requirements, respectively. The final chain-of-custody is delivered to Nobis in the data package as evidence of compliance. The OEME and DAS laboratories will also be required to maintain chain-of-custody similarly and the completed chain-of-custody form will be provided to Nobis in the final data report.

Nobis' Lead Chemist or designee will be responsible for ensuring that all laboratory custody SOPs by the subcontracted laboratories are followed.

11.0 FIELD ANALYTICAL METHOD REQUIREMENTS

The following sections describe the methods and procedures for field analyses.

11.1 Field Analytical Methods and Standard Operating Procedures

Appendix A contains the SOPs for general field screening methods to be used at the Site. For this investigation, groundwater quality measurements (dissolved oxygen [DO], oxidation-reduction potential [ORP], pH, specific conductance, turbidity, and temperature) will be obtained in the field during groundwater sampling with an In-Situ® SmarTroll water quality meter and LaMotte 2020 turbidimeter or equivalent. Soils will be field screened for safety purposes with the handheld portable PID meter in accordance with Vapor and Air Screening SOP FS-007 (Appendix A).

11.2 Field Analytical Method/Standard Operating Procedures Modifications

Any modifications to field analytical methods and/or SOPs will be handled as described in Section 9.8 of this QAPP.

11.3 Calibration Procedures and Frequency

This section presents information regarding the calibration of field instrumentation to be used by Nobis. All instruments and equipment used during sampling and analysis will be operated, calibrated, and maintained according to the manufacturers' guidelines and recommendations, as well as the criteria set forth in this section. Operation, calibration, and maintenance information will be maintained in the calibration log for each instrument, and will be available upon request. If daily calibration cannot be achieved, the instrument will be scheduled for service and an alternate instrument will be used.

In general, instruments will be calibrated at the start of each day of sampling and after any instrument maintenance is performed. Instrument calibration checks will be performed at the end of the day, or during sampling in the event measurement values appear to vary from expected conditions. All calibration data and calibration checks will be entered into the field log forms. Calibration checks will be performed during regular equipment operation to discern instrument drift. Failure of an instrument to maintain accurate calibration will be reported to the FOL who must take immediate action to ensure that accurate field data are collected. The faulty instrument will be tagged out of service and will not be used until it has been repaired or recalibrated.

The In-Situ® SmarTroll water quality meter and the LaMotte 2020 turbidimeter or equivalent will be calibrated daily and checked for accuracy against known standards or references; if necessary, recalibration will be initiated. Calibration measurements will be documented on calibration logs. Water quality meter calibration and operations will be completed in accordance with the manufacturer specifications and associated SOPs FS-005 (YSI Calibration) and FS-006 (Turbidity Meter Calibration) (Appendix A). The procedures for calibration are summarized in Table 11-1.

If total VOC emissions concentration data are required in the field for health and safety screening purposes, this data will be collected using a MiniRae 2000 PID (or equivalent). The procedures for use and calibration of these instruments are summarized in the Vapor and Air Screening SOP attached in Appendix A, as well as the manufacturers specifications and instructions which will be on Site. Calibration will be verified before use in the field, at the beginning of each day of field sampling activities, and after instrument maintenance. Calibration is verified again at the end of the day to check for drift. The calibration for each instrument is summarized in Table 11-1. Calibration will be performed at ambient temperature and pressure.

11.4 Field Analytical Instrument/Equipment Maintenance, Testing, and Inspection Requirements

Maintenance, testing, and inspection requirements for instruments and equipment to be used by field personnel are specified in Table 11-2. More detailed instrument calibration and maintenance instructions are provided in instrument manuals and SOPs.

11.5 Field Analytical Inspection and Acceptance Requirement for Supplies

Supplies in the field shall be delivered free of contamination and will be maintained to be free of contaminants of concern, other compounds, and interferences. The FOL will be responsible for checking that supplies are properly maintained.

12.0 FIXED LABORATORY ANALYTICAL METHOD REQUIREMENTS

The following sections describe the analytical method requirements for the fixed laboratory analyses to be conducted at the Site during FS activities.

12.1 Fixed Laboratory Analytical Methods and Standard Operating Procedures

The sampling for this project requires the analysis of groundwater samples for VOCs, metals, anions, dissolved gases, and oxygen demand parameters; and of indoor air samples for VOCs. The details of the methods that will be used for testing are shown in Table 12-1.

Thirty-three groundwater samples will be analyzed for VOCs by EPA OEME NERL or (if needed) through the CLP program. A subset of 10 groundwater samples will be analyzed for MNA parameters (metals, anions, dissolved gases, and oxygen demand parameters consisting of: DOC/TOC, BOD, and COD). The anions will be analyzed for the EPA OEME NERL and the metals will be analyzed by EPA OEME NERL or (if needed) through the CLP program. Remaining analyses will be performed through the DAS program by Eurofins Spectrum Analytical, Inc., located in Agawam, Massachusetts. Three indoor air samples per 20 structures (total of 60 samples) will be tested for VOCs to evaluate vapor intrusion. Indoor air analysis will be completed by EPA OEME NERL. The future bench scale and pilot scale treatability study is expected to have baseline and three subsequent rounds of groundwater sampling collected from four monitoring points (total of 16 samples), with the final parameter list to be finalized after the initial sampling is completed and incorporated into a revised QAPP.

12.2 Fixed Laboratory Analytical Method/Standard Operating Procedures Modifications

EPA OEME NERL and DAS laboratory SOPs are included in Appendix B to document procedures that will be used for this project. CLP statements of work (SOWs) are published methods and will be used without modification.

12.3 Fixed Laboratory Analytical Calibration Procedures

Table 12-2 outlines calibration procedures associated with all fixed laboratory instruments. These calibration procedures ensure that the analytical methods and selected instrumentation to meet project requirements for selectivity, sensitivity, accuracy, and precision.

12.4 Fixed Laboratory Instrument Equipment Maintenance, Testing and Inspection

Routine inspection and preventative maintenance is conducted by each laboratory to minimize the occurrence of instrument failure and other system malfunctions. Designated laboratory employees regularly perform routine scheduled maintenance and repair of (or coordinate with the vendor for repair of) all instruments. All maintenance that is performed is documented in the laboratory's operating record. All laboratory instruments are maintained in accordance with manufacturer's specifications and laboratory SOPs.

Table 12-2 shows the fixed laboratory instrument maintenance and calibration requirements for the chosen project methods.

12.5 Fixed Laboratory Inspection and Acceptance Requirements for Supplies

Prior to field work (typically 2-3 weeks), the Nobis Lead Chemist will submit RAS requests to the EPA Sample Management Office (SMO) through the Regional Sample Control Coordinator (RSCC), which will select and notify laboratories of the upcoming analyses. Likewise, the Lead Chemist will notify the OEME and DAS laboratories of upcoming work and schedule delivery of sample bottles. These notifications will provide the laboratories with adequate time to obtain supplies for analyses, which will be free of contaminants and interferences.

At the same time Nobis will obtain certified-clean bottles for sampling from an approved vendor. Certificates will be maintained in the project files. The DAS laboratory will be providing Nobis with sample bottles shown in Table 9-2 that have been certified-clean for dissolved gases and oxygen demand tests.

13.0 QUALITY CONTROL REQUIREMENTS

QC samples will be collected and analyzed to assess the quality (cleanliness and effectiveness) of the sampling effort and of the analytical data. QC samples are collected by the sampling team for use by the CLP RAS, OEME, and DAS subcontracted laboratories.

QC samples for this event will include replicates of field samples (field duplicates), trip blanks, MS/MSDs, and PE samples. The types of field QC samples to be collected are provided in Table 7-1

and the number of field QC samples is listed in Table 6-9. The types, frequency, and performance criteria for analytical QC required for the planned analyses are presented in Table 13-1.

14.0 DATA ACQUISITION REQUIREMENTS (NON-DIRECT MEASUREMENTS)

The data generated by this investigation will supplement the existing chemical data from the 2012 to 2015 MNA evaluation (Nobis, 2016), which includes results from eight rounds of groundwater sampling: four spring rounds (approximately 20 wells sampled) and four fall rounds (approximately 40 wells sampled, including the wells from the spring rounds). The DQOs and QA/QC procedures are the same for this data set and the earlier MNA evaluation. The combined OU2 data will be supplemented with analytical results from OU1 groundwater monitoring, collected by a MassDEP contractor in accordance with the OU1/OU3 Sampling and Analysis Plan (Clean harbors Environmental Services [Clean Harbors], 2013). Clean Harbors produces an inspection and monitoring report in spring and fall of each year; and Nobis expects to utilize the data from the most recent report available (expected to be Spring 2017), if provided to Nobis by EPA, when evaluating results from the groundwater sampling round.

15.0 DOCUMENTATION, RECORDS, AND DATA MANAGEMENT

Collection and recording of field observations, field measurements, analytical data, and other data management activities will be performed and documented such that all project team members can use the information. Data reduction consists of compiling and summarizing data collected during field activities. Field and analytical data typically will be summarized in a tabular or other appropriate format. All information and data will be reported, and verified for accuracy with the original sources of data. For analytical data, units designated by the analytical method will be reported. Analytical data will be verified with the original sources of laboratory data whenever manual transcription is required.

Table 15-1 identifies the documents and records that will be generated for all aspects of the project.

15.1 Fixed Laboratory Data Package Deliverables

OEME deliverables will only contain sample results and laboratory QC sample results. Full CLP data packages according to CLP RAS SOWs SOM02.4 and ISM02.4 requirements will be provided for organics and inorganics (metals) analyses, respectively (if applicable). The DAS

laboratories will provide CLP-like data packages for the dissolved gases and oxygen demand parameters, which will include all sample results, QC sample results, and raw data, sufficient to verify calculations.

The EPA OEME NERL laboratory submits their data deliverables to the EPA TOPO, who forwards it to Nobis for review. CLP RAS laboratories submit their deliverables to EPA for contract validation. Once the EPA is satisfied that the laboratory met its contractual obligations, the data is then processed through the EPA's Electronic Data Exchange and Evaluation System (EXES) Data Manager (EDM) for automated data validation. The CLP RAS data are then forwarded to Nobis for data validation (if required; see Section 17) or review, and storage. DAS laboratories submit the data deliverables directly to Nobis for review.

Data deliverables for CLP RAS testing will be targeted to a 21-day turnaround time (from sample receipt to data package delivery). Data deliverables for DAS testing will be requested for a 14-day turnaround time. Data deliverables for EPA OEME NERL testing are on a 30-day turnaround time.

15.2 Electronic Data

Electronic data deliverables (EDDs) from the CLP RAS laboratories will be provided in the EPA Superset or EQuIS format, which Nobis will download from EXES. EDDs from the DAS laboratories will be provided in an EQuIS or Excel format. EDDs from EPA OEME NERL are in an Excel format. Data from the RAS, OEME, DAS and field laboratories will be entered into the Nobis environmental data management system.

16.0 ASSESSMENTS AND RESPONSE ACTIONS

This section describes activities that facilitate assessment of the effectiveness of data collection and reporting activities. Nobis has developed a QA program specific to RAC 2 that is based on Nobis' corporate Policies and Procedures. Nobis applies this program to all the work performed on Nobis RAC 2 Task Orders.

Nobis' QA program is overseen through the RAC 2 QA Officer and RAC 2 PM. It is the responsibility of each PM to apply the appropriate QA measures to Task Orders (TOs) and verify that QA procedures are adhered to and documented as required by the RAC 2 QA program. For each TO, the QA process begins at the TO work plan stage and is carried through until the TO is

closed out. For TO field and sampling tasks, the project-specific QAPP further outlines QA requirements, including assessment and response actions, specific to each TO.

Elements of the RAC 2 QA program as well as the types of planned assessment activities for this TO are described below.

16.1 Planned Assessments

The planned assessments for the groundwater, indoor air, and pilot study sampling will consist of: 1) review of field activities and notebooks by the FOL; 2) CLP program QA; 3) tier 1, stage 1 completeness check of all data packages; 4) tier 1 modified validation of OEME data; 5) tier 1 plus validation of all RAS and DAS data; 6) PE sample evaluation of RAS analyses; and 7) QA of overall project activities and documents.

The field QA reviews will be undertaken by Nobis' FOL or designee. Initial laboratory QA reviews will be undertaken by the laboratories. Data review will be performed by Nobis' chemistry staff, and if required additional QA reviews of laboratory procedures may be performed as a result of the data reviews. These reviews will assure that activities and data are implemented in accordance with the QAPP and associated SOPs. Additionally, laboratory audits of the DAS laboratory selected for the project may be performed if data quality issues are identified.

Field assessments will be performed randomly to determine the accuracy of the field sampling, documentation, and measurement systems. Adherence to SOPs and this QAPP will be evaluated by the FOL or designee. Recommendations for corrective action, if required, will be made at the time of the audit. Additionally, the FOL will monitor the field team to ensure procedures that have been outlined in the project documents are followed. The Lead Chemist or designee will also review the following documents to ensure conformance:

- Field logbooks and forms,
- Field equipment calibration sheets,
- Sample containers and sample preservation used for collected samples,
- Specified numbers and types of samples are collected and sent to the laboratory, and
- Custody forms, including sample labels and chain-of-custody records.

All fixed laboratory analytical data will be reviewed for overall quality as outlined in Section 17.0.

16.2 Assessment Findings and Corrective Action Responses

This section addresses the processes by which QAPP deviations and project deficiencies, identified through the planned project assessments, will be handled.

When, as a result of staff observations, reviews, etc., QC sample analysis, sampling, or analytical systems are shown to be unsatisfactory, a corrective action will be implemented. Staff and management at Nobis, the field team, and the RAS, OEME, or DAS laboratories may be involved in the corrective action. If previously reported data are affected by the situation requiring correction, or if the corrective action will affect the project budget or schedule, the action will directly involve Nobis' PM. Corrective actions are of two kinds:

- Immediate - to correct or repair nonconforming equipment and systems. The need for such an action will most frequently be identified by the field technician or analyst.
- Long-term - to eliminate causes of nonconformance. The need for such actions will probably be identified by audits or data assessments.

Depending on the nature of the problem, the corrective action employed may be formal or informal. In either case, occurrence of the problem, corrective action employed, and verification that the problem has been eliminated will be documented. In some cases, the documentation may only be a notation in a logbook. For more complex problems, a memorandum or report and response may be required, and the EPA TOPO will be notified.

Field Operations

On-site observations of deviations from quality in field operations that require corrective action in the field will be identified by the FOL or by the Lead Chemist from document review. Once the problem has been identified, prompt and appropriate action will be taken by the field staff, FOL, or PM to correct the situation. After a corrective action has been implemented, its effectiveness will be verified and documented in the Site log. If the action does not resolve the problem, appropriate personnel will be assigned by the Program Manager or PM to investigate and effectively remedy the problem.

Documentation of all corrective actions is required. Immediate corrective actions taken in the field will be documented in the field logbooks and approved by the FOL.

Laboratory Operations

If weaknesses or problems are uncovered during system or performance audits or QC sample analyses, then corrective action will be initiated immediately. The laboratory's Project Manager, Analytical Coordinator, QA Coordinator, and analyst must be involved in the corrective action. If previously reported data or project schedule or budget will be affected, then the corrective actions planned will be directly reported to the laboratory Project Manager, Nobis' Program Manager, PM, and QA Officer by Nobis' Lead Chemist.

Corrective action might include, but not necessarily be limited to: recalibration of instruments using freshly prepared calibration standards; replacement of solvent lots or other reagents that give unacceptable values; instrument repair; additional training of laboratory personnel in correct implementation of sample preparation and analysis methods; reassignment of personnel, if necessary, to improve the overlap between operator skills and method requirements; recalculation of results; and re-sampling, if possible.

17.0 QUALITY ASSURANCE MANAGEMENT REPORTS

The QA Management Reports will be prepared to update the status of the project. Table 17-1 lists the type and frequency of the reports, the expected delivery dates, persons responsible for generating the reports, and the recipients of the reports. Efficient communication of project status and problems allows Nobis and EPA to implement timely, effective corrective actions.

18.0 VERIFICATION AND VALIDATION REQUIREMENTS

Sample collection information will be transcribed directly into field logbooks or onto standardized forms (Appendix A). Procedures for recording this information are described in Section 10. Data verification is completed first by the field technician, then by the FOL. A final review will be done by the Lead Chemist (or designee) and/or the Nobis PM prior to final reporting.

Likewise, laboratory data verification begins with the analyst or technician who performs a 100 percent review of the data to ensure that the work was performed correctly. An experienced peer

will then systematically check the data. This check will be performed to ensure that initial review has been completed correctly and thoroughly. A third-level review will be performed by the Laboratory Project Manager (or designee) before results are submitted to Nobis. This review serves to verify the completeness of the data report and to ensure that project requirements are met for the analyses performed. The Laboratory Project Manager will prepare a narrative to accompany the data report that includes relevant comments, including data anomalies and non-conformances, pertaining to the analyses.

Data validation will be performed according to the *EPA-NE Data Review Program Guidance,* (EPA, April 2013a) and *EPA-NE Environmental Data Review Supplement* (EPA, April 2013b). All analytical data will be reviewed to tier 1, stage 1, which consists of a completeness check. OEME data will be reviewed to a tier 1 modified level. This review will include a review of laboratory and field sample QC results, modified to the specific laboratory methods. A more limited review will be conducted because a full data package is not available. All CLP RAS (if applicable) and DAS data will be reviewed to a tier 1 plus level, which includes review of laboratory and field sample QC results and select recalculation and verification of results.

Table 18-1 outlines the data verification process and Table 18-2 defines the data review criteria and levels planned for the data.

19.0 VERIFICATION AND VALIDATION PROCEDURES

The Nobis Lead Chemist or data validation staff will perform the validation according to the procedures outlined in Section 18. OEME data be taken through a tier 1 modified data review. CLP RAS (if applicable) and DAS data will be taken through a tier 1 plus data review.

Laboratory data generated from the sampling activities will be validated in accordance with the following guidance documents, modified where appropriate.

- *EPA-NE Data Review Program Guidance, (EPA, April 2013a)*
- *EPA-NE Environmental Data Review Supplement,* (EPA, April 2013b)
- *EPA National Functional Guidelines for Superfund Organic Methods Data Review (EPA, August 2014a)*

- *EPA National Functional Guidelines for Inorganic Superfund Data Review (EPA, August 2014b)*

Additionally, EPA's EXES data system uses EPA's CLP National Functional Guidelines listed above for automated data validation in some steps, where possible. The results of the validation will be documented and submitted to EPA in data review memos formatted to EPA Region 1 requirements.

20.0 DATA USABILITY/RECONCILIATION WITH PROJECT QUALITY OBJECTIVES

After each data review, the Lead Chemist shall prepare a memorandum summarizing the findings of the data validation and review. The memorandum shall include an evaluation of the results in relation to the DQOs for the project. These results and/or copies of the memos are included in final reports for the project.

21.0 REFERENCES

Clean Harbors. 2013. Sampling and Analysis Plan, Nyanza Chemical Waste Dump, Ashland, Massachusetts, Operable Units 1 and 3. October.

EPA. 2001. USEPA EPA Requirements for Quality Assurance Project Plans. EPA QA/R-5. EPA/240/B-01-003. March.

EPA. 2011. USEPA CLP National Functional Guidelines for Chlorinated Dibenzo-p-Dioxins (CDDs) and Chlorinated Dibenzofurans (CDFs) Data Review. OSWER 9240.1-53. USEPA-540-R-10-016. Office of Superfund Remediation and Technology Innovation. September.

EPA. 2013. New England Environmental Data Review Supplement for Regional Data Review Elements and Superfund Specific Guidance/Procedures. April.

EPA. 2014a. EPA National Functional Guidelines for Superfund Organic Methods Data Review. EPA-540-R-014-002. Office of Superfund Remediation and Technology Innovation. August.

EPA. 2014b. EPA National Functional Guidelines for Inorganic Superfund Data Review. EPA-540-R-013-001. Office of Superfund Remediation and Technology Innovation. August.

EPA. 2017. ERT User Manual for Scribe CLP Sampling, V3.10, US EPA Environmental Response Team (ERT). April.

EPA-NE. 2010. Quality Assurance Project Plan Program Guidance, Revision 2. January.

EPA-NE. 2013a. Environmental Data Review Program Guidance. Office of Environmental Measurement and Evaluation – Quality Assurance Unit. April 22.

EPA-NE. 2013b. Environmental Data Review Supplement for Regional Data Review Elements and Superfund Specific Guidance/Procedure. Office of Environmental Measurement and Evaluation – Quality Assurance Unit. April 22.

Nobis. 2016. 2015 Groundwater Monitoring Data Summary, Nyanza Chemical Waste Dump – Operable Unit 2, Ashland, Massachusetts. December.

TABLES

Table 3-1
Distribution List
Nyanza Chemical Waste Dump, Operable Unit 2
Ashland, Massachusetts

QAPP Recipients	Title	Organization	Telephone Number
Lynne Jennings	Task Order Project Officer (TOPO)	U.S. Environmental Protection Agency (EPA), Region 1	617-918-1210
Nora Conlon	EPA Quality Assurance Coordinator/Reviewer	EPA, Region 1	617-918-8335
Jennifer McWeeney	Project Manager	Massachusetts Department of Environmental Protection (MassDEP)	617-654-6560
James Vernon	Project Manager	Nobis Engineering Inc.	603-513-7331
Jeff Brunelle	Field Operations Leader	Nobis Engineering Inc.	978-703-6038
Jennifer Lambert	Hydrogeologist	Nobis Engineering Inc.	603-513-1003
Gary Glennon	Quality Assurance Officer and Lead Chemist	Nobis Engineering Inc.	978-703-6007

Note:
TBD – to be determined

Table 4-1
Personnel Responsibilities and Qualifications
Nyanza Chemical Waste Dump, Operable Unit 2
Ashland, Massachusetts
Page 1 of 2

Name	Organizational Affiliation	Responsibilities	Location of Personnel Resumes	Education and Experience Qualifications
Scott Harding RAC 2 Program Manager	Nobis	Manages the Nobis RAC 2 program, with the assistance of the Nobis Deputy RAC 2 Program Manager.	Available upon request	Refer to Resume
Chris Hagger Deputy RAC 2 Program Manager	Nobis	Assists the Nobis RAC 2 Program Manager with managing the Nobis RAC 2 program, reviews all monthly RAC 2 reports, and maintains direct contact with the NOBIS RAC 2 Project Managers and the EPA TOPO.	Available upon request	Refer to Resume
Tom Bobowski Corporate Health and Safety Officer	Nobis	Oversees company-wide health and safety protocol for all Nobis field activities. Interacts with the Project Health and Safety Officer. Reviews and approves the Site-Specific Health and Safety Plan.	Available upon request	Refer to Resume
Gary Glennon RAC 2 Program QA Officer	Nobis	Oversees periodic performance audits of field activities and data collection activities, conducts periodic program QA audits and reports to EPA, follows up on corrective actions and ensures resolution of any technical advisory team concerns, oversees the maintenance of RAC 2 QA file for documentation of all of the above, directs and coordinates periodic performance and systems audits of environmental data collection activities, prepares monthly reports summarizing any unresolved corrective action recommendations for laboratory and field activities.	Available upon request	Refer to Resume
James Vernon Project Manager	Nobis	Reports to the RAC 2 Program Manager, monitors schedules for field, analytical, and data validation activities associated with the field sampling program, coordinates review of the QAPP, coordinates analytical and sampling activities with the FOL, coordinates and oversees all sampling and analytical data assessment activities, verifies that all sampling and analytical procedures are followed, verifies that all data validation activities are complete and validation deliverables are submitted to EPA, coordinates with the reviewers in preparation of sampling plans and reports. Prepares monthly progress reports.	Available upon request	Refer to Resume

Table 4-1
Personnel Responsibilities and Qualifications
Nyanza Chemical Waste Dump, Operable Unit 2
Ashland, Massachusetts

Name	Organizational Affiliation	Responsibilities	Location of Personnel Resumes	Education and Experience Qualifications
Jenny Lambert – Hydrogeology Lead	Nobis	As the lead hydrogeologist, assists the Project Manager and other technical staff in the evaluation of hydrogeological data and the assessment of hydrogeologic conditions, groundwater hydraulics, and contaminant fate and transport.	Available upon request	Refer to Resume
Gary Glennon Lead Chemist	Nobis	Functions as point of contact for RAS and non-RAS laboratories; oversees all analytical, sampling, and data assessment activities for the RAC 2 program; reviews RAS modifications if required; verifies that all sampling and analytical procedures are followed; reviews all data validation and sampling and analysis plans; verifies that all data validation activities are complete and validation deliverables are submitted to EPA; and monitors schedules for field, analytical, and data validation activities associated with the field sampling program.	Available upon request	Refer to Resume
Jeff Brunelle Field Operations Leader (FOL)	Nobis	Coordinates and oversees all sampling events and analytical data assessment activities, verifies that all sampling and analytical procedures are followed, implements sample chain-of-custody protocols and performs sample shipments. Prepares or coordinates all project report deliverables related to field activities.	Available upon request	Refer to Resume
TBD Site Health and Safety Officer	Nobis	Serves as the Site Health and Safety Officer for all field activities. Ensures all activities are being performed in accordance with the Site Specific Health and Safety Plan.	Available upon request	Refer to Resume

Table 6-1
Project Schedule
Nyanza Chemical Waste Dump, Operable Unit 2
Ashland, Massachusetts

Activity/Deliverable	Date
QAPP Prepared	August 2017
QAPP Approved	September 2017
Monitoring Well Installation	October 2017
Well Elevation Survey	November 2017
Groundwater Sampling	November 2017
Indoor Air Sampling	November 2017
Sample Analysis – Groundwater, Indoor Air	21 days after sample receipt
Data Validation – Groundwater, Indoor Air	21 days after data receipt
Sampling / Data Evaluation Technical Memorandum	January 2018
Treatability Study – Bench Scale Testing	February 2018
Treatability Study – Pilot Scale Sampling - Baseline	March-April 2018
Treatability Study – Pilot Scale Sampling – Round 1	TBD – expected 1 week after baseline
Treatability Study – Pilot Scale Sampling – Round 2	TBD – expected 2 weeks after baseline
Treatability Study – Pilot Scale Sampling – Round 3	TBD – expected 4 weeks after baseline
Treatability Study – Pilot Scale Sampling – Round 4	TBD – expected 8 weeks after baseline
Sample Analysis – Treatability Study	21 days after sample receipt
Data Validation – Treatability Study	21 days after data receipt
Treatability Study Technical Memorandum	August 2018

Note:

Other deliverables for this project (i.e., Human Health Risk Assessment, Remedial Alternatives Technical Memorandum, and Feasibility Report) are not included in this QAPP.

Table 6-2
Chemical Analysis Information
Nyanza Chemical Waste Dump, Operable Unit 2
Ashland, Massachusetts

Analysis	Laboratory	Address	Contact Name/ Phone
Fixed Laboratory Analyses			
Volatile Organics-Groundwater	EPA-OEME or EPA-CLP Lab TBD	11 Technology Drive North Chelmsford, MA or CLP Lab TBD	Dan Boudreau 617-918-8340 or EPA RSCC 617-918-8614
Metals - Groundwater	EPA OEME or EPA-CLP Lab TBD	11 Technology Drive North Chelmsford, MA or CLP TBD	Dan Boudreau 617-918-8340 or EPA RSCC 617-918-8614
Anions (chloride, nitrate, nitrite, sulfate) – Groundwater	EPA-OEME	11 Technology Drive North Chelmsford, MA	Dan Boudreau 617-918-8340
Volatile Organics – Indoor Air	EPA-OEME	11 Technology Drive North Chelmsford, MA	Dan Boudreau 617-918-8340
Dissolved Gases (methane, ethane, ethene) – Groundwater	DAS Lab Eurofins Spectrum Analytical, Inc.	11 Herbert P Almgren Drive Agawam, MA	Agnes Huntley 413-789-9018
Oxygen Demand (DOC/TOC, BOD, COD)	DAS Lab Eurofins Spectrum Analytical, Inc.	11 Herbert P Almgren Drive Agawam, MA	Agnes Huntley 413-789-9018
Field Measurements			
Dissolved Oxygen	Nobis Project Team	18 Chenell Drive Concord, NH	Jeff Brunelle 978-703-6038
Oxidation Reduction Potential			
pH			
Specific Conductance			
Temperature			
Turbidity			
Water Elevation			

Note:

EPA OEME NERL may also complete volatile organics and metals analyses in groundwater, depending on availability.

Table 6-3
Target Analyte List - Volatile Organic Compounds (VOCs) - Water
Nyanza Chemical Waste Dump, Operable Unit 2
Ashland, Massachusetts

Target Analyte	CAS Number	Project Action Limits		Quantitation Limits	
		MCP GW-1[1] Groundwater µg/L	MCP GW-2[2] Groundwater µg/L	OEME[3] Low Water µg/L	CLP[4] Low Water µg/L
1,1,1-Trichloroethane	71-55-6	200	4,000	1	5
1,1,2,2-Tetrachloroethane	79-34-5	2	9	1	5
1,1,2-Trichloro-1,2,2-trifluoroethane	76-13-1	-	-	1	5
1,1,2-Trichloroethane	79-00-5	5	900	1	5
1,1-Dichloroethane	75-34-3	70	2,000	1	5
1,1-Dichloroethene	75-35-4	7	80	1	5
1,2,3-Trichlorobenzene	87-61-6	-	-	1	5
1,2,4-Trichlorobenzene*	120-82-1	70	200	1	5
1,2,4-Trimethyl benzene	95-63-6	-	-	1	NT
1,2-Dibromo-3-chloropropane	96-12-8	-	-	1	5
1,2-Dibromoethane	106-93-4	0.02	2	1	5
1,2-Dichlorobenzene*	95-50-1	600	8,000	1	5
1,2-Dichloroethane	107-06-2	5	5	1	5
1,2-Dichloropropane	78-87-5	5	3	1	5
1,3-Dichlorobenzene*	541-73-1	100	6,000	1	5
1,4-Dichlorobenzene*	106-46-7	5	60	1	5
2,2-Dichloropropane	594-20-7	-	-	1	NT
2-Butanone	78-93-3	4,000	50,000	1	10
2-Chlorotoluene	106-43-4	-	-	1	NT
2-Hexanone	591-78-6	-	-	1	10
4- Chlorotoluene	106-43-4	-	-	1	NT
4-Methyl-2-pentanone	108-10-1	350	50,000	1	10
Acetone	67-64-1	6,300	50,000	1	10
Acrylonitrile	107-13-1	-	-	1	NT
Benzene*	71-43-2	5	1,000	1	5
Bromobenzene	108-86-1	-	-	1	NT

Table 6-3
Target Analyte List - Volatile Organic Compounds (VOCs) - Water
Nyanza Chemical Waste Dump, Operable Unit 2
Ashland, Massachusetts

Target Analyte	CAS Number	Project Action Limits		Quantitation Limits	
		MCP GW-1[1] Groundwater µg/L	MCP GW-2[2] Groundwater µg/L	OEME[3] Low Water µg/L	CLP[4] Low Water µg/L
Bromochloromethane	74-97-5	-	-	1	5
Bromodichloromethane	75-27-4	3	6	1	5
Bromoform	75-25-2	4	700	1	5
Bromomethane	74-83-9	10	7	1	5
Carbon disulfide	75-15-0	-	-	1	5
Carbon tetrachloride	56-23-5	5	2	1	5
Chlorobenzene*	108-90-7	100	200	1	5
Chloroethane	75-00-3	-	-	1	5
Chloroform	67-66-3	70	50	1	5
Chloromethane	74-87-3	-	-	1	5
cis-1,2-Dichloroethene*	156-59-2	70	20	1	5
cis-1,3-Dichloropropene	10061-01-5	0.4	10	1	5
Cyclohexane	110-82-7	-	-	NT	5
Dibromochloromethane	124-48-1	2	20	1	5
Dibromomethane	74-95-3	-	-	1	NT
Dichlorodifluoromethane	75-71-8	-	-	1	5
Ethyl ether	60-29-7	-	-	1	NT
Ethylbenzene	100-41-4	700	20,000	1	5
Isopropylbenzene (Cumene)	98-82-8	-	-	1	5
Hexachlorobutadiene	87-68-3	0.6	50	1	NT
m,p-xylene	179601-23-1	10,000	3,000	1	5
Methyl acetate	79-20-9	-	-	NT	5
Methyl tert-butyl ether	1634-04-4	70	50,000	1	5
Methylcyclohexane	108-87-2	-	-	NT	5
Methylene chloride	75-09-2	5	2,000	1	5
Naphthalene	91-20-3	140	700	1	NT

Table 6-3
Target Analyte List - Volatile Organic Compounds (VOCs) - Water
Nyanza Chemical Waste Dump, Operable Unit 2
Ashland, Massachusetts

Target Analyte	CAS Number	Project Action Limits		Quantitation Limits	
		MCP GW-1[1] Groundwater µg/L	MCP GW-2[2] Groundwater µg/L	OEME[3] Low Water µg/L	CLP[4] Low Water µg/L
N-Butylbenzene	104-51-8	-	-	1	NT
N-Propylbenzene	103-65-1	-	-	1	NT
o-xylene	95-47-6	10,000	3,000	1	5
P-Isopropyltoluene	99-87-6	-	-	1	NT
Sec-Butylbenzene	135-98-8	-	-	1	NT
Styrene	100-42-5	100	100	1	5
Tetrachloroethene	127-18-4	5	50	1	5
Tetrahydrofuran	109-99-9	-	-	1	NT
Toluene	108-88-3	1,000	50,000	1	5
trans-1,2-Dichloroethene*	156-60-5	100	80	1	5
trans-1,3-Dichloropropene	10061-02-6	0.4	10	1	5
Trichloroethene*	79-01-6	5	5	1	5
Trichlorofluoromethane	75-69-4	-	-	1	5
Vinyl acetate	108-05-4	-	-	1	NT
Vinyl chloride*	75-01-4	2	2	1	5

Notes:
Project Action Limits are based on the following:
[1] MCP Method 1 Groundwater Standards, GW-1, November 2, 2014.
[2] MCP Method 1 Groundwater Standards, GW-2, November 2, 2014.
[3] The Quantitation Limits (QLs) are from the EPA OEME SOP EIASOP-VOAGCMS9.
[4] The Quantitation Limits (QLs) are from the CLP SOW SOM02.4.
Project Action Limit (PALs) not achieved by OEME or CLP QLs.
PALs not achieved by CLP QLs.
Even though some PALs are not achieved with trace level analytes, all samples will be submitted for low level analysis, as historical levels of contaminants are above trace level concentration ranges.
* - denotes contaminants of concern
NT - not tested
- means not available or not applicable
µg/L = micrograms per liter

Table 6-4
Target Analyte List - Metals - Water
Nyanza Chemical Waste Dump, Operable Unit 2
Ashland, Massachusetts

Target Analyte	CAS Number	Project Action Limits	CLP Quantitation Limits[2]		OEME Quantitation Limits[3]
		MCP GW-1[1] Groundwater µg/L	ICP-AES Water µg/L	ICP-MS Water µg/L	ICP-AES Water µg/L
Aluminum	7429-90-5	-	200	20	110
Antimony	7440-36-0	6	60	2	20
Arsenic	7440-38-2	10	10	1	20
Barium	7440-39-3	2,000	200	10	20
Beryllium	7440-41-7	4	5	1	8
Cadmium	7440-43-9	5	5	1	10
Calcium	7440-70-2	-	5,000	500	100
Chromium	7440-47-3	100	10	2	20
Cobalt	7440-48-4	-	50	1	20
Copper	7440-50-8	-	25	2	20
Iron	7439-89-6	-	100	200	40
Lead	7439-92-1	15	10	1	20
Magnesium	7439-95-4	-	5,000	500	100
Manganese	7439-96-5	-	15	1	20
Nickel	7440-02-0	100	40	1	20
Potassium	7440-09-7	-	5,000	500	NT
Selenium	7782-49-2	50	35	5	20
Silver	7440-22-4	100	10	1	10
Sodium	7440-23-5	-	5,000	500	NT
Thallium	7440-28-0	2	25	1	20
Vanadium	7440-62-2	30	50	5	20
Zinc	7440-66-6	5,000	60	2	20

Notes:

Project Action Limits are based on the following:

[1] MCP Method 1 Groundwater Standards, GW-1, November 2, 2014.

[2] The Quantitation Limits (QLs) are from the CLP ISM02.4 SOW.

[3] The Quantitation Limits (QLs) are from the EPA OEME SOP EIASOP INGDVICP1.

Project Action Limit (PALs) not achieved by the OEME ICP-AES QLs.

PALs not achieved by the OEME or CLP ICP-AES QLs.

The following analytes will be analyzed by CLP ICP-MS to achieve the action levels: Sb, As, Be, Tl, and V.

- means not available or not applicable

µg/L = micrograms per liter

ICP-AES = inductively coupled plasma-atomic emission spectrometry

ICP-MS = inductively coupled plasma-mass spectrometry

Table 6-5
Target Analyte List - Anions - Water
Nyanza Chemical Waste Dump, Operable Unit 2
Ashland, Massachusetts

Target Analyte	CAS Number	Project Action Limits	Quantitation Limits[2]
		MCP GW-1[1] Groundwater mg/L	Water mg/L
Chloride	16887-00-6	-	0.1
Sulfate	14808-79-8	-	0.1
Nitrate	14797-55-8	-	0.1
Nitrite	14797-65-0	-	0.1

Notes:
Project Action Limits are based on the following:
[1] MCP Method 1 Groundwater Standards, GW-1, November 2, 2014.
[2] The Quantitation Limits (QLs) are from EPA OEME NERL EIASOP-INGIC11.
Project Action Limit (PALs) not achieved.
- means not available or not applicable
mg/L = milligrams per liter

Table 6-6
Target Analyte List - Dissolved Gases - Water
Nyanza Chemical Waste Dump, Operable Unit 2
Ashland, Massachusetts

Target Analyte	CAS Number	Project Action Limits	Quantitation Limits[2]
		MCP GW-1[1] Groundwater µg/L	Water µg/L
Methane	74-82-8	-	2.2
Ethane	74-84-0	-	5
Ethene	74-85-1	-	5

Notes:
Project Action Limits are based on the following:
[1] MCP Method 1 Groundwater Standards, GW-1, November 2, 2014.
[2] The Quantitation Limits (QLs) are from Eurofins Spectrum Analytical's SOP 90.0060.
Project Action Limit (PALs) not achieved.
- means not available or not applicable
µg/L = micrograms per liter

Table 6-7
Target Analyte List - Oxygen Demand - Water
Nyanza Chemical Waste Dump, Operable Unit 2
Ashland, Massachusetts

Target Analyte	CAS Number	Project Action Limits	Quantitation Limits[2]
		MCP GW-1[1] Groundwater mg/L	Water mg/L
Dissolved Organic Carbon (DOC)	-	-	1
Total Organic Carbon (TOC)	-	-	1
Biological Oxygen Demand (BOD)	-	-	3
Chemical Oxygen Demand (COD)	-	-	5

Notes:
Project Action Limits are based on the following:
[1] MCP Method 1 Groundwater Standards, GW-1, November 2, 2014.
[2] The Quantitation Limits (QLs) are from Eurofins Spectrum Analytical's SOPs.
Project Action Limit (PALs) not achieved.
- means not available or not applicable
mg/L = milligrams per liter

Table 6-8
Target Analyte List - Volatile Organic Compounds (VOCs) - Indoor Air
Nyanza Chemical Waste Dump, Operable Unit 2
Ashland, Massachusetts

Target Analyte	CAS Number	Project Action Limits	Quantitation Limits[2]
		MCP Residential Vapor Threshold Values[1] ppbv	Indoor Air ppbv
1,1,1-Trichloroethane	71-55-6	0.54	0.05
1,1,2,2-Tetrachloroethane	79-34-5	0.0059	0.05
1,1,2-Trichloroethane	79-00-5	0.027	0.05
1,1-Dichloroethane	75-34-3	0.2	0.05
1,1-Dichloroethene	75-35-4	0.2	0.05
1,2,4-Trichlorobenzene*	120-82-1	0.46	0.05
1,2,4-Trimethylbenzene	95-63-6	-	0.05
1,2-Dibromoethane	106-93-4	0.001	0.05
1,2-Dichlorobenzene*	95-50-1	0.12	0.05
1,2-Dichloroethane	107-06-2	0.022	0.05
1,2-Dichloropropane	78-87-5	0.027	0.05
1,3,5-Trimethylbenzene	108-67-8	-	0.05
1,3-Butadiene	106-99-0	-	0.1
1,3-Dichlorobenzene*	541-73-1	0.1	0.05
1,4-Dichlorobenzene*	106-46-7	0.083	0.05
2-Butanone	78-93-3	4.1	0.05
2-Hexanone	591-78-6	-	0.05
4-Ethyltoluene	622-96-8	-	0.05
4-Methyl-2-pentanone	108-10-1	0.54	0.05
Acrylonitrile	107-13-1	-	0.05
Allyl Chloride	107-05-1	-	0.05
Benzene*	71-43-2	0.72	0.05
Benzylchloride	100-44-7	-	0.05
Bromodichloromethane	75-27-4	0.02	0.05
Bromoform	75-25-2	0.2	0.05
Bromomethane	74-83-9	0.15	0.05
Carbon tetrachloride	56-23-5	0.086	0.05
Chlorobenzene*	108-90-7	0.5	0.05
Chloroethane	75-00-3	-	0.05
Chloroform	67-66-3	0.39	0.05
Chloromethane	74-87-3	-	0.05
cis-1,2-Dichloroethene*	156-59-2	0.2	0.05
cis-1,3-Dichloropropene	10061-01-5	0.13	0.05
Cyclohexane	110-82-7		0.05

Table 6-8
Target Analyte List - Volatile Organic Compounds (VOCs) - Indoor Air
Nyanza Chemical Waste Dump, Operable Unit 2
Ashland, Massachusetts

Target Analyte	CAS Number	Project Action Limits	Quantitation Limits[2]
		MCP Residential Vapor Threshold Values[1] ppbv	Indoor Air ppbv
Dibromochloromethane	124-48-1	0.011	0.05
Dichlorodifluoromethane	75-71-8	-	0.05
Dichlorotetrafluoroethane	76-14-2	-	0.05
Ethylbenzene	100-41-4	1.7	0.05
Heptane	142-82-5	-	0.05
Hexachloro-1,3-butadiene	87-68-3	0.0099	0.05
Hexane	110-54-3	-	0.05
m,p-xylene	179601-23-1	4.6	0.1
Methylene chloride	75-09-2	3.2	0.05
Methyl tert-butyl ether	1634-04-4	11	0.05
o-xylene	95-47-6	4.6	0.05
Styrene	100-42-5	0.32	0.05
Tetrachloroethene	127-18-4	0.21	0.05
Tetrahydrofuran	109-99-9	-	0.05
Toluene	108-88-3	14	0.05
trans-1,2-Dichloroethene*	156-60-5	0.2	0.05
trans-1,3-Dichloropropene	10061-02-6	0.13	0.05
Trichloroethene*	79-01-6	0.075	0.05
Trichlorofluoromethane	75-69-4	-	0.05
Trichlorotrifluoroethane	75-69-4	-	0.05
Vinyl Bromide	593-60-2	-	0.05
Vinyl chloride*	75-01-4	0.1	0.05

Notes:
Project Action Limits are based on the following:
[1] MCP Vapor Intrusion Guidance, WSC-16-435, Residential Threshold Values, October 2016.
[2] The Quantitation Limits (QLs) are from EPA OEME NERL's EIA SOP-AIRCAN12.
Project Action Limit (PALs) not achieved by QLs.
* - denotes contaminants of concern
- means not available or not applicable
µg/L = micrograms per liter

Table 6-9
Field and Quality Control Sample Summary
Nyanza Chemical Waste Dump, Operable Unit 2
Ashland, Massachusetts

Medium/ Matrix[1]	Analytical Parameter	Conc. Level	Laboratory Type[2]	Analytical Method/SOP[3]	No. of Sample Locations[4]	No. of Field Duplicate Pairs[5]	No. of Matrix QC Samples[6]		No. of Equip. Blanks[7]	No. of PE Samples[8]	No. of Trip Blanks	No. of Sampling Rounds	Total No. of Samples to Lab[9]
							No. of MS	No. of MSD or DUP					
Groundwater Sampling													
GW	TCL VOCs	Low	OEME or CLP RAS Organic	L-1a or L-1b	33	2	2	2	0	2	2	1	43
GW	TAL Metals - Total	Low	OEME or CLP RAS Inorganic	L-2a or L-2b	10	1	1	1	0	1	0	1	14
GW	Anions (Table 6-5)	Low	OEME	L-3	10	1	1	1	0	0	0	1	13
GW	Dissolved Gases	Low	DAS	L-4	10	1	0	0	0	0	0	1	11
GW	Oxygen Demand (Table 6-7)	Low	DAS	L-5, L-6, L-7	10	1	1	1	0	0	0	1	13
Groundwater Pilot Test Sampling													
GW	TCL VOCs	Low	OEME or CLP RAS Organic	L-1a or L-1b	4	1	1	1	0	0	1	4	26
GW	TBD - other analyses may be determined after initial groundwater sampling and remedial alternative screening												
Indoor Air Sampling													
AR	VOCs	Low	OEME	L-8	60	3	0	0	0	0	0	1	64

Notes:

[1] GW=groundwater; AR=air

[2] CLP=Contract Laboratory Program; RAS=Routine Analytical Services; OEME = Office of Environmental Measurement and Evaluation; DAS=Delivery of Analytical Services

[3] Analytical Methods and SOPs are listed in Table 12-1.

[4] See Section 6.1 for summary of sample locations.

[5] Field duplicates are collected and analyzed at a 5% (1:20) rate.

[6] Matrix quality control (QC) samples are collected and analyzed at a 5% (1:20) rate. Some tests will be a laboratory duplicate only, MS/MSD, or MS/DUP depending on the method. MS=matrix spike; MSD=matrix spike duplicate; DUP=laboratory duplicate. Trip blanks will be done for VOCs for each shipment.

[7] Equipment blanks will be collected if dedicated equipment is not available for the sampling process. For this project, it is anticipated that dedicated equipment will be available.

[8] Performance Evaluation (PE) samples are analyzed at submitted at a 5% (1:20) rate for indicated analyses.

[9] All sample quantities are estimated. For pilot test samples, field duplicates and trip blanks are collected for each round of sampling only. MS/MSDs and EBs are only collected in the first round.

Table 7-1
Measurement Performance Criteria
Nyanza Chemical Waste Dump, Operable Unit 2
Ashland, Massachusetts

Medium/Matrix	GW
Analytical Parameter	VOCs
Concentration Level	Low

Sampling Procedure[1]	Analytical Method/SOP[2]	Data Quality Indicators (DQIs)	Measurement Performance Criteria (MPC)	QC Sample and/or Activity Used to Assess Measurement Performance	QC Sample Assesses Error for Sampling (S), Analytical (A) or both (S&A)
S-12, S-3, S-5	L-1a	accuracy/bias	all target analytes < CRQL, except acetone, 2-butanone, and methylene chloride < 2x contract required quantitation limit (CRQL)	method blanks, storage blanks	A
			all target analytes < CRQL, except acetone, 2-butanone, and methylene chloride < 2x CRQL	trip blanks, equipment blanks	S & A
			all target analytes < CRQL	instrument blanks	A
			no false positives, no false negatives, quantitation within warning limits	PE sample	A
		accuracy/ precision	see table below	matrix spike/matrix spike duplicate	A
		precision - overall	RPD $\leq$ 30% (GW) when results for both samples are > 2x CRQL	field duplicates	S & A

Notes:
[1] Sampling Procedure references are listed in Table 9-1.
[2] Analytical Method/SOP references are listed in Table 12-1.
CRQL = contract required quantitation limit
GW = groundwater
RPD = relative percent difference
PE = performance evaluation
VOCs = volatile organic compounds

Matrix Spike Recovery and RPD Limits

Compound	Percent Recovery		RPD	
	Water	Soil	Water	Soil
1,1-Dichloroethene	61-145	59-172	0-14	0-22
Trichloroethene	71-120	62-137	0-14	0-24
Benzene	76-127	66-142	0-11	0-21
Toluene	76-125	59-139	0-13	0-21
Chlorobenzene	75-130	60-133	0-13	0-21

Table 7-1
Measurement Performance Criteria
Nyanza Chemical Waste Dump, Operable Unit 2
Ashland, Massachusetts

Medium/Matrix	GW
Analytical Parameter	VOCs
Concentration Level	Low

Sampling Procedure[1]	Analytical Method/SOP[2]	Data Quality Indicators (DQIs)	Measurement Performance Criteria (MPC)	QC Sample and/or Activity Used to Assess Measurement Performance	QC Sample Assesses Error for Sampling (S), Analytical (A) or both (S&A)
S-12, S-3, S-5	L-1b	accuracy/bias	all target analytes < QL	method blanks, storage blanks	A
			all target analytes < QL	trip blanks, equipment blanks	S & A
			all target analytes < QL	instrument blanks	A
			no false positives, no false negatives, quantitation within warning limits	PE sample	A
		accuracy/ precision	All target analytes. Control limits established bi-annually.	matrix spike/matrix spike duplicate	A
		precision - overall	RPD $\leq$ 30% (GW) when results for both samples are > 2x CRQL	field duplicates	S & A

Notes:
[1] Sampling Procedure references are listed in Table 9-1.
[2] Analytical Method/SOP references are listed in Table 12-1.
RPD = relative percent difference
PE = performance evaluation
VOCs = volatile organic compounds
GW = groundwater
QL = quantitation limit

Table 7-1
Measurement Performance Criteria
Nyanza Chemical Waste Dump, Operable Unit 2
Ashland, Massachusetts

Medium/Matrix	GW
Analytical Parameter	Metals
Concentration Level	Low

Sampling Procedure[1]	Analytical Method/SOP[2]	Data Quality Indicators (DQIs)	Measurement Performance Criteria	QC Sample and/or Activity Used to Assess Measurement Performance	QC Sample Assesses Error for Sampling (S), Analytical (A) or both (S&A)
S-12, S-3, S-5	L-2a	accuracy/bias	all target analytes < CRQL	method blanks	A
			all target analytes < CRQL	equipment blanks	S & A
			all target analytes < CRQL	instrument blanks	A
			no false positives, no false negatives, quantitation within warning limits	PE sample	A
		accuracy/precision	75-125% recovery; 20% RPD	matrix spike/laboratory duplicate	A
		precision - overall	RPD $\leq$ 30% (GW) when results for both samples are > 2x CRQL	field duplicates	S & A

Notes:
[1] Sampling Procedure references are listed in Table 9-1.
[2] Analytical Method/SOP references are listed in Table 12-1.
CRQL = contract required quantitation limit
GW = groundwater
RPD = relative percent difference
PE = performance evaluation

Table 7-1
Measurement Performance Criteria
Nyanza Chemical Waste Dump, Operable Unit 2
Ashland, Massachusetts

Medium/Matrix	GW
Analytical Parameter	Metals
Concentration Level	Low

Sampling Procedure[1]	Analytical Method/SOP[2]	Data Quality Indicators (DQIs)	Measurement Performance Criteria	QC Sample and/or Activity Used to Assess Measurement Performance	QC Sample Assesses Error for Sampling (S), Analytical (A) or both (S&A)
S-12, S-3, S-5	L-2b	accuracy/bias	all target analytes < ½ QL	method blanks	A
			all target analytes < QL	equipment blanks	S & A
			all target analytes < ½ QL	instrument blanks	A
			no false positives, no false negatives, quantitation within warning limits	PE sample	A
		accuracy/precision	75-125% recovery; 20% RPD	matrix spike/laboratory duplicate	A
		precision - overall	RPD $\leq$ 30% (GW) when results for both samples are > 2x CRQL	field duplicates	S & A

Notes:
[1] Sampling Procedure references are listed in Table 9-1.
[2] Analytical Method/SOP references are listed in Table 12-1.
QL = quantitation limit
GW = groundwater
RPD = relative percent difference
PE = performance evaluation

Table 7-1
Measurement Performance Criteria
Nyanza Chemical Waste Dump, Operable Unit 2
Ashland, Massachusetts

Medium/Matrix	GW
Analytical Parameter	Anions
Concentration Level	Low

Sampling Procedure[1]	Analytical Method/SOP[2]	Data Quality Indicators (DQIs)	Measurement Performance Criteria	QC Sample and/or Activity Used to Assess Measurement Performance	QC Sample Assesses Error for Sampling (S), Analytical (A) or both (S&A)
S-12, S-3, S-5	L-3	accuracy/bias	all target analyte < QL	method blanks	A
			all target analytes < QL	equipment blanks	S & A
			all target analytes < QL	Instrument blanks	A
			80-120% recovery	Laboratory control samples	A
		accuracy/precision	80-120% recovery; 20% RPD (aqueous)	matrix spike/ matrix spike duplicate	A
		precision - overall	RPD $\leq$ 30%(GW) when results for both samples are > 2x QL	field duplicates	S & A

Notes:
[1] Sampling Procedure references are listed in Table 9-1.
[2] Analytical Method/SOP references are listed in Table 12-1.
QL = quantitation limit
GW = groundwater
RPD = relative percent difference

Table 7-1
Measurement Performance Criteria
Nyanza Chemical Waste Dump, Operable Unit 2
Ashland, Massachusetts

Medium/Matrix	GW
Analytical Parameter	Dissolved Gases
Concentration Level	Low

Sampling Procedure[1]	Analytical Method/SOP[2]	Data Quality Indicators (DQIs)	Measurement Performance Criteria	QC Sample and/or Activity Used to Assess Measurement Performance	QC Sample Assesses Error for Sampling (S), Analytical (A) or both (S&A)
S-12, S-3, S-5	L-4	accuracy/bias	all target analyte < QL	method blanks	A
			all target analytes < QL	equipment blanks	S & A
			all target analytes < QL	Instrument blanks	A
			70-130% recovery; 30% RPD	Laboratory control samples	A
		accuracy/precision	70-130% recovery; 40% RPD (aqueous)	matrix spike/ matrix spike duplicate	A
		precision - overall	RPD $\leq$ 30% (GW) when results for both samples are > 2x QL	field duplicates	S & A

Notes:
[1] Sampling Procedure references are listed in Table 9-1.
[2] Analytical Method/SOP references are listed in Table 12-1.
QL = quantitation limit
GW = groundwater
RPD = relative percent difference

Table 7-1
Measurement Performance Criteria
Nyanza Chemical Waste Dump, Operable Unit 2
Ashland, Massachusetts

Medium/Matrix	GW
Analytical Parameter	Oxygen Demand Parameters[3]
Concentration Level	Low

Sampling Procedure[1]	Analytical Method/SOP[2]	Data Quality Indicators (DQIs)	Measurement Performance Criteria	QC Sample and/or Activity Used to Assess Measurement Performance	QC Sample Assesses Error for Sampling (S), Analytical (A) or both (S&A)
S-12, S-3, S-5	L-5, L-6, L-7	accuracy/bias	all target analyte < QL	method blanks	A
			all target analytes < QL	equipment blanks	S & A
			all target analytes < QL	Instrument blanks	A
			COD = 80-120% recovery; TOC and BOD = 85-115%	Laboratory control samples	A
		accuracy/precision	COD = 80-120% recovery; TOC = 70-130%; 20% RPD; BOD samples are not spiked	matrix spike/ matrix spike duplicate	A
		precision - overall	RPD $\leq$ 30%(GW) when results for both samples are > 2x QL	field duplicates	S & A

Notes:
[1] Sampling Procedure references are listed in Table 9-1.
[2] Analytical Method/SOP references are listed in Table 12-1.
[3] Oxygen Demand Parameters consist of: dissolved organic carbon (DOC)/ total organic carbon (TOC); biological oxygen demand (BOD); and chemical oxygen demand (COD).
QL = quantitation limit
GW = groundwater
RPD = relative percent difference

Table 7-1
Measurement Performance Criteria
Nyanza Chemical Waste Dump, Operable Unit 2
Ashland, Massachusetts

Medium/Matrix	AR
Analytical Parameter	VOCs
Concentration Level	Low

Sampling Procedure[1]	Analytical Method/SOP[2]	Data Quality Indicators (DQIs)	Measurement Performance Criteria (MPC)	QC Sample and/or Activity Used to Assess Measurement Performance	QC Sample Assesses Error for Sampling (S), Analytical (A) or both (S&A)
S-1	L-8	accuracy/bias	all target analytes < QL	method blanks, storage blanks	A
			all target analytes < QL	equipment blanks	S & A
			all target analytes < QL	instrument blanks	A
			NA	PE sample	A
		accuracy/ precision	70-130% Recovery or laboratory established limits	matrix spike/matrix spike duplicate	A
		precision - overall	RPD $\leq$ 50% when results for both samples are > 2x CRQL	field duplicates	S & A

Notes:
[1] Sampling Procedure references are listed in Table 9-1.
[2] Analytical Method/SOP references are listed in Table 12-1.
RPD = relative percent difference
PE = performance evaluation
VOCs = volatile organic compounds
AR = air
QL = quantitation limit

Table 8-1
Survey Wells, Sampling Locations, and Sampling Rationale
Nyanza Chemical Waste Dump, Operable Unit 2
Ashland, Massachusetts

WELL ID	WELL TYPE	Depth to Bedrock (ft bgs) inferred	Top of Screen (ft bgs)	Bottom of Screen (ft bgs)	Well Diameter (inches)	Selected to Sample	Sample Selection Rationale
ERT-2	OB	(33.5)	*25*	*30*	2		
MADEP-MW-1	OB	BNE	10	15	0.75	Y	Detected TCE just below criterion; confirm plume edge in SVE area
MADEP-MW-2	OB	BNE	15	20	0.75		
MW/B-05	OB/BR	42	39	46	2	Y	Source area overburden/bedrock well; not stat.sig. upward TCE trend
MW/B-11	BR	9	11.25	21.25	2		
MW-03A	OB/BR	(35)	11	36	2		
MW-03B	BR	35	38	43	2	Y, M	High concentrations and increasing or erratic trend; near source area
MW-04A	OB	(67)	4	24	2		
MW-04B	OB/BR	(67)	48	68	2	Y	Western plume edge; upward gradient to overburden
MW-04C	BR	67	73	78	2	Y	Western plume edge; upward gradient to overburden
MW-06A	OB	(58)	7	12	2	Y	Within southern portion of plume; upward gradient from bedrock
MW-06B	OB	(26.6)	8	18	2	Y	Southeast plume edge
MW-08	OB	(33.5)	UNK	UNK	2		
MW-09A	OB	(33)	5.5	33	2		
MW-09B	BR	33	34.7	41.7	2		
MW-09C	OB	(33)	11	16	2		
MW-10A	OB/BR	(10.8)	6.8	11.8	2		
MW-10B	BR	10.8	15	20	2		
MW-11	OB	BNE	6	16	2		
RMW-102	OB	BNE	5	10	2		
MW-102A	BR	21	25	30	2		
MW-102B	OB	(21)	10.6	15.6	2		
MW-103	OB	BNE	10	15	2		
MW-104A	BR	19.3	35.1	40.1	2	Y, M	Elevated concentrations close to landfill and MW-503B
MW-104B	OB	(19.3)	10.4	15.4	2	Y, M	Elevated concentrations close to landfill and MW-503B
MW-105	OB	BNE	20.5	25.5	2		

Table 8-1
Survey Wells, Sampling Locations, and Sampling Rationale
Nyanza Chemical Waste Dump, Operable Unit 2
Ashland, Massachusetts

WELL ID	WELL TYPE	Depth to Bedrock (ft bgs) inferred	Top of Screen (ft bgs)	Bottom of Screen (ft bgs)	Well Diameter (inches)	Selected to Sample	Sample Selection Rationale
MW-106	OB	BNE	18.8	23.8	2		
MW-107	BR	26.6	30.9	35.9	2		
MW-110	BR	58	64.1	69.1	2	Y	Within southern portion of plume; upward gradient to overburden
MW-112A	BR	35	38	43	2	Y, M	Upward gradient; higher concentration than nearby well close to source
MW-112B	OB	(35)	25	30	2	Y, M	Upward gradient; TCE detected close to criterion
MW-113A	BR	43	46	51	2		
MW-113B	OB	(43)	24.5	29.5	2	Y	Source area overburden well; erratic concentration trend
MW-115A	BR	70	86	91	2	Y, M	Hotspot in plume core; erratic or increasing concentration trend
MW-115B	OB	(70)	43.5	48.5	2	Y, M	Hotspot in plume core; erratic concentration trend
RMW-116A	BR	21	31.5	36.5	2		
RMW-117A	BR	19.5	29.5	34.5	2		
MW-201	OB	BNE	15	20	2	Y	Downgradient of overburden hotspot in plume core; relatively high conc.
MW-202	OB	BNE	20	25	2	Y	Overburden hotspot in plume core
MW-203A	BR	68	73.7	78.7	2	Y, M	Plume core south of overburden hotspot; upward gradient
MW-203B	OB	(68)	27	32	2	Y, M	Plume core south of overburden hotspot; upward gradient
MW-204A	BR	36.5	47	52	2		
MW-204B	OB	(36.5)	23.6	28.6	2		
MW-301	OB	BNE	17	22	2		
MW-302	OB	BNE	20	25	2	Y	Southeastern-most overburden well with elevated TCE concentration
MW-304A	BR	45	50	55	2	Y	Hotspot close to river, increasing chloroethene contaminant trend
MW-304B	OB	(45)	25.7	30.7	2	Y	Hotspot close to river, increasing chloroethene contaminant trend
RMW-305A	BR	47	49	54	2	Y	High concentration, at NW plume edge, upward gradient
MW-305B	OB	(44)	14.8	19.8	2	Y, M	Detected TCE; above high bedrock concentration with upward gradient
MW40MAIN	OB	BNE?	16?	21?		Y	Possible northern edge of eastern plume; not sampled since 2006
MW-401	BR	41	83	98	2		
MW-402	BR	14	93.5	108.5	2		

Table 8-1
Survey Wells, Sampling Locations, and Sampling Rationale
Nyanza Chemical Waste Dump, Operable Unit 2
Ashland, Massachusetts

WELL ID	WELL TYPE	Depth to Bedrock (ft bgs) inferred	Top of Screen (ft bgs)	Bottom of Screen (ft bgs)	Well Diameter (inches)	Selected to Sample	Sample Selection Rationale
MW-403A	BR	37	41	44.9	2		
RMW-403B	OB	(37)	14.5	19.5	2		
MW-404A	BR	111	130	135	2		
MW-404B	OB	(111)	32	37	2	Y	Downgradient southeast plume edge
RMW-405A	BR	57.5	68.5	73.5	2	Y	Downgradient plume edge; no significant conc. trend
RMW-405B	OB	(57.5)	40.5	45.5	2	Y	Downgradient plume edge; overburden member of couplet
MW-406A	BR	45.9	61	66	2		
MW-406B	OB	(45.9)	38	43	2		
MW-407A	BR	87	103.6	108.6	2		
MW-407B	OB	(87)	42.5	47.5	2		
MW-408A	BR	32	41.9	46.9	2		
MW-408B	OB	(32)	24.7	29.7	2		
MW-501A	OB	10.5	5.3	10.3	2		
MW-501B	BR	13.5	18	28	2		
MW-502B	BR	3.5	7.8	17.8	2		
MW-503A	OB	(16)	5	15	2		
MW-503B	BR	16	21	31	2		
MW-504A	OB	10.5	5	10	2		
MW-504B	BR	10	15	25	2		
MW-505A	OB	(14.5)	9	14	2		
MW-505B	BR	14.5	19.5	29.5	2		
MW-506A	OB	14.5	9	14	2		
MW-506B	BR	16	21	31	2		

Table 8-1
Survey Wells, Sampling Locations, and Sampling Rationale
Nyanza Chemical Waste Dump, Operable Unit 2
Ashland, Massachusetts

WELL ID	WELL TYPE	Depth to Bedrock (ft bgs) inferred	Top of Screen (ft bgs)	Bottom of Screen (ft bgs)	Well Diameter (inches)	Selected to Sample	Sample Selection Rationale
P-1	OB	42	39	42	2		
P-1B	BR	43	50	53	2		
P-1S	OB	43	8	18	2		
P-2	OB	45.5	40.2	43.2	2		
P-4	OB	33	29.5	32.5	2		
P-5	OB	43	38	43	2		
RW-1	OB/BR	41	36	51	6	Y	Source area overburden/bedrock; erratic concentrations
RWS-1	OB	41	0	46	1.5		
SB-600	BR	19.6	UNK	UNK	--		
SB-601	BR	32.1	UNK	UNK			
WP-101	OB	BNE	8	10	1.25		
WP-105	OB	BNE	9	11	1.25	Y	Confirm low/non-detect concentrations in SVE area
MW-701S	OB	TBD	TBD - screen across water table		2	Y	Evaluate shallow groundwater near Mill Pond and downtown area
MW-702S	OB	TBD			2	Y	Evaluate shallow groundwater near Mill Pond and downtown area
MW-703S	OB	TBD			2	Y	Evaluate shallow groundwater near Mill Pond and downtown area

Notes:
OB = overburden
BR = bedrock
UNK = unknown
BNE = Bedrock not encountered
Y = Wells will be sampled for VOCs.
TBD = to be determined
M = Wells will be sampled for MNA parameters (anions, dissolved gases, and oxygen demand parameters).

Table 9-1
Project Sampling SOP Reference
Nyanza Chemical Waste Dump, Operable Unit 2
Ashland, Massachusetts

SOP Reference Number	Title, and Revision Date	Originating Organization	Equipment Identification	Modified for Project Work Y or N	Nobis SOP Number[2]
S-1	Summa Canister Sampling	Nobis	(1)	N	ENV-029
S-2	Soil Headspace Screening	Nobis	(1)	N	FS-005
S-3	Field Sampling Equipment Decontamination	Nobis	(1)	N	FS-004
S-4	Calibration of Turbidity Meters	Nobis	(1)	N	FS-006
S-5	Vapor and Air Screening with PID and FID	Nobis	(1)	N	FS-007
S-6	Calibration of In-Situ SmarTroll	Nobis	(1)	N	FS-0008
S-7	Split Spoon Sampling and Standard Penetration Test	Nobis	(1)	N	GT-001
S-8	Monitoring Well Installation	Nobis	(1)	N	HYD-001
S-9	Groundwater Level Measurement	Nobis	(1)	N	HYD-003
S-10	Monitoring Well Development	Nobis	(1)	N	HYD-004
S-11	Soil Description and Classification	Nobis	(1)	N	SA-001
S-12	Low Flow Groundwater Sampling	Nobis	(1)	N	SA-003
S-13	Direct Push Technique (DPT) Drilling Techniques	Nobis	(1)	N	SA-004
S-14	Field Measurement of Water Quality Parameters	Nobis	(1)	N	SA-008
S-15	Scribe Sample Documentation	Nobis	(1)	N	DOC-002
S-16	Sample Packaging and Shipping	Nobis	(1)	N	SH-001

Notes:
(1) = Refer to equipment and supplies section of the SOP for complete listing of Equipment (Appendix A).
(2) = See Appendix A for SOPs.

Table 9-2
Sample Containers, Preservation, and Holding Time by Matrix and Analysis
Nyanza Chemical Waste Dump, Operable Unit 2
Ashland, Massachusetts

Medium/ Matrix[1]	Analytical Parameter	Laboratory Type[2]	Analytical Method/SOP[3]	Minimum Sample Mass/Volume	Containers required for each sample (Number, size and type)[4]	Preservation Requirements (chemical, temperature, light protected)	Maximum Holding Time (from date/time of sample collection)[5]
Groundwater Sampling							
GW	TCL VOCs	OEME (or CLP RAS Organic)	L-1a	120 mL	3 x 40 mL Teflon lined amber septum vials	HCl to pH<2; Cool to 4°C; no headspace.	14 Days
GW	TAL Metals - Total	OEME (or CLP RAS Inorganic)	L-2a	300 mL	1 x liter polypropylene bottle	HNO_3 to pH<2, Cool to 4°C.	180 days
GW	TCL VOCs	OEME (or CLP RAS Organic)	L-1b	120 mL	3 x 40 mL Teflon lined amber septum vials	HCl to pH<2; Cool to 4°C; no headspace.	14 Days
GW	TAL Metals - Total	OEME (or CLP RAS Inorganic)	L-2b	50 mL	1 x 250 mL polypropylene bottle	HNO_3 to pH<2, Cool to 4°C.	180 days
GW	Anions	OEME	L-3	10 mL	100 mL polypropylene bottle	Cool to 4°C.	Nitrate and nitrite - 48 hours. Chloride and sulfate - 28 days
GW	Dissolved Gases	DAS	L-4	20 mL	2 x 40 mL Teflon lined septum vials	HCl to pH<2; Cool to 4°C; no headspace.	14 Days
GW	DOC/TOC	DAS	L-5	100 mL	250 mL glass bottle	H2SO4 to pH<2, Cool to 4°C.	28 Days
GW	BOD	DAS	L-6	1 liter	1 liter polypropylene bottle	Cool to 4˚C.	48 hours
GW	COD	DAS	L-7	50 mL	250 mL glass bottle	H2SO4 to pH<2, Cool to 4°C.	28 Days
Indoor Air Sampling							
AR	VOCs	OEME	L-8	6 L	6L Summa Canister; 15 mL/min. flow regulator	Room Temperature	14 Days

Notes:

[1] GW=groundwater; AR=air

[2] CLP=Contract Laboratory Program; RAS=Routine Analytical Services; OEME=Office of Environmental Measurement and Evaluation; DAS=Delivery of Analytical Services

[3] Analytical Methods and SOPs are listed in Table 12-1.

[4] Containers going to the same laboratory and where volume can be shared between parameters are grouped as such in this column.

[5] Holding Times are indicated from date/time of sample collection except when there is an extraction listed. In those cases, the analysis time is from date/time of extraction.

[6] For locations where a field duplicate will be collected, one additional bottle set will be required for each parameter as indicated in the table.

[7] For locations where a matrix QC samples will be collected (MS/MSD or MS/DUP), one additional bottle set will be required for each parameter for soil/sediment samples.

[8] For locations where a matrix QC samples will be collected (MS/MSD or MS/DUP), two additional bottle sets will be required for each parameter for GW samples.

[9] HCl=hydrochloric acid; HNO3=nitric acid; H2SO4=sulfuric acid

Table 10-1
Sample Identification System
Nyanza Chemical Waste Dump, Operable Unit 2
Ashland, Massachusetts

Nomenclature Section	Description	Example
AAAAAA-BBBBBBC	Sample identification ID	MW-03A-060117A
AAAAAA	Well sample ID from Table 8-1	MW-03A
BBBBBB	Date of sample collection in 6-digit month, day, and year format	060117 (e.g. June 1, 2017)
C	Field duplicate identifier. Default value is “A” for a normal field sample. “D” is designated for a duplicate sample.	A

Notes:
Well sample IDs are shown in Table 8-1.

Codes for field quality control samples:
TB = trip blank
EB = equipment blank

Table 11-1
Field Analytical Instrument Calibration
Nyanza Chemical Waste Dump, Operable Unit 2
Ashland, Massachusetts

Instrument	Activity	Frequency of Calibration	Acceptance Criteria	Corrective Action (CA)	Person Responsible for CA	Method/ Appendix Reference
pH Probe	Calibrate with three temperature equilibrated standards to bracket expected pH values (4, 7, 10)	Initial calibration: beginning of each day Calibration check: end of each day, and in response to erratic readings	Initial calibration: ± 0.05 pH units Calibration check: ± 0.3 pH units	Rinse the probes carefully, use fresh buffer, and reanalyze the standard. Recalibrate or service as necessary. If still outside criteria, use backup instrument. If necessary, consult owner's manual for repair instructions. If end of day calibration check is off, annotate previously obtained results.	FOL/Field Sampler	Appendix A
DO Probe	Calibrate with saturated DO standard and 0.0 mg/L standard	Initial calibration: beginning of each day Calibration check: end of each day, and in response to erratic readings	Initial calibration: < 0.5 mg/L for 0.0 mg/L standard; ± 0.2 mg/L for saturated solution Calibration check: ± 0.5 mg/L of saturated solution	If DO reading exceeds criterion, then prepare new 0.0 mg/L standard, clean probe and/or change membrane. Recalibrate or service as necessary. If end of day calibration check is off, use professional judgment in interpreting previously obtained results.	FOL/Field Sampler	Appendix A
Specific Conductance Probe	Calibrate with one standard close to the expected sample values	Initial calibration: beginning of each day Calibration check: end of each day, and in response to erratic readings	Initial calibration: ± 20% of expected Calibration check: ± 20% of expected	Rinse the probes carefully, use fresh solution, and reanalyze the standard. Recalibrate or service as necessary. If still outside criteria, use backup instrument. If necessary, consult owner's manual for repair instructions. If end of day calibration check is off, annotate previously obtained results.	FOL/Field Sampler	Appendix A
Temperature Sensor	Calibrate against NIST- certified thermometer	Initial calibration: beginning of each day Calibration check: end of each day, and in response to erratic readings	± 0.15°C of NIST-certified thermometer	Clean probe or service as necessary and recalibrate. Replace probe if necessary.	FOL/Field Sampler	Appendix A

Table 11-1
Field Analytical Instrument Calibration
Nyanza Chemical Waste Dump, Operable Unit 2
Ashland, Massachusetts

Instrument	Activity	Frequency of Calibration	Acceptance Criteria	Corrective Action (CA)	Person Responsible for CA	Method/ Appendix Reference
Turbidity Meter	Standardize with a 1.00 and 10.00 NTU standards	Initial calibration: beginning of each day Calibration check: end of each day, and in response to erratic readings	Initial calibration: ± 0.50 NTU of the 10.00 NTU standard Calibration check: ± 0.50 NTU of the 10.00 NTU standard	Wipe standard container cell, check orientation, and reanalyze the standard. If still outside criteria, use backup instrument. If necessary, consult owner's manual for repair instructions. If end of day calibration check is off, use professional judgment in interpreting previously obtained results.	FOL/Field Sampler	Appendix A
ORP Probe	Calibrate against Zobell solution	Initial calibration: beginning of each day Calibration check: end of each day, and in response to erratic readings	Initial calibration: ± 10 mv of true value Calibration check: ± 10 mv of true value	Recalibrate. If still outside criterion, use back-up instrument. If end of day calibration check is off, use professional judgment in interpreting previously obtained results.	FOL/Field Sampler	Appendix A
Photoionization Detector	Calibrate against 100 ppm isobutylene calibration gas	Initial calibration: beginning of each day Calibration check: end of each day, and in response to erratic readings	Initial calibration: ± 10% of standard Calibration check: ± 10% of standard	Recalibrate until acceptance criteria are met or replace.	FOL/Field Sampler	Appendix A

Table 11-2
Field Analytical Instrument/Equipment Maintenance, Testing, and Inspection
Nyanza Chemical Waste Dump, Operable Unit 2
Ashland, Massachusetts

Instrument	Maintenance Activity	Testing Activity	Inspection Activity	Responsible Person	Frequency	Acceptance Criteria	Corrective Action	Reference*
In-Situ SmarTroll or equivalent	Cleaning, replacement of probes	Operation	Visual inspection for defective parts	FOL, Field Technician	Each probe prior to use	No visually defective parts; Conformance with manufacturer standards	Repair or use alternate equipment	Instrument manuals
Turbidity Meter	Cleaning, replacement of sample tubes	Operation	Visual inspection for defective parts	FOL, Field Technician	Each meter prior to use	No visually defective parts; Conformance with manufacturer standards	Repair or use alternate equipment	Instrument manuals
Photoionization Detector	Cleaning, replacement of PID lamp	Operation	Visual inspection for defective parts	FOL, Field Technician	Each PID prior to use	No visually defective parts; Conformance with manufacturer standards	Repair or use alternate equipment	Instrument manuals

Note:
*Instrument Manuals accompany instruments in the field.

Table 12-1
Fixed Laboratory Analytical Method/SOP References
Nyanza Chemical Waste Dump, Operable Unit 2
Ashland, Massachusetts

Reference Number	Fixed Laboratory Performing Analysis	Title, Revision Date and/or Number	Definitive or Screening Data	Region I NESTS Method Code*	Analytical Parameter	Instrument	Modified for Project Work Y or N
L-1a	TBD (RAS Laboratory)	Low/Medium Concentrations of Volatile Organic Compounds Analysis *EPA Contract Laboratory Program Statement of Work for Organic Superfund Methods, Multi-Media, Multi-Concentration, SOM02.4, August 2014*	D	SOM02.4	VOCs	GC/MS	N
L-1b	EPA OEME NERL	GC/MS Operation for Volatile Organic Compounds, EIASOP-VOAGCMS9, Rev. 9, 3/31/10 *Method 524.2, "Measurement of Purgeable Organic Compounds in Water by Capillary Column Gas Chromatography/ Mass Spectrometry", Rev 4.1, (1995), US EPA, Cin. OH.*	D	524.2	VOCs	GC/MS	N
L-2a	TBD (RAS Laboratory)	Analytical Methods for Inductively Coupled Plasma (ICP) – Atomic Emission Spectroscopy (AES) and Analytical Methods for Inductively Coupled Plasma (ICP) – Mass Spectrometry (MS) *EPA Contract Laboratory Program Statement of Work for Inorganic Analysis, Multi-Media, Multi-Concentration, ISM02.4, August 2014*	D	ISM02.4	Metals	ICP-AES, ICP/MS	N
L-2b	EPA OEME NERL	Standard Operating Procedure for the Determination of Metals in Environmental Samples Using Dual View Coupled Plasma Optical Emission Spectroscopy (ICP-OES), EIASOP-INGDVICP1.SOP, Rev. 1, 1/31/08 *Test Methods for the Determination of Metals in Environmental Samples, Supplement 1 (EPA/600/4-79-020), Revised March 1983. Method 200.7*	D	200.7	Metals	ICP-OES	N

Table 12-1
Fixed Laboratory Analytical Method/SOP References
Nyanza Chemical Waste Dump, Operable Unit 2
Ashland, Massachusetts

Reference Number	Fixed Laboratory Performing Analysis	Title, Revision Date and/or Number	Definitive or Screening Data	Region I NESTS Method Code*	Analytical Parameter	Instrument	Modified for Project Work Y or N
L-3	EPA OEME NERL	Standard Operating Procedure for the Determination of Inorganic Anions and Cations by Ion Chromatography, EIASOP-INGIC11, Revision 11, March 2010. *Method 300.0, Determination of Inorganic Anions by Ion Chromatography, EPA, Revision 2.1, August 1993.*	D	300.0C	Anions	IC	N
L-4	Eurofins Spectrum Analytical, Inc. (DAS Laboratory)	SOP for Fixed Gases and Dissolved Gases Mod. 3C-RSK-175 by TCD, 5-17-17, Rev. 6 *DAS Laboratory SOP based equivalent to Standard Operating Procedure for Gas Analysis by Micro Gas Chromatographs, EPA RSKSOP-194 and Standard Operating Procedure: Sample Preparation and Calculations for Dissolved Analysis in Water Samples Using a GC Headspace Equilibration Technique, EPA RSKSOP-175.*	D	RSK-175	Diss. Gases	GC	N
L-5	Eurofins Spectrum Analytical, Inc. (DAS Laboratory)	SOP for TOC by SW846 9060 and SM5310B 7-19-16 Rev. 15 *Standard Methods, 21st Edition. Total Organic Carbon (TOC). High Temperature Combustion Method.*	D	5310/B	TOC/DOC	TOC Analyzer	N
L-6	Eurofins Spectrum Analytical, Inc. (DAS Laboratory)	SOP for BOD by SM 5210B, 10-12-16 Rev. 12 *Standard Methods, 21st Edition. Biological Oxygen Demand (BOD). 5-Day BOD Test.*	D	5210/B	BOD	DO Meter	N

Table 12-1
Fixed Laboratory Analytical Method/SOP References
Nyanza Chemical Waste Dump, Operable Unit 2
Ashland, Massachusetts

Reference Number	Fixed Laboratory Performing Analysis	Title, Revision Date and/or Number	Definitive or Screening Data	Region I NESTS Method Code*	Analytical Parameter	Instrument	Modified for Project Work Y or N
L-7	Eurofins Spectrum Analytical, Inc. (DAS Laboratory)	SOP for COD by HACH 8000, 10-17-16 Rev. 8 *Principles of Procedures based on Standard Methods. 21st Edition. Chemical Oxygen Demand (COD). Closed Reflux, Colorimetric Method.*	D	5220/D	COD	UV-Vis	N
L-8	EPA OEME NERL	Standard Operating Procedure for the Analysis of Volatile Organic Compounds in Air by Gas Chromatograph/Ion Trap Detector, EIASOP-AIRCAN12, January 2014. *Compendium of Methods for the Determination of Toxic Organic Compounds in Ambient Air. Second Edition. Compendium Method TO-15. Determination of Volatile Organic Compounds (VOCs) in Air Collected in Specially-Prepared Canisters and Analyzed by Gas Chromatography/Mass Spectrometry (GC/MS), EPA/625/R-96/010b. January 1999.*	D	TO-15	VOCs	GC/MS	N

Notes:
* NESTS Method Code as described on the EPA-NE DQO Summary Form.
NEST = New England Sample Tracking System
TBD – To Be Determined.

Table 12-2
Fixed Laboratory Instrument Maintenance and Calibration
Nyanza Chemical Waste Dump, Operable Unit 2
Ashland, Massachusetts

Instrument	Activity	List Maintenance, Testing and Inspection Activities	Frequency of Calibration	Acceptance Criteria	Corrective Action (CA)	Person Responsible for CA	Method/SOP Reference
GC/MS	VOC	Check connections, replace disposables, bake out instrument, recondition trap and column	IC – instrument receipt, major instrument maintenance, when CC fails	minimum RRF achieved and maximum %RSD not exceeded, see SOW	See SOM02.4 (SOW)	Laboratory QA Manager TBD	L-1a
			CC – every 12 hours of operation following instrument tune	minimum RRF achieved for each analyte and maximum %D not exceeded, see SOW			
ICP-AES ICP-MS	Metals	Check connections, replace disposables, clean the instrument, change the nebulizer	IC - instrument receipt, major instrument maintenance, when CC fails	%R 80-120 for Hg; all others 90-110%, see SOW	See ISM02.4 (SOW)	Laboratory QA Manager TBD	L-2a
			CC - every 10 samples	%R 80-110 for Hg; all others 90-110%; see SOW			
GC/MS	VOC	Check connections, replace disposables, bake out instrument, recondition trap and column	IC – instrument receipt, major instrument maintenance, when CC fails	20% RSD; linear regression R^2>0.99	Evaluate chromatogram and integration. Recalibrate.	Laboratory Manager OEME	L-1b
			CC – every 12 hours of operation following instrument tune	30% RSD			

Table 12-2
Fixed Laboratory Instrument Maintenance and Calibration
Nyanza Chemical Waste Dump, Operable Unit 2
Ashland, Massachusetts
Page 2 of 3

Instrument	Activity	List Maintenance, Testing and Inspection Activities	Frequency of Calibration	Acceptance Criteria	Corrective Action (CA)	Person Responsible for CA	Method/SOP Reference
ICP-OES	Metals	Check connections, replace disposables, clean the instrument, change the nebulizer	IC - instrument receipt, major instrument maintenance, when CC fails	%R 95-105%	Reanalyze, Recalibrate	Laboratory Manager OEME	L-2b
			IPC - every 10 samples	%R 90-110%			
Ion Chromato-graph	Anions	Clean equipment, replace disposables, check connections.	IC – daily prior to blank and sample analysis	Correlation coefficient ≥ 0.995, 90-110%	Recalibrate and Reanalyze.	Laboratory Manager OEME	L-3
			CC – 10% frequency or every 2 hours and at end of run	90-110%	Recalibrate and re-run samples.		
GC	Dissolved Gases	Check connections, replace disposables, bake out instrument, recondition column or detector	IC – instrument receipt, major instrument maintenance, when CC fails	30% RSD or >0.99 linear regression; ICV +/- 25% (gases)	Repeat analysis, prepare new standards	Laboratory QA Manager Eurofins Spectrum	L-4
			CC - every 4 hours of operation or 25 samples, whichever is more frequent; and at end of sample batch	±25% of average response (gases) ±30% of average response (CO2)	Repeat, recalibrate, prepare new standards, reanalyze samples		
TOC Analyzer	TOC	Clean equipment, replace disposables, check connections.	IC – daily prior to blank and sample analysis	Correlation coefficient ≥ 0.997, 85-115%	Recalibrate and Reanalyze.	Laboratory QA Manager Eurofins Spectrum	L-5
			CC – 1 of every 10 samples	85-115%	Recalibrate and re-run samples.		

Table 12-2
Fixed Laboratory Instrument Maintenance and Calibration
Nyanza Chemical Waste Dump, Operable Unit 2
Ashland, Massachusetts

Instrument	Activity	List Maintenance, Testing and Inspection Activities	Frequency of Calibration	Acceptance Criteria	Corrective Action (CA)	Person Responsible for CA	Method/SOP Reference
DO Meter	BOD	Clean equipment, replace probe, allow instrument to stabilize.	Seed Standard – daily prior to blank and sample analysis	198 mg/L ±30.5 mg/L	Recalibrate and Reanalyze.	Laboratory QA Manager Eurofins Spectrum	L-6
			Standard Reference Material run after calibration	Within specified range	Recalibrate and re-run samples.		
UV-Vis Spectrometer	COD	Clean equipment and cuvettes, check connections.	IC – daily prior to blank and sample analysis	Correlation coefficient ≥ 0.997, 90-110%	Recalibrate and Reanalyze.	Laboratory QA Manager Eurofins Spectrum	L-7
			Standard Reference Material run after calibration	80-120% or vendor acceptable range	Recalibrate and re-run samples.		
GC/MS	VOCs in Air	Check connections, replace disposables, bake out instrument, recondition trap and column	IC – instrument receipt, major instrument maintenance, when CC fails	Correlation coefficient ≥ 0.99; %RSD <30%	Recalibrate and Reanalyze.	Laboratory Manager OEME	L-8
			CC – every 24 hours of operation following instrument tune	%D <30%	Reanalyze/recalibrate		

Table 13-1
Fixed Laboratory Analytical QC Samples
Nyanza Chemical Waste Dump, Operable Unit 2
Ashland, Massachusetts

Medium/Matrix	GW
Sampling SOPs	S-12, S-3, S-5
Analytical Parameter	VOC
Concentration Level	Low
Analytical Method/ SOP Reference	L-1a
Laboratory Name	CLP RAS TBD
No. of Sample Locations	See Table 6-9

Laboratory QC	Frequency / Number	Method/SOP QC Acceptance Limits	Corrective Action (CA)	Person(s) Responsible for CA	Data Quality Indicator (DQI)	Measurement Performance Criteria
Method Blank	Once each 12-hour shift after IC or CC and before samples	< CRQL for all target compounds < 2x CRQL for methylene chloride; acetone and 2-butanone	Reclean, retest, re-analyze and/or qualify data.	Analyst/ Data Validator	Accuracy/Bias (Contamination)	< CRQL for all target compounds < 2x CRQL for methylene chloride; acetone and 2-butanone
Reagent Blank	NA	NA	NA	NA	NA	NA
Storage Blank	Once per SDG, after all samples	< CRQL for all target compounds < 2x CRQL for methylene chloride; acetone and 2-butanone	Re-analyze and report results	Analyst/ Data Validator	Accuracy/Bias (Contamination)	< CRQL for all target compounds < 2x CRQL for methylene chloride; acetone and 2-butanone
Instrument Blank	Immediately following sample or dilution where TCL concentration exceeds CAL range	< CRQL for all target compounds	Reclean, retest, re-analyze and/or qualify data	Analyst/ Data Validator	Accuracy/Bias (Contamination)	< CRQL for all target compounds
Laboratory Duplicate	NA	NA	NA	NA	NA	NA
Internal Standards (IS)	All samples, standards, QC samples, and blanks	RT shifts < 0.50 min. (30 sec) of CC RT; EICP area 50% to 200% of its response in most recent CC	Check calculations, spiking solutions, and instrument performance. Check instrument, and either reanalyze samples or qualify data.	Analyst /Data Validator	Precision and Accuracy/Bias	RT shifts < 0.50 min. (30 sec) of CC RT; EICP area 50% to 200% of its response in most recent CC
Matrix Spike/Matrix Spike Duplicates (MS/MSD)	Once per SDG or sample preparation batch (1/20)	Must meet all IS, and DMC criteria. For advisory MS recoveries and RPDs see Table 7-1.	If IS, DMC, blanks, CC, IC, or BFB tune does not meet criteria, reanalyze.	Analyst /Data Validator	Accuracy/Bias and Precision	Must meet all IS, and DMC criteria. For advisory MS recoveries and RPDs see Table 7-1.
Deuterated monitoring compounds (DMC)[1]	All samples, standards, QC samples, and blanks	See below for recovery criteria. For samples, up to 3 may exceed acceptance criteria.	Check calculations, spiking solutions, and instrument performance. Check instrument.	Analyst /Data Validator	Accuracy/Bias	See below for recovery criteria. For samples, up to 3 may exceed acceptance criteria.
Laboratory Control Sample (LCS)	NA	NA	NA	NA	NA	NA
Performance Evaluation (PE) Sample	One per SDG (1/20)	Must meet EPA acceptance criteria for water and soil.	Reanalyze and qualify data associated with PE	Analyst /Data Validator	Accuracy/ Bias	Must meet EPA acceptance criteria for water and soil.

Notes:

[1]DMC	% Rec-water	DMC	%Rec-water
vinyl chloride-d_3	60-135	1,2-dichloroethane-d_4	70-125
2-hexanone-d_5	45-130	chloroethane-d_5	70-130
benzene-d_6	70-125	1,1-dichloroethene-d_2	60-125
1,1,2,2-tetrachloroethane-d_2	65-120	2-butanone-d_5	40-130
toluene-d_8	80-120	1,2-dichlorobenzene-d_6	80-120
Chloroform-d	70-125	trans-1,3-dichloropropene-d_4	60-125
1,2-dichloropropane-d_6	70-120		

CAL – calibration
CC – continuing calibration
CRQL – contract required quantitation limit
EICP – extracted ion current profile
BFB – 4-bromofluorobenzene

IC – initial calibration
NA – not applicable
QC – quality control
RT – retention time
SDG – sample delivery group
TCL – target compound list
TBD – to be determined
RPD – relative percent difference

Table 13-1
Fixed Laboratory Analytical QC Samples
Nyanza Chemical Waste Dump, Operable Unit 2
Ashland, Massachusetts

Medium/Matrix	GW
Sampling SOPs	S-12, S-3, S-5
Analytical Parameter	VOC
Concentration Level	Low
Analytical Method/ SOP Reference	L-1b
Laboratory Name	EPA OEME
No. of Sample Locations	See Table 6-9

Laboratory QC	Frequency / Number	Method/SOP QC Acceptance Limits	Corrective Action (CA)	Person(s) Responsible for CA	Data Quality Indicator (DQI)	Measurement Performance Criteria
Method Blank	Before analysis and once each 12-hour shift	< QL for all target compounds	Reclean, retest, re-analyze and/or qualify data.	Analyst/ Data Validator	Accuracy/Bias (Contamination)	< QL for all target compounds
Reagent Blank	NA	NA	NA	NA	NA	NA
Storage Blank	Once per SDG, after all samples	< QL for all target compounds	Re-analyze and report results	Analyst/ Data Validator	Accuracy/Bias (Contamination)	< QL for all target compounds
Instrument Blank	Immediately following sample or dilution where TCL concentration exceeds CAL range	< QL for all target compounds	Reclean, retest, re-analyze and/or qualify data	Analyst/ Data Validator	Accuracy/Bias (Contamination)	< QL for all target compounds
Laboratory Duplicate	NA	NA	NA	NA	NA	NA
Internal Standards (IS)	All samples, standards, QC samples, and blanks	RT shifts < 0.50 min. (30 sec) of CC RT; EICP area 70% to 130% of its response in most recent CC	Check calculations, spiking solutions, and instrument performance. Check instrument, and either reanalyze samples or qualify data.	Analyst /Data Validator	Precision and Accuracy/Bias	RT shifts < 0.50 min. (30 sec) of CC RT; EICP area 70% to 130% of its response in most recent CC
Matrix Spike/Matrix Spike Duplicates (MS/MSD)	Once per SDG or sample preparation batch (1/20)	All target analytes. Control limits established bi-annually.	Evaluate surrogate recovery and IS areas. Explain in report narrative.	Analyst /Data Validator	Accuracy/Bias and Precision	All target analytes. Control limits established bi-annually.
Surrogate Compounds[1]	All samples, standards, QC samples, and blanks	See below for recovery criteria. For samples, up to 3 may exceed acceptance criteria.	Check calculations, spiking solutions, and instrument performance. Check instrument.	Analyst /Data Validator	Accuracy/Bias	See below for recovery criteria. For samples, up to 3 may exceed acceptance criteria.
Laboratory Control Sample (LCS)	NA	NA	NA	NA	NA	NA
Performance Evaluation (PE) Sample	One per SDG (1/20)	Must meet EPA acceptance criteria for water and soil.	Reanalyze and qualify data associated with PE	Analyst /Data Validator	Accuracy/ Bias	Must meet EPA acceptance criteria for water and soil.

Notes:
[1]Surrogates
1,2-dichloroethane-d_4
1,4-bromofluorobenzene
toluene-d_8

IC – initial calibration
NA – not applicable
QC – quality control
CAL – calibration
CC – continuing calibration
QL – quantitation limit
EICP – extracted ion current profile
BFB – 4-bromofluorobenzene

RT – retention time
SDG – sample delivery group
TCL – target compound list
TBD – to be determined
RPD – relative percent difference

Table 13-1
Fixed Laboratory Analytical QC Samples
Nyanza Chemical Waste Dump, Operable Unit 2
Ashland, Massachusetts

Medium/Matrix	GW
Sampling SOP	S-12, S-3, S-5
Analytical Parameter	Metals
Concentration Level	Low
Analytical Method/ SOP Reference	L-2a
Laboratory Name	CLP RAS TBD
No. of Sample Locations	See Table 6-9

Laboratory QC	Frequency / Number	Method/SOP QC Acceptance Limits	Corrective Action (CA)	Person(s) Responsible for CA	Data Quality Indicator (DQI)	Measurement Performance Criteria
Method Blank	One per SDG or sample preparation batch.	< CRQL for all target analytes	Reclean, retest, re-analyze and/or qualify data.	Analyst/ Data Validator	Accuracy/Bias (Contamination)	< CRQL for all target analytes
Reagent Blank	NA	NA	NA	NA	NA	NA
Interference Check Sample (ICS)	Beginning of each run.	±20% of true value or ±2 times the CRQL	Recalibrate and reanalyze	Analyst	Accuracy	±20% of true value or ±2 times the CRQL
Instrument Blanks (ICBs/CCBs)	ICB – after ICV; CCBs – 10% or every 2 hours of operation; after every CCV; at beginning of the run and after last sample.	< CRQL for all target analytes	Reclean, retest, re-analyze and/or qualify data	Analyst/ Data Validator	Accuracy/Bias (Contamination)	< CRQL for all target analytes
Laboratory Duplicate	One per SDG or sample preparation batch (1/20)	20% RPD for results >5x CRQL or +/-CRQL when results <5x CRQL	Data Qualified	Analyst/Data Validator	Precision	20% RPD for results >5x CRQL or +/-CRQL when results <5x CRQL
Internal Standards (IS)	All samples, QC samples for ICP/MS testing.	Sample IS response of 60-125% of calibration blank IS.	Dilute the sample 2x and reanalyze. Note in the narrative if fails again.	Analyst/Data Validator	Accuracy	Sample IS response of 60-125% of calibration blank IS.
Matrix Spike (MS)	Once per SDG or sample preparation batch (1/20)	For advisory MS recoveries of 75-125% are goals.	Flag data and document in case narrative.	Analyst /Data Validator	Accuracy/Bias	Advisory MS recoveries only.
Laboratory Control Sample (LCS)	Once per SDG or sample preparation batch	%R=80-120 for all analytes	Recalibrate and reanalyze the LCS.	Analyst	Accuracy/Bias	LCS must meet requirements stated.
Performance Evaluation (PE) Sample	One per SDG (1/20)	Must meet EPA acceptance criteria for water and soil.	Reanalyze and qualify data associated with PE	Analyst /Data Validator	Accuracy/ Bias	Must meet EPA acceptance criteria for water and soil.

Notes:
ICP/MS – inductively coupled plasma/mass spectrometer
ICB – initial calibration blank
ICV – initial calibration verification
CCB – continuing calibration blank
CCV – continuing calibration verification
CRQL – contract required quantitation limit
NA – not applicable
QC – quality control
RPD – relative percent difference
SDG – sample delivery group
TBD – to be determined

Table 13-1
Fixed Laboratory Analytical QC Samples
Nyanza Chemical Waste Dump, Operable Unit 2
Ashland, Massachusetts

Medium/Matrix	GW
Sampling SOP	S-12, S-3, S-5
Analytical Parameter	Metals
Concentration Level	Low
Analytical Method/ SOP Reference	L-2b
Laboratory Name	EPA OEME
No. of Sample Locations	See Table 6-9

Laboratory QC	Frequency / Number	Method/SOP QC Acceptance Limits	Corrective Action (CA)	Person(s) Responsible for CA	Data Quality Indicator (DQI)	Measurement Performance Criteria
Method Blank	One per SDG or sample preparation batch.	< ½ QL for all target analytes	Reclean, retest, re-analyze and/or qualify data.	Analyst/ Data Validator	Accuracy/Bias (Contamination)	< ½ QL for all target analytes
Reagent Blank	NA	NA	NA	NA	NA	NA
Interference Check Sample (ICS)	Beginning and end of each run.	±20% of true value	Recalibrate and reanalyze	Analyst	Accuracy	±20% of true value
Instrument Blanks (ICBs/CCBs)	ICB – after ICV; CCBs – 10% or every 2 hours of operation; after every CCV; at beginning of the run and after last sample.	< ½ QL for all target analytes	Reclean, retest, re-analyze and/or qualify data	Analyst/ Data Validator	Accuracy/Bias (Contamination)	< ½ QL for all target analytes
Laboratory Duplicate	One per SDG or sample preparation batch (1/20)	20% RPD	Data Qualified	Analyst/Data Validator	Precision	20% RPD
Internal Standards (IS)	NA	NA	NA	NA	NA	NA
Matrix Spike (MS)	Once per SDG or sample preparation batch (1/20)	%R 75-125%.	Flag data and document in case narrative.	Analyst /Data Validator	Accuracy/Bias	%R 75-125%.
Laboratory Control Sample (LCS)	Once per SDG or sample preparation batch	%R=85-115 for all analytes	Recalibrate and reanalyze the LCS.	Analyst	Accuracy/Bias	LCS must meet requirements stated.
Performance Evaluation (PE) Sample	One per SDG (1/20)	Must meet EPA acceptance criteria for water and soil.	Reanalyze and qualify data associated with PE	Analyst /Data Validator	Accuracy/ Bias	Must meet EPA acceptance criteria for water and soil.

Notes:
ICP/MS – inductively coupled plasma/mass spectrometer
ICB – initial calibration blank
ICV – initial calibration verification
CCB – continuing calibration blank
CCV – continuing calibration verification
QL – quantitation limit
NA – not applicable
QC – quality control
RPD – relative percent difference
SDG – sample delivery group
TBD – to be determined

Table 13-1
Fixed Laboratory Analytical QC Samples
Nyanza Chemical Waste Dump, Operable Unit 2
Ashland, Massachusetts

Medium/Matrix	GW
Sampling SOP	S-12, S-3, S-5
Analytical Parameter	Anions
Concentration Level	Low
Analytical Method/ SOP Reference	L-3
Laboratory Name	OEME
No. of Sample Locations	See Table 6-9

Laboratory QC	Frequency / Number	Method/SOP QC Acceptance Limits	Corrective Action (CA)	Person(s) Responsible for CA	Data Quality Indicator (DQI)	Measurement Performance Criteria
Method Blank	One per SDG or sample preparation batch.	< QL for target analyte	Reclean, retest, re-analyze and/or qualify data.	Analyst/ Data Validator	Accuracy/Bias (Contamination)	< QL for target analyte
Reagent Blank	After calibration, every 10 injections and at end of run.	< QL for target analyte	Reclean, retest, re-analyze and/or qualify data.	Analyst/ Data Validator	Accuracy/Bias (Contamination)	< QL for target analyte
Instrument Blanks (ICBs/CCBs)	After calibration, every 10 injections and at end of run.	< QL for target analyte	Reclean, retest, re-analyze and/or qualify data	Analyst/ Data Validator	Accuracy/Bias (Contamination)	< QL for target analyte
Laboratory Duplicate	One per batch or 1 per 10 samples	RPD ≤20%	Rerun samples and/or qualify data	Analyst/ Data Validator	Precision	RPD ≤20%
Matrix Spike/matrix spike duplicate (MS/MSD)	Once per SDG or sample preparation batch (1/10)	80-120% recovery; RPD 20% for aqueous samples	If LCS in control, narrate.	Analyst /Data Validator	Accuracy/Precision	75-125% recovery; RPD 20% for aqueous samples
Laboratory Control Sample (LCS)	Once per SDG or sample preparation batch (1/10)	%R=90-110 for all analytes	Recalibrate and reanalyze.	Analyst	Accuracy/Precision	LCS must meet requirements stated or narrate.
Performance Evaluation (PE) Sample	NA	NA	NA	NA	NA	NA

Notes:
ICB – initial calibration blank
QL – quantitation limit
CCB – continuing calibration blank
SDG – sample delivery group
NA – not applicable
QC – quality control
TBD – to be determined
RPD – relative percent difference

Table 13-1
Fixed Laboratory Analytical QC Samples
Nyanza Chemical Waste Dump, Operable Unit 2
Ashland, Massachusetts

Medium/Matrix	GW
Sampling SOP	S-12, S-3, S-5
Analytical Parameter	Dissolved Gases
Concentration Level	Low
Analytical Method/ SOP Reference	L-4
Laboratory Name	DAS – Eurofins Spectrum
No. of Sample Locations	See Table 6-9

Laboratory QC	Frequency / Number	Method/SOP QC Acceptance Limits	Corrective Action (CA)	Person(s) Responsible for CA	Data Quality Indicator (DQI)	Measurement Performance Criteria
Method Blank	One per SDG or sample preparation batch.	< QL for target analyte	Reclean, retest, re-analyze and/or qualify data.	Analyst/ Data Validator	Accuracy/Bias (Contamination)	< QL for target analyte
Reagent Blank	After calibration, every 10 injections and at end of run.	< QL for target analyte	Reclean, retest, re-analyze and/or qualify data.	Analyst/ Data Validator	Accuracy/Bias (Contamination)	< QL for target analyte
Instrument Blanks (ICBs/CCBs)	After calibration, every 10 injections and at end of run.	< QL for target analyte	Reclean, retest, re-analyze and/or qualify data	Analyst/ Data Validator	Accuracy/Bias (Contamination)	< QL for target analyte
Laboratory Duplicate	NA	NA	NA	NA	NA	NA
Matrix Spike/matrix spike duplicate (MS/MSD)	Once per SDG or sample preparation batch (1/20)	70-130% recovery; RPD 30% for aqueous samples	If LCS in control, narrate.	Analyst /Data Validator	Accuracy/Precision	70-130% recovery; RPD 30% for aqueous samples
Laboratory Control Sample (LCS)	Once per SDG or sample preparation batch (1/20)	%R=70-130; RPD 30% for LCSD for all analytes	Recalibrate and reanalyze.	Analyst	Accuracy/Precision	LCS must meet requirements stated or narrate.
Performance Evaluation (PE) Sample	NA	NA	NA	NA	NA	NA

Notes:
ICB – initial calibration blank
QL – quantitation limit
CCB – continuing calibration blank
SDG – sample delivery group
NA – not applicable
QC – quality control
TBD – to be determined
RPD – relative percent difference

Table 13-1
Fixed Laboratory Analytical QC Samples
Nyanza Chemical Waste Dump, Operable Unit 2
Ashland, Massachusetts

Medium/Matrix	GW
Sampling SOP	S-12, S-3, S-5
Analytical Parameter	Oxygen Demand Parameters[1]
Concentration Level	Low
Analytical Method/ SOP Reference	L-5, L-6, L-7
Laboratory Name	DAS – Eurofins Spectrum
No. of Sample Locations	See Table 6-9

Laboratory QC	Frequency / Number	Method/SOP QC Acceptance Limits	Corrective Action (CA)	Person(s) Responsible for CA	Data Quality Indicator (DQI)	Measurement Performance Criteria
Method Blank	One per SDG or sample preparation batch.	< QL for target analyte	Reclean, retest, re-analyze and/or qualify data.	Analyst/ Data Validator	Accuracy/Bias (Contamination)	< QL for target analyte
Reagent Blank	After calibration, every 10 samples and at end of run.	< QL for target analyte	Reclean, retest, re-analyze and/or qualify data.	Analyst/ Data Validator	Accuracy/Bias (Contamination)	< QL for target analyte
Instrument Blanks (ICBs/CCBs)	After calibration, every 10 samples and at end of run.	< QL for target analyte	Reclean, retest, re-analyze and/or qualify data	Analyst/ Data Validator	Accuracy/Bias (Contamination)	< QL for target analyte
Laboratory Duplicate	Once per SDG or sample preparation batch (1/20)	RPD 20%	Rerun samples and/or qualify data	Analyst/ Data Validator	Precision	RPD ≤20%
Matrix Spike/matrix spike duplicate (MS/MSD)	Once per SDG or sample preparation batch (1/10) – TOC and COD only	COD = 80-120% recovery; TOC = 70-130%; RPD 20% for aqueous samples	If LCS in control, narrate.	Analyst /Data Validator	Accuracy/Precision	80-120% recovery; RPD 20% for aqueous samples
Laboratory Control Sample (LCS)	Once per SDG or sample preparation batch (1/20)	%R=90-110; RPD 20% for LCSD for COD; %R=85-115% for TOC and BOD	Recalibrate and reanalyze.	Analyst	Accuracy/Precision	LCS must meet requirements stated or narrate.
Performance Evaluation (PE) Sample	NA	NA	NA	NA	NA	NA

Notes:
[1] Oxygen Demand Parameters consist of: dissolved organic carbon (DOC)/ total organic carbon (TOC); biological oxygen demand (BOD); and chemical oxygen demand (COD).
ICB – initial calibration blank
QL – quantitation limit
CCB – continuing calibration blank
SDG – sample delivery group
NA – not applicable
QC – quality control
TBD – to be determined
RPD – relative percent difference

Table 13-1
Fixed Laboratory Analytical QC Samples
Nyanza Chemical Waste Dump, Operable Unit 2
Ashland, Massachusetts

Medium/Matrix	AR
Sampling SOPs	S-1
Analytical Parameter	VOC
Concentration Level	Low
Analytical Method/ SOP Reference	L-8
Laboratory Name	OEME
No. of Sample Locations	See Table 6-9

Laboratory QC	Frequency / Number	Method/SOP QC Acceptance Limits	Corrective Action (CA)	Person(s) Responsible for CA	Data Quality Indicator (DQI)	Measurement Performance Criteria
Method Blank	Once each 12-hour shift after IC or CC and before samples	< QL for all target compounds	Reclean, retest, re-analyze and/or qualify data.	Analyst/ Data Validator	Accuracy/Bias (Contamination)	< QL for all target compounds
Storage Blank	Once per SDG, after all samples	< QL for all target compounds	Re-analyze and report results	Analyst/ Data Validator	Accuracy/Bias (Contamination)	< QL for all target compounds
Instrument Blank	Immediately following sample or dilution where analyte concentration exceeds CAL range	< QL for all target compounds	Reclean, retest, re-analyze and/or qualify data	Analyst/ Data Validator	Accuracy/Bias (Contamination)	< QL for all target compounds
Laboratory Duplicate	One per project or 1 per 20 samples	RPD < 50%	Reanalyze; note outliers in narrative and/or qualify data.	Analyst/ Data Validator	Precision	RPD < 50%
Internal Standards (IS) [bromochloromethane, chlorobenzene-d_5, 1,4-difluorobenzene]	All samples, standards, QC samples, and blanks	RT shifts < 0.33 min. of CC RT; EICP area 60% to 140% of its response in most recent CC	Check calculations, spiking solutions, and instrument performance. Check instrument, and either reanalyze samples or qualify data.	Analyst /Data Validator	Precision and Accuracy/Bias	RT shifts < 0.33 min. of CC RT; EICP area 40% to 140% of its response in most recent CC
Matrix Spike/Matrix Spike Duplicates (MS/MSD)	Once per SDG or sample preparation batch (1/20)	70-130% Recovery or laboratory established limits	If IS, surrogate, blanks, CC, IC, or BFB tune does not meet criteria, reanalyze.	Analyst /Data Validator	Accuracy/Bias and Precision	70-130% Recovery or laboratory established limits
Surrogates (1,2-dichloroethane-d_4, toluene-d_8, bromofluorobenzene)	All samples, standards, QC samples, and blanks	70-130% Recovery or laboratory established limits	Check calculations, spiking solutions, and instrument performance. Check instrument.	Analyst /Data Validator	Accuracy/Bias	70-130%Recovery or laboratory established limits
Laboratory Control Sample (LCS)	NA	NA	NA	NA	NA	NA
Performance Evaluation (PE) Sample	NA	NA	NA	NA	NA	NA

Notes:
IC – initial calibration
NA – not applicable
QC – quality control
CAL – calibration
CC – continuing calibration
QL – quantitation limit
EICP – extracted ion current profile
BFB – 4-bromofluorobenzene
RPD – relative percent difference
RT – retention time
SDG – sample delivery group
AR – indoor air

Table 15-1
Project Documentation and Records
Nyanza Chemical Waste Dump, Operable Unit 2
Ashland, Massachusetts

Sample Collection Records	Field Analysis Records	Fixed Laboratory Records	Data Assessment Records	Project Documents
Logbooks	Equipment Calibration Logs	Sample Receipt, Custody and Tracking Records	Data Validation and Usability Reports	Quality Assurance Project Plan
Chains of Custody	Telephone Logs	Standard Traceability Logs	Performance Evaluation Sample Results	Project Billing Records
Airbills	Field Notebooks	Equipment Calibration Logs	Sample Data Tracking Form	Sampling/Analysis Technical Memorandum
Telephone Logs	Field Instrument Data	Sample Preparation Logs	SDG Tracking Form	Site Specific Health & Safety Plan
Scribe Files	Field Instrument Data and Observations	Run Logs	Corrective Action Forms	Draft HHRA
Custody Seals		Equipment Maintenance, Testing, and Inspection Logs	Telephone Logs	Final HHRA
Site Health and Safety Logs		Corrective Action Forms	Boring /well installation logs	Bench and Pilot Treatability Studies Technical Memorandum
Boring /Well installation Logs		Reported Field Sample Results	Treatability Study Results	Draft FS Report
Monitoring Well Sampling Worksheets		Reported Results for Standards, QC Checks, and QC Samples	Electronic Validated Sample Results	Final FS Report
Electronic Data Collection Files		Data Package Completeness Checklists		
		Method QC Checklists		

Table 17-1
QA Management Reports
Nyanza Chemical Waste Dump, Operable Unit 2
Ashland, Massachusetts

Type of Report	Frequency (daily, weekly monthly, quarterly, annually, etc.)	Projected Delivery Date(s)	Person(s) Responsible for Report Preparation, Title and Organizational Affiliation	Report Recipients, Title and Organizational Affiliation
Verbal Status Report	Daily	At the end of each day	Nobis Field Operations Leader	Nobis Project Manager
Verbal or Written Status Report	As necessary	As necessary	Nobis Project Manager	EPA Task Order Project Officer
Written Monthly Status Reports	Monthly	20th calendar day of the month following the fiscal month period	Nobis Project Manager	EPA Task Order Project Officer
Written Data Review Reports	One per Sample Delivery Group	21days after receipt of fully reconciled Sample Data Package	Nobis Data Validators	EPA Task Order Project Officer; Laboratory EPA CLP POs
Data Evaluation Reports/ Technical Memoranda	Following completion of sampling, analysis, and data validation activities	Approximately 3 months after completion of data review/validation	Nobis Project Manager	EPA Task Order Project Officer
Audit Report	Following completion of each audit, if applicable	7 days or sooner after completion of field audit; 2 weeks or sooner after completion of RAC 2 program audits	Nobis Auditor	Nobis Project Manager, Nobis RAC 2 QA Manager, and Nobis Lead Chemist if relevant.

Table 18-1
Data Verification Process
Nyanza Chemical Waste Dump, Operable Unit 2
Ashland, Massachusetts

Verification Task	Description	I/E	Responsible for Verification (Name, Organization)
Sampling	Sampling records, boring logs, and field analysis data will be reviewed daily or per sample for legibility, accuracy, clarity, and completeness to ensure consistent and proper field techniques.	I	Nobis Field Operations Leader (FOL)
Sample Custody and Shipping	Chains-of-custody, sample labels, and shipping documents will be checked for completeness and accuracy by the field technician prior to shipping of samples.	I	Nobis FOL
Sample Receipt	Fixed laboratories will verify chain-of-custody documentation for all methods and samples.	E	Laboratory QA Manager, TBD
Laboratory Data	Results of internal QA/QC sample analyses associated with every method of analysis will be generated by the fixed laboratories	E	Laboratory QA Manager, TBD
Laboratory Data Packages	All data will be reviewed by the laboratory prior to shipment of data packages. Following an internal review process, fixed laboratories will document deviations from the analytical specifications and Table 13-1 in the case narrative for the SDG and/or with data qualifiers.	E	Laboratory QA Manager, TBD
Laboratory Data	Results of PES submitted by Nobis, for analysis and scored by the EPA Region I, OEME, will be evaluated with respect to the DQOs defined in Section 5.0 and 7.0 of the QAPP and on Table 7-1.	I	Nobis Lead Chemist and Nobis Validation Staff
Data Validation	• All CLP RAS and DAS data will be validated to a Tier 1 Plus level. OEME data will be validated to a Tier 1 modified level, which will include qualification for laboratory and field QC samples. • If the quality of any review suggests the need for further review or if the use of the data changes, then with approval from the TOPO, the level of the data validation may be elevated to a higher tier review. • Validation reports will be generated. Critical deficiencies (incomplete data) will be identified, the laboratory and EPA contacted and corrective actions implemented to make the packages complete. Issues that impact the data will be brought to the attention of the Nobis Lead Chemist in order to initiate corrective action, possibly in the form of reanalysis or re-sampling.	I	Nobis Lead Chemist and Data Validation Staff
Database	Analytical results to which data validation qualifiers have been added are compiled into a database. Queries made as part of generation of comparison tables from the database serve to evaluate completeness and usability of the results in the database.	I	Nobis Lead Chemist

Notes:
I – Internal
E - External

Table 18-2
Data Validation Summary
Nyanza Chemical Waste Dump, Operable Unit 2
Ashland, Massachusetts

Medium / Matrix[6]	Analytical Parameter[1]	Validation Criteria[2]	Validation Criteria Modified[3]	Data Validation Tier Level[3]	Modified Tier Level Used	Data Validator (Name, title and organizational affiliation)	Responsibility for Data Validations (Name, title and organizational affiliation)
GW	VOCs by SOM02.4	*EPA-NE Data Review Program Guidance, April 2013* *EPA-NE Environmental Data Review Supplement, April 2013* *EPA National Functional Guidelines for Superfund Organic Methods Data Review* (August 2014)	N	Tier 1 Plus	No	Nobis Staff	Nobis Lead Chemist
GW	VOCs by EPA OEME SOP	*EPA-NE Data Review Program Guidance, April 2013* *EPA-NE Environmental Data Review Supplement, April 2013* *EPA National Functional Guidelines for Superfund Organic Methods Data Review* (August 2014)	Y – Modified for method	Tier 1 Mod	Yes – lab QC and field QC reviewed	Nobis Staff	Nobis Lead Chemist
GW	Metals by ISM02.4	*EPA-NE Data Review Program Guidance, April 2013* *EPA-NE Environmental Data Review Supplement, April 2013* *EPA National Functional Guidelines for Inorganic Superfund Data Review* (August 2014)	N	Tier 1 Plus	No	Nobis Staff	Nobis Lead Chemist
GW	Metals by EPA OEME SOP	*EPA-NE Data Review Program Guidance, April 2013* *EPA-NE Environmental Data Review Supplement, April 2013* *EPA National Functional Guidelines for Inorganic Superfund Data Review* (August 2014)	Y – Modified for method	Tier 1 Mod	Yes – lab QC and field QC reviewed	Nobis Staff	Nobis Lead Chemist
GW	Anions by EPA OEME SOP	*EPA-NE Data Review Program Guidance, April 2013* *EPA-NE Environmental Data Review Supplement, April 2013* *EPA National Functional Guidelines for Inorganic Superfund Data Review* (August 2014)	Y – Modified for method	Tier 1 Mod	Yes – lab QC and field QC reviewed	Nobis Staff	Nobis Lead Chemist

Table 18-2
Data Validation Summary
Nyanza Chemical Waste Dump, Operable Unit 2
Ashland, Massachusetts

Medium / Matrix[6]	Analytical Parameter[1]	Validation Criteria[2]	Validation Criteria Modified[3]	Data Validation Tier Level[3]	Modified Tier Level Used	Data Validator (Name, title and organizational affiliation)	Responsibility for Data Validations (Name, title and organizational affiliation)
GW	Dissolved Gases by RSK-175	*EPA-NE Data Review Program Guidance, April 2013* *EPA-NE Environmental Data Review Supplement, April 2013* *EPA National Functional Guidelines for Superfund Organic Methods Data Review* (August 2014)	Y – Modified for method	Tier 1 Plus	No	Nobis Staff	Nobis Lead Chemist
GW	Oxygen Demand Parameters[4]	*EPA-NE Data Review Program Guidance, April 2013* *EPA-NE Environmental Data Review Supplement, April 2013* *EPA National Functional Guidelines for Inorganic Superfund Data Review* (August 2014)	Y – Modified for methods	Tier 1 Plus	No	Nobis Staff	Nobis Lead Chemist
AR	VOCs by TO-15	*EPA-NE Data Review Program Guidance, April 2013* *EPA-NE Environmental Data Review Supplement, April 2013* *EPA National Functional Guidelines for Superfund Organic Methods Data Review* (August 2014)	Y – Modified for method	Tier 1 Mod	Yes – lab QC and field QC reviewed	Nobis Staff	Nobis Lead Chemist

Notes:
1 The most recent revisions of methods will be used for analysis unless otherwise noted.
2 The most recent revision of data validation protocols will be used to validate project data.
3 Validation of non-CLP methods will be modified base on method and QAPP criteria.
4 Oxygen Demand Parameters consist of: dissolved organic carbon (DOC)/ total organic carbon (TOC); biological oxygen demand (BOD); and chemical oxygen demand (COD).

GW=groundwater; AR=indoor air

FIGURES

Figure 4-1
Project Organization
Nyanza Chemical Waste Dump OU2 Superfund Site
Ashland, Massachusetts

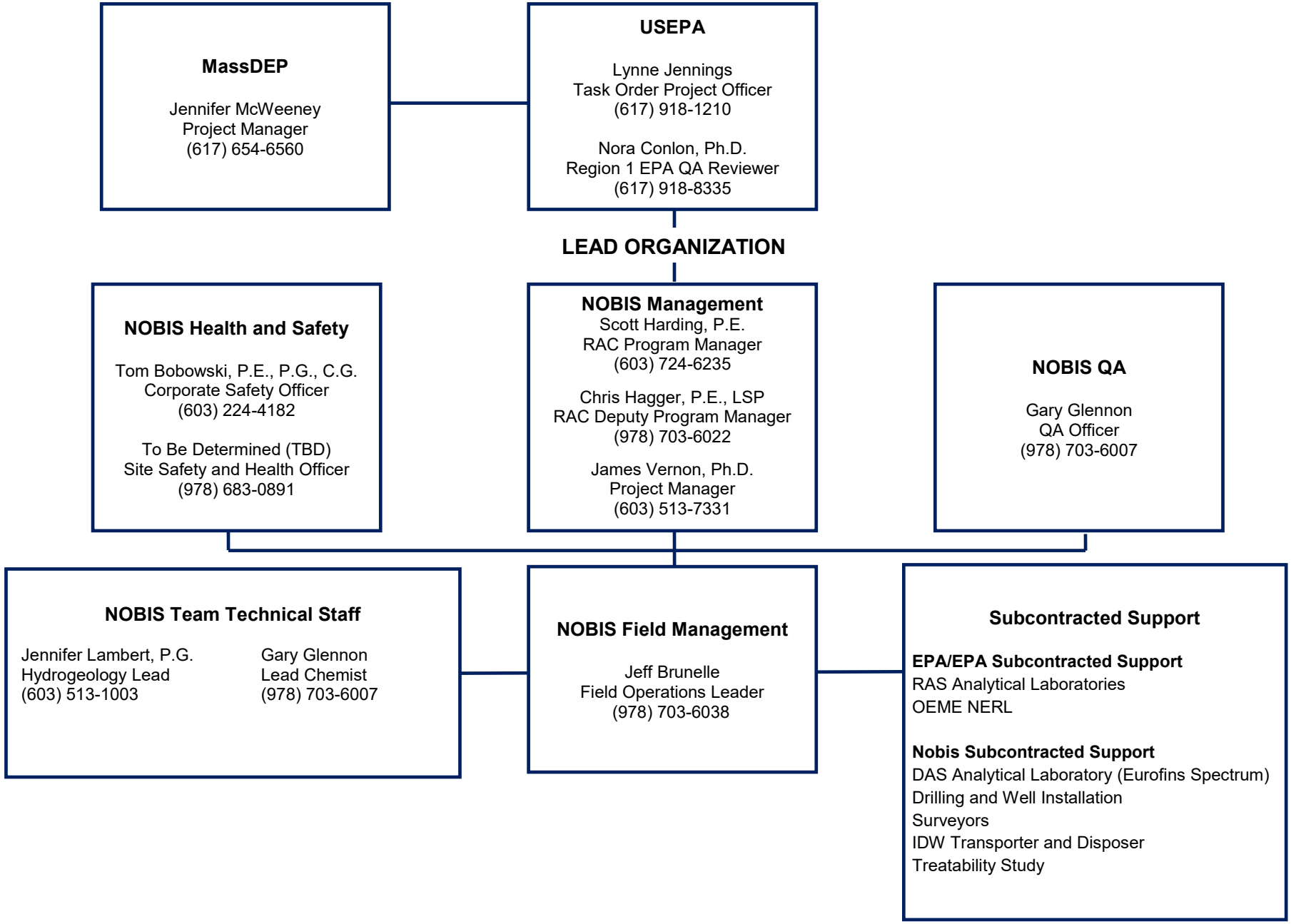

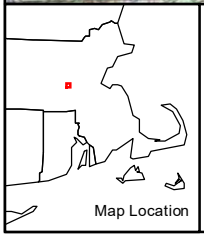

USGS Topographic Map
Ashland, Massachusetts
Revised 1982

0 1,000 2,000 4,000
Feet 1" = 2,000'

N

Nobis
Engineering a Sustainable Future
Nobis Engineering, Inc.
585 Middlesex Street
Lowell, MA 01851
(978) 683-0891
www.nobiseng.com
Client-Focused, Employee-Owned

FIGURE 5-1

SITE LOCUS PLAN
NYANZA CHEMICAL WASTE DUMP
SUPERFUND SITE - OPERABLE UNIT II
ASHLAND, MASSACHUSETTS

PREPARED BY: JH	CHECKED BY: JL
PROJECT NO. 80113	DATE: JULY 2017

R:\80000 Task Orders\80113 Nyanza FS OU2\Technical Data\GIS\Figures\Figure 5-1 Nyanza Locus.mxd 7/14/2017 jharrington

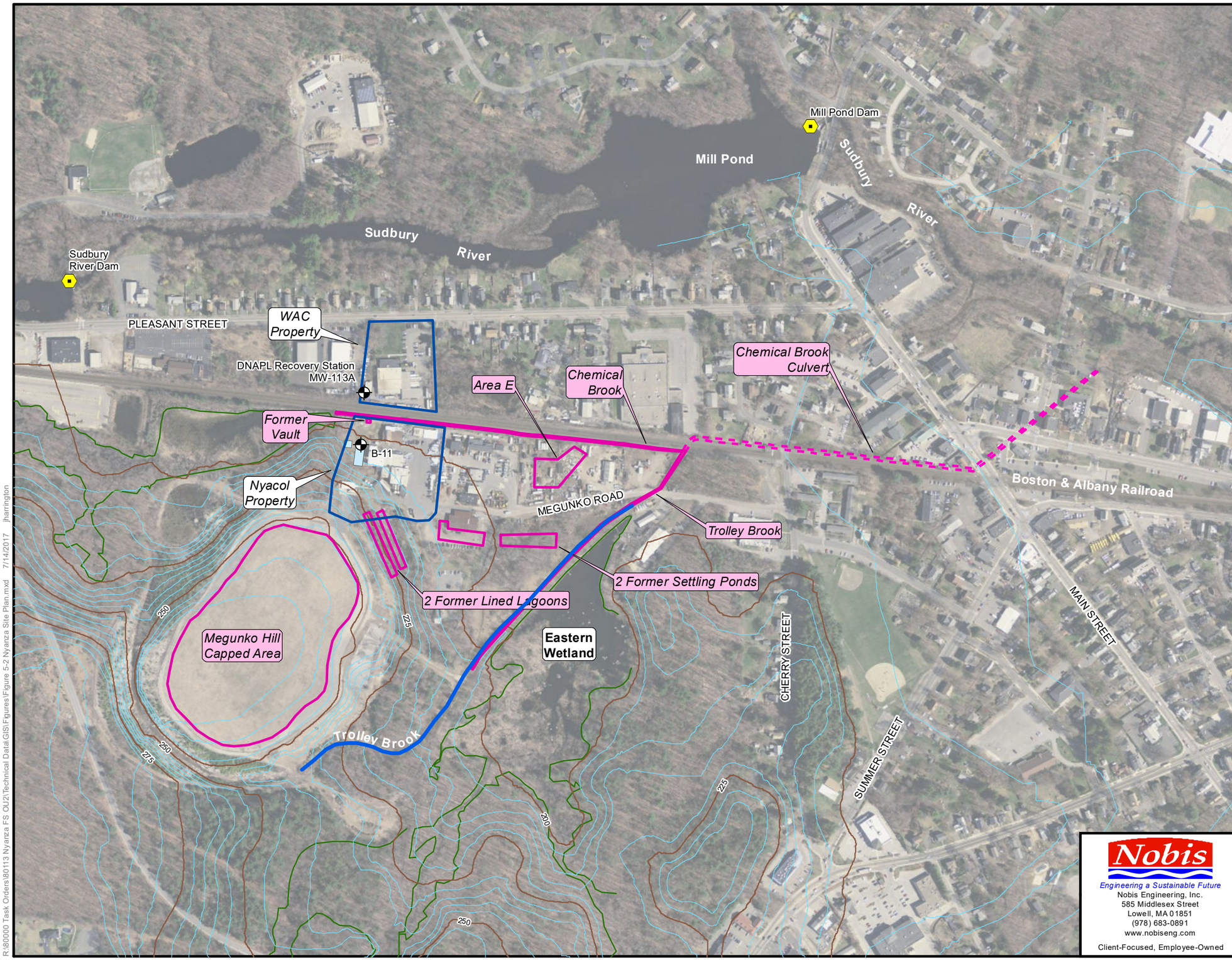

Notes:

1. This site plan was created from a site plan titled "Base Mapping and Well Survey" by A-Plus Construction, Dated September 25, 2012.

2. Contours were interpolated from 3 meter contours obtained from the MassGIS website. Aerial photo from MassGIS web map service, 2013.

3. Horizontal Datum is in reference to the North American Datum of 1983 (NAD83); Vertical Datum is in reference to the North American Vertical Datum of 1988 (NAVD88).

4. Potential DNAPL Sources from Figures 2 and 4 in Shaw (2004).

5. Locations of site features depicted hereon are approximate and given for illustrative purposes only.

Legend

- DNAPL Treatment System Wells
- Dams
- Wetland Delineation Line
- 25 Foot Contour
- 5 Foot Contour
- Potential DNAPL Source

0 200 400 800

Feet

1 inch = 400 feet

N

Nobis

Engineering a Sustainable Future

Nobis Engineering, Inc.
585 Middlesex Street
Lowell, MA 01851
(978) 683-0891
www.nobiseng.com

Client-Focused, Employee-Owned

FIGURE 5-2

SITE PLAN
NYANZA CHEMICAL WASTE DUMP
SUPERFUND SITE - OPERABLE UNIT II
ASHLAND, MASSACHUSETTS

PREPARED BY: JH	CHECKED BY: JL
PROJECT NO. 80113	DATE: JULY 2017

R:\80000 Task Orders\80113 Nyanza FS OU2\Technical Data\GIS\Figures\Figure 5-2 Nyanza Site Plan.mxd 7/14/2017 jharrington

Notes:

1. New well MW-703 may be drilled in the street at 21 Water Street; if time allows, MW-704 will be drilled to replace WP-105, which has been damaged.

2. This site plan was created from a site plan titled "Base Mapping and Well Survey" by A-Plus Construction, Dated September 25, 2012.

3. Contours were interpolated from 3 meter contours obtained from the MassGIS website.

4. Horizontal Datum is in reference to the North American Datum of 1983 (NAD83). Vertical Datum is in reference to the North American Vertical Datum of 1988 (NAVD88).

5. Locations of site features depicted hereon are approximate and given for illustrative purposes only.

Legend

- Proposed Monitoring Wells to be Sampled
- Existing Monitoring Wells to be Sampled
- Existing Monitoring Well (No Sampling)
- Wetland Delineation Line
- 25 Foot Contour
- 5 Foot Contour

N

0 250 500 1,000

Feet

1 inch = 500 feet

Nobis
Engineering a Sustainable Future
Nobis Engineering, Inc.
585 Middlesex Street
Lowell, MA 01851
(978) 683-0891
www.nobiseng.com
Client-Focused, Employee-Owned

FIGURE 8-1

PROPOSED GROUNDWATER SAMPLE LOCATIONS
NYANZA CHEMICAL WASTE DUMP SUPERFUND SITE - OPERABLE UNIT II
ASHLAND, MASSACHUSETTS

PREPARED BY: JH	CHECKED BY: JV
PROJECT NO. 80113	DATE: DECEMBER 2017

R:\80000 Task Orders\80113 Nyanza FS OU2\Technical Data\GIS\Figures\Figure 8-1 Nyanza Proposed Samples-update.mxd 12/12/2017 08:30 jharrington

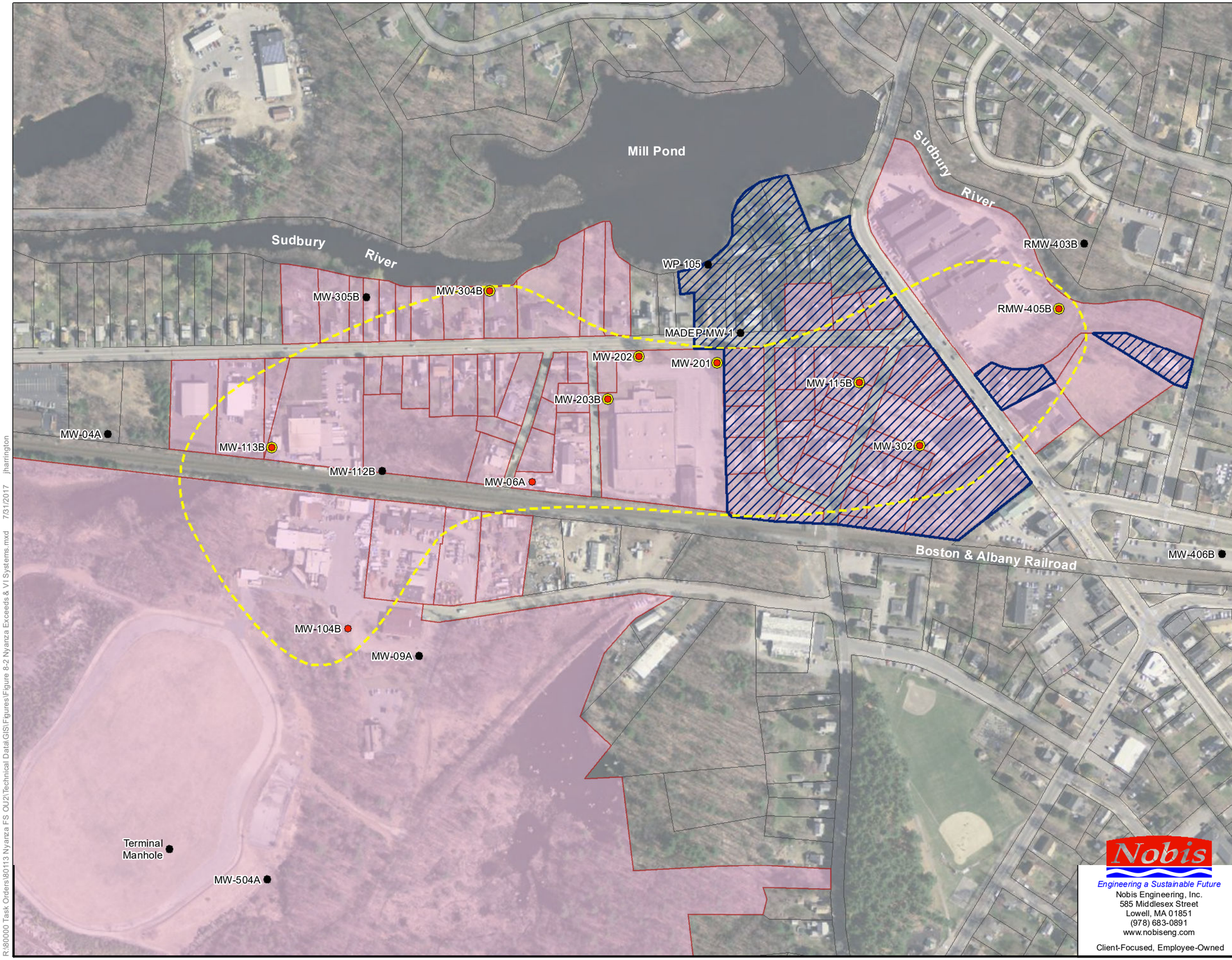

Notes:

1. This site plan was created from a site plan titled "Base Mapping and Well Survey" by A-Plus Construction, Dated September 25, 2012.

2. All exceedances are based on Mass DEP MCP-GW2, June 2016 except where noted. All results are in micrograms per liter (µg/L).

3. TCE = Trichloroethene; 1,4-DCB = 1,4-Dichlorobenzene; cis-1,2-DCE = cis-1,2-Dichloroethene.

4. Plume extent based on overburden locations with samples exceeding GW-2 criteria for TCE, 1,4-DCE, or cis-1,2-DCE in fall 2015.

5. Vapor Mitigation Area is from Community Update, EPA Plans Modifications to Groundwater Cleanup, EPA, August 2006.

6. Aerial photo and property lines from MassGIS web map service, 2013.

7. Locations of site features depicted hereon are approximate and given for illustrative purposes only.

Legend

- TCE Exceeding 5 µg/L, Fall 2015
- 1,4-DCE or cis-1,2-DCE Exceedances, Fall 2015
- No TCE, 1,4-DCB or cis-1,2-DCE Exceedances, Fall 2015
- Vapor Mitigation Area
- Approximate Area of GW-2 Criteria Exceedances in Overburden Groundwater
- Property Above Inferred Overburden GW-2 Plume - Potential Vapor Intrusion Study Area

N

0 150 300 600

Feet

1 inch = 300 feet

Nobis
Engineering a Sustainable Future
Nobis Engineering, Inc.
585 Middlesex Street
Lowell, MA 01851
(978) 683-0891
www.nobiseng.com
Client-Focused, Employee-Owned

FIGURE 8-2

POTENTIAL VAPOR INTRUSION SAMPLING AREA
NYANZA CHEMICAL WASTE DUMP
SUPERFUND SITE - OPERABLE UNIT II
ASHLAND, MASSACHUSETTS

PREPARED BY: JH	CHECKED BY: JL
PROJECT NO. 80113	DATE: JULY 2017

R:\80000 Task Orders\80113 Nyanza FS OU2\Technical Data\GIS\Figures\Figure 8-2 Nyanza Exceeds & VI Systems.mxd 7/31/2017 jharrington

APPENDICES

APPENDIX A

1.0 SCOPE, APPLICATION, AND LIMITATIONS

This Standard Operating Procedure (SOP) establishes a methodology for the collection of volatile organic compound (VOC) samples from ambient air, soil gas, or other atmospheres. The method is based on samples collected as whole air samples in Summa® passivated stainless steel canisters. The samples are subsequently separated by gas chromatography and measured by mass-selective detector or multidetector techniques. This method presents procedures for sampling into canisters at final pressures below atmospheric pressure (referred to as sub-atmospheric pressure sampling).

This method is applicable to specific VOCs that have been tested and determined stable when stored in sub-atmospheric conditions. These compounds are measured at the parts per billion by volume level. Applicable analytical methods (TO-14A and TO-15) for VOCs will be specified in the project Work Plan, Site Specific Quality Assurance Plan, etc.

2.0 INTRODUCTION

The sub-atmospheric pressure sampling mode uses an initially-evacuated canister. This mode may also use a flow controller such as a critical orifice, capillary, or adjustable micrometering valve to regulate flow. With this configuration, a sample of ambient air, soil gas, or other atmosphere is drawn through a sampling train comprised of components that regulate the rate and duration of sampling into a pre-evacuated passivated Summa canister.

There are two common types of sampling: grab sampling and time-integrated sampling. When collecting a grab sample, the canister valve is opened and the vacuum inside the canister draws in a sample in as little as a few seconds. The collection of time-integrated samples requires an additional piece of equipment calibrated by the laboratory (typically a critical orifice). The critical orifice assembly will be placed in-line to the canister and will have been selected for a flow rate that will result in a user-defined sample collection period of up to 24 hours without allowing the pressure in the canister to equilibrate to the ambient air pressure (i.e., the canister remains under vacuum at end of the sample collection period).

The size of the Summa canisters to be used will be determined based on the project-specific data quality objectives. Common sizes for Summa canisters range from 0.4 Liter or 6 Liter volumes. For samples of ambient air, communicate to the laboratory what the sampling period will be. For samples of soil gas, the laboratory will need to know the required project-specific flow rate (typically between 100 and 200 milliliters per minute [mL/min], and not exceeding 200 mL/min).

At very low flow rates, an in-line filter may be used to prevent blockage of the critical orifice by dust or other debris. The laboratory will typically determine the need for, and provide, the filter assembly.

3.0 DEFINITIONS

EPA	Environmental Protection Agency
FOL	Field Operations Leader
HASP	Health and Safety Plan
OSHA	Occupation Safety and Health Administration
PM	project manager
PPE	personal protective equipment
PSI	pounds per square inch
SOP	standard operating procedure
VOC	volatile organic compound

4.0 CAUTIONS

When working with potentially hazardous materials, follow U.S. Environmental Protection Agency (EPA), Occupational Safety and Health Administration (OSHA), and the safety practices as outlined in the site-specific health and safety plan (HASP).

Canisters are under vacuum pressure, and should not be dented or punctured in order to maintain sample integrity. They should be stored in a cool, dry place. Canisters should always be transported or stored in the shipping boxes provided by the laboratory.

5.0 PERSONNEL QUALIFICATIONS

Personnel collecting samples using this method should be familiar with this SOP and the particular equipment to be used to facilitate sampling and troubleshooting equipment problems more efficiently. Because equipment can vary between laboratories, refer to the laboratory's canister handling instructions for product-specific details.

All field samplers are required to take the 40-hour OSHA health and safety training and annual 8-hour refresher courses prior to engaging in any field collection activities.

6.0 EQUIPMENT AND SUPPLIES

- Summa Canister
- Flow controller assembly
- Filter assembly
- Gauge Assembly
- Tubing, typically ¼-inch outside diameter, PTFE (a.k.a. Teflon®)
- Adjustable wrenches

- Extra ferrules
- Field log book
- Field data sheet
- Personal Protective Equipment (PPE), as specified in the site-specific HASP

7.0 PROCEDURES

7.1 Office Preparation and Mobilization

Contamination may occur in the sampling system if canisters are not properly cleaned before use. Additionally, all other equipment with which the sample stream will come into contact (i.e., flow controllers, gauge assemblies, etc.) should be thoroughly cleaned. All cleaning should be completed by a qualified laboratory. Based on project-specific needs, the laboratory can be requested to complete either a certified cleaning of each individual canister or a batch-certified cleaning. The cleaning certification needs will be based on Data Quality Objectives that are typically specified in the project Work Plan, Site Specific Quality Assurance Project Plan, etc.

Summa canister sampling components are shipped in a disassembled state from the laboratory. Canister sampling components will be assembled at the office or at the site prior to sample collection activities.

7.2 Field Procedures

- Sub-atmospheric Sampling

1) Prior to sample collection; complete the appropriate information on the field data sheet included as Attachment 1. Enter the sample designation and all other appropriate information on the canister tag/label.

2) The Summa canister may be used to collect grab samples (i.e., 10-20 seconds or 10 minutes) or time-integrated samples (i.e., 8, 12, or 24 hours). Sampling duration depends upon the degree to which the flow is restricted.

3) Install the flow controller and gauge assemblies onto the canister, which is evacuated to 28-30 inches of mercury at sea level and open the canister valve to the atmosphere to be sampled. Record the start time and the gauge reading immediately before and after opening the valve. In general, for time integrated samples, no movement of the indicator needle on the pressure gauge should be evident. If the needle moves fast enough that movement can be seen, there may be a problem with the flow controller.

4) When the sample collection period is complete, record the time and final vacuum on the field data sheet included in Attachment 1 and close the canister valve. During time-integrated sampling it is advisable to perform periodic inspections of the remaining negative pressure in the canister to ensure that the canister does not approach neutral prematurely. Also, record the gauge reading after closing the canister valve. In some cases, it may be necessary to shorten the sampling period slightly to ensure that there is negative pressure remaining in the Summa canister. The canister should not be allowed to equilibrate to atmospheric pressure during the sampling period.

5) If there is no measureable vacuum remaining in the canister, the canister may have equilibrated to the ambient air. This has the potential for sample loss. However, the gauge provided by the laboratory for use in the field is generally considered to be less accurate than the pressure gauges used by the laboratory. In some cases, it may be necessary to instruct the laboratory to analyze the sample only if a vacuum remains in the canister. In these instances, it may be appropriate to request that the laboratory report the vacuum pressure remaining in the canister.

- Ambient Air Sampling

1) Prior to locating a sampling location, determine the prevailing wind direction using a wind sock or ribbon (surveyor's flag is sufficient). Using this information, identify the location(s) for sample collection.

2) Construct a protective cover for the Summa canister and inlet. The cover should protect the sampling apparatus from excessive solar, wind, and precipitation effects that may have the potential to influence the sample collection and results. An umbrella or portable canopy can be used. The Summa canister should be placed on the ground surface or on a stable platform to avoid tipping or other physical disturbances.

3) Install a rod in the ground or attach the rod to an existing object such as a utility pole, fence post, monitoring well standpipe, etc. as a support for sample collection tubing. Tubing size will vary depending on the dimensions of the regulator; however, it is typical for the regulators to come with ¼ inch NPT threaded connections. Check that all connections are tight and that air cannot enter or escape from the unions. Teflon thread sealant should be used to ensure a tight fit at threaded connections; barbed and push-to-lock fittings can also be used, as appropriate. Use sufficient tubing to extend from the ground surface (or the surface that the Summa canister is placed on) to the desired elevation for sample collection. This elevation is typically within the breathing zone of approximately five to six feet above the ground surface. Refer to the attached Figure 1 for a diagram of the sampling assembly.

4) Once the sampling apparatus is configured follow the procedures for sub-atmospheric sampling outlined above.

- Process Vapor Sampling

1) Process vapor sampling pertains to collection of vapor/air samples from a treatment system (e.g., soil vapor extraction, dual-phase extraction, air-stripping, etc.).

2) Identify the sampling points and assign an identifier (if not already completed). Ensure that the sampling point is sealed properly. Sampling points will often be installed by drilling into PVC piping that carries the vapor/air, tapping the drilled hole, and threading a valved-fitting into the pipe. These threaded connections should have Teflon® thread sealant.

3) Identify the nearest valves before and following the sampling point, relative to the direction of air flow in the treatment system. Isolate the sampling point by closing each of the identified valves simultaneously to trap a "core" of air/vapor to be sampled. Perform

appropriate shut-down procedures on the treatment system and lock-out/tag-out, as necessary.

4) In cases where the treatment system, under vacuum, cannot be shutdown or isolating the process line is not practical, the sample may be collected first into a tedlar bag using a high vacuum double diaphragm pump (KnF brand or equilvalent) with Teflon or Viton® seals due to the potential corrosive nature of the process vapors. The Summa canister is then filled from the tedlar bag.

5) Tedlar bags should be dedicated to individual sample locations where possible and flushed with 1 volume of ambient or zero air and 1 volume of process air prior to collecting the process sample. Teflon or Teflon-ined tubing is preferred. Silicone tubing is acceptable but should be changed out frequently due to the potential of attack from corrosive process vapors.

6) A photo-ionization detector/flame ionization detector (PID/FID) reading of the process vapor should be obtained immediately before or after filling the Summa canister for correlation to the laboratory analytical results. In addition, the PID/FID reading should be noted on the chain-of custody (COC).

7) Connect the Summa canister regulator to the sampling point using the appropriately sized tubing. Check that all connections are tight and prevent air from entering and/or escaping from the connections.

8) Follow the sub-atmospheric sampling procedure described above.

7.3 Data and Records Management

The Summa Canister Sampling Log Sheet (included as Attachment 1) will be completed for every sampling event. Record of the sampling event(s) will also be documented in the site log book by the sampler or FOL.

Completed Field Log Sheets will be transmitted to the PM, and maintained as part of the project file.

7.4 Communication and Technical Direction

Any problems or issues encountered during the sampling event(s) shall be discussed with the PM in order to determine an appropriate solution. Any changes in scope or deviation will be confirmed with and approved by the PM.

7.5 Demobilization

Following the completion of sample collection activities, Summa canisters will be disassembled and shipped under chain-of-custody controls to a pre-determined laboratory for analysis. Sample holding times (when established) will not be exceeded.

8.0 QUALITY CONTROL/QUALITY ASSURANCE

The following general quality assurance procedures apply:

- All data must be documented on standard chain of custody forms, field data sheets, and within site logbooks.
- All instrumentation must be operated in accordance with operating instructions as supplied by the laboratory or manufacturer, unless otherwise specified in the work plan. Equipment checkout and calibration activities must occur prior to sampling/operation, and they must be documented.

9.0 REFERENCES

U.S. Environmental Protection Agency; Compendium of ERT Air Sampling Procedures, PB92-963406, May 1992.

U.S. Environmental Protection Agency. Summa Canister Sampling. SOP #1704, Revision 0.1, July 27, 1995.

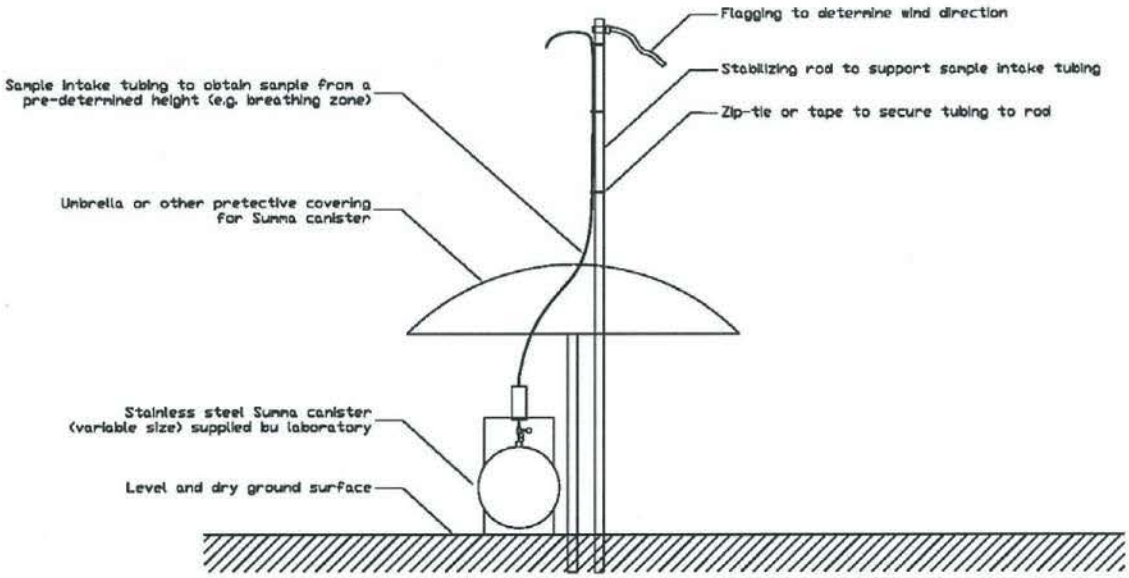

FIGURE 1

AMBIENT AIR SUMMA CANISTER SET-UP DETAIL

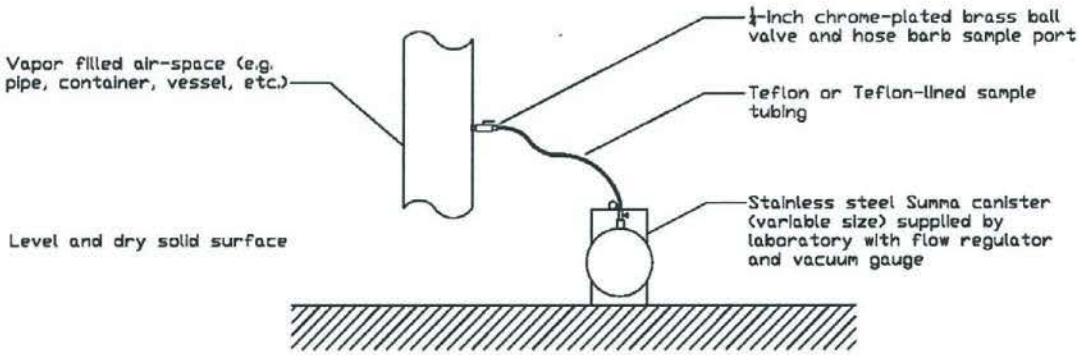

FIGURE 2

PROCESS VAPOR SUMMA CANISTER SET-UP DETAIL

M:\COMMON\For Andy\TDF\SOP File Archive\TDF Approved\ENV-029 Summa Diagram.dwg

Attachment 1
Summa Canister Field Log Sheet

Nobis Nobis Engineering, Inc.	SUMMA® CANISTER SAMPLING LOG SHEET	SOP No: ENV-029 Page: of Date: Apr. 2009 Rev.: 01 Prepared by: Approved by:

Site Name: _____ Temperature Range: _____
Project Number/Task: _____ Precipitation: _____
Personnel: _____ Wind Speed/Direction: _____

EQUIPMENT INFORMATION

Type of Monitoring Equipment (circle): PID / FID / Other
Make & Model: _____ Latest Calibration Date: _____
Serial No.: _____ Nobis No.: _____

FIELD DATA

Sample #				
Location				
Canister ID - S/N				
Canister Size (Liters)				
Can Cleaning Certification: Batch or Individual				
Gauge S/N				
Orifice Used - S/N				
Analysis/Method				
Gauge reading before valve opened				
Date/Time (Start)				
Gauge reading immediately after valve opened				
Gauge reading before valve closed				
Date/Time (Stop)				
Gauge reading after valved closed				
Total Time				

COMMENTS:

Signature: _____

Nobis Engineering, Inc.	STANDARD OPERATING PROCEDURES			Prepared by D. Gorhan
	Title: GROUNDWATER LEVEL MEASUREMENT			Reviewed by G. DeRuzzo
	SOP No: HYD-003	Rev.: 02	Date: May 2010	Approved by

1.0 SCOPE, APPLICATION, AND LIMITATIONS

This Standard Operating Procedure (SOP) has been prepared by Nobis Engineering, Inc. (Nobis) to specify the means to take groundwater level measurements from monitoring wells, and in some instances floating free-product that might be known/anticipated at a Site. This SOP should be used whenever a Site visit is included in the Task Order Scope of Work (SOW), which includes groundwater sampling and free product recovery.

2.0 INTRODUCTION

The field procedures presented in this SOP will be used to obtain groundwater levels in monitoring wells or piezometers. In general, water levels will be measured prior to purging wells and collecting groundwater samples. Acquired water level data may be used to assess hydraulic gradients, perform drawdown tests, etc.

3.0 DEFINITIONS

D.I. water – Deionized water or "clean" water to decontaminate equipment.

HASP – Health and Safety Plan, documenting safety procedures for the Site activities.

NAPL - Non-aqueous phase liquid. Free product that separates from the water requires an interface probe to detect how much NAPL is inside the well. A preceding "D" or "L" refers to "dense" or "light" relative to density of water (e.g., DNAPL or LNAPL).

PID – Photoionization detector is used for detecting volatile organic compounds in the air.

PPE – Personal protective equipment; such as safety glasses, nitrile gloves, hard hat, and steel toe boots.

PVC - Polyvinyl chloride is the material used to construct the majority of groundwater wells.

4.0 CAUTIONS

In the case that NAPL is present at the Site, proper personal protective equipment (PPE) should be used. Some instances will require the NAPL be transferred into a storage vessel. The Health and Safety Plan (HASP) for that Site should include proper transfer and storage procedures.

It is important to take the water level measurement from the reference point determined during the Site survey to get an accurate groundwater elevation relative to a common datum. Reference points can be, but are not limited to, the highest point on the PVC riser, the top of steel casing, the manhole rim, etc. The reference point shall be marked and refreshed during each measurement round.

5.0 PERSONNEL QUALIFICATIONS

Nobis personnel will have been trained by other appropriate personnel (Field Operations Lead/Sample Manager/Project Manager) for taking water level measurements, LNAPL and DNAPL measurements, and storage activities.

6.0 EQUIPMENT AND SUPPLIES

- Electronic water level meter (e.g., Solinst™) or Interface Probe if the presence of NAPL is suspected
- Well keys and wrenches (include an extension for keys and wrenches to apply extra leverage), screwdriver, hammer
- PID, or other monitoring equipment (as required by HASP)
- Metal detector (project-specific)
- Extra Batteries (9 Volt)
- Well installation logs, boring logs
- Field book (and/or data recording sheets, if used)
- Permanent marker
- Protective eyewear and nitrile gloves
- Paper towels, Alconox and spring water and/or D.I. water

7.0 PROCEDURES

7.1 OFFICE PREPARATION AND MOBILIZATION

Prior to Site activities, water level meters and/or interface probes must be signed out from the Nobis office or rental meters must be acquired from equipment rental companies (e.g., Pine Environmental Services) or a manufacturer. Test equipment prior to leaving for the Site.

7.2 FIELD PROCEDURES

- Check the condition of the standpipe or roadbox and protective seal, if any. Observe and record any abnormalities with the well such as a missing cap, run-on, evidence of tampering, missing/rusted/open lock, damaged roadbox or standpipe, etc. Record observations in the log book or on a sampling form.
- Screen the wellhead during removal of the cap with a PID or other monitoring equipment, as required by the HASP. Follow requirements for use of personal protective equipment.
- Record the type of measurement reference point used (i.e., roadbox, standpipe, mark on PVC).
- If not already done, mark the measurement reference point either by etching or with indelible ink at the top of the PVC riser pipe or steel casing. The measurement reference point will generally be the highest point of the PVC riser or casing. Mark well number on the outside of well.

Water Level Measurement

- Lower the water level meter's probe slowly into the well until the auditory signal indicates that water is reached.
- Raise the probe above water level and slowly lower it again until the exact position of the water is indicated on the tape gauge.

- Hold the cable or tape against the side of the PVC riser or steel casing at the reference point designated for water level measurements and record the measured depth to the nearest 0.01 feet.

Well Depth

- Slowly lower the water level meter's probe to the bottom of the well and record to the nearest 0.01 feet. Compare to installed depth of well. Note whether the bottom of the well feels soft or solid.
- If no additional work is to be performed, lock or secure the wellhead.

LNAPL (if suspected)

- Check for the presence and measure the thickness of NAPL using a transparent bailer, product-water interface probe, or water-sensitive paste. If NAPL is observed, do not immerse the electronic water level meter unless specifically required by the Work Plan. Measure and record the thickness of NAPL.
- To use a bailer to measure NAPL, lower it slowly into the water column using a polypropylene or nylon line. For LNAPL, hold the bailer so that the bottom check valve and approximately half the bailer's length are submerged.
- For DNAPL, lower the bailer to the bottom of the well. Hold the bailer at the appropriate level for about 10 to 30 seconds to allow NAPL to enter the bailer. Remove the bailer and measure the thickness of the NAPL within the bailer with a tape measure.
- If the well is known to contain NAPL, an interface probe should be used to give a more accurate measurement of the product thickness. Lower the probe down the well, similarly to the water level meter. The probe sounds differently when it has detected NAPL and when it has detected water. The difference between the two tones indicates the product thickness.

Decontamination

- Inspect meter and tape for the presence of free product. If present, decontaminate accordingly.
- If contaminants are suspected, perform a gross decontamination by wiping the tape with a paper towel as it is retrieved from the well; if LNAPL was present, use a hydrophobic absorbent pad.
- Rinse with tap or bottled water.
- Wash with Alconox™ (or equivalent) detergent wash.
- Rinse with tap or bottled water.
- Rinse with distilled/deionized water.
- Containerize and handle decontamination wastes and wastewater in accordance with applicable Federal, State, and local regulation, and as specified in the sampling plan.

7.3 DATA AND RECORDS MANAGEMENT

On a log sheet or field book, the following items should be recorded.

- Date and time
- Type of well (roadbox, standpipe, etc.) and condition (no j-plug, missing bolts or lock)
- Total depth to water (TDW)
- Depth to water (DTW)
- Depth of NAPL in well, using bailer method (if present)
- Volume of NAPL removed (if any) and storage type.

7.4 COMMUNICATION AND TECHNICAL DIRECTION

All field notes should be copied and given to the Field Operations Lead/Sample Manager/Project Manager, depending on the Site. This information is required when groundwater contours for the site are developed.

7.5 DEMOBILIZATION

- Decontaminate and clean off water level meter/interface probe.
- Ensure that j-plugs are secure on wells
- Lock well (if well requires lock)
- Close up roadboxes and tighten in place with bolts.

8.0 QUALITY CONTROL / QUALITY ASSURANCE

Not applicable

9.0 REFERENCES

- ASTM D4750-87(93): Test Method for Determining Subsurface Liquid Levels in A Borehole or Monitoring Well (Observation Well)

- Site-specific Health and Safety Plan

1.0 SCOPE, APPLICATION, AND LIMITATIONS

This Standard Operating Procedure (SOP) has been prepared by Nobis Engineering, Inc. (Nobis) to classify soil samples collected during field investigations based on visual-manual methods. This SOP is based on and follows American Society for the Testing of Materials (ASTM) D2488-93, which is attached and which forms an integral part of this SOP. It is not the intent of this SOP to replicate ASTM D2488-93, but to provide an overview of the method and to note modifications.

This SOP utilizes the ASTM soil classification method (which is based upon, but different from the Unified Soil Classification System (USCS). Several limitations to the classification system are included as follows:

Fills and Fill Mixtures - Fills can be very difficult to describe, especially if the fill is highly variable or the fill contains high percentages of construction debris such as brick, asphalt, concrete, etc. For these cases, the standard classification format may not be applicable and a general description should be used. For example, a recovered sample contains large percentages of concrete and brick interbedded in a sand and gravel matrix. A possible sample description may be:

- FILL: Dry, medium dense, mixture of sand and gravel, concrete, and brick, red-brown.

Although hard percentages were not given for each fraction, the various fractions were listed in decreasing order. Another example for a highly variable fill where several different types of fill are found within the same sample:

- FILL: Moist, loose, mixture of sand and gravel and reworked glacial till, brown.

Poor Recoveries and Washed Samples - Occasionally, a poor recovery or a washed sample situation will occur. A poor recovery is generally considered to be a recovery of less than 6 inches for a penetration of 24 inches. For this case, judgment must be used in classifying the recovered material. If the recovered material is disturbed or the material doesn't appear to be representative then state "Poor recovery." for the sample description. Washed samples are also another common occurrence. Generally, a washed sample is considered to be a sample that is visibly missing the finer fractions (i.e. silt, fine and medium sand). Washed samples typically are a result of not cleaning out the drill casing properly prior to sampling (i.e. roller bit cuttings) or for the case of auger work, sampling in sands below the water table where the sands are "blowing" into the bottom of the augers. In this instance, state "Washed sample." for the sample description.

Strata Breaks - Occasionally, a strata break will be observed in a spoon sample. For this case, the sample should be split into separate portions and a soil description generated for each portion or strata. The length of each portion should also be noted after the soil description. For example, a spoon sample that has a strata break with a total recovery of 18 inches and an N-value of 8 would be:

- S-1A: (14 in.) Sandy lean clay (CL); wet, medium stiff, 65% clay/silt, 35% fine sand, gray. (MARINE CLAY)

- S-1B: (4 in.) Silty sand with gravel (SM); wet, 10% coarse sand, 20% medium sand, 20% fine sand, 20% gravel, 30% silt, brown. (GLACIAL TILL)

Peat - The ASTM classification system assigns the symbol "(PT)" for peat but does not outline a procedure for describing it. Generally, pure peat will have no soil component to its structure, an organic odor, spongy consistency, dark brown to black color, and will range in texture from fibrous to amorphous. For this case, a typical peat description would include the ASTM symbol PT, moisture condition, relative density, structure, odors (if any), and color. An example of a peat description might be:

- Peat (PT); wet, very soft, fibrous, strong organic odor, dark brown.

Attachment 1 includes a sheet summarizing the Burmister Soil Classification System so that certain observations made for non-engineering purposes may be captured. Attachment 1 is provided for supplemental information only. The inclusion of Attachment 1 should not be interpreted as being an acceptable means of soil classification per this SOP.

2.0 INTRODUCTION

This SOP provides a consistent approach to the visual classification of soils during subsurface geological or geotechnical engineering investigations. The purpose of the SOP is to ensure that what data is recorded in the field, can be accurately interpreted and evaluated.

3.0 DEFINITIONS

Cobble – A particle between 3 and 12 inches in diameter.

Coarse sand – A particle between the #10 and #4 sieve in diameter.

Fines – Silt or clay particles. These soils will pass the #200 sieve.

Fine sand – A particle between the #200 and the #40 sieve in diameter.

Gravel – A particle greater than #4 sieve, but less than 3 inches in diameter.

Medium sand – A particle between the #40 and the #10 sieve in diameter.

Organic clay/silt - Clays/silts with sufficient organic content to influence the properties.

Peat (PT) - A soil composed primarily of vegetable tissue in various stages of decomposition.

Rig geologist – The Nobis staff geologist, engineer, or scientist responsible for field oversight of the drilling activities.

Sampling Plan – Work Plan, QAPP, Field Sampling Plan, Scope of Work, or other description of the work being performed to meet contractual requirements.

SOP – Standard Operating Procedure.

SPT – Standard Penetration Test as referred to ASTM D 1586 Test Method for Penetration Test and Split-Barrel Sampling of Soils. See SOP GT-001.

4.0 CAUTIONS

All personnel involved in activities associated with this SOP should be familiar with the contents and activity hazards included in the Site-Specific Health and Safety Plan.

Soil classification does not in and of itself have hazards associated with it. However, it is typically completed during drilling activities. Therefore, the hazards associated with the drilling activities (included in their respective SOPs) should be reviewed.

5.0 PERSONNEL QUALIFICATIONS

Personnel involved will typically require knowledge of drilling and sampling techniques related to sample collection for classification purposes. The knowledge and experience required may vary depending upon the techniques used and related SOPs for performance of the work should be reviewed, as appropriate, in conjunction with this SOP.

All Rig Geologists operating at waste sites are required receive 40 hours of basic hazardous waste operations and emergency response (HAZWOPER) training as prescribed by OSHA. This training must be refreshed annually with an 8-hour refresher course. Additionally, the Rig Geologist should be familiar with this SOP.

6.0 EQUIPMENT AND SUPPLIES

- Sampling Plan and Site-Specific Health and Safety Plan
- Camera
- Field book (and data recording sheets, if used)
- Well Installation and Boring Logs and Forms
- Soil Classification System Field Guide
- Knife, pocket
- Rule, engineers, 6 ft. folding
- Scale, engineers
- Marker, indelible (black)
- Lens, hand, magnifying
- PDA or laptop with pLog™ (if electronic field data input is specified in the planning documents)
- Penetrometer (optional)
- Torvane (optional)
- Color chart, Munsell's (optional)
- Sieves (optional)
- Test tube (optional)
- Jars (optional)

7.0 PROCEDURES

7.1 Office Preparation and Mobilization

a. Preparation, review, and approval of all appropriate planning documents such as a Site-Specific Health and Safety Plan, Site Management Plan, Quality Assurance Project Plan, Sampling and Analysis Plan, or Work Plan associated with classification of soils prior to mobilization.

b. Prior to mobilization, the project team shall conduct a field scoping meeting to discuss details pertaining to the planned work. Determine if any additional information should be collected during the soil classification activities.

7.2 Field Procedures

a. Soil classification under ASTM D2488 is based on three primary Flowcharts:

- Figure 1a: Inorganic Fine-Grained Soil (50% or more fines)
- Figure 1b: Organic Fine-Grained Soil (50% or more fines)
- Figure 2: Coarse-Grained Soil (less than 50% fines)

The classification takes the following format:

Group name (GROUP SYMBOL); {Moisture Condition}, {Relative Density}, {Estimated percentages for major fraction}, {Estimated percentages for minor fraction(s)}, {odors, sheens, shells, soil structure, etc.}, {color}. {presence of sand seams or other important sample characteristics.} (Geologic interpretation) (Results of FIELD testing: pocket penetrometer, pocket torvane, etc.)

b. Determine the ASTM Group Name. The ASTM Group Name presented in the flowcharts is based on the estimated percentages of the minor fraction of the sample as follows:

Group Name for Coarse-Grained Soils

Major Fraction	Estimated Minor Fractions			
	≤ 5% silt/clay	10% silt/clay	≥ 15% silt/clay	≥15% gravel
Sand	Poorly/well-graded	With silt/with clay	Silty/clayey	With/and gravel
Gravel	Poorly/well-graded	With silt/with clay	Silty/clayey	With/and sand

The ASTM Group Name for sands is dependent upon the estimated percentages of silt/clay, and gravel. The ASTM "Group Name" for gravels is dependent upon the estimated percentages of silt/clay and sand.

Group Name for Fine-Grained Soils

Major Fraction	Estimated Minor Fractions					
	<15% sand and/or gravel	15-25% sand and/or gravel	≥30% sand and/or gravel			
			% sand ≥ % gravel		% gravel > % sand	
			< 15% gravel	≥ 15% gravel	< 15% sand	≥ 15% sand
Clay	Lean Clay/Fat Clay	With sand or With gravel	Sandy	Sandy with gravel	Gravelly	Gravelly with Sand
Silt	Silt/Elastic Silt	With sand or With gravel	Sandy	Sandy with Gravel	Gravelly	Gravelly with Sand
Organic Soil	Organic Soil	With sand or With gravel	Sandy	Sandy with Gravel	Gravelly	Gravelly with Sand

The ASTM Group Name for fine grained soils is dependent on the plasticity of the soil as well as the estimated percentage of sand/gravel (plus #200 sieve) and whether the percentage of sand is greater than the percentage of gravel.

c. Determine the ASTM Group Symbol as presented in the flowcharts. The Group Symbols are based on a prefix and suffix system which utilizes the following symbols where the prefix is used to describe the major fraction of the sample while the suffix is used to describe the minor fraction or, in the case of fine-grained soils their plasticity:

Group Symbols

Prefix	Suffix
G – Gravel	W – Well-Graded
S - Sand	P – Poorly Graded
	M – Inorganic Silt
	C – Clay
M – Inorganic Silt	L – Low Plasticity (Lean)
C – Clay	H – High Plasticity (Fat, elastic)
O – Organic Soil	

Under the ASTM system, dual ASTM group symbols are assigned to some coarse-grained soils. This occurs when the percentage of fines has been estimated to represent 10% of the sample.

d. Determine the moisture condition as either Dry (absence of moisture, dusty, dry to the touch), Moist (damp but no visible water), or Wet (visible free water, sample generally from below the water table).

e. If possible, determine the relative density using the N-value generated from the SPT. As defined in SOP GT-001, the N-value is the sum of the blow counts required to advance the sampler from the 6-inch through the 18-inch penetration intervals. The relative density term is also based on whether the material is coarse-grained (granular) or fine grained (cohesive) as follows:

Coarse-Grained Soil

N-Value	Density Term
0 to 4	Very Loose
5 to 10	Loose
11 to 30	Medium Dense
31 to 50	Dense
Over 50	Very Dense

Fine Grained Soil

N-Value	Density Term
0 to 2	Very Soft
3 to 4	Soft
5 to 8	Medium Stiff
9 to 15	Stiff
16 to 30	Very Stiff
Over 30	Hard

f. Estimate the percentages of the major fraction of the sample to the nearest 5%. For sands, the major fraction can be further broken down into coarse, medium, and fine sand. However, gravels are not further broken down into coarse and fine fractions. For fine grained soils, the amount of clay and silt may be estimated separately (i.e. 50% clay, 20% silt) or combined to form one term (i.e. 70% clay/silt). When one term is used, the first part should indicate the major portion of the sample as this will decide the appropriate ASTM Group Name and Group Symbol used.

g. Estimate the percentages of the minor fraction of the sample to the nearest 5%. The same format for describing the major fraction is also applied to estimating the percentages of the minor fractions. When all the fractions have been estimated, the total should equal 100%

h. Provide a description of any unusual sheens, odors, the presence of shells or soil structure properties that may be present in the sample.

i. Provide a description of the color of the soil. The use of a Munsell color chart is encouraged, but not required.

j. The geologic interpretation of the sample is sometimes stated in parentheses after the soil classification. This is primarily used to indicate fill materials, lacustrine deposits, glacial till, marine clay, etc.

k. Additional information such as field test results may also be incorporated after the soil description. This information is primarily used for cohesive soils and will generally only be required when performing geotechnical investigations.

l. An example of a proper soil classification is as follows:

   - Silty sand with gravel (SM); moist to wet, very dense, 5% coarse sand, 10% medium sand, 30% fine sand, 20% gravel, 35% silt, brown. (GLACIAL TILL)

m. Additional information such as field test results may also be incorporated after the soil description. This information is primarily used for cohesive soils and will generally only be required when performing geotechnical investigations.

7.3 Data and Records Management

When digital photographs are taken pertaining to the soil classification, they shall be maintained on the Nobis project server each day that the drilling occurs. Copies of logbook entries shall be maintained in the project files. The copies of the logbook entries shall be returned to the Nobis Project Manager the following day. If the following day is not possible, the logbook entries shall be submitted to the Nobis Project Manager as soon as possible after completion of associated field activities. Completed well installation logs should be prepared as soon as possible after installation.

7.4 Communication and Technical Direction

The Nobis Project Manager is responsible for coordination with necessary subcontractors. The Nobis Field Operations Leader is responsible for implementing the field activities as they are outlined in planning documents. If problems are encountered, the Field Operations Leader shall contact the Nobis Project Manager to apprise them of the situation and outline possible solutions. The Nobis Project Manager will determine the most-effective solution, and direct the Field Operations Leader to proceed. Deviations from the plan are to be documented in Field Operations Leader logbooks.

7.5 Demobilization

Not applicable.

8.0 QUALITY CONTROL/QUALITY ASSURANCE

Photo-documentation of the soil samples could be used to provide a review of the Rig Geologists' soil classification. The lead technical manager for the project should review the Rig Geologists' classification to ensure compliance with the SOP.

9.0 REFERENCES

ASTM D2488-93, Attached: Standard Practice for Description and Identification of Soils (Visual-Manual Procedure).

ASTM D1586-84, Standard Test Method for Penetration Test and Split-Barrel Sampling of Soils.

ASTM D1587-94, Standard Practice for Thin-Walled Tube Geotechnical Sampling of Soils.

ASTM D2487-93, Standard Classification of Soils for Engineering Purposes (Unified Soil Classification System)

Figures

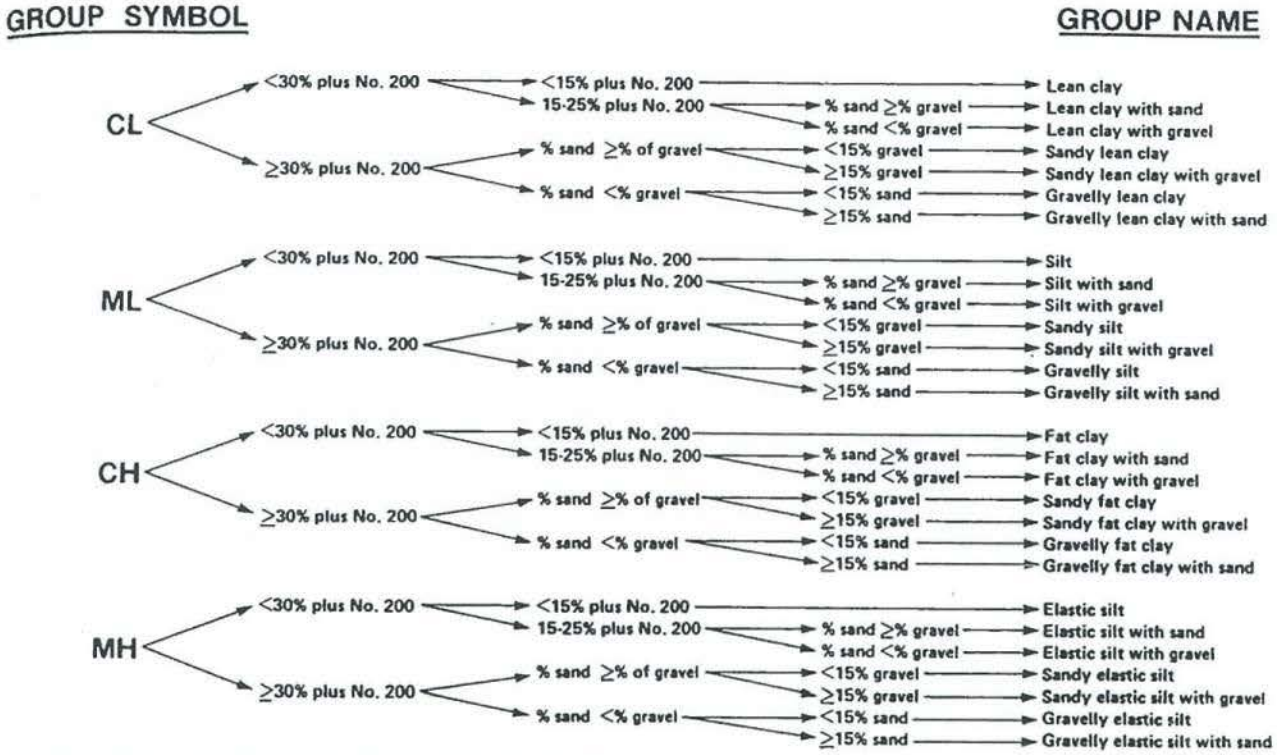

NOTE—Percentages are based on estimating amounts of fines, sand, and gravel to the nearest 5 %.

FIG. 1a Flow Chart for Identifying Inorganic Fine-Grained Soil (50 % or more fines)

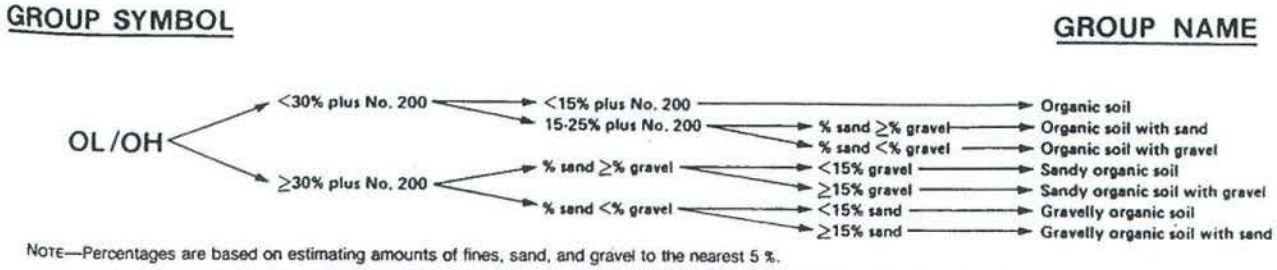

NOTE—Percentages are based on estimating amounts of fines, sand, and gravel to the nearest 5 %.

FIG. 1b Flow Chart for Identifying Organic Fine-Grained Soil (50 % or more fines)

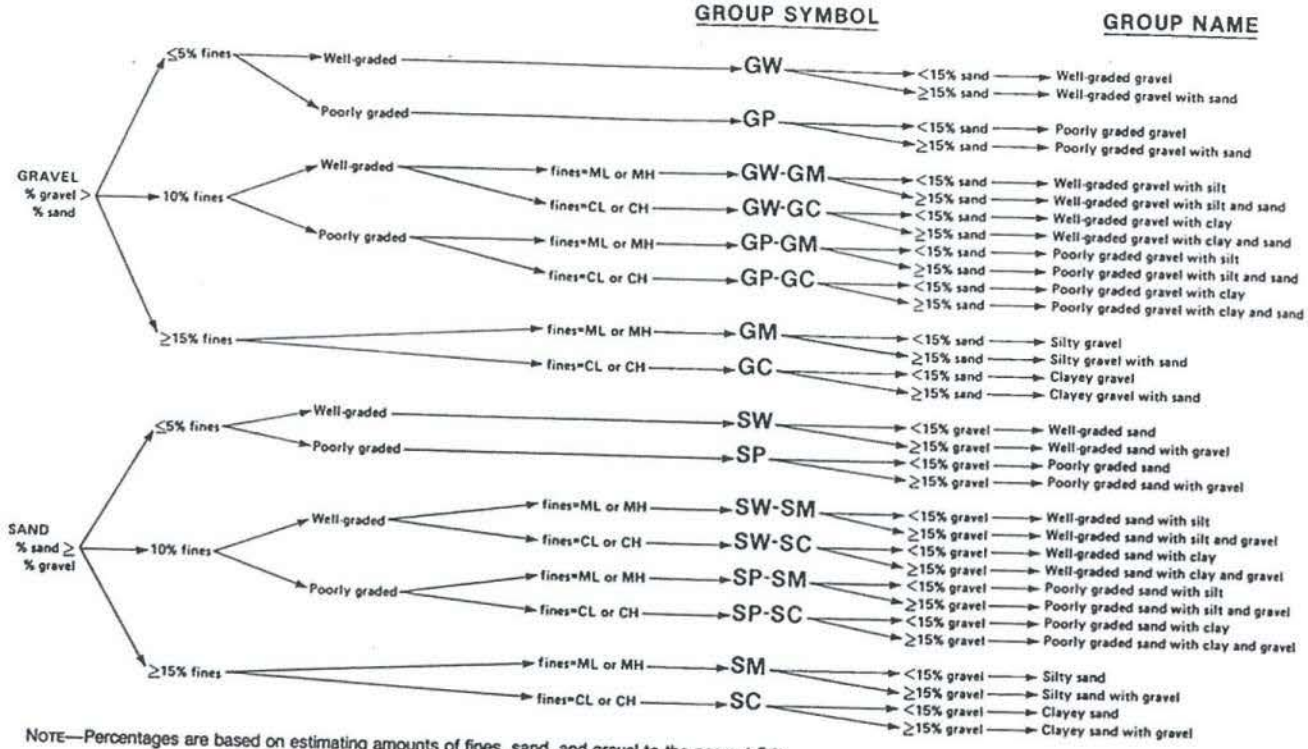

NOTE—Percentages are based on estimating amounts of fines, sand, and gravel to the nearest 5 %.

FIG. 2 Flow Chart for Identifying Coarse-Grained Soils (less than 50 % fines)

Attachment 1

SUMMARY OF BURMISTER CLASSIFICATION SYSTEM

CLASSIFICATION OF SOIL COMPONENTS

PRINCIPAL COMPONENT	DESCRIPTIVE PARTICLE SIZE	SMALLEST DIAMETER OF ROLLED THREADS (IN)	SIEVE SIZE	OVERALL PLASTICITY AND PLASTICITY INDEX
GRAVEL	Coarse Fine	-	3/4" to 3"	-
SAND	Coarse Medium Fine	-	No. 10 to No. 4 No. 40 to No. 10 No. 200 to No. 40	- - -
SILT	-	None	Passing No. 200	Non-plastic 0
CLAYEY-SILT	-	1/4	Passing No. 200	Slight 1 to 5
SILT & CLAY	-	1/8	Passing No. 200	Low 5 to 10
CLAY & SILT	-	1/16	Passing No. 200	Medium 10 to 20
SILTY-CLAY	-	1/32	Passing No. 200	High 20 to 40
CLAY	-	1/64	Passing No. 200	Very High 40 and greater
PEAT	Partially decomposed fibrous organic matter without living fibers			

IDENTIFICATION OF DESCRIPTIVE TERMS

DESCRIPTION OF SOIL COMPONENTS	DEFINING RANGE OF PERCENTAGES BY WEIGHT
Principal Component	50 or more
GRAVEL, SAND, SILT, CLAY, SILT & CLAY, etc.	
Minor Component	
AND	35 to 50
and coarse to fine Sand and Clayey-Silt, etc.	
SOME	20 to 35
some Silt, some fine Sand, etc.	
LITTLE	10 to 20
little coarse to fine Sand, little Silt, etc.	
TRACE	1 to 10
trace Silty-Clay, trace fine Sand, trace Gravel	

DEFINITION OF TERMS IDENTIFYING THE GRADATION OF THE GRANULAR COMPONENT

GRADATION DESIGNATIONS FOR IDENTIFICATION	DEFINING PROPORTIONS
fine to coarse	all fractions greater than 10 percent
medium to coarse	less than 10 percent fine
fine to medium	less than 10 percent coarse
medium	less than 10 percent coarse and fine
fine	less than 10 percent coarse and medium

DENSITY OR CONSISTENCY

Standard Penetration Resistance (N Value) Blows/foot*	Density
GRANULAR SOILS	
0-4	Very loose
4-10	Loose
10-30	Medium dense
30-50	Dense
50+	Very dense
PLASTIC SOILS	
0-2	Very soft
2-4	Soft
4-8	Medium
8-15	Stiff
15-30	Very stiff
30+	Hard

* 140 lb. hammer free-falling 30 inches for the 6- to 18-inch interval of the split-spoon drive. Per ASTM D1586.

GLOSSARY OF MISCELLANEOUS TERMS

PLUS (+) nearer the upper limit of the proportion or overall plasticity
MINUS (-) nearer the lower limit of the proportion or overall plasticity
NO SIGN - middle range of the proportion or overall plasticity
COBBLES - Rounded pieces of rock between 3 to 6 inches.
BOULDERS - Rounded pieces of rock larger than 6 inches.
ROCK FRAGMENTS - Angular pieces of rock which have separated from parent rock and are present in a soil matrix.
QUARTZ - A hard silica mineral often found in some glacial deposits.
IRONITE - Cemented deposits of iron oxide within a soil layer.
VARVED DEPOSITS - Alternating light and dark layers of cohesive soils and silts deposited as glacial lake sedimentation.
FISSURED CLAYS - Cohesive soils exhibiting a joint structure, generally slightly to highly overconsolidated.

ORGANIC MATTER (Excluding Peat): Topsoil - Surficial soils that support plant life and which contain considerable amounts of organic matter; Decomposed Vegetation - Partially decomposed organic matter which retains its original character; Humus - Completely decomposed organic matter.
FILL - Man-made deposits containing soil, rock or foreign matter.
PROBABLE FILL - Soils which contain no visually detectable foreign matter but which are suspect with respect to origin.
LENSES - 0 to 1/2 inch layer
LAYERS - 1/2 to 12-inch layer
POCKET - Discontinuous layers less than 12 inches.
STRATUM - Continuous layers greater than 12 inches.
COLOR SHADES - Light or dark to indicate substantial differences in color
MOISTURE CONDITIONS - Wet, moist, or dry per visual observation

1.0 SCOPE, APPLICATION, AND LIMITATIONS

This Standard Operating Procedure (SOP) establishes methodologies for measuring water quality parameters in the field using multi-parameter meters. This procedure includes the minimum required steps and quality checks that project samplers are to follow when using this technique. This SOP addresses the technical requirements and required documentation to be completed during field measurement of water quality parameters during surface water, storm water, drinking water, and groundwater (when low/flow sampling is not required).

Nobis Engineering Inc. (Nobis) follows the U.S. EPA Region I Low Stress (low flow) Purging and Sampling Procedure for the Collection of Ground Water Samples From Monitoring Wells, Revision 3, January 19, 2010, reflected in SOP SA-003. SOP SA-003 will take precedence over this SOP when performing low-flow groundwater sampling. Some project parameters and/or requirements may not be fully addressed by this SOP; under some circumstances, the project work plan (e.g., QAPP, SAP, FSP, etc.) may be needed to clarify, expand, or modify the SOP.

With advancements in technology, current instruments can be calibrated either automatically or manually. The calibration method should be determined during the project planning stage based on the data quality objectives. Generally, YSI multi-parameter and individual turbidity meters will be used and SOPs FS-005 and FS-006 will be followed for calibration of such instruments, respectively.

2.0 INTRODUCTION

This SOP describes procedures for measuring water quality parameters in monitoring wells and in surface water bodies. This procedure is for the use of portable instruments that are equipped with multiple probes and includes instructions for checks and calibration. Parameters to be monitored include: dissolved oxygen (DO), oxidation-reduction potential (ORP), pH, specific conductivity, temperature, and turbidity.

3.0 DEFINITIONS

DO	Dissolved Oxygen
EPA	Environmental Protection Agency
FOL	Field Operations Leader
FSP	Field Sampling Plan
HASP	Health and Safety Plan
mg/L	milligrams per liter

mg/L milligrams per liter
mV millivolts

NTU Nephelometric Turbidity Units

ORP Oxidation-Reduction Potential

PCBs Polychlorinated Biphenyls

PID Photo Ionization Detector

QAPP Quality Assurance Project Plan

SAP Sampling and Analysis Plan

SOP Standard Operating Procedure

SVOCs Semi-Volatile Organic Compounds

VOA Volatile Organic Analysis

VOCs Volatile Organic Compounds

4.0 CAUTIONS

Measuring water quality using this method is generally not physically hazardous. Care should be taken to minimize slips/trips/falls hazards due to the presence of a large amount of equipment in a fairly small area. Eye protection should be worn when inserting and extracting down-hole equipment and tubing and while tubing is drained. If sample collection is performed, sample preservatives commonly include strong acids and bases. Care should be taken to prevent human contact with the acids and bases, and in addition, particular care should be taken to store each preservative separately from the other. When chemical hazards may be present, the monitoring well or sample location to be sampled should have a headspace reading taken immediately upon arrival at the location with a photoionization (PID) meter. Refer to the site HASP for details regarding action levels, response actions, and other site-specific health and safety requirements.

In monitoring groundwater indicator field parameters and sampling under this SOP, the sampler must be aware of and avoid conditions that cause groundwater degassing, groundwater aeration, groundwater temperature fluctuation, in-well thermal currents, and cross-contamination. In addition, there are several environmental factors that can affect measurements. Below, these factors are summarized with the corrective action to be taken when encountered:

- Altitude: DO meters are sensitive to barometric pressure. Most meters are auto-compensating. Follow the manufacturer's instructions on adjustments needed to compensate for altitude.

- Salinity: Elevated salinity or total dissolved solids (TDS) will reduce the maximum amount of oxygen capable of dissolving in water. Follow the manufacturer's instructions on adjustments needed to compensate for salinity.

- Ions: Some chemical ions will interfere with the electrodes and may damage or cause erroneous readings. Refer to the manufacturer's manual.

- pH: ORP and pH are related parameters.

- Temperature: Most meters are temperature-compensating, but if not, temperature adjustments must be performed.

- Do not agitate the probes or aerate the sample during measurements. Allow readings to stabilize before recording. This is particularly important when measuring DO and ORP, which are highly unstable parameters, sensitive to aeration or turbulence introduced during sampling or measuring.

- Check consistency of DO and ORP readings. Water with DO greater than approximately 1.5 mg/L is under aerobic conditions and should have a corresponding ORP of +50 mV or greater. Water with DO less than approximately 0.5 - 1.0 mg/L is likely anaerobic and should have ORP less than 0.

5.0 PERSONNEL QUALIFICATIONS

Field personnel will be fully trained in this SOP prior to the field event, including at a minimum: equipment calibration, pump operation (if required), troubleshooting, and documentation. Project planning should include sufficient preparation time prior to mobilization for field personnel to become familiar with the specific methods, equipment, and instruments to be used at the specific site. Additionally, the timeframe of the project should be sufficient for the qualified field personnel to fully complete the tasks required.

All field samplers at hazardous waste sites are required to complete the 40-hour OSHA health and safety training and annual 8-hour refresher courses prior to engaging in any field collection activities.

6.0 EQUIPMENT AND SUPPLIES

- Multi-parameter meter including: DO, ORP, pH, specific conductivity, and temperature probes.
- Calibration supplies and standards
- Flow-through cell (if needed)
- Turbidity meter (separate unit, turbidity cannot be measured using the flow-through cell)
- Water level indicator/meter
- Site-specific historical data including well installation logs, boring logs, and previous sampling log sheets
- Field book (and data recording sheets, if used)

7.0 PROCEDURES

7.1 Office Preparation and Mobilization

All field personnel should be familiar with the project work plans (i.e., QAPP, SAP, FSP, etc.) and have the opportunity to ask questions prior to beginning mobilization activities. All field equipment will be inspected by the FOL or designee prior to mobilization. At least one full calibration of all instruments and equipment requiring calibration should be completed and documented in the office prior to mobilization. Reference Nobis SOP Nos. FS-005 and FS-006 for calibration procedures, as appropriate. Field instruments not requiring calibration do require a performance check prior to mobilization to confirm that the instrument is operating correctly. This will entail turning the instrument on and running through the normal monitoring processes to be completed in the field. If the instruments operate and calibrate normally, they should be turned off and packed for travel to the site. If the instruments are determined to be malfunctioning, suitable replacements will be obtained.

The project manager or FOL should provide the field personnel with a list of required and suggested equipment including any tools or personal items not being provided by the project or listed in this SOP. The field personnel should be fully informed of the work site conditions including availability of shelter, climate controls, food, potable water, and project expectations (e.g., anticipated work day length, weather-related decisions, and other reasonably foreseeable conditions) so they can make appropriate decisions on personal gear. The FOL or designee is responsible for ensuring that all required equipment is organized, staged, and ready to mobilize. To the extent possible, all authorization, permission, and access issues should be resolved prior to mobilization. If expendable items such as gases are required, potential local sources should be researched prior to mobilization. Sample shipping and other SOPs should be referenced for further information.

7.2 Field Procedures

Similar to the EPA low-flow groundwater sampling method and SA-003, the parameters DO, ORP, pH, specific conductance, temperature, and turbidity are measured over time to ensure representativeness of the water quality based on the stabilization of the measured parameters.

DO, ORP, pH, specific conductivity, and temperature measurements are also collected to assess local reduction-oxidation (redox) conditions and fluctuations across a site, often to evaluate in-situ biological activity and geochemistry. All monitoring results and notes will be documented in the field log book or on log sheets; an example water quality monitoring log sheet is included as Attachment 1.

<u>Groundwater Quality Measurements</u>

Typically for groundwater sampling, water quality parameters are measured in a flow-through cell (except turbidity) that is installed in-line between the pump and the tubing discharge end. The flow-through cell is situated outside of the well. Because depth to the target well interval to be sampled may be deeper than the instrument cable

between the handheld unit and the sonde, it may not be practical to insert the multi-parameter probe into the well. Also, the cable could be a source of cross-contamination between wells and would need to be decontaminated. However, if groundwater samples are not to be collected, following sufficient decontamination procedures, the sonde may be lowered slowly into the well to the desired depth in lieu of using an external flow-through cell. Avoid dropping the sonde into the water as the impact with the top of the water column could potentially damage the probes installed in the sonde. Turbidity is generally measured from a sample port in-line prior to the flow-through cell.

The following guidelines should be followed in measuring the groundwater quality parameters:

- Select the appropriate range for each parameter to be measured (based on team briefing, historical data, etc.).

- Measure the depth to water in the well and document. Install decontaminated pump and clean tubing into the well (alternatively use dedicated tubing). Allow the well to restabilize to the static water level (prior to installation of the tubing) prior to pumping.

- Install the multi-parameter probe in the flow-through cell and make all appropriate tubing connections. Refer to SOP SA-003 for a pump and flow-through cell setup diagram.

- Turn on the multi-parameter instrument.

- Purge well in accordance with SOP SA-003 (Low-Flow/Low-Stress Groundwater Sampling) for low-flow sampling.

- Record readings during stabilization at a predetermined interval (e.g., 5 minutes) and record the final values upon stabilization. The time intervals should be sufficient to guarantee that a complete flushing of the flow through cell volume occurs between recorded readings (i.e., volume of flow-through cell in mL divided by purge rate in mL/min equals the turnover period of the cell; intervals shall be at least that period of time).

- Stabilization is achieved when three consecutive readings, taken at 3- to 5-minute intervals, are within the following limits:

  - Turbidity - +/- 10% for values greater than 1 NTU; if turbidity is greater than 5, refer to the EPA Low Flow Sampling guidance and SOP SA-003 for sample collection options.
  - Dissolved Oxygen - +/- 10%
  - Specific Conductance - +/- 3%
  - Temperature - +/- 3%
  - pH - +/- 0.1 pH units
  - ORP - +/- 10 mV

- Note odors, turbidity, color, etc. during purging and at stabilization.
- Decontaminate probe before storing probe, or using at the next sample station.

Note: Position tubing and flow-through cell so they are not subject to wind or direct sunlight as these can affect the temperature of the groundwater pumped to the ground surface. If possible, shield the tubing, the flow-through cell, and the multi-parameter instrument from ambient conditions that may affect the readings.

Surface Water Quality Measurements

Water quality parameters for surface water can be measured directly with the probe if the sample station is accessible and safe to work at. If the surface water to be measured is inaccessible or difficult to access safely, then a sample should be obtained using a pre-cleaned container and an extension pole. Water quality measurements can then be made by inserting the sonde into the sample.

The following guidelines should be followed in measuring the water quality parameters for a surface water sample:

- Locate an area where the sonde will be completely submersed to ensure that each of the probes is immersed in the water column. Stand down stream of the location and insert the probe into the surface water body or container. Always perform measurements in a down-stream to up-stream sequence to minimize the disturbance to sediments.
- Stir gently to remove air bubbles being careful to not disturb the sediment. Once air bubbles have been removed, hold the sonde still.
- Allow parameters to stabilize and record measurements. Unlike groundwater monitoring where measurements are recorded every 5 minutes, stabilization in surface water is considered to be stable when there is limited fluctuations in the readings over a 30 second period.
- Note odors, turbidity, color, etc. during purging and at stabilization.
- Decontaminate probe before storing probe, or using at the next sample station.

7.3 Data and Records Management

The FOL will review the field logs and other project specific field data (such as field analyses completed) on a daily basis. Discrepancies and/or omissions should be addressed as soon as possible, preferably the same day. When it is logistically reasonable, it is preferred that copies be made as soon as possible as a backup. Likewise, the data should be provided to the project manager (or designee) at the end

of each sample day, if feasible. All field data sheets will be transferred to the project files at the end of the field event by the FOL.

The FOL will maintain a log of daily events to include, where applicable, the wells sampled, the sampler, the analytical parameters, problems or exceptions, duplicate samples and QC samples collected, sample transfer/shipping dates and times, and general site conditions.

7.4 Communication and Technical Direction

Field personnel should support one another and maintain open communications during all aspects of the field activities. When a technical point is in question, field personnel should communicate with the FOL for clarification and/or additional direction. If the project work plan does not provide sufficient information, the FOL should consult with the project manager unless otherwise directed. Deviations, exceptions, and/or omissions from the project work plan or generally accepted practice should be communicated to the project manager as soon as feasible. The FOL will maintain records of all such communications in a field book detailing the issue, the outcome, and individuals involved in the decision.

7.5 Demobilization

The FOL is responsible for ensuring that all required data has been collected and that the site is secured before authorizing the field crew to complete demobilization. The FOL should confirm with the project manager that the crew is authorized to begin demobilization unless otherwise directed. At a minimum, the site conditions should be left as they were the beginning of field activities. The FOL or designee will ensure that all instruments and equipment are accounted for and either stowed for future use or transported to the office. In some cases, taking an inventory of equipment and expendables may be appropriate.

8.0 QUALITY CONTROL/QUALITY ASSURANCE

The following general quality assurance procedures apply:

- All data must be documented in site field books or field data sheets, as appropriate.
- All instrumentation must be operated in accordance with operating instructions as supplied by the manufacturer, unless otherwise specified in the work plans. Equipment checkout and calibration activities must occur prior to sampling/operation, and they must be documented.

9.0 REFERENCES

Nobis Engineering, Inc., Calibration of YSI® Multiparameter Water Quality Meters, FS-005. Revision 02. March 2010.

Nobis Engineering, Inc., Calibration of Turbidity Meters, FS-006. Revision 03. April 2010.

Nobis Engineering, Inc., Low-Flow / Low-Stress Groundwater Sampling, SA-003. Revision 02. March 2010.

U.S. Environmental Protection Agency; Standard Operating Procedure Calibration of Field Instruments, EQASOP-FieldCalibrat, June 3, 1998 (Revised January 19, 2010).
US Environmental Protection Agency Region I; Low Stress (low flow) Purging and Sampling Procedure for the Collection of Ground Water Samples From Monitoring Wells, EQASOP-GW 001, July 31, 1996 (Revised January 19, 2010).

U.S. Geological Survey. National Field Manual for the Collection of Water-Quality Data. Source: http://water.usgs.gov/owq/FieldManual/. Techniques of Water-Resources Investigations, Book 9 Water Resources. Office of Water Quality. Dates of publication for each chapter vary (1997 through 2006).

YSI Incorporated, 6-Series Water Quality Sondes, User Manual. Revision E. March 2009.

YSI Incorporated, Calibration Tips for YSI 6-Series Sondes and Sensors. DO Excerpt. January 26, 2009.

Attachment 1
Water Quality Parameter Log Sheet

Nobis Engineering, Inc. nobisengineering.com

Water Quality Parameter Field Log

SOP No: SA-008
Date: June 2010

Rev.: 02

Prepared by: D. Gorhan
Approved by: G. DeRuzzo

Date : _____ Page _____ of _____ **Location :** _____

Field Personnel _____ Location Type: Well Surface Water Storm Water Drinking Water other

Depth of Water Column (ft.): _____ Purging Start Time : _____

Screen Length in ft. _____ Screen Depth in ft. _____ Measured Well Depth (ft.): _____

Depth to GW (ft.): _____ From: _____ Parameter Stabilization: (Circle) Yes / No

Pump/Tubing Intake set (ft.): _____ From: _____ Total Volume Purged, Including Drawdown (gallons): _____

Sample Designation _____ Time at Purge Completion: _____

Sample Time _____ Signature: _____

Pump Type (include pressure, discharge, and recharge for bladder pump under pump setting and comments) _____

Multimeter model and serial number _____ Turbidity meter model and serial number _____

Notes: (initial wellhead PID/FID reading, deviations from SOP, etc.)

Clock Time	Discharge / Refill / Pump Setting	Purge Rate	Depth to Water	Draw down	Cum. Draw down	Temp. +/- 3%	Spec. Cond. +/- 3%	pH +/- 0.1	ORP +/-10	DO +/- 10% if >0.5 mg/L	Turbidity +/- 10% if > 5 NTU	Comments / Gas Pressure / Observations
HHMM	sec. / sec. or setting	ml/min	ft.	ft.	ft.	°C	µS/cm		mV	mg/L	NTU	

Notes: All depths in feet below top of PVC unless specified.
NR = No Reading
Use the back of the log to record additional observations and descriptions.
Complete all applicable sections, marked non-applicable sections with N/A.

Nobis Engineering, Inc.	STANDARD OPERATING PROCEDURES			Prepared by: C. Rousseau
	Title: SOIL HEADSPACE SCREENING			Reviewed by: D. McGrath, M. Bouvier, G. DeRuzzo
	SOP No: FS-003	Rev.: 1	Date: May 2009	Approved by: G. DeRuzzo

1.0 SCOPE, APPLICATION, AND LIMITATIONS

The purpose of this Standard Operating Procedure (SOP) is to accurately screen soil sample headspaces for total ionizable volatile organic compounds (VOCs). This is a semi-quantitative method, the results of which may not correlate well with laboratory soil VOC analyses. Headspace screening is performed with a photoionization detector (PID) or a flame ionization detector (FID) depending upon the contaminants of concern. The use of a PID or FID should be determined by the project manager based on site-specific contaminants prior to beginning field operations.

The limitations to this method include:

- To be detected, compounds must be present in the volatile state of the soil sample being screened, and capable of being ionized by the PID (or FID);
- Screening results may vary based on sample temperature, compounds present, soil matrix, age of the sample, and the degree to which the sample has been agitated and crumbled;
- VOCs present in soil gas or groundwater within the soil pores of the sample will result in positive screening results even for samples that may not "contain" VOCs on or within the soil itself; and
- Water vapor may cause large-scale zero drift in the PID. Zero drift occurs when the PID is no longer reading the background conditions present when it was calibrated.
- The PID has a reliable reporting limit of 1 part per million by volume (ppmv) in air.

2.0 INTRODUCTION

The soil headspace screening method is commonly used during advancement of soil borings or excavation of test pits/contaminated soils. This method may be used to:

- Segregate excavated soil into appropriate stockpiles;
- Determine approximate limits of excavation;
- Identify soil samples for laboratory analyses; and
- Provide a qualitative assessment of the presence and locations of VOCs.

3.0 DEFINITIONS

EPA	Environmental Protection Agency
FID	flame ionization detector
HASP	health and safety plan
OSHA	Occupational Safety and Health Administration

PPMV	Parts Per Million by Volume
PID	photoionization detector
PM	project manager
PPE	personal protective equipment
PPM	parts per million
SOP	standard operating procedure
VOCs	volatile organic compounds

4.0 CAUTIONS

When working with potentially hazardous materials, follow U.S. Environmental Protection Agency (EPA), Occupational Safety and Health Administration (OSHA), and the safety practices as outlined in the site-specific health and safety plan (HASP).

5.0 PERSONNEL QUALIFICATIONS

Personnel collecting samples using this method should be familiar with this SOP and the particular equipment to be used to facilitate sampling and troubleshooting equipment problems more efficiently.

All field samplers at waste sites are required receive 40 hours of basic hazardous waste operations and emergency response (HAZWOPER) training as prescribed by OSHA. This training must be refreshed annually with an 8-hour refresher course.

6.0 EQUIPMENT AND SUPPLIES

- PID (or FID), including calibration kit, manual, and intake filters
- Sample jars
- Indelible marker
- Aluminum foil
- Field book
- Field data sheets, if used
- PPE, as specified in the site-specific HASP

7.0 PROCEDURES

7.1 Office Preparation and Mobilization

a. Order all the needed field equipment from the designated environmental supply company. Arrange for delivery of equipment to the office or to the Site, as needed. Always check the equipment when it is delivered to ensure that nothing is missing or broken.

b. Calibrate PID per manufacturer's instructions and document calibration in the field book or log sheet. For example, the zero cal should be performed with ambient air, and the span calibration with 100 ppm isobutylene calibration gas. Make note of calibration or spanning to non-standard specifications. Instrument calibration can be adjusted to respond to specific contaminants of concern.

c. Perform calibration checks once for every three hours of instrument operation, at the end of each work day, and at any time when unexpected readings are observed. Make a note of the calibration checks in the field notes. If during the calibration checks, the instrument is observed to have drifted ±2 parts per million (ppm), recalibrate per the manufacturer's instructions.

7.2 Field Procedures

a. Record and document background VOC readings in ambient air on field records/logbook. Background ambient air conditions are considered to be those upwind of the Site, and away from other sources of contamination (e.g. car exhaust). Record ambient conditions (i.e., temperature, wind speed, sun, precipitation, etc.). If it is not feasible to screen samples in an area with a clean background, document the highest background reading.

b. Half-fill a clean jar or Ziplock™ type plastic bag with soil. Quickly cover the jar with aluminum foil or close the plastic bag and label the container.

c. Vigorously shake the sample to disperse soil and wait for approximately 5 minutes. Record the ambient temperature at which screening is performed. If outside temperatures are below 50°F, try to warm the samples in a heated vehicle or building. Do not place samples directly on a heat source (such as a vehicle defroster or heating vent) as this could cause excess moisture in the soil headspace, which could possible cause false positives.

d. Shake the sample again after 5 minutes.

e. Insert the tip of the PID through the foil or into the plastic bag (do not submerge tip of PID into soil or water) and record the highest meter response, typically after approximately 3 to 15 seconds.

f. Allow the PID to return to background/baseline between screening each sample.

g. After screening all samples (or after 3 hours, whichever occurs first), re-check background and record significant variations.

7.3 Data and Records Management

Record all pertinent data in the field book or field data sheet, as appropriate. The following information should be included in the field notes: sampler's name(s), date, Site name, project and task number, sample identification numbers, PID readings, and results of calibration and calibration checks. The field book or copies of the field book will be stored in the project files.

The PID has a reliable reporting limit of 1 part per million in air. Readings at or below the reporting limit should be reported as “BDL”, “<1 ppmv”, or similar terminology.

7.4 Communication and Technical Direction

Any problems or issues encountered while in the field shall be discussed with the Project Manager (PM) in order to determine an appropriate solution. Any changes in scope or deviation will be confirmed with and approved by the PM.

7.5 Demobilization

Activities to be performed upon the completion of field screening activities include:

- Brush loose soil from the PID, etc;
- Perform a calibration check of the PID and record the results in the field log book;
- Change air intake filter per manufacturer’s directions, if needed; and
- Containerize and handle decontamination wastes in accordance with applicable Federal, State, and local regulation.

8.0 QUALITY CONTROL/QUALITY ASSURANCE

The following general quality assurance procedures apply:

- All data must be documented in site field books or field data sheets, as appropriate.

- All instrumentation must be operated in accordance with operating instructions as supplied by the manufacturer, unless otherwise specified in the work plan. Equipment checkout and calibration activities must occur prior to sampling/operation, and they must be documented.

9.0 REFERENCES

Photovac, Inc. http://www.photovac.com/

RAE Systems, Inc. http://www.raesystems.com/

Thermo Scientific, http://www.thermo.com/

Nobis Nobis Engineering, Inc.	STANDARD OPERATING PROCEDURES			Denis McGrath Prepared by
	Title: FIELD SAMPLING EQUIPMENT DECONTAMINATION			Corey Rousseau Reviewed by Gail DeRuzzo Approved by
	SOP No: FS-004	Rev.: 02	Date: May 2010	

1.0 SCOPE, APPLICATION, AND LIMITATIONS

This procedure sets forth protocols for decontamination of environmental sampling equipment, which may include at a minimum: drilling sampling equipment (e.g., split spoons and direct-push tooling), hand augers, scoops, bowls, sample tubing, pumps, and bailers. Specific contaminants or conditions may require a more-refined or aggressive approach to equipment decontamination.

2.0 INTRODUCTION

This Standard Operating Procedure (SOP) has been prepared by Nobis Engineering, Inc. (Nobis) to provide a framework for decontaminating environmental sampling equipment.

3.0 DEFINITIONS

(IDW) – Investigation Derived Waste is waste that needs to be sampled and sent to a laboratory in order to be characterized for appropriate disposal off-site.

(MSDS) – Material Safety Data Sheets include important information and characteristics about chemicals and compounds and are helpful when human contact with the material occurs, or creates a dangerous situation.

(FOL) – Field Operation Lead ensures compliance with the Site work, regulatory compliance, quality, and the safety of employees working on the Site.

(QA/QC Officer) – The Quality Control and Quality Assurance officer ensures that SOPs are followed, and addresses issues with equipment anomalies or malfunctions.

4.0 CAUTIONS

The Nobis personnel should be equipped with appropriate personal protective equipment (PPE), including protective eyewear and/or face shield, nitrile gloves, tyvek suit (only as Site specified). The site-specific health and safety plan (HASP) will document the PPE required for the Site and activity.

Avoid inhalation, skin contact, eye contact, or ingestion of hazardous materials and contaminants. If skin contact occurs, remove the contaminated clothing immediately. Wash the affected areas thoroughly with large amounts of water. If inhalation, eye contact, or ingestion occurs, consult the MSDS for prompt action, and in all cases seek medical attention immediately

5.0 PERSONNEL QUALIFICATIONS

Nobis personnel should be trained on decontamination procedures by experienced Nobis personnel.

6.0 EQUIPMENT AND SUPPLIES

- Detergent soap (Alconox)
- Deionized Water
- Solvent (e.g., isopropanol, methanol, hexane)
- Nitric acid solution
- Potable water
- Drip pans/buckets
- Brushes
- Polyethylene sheeting
- Spray bottles
- Pump sprayers
- Paper towels
- Temporary storage container for the decontamination liquid (IDW)

7.0 PROCEDURES

7.1 OFFICE PREPARATION AND MOBILIZATION

Prior to field work, ensure that appropriate equipment and supplies are acquired prior to leaving for the Site.

7.2 FIELD PROCEDURES

- Table 1 provides a basic description of common decontamination fluids and their respective uses. Whenever site-specific contamination is known, a specialized decontamination procedure may be developed.
- Prior to completion of sampling, gross contamination of the sampling equipment should be removed at the sample collection site, and managed appropriately.
- Contaminated sample collection equipment to be decontaminated should be brought to a centralized decontamination station or pad, which should be lined with plastic sheeting to prevent decontamination solutions and/or contamination from contacting the ground surface. If possible, the station or pad should contain drip pans or buckets at each stage of the process to collect dripping decontamination fluids. For larger pads, the pad should be sloped such that water drains to a sump area for removal and containerization.

Table 1
Decontamination Fluids and Their Applications

FLUIDS	TYPICALLY USED	APPLICATIONS
Potable Water	Tap water	All-purpose rinse
Distilled/Deionized Water	deionized/distilled/ contaminant free water	All-purpose rinse
Low-phosphate detergent	10% solution	All-purpose cleaning
Sodium Carbonate	10% solution	Neutralize acids and bases
Trisodium Phosphate	10% solution	Organic compounds (including PCBs)

Calcium Hypochlorite	10% solution	"Disinfectant, oxidizes pesticides, fungicides, chlorinated phenols, dioxins, cyanides, ammonia, and other non-acidic inorganic wastes."
Hydrochloric, Nitric acids	10% solution	Heavy metals
Citric, tantaric, oxalic acid/salts	5% solution	Inorganic bases, alkali and caustic wastes
Organic Solvents	Concentrated	Organic compounds with poor solubility (e.g., oil and grease)

Notes: Adapted from ASTM D5088-02 Table 1 Applications of Various Solutions for Decontamination of Field Equipment

- A typical decontamination station and procedure for decontaminating soil or other solid-matrix sample collection equipment includes the following steps:

  - Wash and scrub using detergent, potable water, and brushes as necessary.
  - When using a pump sprayer and potable water, rinse the soap and gross contamination from the equipment.
  - Using a pesticide-grade isopropanol solution in a spray bottle, rinse the equipment thoroughly, with drippings collected in a drip pan or bucket.
  - A 10% nitric acid solution may be utilized if sampling is to consist of trace metals analysis. It should be noted that nitric acid on stainless-steel may cause inadvertent leaching of the steel into the acid.
  - If organic contamination (such as oils/greases, polychlorinated biphenyls, or other extractable organic compounds) is suspected, the use of an additional solvent in accordance with Table 1 should be considered.
  - Rinse the equipment with deionized water
  - Allow sampling equipment to air dry to the extent possible
  - Wrap the equipment with aluminum foil for storage

- A typical decontamination station and procedure for decontaminating monitoring well sample collection equipment includes the following steps:

  - To the extent possible purge water should be removed from the equipment prior to decontamination.
  - Scrub the exterior of the equipment using brushes, potable water, and soap.
  - Immerse the pump into a container of soapy water, and pump a sufficient amount of water through the pump to completely flush the equipment (and tubing if needed).
  - Remove the equipment from the soap and water, and immerse it into a container of tap water. Operate the pump for a sufficient length of time to remove all soap and water from the system (i.e., until clear).
  - Rinse the equipment with pesticide-grade isopropanol.
  - Immerse the equipment into a container of deionized water and flush the system until all solvent and residual soap is removed.
  - Allow all components to dry.
  - Wrap the equipment with aluminum foil and/or plastic storage bag.

- Equipment utilized during the collection of groundwater samples, but not actually involved in the collection of the sample (such as a water level meter, water quality meter sonde/flow-through cell) should be rinsed with soapy water, followed by a deionized water rinse and wipe-down.

All used decontamination solutions should be handled in accordance with project planning documents. In general, these fluids are contained as investigation-derived wastes (IDW), and transported/disposed of in accordance with applicable Local, State, and Federal regulations. This is particularly important when decontamination IDW includes solvents such as acids, methanol, acetone, and/or hexane.

At the end of equipment use, rinse and decontaminate all components and store in its case. If there are any issues with the piece of the equipment, leave a note regarding the problem with the unit to alert the rental company upon return.

7.3 DATA RECORDS AND MANAGEMENT

Not applicable to this SOP.

7.4 COMMUNICATION AND TECHNICAL DIRECTION

If any problems, health and safety issues concerns, or incidents occur, the Field Operations Leader (FOL) and Health and Safety Officer must be contacted. Follow up will occur in adherence to the HASP. If deviations from this SOP or site-specific quality assurance project plan (QAPP) are made in the equipment decontamination process, documentation of these deviations must be made in the field log and communicated to the Project Manager and Lead Chemist.

8.0 QUALITY CONTROL / QUALITY ASSURANCE

After completing decontamination activities on field equipment, a visual evaluation shall be completed to assess the overall effectiveness of the procedure in removing gross-level contamination (i.e., remnants of soil or other obvious indication of possible contamination).

Another commonly-applied practice is the collection of equipment rinse blanks. These samples are collected using a variety of methods, but all involve the use of high-purity water that is rinsed through/over the decontaminated field equipment in an effort to determine the overall effectiveness of the decontamination procedures. These samples should not be used in lieu of the visual inspection due to the fact the results of these samples may not be available for several days, if not weeks. Often, by that time, the field effort is completed, and no improvements on decontamination procedures can be made. The need for and method for collecting these samples should be included in project planning documents.

9.0 REFERENCES

- USEPA Environmental Response Team, 2004, USEPA Sampling Equipment Decontamination, SOP 006.

- U.S.EPA Region 9 Laboratory, Richmond, California, 1999. Field Sampling Guidance Document #1230 Sampling Equipment Decontamination.

1.0 SCOPE, APPLICATION, AND LIMITATIONS

This Standard Operating Procedure has been prepared by Nobis Engineering, Inc. (Nobis) to establish the required documentation and methodologies necessary to perform calibration of a typical turbidity meter using prepared calibration standards. This SOP details the procedures for two common meters. Other meters may be acceptable if they are consistent with the project DQOs. In all cases, the user's manual should be consulted prior to calibration.

The use of a turbidity meter may be in support of a groundwater or surface water sampling event. A turbidity meter is a single-measurement device and, therefore, is not viable for long-term deployment. This SOP describes the calibration of the LaMotte 2020e (single-point calibration) and the HACH 2100P (four-point calibration), although the general procedure may apply to other instruments. This SOP is not applicable to the turbidity feature of multi-parameter water quality meters such as the YSI 6-Series Sonde. Project planning should include a determination of the instrument to be used. The project planning documents, including quality assurance project plans, should be consulted for project-specific information.

Additionally, the document entitled *Standard Operating Procedure, Calibration of Field Instruments* that was prepared by the U.S. EPA Region 1 Quality Assurance Unit in North Chelmsford, Massachusetts on January 19, 2010 (EPA SOP) should be referenced for further information. Please note that the EPA SOP is generic for different types of instruments, and that this Nobis SOP is specific to two commonly used instruments.

2.0 INTRODUCTION

This SOP provides the calibration procedures for typical turbidity meters. These meters use a light source that is projected through a cuvette (glass sample vial) containing the sample. One (or more) photosensors are located at a 90° angle to the path of the light source. These sensors detect the scattering of light by the turbidity in the sample. The intensity of the scattered light detected is compared to a reference standard and a value is calculated. The measurement units are typically NTU.

The purpose of this SOP is to provide the procedures for uniform performance and documentation of a valid calibration of the instrument to ensure that turbidity data obtained using these instruments is sufficiently accurate to meet project DQOs.

These instruments must be calibrated each day prior to collecting turbidity measurements and a calibration check must be performed at the end of the day's operations. Additional calibration checks can be performed throughout the day if DQOs require it or if erratic readings persist. The purpose of these calibration checks is to determine if the instrument has drifted out of calibration during the day's operation. If during a mid-day calibration check, the meter has drifted out of calibration, the meter must be taken out of service and recalibrated prior to being put back into service. Measurement data collected since the last calibration and up to the point of a failed calibration check shall be qualified appropriately. (This shall include documentation on the field sampling form and the field calibration log sheet.) All calibrations and calibration checks must be documented in accordance with this SOP.

3.0 DEFINITIONS

DQO	Data Quality Objectives
EPA	United States Environmental Protection Agency
FOL	Field Operations Leader
HASP	Health and Safety Plan
mL	milliliters
MSDS	Material Safety Data Sheet
NTU	Nephelometric Turbidity Units
OSHA	Occupation Safety and Health Administration
PM	Project Manager
PPE	Personal Protective Equipment
QAPP	Quality Assurance Project Plan
SAP	Sampling and Analysis Plan
SOP	Standard Operating Procedure

4.0 CAUTIONS

- All proper personal protection clothing and equipment is to be worn as specified in associated HASPs.

- The calibration standard for calibrating turbidity can contain styrene divinylbenzene copolymer spheres. While the material is not volatile and has no known physical effects on skin, eyes, or from ingestion, general health and safety precautions should be adopted to minimize unnecessary contact. If skin contact occurs, immediately remove any contaminated clothing. Wash the affected areas thoroughly with copious amounts of water. If inhalation, eye contact, or ingestion occurs, consult the MSDS for prompt action, and in all cases seek medical attention immediately.

5.0 PERSONNEL QUALIFICATIONS

Personnel calibration and/or collecting samples using this method should be familiar with this SOP and the particular equipment to be used to facilitate sampling and troubleshooting equipment problems more efficiently. Consulting the user's manual for each meter s required. Consulting the EPA SOP may also be useful. At a minimum, all calibration technicians should have an operational understanding of the instrument functions, the parameter measured, and the units of the measurement.

All field samplers at hazardous waste sites are required to complete the 40-hour OSHA health and safety training and annual 8-hour refresher courses prior to engaging in any field collection activities.

6.0 EQUIPMENT AND SUPPLIES

- Turbidity meter; the LaMotte 2020e (LaMotte) or HACH 2100P (HACH) are commonly used.
- Cuvettes designed for the meter (a minimum of two are required, more if the calibration standards are not sealed).
- Extra batteries
- Calibration standard. For single-point calibration units, a 0 NTU blank and a 10 NTU calibration standard are generally appropriate. For four-point calibration units, calibration standards of <0.1, 20, 100, and 800 NTU are generally provided. Other calibration standards can be requested from most vendors. It is desirable whenever possible to cover the range of anticipated field measurements with calibration standards.
- Additional calibration standards if required for the instrument or the project quality objectives
- User's Manual
- Delicate low-lint wipes (Kimwipes or equivalent)
- Paper towels
- Indelible pen
- Field Calibration Log Sheet (Attachment A)

7.0 PROCEDURES

7.1 Office Preparation and Mobilization

The Quality Control Officer and the Project Manager (or their designees) must first determine the DQOs associated with the turbidity data that will be collected, then select appropriate instrumentation to achieve these DQOs. Factors to consider include the range of historical or expected turbidity for the water to be screened, how the data will be used (i.e., to determine well stability only or also for assessing groundwater chemistry), and other site or project specific considerations. The LaMotte is capable of a single-point calibration, usually to 1 NTU for expected turbidities of ≤1 NTU or 10 NTU for expected turbidities >1 NTU. The LaMotte has a specified accuracy of ±0.05 NTU or 2% of the reading at <100 NTU and ±3% of the reading at >100 NTU with a resolution of 0.01 NTU in the 0-10.99 NTU range, 0.1 NTU in the 11-109.99 NTU range, and 1 NTU in the 110 to 4,000 NTU range. The HACH is a four-point calibration (or blank plus three calibration points) generally <0.1, 20, 100, and 800 NTU. The HACH specifies a ±2% accuracy in the 0-1,000 NTU range with a resolution of 0.01 NTU in the lowest manually selected range of 0-9.99 NTU. The post-calibration and end-of-day calibration check calibration standard values cited in this SOP are acceptable for most projects. The DQOs for a specific project may require that different calibration standards be used.

Prior to field mobilization, visually inspect the condition of the turbidity meter. Clean the unit as required in accordance with the user's manual. The user should closely examine the cuvettes for scratches, lint, dirt, or fingerprints. If a cuvette is scratched or cracked, it should be discarded and replaced. If the cuvettes are dirty, they should be cleaned as indicated in accordance with manufacturer's recommendations.

Turn the unit on to ensure that the unit is operable.

Verify that any calibration standards to be used in subsequent calibrations are not expired (if an expiration date is included on the container). Each calibration standard container should be stamped with a lot number and expiration date (if applicable). If the lot number is not present, the calibration standard should not be used and new calibration standard should be obtained.

If the meter was rented, ensure that documentation indicating that the unit was calibrated is present. If any of the required documentation is missing from the unit, the vendor should be contacted to obtain it prior to use in the field. The unit should not be used, and another unit should be requested, if this documentation cannot be produced. Alternately, if time does not allow instrument replacement, or if required by the sampling plan, the user can perform a calibration of the meter in accordance with this SOP prior to mobilization into the field. Review the vendor's calibration documentation to ensure that the calibration date was recent and that the calibration met target values. Note that the calibration completed by the rental company does not excuse the user from calibrating; the instrument must be calibrated before use on a daily basis.

Prepare copies of the Turbidity Meter Field Calibration Log Sheet for use in the field. Ensure sufficient quantities of calibration standards and undamaged cuvettes are prepared for the scope of the field work.

7.2 General Field Procedures

7.2.1. Ideally, the calibration standards should be maintained at a temperature that closely-represents the expected temperature of the water being measured. However, without the ability to carefully heat and/or cool calibration standards to that temperature, implementation of this in the field is not practical. Therefore, the calibration standards should be maintained at a stable temperature and out of direct sunlight (i.e., in a cooler with some ice or an ice pack or other stable-temperature environment). Additionally, the calibration standards should be allowed to stabilize at that temperature (for instance, bringing new calibration standards into a warm trailer from an outside storage unit) prior to calibration. Failure to allow the calibration standards to stabilize in temperature could lead to erratic calibration.

7.2.2. Ensure that the unit is clean and that the cuvettes are not dirty, scratched, or cracked (see above). It is common to dedicate at least two cuvettes to calibration.

7.2.3. Turn the unit on and allow it to warm up for approximately 30 seconds. Initially, leave the instrument in the screen that appears when first turned on.

7.2.4. Generally, sealed prepared calibration standards are provided with a rental instrument. If sealed prepared calibration standards are not provided, calibration standards are poured into clean cuvettes up to the graduation mark indicating the vessel is full. This is typically 10 mL. Place the cap on the cuvette.

7.2.5. Before use, gently invert the calibration standard at least twice to ensure that the calibration standard is well mixed. Care must be taken to not create bubbles in the calibration standard that the instrument will interpret as suspended solids.

7.2.6. With either the LaMotte or HACH, the lid must never be opened while the instrument is in an active mode (i.e., with the lamp operating in either calibration or read modes). Allowing ambient light into the chamber while the unit is in an active mode may result in the photosensor being overloaded and the instrument being rendered unusable without service

by a qualified technician. Nobis is generally not prepared or qualified to perform this level of service in the field.

7.2.7. **LaMotte Procedure**

1) Turn the instrument on and allow the appropriate warm-up time. LaMotte does not specify a period; for uniformity, 5 minutes is recommended.
2) Clean the cuvette containing the 0 NTU calibration standard or blank with a lint-fee cloth or tissue. The reference line on the cuvette should be aligned with the notch at the top of the plastic collar (refer to the instrument manual for an illustration).
3) Insert the blank into the chamber aligning the notch with the reference arrow on the instrument. Close the chamber lid.
4) In the Main Menu screen, if the asterisk is not next to Measure, use the up and down arrows to move it there and press */OK. In the Turbidity screen, if the asterisk is not next to Scan Blank, use the up and down arrows to move it there and press */OK. The screen will display “Please Wait” for several seconds and then display the asterisk next to Scan Sample.
5) Leave the cuvette in the chamber with the lid closed and press */OK again. Again, “Please Wait” will display for several seconds and then the reading will be displayed.
6) The Scan Sample reading for the blank should be 0.00 NTU. If the reading is not 0.00 NTU, use the up or down arrows to select Scan Blank and repeat the procedure.
7) It may take up to three attempts of the Scan Blank/Scan Sample sequence to get a reading of 0.00 NTU. According to LaMotte, a very small positive or negative (e.g., a range of 0.02 to -0.02 NTU) reading is acceptable. **Do not proceed** until the required result is achieved.
8) Once the Scan Blank/Scan Sample is completed and the required Scan Sample reading of 0.00 NTU for the blank is achieved, prepare the calibration standard cuvette for the one-point calibration by gently inverting several times, if not done within the last several minutes, and clean with a lint-free cloth or tissue. For most applications, this will be the 10 NTU calibration standard and that is the assumed calibration value for the remainder of this description.
9) Place the calibration standard in the chamber, aligning the reference notch with the arrow on the deck of the instrument and close the lid. With Scan Sample selected, press */OK. The unit will display “Please Wait” for several seconds and then display the reading.
10) Remove the cuvette from the chamber and place it back in, ensuring that the notch is aligned with the arrow, and repeat the Scan Sample procedure. This should be repeated at least three times or until a consistent reading is achieved.
11) The last consistent reading should be used to calibrate the instrument. Aberrant or “outlier” readings should not be used; e.g., if three sequential readings of 9.89, 9.91, and 8.03 NTU are displayed, continue until another reading in the 9.9 NTU range is achieved.
12) Using the last consistent reading, select Calibration using the up or down arrows and press */OK. The first display number will be selected; if it is not appropriate for the calibration standard, use the arrows to scroll to the appropriate number and press

*/OK to select the second display number. Use the arrows to scroll to the appropriate number if it is not displayed and press */OK. Continue with this process until the display reads a value equal to the calibration standard and the asterisk is next to Set. To set (or accept) this calibration, press */OK.

13) Note that if a calibration number is set incorrectly and */OK is pressed to continue to the next number, the selection cannot be reversed to correct the error. If this occurs, turn the instrument off to cancel the calibration before final acceptance and restart the **entire** process from the beginning.

14) Perform a calibration check with the same calibration standard. After accepting the calibration the display will return to the Main Menu screen with Measure selected. Press */OK to enter the Turbidity screen and select Scan Sample using the up or down arrows. Press */OK and wait for the reading to display.

15) Enter the reading for the cal check in the Turbidity Meter Field Calibration Log Sheet. The reading displayed should be within 5% of the calibration standard value. If the displayed value is not within the acceptance range, repeat the **entire** calibration process.

16) The instrument must pass the check to be used for data collection. An instrument that repeatedly fails a calibration check must be removed from service and replaced.

7.2.8. **HACH Procedure**

The HACH is generally provided from the vendor with calibration standards of <0.1, 20, 100, and 800 NTU. If other calibration standard values are required to meet the project-specific DQOs, they should be specified at the time the instrument is ordered so that the vendor can set the instrument up for the calibration sequence and supply the appropriate calibration standards.

1) Turn the instrument on and allow the appropriate warm-up time. HACH does not specify a period; for uniformity, 5 minutes is recommended.

2) The HACH is in measurement mode when first turned on. To begin the calibration procedure, press the CAL button at the top of the left column of the keypad. The display will show CAL in the upper right. The value of the first calibration standard (000.1 NTU) and the sequential number of the calibration standard (0) will be flashing on the right.

3) If not already done, gently invert the calibration standard several times and clean the cuvette with a lint-free cloth or tissue.

4) Place the <0.1 calibration standard in the chamber, aligning the white arrow or diamond on the cuvette with the small reference tab on the deck of the instrument, and close the lid.

5) Press the READ button at the bottom center of the keypad. The display will count down from 60 seconds and then display the value of the next calibration standard (020.0 NTU) and the sequential number of the calibration standard (1) will be flashing on the right.

6) Repeat the sequence with the remaining calibration standards ensuring that each is gently agitated, the cuvettes are clean, and the marks are aligned.

7) After the final calibration standard, the display will return to the original calibration screen with the value of the original calibration standard (000.1 NTU) and the sequential number of the calibration standard (0) flashing on the right.

8) At this point the calibration is complete. Press CAL again to accept and finalize the calibration. The instrument should return to the READ mode.

9) If CAL? is displayed at the upper right, or if E 1 or E 2 are displayed, an error has occurred during the process and the technician should refer to the manual before continuing.

10) Check the calibration by placing the 20 NTU calibration standard in the chamber and pressing READ. Enter the reading for the cal check in the Turbidity Meter Field Calibration Log Sheet.

11) The measured value should be within 5% (1 NTU) of the calibration standard value. If the calibration check is not acceptable, repeat the **entire** calibration procedure.

12) The instrument must pass the check to be used for data collection. An instrument that repeatedly fails a calibration check must be removed from service and replaced.

7.2.9. End-of-Day Calibration Check

At a minimum, an end-of-day calibration verification check must be performed at the conclusion of the workday. This check verifies that the unit maintained a viable calibration during operation. Project DQOs may also require that checks be completed at other times during the day. If the checks are completed during the day and the calibration has drifted out of specification, the turbidity instrument will require recalibration prior to being put back into service. If an instrument fails to pass an end-of-day (or other required) calibration check, documentation of the failure must be completed in the form of a notation on the field sampling form for **each** sample collected using the instrument during the period since the last calibration. Failure to pass a calibration check may result in the analytical data being qualified. To maintain the utility of the calibration check for assessing the viability of the data collected with the instrument, the check must be completed under the conditions that the instrument was used in the field. **Re-calibration to pass an end-of-day check is unacceptable.**

1) The end-of-day calibration check (and other checks if required by DQOs) is completed as a measurement.

2) The cuvette containing the appropriate calibration standard (usually the same calibration standard used for the initial post-calibration check) should be gently inverted several times to mix the calibration standard and cleaned with a lint-free cloth or tissue.

3) The calibration standard is measured as a field sample.

4) The value reported should be within 5% of the calibration standard value. If it is not, it is noted on the calibration log and, as described above, on the field sampling form for **each** sample collected during that day/work period.

7.2.10. Additional Considerations

This document addresses the procedures to be followed to ensure uniformity and quality between projects and technicians with respect to the proper calibration of the turbidity

instrument and verification of the data viability. Although not directly part of the calibration process, the conditions that the instrument operates under during the workday have the potential to negatively impact the assessment of the instrument's data quality. In general, turbidity meters are designed for field use and are relatively robust. They are, however, sensitive instruments that require respectful and conscientious treatment and use to perform at optimum levels. If moisture is allowed to collect in the chamber or if dirt or other contaminants are introduced, the instrument may deliver poor quality field data and fail a calibration check potentially resulting in the qualification of analytical data. Because of this, the unit should be kept dry at all times; sheltered from rain/snow, splashes, etc. and cuvettes should be thoroughly dried before putting them into the chamber. Cuvettes used for field measurements or calibration should be removed from use if the surface is scratched, stained, or otherwise damaged. As discussed previously in this SOP, the chamber lid must never be opened when the instrument is active; i.e., when the lamp is active. Introduction of ambient light during an active phase may result in overloading the photosensor and require service that Nobis is not qualified or equipped to perform in the field.

7.3 Data and Records Management

Daily completion of Turbidity Meter Field Calibration Log Sheets (attached) is a requirement of this SOP. These calibration log sheets must be completed for every turbidity meter in operation that day with the specific serial number noted for data tracking purposes.

It is imperative that the Turbidity Meter Field Calibration Log Sheets are completed thoroughly and quality-checked by the FOL each day. The Turbidity Meter Field Calibration Log Sheets are generally maintained in a loose-leaf binder that is available to the FOL at the end of each work day. These sheets are often scanned and incorporated into the FOL's daily report to the PM.

Once transferred to the PM (or designee), these sheets shall be incorporated into a project file and/or report documents.

7.4 Communication and Technical Direction

Any problems or issues encountered during the sampling event(s) shall be discussed with the PM or designated project technical lead in order to determine an appropriate solution. Any changes in scope or deviation will be confirmed with and approved by the PM.

7.5 Demobilization

Following completion of calibration, the turbidity meter should be shut off and packaged in its storage box and stored in an environment that will prevent cross-contamination, freezing, and/or over-heating.

8.0 QUALITY CONTROL/QUALITY ASSURANCE

The following general quality assurance procedures apply:

- All data must be documented on the Turbidity Meter Field Calibration Log Sheets included in Attachment A. It may also be necessary to document certain information in the site logbooks and/or field sampling forms, as required by the work plan (i.e., QAPP, SAP, etc.).

- All instrumentation must be operated in accordance with operating instructions supplied by the manufacturer, unless otherwise specified in the work plan.

9.0 REFERENCES

U.S. Environmental Protection Agency; Standard Operating Procedure, Calibration of Field Instruments, EQASOP-FieldCalibrat, June 3, 1998 (Revised January 19, 2010).

Nobis Engineering, Inc., Calibration of Turbidity Meters, Revision 03, April 2010.

HACH Cat. No. 46500-88 Portable Turbidity Meter 2100P Instrument and Procedure Manual, Hach Company, 4/08 9ed

LaMotte 2020e/i Turbidity Meter Version 5.1 Code 1979-MN 12-07, LaMotte Company

ATTACHMENT A

Nobis
Engineering a Sustainable Future

TURBIDITY METER
FIELD CALIBRATION LOG SHEET

SOP No:	FS-006	Page:	1 of 1
Date:	May 2011	Rev.:	04
Field Reviewer (FOL):			

SITE INFORMATION

Site Name: _____

Project Number/Task: _____

Calibration Procedure (circle one): Blank/1-Point 4-Point Other

List All Project Calibration Technicians:

INSTRUMENT INFORMATION

Make/Model LaMotte 2020e HACH 2100P Other_____

Serial No. _____ Vendor _____

Cal. Standards (NTU): 0 (Blank) 1 10 <0.1 20 100 800 Other (list in Comments)

Sealed Standards In Use? Y N List standard lot nos. and expiration if provided:

CALIBRATION RECORD

	Date/Time	Standard Cuvette(s) in Good Condition	Calibration Procedure Successful	Calibration Check Standard in Use (NTU)	Calibration Check Standard Reading (NTU)	Calibration Check Passed (± 5%)	Calibration Technician Initials	FOL Review Initials	Comments / Samples Collected with Instrument Failing EOD Cal. Check (explain "other" - use back of form as needed; note if instrument calibration difficult)
Initial		Y N	Y N error			Y N			
EOD		Y N				Y N			
Initial		Y N	Y N error			Y N			
EOD		Y N				Y N			
Initial		Y N	Y N error			Y N			
EOD		Y N				Y N			
Initial		Y N	Y N error			Y N			
EOD		Y N				Y N			
Initial		Y N	Y N error			Y N			
EOD		Y N				Y N			
Initial		Y N	Y N error			Y N			
EOD		Y N				Y N			
Initial		Y N	Y N error			Y N			
EOD		Y N				Y N			
Initial		Y N	Y N error			Y N			
EOD		Y N				Y N			

Notes:

Detail issues, error messages, etc. - use back of form (include dates) as needed.

1.0 SCOPE, APPLICATION, AND LIMITATIONS

The purpose of this Standard Operating Procedure (SOP) is to accurately screen ambient air and process vapors for total ionizable volatile organic compounds (VOCs). This is a semi-quantitative method, the results of which may not correlate well with laboratory VOC analyses. Screening is performed with a photoionization detector (PID) or a flame ionization detector (FID) depending upon the contaminants of concern. The selection of a PID or FID should be determined by the project manager based on site-specific contaminants prior to beginning field operations.

This SOP is limited to screening air and process vapors for performance evaluation purposes. Screening may also be performed for health and safety monitoring reasons; however, the procedures for doing so may be different. Neither the PID or FID will detect the specific concentrations of individual VOCs; rather, they measure the total concentration of ionizable VOCs. Screening results may vary based on sample temperature, humidity, and compounds present. Typical PID/FID instruments have an effective detection limit of 1 part per million by volume (ppmv).

2.0 INTRODUCTION

The air and vapor screening method is most commonly used during the remedial implementation and/or pilot-scale testing of proposed remedial alternatives. Data can be obtained quickly from the remedial process train and compared in real-time to make estimations of mass removal, remedial effectiveness, and potential for human and environmental exposure. The use of a PID versus an FID can be determined by volatility and the concentrations of the compounds anticipated.

Typical screening of process vapors will include collection of the air or vapor in a Tedlar® bag, connection of the bag to the intake probe of the instrument, and monitoring the resultant concentrations.

3.0 DEFINITIONS

EPA	Environmental Protection Agency
FID	Flame ionization Detector
HASP	Health and Safety Plan
OSHA	Occupational Safety and Health Administration
PID	Photo-ionization Detector
PM	Project Manager
PPE	Personal Protective Equipment
PPMV	Parts Per Million by Volume
SOP	Standard Operating Procedure
VOCs	Volatile Organic Compounds

4.0 CAUTIONS

When working with potentially hazardous materials, follow U.S. Environmental Protection Agency (EPA), Occupational Safety and Health Administration (OSHA), and the safety practices as outlined in the site-specific health and safety plan (HASP).

Extreme temperatures, humidity, and precipitation can cause drift in the readings displayed by the PID/FID, therefore, giving potential for false positive results. Ensure the moisture and particulate filters are installed correctly on the unit and keep the instrument in a protected location when not in immediate use.

5.0 PERSONNEL QUALIFICATIONS

Personnel collecting samples using this method should be familiar with this SOP and the particular equipment to be used to facilitate sampling and troubleshooting equipment problems more efficiently.

All field samplers at waste sites are required receive 40 hours of basic hazardous waste operations and emergency response (HAZWOPER) training as prescribed by OSHA. This training must be refreshed annually with an 8-hour refresher course.

6.0 EQUIPMENT AND SUPPLIES

PID (or FID), including calibration kit, manual, and intake filters
1-liter Tedlar® bag
Silicone Tubing
Indelible marker
Field book
Field data sheets, if used
PPE, as specified in the site-specific HASP

7.0 PROCEDURES

7.1 Office Preparation and Mobilization

7.1.1 Order all the needed field equipment from the designated environmental supply company. Arrange for delivery of equipment to the office or to the Site, as needed. Always check the equipment when it is delivered to ensure that nothing is missing or broken.

7.1.2 Calibrate PID/FID per manufacturer's instructions and document this calibration in the field book or log sheet. For example, the zero cal should be performed with ambient air, and the span calibration with 100 ppm isobutylene calibration gas. In some cases, the concentration of process vapor could easily exceed the range of the standard 100 ppm isobutylene or methane calibration standards. In these cases, calibration with a higher concentration standard is desirable to better match the anticipated process vapor concentration. Make note of calibration or spanning to non-standard specifications. Instrument calibration can be adjusted to respond to specific contaminants of concern. If the contaminants are known, determine what the appropriate response factor is and set the instrument to compensate for that factor. Make note of the response factor in the field notes and on the field log sheet, if necessary. Typically, instruments are set for a response factor of 1, appropriate for benzene.

7.1.3 Perform calibration checks once for every three hours of instrument operation, at the end of each work day, and at any time when unexpected readings are observed. Make a note of the calibration checks in the field notes. If during the calibration checks, the instrument is observed to have drifted ±2 ppmv from zero or the span value, recalibrate per the manufacturer's instructions.

7.2 Field Procedures

7.2.1 Record and document background VOC readings in ambient air on field records/logbook. Background ambient air conditions are considered to be those upwind of the Site, and away from other sources of contamination (e.g. car exhaust). Record the ambient conditions (i.e., temperature, wind speed, sun, precipitation, etc.). If it is not feasible to screen samples in an area with a clean background, document the highest background reading.

7.2.2 Connect the Tedlar® bag to the sampling orifice along the treatment train using silicone (Teflon® or Teflon lined tubing is also acceptable) tubing or other appropriate air-tight connection. Sampling orifices are typically constructed of a valve and hose barb, or similar connections, capable of restricting air flow and allowing for an air-tight seal between the treatment train and the Tedlar® bag. Open the valve on the Tedlar bag and then the valve on the sampling orifice. Slowly fill the bag until nearly full. Never overfill a Tedlar bag; it can explode causing multiple hazards including inhalation, projectile, noise, etc. Close the valve on the sampling orifice and then the valve on the bag.

7.2.3 Tedlar bag samples should be screened as soon as possible following collection. Connect the bag to the instrument with silicone tubing and open the valve on the Tedlar® bag. Note the readings and record the highest reading obtained within the initial 15 seconds of measurement. Do not allow the instrument's pump to completely evacuate the vapor in the bag as this could result in a pump fault on the instrument. Once the reading is recorded, remove the bag from the instrument and roll the bag from the bottom, squeezing the residual vapor from the bag until as much as can be removed is evacuated. Close the valve on the bag to ensure that ambient air does not enter the bag prior to the next sample collection.

7.2.4 If the bag is to be used repeatedly during the project, it is best to have the bag dedicated to one sampling point and labeled as such.

7.2.5 Remedial treatment systems often have portions of the treatment train under positive and negative pressure. Those portions of the system that are under positive pressure can be sampled in accordance with the procedures outlined above. Specific portions of the system under negative pressure will require the use of additional equipment to collect an air sample. Vacuum chambers are a common tool for overcoming the negative pressure and obtaining a representative air/vapor sample.

7.2.6 Vacuum chambers from different manufacturers will have slightly different instructions for use. Always consult the user's guide that shall accompany the chamber prior to use for specific instructions. Generally, the Tedlar bag will be installed in the chamber and connected to the sample inlet on the chamber. The sample inlet will then be connected to the sampling orifice on the treatment train and the valve on the bag will be opened. Secure the lid of the chamber and connect the vacuum port on the chamber to a suitable air sampling pump (refer to manufacturer's recommendation for the appropriate pump

selection). Turn the pump on and open the treatment train valve. Observe the Tedlar bag filling with the sample though the window if possible. Once the bag is nearly full, close the valve at the sample orifice and turn off the pump. Relieve the pressure in the chamber and open the lid. Close the valve on the Tedlar bag and disconnect the tubing. Repeat Section 7.2.3 until all sampling is complete.

7.2.7 Alternatively, Tedlar bags may used to collect a process sample under vacuum. The tedlar gag is connected directly to the outlet of a high vacuum double diaphragm pump (KnF brand or equivalent) with Teflon or Viton® seals due to the corrosive nature of the process vapors. The inlet to double diaphragm pump is then connected to the sample inlet. Turn the pump on and open the treatment train valve. Teflon or Teflon-lined tubing is desirable. Tygon tubing is acceptable but should be changed out frequently due to the potential for attack by the process vapors. Observe the bag filling. Once the bag is nearly full, close the valve at the sample orifice and turn off the pump. Repeat Section 7.2.3 until all sampling is complete..

7.2.8 After screening all samples (or after 3 hours, whichever occurs first), re-check background and record significant variations.

7.3 Data and Records Management

Record all pertinent data in the field book or field data sheet, as appropriate. The following information should be included in the field notes: sampler's name(s), date, Site name, project and task number, sample identification numbers, PID/FID readings, and results of calibration and calibration checks. The field book or copies of the field book will be stored in the project files.

The PID/FID has a reliable reporting limit of 1 ppmv. Readings at or below the reporting limit should be reported as "BDL", "<1 ppmv", or similar terminology.

7.4 Communication and Technical Direction

Any problems or issues encountered while in the field shall be discussed with the Project Manager (PM) in order to determine an appropriate solution. Any changes in scope or deviation will be confirmed with and approved by the PM.

7.5 Demobilization

Activities to be performed upon the completion of field screening activities include:

Wipe or brush off any gross contamination that may have accumulated on the instrument including soil, water, or dust;
Perform a calibration check of the instrument and record the results in the field log book;
Change air intake filter per manufacturer's directions, if needed.

8.0 QUALITY CONTROL/QUALITY ASSURANCE

The following general quality assurance procedures apply:

- All data must be documented on standard chain of custody forms, field data sheets, and within site logbooks.

- All instrumentation must be operated in accordance with operating instructions as supplied by the laboratory or manufacturer, unless otherwise specified in the work plan. Equipment checkout and calibration activities must occur prior to sampling/operation, and they must be documented.

9.0 REFERENCES

Photovac, Inc. http://www.photovac.com/

RAE Systems, Inc. http://www.raesystems.com/

Thermo Scientific, http://www.thermo.com/

1.0 SCOPE, APPLICATION, AND LIMITATIONS

This Standard Operating Procedure establishes the documentation and methodologies required to perform calibration of the In-Situ® Multiparameter Water Quality Meters. This SOP is written specifically for the In-Situ® SmarTroll Meter. The general calibration processes discussed herein may be applicable to other manufacturers' meters and displays/loggers; however, the user must consult that meter's operation manual for specific procedures.

A water quality meter may be used to supplement a groundwater or surface water sampling event. The meters may be used either in a "down-hole"/direct immersion manner or coupled with a flow-through cell. Meters coupled with a flow-through cell are commonly used during low-flow/low-stress groundwater sampling events. Specific procedures describing the low-flow/low-stress groundwater sampling process are included in Nobis SOP SA-003.

The In-Situ® SmarTroll water quality meters are durable instruments and are capable of operating in a wide range of environmental applications. As with any calibration, this procedure is limited by the individual instrument calibration results. Any measurements that fall outside of the instrument calibration range must be qualified as an estimate. However, at certain sites with unique water chemistry (e.g., elevated specific conductance), it is important that this SOP is modified in work plans such as QAPPs or SAPs because measurements may be outside of the normal instrument calibration ranges.

Dependent on project data quality objectives, the In-Situ® SmarTroll water quality meter may be used on the first day of operation with the calibration performed by the equipment supplier if calibration documentation is present, in place of performing a calibration as required in this SOP.

This SOP pertains to short-term field activities, such as groundwater or surface water sample collection. The calibration and instrument setup for a long-term deployment, such as a permanent station in a monitoring well or surface water body, is not included in this SOP.

Additionally, the document entitled *Standard Operating Procedure, Calibration of Field Instruments* that was prepared by the U.S. EPA Region 1 Quality Assurance Unit in North Chelmsford, Massachusetts on January 19, 2010 (EPA SOP) should be referenced for further information. Please note that the EPA SOP is generic for different types of instruments, and that this Nobis SOP is specific to the In-Situ® SmarTroll Meter.

2.0 INTRODUCTION

This SOP provides the calibration procedures for In-Situ® SmarTroll multiparameter water quality meters. These meters contain several probes (referred to collectively as the Sonde) that measure physical and chemical parameters in water. These parameters typically include: temperature, pH, specific conductivity, ORP, and DO. Each probe (except for the temperature probe) requires calibration. The purpose of this SOP is to provide the procedures for performing and documenting a valid calibration of the instrument to ensure that water quality and geochemical data obtained using these instruments is sufficiently accurate to meet project quality objectives.

The instrument must be calibrated each day prior to collecting water quality measurements (except the first day if data quality objectives allow use of the calibration performed by the equipment supplier) and a calibration check must be performed at the end of the day's operations. Additional calibration checks may be performed throughout the day if data quality objectives require it or if questionable data are identified during use. The purpose of the calibration checks is to determine if the instrument has drifted out of calibration during the day's operation. If erratic or conflicting readings are displayed during the day's use, mid-day calibration checks may be needed with re-calibration completed if the instrument is out of specification. Measurement data collected since the last calibration that day and up to the point of a failed calibration check shall be qualified appropriately. (This shall include documentation on the field sampling form and the field instrument calibration form.) All calibrations and calibration checks must be documented in accordance with this SOP.

3.0 DEFINITIONS

°C	Degrees Celsius
DI	Deionized
DO	Dissolved Oxygen
EPA	Environmental Protection Agency
FOL	Field Operations Leader
HASP	Health and Safety Plan
HAZWOPER	Hazardous Waste Operations and Emergency Response
µS/cm	microSiemens per centimeter
mg/L	milligrams per liter
mm of Hg	millimeters of mercury
mS/cm	milliSiemens per centimeter
MSDS	Material Safety Data Sheet
mV	millivolts
NIST	National Institute of Standards and Technology
ORP	Oxidation/Reduction Potential
OSHA	Occupational Safety and Health Administration
PM	Project Manager
PPE	Personal Protective Equipment

QAPP	Quality Assurance Project Plan (a type of Work Plan)
SAP	Sampling and Analysis Plan (a type of Work Plan)
SDS	Safety Data Sheet
SOP	Standard Operating Procedure

4.0 CAUTIONS

- All proper PPE and clothing is to be worn as specified in associated HASPs.
- The standard solutions for calibrating specific conductivity contain iodine and potassium chloride. When using the standards, avoid inhalation, skin contact, eye contact, or ingestion. If skin contact occurs, immediately remove any contaminated clothing. Wash the affected areas thoroughly with copious amounts of water. If inhalation, eye contact, or ingestion occurs, consult the MSDS or SDS for prompt action, and in all cases seek medical attention immediately.
- The 0.0 mg/L DO solution contains sodium metabisulfite, and general health and safety precautions should be adopted to minimize unnecessary contact. If skin contact occurs, immediately remove any contaminated clothing. Wash the affected areas thoroughly with copious amounts of water. If inhalation, eye contact, or ingestion occurs, consult the MSDS/SDS for prompt action, and in all cases seek medical attention immediately.
- Standard solutions for pH calibration contain the following compounds:

  pH 4 Solutions: Potassium Hydrogen Phthalate, Formaldehyde, Water;
  pH 7 Solutions: Sodium Phosphate (dibasic), Potassium Phosphate (Monobasic), Water;
  pH 10 Solutions: Potassium Borate (Tetra), Potassium Carbonate, Potassium Hydroxide, Sodium (di) Ethylenediamine Tetra-Acetate, Water.

  Avoid inhalation, skin contact, eye contact, or ingestion. If skin contact occurs, immediately remove any contaminated clothing. Wash the affected areas thoroughly with copious amounts of water. If inhalation, eye contact, or ingestion occurs, consult the MSDS/SDS for prompt action, and in all cases seek medical attention immediately.
- Standard solutions for ORP calibration (Zobell solution) contain the following compounds: potassium chloride, potassium ferrocyanide, trihydrate, and potassium ferricyanide. These compounds may be harmful by inhalation, ingestion, or skin absorption. These compounds can cause eye and skin irritation. This material is irritating to mucous membranes and the upper respiratory tract. The chemical, physical, and toxicological properties have not been thoroughly investigated. Ingestion of large quantities can cause weakness, gastrointestinal irritation, and circulatory disturbances.

5.0 PERSONNEL QUALIFICATIONS

Personnel calibrating and/or collecting samples using the In-Situ SmarTroll calibrated using this method should be familiar with this SOP and the particular equipment to be used in order to facilitate sampling and troubleshooting equipment problems more efficiently. Consulting the user's manual for each meter is required. Consulting the EPA SOP may also be useful. At a minimum, all

calibration technicians should have an operational understanding of the instrument functions, the geochemical parameters measured, and the units of each measurement.

All field personnel at waste sites are required to receive 40 hours of HAZWOPER training as prescribed by OSHA. This training must be refreshed annually with an 8-hour refresher course.

6.0 EQUIPMENT AND SUPPLIES

- Thermometer (with NIST traceability); or suitable documentation that the on-board temperature probe has been checked against a NIST-traceable thermometer within the past year;
- Barometer (if one is not included within the SmarTroll);
- pH Standards of 4, 7, and 10;
- Specific Conductance standards (calibrating with a 1413 µS/cm standard and checking with a 5000 µS/cm standard is recommended for most sites; refer to the specific conductivity calibration procedure for further discussion);
- 0.0 mg/L DO calibration solution;
- Zobell Solution (purchased pre-mixed, or in solid form for in-field preparation);
- SmarTroll Quick Cal Solution;
- Deionized (DI) water;
- Spray bottles (Containing DI water;)
- SmarTroll Sonde with attached pH, specific conductivity, DO, ORP, and temperature probes;
- Sonde communications cable;
- SmarTroll Android® or Apple® battery pack (Android® battery packs are recommended and work with our Tablets) with charge cable (or batteries);
- Android® based Tablet or Phone with the VuSitu App installed. (An Apple® iPod, iPad, or iPhone with iSitu app installed can be used when using the Apple® battery pack) (The Android® battery pack is rechargeable, the Apple® battery pack uses disposable batteries);
- Multiparameter Display System (with optional display data logger);
- SmarTroll low-flow kit (90ml flow cell, ground spike, base plate);
- SmarTroll Sonde calibration cup and or storage cup;
- SmarTroll Sonde probe guard;
- Sonde communications cable;
- User's manual;
- Paper towels;
- Indelible pen; and
- Calibration Log Sheet (Attachment A).

7.0 PROCEDURES

7.1 Office Preparation and Mobilization

1) Prior to field mobilization, visually inspect the condition of the In-Situ® SmarTroll water quality meter and associated battery pack. Clean the unit as required in accordance with the user's manual. Closely examine the probes themselves for damage or fouling. If any of these conditions are noticed, then the probe will require maintenance, and the user should either consult the user's manual for instruction on these maintenance items, contact the equipment manufacturer for technical support, or if the equipment was rented, request a replacement unit. If no replacement unit is available immediately, proceed with caution during calibration procedures, particularly for the parameters whose performance may be impacted.

2) Turn the unit on to ensure that the unit is operable. This is accomplished by connecting the communications cable to the sonde and battery pack. Power on the battery pack and pair the battery pack with your tablet or phone via Bluetooth. Open the VuSitu or iSitu app to view data from the sonde.

3) Verify that any solutions to be used in subsequent calibrations have not expired by checking the expiration date included on the container. Each solution container should be stamped with a lot number and expiration date (if applicable). If the lot number is not present, the solution should not be used and new solution should be obtained.

4) If the meter was rented, ensure that documentation indicating that the unit was calibrated is present and that it indicates that the temperature probe was checked against a NIST-traceable thermometer within the previous year. If any of this documentation is missing from the unit, contact the rental company to obtain it prior to use. The unit should not be used, and another unit should be requested, if this documentation cannot be produced. Alternately if time allows, or if required by the QAPP/SAP, the user can perform a calibration of the meter and check the temperature probe in accordance with this SOP prior to mobilization into the field. If the documentation is present, ensure that the calibration date was recent and that the calibration met target values. Note that the calibration completed by the rental company does not preclude the user from calibrating prior to using the instrument (unless project data quality objectives allow). This is predominantly due to the potential differences between in-office (temperature, pressure, etc.) conditions and in-field conditions, which could adversely affect measurements.

5) Additionally, if the unit is to be rented, request that the equipment vendor provide the equipment with the DO probe charge value set to be shown on the display unit.

7.2 Field Procedures

1) Prior to initiating the calibration of the In-Situ® SmarTroll water quality meter, the work area should be setup to allow for efficient calibration of the meter.

2) Additionally, the communications cable should be carefully connected to the Sonde unit such that the threads and security notches (if present) line up appropriately. Hand-tighten the cable threads. Connect the other end of the cable to the battery pack. Do not use hand tools to tighten the threads as this may cause damage to the battery, Sonde, and/or cable connections.

3) Turn on the unit using the procedure detailed in section 7.1 step 2.

4) Enter the calibration menu within the VuSitu or iSitu app, the SmarTroll can be calibrated using the Quick Cal solution or each probe can be calibrated separately. For most projects calibrating with the Quick Cal solution and checking with individual standards is acceptable. The calibration of the sonde is completed by following the steps and pictures displayed in the app.

5) Ideally, the calibration solutions should be maintained at a temperature that closely-represents the expected temperature of the water being measured. However, without the ability to carefully heat and/or cool solutions to that temperature, implementation of this in the field is not practical. Therefore, the solutions should be maintained at a stable temperature, out of direct sunlight, and not allowed to freeze (i.e., in a cooler or other stable-temperature environment). If seasonal conditions or site logistics do not allow for stable temperatures, alternate arrangements should be considered. Calibration standards should never be allowed to freeze, either during storage or use. Additionally, the solutions should be allowed to equilibrate at the ambient stable temperature if transferred from storage at a different temperature (for instance, bringing new solutions into a warm trailer from a cold outside storage unit) prior to calibration. Failure to allow the solutions to stabilize in temperature could lead to erratic or unsuccessful calibration. Also, the calibration solutions for the initial calibration and the end-of-day check calibration should be from the same lot and preferably from the same container.

6) Calibration of the In-Situ® SmarTroll multiparameter water quality meter is stored in the Sonde; the battery packs are interchangeable. If problems are encountered with a battery pack or cable during the day, different battery packs and/or cables may be connected to the Sonde without the need for recalibration. Likewise, one battery pack could be used to calibrate multiple Sondes, although it is unlikely this would be done in practice.

- **Other Considerations**

1) During the calibration process, it is imperative that calibration solutions are not contaminated by the previous solution or diluted by DI water used to rinse the Sonde and calibration cup. When calibrating for DO, the Sonde and the calibration cup must always be dried thoroughly after the 100% saturation check is completed and before the 0% DO solution is placed in the calibration cup to ensure that the 0% standard is not diluted. After the 0% DO check, and with all subsequent standards, the Sonde and cup should be rinsed with DI water, gently tapped to removed excess water and then dried thoroughly.

2) In practice, experience has shown that recycling calibration solutions requires strict attention to detail and close coordination between the calibration technicians to ensure that the solutions are not contaminated by mixing the wrong standards. The Field Operations Leader (FOL) will need to determine if the site logistics and the experience of the calibration technicians are appropriate for recycling and institute a procedure suitable for the consistent quality of the calibration procedures for the sampling event and the project.

- **Initial Calibration Procedures**

The following calibration procedures should be followed in the order indicated by this SOP.

Temperature *(To be completed if a check within the past year to a NIST-traceable thermometer cannot be documented; otherwise, this check is optional. FOLs should require the vendor to provide documentation that the check has been completed for the instrument.)*

The temperature of a sample is determined by using a thermistor whose resistance changes predictably with temperature.

1) Fill a container with water and adjust temperature (with cooler water) such that it is below the anticipated temperature of the water body to be monitored.

2) Place the SmarTroll Sonde and a NIST-traceable thermometer into the water and allow the readings on both of the instruments to stabilize.

3) Ensure that the readings on both instruments are within the accuracy limits of the probe. In the case of the SmarTroll probe, the stated accuracy is ±0.1 degrees Celsius (°C).

4) Raise the temperature of the water to above the anticipated temperature of the water body to be monitored.

5) Place the SmarTroll Sonde and a NIST-traceable thermometer into the water and allow the readings on both of the instruments to stabilize.

6) Ensure that the readings on both of the instruments are within the accuracy limits of the probe. In the case of the SmarTroll probe, the stated accuracy is ±0.1 °C.

7) If the SmarTroll probe readings are not comparable to the NIST-traceable thermometer within accuracy limits, then the instrument is not operating properly and the equipment vendor and/or manufacturer must be consulted.

Dissolved Oxygen (DO)

The SmarTroll DO probe is optical based and determines the DO of a sample by measuring the fluorescence associated with the partial pressure of oxygen that interacts with a dyed gel coating. The fluorescence is proportional to the partial pressure of oxygen in the solution.

SmarTroll RDO probes do not require maintenance and if the probe continually fails calibration or calibration checks the probe should be replaced. The RDO probes have a life span of 15 months from the first reading taken. The life of the probe can be checked in the VuSitu or iSitu

1) Place a small piece (approximately 1/4-inch cube) of wet sponge or approximately 1/8 inch of water into the bottom of the included calibration cup.

2) The calibration cup should be loosely fitted over the Sonde to allow barometric pressures inside and outside the cup to equilibrate and to allow the air in the cup to saturate. Screw the cup onto the Sonde until two full courses of threads are used. The cup should wiggle slightly with little force; this confirms that the cup is not screwed on too tightly and air pressure is allowed to equilibrate. Some SmarTrolls may come with a thread-less calibration cup, when using this type of cup for calibrating DO insert the Sonde in the cup until the threads are below the cap of the cup. Additionally, the Sonde should not be in direct sunlight.

3) From the calibration menu select the "RDO Saturation" option, then the 100% Saturation option (Note: For the In-Situ® SmarTroll Sondes, calibration of dissolved oxygen by the DO% procedure also results in the calibration of the DO mg/L mode.) and follow the steps displayed on screen.

4) Wait for the DO% reading value to stabilize and accept the calibration. View the calibration report to get the current barometric pressure. Record the temperature and the barometric pressure after accepting the calibration on the Calibration Form included in Attachment A. Enter the live readings mode and record the DO reading in mg/L. Ensure that the DO reading in mg/L is within 2% (or 0.2 mg/L, whichever is greater) of the appropriate temperature and pressure-corrected oxygen solubility values shown on the table included in Attachment B. Thoroughly dry each of the probes and the calibration cup with a wipe to ensure that the check solution is not diluted or contaminated.

5) Post-calibration check: a) Place the probe in a 0.0 mg/L DO solution ensuring that no air bubbles are entrained in the Sonde. b) Verify that the unit displays a reading of <0.5 mg/L but ≥0.0 mg/L from the live readings mode and record on the Calibration Form included in Attachment A. If a reading of <0.5 mg/L is not reached or the unit reads <0.0 mg/L, the probe should be recalibrated or replaced. c) Rinse the Sonde and calibration cup with DI water and gently tap to remove excess water. Gently tap to remove excess moisture and thoroughly dry the Sonde and the cup.

Quick-Cal Multiple Sensor Calibration

The SmarTroll is capable of calibrating the conductivity, pH and ORP probes using one solution and one calibration procedure. This calibration process is preferred if project data quality objectives allow. If project data quality objectives require each probe to be calibrated individually or by more than a one-point calibration, then follow the procedures for calibration of individual probes presented in subsequent sections.

1) If not already done, rinse the Sonde with DI water, gently tap the Sonde to remove any excess water/DO standard solutions and thoroughly dry the Sonde and the cup.

2) Fill the calibration cup to the fill line with Quick-Cal Solution and place the Sonde in the calibration cup.

3) From the calibration menu, select Quick-Cal (multi-sensor). Then confirm the probes you wish to calibrate and select Next. Wait for the measurements to stabilize (they will be highlighted in green when stable). When stable select Accept and then select Done.

4) Rinse the probes and the cup with DI water, gently tap the Sonde and cup to remove any excess water/Quick-Cal standard solutions and thoroughly dry the Sonde and the cup. Confirm the calibration by immersing the Sonde into the individual calibration solutions for conductivity, pH, and ORP. Remember to rinse and thoroughly dry the Sonde and the cup between each solution. Record calibration confirmation values on the Calibration Form included in Attachment A

pH

The pH of a sample is determined by measurement of an electrochemical voltage potential generated across a glass electrolyte-filled bulb. This potential is compared to that of a reference electrode of known hydrogen ion concentration. The difference is proportional and returns as a measure of hydrogen ion concentration (or pH).

1) If not already done, rinse the Sonde and calibration cup with DI water and gently tap the Sonde to remove any excess water/DO standard solutions. Then, thoroughly dry the Sonde and the cup.

2) From the calibration menu, select the pH option. Then select the 3 point option. Place the Sonde into the pH 4 standard solution. The VuSitu app will auto detect the standard and wait for stabilization. Ensure that no air bubbles are entrained on the Sonde. Allow the measurements to stabilize, they will be highlighted in green when stable. Once stable, select Accept. If an error message is noted, refer to the user's manual for troubleshooting options.

3) Remove the Sonde from the pH 4 solution and rinse both the Sonde and calibration cup with DI water. Again, gently tap the Sonde to remove excess rinse water. Then, thoroughly dry the Sonde and the cup.

4) Immerse the Sonde into pH 10 standard solution and to continue the calibration process the VuSitu app will auto detect the pH value of the solution. When prompted, enter the pH standard value and press enter. Ensure that no air bubbles are entrained on the Sonde. Allow the measurements to stabilize, they will be highlighted in green when stable. Once stable select Accept.

5) Remove the Sonde from the pH 10 solution and rinse both the Sonde and calibration cup with DI water. Again, gently tap the Sonde to remove excess rinse water. Then, thoroughly dry the Sonde and the cup.

6) Immerse the Sonde into pH 7 standard solution and to continue the calibration process the VuSitu app will auto detect the pH value of the solution. When prompted, enter the pH standard value and press enter. Ensure that no air bubbles are entrained on the Sonde. Allow the measurements to stabilize, they will be highlighted in green when stable. Once stable select Accept.

7) While the Sonde is immersed in the pH 7 standard solution enter the live readings mode to check that the unit reads in the acceptable range. Allow the probe to stabilize (no downward or upward trend to the reading when checked every 30 seconds). Ensure that no air bubbles are entrained on the Sonde. Ensure that the pH reading is within ±0.2 units of the solution value. Record the pH value reported by the unit. If the reading is within the acceptable range, press enter again to return to the calibration menu. If the values are not within specification, perform the calibration again. Repeated calibration failures should necessitate a call to the equipment manufacturer and/or vendor. If pH calibration is complete, remove the Sonde from the solution and rinse both the Sonde and calibration cup with DI water. Again, gently tap the Sonde to remove excess rinse water. Then, thoroughly dry the Sonde and the cup.

Specific Conductance

Specific conductance is used to measure the ability of an aqueous solution to carry an electrical current. Specific conductance is the solution's conductance value corrected to 25°C. The measurement is made using four electrodes. Two electrodes drive a current through the solution; the remaining two detect a voltage drop. This voltage drop is converted into a conductance value in µS/cm. The value is further corrected to a temperature of 25°C to yield a specific conductance value.

The specific conductivity calibration is a one-point calibration with a linearity check. There is often confusion as to which standard is used for the calibration and which is used for the linearity check. The check ensures that the instrument is capable of extrapolating beyond the calibrated point in a linear manner; therefore, the calibration point is the lower standard and the check is the higher standard. Field experience has confirmed that the most consistent results will be achieved in this way (i.e., **calibrate with low, check with high)**. The two standards should be selected on a project specific basis based on previous field data (if available) and may be modified from one event to another based on additional data. The intent should be to bracket the values anticipated to be encountered. Experience has shown that standards with values too far apart will result in inconsistent results during calibration. Also, very low concentration standards are often unstable and problematic to use. These factors should be considered when choosing the appropriate standards for the project that will achieve the desired precision and accuracy in field measurements without resulting in inefficient calibration and/or instrument drift.

The EPA SOP provides a discussion in Section 5.4, Step 6 that allows the use of a closer check standard when the bracket range is too great. Based on experience and the EPA's acceptance of the limitations of bracketing expected values, calibrating with a 1413 µS/cm standard and checking with a 5000 µS/cm standard is recommended for most sites. If neither value is within the historical range for a site, alternative values should be considered. If the data quality objectives for a specific site include the need for greater precision and accuracy in conductivity measurements (i.e., the data is being used for decisions other than aquifer stability during low-flow sample collection), use of specific standards for specific wells may be considered. This decision should be based on the existing data for the site and should be made prior to mobilization during the planning phase of the project. The instrument vendor or In-Situ, Inc. may be able to provide additional guidance for problematic sites.

1) If not already done, rinse both the Sonde and calibration cup with DI water. Gently tap the Sonde to remove excess rinse water. Then, thoroughly dry the Sonde and the cup.

2) From the calibration menu, select conductivity.

3) Place the Sonde it into the lower specific conductance standard solution, making sure that the specific conductance probe is fully submerged. Ensure that no air bubbles are entrained on the Sonde.

4) Select Next, the VuSitu app will auto-detect the concentration of the calibration solution and will wait to stabilize.

5) Confirm the reference temperature of the calibration solution and tap the drop-down list if a change is necessary, most will be 25°C. However, some may be referenced to 20°C.

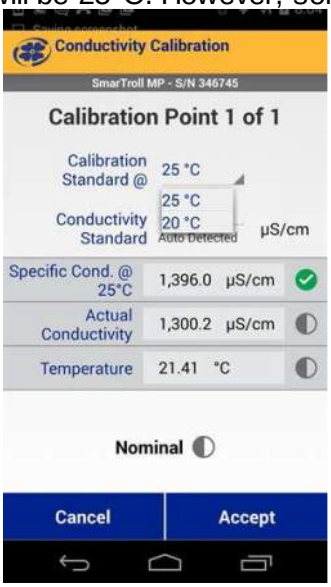

6) After the specific conductance reading has stabilized, select Accept and the select Done.

7) After accepting the calibration, enter the live readings mode. The specific conductance value should read within 5% of the standard value. Record this value on the calibration form included in Attachment A.

8) Remove the Sonde from the solution and rinse both the Sonde and calibration cup with DI water. Gently tap the Sonde to remove excess rinse water. Then, thoroughly dry the Sonde and the cup.

9) Insert the Sonde into the second, higher concentration standard solution to verify linearity of the instrument. Ensure that no air bubbles are entrained on the Sonde.

10) While in live readings mode, allow the temperature and specific conductance to stabilize and record the value on the calibration form included in Attachment A. If the value is within 5% of the standard value, the calibration is complete. If the value is not within 5% of the standard value, recalibrate the probe.

11) Remove the Sonde from the conductivity solution and rinse both the Sonde and calibration cup with DI water. Gently tap the Sonde to remove excess rinse water. Then, thoroughly dry the Sonde and the cup.

Oxidation/Reduction Potential (ORP)

The ORP of a solution is the electrometric difference measured in a solution between an inert indicator electrode and a reference electrode, measured in mV. The ORP probe on In-Situ® SmarTroll Sonde is part of the pH probe and the pH probe must be correctly calibrated before the ORP procedure can be done. The value of the Zobell solution used to calibrate the unit is temperature dependent over a linear range. This SOP requires that the reference table of Zobell values over a range of temperatures in Attachment C be used to determine the applicable value. The temperature used to determine the value of the Zobell solution **must** be the temperature of the Zobell solution; using a temperature of another standard measured previously is **not acceptable**.

1) If not already done, rinse both the Sonde and calibration cup with DI water. Gently tap the Sonde to remove excess rinse water. Then, thoroughly dry the Sonde and the cup.

2) From the calibration menu, select ORP

3) Insert the Sonde into the Zobell standard solution. Ensure that no air bubbles are entrained on the Sonde.

4) The VuSitu App will auto-detect the value of the standard and will wait for stabilization.

5) Locate the Zobell solution ORP value at the stabilized temperature displayed in the previous step on the table included in Attachment C. Record this value and acceptance range on the field calibration form located in Attachment A.

6) After the ORP reading has stabilized, select Accept and then select Done.

7) After accepting the calibration, enter the live readings mode.

8) Ensure that the value displayed in the live reading mode is ±10mV of the ORP value recorded on the calibration form (Attachment A) from Step 5. If the temperature of the solution varies significantly from the value recorded previously, then the temperature of the Zobell solution is not equilibrated to ambient conditions and stable, or the measurement had not stabilized when originally recorded. Record the calibrated value on the calibration form located in Attachment A. If the value does not fall within the acceptance range, the probe will need to be recalibrated.

9) Remove the Sonde from the ORP solution and rinse rinse both the Sonde and calibration cup with DI water. Gently tap the Sonde to remove excess rinse water. Then, thoroughly dry the Sonde and the cup.

- **Calibration Verification Check (or End-of-Day Check)**

At a minimum, a calibration verification check must be performed at the conclusion of the day's sample collection. This check verifies that the unit maintained a viable calibration during operation. Project data quality objectives may require that checks be completed at other times during the day. If the checks are completed during the day and the calibration has drifted out of specification, then the out-of-specification probes will require recalibration prior to being put back into service. Additionally, any measurements made with a meter that does not pass the end-of-day check must be qualified. The sample designators for all samples collected with an instrument that does not pass the end-of-day check should be listed on the calibration log, and possibly other documentation (such as the field sampling forms and the field log book) that may be required by the work plan. The calibration checks should be completed in the same order that the calibration was completed. The end-of-day calibration check is completed in the live readings mode. To ensure that a true assessment of the viability of the instrument readings is completed, the unit **must not** be put into the calibration mode between the last sample location of the day and the beginning of the end-of-day check. Recalibration to pass the end-of-day check is **unacceptable**.

1) Clean the Sonde with DI water. Gently tap the Sonde unit to remove excess water. Use paper towels or similar absorbent sheets to dry the Sonde.

2) Place a small piece (approximately 1/4-inch cube) of wet sponge or approximately 1/8 inch of water in the bottom of the calibration cup. Place the Sonde into the cup. Ensure the DO probe is vented to the atmosphere. Make sure that the DO and temperature probes are NOT immersed in water and that the calibration cup is not in direct sunlight.

3) Operate the Sonde unit in live readings mode. Wait approximately 10 minutes for the air in the calibration cup to become water saturated and for the temperature to equilibrate.

4) Record the temperature, DO, and barometric pressure on the calibration form (Attachment A). The DO value should be within ±0.5 mg/L of the saturation value at the **current** temperature and pressure, as listed in Attachment B.

5) Ensure that the Sonde is still dry and dry the calibration cup. Add the 0.0 mg/L DO solution to the calibration cup and immerse the Sonde. As with the post-cal check, a value ≥ 0.0 mg/L and <0.5 mg/L should be reached. Record the stabilized reading. Continue the end-of-day calibration check for the other parameters in the same sequence as the calibration procedure and record values on the calibration form (Attachment A). Between verifications of each probe, be certain that the Sonde and calibration cup are rinsed with DI water and dried thoroughly, as described in the calibration procedures. The technician should verify that no air bubbles are entrained in the Sonde. Use the check (higher) standard for specific conductance. Remember that the ORP value is checked for the **current temperature** conditions, not against the calibrated value.

6) After all verifications have been completed and recorded on the calibration form (Attachment A), store the Sonde unit with the protective calibration cup in place. Ensure that a wetted piece of sponge or 1/8 inch of water is in the cup to prevent the probes from drying out.

7) Compare the verification values to the criteria included in Table 1, below. If the Sonde did not meet all end-of-day check criteria, record the sample designations of all samples collected using the instrument during the day on the calibration log. Note on the field form for all samples collected using that instrument that the Sonde did not meet end-of-day criteria.

Table 1
Quality Control Goals for Sondes

PARAMETER	END-OF-DAY CHECK CRITERIA
Dissolved Oxygen	± 0.5 mg/L of saturation value / ≥0.0 mg/L but <0.5 mg/L
pH	± 0.3 with pH 7 buffer (6.7 to 7.3)
Specific Conductance	± 5% of standard (use the check [higher] standard)
ORP	± 10 mV

7.3 Data and Records Management

It is imperative that the Multiparameter Water Probe Field Calibration Log Sheets (Attachment A) are completed thoroughly and quality-checked by the FOL each day. These calibration sheets must be completed for every Sonde unit in operation each day with the specific serial number noted for data tracking purposes.

Completed Multiparameter Water Probe Field Calibration Log Sheets will be given to the FOL at the end of each work day. These sheets are often scanned and incorporated into the FOL's daily report to the PM.

Once transferred to the PM (or designee), these sheets shall be incorporated into a project file and/or report documents.

7.4 Communication and Technical Direction

Any problems or issues encountered during the sampling event(s) shall be discussed with the PM or designated project technical lead in order to determine an appropriate solution. Any changes in scope or deviation will be confirmed with and approved by the PM.

7.5 Demobilization

Following completion of calibration, the In-Situ® SmarTroll multiparameter water quality meter should be carefully disassembled and packaged in its storage box, and stored in an environment that will minimize the potential for cross-contamination, freezing, and/or overheating.

8.0 QUALITY CONTROL/QUALITY ASSURANCE

The following general quality assurance procedures apply:

- All data must be documented on the calibration data sheet included in Attachment A. It may also be necessary to document certain information in the site logbooks and/or field sampling forms, as required by the work plan (i.e., QAPP, SAP, etc.).
- All instrumentation must be operated in accordance with operating instructions supplied by the manufacturer, unless otherwise specified in the work plan.

9.0 REFERENCES

U.S. Environmental Protection Agency; Standard Operating Procedure Calibration of Field Instruments, EQASOP-FieldCalibrat, June 3, 1998 (Revised January 19, 2010).

In-Situ Incorporated, SmarTroll MP Handheld Instrument for Android, User Manual. Revision 002. February 2016.

ATTACHMENT A

MULTIPARAMETER WATER PROBE
FIELD CALIBRATION LOG SHEET

Nobis
Engineering a Sustainable Future

SOP No: FS-005	Page: 1 of 1
Rev. Date: Feb. 20, 2014	Rev.: 4
Completed by: (signature)	
Reviewed by (FOL): (signature)	

SITE INFORMATION

Site Name: _____

Project Number/Task: _____

Personnel: _____

INSTRUMENT INFORMATION

Instrument Make/Model: _____ passed morning cal check **Y** **N** (not used)

Instrument Serial No.: _____ passed EoD cal check **Y** **N**

Identification No.: _____ if EoD cal check fails, list sample designators at bottom of form

Vendor documentation of cleaning and cal present? **Y** **N** **with FOL** Calibration of temp. probe to NIST thermometer verified? **Y** **N** DO membrane replaced today? **Y** **N** *list other maintenance at bottom*

Calibration	**Date:**			**Time:**				**End-of-Day (EoD) Calibration Check**	**Date:**			**Time:**	
Criteria	**Units**	**Standard Lot Number**	**Standard Expiration Date**	**Reading / Measured Value**	**"Check" Target Value**	**"Check" Measured Value**	**Acceptable Value**	**Standard Lot Number**	**Standard Expiration Date**	**Reading / Measured Value**	**"Check" Target Value**	**"Check" Measured Value**	**Acceptable Value**
Dissolved Oxygen (DO)													
DO Probe Charge							25-75						25-75
Barometric Preassure	mm Hg												
Temperature	°C												
100% Saturation	mg/L						± 2% (or ±0.2 mg/L, whichever is greater) of target value						± 0.5 mg/L to temp. corrected value
0.0 mg/L Dissolved Oxygen	mg/L				<0.5		≥0 but <0.5				<0.5		≥0 but <0.5
pH													
pH 7					7		6.8-7.2 (±0.2)				7		6.7-7.3 (±0.3)
pH 4													
pH 10													
Specific Conductance													
Specific Conductivity Calibration Standard (lower)	µS/cm						±5 % of Target Value						
Specific Conductivity Check Standard (higher)	µS/cm						±5 % of Target Value						±5 % of Target Value
Oxidation/Reduction Potential (ORP)													
Temperature	°C												
ORP	mV						±10 mV						±10 mV
Other Criteria (Specify)													

Comments:
If the instrument did not pass the end-of-day cal check, note parameters that failed and list all samples designations from the day's work. List all maintenance (DO probe reconditioned, etc.). Use the back of the form for additional notes.
Use calibration solutions from the same lot when performing calibration and EoD calibration checks whenever possible.
°C=degrees Celsius mV=millivolts mg/L=milligrams per liter mm of Hg=millimeters of mercury µS/cm=microSiemens per centimeter (1,000 µS/cm = 1 mS/cm)

ATTACHMENT B

Solubility of Oxygen in Water at Various Temperatures and Pressures

	Atmospheric pressure, in millimeters of mercury							
Temperature °C	775	770	765	760	755	750	745	740
0	14.9	14.8	14.7	14.6	14.5	14.4	14.3	14.2
0.5	14.7	14.6	14.5	14.4	14.3	14.2	14.1	14.0
1	14.5	14.4	14.3	14.2	14.1	14.0	13.9	13.8
1.5	14.3	14.2	14.1	14.0	13.9	13.8	13.7	13.6
2	14.1	14.0	13.9	13.8	13.7	13.6	13.5	13.4
2.5	13.9	13.8	13.7	13.6	13.5	13.4	13.3	13.3
3	13.7	13.6	13.5	13.4	13.3	13.3	13.2	13.1
3.5	13.5	13.4	13.3	13.3	13.2	13.1	13.0	12.9
4	13.3	13.3	13.2	13.1	13.0	12.9	12.8	12.7
4.5	13.2	13.1	13.0	12.9	12.8	12.7	12.7	12.6
5	13.0	12.9	12.8	12.7	12.7	12.6	12.5	12.4
5.5	12.8	12.7	12.7	12.6	12.5	12.4	12.3	12.2
6	12.7	12.6	12.5	12.4	12.3	12.3	12.2	12.1
6.5	12.5	12.4	12.3	12.3	12.2	12.1	12.0	11.9
7	12.4	12.3	12.2	12.1	12.0	12.0	11.9	11.8
7.5	12.2	12.1	12.0	12.0	11.9	11.8	11.7	11.6
8	12.1	12.0	11.9	11.8	11.7	11.7	11.6	11.5
8.5	11.9	11.8	11.8	11.7	11.6	11.5	11.4	11.4
9	11.8	11.7	11.6	11.5	11.5	11.4	11.3	11.2
9.5	11.6	11.6	11.5	11.4	11.3	11.2	11.2	11.1

Solubility of Oxygen in Water at Various Temperatures and Pressures

	Atmospheric pressure, in millimeters of mercury							
Temperature °C	775	770	765	760	755	750	745	740
10	11.5	11.4	11.3	11.3	11.2	11.1	11.0	11.0
10.5	11.4	11.3	11.2	11.1	11.1	11.0	10.9	10.8
11	11.2	11.2	11.1	11.0	10.9	10.9	10.8	10.7
11.5	11.1	11.0	11.0	10.9	10.8	10.7	10.7	10.6
12	11.0	10.9	10.8	10.8	10.7	10.6	10.5	10.5
12.5	10.8	10.8	10.7	10.6	10.6	10.5	10.4	10.4
13	10.7	10.7	10.6	10.5	10.4	10.4	10.3	10.2
13.5	10.6	10.5	10.5	10.4	10.3	10.3	10.2	10.1
14	10.5	10.4	10.4	10.3	10.2	10.1	10.1	10.0
14.5	10.4	10.3	10.2	10.2	10.1	10.0	10.0	9.9
15	10.3	10.2	10.1	10.1	10.0	9.9	9.9	9.8
15.5	10.2	10.1	10.0	10.0	9.9	9.8	9.8	9.7
16	10.0	10.0	9.9	9.8	9.8	9.7	9.7	9.6
16.5	9.9	9.9	9.8	9.7	9.7	9.6	9.5	9.5
17	9.8	9.8	9.7	9.6	9.6	9.5	9.4	9.4
17.5	9.7	9.7	9.6	9.5	9.5	9.4	9.3	9.3
18	9.6	9.6	9.5	9.4	9.4	9.3	9.3	9.2
18.5	9.5	9.5	9.4	9.3	9.3	9.2	9.2	9.1
19	9.4	9.4	9.3	9.3	9.2	9.1	9.1	9.0
19.5	9.3	9.3	9.2	9.2	9.1	9.0	9.0	8.9

Solubility of Oxygen in Water at Various Temperatures and Pressures

	Atmospheric pressure, in millimeters of mercury							
Temperature °C	775	770	765	760	755	750	745	740
20	9.3	9.2	9.1	9.1	9.0	8.9	8.9	8.8
20.5	9.2	9.1	9.0	9.0	8.9	8.9	8.8	8.7
21	9.1	9.0	8.9	8.9	8.8	8.8	8.7	8.6
21.5	9.0	8.9	8.9	8.8	8.7	8.7	8.6	8.6
22	8.9	8.8	8.8	8.7	8.7	8.6	8.5	8.5
22.5	8.8	8.8	8.7	8.6	8.6	8.5	8.5	8.4
23	8.7	8.7	8.6	8.6	8.5	8.4	8.4	8.3
23.5	8.6	8.6	8.5	8.5	8.4	8.4	8.3	8.2
24	8.6	8.5	8.4	8.4	8.3	8.3	8.2	8.2
24.5	8.5	8.4	8.4	8.3	8.3	8.2	8.1	8.1
25	8.4	8.3	8.3	8.2	8.2	8.1	8.1	8.0
25.5	8.3	8.3	8.2	8.2	8.1	8.0	8.0	7.9
26	8.3	8.2	8.1	8.1	8.0	8.0	7.9	7.9
26.5	8.2	8.1	8.1	8.0	8.0	7.9	7.8	7.8
27	8.1	8.0	8.0	7.9	7.9	7.8	7.8	7.7
27.5	8.0	8.0	7.9	7.9	7.8	7.8	7.7	7.7
28	8.0	7.9	7.9	7.8	7.7	7.7	7.6	7.6
28.5	7.9	7.8	7.8	7.7	7.7	7.6	7.6	7.5
29	7.8	7.8	7.7	7.7	7.6	7.6	7.5	7.5
29.5	7.8	7.7	7.6	7.6	7.5	7.5	7.4	7.4

Solubility of Oxygen in Water at Various Temperatures and Pressures

	Atmospheric pressure, in millimeters of mercury							
Temperature °C	775	770	765	760	755	750	745	740
30	7.7	7.6	7.6	7.5	7.5	7.4	7.4	7.3
30.5	7.6	7.6	7.5	7.5	7.4	7.4	7.3	7.3
31	7.6	7.5	7.5	7.4	7.4	7.3	7.3	7.2
31.5	7.5	7.4	7.4	7.3	7.3	7.2	7.2	7.1
32	7.4	7.4	7.3	7.3	7.2	7.2	7.1	7.1
32.5	7.4	7.3	7.3	7.2	7.2	7.1	7.1	7.0
33	7.3	7.3	7.2	7.2	7.1	7.1	7.0	7.0
33.5	7.2	7.2	7.1	7.1	7.1	7.0	7.0	6.9
34	7.2	7.1	7.1	7.0	7.0	6.9	6.9	6.8
34.5	7.1	7.1	7.0	7.0	6.9	6.9	6.8	6.8
35	7.1	7.0	7.0	6.9	6.9	6.8	6.8	6.7
35.5	7.0	7.0	6.9	6.9	6.8	6.8	6.7	6.7
36	7.0	6.9	6.9	6.8	6.8	6.7	6.7	6.6
36.5	6.9	6.9	6.8	6.8	6.7	6.7	6.6	6.6
37	6.9	6.8	6.8	6.7	6.7	6.6	6.6	6.5
37.5	6.8	6.8	6.7	6.7	6.6	6.6	6.5	6.5
38	6.7	6.7	6.7	6.6	6.6	6.5	6.5	6.4

R.F. Weiss (1970) via U.S. Geological Survey TWRI Book 9, April 1998, Table 6.2-6

ATTACHMENT C

Zobell Solution mV Values

Temp. (°C)	mV	Range ±10 mV
0	263.5	253.5 - 273.5
1	262.2	252.2 - 272.2
2	260.9	250.9 - 270.9
3	259.6	249.6 - 269.6
4	258.3	248.3 - 268.3
5	257	247.0 - 267.0
6	255.7	245.7 - 265.7
7	254.4	244.4 - 264.4
8	253.1	243.1 - 263.1
9	251.8	241.8 - 261.8
10	250.5	240.5 - 260.5
11	249.2	239.2 - 259.2
12	247.9	237.9 - 257.9
13	246.6	236.6 - 256.6
14	245.3	235.3 - 255.3
15	244	234.0 - 254.0
16	242.7	232.7 - 252.7
17	241.4	231.4 - 251.4
18	240.1	230.1 - 250.1
19	238.8	228.8 - 248.8
20	237.5	227.5 - 247.5
21	236.2	226.2 - 246.2
22	234.9	224.9 - 244.9
23	233.6	223.6 - 243.6
24	232.3	222.3 - 242.3
25	231	221.0 - 241.0
26	229.7	219.7 - 239.7
27	228.4	218.4 - 238.4
28	227.1	217.1 - 237.1
29	225.8	215.8 - 235.8
30	224.5	214.5 - 234.5
31	223.2	213.2 - 233.2
32	221.9	211.9 - 231.9
33	220.6	210.6 - 230.6
34	219.3	209.3 - 229.3
35	218	208.0 - 228.0
36	216.7	206.7 - 226.7
37	215.4	205.4 - 225.4
38	214.1	204.1 - 224.1

Nobis Engineering, Inc.	STANDARD OPERATING PROCEDURES			D. Gorhan Prepared by
	Title: **SPLIT-SPOON/SPLIT-BARREL SOIL SAMPLING AND STANDARD PENETRATION TEST**			Reviewed by C. Thunberg, P.E.
	SOP No: GT-001	Rev.: 01	Date: March 2010	Approved by

1.0 SCOPE, APPLICATION, AND LIMITATIONS

This Standard Operating Procedure (SOP) is applicable to the collection of representative subsurface soil samples utilizing a split-spoon/split-barrel sampler. In addition, this SOP provides the procedure for implementing the Standard Penetration Test (SPT). The results of an SPT yield a practical value of relative density. This SOP is applicable for civil, environmental, and geotechnical investigations.

2.0 INTRODUCTION

The use of a split-spoon sampler provides either continuous or discrete collection of soil samples from the subsurface. The use of the sampler is an integral component of the SPT and is typically utilized in conjunction with conventional drilling techniques such as hollow stem auger or drive-and-wash drilling. The assembled split-spoon sampler is hammer or weight-driven into the soil such that the hollow core of the sampler is filled with soil and withdrawn from the boring. Once withdrawn from the boring, the split-spoon sampler is disassembled and the resulting sample is exposed for collection, field analysis(es), and/or classification.

Soil samples are collected for classification of lithology, field headspace screening (in the case of environmental investigations), and laboratory analysis (geotechnical and/or environmental).

3.0 DEFINITIONS

Split-spoon sampler - open-ended cylindrical tool used to collect samples by driving or pushing them into the ground. Split-spoon samplers have inside diameters ranging from 3 to 6.3 cm (1-3/8 to 2-1/2 in.) and usually consist of five parts, similar to a continuous barrel sampler (Figure 1).

Figure 1
Schematic of a Split-Spoon Sampler

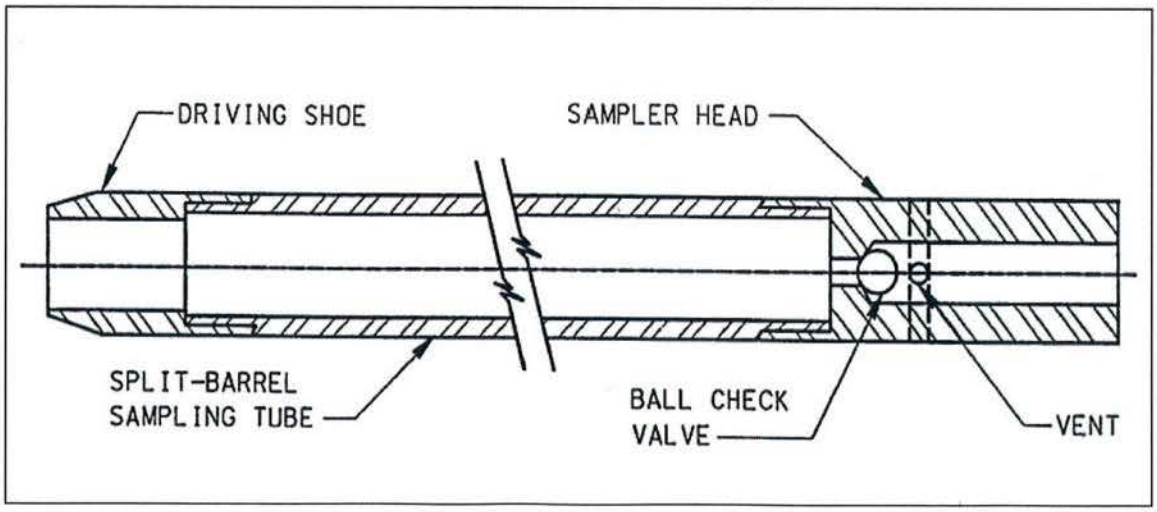

SPT - Standard Penetration Test. The SPT is a test that results in a relative density based upon the number of blows that are required to drive the split-spoon a measured distance (typically four, six inch intervals totaling 24 inches) into the soil using a hammer or weight of known mass falling from a known distance (typically a 140 pound safety hammer free falling from a height of 30 inches).

4.0 CAUTIONS

- This SOP does not address specific activity hazard analyses inherent with this procedure, and cannot address all hazards associated with drilling activities. Therefore, health and safety details such as activity hazard analyses should be included and referenced in Site Specific Health and Safety Plan. The following is a highlighted summary of health and safety issues associated with every split-spoon sampling event.

- Prior to the performance of any subsurface activity (e.g., drilling, excavation, etc.), SOP ENV-009 should be followed to gain consent to access the property and to mark the work area for clearance of underground and overhead utilities.

- Split-spoon sampling involves the use of many moving parts, which may present a pinching hazard, overhead weights which may present crushing hazards, and sharp objects and hand tools which may present piercing, crushing, or repetitive motion hazards. In addition, driving the split-spoon with the weights/hammers may present a noise hazard and an eye hazard from disturbed particles.

- Often, split-spoon sampling is involved in the investigation or remediation of a petroleum or hazardous material release. Particular chemical-specific hazards (which are detailed in the site health and safety plan) are present and specific safety parameters/controls are required.

- All drilling equipment, including the split-spoon samplers, will be used, manipulated, or handled by the drilling subcontractor. Once the split-spoon is retrieved from the borehole, the driller will open and provide the sampler to the Nobis staff for logging and sampling. Alternatively, Nobis staff may elect, at their sole discretion, to open the split spoon sampler themselves to facilitate the drilling operation

- If available, previous soil boring logs should be reviewed to identify potential confining layers or the top of bedrock. If the potential for subsurface contamination exists at a location or is unexpectedly encountered during drilling, care should be used to prevent penetration of any geologic confining layer, which may affect the distribution of contamination. Thin confining layers may not be readily identified if non-continuous sampling is utilized.

- Split-spoon sampler damage may result from overdriving the sampler, or if the sampler is driven into rock. Split-spoon sampling is generally not feasible in weathered bedrock.

- Split-spoon sampling is generally more-difficult if a “running-sand” condition is encountered. Soil samples obtained in “running sand” should be considered unreliable and not representative of the soil strata sampled. SPT “N” values in “running sand” should not be relied upon for foundation design. Often, this condition can be mitigated using a drive and wash drilling method as opposed to a rotary auger method.

- If a split-spoon sample is collected from a saturated, non-cohesive, unconsolidated soil medium, the water in the formation may run out of the sampler once above the water table causing the fine-grained materials to "wash out" from the sample. If observed, this condition should be noted in field logs.

- If soil samples are to be collected for volatile organic compounds (VOC) analysis (including field headspace screening), samples should be collected immediately after opening the split-spoon sample. SOPs for field headspace screening and preservation of soil samples for VOC analysis have been developed under separate cover. A delay in collection of VOC samples may result in a loss of VOC concentrations in the affected sample(s), yielding incorrect field/laboratory results.

- During environmental investigations, insufficient homogenization of the non-volatile sample aliquots may result in a faulty quantitation of contaminant concentrations.

5.0 PERSONNEL QUALIFICATIONS

- Sampling personnel utilizing this SOP should be familiar with the methods of drilling which coincide with the split-spoon sample collection technique.

- Sampling personnel utilizing this SOP should be proficient in visually-classifying soil samples via the Nobis Engineering Inc. procedure for Description and Identification of Soils, SOP SA-001.

- In the case of petroleum/chemical release investigations, personnel should be trained to the appropriate degree in hazardous waste site safety procedures as per OSHA regulations.

- Any drill operators should be qualified to operate the drill and be licensed (if applicable) in the State in which the work is being performed. Drill operators should also be trained in hazardous waste site safety procedures as per OSHA regulations as needed.

6.0 EQUIPMENT AND SUPPLIES

The following list is not exhaustive, but provides a partial listing of equipment and supplies. Additional equipment may be required per site specific planning documents.

- For all subsurface sampling events the following equipment is required:

  - Drill equipment; Hollow Stem Auger rig, Barber drill rig, Air/Mud Rotary rig, etc.
  - Split-spoon samplers, drill rods, drive hammer, etc.
  - Field logbook and boring log sheets (as appropriate)
  - Stakes, pin flags, or other marker
  - Folding engineer's rule
  - Lumber crayon/soapstone marker
  - Labeled sample jars (for classification)
  - Pencils, pens, and indelible marker
  - Fiberglass engineer's tape measure

- Cleaning equipment
- Camera

- For environmental investigations, in addition to the above mentioned items, the following equipment should also be included:

  - Stainless-steel bowl and mixing scoop/spoon
  - Plug samplers (to collect soil aliquots for VOCs analysis)
  - Environmental sample containers with preservatives, if applicable
  - Cooler
  - Ice
  - Chain-of-custody forms
  - Appropriate personal protection equipment (PPE)
  - Environmental field monitoring equipment (i.e. PID/FID meter, multi-gas meter, water level meter, etc.)
  - Decontamination equipment and supplies

- Additional optional equipment may include:

  - Field penetrometer
  - Field torvane
  - Field gradational sieves

7.0 PROCEDURES

After the soil boring has been advanced to the desired sample depth and cuttings have been removed from the hole, the following procedure shall be followed for the collection of a representative subsurface soil sample. (Paraphrased from ASTM D 1586). All drilling and handling of parts will be performed by the driller.

1. Attach the split-spoon sampler to the drill rods and lower into the borehole annulus. Do not allow the sampler to drop to the bottom of the boring.

2. Position the 140 pound hammer/weight above the drill rods and attach the hammer to the top of the rod string.

3. Rest the entire weight of the rod string, anvil, and hammer on the sampler to determine the approximate amount of borehole slough is present. Record the amount that the rod string sinks, if applicable, and remove any material interpreted as slough once the spoon is retrieved, if needed.

4. Mark the drill rods in 6-inch increments over two feet using lumber crayon such that the advance of the sampler is easily observed over each 6-inch increment.

5. Drive the sampler with blows from the 140 pound hammer free-falling for a distance of 30 inches, and record the number of blows per 6-inch increment over the 2-foot sample span. Continue driving the sampler until the sampler is advanced the entire 24-inch length of the

sample span. "Split spoon refusal" is defined as a total of 100 blows within one 6 inch interval where movement of the drill rods is no longer visually detected.

6. The sum of the blow counts required for the 6 inch to 12 inch and 12 inch to 18 inch penetration is termed the "N-value" and will be recorded on the boring log.

7. Bring the sampler to the surface using the drill rod and drill derrick. Remove the sampler from the rod string using pipe wrenches. Do not bang on the sampler to remove it, particularly if drilling in moist to wet silty and/or clayey soils. The impact from the hammer can liquefy the sample inside the sampler making it difficult to determine recovery and appropriately classify the soils. Open the sampler by removing the drive shoe and sampler head with pipe wrenches; again, avoid hammering to releases these pieces. Split the sampler by pulling or prying the two halves apart. The catch piece, or basket, of the split spoon should be inspected for wear when removing each sample and if needed it should be replaced to maximize soil recovery.

8. Record total advancement and recovery on the boring log. For environmental investigations, screen the soil sample with a PID/FID for VOCs and inspect the sample for staining, odors, and/or non-aqueous phase liquid (NAPL) presence. Place a representative sample in a jar for classification (and in the case of environmental investigations also for headspace screening via Nobis Engineering Inc. procedure for Soil Sample Headspace Screening for VOCs, SOP FS-003). Record all observations consistent with SOP SA-001.

9. If applicable, immediately upon opening and determining the appropriate sample collection depth, the VOC sample should be collected and directly transferred to the appropriate sample container in accordance with the SOP for Soil VOCs Sample Collection and immediately preserved in accordance with procedure for Soil Sample VOC Preservation Using EPA Method 5035, SOP ENV-008.

10. If samples for environmental laboratory analysis are to be collected, the remaining split-spoon sample volume (after the VOC sample aliquot has been collected) shall be placed in a dedicated or decontaminated stainless-steel bowl and homogenized with a dedicated or decontaminated stainless-steel scoop/spoon for approximately 30 seconds to ensure sample homogeneity. A sample of the homogenized soil will then be collected and transferred to the appropriate soil sample containers in the order of priority outlined in the project planning documents. The number, type, and size of the individual sample containers will vary depending on analysis to be performed, and should be detailed in the approved site sampling and analysis plan or similar approved planning document. In the event that a field duplicate sample is required by the project planning documents, repeat the procedures outline in SOP ENV-008 for VOCs selecting the location in the opened split spoon immediately adjacent to the parent sample collection location. The remaining analytes should be sampled in the order of priority outlined in the planning documents. When large volumes of soil are required to provide sufficient sample to the laboratory(ies) for analysis, it is acceptable to utilize a 3-inch ID split-spoon; however, if the SPT is performed using a 3-inch split spoon sampler driven using a 300-pound hammer, the standard penetration resistance "N" value should considered subject to interpretation by the geotechnical engineer of record. The 3-inch split spoon should only be used for the interval at which the field duplicate sample is required; otherwise, the standard 2-inch split spoon shall be used.

11. If no environmental laboratory analytical samples are to be collected, the remaining split-spoon sample volume should be discarded or disposed of in an appropriate fashion with soil boring cuttings generated during the advancement of that specific boring.

12. After completion of sample collection, all sampling equipment should then be cleaned/ decontaminated in accordance with the approved sampling and analysis plan or other similar approved planning document.

13. All Investigation Derived Waste (IDW) shall be handled and disposed of in accordance with an approved sampling and analysis plan or other similar approved planning document.

8.0 QUALITY CONTROL / QUALITY ASSURANCE

Quality control and quality assurance parameters for sample collection vary from project to project; therefore, no procedures are set forth in this SOP. It should be noted that project sampling and analysis plans, quality control plan, or other similar planning document typically provide detailed information regarding QA/QC sample collection frequencies/schedules, and also decontamination procedures and verification sample collection, in particular as it applies to a environmental investigation.

At a minimum, each soil boring log/data sheet should be checked for completeness and legibility.

9.0 REFERENCES

ASTM Designation D 1586-84 (Reapproved in 1992); Standard Test Method for Penetration Test and Split-Barrel Sampling of Soils

ASTM Designation D 2487-93; Standard Classification of Soils for Engineering Purposes (Unified Soil Classification System)

U.S. Environmental Protection Agency EPA/240/B-01/004; Guidance for Preparing Standard Operating Procedures (SOPs), March 2001

1.0 SCOPE, APPLICATION, AND LIMITATIONS

This Standard Operating Procedure (SOP) has been prepared by Nobis Engineering, Inc. (Nobis) to specify the means and methods required to perform field oversight of the installation of groundwater monitoring wells and piezometers. This procedure includes the minimum required steps and quality checks that employees and subcontractors are to follow as part of the installation.

Monitoring wells are typically used to measure groundwater elevation, test the hydrogeologic properties of the aquifer, and collect groundwater samples (which may or may not contain non-aqueous phase liquids (NAPLs). Piezometers are installed simply to measure depth to groundwater.

Limitations of monitoring wells include:

- Most monitoring wells intercept a limited area of aquifer. Therefore, results obtained from wells in heterogeneous aquifers should not be considered representative of groundwater plumes over a large vertical or aerial extent. This is of particular concern in well graded, interbedded sediments of varying grain size, (e.g. interbedded silts and sands), fractured glacial till, or fractured bedrock. In these settings, care must be taken to characterize potential aquifer and plume heterogeneities, and the groundwater monitoring results must be interpreted accordingly.

Limitations of piezometers include:

- Piezometers should not be used for groundwater sample collection. They are a tool used method to monitor groundwater hydraulic head, are typically not developed, and have very short screen sections.

2.0 INTRODUCTION

Monitoring wells are installed to evaluate the hydrogeologic condition in the immediate area around the well and to allow for the collection of groundwater samples for testing. Piezometers are installed solely to measure groundwater hydraulic head. Each of these installations is typically a vertical pipe fitted with a length of screen at the bottom, which is surrounded by a filter-pack (typically quartz sand-based). Monitoring wells/piezometers should be installed in pre-drilled boreholes.

A variety of drilling methods can be used to advance a borehole for monitoring wells and piezometers; however, some drilling methods are more-favorable for specific subsurface materials than others. The selected drilling method should be specified in planning documents and should proceed in accordance with their respective SOPs. It is not the intent to describe the drilling of the borehole in this SOP, but rather a description of the installation of the well/piezometers after the borehole has been advanced and sufficiently cleaned of cuttings.

3.0 DEFINITIONS

Annular seal (bentonite seal) – A (typically constructed of bentonite) low-permeability seal placed in the borehole annulus that prevents vertical migration of grout into the filterpack.

Blow-in – The inflow of groundwater and unconsolidated material into a borehole/casing caused by greater hydraulic head outside the borehole/casing than within the borehole/casing.

Bridge – An obstruction within the borehole annulus (or within a tremie pipe) that prevents the proper placement of annular materials.

Borehole annulus – Interstitial space in a borehole between an inner casing or riser pipe and the borehole wall.

Casing – A hollow cylinder advanced through a borehole to prevent the borehole from collapsing. These are typically constructed of carbon steel and can be temporary or permanent installations.

Cleanout depth – The depth to which the end of the drill string has reached after an interval of cutting.

Filterpack – A filter media (typically silica-sand-based) that is placed around a well screen to act as a filter preventing fine particles from entering and potentially fouling the well screen.

Grout – A low-permeability material placed between the casing or well riser and the borehole wall to stabilize the casing or well riser, seal the casing into a rock-socket (applies bedrock wells/boreholes only), and to prevent vertical migration of water through the borehole annulus.

HASP – Health and Safety Plan

Monitoring well – A well utilized to monitor groundwater hydrogeologic properties and used to collect groundwater samples for testing.

NAPL – Non-aqueous phase liquids; typically either more-dense (dense) than water (DNAPL) or less dense (light) than water (LNAPL).

Piezometer – A non-pumping well installed into groundwater, generally small-diameter and fitted with a short screen, that is used to measure the elevation of the pieziometric or potentiometeric surface.

Rig geologist – The Nobis Field Operations Lead (FOL), staff geologist, engineer, or scientist responsible for field oversight of the drilling activities.

Riser – A solid section of well pipe (through which no water can enter) connected to the screen section of a well.

Sampling Plan – Work Plan, QAPP, Field Sampling Plan, Scope of Work, or other description of the work being performed to meet contractual requirements.

SOP – Standard Operating Procedure

Tremie pipe – A small diameter (usually 1-inch) threaded pipe that has an open ended top and bottom which is used to place well installation materials in the borehole uniformly. The pipe is placed in the borehole and sections are added to keep it accessible to ground surface. Well installation materials (filterpack media, bentonite, or grout) is placed in the pipe, migrates down the pipe and out the bottom. This typically displaces water out the top of the borehole. Another advantage to a tremie pipe is that it prevents annular bridging; however, bridging within the tremie pipe is common with filterpack materials and bentonite.

Well development – Process by which fine materials are removed from the filterpack through the well screen and removed from the well. Additionally, development can be used to counteract the effects that borehole drilling had on the subsurface materials (such as borehole smearing).

Well screen – A slotted or mesh section of pipe with openings of uniform size used to allow passage of water into the well while preventing the filterpack materials from entering.

4.0 CAUTIONS

All personnel involved in activities associated with this SOP should be familiar with the contents and activity hazards included in the Site-Specific HASP.

As with any heavy equipment, caution should be taken to minimize the potential for injuries such as crushing and pinching. Typically wells are installed using a drill rig or some form of hoist rig. This equipment has overhead hazards and noise hazards which should also be considered. Before installation can commence, the rig should be leveled and sitting securely on its outriggers. If blocking must be placed under the outrigger, because of uneven or wet ground conditions, large wooden blocks will be used. Drill operation with the drill tires/tracks in contact with the ground should be avoided.

All personnel shall be familiar with the location of the rig's emergency kill switch.

All non-essential personnel should be kept clear of exclusion zone or from an area surrounding the rig. In general, non-essential personnel should be excluded from a radius that is equal in length to the maximum height of the drill string that may be raised above the casing.

Monitoring wells have the potential to provide subsurface contaminant migration pathways, particularly in the following settings:

1. sites where DNAPL has been observed or is suspected to exit;
2. locations where wells will be installed across aquicludes or aquitards;
3. locations where long well screens will be installed; and
4. locations where deep wells will be screened adjacent to groundwater divides (i.e. streams, rivers).

The location of monitoring well installations both spatially and vertically must be planned in consultation with a hydrogeologist or technical lead who is familiar with the appropriate design and installation contingencies to reduce or eliminate the risk of contaminant migration. The rig geologist must be trained to observe conditions that warrant these contingency measures.

5.0 PERSONNEL QUALIFICATIONS

The drill operator should be licensed (if appropriate according to State regulations) or otherwise sufficiently experienced to operate the drill rig. The driller's assistant should be sufficiently familiar with the rig operations to adequately assist the drill operator. The rig geologist should be sufficiently knowledgeable of the drilling method, classification of soils, and installation of groundwater monitoring devices. The rig geologist must be capable of recognizing unanticipated hydrogeologic conditions that warrant field modification of the monitoring well installation plan. The rig geologist must be capable of recognizing unanticipated hydrogeologic conditions that warrant field modification of the monitoring well installation plan.

All rig geologists operating at waste sites are required receive 40 hours of hazardous waste operations and emergency response (HAZWOPER) training as prescribed by OSHA. This training must be refreshed annually with an 8-hour refresher course.

6.0 EQUIPMENT AND SUPPLIES

- Site Sampling Plan and HASP
- Field book (and data recording sheets, if used)
- Camera
- Well installation logs and field data sheets, as specified in the Sampling Plan
- Indelible marker
- PDA or laptop with pLog™ (if electronic field data input is specified in the planning documents)
- Fiberglass tape and plunker
- Polyethylene sheeting to spread on the ground in the work area
- Decontamination equipment (sprayers, soap, water, brushes, solvents) as required by planning documents
- PPE and monitoring equipment (as specified in the Site-Specific HASP). No loose or dangling clothing like scarves or sweat shirt hood strings should not be worn as these can become tangled in drill equipment.
- Threaded well screen and riser piping (no glue can be used during installation)
- Clean filterpack materials
- Bentonite chips/pellets
- Portland cement and grout
- Well installation rig
- Grout mixer
- Well completion materials (roadbox or standpipe)
- Concrete
- Expandable plug
- Padlock and key
- Clean supply of water

7.0 PROCEDURES

7.1 Office Preparation and Mobilization

1. Preparation, review, and approval of all appropriate planning documents (e.g., Site-Specific HASP, Site Management Plan, and Sampling Plan) prior to mobilization.

2. Prior to mobilization, the project team shall conduct a field scoping meeting to discuss details pertaining to the planned work (i.e. review of the monitoring well installation design. This should include well locations, designated screen intervals for each of the wells to be installed [or the rationale for selecting screen locations in the field], the specifications for well screen slot size, filterpack type and sizing, and type of well screen and riser construction materials).

3. Well/piezometer installation typically occurs immediately after the borehole has been advanced to the target depth. Separate mobilizations for monitoring well/piezometer installations from drilling mobilizations are typically not required. However, in some cases (particularly with respect to bedrock boreholes), a borehole may be left open until sufficient testing can be completed to finalize monitoring well/piezometer installation details. In these cases, multiple mobilizations may be required.

4. Prior to mobilization, subcontractors shall provide pertinent certificates of insurance in accordance with Nobis procurement policy. Additionally, as required, subcontractors will provide certificates documenting completion of required safety training and professional certifications (drilling license, hoist license, etc).

5. One day prior to mobilization, the rig geologist shall ensure that all equipment and supplies required for the field effort are on-hand (or en-route), equipment is operational, and is appropriate for the intended tasks. Subcontractor-supplied materials should be verified with the subcontractor at this time as well. In the event a rig geologist is not available to perform this task, it will be performed or delegated to others by the Project Manger, as determined in the field scoping meeting.

6. During preparation and mobilization, supplies and equipment should be kept away from potential sources of contamination. These sources can include fuel containers, equipment containing fuels, environmental testing calibration standards, known contaminated materials and samples.

7. Review any special requirements of the Site-Specific HASP with all subcontractors.

7.2 Field Procedures

1. This procedure assumes that the monitoring wells/piezometers are being installed in a cased borehole. The casing may be the hollow stem of an auger flight or drill casing. An open borehole in unconsolidated materials should be avoided because borehole collapse during the well installation is possible, and could compromise the installation.

2. The rig geologist and drill operator should inspect the drilling equipment and any subcontractor-supplied materials for compliance with contract and technical specifications. Non-compliant equipment or materials shall not be utilized. All well piping and screen shall be in good condition and inside their original manufacturers packaging. If the manufacturer's packaging that is in direct contact with the piping/screens (such as a plastic sheath) is missing or has been damaged, the piping/screen should be thoroughly decontaminated prior to installation.

3. As appropriate, physical barriers shall be erected around the work location to restrict access around the work area. If necessary, place polyethylene sheeting in the work area to prevent well installation materials from contacting the ground surface.

4. Position the rig over the borehole. The rig should be stabilized and leveled using the hydraulic outriggers (stabilization using the vehicle tires/tracks should be avoided). The mast should be raised slowly such that no shifting of the rig occurs and no overhead utilities or other structures are contacted.

5. Use a weighted tape measure to ensure that the borehole has been advanced to the designated depth for well installation. If the borehole is not at the design depth, the well installation should not proceed until corrective action can be implemented. This action can include additional drilling (in cases where the borehole is too shallow) or placement of annular seal material and filter sand at the bottom of a borehole (in cases where the borehole is too deep). In either situation, the rig geologist should contact the Project Manager or technical lead to apprise them of the situation and to provide direction on how best to proceed.

6. The well installers should use clean PPE (such as nitrile gloves) when handling well screens and risers. Screen and riser sections should remain in their manufacturer's packaging until they are needed during installation. Screen and riser sections should not be placed directly on the ground, but rather on clean plastic sheeting to prevent contamination of the materials and well screen fouling by surface materials.

7. A 6-inch minimum bed of filterpack sand should be placed at the bottom of the borehole to seat the well. In shallow applications (less than 50 feet in depth) the placement of filterpack material may be performed by directly pouring the filter media into the borehole annulus. In deeper applications, the filterpack should be placed using a tremie pipe to prevent bridging.

8. The bottom of the bottommost screen section may be cut to allow for an off-typical size (i.e., 6-foot screen) screen to be installed. A snap-fit or threaded cap should be placed on the bottom of the bottommost screen section to prevent filter materials from entering the well from the bottom. Blank riser may also be attached below the screen in some cases to serve as a sump to collect sediment or dense, non aqueous phase liquids.

9. Sections of screen are coupled together to complete the screen interval. The screen interval may then be placed into the center of the borehole and secured at the surface such that it does not fall to the bottom of the borehole. If specified in the well installation plan, well centralizers should be installed with the screen and riser sections to ensure the well is installed in the actual center of the borehole. Additional sections of riser are added to the screen which is then lowered to and seated in the bottom layer of filterpack material.

10. The top of the well should be capped to prevent accidental addition of well installation materials to the interior of the well.

11. The well piping will likely be buoyant and should be kept from shifting in the borehole using a weight placed on the top of the uppermost riser pipe.

12. Filterpack materials should then be added in two-foot lifts using either a tremie pipe or by direct pouring into the annulus if the screen is located at a shallow depth. The materials should be measured and tamped using a weighted tape measure (also serves to break up bridging should it occur) after each lift.

13. After each lift, the outer casing should be removed the approximate length of the each lift. The installed lift will then fill the volume left by the casing, which will also assist in breaking up any bridging. This process should be repeated until the filterpack extends approximately two feet above the top of the uppermost screen section (prior to removal of the casing). The top of the filterpack should be measured after the casing has been removed to ensure that filterpack extends a minimum of two feet above the top of the screen section.

14. A bentonite seal should extend a minimum of two feet above the filterpack for wells completed in saturated conditions. Prior to placement of the bentonite seal, casing should be removed to prevent bridging of the bentonite. Bentonite may be pelletized or chipped and may be placed by direct pouring into the annular space or using a tremie pipe. Bentonite slurry may also be used, but must be installed using a tremie pipe. The top of the bentonite should be tamped and measured using a weighted measuring tape completed after each lift (which is typically every 6 inches). Sufficient time must be allotted for the bentonite to hydrate. This time is based upon the volume and type of bentonite used. The subcontractor or manufacturer should be consulted to determine the proper length of time required to hydrate the bentonite prior to grout placement. In instances where the top of the filterpack extends above the saturated zone, a layer (no less than 1 foot thick) of very fine sand can be added to provide isolation between the regular filterpack and grout.

15. The typical grout mixture should be a Type II Portland cement-based (no accelerator additives) mixture augmented with a bentonite powder. The grout must be mechanically mixed. Hand-mixing of grout is not acceptable. Typically, 6 to 7 gallons of clean water are added to the mixer for each 94-pound back of Portland cement. Sufficient cement to fill the mixer approximately 2/3-full should be added to the water and thoroughly mixed prior to addition of bentonite. Bentonite (in flake or granular form) should be added at a ratio of 2-4 pounds of bentonite per 94-pound sack of concrete added. The bentonite should be added slowly and uniformly to the cement mixture. The mixture should be mixed such that there are no lumps present in the mixture prior to grout placement.

16. Grout placement should be made using a pump and tremie pipe. The grout should be placed at the top of the bentonite seal and should fill the borehole from the bottom up displacing all the standing water in the borehole. Care needs to be exercised to insure that the grout does not “jet” into the filterpack. The grout should be placed to within 12 inches of the ground surface as settlement is expected. Loss of grout to the formation is expected; however, if the volume of grout placed appears to be greater than 20% over the expected volume, grouting operations should stop and the reasons for the excessive loss should be evaluated.

17. For a surface-mount well completion, an area surrounding the well should be excavated to between 6 and 18 inches below grade (or to the top of grout, whichever is shallower). After the grout has cured, the grout should be overlain with a 6-inch layer of drainage sand prior to placement of the protective casing. The protective casing should be sized correctly for the diameter of the well to allow for handling of equipment within the casing. The casing should be placed such that the well is at the center of the casing. Once placed, the excavated area surrounding the casing should be filled with concrete.

18. A stand-pipe well completion should be initiated while the grout remains semi-fluid. The standpipe should be centered around the well and should be placed such that the bottom is below the frost long (usually 3 to 4 feet below grade). A wooden block of up to 6 inches in thickness should be placed on top of the monitoring well and the protective casing should be allowed to rest on the block while the grout cures. Once the grout has cured, an area surrounding the well casing should be excavated and a concrete should be poured to stabilized the casing.

19. The top of the standpipe casing should be locked with a padlock. In a surface mount casing installation, the expandable plug on the top of the well should be fitted with a padlock, and the casing cover should be secured in-place with bolts.

20. The monitoring well/piezometer name should be written on the top and underside of the protective casing cover. If possible, the same information should be written on the exterior side of a standpipe protective casing.

21. A notch made using a file or a mark using an indelible marker should be placed on one edge of the top of the well riser for the purpose of taking groundwater level measurements using a consistent measuring point. Generally this is done on the north side of the well riser.

22. Well development should commence no sooner than 48 hours after grout placement and should be performed in accordance with Nobis SOP HYD-004.

7.3 Data and Records Management

Digital photographs taken during the well/piezometer installation operations should be downloaded and stored on the Nobis project server or field computer after the completion of each day's work. Copies of field book entries shall be maintained in the project files. The copies of the field book entries shall be transmitted to the Nobis Project Manager the following day, where practicable. If the following day is not possible, the field book entries shall be submitted to the Nobis Project Manager as soon as possible after completion of associated field activities. Completed well installation logs should be prepared as soon as possible after installation.

7.4 Communication and Technical Direction

The Nobis Project Manager is responsible for coordination with necessary subcontractors. The Nobis rig geologist is responsible for implementing the field activities as they are outlined in planning documents. If problems are encountered, the rig geologist shall contact the Nobis Project Manager or technical lead to apprise them of the situation and outline possible solutions. The

Nobis Project Manager or technical lead will determine the most-effective solution, and direct the rig geologist to proceed. Deviations from the plan are to be documented in the rig geologist field book.

7.5 Demobilization

Once the Rig Geologist is satisfied that the installation has been completed properly, the rig may demobilize from the location.

8.0 QUALITY CONTROL/QUALITY ASSURANCE

As part of the mobilization task, the rig geologist shall inspect the installation rig and associated tooling for contract compliance and safety reasons. Installation materials brought on site by the subcontractor shall also be inspected prior to their use.

9.0 REFERENCES

ASTM D 5092 (reapproved in 2004) Standard Practice for Design and Installation of Ground Water Monitoring Wells in Aquifers

Nobis SOP HYD-004 - Monitoring Well Development

1.0 SCOPE, APPLICATION, AND LIMITATIONS

This Standard Operating Procedure (SOP) has been prepared by Nobis Engineering, Inc. (Nobis) to specify the means and methods required to perform development of boreholes, newly-installed monitoring wells, or monitoring wells that require redevelopment after long periods of inactivity. This procedure includes the minimum required steps and quality checks that employees and subcontractors are to follow when using this technique.

The objective of well development is to enhance the hydraulic connection between the well screen and the natural formation or fill by removing fine soil material or drill cuttings within or adjacent to the well and subsequently rearranging the natural or artificial sand filter pack around the well. Well development is also necessary in order to remove fluids introduced during drilling or installation of the monitoring well. Well development may increase the hydraulic conductivity in the vicinity of the well screen. Appropriate mechanical rearrangement of the sand or gravel pack will allow the ground water to move through the sand pack more easily and reduce the amount of fines that enter the well. Reduction of groundwater turbidity will thereby reduce the chance of chemical alteration of groundwater samples caused by suspended sediments.

Care should be taken not to overdevelop the monitoring wells. Overdevelopment can potentially damage the well or cause well screens to become plugged with fine soil material.

2.0 INTRODUCTION

Two development techniques have been identified for use at the discretion of the Nobis Project Manager and technical lead. The methods are as follows:

- mechanical surging with a rubber surge block; and
- over-pumping using a submersible pump.

Mechanical surging is a technique that involves the use of a tool called a surge block. The device first forces water within the well through the well screen and out into the formation, and then pulls water back through the screen into the well along with fine soil and rock particles.

Over-pumping with a submersible pump involves pumping at a faster rate than the well would normally be pumped or purged for sample collection. The intent of over-pumping is to increase the hydraulic gradient near the well by drawing the water level down to as low a level as possible. The steepened hydraulic gradient increases the velocity of the groundwater moving through the screen into the well. The increased velocity will move residual fine soil or rock particles into the well and clear the well screen of this material.

While not generally encouraged, bailing can be used to develop monitoring wells if mechanical surging or over-pumping methods are not available or impracticable.

3.0 DEFINITIONS

EPA - U.S. Environmental Protection Agency

HASP - health and safety plan

HAZWOPER - hazardous waste operations and emergency response

OSHA - Occupational Safety and Health Administration

PM - Project Manager

PPE - personal protective equipment

SOP - standard operating procedure

4.0 CAUTIONS

When working with potentially hazardous materials, follow EPA, OSHA, and the safety practices as outlined in the site-specific HASP.

Each of the well development techniques described above has drawbacks that should be noted and avoided whenever possible. They are listed below:

- Mechanical Surging
  - Vigorous surging may cause damage to non-metallic well screens;
  - May cause the formation around the screen to become clogged by pushing fines back into the formation, reducing flow into the well;
  - If the surge block fits too tightly in the well casing, the surge block can damage the well screen; and
  - May remove sufficient formation material outside and above the well screen causing the seal to collapse, resulting in infiltration of overlying aquifer material.
- Over-pumping
  - If the permeability is quite high or quite variable, only a limited section of the screened zone may actually be developed, especially in wells with long screens;
  - Over-pumping may compact finer sediments around borehole and screen, restricting groundwater flow into the screen. If this happens it may be difficult to correct;
  - May result in an unstable formation around the well screen (i.e. bridging of fines may allow formation of voids around coarser-grained materials); and
  - At contaminated sites, over-pumping may produce a large volume of contaminated purge water that must be disposed of as a hazardous waste.
- Bailing
  - This method is slow, and not effective in adequately removing suspended sediments.

5.0 PERSONNEL QUALIFICATIONS

Personnel using this method should be familiar with this SOP and the particular equipment to be used to facilitate troubleshooting equipment problems more efficiently.

All field personnel at waste sites are required to receive 40 hours of basic hazardous waste operations and emergency response (HAZWOPER) training as prescribed by OSHA. This training must be refreshed annually with an 8-hour refresher course.

6.0 EQUIPMENT AND SUPPLIES

- Surge block or submersible pump (depending on method being used)
- Tubing
- Water level meter
- Graduated container to collect and measure purge water (e.g., 55-gallon drum or adequately sized tank)
- Multi-parameter or individual parameter water quality monitoring instruments to collect at a minimum pH, temperature, and specific conductivity.
- Turbidimeter or graduated Imhoff cones
- Field book
- Watch or stopwatch
- Field data sheets
- Personal protective equipment (PPE), as specified in the site-specific HASP

7.0 PROCEDURES

7.1 Office Preparation and Mobilization

All equipment that will be placed in the monitoring well must be decontaminated prior to beginning development activities. Decontamination of equipment will also occur between every monitoring well, when multiple wells are being developed.

7.2 Field Procedures

Prior to beginning development, the well will be sounded for total depth and static water level. Total depth will be compared to as built details to determine potential depth of sediment within the well or blockage of well screen. All development will begin gradually by gently surging or pumping from the top of the water column and gradually increasing in intensity while advancing through the water column and down the length of the well screen until the bottom of the well is reached. If mechanical surging is employed, fine material mobilized from the formation should be removed by pumping or bailing the well at a frequency determined by the technical lead.

For each well, development will include, if possible, removal of all of the water lost during installation. During the development of the wells, conductivity, pH, temperature will be monitored using a multi-parameter water quality monitoring instrument (or alternately individual parameter gauges/probes) an appropriate frequency as determined by the technical lead . If practical, the well development procedure will be continued until two of these parameters stabilize, or until at least five

(5) times the well volume has been removed. Stabilization is considered to be achieved after three consecutive readings are within 10 percent. Turbidity will also be monitored at an appropriate frequency as determined by the technical lead using either a turbidimeter or graduated Imhoff cone until stabilized values below 5 NTUs are recorded.

In the event that stabilization cannot be achieved after the removal of five well volumes, the technical lead should be notified and asked to provide direction regarding the appropriate completion of development.

During the well development, the purge rate and recharge rate should be estimated using a watch, a graduated vessel (e.g. 55-gallon drum, and a water level meter).

7.3 Data and Records Management

Field notes documenting the development activities will be recorded in a site field book and transferred to field data sheets as appropriate. All measured field data will be recorded using the Well Development Field Data Sheet (Attachment 1). Field books and data sheets will be transmitted to the Project Manager (PM) and maintained as part of the project file.

7.4 Communication and Technical Direction

Any problems or issues encountered while in the field shall be discussed with the PM or designated technical lead in order to derive an appropriate solution. Any changes in scope or deviation from procedure will be confirmed with and approved by the PM.

7.5 Demobilization

Purge water will be stored and disposed of in accordance with applicable Federal, state, and local regulations. In many instances, removed groundwater can be emptied on site. This determination will be made on a case-by-case basis.

All equipment will be decontaminated following the cessation of well development activities and prior to removal from the Site. Decontamination will be performed in accordance with the Nobis "Standard Operating Procedure FS-004, Field Sampling Equipment Decontamination."

8.0 QUALITY CONTROL/QUALITY ASSURANCE

The following general quality assurance procedures apply:

- All data must be documented in site field books and then can be transferred to field data sheets, as appropriate.
- All instrumentation must be operated in accordance with operating instructions as supplied by the manufacturer, unless otherwise specified in the work plan. Equipment checkout and calibration activities must occur prior to operation, and they must be documented.

9.0 REFERENCES

American Society of Testing Materials, Standard Practice for Design and Installation of Ground Water Monitoring Wells in Aquifers, D 5092-04e1 (reapproved in 2004 with edits) or most recent version.

Massachusetts Department of Environmental Protection. Standard References for Monitoring Wells. Publication No. WSC-310-91. April 1991.

Attachment 1
Well Development Field Data Sheet

WELL DEVELOPMENT FIELD DATA SHEET

Project: _____

Start Date/Time: _____ End Date/Time: _____

Well I.D.: _____ Method: _____ Identify Measuring Point: _____

Well Diameter: _____ Total Well Depth: (at start) _____ ft bmp Screen Length: _____ ft

(at finish) _____ ft bmp

Initial Level: _____ ft bmp Water Volume: _____ gallons Well headspace: _____

Water Volume Lost During Drilling: _____ gallons Approximate Sediment Thickness: _____ ft

Equipment: _____ Recharge Rate: _____ gpm Volume Removed: _____ gallons

Water Parameter Measurements

Time	Volume Purged (gallons)	Total Gallons	pH (SU)	Temp. (°C)	Specific Conductivity (mS/cm)	Turbidity (NTU) or (mL/L sediment[4])	Other (specify w/ units)	
Completion Criteria			(10%) [3]	(10%) [3]	(10%) [3]	(10% [3],<5 NTU)		

Development Notes: _____

Signature:

Notes:
1. bmp = below measuring point
2. gpm = gallons per minute
3. 10% completion criteria refers to three consecutive measurements within 10% of each other.
4. mL/L is measured using an Imhoff Cone. The completion criteria for the Imhoff Cone method should be confirmed with the technical lead.

SOP HYD-004 Attachment A Well Development Field Data Sheet.xls Updated April 2009

1.0 SCOPE, APPLICATION, AND LIMITATIONS

This Standard Operating Procedure (SOP) establishes methodologies for low-flow / low-stress groundwater sample collection. This procedure includes the minimum required steps and quality checks that project samplers are to follow when sampling groundwater using this technique. This SOP addresses the technical requirements and required documentation to be completed during low-flow groundwater sampling.

Nobis Engineering Inc. (Nobis) follows the U.S. Environmental Protection Agency (EPA) Region I *Low Stress (low flow) Purging and Sampling Procedure for the Collection of Ground Water Samples from Monitoring Wells*, Revision 3, January 19, 2010. Therefore, for additional detail regarding the Scope and Application of this procedure, please refer to this EPA document.

Some project parameters and/or requirements may not be fully addressed by this SOP. Under some circumstances, the project work plans (e.g., Quality Assurance Project Plan (QAPP), Sampling and Analysis Plan (SAP), Field Sampling Plan (FSP), etc.) may be needed to clarify, expand, or modify the SOP. Project requirements written in such documents supersede this SOP, as project specific practices and procedures outlined in project specific work plans are approved by the governing body (EPA, state agency, U.S. Army Corps of Engineers (USACE), etc).

The EPA low flow method is intended for wells that can accommodate a positive lift pump (1.5-inch inside diameter or greater), have a screen (open) interval of 10 feet or less, and have a static water level above the top of the screen interval (i.e., fully saturated screen). Method modifications may be required on a project or well-specific basis if well conditions vary from these.

2.0 INTRODUCTION

This method of groundwater sample collection involves the minimal disturbance of the aquifer matrix to obtain a “representative” sample of groundwater containing mobile organic and inorganic constituents (including dissolved and mobile particulate organic and inorganic chemicals) and reduce or eliminate the inclusion of non-mobile particulates.

The method requires pumping of groundwater at a sufficiently low rate to minimally influence the water level and limit migration of fines from the aquifer matrix into the water sample. Groundwater indicator field parameters recommended to be measured include: turbidity, dissolved oxygen, specific conductance, temperature, pH, and oxidation-reduction potential. These indicator parameters are used to determine when stabilization has been reached and sample collection can begin.

3.0 DEFINITIONS

DO	Dissolved Oxygen
EPA	Environmental Protection Agency
FID	Flame Ionization Detector
FOL	Field Operations Leader
FSP	Field Sampling Plan

HASP	Health and Safety Plan
low-flow	Purge rates (usually less than 1 liter per minute) that stress the aquifer only minimally and minimize drawdown (ideally 0.3 feet or less once stabilized) so that samples can be collected with minimal alterations of the groundwater chemistry.
mg/L	milligrams per liter
mL	milliliter
mL/min	milliliters per minute
mV	millivolts
NTU	Nephelometric Turbidity Units
ORP	Oxidation-Reduction Potential
OSHA	Occupational Safety and Health Administration
PCBs	Polychlorinated Biphenyls
PID	Photo Ionization Detector
QAPP	Quality Assurance Project Plan
QC	Quality Control
SAP	Sampling and Analysis Plan
SOP	Standard Operating Procedure
SVOCs	Semi-Volatile Organic Compounds
USACE	United States Army Corps of Engineers
VOA	Volatile Organic Analysis
VOCs	Volatile Organic Compounds
YSI	Yellow Springs Instrument (multi-parameter meter)

4.0 CAUTIONS

Collecting groundwater samples using this method is generally not physically hazardous. Care should be taken to minimize slip/trip/fall hazards due to the presence of a large amount of equipment required for low flow sampling. Personal protective equipment (PPE), including the appropriate gloves specified in the site Health and Safety Plan (HASP) and eye protection, should be worn, as well as any other PPE specified in the HASP.

Sample preservatives commonly include strong acids and bases. Care should be taken to prevent contact with these chemicals. Acids and bases should be stored separate from each other.

When vapor hazards may be present, the HASP may require that a headspace reading be taken immediately upon opening the monitoring well. Refer to the site HASP for details regarding action levels, response actions, and other site-specific health and safety requirements.

5.0 PERSONNEL QUALIFICATIONS

Field personnel will be fully trained in low-flow techniques prior to the field event, including at a minimum: equipment calibration, pump operation, troubleshooting, sample collection, and

documentation. While it is assumed that the qualified technician is generally familiar with low flow methods and equipment, project planning should include sufficient preparation time prior to mobilization for field personnel to become familiar with the specific methods, equipment, and instruments to be used at the specific site. Additionally, the timeframe of the project should be sufficient for the qualified field personnel to fully complete the tasks required.

Personnel collecting samples using this method must be familiar with this SOP and the particular equipment to be used to facilitate sampling and troubleshooting equipment problems more efficiently. Consult the user's manual for each meter and the EPA SOP, as required.

All field samplers at hazardous waste sites are required to complete the 40-hour Occupational Safety and Health Administration (OSHA) health and safety training and annual 8-hour refresher courses prior to engaging in any field collection activities.

6.0 EQUIPMENT AND SUPPLIES

The following are recommended for low flow sample collection:

- Pump (bladder pumps and centrifugal pumps are preferred) constructed of stainless-steel. In some cases, dedicated plastic bladder pumps may be used. Non-dedicated bladder pumps need to have the bladder and other non-inert parts replaced between locations. Peristaltic pumps may be utilized with caution. When used, the inside diameter of the rotor head (usually silicon) tubing needs to match the inside diameter of the tubing installed in the monitoring well – rotor head tubing may be used for connections also.
- Tubing will be dedicated to the well and be selected based on the type of contaminants that may be present. Teflon® or Teflon®-lined tubing is preferred when samples will be analyzed for volatile organic compounds (VOCs), semi-volatile organic compounds (SVOCs), pesticides, polychlorinated biphenyls (PCBs), and inorganic constituents. However, polyethylene tubing and silicone tubing may also be used in some cases when Teflon tubing is unavailable. The recommended inside diameter of the tubing is 1/4 inch or 3/8 inch
- 3-Way stopcock or "T" connector and clamp appropriately sized for the tubing in use
- Water level meter
- Power source (e.g., generator that is stationed at least 30-feet downwind of the well being sampled, compressed gas, battery, etc.)
- Multiple parameter instrument (e.g., Yellow Springs Instrument [YSI]) with a clear flow-through cell (250 mL flow-through cell is preferred) – manual must accompany the instrument in the field. Documentation of vendor calibration should be requested at the time the instrument is ordered.
- Turbidity meter (separate from the multiple parameter instrument) – manual must accompany the instrument in the field. Documentation of vendor calibration should be requested at the time the instrument is ordered.
- Graduated cylinder(s) of appropriate volume
- Stopwatch or other watch with display in seconds
- 5-Gallon buckets with 1/2 gallon graduations marked
- Utility spring-clamps for tubing

- Calibration standards or reagents
- Decontamination supplies
- Logbooks or tablets
- Well parameter data logs (sheets) (Attachment A)
- Site plan with well locations
- Project work plans (i.e., QAPP, SAP, FSP, etc.) and additional project documentation, as appropriate
- *Low Stress (low flow) Purging and Sampling Procedure for the Collection of Groundwater Samples from Monitoring Wells*, prepared by the U.S. EPA Region 1 Quality Assurance Unit in North Chelmsford, Massachusetts, January 19, 2010.
- Sample containers; pre-preserved is preferred when appropriate
- Labels
- Well keys
- Miscellaneous hand tools (minimum recommended: utility knife, standard and Phillips screwdrivers, slip-joint pliers, small and medium adjustable wrenches) – a tubing cutter is preferred over a utility knife for cutting rigid tubing in order to maintain tubing shape and avoid crimping
- Safety cord when using submersible pumps
- Vapor screening instruments (e.g., photo-ionization detector [PID], flame-ionization detector [FID] as required by HASP and/or project work plans [i.e., QAPP, SAP, FSP, etc.])
- Radios and/or cell phones, as appropriate
- Folding canopies or other appropriate shelter from sun or precipitation
- Extra buckets for equipment transport
- Appropriate protective gloves (see HASP)
- Resealable plastic bags
- Paper towels
- Camp chair
- Sample-holding cooler with loose ice for each sampler or team
- Extra coolers for on-site interim storage / ice and sample management
- Extra Batteries (e.g., 9V, C, and/or AA)
- Paint pens for marking wells (generally available where welding supplies are sold)

Refer to Figure 1 for a generalized description of the generic arrangement of equipment for low flow sampling.

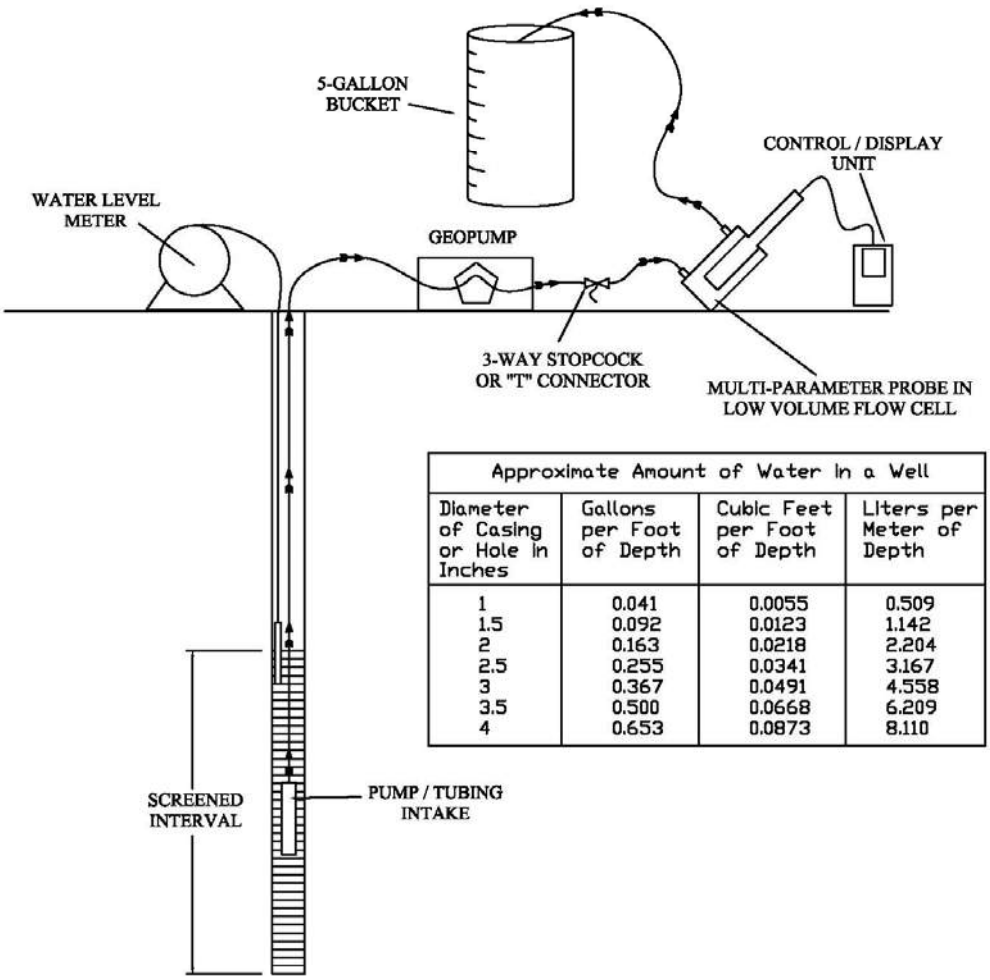

Approximate Amount of Water in a Well

Diameter of Casing or Hole in Inches	Gallons per Foot of Depth	Cubic Feet per Foot of Depth	Liters per Meter of Depth
1	0.041	0.0055	0.509
1.5	0.092	0.0123	1.142
2	0.163	0.0218	2.204
2.5	0.255	0.0341	3.167
3	0.367	0.0491	4.558
3.5	0.500	0.0668	6.209
4	0.653	0.0873	8.110

FIGURE 1

GENERALALIZED LOW–FLOW ARRANGEMENT

7.0 PROCEDURES

7.1 Office Preparation and Mobilizations

All field personnel should be familiar with the project work plans (i.e., QAPP, SAP, FSP, etc.) and have the opportunity to ask questions prior to beginning mobilization activities. All field equipment will be inspected by the Field Operations Leader (FOL) or designee prior to mobilization. When instruments requiring calibration are obtained from a vendor, documentation of calibration prior to delivery should be requested when the instruments are ordered. If documentation of pre-delivery calibration is provided, calibration prior to mobilization is considered to be completed. **This does not supersede QAPP/SAP requirements for field calibration on site prior to daily use.** If documentation of calibration by the vendor is not provided, field personnel should complete and document one full calibration of all instruments and equipment requiring calibration prior to mobilization for projects that require initial daily calibration to be performed prior to use. The data quality objectives for some projects may forgo re-calibration for single day field efforts if initial calibration is documented by the instrument vendor. Field technicians should refer to the project scope or consult with the project manager for clarification of the data quality objectives for projects that do not utilize other planning documents such as a QAPP/SAP. Reference Nobis SOP Nos. FS-005 and FS-006 for YSI and turbidity meter calibration procedures, respectively. Personnel should confirm that field instruments are complete and in working order prior to mobilization.

The project manager or FOL should provide the field personnel with a list of required and suggested equipment including any tools or personal items not being provided by the project or listed in this SOP. The field personnel should be fully informed of the work site conditions including availability of shelter, climate controls, food, potable water, and project expectations (e.g., anticipated work day length, weather-related decisions, and other reasonably foreseeable conditions) so they can make appropriate decisions on personal gear.

The FOL or designee is responsible for ensuring that all required equipment is organized, staged, and ready to mobilize. To the extent possible, all authorization, permission, and access issues should be resolved prior to mobilization. If samples are to be shipped, a shipper or parcel drop should be identified prior to mobilization and hours of operation confirmed. If expendable items such as gases are required, potential local sources should be researched prior to mobilization. Sample shipping and other SOPs should be referenced for further information.

7.2 Field Procedures

7.2.1. For most large-scale sampling efforts, a synoptic water level round where static water levels and total depths are measured and recorded for all locations is completed prior to initiating the low flow effort. The intent of the synoptic round is to measure water levels across all measuring points to obtain a “snapshot” of conditions at a given point in time. During the synoptic water level round, the condition of the wells should be noted as well as the presence and condition of tubing, dedicated pumps (where present), and other factors that may later impact purging and sample collection. This is also the appropriate time to verify well identity and add or refresh well markings to ensure correct identification during the subsequent sample collection efforts and in the future. Reference Nobis SOP No. HYD-003 for further information on measuring the groundwater level in wells. When the tubing, pump, or other equipment is to be installed or removed, it should be done after the static water level is measured during the synoptic round. If tubing is to be installed, repositioned, or replaced, water levels and turbidity should be allowed to stabilize prior to purging. Refer to the project work plan for other project-specific factors.

7.2.2. Equipment including the multiple parameter meter, turbidity meter, and pump (as necessary) shall be calibrated at the start of each sample day per the manufacturer's specifications and/or Nobis SOP Nos. FS-005 and FS-006. Manufacturer's literature for each piece of equipment will be included in planning documents and will accompany the instruments in the field. Documentation of equipment calibration will be made on an equipment calibration log as required by the project work plan.

7.2.3. If required for the project, remove the well cap and immediately screen for VOCs in the monitoring well headspace using a calibrated PID/FID and record the results. Record the readings on a project-specific field form (Attachment A). Note the presence of positive or negative pressure, if any, as the wellhead compression plug is released.

7.2.4. If required by the HASP, monitor the breathing zone air with the PID/FID. If below action levels, proceed with the sampling. If above action levels, allow VOCs to dissipate before proceeding.

7.2.5. Measure and record the initial depth to water; the total depth should have been measured and the well identification verified during the synoptic water level round (Section 7.2.1). If the total depth of the well was not measured during the synoptic water level round, it should be measured after completing the purge and collection process so as not to influence turbidity. The total depth should only be measured during the setup for purging if the well identification was not confirmed during the synoptic round and documentation such as site figures are unclear regarding the well identification.

7.2.6. Refer to the project work plans for specific instructions on pump or tubing intake depth based on screen interval or other site-specific factors. Pumps or pump tubing should be installed at the specified depth or in the center of the screened or open interval if no depth is provided. Dedicated tubing will be marked to facilitate correct placement with minimal disturbance to the water column. If dedicated tubing is not being used, the tubing should be measured as it is placed; using the bottom of the well as a reference point for setting the intake depth will disturb the water column and influence turbidity and should be avoided.

7.2.7. If not completed during the synoptic gauging round, install the pump (for non-dedicated submersible pumps) or pump tubing with as little disturbance to the water column as possible. Allow the groundwater level to return to static conditions prior to beginning of the purge process. When a peristaltic pump is used, the length of the rotor head tubing should be limited to one foot, to minimize vibrations that may aerate the sample. Limit the length of tubing outside the well to the extent possible while retaining enough tubing to allow for adjustments to the intake depth. The low-flow set-up, including tubing, should be protected from direct sunlight and precipitation to minimize changes in temperature.

7.2.8. Install a 3-way stopcock or "T" connector and clamp to the pump tubing and flow-through cell (as shown in Figure 1). Attach tubing to the bottom port of the flow-through cell so water flows up to and exits the upper port. Angle the flow through cell to approximately 45 degrees with tubing ports facing up to reduce the possibility of air bubbles becoming trapped in the cell and/or sticking to the DO probe. Water exiting the cell is to be collected in a graduated bucket.

7.2.9. Set the 3-way stopcock or "T" so that the flow from the well is directed out to the 5-gallon graduated bucket and not through the flow-through cell.

7.2.10. Turn on the pump and record the start time. Start purging the well using the lowest pump setting and gradually increase the speed until discharge occurs. Monitor the water level in the well and adjust the pump rate to minimize drawdown. Drawdown is considered stable when the water table drop is limited to 0.3 feet or less.

a. Stable drawdown of less than 0.3 feet, while desirable, is not always feasible. Continued drawdown may require additional purging to remove head and allow the well recharge rate to increase to match the pumping rate. The drawdown should never reach the screened interval. If the drawdown has exceeded 0.3 feet and stabilizes, calculate the volume of water between the initial water level and the stabilized water level. Add the volume of the water which occupies the pump's tubing to this calculation. This combined volume of water needs to be purged from the well after the water level has stabilized before samples are collected. The volume of drawdown should be less than the volume of water purged when parameter stability indicates adequate conditions for sample collection. When these conditions cannot be met, the actions taken should be fully documented and the FOL and/or quality control officer for the project should be consulted before collecting samples and submitting them for analysis. Continue with the following steps during drawdown to monitor purge water parameters and pumping conditions. When problematic wells are identified, establishing a well-specific procedure in the project planning is recommended.

b. If the water level cannot be stabilized, set the pump to the lowest setting and continue to record water levels in efforts to overcome drawdown issues. Estimate the drawdown rate and consult with the FOL or project manager for instructions. Be sure not to allow water to be drawn down into the screened interval of the well. If the water level approaches the screened interval, stop pump and allow the well to recharge while consulting the FOL and/or quality control officer for the project before collecting samples and submitting them for analysis. When problematic wells are identified, establishing a well-specific procedure in the project planning is recommended.

7.2.11. Measure the flow rate with a graduated cylinder and a stopwatch to calculate the purge rate in milliliters per minute (mL/min). Typical purge rates range between 100 mL/min to 400 mL/min but are dependent on the aquifer matrix composition. Historical flow rates are a good starting point; however, aquifer conditions can change seasonally and over time. Attempt to achieve historical purging flow rates if previously established; however, establish a new flow rate if those rates cause excessive drawdown. When using a bladder pump, the discharge rate should be capable of filling a 40 mL volatile organic analysis (VOA) vial with a single discharge while maintaining a smooth flow at a pressure that will not result in aeration of the sample.

7.2.12. If turbidity levels are excessive, additional purging while bypassing the flow-through cell may be necessary to avoid silt build up in the cell and around the multiple parameter instrument probes. There is no defined upper limit for turbidity with respect to directing the purge water to the flow-through cell; it is up to the field technician's judgment. Visual indications of suspended material or discoloration and obvious silt accumulation in the purge bucket may be useful indicators. Historical records may be useful in determining what amount of turbidity is generally encountered. It is important to remember that there is no rush to begin collecting field parameter measurements; the purge time starts when the first water is drawn from the well. Allowing some additional purging before water is routed to the flow-through cell may ultimately decrease the overall time to reach parameter stability. Stabilizing the drawdown and avoiding silt accumulation in the flow-through cell are the initial priorities. When the flow rate has been established and turbidity is not excessive, redirect the flow through the 3-way stopcock or "T" to the flow-through cell. Silt levels should be monitored and the flow-through cell should be emptied if silt build up is occurring. This is to be avoided, however, as the DO probe will spike if exposed to ambient air and generally will take 15 minutes or more to stabilize again. Allowing excess turbidity to be purged out before allowing water to enter the flow cell is preferred, if possible. Additionally, if the flow-through cell is at the appropriate 45-degree angle (Section 7.2.8), silt that does enter the cell should settle away from the probes.

7.2.13. Collect all purge water in the graduated bucket. Generally, low-flow methods do not include minimum purge volumes; refer to the project work plan for confirmation.

7.2.14. Record the indicator parameters and flow rate at intervals determined by the flow rate and flow-through cell volume. The generally accepted approach is to record parameter measurements at 5-minute intervals, however, the entire volume of water in the flow-through cell should be exchanged at least once between readings. To check this, divide the flow-through cell volume by the flow rate to result in minutes per turnover. Reading intervals shall not be less than 5 minutes; however, to ensure that water in the flow through cell is exchanged between readings, the length of the intervals may be increased if slower pumping rates are required.

When monitoring groundwater indicator field parameters and sampling under this SOP, the sampler must be aware of and avoid conditions that cause groundwater degassing, groundwater aeration, groundwater temperature fluctuation, in-well thermal currents, and cross-contamination.

The field parameters measured during low flow have either direct or indirect temperature components. Stabilizing the temperature of the water between the time it is drawn into the tubing and the time it exits the flow-through cell will often shorten the time needed for the other field parameters to stabilize. Protecting the tubing and flow-through cell from direct sunlight is generally the most important component of stabilizing the purge water temperature and obtaining the most precise measurements capable through low flow methods.

7.2.15. Turbidity measurements should be collected before the flow-through cell. Use the 3-way stopcock or “T” to divert water directly into the measurement vial (also referred to as a cuvette). Where ambient groundwater temperatures are cool and/or surface humidity is high, condensation may form on the vial. It is acceptable to immerse the vial in water at stable surface air temperature for a few minutes to equilibrate the field measurement sample and wipe moisture off of the vial prior to placing it in the meter to be measured. If the turbidity vial is not being measured immediately after collection, remember to gently agitate the vial to re-entrain particulates that may have settled out. If turbidity measurement vials become stained with iron flocculent or other groundwater constituents, a rinse with a small amount of a 1:1 hydrochloric acid and water solution may remove the staining.

7.2.16. The tubing and flow-through cell should be monitored for air bubbles. Bubbles in the cell may be freed by gently tapping the cell. Stationary bubbles in the tubing may be worked toward the cell and eventually the outlet by lowering the tubing to encourage water to push the bubble(s) downstream. When using a peristaltic pump, persistent bubbles or intermittent flow may indicate that the tubing is too large for the flow rate, that the water level is at the limits of the pump’s capacity to lift it, or that the groundwater is effervescing due to geochemical characteristics. Whenever possible, arrange the equipment so that the pump is above the wellhead and the flow-through cell is above the pump. The tubing from the wellhead to the flow-through cell should be as short as is practical; loops and humps should be eliminated to the extent possible.

7.2.17. Continue purging until indicator parameters stabilize. Record the readings on the project-specific field form included in Attachment A. Stabilization is considered to be achieved after three consecutive readings for all parameters are within the following limits:

Turbidity -	+/- 10% for values greater than 5 NTU; if three consecutive turbidity measurements are less than 5 NTU, consider the parameter stable.
DO -	+/- 10% for values greater than 0.5 mg/L; if three consecutive measurements are less than 0.5 mg/L, consider the parameter stable.

Specific Conductance - +/- 3%

Temperature - +/- 3%

pH - +/- 0.1

ORP - +/- 10 mV

Calculate stability using the lowest and highest of three sequential readings for each parameter; sequence is not important. Use the percent difference formula [(high-low)/high x 100] to calculate percent difference and compare results to the stability criteria above. **Examples of this calculation are shown in Attachment B.**

7.2.18. After the indicator parameters have stabilized according to the above criteria, record the stabilization time and collect analytical samples. Fill sample bottles directly from the tubing in the well by disconnecting the tubing from the 3-way stopcock or sample T. Do not collect samples from tubing after the stopcock or sample T or the flow-through cell – samples should be collected as close to the pump as possible. The project work plan may specify an order of sample collection based on project-specific factors. Typically, the flow rate shall not be changed during sample collection; however, the flow rate may be reduced after collection of non-VOC and non-gas samples if necessary to allow for "laminar flow" (undisrupted flow) during collection of VOC volumes. In this case, VOC and groundwater gas samples would be collected last among the laboratory and field analytes to preserve the flow rate for the remainder of the sampling suite. The pump rate is never increased to accommodate large volumes. If field analyses are to be completed, these sample volumes are generally collected after the samples to be submitted to a laboratory and at the stable pump rate. If field quality control (QC) samples are to be collected (i.e., field duplicate or matrix spike samples), then these QC samples are collected after the original field sample is collected for all parameters.

7.2.19. In certain situations which will be outlined in the project work plans, when turbidity meets the stabilization criteria but remains above 25 NTU's, additional considerations are warranted. If total metals are being collected, an additional filtered sample for metals using a 0.45 micron in-line filter may be required by the work plans to also be collected to compare to the total metals sample. An alternative method would be to send the laboratory two samples: an unfiltered and unpreserved sample that the laboratory can filter within 24 hours of collection for dissolved metals analysis and a preserved sample for total metals analysis. It is preferable that the dissolved metals are field filtered if turbidity values are greater than 5 NTU.

7.2.20. Place samples in a cooler with loose ice immediately after collection. Transfer samples to the project sample manager as soon as possible for processing and shipping.

7.2.21. In general, limit purge water parameter monitoring to 2 hours and collect samples at the end of the 2-hour period, regardless of stabilization. The project work plan may provide guidance for extending the purge period based on parameter trends or other factors. There is no lower limit for the purge period. Once the water level and indicator parameters stabilize and the minimum volume is purged, i.e., the volume of the well tubing and any drawdown, the sample may be collected.

7.2.22. Problems, discrepancies, unexpected or unusual observations (such as contrasting DO and ORP values), and potential exceptions to the SAP or other project documentation should be communicated to the FOL at the time that they are recognized. At a minimum, the FOL

should be aware of such occurrences before purging is stopped and the work area broken down. Additional meter calibration may be warranted.

7.2.23. After collecting the samples, turn off the pump and monitoring equipment and remove the non-dedicated equipment (pump or tubing) from the well. Leave or re-install dedicated tubing in the well or dispose of appropriately. Refer to the project work plans for site-specific procedures.

7.2.24. Record the total volume accumulated in the graduated bucket. Complete all other required notes and documentation in the field book, tablet, or on the field log, as appropriate. The project work plans may provide additional information regarding the required data. Unless otherwise specified, duplication of data on field logs and in field books is not necessary.

7.2.25. Decontaminate all non-dedicated equipment that will be reused in accordance with the project work plan.

7.3 Data and Records Management

In most cases, the samples should be immediately returned to the staging area and turned over to the FOL or sample manager for processing and shipping. Unless site logistics prevent it, this should be done prior to breaking down and demobilizing from the well. Alternately, the sample manager or other site personnel may be available to courier samples to the staging area for appropriate storage. The samples will be transferred to holding coolers or refrigerators until they are packed for shipping. The FOL or sample manager will maintain a log of the samples that will include the sample designator (and well number if different), the analytical parameters, the number of containers, the collection date and time, and any notes regarding exceptions to the SAP or other project documentation and/or quality control. All field data logsheets, notes, and/or electronic filesshall accompany the samples and be turned in to the FOL with the samples after review by the sampler for completeness and accuracy. These documents serve as a chain of custody for the samples while they remain on-site. Communicate any significant observations not noted on the field log to the FOL.

The FOL will review the field logsheets and other project specific field data (such as field analyses completed) on a daily basis. Discrepancies and/or omissions should be addressed as soon as possible, preferably the same day as sample collection and prior to the next sample collection. When it is logistically reasonable, it is preferred that copies be made as soon as possible as a backup. Likewise, the data should be provided to the project manager at the end of each sample day, if feasible. If electronic tablets are used, the field logsheets may be saved in the project files while in the field.

The FOL will maintain a log of daily events to include, where applicable, the wells sampled, the sampler, the analytical parameters, problems or exceptions, duplicate or matrix QC samples collected, sample transfer/shipping dates and times, and general site conditions. Some or all of this information may be collected in the sample management software, Scribe. Refer to SOP No. DOC-002.

7.4 Communication and Technical Direction

Field personnel shall support one another and maintain open communications during all aspects of the field activities. When a technical point is in question, field personnel shall communicate with the FOL for clarification and/or additional direction. If the project work plans do not provide sufficient information, the FOL should consult with the project manager unless otherwise directed. Deviations, exceptions, and/or omissions from the project work plan or generally accepted practice should be communicated to the project manager as soon as feasible. The FOL will maintain records of all such

communications in a field book or other acceptable format detailing the issue, the outcome, and individuals involved in the decision.

7.5 Demobilization

The FOL is responsible for ensuring that all required data have been collected and that the site is secured before authorizing complete demobilization. The FOL should confirm with the project manager that the crew is authorized to begin demobilization unless otherwise directed. At a minimum, the site conditions should be no worse than at the beginning of field activities. The FOL or designee will ensure that all instruments and equipment are accounted for and either stowed for future use or transported to the office. In some cases, taking an inventory of equipment and expendables may be appropriate.

8.0 QUALITY CONTROL/QUALITY ASSURANCE

As discussed in Section 7.3, the FOL will review field logs and other documentation on a daily basis and address issues as soon as feasible. The requirements for field duplicates, trip blanks, equipment blanks, matrix spike/matrix spike duplicates, performance evaluation samples, temperature blanks, sample management/chain of custody procedures, shipping requirements, and custody seals will be specified in the SAP or other project work plans. Follow Nobis SOPs where established.

9.0 REFERENCES

US Environmental Protection Agency Region I; *Low Stress (low flow) Purging and Sampling Procedure for the Collection of Ground Water Samples from Monitoring Wells*, EQASOP-GW 001, July 31, 1996 (Revised January 19, 2010).

ATTACHMENTS

A Low-Flow Groundwater Sampling Field Log
B Example Stability Calculations

ATTACHMENT A

Nobis
Engineering a Sustainable Future

Low-Flow Field Log

Site Name: _____
Job Number: _____
Sampler: _____

Date:

Page: _____ of

Well ID: _____
Sample ID: _____
Reviewed By: _____

Measurement Reference Point (MP): _____ (PVC, Casing, Ground, etc.)
Depth to GW: _____ (ft from MP)
Depth to Bottom: _____ (ft from MP)
Pump Intake Depth: _____ (ft from MP)
Well depth as installed: _____ (ft bgs)
Screen interval (range): _____ (ft bgs)

Purging start time: _____
Parameter stabalization (Y/N): _____
Two hour time limit reached (Y/N): _____
Sample time: _____
Total volume purged (gals): _____
Time at purge completion: _____

Equipment Vendor: _____
Pump Type: _____

Turbidity Meter: _____
Serial #: _____

Multimeter: _____
Serial #: _____

Notes (Initial PID reading, SOP deviations, etc.):

Lab Analyses:
QC Info (Duplicate, MS/MSD)

Clock Time	Bladder Pump Discharge/ Refill	Purge Rate	Depth to Water	Draw down	Cum. Draw down	Temp ±3%	Spec. Cond. ±3%	pH ±0.1	ORP ±10	DO ±10% if >0.5 mg/L	Turbidity ±10% if >5 NTU	Comments/Gas Pressure/Observations	Stability Calculator (auto)
HHMM	sec./sec. or setting	ml/min	ft. below MP	ft.	ft.	°C	µS/cm[c]		mV	mg/L	NTU		
0:00													

Nobis
Engineering a Sustainable Future

Low-Flow Field Log

Date: 1/0/1900

Page: ____ of ____

Site Name: 0
Job Number: 0
Sampler: 0

Well ID: **0**
Sample ID: 0
Reviewed By: 0

Measurement Reference Point (MP): 0 (PVC, Casing, Ground, etc.)
Depth to GW: 0 (ft from MP)
Depth to Bottom: 0 (ft from MP)
Pump Intake Depth: 0 (ft from MP)
Well depth as installed: 0 (ft bgs)
Screen interval (range): 0 (ft bgs)

Purging start time: 0:00
Parameter stabalization (Y/N): 0
Two hour time limit reached (Y/N): 0
Sample time: 0:00
Total volume purged (gals): 0
Time at purge completion: 0:00

Equipment Vendor: 0
Pump Type: 0

Turbidity Meter: 0
Serial #: 0

Multimeter: 0
Serial #: 0

Notes (Initial PID reading, SOP deviations, etc.): 0

Lab Analyses: 0

QC Info (Duplicate, MS/MSD) 0

Clock Time	Bladder Pump Discharge/ Refill	Purge Rate	Depth to Water	Draw down	Cum. Draw down	Temp ±3%	Spec. Cond. ±3%	pH ±0.1	ORP ±10	DO ±10% if >0.5 mg/L	Turbidity ±10% if >5 NTU	Comments/Gas Pressure/Observations	Stability Calculator (auto)
HHMM	sec./sec. or setting	ml/min	ft. below MP	ft.	ft.	oC	µS/cm		mV	mg/L	NTU		

ATTACHMENT B

Attachment B

SA-003 Low-Flow Groundwater Sampling

Example Calculations

Parameter Stability Calculation

percent difference formula [(high - low) / high] x 100 = percent difference

For three successive specific conductance readings of 530 µS/cm, 500 µS/cm, and 520 µS/cm; stability is defined as ±3%:

Use the highest and lowest readings of the three →

[(530 µS/cm – 500 µS/cm) / 530 µS/cm] x 100 = 5.6% → **not stable**

For three successive specific conductance readings of 530 µS/cm, 515 µS/cm, and 520 µS/cm; stability is defined as ±3%:

Use the highest and lowest readings of the three →

[(530 µS/cm – 515 µS/cm) / 530 µS/cm] x 100 = 2.8% → **stable**

Well and Tubing Volumes

Tubing Volume Per Foot

for tubing OD (in.)	0.25 (1/4)	0.375 (3/8)	0.5 (1/2)	0.625 (5/8)
tubing ID (in.) =	0.17	0.25 (1/4)	0.375 (3/8)	0.5 (1/2)
volume (gal./ft.) =	0.0012	0.0026	0.0057	0.0102

Well Volume Per Foot

for casing ID (in.)	1.25	1.5	1.75	2	2.25	3	3.5	4	6
volume (gal./ft.) =	0.06	0.09	0.12	0.16	0.21	0.37	0.5	0.65	1.47

OD = outside diameter, ID = inside diameter

Minimum Purge Volume Calculation

drawdown or tubing length (ft.) x volume per foot (gal./ft.) = V_d (gal.) or V_t (gal.)

for a 2-in. ID well with a 0.27-ft. drawdown and 30 ft. of 0.17-in tubing→

0.27 ft. x 0.16 gal./ft. = 0.043 gal. V_d

30 ft. x 0.0012 gal./ft. = 0.036 gal. V_t →

V_d + V_t = minimum purge volume → 0.043 gal. + 0.036 gal = 0.079 gal. minimum purge

Supporting Conversions and Tubing / Well Volume Calculations

ID (in.) / 2 = radius (r) in.

π (Pi) $\approx$ 3.14

1 $ft.^3$ = 1,728 $in.^3$ or 1,728 cubic in. per cubic ft.

[$in.^3$ x (1 ft. / 12 in.) x (1 ft. / 12 in.) x (1 ft. / 12 in.) = $ft.^3$]

1 $ft.^3$ = 7.48 gal. or 7.48 gallons per cubic foot

$\pi \times r^2$ = area of a circle ($in.^2$) →

for a round cylinder, area ($in.^2$) x length (in.) = volume of cylinder ($in.^3$) →

volume of cylinder ($in.^3$) x 1 $ft.^3$ / 1,728 $in.^3$ = volume of cylinder ($ft.^3$) →

volume of cylinder ($ft.^3$) x 7.48 gal. / $ft.^3$ = <u>volume of cylinder (gal.)</u>

for a 2-in. ID well, the volume of water in a 1-ft. section is:

r = 1 in. → π x $(1\ in.)^2$ → 3.14 x 1 $in.^2$ = 3.14 $in.^2$ = cross section area →

the volume of 12 in. of 2-in. well = 3.14 $in.^2$ x 12 in. = 37.68 $in.^3$ →

37.68 $in.^3$ x 1 $ft.^3$ / 1,728 $in.^3$ = 0.021 $ft.^3$ →

0.021 $ft.^3$ x 7.48 gal. / $ft.^3$ = <u>0.16 gal.</u>

1.0 SCOPE, APPLICATION, AND LIMITATION

This Standard Operating Procedure (SOP) establishes methodologies for direct push technique (DPT) soil drilling. This procedure includes the minimum required steps and quality checks that employees and subcontractors are to follow when drilling using this technique. This SOP addresses technical requirements and required documentation to be completed during DPT drilling activities.

Limitations of this drilling method include:

- DPT can only be performed in overburden formations.
- Subsurface conditions such as solid rock, boulders, cobbles, gravel, and dense soils will affect the performance of the sample collecting and advancement of the sampler. Compact gravelly tills containing boulders and cobbles, stiff clay, compacted gravel, and cemented soil may cause refusal. Some cohesive soils, depending on their water content, can create enough friction on the sampler that may cause refusal. These conditions can also complicate the removal of the sampler and retrieval of the soil sample.
- The presence or absence of ground water can affect the performance of the sampler.
- Total depths to which DPT drilling can be achieved depends upon the subsurface material and the power of the DPT tooling. Depths of 100 feet or more have been reported. However, in typical New England overburden, drilling depths of 25 feet are very common.

2.0 INTRODUCTION

The hydraulic push-probe is typically truck mounted, or track mounted. Soil samples are obtained using a two-tube system sampler advanced into the subsurface by impacting, vibration, and downward pressure. Samples can be collected continuously, or at discrete intervals. The most common discrete interval sampler is the Macro-Core®. The sampler produces a 1.5 inch diameter sample in a disposable polyvinyl chloride (PVC), polyethylene terephthalate glycol (PETG), or Teflon® liner. The length of the sampler may vary between 24, 36, 48, and 60 inches. However, 48 inch samplers are the most common.

After the sampler has been driven to the appropriate sampling depth, the sample will be collected by removing the sampler from the borehole and extension rods, and unscrewing the cutting shoe and cap assembly from the outer tube. The inner tube (disposable liner) can then be removed from the sampler. The liner is then split into two longitudinal sections by cutting the length of the liner. After soil classification and sampling, the liner will be disposed of in accordance with planning documents.

3.0 DEFINITIONS

Direct push sampling – sampling device advanced without drilling or borehole excavation.

Extension rods – hollow steel rod, various lengths, used to advance and retrieve sampler.

Push depth – depth below the ground surface of the direct-push sampler.

Sample recovery – length of the material recovered.

Impact heads/drive heads – parts of the direct-push rig that receive and transfer energy to the extension rods and sampler.

Two-tube system – inner and outer tube systems is advanced simultaneously into the subsurface to collect a soil sample. The outer tube is commonly made of steel and the disposable inner liner varies in material (PVC, PETG, Teflon) and length (24, 36, 48, and 60 inches).

Sampler – the outer and inner, two-tube system used for subsurface soil collection.

Catchers or retainers – used to help retain loose soils within the sampler.

HASP – Health and Safety Plan

Rig geologist – The Nobis Field Operations Lead (FOL), staff geologist, engineer, or scientist responsible for field oversight of the drilling activities.

Sampling Plan – Work Plan, QAPP, Field Sampling Plan, Scope of Work, or other description of the work being performed to meet contractual requirements.

SOP – Standard Operating Procedure

4.0 CAUTIONS

- This SOP does not address all of the hazards and environmental conditions that are typically associated with subsurface and other construction investigations, such as the establishment of safe work zones, steep slopes, loud noise, traffic hazards, subsurface obstructions, powerful machinery, prevention of contaminant migration, gas emanations, etc.

- All personnel involved in activities associated with this SOP should be familiar with the contents and activity hazards included in the Site-Specific HASP.

- Site access and utility clearance is required prior to commencing any subsurface investigation and/or construction involving drilling and/or heavy machinery such as back-hoes, excavators. Drill operators and rig geologists should be familiar with the locations of utilities in the area, both overhead and underground. For all subsurface explorations or excavations using any method, adherence to regulations that require utility notification (i.e. Dig Safe® or Call Before You Dig) is mandatory. Refer to SOP No. ENV-009 Site Access and Utility Clearance.

- As with any heavy equipment, caution should be taken to minimize the potential for injuries such as crushing and pinching. Additionally, the drill rig has overhead hazards and in most cases noise hazards which should also be considered. Before any drilling is completed, the rig should be set level and securely on its outriggers. If additional stabilization must be placed under the outrigger, due to ground conditions, these shall consist of large wooden blocks. Drill operation with the drill tires/tracks in contact with the ground should be avoided.

- All personnel shall be familiar with the location of the rig's emergency kill switch.

- All non-essential personnel should be kept clear of exclusion zone or from an area surrounding the rig. All non-essential personnel should be kept clear of the exclusion zone, or from an area surrounding the rig.

- Due to the potential of noise, hand signals should be developed for communication between rig geologist and the driller.

- If the potential for subsurface contamination exists on a site or is unexpectedly encountered during drilling, care should be used to prevent penetration of an aquitard that may serve to confine the distribution of contamination. Thin silt or clay layers may not be readily identified if standard (i.e., 5-foot spacing) sampling is used.

5.0 PERSONAL QUALIFICATIONS

The drill operator should be licensed (if appropriate according to State regulations) or otherwise sufficiently experienced to operate the drill rig. The drillers' attendant should be sufficiently familiar with the rig operations to adequately assist the drill operator.

All rig geologists operating at hazardous waste sites are required receive 40 hours of basic hazardous waste operations and emergency response (HAZWOPER) training as prescribed by the Occupational Safety and Health Administration (OSHA). This training must be refreshed annually with an 8-hour refresher course.

The rig geologist should be sufficiently knowledgeable of the drilling method, classification of soils, and installation of groundwater monitoring devices (if required).

6.0 EQUIPMENT AND SUPPLIES

- Site Sampling Plan and HASP
- Field book (and data recording sheets, if used)
- Boring logs and field data sheets, as specified in the planning documents;
- PDA or laptop with pLog™ (if electronic field data input is specified in the Sampling Plan)
- Tape measure, 25-foot steel (or equivalent)
- Lumber crayon (Kiel™ or equivalent)
- Sample containers
- Aluminum foil (if drillers jars are used for soil headspace screening)
- Zip-loc ® baggies (if drillers jars are not used for soil headspace screening)
- Indelible marker

- Fiberglass tape and plunker
- Polyethylene sheeting to spread on the ground in the work area
- Decontamination equipment (sprayers, soap, water, brushes, solvents) as required by planning documents
- PPE and monitoring equipment (as specified in the Site-Specific Health and Safety Plan)
- Survey stakes, pin-flags
- Caution tape, barriers, cones
- Camera and extra batteries
- Water level meter, if required.
- Engineers rule
- Coolers
- Ice
- Chain of custody
- Knife

7.0 PROCEDURES

7.1 Office Preparation and Mobilization

a) Preparation, review, and approval of all appropriate planning documents such as the Site-Specific HASP and Sampling Plan associated with drilling activities prior to mobilization.

b) Prior to mobilization, the project team shall conduct a field scoping meeting to discuss details pertaining to the planned work.

c) Prior to mobilization, subcontractors shall provide pertinent certificates of insurance in accordance with Nobis procurement policy. Additionally, as required, subcontractors will provide certificates documenting completion of required safety training.

d) Site access and utility clearance must be performed in accordance with Nobis SOP ENV-009.

e) One day prior to mobilization, the rig geologist shall ensure that all equipment and supplies required for the field effort is on-hand (or is en-route), is operational, and is appropriate for the intended tasks. In the event rig geologist is not available to perform this task, it will be performed or delegated to others by the Project Manger, as determined in the field scoping meeting.

f) During preparation and mobilization, supplies and equipment should be kept away from potential sources of contamination. These sources can include fuel containers, equipment containing fuels, environmental testing calibration standards, known contaminated materials and samples.

g) Review any special requirements of the Site-Specific HASP with all subcontractors.

7.2 Field Procedures

a) Once mobilized to the Site, the rig geologist will review each of the proposed borehole locations with the drill operators to evaluate potential hazards or obstructions and to ensure that utility clearances have been obtained from all required utilities. The rig geologist should take photographs of the overall work area and all borehole locations and nearby utility markings prior to disturbing the ground surface. If borehole locations must be moved due to the presence of hazards or obstructions, the rig geologist should contact the Project Manager or technical lead and work with the drill operator to identify suitable alternate locations that meet the goals of the investigation and allows adequate safety.

b) The rig geologist and drill operator should inspect the drilling equipment and any subcontractor-supplied materials for compliance with contract and technical specifications. Non-compliant equipment or materials shall not be utilized. Sample liners should be kept in a sealed or clean environment prior to use.

c) If necessary, barriers/caution tape shall be erected around the drilling location and work/laydown areas to restrict access around the drill site. If necessary, place polyethylene sheeting in the work area to prevent soils from contacting the ground surface.

d) Mobilize the drill over the drilling location. The drill should be stabilized and leveled if possible (typical truck-mounted rigs do not come with stabilizers or outriggers). The mast should be raised slowly such that no shifting of the rig occurs and no overhead utilities or other structures are contacted.

e) The driller will assemble the sampler, attach a disposable liner to the cutting shoe and insert it into the outer tube. Screw the cutting show and outer tube together, and attach the drivehead to the top of the outer tube. Insert a soil catcher or retainer inside the cutting shoe such that the rounded portion is upright..

f) Advancement of the shallow depths (up to 6 feet) should be completed slowly as unmarked utilities or other obstruction may be present. Initial driving should be completed using a minimum 1-foot long drive rod. Avoid attaching the drive cap directly to the drivehead in order to minimize damage to the drivehead threads. Every effort should be made to attempt to make a vertical borehole. Because the drill string is held in-place only by the driller's hands, inattention can easily cause an off-vertical boring.

g) Once the target sample depth is reached, the driller retracts the drillstring using a pull cap and hydraulic lifting power. The drillstring is retracted in sections and is typically held in place using hand wrenches. Rig wrenches or other holding devices may also be used, if so-equipped.

h) If only a discrete sample interval is required, a plug is attached to the bottom of the cutting shoe prior to insertion into the subsurface. This plug will prevent soil from entering the inner tube until it is removed. The plug is reverse threaded and is removed by inserting inter-locking sections of threaded-rods and unscrewing the plug and removing it from the hole. The sampler is then driven to the target sample bottom and removed conventionally.

i) The engineer/geologist shall observe and document the drilling operation and make certain that it is in compliance with all planning documents.

j) The sampling device is disassembled in reverse order from assembly. The rig geologist may be required to slice the disposable liner open to access the soil sample.

k) The geologist/engineer will collect soil samples in accordance with the Sample Plan and will log the soil lithology in accordance with Nobis SOP No. SA-0001.

l) Other observations the engineer/geologist should make include the ease of drilling, hard drilling, drilling refusal, etc.

m) The engineer/geologist should conduct regular health and safety monitoring of the boring location as specified in the HASP.

n) If the soil boring is to be abandoned, it shall be done in accordance with the applicable planning documents and appropriate State regulations.

o) If the boring is to be converted to a monitoring well, the well shall be constructed in accordance with Nobis SOP HYD-001 or the Sample Plan. Installing a monitoring well in a DPT-drilled hole is difficult and pre-packed wells are often utilized.

p) Once the boring/well installation is complete, the rig will be moved off of the boring location.

q) Drill cuttings and excess sample material shall be considered investigation-derived waste and will be managed in accordance with planning documents.

r) Decontamination should be performed in accordance with Nobis SOP FS-004. In general, those procedures are:

1. Brush loose soil from sampler, pocket knife, etc.
2. Rinse with tap or bottled water.
3. Wash and brush with Alconox™ (or equivalent) detergent wash.
4. Rinse with tap or bottled water.
5. If steam cleaning of downhole equipment is to be performed, document the effort in the logbook.
6. Containerize and handle decontamination wastes and wastewater in accordance with planning documents.

7.3 Data and Records Management

Data associated with the logging of soils is recorded in accordance with Nobis SOP SA-001. Digital photographs taken during the drilling operations should be downloaded and stored on the Nobis project server or field computer after the completion of each day's work. Copies of field book entries shall be maintained in the project files. The copies of the field book entries shall be returned to the Project Manager the following day. If the following day is not possible, the field book entries shall be submitted to the Project Manager as soon as possible after completion of associated field activities.

7.4 Communication and Technical Direction

The Project Manager is responsible for coordination with necessary subcontractors. The rig geologist is responsible for implementing the field activities as they are outlined in planning documents. If adjustments are required (i.e., refusal, gross-contamination encountered, subsurface utilities), the rig geologist shall contact the Project Manager or FOL to apprise them of the situation and identify possible solutions. The Project Manager or FOL will determine the most effective solution, and direct the rig geologist to proceed. All communication and technical direction are to be documented in the rig geologist field book.

7.5 Demobilization

Demobilization from the borehole location will be completed in the reverse order of the mobilization. It is anticipated that DP tooling decontamination will be completed as part of the location demobilization.

Prior to final demobilization from the project site, the rig should be free of gross contamination. Additional decontamination (i.e., rig and equipment spray-down) may be required as specified in planning documents.

8.0 QUALITY CONTROL / QUALITY ASSURANCE

Quality control of the drilling process shall be the responsibility of the rig geologist overseeing the drilling. The QA/QC shall consist of verification that all procedures completed are in accordance with appropriate planning documents, inspect drill rig and associated tooling for contract compliance and safety reasons. Any supplies brought on site as part of the drilling operations shall also be inspected prior to their use.

9.0 REFERENCE

ASTM D6282-98 (2005) Standard Guide for Direct Push Soil Sampling for Environmental Site Characterizations

SOP SA-001 Description and Identification of Soils

SOP ENV-009 Site Access and Utility Clearance

SOP FS-004 Field Sampling Equipment Decontamination

Nobis SOP HYD-001 Monitoring Well and Piezometer Installation Procedure

1.0 SCOPE, APPLICATION, AND LIMITATIONS

This Standard Operating Procedure (SOP) has been prepared by Nobis Engineering, Inc. (Nobis) to specify the means and methods required to appropriately document and track samples collected in the field for delivery to laboratories for analyses using Scribe software. Scribe is a United States Environmental Protection Agency (EPA) proprietary computer-based program designed to record and track field and quality assurance (QA) samples and prepare traffic reports (TRs)/chains of custody (COCs) and sample labels. This SOP shall be referenced when performing field sampling events including samples that will be submitted to EPA Contract Laboratory Program (CLP), Delivery of Analytical Services (DAS) program, or other designated laboratory programs.

2.0 INTRODUCTION

This procedure includes the minimum required steps and quality checks that the Sample Manager or Field Operations Leader (FOL) (or designee) is to follow when preparing field samples for submission to analytical laboratories. Once a user becomes fluent in the program several shortcuts or alternate data-entry processes can be implemented. Often, existing projects can be used for repeat sampling rounds to reduce the number of steps in the process. This SOP addresses the technical requirements and required documentation to be completed following sample collection.

3.0 DEFINITIONS

Field Sheet – A form designed for the collection of pertinent field data for a single location in an organized and easy to use manner.

Case Assignment – Specifies the laboratory and analyses to be performed. CLP Case Assignments are provided by the EPA; DAS Case Assignments are developed and provided by the Nobis Lead Chemist.

Chain of Custody (COC) – This term is used synonymously with Traffic Report. The report from the Scribe system that provides a listing of samples, analyses, dates and times of sampling, and where and when samples were shipped. This document is used to document samples shipped for analysis.

Contract Laboratory Program (CLP) – EPA program used for routine analytical services where the EPA coordinates and communicates with the laboratory.

Delivery of Analytical Services (DAS) – EPA program used for non-routine analytical services where the contractor (Nobis) coordinates and communicates with the laboratory.

Non-Routine Analytical Services (NRAS) – EPA program used for dioxins/furans and/or PCB congener testing.

Performance Evaluation (PE) Samples – Performance evaluation samples are defined in the project QAPP and are samples that need to be prepared by the laboratory from vials and/or bottles

provided by the EPA PE Repository or other PE sample vendor. These samples are identified on the COC with the PE sample ID provided by the EPA or vendor.

Quality Assurance Project Plan (QAPP) – defines the data quality objectives for the project.

Quality Assurance (QA) Samples – Samples that may be used for quality assurance include Trip Blank, Equipment Blank, Rinsate Blank, Field Duplicate, and Performance Evaluation Samples. These types of samples are given a different "Sample Type" than field samples.

Sample Label – Printed adhesive label affixed to the sample container which includes sample information (i.e., sample number, station location, collection date and time, analysis, preservative, etc.)

Scribe v.3.9.3 – Scribe supports the mission of EPA and contractor personnel who visit hazardous waste sites and take soil, air, water and other matrix samples. This software automates many of the processes that personnel follow to assure data quality for the analyses that are later conducted on those samples. Scribe was created to automate printing of sample documentation in the field, reduce the time spent completing sample collection and transfer documentation, and, facilitate electronic capture of data prior to and during field sampling activities. The program output is designed to upload all sampling data automatically to the EPA database through a website, a requirement of the Remedial Action Contract 2 (RAC2) contract. This task is performed by the Lead Chemist or designee following shipments.

Traffic Report (TR) – This term is used synonymously with Chain of Custody. The report from the Scribe system that provides a listing of samples, analyses, dates and times of sampling, and where and when samples were shipped. This document is used to document samples shipped for analysis.

4.0 CAUTIONS

Scribe may not include all the pertinent site and sample information required for a project; therefore, check with the Project Manager, Lead Chemist, Technical Lead, etc. on the project to ensure that appropriate information is collected and documented. Additional sample tracking spreadsheets may be required to capture all of the required data.

5.0 PERSONNEL QUALIFICATIONS

All samplers (field staff/scientist/geologist/engineer) should have a cursory knowledge of the program; however, only the Sample Manager and/or the FOL (or designee) shall require working knowledge of the SOP and the Scribe program. Scribe provides training files that are available from the ERT support site at:

http://www.ertsupport.org/download.asp?PKNAME=SCRIBE&DKEY=SCRIBE.

6.0 EQUIPMENT AND SUPPLIES

The following equipment is expected to be required for Scribe documentation:

- Computer with Scribe Version 3.9.3 installed
- Printer/photocopier (multi-use printer/scanner/copier unit is preferred, but not required)
- Avery labels #5160 (1 X 2 5/8)
- Field book (and/or data recording sheets)
- Ball point pen (and or marker), indelible (black)
- Sample containers with labels and the appropriate preservatives
- Tape – clear, packing
- Baggies

7.0 PROCEDURES

The procedures required to complete sample management tasks using Scribe are provided in the following sections.

7.1 Office Preparation and Mobilization

7.1.1 Coordinate with the Lead Chemist to obtain the Case Assignment, performance evaluation (PE) samples, applicable modifications, and turnaround times. Provide the Nobis Lead Chemist with contact information as soon as established at the site. If issues arise following shipments, resolution with field staff may be necessary.

7.1.2 As an option, many of the procedures in Section 7.2 can be performed prior to sampling, if the sample IDs are known.

7.1.3 Scribe New Project Information Data Entry

The following steps outline the procedures to start a new project:

a. Open the Scribe software. The New Project Wizard will appear. If you have already started a project, select “Open Project”; otherwise, select “Next”.

b. Complete the Project Information. Refer to the Case Assignment for the required information. Select “Next”.

c. Browse to the location that you would like to save the database. For convenience and portability select a location under the c:\ root directory on the site-designated computer. This will ensure that any employee using the site computer will be able to access the location. After the sampling effort is completed, all final files and project information should be saved to the project folder under “Analytical Information\Scribe”. Select “Finish”. Note that if the Site has internet connectivity, the database should always be saved in the “Analytical Information\Scribe” folder in the appropriate project folder on the server.

d. The full Scribe interface will open and default to the Site Info window. Complete as much of the information in this window as possible. Leave any information not known blank. Throughout the user interface,

required fields will be highlighted in blue; these fields must be completed accurately before moving to the next step.

- Site Action should be completed from the "Purpose" field on the CLP Case Assignment. If the information is not included in the dropdown menu, then input it.

- EPA Contact is the EPA Task Order Project Officer (TOPO) assigned to the project and their telephone number.

- Contractor Contact is the Nobis PM and their telephone number.

- WA Number is the Work Assignment (Task Order [TO]) and is usually the end of the Nobis project number plus the phase of the project, the task Site Action, and the Spill ID. For example, the TO number for Eastern Surplus is 0005-RA-LR-0189. If you are unsure of your task order number, ask the PM.

- The Contract Number is the appropriate EPA contract number associated with the project and site work. For example, the 2006 awarded Contract Number for EPA Region 1 RAC2 is EP-S1-06-03. If you are working on another contract, please ask the PM for the appropriate Contract Number.

- Select Save at the bottom of the screen.

7.1.4 Scribe "Planning" Data Entry

The following information will be entered in different subsections under the "Planning" section. Navigate by selecting the appropriate subsection in the left frame.

a. Select "Events" on the left frame. In the main frame, input an Event ID (e.g., Fall 2010 GW Sampling). The event name should describe what the sampling is for and when the sampling will occur and should be consistent throughout the project.

b. Select "Sampling Locations" from the left frame. Select "Add" from the bottom of the screen. Begin adding the different sampling locations for the sampling event if known (e.g., MW-12D, INN, SW-4, etc.). Enter all the information known for the location and select "Add" at the top of the screen to continue adding locations. Select "Save" at the bottom of the screen following your final location. You can scroll through using the Previous and Next buttons. It is noted that this step can be completed in the field at the time of sampling if the sample locations are not known prior to mobilization.

c. Select "Analyses" from the left frame. Select "Add" from the top of the screen to add in any analyses that are not listed. Select "Filter" from the top of the screen and select each of the analyses for which you will be submitting. It is best to delete all analyses here and input only the ones

that you want to use. The name and abbreviation for the analyses should be approved by the Nobis Lead Chemist prior to mobilization to the field. When setting up new analyses, make sure to select the appropriate "Analyses Type". VOCs and SVOCs should be organic, metals should be inorganic. DAS and other program analyses should be considered CLP generic. A spreadsheet of the default analyses are saved on the Nobis server in the R:\Field_Documentation\Scribe location. This spreadsheet can be uploaded to the Scribe database by Selecting File>Import>Custom Import and browsing to the file location.

d. Select "Sampler" from the left frame. Delete the pre-loaded sample names listed and input active sampler's names by selecting "Add" at the top of the screen.

e. Select "Lab List" from the left frame. Check to see that the laboratory on the Case Assignment is listed and that the information is correct. If it is not, correct the information. Select "Add" to include any laboratories that are not currently in the list. Note that laboratories often change names through mergers and acquisitions. A spreadsheet of the default laboratories are saved on the Nobis server in the R:\Field_Documentation\Scribe location. This spreadsheet can be uploaded to the Scribe database by Selecting File>Import>Custom Import and browsing to the file location.

7.2 Field Procedures

7.2.1 Scribe "Sampling" Data Entry

The following steps will be completed once the samples are collected and delivered to the Sample Manager or FOL. Sample-specific information and analyses will be entered in different subsections under the "Sampling" section. Navigate by selecting the appropriate subsection (i.e., sample matrix) in the left frame. The steps described below use water samples as an example. The instructions are similar for the different matrices presented in the left frame.

a. Select "Water Sampling" from the left frame. Select the "Event ID" from the drop-down menu. Input the Sample ID into the Sample # field (e.g., ESLT-GW-MW18S-0111) and complete the remainder of the fields on the Sample Details tab. If the correct information is not included in a drop-down menu, then revise or add it, as appropriate.

b. Pay particular attention to the Sample Type pull down menu. Select the appropriate Sample Type from the drop-down list. Most samples will be designated as Field Samples. Field Duplicate needs to be designated for the duplicate sample itself as well as the parent sample and be appended with a sequential number. For example, ESLT-GW-MW18S-1008 / ESLT-GW-DUP03-1008 is the third field duplicate pair for the sampling event; both MW18S and Dup03 will be designated as the Sample Type "Field Duplicate 03". Designate the remaining QA samples as appropriate. MS/MSD samples are always considered one sample

(with additional bottleware) and should be designated as Lab QC for the sample type.

c. Select the “Water Quality” tab. Input the stabilized monitoring parameter readings from the sampling field sheets.

d. Select the “Analysis” tab. Before entering any data on the first sample, select the “CLP/Tag Settings” button at the bottom of the screen. Fill in the Case number from the laboratory assignment information. Input the next available CLP number obtained from the Lead Chemist. Note that EPA no longer requires the use of tags for the samples. If no specific Tag Number is required, Scribe will generate the first tag number of 1000.This step should only be required for the initial sample of the task; the remainder of the samples will auto-increment from the value that is input here.

e. Click in the “Analyses” field and select the applicable analysis from the drop-down list. Notice the CLP and Tag fields automatically populate if the analysis is designated as a CLP analysis in Step c in Section 7.1.4. If the analysis is a DAS or other program analysis, input the appropriate sample number. Click in the “Container” field. Select the container used from the drop-down list. Click in the “No. of Containers” field and input “1” (even for VOAs), continue through the rest of the fields. If the correct information is not included in the drop-down menu, then revise as appropriate. Select the collection method; this is where the pump or sampler type can be input. Select the storage method (i.e., ice, dry ice, refrigerator). Select the preservative (e.g., HCl, HNO3, etc.). Select whether the sample is a matrix spike/matrix spike duplicate (MS/MSD). An MS/MSD sample is a laboratory QC sample that generally requires 3 times the sample volume for water samples.

f. For analyses with multiple containers, hit the “Copy Analyses” button at the bottom of the screen. Copy the analyses until you have the appropriate number of sample containers. Ensure that the MS/MSD sample has sufficient number of containers.

g. For additional analyses (metals, PCBs, VOAs, etc.) press the “Add Analysis” button at the bottom of the screen and complete the fields.

h. The “Assign From” button can be used for samples that have the identical analysis suite as previous samples. Press the “Assign From” button and enter the sample number (e.g., ESLT-GW-MW3S-0713) of the analyses you wish to copy.

i. To prepare a field duplicate sample, return to the “Sample Details” tab. Click “Copy” along the top bar and Scribe will produce an identical copy of the sample that was just prepared. Update the sample number with the correct information and update the sample time. Click “Save”.

j. Press the “Next” button to move to the next sample. Select the “Sample Details” tab and repeat Steps a through g in Section 7.2.1.

k. Press “Close” at the bottom of the screen and review the data input in the flat format to ensure completeness and accuracy.

7.2.2 Scribe Sample Management

The two main subsections used by Nobis Sample Managers under the Scribe Sample Management Section are the “Samples” and “Chain of Custody” subsections.

The following steps outline the procedures for creating a COC. It is critical that the appropriate COC format is selected.

a. Select “Chain of Custody” from the left frame. Select “Add” from the top of the screen or “Add a Chain of Custody” from the bottom of the screen.

b. Click on the “COC Format” field (see below) and select the appropriate COC format. You will need to create separate COCs if you are shipping samples for CLP Organics and CLP Inorganic analyses. For DAS and other program analyses select CLP Generic COCs. Once you select the laboratory from the dropdown list, many of the fields will automatically populate. Complete the remaining fields including the FedEx airbill/tracking number, if applicable.

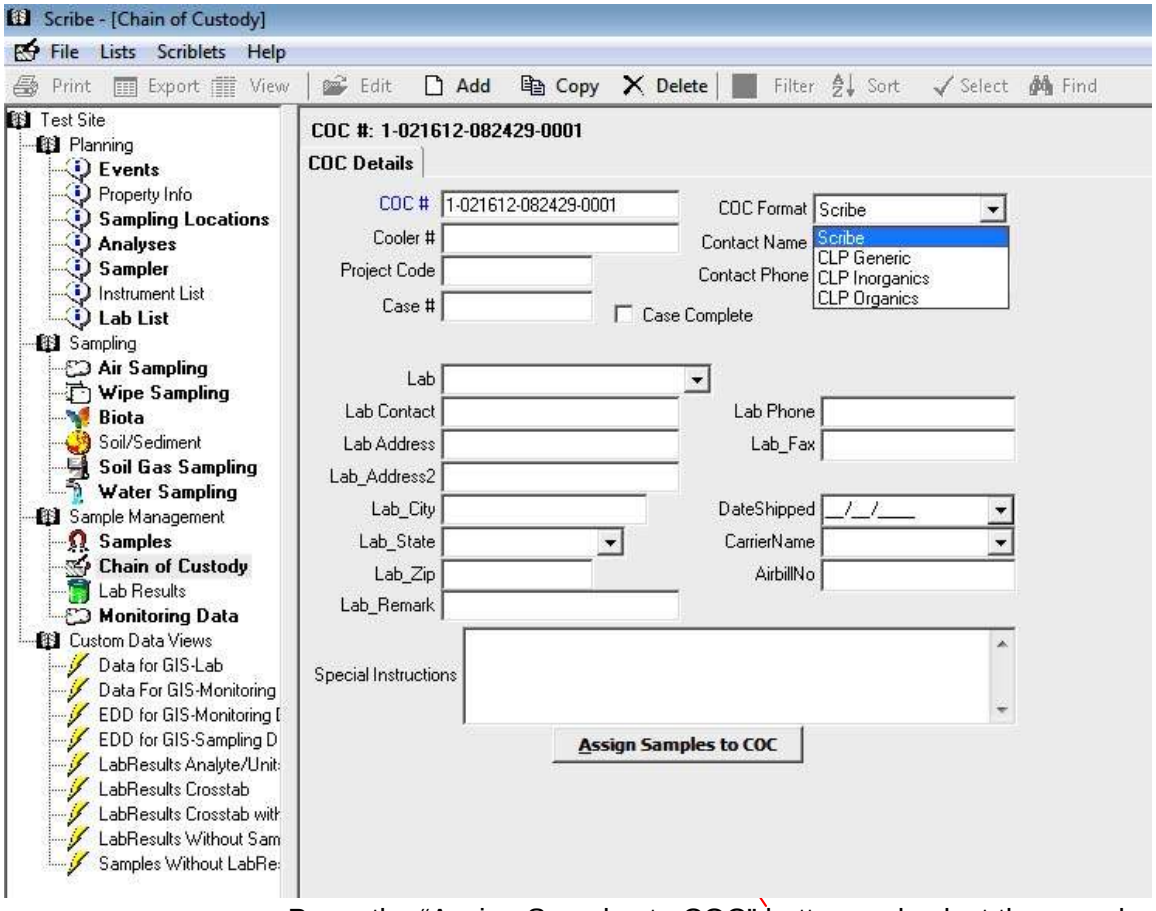

c. Press the "Assign Samples to COC" button and select the samples being submitted to that laboratory. You can sort and filter the list of samples by using the buttons at the top of the screen. Note that if you selected a CLP Organic COC in the steps above, only those samples with a CLP Organic analysis will be displayed. The same is true for CLP Inorganics and CLP Generic.

d. Repeat for each laboratory where samples are being shipped. Be sure to change the "Case #" field if the Case number changes between laboratories. Be sure to check the "Case Complete" checkbox if there will be no further shipments from the Site under the current Case.

e. Once the samples are assigned to the COC, labels can be prepared following the steps in Section 7.2.2, starting with Step m. If all of the samples to be included on the COC have been assigned, proceed with the following steps. If additional samples are to be added to the COC at a later time, select the COC from the list displayed in the "Chain of Custody" window and click on "Assign Samples to COC" and repeat Steps c and d in Section 7.2.2.

f. In the event that you want to remove a sample from the COC, select "Samples" Tab and browse to the desired sample. Select the "COC value" in the record and physically delete the value (using the delete key on the keyboard, not the Delete button on the screen as that will delete the entire sample).

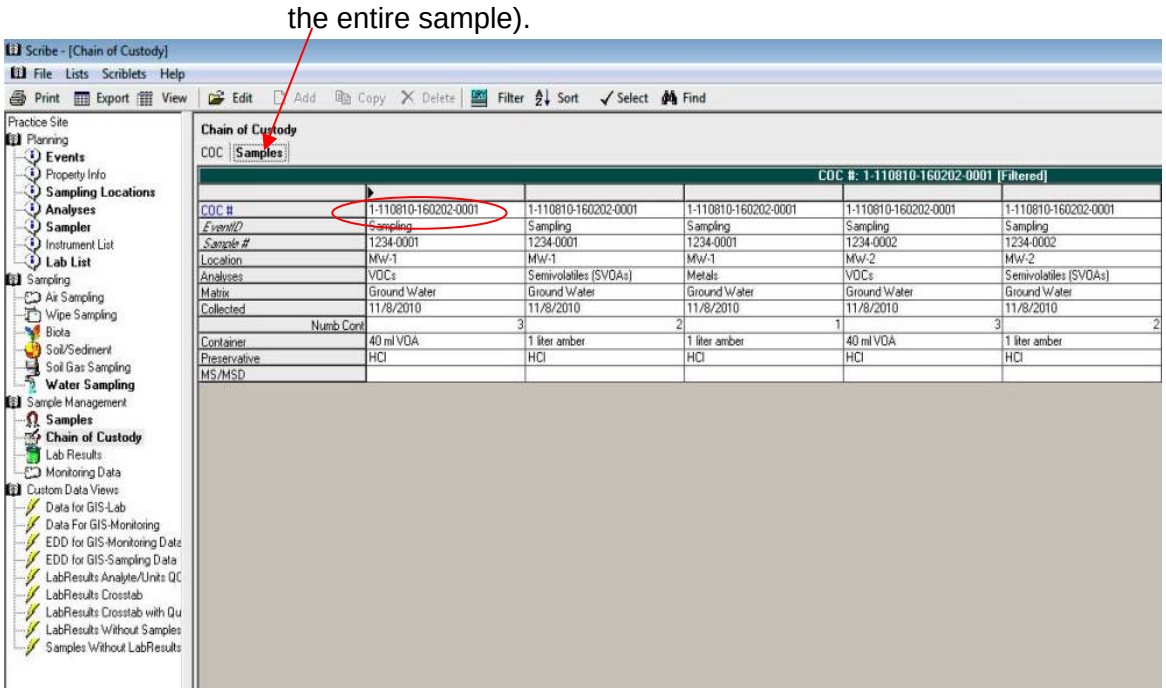

g. Pull down the "File" menu on the menu bar and select "Backup Project". Browse to the location desired or use the default location (e.g., C:\Program Files (x86)\Scribe\BACKUP) and press Save.

h. Click the "Chain of Custody" tab and select the appropriate COC and press the "Export" button at the top of the screen. Select "COC XML File (*.xml)" (see below).

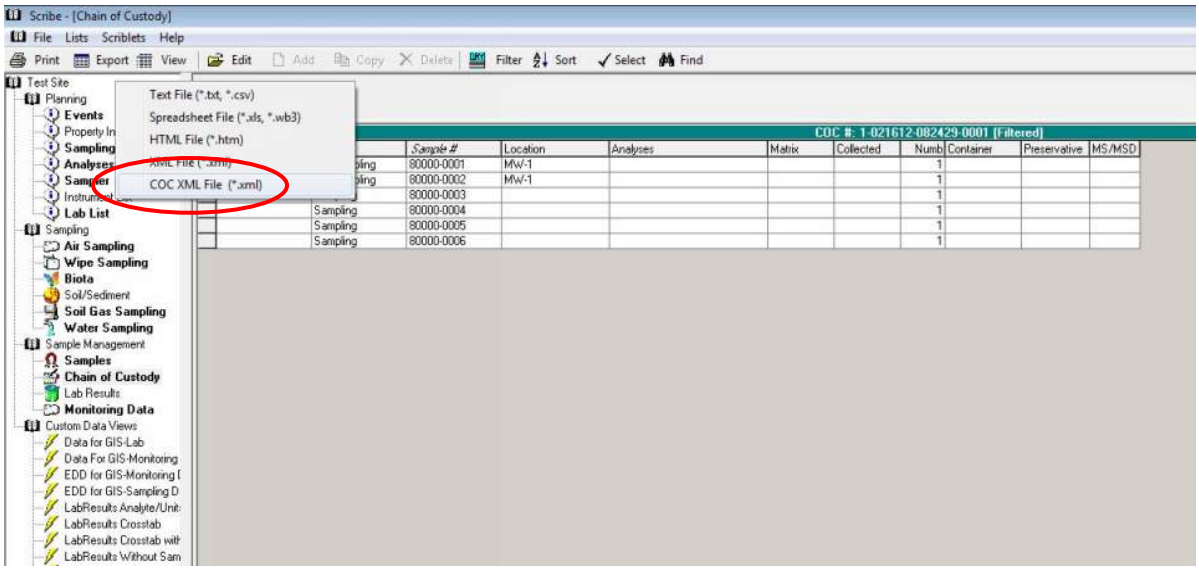

i. The correct COC should be checked, but if additional COCs are required, check each of the COCs that require export and select OK. Be sure that the "CLP Region Copy (Includes additional Site and Geospatial Information" checkbox is checked (see below). Browse to the folder desired and "Save" the file. Note that the *.xml file will open in Internet Explorer (IE) where you can review the file. Close the IE window and return to Scribe.

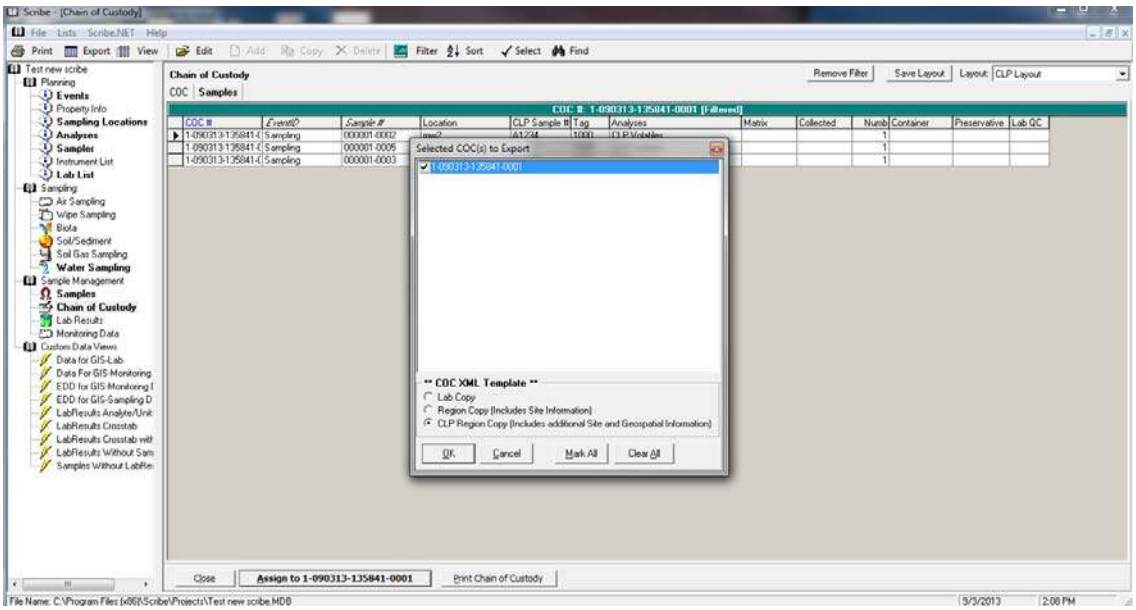

j. In the COC tab, ensure that the appropriate COC is highlighted and press the "Print Chain of Custody" button at the bottom of the screen. Select "Report Setup" and use the Report Header displayed below. Select whether to print the "Lab Copy" or the "Region Copy" of the COC and select OK. The Lab Copy of the COC should be included in the cooler with the samples while the Region Copy will be sent to the Nobis Lead Chemist and subsequently to the EPA. The Lab Copy of the COC lacks Site and QC information that is displayed on the Region Copy to ensure unbiased analyses from the laboratories.

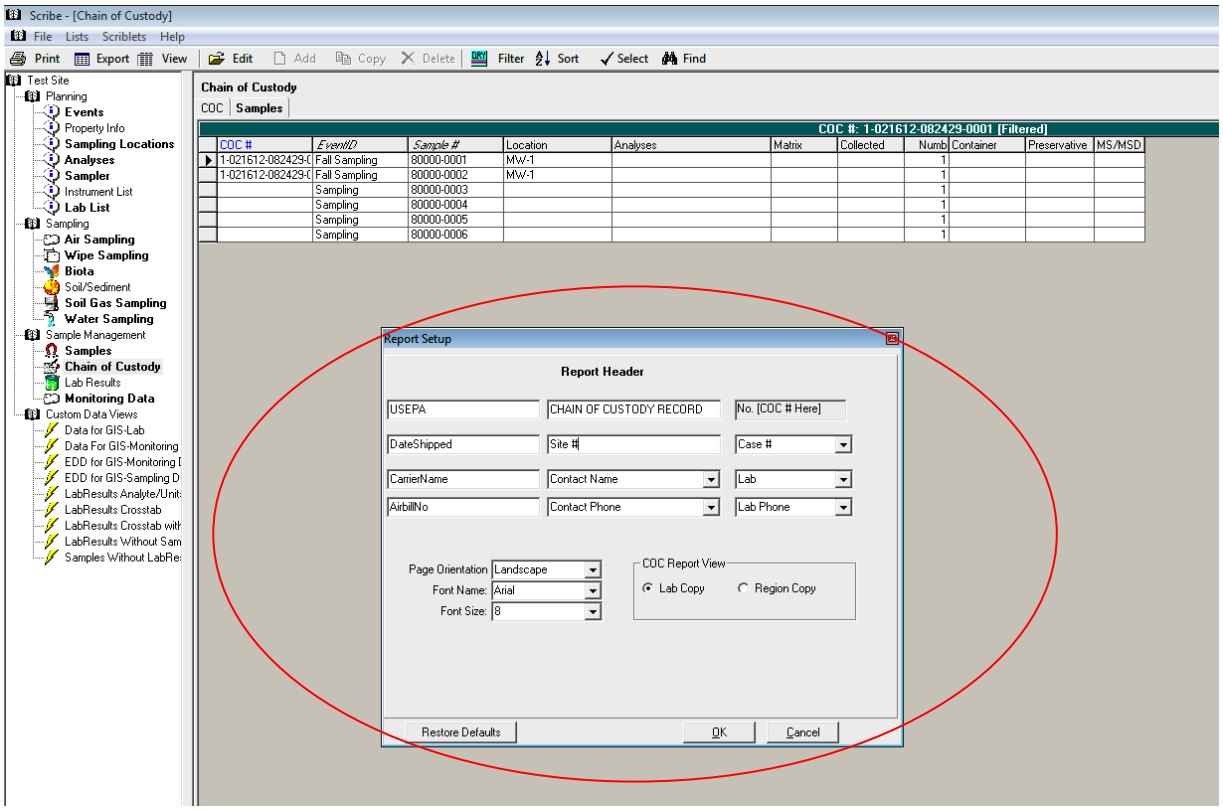

k. Repeat for both the lab and region copies of the COC, if required. DAS and other program laboratories should receive the region copies of the COC.

l. Scribe now performs a QC check for the COC hardcopies and XML reports. The QC check will generate a QC Exceptions notification and a log indicating what information is missing from which samples (See example below). If errors are identified the user should correct the errors prior to printing the COC.

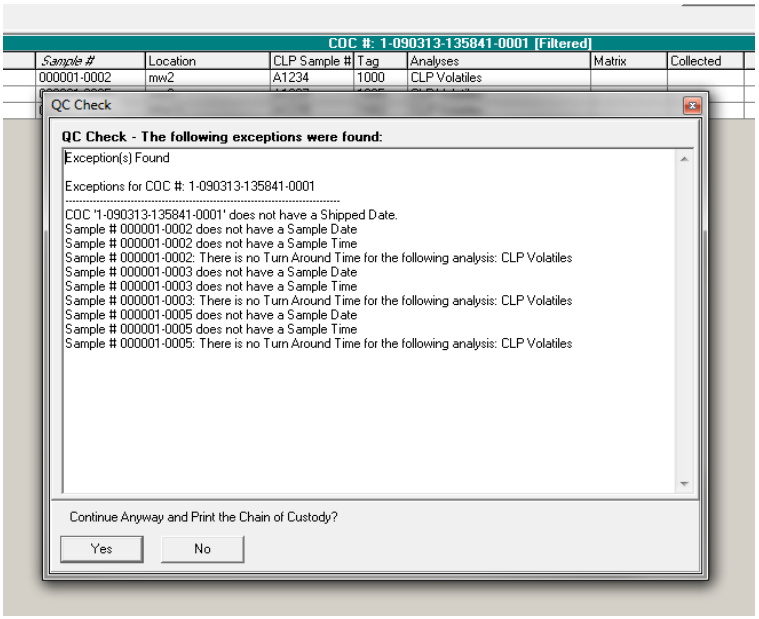

m. There are different methods for printing labels in Scribe. However, it is best to print labels AFTER assigning the samples to a COC. The following procedures cover the most common method for printing sample bottle labels.

n. After the samples have been assigned to the appropriate COC, select the “Samples” subsection on the left frame. In order to print select sample labels and not all of the sample labels, select a column or value, right click on it, and select Filter for a value. Generally, the “Remarks” column can be used as a dummy value for filtering. In the Samples view, enter a value in the column for all the samples that require a label and filter for that value. Repeat that process with a new value for each round of labels to print. It is recommended that a one digit numerical value is used for efficiency. For example, input 1 for the first round of samples being labeled, 2 for the second round, 3 for the third, etc.

o. Press the “Print Labels” button at the bottom of the screen and select “Label Setup”.

p. In this section the label format for each job will be set up. Choose #5160 from the list and click “Next”.

- Set up the labels as:

  Line 1: Case # [CaseNumber] CLP #[CLP Sample #]
  Line 2: [Sample #]
  Line 3: Date: [Sample Date] Time: [Sample Time]
  Line 4: [Analyses] Pres: [Preservation]

- To select the entries for the label, locate the entry in the list indicated on the left, select it, and drag it to the location desired on the right. Double click on each line and set the font to 8 pt and remove any text that is bold. Note that for DAS, NRAS, etc. samples, replace the "CLP" with the appropriate acronym.

- Set up the labels as:

  Line 1: Case # [CaseNumber] DAS # [CLP Sample #]
  Line 2: [Sample #]
  Line 3: Date: [Sample Date] Time: [Sample Time]
  Line 4: [Analyses] Pres: [Preservation]

q. Press "Next" and then "Finish" and print the labels using the Avery #5160 labels (or generic equivalent). These labels will be applied to the sample containers. Note that it is best to dry off the containers prior to affixing the labels and that all labels must be completely covered with clear packing tape prior to sample shipment.

r. Continue to prepare the samples for shipment in accordance with Nobis SOP SH-001.

7.3 Data and Records Management

7.3.1 It is recommended that a summary of the samples and monitoring parameters be exported to a spreadsheet at the completion of sampling. Click on "Samples" in the left pane and filter for the current sampling event in the right pane. Right click on any of the columns and select "View>Select Columns". Ensure that all appropriate columns names are checked. It is recommended that at a minimum the following are checked: Analyses, CaseNumber, CLP Sample #(even if not a CLP sampling event), COC, Collection Method, EventID, Lab, Location, Matrix, MS_MSD, Preservation, Remarks, Samp_Depth, Samp_Depth_To, Samp_Depth_Units, Sample #, Sample Date, SampleTime, Sample Type, Sampler, and Tag. Additional columns can be displayed based on the individual needs. Once the columns are selected and the appropriate samples are filtered, click "Export" on the menu bar and select "Spreadsheet File". Save the spreadsheet in a Microsoft Excel file format. This file will often be formatted and included in documents prepared for the Site.

7.3.2 Forward a copy of the signed Lab COC, the Region COC, and the *.xml file to the Lead Chemist. The file names should have the following naming convention: Case#_Task Order#_Date_file type.
For example: Case 41770_80005_02122012_lab copy.

7.4 Communication and Technical Direction

7.4.1 Notify the Nobis Lead Chemist of any changes to the CLP, NRAS, or DAS sampling or deviations from the QAPP including adding or removing samples,

analyses, and shipment schedules. The EPA Sample Management Office (SMO) requires notification of any changes to the RAS or NRAS Cases after they have been assigned and if there will be Friday shipment/Saturday delivery.

7.4.2 Forward COCs and *.xml files to the Nobis Lead Chemist as soon as is reasonably possible. The files are needed by EPA Region I and EPA SMO to address concerns and questions from the laboratory and contain the FedEx tracking number to confirm that the samples were delivered to the laboratory.

7.5 Demobilization

7.5.1 Following completion of the Case await any questions arising from the CLP laboratory, EPA SMO, and the Nobis Lead Chemist. Respond to questions promptly to not delay analysis of samples which may have short holding times.

7.5.2 Forward a copy of field notes via *.pdf to the Nobis Lead Chemist at the conclusion of the sampling event. These notes are included in the data validation memos. Name the field notes with case number, project number, event and date similar to Section 7.3.2. If more than one type of media was sampled, the notes could also be split up by type of sampling event. Examples are: Case 35432_80024_GW_02122012_Field Notes.pdf and Case 0118S_80018_GW_Rd5_02122012_Field Notes.pdf.

7.5.3 Save a copy of the project from the laptop to the applicable folder on the server for future events (e.g., R:\80000 Task Orders\80018 Scovill LF\Analytical Information\Scribe). It may be necessary to create the “Scribe” folder if it is not already present.

8.0 QUALITY CONTROL / QUALITY ASSURANCE

The quality control/quality assurance requirements and procedures for each project and sampling event will be detailed in the QAPP.

It is advisable to have a second person familiar with the project requirements review Scribe set up and entries as time permits to ensure all information is correct.

9.0 REFERENCES

Scribe download site: http://www.ertsupport.org/downloads.htm.

US EPA Environmental Response Team User Manual for Scribe CLP Sampling (located on R:\80000 RAC Analytical\EDDs\Scribe\Scribe Users Guide Draft.pdf)

Nobis Engineering, Inc.	STANDARD OPERATING PROCEDURES			Prepared by / Reviewed by / Approved by
	Title: ENVIRONMENTAL SAMPLES: PACKAGING AND SHIPPING			
	SOP No: SH-001	Rev.: 2	Date: January 2010	

1.0 SCOPE, APPLICATION, AND LIMITATIONS

This Standard Operating Procedure (SOP) establishes methodologies for shipping environmental samples collected during field investigation or remediation activities. This SOP follows the more stringent requirements of the International Air Transport Association (IATA) and is intended for shipment via an airline. However, it is also applicable for all samples shipped via ground and rail transportation. This SOP is divided into 3 sections for the following types of environmental samples:

1. Environmental samples where the contaminants are estimated to be less than 1% (10,000 ppm) of the total volume of the environmental media (e.g., drinking water, surface water, groundwater, soil, sediment, or building materials).

2. Drinking water, surface water, or groundwater preserved with hydrochloric acid (HCl), nitric acid (HNO_3), sodium hydroxide (NaOH), or sulfuric acid (H_2SO_4).

3. Soil or sediment samples with methanol used as a preservative.

This SOP is not intended for samples collected from process wastewater steams, non-aqueous phase liquids, drums, bulk storage tanks, or other chemical products. It is also not intended for environmental samples that are radioactive, explosive, or poisonous via inhalation.

2.0 INTRODUCTION

The Code of Federal Regulations (CFR) 49 Parts 100 to 185 governs shipments of hazardous materials via rail, highway, and barge. The IATA Dangerous Goods Regulations govern the shipment of dangerous (hazardous) materials via air. This SOP seeks to follow the more stringent requirements of air shipment and will be used for all shipments regardless of their mode of transport. Also, this SOP is more stringent than regulatory requirements as it adheres to Nobis Engineering, Inc. quality assurance procedures regarding the management of environmental samples.

3.0 DEFINITIONS

COC	Chain of Custody
EPA	United States Environmental Protection Agency
DOT	United States Department of Transportation
HASP	Health and Safety Plan
HAZWOPER	Hazardous Waste Operations and Emergency Response
IATA	International Air Transport Association
OSHA	Occupational Safety and Health Administration
SOP	Standard Operating Procedure
QAPP	Quality Assurance Project Plan

4.0 CAUTIONS

When working with potentially hazardous materials follow the EPA, OSHA, and the safety practices as outlined in the site-specific HASP, QAPP, or other work plan document.

5.0 PERSONNEL QUALIFICATIONS

Personnel should be familiar with this SOP and should have had both general awareness hazardous materials shipping training (2 hours) and function-specific field shipping training. The general awareness hazardous materials shipping training can be taught by Nobis' hazardous materials/dangerous goods shipper and the function specific field training can be taught by the Field Operations Leader.

All field personnel at contaminated field sites are required to receive 40 hours of basic hazardous waste operations and emergency response (HAZWOPER) training as prescribed by OSHA. This training must be refreshed annually with an 8-hour refresher course.

6.0 EQUIPMENT AND SUPPLIES

- Cooler
- Environmental Samples in glass or plastic inner containers
- Labels (Dangerous Goods in Excepted Quantities, orientation arrows)
- Ink pen
- Packing materials (bubble wrap, Styrofoam, absorbent materials or similar) to prevent breakage, absorb leakage, and insulate environmental samples.
- Polyethylene zip-type bags large enough to contain the largest sample bottles
- Chain of Custody seals
- Large plastic trash bag to act as containment for the packing materials
- Packing tape

7.0 GENERAL PACKING PROCEDURES FOR ALL ENVIRONMENTAL SAMPLE SHIPMENTS

7.1 Office Preparation and Mobilization

- Verify the required type and quantity of environmental samples per the QAPP or other work plan document.
- Ascertain which sample preservatives will be used for each type of environmental sample collected.
- Acquire all required supplies for sample collection, package, and shipment.

7.2 Field Procedures

- Be certain that all individual containers are sufficiently tight, preserved, and labeled correctly.
- Clean the exterior of each sample container to ensure no visible contamination remains on the outside.
- Place sample containers within zip-type plastic baggies and remove all air from the baggie.
- If the cooler is equipped with a drain plug, ensure that it is taped in the closed position. Melt water from the shipping ice should not leak out of the cooler.
- Line the cooler with a trash bag.
- Place sample containers into the cooler, and pack sufficiently to prevent the sample containers from shifting during shipment.
- If the QAPP or other work plan document requires ice, place ice-filled zip-type bags on samples, so all samples are in contact with the ice. Place a sufficient amount of ice to retain the sample temperature between 2 and 6 degrees Celsius. Place a temperature blank (also in contact with the ice) with the samples in each cooler.
- Fill the remaining space in the cooler with packing material and close and secure the top of the trash bag.
- On the COC, sign the “Relinquished By” box and add the name of the courier or carrier and the airbill number (if applicable) in the subsequent “Received By” box.
- Place the COC into a plastic bag and tape it to the inside top of the cooler if shipping other than by private laboratory courier.
- Apply custody seals to the cooler such that the seals must be broken in order to open the cooler.
- Close the cooler and tape the cooler shut with strapping tape or similar high-strength shipping tape.
- If more than one cooler is being shipped under the same COC, copies of the COC should be placed into each additional cooler in the same manner as the original COC.
- Apply “UP Arrows” in the appropriate direction on at least two opposing sides of the cooler exterior.
- Add the appropriate shipping address labels and a return address to the cooler. If more than one cooler is being shipped to a particular recipient, label appropriately (e.g., if shipping three coolers, label one “1 of 3”, another “2 of 3”, etc.) so that the recipient is aware of the number of coolers that they should expect in the shipment.

8.0 SPECIFIC PACKING PROCEDURES

8.1 Environmental samples where the contaminants are estimated to be less than 1% of the total volume of the environmental media (drinking water, surface water, groundwater, soil, or sediment)

- The procedures outlined in 7.0 above are sufficient.

8.2 Drinking water, surface water, or groundwater preserved with hydrochloric acid (HCl), nitric acid (HNO_3), sodium hydroxide (NaOH), or sulfuric acid (H_2SO_4).

- The procedures outlined in 7.0 above are sufficient.

8.3 Soil or sediment samples preserved with methanol

- Because methanol is a flammable chemical preservative, these environmental samples will be shipped as Dangerous Goods in Excepted Quantities.
- Each sample vial must be glass with a threaded leak-proof cap.
- Each sample vial cannot contain more than 30 mL of methanol.
- Each shipping cooler cannot contain more than 500 mL of methanol.
- Intermediate packaging: Between the sample vial and the cooler there must be an intermediate package with sufficient absorbent material that will absorb the entire contents of the sample vials.
- Package tests: The completed package must be capable of withstanding without leakage:
    - Drops onto a solid surface from a height of 1.8 meters. The drop must be on each side of the box and at one corner.
    - This package test should be done on each type of cooler, but need not be done on every individual cooler.
    - At the start of every sampling event, this package test must be performed with sample containers filled with water. It should be documented that the cooler survived the drop without any breakage or leakage.

- Each cooler must have a Dangerous Goods in Excepted Quantities Label with a “3” for flammable liquids. The label must be at least 100 mm by 100 mm and must be durable and clearly visible.
- There must be orientation arrow labels on two opposing sides of the cooler.
- For transportation by highway or rail, no shipping paper is required if the total contents are less than 500 mL of methanol.
- For transport by air, a shipping paper is not required; however, an airbill must include the statement “Dangerous Goods in Excepted Quantities” and indicate the number of packages.

9.0 DATA AND RECORDS MANAGEMENT

A copy of the COC shall be retained by the shipper until the completed laboratory data package is received. In addition, a copy of the airbill shall also be retained for validation/custody purposes and payment.

10.0 COMMUNICATION AND TECHNICAL DIRECTION

Any problems or issues encountered while in the field shall be discussed with the Project Manager and Dangerous Goods Shipping Coordinator in order to derive an appropriate solution. If the environmental sample shipment is to include materials and quantities other than those discussed above, the Dangerous Goods Shipping Coordinator must be consulted in advance of the field sampling event. These procedures may have to be adjusted to accommodate additional requirements.

11.0 DEMOBILIZATION

Not applicable.

12.0 QUALITY ASSURANCE/QUALITY CONTROL

The Project Manager or Dangerous Goods Shipping Coordinator will periodically audit environmental sample shipments to verify compliance with these procedures on an annual basis.

13.0 REFERENCES

Nobis Engineering Inc. Standard Operating Procedure for Chain of Custody

Code of Federal Regulations 40 CFR Part 261.4(d) Samples

Code of Federal Regulations 49 CFR Part 173.4a Excepted Quantities

Dangerous Goods Regulations, IATA, most current version.

ATTACHMENT

Example Dangerous Goods in Excepted Quantities Label for soil and sediment samples preserved with methanol.

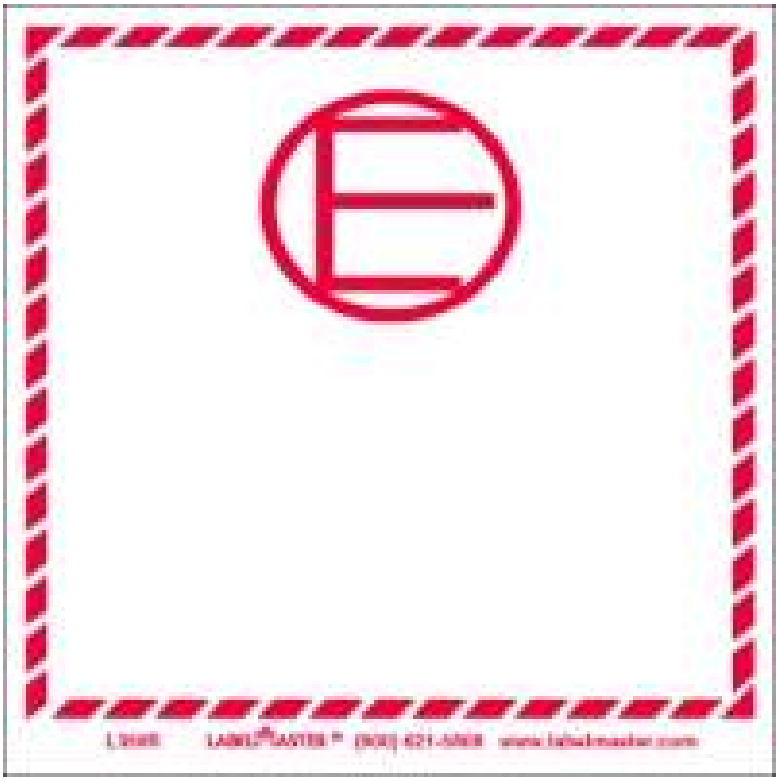

APPENDIX B

GC/MS OPERATION
FOR VOLATILE ORGANIC COMPOUNDS

The Office of Environmental Measurement and Evaluation
Investigations and Analysis Unit- Chemistry Laboratory
US EPA Region 1 New England
11 Technology Drive
North Chelmsford, MA 01863-2431

Prepared by: _____ 3/31/10
Joseph Montanaro, MS — Date
Chemists, Investigations and Analysis Unit

Approved by: _____ 4/1/2010
Agnes Van Langenhove, Ph.D., Laboratory QA Officer — Date
Investigations and Analysis Unit, OEME

Approved by: _____ 4/1/2010
Ernest Waterman, Chief, Investigations and — Effective Date
Analysis Unit, OEME

The controlled version of this document is the electronic version viewed on-line only. If this is a printed copy of the document, it is an uncontrolled version and may or may not be the version currently in use.

This document contains direction developed solely to provide internal guidance to U.S. Environmental Protection Agency (EPA) personnel. EPA retains the discretion to adopt approaches that differ from these procedures on a case by case basis. The procedures set forth do not create any rights, substantive or procedural, enforceable at law by a party to litigation with EPA or the United States.

Table Contents

1.0 Summary 4
2.0 Purpose 4
3.0 Scope and Application 4
4.0 Personnel Qualifications 4
5.0 Interferences 4
6.0 Procedure 4
6.1 Instrumentation 4
6.1.1 Autosampler Devices: 4
6.1.2 Agilent 7890A/Agilent 6890N/TermoQuest Trace GC(s): 5
6.1.3 Agilent 5975B/Agilent 5975C: 5
6.1.4 Finnigan Polaris Q: 5
6.1.5 Hewlett Packard/Dell Computer Data System(s): 5
6.1.6 Instrument Maintenance Records: 5
6.2 Sample Requirements 5
6.2.1 Aqueous samples: 5
6.2.2 Soil samples: 6
6.2.3 Sample Quantity: 6
6.2.4 Trip Blanks: 7
6.2.5 Methanol Blanks: 7
6.2.6 Hold blanks: 7
6.2.7 Sample acceptance criteria: 7
6.2.8 Sample storage: 7
6.2.9 Hold times: 7
6.3 Sample Preparation (High-Level soil and drum extraction) 7
6.3.1 Percent moisture determination for soil samples: 7
6.3.2 Preparation of samples\method blanks: 8
6.3.3 Reporting Level Calculation(s): 8
6.3.4 Matrix spike and matrix spike duplicate: 9
6.3.5 Internal standards and surrogate compounds: 9
6.3.6 Screening the extracts: 9
6.4 Sample Preparation (Mid-level Water) 10
6.4.1 Sample screening: 10
6.4.2 Sample dilutions: 10
6.4.3 Sample size: 10
6.4.4 Internal Standards: 10
6.4.5 Surrogate compounds: 10
6.4.6 Spiking Solution: 10
6.5 Sample Preparation Method (Drinking Water) 10
6.5.1 Aqueous sample screening: 10
6.5.2 Sample dilutions: 10
6.5.3 Sample size: 10
6.5.4 Internal standards and surrogate compounds: 10
6.5.5 Spiking solution: 11

6.6 Mass Spectrometer Tuning (FC-43) 11
6.7 Check for Air Leaks 11
6.8 p-Bromofluorobenzene (BFB) Criteria: 11
6.8.1 Gas chromatograph Setup: 11
6.8.2 p-Bromofluorobenzene solution: 11
6.9 Calibration Of The Mass Spectrometer 12
6.9.1 Preparation of standards, table 1 and 2: 12
6.9.2 Water, soil and drum samples: 12
6.9.3 Drinking Water: 12
6.9.4 Reporting Limits for All Methods: 17
6.10 Sample Analysis 19
6.10.1 Gas chromatograph setup: 19
6.10.2 Setup of the Tekmar LSC 3000/3100/Stratum: 19
6.10.3 Operation of Varian Archon: 19
6.10.4 Gas-Chromatography/Mass Spectrometry: 20
6.10.5 Operation of the Gas-Chromatography/Mass Spectrometer 20
6.10.6 Calibration tables 20
6.11 DATA REDUCTION 22
6.11.1 Data recording 22
6.11.2 Manual reduction 23
6.11.3 Multiple files: 24
6.11.4 Data qualifiers and definitions 24
6.11.5 Treatment of blank values 24
6.11.6 Reporting limits of target compounds 25
6.11.7 Tentatively identified compound reporting 25
7.0 Quality Control And Quality Assurance Section 25
7.1 Acceptance criteria for VOAs by GC/MS 25
7.2 Surrogates Recoveries: 27
7.3 Matrix Spike and Duplicate Recoveries. 27
7.4 Performance evaluation sample analysis 27
7.5 Determination of detection limit 27
7.6 Corrective action procedure 27
8.0 Waste Management 27
9.0 References 28
10.0 Appendix 30
10.1 Start up from a power-off position 30
10.2 Sampling method for soils. 31
Project Review Form 33
Method Comparison Table 35

1.0 Summary

This SOP describes the analysis of Volatile Organic Compounds (VOC) by GC/MS. Sample preparation, quality control and the operation of the GC/MS is described.

2.0 Purpose

To ensure that the same procedures are used for the analysis of Volatile Organic Compounds. To ensure that the proper quality control is run with the analysis. To aid other chemists in the operation of the GC/MS for VOC analysis.

3.0 Scope and Application

This procedure is to be used for the preparation and analysis of water, soil and drum samples for VOC analysis by the Agilent 5975B, Agilent 5975C, and Polaris Q GC/MS. It includes water samples for the drinking water and NPDES programs, and water, soil and drum samples for RCRA and CERCLA.

4.0 Personnel Qualifications

The analyst should have at least a four year degree in a physical science.

A new analyst should be trained at least one week by an experienced analyst and posess a working knowledge of this method and quality control before initiating the procedure.

All personnel shall be responsible for complying with all quality assurance/quality control requirements that pertain to their organizational/technical function.

5.0 Interferences

Interferences may include contaminant target analytes specifically; methylene chloride, tetrahydrofuran, ketone(s), artifacts resulting from systemic contaminants (moisture, column bleed, strong oxidation agents associated with sample matrix). The addition of anti-foam reagent to laboratory blank(s) and samples are also common interferences. These would be addressed in the project notes by the analyst.

6.0 Procedure

6.1 Instrumentation

6.1.1 Autosampler Devices:

There are three techniques to introduce sample(s) to the Agilent and Polaris GC/MS(s).

1) A single sample may be introduced manually via addition to the Tekmar 3000/3100/Stratum sample concentrators. Internal and surrogate compounds are introduced to samples as they are loaded into the sparge cell with a luer lock syringe (5 ml or 25 ml).

The Tekmar 3000/3100/Stratum sample concentrator(s) purge the aqueous samples,

adsorbs the volatiles on a porous polymer trap and, then thermally desorbs them onto the GC.

2) The Varian Archon Purge and Trap system(s) hold fifty one 40 ml VOA vials. The aqueous samples are withdrawn from the vial and transferred to the Tekmar 3000/3100/ Stratum sample concentrators for purging. The internal and surrogate compounds are added automatically by each system.

3) The Varian Archon purges soil samples for low level analysis (Method 5035A) directly in 40 ml VOA vials with 5 mls of water (magnetic stir bars). The samples are prepared in the field with pre-weighed 40 ml VOA vials preserved with water.

All volatiles are purged from the samples with helium gas onto a porous polymer trap, prior to being thermally desorbed into the gas chromatograph.

6.1.2 Agilent 7890A/Agilent 6890N/TermoQuest Trace GC(s):

The GC(s) separate the thermally desorbed volatiles and elute them into the mass spectrometer.

6.1.3 Agilent 5975B/Agilent 5975C:

The 5975 GC/MS(s) identify and quantitate the volatiles by using electron impact and a quadrupole mass spectrometer.

6.1.4 Finnigan Polaris Q:

The Polaris Q GC/MS(s) identify and quantitate the volatiles by using electron impact and an ion trap mass spectrometer.

6.1.5 Hewlett Packard/Dell Computer Data System(s):

The Hewlett Packard/Dell computers systems run the software and control the mass spectrometer(s). The software operates using a windows based system. Samples are run under an acquisition operating system. The sample results are reduced using an automated Environmental Processing System (Hewlett Packard Enviroquant).

6.1.6 Instrument Maintenance Records:

The recording of all repairs, scheduled contractual preventive maintenance applications, and instrument modifications will be documented in the VOA Instrument Maintenance log book(s). The log book(s) are stored at the VOA work station(s) located with the instruments.

6.2 Sample Requirements

6.2.1 Aqueous samples:

Water samples for VOC analysis must be preserved prior to receipt by the laboratory with 1:1 HCl to a pH of <2. Measure with pH paper and record on the worksheet. This will be performed prior to analysis when samples are to be loaded via luer lock syringe or following the removal of the 40 ml vial post analysis. The results for samples received unpreserved will be qualified. A minimum of four 40 ml vials is desired for each sample location.

6.2.2 Soil samples:

There are two generally preferred techniques for taking soil samples as per SW-846, Method 5035A (Closed-system Purge-and-trap and Extraction for Volatile Organics in Soil and Waste Samples), Draft Revision 1, July 2002.

The first technique, High Level Soil or HS sample analysis, involves the addition of a soil sample to a pre-weighed vial containing methanol. The other technique entails the direct addition of soil in the field to a pre-weighed vial containing water (magnetic stir bar inclusive). This method is referred to as a Low Level Soil or LS sample analysis.

Samples are collected using a 10 cc syringe barrel or equivalent and placed directly into the 40 ml VOA vials containing preservative. A sample of 10 grams is desired with excess water to be removed where possible. This can be achieved by taking approximately 6-8 cc of sample into the syringe. At each sampling location, two vials will be required for the High Level Soil or HS sample analysis. One vial will contain 10 ml of pre-weighted methanol and one vial will be empty. The methanol preserved vial is for analyzing elevated levels of target analytes or contaminants if present and the second is for the calculation of percent solids.

Using the Low Level Soil (LS) sample analysis requires the addition of the High Level Soil (HS) sample analysis vials. ie. The High Level (HS) vials are used for dilutions, loss of sample in the analysis, or if a matrix effect applies to the Low Level Soil (LS) sample.

Alternatively, samples can be taken in the field using EnCore or equivalent sampling devices and prepared in the laboratory using the technique described in Section 6.3.2.

Refer to SOP for Soil Sampling, Region I, EIASOP-SOIL_SED_SOLID, Rev. 02, 02/13/04.

6.2.3 Sample Quantity:

WATER - *Four 40ml VOA vials (Varian Archon)

SOIL (LS) - Two soil-water samples in pre-weighed vials (LS) and a soil-methanol pre-weighed vial (HS). An additional sample is to be taken for the percent solids determination. Sample should be analyzed or frozen within 48 hours from the period when it is taken. There are two freezers in the sample receipt and storage lab, room 190, that range from 0 degrees C to -50 degrees C.

SOIL (HS) - *One soil-methanol pre-weighed vial (HS). An additional sample is to be taken for the percent solids determination.

Drums - *One 40ml VOA vial is needed if the sample is not water soluble and/or organic product . The vial should have headspace to allow for expansion that is common with non aqueous liquid organic product(s).

* These samples require storage to 4 degrees C.

6.2.4 Trip Blanks:

The trip blank for water samples should be preserved the same way as the unknown sample, i.e. same number of drops of 1:1 HCl should be added. Trip blank water is available from the VOA group and a record of origin is kept in room 175.

6.2.5 Methanol Blanks:

Methanol blanks shall be run to analyze each Lot of water soluble reagent to determine purity. This applies to use for both standard and sample preparation. A record of this analysis is kept in room 175.

6.2.6 Hold blanks:

Hold blanks will be collected with all trip blanks originating from room 175. This sample will be stored in the Sample receipt and storage, room 190. A record of this analysis is kept in room 175.

6.2.7 Sample acceptance criteria:

Observe if any air bubbles are apparent. The sample is invalid, if there are significant air bubbles. A new sample must then be collected or the observed data will be qualified.

6.2.8 Sample storage:

Store samples at 4°C. The temperature of R-13 located in the Sample receipt and storage room 190, is checked each working day. Storage blank samples for R-13 are analyzed monthly. An R-13 Blank log book is stored with the verified storage blank samples. The vials containing the blank water are labeled with the date that they are put into the refrigerator and sequenced in the log book. The data from each analysis is stored at the VOA work station located with the instruments in room 175.

6.2.9 Hold times:

Holding time for all preserved VOC samples is 14 days. Low Level Soil (LS) sample(s) should be analyzed or frozen within 48 hours from the period when they are taken as described in Section 6.3.2. Frozen samples are allowed 14 days holding time.

6.3 Sample Preparation (High Level Soil and Non Aqueous Product Extraction)

Method 5035A (Closed-system Purge-and-trap and Extraction for Volatile Organics in Soil and Waste Samples):

6.3.1 Percent moisture determination for soil samples:

Check the balance calibration using Class 1 weights by recording the results in the balance log book and on the laboratory bench work sheet (soil extractions summary sheet). Balance log books are stationed with all balances in the laboratory. Weigh 5.00 g of sample to the nearest hundredth of a gram in an aluminum dish. Dry sample at 105°C for 24 hours. Following the removal of the sample(s) from a drying oven, allow to cool and record weight (soil extractions summary sheet) to the nearest hundredth of a gram.

$$\% \text{ Moisture} = \frac{\text{gm wet sample - gm of dry sample}}{\text{gm of wet samples}} \times 100$$

6.3.2 Preparation of samples\method blanks:

Weigh approximately 10 gm of soil or 100 ul of liquid drum sample in a tarred VOA vial. Record results on the laboratory bench work sheet (VOA soil extraction worksheet). Pipet 10 ml of water for Low Level Soil (LS) analysis or methanol for High Level Soil (HS) analysis. Cap and shake for 1 minute. Sample extract is now ready for dilution. A 50 fold dilution into water is the standard preparation. All dilution will be recorded in the instrument run log book(s). A VOA sample extraction and dilution summary bench worksheet is also included in all project folders.

6.3.3 Reporting Level Calculation(s):

Method 5035A Reporting Level =

$$\frac{\text{(Extract volume)(dilution)(*low standard conc)}}{\text{(weight of dry sample)}}$$

Method 5035A Reporting Level = Low Soils

$$\frac{(0.005L)\ (1)\ (1ug/L)}{0.005Kg\ \text{(decimal \% solids)}} = 1\ ug/Kg$$

Reporting Level = High Soils

$$\frac{((0.010L + \textit{(gm of wet sample*)(\%moist.*)})(50)(1\ ug/L)}{0.010\ Kg\ \text{(decimal \% solids)}} = 50\ ug/Kg$$

*= *in volume units to account for water from sample*

$$\textit{Dilution Factor} = \frac{\textit{5000 ul (volume purge tube)}}{\textit{100 ul (extract volume)}} = \textit{50}$$

Reporting Level = Drums

$$\frac{(0.010L)(50)(1\ ug/L)}{0.0001\ Kg} = 5000\ ug/Kg$$

*Refer to compound concentrations Section 6.9.2, Table 1

6.3.4 Matrix spike and matrix spike duplicate:

Add 20 ul of 100 ug/ml matrix spike (secondary source calibration standard) solution to 100 ml of diluted extract, see below. The split VOA vials are closed tightly and analyzed.

The compounds present in the matrix spike solution for Soil/Drum is the complete target analyte list at a concentration of 100 ug/ml (xylenes at 200 ug/ml).

A 50x dilution with water is made and the sample(s) analyzed.

6.3.5 Internal standards and surrogate compounds:

The Varian Archon Purge and Trap Autosampler(s) ampoules automatically add internal and surrogate standards to samples under normal operating conditions. Determine that the absolute areas of the quantitation ions of the internal standards and surrogate(s) have not decreased by more than 30% from the areas measured in the most recent continuing calibration check, or by more than 50% from the areas measured during initial calibration. Check the response factors and surrogates.

a. Internal standards - for both the soil and drum sample analysis, 1ul of a 50 to 250 ug/ml internal solution is added (5ml purge) using the Varian Archon.

Chlorobenzene-d5
1,4-dichlorobenzene-d4
1,4-difluorobenzene
Pentafluorobenzene

b. Surrogates- for both the soil and drum sample add 1 ul of the 25 to 125 ug/ml surrogate solution is added (5ml purge) using the Varian Archon.

1,2-dichloroethane-d4
Toluene-d8
1,4-bromofluorobenzene

c. Internal standards – Direct manual injection to all matrices when autosamplers are unavailable, 5ul of the 10 to 50 ug/ml internal solution is added for per analysis (5ml purge) using the Tekmar LSC 3000/3100 or Tekmar Stratum sample concentrators.

Chlorobenzene, d5
1,4-dichlorobenzene, d4
1,4-difluorobenzene
Pentafluorobenzene

d. Surrogates- Direct manual injection to all matrices when autosamplers are unavailable 5 ul of the 5 to 25 ug/ml surrogate solution.

1,2-dichloroethane, d4
Toluene, d8
1,4-bromofluorobenzene

6.3.6 Screening the extracts:

Screening the methanol soil or drum extract before GC/MS analysis: Refer to the Head space Screening SOP for VOC in Aqueous and Soil Samples, (EIA SOP-FLDVOA2, Revision 2, 10/11/02 or EIASOP-VOCSCREEN0, 09/03/09).

6.4 Sample Preparation (Mid-level Water)

Sample preparation SW-846 Method 8260B, Rev 2, 12/96 (Mid-level Water), samples analyzed by Method 624 are reported as a subset of 8260B: (refer to method comparison table).

6.4.1 Sample screening:

Where necessary, samples are first screened by using head space or other technique.

6.4.2 Sample dilutions:

Based on the screening results dilutions may be necessary. Dilutions should be performed with volumetric glassware and disposable micro pipets.

6.4.3 Sample size:

Five ml of sample is purged.

6.4.4 Internal Standards, same as referenced in section 6.3.5.

6.4.5 Surrogate compounds, same as referenced in section 6.3.5.

6.4.6 Spiking Solution:

The compounds present in the matrix spike solution for Water is the complete target analyte list at a concentration of 100 ug/ml (xylenes at 200 ug/ml).
Spike at 20 ppb. 5ul of the 20 ug/ml solution to 5 ml of sample or 40ul to 40 ml.

6.5 Sample Preparation Method (Drinking Water)

Sample Preparation Method 524.2, Rev 4.1 12/96 (Drinking Water) or LL:

6.5.1 Aqueous sample screening:

The samples may be screened first if it is felt necessary by using the head space technique.

6.5.2 Sample dilutions:

Based on the screening results dilutions may be necessary. Dilutions should be performed in volumetric glassware.

6.5.3 Sample size:

5 mls (Agilent 5975B/5975C) or 25 mls (Finnigan Polaris Q) sample is purged.

6.5.4 Internal standards and surrogate compounds:

To a 25 ml sample is added 1 ul of 25 ug/ml solution containing the internal standards and surrogate compounds for an analysis (5 ml or 25 ml purge) using the Varian Archon. For the analysis using the Tekmar LSC 3000/3100 or Tekmar Stratum sample concentrators, 5 ul of 5 ug/ml internal and surrogate compounds is added.

SURROGATES	5 ml purge (ug/L)	25 ml purge (ug/L)
1,2 dichloroethane-d_4	5	1
Toluene-d8	5	1
1,4-Bromofluoro-benzene	5	1
INTERNAL STANDARDS		
Fluorobenzene	5	1

6.5.5 Spiking solution:

The compounds present in the matrix spike solution for Water is the complete target analyte list at a concentration of 100 ug/ml (xylenes at 200 ug/ml).

spike at 5 ppb. 2 ul of the 100 ug/ml solution to 40 ml of sample.

The samples are now ready for GC/MS analysis. Refer to the GC/MS operating section of this SOP.

BEFORE PROCEEDING, REFER TO SECTION 7.0, QUALITY CONTROL AND QUALITY ASSURANCE. THE TABLE OF ACCEPTANCE CRITERIA MUST BE MET BEFORE CONTINUING THE ANALYSIS.

6.6 Mass Spectrometer Tuning (FC-43)

See manual

6.7 Check for Air Leaks

Check for air leaks by observing the 18amu (water) and 28amu (nitrogen) peak counts. The ratio of 18/28 should be between 1-3 if no leaks are present. If the ratio is less than 0.5 look for the leak before proceeding.

6.8 p-Bromofluorobenzene (BFB) Criteria:

6.8.1 Gas chromatograph Setup:

GC column- RTX 502.2, 40m, 0.18mm id, 1.0 um film thickness or equivalent. BFB acquisition is attained by analyzing a lab blank, standard or sample. This can be referenced in section(s) 6.9. and 6.10.

6.8.2 p-Bromofluorobenzene solution:

25 ng/ul (drinking water) or 50 ng/ul (all other matrices) of BFB. These concentrations are incorporated into the internal/surrogate solutions referred to in section(s) 6.3.5 and 6.5.4. This criteria must be achieved every 12 hours to check that the GC/MS system meets the mass spectral ion abundance criteria for BFB.

BFB Ion Abundance Criteria:

Mass	SW-846/CLP Ion Abundance Criteria	DW Criteria
50	8-40 % of mass 95	15-40%
75	30-66 % of mass 95	30-80%
95	base peak, 100 % rel abundance	base peak, 100 % rel abundance
96	5-9 % of mass 95 (see note)	5-9 % of mass 95
173	< 2 % of mass 174	< 2 % of mass 174
174	50-120 % of mass 95	>50%
175	4-9 % of mass 174	5-9%
176	93-101 of mass 174	>95<101
177	5-9 % of mass 176	5-9 % of mass 176

note: All ion abundances must be normalized to m/z 95, the nominal base peak, even though the ion abundance of m/z 174 may be up to 120 % that of m/z 95.

6.9 Calibration Of The Mass Spectrometer

6.9.1 Preparation of calibration standards, tables 1 and 2:

Standards are prepared from commercially purchased and certified unopened glass sealed ampules every month. These standards are stored in F-9 and the date of receipt is recorded in the VOA Standard Inventory Log Book located with the refrigerator. The preparation of all standards is archived in a bound laboratory notebook. Entries are logged as follows:

V (standard reference notebook number)-month-date-year-alphabetical sequence.

Copies of all certification references are stored in three ring binders or in a yearly purchasing folder. Each standard is also archived in a bound laboratory notebook for daily calibration standards. Internal and surrogate standards are referenced for each method of acquisition. All materials above are stored at the VOA work station(s) located with the instruments. Verification of all standard preparation will be performed for each primary calibration as part of the project review form data evaluation process.

6.9.2 Water, soil and drum samples:

The calibration standards are purged and analyzed like the samples. Five milliliters of the standards in Table 1 are run and analyzed and quantitated against the present calibration curve. Calibration curves are designated as hazardous waste (MW), high soils (HS), low soils (LS), or drinking water (DW).

6.9.3 Drinking Water:

The standards are purged and analyzed like the samples. Twenty five milliliters (or 5 ml) of the standards in Table 2 are run and analyzed and quantitated against the present calibration curve. The regulated compounds are indicated in bold.

TABLE 1
VOA for Water, Soils & Drums – MW/HS/LS CALIBRATION
STANDARD RANGE IN ug/L

COMPOUND	1	2	3	4	5	6	7
Chloromethane	1	5	10	20	25	50	100
Bromomethane	1	5	10	20	25	50	100
Vinyl Chloride	1	5	10	20	25	50	100
Chloroethane	1	5	10	20	25	50	100
Trichlorofluoromethane	1	5	10	20	25	50	100
Ethyl Ether	1	5	10	20	25	50	100
2-Propanone (acetone)	1	5	10	20	25	50	100
1,1,2-Trichloro-1,2,2-Trifluoroethane	1	5	10	20	25	50	100
1,1-Dichloroethylene	1	5	10	20	25	50	100
Carbon Disulfide	1	5	10	20	25	50	100
Dichlorodiflouromethane	1	5	10	20	25	50	100
Methylene Chloride	1	5	10	20	25	50	100
Acrylonitrile	1	5	10	20	25	50	100
Methyl-t-Butyl Ether (MTBE)	1	5	10	20	25	50	100
trans-1,2-Dichloroethylene	1	5	10	20	25	50	100
1,1-Dichloroethane	1	5	10	20	25	50	100
Vinyl Acetate	1	5	10	20	25	50	100
2-Butanone (MEK)	1	5	10	20	25	50	100
2,2-Dichloropropane	1	5	10	20	25	50	100
cis-1,2-Dichloroethylene	1	5	10	20	25	50	100
Chloroform	1	5	10	20	25	50	100
Bromochloromethane	1	5	10	20	25	50	100
Tetrahydrofuran	1	5	10	20	25	50	100
1,1,1-Trichloroethane	1	5	10	20	25	50	100
1,2-Dichloroethane	1	5	10	20	25	50	100
Carbon Tetrachloride	1	5	10	20	25	50	100
Benzene	1	5	10	20	25	50	100
cis-1,3-Dichloropropene	1	5	10	20	25	50	100
trans-1,3-Dichloropropene	1	5	10	20	25	50	100
1,1,2-Trichloroethane	1	5	10	20	25	50	100
Dibromochloromethane	1	5	10	20	25	50	100
Chlorobenzene	1	5	10	20	25	50	100
Toluene	1	5	10	20	25	50	100
1,1-Dichloropropene	1	5	10	20	25	50	100
Trichloroethylene	1	5	10	20	25	50	100

TABLE 1
VOA for Water, Soils & Drums – MW/HS/LS CALIBRATION
STANDARD RANGE IN ug/L

COMPOUND	1	2	3	4	5	6	7
1,2-Dichloropropane	1	5	10	20	25	50	100
Bromodichloromethane	1	5	10	20	25	50	100
Dibromomethane	1	5	10	20	25	50	100
4-Methyl-2-Pentanone (MIBK)	1	5	10	20	25	50	100
1,3-Dichloropropane	1	5	10	20	25	50	100
Tetrachloroethylene	1	5	10	20	25	50	100
1,2-Dibromomethane	1	5	10	20	25	50	100
2-Hexanone	1	5	10	20	25	50	100
1,1,1,2-Tetrachloroethane	1	5	10	20	25	50	100
Ethylbenzene	1	5	10	20	25	50	100
META/PARA XYLENE	1	5	10	20	25	50	100
Ortho Xylene	1	5	10	20	25	50	100
Styrene	1	5	10	20	25	50	100
BROMOFORM	1	5	10	20	25	50	100
1,1,2,2-Tetrachloroethane	1	5	10	20	25	50	100
Isopropylbenzene	1	5	10	20	25	50	100
Bromobenzene	1	5	10	20	25	50	100
1,2,3-Trichloropropane	1	5	10	20	25	50	100
n-Propylbenzene	1	5	10	20	25	50	100
2-Chlorotoluene	1	5	10	20	25	50	100
4-Chlorotoluene	1	5	10	20	25	50	100
tert-Butylbenzene	1	5	10	20	25	50	100
1,3,5-Trimethylbenzene	1	5	10	20	25	50	100
1,2,4-Trimethylbenzene	1	5	10	20	25	50	100
sec-Butylbenzene	1	5	10	20	25	50	100
1,3-Dichlorobenzene	1	5	10	20	25	50	100
para-Isopropytoluene	1	5	10	20	25	50	100
1,4-Dichlorobenzene	1	5	10	20	25	50	100
1,2-Dichlorobenzene	1	5	10	20	25	50	100
n-Butylbenzene	1	5	10	20	25	50	100
1,2-Dibromo-3-Chloropropane	1	5	10	20	25	50	100
1,2,4-Trichlorobenzene	1	5	10	20	25	50	100
Hexachlorobutadiene	1	5	10	20	25	50	100
Naphthalene	1	5	10	20	25	50	100
1,2,3-Trichlorobenzene	1	5	10	20	25	50	100

TABLE 2
METHOD 524.2 – DW CALIBRATION
STANDARD RANGE IN ug/L

COMPOUND	1	2	3	4	5	6	7	8
Chloromethane	0.5	1	2	5	10	20	25	50
Bromomethane	0.5	1	2	5	10	20	25	50
Vinyl Chloride	0.5	1	2	5	10	20	25	50
Chloroethane	0.5	1	2	5	10	20	25	50
Trichlorofluoromethane	0.5	1	2	5	10	20	25	50
Ethyl Ether	0.5	1	2	5	10	20	25	50
2-Propanone (acetone)	0.5	1	2	5	10	20	25	50
1,1,2-Trichloro-1,2,2-Trifluoroethane	0.5	1	2	5	10	20	25	50
1,1-Dichloroethylene	0.5	1	2	5	10	20	25	50
Carbon Disulfide	0.5	1	2	5	10	20	25	50
Dichlorodiflouromethane	0.5	1	2	5	10	20	25	50
Methylene Chloride	0.5	1	2	5	10	20	25	50
Acrylonitrile	0.5	1	2	5	10	20	25	50
Methyl-t-Butyl Ether (MTBE)	0.5	1	2	5	10	20	25	50
trans-1,2-Dichloroethylene	0.5	1	2	5	10	20	25	50
1,1-Dichloroethane	0.5	1	2	5	10	20	25	50
Vinyl Acetate	0.5	1	2	5	10	20	25	50
2-Butanone (MEK)	0.5	1	2	5	10	20	25	50
2,2-Dichloropropane	0.5	1	2	5	10	20	25	50
cis-1,2 Dichloroethylene	0.5	1	2	5	10	20	25	50
Chloroform	0.5	1	2	5	10	20	25	50
Bromochloromethane	0.5	1	2	5	10	20	25	50
Tetrahydrofuran	0.5	1	2	5	10	20	25	50
1,1,1-Trichloroethane	0.5	1	2	5	10	20	25	50
1,2-Dichloroethane	0.5	1	2	5	10	20	25	50
Carbon Tetrachloride	0.5	1	2	5	10	20	25	50
Benzene	0.5	1	2	5	10	20	25	50
cis-1,3-Dichloropropene	0.5	1	2	5	10	20	25	50
trans-1,3-Dichloropropene	0.5	1	2	5	10	20	25	50
1,1,2-Trichloroethane	0.5	1	2	5	10	20	25	50
Dibromochloromethane	0.5	1	2	5	10	20	25	50
Chlorobenzene	0.5	1	2	5	10	20	25	50
Toluene	0.5	1	2	5	10	20	25	50
1,1-Dichloropropene	0.5	1	2	5	10	20	25	50
Trichloroethylene	0.5	1	2	5	10	20	25	50

TABLE 2
METHOD 524.2 – DW CALIBRATION
STANDARD RANGE IN ug/L

COMPOUND	1	2	3	4	5	6	7	8
1,2-Dichloropropane	0.5	1	2	5	10	20	25	50
Bromodichloromethane	0.5	1	2	5	10	20	25	50
Dibromomethane	0.5	1	2	5	10	20	25	50
4-Methyl-2-Pentanone (MIBK)	0.5	1	2	5	10	20	25	50
1,3-Dichloropropane	0.5	1	2	5	10	20	25	50
Tetrachloroethylene	0.5	1	2	5	10	20	25	50
1,2-Dibromomethane	0.5	1	2	5	10	20	25	50
2-Hexanone	0.5	1	2	5	10	20	25	50
1,1,1,2-Tetrachloroethane	0.5	1	2	5	10	20	25	50
Ethylbenzene	0.5	1	2	5	10	20	25	50
META/PARA XYLENE	1	2	4	10	20	40	50	100
Ortho Xylene	0.5	1	2	5	10	20	25	50
Styrene	0.5	1	2	5	10	20	25	50
BROMOFORM	0.5	1	2	5	10	20	25	50
1,1,2,2-Tetrachloroethane	0.5	1	2	5	10	20	25	50
Isopropylbenzene	0.5	1	2	5	10	20	25	50
Bromobenzene	0.5	1	2	5	10	20	25	50
1,2,3-Trichloropropane	0.5	1	2	5	10	20	25	50
n-Propylbenzene	0.5	1	2	5	10	20	25	50
2-Chlorotoluene	0.5	1	2	5	10	20	25	50
4-Chlorotoluene	0.5	1	2	5	10	20	25	50
tert-Butylbenzene	0.5	1	2	5	10	20	25	50
1,3,5-Trimethylbenzene	0.5	1	2	5	10	20	25	50
1,2,4-Trimethylbenzene	0.5	1	2	5	10	20	25	50
sec-Butylbenzene	0.5	1	2	5	10	20	25	50
1,3-Dichlorobenzene	0.5	1	2	5	10	20	25	50
para-Isopropytoluene	0.5	1	2	5	10	20	25	50
1,4-Dichlorobenzene	0.5	1	2	5	10	20	25	50
1,2-Dichlorobenzene	0.5	1	2	5	10	20	25	50
n-Butylbenzene	0.5	1	2	5	10	20	25	50
1,2-Dibromo-3-Chloropropane	0.5	1	2	5	10	20	25	50
1,2,4-Trichlorobenzene	0.5	1	2	5	10	20	25	50
Hexachlorobutadiene	0.5	1	2	5	10	20	25	50
Naphthalene	0.5	1	2	5	10	20	25	50
1,2,3-Trichlorobenzene	0.5	1	2	5	10	20	25	50

6.9.4 Reporting Limits for All Methods:

TABLE 3

Method:	DW	MW	HS	LS	HS
Type:	Water	Water	Soil	Soil	Drum
COMPOUND	ug/L	ug/L	ug/Kg	ug/Kg	ug/Kg
Chloromethane	0.5	1	50	1	5000
Bromomethane	0.5	1	50	1	5000
Vinyl Chloride	0.5	1	50	1	5000
Chloroethane	0.5	1	50	1	5000
Trichlorofluoromethane	0.5	1	50	1	5000
Ethyl Ether	0.5	1	50	1	5000
2-Propanone (acetone)	0.5	1	50	1	5000
1,1,2-Trichloro-1,2,2-Trifluoroethane	0.5	1	50	1	5000
1,1-Dichloroethylene	0.5	1	50	1	5000
Carbon Disulfide	0.5	1	50	1	5000
Dichlorodiflouromethane	0.5	1	50	1	5000
Methylene Chloride	0.5	1	50	1	5000
Acrylonitrile	0.5	1	50	1	5000
Methyl-t-Butyl Ether (MTBE)	0.5	1	50	1	5000
trans-1,2-Dichloroethylene	0.5	1	50	1	5000
1,1-Dichloroethane	0.5	1	50	1	5000
Vinyl Acetate	0.5	1	50	1	5000
2-Butanone (MEK)	0.5	1	50	1	5000
2,2-Dichloropropane	0.5	1	50	1	5000
cis-1,2-Dichloroethylene	0.5	1	50	1	5000
Chloroform	0.5	1	50	1	5000
Bromochloromethane	0.5	1	50	1	5000
Tetrahydrofuran	0.5	1	50	1	5000
1,1,1-Trichloroethane	0.5	1	50	1	5000
1,2-Dichloroethane	0.5	1	50	1	5000
Carbon Tetrachloride	0.5	1	50	1	5000
Benzene	0.5	1	50	1	5000
cis-1,3-Dichloropropene	0.5	1	50	1	5000
trans-1,3-Dichloropropenc	0.5	1	50	1	5000
1,1,2-Trichloroethane	0.5	1	50	1	5000
Dibromochloromethane	0.5	1	50	1	5000
Chlorobenzene	0.5	1	50	1	5000
Toluene	0.5	1	50	1	5000
1,1-Dichloropropene	0.5	1	50	1	5000
Trichloroethylene	0.5	1	50	1	5000

TABLE 3

Method:	DW	MW	HS	LS	HS
Type:	Water	Water	Soil	Soil	Drum
COMPOUND	ug/L	ug/L	ug/Kg	ug/Kg	ug/Kg
1,2-Dichloropropane	0.5	1	50	1	5000
Bromodichloromethane	0.5	1	50	1	5000
Dibromomethane	0.5	1	50	1	5000
4-Methyl-2-Pentanone (MIBK)	0.5	1	50	1	5000
1,3-Dichloropropane	0.5	1	50	1	5000
Tetrachloroethylene	0.5	1	50	1	5000
1,2-Dibromomethane	0.5	1	50	1	5000
2-Hexanone	0.5	1	50	1	5000
1,1,1,2-Tetrachloroethane	0.5	1	50	1	5000
Ethylbenzene	0.5	1	50	1	5000
META/PARA XYLENE	1	2	100	2	10000
Ortho Xylene	0.5	1	50	1	5000
Styrene	0.5	1	50	1	5000
BROMOFORM	0.5	1	50	1	5000
1,1,2,2-Tetrachloroethane	0.5	1	50	1	5000
Isopropylbenzene	0.5	1	50	1	5000
Bromobenzene	0.5	1	50	1	5000
1,2,3-Trichloropropane	0.5	1	50	1	5000
n-Propylbenzene	0.5	1	50	1	5000
2-Chlorotoluene	0.5	1	50	1	5000
4-Chlorotoluene	0.5	1	50	1	5000
Tert-Butylbenzene	0.5	1	50	1	5000
1,3,5-Trimethylbenzene	0.5	1	50	1	5000
1,2,4-Trimethylbenzene	0.5	1	50	1	5000
sec-Butylbenzene	0.5	1	50	1	5000
1,3-Dichlorobenzene	0.5	1	50	1	5000
para-Isopropytoluene	0.5	1	50	1	5000
1,4-Dichlorobenzene	0.5	1	50	1	5000
1,2-Dichlorobenzene	0.5	1	50	1	5000
n-Butylbenzene	0.5	1	50	1	5000
1,2-Dibromo-3-Chloropropane	0.5	1	50	1	5000
1,2,4-Trichlorobenzene	0.5	1	50	1	5000
Hexachlorobutadiene	0.5	1	50	1	5000
Naphthalene	0.5	1	50	1	5000
1,2,3-Trichlorobenzene	0.5	1	50	1	5000

6.10 Sample Analysis

6.10.1 Gas chromatograph setup:

The active method (VOA) for all GC(s), holds at 35°C for 4 minutes to 150°C at 6°C/min to 220°C at 8°C/min and hold for 8 minutes. The carrier gas is helium at a rate of 15 ml/min initially at 35°C.

6.10.2 Setup of the Tekmar LSC 3000/3100/Stratum:

The samples are purged for 11 minutes with a helium flow rate of 40 ml/min. The Tekmar LSC 3000/3100/Stratum controls the purging methods as well as the activating the gas chromatography/ mass spectrometer.

Multiple sampling sequences can be programmed with the Tekmar LSC 3000/3100/Stratum sample concentrators.

The Tekmar LSC 3000/3100/Stratum sample concentrators require high purity helium (99.999%, hydrocarbon tested gas supply at 20-200 psi), as a purge gas supplied via a tee union from the tank supplying the GC carrier gas. The purge gas line is connected to a hydrocarbon trap in between. The GC supplies and controls the carrier gas when it is connected to a concentrator. The trap is a VOCARB 3000 (K trap). Condition the trap overnight at 180°C by back flushing with 20 ml/min of helium and desorb the trap daily before analysis of samples. The trap is desorbed for 4 min at 250°C with 15 ml/min of helium flow.

Sample introduction into purging device:

(LSC 3000/3100/Stratum) sample concentrators

Warm the sample to room temperature, open the sample bottle, and carefully pour the sample into the syringe barrel to just short of overfilling. Replace the syringe plunger, invert the syringe. Vent any residual air, while adjusting the sample volume to 25 ml accurately (or 5 ml volume). For manual analysis of samples and blanks, add 5 ul of the fortification solution containing the internal standards and the surrogates to the sample through the syringe valve. For the calibration standards and laboratory fortified blanks, 5 ul of the fortification solution with internal standards is added through the valve.

Attach the sample syringe valve to the syringe valve purging device. Be sure that the trap is cooler than 25 C., then open the sample syringe valve and inject the sample into the purging chamber. Close both valves and start purging.

6.10.3 Operation of Varian Archon:

This unit operates through the Tekmar LSC 3000/3100/Stratum sample concentrator and runs samples directly from 40 ml volatile organic free vials. The GC/MS is to be configured in acquisition mode and awaiting a start signal from the autosampler device.

The set up for the Varian Archon is specific for the analysis to be performed. Methods for aqueous purge automate the transfer of 5 ml and 25 ml directly from a 40 ml VOA vial to a fritted purge vessel affixed to the LSC. Once a method is selected, the first and

last sample location(s) are programmed into the selected Method. The runs are actuated in the Auto menu. A selected method is loaded and the start autosampler is activated. The LSC 3000/3100/Stratum sample concentrators are defaulted to single acquisition and method 1 so that continuous throughput is controlled from the Archon.

6.10.4 Gas-Chromatography/Mass Spectrometry:

Acquire and store data over the mass range 35-260 with a total cycle time(including scan overhead time) of 2 sec. or less. Cycle time must be adjusted to measure five or more spectra during the elution of each GC peak. Several alternative temperature programs are used.

Check the disc storage space before analyzing any samples. There should be approximately 150 MB of storage space. This can be checked with the File Manager.

6.10.5 Operation of the Gas-Chromatography/Mass Spectrometer:

a. Load samples into the purge unit according to section 6.10 Sample analysis step 4.
b. Acquisition mode, select the Icon.
c. Select the sequence method.
d. Proceed with the injection table first.
e. Select the method cal VOA.mth for all sample analysis but BFB run.
f. Macro C:\HPCHEM\1\METHOD\LASTEST CAL FILE.
g. Select to screen with HP CHEM.
h. Select as 1, Methods, 410CLPIN.M OR THE LATEST, BFB.CMD.
i. Proceed to fill in the sample sequence
j. Select on parameter and enter operator initials
l. Select file and save the sequence as MMMYYI##.SEQ
Example: JUL14G02.SEQ
m. Select start or position and run sequence
n. Select simulate
o. Select start.

6.10.6 Calibration tables

6.10.8.1 Calibration curve

A minimum of five levels of standards (6.9.2 Table 1 or 6.9.3 Table 2) are quantitated against a previously acquired curve and then updated. This allows the use of the compound table and retention times.

6.10.8.2 File

Load file (do this for each new standard that will be used to create the new calibration table), QUANT, Calculate and generate report. Go into Quant and print out the summary report. Check the cpd values and retention times.
If the responses and concentrations correct proceed with:

a. Init Cal

b. Load file

c. Update Levels

d. Recalibrate, both the response and retention times. **Calib Level ID** - the concentration of the standard for this file **must** match the table on page 3 under Init Cal, Edit Compounds, View, Go into Initial Cal and Edit compounds if needed. Page 3 gives the sequence and conc.(VERY IMPORTANT TO KNOW THE LOCATION OF THE STANDARDS). Double click on the compound to see page 3 for information for the system during acquisition.

e. Replace

f. Perform update The message "Instrument name from data file does not match" is to be ignored. Select OK.

g. Repeat the above for all standards.

6.10.8.3 When done, select Initial Cal and print response factors

QEDIT and EXIT

Quant and Generate Report.

SAVE METHOD

SAVE METHOD (save under a different name)

If the response factors meet the criteria established in the method, the system is ready to analyze samples.

6.10.8.4. Manual quantitation:

If the calibration did not find all the peaks or the response factors have a large % RSD then do the following:

File

Load File

Quant

QEDIT

Select the compound of interest from the table, (double click) and evaluate the peak shape or interferences. To re-calculate the area, re-draw the baseline by placing the cursor at the left side of the peak at the baseline and hold the right button on the mouse down and move the line to the location to the right of the peak and release the button. The new area and value will be displayed.

Exit

Init Cal

Load file

Update Levels

Recalibrate, both the response and retention time **Calib Level ID** - the conc. of the std for this file **must** match the table on page 3 under Init Cal, Edit Compounds, View, Go into Initial Cal and Edit compounds if needed. Page 3 gives the sequence and conc.(VERY IMPORTANT TO KNOW THE LOCATION OF THE STANDARDS). Double click on the compound to see page 3 for information for the system during acquisition.

Replace

Do update (The message "Instrument name from data file does not match" is to be ignored)

OK.

The manually quantitated compound must be noted for validation as per the SOP for Peak Intergrations and for the Manual Manipulation of Computer Generated Data, Revision 2, 02/24/04.

6.10.8.5. Select initial cal and print response factors

Select QEDIT and EXIT. All changes should be saved.

Select quant and generate report (it will mark the ones where manual integration was performed). DO NOT CALCULATE AND GENERATE REPORT.

6.10.8.6. SAVE METHOD

Select File.

Select Save method and Save as a different name.

6.11 DATA REDUCTION

6.11.1 Data recording

The notation of all data acquisition shall be recorded into specified run log book(s) stored at the VOA work station located with the instruments. These run log book(s) contain the project number and survey name, the method for calibration, the data file ID name(s), the sample ID, and comments associated with the sample. The data file ID name(s) are assigned as follows:

XX (month)- XX (date) - X (year) – G,H or I - XX sequential ID

Example – 08139G03 G=5975B or H=5975C or I=Polaris Q

Dilution preparation will be archived in the comments section of the run log books and noted to the VOA sample extraction and dilution worksheet.

Analysts initials will be included in the "edit parameter" field when setting up the acquisition sequence for GC/MS injections. The initials are then carried forward to the HP Enviroquant file when the acquisition file is converted with MassTransit software. The analysts initials are manually entered in both the Excalibur sequence and in the HP file after conversion with the Finnigan Polaris Q ion-trap MS. The MassTransit software does not carry this information forward during the conversion.

Electronic back up of raw data files shall be performed routinely with current storage technology. The file directories for the data cartridge will be inventoried using a data back up log notebook.

6.11.2 Manual reduction

a. Select environmental processing

b. ".D" file, type in the file name. If this file is not present in the directory (example - NOV11E) then the ".TKF" file must be converted to a ".D" file (OS2 to Windows) by using the Tekloop program (Finnigan icon program). The file is entered into the menu as a ".TKF" file and is converted to a ".D" file.

c. Chromatogram will appear

d. Place cross hairs on the peak and dc with the right mouse button.

e. Library search by dc right mouse on the spectra.

Access the programs listed as headers by clicking on them. A number of choices are available to look at the data.

a. FILE: Selecting method report

b. INIT: Draw chromatogram and label peak numbers

c. TUNER: evaluate spectra

d. INIT CAL: set up Quant

edit compounds

update levels

report response factors

e. CON CAL: update continuing calibration

update reference spectra with ongoing standard file

evaluate continuing calibration

edit continuing calibration criteria

f. QUANT: calculate and generate a detailed report to printer with multiplier factor of factor of 1.

edit Quant report options

QEDIT Quant results

trace mode quant

generate report - summary with multiplier factor reflecting dilution (aqueous sample matrix) or multiplication factor (soils or drum sample matrix) to screen (print).

g. LSC: generate LSC report

h. LIB: generate library search report

i. CUST REPT: create/modify template

j. TOOLS: dolist
doscan
locate a compound
locate all compounds
easy ID
MS/dup recovery report

k. JOB: queue quant rept
queue list of files
configure quant list

l. HELP: contents
search
tutorial
about
about envirolink
clean up macro remains
log errors

6.11.3 Multiple filcs:

These are to be noted in the project notes.

6.11.4 Data qualifiers and definitions

ND - Not detected above the reporting limit

RL - Reporting Limit

J - Approximate

NA - Not applicable

B - Blank contaminant

E - Estimated value cxceeds the calibration range

L - Estimated value is below the calibration range

MCL - Maximum Contaminant lcvel

6.11.5 Treatment of blank values

a. If a blank contaminant is observed, corrective action will be taken to eliminate the source of contamination and samples will be reanalyzed if contamination significantly impacts the analytical results.

b. The reported value for the analytes in the sample will be qualified with a B if the observed value is not 5 times greater than the blank value.

6.11.6 Reporting limits of target compounds

Quantitation of target analytes are based on the initial calibration. The reporting limits of all target compounds are based on the low level standard point in each calibration table for each compound as observed in section 6.9, tables 1 and 2 or as referenced in table 3 for Method 5035. For an example of reporting limit(s) determination, see example calculation in section 6.3.3.

6.11.7 Tentatively identified compound reporting

The highest ten tentatively identified compounds are reported as observed. The observed levels must be twice the level of the low level standard point in each calibration table. The probability fit must be greater than 60% from the NIST reference spectral library. The estimated quantity is reported out. The reporting limit is estimated at ten fold the level of the low level initial calibration standard point in each calibration or as per 6.9.4. Reporting Limits for All Methods, Table 3.

7.0 Quality Control And Quality Assurance Section

The Quality control Officer has the results for the MDL study and the Precision and Accuracy Study for the Drinking Water Program, NPDES, RCRA, and CERCLA.

The Quality Control requirements found in each method are met before the sample(s) results are accepted. This includes the calibration and internal standards, surrogates, LFB, LRB and matrix spikes. The precision and accuracy is determined for each survey by analyzing a matrix spike and duplicate spike.

7.1 Acceptance criteria for VOAs by GC/MS

AUDIT	METH	FREQUENCY	LIMIT	CORRECTIVE ACTION
BFB	All	Before analysis and every 12 hrs.	see SOP 6.8.2, method(s) [1],[2]	Repeat BFB Tune MS Clean source
Initial Calibration (Primary source)	All	Initially before the analysis of sample(s) When continuous calibration fails or as method requires	All waste matrices for VOA are 20% RSD: VOADW is 20% RSD; Linear - Regression $R^2 >$ 0.99 method(s) [1],[2]	Evaluate chromatogram and integration Re- Calibrate

AUDIT	METH	FREQUENCY	LIMIT	CORRECTIVE ACTION
Continuous Calibration (Secondary source)	All except 624	Before analysis and every 12 hrs.	All waste matrices for VOA are is 30% RSD;VOADW is 30%; Linear - Regression+/- 15% of True Value method(s) [1],[2]	Evaluate Chromatogram and integration Repeat multi-cal
Lab Blk	All	Before sample analysis and every 12 hrs.	see SOP 6.11.5, method(s) [1],[2],[3]	Check blank source Bake trap Clean purge vessel Rinse syringes
Method Blk	All except 524.2	Before analysis and every 12 hours	see SOP 6.11.5, method(s) [1],[2],[3]	Check blank source Check reagent source Bake trap Clean purge vessel Rinse syringes
Trip Blk	All	One/set of samples	< Lab blank	Check storage blk Contact project officer
Lab Fortified Blk	524.2	Before analysis and every 12 hrs.	+ 30 %	Check peak integration Test for leaks Repeat
Matrix Spikes	All except 524.2	One MS/MSD for every project up to 20 samples	see SOP 6.3.4, 6.4.6, 6.5.5, method(s) [4]	Evaluate surrogate recovery Areas of internal standard Explain in report narrative
Duplicates	All	One for every project up to 20 samples	+ 40 %	Evaluate surrogate recovery Areas of internal standard Explain in report narrative
Internal Std	All	Every sample including std, blk and QC samples	see SOP 6.3.5, method(s) [1],[2],[3]	Re-run the sample Check the solution
Surrogate Recoveries	All	Every sample including std, blk, and QC sample	see SOP 7.2, method(s) [4]	Evaluate integration Quality the report

AUDIT	METH	FREQUENCY	LIMIT	CORRECTIVE ACTION
Response Factors of Internal and Surrogate Standards	All	Initial and Continuous Calibration	see SOP 6.3.5, method(s) [1],[2]	Evaluate integration Check for leaks Eval trap Re-calibrate
Linear Range	All	all samples	Bracket by Standard	Dilute sample

[1]= Acceptance criteria from Reference Method 524.2 ,rev 4.1
[2]= Acceptance criteria from Reference Method 8260B,SW-846, rev 2.0
[3]= Acceptance criteria defined based on technical judgment
[4]= Acceptance criteria defined based laboratory generated control windows

7.2 Surrogates Recoveries:

These are updated using LIMS bi-annually as control charts.

7.3 Matrix Spike and Duplicate Recoveries.

These are updated using LIMS bi-annually as control charts.

7.4 Performance evaluation sample analysis

Performance evaluation samples (PE) for the WS and WP programs are run bi- annually.

Performance evaluation samples (PE) for Low/High Soil proficiency programs are run bi-annually.

7.5 Determination of detection limit

The detection limit is determined according to the method described in 40 CFR Part 136 Appendix B, "Definition and Procedure for the Determination of the Method Detection Limits".

7.6 Corrective action procedure

The procedure for corrective action is outlined in section 14.0 of the EIA QA Plan, Rev 10., 02/14/08.

8.0 Waste Management

NERL encourages all chemist and biologists to investigate micro analytical techniques, innovative technologies, and chemical substitution in laboratory processes to reduce waste and prevent pollution. As analytical SOPs are reviewed, on an annual basis, the responsible chemist or biologist will incorporate waste minimization practices where practicable and where these practices have been demonstrated to return data of equivalent quality.

Chemists and biologists must refer to the Waste Management Program SOP for proper disposal of laboratory waste. Personnel should contact the Environmental, Safety and Health Department if changes in the analytical SOP will generate new waste streams. Questions regarding the proper disposal of laboratory waste and purchase of new reagents should be directed to the Environmental, Safety and Health Department in advance of actually initiating a change in the analytical method.

General procedures are contained in the aforementioned Waste Management Program SOP.

9.0 References

Environmental Investigation and Analysis Quality Assurance Plan, Rev 10., 02/14/08.

Standard Operating Procedures for Peak Intergrations and For Manual Manipulation of Computer Generated Data., Rev 2., 02/24/04.

Method 524.2, "Measurement of Purgeable Organic Compounds in Water by Capillary Column Gas Chromatography/Mass Spectrometry", Rev 4.1, (1995), US EPA, Cin, OH.

USEPA CONTRACT LABORATORY PROGRAM, STATEMENT OF WORK FOR ORGANIC ANALYSIS, OLM03.1, EPA-540/R-94/073, PB963503, August 1994.

TEST METHODS FOR EVALUATING SOLID WASTE, PHYSICAL/CHEMICAL METHODS. SW-846, Rev 2, December 1996.

SW-846, Method 5035A (Closed-system Purge-and-trap and Extraction for Volatile Organics in Soil and Waste Samples), Draft Revision 1, July 2002.

Standard Operating Procedure For Soil Sampling, Region I, EPA-New England, Rev. 02, 02/13/04.

40 CFR, Part 136, "Guidelines Establishing test Procedures for the Analysis of Pollutants".

Example of Analyst's Agreement Form (Performed Electronically)

I have read and understand the revision of the Standard Operating Procedure listed above and agree to use the procedures as written. If specific SOP requirements can not be met due to uncontrollable factors or if the client requests a departure from the SOP, the policy for departures from SOPs outlined in the current laboratory QA Plan will be adhered to.

Print Name	Signature	Date
Print Name	Signature	Date
Print Name	Signature	Date
Print Name	Signature	Date
Print Name	Signature	Date

10.0 Appendix

10.1 Start up from a power-off position.

a. Check the GC, if all the lights are on shut off the unit with the on/off switch in the rear of the GC.

b. Check the Tekmar(s), if it is beeping, press the EXIT pad on the unit.

c. Check the Archon(s), it may need to be started before the Tekmar. Turn off the Tekmar and start the Archon then the Tekmar.

10.2 Sampling method for soils.

10.2.1Soil sampling for High Level Soil sample analysis (HS) VOC analysis for solid matrices

This technique pertains to sampling methods for volatile organic compounds (VOCs) in solid matrices (sediment and soil). These samples will be analyzed using modified Method 5035A, closed-system purge-and-trap method for mid concentration soils. Samples will be collected using a 10cc syringe barrel and placed directly into 40 ml VOA vials containing preservatives.

At each sampling location, two vials will be used for the sample. One vial will contain 10 ml of methanol; and one vial will be empty. The methanol preserved sample is for analyzing levels of contamination if present, and the second is for calculation of percent solids. All vials containing preservatives will have been preweighed in the laboratory by a certified vendor.

Samples will be collected using dedicated 10cc syringes, which have had the ends cut to present an open barrel. When possible, the sample will be taken by pulling back the plunger of the syringe, and pushing the syringe into the sediments *in situ* to remove a plug of sediment. If the water depth exceeds 2-3 inches, or the sediment is highly heterogeneous in an area, an intact section of sediment may be removed using an Eckman or Ponar sampler, or a stainless steel bulb planter. This section will be placed in a clean stainless steel bowl with as little disturbance as possible, and the sediment will be collected from an undisturbed section using the syringe.

A sample of approximately 6-8 cc of sediment will be taken to obtain the needed 10 grams wet weight of sediment for the methanol preserved vial . The second vial to be used for the calculation of percent solids should be substantially filled. Aliquots of sample for each of the two VOA vials will be taken, placed into the vials, and immediately sealed with the vial cap.

Samples will be kept at 4 degrees centigrade. Sample preservation in methanol and water (bisulfite) must occur within 48 hours from when the sample is taken. The laboratory should be notified in advance to meet this criteria.

The following can be applied when selecting a suitable method for HS analysis.

Laboratory Derivations:

$$\text{Reporting Level(s)} = \frac{\text{(Extract Volume)(Dilution)(Standard)}}{\text{(Sample Dry Weight)}}$$

$$\text{Reporting Level(s)} = \frac{((0.010\text{L} + \textit{(gm of wet sample*)(\%moist.*)})(50)(5\text{ ug/L})}{0.010\text{ Kg (decimal \% solids)}} = \sim 250\text{ ug/Kg}$$

(Based on 5 ppb DL)
Methanol Preserved

**in volume units to account for water volume from sample*

$$\textit{Dilution Factor..} = \frac{\textit{5000 ul (volume purge tube)}}{\textit{100 ul (extract volume)}} = 50$$

$$\text{Reporting Level(s)} = \frac{((0.010\text{ L} + \textit{(gm of wet sample*)(\%moist.*)})(50)(1\text{ ug/L})}{0.010\text{ Kg (decimal \% solids)}} = \sim 50\text{ ug/Kg}$$

(Based on 1 ppb DL)
Methanol Preserved

10.2.2. Soil sampling for Low Level Soil sample analysis (LS) VOC analysis for solid matrices

This technique pertains to sampling methods for volatile organic compounds (VOCs) in solid matrices (sediment and soil). These samples will be analyzed using modified Method 5035A, closed-system purge-and-trap method for mid concentration soils. Samples will be collected using a 10cc syringe barrel and placed directly into 40 ml VOA vials containing preservatives.

At each sampling location, four vials will be used for the sample. Two vials will contain 5 ml of water preserved with sodium bisulfite; one vial will contain 5 ml of methanol; and one vial will be empty. The water and methanol preserved samples arc for analyzing levels of contamination if present, and the second is for the calculation of percent solids. All vials containing preservatives will have been preweighed in the laboratory or by a certified vendor .

Samples will be collected using dedicated 10cc syringes, which have had the ends cut to present an open barrel. When possible, the sample will be taken by pulling back the plunger of the syringe, and pushing the syringe into the sediments *in situ* to remove a plug of sediment. If the water depth exceeds 2-3 inches, or the sediment is highly heterogeneous in an area, an intact section of sediment may be removed using an Eckman or Ponar sampler, or a stainless steel bulb planter. This section will be placed in a clean stainless steel bowl with as little disturbance as possible, and the sediment will be collected from an undisturbed section using the syringe.

A sample of approximately 3-4 cc of sediment will be taken to obtain the needed 5 grams wet weight of sediment for the water and methanol preserved vials. The remaining vial to be used for the calculation of percent solids should be substantially filled. Aliquots of sample for each of the four VOA vials will be taken, placed into the vials, and immediately sealed with the vial cap.

Samples will be kept at or below zero degrees centigrade. Alternatively, Encore sampling devices or equivalent may be used. Sample preservation in water must occur within 48 hours from when the sample is taken. The laboratory should be notified in advance to meet this criteria.

The following can be applied when selecting a suitable method for LS analysis.

Laboratory Derivations:

$$\text{Reporting Level(s)} = \frac{\text{(Extract Volume)(Dilution)(Standard)}}{\text{(Sample Dry Weight)}}$$

$$\text{Reporting Level(s)} = \frac{\text{(0.005 L)(1)(5 ug/L)}}{\text{0.005 Kg (decimal \% solids)}} = \sim 5 \text{ ug/Kg}$$

(Based on 5 ppb DL)
Water Preserved

$$\text{Reporting Level(s)} = \frac{\text{(0.005 L)(1)(1ug/L)}}{\text{0.005 Kg (decimal \% solids)}} = \sim 1 \text{ ug/Kg}$$

(Based on 1 ppb DL)
Water Preserved

Project Review Form
VOA Analyses by GC/MS

Project Number_____**Site**_____**LIMS Code**_____**Matrix**_____

Note: Any omissions or problems with the data require resolution before proceeding to the next review step.

==========

REQUESTED ANALYSIS AND DATA FOLDER COMPLETENESS CHECK

( ) Does the LIMS information match the COC requests?- Check LIMS Project Form
( ) Were all samples analyzed and identified correctly?
( ) Have the samples been analyzed according to the referenced method or SOP? Are all deviations approved and documented?
( ) Have holding times been met?
( ) Has sample preservation been checked and documented for all samples ?
( ) Is the raw data folder complete?
  ( ) Copy of the Chain-of-Custody form and sample receipt checklist
  ( ) Project notes
  ( ) Soil extraction summary sheet for dry weight calculation
  ( ) Laboratory notebook form
  ( ) GC screening data (if applicable)
  ( ) BFB tunes - summary and raw data
  ( ) Initial and continuing calibrations - summarizations and raw data for all associated calibrations
  ( ) Computer generated sample sequence list, copy of instrument run log
  ( ) ID list with updated RFs
  ( ) Quantitation reports, reprocessed after manual checks (manual integration stamp initialed and dated by analyst)
  ( ) Extended GC/MS reports and TICs for samples
  ( ) Surrogate and matrix spike recovery table, IS area table

Reviewed by: Date Reviewed:

==========

DATA EVALUATION

( ) Have the proper number of QC samples been analyzed?
  ( ) Blanks
  ( ) Duplicates
  ( ) PE Samples
  ( ) MS/MSD
  ( ) LCS/ LFB
  ( ) QC check sample
  ( ) Second source standard
  ( ) Other (specify)
  ( ) Calibration standards (initial, continuing)
( ) Is the information on the medium level soil extraction bench sheets correct?
( ) Is there documentation of standard preparation and traceability?

( ) Are blank contaminants within limits? If outside limits, is there documented approval to proceed with analysis?
( ) Are spike recoveries and other QC check samples within limits ?
( ) Are surrogate recoveries/IS areas within limits? Do samples require reanalysis?
( ) Are BFB tunes acceptable?
( ) Are initial and continuing calibrations acceptable? Spot check RRF from raw data. Check all outliers.
( ) If required, were all samples analyzed within 12 hr of BFB?
( ) Have samples been processed with updated response factors? Check quantitation time on raw data.
( ) Are manual and computer based calculations correct? Check significant figures and document with a sample calculation from raw data to final concentration (the reviewer initials and dates calculation.)
  ( ) Dry weight calculations
  ( ) Report factors
  ( ) Sample concentrations
  ( ) Other
( ) Are the concentrations of the compounds found within calibration range?
( ) Are duplicate results within QC acceptance windows ?
( ) Has the final report been checked for transcription errors?

Reviewed by: Date Reviewed:

==========

FINAL REPORT

( ) Check the following information on the report accuracy.
  ( ) Sample IDs- laboratory and field
  ( ) Date sampled (collected) ( ) Date received ( ) Date analyzed
  ( ) Sample weight, % solids
  ( ) Reporting Limit (R.L.), dilution and scaling factor
  ( ) Qualifiers
  ( ) pH
( ) Is the method summary an accurate reflection of all encountered problems? Are observations about the samples noted? Are method blank contaminants mentioned?
( ) Are the reported results consistent with the significant figure policy?
( ) Has the final report been checked for transcription errors?

Reviewed by: Date Reviewed:

Comments:

* = See Comments N = No
NA = Not Applicable Y = Yes

Method Comparison Table

Method / Parameter ⇓	SW-846 Method 8260B	EPA 600 Series Method 624	CLP VOA (Organic SOW)	EIASOP-VOAGCMS9
Applicability	Groundwaters, soils, sediments, sludges, non-water miscible wastes & others	Municipal and industrial discharge	Water, soil, and sediment.	Groundwaters, soils, sediments, sludges, non-water miscible wastes & others
Number of Analytes	121 total	31 total	33 total	70 total
Method Validation	Analyze 4 replicates of QC check standard. Compare to average recovery (R), standard deviation of recovery (S) and relative standard deviation (RSD) values given in Tables 6 (see page A-128) and 7 (see page A-130). Results for RSD must not exceed 2.6 times the single laboratory RSD or 20%, whichever is greater, and the mean recovery must lie within the interval R ± 3 times S or R ±30%, whichever is greater.	Analyze 4 replicates of QC check standard. Compare accuracy and precision results to Table 5 (see page A-75).	Not specified.	Analyze 4 replicates of QC check standard. Compare to average recovery (R), standard deviation of recovery (S) and relative standard deviation (RSD) values given in Tables 6 (see page A-128) and 7 (see page A-130). Results for RSD must not exceed 2.6 times the single laboratory RSD or 20%, whichever is greater, and the mean recovery must lie within the interval R ± 3 times S or R ±30%, whichever is greater.
QC Check Standards/ Samples	The MS/MSD percent recovery (R_i) should lie within the QC acceptance criteria determined from the analysis of laboratory control samples during method validation. If the MS recovery is out of criteria, a QC check standard must be analyzed and fall within those ranges. Express the accuracy assessment as a percent recovery interval of ± 2 standard deviations.	Analyze one QC check standard each working day. (Frequency may be reduced if MS recoveries meet QC criteria). Compare %R to Table 5 (See page A-75). If MS results fall outside acceptance criteria, a QC check standard must be analyzed and fall within acceptance criteria.	Not specified.	The MS/MSD percent recovery (R_i) should lie within the QC acceptance criteria established by the laboratory.

Method Parameter ⇓	SW-846 Method 8260B	EPA 600 Series Method 624	CLP VOA (Organic SOW)	EIASOP- VOAGCMS9
Initial Calibration	Minimum of 5 levels, lowest near but above MDL. %RSD should be < 15 for every compound, however for CCCs < 30. RF for SPCCs = 0.300 for chlorobenzene and 1,1,2,2-tetrachloroethane; = 0.100 for chloromethane and 1,1-dichloroethane, (> 0.100 for bromoform) Option 1: If CF or RF %RSD <15 or if mean %RSD of all analytes < 15 then use average CF or RF. Alternatively use a cal. curve (see option below). Option 2: If CF or RF %RSD >15 or if the mean %RSD of all analytes > 15, then use a cal. curve: a) linear cal. using least squares regression; b) linear cal. using weighted least squares regression. Requirement: r ≥0.99, not forced through the origin, do not use origin as a cal. point. Option 3: Where instrument response is non-linear over wide working range or above procedures fail acceptance criteria, non-linear cal. may be employed. Requirement: COD ≥0.99, not forced through origin, do not use origin as a cal. point, other requirements exist pending curve fitting model chosen.	Minimum of 3 levels, lowest near but above MDL. If %RSD < 35, linearity assumed and average RF used. Alternatively, use a calibration curve.	Five levels (10, 20, 50, 100, and 200). RRF and RSD criteria listed in Table 5 of Exhibit D/VOA (see page A-13). Primary characteristic ions used for quantitation are listed in Tables 2 (see page A-11) and 4 (see page A-12) of Exhibit D/VOA. Up to 2 compounds in Table 5 of Exhibit D/VOA are permitted to fail RRF and RSD criteria provided RRF ≥0.010 and %RSD ≥40.0%.	Minimum of 5 levels, lowest near but above MDL. %RSD should be <20 for all compounds. If RF %RSD >20, then use a cal. curve: a) linear cal. using least squares regression; b) linear cal. using weighted least squares regression. Requirement: r ≥0.995, not forced through the origin, do not use origin as a cal. point. For compounds using linear calibration, the low initial calibration point is reprocessed using the generated method and must have true value of +/- 30%. Point is either dropped or the next calibration level is utilized as the RL. The RL is raised to the appropriate concentration where calibration criteria is achieved by average response or by linear regression. If neither criteria is achieved then compound(s) are flagged with a J qualifier .

Method Parameter ⇓	SW-846 Method 8260B	EPA 600 Series Method 624	CLP VOA (Organic SOW)	EIASOP- VOAGCMS9
Continuing Calibration/ Calibration Verification	Mid-level calibration standard run every 12 hours. RF for SPCCs same as for initial calibration. RF of CCCs must be <20% difference from initial calibration. Internal standards: RT must be within ± 30 seconds from last mid-point standard level of the initial calibration; area must be -50 to +100%.	QC check standard analyzed each working day. Compare results to Table 5 (see page A-75).	A mid-level calibration standard is analyzed every 12 hours. The % difference criteria is listed in Table 5 of Exhibit D/VOA. Up to 2 compounds in Table 5 of Exhibit D/VOA (see page A-13) permitted to fail criteria if RRF > 0.010 and %D = 40%.	Mid-level calibration standard run every 12 hours. RF must be <30% difference from initial calibration. The absolute areas of quantitation ions of both internal and surrogate standards must not be decreased by more than 30% from the most recent continuing calibration, or by more than 50% from the areas of the initial calibration.
Surrogate Standards	4-Bromofluorobenzene, Dibromofluoromethane, Toluene-d_8, and 1,2-Dichloroethane-d_4 are recommended. Compare %R to laboratory established limits or to Table 8 (see page A-131) if laboratory limits are not available. Laboratory limits must fall within limits specified in Table 8. (See page A-131)	Minimum of 3 from Table 3 (see page A-74). % Recovery limits not specified.	(System Monitoring Compounds) 4-Bromofluorobenzene, 1,2-Dichloroethane-d_4, and Toluene-d_8. Recovery limits in Table 7 of Exhibit D/VOA (see page A-14). RRT must be within 0.06 RRT units of continuing calibration standard.	4-Bromofluorobenzene, 1,2-Dichloroethane-d_4, and Toluene-d_8. Recovery limits established by laboratory.
Internal Standards	Fluorobenzene, Chlorobenzene-d_5, 1,4-Dichlorobenzene-d_4 are recommended. RT must be ±30 seconds from last calibration check (12 hours); area must be -50 to +100%.	Optional. If used, minimum of 3 from Table 3 (see page A-74).	Bromochloromethane, 1,4-Difluorobenzene, and Chlorobenzene-d_5. RT must be ±30 seconds from last calibration; area must be 50 to 100%. See Table 3 of Exhibit D/VOA (see page A-12) for target compound assignments.	Pentafluorobenzene, 1,4_DiflourobenzeneChlorobenzene-d_5, and 1,4-Dichlorobenzene-d_4

Method / Parameter ⇓	SW-846 Method 8260B	EPA 600 Series Method 624	CLP VOA (Organic SOW)	EIASOP-VOAGCMS9
Accuracy/Precision	One MS/MSD per 20 samples or each batch of samples, whichever is more frequent. The MS/MSD percent recovery (R_i) should lie within the QC acceptance criteria determined from the analysis of laboratory control samples during method validation. (See also: **QC Check Standards/Samples**.)	One MS per 20 samples from each site or 1 per month, whichever is more frequent. Compare %R to Table 5 (see page A-75). (See also: **QC Check Standards/Samples**.)	One MS/MSD per each case or 20 samples or each extraction batch or each 14 day period samples received from case, whichever is more frequent (only 5 compounds spiked). Compare results to Table 8 of Exhibit D/VOA (see page A-14).	One MS/MSD per 20 samples or each batch of samples, whichever is more frequent The MS/MSD percent recovery (R_i) should lie within the QC acceptance criteria established by the laboratory.
Method Blanks	One method blank per extraction batch (up to 20 samples) or when there is a change in reagents, whichever is more frequent.	One method blank per day.	One method blank every 12 hours. Concentration = CRQL for all but methylene chloride = 2.5 times CRQL; acetone; 2-butanone = 5 times CRQL.	One method blank per extraction batch (up to 20 samples) or every 12 hours.
Preservation/ Storage Conditions	pH <2 with HCl or H_2SO_4 (aqueous). Sodium thiosulfate if residual chlorine (aqueous). Store at 4°C.	pH <2 with HCl. Sodium thiosulfate if residual chlorine. Store at 4°C.	Protect from light. Store at 4°C. Aqueous: pH of 2 All samples in group should be stored together. Storage blanks required. Samples should be stored for 60 days after the data package has reached the EPA.	pH <2 with HCl (aqueous). Sodium thiosulfate if residual chlorine (aqueous). Store at 4°C.
Holding Time	14 days of sample collection.	14 days of sample collection.	10 days of sample receipt.	14 days of sample collection.
Field Sample Amount Required	40 mL VOA vial in duplicate without headspace (air bubbles) (aqueous) 4 oz. (solid) glass container Teflon lined septa	40 mL VOA vial in duplicate without headspace (air bubbles) glass container Teflon lined septa	40 mL VOA vial in duplicate without headspace (air bubbles) (aqueous) 4 oz. (solid) glass container Teflon lined septa	40 mL VOA vial in quadruplicate without headspace (air bubbles) (aqueous) 40 mL VOA vial in duplicate with water (low soil) Store below 10 degees

Method Parameter ⇓	SW-846 Method 8260B	EPA 600 Series Method 624	CLP VOA (Organic SOW)	EIASOP- VOAGCMS9
Amount for Extraction	5 mL (aqueous) or 25 mL (aqueous) 5 grams (solid)	5 mL	5 mL (aqueous) 5 grams (solid) 4 grams (medium-level solid)	5 mL (aqueous) 5 or 10 grams (solid)
Other Criteria (Method Specific)	Tuning: 50 ng bromofluorobenzene (BFB) initially and every 12 hours; acceptance criteria in Table 4 (see page A-123). Qualitative ID: The intensities of the characteristic ions of a compound maximize in the same scan or within one scan of each other. RRT of the sample component is within 0.06 RRT units of the RRT of the standard component. The relative intensities of the characteristic ions are within 30% of those ions in the reference spectrum. Tentative ID: All ions >10% intensity must be ±20% of standard, ±0.06 RRT units of standard RRT. Molecular ion must be present. Library searches may be made for the purpose of tentative identification.	Tuning: 50 ng bromofluorobenzene (BFB) initially and every 24 hours; acceptance criteria in Table 2 (see page A-74). Qualitative ID: Three characteristic ions must be ±20% of standard and must maximize within 1 scan.	Tuning: 50 ng bromofluorobenzene (BFB) initially and every 12 hours; acceptance criteria in Table 1 of Exhibit D/VOA (see page A-10). Qualitative ID: All ions > 10% intensity must be present and ±20% of standard; ±0.06 RRT units of standard RRT. Up to 30 compounds not listed in Exhibit C for the volatile organic fraction, with responses > 10% of nearest IS are tentatively identified via a library search. Relative intensities of reference spectrum must be present in sample spectrum and within 20%. Molecular ion must be present.	Tuning: 50 ng bromofluorobenzene (BFB) initially and every 12 hours; acceptance criteria in SOP. Qualitative ID: All ions > 10% intensity must be present and ±20% of standard The retention time should be within three standard deviations of the mean retention time of the compound in the calibration mixture. Up to 10 non-targets compounds with responses twice the level of the low level calibration point. Probability >60% from the reference library.

EPA New England Region 1

Standard Operating Procedure for the Determination of Metals in Environmental Samples using Dual View Inductively Coupled Plasma Optical Emission Spectroscopy (ICP-OES)

Office of Environmental Measurement and Evaluation (OEME)
Investigations and Analysis Unit (EIA) - Chemistry Laboratory
USEPA Region 1, New England Laboratory
11 Technology Drive
North Chelmsford, MA 01863-2431

Prepared by: Michael Dowling for Janet Paquin 2/25/08
Janet Paquin, Chemist
Investigations and Analysis Unit, OEME

Approved by: 2/25/08
Agnes VanLangenhove, QA Officer
Investigations and Analysis Unit, OEME

Approved by: 2/25/08
Daniel Boudreau, Acting Chief
Investigations and Analysis Unit, OEME

The controlled version of this document is the electronic version viewed on-line only. If this is a printed copy of the document, it is an uncontrolled version and may or may not be the version currently in use.

This document contains direction developed solely to provide internal guidance to U.S. Environmental Protection Agency (EPA) personnel. EPA retains the discretion to adopt approaches that differ from these procedures on a case by case basis. The procedures set forth do not create any rights, substantive or procedural, enforceable at law by a party to litigation with EPA or the United States.

This SOP was revised by ESAT contractors.

Table of Contents

Section:		Page:
1.0	Scope and Application	3
2.0	Summary of Method	3
3.0	Purpose	3
4.0	Interferences	3-4
5.0	Instrumentation	4
6.0	Health and Safety	4
7.0	Personnel Qualifications	4
8.0	Sample Preparation	4
9.0	Preparation of Calibration Standards and Quality Control Solutions	4-6
10.0	Instrument Operation	6-16
11.0	Instrument Maintenance	16-17
12.0	Data Calculations and Data Reporting	17-22
13.0	Quality Control and Quality Assurance	22-24
14.0	Waste Management	25
15.0	References	25
	Table I: ICP Reporting Limits	26
	Table II: Instrument Parameters	27
	Table III: Calibration Standard Concentrations	28
	Project Review Form	29-30

1.0 Scope and Application:

1.1 The ICP method is used to determine the concentration of metals in various matrices (water, soil/sediment, sludge, etc.).

1.2 This method is applicable to the analysis of the following metals: Ag, Al, As, Ba, Be, Ca, Cd, Co, Cr, Cu, Fe, K, Mg, Mn, Na, Ni, Pb, Sb, Se, Ti, Tl, V, Zn. The instrument also has the capability to analyze additional elements.

***See Appendices I and II for EPA methods and EPA SOP comparisons.**

2.0 Summary of Method:

An inductively coupled plasma (ICP) instrument is used to determine the metal concentrations in environmental samples. This instrument utilizes the principle of atomic emission; it measures the intensity of light energy that is given off when metal atoms are subjected to thermal excitation. The emitted light is then separated into individual wavelengths using an echelle grating and a prism. A segmented-array, charge-coupled-device detector is used to monitor the intensities of the line spectra.

3.0 Purpose

To ensure that the procedures for the analysis of metals by ICP are consistently applied by all analysts.

4.0 Interferences:

There are four types of interferences that occur in ICP analysis.

4.1 Spectral interferences are caused by the overlapping of two spectral lines and/or by an elevated background produced by the emission from a high concentration element. These interferences are usually compensated for by employing background correction points and interelement correction factors. An alternate wavelength can also be selected.

4.2 Physical interferences are caused by the differences in nebulization and uptake rates between the samples and standards. Samples that have high levels of solids will be nebulized at a slower rate than the calibration standards which may cause a negative bias. The use of a high solids nebulizer, sample dilution, matrix matching and/or internal standards can be used to compensate for these effects.

4.3 Chemical interferences are not common in ICP-OES due to the extremely high temperature argon plasma excitation source. However, certain elements like Na and K require adjustments to the plasma radio frequency (RF) power, nebulizer

pressure and plasma viewing height in order to improve sensitivity. The alkali metals are considered "easily ionizable elements."

4.4 Memory interferences result when analytes in a previous sample contribute to the analyte concentration in the sample being analyzed. This would occur if the rinse time is too short and/or a high concentration sample was analyzed. A rinse time of 60 secs. (seconds) is recommended to minimize this interference.

5.0 Instrumentation:

PerkinElmer 4300 DV ICP Spectrometer (Dual View ICP). The instrument is equipped with a data management system and an auto-sampling system.

6.0 Health and Safety:

This instrument uses a UV (ultra violet) filter to absorb the high energy UV light that is emitted by the argon plasma. All samples are analyzed using an autosampler which is contained within a vented cover to prevent the analyst from being subjected to acid fumes. Safety glasses must be worn at all times.

7.0 Personnel Qualifications

Each person performing this analysis must have the education, training, technical knowledge, and experience, or a combination thereof, to enable that individual to perform this analysis. Personnel qualifications are documented in terms of education, experience, and training, and are periodically reviewed to ensure adequacy to current responsibilities.

8.0 Sample Preparation:

-See Sample Preparation Methods for Metals Analysis SOP INGMETALSPREP6.SOP

9.0 Preparation of Calibration Standards and Quality Control Solutions:

***Note - The diluent used for all solutions is l% HNO_3+ 5% HCL** (20mL conc. HNO_3 + 100mL conc. HCL diluted to 2L in reverse osmosis (RO) water).

All standards are prepared volumetrically.

The expiration date for the stock standards is at least one year from the manufacturer's preparation date. Expiration dates are noted on the standards bottles and/or on the Certificate of Analysis.

Different stock solutions and vendors may be used due to availability. The initial

volumes and final volumes prepared may be varied based on workload.

The expiration date for all working standards is one month after the date of preparation.

9.1 The **initial calibration standard (ICS)** is prepared by combining each of the following solutions and diluting to 100 mL:

a. 2.0mL of ICV-1 standard (VHG Labs)
b. 1.0mL of ICV-II standard (VHG Labs)
c. 0.2mL of 1000 µg/mL Titanium (Inorganic Ventures)
d. 1.0mL of 1000 µg/mL Aluminum (Inorganic Ventures)

9.2 The **instrument performance check standard (IPC)** is prepared by combining each of the following solutions and diluting to 200 mL:

a. 2.0mL of ICV-1 standard (VHG Labs)
b. 1.0mL of ICV-II standard (VHG Labs)
c. 0.2mL of 1000 µg/mL Titanium (Inorganic Ventures)
d. 1.0mL of 1000 µg/mL Aluminum (Inorganic Ventures)

9.3 The **reporting limit standard (RLS) is** prepared by first combining each of the following solutions and diluting to 100 mL.

a. 1.0 mL CRQL solution 1 (VHG Labs)
b. 1.0 mL CRQL solution 2 (VHG Labs)
c. 0.5mL of 1000 µg/mL Titanium Standard (Inorganic Ventures)

This solution is further diluted 1:10 for the final RL standard.

The lowest acceptable result achieved from the RLSs will be used for the reporting limits.

9.4 The **ICS calibration standard** is diluted at 1:50 and 1:100 and analyzed as secondary reporting limit standards. The lowest result achieved from the CRQL standard and the diluted ICS standard will be used for reporting limits.

9.4 **Interference check standards A and AB (IFCS A and IFCS AB)** are used to verify the proper background correction points and interelement correction factors are in place.

IFCS A contains only the interferents (Al, Ca, Fe, and Mg). To prepare, add 10.0 mL of ICSA-500 (VHG Labs) to 200mL.

IFCS AB contains the analytes and interferents. To prepare, dilute the following to 200 mL:

a. 10.0 mL ICSA-500 (VHG Labs)
b. 18.0 mL 10 ppm As, Pb, Se, and Tl (dilute 1000ppm stocks of As, Pb, Se, and Tl 1:100)
c. 2.0 mL 4ICSAB-100 (VHG Labs)
d. 0.1mL 1000 ppm Ti (Inorganic Ventures)

9.5 The **initial calibration verification standard (ICV)** or quality control sample (QCS) is used to verify the accuracy of the calibration standards. It is prepared by diluting the following to 100 mL:

a. 2.0 mL ICV-I (J.T. Baker brand)
b. 1.0 mL ICV-II (J.T. Baker brand)
c. 0.2 mL of 1000 µg/mL Titanium standard (Environmental Express).

9.6 The **internal standard solution** (5 ppm Sc) is prepared by adding 2.5mL of 1000ppm Sc to 500mL.

The internal standard (scandium or yttrium) is used to compensate for physical interferences such as differences in densities, viscosities and dissolved solids levels between the standards and samples. The software monitors the emission counts of the analytes and internal standard in the samples. The ratio of the counts is used to correct for physical changes during the analysis.

9.7 The **calibration blank** consists of 1% HNO_3 + 5% HCL.

10.0 Instrument Operation:

10.1 Instrument start-up

- Attach the 0.045" 2-stop red/red tubing on the drain pump platen. Attach the 0.030" 2-stop black/black tubing on the sample pump platen. Attach the 0.015" 2-stop orange/green tubing on the internal standard pump tubing platen. Install the platens on the peristaltic pump. Immerse the ends of both the internal standard tubing and the rinse line tubing in RO water. Check the tubings for the autosampler rinse station and change if necessary. Tighten the platen for the autosampler rinse station.

- Check that the chiller is on and the nitrogen pressure is 100 psi (pounds per square inch) and the argon pressure is at least 125 psi; the exhaust is always on.

- Turn on the computer, monitor, printer (check that paper supply is sufficient). It may be necessary to change the User Name. Go to the **start**, **shut down**, and log off the user name if necessary. Currently, the User Name is **administrator.**

- On the computer, go to **WINLAB32** to access the WinLab32 ICP Continuous -Plasma Control screen. The instrument goes through a series of automatic checks (Optima 4300 DV Spectrometer, Plasma Generator, and AS-93plus Autosampler) to ensure that all systems are adequate for analysis.

- In the toolbar choose **file**, **open**, **Method DV4300, ok.**

- Click on the plasma icon and click on **pump**

- Click on the plasma icon and click on **nebulizer (Neb).**

- Click on the options in the tool bar, and choose autosampler. The rinse can be set to "**pump always on**."

- Check that all flows are operating correctly prior to igniting the plasma.

- On the plasma switch click **on**. Argon will purge for approximately 60 seconds. and then plasma will ignite. The pump will automatically shut off until the plasma comes on. It will then turn back on automatically.

- Check that the plasma is stable and looks normal. If the plasma does not look normal, immediately click on the plasma off switch so that the torch will not be damaged.

- If the autosampler probe is not in the rinse
- click on **analysis**

- click on **autosampler**

- click on **A/S Probe Up/Down**

-The side (optional) autosampler can now be set to "**pump on while in rinse location**." This option not only prevents continuous and wasteful disposal of the rinse solution, but allows the analyst to observe if the autosampler probe is set at the correct depth and will not crash into the sides of the sample vials or rinse port.
-Go to **options** in the tool bar, choose **autosampler**

-Choose "**pump on while in rinse location**".

It may be necessary to manually re-start the autosampler rinse pump at this point.

-Go to **Auto**, **Analyze**, **Analyze All**, **Analyze All**, choose "**stop immediately**" then **Reset Sequence**, and close the window.

-Wait at least 60 minutes for the instrument to warm up

10.2 Aligning the Torch Viewing Position

The torch viewing position alignment is done to set the plasma viewing position of the spectrometer entrance optics at the highest signal intensity. This procedure should be done every day, and if the torch is removed or replaced. It should also be done if the RF coil is replaced.

- Aspirate a 10 ppm Mn standard.

- After the instrument has warmed up for an hour, Click on **Tools**

- Click on **Spectrometer Control**

- Click on **Align View**

- Select the analyte **Mn 257.610**

- Set the read delay time to **120 seconds** (time entered should be sufficient to allow manganese to through the alumina tip injector).

- Click on **OK**

- Repeat if positions are unacceptable.

The x-viewing position should be set to 0.0 mm for Radial viewing.
The y-viewing position should be set to 15.0 mm for Axial viewing.

- Choose **Radial**

- Click on **Align View**

- Select the analyte **Mn 257.610**

- Set the read delay time to **0 seconds** (time entered should be sufficient to allow manganese to through the alumina tip injector).

- Aspirate the 10ppm Mn solution

- Click on **OK**

- Repeat if positions are unacceptable. The x-viewing position should be set to 0.0 mm for Radial viewing.

- When the instrument finishes the procedure a report will be generated. The report should be kept on file for future reference.

- Allow the instrument to flush for at least 5 minutes before proceeding with Analysis.

- Alternatively, a work space to align the torch has been created. Click on **wrkspc**, choose **torch align.icp**, click on **ok**, choose **axial** or **radial** and proceed as described above.

10.3 Creating a New Method

Note - The method that is used on a daily basis is called "DV4300". This method is routinely used for sample analysis. The method contains a series of 7 tabs. Most tabs contain more than one page. On each page there is a list of options that may be modified providing the changes comply with the E.P.A. method that is being followed. If the DV4300 method is modified, the new method should be saved under a new name.

-To open the method, click on the **MethEd** icon.

The following tabs and their corresponding pages are as follows:

- The **Spectrometer** tab has a **Define Elements** page. The elements, corresponding wavelengths (see table - II), and the element function (analyte or int.std.) can be changed from this page.

- The **Spectrometer** tab has a **Settings** page which contains the following:

Spectral Profiling: No
Resolution: Normal
Purge Gas Flow: Normal
Read Delay Time (sec): 90
Replicates: 3
Read time: Auto
Min Time: 5.000 sec
Max Time: 20.000 sec

- The **Spectrometer** tab has a **Spectral Window** page that contains the elements,

corresponding wavelengths (see table - II), each element's survey window (the wavelength range in which the plasma emission data is collected), and each element's auto integration window (the wavelength range in which the integration time is calculated).

- Under the **Sampler Tab** there is the **Plasma Parameters** page. For all elements the parameters are set up the same:

Source Equilibration Delay: 15 sec
Plasma Aerosol Type: Wet
Nebulizer Start-up conditions: Instant
Argon Flow to the plasma: 15 L/min
Auxiliary Argon Flow for the ICP torch: 0.2 L/min
Argon Flow the nebulizer: 0.6 L/min
Rf power: 1500 Watts
Plasma Viewing Distance: 15.0
Plasma View: see Table - 2

- Under the **Sampler Tab** there is a **Peristaltic Pump** page. Sample flow rate: 1.80 mL/min Flush time: 70 sec.

- Under the **Sampler Tab** there is an **Autosampler Page**. Wash frequency: between samples rate: 1.80 mL/min Normal time: 60 sec. Wash location: 0

- Under the **Process Tab** there is a **Peak Process** page. For each element there is:
Function: A or IS
Peak Algorithm: Peak Area
Points per Peak: Ag-3, Al-3, As-1, Ba-3, Be-2, Ca-3, Cd-3, Co-3, Cr-3, Cu-2, Fe-3, K-5, Mg-3, Mn-2, Na-3, Ni-3, Pb-2, Sb-1, Se-1, Ti-3, Tl-1, V-2, Zn-3, Sc (radial)-3, and Sc (axial)-3

- Under the **Process Tab** there is a **Spectral Corrections** page. For each element there is listed the following:
Function: A or IS
Overlap Correction: IEC
Number of background corrections: Ag-2, Al-2, As-2, Ba-1, Be-1, Ca-2, Cd-1, Co-2, Cr-2, Cu-1, Fe-2, K-2, Mg-2, Mn-2, Na-2, Ni-2, Pb-2, Sb-2, Se-2, Ti-2, Tl-1, V-2, Zn-2, Sc (radial)-1, and Sc (axial)-1

- Under the **Process Tab** there is an **Internal Standards** page where each analyte is either assigned to the Sc axial or the Sc radial internal standard (see Table – 2).

- Under the **Process** Tab there is an **Internal Standards** Check Page containing the internal standards check requirements:

Perform internal standards check: Yes
For each internal standard: Enabled
Check Min (%): 80
Check Max (%): 120
Action for internal standards failure: Repeat 1 time, then continue.

- Under the **Calibration** tab there is a **Define Standards** page. There are currently 2 standards used for the curve. The cal. blank in A/S location 1 and the 1CS -1 in A/S location 2.

- Under the **Calibration** tab there is a **Calibration Units and Concentrations** page. All concentrations are in ug/L and the concentrations are listed in Table - 111.

- Under the **Calibration** tab there is a **Blank Usage** page. All analytes are assigned to calibration blank 1 and the subtract reagent option is set to n/a.

- Under the **Calibration** tab there is an **Equations and Sample Units** tab. The information on this page is:

the function of each analyte: A or 1S

the type of calibration equation used: linear for all analytes

the sample units: ug/L for analytes and mg/L for internal standards

the number of decimal places to be reported: one for all analytes

the number of significant figures: four for all analytes

- Under the **Calibration** tab there is an **Initial Calibration** page. It is set to clear the old calibration curve and construct a new one.

- Under the **Calibration** tab there is a **Multi Line Calibration** page. It is currently not enabled.

- The **Checks** tab contains the list of elements, their wavelengths, and the concentration units (ug/L).

- The **QC** tab contains a **QC Sample Definition** page. This page list the QC required for the run and their position in the autosampler.

- Under the **QC** tab there is a **Concentrations and Limits page.** That page lists each QC standard, the elements to be analyzed for, and the upper and lower acceptance ranges for each element.

- The **QC** tab contains a **Scheduled QC's** page. The frequency that each QC standard must be run is listed.

- The **QC** tab contains an **Action: After Calibration QCs** page. Currently the function is set to simply flag any limits not met and then continue.

- The **QC** tab contains an **Action: Failure Actions for Periodic QC's** page. Currently the function is set to simply flag any limits not met and then continue.

- Under the **QC** tab there is an **Action: End & Retry** page. Currently the function is not used. The action is scheduled to continue.

- All analysts are required to evaluate the calibration, and re-calibrate if necessary prior to sample analysis.

- The **Options** tab lists available options for the final results. The current options used are analytical header, method header, sample header, start each sample on a new page, means and statistics, matrix test reports, calibration summary, and spectral data.

10.4 InterElement Correction (IEC) Setup.

InterElement correction (IEC) is a technique used to correct for spectral interferences. The software uses mathematical correction factors to adjust for element concentrations. It is usually best to establish IEC by using two sources of stock solutions; this typically lessens the chances of incorrect corrections (especially positive corrections which may be due to stock contamination). ICP trace grade, with concentrations lower than the instrument detection limit is mandatory. IECs should be set by an experienced analyst.

1: Calibrate instrument, with past interelement correction factors turned off.
2: Analyze known concentrations; typically close to the upper linear end.
3: Be sure to name and store data.
4: After the completion of the analysis, open **"Tools"**
5: Open **"IEC Model Builder"**
6: In **"Set Up",** open the previously stored **"Results Data Set"** and find the data set where the initial analysis was stored. If two sets of stock solutions were used, only one may be used to calculate the factors (use stock 2 to make professional judgment about the validity of positive factors).
7: Using the "**Set Limits**" soft key, set up the lowest concentration to examine under each analyte; concentrations near the Instrument Detection Limits are usually preferred.
8: Use the "**Calculate Factors**" soft key to select the samples (stock solutions) and scroll across to match the analytes that need interference corrections. The software will automatically apply the mathematical correction factors. Examine positive

corrections, comparing results from the separate stock solutions.
9: Use the "**Summarize Factor**" key and make any necessary changes.
10: Save the results by date using **"Save"** from the file menu.

10.5 Background Correction Setup

Background corrections (BGC) are set to establish the best analyte viewing parameters. BGCs should be set by an experienced analyst.

1: Calibrate the instrument, name and save Results Data Set
2: Analyze a multi concentration standard, preferably an Initial Continuing Verification (ICV) Standard since the concentrations are at a high enough level to create easily checked peaks.
3: When the analysis is complete open **"Examine Spectra"**
4: Open **"Data"** and select the previously saved data set.
5: Pick Sample ID **(ICV)**
6: Choose analytes one at a time.
7: Drag the horizontal scroll bar to position vertical the cursor wherever a background correction (BGC) point is to be placed. Another method is to simply hold down the control key and position the mouse on the exact spot to be chosen for the correction. Background corrections are best chosen valley to valley. Left offsets are entered as negative numbers. Right offsets are entered as positive numbers. If two peaks are present the left offset may display as a lower positive number.
8: In the Method menu, click on the "**Update Method Parameters"** option.
9: Be sure that check marks appear to show that BGCs have been selected. If two background correction points are selected, a checkmark should appear in the boxes for "Background Correction", BGC 1 Offset (nm), and BGC 2 Offset (nm).
10: Click on the **Update** button to enter the new BGC points into the method.
11: Save the Method.
12: Reanalyzing and printing off the peaks of the standard (ICV) used is recommended.
13: Adjustments can be made under "Method Editor", "Process" "Spectral Corrections" by simply typing in small adjustments and re-examining the active spectra.

10.6 Linear Dynamic Ranges

Linear dynamic ranges (LDR) for each wavelength is established to set the maximum concentration at which an analyte may be reported without dilution.

1: Calibrate the instrument.
2: Prepare 3-5 (preferably 5) known concentrations for all analytes. Standards near the upper ranges must be prepared.
3: Analyze the standards from the lowest concentrations to the highest concentrations.
4: A higher concentration can be analyzed if the previous standard recovers within 10% of the true value.

5: Set the LDR for each analyte at the highest concentration within 10% of the true values.

10.7 Instrument Calibration and Sample Analysis:

A typical sample run sequence is as follows:

Calibration Blank
Initial Calibration Standard (ICS)

Initial Calibration Blank (ICB)
Initial Calibration Verification (ICV)
Instrument Performance Check Standard (IPC)
Initial Calibration Standard (ICS)
Reporting Limit Standard(s) (RLS)
Interference Check Standard A (IFCS A)
Interference Check Standard AB (IFCS AB)
Continuing Calibration Verification Standard (CCV)
Continuing Calibration Blank (CCB)

Preparation Blank or Lab Reagent Blank (LRB)
Laboratory Fortified Blank (LFB) water/soil
Laboratory Control Sample (LCS) soil
Field Samples
Laboratory Duplicate Sample
Matrix Spike Sample or Lab Fortified Matrix (LFM)
Field Samples

CCV and CCB standards are analyzed at a 10% frequency throughout the run.

The following standards must be analyzed at the end of all analyses:

IFCS A
IFCS AB
CCV
CCB

Note: The IPC solution is used as the CCV solution.

To set up a run:

- Place the internal standard line in the 5 ppm Sc solution. Place the autosampler rinse line in the 2% HNO_3 + 2% HCl. Let the solutions flush through the system before running any standards.

- If Method **DV4300** is not displayed:

- Click on **file**

- Choose **open, method**

- Choose **DV4300**

- Click on **ok**

- Click on **file**

- Choose **open, sample info file** (depending on previous use it may be necessary to re-map this path at pe\administrator\sample information).

- Choose **Template,** then click on **open**, **file**, **save as, sample info file,** and type in the file name as the date, e.g. 01302008, **save, yes** to replace.

- Save template as today's date e.g 01302008 to be used as **batch ID**.

- In the WINLAB32 ICP Continuous –Automated Analysis Control toolbar, click on the **SamInfo** (Sample Information Editor) and fill in the necessary fields. At a minimum the following fields can be populated: Autosampler (A/S) Location, Sample ID, Aliquot Volume, Diluted to Vol., Analyst's Name, Sample Units.

- For soil samples the conversion factor is entered on the dilution line.

- Delete unnecessary sample positions/numbers by highlighting the rows, right click and choose **Delete Rows**.

- Go to **file**, **save as**, **sample info. file** (choose the file previously created, e.g 01302008, **save**, **yes** to replace.

- Close window.

- Click on **Auto** to get to the Automated Analysis Control if necessary.

- Verify that the correct sample information file is being used (if file is incorrect click on **open** and search for the correct file.

- Under the **results data set name,** click **open**.

- For **name,** enter today's date e.g 01302008.

- Click on **ok** to save.

- Click on **Analyze** (next to the Set-Up icon).

- Click on **rebuild list.**

- Print and keep the sample information file as a guide to load the autosampler.

- Load the standards and samples into the autosampler. When the samples have been loaded,

- Click on **Analyze All.** It may be worth the effort to re-click **Analyze All** and choose "complete all replicates for current sample" to check the calibration blank prior to analysis.

- If calibration blank check is acceptable, **Reset Sequence**, and **Analyze All**.

- After the calibration is finished, check to make sure that the RSD's are all less than 2%. If there is one or more greater than 2%, re-run the calibration.

- If the calibration is acceptable, let the analysis continue.

- If calibration is unacceptable, click once more on **Analyze All** to stop the analysis, correct the problem, **Reset Sequence,** and click on **Analyze All** to resume calibration.

10.8 Instrument Shut-Down:

- Flush the system for at least 30 min. with the acid rinse (2% HNO_3 + 2% HCL), then rinse with RO water for 5-10 min. The sample lines may also be placed in the clean dry plastic container supplied to drain the lines of all liquids.

-Go to **Options,** choose **Autosampler**, "**pump always off**" to shut off side autosampler.

- Click on the plasma icon. Click on off and the plasma will extinguish. The sample pump is set up to shut off automatically when the plasma is shut off. The autosampler probe should lift up over the rinse position when the WIN32 software is closed.

- Loosen all pump platens.

11.0 Instrument Maintenance:

The peristaltic pump tubing generally lasts for 1 day of operation. If it is used too long, high RSD's may occur.

The 1% HNO_3 + 5% HCL acid matrix needs to be kept pumping through the system in between samples for at least 45-60 sec. to avoid memory effects and to prevent the nebulizer from being clogged. This acid matrix needs to be pumped through the system for at least 30 minutes before shutdown.

Periodically, the torch, spray chamber, and nebulizer may need to be dismantled and cleaned with hot 10% HCL.

Periodically, the axial and radial purge windows should be cleaned with a solution of 5% nitric; if absolutely necessary a solution of up to 20% may also be used. An ultrasonic bath may also be used.

The 2 filters at the back of the instrument need to be cleaned at least every 2 months.

The instrument should be kept free of dust and clutter.

12.0 Data Calculations, Data Management and Reporting

Hardness is calculated by determining the concentrations of calcium and magnesium, expressed as calcium carbonate, in mg/L. The following formula is used:

Hardness, mg equivalent $CaCO_3$/L = 2.497(Ca, mg/L) + 4.118 (Mg, mg/L)

For aqueous samples, the result from the instrument X dilution factor = result reported in ppb. For solids, because the samples are analyzed with an ICP factor, the results on the raw data are already converted to mg/Kg. Dividing the reported result by the ICP factor, the reported result is calculated as follows:

$$\text{mg/Kg} = \text{initial conc.}(\mu\text{g/L}) \times \frac{\text{final volume (mL)}}{\text{Initial weight(g)}} \times \frac{1\text{L}}{1000\text{mL}} \times \frac{1000\text{g}}{1\text{Kg}} \times \frac{1\text{mg}}{1000\text{ug}} \times \%\text{solids.}$$

Samples below the reporting limit are reported out as nondetect (ND).

If sample results need to be estimated (due to matrix problems, etc.) the data should be flagged with a J and it should be indicated on the report that the results are estimated. The reason the data is flagged should also be included in the report.

The data is uploaded to LIMS (LABWORKS). A seagate crystal report is then generated.

The LIMS codes for low level metals by ICP for aqueous samples are $METW_PE (total recoverable), $DMETW_PE (dissolved), and $METMS_PE for solid samples.

In addition to a LIMS generated final report, each data package must include the following:

- A sample digestion sheet - must contain sample number or quality control sample ID, sample volume used (for aqueous samples) or a detailed description on how the sample or QC sample was prepared (i.e. volumes used for dilutions, dilution factor for aqueous samples, volumes of standards used to make QC standards, etc.); the sample pH (for aqueous samples); hot block temperature; the LIMS code for the analysis; and the filename of the S.O.P. including the revision number.

- A sample preparation flow sheet - must contain a description of the procedure for sample preparation in flow chart form. Any deviations from normal procedure should be documented.

- All raw instrument data.

- Digestate dilution sheet - must contain sample numbers, amount of sample digestate used, amount of diluent used, the diluent identification (should be the calibration blank) and the calculated dilution factor. If no dilutions were done for the batch, this sheet will be omitted.

- Certificates of Analysis storage:

The Certificates of Analysis received with the standards are kept in the metals standards certificates log. This log is kept in the laboratory room 185.

- Standard and reagent documentation:

Standard, QC, and reagent preparation information is documented in the metals standard preparation and reagent preparation logbooks. The date of preparation, analyst, method of preparation, vendor, lot number, and expiration date of standards must be documented. The logs are kept in rooms 183 and 185. The instrument maintenance and run logs are kept in room 185.

- Project review form:

Each of the above forms must also include project number, project name, date, and analyst's name on every page.

If there are multiple pages, the pages should be numbered by the format page 1 of X, page 2 of X, etc., where X is the last page.

The calibration of the eppendorf pipet should be checked gravimetrically with water at

the appropriate volumes. The serial number of the eppendorf and the calibration should be recorded on the appropriate sheet (sample preparation bench sheet, sample dilution sheet, etc.) or on a separate sheet of paper. If a separate sheet of paper is used it should have the project number, survey name, analyst's name, date, and a description of what the eppendorf was used for.

- Creating a Runlog

In addition to the runlog created by WinLab a more detailed runlog can be created using Microsoft Excel.

-open **Data Manager** to get to Win32 Data Management

-choose **Result Name**, e.g 01302008

-Use Existing Design

-Browse

-choose **Runlog.xpt**

-open

-advance by using the **next** soft keys to step 8: "**Export Data Set.**"

-finish

-close window.

To view and edit the runlog:

- open **Microsoft Excel, ok**

-file, open

-files of type: choose **All Files,** and look in **C$ on 'Client' V:**

-go to **PE\ DV4300,** and find file chosen at **Results Name** above e.g 01302008.

- "Text Import Wizard" should be opened

-check **Delimited** if necessary

-advance by using **next**

-comma

-next

-finish

The following fields should be available for view or population: SampleID, Date, Time, Analyst Name, and Diluted to Volume. Check the current runlog design being used and edit to include the necessary information such as project name, project number, e.t.c.

-print the file and save the file as a Microsoft Excel Workbook (file, save, dropdown tab and choose Microsoft Excel Workbook, save by overwriting existing file as necessary, save)

-close window.

- Saving Data to LIMS

Prior to saving data to LIMS the analyst should have been trained to create a batch analysis. Open LabWorks Enterprise and batch Data Set appropriately. The batch created should match the batch analyzed. The Laboratory Reagent Blank, Laboratory Fortified Blank etc. should be attached to the appropriate sample.

-open **Data Manager** to get to Win32 Data Management

-choose **Result Name**, e.g. 01302008

-Use Existing Design

-Browse

-choose **Labworks.xpt**

-open

-advance by using the **next** soft keys to step 8: "**Export Data Set.**"

-finish

-close window.

-To view data exported to LIMS

-open **Labworks Enterprise**

- enter **User ID** and **Password, ok**

-open **MCXFER (Multicomponent Results Transfer)**

- Results File Mode

-Add Files To List

-check that **PE WinLab/WinLab 32,** is highlighted

-under Drive, drop down toggle and look for **V: [\\Client\C$]** then map directory as

-PE

-DV4300

-under **file name,** search for the necessary file 01302008.prn, ok

-Find Samples

-under **Dil Factor**, enter the correct dilution factor (for example a soil ICP factor of 0.104 should be entered as 1.04)

- Load Results

- Save Results

- close windows.

The data has now been exported and may be available for review in the Results data field.

- Data Archival

Periodically, the active data storage library must be reduced to prevent data management problems and communication problems with the WINLAB32 software.
Data archival must be done in the series of steps listed below:

-Before data is archived the data must be **checked**, **archived**, **deleted**, and then **packed** so that the WINLAB32 software can correct any file that may lead to data manipulation archival/retrieval problems.

-Begin by closing the WINLAB32 program since the instrument assumes the database is

being used and will prevent manipulation of the library

- Open the **Data Manager**
-Choose the **Result Name(s)** to be archived e.g. 12272006
- Click on **Check**, then **OK**. A message "check in progress", and "check library" will be displayed. Allow the process to go to completion.
- Click on **Archive.** The highlighted Result Names should be displayed with an Archive Description which is the data path, and the date the zip file is being created e.g. C:\pe\Mike Dowling\Archived Data\RS122706.zip. Change the zip file to the file name being used for archival, click **OK**, and allow the process to finish. Currently the results will be archived monthly, at the end of the following month. On February 28th, all of January's data will be archived as C:\pe\Mike Dowling\Archived Data\RSJan2006.zip.
- Click on **Delete. "Delete Data Sets."** Data Sets to be deleted should be displayed, then **ok**. Allow the process to finish.
- Click on **Pack.** The library must be packed to reduce the space created by deleting the files. Extra space is **NOT** created until it has been packed. Allow the process to go to completion.
- Close Data Manager.

13.0 Quality Control and Quality Assurance

All analysts must successfully complete a demonstration of capability study prior to analyzing any samples. This study is done according to the *NELAC Quality Systems (Ref. 16.4)*

Reporting limit standards studies are done daily, prior to sample analysis.

Acceptance criteria are given in the chart below. If acceptance criteria cannot be met, corrective actions must be taken and the samples must re-analyzed within hold time.

InterElement Correction studies are verified and updated every six months or when significant changes occurs, such as in the torch, nebulizer, injector or plasma conditions.

Linear Dynamic Range studies are done every six months or whenever significant instrument components have been replaced or replaced.

The following table lists the method and instrument quality control parameters, frequency, acceptance criteria and corrective actions.

QA/QC Sample	Parameter	Frequency	Acceptance Criteria	Corrective Action
Initial Cal. Blank (ICB)	Metals	After calibration	< ½ R.L.[2]	Recalibrate, prepare new ICB
Continuing Cal. Blank (CCB)	Metals	10%	< ½ R.L.[2]	Same as ICB
Quality Control Sample(QCS) EPA 6010B	Metals	After calibration	± 10% of True value [1]	Recalibrate, prepare new QCS and/or ICS
Quality Control Sample(QCS) EPA 200.7/200.2	Metals	After calibration	± 5% of True value [1]	Recalibrate, prepare new QCS and/or ICS
Reporting Limit Standard (RLS)	Metals	Beginning of run	± 20% of True value [1]	Prepare new standard, use higher RL standard
Instrument Performance Check Standard(IPC)	Metals	Initial After every 10 samples	+/-5% of True value [1] ± 10% of True value [1]	Recalibrate
Lab Reagent Blank (LRB)	Metals	1 per batch or 1 per 20 samples - whichever is more frequent	< ½ R.L.[2]	J values <10 times LRB
Laboratory Fortified Blank (LFB)	Metals	1 per batch or 1 per 20 samples - whichever is more frequent	± 15% of True value [1]	Qualify data, redigest

1 = Acceptance criteria from Reference Method or Reference QC documentation.
2 = Acceptance criteria defined based on technical judgment

Matrix Spike-Laboratory Fortified Matrix(LFM) EPA 6010B	Metals	1 per batch or 1 per 20 samples - whichever is more frequent	± 25% of True value [1]	Qualify data for sample if LFB is OK. If LFB is not OK, qualify all sample results.
Matrix Spike-Laboratory Fortified Matrix(LFM) EPA 200.7/200.2	Metals	1 per batch or 1 per 20 samples - whichever is more frequent	± 30% of True value [1]	Qualify data for sample if LFB is OK. If LFB is not OK, qualify all sample results.
Laboratory Duplicate	Metals	1 per batch or 1 per 20 samples - whichever is more frequent	+ 20 RPD for waters, + 30 RPD for soils[1]	Reanalyze, qualify data
Interference Check Sample A(IFCS A)	Metals	beginning and end	± 20% of True value of interferents [1]	Prepare new standard; check correction equations.
Interference Check Sample AB(IFCS AB)	Metals	beginning and end	± 20% of True value of analytes and interferents [1]	Prepare new standard; check correction equations.
Laboratory Control Sample(LCS)	Metals	1 per batch or 1 per 20 soil/solid samples, whichever is more frequent	within ERA's performance acceptance limits [1]	Redigest LCS. Qualify data.
Initial Calibration Standard	Metals	after calibration	95-105%[1]	Reanalyze, recalibrate

1 = Acceptance criteria from Reference Method or Reference QC documentation.
2 = Acceptance criteria defined based on technical judgment

14.0 Waste Management

"NERL encourages all chemist and biologists to investigate microanalytical techniques, innovative technologies, and chemical substitution in laboratory processes to reduce waste and prevent pollution. As analytical SOPs are reviewed, on an annual basis, the responsible chemist or biologist will incorporate waste minimization practices where practicable and where these practices have been demonstrated to return data of equivalent quality.

Chemists and biologists must refer to the Waste Management Program SOP for proper disposal of laboratory waste. Personnel should contact the Environmental, Safety and Health Department if changes in the analytical SOP will generate new waste streams. Questions regarding the proper disposal of laboratory waste and purchase of new reagents should be directed to the Environmental, Safety and Health Department in advance of actually initiating a change in the analytical method.

General procedures are contained in the aforementioned Waste Management Program SOP.)" Separate waste containers are located in the lab for digestate waste and standard waste and are labeled appropriately.

15.0 References:

15.1 CLP - ICP Method 200.7 CLP-M

"The U.S. EPA Contract Laboratory Program Statement of Work for Inorganic Analysis, Document # 1LM05.0."

15.2 NPDES - ICP Method 200.7

"Methods for the Determination of Metals in Environmental Samples, Supplement I (EPA/600/R-94/111), Rev. 4.4, May, 1994."

"Methods for Chemical Analysis of Water and Wastes, USEPA, EPA-600/4-79-020, Revised March 1983."

15.3 RCRA - ICP Method 6010B

"Test Methods for Evaluating Solid Waste, Physical/Chemical Methods, SW-846, 3rd ed., Rev. 2, Final Update III, 12/96."

15.4 2003 NELAC Standard, Chapters, Quality Systems, Appendix C1. (EPA/600/R-04/003)

Table I - ICP Reporting Limits

Parameter	Water (µg/L)	Soil (0.50g) (mg/Kg)
Ag	10	1.0
Al	110	11
As	20	2
Ba	20	2
Be	8	0.80
Ca	100	10
Cd	10	1
Co	20	2
Cr	20	2
Cu	20	2
Fe	40	4
K	500	50
Mg	100	10
Mn	20	2
Na	500	50
Ni	20	2
Pb	20	2
Sb	10	1
Se	20	2
Ti	20	2
Tl	20	2
V	10	1
Zn	20	2

Reporting Limits are based on the lowest concentrations achieved from the results of the CRQL solution and the ICS 1:50 and ICS 1:100 (see section 9). Reporting Limits may increase depending on the magnitude of matrix interferences.

Table II - Instrument Parameters

Analalyte	Wavelength	Plasma View
Ag	328.068	Axial
Al	396.153	Radial
As	188.979	Axial
Ba	233.527	Axial
Be	313.107	Axial
Ca	317.933	Radial
Cd	228.802	Axial
Cd	214.440	Axial
Co	228.616	Axial
Cr	267.716	Axial
Cu	327.393	Axial
Fe	238.204	Radial
K	766.490	Radial
Mg	285.213	Radial
Mn	257.610	Radial
Na	589.592	Radial
Ni	231.604	Axial
Pb	220.353	Axial
Sb	206.836	Axial
Se	196.026	Axial
Tl	190.801	Axial
Ti	334.940	Axial
V	290.880	Axial
Zn	206.200	Axial
Sc	361.383	Axial and Radial

Table - III Calibration Standard concentrations

Analyte	ICS - ug/L
Ag	400
Al	11000
As	1000
Ba	2000
Be	800
Ca	10000
Cd	1000
Co	2000
Cr	1000
Cu	2000
Fe	2000
K	10000
Mg	10000
Mn	2000
Na	10000
Ni	2000
Pb	2000
Sb	1000
Se	999
Tl	2000
Ti	2000
V	999
Zn	2000

Project Review Form

ICP Metals Analysis

Project Number:_____**Site:**_____**Matrix:**_____

Note: Any omissions or problems with the data require resolution before proceeding to the next review step.

==========

REQUESTED ANALYSIS AND DATA FOLDER COMPLETENESS CHECK

( ) Does the RLIMS information match the COC requests?
( ) Were all samples analyzed and identified correctly?
( ) Have the samples been analyzed according to the referenced method or SOP? Are all deviations approved and documented?
( ) Is sample preservation (if applicable) checked for all samples?
( ) Is the raw data folder complete?
( ) Copy of the Chain-of-Custody Form
( ) % Solids Worksheet for Soils
( ) Digestion Worksheet
( ) Instrument Printouts/Raw Data/Calibration Data

Reviewed by: Date Reviewed:

==========

DATA EVALUATION

( ) Have the proper number of QC samples been analyzed?
( ) Blanks
( ) Spikes
( ) Duplicates
( ) PE Samples (if received with sample delivery)
( ) Laboratory Control Sample
( ) Laboratory Fortified Blank
( ) Continuing Calibration Verifications and Blanks
( ) Initial Calibration Verification Standard
( ) Interference Check Standards
( ) Is information on the digestion benchsheets correct?
( ) Is there documentation of standard preparation and traceability?
( ) Cu Profile Line 324.745 Peak Position at +/- 0.2 ?
( ) Are blank contaminants within limits? If outside limits, is there documented approval to proceed with analysis?
( ) Are spike recoveries within limits?

( ) Are duplicate sample RPD's acceptable?
( ) Are continuing calibration checks (CCV)acceptable?
( ) Are the calculations correct? Document with a sample calculation from raw data to final concentration (The reviewer initials and dates calculation.)
( ) Dry weight
( ) Report factors
( ) Sample concentrations
( ) Are the concentrations of the analytes found within linear dynamic range?
( ) Has the final report been checked for transcription errors?

Reviewed by: Date Reviewed:

==========

FINAL REPORT

( ) Check the following information on the report accuracy.
( ) Date received
( ) Date analyzed
( ) Reporting Limit (R.L.)
( ) Flags
( ) Is the method summary an accurate reflection of all encountered problems? Are observations about the samples noted?
( ) Are the number of significant figures used correctly and consistently?
( ) Has the final report been checked for typographical errors?

Reviewed by: Date Reviewed:

Comments: □= yes
NA = Not Applicable

ICP Analysis Checklist PEDV4300

____ Check argon tank.

____ Check nitrogen gauge (approx. 100 psi)

____ Check and Replace if necessary: Pump tubing/drain tubing/secondary drain tubing

____ Chiller on/Check...Should always be on.

____ Exhaust on/Always on.

____ Computer and printer on.

____ Start pumps and check flows. Drain stream should be segmented.

____ Start plasma/Pumps should stop then re-start

____ Check plasma/check pump

____ Warm up 45-60 minutes.

____ Start IS flow.

____ Run Mn profile for Axial and Radial Settings

____ Print profile.

Date:

Analyst:

Project Name(s):

Project Number(s):

LimsCode(s):

____ Open Method

____ Set up Sample Info file (Autosampler Positions/Sample ID/LimsCodes/Analyst/Correlation Factors etc).

____ Name and Save Sample Info file

____ Name and Save Results file

__ Print Run Sequence and Save for Runlog

____ Reset (Autozero) and Run All samples

____ Check Calibration Sequence/Monitor %RSDs

__ Monitor all QC recoveries

__ Periodically monitor all concentrations to schedule dilutions/reanalyses

__ Print Completed Run Sequence

____ Rinse system at least 30 minutes after run completion

____ Shut plasma off.

____ Exit Method.

____ Check that primary and secondary pumps are off, and rinse probe has lifted up.

____ Disconnect/Loosen tubing from pumps

.____ Open Data Manager

____ Export Results to PRN files.

____ Generate Lims Report

____ Generate Runlog

____ Computer and printer off.

____ Enter logbook info.

____ Document dilutions.

____ Monitor interferences

ICP Reporting Limits (RL) Worksheet
Perkin Elmer Dual View 4300

Analyte	ICS 1:200 (µg/L)	ICS 1:100 (µg/L)	ICS 1:50 ((µg/L)	CRQL (µg/L)	Soil (0.50g) (mg/Kg)
Ag		4		10	1.0
Al		110			11
As		10	20		2.0
Ba		20			2
Be	4	8			0.80
Ca		100			10
Cd	5	10			1.0
Co		20			2.0
Cr			20		2.0
Cu		20			2.0
Fe			40		4.0
Mg		100			10
Mn		20			2.0
Ni		20			2.0
Pb	10	20			2.0
Sb	5	10			1.0
Se			20		2.0
Tl		20			2.0
V		10			1.0
Zn		20			2.0
Na				500	50
K				500	50

- Default values.

Date:
Analyst:
Project Name(s):
Project Number(s):
LimsCodes(s):
Soil Units (if applicable):

EPA REGION 1

STANDARD OPERATING PROCEDURE FOR THE DETERMINATION OF INORGANIC ANIONS AND CATIONS BY ION CHROMATOGRAPHY

The Office of Environmental Measurement and Evaluation
US EPA Region 1 New England
11 Technology Drive
North Chelmsford, MA 01863

Prepared by: _____ 3/23/10
Inna Germansderfer, Chemist, Investigation and Analysis Unit, OEME — Date

Approved by: _____ 3/23/10
Agnes Van Langenhove, Laboratory QA Officer, Investigations and Analysis Unit, OEME — Date

Approved by: _____ 3/24/2010
Ernest Waterman, Chief, Investigations and Analysis Unit, OEME — Effective Date

The controlled version of this document is the electronic version viewed on-line only. If this is a printed copy of the document, it is an uncontrolled version and may not be the version currently in use.

This document contains direction developed solely to provide internal guidance to U.S. Environmental Protection Agency (EPA) personnel. EPA retains the discretion to adopt approaches that differ from these procedures on a case by case basis. The procedures set forth do not create any rights, substantive or procedural, enforceable at law by a party to litigation with EPA or the United States.

Table of Contents

1.0 Summary of Method 3

2.0 Scope and Application 3

3.0 Definitions 3

4.0 Health and Safety 4

5.0 Personnel Qualifications 4

6.0 Interferences 4

7.0 Equipment and Supplies 4

8.0 Reagents and Standards 5

9.0 Daily Operating Procedure 7

10.0 Sample Collection and Preservation 8

11.0 Sample Preparation and Analysis 9

12.0 Calculations and Reporting Limits 9

13.0 Quality Control and Data Assessment 10

14.0 Pollution Prevention and Waste Management 12

15.0 Troubleshooting 13

16.0 References 13

1.0 Summary of Method

A water sample is loaded via an auto sampler and a sample loop into an aqueous eluent stream and passed through guard and analytical ion-exchange columns, suppressor device and conductivity detector where ions of interest are separated. Identification of target ions is based on the retention time compared to the standards. Quantitation is performed by the external standard method based on peak areas.

2.0 Scope and Application

2.1. This method applies to drinking water, surface water, mixed domestic and industrial wastewaters, groundwater, and reagent water.

2.2 This method applies to the determination of inorganic anions (fluoride, chloride, nitrite, bromide, nitrate, ortho-phosphate and sulfate) and inorganic cations (lithium, sodium, ammonium, potassium, magnesium, and calcium) following guidelines outlined in **EPA Method 300.0** .

3.0 Definitions

Anion - a negatively charged ion; in electrolysis anions move toward the anode.
Anode -a positively charged electrode.
ASRS - Anion Self-Regenerating Suppressor
CAL - Calibration standard
Cathode - a negatively charged electrode
Cation - a positively charged ion; in electrolysis cations move toward the cathode.
CSRS - Cation Self-Regenerating Suppressor
Eluent - the ionic liquid mobile phase used to transport the sample through the exchange columns.
Ion Exchange - a reversible process by which ions are interchanged between an insoluble material and a liquid with no substantial structural changes of the material.
QC - Instrument Performance Check Solution/Standard
LFB - Laboratory Fortified Blank
LFM - Laboratory Fortified Sample Matrix
LRB - Laboratory Reagent Blank
MDL - Method Detection Limit
MSDS - Material Safety Data Sheet
PE - Performance Evaluation Sample
RT - Retention Time

4.0 Health and Safety

4.1 The calibration standards, samples and most reagents used in this method pose no hazard to the analyst. Use a fume hood, protective clothing and safety glasses when handling sulfuric acid. If solvents or acid solutions come into contact with your eyes, or skin flush with water continuously for fifteen minutes.

4.2 A Material Safety Data Sheet (MSDS) is available for all laboratory standard and reagent chemicals. The appropriate MSDS must be read before handling the chemical(s).

5.0 Personnel Qualifications

The analyst should have at least 4 year degree in physical science. The analyst must have a satisfactory IDC in place before analyzing samples. All personnel shall be responsible for complying with all QA/QC requirements that pertain to their organizational/technical function.

6.0 Interferences

6.1 Direct chromatographic coelution. Response from non-target analyte is observed at almost the same retention time as target ion. Column changing, flow rate adjustment, matrix removal via cartridge, or a change in eluent concentration can be used to solve most problems.

6.2 Concentration dependent coelution can be observed when response of non target analytes overlap into retention time window of the target ions. Sample dilution can be used to solve most interference problems.

6.3 The water dip that elutes near the fluoride peak can usually be eliminated by the addition of I ml of concentrated cluent to 100 ml of each standard and sample.

6.4 It is recommended that water be used for sample dilution.

6.5 Samples must bc filtered to prevent particles larger than 0.20 microns from being introduced into the system which could cause damagc to the instrumcnt columns and flow systems. The system is equipped with in-line filters for eluents. Each sample must be filtered utilizing polyvial caps.

7.0 Equipment and Supplies

7.1 Ion Chromatographs: Dionex ICS 3000 or similar

7.2 Anion guard columns AG17 (4x50mm) or similar

7.3 Anion analytical columns - AS17 (4x250mm) or similar

7.4 Anion suppressor - ASRS-UltraII 4mm (recycle mode)

7.5 Cation guard column - CG12A 4x50mm or similar

7.6 Cation analytical column - CS12A (4x250mm)or similar

7.7 Cation suppressor - CSRS-UltraII 4mm (recycle mode)

7.8 Sample loops (25,50 ul) - PEEK 0.51mm

7.9 Autosampler - Dionex ICS AS-DV

7.9.1 5ml Polyvials, with 40 micron filter caps

7.9.2 Two sided Cap Insertion Tool

7.9.3 Disposable particulate filters, 1.0 micron

7.10 Glassware

7.10.1 Volumetric flasks - 1000ml, 500ml, 250ml, 100

7.10.2 Volumetric pipettes - 50ml, 25ml, 10ml and 5ml

7.10.3 Plastic eluent bottles(2 liter)

7.11 Computer Hardware/Software (Chromeleon 6.7 version)

8.0 Reagents and Standards

8.1 Deionized water - Type 1 reagent grade water with a specific resistance of 17.8 megohm-cm resistance or greater having a conductivity of one or less mS. The de ionized water should be free of ionized impurities, organics, microorganisms and particulate matter larger than 0.20 microns.

8.2 Eluents:

8.2.1 Potassium Hydroxide solution prepared by using ECG II KOH eluent generator system (concentration of eluent controlled by Chromeleon 6.7 version software.)

8.2.2 Methanesulfonic acid solution prepared by using ECG II MSA eluent generator system (concentration of eluent controlled by Chromeleon 6.7 version software)

8.3 Standard Preparation

8.3.1 Preparation of **ANION** Standards: Stock Standards: Anions Stock standard solutions are purchased as certified solutions and stored at 4 ^{O}C.

8.3.1.1 100 ug/ml Working Standard - Prepare fresh weekly. From each of the seven 1000 ug/ml stock standards, pipette 20 ml into one 200ml volumetric flask and dilute to volume with DI water.

8.3.1.2 Anion Calibration Standards

Prepare fresh before runs due to instability of nitrite and ortho-phosphate.

Concentration of the standard, ppm(ug/mL)	0.05* ppm	0.1 ppm	0.5 ppm	5.0 ppm	10.0 ppm	20.0 ppm	50.0 ppm
Level	1	2	3	4	5	6	7
mL of the working standard added to the 100 mL volumetric flask	0.05 mL	0.1 mL	0.5 mL	5.0 mL	10.0 mL	20.0 mL	50.0 mL

*- only by client request for low reporting limit.

8.3.2 Preparation of **Cation** Standards: Stock Standards: Cation Stock standards solutions are purchased as certified solutions and stored at 4 ^{O}C.

8.3.2.1 100 ug/ml Working Standards: Prepare as needed. From each of the six 1000 ug/ml stock standards, pipette 20 ml into one 200ml volumetric flask and dilute to volume with DI water.

8.3.2.2 Cation Calibration Standards

Prepare fresh before runs

Concentration of the standard, ppm(ug/mL	0.2	0.5	1.0	5.0	10.0	20.0	50.0
Level	1	2	3	4	5	6	7
mL of the working standard added to the 100 mL volumetric flask	0.2	0.5	1.0	5.0	10.0	20.0	50.0

All standard preparations are recorded on the Standard Preparations bench sheets.
Calibration levels for anions are 0.05 to 50 ppm and for cation 0.2 to 50 ppm. The low or high calibration standards may be omitted for any individual target compound if non-linearity occurs and /or if DQC are satisfied. At minimum 3 calibration standards are used to determine ealibration curve

9.0 Daily Operating Procedure

The ICS 3000 can operate in the remote mode via the Chromeleon 6.7 software.

9.1 Daily Operation

-Add water to the two liters reservoirs located on the top of ICS DC module
- From the Control panel under Gradients pumps push a button "Pump prime control" Make sure to open a pressure transducer waste valve located on the pump inside DP module.
- Allow the pump to prime until all air is purged and no air bubbles can be seen exiting the waste line. When pump will stop elose the pressure transdùcer.
-The pump is now ready for operation.

9.2 System equilibration

Start the system in the order:

1-gradient pump - ON
2-eluent generator - ON
3 -CR-TC column - ON
4- suppressor – ON
Let it run for approximately 30 minutes .

9.3 From the Control panel under AS-DV(autosampler) push "Reset All' button. On the autosampler push the "Carousel Release" button located in the left upper corner once. This will release autosampler pin.
9.4 Record in the daily maintenance log the system pressure, detector background, flow rate, and any other pertinent comments such as maintenance performed.
9.5 Check the level of the 4 liter waste bottle. Contact H&S if full.

10.0 Sample Collection and Preservation

10.1 Holding times and preservation for ions as follows:

Analyte	Preservation	Holding Time
Bromide	Not required	28 days
Chloride	Not required	28 days
Fluoride	Not required	28 days
Nitrate-N	Cool to 4^0C	48 hours
Nitrite-N	Cool to 4^0C	48 hours
Combined (Nitrite/Nitrate)	conc,H_2SO_4 to a pH <2	28 days
O-Phosphate-P	Cool to 4^0C	48 hours
Sulfate	Cool to 4^0C	28 days
Magnesium	All cations	6 weeks
Calcium	filter through	6 weeks
Sodium	a 0.45 mc filter	6 weeks
Potassium	and cool to 4^0C	6 weeks
Lithium		6 weeks
Ammonium		not to exceed 7 days

10.2 Sample Collection: Samples should be collected in plastic or glasses bottles. All bottles must be thoroughly cleaned and rinsed with reagent water. Volume collected should be sufficient to insure a representative sample, allow for replicate analysis. Presence of microbial activity will affect ion stability. Refrigeration and filtering

will retard but not completely prevent changes in concentrations.

11.0 Sample Preparation and Analysis

11.1 Verify the pH of the prescrved samples with pH paper and document. The preserved samples should have a pH of two or less. If the sample is not preserved, continue with the analysis and document this on the lab notebook form.

11.2 Each sample should be filtered through a 0.45 micron polyvial filter cap to prevent damage or possible contamination to instrument internal tubing and/or columns.

11.3 For colored samples and samples containing visible sediments additional pre-filtering through disposable Whatman c 1.00um PTFE membrane filter devices will be requircd.

11.4 Fill the polyvial with the sample/standard to the 5ml full line,
Since only 50ul of the 5ml is injected from each vial, final vial volume is not critical. Place a polyvial cap into the polyvial. The cap is pressed into each vial with the indented side of a two sided black plastic cap insertion tool first, then using the opposing flat side of the insertion tool, further insert the cap until it is flush with the top of the polyvial. Label the vials with a marker, indicating vial contents, and place them in the autosampler

11.5 On Guard Cartridges: Designed for samplc clean up or matrix elimination, including removal of both column fouling substances and interfering ions.

11.5.1 Sea Water - Three diffcrent On-Guard cartridges are used in sequence. Connect a disposablc 10ml plastic lucr-lock syringe to an On-Guard-Ba cartridge (removes sulfate), then connect an On-Guard-Ag cartridge (removes chloridc), then connect an On-Guard-H cartridge (removes soluble silver from Ag cartridge). Fill the syringe with 10ml of water and flush the cartridges at a maximum flow rate of 2ml/min. Discard the rinse water. Rinse thc syringe three times with the sample. Fill the syringe with the sample. Push the sample through the cartridgc train and discard the first three ml of samplc into a waste container. Fill a polyvial up to the 5 ml mark with the filtered sample. Optimum performance is achieved when the cartridges are used in a vertical direction..

12.0 Calculations and Reporting Limits

12.1 Prepare a calibration curve for cach analyte, plotting instrument responsc against concentration. Chromcleon software will automatically compute sample concentration by comparing sample response with the standard curvc. Report sample results in micrograms per litcr. Concentrations which are bctwcen 0.05 and 100 must be reported to two significant figures, concentrations which are greater than 100 are

reported to three significant figures. For samples report Nitrite as N; Nitrate as N and Ortho-phosphatc as P.

12.2 Conversion factors: to convert Nitrite to Nitrite as N: divide Nitrite result by 3.285.From Nitrate to Nitrate as N: divide Nitratc result by 4.4277. From ortho-phosphate to ortho-phosphate as P: divide ortho-phosphate result by 3.066. From ammonium to ammonia: divide ammonium result by 1.0592.

12.3 Hardness calculation- compute from result of separate determination of calcium and magnesium.

Hardness, mg equivalent $CaCO_3$ /L=2.497[Ca,ppm]+ 4.118[Mg,ppm]

12.4 Reporting limits: RL is equal to the lowcst calibration standard.

13.0 Quality Control and Data Assessment

Analysis of initial calibration standards, calibration verification standards, and laboratory control samplcs are performed as part of the QC process. A set of QC samples, consisting of a preparation blank, a duplicate sample and a matrix spike, are prepared with each batch (up to 20 samples.)

13.1 Initial Calibration

13.1.1 An initial calibration is performed by analysis minimum of a blank and three standards and up to six standards. The correlation coefficient must be ≥ 0.990 for the calibration to be valid. Investigate and apply corrective action if criterion is not met.

13.2 Initial Calibration Verification (ICV)

Immediately aftcr the IC system has bcen calibrated, the accuracy of the initial calibration shall be verified by the analysis of an ICV Standard (source different from the sourcc of initial calibration standard).

AccuStandard Sevcn Anion Mix, or similar contains all seven anions, uscd for ICV (1ml to 10ml final volume with DI watcr).

For Cations Alltech Cation Mix B, or similar contains all six cations. No dilution is required.

The Initial Calibration is considered valid as long as the initial calibration

verification (ICV) standard response is within the ±10% of the response for ppm standard level in the initial calibration. Investigate and apply corrective action if ICV recoveries are outside this range.

13.3 Continuing Calibration Verification (CCV)

CCV Standard near the mid-range level of the calibration curve must be analyzed immediately after calibration and after every 10 injection.. It shall also be analyzed after the last analytical sample. The recovery of the CCV for the ppm level analysis must be between 90-110%. Investigate and apply corrective action if CCV recoveries are outside this range.

13.4 Initial and Continuing Calibration Blank (BLK)

A Calibration Blank shall be analyzed immediately after every initial and continuing calibration verification standard, and at the end of the sequence. If the absolute value of an initial or continuing calibration blank result exceeds the reporting limit, the result shall be reported .

13.5 Duplicate Sample

One duplicate sample shall be analyzed at the frequency of one per 10 samples. Samples identified as field blanks cannot be used for duplicate sample analysis. The Relative Percent Difference (RPD) must be 20%.

13.6 Analytical Spike Sample (LFM)

The Analytical Spike Sample is designed to provide information about the effect of sample matrix on the measurement system. One analytical spike sample analysis shall be performed per each 10 samples. It should be performed on a sample containing measurable amounts of analytes.

Dionex seven anion mix contains all seven anions used as a spiking solution (0.5 ml to 10 ml final volume of the sample).

The Dionex Six Cation Standard used as spiking solution for cations(0.2ml spiking solution into 10 ml final volume of the sample in a volumetric flask).

The spike recovery for the ppm level analyte method must be between 80-120%. If the recovery of any analyte falls outside the designated recovery range and the laboratory performance for that analyte is shown to be in control (Blanks, LFB, ICV),the recovery problem encountered is judged to be either matrix or solution

related, not system related.

13.7 Laboratory Fortified Blank (LFB)

The LFB shall be prepared and analyzed per every 10 samples or less. The recovery of the LFB for ppm level analysis must be between 90-110%. Investigate and apply corrective action if LFB recoveries are outside this range.

13.7.1 Anions: The Dionex Seven Anion Standard is used (500ul into DI water to a final volume of 10ml).

13.7.2 Cations: The Dionex Six Cation Standard is used (200ul into 10ml final volume).

13.8 Analytical Sequence

1.) Water blank
2.) Water Blank
3.) Initial Calibration Standards
4.) ICV
4.) CCV
5.) BLK
6.) LFB
7.) Sample 1-8
8.) CCV
9.) BLK

where: ICV = Initial Calibration Verification
BLK = Water Blank
CCV = Continuing Calibration Verification
LFB = Laboratory Fortified Blank
LFM = Laboratory Fortified Matrix
DUP = Duplicate

14.0 Pollution Prevention and Waste Management

NERL encourages all chemist and biologists to investigate micro analytical techniques, innovative technologies, and chemical substitution in laboratory processes to reduce waste and prevent pollution. As analytical SOPs are reviewed, on an annual basis, the responsible chemist or biologist will incorporate waste minimization practices where practicable and where these practices have been demonstrated to return data of equivalent quality.

Chemists and biologists must refer to the Waste Management Program SOP for proper disposal of laboratory waste. Personnel should contact the Environmental, Safety and Health Department if changes in the analytical SOP will generate new waste streams. Questions regarding the proper disposal of laboratory waste and purchase of new reagents should be directed to the Environmental, Safety and Health Department in advance of actually initiating a change in the analytical method.

Non-hazardous aqueous waste disposed in the sink. Non- hazardous waste would include expired standards and anion(carbonate-bicarbonate) eluent waste. The Methanesulfonic acid- cation eluent, potassium hydroxide or sodium hydroxide eluents waste are stored in a four liter hazardous waste satellite container.

15.0 Troubleshooting

15.1 Refer to the Operators Manual for troubleshooting for all three modules

15.2 Error Codes - When an error occurs, an error code number displays in the middle of the screen. Refer to the Operators Manual.

15.3 All system maintenance and troubleshooting must be documented in the Dionex Maintenance logbook.

16.0 References

16.1 Method 300.0 - The Determination of Inorganic Anions by Ion Chromatography. Revision 2.1, August 1993.

16.2 Dionex ICS 3000 Ion Chromatograph Operator's Manual. Document No. 065301, Revision 01, November 2005. Dionex Corporation, Sunnyvale, CA.

16.3 Dionex Peaknet 6.7 Software User's Guide. Document No. 031630, Revision 1, December 2008. Dionex Corporation, Sunnyvale, CA.

Table 1

Dionex Seven Anion Standard Dionex

Fluoride	20 mg/L
Chloride	30 mg/L
Bromide	100 mg/L
Nitrite	100 mg/L
Nitrate	100 mg/L
Phosphate	100 mg/L
Sulfate	100 mg/L

Dionex Six Cation -1 Standard

Lithium	51 mg/L
Sodium	203 mg/L
Ammonium	402 mg/L
Potassium	201 mg/L
Magnesium	201 mg/L
Calcium	1001 mg/L

AccuStandard Multi -component Cation Mix6

Calcium	2 mg/L
Ammonium	1.5 mg/L
Magnesium	2.0 mg/L
Potassium	2.5 mg/L
Sodium	1.5 mg/L
Lithium	0.2 mg/L

AccuStandard Multi-Component Anion Mix 10

Fluoride	25 mg/L
Chloride	50 mg/L
Bromide	50 mg/L
Nitrate	50 mg/L
Phosphate	50 mg/L
Sulfate	50 mg/L

AccuStandard Nitrite

Nitrite	200 mg/L

Table 2

Quality Control Acceptance Criteria

QA/QC Sample	Frequency	Acceptance Criteria	Corrective Action
Blank (reagent, preparation, continuing)	After calibration, every 10 injection and at the end of the run	Less than reporting limit [3]	All samples associated with a contaminated blank must be reanalyzed. Otherwise flag in the report(**B**) all data associated with this blank
Instrument Calibration Verification(ICV)	after calibration	±10% of the true value[1] for ppm level	Analysis stopped and new ICV standard is analyzed
Continue Calibration Verification(CCV)	After initial calibration, every 10 samples and at the end of the run	±10% of the true value[1]	All samples associated with a CCV must be reanalyzed.
Laboratory Duplicate	1 per batch or 1 per 10 samples*	≤ 20 % RPD [3]	Rerun samples, if still a problem, estimate results for that sample (J) and make explanation in comments section of the report
Analytical Spike(LFM)	1 per batch or 1 per 10 samples*	recoveries: ppm level: 80-120%	If LFB results are acceptable, qualify results for the sample. If LFB results are not acceptable qualify all samples results.
Laboratory Fortified Blank (LFB)	1 per batch or 1 per 10 samples*	recoveries: ppm level-90-110%	Rerun LFB, if still problem, re-calibrate and re-analyze all samples.
Holding Time		Samples must be analyzed within holding times[1]	If re-sampling is not available, results for samples are estimated(J) and need explanation under comments in report.

IDC	Every analyst, or when there is a change in the method, apparatus or equipment	70-130% recovery <20% RSD [3]	Investigate problem and repeat

*Whichever is more frequent
[1]= Acceptance criteria from Reference Method or Reference QC documentation
[2]= Acceptance criteria calculated from in-house historical data (control charts)
[3]= Acceptance criteria defined based on technical judgment

Table 3

Notebook form

DIONEX BENCH SHEET - Anions LIMS Code $ICA

SURVEY NAME: ANALYST:
PROJECT #: DATE:
REFRIGERATOR: TEMPERATURE (2-6)
DATE TAKEN OUT DATE RETURNED

HAS SAMPLE PRESERVATION BEEN VERIFIED FOR ALL SAMPLES?

ICV: 1.0 mL of Std1 + 0.2 mL of Std 2 to 10 mL with RO H_2O

Std1_____
Mfg_____
Lo#_____
Date Rec'd_____
Date Opened_____
Exp. Date_____
Bar Code_____

Std 2_____
Mfg _____
Lot#_____
Date Rec'd_____
Date Opened_____
Exp Date_____
Bar Code _____

LFB: 0.5 ML of LFB standard with RO H_2O to 10 ml
LFB Std_____
Mfg_____
Lo#_____
Date Rec'd_____
Date Opened_____
Exp. Date_____
Bar Code_____

LFM Preparation: 0.5 ml of LFB std to 10 ml w/sample
LFM sample :
Duplicate sample

Calibration standards prepared on _____ from working standard prepared on _____

Stock Standard

	Lot #	Bar Code	Opened	Expires	Mfg
Fluoride.	_____	_____	_____	_____	_____
Chloride	_____	_____	_____	_____	_____

Nitrate	_____	_____	_____	_____	_____
Bromide	_____	_____	_____	_____	_____
Nitrite	_____	_____	_____	_____	_____
Phosphate	_____	_____	_____	_____	_____
Sulfate	_____	_____	_____	_____	_____

Eluent EGC II KOH exp date _____

Table 4

DIONEX BENCH SHEET - Cations LIMS Code $ICC

SURVEY NAME: ANALYST:
PROJECT #: DATE:
REFRIGERATOR: TEMPERATURE (2-6)
DATE TAKEN OUT DATE RETURNED

ICV: no dilution needed
Std_____
Mfg_____
Lo#_____
Date Rec'd_____
Date Opened_____
Exp. Date_____
Bar Code_____

LFB: 0.1 mL of LFB standard with RO H_2O to 10 mL
LFB Std_____
Mfg_____
Lo#_____
Date Rec'd_____
Date Opened_____
Exp. Date_____
Bar Code_____

LFM Preparation: 0.1 mL of LFB std to 10 ml w/sample
LFM sample :
Duplicate sample
Calibration standards prepared on _____ from working standard prepared on _____

Stock Standard

	Lot #	Bar Code	Opened	Expires	Mgf
Lithium.	_____	_____	_____	_____	_____
Magnesium	_____	_____	_____	_____	_____
Sodium	_____	_____	_____	_____	_____
Potassium	_____	_____	_____	_____	_____
Calcium	_____	_____	_____	_____	_____
Ammonium	_____	_____	_____	_____	_____

Eluent EGC II MSA exp date _____

Table 5

Anion Calibration Standards

Date_____

Working Standard Preparation Date _____

Concentration of the standard, ppm(ug/mL)	0.05*	0.1	0.5	5.0	10.0	20.0	50.0
Level	1	2	3	4	5	6	7
mL of the working standard added to the 100 mL volumetric flask	0.05	0.1	0.5	5.0	10.0	20.0	50.0

*- only by client request for low reporting limit.

Table 6

Working Standard Form

Cation Calibration Standards

Date_____

Working Standard Preparation Date_____

Concentration of the standard, ppm(ug/mL) .	0.2 ppm	0.5 ppm	1.0 ppm	5.0 ppm	10.0 ppm	20.0 ppm	50.0 ppm
mL of working standard in 100 ml volumetric flask diluted to the mark with DI water.	0.2	0.5	1.0	5.0	10.0	20.0	50.0

Table 7

Method Comparison

Method ⇒ / Parameter ⇓	**EPA Series Method 300.0**	EIASOP –INGIC11.SOP
Applicability	Drinking, surface, saline water, domestic and industrial wastes.	Drinking, surface, saline water, domestic and industrial wastes.
Number of Analytes	Inorganic anions :Chloride, Fluoride, Nitrate, Nitrite, Sulfate, Bromide, Ortho-Phosphate	Common Ions: Chloride, Fluoride, Nitrate, Nitrite, Sulfate, Bromide, Ortho-Phosphate, Calcium, Potassium Magnesium, Sodium
Method Validation	Initial demonstration of performance: 1. The Linear Calibration Range (LCR) must be determined initially and verified every 6 months. The verification of linearity must use a minimum of a blank and 3 standards. 2. A Quality Control sample (QCS), an independent standard, is prepared and analyzed at least quarterly to verify the calibration standards and instrument performance. If not within ± 10% of stated value, determine source of problem and correct before continuing with analyses. 3.Determine MDLs by analyzing seven replicates of Laboratory fortified blanks at concentration of 2 to 3 times estimated instrument detection limit MDLs must be determined every six months.	Initial demonstration of performance: 1. The Linear Calibration Range (LCR) is verified every run. The verification of linearity used a minimum of a blank and 3 standards. 3. Determine MDLs by analyzing seven replicates of Laboratory fortified blanks at concentration of 2 to 4 times reporting limit.

Method ⇒	**EPA Series Method 300.0**	EIASOP –INGIC11.SOP
Parameter ⇓		
Initial Calibration	Minimum of 3 levels and a blank. Range mg/L: Bromide 0.63- 21.0 Chloride 0.78- 26 Fluoride 0.26- 8.49 Nitrate -N 0.42- 14.0 Nitrite -N 0.36– 12.0 Sulfate 2.85- 95 O-Phosphate -P 0.69- 23.I	Minimum of 3 levels and a blank. Range mg/L: Bromide 0.1-20 Chloride 0.1-100 Fluoride 0.1-20 Nitrate -N 0.1-20 Nitrite -N 0.I-20 Sulfate 0.1-100 O-Phosphate -P 0.1-50 All cations from 0.2 to 50
Continuing Calibration Verification	Analyze Instrument performance check (IPC) solution (mid-range chcck standard) immediately following calibration, after every 10 samples and at the end of the run. 1. If not within ±10% of stated value, reanalyze IPC. 2. If second analysis of IPC is not within ±I0% of stated value, discontinue analysis, determine the cause and/or in the case of drift recalibrate instrument. Reanalyze all samples since last compliant IPC.	Analyze Continue calibration Verification standard (CCV) – after calibration curve, after every I0 injection and at the end of the run. If not within ±I0% of stated value, re-analyze CCV or discontinue run and determine the cause and/or in the case of drift re-calibrate instrument. Re-analyze all samples since last compliant CCV.
Surrogate Standards	Not applicablc.	Not applicable.
Internal Standards	Not applicable.	Not applicable.
Accuracy/Precision	Spikc and analyze one samplc out of every I0 sample (Laboratory Fortified Matrix: LFM). The added analyte concentration	Spike and analyze one sample out of every I0 sample (Laboratory Fortified Matrix: LFM). %R =80-I20

Method ⇒	**EPA Series Method 300.0**	EIASOP –INGIC11.SOP
Parameter ⇓		
	should be the same as that used in the LFB. %R =80-120	
Blanks	A Laboratory reagent blank (LRB) must be analyzed with cach batch Values that cxceed the MDL indicate contamination should be suspected and corrective actions must be taken beforc continuing analysis	A Laboratory reagent blank (LRB) must be analyzcd with each batch If the absolute value of an initial or continuing calibration blank result exceeds the reporting limit, the result shall be reported. All samples associated with a contaminated blank must be reanalyzed. Otherwise flag in the report(**B**) all data associated with this blank LRB must be analyzcd after cach CCV

Eurofins Document Reference	NA	**Revision**	6
Effective Date	5/17/17	**Status**	Effective
Historical/Local Document Number	NA		
Local Document Level	ESAI-MA		
Prepared by	Brittany Fisk		
Reviewed and Approved by (name/date)	Emily Kinney 5/17/17		
Reviewed and Approved by (name/date)	Christina White 5/17/17		

Standard Operating Procedures For Modified EPA 3C / RSKSOP-175 Determination of Fixed Gases and Dissolved Gases in Gaseous and Aqueous phase matrixes by TCD

Uncontrolled Copy

Prepared by: Brittany Fisk

Digitally signed by Brittany Fisk
DN: cn=Brittany Fisk, o, ou=Eurofins Spectrum Analytical, Inc., email=BrittanyFisk@EurofinsUS.com, c=US
Date: 2017.05.17 14:58:34 -04'00'

Reviewed by: Emily Kinney

Digitally signed by Emily Kinney
DN: cn=Emily Kinney, o=Eurofins Spectrum Analytical Inc., ou=Eurofins, email=EmilyKinney@EurofinsUS.com, c=US
Date: 2017.05.17 16:38:36 -04'00'

Laboratory Director: Christina White

Digitally signed by Christina White
DN: cn=Christina White, o=Eurofins Spectrum Analytical, ou, email=ChristinaWhite@EurofinsUS.com, c=US
Date: 2017.05.17 14:42:57 -04'00'

F:\data\QAQC\NELAC SOPs\NELAC SOPs 2017\Air\SOP for Fixed Gases & Dissolved Gases Mod. 3C-RSK-175 by TCD, 5-17-17 Rev. 6.doc

TABLE OF CONTENTS
for
Modified EPA 3C / RSKSOP-175 by TCD

I. METHOD SCOPE AND APPLICATION 3
II. METHOD SUMMARY 3
III. DEFINITIONS 4
IV. HEALTH AND SAFTEY 4
V. CAUTIONS 5
VI. INTERFERENCES 5
VII. PERSONNEL QUALIFICATIONS 5
IX. REAGENTS AND STANDARDS 5
X. STANDARD PREPARATION 6
XI. CALIBRATION 6
XII. SAMPLE COLLECTION, PRESERVATION AND STORAGE 7
XIII. PROCEDURE - SAMPLE PREPARATION AND ANALYSIS 7
XIV. TROUBLESHOOTING 8
XV. DATA ACQUISITION, CALCULATIONS AND DATA REDUCTION 8
XVI. COMPUTER HARDWARE AND SOFTWARE 9
XVII. DATA MANAGEMENT AND RECORDS 9
XVIII. QUALITY CONTROL AND QUALITY ASSURANCE 10
XIX. METHOD PERFORMANCE 10
XX. POLLUTION PREVENTION AND WASTE MANAGEMENT 11
XXI. REFERENCES 12
XXII. CONTROL CHARTING 12
XXIII. REVISIONS 12

Uncontrolled Copy

I. METHOD SCOPE AND APPLICATION

A. This method is designed to measure the gaseous-phase concentrations of Fixed Gases in air and Dissolved Fixed Gases in water. Fixed Gases of interest are as follows:

1. Carbon Dioxide (CO2)
2. Carbon Monoxide (CO)
3. Methane (CH4)
4. Hydrogen (H)
5. Nitrogen (N)
6. Oxygen (O)
7. Ethene
8. Ethane
9. Acetylene

B. Dissolved Gas analysis includes the following analytes:

1. Carbon Dioxide (CO2)
2. Methane (CH4)
3. Hydrogen (H2)
4. Ethane
5. Ethene
6. Oxygen (O2)
7. Nitrogen (N2)

C. Fixed Gas analysis included the following analytes:

1. Carbon Dioxide (CO2)
2. Carbon Monoxide (CO)
3. Hydrogen (H2)
4. Methane (CH4)
5. Oxygen (O2)
6. Nitrogen (N2)

Uncontrolled Copy

II. METHOD SUMMARY

A. Gaseous phase samples are introduced into specially prepared canisters under vacuum either by sub-atmospheric pressure or by pressurizing the canister. After collection, the valve is closed, labeled, and returned to the laboratory for analysis. Samples are logged in, client information is verified against the COC, and the canister pressure is recorded from the gauge on the can. If the canister is below 15 “Hg, the can may need to be pressurized to allow sampling.

B. Aqueous samples are collected in 40ml unpreserved amber vials without headspace. These samples follow the same procedure as the Gaseous phase samples once they have reached the laboratory.

C. Analysis consists of attaching the can or vial to the inlet of the Perkin-Elmer/Arnell GC where an aliquot of sample is loaded onto a loop with a pump from where it is desorbed onto the capillary column in the GC then analyzed by the TCD. After analysis, data is reviewed and approved, or rerun if it is rejected. Minimum reporting limit should be 10PPMv for Dissolved gasses and 1,000PPMv for Fixed gases.

III. DEFINITIONS

A. Whole Air Sampling – An air sample technique that does not selectively sample specific compounds onto a specific sampling media. An aliquot of air is drawn into a passivated sampling canister and a measured amount of sample is used for analysis.

B. PPBv – Parts per Billion by Volume

C. PPMv – Parts per Million by Volume

D. Sub-atmospheric Sampling – Collection of an air sample in an evacuated canister with a final canister pressure below atmospheric pressure without the assistance of a sampling pump. The canister is filled as the internal pressure equilibrates with the external pressure to near ambient pressure.

E. Summa Can – Summa is a trade name for the sampling container for whole air sampling. The container is either made from Electro-polished stainless steel or has an inert coating applied to the inner surface. Canisters with inert coating are referred to as Passivated Sampling Containers.

F. GC – Gas Chromatograph.

G. TCD – Thermal Conductivity Detector.

H. Passive Flow Controller – A calibrated metering device that is attached to a Summa Canister to control flow into the container at a fixed rate (5 minutes to 7 days).

Uncontrolled Copy

IV. HEALTH AND SAFTEY

A. To maintain the application of OSHA regulations regarding the safe handling of chemicals specified in the method, the laboratory must follow proper safety procedures as outlined in ESAI's Chemical Hygiene Plan.

V. CAUTIONS

A. The operating temperature of the TCD is 200 degrees.

VI. INTERFERENCES

A. Improper cleaning of Summa Canisters and Passive Flow controllers may result in contaminated equipment.

VII. PERSONNEL QUALIFICATIONS

A. Analysts must have a working knowledge of the Perkin-Elmer GC equipped with a TCD.

B. Must have experience with the dilution of Air standards to generate a calibration curve.

VIII. APPARATUS AND MATERIALS

A. Summa Canisters – 6 or 3.2 Liter with SilcoSteel or Silonite coating.

B. Passive Flow Controllers - With SilcoSteel or Silonite coating.

C. Perkin-Elmer / Arnel Clarus 500 GC.

D. 7' HayeSep N 60/80, 1/8" SF column

E. 9' Molecular Sieve 13x45/60, 1/8" SF column

F. Barnant Company Vacuum Pressure Station. (Pump)

G. MaxQ2000 Rotary Shaker

H. Class A syringes or Class B syringes with P&A

I. 40ml pre-cleaned unpreserved amber vials with Teflon caps

IX. REAGENTS AND STANDARDS

A. 6 Component Fixed gas calibration standard at 5%

B. 9 Component Dissolved gas calibration standard at 1000PPMv.

Uncontrolled Copy

C. Chromatographic grade He.

D. The following is required for all standards:

1. **Any standard/reagent that comes with a Certificate of Analysis must be scanned into Element.**
2. **Proper labeling of standards including an Element ID, received date, expiration date, and opened/prepared date.**
3. **All standards must be checked for expiration dates on a regular basis. Provide enough lead time to order new standards before the old standard expires.**

X. STANDARD PREPARATION

A. Standard is drawn from the pressurized standard cylinders and are diluted into separate Tedlar Bags with He.

XI. CALIBRATION

A. For Dissolved Gasses: Standards are diluted at a minimum of 5 different levels and injected onto the sample loop to create the calibration curve. Standard dilutions are typically: 100x, 50x, 10x, 2x, and 1x to create a calibration range from 10PPMv to 4000/5000PPMv. In addition, Dissolved Gas for O2/N2 has its own calibration separate from the other analytes. Dissolved Gas O2/N2 uses the Fixed gas standard to calibrate, and the points range from 5000PPMv to 50000PPMv.

B. For Fixed Gases: Standards are diluted at a minimum of 3 levels to create a calibration range from 1,000ppm to 50,000ppmv. The range for Oxygen is typically 10,000 – 100,000PPMv. The range for Nitrogen is typically 10,000 – 200,000PPMv.

C. Initial calibration criteria for both Fixed and Dissolved Gases is 30% RSD or 0.99 by Linear and Quadratic Regression.

D. ICV must pass at 30%.

E. CCV must pass at 30%.

F. For DoD work, calibration points must be run as a 'single event'. All points must be run within the same 24 hour window which begins with the opening CCV. No points may be dropped from the middle of the curve even if the whole point were to be discarded. If a point needs to be rerun it must be done in the same 24 hour window as the rest of the curve.

Uncontrolled Copy

G. When uploading a calibration onto the software after the points have run, first the analyst must go into the Methods option in the TNAV software. The previous method is then picked so that the new points can be uploaded. It can be found under file, C drive then methods.

H. After the old method is picked, go to Components, Calibrate, then pick each file for each level in the calibration. Make sure to pick a new level for each point, and press Add each time. After all the points are picked make sure the identify box is unchecked. Hit apply to see calibration results. A passing calibration has points below 30% RSD for average and above 0.99 for linear or quadratic.

XII. SAMPLE COLLECTION, PRESERVATION AND STORAGE

A. Tedlar bag collection for Fixed Gas analysis has a holding time of 48 hours in MA and 72hrs for other states.

B. Summa Canister – Sample collection can be done via grab sampling or by time weighted average. Grab sampling is when a filter is connected to the sample can and the sample is instantly collected into the canister. This process takes about 4-5min.Regulators can be set for ½ hour, or anywhere from 100ml/min to 24hours. This method creates a more representative sample. Samples are then transported to the lab, logged in, client information checked, then run for analysis. Recommended holding time for Fixed Gas compounds in Summa canisters is 28 days.

C. Aqueous samples are collected in VOA vials with no preservative added. Samples are then transported to the lab, logged in, client information checked then analyzed. Recommended holding time for Dissolved Gas compounds in VOA vials is 14 days.

Uncontrolled Copy

XIII. PROCEDURE - SAMPLE PREPARATION AND ANALYSIS

A. After a calibration has been run, a continuing calibration check is run along with a method blank. An LCS is also run as a second source. The CCV must be 30%; the blank must not have targets above the MDL.

B. Air Phase Matrix - The can is attached to the inlet of the Perkin-Elmer GC the vacuum pump is turned on, then the canister valve is opened. Sample is allowed to flow long enough to fill the 2ml injection loop, about 10 seconds. The pump is shut off and the valve closed as quickly as possible.

C. For Aqueous Matrix – Samples should be in an unpreserved 40ml amber vial with no headspace. An empty syringe is inserted through the septa on the vial and a needle connected to Helium is also inserted. Low pressure of Helium is introduced into the vial until 10mls of water is displaced into the empty syringe without allowing ambient air into

the vial. The vial is then allowed to equilibrate to room temperature for 20 minutes. The samples are placed on a rotary shaker during the temperature equilibration time at approximately 200 RPM. The sample is then attached to the inlet of the Perkin-Elmer GC via a specially prepared airtight syringe. The vacuum pump is turned on for 10 seconds to fill the 5ml loop then the pump is turned off.

D. Once the rotometer has returned to zero, the sample run is started via the start button on the GC interface screen.

E. After the sample has run (15 minutes), the sample data is opened and compared against the initial calibration to obtain the PPMv amounts for each compound of interest.

F. All sample sequences must include a duplicate sample with an RPD ≤30%.

G. After all samples have run, a closing continuing calibration check must be analyzed with ≤30% recovery.

H. The acceptance limit for a Fixed and Dissolved Gas LCS is 70-130% for all compounds. LCS must pass with 30% RPD.

I. Fixed gas CCVs must be preformed in triplicate and all be with in 30% RSD to pass in each batch.

Uncontrolled Copy

XIV. TROUBLESHOOTING

A. Check the entire system for leakage.

B. Bake out or replace columns.

C. Tedlar bags may be checked for leaks and replaced.

XV. DATA ACQUISITION, CALCULATIONS AND DATA REDUCTION

A. Data from Air phase samples are reported directly from the data results.

B. For dissolved gasses from an aqueous matrix, results must be multiplied by factors based on the equation from Henry's Law. The raw results are multiplied by the following conversion factors specific to each individual compound:

	a (concentration on column)	H (Henry's constant at 25°C)	MW (molecular weight)	Temp (C)	MD (Molar Density = (MW * 273) / (22.4 *T))	Headspace	Volume of sample	B=a * MD * Head Space (vol.) / Sample (vol.)	A=a * 55.504 * MW / H	TC (ppb)
CH4	0.000001	39769.000	16	25	0.654	10.000	0.032	0.0002045	0.0000223	0.227
CO2	0.000001	1543.000	44	23	1.812	10.000	0.030	0.0006039	0.0015827	2.187
H2	0.000001	70719.000	2	25	0.082	10.000	0.032	0.0000256	0.0000016	0.027
O2	0.000001	43414.000	32	25	1.309	10.000	0.032	0.0004090	0.0000409	0.450
Ethane	0.000001	29771.000	30	25	1.227	10.000	0.032	0.0003834	0.0000559	0.439
Ethene	0.000001	11616.000	28	25	1.145	10.000	0.032	0.0003579	0.0001338	0.492
N2	0.000001	95411	28	25	1.145	10	0.032	0.0003579	0.0000163	0.374

Uncontrolled Copy

XVI. COMPUTER HARDWARE AND SOFTWARE

A. Computer – Hewlett Packard PC

B. Software – Windows 2000, Perkin-Elmer TotalChrom Version 6.2.1

XVII. DATA MANAGEMENT AND RECORDS

A. Data is stored to the C drive and written as a text file. That file is processed on the C then copied to the G drive, where it can be uploaded into element.

B. All sequences are copied and backed up with the data files.

C. All corrections made in any record or document pertaining to the analytical process **must** be in accordance with the following NELAC requirement: "Entries in records shall not be obliterated by methods such as erasures, overwritten files or markings. All corrections to record-keeping errors shall be made by one line marked through the error. The individual making the correction shall sign (or initial) and date the correction. These criteria also shall apply to electronically maintained records."

XVIII. QUALITY CONTROL AND QUALITY ASSURANCE

A. All samples must be run under a passing calibration curve of 30% RSD or >0.99 Linear Regression. If an opening CCC does not pass, the instrument must be re-calibrated.

B. All sequences must include a blank with no targets above the MDL after the CCC, a duplicate run that falls within 30%RPD, an LCS at ≤30% recovery, and a closing CCC after all samples have run that passes less than 30%RSD. If the blank does not pass, it must be rerun. If the duplicate does not pass at ≤30%RSD, it must be rerun. If the closing CCC does not pass, the instrument needs to be recalibrated.

C. If a sample concentration is greater than the calibration range, it must be diluted and re-analyzed.

D. All samples must be run within a 24-hour period after the opening CCC.

Uncontrolled Copy

XIX. METHOD PERFORMANCE

A method detection limit (MDL) study is performed on any newly installed instrument or on one that has undergone major maintenance. This is done by analyzing a series of a minimum of seven low concentration injections of a standard containing all compounds in the analysis. A precision and accuracy (P& A) study is also performed yearly by each analyst as a continuing demonstration of proficiency. The P&A is done by analyzing a standard mixture containing all analytes listed in the Dissolved / Fixed gas analyte list at a concentration that is consistent with the lowest calibration point. They are then evaluated according to EPA methodology. An LOD is run quarterly by instrument. The LOD must contain all target analytes, and must be run at a level between the MDL and MRL, and must have a reliable detection. An LOQ is run on a quarterly basis. 4 injections of the Dissolved / Fixed gas standard mixture are run at or below the MRL. They are then evaluated under the same criteria as a P&A study.

Eurofins Spectrum Analytical, Inc. performs MDLs on all instruments/method in support of state and program requirements such as CAM, RCP, ASP, CLP-like deliverables and specific project quality assurance objectives by carrying out a new study annually or by completion of quarterly limit of detection (LOD) and Limit of Quantitation (LOQ) analysis.

To determine the MDL for each analyte, analyze a sample aliquot at 3-5X the detection limit or as specified by the method. The calculated MDL **must be greater** than 10% of the standard used. If the MDL is less than 10%, repeat the analysis using a smaller concentration. The ideal MDL will be slightly greater than 10% of the standard used and must be below the practical quantitation limit. The average recovery of the MDL replicates must be within 50-150% of true value. MDL updates are also done when new instruments are installed, if the configuration of the instrument is significantly changed, or if the sample preparation method is modified.

Limit of Detection (LOD) is defined as an estimate of the minimum amount that an analytical process can reliably detect. Prior to use, MDL values are verified quarterly by preparing an LOD at a concentration 2-3 times the MDL. The LOD is acceptable if it produces a peak at least 3 times above the instrument's noise level. If a response is not acceptable or detected, the concentration of the failing analyte shall be increased until an acceptable response is observed, however, it should not exceed the reporting limit. LODs are analyte, matrix, extraction method, and instrument configuration specific. The LODs are logged in by QA on a quarterly basis. LOD will replace the annual MDL study except where specified by the method or program that reoccurring MDL study is required. Fixed Gas LODs are performed in Tedlar bags. LODs for Dissolved Gas are performed using Dissolved Gas standard and are taken directly from 40ml amber vials to be treated as samples.

Limit of Quantitation (LOQ) is defined as the minimum concentration of an analyte/compound that can be reported with a specified degree of confidence or the lowest concentration that produces a quantitative result within specified limits of precision and bias. LOQ is set at or above the concentration of the lowest initial calibration standard. ESAI defines the LOQ = RL. The LOQs are analyzed once per analysis, matrix and extraction method. The LOQ may also serve as ongoing demonstration of capability of analyst. A minimum of four consecutive replicates are analyzed at a concentration of the lowest initial calibration standard on a quarterly and/or annual basis; however, LOQ may be analyzed as high as 2 times the reporting limit. Fixed Gas LOQs are performed in Tedlar bags. Dissolved Gas LOQs are performed in Tedlar bags due to ambient background levels that exist in air and DI water.

Precision & Accuracy (P&A)

P&A is an annual requirement for each analyst and is an ongoing demonstration of their capability. As mentioned above, the LOQ can also serve as the P&A; however each analyst performing the method must demonstrate capability on an annual basis. If an LOQ was not performed by an analyst, then four LCS spikes must be entered into the P&A demonstration of capability form to calculate the P&A recovery within the method limits. For analytical methods that don't have LCS spikes, blind proficiency tests can serve as ongoing capability.

See the most recent revision of the SOP for Establishment and Reporting of Detection Limits

XX. POLLUTION PREVENTION AND WASTE MANAGEMENT

A. The Summa canisters are cleaned after analysis has occurred.

B. Vials are stored and disposed of in accordance with ESAI's Chemical Hygiene Plan.

Uncontrolled Copy

XXI. REFERENCES

A. EPA Method 3C

B. RSK-175

XXII. CONTROL CHARTING

Control charts are a useful tool when monitoring the quality system within the lab. They are used to monitor trends and detect out of control conditions such as shifts in mean recovery. ESAI has a Control Chart program that automatically searches the LIMs for trending, it emails the department when any analyte is trending ± 5% of the acceptance range. The control chart will utilize a minimum of 30 data points and also show standard deviation, the mean, 2S and 3S lower and upper limits for review. Corrective actions can include, but are not limited to, replacing a degrading standard or recalibrating an instrument that is showing a repeated problem.

The acceptance limit for Fixed and Dissolved Gas LCS is 70-130% for all compounds.

XXIII. REVISIONS

Revision 5, 02/23/15

- Added section I. A. Dissolved gas compounds.
- Added section I. B. Fixed gas compounds.
- Revised section X. A. Clarified standard preparation.
- Revised section XI. A. Updated calibration points and methods.
- Revised section XII. B. Updated regulator settings.
- Revised section XIII. A. Added LCS standard.
- Added section XIV. C. Added Tedlar bag to trouble shooting.
- Revised section XVII. A. Updated data management.
- Added to section XIX. Added statements about how LODs and LOQs are performed for both Dissolved and Fixed Gas methods.
- Fixed grammatical errors.

Revision 6, 05/17/17

- Deleted section IX B, standard not used
- Revised section XI A, updated N2O2 Calibration.

Uncontrolled Copy

- Revised section XI C, updated calibration.
- Revised section G+H, added calibration steps.
- Updated XII A+B.
- Revised section XIII I, added CCV criteria.
- Updated section XV A, updated new data storage
- Removed all but two most recent revisions.
- Replaced references to Spectrum Analytical, Inc. with Eurofins Spectrum Analytical, Inc. or ESAI.

Uncontrolled Copy

Eurofins Document Reference	NA	**Revision**	15
Effective Date	7/19/16	**Status**	Effective
Historical/Local Document Number	NA		
Local Document Level	ESAI-MA		
Prepared by	Raquel Thomas		
Reviewed and Approved by (name/date)	Christina White, 7/20/16		
Reviewed and Approved by (name/date)	June O'Connor, 7/19/16		

11 Almgren Drive
Agawam, MA 01001

Uncontrolled Copy

STANDARD OPERATING PROCEDURE
For
Total Organic and Inorganic Carbon by SW846 9060/SM5310B

Prepared by: Raquel Thomas

Digitally signed by Raquel Thomas
DN: cn=Raquel Thomas, o=Eurofins Spectrum Analytical, ou=Wet Chemistry, email=raquelthomas@EurofinsUS.com, c=US
Date: 2016.07.19 12:10:19 -04'00'

Reviewed by: Christina White

Digitally signed by Christina White
DN: cn=Christina White, o=Eurofins Spectrum Analytical, ou, email=ChristinaWhite@EurofinsUS.com, c=US
Date: 2016.07.20 12:15:49 -04'00'

Laboratory Director:

Digitally signed by June OConnor
DN: cn=June OConnor, o=Eurofins Spectrum Analytical Inc., ou, email=juneoconnor@eurofinsus.com, c=US
Date: 2016.07.19 12:01:05 -04'00'

F:\data\QAQC\NELAC SOPs\NELAC SOPs 2016\Wet Chem\SOP for TOC by SW846 9060 & SM5310B, 7-19-16 Rev. 15.doc

TABLE OF CONTENTS

STANDARD OPERATING PROCEDURE
for
TOTAL ORGANIC and INORGANIC CARBON
By SW846 9060/SM5310B

I. SCOPE AND APPLICATION 3
II. SUMMARY OF METHOD 3
III. HEALTH & SAFETY 3
IV. INTERFERENCES 4
V. PERSONNEL QUALIFICATIONS 4
VI. REAGENTS AND STANDARDS 4
VII. APPARATUS AND MATERIALS 5
VIII. INSTRUMENT CALIBRATION 6
IX. SAMPLE COLLECTION, PRESERVATION, AND HANDLING 7
X. PROCEDURE 8
XI. DATA CALCULATION 9
XII. TROUBLESHOOTING AND MAINTENANCE 9
XIII. QUALITY CONTROL AND QUALITY ASSURANCE 9
XIV. METHOD PERFORMANCE 11
XV. POLLUTION PREVENTION 12
XVI. WASTE MANAGEMENT 12
XVII. REFERENCES 13
XVIII. GLOSSARY 14
XIX. REVISIONS 14
XX. ATTACHMENTS 16

Uncontrolled Copy

I. SCOPE AND APPLICATION

A. This method describes the measurement of total organic carbon (TOC) and inorganic carbon (IC) in various matrices:
Drinking, surface water as well as in domestic, industrial aqueous wastes and soil or sludge.

B. This method is used to determine the concentration of total organic and/or inorganic carbon in particulated suspensions, water solutions and solids including samples such as soil, mud and sediments.

II. SUMMARY OF METHOD

A. This method provides the conditions for the detection of ppm levels of total organic carbon, inorganic carbon or total carbon by converting the various carbon forms to carbon dioxide by catalytic combustion.

B. An infrared detector measures the carbon dioxide formed directly.

C. The amount of carbon dioxide is directly proportional to the concentration of carbon in the sample.

D. This method utilizes the external standard calibration technique to determine the carbon present. This is done by comparing the intensity of the sample absorbance to the response of the calibration standard.

E. Total Organic Carbon (TOC) and Total Carbon (TC) analysis of soils, slurries, sediments, sludges, particulate-laden liquids, and other solids yield important insight in a variety of analytical applications. From quality assurance in chemical production to detection of contaminants in soils, this application could prove to be difficult without the proper equipment. Consequently, high temperature combustion oxidation with cobalt oxide as a catalyst and a CO2 specific Infrared detector is the method of choice.

Uncontrolled Copy

III. HEALTH & SAFETY

To maintain the application of OSHA regulations regarding the safe handling of the chemicals specified in this method, the laboratory must follow proper safety procedures:

A. All chemical solvents should be transported on a cart when moved from room to room.

B. All analytical operations, such as digestions, must be performed under a hood expressly designed for acid use.

C. Safety glasses, gloves and protective clothing must be worn when preparing standards and digesting samples.

D. The analyst must wear safety glasses and take extra care when opening the gas cylinders or checking for leaks in the gas lines. (See Spectrum's chemical hygiene plan on using compressed gas cylinders.)

E. The analyst must dispose of all unwanted chemicals and acids in properly marked containers inside the hood and chemical cabinets. (See Spectrum's waste disposal plan.)

IV. INTERFERENCES

A. Carbonate and bicarbonate carbons are interferences and must be removed or accounted for. Removal of carbonate and bicarbonate by acidification and purging is completed prior to TOC analysis.

B. Any particulate in the sample may clog the openings in the syringe and must be avoided.

V. PERSONNEL QUALIFICATIONS

Personnel that are performing this method must have signed the current SOP and have a completed training form on file. Personnel must pass a P&A analysis and have it on file.

VI. REAGENTS AND STANDARDS

A. Carbon Standard, 1000 ppm

B. Inorganic Carbon Standard, 1000 ppm

C. DI water used in preparation of standards and for diluting of samples should be ultra pure to reduce the carbon concentration of the blank. The concentration of carbon in the water must be less than 2 times the MDL.

D. 1M HCL solution for IC removal: Bring 88 mls concentrated HCL(+/- 2% purity acceptable) up to 1L of DI in a volumetric flask.

E. IC Reagent: 50mls of 85% Phosphoric Acid to 250mls DI.

F. TOC SRM for water.

G. Total organic \ inorganic carbon working solution: 100 ppm: In a 200ml volumetric flask, add 20mls of 1000ppm Total organic\inorganic carbon standard to 200mls DI.

H. Total organic/inorganic carbon standard solutions for water: Prepare standard solutions of 0.5, 1.0, 5.0, 10.0, 20.0, for Low Calibration curves.

Uncontrolled Copy

Final ppm per 100 ml volume	Volume 100 ppm Standard
20.0	20.00
10.0	10.00
5.0	5.00
1.0	1.00
0.5	0.50
0.0	0.0

I. Total organic/inorganic carbon standard solutions for water: Prepare standard solutions of 20.0, 50.0, 100.0, 200.0, 250.0 300.0 for High Calibration curves.

Final ppm per 100 ml volume	Volume 1000 ppm Standard
300.0	30.0
250.0	25.0
200.0	20.0
100.0	10.0
50.0	5.0 or 50mls of 100ppm
20.0	As is

J. LOD/LOQ: Use the appropriate volume of the working standard to prepare the concentration needed for the LOD/LOQ.

Equation: (concentration needed) (250mL) = (actual ppm of stock) (X mL)

K. The following procedures must be followed for all standards and reagents:

1. Any standard/reagent that comes with a Certificate of Analysis must be scanned into Element.

2. Proper labeling of standards includes an Element ID, received date, expiration date, and opened/prepared date.

3. All standards and reagents must be checked for expiration dates on a specific timeframe.

VII. APPARATUS AND MATERIALS

A. Shimadzu TOC-L Total Organic Carbon Analyzer

B. Analytical balance capable of accurately weighing 0.0001 g

C. 40mL glass vials for autosampler

Uncontrolled Copy

D. Pipettes = all sizes needed

E. Volumetric flasks = 100 mL

F. Class A 25 ml and 50 ml graduated cylinders

G. 10 mL Luer-Lok syringe with 0.45 micron syringe filter for DOC

VIII. INSTRUMENT CALIBRATION

A. Method files must be created before calibration and samples can be analyzed. See manual for specific instruction for creating methods.

B. The Standards to make for the calibration are:

C. 0ppm, 0.5 ppm, 1.0 ppm, 5.0 ppm, 10.0 ppm and 20.0 ppm. 50ppm, 100ppm, 200ppm, 250ppm 300ppm. The TOC Low Curve range will be 0.00 ppm to 20.0 ppm. The High Curve range will be 20ppm to 300ppm.

D. Standards are run in ascending order.

E. Run a blank DI vial before calibration run.

F. See instrument manual for more detailed running procedures:

1. Go to Calibration Curves tab in Sample Table Editor window and click New.

2. Click on Normal settings then Next.

3. Choose analysis, the fill in Sample Name and ID.

4. Choose Linear Regression, check off Multiple Injections and uncheck Zero Shift, then create a file name and open. Click Next.

5. Leave the Units, Number of Washes, SD Max and CD Max at the default settings. Acid Add is determined by the Analysis(which is linked to the Method) chosen on Page 3 of curve creation process so there should be no need to change it. Set Number of Injections to 4/4.

6. Click Next and add your calibration standards and vial numbers for Low or High Calibration to the table. Do not add both Low and High on the Table. The Calibration Parameters Table will come up each time a calibration standard is added. Remember to set Number of Injections to 4/4 and leave SD and CV Max at default in this table.

7. When all standards and vial numbers are entered click Next.

Uncontrolled Copy

8. On Page 6 make sure Default Settings is checked off. Check off Correlation Coefficient Check box.

9. Choose your action settings then set 0.997 as the lower limit. Click Finish.

10. Do the above process for the remaining curve.

11. Open the Methods tab in Sample Table Editor and open the appropriate method.

12. Add both calibration curves to the method parameters.

13. Load vials into autosampler rack. Place a cleaning blank before the first standard.

14. An ICV and ICB must follow each curve.

15. Replace the cover on the autosampler or instrument will not initialize.

16. Click Connect at the top of the screen. The instrument cannot be connected to more than one sample table at a time and will give an error message if attempted.

17. When instrument is Ready, click Start.

18. The instrument reads total organic carbon, inorganic carbon and total carbon, so standards must be prepared and the instrument must be calibrated for all.

19. At the completion of the calibration, a linear curve is displayed and printed for each type of analysis. It is up to the user to be sure that the calibration is acceptable. The R2 value must be > or = 0.997.

Uncontrolled Copy

IX. SAMPLE COLLECTION, PRESERVATION, AND HANDLING

A. For both water and soil, sample containers must be pre-washed with detergents, acids, and DI water. Glass is preferable.

B. Samples should be analyzed as soon as possible after sampling.

C. Because of the possibility of oxidation or bacterial decomposition of some components of aqueous samples, the time between sample collection and the start of analysis should be minimal and the sample needs to be stored at 4°C and protected from sunlight and atmospheric oxygen.

D. If samples cannot be analyzed right away, they should be preserved to a pH<2 with Phosphoric acid and kept at 4°C and away from sunlight.

X. PROCEDURE

A. All samples must be run in quadruplicate.

B. Method files must be created before samples can be analyzed. Refer to manual for specific instructions for creating methods.

C. See the instrument manual for complete details on running the samples:

1. Go to Sample tab in Sample Table Editor window. Click New for a blank Sample Table. Click on the Method Tab to drag and drop method onto the table. Use this method file for all Unknown samples and the batch Blank. Go to the Control tab to drag drop the CCV, CCB, BS, SRM and other quality control samples onto the table. See sample set up on page 11 of S.O.P.
2. Enter sample names and ID's in sample table.
3. There is a duplicate run for every 10 samples. This result must be within 20%, of the original value. If the duplicate is more than +/- 20% of the value then the sample must be re-run if possible.
4. On one of every ten samples, an MS and MSD are analyzed. A known amount of total organic carbon is added to the sample.
5. When sample entry is complete, use the View Vial Settings button at the top of Sample Table window to enter vial positions. When done, Save As.
6. Pour about 40 mL of sample into a glass vial.
7. For DOC, filter a sample and a blank using a 10ml Luer-Lok syringe with a 0.45 micron syringe filter.
8. Load vials into autosampler rack. Place a cleaning blank before the first sample. Replace the cover on the autosampler or instrument will not initialize.
9. Click Connect at the top of the screen. The instrument cannot be connected to more than one sample table at a time and will give an error message if attempted. When instrument is Ready, click Start.
10. The instrument allows the sample to be recalculated against a different calibration curve if the sample is over range. If a sample is higher than the highest calibration range, it must be diluted.

Uncontrolled Copy

XI. DATA CALCULATION

The instrument prints out a value in ppm for total carbon, inorganic carbon, and organic carbon for each sample run. The value is calculated from the average of four sample repetitions. This number is multiplied by the dilution factor for the sample, if any. TOC boat sampler samples are calculated as an average of each of the four repetitions and reported along with the associated RPD value.

XII. TROUBLESHOOTING AND MAINTENANCE

Shimadzu TOC-L TOC Analyzer	Replace DI water Replace Acid Replace catalyst Replace permeation drier Replace halide scrubber Replace dehumidifier reagent	Monthly Monthly Every 6 months Every 6 months As needed Yearly

Top-loading balances	Verify accuracy with certified weights	Daily

Uncontrolled Copy

XIII. QUALITY CONTROL AND QUALITY ASSURANCE

A. QC standards are made up fresh daily from the total organic carbon or inorganic carbon stock solution of 1000 ppm.

B. Any blank, and other DI water used, is taken directly from the DI water supply.

C. On one of every ten samples, an MS and MSD are analyzed. The % recovery must be within 30% of the known value or the data is suspect due to matrix interferences.

D. For water: a blank, blank spike and SRM must be run for a batch of 20 samples. A 5 ppm and 200ppm CCV is run to verify the calibration curve every 10 samples as well as a calibration blank. The QC samples must fall within 15 % of its known value with the exception of the SRM, which must be within the manufacturer's established limits.

If any of the CCV's are outside the acceptance limits and this check standard fails, a freshly prepared QC is run. If this fails, the entire run is suspect and further action should be taken to understand the problem.

F. The sample run should be setup as follows.

ICV*- Instrument QC
ICB*- Instrument QC
CCV HIGH- Instrument QC
CCV LOW- Instrument QC
CCB
BLK- Batch QC
BS HIGH- Batch QC
BS LOW- Batch QC
SRM HIGH- Batch QC
SRM LOW- Batch QC
2 SAMPLES
DUP- Batch QC
MS- Batch QC
MSD- Batch QC
CCV HIGH- Instrument QC
CCV LOW- Instrument QC
CCB
10 SAMPLES
CCV HIGH- Instrument QC
CCV LOW- Instrument QC
CCB
7 SAMPLES
DUP- Batch QC
MS- Batch QC
MSD- Batch QC
CCV HIGH- Instrument QC
CCV LOW- Instrument QC
CCB

Uncontrolled Copy

*ICB and ICV are to be run only after a new Calibration has been performed to verify the curve.

J. The QA department will log in the LOD/LOQs and these will be performed quarterly. Please refer to the most current version of the SOP for Establishment and Reporting of Detection Limits for further criteria information.

K. Control charts are a useful tool when monitoring the quality system within the lab. They are used to monitor trends and detect out of control conditions such as shifts in mean recovery. Spectrum Analytical, Inc. has a Control Chart program that automatically searches the LIMs for trending, it emails the department when any analyte is trending ± 5% of the acceptance range. The control chart will utilize a minimum of 30 data points and also show standard deviation, the mean, 2S and 3S lower and upper limits for review. Corrective actions can include, but are not limited to, replacing a degrading standard or recalibrating an instrument that is showing repeated problems.

L. All corrections made in any record or document pertaining to the analytical process **must** be in accordance with the following NELAC requirement: "Entries in records shall not be obliterated by methods such as erasures, overwritten files or markings. All corrections to record-keeping errors shall be made by one line marked through the error. The individual making the correction shall sign (or initial) and date the correction. These criteria also shall apply to electronically maintained records."

XIV. METHOD PERFORMANCE

A. MDLs

1. Eurofins Spectrum performs MDLs also known as Limit of Detection (LOD) study on all instruments/ method in support of state and other program requirements such as CAM, RCP, ASP, CLP-like deliverables and specific project quality assurance objectives by carrying out a new study annually or by completion of quarterly limit of detection (LOD) verification and Limit of Quantitation (LOQ) analysis.

2. To determine the MDL for each analyte, analyze a sample aliquot at 3-5X the detection limit or as specified by the method. The calculated MDL **must be greater** than 10% of the standard used. If the MDL is less than 10%, repeat the analysis using a smaller concentration. The ideal MDL will be slightly greater than 10% of the standard used and must be below the practical quantitation limit. The average recovery of the MDL replicates must be within 50-150% of true value. MDLs updates are also done when new instruments are installed, if the configuration of the instrument is significantly changed, or if the sample preparation method is modified.

B. LOD Verification

Limit of Detection (LOD) verification is defined as an estimate of the minimum amount that an analytical process can reliably detect. Prior to use of values from an MDL study, the MDL value obtained shall be verified, either quarterly or annually, by preparing an LOD verification at a concentration no more than 3 times the MDL for single analyte tests and no more than 4 times the MDL for multiple analyte tests and no greater than or equal to the RL. The LOD is acceptable if it produces a peak at least 3 times above the instrument's noise level. If a response is not acceptable or detected, the concentration of the failing analyte shall be increased until an acceptable response is observed, however, it should not exceed the reporting limit. LOD verifications are analyte, matrix, extraction method, and instrument configuration specific. The LOD verifications are logged in by QA on a quarterly and/or annual basis. LOD verification will replace the annual MDL study except where specified by the method or program that a reoccurring MDL study is required.

Uncontrolled Copy

C. LOQ

Limit of Quantitation (LOQ) is defined as the minimum concentration of an analyte/compound that can be reported with a specified degree of confidence or the lowest concentration that produces a quantitative result within specified limits of precision and bias. LOQ is set at or above the concentration of the lowest initial calibration standard. Eurofins Spectrum Analytical, Inc defines the LOQ = RL. The LOQs are analyzed once per analysis, matrix and extraction method. The LOQ may also serve as ongoing demonstration of capability of analyst. A minimum of four consecutive replicates are analyzed at a concentration of the lowest initial calibration standard on a quarterly and/or annual basis; however, LOQ may be analyzed as high as 2 times the reporting limit.

D. Precision & Accuracy (P&A)

P&A is an annual requirement for each analyst and is an ongoing demonstration of their capability. As mentioned above the LOQ can also serve as the P&A, however each analyst performing the method must demonstrate capability on an annual basis. If an LOQ was not performed by an analyst, then four LCS spikes must be entered into the P&A demonstration of capability form to calculate the P&A recovery within the method limits. For analytical methods that don't have LCS spikes, blind proficiency tests can serve as ongoing capability.

See the most recent revision of the SOP for Establishment and Reporting of Detection Limits

Uncontrolled Copy

XV. POLLUTION PREVENTION

A. Never dispose of samples, reagents, chemicals, or waste waters by pouring them down the sink. Always use designated waste containers for disposal.

B. Plan accordingly to limit waste accumulation. Make only the amount of reagent that can be used before the expiration date. Do not make in excess.

C. Clients should provide a sufficient amount of the sample for the requested analysis. Excess amounts of the sample result in increased disposal fees for the laboratory.

XVI. WASTE MANAGEMENT

Eurofins Spectrum Analytical is dedicated to implementing ways to efficiently utilize resources along with complying with all environmental laws and regulations in order to reduce the accumulation of waste as defined in Eurofins Spectrum's Chemical Hygiene Plan. All questions and/or problems should be referred to the Health and Safety Manager.

A. Aqueous Wastes:

1. All solvent contaminated water must be collected in lab satellite-containers the transferred to a waste drum in the hazardous waste staging area where they are monitored and ultimately disposed of by a hazardous waste disposal facility.

2. All non-solvent contaminated aqueous wastes (including preserved water, digestates, instrument effluents, and corrosive aqueous wastes) are accumulated in lab satellite-containers and transferred to a drum in Hazardous Waste staging area #2 where they will be disposed by a licensed hazardous waste facility.

3. COD vials are disposed in a designated drum.

B. Solids:

1. Expired soil samples in the storage area are emptied into a drum and a sample is collected. The method of disposal will be determined by the findings of the sample profile.

2. Expired PCB containing samples (marked with yellow tape) are segregated and collected in the waste staging area and packed for disposal by a licensed hazardous waste facility.

3. Objects containing high levels of mercury (samples, broken thermometers, etc.) are segregated and collected in the waste staging area and packed for disposal by a hazardous waste facility.

C. Sludge, Tars, Oils:

These samples are accumulated in the waste staging area and packed for disposal by a hazardous waste facility/transporter.

D. Highly contaminated objects (reagents, chemicals, vials, samples) are segregated and collected by each dept. to avoid mixing of incompatible materials. It is then collected, and packed periodically throughout the year by hazardous waste disposal facilities.

Uncontrolled Copy

XVII. REFERENCES

Method 9060, Total Organic Carbon. September, 1986, U.S. Environmental Protection Agency, Office of Research and Development, Environmental Monitoring and Support Laboratory, Cincinnati, Ohio 45268.

Standard Methods for the Examination of Water and Wastewater, Method 5310B: 18th, 19th, 20th, and 22nd Editions (2000).

Shimadzu TOC-L CPH/CPN Users Manual copywright 2011-2014.

XVIII. GLOSSARY

TC:	Total Carbon
IC:	Inorganic Carbon
mg/L:	Milligram per Liter
TOC:	Total Organic Carbon
CO2:	Carbon Dioxide
mL:	Milliliter
MDL:	Minimum Detection Limit
SRM:	Standard Reference Material
QC:	Quality Control
PPM:	Parts per Million
ICB:	Initial Calibration Blank
ICV:	Initial Calibration Verification
CCB:	Continuing Calibration Blank
CCV:	Continuing Calibration Verification
BLK:	Method Blank
BS:	Blank Spike
SRM:	Standard Reference Material
DUP:	Sample Duplicate
MS:	Matrix Spike
MSD:	Matrix Spike Duplicate

Uncontrolled Copy

XIX. REVISIONS

Revision 8:

- Updated QC section XI to reflect current lab practices.

Revision 9, 01/14/09:

- Added Revisions Section XIX.

Revision 10, 9/09/11:

- Added attachments Daily Maintenance Checks for Apollo 9000 and Tips for Maintaining Apollo 9000 to the body of the SOP Word document.

Revision 11, 1/27/12:

- Updated section V and section XII to include LOD/LOQ.
- Section XII was also updated to include control charts.
- Updated section VI to include instrument maintenance
- Added Section XI Troubleshooting and Maintenance

- Section XIII Method Performance. Updated section numbers to accommodate new sections.

Revision 12, 3/22/2013:

- Updated Sections V and VII to reflect Calibration Standards used to produce the calibration curve for TOC water and TIC water.
- Updated XIII.D for current control charting procedure.

Revision 13, 9/17/13:

- Added section V for personnel qualifications
- Updated section numbering after insertion of section V
- Consolidated the lists of reagents and standards in section VI into one
- Added a reference to the purity of water needed in section VI.C
- Added information on handling and labeling standards in section VI
- Updated section XIII for control charts and documentation of corrections
- Updated section XIV for procedures for MDL, LOD, LOQ, and P&A
- Added reference to the 22nd edition of Standard Methods in section XVII

Revision 14, 7/9/15:

- Updated table in VI.H to reflect the addition of a 2.5 ppm standard
- Updated VIII.A.1 to reflect the addition of a 2.5 ppm standard

Revision 15, 7/19/16

- Updated replace Apollo 9000 reagent, calibration preparation, sample preparation and maintenance protocol with Shimadzu TOC-L protocol.
- Removed all references to soil procedure.
- Updated Section XIV. B. LOD criteria.
- Added year for Standard Method reference.

Uncontrolled Copy

XX. ATTACHMENTS

Daily Maintenance Checks for Shimadzu TOC-L

- Carrier gas >500 psi from tank to run scheduled load.
- Ample 1 M HCL supply for load.
- Check dilution water bottle is full.
- Check autosampler rinse water is full.
- Check 0.05M HCL level in halogen scrubber. Top off if necessary or replace stainless steel mesh. Check scrubber for discoloration.
- Carrier gas flow rate 150 cc/min +/- 10%.
- Change de-humidifier annually.
- Inspect and clean syringe if needed.
- Check drain vessel is filled with water.
- Check humidifier is filled with water.
- Change reagents if needed.
- Inspect permeation dryer for damage, water accumulation.
- Load= estimated amount of daily analysis
- Reference: Shimadzu TOC-L CPH/CPN User's Manual version 638-9460F.

Uncontrolled Copy

	Not Applicable		12
	10/12/16		Effective
	Not Applicable		
	ESAI - Massachusetts		
	Raquel Thomas		
	Christina White, 10/13/16		
	June O'Connor, 10/12/16		

Standard Operating Procedure
For
Biochemical Oxygen Demand
SM 5210 B

Uncontrolled Copy

Prepared by: Raquel Thomas

Digitally signed by Raquel Thomas
DN: cn=Raquel Thomas, o=Eurofins Spectrum Analytical, ou=Wet Chemistry, email=raquelthomas@EurofinsUS.com, c=US
Date: 2016.10.12 16:45:46 -04'00'

Reviewed by: Christina White

Digitally signed by Christina White
DN: cn=Christina White, o=Eurofins Spectrum Analytical, ou, email=ChristinaWhite@EurofinsUS.com, c=US
Date: 2016.10.13 10:45:25 -04'00'

Laboratory Director:

Digitally signed by June OConnor
DN: cn=June OConnor, o=Eurofins Spectrum Analytical Inc., ou, email=juneoconnor@eurofinsus.com, c=US
Date: 2016.10.12 17:10:13 -04'00'

F:\data\QAQC\NELAC SOPs\NELAC SOPs 2016\Wet Chemistry\SOP for BOD by SM5210B, 10-12-16 Rev. 12.doc

TABLE OF CONTENTS

STANDARD OPERATING PROCEDURE
for
BIOCHEMICAL OXYGEN DEMAND
SM 5210 B

I. METHOD SCOPE AND APPLICATION 3
II. SUMMARY OF METHOD 3
III. HEALTH AND SAFETY 3
IV. CAUTIONS 3
V. INTERFERENCES 4
VI. PERSONNEL QUALIFICATIONS 4
VII. REAGENTS 4
VIII. APPARATUS AND MATERIALS 5
IX. CALIBRATION OF ACCUMET XL40 DISSOLVED OXYGEN METER 6
X. SAMPLE COLLECTION, PRESERVATION, AND HANDLING 7
XI. PROCEDURE 7
XII. DATA CALCULATIONS AND REPORTING 10
XIII. QUALITY CONTROL AND QUALITY ASSURANCE 11
XIV. MDL/LOD/LOQ/P&A 12
XV. POLLUTION PREVENTION 14
XVI. WASTE MANAGEMENT 14
XVII. REFERENCES 15
XVIII. REVISIONS 15
XIX. ATTACHMENTS 18
XX. GLOSSARY 18

Uncontrolled Copy

I. METHOD SCOPE AND APPLICATION

The Biochemical Oxygen Demand (BOD) is an empirical test using standardized laboratory procedures to determine the relative oxygen requirements of wastewaters, effluents and polluted waters.

Chemical inhibition of nitrogenous demand provides a reliable measure of Carbonaceous Biological Oxygen Demand (CBOD).

II. SUMMARY OF METHOD

A. This method is performed by placing a sample aliquot in a BOD bottle and filling to volume with buffered dilution water. The full, airtight bottle is incubated under specific conditions for a specific time, normally at 20°C for 5 days.

B. Dissolved oxygen (D.O.) is measured initially and after incubation. The BOD is computed from the difference between initial and final D.O.

C. CBOD is done similarly except that a nitrification inhibitor is added to sample before reading the initial D.O.

Uncontrolled Copy

III. HEALTH AND SAFETY

To maintain the application of OSHA regulations regarding the safe handling of the chemicals specified in this method, the laboratory must follow proper safety procedures:

A. All chemicals should be transported on a cart then moved from room to room.

B. Safety glasses, gloves and protective clothing must be worn when performing any phase of the analysis.

C. The analyst must dispose of all unwanted chemicals and acids in properly marked containers inside the hood and chemical cabinets. (See Eurofins Spectrum Analytical's waste disposal plan.)

IV. CAUTIONS

Samples for BOD analysis may degrade significantly during storage between collection and analysis, resulting in low BOD values. Analyze sample promptly or store at near freezing temperatures. Warm samples to 20°C before analysis. The samples must be analyzed within 48

hours.

V. INTERFERENCES

A. All samples- Check pH; if not between 6.0 and 8.0, adjust sample temperature to 20 +/-3C, then adjust pH to 7.0 to 7.2 using a solution of sulfuric acid (H2SO4 or sodium hydroxide (NAOH) of such strength that the quantity of reagent does not dilute the sample by more than 0.5%. Exceptions may be justified with natural waters when the BOD is to be measured at in-situ pH values. The pH of dilution water should not be affected by the lowest sample dilution. Always seed samples that have been pH adjusted.

B. Residual chlorine must be destroyed by adding Na_2SO_3 solution. Aquachek test strips are used primarily for chlorine testing; if the result from the test strip is inconclusive then Swiftest DPD Total Chlorine Indicating Reagent will be used for confirmation.

VI. PERSONNEL QUALIFICATIONS

Personnel that are performing this method must have signed the current SOP and have a completed training form on file. Personnel must pass a P&A analysis and have it on file.

VII. REAGENTS

A. Glucose-Glutamic Acid Standard solution: a pre-made solution of 198 mg/L BOD is bought from a vendor such as item number LC148451 from Environmental Express. Each bottle is good for 45 days from opening.

B. Calcium Chloride Solution: 27.5 g $CaCl_2$ to 1 liter. (VWR Cat No.VW3308-1)

C. Ferric Chloride Solution: 0.25 g $FeCl_3 \cdot 6H_2O$ to 1 liter. (VWR Cat No.VW3318-1)

D. Magnesium Sulfate Solution: 22.5 g $MgSO_4 \cdot 7H_2O$ to 1 liter. (VWR Cat No.3328-1)

E. Phosphate Buffer Solution: 8.5 g KH_2PO_4 + 21.75 g K_2HPO_4 + 33.4 g $Na_2HPO_4 \cdot 7H_2O$ + 1.7 G NH_4Cl to 1 liter. (VWR Cat No. VW3345-1)

NOTE: DISCARD REAGENTS IF THERE IS ANY SIGN OF BIOLOGICAL GROWTH

F. Sodium Sulfite Solution (For chlorine removal): Dissolve 157.5 mg Na_2SO_3 in 100 mL of DI water.

G. Polyseed or Bioseed inoculation capsules. (Inter Bio)

Uncontrolled Copy

H. Nitrification Inhibitor: 2-chloro-6-(tricholoromethyl) pyridine (TCMP) Hach Co.Cat. 2533-35

I. LOD/LOQ:
Use the appropriate volume of the working standard to prepare the concentration needed for the LOD/LOQ.

Equation: (concentration needed) (250mL) = (actual ppm of stock) (X mL)

J Aquachek chlorine test strips – HACH catalog number 27450-50

K. Swiftest DPD Total Chlorine Indicator Reagent

L. Second source standard (SRM) – a vendor prepared solution to confirm our procedure such as ERA catalog number 516. This product has varying concentrations depending on the lot but all are in the range of 18-230 mg/L.

M. The following procedures must be followed for all standards and reagents:

1. Any standard/reagent that comes with a Certificate of Analysis must be scanned into Element.

2. Proper labeling of standards includes an Element ID, received date, expiration date, and opened/prepared date.

3. All standards and reagents must be checked for expiration dates on a specific timeframe.

Uncontrolled Copy

VIII. APPARATUS AND MATERIALS

A. Accumet Excel XL40 Dissolved Oxygen Meter

B. Fisher Scientific Dissolved Oxygen Probe for Accumet.

C. See attachment for operation and maintenance.

D. NOTE: Meter and probe must be warmed up for at least 1/2 hour before calibration and readings.

E. Laboratory filtered water. Nanopure filter system.

F. 5-gallon bottle for air saturated, buffered dilution water.

G. Erlenmeyer flasks - 500 mL

H. Magnetic stir plate and magnetic stir bars.

I. Various size graduated cylinders and pipets (wide mouth, graduated).

J. 300 mL BOD glass bottles with stoppers and air tight plastic caps. Alternatively use plastic disposable bottles. It is imperative that the glass containers are properly cleaned with brush, soap and water, and have a final rinsing with DI water. **These bottles can not go into the dishwasher.**

K. Instrument Maintenance

Accumet Excel XL 40 Dissolved Oxygen Meter

- Use Kimwipes® to wipe down screen
- Refer to Accumet Excel series Meter User Manual
- For Software maintenance refer to Accumet Excel series Meter User Manual
- Wipe excess water from probe tip before calibration

BOD Probe Fisher Scientific

- Replace probe membrane, refer to user manual
- Clean probe gold/silver electrode refer to user manual

IX. CALIBRATION OF ACCUMET XL40 DISSOLVED OXYGEN METER

A. Turn meter on. Log in under operator name.

B. Take probe from BOD bottle and use a Kimwipe® to blot any water droplets that formed on the end of the probe tip. Return to BOD bottle (containing about 1 inch of water to provide a 100% relative humidity environment) and let probe and meter warm up for at least one-half hour.

C. To calibrate, press Standardize (picture of a beaker), then press clear icon. Answer yes to “are you sure you want to clear last standardization”. Record the Barometric pressure and the Temperature. Compare those readings with the Fisher Scientific Gauges.

D. Wait until the Blue Beaker to the left of the reading is blinking and the word stable is on the right of the reading, then press the blinking blue beaker. A dissolved oxygen reading will appear. Once “stable” has appeared again record this reading. Now the meter has been calibrated.

Uncontrolled Copy

NOTE: The oxygen content of air is affected by water vapor content. Using air at 100% humidity can cause evaporation of moisture from the probe's temperature sensor, producing a local cooling effect. Errors of up to 8% can result from calibrating in dry air. If the Barometric pressure and or surrounding temperature change noticeably recalibrate meter.

X. SAMPLE COLLECTION, PRESERVATION, AND HANDLING

A. Samples should be collected using an appropriate sampling plan.

B. Samples must be refrigerated.

C. See Section V. for treatment of samples immediately upon arrival in the laboratory.

D. The preparation process for the samples must begin within 48 hours.

XI. PROCEDURE

A. Prepare Solutions

1. Fill 5-gallon dilution water bottle with deionized water to the 20-liter mark. Add 1 mL/L of each buffer solution to the bottle (20 mL of each solution: calcium chloride, ferric chloride, magnesium sulfate, and phosphate buffer)

2. Seed: 1 capsule of Polyseed into a 600 mL beaker containing 500 mL of the buffered dilution water. Place on stir plate and stir to aerate for 1 hour. The seed is good for 6 hours.

3. Glucose-Glutamic Acid Standard (LCS): As described in the Reagents section. Use an appropriate amount of this solution as a standard in a BOD bottle containing the proper volume of seed. The dilution used must cover the range of the concentration of the standard which is 198 mg/L.

4. SRM: As described in the Reagents section. Use an appropriate amount of this solution as a standard in a BOD bottle containing the proper volume of seed. The dilution used must cover the range of the concentration of the standard which is listed on the certificate of analysis.

B. Analysis

1. Calibrate the D.O. meter (see Calibration of D.O. Section VIII).

Uncontrolled Copy

2. Make dilutions:

   a. Obtain background information on the sample if possible. This will help in selecting suitable dilutions. Samples low in organics may contain synthetics, glass, and plastic; substances that don't break down. Samples high in organics may contain sugar, alcohol, and cellulose; organic materials that would break down.

   b. In the absence of prior knowledge, dilute samples according to the origin of the sample.

      Dilution for industrial waste samples: 0 to 1%
      Dilution for raw wastewater samples: 1 to 5%
      Dilution for effluent samples: 5 to 25%
      Dilution for surface waters: 25 to 100 %

   c. When a bottle contains more than 67% of the sample after dilution, nutrients may be limited in the diluted sample and subsequently reduce biological activity. In such samples, add the nutrient, mineral, and buffer solutions directly to diluted sample at a rate of 1 mL/L (0.30 mL/300-mL bottle). As stated above (section XI.B.2.b), this lab does not typically use more than 67% of sample.

   d. Line up the BOD bottles needed (one bottle for each dilution) and record the Lab ID's (including 1 dilution water blank, 3 seed blanks and 2 standard (LCS) bottles and 2 reference sample bottles) with the corresponding BOD bottle numbers in the BOD logbook.

   e. Allow the seed solution to settle momentarily. Add 3 mL of seed solution to each bottle. (All but the dilution water blank bottle)

   f. Perform at least 3 dilutions for each sample. More dilutions, as many as 8 dilutions may be needed to cover anticipated BOD range if the sample is an unknown.

      NOTE: Refer to the BOD dilution table at the end of the method to establish overlapping ranges.

3. Prepare Samples (Aqueous):

   a. Bottle size, incubation temperature, and incubation period are all specified. Since most wastewater samples contain more oxygen demanding material than the amount of D.O. available in air saturated water, it is necessary to dilute the sample before incubation to bring the

Uncontrolled Copy

oxygen demand and supply into appropriate balance.

b. Using wide mouth graduated pipets or graduated cylinders, pour the desired amounts of the sample into bottles and fill with dilution water. (See dilution guide)

c. Fill all bottles with buffered dilution water to the neck so that when the stopper is placed on the bottle, there is no air present.

d. Read the initial D.O. and record in the proper column of the BOD record book. The initial DO must be 9.2 or less. At 20.0 degrees C the maximum amount of oxygen that can dissolve into water is 9.2 mg/L. Any amount over this value is unstable and may be lost physically and not by biological consumption.

e. Stopper each bottle immediately after it has been read, making sure there is no air in the bottle and that there is water above the stopper, then cap with a plastic cap.

g. If nitrification inhibition is desired (CBOD), add 2 shots of TCMP reagent per 300 mL sample to all the sample and QC bottles in the batch.

4. Prepare Samples (Soils):

a. Weigh 0.01, 0.1, 0.5 and 1.0 gram aliquots of sample.

b. Add the aliquots to the BOD bottles.

c. If the sample is suspected to be high (i.e., waste water sludge) add an aliquot to 100 mL of DI water and make serial dilutions into the BOD bottles.

d. Fill with dilution water and treat as aqueous samples

e. Calculate as follows;

BOD (mg/Kg) = {[BOD (mg/L)] [Final Volume (L)]}/Wt (Kg)

If weighing directly into BOD bottles, final volume will be 0.300 L and no dilution factors will apply.

If the sample is dissolved in water before adding to the dilution bottle, a dilution factor will apply and the final volume will be the final volume of the initial mixture.

Uncontrolled Copy

5. Incubate samples for 5 days at 20° +/- 1 ^{o}C. Some clients require incubation for 20 days. (20 day BODs)

6. Remove bottles from the incubator after 5 days (+/- 6 hours) and read the final D.O. In the event the final D.O. reading of the dilution water blank is greater than the initial D.O. reading, determine the cause. If the final D.O. reading is less than 0.100 mg/L or 2% of the initial reading, the cause can be attributed to the measurement uncertainty of the probe. If the final reading is greater than 0.100 mg/L or 2% of the initial reading, the BOD bottle may not have been properly sealed. If the dilution water blank is to be reported, the analyst must add a notation to the logbook indicating the elevated final D.O. reading is acceptable and if the result is within the probe measurement of uncertainty.

XII. DATA CALCULATIONS AND REPORTING

A. Record all data in the BOD logbook. Calculate the mg/L BOD using the following calculation:

$$BOD = (D_i - D_f) - (B_i - B_f)\text{Average} \times DF$$

Where D_i= Initial D.O.
D_f= Final D.O.
B_i= Initial seed D.O.
B_f= Final seed D.O.
DF= Dilution Factor

$$DF = \frac{\text{Final Volume of Sample(300 mL)}}{\text{Volume of Sample}}$$

B. Dissolved Oxygen Uptake **Requirements**:

1. Dilution water blank: 0.1-0.2 mg/L. **This is required**. If the Dilution blank is greater than 0.2 mg/L, the glassware was not properly cleaned and /or the deionized water used was contaminated. Data from a batch with a blank >0.2 mg/L will be qualified to alert the client. If the blank continues to exceed 0.2 mg/L, rewash all affected bottles. If the problem persists, steam distilled water may be purchased and used. Review the attached document from the New York Department of Health.

2. Seed blank: 0.6 -1.0 mg/L.

3. D_f >/= 1.0 mg/L.

Uncontrolled Copy

4. D_i-D_f >/= 2.0 mg/L.

5. If more than one sample dilution meets the criteria of a residual D.O. of at least 1.0 mg/L and a D.O. depletion of at least 2.0 mg/L, average the results. If the results are too widespread, it may be preferable to use the result of the dilutions containing the largest volume of sample as it may be considered most representative.

C. The RPD between the high and low dilution values from each sample will be calculated. Any samples that have an RPD greater than 30% will be qualified. Also, if any sample has only a single acceptable dilution it will be qualified to state that the RPD could not be determined.

XIII. QUALITY CONTROL AND QUALITY ASSURANCE

A. Duplicate samples are run at a frequency 5% or one per batch (if < 20 samples) and analyzed to assess precision.

B. Glucose-glutamic acid standard is run with each batch of samples. If the standard result is outside the established control limit (198 mg/L +/-30.5 mg/L) the cause of the problem must be determined. Usually a new seed dilution is needed. Use of the glucose-glutamic acid standard is a check assessing dilution water quality, seed effectiveness, and the bias of the analytical procedure.

C. An outside reference solution such as an ERA standard is run with each batch.

D. Calibrate the DO meter. See Section VIII for procedure.

E. BOD analysis must be started within 48 hours of sampling (24 hours if not kept at 4ºC) and sample pH must be adjusted to between 6.5 and 7.5 immediately upon receipt by the laboratory.

F. Sample dilutions from 0.25 mL to 150 mL in 300 mL are listed at the end of this procedure. Try to avoid using < 1.0 mL. For sample volumes < 1 mL use a graduated wide mouth pipet or a serial dilution. Example: A dilution of 10 mL of sample to 100 mL (1:10) with DI water may be used and then the result is multiplied by 10.

G. Samples with out-of-control data will be flagged on the report. The client will be called and advised to resample.

H. Initial DO can be no more than 9.2 mg/L. The current deionized water in the lab is sufficient to achieve this. On rare occasions contamination can occur which causes higher D.O. readings. In this case Steam Distilled Water can be purchased from the

Uncontrolled Copy

grocery store. Some waters are now ozonated which causes high D.O. readings and are therefore unacceptable. To allow the water to equilibrate to ambient O_2 levels remove the cap and let it sit.

I. Control charts are a useful tool when monitoring the quality system within the lab. They are used to monitor trends and detect out of control conditions such as shifts in mean recovery. Eurofins Spectrum Analytical, Inc. has a Control Chart program that automatically searches the LIMs for trending, it emails the department when any analyte is trending ± 5% of the acceptance range. The control chart will utilize a minimum of 30 data points and also show standard deviation, the mean, 2S and 3S lower and upper limits for review. Corrective actions can include, but are not limited to, replacing a degrading standard or recalibrating an instrument that is showing repeated problems

J. All corrections made in any record or document pertaining to the analytical process **must** be in accordance with the following NELAC requirement: "Entries in records shall not be obliterated by methods such as erasures, overwritten files or markings. All corrections to record-keeping errors shall be made by one line marked through the error. The individual making the correction shall sign (or initial) and date the correction. These criteria also shall apply to electronically maintained records."

Uncontrolled Copy

XIV. MDL/LOD/LOQ/P&A

A. MDLs

1. Eurofins Spectrum Analytical performs MDLs also known as Limit of Detection (LOD) study on all instruments/ method in support of state and other program requirements such as CAM, RCP, ASP, CLP-like deliverables and specific project quality assurance objectives by carrying out a new study annually or by completion of quarterly limit of detection (LOD) verification and Limit of Quantitation (LOQ) analysis.

2. To determine the MDL for each analyte, analyze a sample aliquot at 3-5X the detection limit or as specified by the method. The calculated MDL **must be greater** than 10% of the standard used. If the MDL is less than 10%, repeat the analysis using a smaller concentration. The ideal MDL will be slightly greater than 10% of the standard used and must be below the practical quantitation limit. The average recovery of the MDL replicates must be within 50-150% of true value. Additionally, the recovered concentration of any analyte in a replicate must not be less than the calculated MDL in that study. MDLs updates are also done when new instruments are installed, if the configuration of the instrument is significantly changed, or if the sample preparation method is modified.

B. LOD Verification

Limit of Detection (LOD) verification is defined as an estimate of the minimum amount that an analytical process can reliably detect. Prior to use, MDL values are verified quarterly by preparing an LOD at a concentration no more than 3 times the MDL for single analyte tests, no more than 4 times the MDL for multiple analyte tests and no greater than the RL. The LOD is acceptable if it produces a peak at least 3 times above the instrument's noise level. If a response is not acceptable or detected, the concentration of the failing analyte shall be increased until an acceptable response is observed, however, it should not exceed the reporting limit. If the LOD verification fails due to lack of detection, then the laboratory must perform and pass two consecutive LOD verifications at the higher spike concentration. LOD verifications are analyte, matrix, extraction method, clean-up technique and instrument configuration specific. If LOD verifications are not performed on all combinations, the laboratory must base the verification on the "worst case basis" by including all applicable clean-up techniques. Surrogates are required to be included in this study as well. Surrogates must be spiked at the lowest Initial Calibration concentration. The LOD verifications are logged in by QA on a quarterly and/or annual basis. LOD verification will replace the annual MDL study except where specified by the method or program that a reoccurring MDL study is required.

C. LOQ

Limit of Quantitation (LOQ) is defined as the minimum concentration of an analyte/compound that can be reported with a specified degree of confidence or the lowest concentration that produces a quantitative result within specified limits of precision and bias. LOQ is set at or above the concentration of the lowest initial calibration standard. Eurofins Spectrum Analytical, Inc defines the LOQ = RL. The LOQs are analyzed once per analysis, matrix and extraction method. The LOQ may also serve as ongoing demonstration of capability of analyst. A minimum of four consecutive replicates are analyzed at a concentration of the lowest initial calibration standard on a quarterly and/or annual basis; however, LOQ may be analyzed as high as 2 times the reporting limit.

D. Precision & Accuracy (P&A)

P&A is an annual requirement for each analyst and is an ongoing demonstration of their capability. As mentioned above the LOQ can also serve as the P&A, however each analyst performing the method must demonstrate capability on an annual basis. If an LOQ was not performed by an analyst, then four LCS spikes must be entered into the P&A demonstration of capability form to calculate the P&A recovery within the method limits. For analytical methods that don't have LCS spikes, blind proficiency tests can serve as ongoing capability.

See the most recent revision of the SOP for Establishment and Reporting of Detection Limits

Uncontrolled Copy

XV. POLLUTION PREVENTION

A. Never dispose of samples, reagents, chemicals, or waste waters by pouring them down the sink. Always use designated waste containers for disposal.

B. Plan accordingly to limit waste accumulation. Make only the amount of reagent that can be used before the expiration date. Do not make in excess.

C. Clients should provide a sufficient amount of the sample for the requested analysis. Excess amounts of the sample result in increased disposal fees for the laboratory.

XVI. WASTE MANAGEMENT

Eurofins Spectrum Analytical is dedicated to implementing ways to efficiently utilize resources along with complying with all environmental laws and regulations in order to reduce the accumulation of waste as defined in Eurofins Spectrum Analytical's Chemical Hygiene Plan. All questions and/or problems should be referred to the Health and Safety Manager.

A. Aqueous Wastes:

1. All solvent contaminated water must be collected in lab satellite-containers then transferred to a waste drum in the hazardous waste staging area where they are monitored and ultimately disposed of by a hazardous waste disposal facility.

2. All non-solvent contaminated aqueous wastes (including preserved water, digestates, instrument effluents, and corrosive aqueous wastes) are accumulated in lab satellite-containers and transferred to a drum in Hazardous Waste staging area #2 where they will be disposed by a licensed hazardous waste facility.

3. COD vials are disposed in a designated drum.

B. Solids:

1. Expired soil samples in the storage area are emptied into a drum and a sample is collected. The method of disposal will be determined by the findings of the sample profile.

2. Expired PCB containing samples (marked with yellow tape) are segregated and collected in the waste staging area and packed for disposal by a licensed hazardous waste facility.

3. Objects containing high levels of mercury (samples, broken thermometers, etc.)

Uncontrolled Copy

are segregated and collected in the waste staging area and packed for disposal by a hazardous waste facility.

C. Sludge, Tars, Oils:

These samples are accumulated in the waste staging area and packed for disposal by a hazardous waste facility/transporter.

D. Highly contaminated objects (reagents, chemicals, vials, samples) are segregated and collected by each dept. to avoid mixing of incompatible materials. It is then collected, and packed periodically throughout the year by hazardous waste disposal facilities.

XVII. REFERENCES

Standard Methods for the Examination of Water and Wastewater 18th, 19th, 20th, and 22nd Editions. (Method 5210B)

Standard Methods for the Examination of Water and Wastewater 21st Edition. (Method 5210B)

Careful Procedures Needed in Determining BOD; Deeds and Data, Volume 19, Number 10; Mathew Caruso, pp12-15.

XVIII. REVISIONS

Revision 11, 08/03/16

- Clarified in section XI.B.2.e that 3 dilutions per sample are required
- Added that any batch with a blank over 0.2 mg/L will have a qualifier applied in section XII.B.1
- Section XII.C added to include the calculation of the RPD between the high and low values and the qualifiers associated with it.
- Section XIV.B – Updated LOD criteria.

Revision 12, 10/12/16

- Updated Section XI.B.2.c. to include Standard Methods 5210B. 5-Day BOD Test Section 5.c.2.
- Updated Section XI.B.2.c. to include maximum sample amount used by lab.
- Removed all but two most recent revision logs.

Uncontrolled Copy

BOD DILUTION GUIDE

Assumed BOD (mg/L)	Dilutions* (mL)	Dilution Factor	BOD Range Covered* (mg/L)
	150	2	2 - 12
10	100	3	3 - 18
	75	4	4 - 24
	50	6	6 - 36
25	40	7.5	7.5 - 45
	30	10	10 - 60
	30	10	10 - 60
50	25	12	12 - 72
	20	15	15 - 90
	20	15	15 - 90
75	15	20	20- 120
	10	30	30 - 180
	15	20	20 - 120
100	10	30	30 - 180
	8	37.5	37.5- 225
	10	30	30 - 180
150	8	37.5	37.5 - 225
	6	50	50 - 300
	8	37.5	37.5 - 225
200	6	50	50 - 300
	4	75	75 - 450
	6	50	50- 300
250	5	60	60 - 360
	4	75	75 - 450
	5	60	60 - 360
300	4	75	75 - 450
	3	100	100 - 600
	4	75	75 - 450
400	3	100	100 - 600

Uncontrolled Copy

Assumed BOD (mg/L)	Dilutions* (mL)	Dilution Factor	BOD Range Covered* (mg/L)
400	2.5	120	120 - 720
	3	100	100 - 600
500	2.5	120	120 - 720
	2	150	150 - 900
	2	150	150 - 900
750	1.5	200	200 - 1200
	1.2	250	250 - 1500
	1.5	200	200 - 1200
1000	1.2	250	250 - 1500
	1	300	300 - 1800
	1	300	300 - 1800
1500	0.75	400	400 - 2400
	0.60	500	500 - 3000
	0.75	400	400 - 2400
2000	0.60	500	500 - 3000
	0.40	750	750 - 4500
	0.60	500	500 - 3000
2500	0.50	600	600 - 3600
	0.40	750	750 - 4500
	0.40	750	750 - 4500
4000	0.30	1000	1000 - 6000
	0.25	1200	1200 -7200

***Dilutions made in a standard 300 mL BOD bottle.**

Uncontrolled Copy

XIX. ATTACHMENTS

Attachments: Operating procedure, precaution and maintenance of Accumet XL40 BOD meter and probe

Careful Procedures Needed in Determining BOD; Deeds and Data, Volume 19, Number 10; Mathew Caruso, pp12-15.

XX. GLOSSARY

°C = degrees Celsius
OSHA = Occupational Safety and Health Agency
pH = potential of hydrogen
mg = milligrams
DI = deionized
mL = milliliters
mg/L = milligrams per liter

Uncontrolled Copy

wil
are
e,
larg
din

s.
re

arb
e c
ou
y to

ces
ial
de
ess

Careful Procedures Needed in Determining BOD

Matthew Caruso
Associate Sanitary Chemist
New York Department of Health
Syracuse, N.Y.

roblems with biochemical oxygen)and (BOD) determination can .. be understood by reviewing the iciples on which the test is based. iply defined, BOD is the amount of gen required by bacteria over a iod of 5 days at 20°C to consume degradable material.

Because the BOD determination is lly a bioassay, close control is re- red over the bacteria's environment, gen supply, and food sources.

The environment provided for the bac- a must be favorable; toxic chemicals st be eliminated, if possible. Condi- ns deadly to bacteria—such as stewater with pH values outside the itral range of 6.5 to 7.5, chlorine, or h temperature exposure—must be rected. Samples with extremes of pH ist be neutralized (with 1 N H_2SO_4 1 N NaOH), chlorinated samples chlorinated (with sodium sulfite solu- n), and hot samples cooled (to 20°C).

When any of these toxic factors must eliminated, you must assume that the cterial population that once existed in sample is dying or dead. Therefore, a w population of bacteria (seed) must supplied.

For bacteria to metabolize and con- m ganic material, certain minerals is present. These are provided by four nutrient and buffering solutions uffers) added to the dilution water. so, temperature must be rigidly aintained at 20°C ± 1°C.

Stop a moment, and ask yourself: m I providing the bacteria I am going employ with the best working nditions? Have toxics been elimi- ted? Has a new population of bacteria ied) been supplied? Have minerals en supplied? Is incubation at 20°C?" If u are able to answer "yes" to all these estions, you should be in good shape.

The next concept to be discussed is isolved oxygen (DO). As the definition BOD states, you are to determine the ygen required by the bacteria as or- nic matter is consumed. This oxygen dissolved in water. The maximum iount that water can dissolve at 20°C 9.2 mg/l. Higher concentrations can st, but these represent unstable con- ions in which the excess oxygen may lost physically and not by biological nsumption. Too low a DO concentra- n will cause the bacteria to stop tabolizing. Either problem can be cor- ted by aerating the dilution water or use.

Re nber that you want to measure amount of oxygen the bacteria re- re to consume the organic matter sent. Once you supply the bacteria h a known initial quantity of oxygen, you do not want to lose it physically, nor allow more than that originally present to enter the system. For this reason several precautions must be taken. A siphon must be used to dispense dilution water (to avoid further aeration). Water seals must be maintained during incubation (so more oxygen cannot enter the bottle). The dilution water must be at 20°C when prepared (to avoid contraction of water in the BOD bottle as it cools to 20°C, drawing air into the bottle). Some oxygen must remain in the system at the end of the 5-day incubation period (so you know that the bacteria ran out of "food" before they ran out of oxygen).

DO values must be determined carefully by either the Winkler method or a DO probe calibrated by the Winkler method.

The source and quantity of organic matter must be carefully controlled. The *only* sources must be the sample and the seed. Organic matter from other sources will introduce errors. To follow the rule that at least 2.0 mg/l of oxygen be consumed (depletion) and at least 1.0 mg/l of oxygen remain (residual), several dilutions of each wastewater sample are generally required. In the ideal dilution, 5 mg/l of oxygen will be consumed. Since the sample will be diluted, the BOD result for the diluted sample is the product of (the oxygen consumed by a given dilution) times (the dilution factor for that dilution). Obviously, if organic matter is present from unknown sources (e.g., dirty bottles), your BOD result will be falsely high.

Having reviewed the basic concepts of the BOD determination, you should be fairly confident of the sample analysis—right? Not really.

By analyzing a sample for which the BOD is known, you should be able to demonstrate that the analysis performed was properly executed. This quality-control test can be done by preparing a glucose-glutamic acid solution, as described in *Standard Methods* (14th Ed.; Part 507, para. 4i, pp. 547-8). Alternatively, a quality-control sample can be purchased from an outside source. Remember, the glucose-glutamic acid solution and the purchased BOD standard are synthetic solutions that must be seeded.

If a synthetic BOD sample produces an acceptable result, all is well with your method. Depending on the seed you use, the glucose-glutamic acid solution will have a BOD of approximately 200 mg/l (200 ± 37 mg/l). If it does not, the following section on common problems and the Troubleshooting Chart should help.

BOD Troubleshooting Chart I

Symptom	Possible Cause	Remedy
Unseeded dilution water depletes by more than 0.2 mg/l in 5 days		
Both bottles	Contaminated distilled water	Clean distilled water storage tank.
		Reduce still's cooling water supply.
		If deionizer is used, install microfilter.
	Contaminated buffers	Buffers should appear crystal-clear and be less than 1 year old. Replace phosphate buffer first.
	Thio wrong normality	Restandardize thio.
	Dirty glassware	Review and revise glassware washing procedure.
	Initial DO > 9.2 mg/l	Do not incubate water with DO > 9.2 mg/l.
One bottle only depletes by more than 0.2 mg/l	Dirty glassware	Recheck glassware washing procedure, especially pH of final rinse water.

Uncontrolled Copy

Distilled Water. The entire BOD test hinges on the quality of your distilled water.

- Operate your still's cooling-water supply so that small puffs of steam are visible at the condenser. This will prevent organics in the feedwater from being carried over.

- Older, all-metal stills are lined with tin-coated copper. With age the tin coating wears away exposing the copper. Copper is toxic and will produce low BOD results. Distilled water containing excessive copper can be cleaned up by redistillation from an all-glass still or by deionization. Alternatively, the old still could be replaced with an all-glass still. Both remedies are expensive. To determine if this is the problem, your distilled water should be analyzed for copper.

- To minimize still maintenance in hard-water areas, deionizaton columns are frequently used for water entering the still. However, these columns can lead to problems. When particles of the deionization resin break through and enter the still, the resin decomposes in the boiler, yielding ammonia, which may produce high BOD results. An alternative to removing the deionizer would be to place a microfilter between the deionizing column and the still.

- Bacteria will grow in your distilled-water storage tank by utilizing traces of ammonia, natural gas, or hydrocarbon vapors in the laboratory air. Even if the bacteria die off, the organic matter they produce will remain. Therefore, frequently drain your storage tank completely, scrub the walls, rinse with fresh distilled water, and refill. Keep your storage tank as clean as possible.

Glassware. *All* glassware used in the lab must be chemically clean. Water will sheet over on clean glass and not form beads. Stories you may have heard about not washing BOD bottles with detergent are *false*. However, residues of synthetic detergent on glassware *can* cause two problems: (1) a high residue concentration will cause low BOD results because of the bacteriostatic nature of detergents, and (2) a low residue concentration will produce high BOD results because the detergents are biodegradable. This doesn't mean you should avoid detergents. Remember, your samples are polluted. Grease in sewage will adhere to glass. Hot sudsy water will remove this source of organic matter, which would cause high BOD readings.

Just remember to *rinse* all your glassware *thoroughly after washing with detergent.* Rinse 5 to 10 times with tap water and then at least 3 times with distilled water. Collect the last distilled-water rinse, and check the pH. It should be between 5.7 and 7.5. If it is not, increase the number of rinses. Remember, 5 rinses with 20 ml of water are better than one rinse with 100 ml of water.

BOD Troubleshooting Chart II

Symptom	Possible Cause	Remedy
10x-seed controls have very small deletion (<1.0 mg/l)	Thio wrong normality	Restandardize thio.
	Insufficient seed	Increase amount of seed used.
	Weak seed	Collect seed from a different source or when strength of wastewater is greater.
	Seed was chlorinated or contained toxic industrial waste.	Change seed source.
	Toxics in distilled water	Try redistilled or distilled-deionized water.
	Incubator temperature low	Check temperature.
10x-seed controls run out	Too much seed	Reduce seed. Use depletion of 1x seed controls for calculations.
	Incubator temperature too high	Check temperature.
	Thio wrong normality	Restandardize thio.
One-tenth of 10x-seed depletion not equal to 1x seed depletion	Erratic comsumption of DO	This is normal and is the reason for using 10x seed.
BOD standard controls too high (more than 15% high)	Contaminated distilled water	Drain distilled water storage tank.
		Reduce still's cooling water supply.
		If deionizer is used ahead of still, install microfilter.
	Contaminated buffers	Buffers should appear crystal-clear and be less than 1 year old. Replace phosphate buffer first.
	Dirty glassware	Review and revise glassware washing procedure.
	Improperly prepared standard.	Prepare new standard.
		Purchase prepared standard.
	Thio wrong normality	Restandardize thio.
	Math error	Check calculation.
	Incubator temperature high	Check temperature.

Reagents

- **Nutrient and buffering solutions (buffers).** These solutions should be less than 1 year old and should appear crystal-clear. Turbidity and/or precipitates indicate bacterial contamination and/or exposure to temperature extremes. Maintain your buffers at room temperature (if room temperatures can reach extremes, use your 20°C incubator). To avoid contaminating the solution, always use a clean pipette.

Uncontrolled Copy

Sodium thiosulfate (0.025 N)
o). This reagent should always ap-
r crystal-clear, and it should be stan-
d frequently. *Always* standardize
self, even if purchased solutions
used. Commercially available solu-
s are rarely, if ever, preserved. Thio-
ate can be preserved by adding sod-
hydroxide at 0.4 g per liter of 0.025 N
ution.

• **Starch indicator.** This solution also
uld appear crystal-clear. When pre-
ing a starch solution from arrowroot
soluble starch, use only the clear supernatant. Never use cornstarch. Add starch only when the titration has produced a pale straw-colored solution.

• **General rule:** When in doubt, throw it out.

Dissolved oxygen probes

Always standardize the probe with a Winkler titration in the following manner: Aerate 2 l of distilled water, and fill four BOD bottles with a siphon. Determine the DO in three BOD bottles by Winkler titration. Use the fourth bottle to calibrate the meter to the average DO of the other three bottles.

Make a mental note of the sound of the DO probe's agitator. If the sound changes in pitch from bottle to bottle, the agitator shaft may be binding in the bottle neck. A reduced agitator speed will cause low DO readings.

Quality Control Procedures

• **Dilution-Water Blanks.** Always incubate two bottles of dilution water without seed but with nutrient solutions 1.0 ml/l each of calcium chloride, ferric chloride, magnesium sulfate, and ammonium phosphate buffers). Determine the initial DO on a third bottle. Always dispense dilution water with a siphon. Dilution water should not deplete more than 0.2 mg/l of O_2 in 5 days.

• **Seed Controls.** After adding seed to the dilution water, mix well. Incubate two bottles of 1x seed, and determine initial DO in a duplicate pair of bottles. Record the average if the two results are close. If they are not, determine the DO on a third bottle. Prepare two bottles of 10x seed by adding the additional volume of seed required directly to each BOD bottle. (For every 1 ml/l of seed used in the dilution water, 2.7 ml of seed must be added to the 10x-seed control bottles. For example, 3 ml/l of seed used in the dilution water requires 3 x 2.7 = 8.1 ml additional seed in each 10x control. Always use a siphon to fill the bottles. Remember to seed only if the pH was corrected, chlorine was removed, the sample required cooling, or when using synthetic samples or industrial wastes.

• **BOD Standard Controls.** Using the glucose-glutamic acid synthetic sample described above, prepare two 5.0-ml dilutions with seeded dilution water and incubate. BOD standards are quite unstable, so discard the unused portions. Only commercially prepared standards in sealed ampuls can be stored. Once the ampul is opened, the solution must be used immediately and the remainder discarded.

BOD Troubleshooting Chart III

Symptom	Possible Cause	Remedy
OD standard controls o low (more than 15% w.	Weak or no seed used	Increase seeding.
	Toxics in distilled water	Try redistilled or distilled-deionized water.
	Toxic residue on glassware	Review and revise glassware washing procedure
		Check pH of final rinse.
		Rinse with distilled or deionized water.
	Used "old" standard	Prepare fresh standards. Store standards only in concentrated form in sealed sterile ampuls.
	Improperly prepared standard	Prepare new standard.
		Purchase prepared standard.
	Thio wrong normality	Restandardize thio.
	Math error	Check calculations.
	Incubator temperature low	Check temperature.
Two or more proper dilutions (depletion more than 2.0 mg/l, residual DO more than 1.0 mg/l) yield widely differing results.		
Influent samples	Toxics present	Check and correct for residual chlorine, pH extremes, and heated samples. Seed the dilution water.
		Check industrial discharges for other toxics present
Effluent samples	Toxics present	Check for and remove residual chlorine. Seed the dilution water.
	Chemical demand	Use titration technique when removing residual chlorine with sodium sulfite.

Calculations

Calculated DO of seeded dilution water (Calc B)

Where B_1 is the initial DO of seeded dilution water, and B_2 is the DO after 5 days of incubated 10x-seed control,

$$\text{Calc B} = B_1 - [(B_1 - B_2)/10]$$

Example 1. The seeded and mixed dilution water control had an initial DO (B_1) of 8.5 mg/l. Five days later the 10x-seed controls had an average DO (B_2) of 2.5 mg/l. Thus:

$$\begin{aligned}\text{Calc B (in mg/l)} &= 8.5 - [(8.5 - 2.5)/10] \\ &= 8.5 - 6.0/10 \\ &= 8.5 - 0.6 \\ &= 7.9\end{aligned}$$

Note: the 1x-seed controls are used *only* if the 10x-seed controls have a B_2 of less than 1.0 mg/l after 5 days.

Uncontrolled Copy

Eurofins Document Reference	Not Applicable	**Revision**	8
Effective Date	10/17/16	**Status**	Effective
Historical/Local Document Number	Not Applicable		
Local Document Level	ESAI - Massachusetts		
Prepared by	Christina White		
Reviewed and Approved by (name/date)	Raquel Thomas 10/18/16		
Reviewed and Approved by (name/date)	June O'Connor 10/17/16		

Standard Operating Procedure
For
CHEMICAL OXYGEN DEMAND (COD) by HACH 8000

Uncontrolled Copy

Prepared by: Christina White

Digitally signed by Christina White
DN: cn=Christina White, o=Eurofins Spectrum Analytical, ou, email=ChristinaWhite@EurofinsUS.com, c=US
Date: 2016.10.17 14:49:52 -04'00'

Reviewed by: Raquel Thomas

Digitally signed by Raquel Thomas
DN: cn=Raquel Thomas, o=Eurofins Spectrum Analytical, ou=Wet Chemistry, email=raquelthomas@EurofinsUS.com, c=US
Date: 2016.10.18 12:20:53 -04'00'

Laboratory Director Signature Signifies Effective Date:

Digitally signed by June OConnor
DN: cn=June OConnor, o=Eurofins Spectrum Analytical Inc., ou, email=juneoconnor@eurofinsus.com, c=US
Date: 2016.10.17 12:45:56 -04'00'

F:\data\QAQC\NELAC SOPs\NELAC SOPs 2016\Wet Chemistry\SOP for COD by HACH 8000, 10-17-16 Rev. 8.doc

TABLE OF CONTENTS

STANDARD OPERATING PROCEDURE
For
CHEMICAL OXYGEN DEMAND (COD) by
HACH 8000

I. SCOPE AND APPLICATION 3

II. SUMMARY OF METHOD 3

III. INTERFERENCES 3

IV. APPARATUS AND MATERIALS 3

V. REAGENTS 3

VI. SAFETY 4

VII. SAMPLE COLLECTION, PRESERVATION, AND HANDLING 4

VIII. CALIBRATION 4

IX. PROCEDURE 5

X. TROUBLESHOOTING AND MAINTENANCE 7

XI. QUALITY CONTROL 7

XII. METHOD PERFORMANCE 9

XIII. POLLUTION PREVENTION 10

XIV. WASTE MANAGEMENT 11

XV. REFERENCES 12

XVI. GLOSSARY 12

XVII. REVISIONS 12

Uncontrolled Copy

I. SCOPE AND APPLICATION

The Chemical Oxygen Demand (COD) test is used widely to estimate the amount of organic matter in wastewater. It is a measure of the oxygen equivalent of materials present in waste water that are subject to oxidation by a strong chemical oxidant, in this case, dichromate. The method is applicable to wastewater, groundwater, surface water, effluents, and sample extracts including liquid extracts from soil.

II. SUMMARY OF METHOD

A. Samples are checked for pH (using pH paper) and the pH is adjusted to <2.0 with H_2SO_4.

B. Small volumes of sample, blanks, and standards are pipetted into vials containing pre-measured reagents, sealed and heated at 150°C for 2 hours. The vials are then removed, cooled, and measured spectrophotometrically at 620 nm (for High Range) or 420 nm (for Low Range.)

III. INTERFERENCES

Chlorides are oxidized by dichromate and add a positive bias to the results; however, HACH vials contain enough mercuric sulfate to remove interference of up to 2000 mg/L of chloride. If samples are identified as sea water or if notified by the client of potential chloride interferences, samples containing high levels of chloride can be diluted to bring the chloride levels into the treatment range of the mercuric chloride contained in the vials.

IV. APPARATUS AND MATERIALS

A. Spectrophotometer.

B. COD Reactor Block preheated to 150°C.

C. Eppendorf or other brand pipettes, various sizes – Calibrated weekly

D. Metal back-connected Thermometer (10 – 200 degrees C - Certified against a NIST calibrated thermometer annually.

V. REAGENTS

A. High Range Digestion tubes (0-1500 mg COD/L). (HACH or Environmental Express)

B. Low Range Digestion tubes (0-150 mg COD/L). (HACH or Environmental Express)

Uncontrolled Copy

C. 500 mg/L Stock Standard, prepared from a COD 1000mg/l standard from a Certified Standards Provider for traceability.

*All reagents and standards must be initialed and dated when received and opened.

VI. SAFETY

To maintain the application of OSHA regulations regarding the safe handling of the chemicals specified in this method, the laboratory must follow proper safety procedures:

A. All chemicals should be transported on a cart when moved from room to room.

B. Safety glasses, gloves and protective clothing must be worn when performing any phase of the analysis.

C. The analyst must dispose of all unwanted chemicals and acids in properly marked containers inside the hood and chemical cabinets. See Eurofins Spectrum Analytical's waste disposal plan.)

VII. SAMPLE COLLECTION, PRESERVATION, AND HANDLING

A. Samples should be collected using an appropriate sampling plan.

B. Adjust sample pH to <2.0 with H_2SO_4.

C. Samples must be refrigerated until analyzed.

Uncontrolled Copy

VIII. CALIBRATION

A. High range: Prepare a series of standards into the high range vials using the 1500 mg/L standard. Final volume for the standards is 2.0 mL. Use a calibrated pipette.

COD (mg/L)	mL DI water added to vials	mL 1500 mg/L COD standard added to vials
0.0	2.00	0.000
50	1.93	0.067
150	1.80	0.200
375	1.50	0.500
750	1.00	1.000
1500	0.00	2.000

B. Low range: Prepare a series of standards into the low range vials using the 500 mg/L standard. Final volume for the standards is 2.0 mL. Use a calibrated pipette.

COD (mg/L)	mL DI water added to vials	mL 500 mg/L COD standard added to vials
0.0	2.00	0.000
5.0	1.98	0.020
25	1.90	0.100
50	1.80	0.200
100	1.60	0.400
150	1.40	0.600

IX. PROCEDURE

Uncontrolled Copy

A. High Range Analysis:

1. Preheat the COD reactor to 150°C.

2. Label a digestion tube for each standard and sample including a BLK, BS, SRM, duplicate, MS, and MSD.

3. Each tube will get 2 mL of liquid added to it: sample, standard, or DI water.

4. The BLK is DI water only, the BS is made the same as the mid range standard in the calibration above, 375 mg/L. The SRM is a separate standard, use as applicable to its concentration.

5. Samples are done straight using 2 mL or diluted. If diluted, the final volume of liquid added is still 2 mL and the non-sample liquid is DI water. A duplicate is done the same way as the sample.

6. The MS and MSD are done using 1.5 mL of sample and 0.5 mL of standard for a spike level of 375 mg/L. If the sample needs to be diluted then the 1.5 mL of sample would be already diluted as required.

7. Remove cap of the COD digestion vial of the desired range and holding it at a 45° angle, pipet the required volume of DI water, standard, or sample into the appropriate vials.

8. Replace cap tightly and invert several times.

9. Place vial in reactor and heat for 2 hours. Record the temperature on the backlog or bench sheet. Check the sample color against the highest standard after 15 minutes. Look for a for greenish color change. If the sample is greener than the

highest standard, make an appropriate dilution and proceed with the digestion.

10. Turn reactor off and wait 20 minutes for vials to cool to 120°C or less.

11. Invert the tubes several times and place in a test tube rack to settle and cool to room temperature.

12. Turn the Spectrophotometer and allow it to warm up for 1/2 hour. Set the wavelength to 620 nm and place the adapter inside for use with the COD vials.

13. Following directions for spectrophotometer, plot curve and proceed to read sample absorbances and concentration directly from the instrument.

B. Low Range Analysis:

1. Preheat the COD reactor to 150°C.

2. Label a digestion tube for each standard and sample including a BLK, BS, SRM, duplicate, MS, and MSD.

3. Each tube will get 2 mL of liquid added to it: sample, standard, or DI water.

4. The BLK is DI water only, the BS is made the same as the mid range standard in the calibration above, 50 mg/L. The SRM is a separate standard, use as applicable to its concentration.

5. Samples are done straight using 2 mL or diluted. If diluted, the final volume of liquid added is still 2 mL and the non-sample liquid is DI water. A duplicate is done the same way as the sample.

6. The MS and MSD are done using 1.8 mL of sample and 0.2 mL of standard for a spike level of 50 mg/L. If the sample needs to be diluted then the 1.5 mL of sample would be already diluted as required.

7. Remove cap of the COD digestion vial of the desired range and holding it at a 45° angle, pipet the required volume of DI water, standard, or sample into the appropriate vials.

8. Replace cap tightly and invert several times.

9. Place vial in reactor and heat for 2 hours. Record the temperature on the backlog or bench sheet. Check the sample color against the highest standard after 15 minutes. Look for a for greenish color change. If the sample is greener than the highest standard, make an appropriate dilution and proceed with the digestion.

Uncontrolled Copy

10. Turn reactor off and wait 20 minutes for vials to cool to 120°C or less.

11. Invert the tubes several times and place in a test tube rack to settle and cool to room temperature.

12. Turn the Spectrophotometer and allow it to warm up for 1/2 hour. Set the wavelength to 420 nm and place the adapter inside for use with the COD vials.

13. Following directions for spectrophotometer, plot curve and proceed to read sample absorbances and concentration directly from the instrument.

14. Most samples will be analyzed using the low range vials.

X. TROUBLESHOOTING AND MAINTENANCE

A. Refer to Evolution Spectrophotometer user manual

B. Refer to VisionPro software manual

C. Use NIST calibrated thermometer to verify reactor temperature of 150°C

XI. QUALITY CONTROL

A. Prepare a calibration curve each working day. The correlation coefficient for the linear curve must be 0.997 or greater.

B. A Standard Reference Material (SRM) is prepared and analyzed to document any bias of the analytical procedure. Acceptable criteria are listed below.

C. Lab Reagent Blank (BLK). Acceptable criteria are listed below.

D. Lab Fortified Blank or Blank Spike (BS). Acceptable criteria are listed below.

E. Duplicates, Matrix Spikes (MS) and Matrix Spike Duplicates (MSD) are run at a frequency of > or = 5% or 1 per batch if less than 20 samples are analyzed. Use of duplicate measurements and calculation of Relative Percent Difference (RPD) assess precision. Use of spiked samples and calculation of percent recovery assess accuracy.

F. %RPD for duplicate analysis is calculated as follows:

$$\%RPD = \frac{|A - B|}{\frac{1}{2}(A + B)} \times 100$$

Uncontrolled Copy

Where A= Sample value
B= Duplicate value
Acceptable criteria is listed below

G. %Recovery for spiked analysis is calculated as follows:

%Recovery = [(C-A)/Spike True Value]x100

Where A= Sample value
C= Spiked sample value

Acceptable criteria is listed below

H. If any set of samples has out-of-control data, the samples in question are re-analyzed. Under no circumstances will out-of-control data be used as a final result. Acceptable criteria listed below:

BLK	Less than or equal to the Analyte MRL
BS	90-110 %
SRM	80-120 % or vendor acceptable range
DUP	20 % if value >5 x MDL. If value less than 5 x MDL, use +/- MDL.
MS/ MSD	80-120 % recovery. If the % recovery is outside these limits, spike the unspiked aliquot.

The sample log should be set up as follows.

ICV*- Instrument QC
ICB*- Instrument QC
CCV- Instrument QC
CCB- Instrument QC
BLK- Batch QC
BS- Batch QC
SRM- Batch QC
4 SAMPLES
DUP- Batch QC
MS- Batch QC
MSD- Batch QC
CCV- Instrument QC
CCB- Instrument QC
9 SAMPLES
CCV- Instrument QC
CCB- Instrument QC
7 SAMPLES
DUP- Batch QC

Uncontrolled Copy

MS- Batch QC
MSD- Batch QC
CCV- Instrument QC
CCB- Instrument QC

*ICV and ICB are to be run only after a new Calibration has been performed to verify the curve.

I. The thermometer must be calibrated once a year. Check the temperature against a NIST certified thermometer and note the results. The corrected reading is listed on each bench sheet.

J. Check the calibration and document the results of the calibration of the Eppendorf pipettes used at least weekly.

XII. METHOD PERFORMANCE

A. Eurofins Spectrum Analytical performs MDLs on all instruments & methods in support of state and other program requirements such as CAM, RCP, ASP, CLP-like deliverables and specific project quality assurance objectives by carrying out a new study annually or by completion of quarterly limit of detection (LOD) and Limit of Quantitation (LOQ) analysis.

B. To determine the MDL for each analyte, analyze a sample aliquot at 3-5X the detection limit or as specified by the method. The calculated MDL **must be greater** than 10% of the standard used. If the MDL is less than 10%, repeat the analysis using a smaller concentration. The ideal, MDL will be slightly greater than 10% of the standard used and must be below the practical quantitation limit. The average recovery of the MDL replicates must be within 50-150% of true value. Additionally, the recovered concentration of any analyte in a replicate must not be less than the calculated MDL in that study. MDLs updates are also done when new instruments are installed, if the configuration of the instrument is significantly changed, or if the sample preparation method is modified.

C. Limit of Detection (LOD) verification is defined as an estimate of the minimum amount that an analytical process can reliably detect. Prior to use, MDL values are verified quarterly by preparing an LOD at a concentration no more than 3 times the MDL for single analyte tests, no more than 4 times the MDL for multiple analyte tests and no greater than the RL. The LOD is acceptable if it produces a peak at least 3 times above the instrument's noise level. If a response is not acceptable or detected, the concentration of the failing analyte shall be increased until an acceptable response is observed, however, it should not exceed the reporting limit. If the LOD verification fails due to lack of detection, then the laboratory must perform and pass two consecutive LOD verifications at the higher spike concentration. LOD verifications are analyte, matrix,

Uncontrolled Copy

extraction method, clean-up technique and instrument configuration specific. If LOD verifications are not performed on all combinations, the laboratory must base the verification on the "worst case basis" by including all applicable clean-up techniques. Surrogates are required to be included in this study as well. Surrogates must be spiked at the lowest Initial Calibration concentration. The LOD verifications are logged in by QA on a quarterly and/or annual basis. LOD verification will replace the annual MDL study except where specified by the method or program that a reoccurring MDL study is required.

D. Limit of Quantitation (LOQ) is defined as the minimum concentration of an analyte compound that can be reported with a specified degree of confidence or the lowest concentration that produces a quantitative result within specified limits of precision and bias. LOQ is set at or above the concentration of the lowest initial calibration standard. Eurofins Spectrum Analytical, Inc defines the LOQ = RL. The LOQs are analyzed once per analysis, matrix and extraction method. The LOQ may also serve as ongoing demonstration of capability of analyst. A minimum of four consecutive replicates are analyzed at a concentration of the lowest initial calibration standard on a quarterly basis.

E. Control limits may not be greater than +/- 3 times the standard deviation of the mean LCS recovery. Control charts shall be maintained and used to detect trends and prevent out-of-control conditions. Control charts shall be continually monitored for shifts in mean recovery, changes in standard deviation, and development of trends. Laboratories may choose representative compounds for control charts for the purpose of trend analysis. These charts are based on at least 30 data points generated under the same analytical process. Refer to Eurofins Spectrum Analytical's Laboratory Information Management System (LIMS) for quality control charts.

F. The QA department will log in LOD/LOQs and these will be performed quarterly. Please refer to the most current version of the SOP for Establishment and Reporting of Detection limits for further criteria information.

G. Refer to Eurofins Spectrum Analytical's Laboratory Information System (LIMS) for quality control charts

Uncontrolled Copy

XIII. POLLUTION PREVENTION

A. Never dispose of samples, reagents, chemicals, or waste waters by pouring them down the sink. Always use designated waste containers for disposal.

B. Plan accordingly to limit waste accumulation. Make only the amount of reagent that can be used before the expiration date. Do not make in excess.

C. Clients should provide a sufficient amount of the sample for the requested analysis. Excess amounts of the sample result in increased disposal fees for the laboratory.

XIV. WASTE MANAGEMENT

Eurofins Spectrum Analytical is dedicated to implementing ways to efficiently utilize resources along with complying with all environmental laws and regulations in order to reduce the accumulation of waste as defined in Eurofins Spectrum Analytical's Chemical Hygiene Plan. All questions and/or problems should be referred to the Health and Safety Manager.

A. Aqueous Wastes:

1. All **solvent contaminated** water must be collected in lab satellite-containers then transferred to a waste drum in the hazardous waste staging area where they are monitored and ultimately disposed of by a hazardous waste disposal facility.

2. All **non-solvent contaminated** aqueous wastes (including preserved water, digestates, instrument effluents, and corrosive aqueous wastes) are accumulated in lab satellite-containers and transferred to a drum in Hazardous Waste staging area #2 where they will be disposed by a licensed hazardous waste facility.

3. COD vials are disposed in a designated drum.

B. Solids:

1. Expired soil samples in the storage area are emptied into a drum and a sample is collected. The method of disposal will be determined by the findings of the sample profile.

2. Expired PCB containing samples (marked with yellow tape) are segregated and collected in the waste staging area and packed for disposal by a licensed hazardous waste facility.

3. Objects containing high levels of mercury (samples, broken thermometers, etc.) are segregated and collected in the waste staging area and packed for disposal by a hazardous waste facility.

C. Sludge, Tars, Oils:

These samples are accumulated in the waste staging area and packed for disposal by a hazardous waste facility/transporter.

D. Highly contaminated objects (reagents, chemicals, vials, samples) are segregated and collected by each dept. to avoid mixing of incompatible materials, collected, and packed periodically throughout the year by hazardous waste disposal facilities.

Uncontrolled Copy

XV. REFERENCES

USEPA - Methods for Chemical Analysis of Water and Wastes - EPA 600/4-79-020, Revised 1993, Method 410.4.

HACH - Dichromate Reflux Method; Colorimetric Determination Hach Water Analysis Handbook, Second Edition, 1992.

XVI. GLOSSARY

mg/L	=	milligrams per liter
g	=	grams
pH	=	potential of hydrogen
H_2SO_4	=	sulfuric acid
DI	=	de-ionized
ICB	=	initial calibration blank
ICV	=	initial calibration verification
CCB	=	continuing calibration blank
CCV	=	continuing calibration verification
BLK	=	method blank
BS	=	blank spike
SRM	=	standard reference material
DUP	=	sample duplicate
MS	=	matrix spike
MSD	=	matrix spike duplicate
nm	=	nanometers

Uncontrolled Copy

XVII. REVISIONS

8/27/14 – Revision #7

- Removed reference to EPA method 410.4.
- Clarified interference SAI interference procedures and removed HACH spectrophotometer reference.
- Corrected Revision section entry dates and revision numbers.
- Section XII.B. Added additional MDL criteria: the recovered concentration of any analyte in a replicate must not be less than the calculated MDL in that study.

10/17/16 – Revision #8

- Changed section IV.C to include all volume ranges of pipettes that might be used.
- Updated sections IX.A and IX.B to include more information for how to digest samples.
- Updated section XI.A to include the required correlation coefficient for the curve.
- Updated section XII.C with current LOD spiked value criteria.
- Update Lab name throughout document.
- Remove all but 2 most recent revision logs.

EPA Region I

Standard Operating Procedure for the Analysis Of Volatile Organic Compounds in Air By Gas Chromatograph/Ion Trap Detector

Prepared By: Dan Curran 1/28/14
Dan Curran, Chemist
Investigations and Analysis Unit, OEME

Approved By: E W 1/28/2014
Ernest Waterman, Acting Laboratory QA Officer
Investigations and Analysis Unit, OEME

Approved By: E W 1/28/2014
Ernest Waterman, Chief
Investigations and Analysis Unit, OEME

The controlled version of this document is the electronic version viewed on-line only. If this is a printed copy of the document, it is an uncontrolled version and may or may not be the version currently in use.

This document contains direction developed solely to provide internal guidance to the U.S. Environmental Protection Agency (EPA) personnel. EPA retains the discretion to adopt approaches that differ from these procedures on a case by case basis. The procedures set forth do not create any rights, substantive or procedural, enforceable, at law by a party to litigation with EPA or the United States.

Table of Contents

1.0 Summary 3
2.0 Purpose 3
3.0 Scope and Application 3
4.0 Interferences 4
5.0 Health and Safety Warnings 4
6.0 Personnel Qualifications 4
7.0 Apparatus, Materials, Computer Hardware and Software 4
8.0 Standards and Reagents 5
9.0 Method Calibration 5
10.0 Sample Analysis and Quantitation 9
11.0 Laboratory Documentation and Data Reporting: 9
12.0 References 10
Appendix 1 –Instrument Run Log 11
Apppendix 2-Standard Prep Log 12
Appendix 3 – Entech Operating Parameters 13
Appendix 4 – GC Operating Parameters 13
Appendix 5 – MS Operating Parameters 15
Appendix 6 – BFB Criteria 15
Appendix 7- Quality Control Requirements Summary 16

1.0 Summary

This SOP is for the analysis of volatile organic compounds in air. Samples are collected in SUMMA, SilcoSteel or similarly passivated canisters. A 500 cc sample is trapped and cryofocused using the Cold Trap Dehydration technique. The sample is then desorbed onto a capillary column and quantitated using an Ion Trap Detector.

2.0 Purpose

The purpose of this SOP is to ensure that the procedures for airtoxics analysis are consistently followed by all analysts.

3.0 Scope and Application

This SOP is for the determination of the following compounds in air samples.

Table 1

Dichlorodifluoromethane (F12)	Bromodichloromethane
Methychloride	Trichloroethylene
Dichlorotetrafluoroethane (F114)	Heptane
Vinylchloride	c-1,3-Dichloropropylene
1,3 Butadiene	Methyl Isobutyl Ketone
Methylbromide	t-1,3 Dichloropropylene
Chloroethane	1,1,2-Trichloroathane
Vinyl Bromide	Toluene
Trichlorofluoromethane (F11)	2-Hexanone
1,1 –Dichloroethylene	Dibromochloromethane
Allyl Chloride	1,2-Dibromoethane
Methylene\ Chloride	Tetrachloroethylene
Trichlorotrifluoroethane (F113)	Chlorobenzene
Acrylonitrile	Ethylbenzene
t-1,2-Dichloroethylene	m/p-Xylenes (coelute)
1,1-Dichloroethane	Styrene
Methyl-t-Butyl Ether	0-Xylene
Methyl Ethyl Ketone	Bromoform
c-1,2-Dichloroethylene	1,1,2,2-Tetrachloroethane
Hexane	4-Ethyltoluene
Chloroform	1,3,5-Trimethylbenzene
Tetrahydrofuran	1,2,4-Trimethylbenzene
1,2-Dichloroethane	Benzylchloride
1,1,1-Trichloroethane	1,3-Dichlorobenzene
Benzene	1,4-Dichlorobenzene
Carbon Tetrachloride	1,2-Dichlorobenzene
1,2-Dichloropropane	Hexachloro-1,3-butadiene

4.0 Interferences

Direct chromatographic coelution. Response from target or non-target analyte is observed at almost the same retention time as target compound.

5.0 Health and Safety Warnings

This method uses both cryogenic and compressed gases. Analysts should read and understand the appropriate ESH SOP. Skin contact with liquid nitrogen can cause tissue freezing, resulting in severe burns. The burns are caused by the extremely low temperature of the cryogenic liquid and not the result of chemical action. MSDS for all chemicals used in the lab are available from the Health and Safety Officer.

6.0 Personnel Qualifications

The analyst should have at least a 4 year degree in physical science. The analyst must have a satisfactory IDC/MDL study in place before analyzing samples. All personnel shall be responsible for compliance with all QA/QC requirements that pertain to their organizational/technical duties.

7.0 Apparatus, Materials, Computer Hardware and Software

7.1	Preconcentrator	Entech 7200 with a Glass Bead in Module 1 and a Tenax Trap in Module 2.
7.2	Autosamplers	Entech 7016D, (Inlet 3) and 7032 Inlet 1, Inlet 2).
7.3	Preconcentrator Software:	Entech Version 1.51
7.4	Gas Chromatograph	Varian, Model 3800
7.5	Mass Spectrometer	Varian 4000
7.6	GC/MS Software	Varian MS Workstation Version 6.9
7.7	Processing Software	HP Enviroquant Version D.00.00.38
7.8	Vx Capture	Version 2.08.111
7.9	Gas Manifold	For standard preparation and sample dilution.

7.10	Pressure Sensor	MKS Baratron
7.11	Power Supply Readout	MKS Model PDR-C-1-C
7.12	Syringes	100 and 250 uL
7.13	GC Column	Restek 502.2 or equivalent

8.0 Standards and Reagents

8.1	Calibration Standards:	Spectra /Linde Gases TO 14A 41 Components and Spectra /Linde TO15/TO-17 Subset 25 Components Both standards are supplied at 100 ppb (V) in size 6A cylinders with a CGA 180 valve connection. Both cylinders expire one year from date of manufacture.
8.2	Quality Control Sample:	A second standard set with different lot numbers than the calibration standards
8.3	Internal Standard/ Surrogate:	2.0 ppm (V) of bromochloromethane, 1,4-difluorobenzene, chlorobenzene-d5 1,2-dichloroethane-d4, toluene-d8 and bromofluoroenzene
8.4	Purged RO water:	For humidification of standards
8.5	UHP Nitrogen:	For diluting standards and system blanks
8.6	UHP Helium:	For GC carrier gas and Entech sweep/purge
8.7	Liquid Nitrogen:	Ccryogen for Entech and GC.

9.0 Method Calibration

A six point calibration is performed using the appropriately diluted standards. Standards should be prepared monthly.

9.1 Working Standards are prepared in Summa or equivalent canisters by static dilution. Record all information in PAMS/AIRTOX Standard Prep Logbook (See Appendix 2).

9.1.1 A 5.0 ppb (V) is made by combining and diluting stock standards approximately 20 fold in a 6 or 15 L canister.

9.1.2 Purged RO water is added to the top of the valve of a clean, evacuated canister. The volume of water to be added is dependent on canister size. See Table 2. The pressure is recorded as Pressure Initial (psia).

Table 2

Canister Size	Volume of Water to be added
6 L	125 uL
15 L	325 uL
33 L	825 uL

9.1.3 An appropriate amount of each Primary standard (approximately equivalent to 2.5 psi) is introduced into the canister and allowed to equilibrate. Record the pressure as Pressure 1 as (psia) after each addition.

9.1.4 UHP nitrogen is then introduced into the canister to bring final pressure to approximately 50 psia. After equilibration the final pressure is recorded as Final Pressure (psia).

9.1.5 Dilutions are calculated using the following equation:

Dilution of standard = Final Pressure /(P1- Pressure Initial)

9.1.6 A 0.5 ppb (V) mix is made by performing a 10 fold dilution on the 5.0 ppb standard.

Table 3

Standard ppb (V)	Standard Used	Volume Trapped	Dilution
5.0	5.0	500	1
2.0	5.0	200	2.5
1.0	5.0	100	5
0.50	0.50	500	1
0.10	0.50	100	5
0.05	0.50	50	10

The actual concentrations will vary based on initial and final pressure.

9.1.7 An Internal/Surrogate Primary Dilution Standard (approximately 50 ppb) must be made. The primary standard is diluted approximately forty fold in a 15 L canister. A further fivefold dilution into a 33 L canister yields a final concentration of approximately 10 ppb(V).

9.2 Entech Setup

9.2.1 Measure and record the pressure of each standard canister.

9.2.2 Connect each standard canister to an available port of 7016 or 7032 autosampler and tighten with a 9/16 wrench.

9.2.3 Create and Entech sequence file listing the standard, volume, port number, inlet number and method.

9.2.4 The sequence is saved with a date descriptive title (e.g. MMDDYYG01.seq)

9.2.5 A leak check of the 7016 must be preformed prior to analysis of standards and samples. Select Manual Test to open the manual leak check screen. Select inlet and port number and evacuate to 0.7 psia. Allow10 seconds for

equilibration. Record the final pressure after 30 additional seconds Leak rate should be less than 1 psi/min.

9.2.6 Open the sequence table in Word Pad and print. This will provide a hard copy of the sequence for the project folder.

9.2.7 Highlight the first sample in the sequence and select Start Sequence when ready to begin analysis.

9.2.8 See Table 4 for available Entech Inlets and Ports.

Table 4

Auto sampler	Inlet	Ports	Volume
7032	1	1-12	20 cc- 1000cc
7032	2	1-9	20cc- 1000cc
7016	3	1-16	20cc- 1000cc

(See Appendix 3 for Entech method details)

9.3 Mass Spectrometer

9.3.1 Select **System Control** from Varian Workstation Toolbar.

9.3.2 Under the **4000 Manual Control** tab select: Air/Water check, Cal Gas Adjustment and RF Ramp Adjustment.

9.3.3 Under the **Auto Tune** tab select all options and start auto tune.

9.3.4 Select **Automation File Editor** from the Varian Workstation Toolbar.

9.3.5 Create a Sample List that matches the Entech sequence. Save in MMDDYY format. Save Data in a new folder named with a MMDDYY format.

9.3.6 Open the Sample List in **System Control** and select begin.

9.4 Processing Calibration Data

9.4.1 Open Vx Capture and convert the files into HPChemstation format.

9.4.2 Open the 5.0 ppb standard and process using a recent method.

9.4.3 QEDIT the file. Check retention times of all compounds.

9.4.4 Clear all calibration responses under Calibration.

9.4.5 Update calibration by replacing responses and retention times.

9.4.6 Save method with MMDYY format.

9.4.7 Process other standards and update calibration.

10.0 Sample Analysis and Quantitation:

10.1 Sample pressure before and after analysis is measured and recorded.

10.2 An autosampler leak check must be performed on sample canisters.

10.3 Process samples with most recent calibration method.

10.4 Open processed result files and visually inspect chromatogram under QEDIT.

10.5 Print a before and after copy of the chromatogram if any manual integration is done. Use the Manual Integration Stamp to indicate the reason for manual integration.

10.6 A volume less than 500 cc may be trapped if analytes are over-range.

10.7 If necessary, samples may be diluted by pressurizing the canister with UHP nitrogen.

$$\text{Dilultion Factor} = Pf/Pi$$

Where Pi = Pressure Initial
Where Pf = Pressure Final

11.0 Laboratory Documentation and Data Reporting:

11.1 The certificates of analysis received with standards are kept in the standard log book and kept in the laboratory room 174.

11.2 Standard preparation information is documented in Standard Preparation Log. The date of preparation, vendor, lot number and expiration date are documented. The standard preparation log is kept in Room 174.

11.3 CSV files are created in HP Enviroquant and the data is loaded into LABWORKS using the Multicomponent Transfer option.

11.4 Project Folder should contain the following:

11.5.1 Copy of Instrument Run Log
11.5.2 Leak Check Report
11.5.3 Copy of Entech Sequence
11.5.4 Initial and Continuing Calibrations
11.5.5 Project Notes.

12.0 References

Compendium of Methods for the Determination of Toxic Organic Compounds in Ambient Air. Second Edition. Compendium Method TO-15. Determination of Volatile Organic Compounds (VOSs) In Air Collected in Specially-Prepared Canisters And Analyzed By Gas Chromatography/Mass Spectrometry (GC/MS)
EPA/625/R-96/010b. January 1999.

Appendix 1 –Instrument Run Log

EPA Region 1
Airtoxics Injection Log
Instrument Code D

Date/Project	File Name	Sample ID	Port	Sample Volume	Initial Press	Final Press	Entech Seq.	Varian Seq.	Notes

IS/Surr Volume:_____

Apppendix 2-Standard Prep Log
US EPA Region 1
Air Toxics/PAMS Standard Form

Analyst
Date

Pressure

Barometer mm Hg
Baratron mm Hg

Diluent

Stock
Manufacturer
Lot Number
Exp. Date

Standard	Volume Water Added uL	Initial Pressure	Pressure 1	Pressure Of Standard	Final Pressure	Dilution

Appendix 3 – Entech Operating Parameters
ENTECH05.CTD Parameters
Trap Temperature (C)

	Trap Temp	M1 1Preheat	M1 to M2	M3 Precool	M2 Preheat	M2 to M3	Inject	System Bake
Module 1 Trap	-40	10	10					150
Module 1 Bulkhead	10		30					150
Module 2	-60		-60		-60	230		200
Module 2 Bulkhead	30				60			150
Module 3				-175		-160	80	

Temperature (C)

Sample Transfer Line	110
GC Transfer Line	110
Rotary Valve Plate	80

Flow (CC)

Helium Trap Flush	75
M1 TO M2 VOLUME	50

Flow Rate (CC/min)

ISTD Trapping	100
Cal STD Trapping	100
Sample Trapping	100
Helium Flush	100
M1 TO M2 Transfer	10

Event Time (min)

Sample Preheat	0
M# Focusing	3.5

Inject time	1.5
System Bake	10
Post Injection Delay	29
M3 Bake Time (STEP 3)	4
M3 Bake Time (STEP 3)	0.3

Prepurge Time (Sec)

Internal Standard	10
Calibration Standard	10
Sample	30
He Swp/ PRG Gas	20

M3 Focusing Enabled

Options

Wait for GC Ready
Before final focusing
Pressure Compensation
Used
Pressure Compensation Factor 9
Delay Offset (seconds) 0
Max Temp below setpoint before adding heat
Control Heaters during trapping (X)
Module 1 10C
Module 2 10C
Injection Control
Extra M2 – M3 Transfer after inject
1 Minute

Appendix 4 – GC Operating Parameters

Segment	Temperature	Rate	Hold Time(min)	Total(min)
1	25	0	5	5
2	130	8	0	18.13
3	220	15	5	29.13

Appendix 5 – MS Operating Parameters

Mass Range	35 to 300 amu
uScans	3 uScans
Acq Time	40 min
Fil/Mult Delay	4.5 min

Appendix 6 – BFB Criteria

Target Mass	Rel. to Mass	Lower Limit%	Upper Limit %
50	95	8	40
75	95	30	66
95	95	100	100
96	95	5	9
173	174	0.00	2
174	95	50	120
175	174	4	9
176	174	93	101
177	176	5	9

Appendix 7- Quality Control Requirements Summary

Requirement	Frequency	Acceptance Criteria	Corrective Action
Initial Calibration	Prior to analysis of samples.	% RSD of less than 30% with at 2 exceptions up to a limit of 40%	Use linear regression if R^2>0.99. Drop high or low point in calibration.
Method Blank	Following the CCV	Less than the RL for all target compounds	Target compounds associated with contamination are flagged in the report if less than 5 times the level found in the blank
BFB	Once per 24 hours	See Appendix 6	Stop Analysis Retune
QC sample	1 per project	Use +-30% until control limits are established	Reanalyze. Note outliers in project notes
Duplicate Analysis	1 per project or 1 per 20 samples	RPD<50%	Target compounds associated with outliers are estimated in the report
CCV	Prior to the analysis of samples. Minimum of once per 24 hours	% D of less than 30%	Reanalyze/recalibrate