SEMS-RM DOCID # 100016421

Hoskie Tso No. 1 (#852)

Removal Site Evaluation Report

Final | October 9, 2018

Stantec

NAVAJO NATION
AUM Environmental Response Trust-First Phase

Hoskie Tso No.1 (#852) Removal Site Evaluation Report - Final

October 9, 2018

Prepared for:

Navajo Nation AUM Environmental Response Trust – First Phase

Prepared by:

Stantec Consulting Services Inc.

Title and Approval Sheet

Title: Hoskie Tso No.1 Removal Site Evaluation Report - Final

Approvals

This Removal Site Evaluation Report is approved for implementation without conditions.

10/15/18

Dr. Donald Benn
Navajo Nation Environmental Protection Agency
Executive Director

Date

10/5/18

Linda Reeves
US Environmental Protection Agency, Region 9
Remedial Project Manager

Date

10/17/2018

Sadie Hoskie
Navajo Nation AUM Environmental Response Trust – First Phase
Trustee

Date

10/17/2018

Toby Leeson, P.G.
Stantec Consulting Services, Inc.
Project Technical Lead

Date

Revision Log

Revision No.	Date	Description
0	June 16, 2017	Submission of Draft RSE report to Agencies for review
1	September 29, 2017	Submission of Draft Final RSE report to Agencies for review
2	October 9, 2018	Submission of Final RSE report to Agencies

Stantec

NAVAJO NATION

Sign-off Sheet

This document entitled *Hoskie Tso No.1 Removal Site Evaluation Report* was prepared by MWH, now part of Stantec Consulting Services Inc. (Stantec) on behalf of the Navajo Nation AUM Environmental Response Trust – First Phase (the "Client") for submittal to the Navajo Nation Environmental Protection Agency (NNEPA) and United States Environmental Protection Agency (USEPA) (collectively, the "Agencies"). The material in it reflects Stantec's professional judgment in light of the scope, schedule and other limitations stated in the document and in the contract between Stantec and the Client. The opinions in the document are based on conditions and information existing at the time the document was published and do not take into account any subsequent changes. In preparing the document, Stantec did not verify information supplied to it by others. Any use which a third party makes of this document is the responsibility of such third party. Such third party agrees that Stantec shall not be responsible for costs or damages of any kind, if any, suffered by it or any other third party as a result of decisions made or actions taken based on this document.

Per the *Navajo Nation AUM Environmental Response Trust Agreement – First Phase*, *Section 5.4.1,* (United States [US], 2015) the following certification must be signed by a person who supervised or directed the preparation of the Removal Site Evaluation report: "Under penalty of law, I certify that to the best of my knowledge, after appropriate inquiries of all relevant persons involved in the preparation of this report, the information submitted herein is true, accurate, and complete. I am aware that there are significant penalties for submitting false information, including the possibility of fine and imprisonment for knowing violations."

Prepared by _____

(signature)

Emily Yeager, P.G.

Reviewed by _____

(signature)

Kelly Johnson, PhD, P.G.

Approved by _____

(signature)

Toby Leeson, P.G.

Table of Contents

1.0 INTRODUCTION 1.1
1.1 BACKGROUND 1.1
1.2 OBJECTIVES AND PURPOSE OF THE REMOVAL SITE EVALUATION 1.2
1.3 REPORT ORGANIZATION 1.4

2.0 SITE HISTORY AND PHYSICAL CHARACTERISTICS 2.1
2.1 SITE HISTORY AND LAND USE 2.1
2.1.1 Mining Practices and Background 2.1
2.1.2 Ownership and Surrounding Land Use 2.2
2.1.3 Site Access 2.3
2.1.4 Previous Work at the Site 2.3
2.2 PHYSICAL CHARACTERISTICS 2.4
2.2.1 Regional and Site Physiography 2.4
2.2.2 Geologic Conditions 2.5
2.2.3 Regional Climate 2.6
2.2.4 Surface Water Hydrology 2.7
2.2.5 Vegetation and Wildlife 2.7
2.2.6 Cultural Resources 2.7
2.2.7 Observations of Potential Mining and Potential Exploration 2.8

3.0 SUMMARY OF SITE INVESTIGATION ACTIVITIES 3.1
3.1 INTRODUCTION 3.1
3.2 SUMMARY OF SITE CLEARANCE ACTIVITIES 3.3
3.2.1 Desktop Study 3.3
3.2.2 Field Investigations 3.4
3.3 SUMMARY OF REMOVAL SITE EVALUATION ACTIVITIES 3.11
3.3.1 Baseline Studies Activities 3.12
3.3.2 Site Characterization Activities and Assessment 3.16
3.3.3 Identification of TENORM Areas 3.19
3.4 DATA MANAGEMENT AND DATA QUALITY ASSESSMENT 3.20
3.4.1 Data Management 3.20
3.4.2 Data Quality Assessment 3.21

4.0 FINDINGS AND DISCUSSION 4.1
4.1 BACKGROUND REFERENCE AREA STUDY RESULTS AND CALCULATION OF INVESTIGATION LEVELS 4.1
4.2 SITE GAMMA RADIATION SURVEY RESULTS AND PREDICTED RADIUM-226 CONCENTRATIONS 4.4
4.2.1 Site Gamma Radiation Results 4.4
4.2.2 Gamma Correlation Results 4.5
4.3 SOIL METALS AND RADIUM-226 ANALYTICAL RESULTS 4.8
4.4 CONSTITUENTS OF POTENTIAL CONCERN 4.11
4.5 AREAS THAT EXCEED THE INVESTIGATION LEVELS 4.11

4.6 AREAS OF TENORM AND NORM 4.12
4.7 TENORM VOLUME ESTIMATE 4.14
4.8 SURFACE WATER AND WELL WATER ANALYTICAL RESULTS 4.14
4.9 POTENTIAL DATA GAPS AND SUPPLEMENTAL STUDIES 4.15
4.9.1 Data Gaps 4.15
4.9.2 Supplemental Studies 4.15

5.0 SUMMARY AND CONCLUSIONS 5.1

6.0 ESTIMATE OF REMOVAL SITE EVALUATION COSTS 6.1

7.0 REFERENCES 7.1

LIST OF TABLES

Table 3-1a Identified Potential Water Features

Table 3-1b Water Well Specifications for 07T-517

Table 3-2 Soil and Sediment Sampling Summary

Table 3-3 Water Sampling Summary

Table 4-1 Background Reference Area Soil Sample Analytical Results

Table 4-2 Static Gamma Measurement Summary

Table 4-3 Gamma Correlation Study Soil Sample Analytical Results

Table 4-4a Site Characterization Soil and Sediment Sample Analytical Results for Survey Area A

Table 4-4b Site Characterization Soil Sample Analytical Results for Survey Area B

Table 4-5 Summary of Investigation Level Exceedances in Soil/Sediment at Borehole Locations

Table 4-6a Water Sampling Investigation Level Derivation

Table 4-6b Water Sampling Analytical Results

LIST OF FIGURES

Figure 1-1 Site Location

Figure 2-1 Site Features

Figure 2-2 Regional Aerial Photograph

Figure 2-3 Regional Topographic Map

Figure 2-4 Regional Geology

Figure 2-5a Detailed Site Geology

Figure 2-5b Simplified Site Geology

Figure 2-6 Site Map

Figure 3-1a Historical Aerial Photograph Comparison

Figure 3-1b 1965 Historical Aerial Photograph Comparison

Figure 3-2 Potential Background Reference Areas

Figure 3-3 Background Reference Areas - Sample Locations

Figure 3-4 Gamma Radiation Survey Areas

Figure 3-5 Gamma Correlation Study Locations

Figure 3-6 Site Characterization Surface and Subsurface Sample Locations

Figure 4-1a Gamma Radiation Survey Results

Figure 4-1b Gamma Radiation Survey Results for Survey Area A

Figure 4-1c Gamma Radiation Survey Results for Survey Area B

Figure 4-2a Predicted Concentrations of Ra-226 in Soil Using the Correlation Equation

Figure 4-2b Predicted Ra-226 Concentrations in Soil Compared to Ra-226 Concentrations in Soil/Sediment

Figure 4-2c Predicted Ra-226 Concentrations in Soil Compared to Ra-226 ILs

Figure 4-3 Surface and Subsurface Metals and Ra-226 Analytical Results

Figure 4-4a Lateral Extent of Surface and Subsurface IL Exceedances

Figure 4-4b Survey Area A Lateral Extent of Surface and Subsurface IL Exceedances

Figure 4-4c Survey Area B Lateral Extent of Surface and Subsurface IL Exceedances

Figure 4-5 Vertical Extent of IL Exceedances in Unconsolidated Material

LIST OF APPENDICES

Appendix A – Radiological Characterization of the Hoskie Tso No.1 Abandoned Uranium Mine

Appendix B – Site Photographs

Appendix C - Field Activity Forms

C.1 Soil Sample Field Forms

C.2 Hand Auger Borehole Logs

C.3 Water Sample Field Forms

Appendix D – Statistical Evaluation

Appendix E – Cultural and Biological Resource Clearance Documents

Appendix F – Data Usability Report, Laboratory Analytical Data, and Data Validation Reports

F.1 Data Usability Report

F.2 Laboratory Analytical Data and Data Validation Reports

LIST OF ATTACHMENTS – PROVIDED ELECTRONICALLY TO THE AGENCIES

- Site-specific geodatabase
- Tabular database files
- 2017 Cooper aerial survey orthophotographs and data files
- Historical documents referenced in this RSE Report (refer to Section 7 for complete citation)
    - Chenoweth and Malan, 1973 – The Uranium Deposits of Northeastern Arizona. US Atomic Energy Commission Grand Junction, Colorado
    - Chenoweth, 1990 – The Geology and Production History of the Morale Uranium Mine, Hopi Buttes Area, Navajo County, Arizona
    - Hendricks, 2001 - An Aerial Radiological Survey of Abandoned Uranium Mines in the Navajo Nation
    - NAML, 2002 – The Navajo Nation Navajo Abandoned Mine Lands Reclamation Program Central Navajo Abandoned Mine Lands (AML) Reclamation Project Proposal Documents
    - Scarborough, 1981 – Radioactive Occurrences and Uranium Production in Arizona, Final Report
    - Shoemaker, 1962 – Diatremes and Uranium Deposits in the Hopi Buttes, Arizona

- USEAP, 2007a – Abandoned Uranium Mines and the Navajo Nation. Navajo Nation AUM Screening Assessment Report and Atlas with Geospatial Data
- Wenrich and Mascarenas, 1982 – Maps Showing Uranium-Bearing Diatremes of the Hopi Buttes, Arizona
- Wenrich-Verbeek, 1980 - National Uranium Resource Evaluation, Flagstaff quadrangle, Arizona
- Wenrich-Veerbeek, 1982 – National Uranium Resource Evaluation, Flagstaff quadrangle, Arizona
- Weston Solutions, 2012 - Navajo Abandoned Uranium Mine Site Screen Report, Hoskie Tso No. 1

Executive Summary

Introduction

The Hoskie Tso No.1 site (the Site) is located within the Navajo Nation, Fort Defiance Bureau of Indian Affairs (BIA) Agency, Indian Wells Chapter in northeastern Arizona. The Site is one of 46 "priority" abandoned uranium mines (AUMs) within the Navajo Nation selected by the United States Environmental Protection Agency (USEPA) in collaboration with the Navajo Nation Environmental Protection Agency (NNEPA) for further evaluation based on radiation levels and potential for water contamination (USEPA, 2013). Mining for uranium on the Navajo Nation occurred prior to, during, and after World War II, when the United States (US) sought a domestic source of uranium located on Navajo lands (USEPA, 2007a).

On April 30, 2015, the *Navajo Nation AUM Environmental Response Trust Agreement – First Phase* (the *Trust Agreement*) became effective. The *Trust Agreement* was made by and among the US, as Settlor and as Beneficiary on behalf of the USEPA, the Navajo Nation, as Beneficiary, and the Trustee, Sadie Hoskie. The *Trust Agreement* was developed in accordance with a settlement on April 8, 2015 between the US and Navajo Nation for the investigation of 16 specified priority AUMs. The priority sites were selected by the US and Navajo Nation, as described in the *Trust Agreement*:

> "based on two primary criteria, specifically, demonstrated levels of Radium-226[1]: (a) at or in excess of 10 times the background levels and the existence of a potentially inhabited structure located within 0.25 miles of AUM features; or (b) at or in excess of two times background levels and the existence of a potentially inhabited structure located within 200 feet (ft)."

The purpose of this report is to summarize the objectives, field investigation activities, findings, and conclusions of Site Clearance and Removal Site Evaluation (RSE) activities conducted between October 2015 and November 2016 at the Site. The primary objective of this RSE is to provide data required to evaluate relevant site conditions. The purpose of the RSE data (e.g., the review of relevant information and the collection of historical data) is to determine the volume of technologically enhanced naturally occurring radioactive material (TENORM) at the Site in excess of Investigation Levels (ILs). ILs are based on the background gamma measurements (in counts per minute [cpm]), and Radium-226 (Ra-226) and metals concentrations, determined through statistical analyses, that are used to evaluate potential mining-related impacts.

Site History and Physical Characteristics

The Site is located within the Colorado Plateau physiographic province, which is an area of approximately 240,000 square miles in the Four Corners region of Utah, Colorado, Arizona, and

[1] The Agencies selected the priority mines based on gamma radiation but the *Trust Agreement* erroneously states "levels of Radium -226".

New Mexico. Regionally the Site is located within the Hopi Buttes volcanic field which is characterized by outcropping diatremes where the mineralized uranium is located either adjacent to the diatremes or in the sediments within the diatremes. The Site is also located within the Little Colorado River Valley watershed, an area of approximately 27,000 square miles spanning Arizona and New Mexico. Topographically the Site is located on a flat to hilly topographic highland that is rimmed by a volcanic vent ridge (i.e., the ridge of the diatreme). The elevation on-site is approximately 5,700 ft above mean sea level. On-site overland surface water flow, when present, is controlled by the topographically high volcanic vent ridge where the surface-water drains to the west, southwest, and northeast.

Based on the historical document review for the Site, the following is known about historical exploration activities at the Site: (1) exploration workings on the Site consisted of exploration rim stripping (also referred to as a small prospect pit[Shoemaker et al. (1962) and Scarborough (1981)]) on the northwest rim of the diatreme; (2) no ore was shipped from the Site(Chenoweth, 1990); (3) six rotary boreholes were drilled on-site and the results suggested the Site was not favorable for generating economically viable ore in a mineable configuration(Wenrich-Verbeek et al., 1980 and 1982); and (4) the Site was reported as an inactive, raw prospect that had no cumulative uranium production(Wenrich-Verbeek et al., 1982). In addition, field personnel did not observe evidence of the exploratory rim stripping or the six exploratory rotary boreholes. Based on the historical documentation review, observations made by field personnel (i.e. no evidence of waste piles of soil or rock related to mining activities was present at the Site), and record that no ore was shipped from the Site, it is concluded that no mining occurred at the Site and only minor exploration occurred at the Site.

In 2012, Weston Solutions (Weston) performed site screening at abandoned uranium mines on behalf of the USEPA. The screening at the mines included: (1) recording site observations (i.e., number of homes, water sources, and sensitive environments[2] around the Site); (2) recording the type, number, and reclamation status of mine features; and (3) performing a surface gamma survey.

Summary of Removal Site Evaluation Activities

The Trust's RSE was performed in accordance with the *Site Clearance Work Plan* (MWH, 2016a) and the *Removal Site Evaluation Work Plan* ([*RSE Work Plan*] MWH, 2016b). The *Site Clearance Work Plan* and the *RSE Work Plan* were approved in April and October 2016, respectively, by the NNEPA and the USEPA (collectively, the Agencies). The Trust conducted Site Clearance activities as the initial task for the RSE work to obtain information necessary to develop the *Removal Site Evaluation Work Plan* ([*RSE Work Plan*] MWH, 2016b). Following Site Clearance activities, the Trust conducted two sequential tasks to complete the RSE: Baseline Studies activities and Site Characterization Activities and Assessment. Details of the Site Clearance activities, Baseline Studies activities, and Site Characterization and Assessment activities are as follows:

[2] Weston defined sensitive environments as "all sensitive environments located within visible range of the mine site, including: wetlands, endangered species, habitats and approximate locations of sites that may be under protection of the government of the Navajo Nation"

- **Site Clearance activities** consisted of a desktop study of historical information, site mapping, potential background reference area evaluation, biological (vegetation and wildlife) surveys, and cultural resource survey. Results of the Site Clearance activities provided historical information, site access information, potential background reference area data, and vegetation, wildlife, and cultural clearance of the Site for the Baseline Studies activities and Site Characterization and Assessment activities to commence.

- **Baseline Studies activities** included a background reference area study, site gamma radiation surveys, and a Gamma Correlation Study. Results of the Baseline Studies were used to plan and prepare the Site Characterization Activities and Assessment. Data collected in the background reference area (soil sampling, laboratory analyses, surface gamma surveying, and subsurface static gamma measurements) were used to establish ILs for the Site. Data collected from the site gamma radiation survey were used, along with sampling, to evaluate potential mining-related impacts in areas containing radionuclides. The Gamma Correlation Study objectives were to determine the correlations between: (1) gamma measurements and concentrations of Ra-226 in surface soils; and (2) gamma measurements and exposure rates; to use as screening tools for site assessments.

- **Site Characterization Activities and Assessment** included surface and subsurface soil and sediment sampling, and surface water and well water sampling. The results of the surface and subsurface soil and sediment sampling analyses were used to evaluate potential mining impacts and define the lateral and vertical extent of TENORM at the Site. The results of the surface water and well water analyses were used to evaluate potential mining impacts to surface water and well water.

Findings and Discussion

Surface and subsurface soil and sediment sampling results. Two background reference areas were selected to develop surface gamma, subsurface static gamma, Ra-226, and metals ILs for the Site. Arsenic, molybdenum, selenium, uranium, and Ra-226 concentrations and gamma radiation measurements in soil/sediment exceeded their respective ILs and are confirmed constituents of potential concern (COPCs) for the Site. Based on the data analyses performed for this report along with the multiple lines of evidence, the results indicate that there is no TENORM at the Site. The IL exceedances in soil/sediment are presumed to be NORM associated with the Site geology and are not mining-related, or the result of human disturbance of naturally occurring uranium-bearing materials.

Gamma Correlation Study results. The Gamma Correlation Study indicated that surface gamma survey results correlate with Ra-226 concentrations in soil. Therefore, gamma surveys could be used during site assessments as a field screening tool to estimate Ra-226 concentrations in soil, where sampling or gamma surveys are not available. The model was made of the correlation results predicting the concentrations of Ra-226 in surface soils from the mean of the gamma measurements in five correlation locations. Additional correlation studies may be needed to refine the relationship between gamma and Ra-226.

Water sampling results. Water samples were collected from one water well and from one surface water pond. Sample analyses indicated that the water well sample exceeded the

arsenic, total dissolved solids (TDS), chloride, and sulfate ILs. Based on these results arsenic, TDS, chloride, and sulfate are confirmed COPCs for the water well. Sample analyses indicated that the sample from the overflow pond exceeded the arsenic, uranium, TDS, chloride, and sulfate ILs. Based on these results arsenic, uranium, TDS, chloride, and sulfate are confirmed COPCs for the pond. Because the results of the RSE investigations indicate that no mining occurred at the Site (and no human disturbance of naturally occurring uranium-bearing materials), it is likely that the IL exceedances in the well water and pond are the result of natural processes (i.e., contact with mineralized bedrock) and are not related to historical mining activities.

Based on the Site Clearance and RSE data collection and analyses for the Site, potential data gaps were identified and are presented in Section 4.9 of this RSE report.

Acronyms/Abbreviations

°F	degrees Fahrenheit
e.g.	exempli gratia
etc.	et cetera
ft	feet
ft^2	square feet
i.e.	id est
mg/kg	milligram per kilogram
µR/hr	microRoentgens per hour
pCi/g	picocuries per gram
yd^3	cubic yard
Adkins	Adkins Consulting Inc.
ags	above ground surface
amsl	above mean sea level
AUM	abandoned uranium mine
bgs	below ground surface
BIA	Bureau of Indian Affairs
CCV	continuing calibration verification
C.F.R	Code of Federal Regulations
COPC	constituent of potential concern
cpm	counts per minute
Dinétahdóó	Dinétahdóó Cultural Resource Management
DMP	Data Management Plan
DQO	Data Quality Objective
ERG	Environmental Restoration Group, Inc.
ESA	Endangered Species Act
FSP	Field Sampling Plan
GIS	geographic information system
GPS	global positioning system
HASP	Health and Safety Plan
ICAL	initial calibration
ICB/CCB	initial/continuing calibration blank
ICV	initial calibration verification
IL	Investigation Level
LCS/LCSD	laboratory control sample/laboratory control sample duplicate

MARSSIM	Multi-agency Radiation Survey and Site Investigation Manual
MBTA	Migratory Bird Treaty Act
MCL	maximum contaminant level
MLR	Multivariate Linear Regression
MS/MSD	matrix spike/matrix spike duplicate
MWH	MWH, now part of Stantec Consulting Services Inc. (formerly MWH Americas, Inc.)
NaI	sodium iodide
NAML	Navajo Abandoned Mine Lands Reclamation Program
NCP	National Oil and Hazardous Substances Pollution Contingency Plan
NNDFW	Navajo Nation Department of Fish and Wildlife
NNDOJ	Navajo Nation Department of Justice
NNDNR	Navajo Nation Division of Natural Resources
NNDWR	Navajo Nation Department of Water Resources
NNEPA	Navajo Nation Environmental Protection Agency
NNESL	Navajo Nation Endangered Species List
NNHP	Navajo Natural Heritage Program
NNHPD	Navajo Nation Historic Preservation Department
NNPDWR	Navajo National Primary Drinking Water Regulation
NORM	Naturally Occurring Radioactive Material
NRCS	Natural Resources Conservation Service
NSDWR	National Secondary Drinking Water Regulation
NURE	National Uranium Resource Evaluation
QA/QC	quality assurance/quality control
QAPP	Quality Assurance Project Plan
R^2	Pearson's Correlation Coefficient
Ra-226	Radium-226
Ra-228	Radium-228
Redente	Redente Ecological Consultants
RSE	Removal Site Evaluation
SOP	standard operating procedure
Stantec	Stantec Consulting Services Inc.
T&E	threatened and endangered
Th-230	thorium-230
Th-232	thorium-232
TDS	total dissolved solids
TENORM	Technologically Enhanced Naturally Occurring Radioactive Materials
U-235	uranium-235
U-238	uranium-238
U_3O_8	uranium oxide
UCL	upper confidence limit
US	United States
U.S.C.	United States Code
UTL	upper tolerance limit

USAEC	US Atomic Energy Commission
USEPA	US Environmental Protection Agency
USFWS	US Fish and Wildlife Service
USGS	US Geological Survey
V_2O_5	vanadium oxide
Weston	Weston Solutions

Glossary

Adit – a level, horizontal drift or passage from the surface into a mine (Glossary of Mining Terms, 2018).

Alluvium – material deposited by flowing water.

Arroyo – a steep sided gully cut by running water in an arid or semiarid region.

Bin Range – as presented in the RSE report, a range of values to present surface gamma measurement data in relation to: (1) the surface gamma Investigation Level (IL); (2) multiples of the surface gamma IL; or (3) the mean and standard deviation of the predicted Radium-226 (Ra-226) concentrations for the Site based on the correlation equation.

Colluvium – unconsolidated, unsorted, earth material transported under the influence of gravity and deposited on lower slopes (Schaetzl and Thompson, 2015).

Composite sample – "Volumes of material from several of the selected sampling units are physically combined and mixed in an effort to form a single homogeneous sample, which is then analyzed" (USEPA, 2002).

Constituent of potential concern (COPC) – analytes identified in the *RSE Work Plan* where their levels were confirmed based on the results of the RSE.

Data Validation – "an analyte- and sample-specific process that extends the evaluation of data beyond, method, procedural, or contractual compliance (i.e., data verification) to determine the analytical quality of a specific data set" (USEPA, 2002).

Data Verification – "the process of evaluating the completeness, correctness and conformance/compliance of a specific data set against the method, procedural, or contractual requirements" (USEPA, 2002).

Diatreme – volcanic vents or pipes explosively blasted through overlying rocks by gas charged magmas.

Ephemeral – ephemeral streams flow only in direct response to surface runoff precipitation or melting snow, and their channels are at all times above the water table (USGS, 2003). This concept also applies to ephemeral ponds that contain water in response to surface runoff precipitation or melting snow and are at all times above the water table.

Ethnographic – relating to the scientific description of peoples and cultures with their customs, habits, and mutual differences.

Gamma – a type of radiation that occurs as the result of the natural decay of uranium.

Geochemical – the chemistry of the composition and alterations of the solid matter of the earth (American Heritage Dictionary, 2016).

Geomorphology – the physical features of the surface of the earth and their relation to its geologic structures (English Oxford Dictionary, 2018).

Grab sample – a sample collected from a specific location (and depth) at a certain point in time.

Investigation Level (IL) – based on the background gamma measurements (in counts per minute [cpm]) and, Radium-226 (Ra-226) and metals concentrations, determined through statistical analyses, that are used to evaluate potential mining-related impacts.

Isolated Occurrences – in relation to the Site Cultural Resource Survey: Any non-structural remains of a single event: alternately, any non-structural assemblage of approximately 10 or fewer artifacts within an area of approximately 10 square meters or less, especially if it is of questionable human origin or if it appears to be the result of fortuitous causes. The number and/or composition of observed artifact classes are a useful rule of thumb for distinguishing between a site and an isolate (NNHPD, 2016).

Mineralized – economically important metals in the formation of ore bodies that have been geologically deposited. For example, the process of mineralization may introduce metals, such as uranium, into a rock. That rock may then be referred to as possessing uranium mineralization (World Heritage Encyclopedia, 2017).

Naturally occurring radioactive material (NORM) – "materials which may contain any of the primordial radionuclides or radioactive elements as they occur in nature, such as radium, uranium, thorium, potassium, and their radioactive decay products, that are undisturbed as a result of human activities" (USEPA, 2017).

Pan Evaporation – evaporative water losses from a standardized pan.

Radium-226 (Ra-226) – a radioactive isotope of radium that is produced by the natural decay of uranium.

Radium-228 (Ra-228) – a radioactive isotope of radium that is produced by the natural decay of uranium.

Remedial Action (or remedy) – "those actions consistent with permanent remedy taken instead of, or in addition to, removal action in the event of a release or threatened release of a hazardous substance into the environment, to prevent or minimize the release of hazardous substances so that they do not migrate to cause substantial danger to present or future public health or welfare or the environment…For the purpose of the National Oil and Hazardous Substances Pollution Contingency Plan (NCP), the term also includes enforcement activities related thereto" (USEPA, 1992).

Remove or removal – "the cleanup or removal of released hazardous substances from the environment; such actions as may be necessary taken in the event of the threat of release of hazardous substances into the environment; such actions as may be necessary to monitor, assess, and evaluate the release or threat of release of hazardous substances; the disposal of removed material; or the taking of such other actions as may be necessary to prevent, minimize, or mitigate damage to the public health or welfare of the United States or to the environment, which may otherwise result from a release or threat of release…" (USEPA, 1992).

Residual Soil – soil formed in situ by rock decay and left as residue after the leaching out of the more soluble products.

Respond or response – "remove, removal, remedy, or remedial action, including enforcement activities related thereto" (USEPA, 1992).

Secular equilibrium – a type of radioactive equilibrium in which the half-life of the precursor (parent) radioisotope is so much longer than that of the product (daughter) that the radioactivity of the daughter becomes equal to that of the parent with time; therefore, the quantity of a radioactive isotope remains constant because its production rate is equal to its decay rate. In secular equilibrium the activity remains constant.

Static gamma measurement – stationary gamma measurement collected for a specific period of time (e.g., 60 seconds).

Technologically enhanced naturally occurring radioactive material (TENORM) – "naturally occurring radioactive materials that have been concentrated or exposed to the accessible environment as a result of human activities such as manufacturing, mineral extraction, or water processing", which includes disturbance from mining activities. Where "technologically enhanced means that the radiological, physical, and chemical properties of the radioactive material have been concentrated or further altered by having been processed, or beneficiated, or disturbed in a way that increases the potential for human and/or environmental exposures" (USEPA, 2017).

Thorium (Th) – "a naturally occurring radioactive metal found at trace levels in soil, rocks, water, plants and animals. Thorium (Th) is solid under normal conditions. There are natural and man-made forms of thorium, all of which are radioactive" (USEPA, 2017).

Th-230 – a radioactive isotope of thorium that is produced by the natural decay of thorium.

Th-232 – a radioactive isotope of thorium that is produced by the natural decay of thorium.

Upper Confidence Limit (UCL) – the upper boundary (or limit) of a confidence interval of a parameter of interest such as the population mean (USEPA, 2015).

Upper Tolerance Limit (UTL) – a confidence limit on a percentile of the population rather than a confidence limit on the mean. For example, a 95 percent one-sided UTL for 95 percent coverage represents the value below which 95 percent of the population values are expected

to fall with 95 percent confidence. In other words, a 95 percent UTL with coverage coefficient 95 percent represents a 95 percent UCL for the 95th percentile (USEPA, 2015).

Uranium (U) – a naturally occurring radioactive element that may be present in relatively high concentrations in the geologic materials in the southwest United States.

U-235 – a radioactive isotope of uranium that is produced by the natural decay of uranium.

U-238 – a radioactive isotope of uranium that is produced by the natural decay of uranium.

Walkover gamma radiation survey – referred to as a scanning survey in the Multi-agency Radiation Survey and Site Investigation Manual (*MARSSIM*; USEPA, 2000). A walkover gamma radiation survey is the process by which the operator uses a portable radiation detection instrument to detect the presence of radionuclides on a specific surface (i.e., ground, wall) while continuously moving across the surface at a certain speed and in a certain pattern (USEPA, 2000). Referred to in the RSE report as surface gamma survey after the first mention in the report.

Wind rose – a circular graph depicting average wind speed and direction.

1.0 INTRODUCTION

1.1 BACKGROUND

This report summarizes the purpose and objectives, field investigation activities, findings, and conclusions of Site Clearance and Removal Site Evaluation (RSE) activities conducted between October 2015 and November 2016 at the Hoskie Tso No.1 site (the Site) located in northeastern Arizona, as shown in Figure 1-1. The Site is also identified by the United States Environmental Protection Agency (USEPA) as abandoned uranium mine (AUM) identification #852 in the *Navajo Nation AUM Screening Assessment Report and Atlas with Geospatial Data* (the *2007 AUM Atlas*; USEPA, 2007a). The *2007 AUM Atlas* was prepared for the USEPA in cooperation with the Navajo Nation Environmental Protection Agency (NNEPA) and the Navajo Abandoned Mine Lands Reclamation Program (NAML). The claim boundary polygon (refer to Figure 2-1) used for the RSE encompassed an area of approximately 15.5 acres (675,180 square feet [ft^2]) and was provided as part of the *2007 AUM Atlas*. Per the *2007 AUM Atlas* this polygon and other factors represent the location and surface extent of the AUM.

Stantec Consulting Services Inc. (Stantec; formerly MWH), performed Site Clearance activities in accordance with the *Site Clearance Work Plan* (MWH, 2016a), and performed RSE activities in accordance with the *Removal Site Evaluation Work Plan* ([*RSE Work Plan*] MWH, 2016b). The *Site Clearance Work Plan* and the *RSE Work Plan* were approved in April and October 2016, respectively, by the NNEPA and the USEPA (collectively, the Agencies). Stantec conducted this investigation on behalf of Sadie Hoskie, Trustee pursuant to Section 1.1.21 of the *Navajo Nation AUM Environmental Response Trust Agreement – First Phase* (the *Trust Agreement*), effective April 30, 2015 (United States [US], 2015). The *Trust Agreement* is made by and among the US, as Settlor, and as Beneficiary on behalf of the USEPA, the Navajo Nation, as Beneficiary, and the Trustee. The *Trust Agreement* was developed in accordance with a settlement on April 8, 2015 between the US and Navajo Nation for the investigation of 16 specified "priority" AUMs.

A "Site" is defined in the *Trust Agreement* as:

> "each of the 16 AUMs listed on Appendix A to the Settlement Agreement, including the proximate areas where waste material associated with each such AUM has been deposited, stored, disposed of, placed, or otherwise come to be located." *Trust Agreement*, § 1.1.25.

The Site is one of 46 priority AUMs within the Navajo Nation selected by the USEPA in collaboration with the NNEPA for further evaluation based on radiation levels and potential for water contamination (USEPA, 2013). The 16 priority AUMs included in the *Trust Agreement* are located on Navajo Lands throughout southeastern Utah, northeastern Arizona, and western New Mexico, as shown in Figure 1-1. The 16 priority AUMs were selected by the US and Navajo Nation, as described in the *Trust Agreement*:

> "based on two primary criteria, specifically, demonstrated levels of Radium-226[3]: (a) at or in excess of 10 times the background levels and the existence of a potentially inhabited structure located within 0.25 miles of AUM features; or (b) at or in excess of two times background levels and the existence of a potentially inhabited structure located within 200 feet (ft)." *Trust Agreement*, Recitals.

In addition, the 16 priority AUMs are, for the purposes of this investigation, a subset of priority mines for which a viable private potentially responsible party has not been identified. Mining for uranium on the Navajo Nation occurred prior to, during, and after World War II, when the US sought a domestic source of uranium located on Navajo lands (USEPA, 2007a). *Trust Agreement*, Recitals.

1.2 OBJECTIVES AND PURPOSE OF THE REMOVAL SITE EVALUATION

The primary objective of this RSE is to provide data required to evaluate relevant site conditions. The purpose of the RSE data (e.g., the review of relevant information and the collection of historical data) is to determine the volume of technologically enhanced naturally occurring radioactive material (TENORM) at the Site in excess of Investigation Levels (ILs). ILs are based on the background gamma measurements (in counts per minute [cpm]), and Radium-226 (Ra-226) and metals concentrations, determined through statistical analyses, that are used to evaluate potential mining-related impacts. The USEPA (2017) defines TENORM as:

> "naturally occurring radioactive materials that have been concentrated or exposed to the accessible environment as a result of human activities such as manufacturing, mineral extraction, or water processing" (mine waste or other mining-related disturbance).
>
> "Technologically enhanced means that the radiological, physical, and chemical properties of the radioactive material have been concentrated or further altered by having been processed, or beneficiated, or disturbed in a way that increases the potential for human and/or environmental exposures."

An understanding of the extent and volume of TENORM that exceeds the ILs at the Site is key information for future Removal or Remedial Action evaluations, including whether, and to what extent, a Response Action is warranted under federal and Navajo law. Definitions presented in the glossary for "Removal", "Remedial Action", and "Response" are defined in 40 Code of Federal Regulations (CFR) Section 300.5 of the National Oil and Hazardous Substances Pollution Contingency Plan (NCP; USEPA, 1992).

The Trust conducted Site Clearance activities to obtain information necessary to develop the *RSE Work Plan*. Site Clearance activities consisted of two separate tasks: a "desktop" study (e.g., literature and historical documentation review) and field activities.

[3] The Agencies selected the priority mines based on gamma radiation but the *Trust Agreement* erroneously states "levels of Radium -226".

Desktop study – included review of readily available and reasonably ascertainable information including:

- Historical and current aerial photographs to identify any potential historical mining features, and to identify if buildings, homes and/or other structures, and potential haul roads were present within 0.25 miles of the Site
- Topographic and geologic maps
- Available data concerning perennial surface water features and water wells
- Previous studies
- Meteorological data (e.g., predominant wind direction in the region of the Site)

Site Clearance field activities – included the following:

- Site reconnaissance to evaluate in the field: access routes to the Site, location of site boundaries, and observations presented in the Weston Solutions (Weston)(2012) report
- Mapping of site features and boundaries
- Evaluation of potential background reference areas
- Biological surveys (wildlife and vegetation)
- Cultural resource surveys

Following Site Clearance activities, two sequential tasks were conducted to complete the RSE: Baseline Studies and Site Characterization and Assessment. Baseline Studies activities were completed to establish the basis for the Site Characterization and Assessment activities.

Baseline Studies activities – included the following:

- Background Reference Area Study – walkover gamma radiation survey (referred to hereafter as surface gamma survey), subsurface static gamma radiation measurements (referred to hereafter as subsurface static gamma measurements), surface and subsurface soil/sediment sampling, and laboratory analyses
- Site gamma survey – surface gamma survey
- Gamma Correlation Study – co-located surface static gamma measurements and exposure-rate measurements at fixed points, high-density surface gamma surveys (intended to cover 100 percent of the survey area), surface soil sampling, and laboratory analyses

Site Characterization Activities and Assessment – included the following:

- Characterization of surface soils and sediments – surface soil and sediment sampling and laboratory analyses.

- Characterization of subsurface soils and sediments – static gamma measurements (at surface and subsurface hand auger borehole locations), and subsurface sampling and laboratory analyses. Hand auger borehole locations are referred to hereafter as boreholes.

- Characterization of perennial surface water and well water – surface water and well water sampling and laboratory analyses. Investigation of groundwater is not included in the scope of this RSE.

Details regarding the Site Clearance activities are provided in the *Hoskie Tso No.1 Site Clearance Data Report* (*Site Clearance Data Report*; MWH, 2016c) and summarized in Section 3.2 of this report. Details regarding the Baseline Study activities are provided in the *Hoskie Tso No.1 Baseline Studies Field Report* (Stantec, 2017) and summarized in Section 3.3 of this report. Details regarding the Site Characterization Activities and Assessment are provided in Section 3.3 of this report. Findings are presented in Section 4.0 of this report.

1.3 REPORT ORGANIZATION

This report presents a comprehensive discussion of all RSE activities, including applicable aspects of the outline suggested in the *Multi-Agency Radiation Survey and Site Investigation Manual – Appendix A* ([*MARSSIM*] USEPA, 2000), and consists of the following sections:

Executive Summary – Presents a concise description of the principal elements of the RSE report.

Section 1.0 Introduction – Describes the purpose and objectives of the RSE process, and organization of this RSE report.

Section 2.0 Site History and Physical Characteristics – Presents the history, land use, and physical characteristics of the Site.

Section 3.0 Summary of Site Investigation Activities – Summarizes the Site Clearance and RSE activities.

Section 4.0 Findings and Discussion – Presents the results of the Site Clearance and RSE activities, areas that exceed ILs, areas of Naturally Occurring Radioactive Material (NORM) and TENORM, and the volume of TENORM that exceeds the ILs. Potential data gaps are also presented, as applicable.

Section 5.0 Summary and Conclusions – Summarizes data and presents conclusions based on results of the investigations completed to date.

Section 6.0 Estimate of Removal Site Evaluation Costs – A statement of actual or estimated costs incurred in complying with the *Trust Agreement*, as required by the *Trust Agreement*.

Section 7.0 References – Lists the reference documents cited in this RSE report.

Tables Included at the end of this RSE report.

Figures Included at the end of this RSE report.

Appendices – Appendices A through F.1 are included at the end of this RSE report and Appendix F.2 is provided as a separate electronic file due to its file size and length.

- **Appendix A** – Includes the radiological characterization report for the Site
- **Appendix B** – Includes photographs of the Site
- **Appendix C** – Includes copies of RSE field activity forms
- **Appendix D** – Provides the methods and results of the statistical data evaluation for the Site
- **Appendix E** – Includes the biological evaluation report and the biological and cultural resources compliance forms
- **Appendix F** – Includes the Data Usability Report, laboratory analytical data, and data validation reports for the RSE analyses

Attachments – Site-specific geodatabase, tabular database files, and available historical documents referenced in this RSE report.

2.0 SITE HISTORY AND PHYSICAL CHARACTERISTICS

2.1 SITE HISTORY AND LAND USE

2.1.1 Mining Practices and Background

The Site is located on the Navajo Nation, in northeastern Arizona and approximately 0.5 miles southeast of Indian Wells, Arizona, as shown in Figure 1-1 inset. The Site is also directly east of Highway 77, as shown in Figure 2-1. The Site is located within the Hopi Buttes, Arizona volcanic field which is characterized by outcropping diatremes. Diatremes are volcanic vents or pipes explosively blasted through overlying rocks by gas charged magmas (refer to the glossary and Section 2.2.2). Uranium occurrences associated with diatremes have been discovered in bedded carbonate rocks located within the diatremes (Chenoweth and Malan, 1973). In 1952, the US Geological Survey (USGS) discovered that many of the diatremes in the Hopi Buttes contained low-grade deposits of uranium (Chenoweth and Malan, 1973). From 1953 to 1955, the US Atomic Energy Commission (USAEC) and a private group separately performed aerial radiation surveys of the Hopi Buttes (Chenoweth, 1990). Based on the survey findings the private group identified one diatreme, the Seth-la-kai diatreme, which contained economically mineable ore within the Hopi Buttes (Chenoweth and Malan, 1973). The Seth-la-kai diatreme would later be known as the Morale Mine, which was located approximately 6.5 miles northeast of the Hoskie Tso No. 1 site.

In March 1954, Navajo Tribal Mining Permit No.105 was issued for the Morale Mine and in April 1954, the Bureau of Indian Affairs (BIA) approved assignment of the permit to the partnership of M.K. Robinson, M.J. O'Haco, and Robert Lukius (Chenoweth, 1990). In May 1954, mining began at the Morale Mine. Mine workings consisted of rim stripping and underground stopes that were accessed through an adit (Scarborough, 1981). Total ore production from the Morale Mine was 192 tons (approximately 384,000 pounds) of ore that contained 0.15 percent U_3O_8 (uranium oxide) and 0.04 percent V_2O_5 (vanadium oxide). Mining at the Morale Mine ended in 1959 due to the low price of uranium and the low uranium grade of the ore (Wenrich-Verbeek et al., 1982). The Morale Mine (i.e., the Seth-la-kai diatreme) was the only diatreme mined in the Hopi Buttes that produced ore grade material (Chenoweth and Malan, 1973).

Also, in 1954, three additional mining permits were issued for five diatremes in the Hopi Buttes (Chenoweth, 1990). One of the permits was for the Hoskie Tso No.1 mine claim (also referred to in historical documents as Hoskietso and/or Diatreme #2). In December 1954, Mining Permit No. 234 was issued to Leroy Begay and John H. Lee for the Hoskie Tso No.1 mine claim (i.e., the Site) under the name Kachina Uranium Corporation. Exploration workings on-site consisted of exploration rim stripping on the northwest rim of the diatreme (Chenoweth, 1990). Of note, the exploration rim strip has also been historically referred to as a small prospect pit by both Shoemaker et al. (1962) and Scarborough (1981). In December 1958, the mining permit for the Site expired and no ore was shipped from the Site (Chenoweth, 1990).

From 1978 to 1980, the USGS conducted a study for the National Uranium Resource Evaluation (NURE) program to identify and delineate areas within the Flagstaff, Arizona quadrangle that might be favorable for the occurrence of uranium deposits that contained at least 100 metric tons of U_3O_8 at a grade greater than 0.01 percent U_3O_8 in a mineable configuration (Wenrich-Verbeek et al., 1980 and 1982). In the spring of 1979, as part of the study, gamma measurements were collected along transects at Diatreme #2 (i.e., the Site). Where the gamma measurements were greater than two times the background level used for the study, a rock sample was collected. As part of the NURE study, a total of six rock samples were collected from Diatreme #2. Refer to maps included in Wenrich, K.J. and Mascarenas, J.F. (1980 and 1982) and Wenrich-Verbeek et al. (1982) for rock sample locations. Also, as part of the study, in November 1979, the USGS in cooperation with the BIA, and the Navajo Tribe, drilled six rotary boreholes along the eastern rim of Diatreme #2 (Wenrich-Verbeek et al., 1980 and 1982). Gamma measurements were collected downhole at the boreholes and average U_3O_8 grades were determined using the gamma measurements. Based on the drilling and collected gamma measurements at Diatreme #2, the average grades of U_3O_8 ranged from 0.005 to 0.012 percent, from 1 ft to 26 ft below ground surface (ft bgs). The results at Diatreme #2 suggested this location was not favorable for generating 100 metric tons of U_3O_8 (i.e., economically viable ore in a mineable configuration). The locations of the six boreholes were not provided in the historical documents. The data gathered from the drilling was also used by the USGS and NURE to further delineate the three-dimensional extent of uranium content in the Hopi Buttes. The study also produced a uranium occurrence report for the Hoskietso claim (i.e., the Site). The report stated the Hoskietso claim was an inactive, raw prospect that had no cumulative uranium production (Wenrich-Verbeek et al., 1982).

The historical document review for the Site suggested that the following historical exploration activities may have occurred at the Site (although no evidence was observed at the Site):

1. Exploration workings on the Site consisted of exploration rim stripping (also referred to as a small prospect pit) on the northwest rim of the diatreme

2. Six rock samples were collected from the Site

3. Six rotary boreholes were drilled along the eastern rim of Diatreme #2 and the results suggested that the Site was not favorable for generating 100 metric tons U_3O_8 (i.e., economically viable ore in a mineable configuration)

4. The Site was reported as an inactive, raw prospect that had no cumulative uranium production

5. No ore was shipped from the Site

2.1.2 Ownership and Surrounding Land Use

The Site is located within the Navajo Nation, Fort Defiance BIA Agency in Section 24 of Township 23 North, Range 21 East, Gila and Salt River Principal Meridian. Land ownership where the Site is located falls under Navajo Trust lands. The Site is located within the Indian Wells Chapter of the

Navajo Nation, as shown in Figure 1-1, and is in Grazing Unit 7, as designated by the Navajo Nation Division of Natural Resources (NNDNR, 2006). The Site is currently uninhabited. However, one home-site is located to the east of and within 0.25 miles of the Site, as shown in Figure 2-1.

2.1.3 Site Access

In 2015, the Navajo Nation Department of Justice (NNDOJ) provided the Trustee with legal access to all Navajo Trust lands to implement work in accordance with the *Trust Agreement*. The Trustee also obtained individual written access agreements from residents living at or near the Site, or with an interest in lands at or near the Site, such as home-site leases and grazing rights, as applicable. In addition, the Trustee consulted with the Indian Wells Chapter officials and nearby residents and notified them of the work.

2.1.4 Previous Work at the Site

2.1.4.1 1994 through 1999 Aerial Radiological Surveys

Between 1994 and 1999, aerial radiological surveys were conducted at 41 geographical areas within the Navajo Nation, including the Indian Wells area, which included the location of the Site (Hendricks, 2001). The surveys were done at the request of the USEPA Region 9 and were performed by the Remote Sensing laboratory, a US Department of Energy facility, National Nuclear Security Administration Nevada Operations Office. The intent of the surveys was to characterize the overall radioactivity levels and excess bismuth-214 activity (i.e., a radioisotope that is an indicator of uranium ore deposits and/or uranium mines) within the surveyed areas. Data collected from the surveys was used to assess the risks (i.e., average gross exposure rate) in mined areas and to determine what action, if any, was needed.

The aerial radiological survey for the Indian Wells area covered approximately 248.68 square miles and included the location of the Site. The aerial radiological survey results for the area within a 0.25 mile radius of the Site indicated a gross exposure rate range of 6 µR/hr to 12 µR/hr and excess bismuth (i.e., bismuth activity greater than approximately 3.5 µR/hr) present in approximately 0.02 square miles (10.5 acres) of the area (*2007 AUM Atlas*). The aerial radiological survey results for the Indian Wells area indicated a gross exposure rate range of 3.93 µR/hr to 49.77 µR/hr and excess bismuth (i.e., bismuth activity greater than approximately 3.5 µR/hr) present in approximately 3.03 square miles of the 248.68 square miles of the Indian Wells flight area (Hendricks, 2001).

2.1.4.2 2012 Site Screening

In 2012, Weston performed site screening on behalf of the USEPA (Weston, 2012). The screening included: (1) recording site observations (i.e., number of homes, water sources, and sensitive environments[4] around the Site); (2) recording the type, number, and reclamation status of mine

[4] Weston defined sensitive environments as "all sensitive environments located within visible range of the mine site, including: wetlands, endangered species, habitats and approximate locations of sites that may be under protection of the government of the Navajo Nation"

features; and (3) performing a surface gamma survey. Weston reported it did not observe any mining related features (e.g., adits, waste piles, pits, shafts, etc.). Weston also reported two home-sites within 0.25 miles of the Site, no water features within a one-mile radius of the Site, and no sensitive environments were identified. Based on Weston's performance of surface gamma survey, Weston determined that the highest gamma measurements were greater than 23 times the site-specific background level used for its gamma screening.

Weston also reported that NAML reclamation identification number NA-0751 was associated with the Site. NAML reclamation identification numbers generally suggest that reclamation work may have been proposed for or taken place on-site. However, NAML reclamation documents associated with reclamation identification number NA-0751 describe proposed reclamation activities for the Morale Mine, which was located 6.5 miles northeast of the Site, and do not describe reclamation activities proposed for the Site (NAML, 2002). In addition, the NAML reclamation documents included a map showing the location of NA-0751, which was also located where the Morale Mine was located (NAML, 2002).

2.2 PHYSICAL CHARACTERISTICS

2.2.1 Regional and Site Physiography

The Site is located within the Colorado Plateau physiographic province, which is an area of approximately 240,000 square miles in the Four Corners region of Utah, Colorado, Arizona, and New Mexico. Figure 2-2 presents a current regional aerial photograph (BING® Maps, 2018) of the Site within a portion of the Colorado Plateau. The Colorado Plateau is typically high desert with scattered forests and varying topography having incised drainages, canyons, cliffs, buttes, arroyos, and other features consistent with a regionally uplifted, high-elevation, semi-arid plateau (Encyclopedia Britannica, 2017). The physiographic province landscape includes mountains, hills, mesas, foothills, irregular plains, alkaline basins, some sand dunes, and wetlands. This physiographic province is a large transitional area between the semi-arid grasslands to the east, the drier shrub-lands and woodlands to the north, and the lower, hotter, less-vegetated areas to the west and south.

The Colorado Plateau includes the area drained by the Colorado River and its tributaries: the Green, San Juan, and Little Colorado Rivers (Kiver and Harris, 1999). The physiographic province is composed of six sections: Uinta Basin, High Plateaus, Grand Canyon, Canyon Lands, Navajo, and Datil-Mogollon. The Site is located within the Navajo section.

Figure 2-3 presents the regional USGS topographic map in the vicinity of the Site and shows site topography within a portion of the Colorado Plateau. The Site is located on a flat to hilly topographic highland that is rimmed by a volcanic vent ridge (i.e., the ridge of the diatreme). The elevation on-site is approximately 5,700 ft above mean sea level (amsl) (refer to Figure 2-3).

2.2.2 Geologic Conditions

2.2.2.1 Regional Geology

Regionally the Site is located within the Hopi Buttes volcanic field which is characterized by outcropping diatremes that have intruded through the Rock Point Member of the Triassic Wingate sandstone. Figure 2-4 depicts a regional geology map showing the Site in relation to the regional extent of the Hopi Buttes volcanic field. The Hopi Buttes volcanic field is a circular field approximately 20 miles in diameter and contains approximately 300 diatremes and associated flows and volcanic tuff beds (Scarborough, 1981). The Hopi Buttes diatremes range from a few hundred to a few thousand feet in diameter and normally flare out at the surface. Near the surface, the diatremes often have a basin-like form in which a variety of clastic materials accumulated, such as bedded tuff, limestone, clay, silt, and evaporates (Peirce et al., 1970). At depth, the diatremes often contain massive tuff, breccia, country rock, agglomerate, and alkaline basalt. The Hopi Buttes diatremes were first studied in detail in 1942 and later were prospected for uranium (Shoemaker et al., 1962). Regionally, the mineralized uranium is located either adjacent to the diatremes or in the sediments within the diatremes (Peirce et al., 1970).

2.2.2.2 Site Geology

A detailed geology map of the Site is shown in Figure 2-5a and was adapted from Shoemaker et al. (1962). Shoemaker et al. (1962) described site geology as follows:

> One diatreme is present on-site, as shown in Figure 2-5a, which intruded through the older Triassic Rock Point Member of the Wingate sandstone, and is associated with the volcanic vent deposits of Pliocene age. The rocks within the diatreme crop out as low hills rising 50 ft to 80 ft above the surrounding ground surface. The volcanic vent deposits dip gently through the central part of the diatreme, and the bulk of the rocks exposed are laminated siltstones that constitute a relatively thin unit within the volcanic vent deposits. The wall of the volcanic vent lies against the Rock Point Member of the Triassic Wingate sandstone. A sedimentary breccia unit and limburgite agglomerate (similar to basalt) are present around the edge of the diatreme and form the topographic ridge around the northeastern border of the Site. The breccia is composed of angular blocks of the Rock Point Member of the Wingate sandstone and secondary blocks of limburgite in a tuff matrix. The limburgite agglomerate is composed of intrusive monchiquite (igneous rock), limburgite tuff, and tuff breccia. Thin lenses of platy siltstone are localized and inter-layered in the breccia. Lamination in the siltstone is composed of non-volcanic detritus and is evidence that subsequent sedimentation proceeded slowly and uniformly. The silt may have been transported into the diatreme crater by wind and deposited on the floor of a small lake that occupied the crater during the Pliocene age.

A simplified geology map of the Site is shown in Figure 2-5b and is based on Stantec field personnel (field personnel) observations and adaptions to the Flagstaff, Arizona Quadrangle geology map (Ulrich et al., 1984). The Tertiary limburgite agglomerate mapped on Figure 2-5a was mapped as the Tertiary volcanic vent deposit in Figure 2-5b. The remaining Tertiary volcanic

bedrock units on Figure 2-5a were over-lain by Tertiary siltstone, as observed by field personnel, and could only be identified in the vertical cliff face on the north side of the ridge. The remainder of the Site was mapped as Tertiary siltstone and mudstone, as shown in Figure 2-5b. Appendix B photograph numbers 1, 3, 4, and 5 shows volcanic outcrops surrounding the Site, and the lithology change from mudstone/siltstone to volcanics on-site.

Unconsolidated deposits on-site (i.e. Quaternary deposits) consisted of colluvium, residual soil, and minor alluvium consisting of sand and silt, with varying amounts gravel, as described on the borehole logs in Appendix C.2. Colluvium and residual soil covered the majority of the Site, except where there was exposed bedrock and within the drainages. Minor amounts of alluvium were present in the drainage located in the western portion of the Site, as shown on Figure 2-5b. Boreholes were advanced through the unconsolidated deposits using a hand auger (refer to Section 3.3.2.2 and Appendix C.2 for borehole logs). The unconsolidated deposits ranged in depth from 0.4 ft to 2.0 ft bgs at borehole locations.

According to the United States Department of Agriculture Natural Resources Conservation Service (NRCS), soils on-site that have not been disturbed are classified as soil unit 118 Tesihim complex, which consist of loamy, mixed, superactive, calcareous, mesic soils that form on buttes, mesas and slopes with grades of 3 to 15 percent (NRCS, 2017).

2.2.3 Regional Climate

The Colorado Plateau is located in a zone of arid temperate climates characterized by periods of drought and irregular precipitation, relatively warm to hot growing seasons, and winters with sustained periods of freezing temperatures (National Park Service, 2017). The average monthly high temperature at weather station 024089, Holbrook, Arizona (Western Regional Climate Center, 2017) located approximately 34 miles south of the Site, ranges between 48.1 degrees Fahrenheit (°F) in January to 93.9°F in July. Daily temperature extremes reach as high as 110°F in summer and as low as -21°F in winter. Holbrook receives an average annual precipitation of 8.32 inches, with August being the wettest month, averaging 1.49 inches, and May being the driest month, averaging 0.28 inches.

Potential evaporation in the area is greater than the area's average annual precipitation. The potential evaporation noted at the Many Farms School weather station, located approximately 65 miles northeast of the Site, averages 90.8 inches of pan evaporation annually (Western Regional Climate Center, 2017). Average wind speeds in the area are generally moderate, although relatively strong winds often accompany occasional frontal activity, especially during late winter and spring months. Blowing dust, soil erosion, and local sand-dune migration/formation are common during dry months. The Winslow, Arizona airport, located approximately 43 miles to the southwest of the Site, had the most complete record of wind conditions. A wind rose for Winslow airport is presented on Figure 1-1. The wind rose was produced using data contained in the *2007 AUM Atlas* for the years 1996 to 2006. Predominant winds were from the southwest (refer to the wind rose on Figure 1-1).

2.2.4 Surface Water Hydrology

The Site is located within the Little Colorado River Valley watershed, an area of approximately 27,000 square miles spanning Arizona and New Mexico, as shown in Figure 1-1. The Site is on a flat to hilly topographic highland that is rimmed by a volcanic vent ridge, which controls the surface-water flow direction in drainages to the west, southwest, and northeast. Figure 2-6 shows the extension of the volcanic vent ridge (the approximate extent of the ridge is labeled as the approximate watershed divide line), drainages, and drainage flow direction. The northern half of the Site has numerous small, incised, shallow, ephemeral drainages that drain to the southwest (refer to Appendix B photograph number 2) or northeast. Flow directions depend on whether the drainage is located on the southwest or northeast side of the volcanic vent ridge. These drainage patterns are generally dendritic and terminate within either the residual soil, colluvium, and or alluvium. The southern portion of the Site has small, shallow, ephemeral drainages that drain to the west and southwest. These drainage patterns are generally parallel and drain toward the Bidahochi Wash (refer to Figure 2-1), which then drains to the Little Colorado River approximately 42 miles to the west southwest.

Adkins Consulting Inc. (Adkins), under contract to Stantec, performed a wildlife evaluation as part of the Site Clearance field investigations and did not identify any wetlands, seeps, springs, or riparian areas within the Site that would be attractive to wildlife (refer to Appendix E).

2.2.5 Vegetation and Wildlife

In the spring and summer of 2016, biological surveys were conducted as part of Site Clearance activities. In May 2016, Adkins conducted a wildlife survey and in July 2016, Redente Ecological Consultants (Redente), under contract to Stantec, conducted a summer vegetation survey. Information about each survey is provided in Appendix E, which includes the Site biological evaluation reports and the *Navajo Nation Department of Fish and Wildlife* (NNDFW) *Biological Resources Compliance Form*. A summary of the survey activities and findings are provided in Section 3.2.2.3.

Vegetation communities found within the physiographic transitional area described in Section 2.2.1 include shrublands with big sagebrush, rabbitbrush, winterfat, shadscale saltbush, and greasewood; and grasslands of blue grama, western wheatgrass, green needlegrass, and needle-and-thread grass. Higher elevations may support pinyon pine and juniper woodlands. The vegetation communities on-site included desert grassland with sporadic shrubs (refer to Appendix E). During the surveys, Stantec and/or its subcontractors observed on-site wildlife including common raven, cottontail rabbit, coyote, mule deer, turkey vulture, western burrowing owl, American kestrel, and prairie falcon (refer to Appendix E).

2.2.6 Cultural Resources

In April 2016, as part of Site Clearance activities, Dinétahdóó Cultural Resource Management (Dinétahdóó), under contract to Stantec, conducted a cultural resource survey, as well as ethnographic and historical data reviews, and interviewed local residents living near the Site

(Dinétahdóó, 2016). The interviewed residents stated they were the leaseholders for the Site sometime between 1950 and 1960, and during that time period they had a dispute with two men interested in the mine site after the two men had staked and surveyed the mine area. The residents stated that the dispute prevented any mining from occurring at the Site. However, they did remember some drilling activities occurring at the Site to test the quality of the ore.

During the cultural resource survey Dinétahdóó identified seven isolated occurrences. Appendix E includes a copy of the *Cultural Resource Compliance Form,* and findings of the cultural resource survey are summarized in Section 3.2.2.4.

2.2.7 Observations of Potential Mining and Potential Exploration

During RSE activities, field personnel did not observe features on-site indicative of historical mining or historical exploration activities, including no observable evidence of the rim stripping reported by Chenoweth (1990), or the six National Uranium Resource Evaluation (NURE) rock samples or exploratory rotary boreholes reported by Wenrich-Verbeek et al. (1980 and 1982). Limited information is known about the potential location of the NURE rock samples (refer to Section 3.2.2.1) and there is no physical evidence of the samples. The exact locations of the boreholes or where the rim stripping may have occurred are unknown. This lack of observable features was used, along with additional lines of evidence (refer to Section 3.3.3), to identify whether TENORM is present at the Site (refer to Section 4.6).

3.0 SUMMARY OF SITE INVESTIGATION ACTIVITIES

3.1 INTRODUCTION

This section summarizes Site Clearance and other RSE activities conducted between October 2015 and November 2016. Site Clearance activities were conducted initially to obtain information necessary to develop the *RSE Work Plan*. Site Clearance activities were performed in accordance with the approved *Site Clearance Work Plan.* Resulting RSE activities were performed in accordance with the approved *RSE Work Plan*.

The primary objective of this RSE is to provide data required to evaluate relevant site conditions

The *RSE Work Plan* is comprised of a Field Sampling Plan (FSP), Quality Assurance Project Plan (QAPP), Health and Safety Plan (HASP), and a Data Management Plan (DMP). The FSP guided the fieldwork by defining sampling and data-gathering methods. The QAPP presented quality assurance/quality control (QA/QC) requirements designed to meet Data Quality Objectives (DQOs) for the environmental sampling activities. The HASP listed site hazards, safety procedures and emergency protocols. The DMP described the plan for the generation, management, and distribution of project data deliverables. The FSP, QAPP, HASP, and DMP provided the approved requirements and protocols to be followed for the RSE data collection, data management, and data analyses performed to develop this RSE report. Any deviations or modifications from the *RSE Work Plan* are described in the appropriate RSE report sections.

The RSE process followed applicable aspects of the USEPA DQO Process and *MARSSIM*, to verify that data collected during the RSE activities would be adequate to support reliable decision-making (USEPA, 2006). The USEPA DQO Process is a series of planning steps based on the scientific method for establishing criteria for data quality and developing survey designs. *MARSSIM* provides technical guidance on conducting radiation surveys and site investigations.

The USEPA DQO Process is a seven-step process[5] that was performed as part of the *RSE Work Plan* to identify RSE data objectives. The goal of the USEPA DQO Process is to minimize expenditures related to data collection by eliminating unnecessary, duplicate, or overly precise data and verifies that the type, quantity, and quality of environmental data used in decision making will be appropriate for the intended application. It provides a systematic procedure for defining the criteria that the survey design should satisfy. This approach provides a more effective survey design combined with a basis for judging the usability of the data collected (USEPA, 2006).

The USEPA DQO Process performed for the RSE is presented in the *RSE Work Plan*, Section 3, and identifies the purpose of the data collected as follows:

[5] (1) State the problem; (2) Identify the goals of the study; (3) Identify the information inputs; (4) Define the boundaries of the study; (5) Develop the analytical approach; (6) Specify the tolerance on decision errors; and (7) Optimize sampling design (USEPA, 2006).

1. Background reference area soil sampling, laboratory analyses, surface gamma surveying, and subsurface static gamma measurements to establish background analyte concentrations and gamma measurements, which will be used as the ILs, for the Site.

2. Site sampling (soil and sediment), laboratory analyses, surface gamma surveying, and subsurface static gamma measurements for comparison with ILs, to define the lateral and vertical extent of contamination at the Site to characterize the Site.

The USEPA DQO Process was used in conjunction with *MARSSIM* guidance for RSE planning and data collection. Per *MARSSIM* guidance, "planning radiation surveys, using the USEPA DQO Process, can improve radiation survey effectiveness and efficiency, and thereby the defensibility of decisions" (USEPA, 2000).

The applicable aspects of *MARSSIM* incorporated into the RSE process include:

- Historical site assessment
- Determining RSE DQOs
- Selecting background reference areas
- Selecting radiation survey techniques
- Site preparation
- Quality control
- Health and safety
- Survey planning and design
- Baseline surface gamma surveys and subsurface static gamma measurements
- Field measurement methods and instrumentation
- Media sampling and preparation for laboratory analyses

The RSE process also used applicable aspects of *MARSSIM* for interpretation of the RSE results, including:

- Data quality assessment through statistical analyses
- Evaluation of the analytical results
- Quality assurance and quality control

Sections 3.2 and 3.3 summarize the preparation, field investigation methods, and procedures for data collection during the Site Clearance activities and other RSE activities. Activities subsequent to the Site Clearance are described in detail in the *RSE Work Plan,* Section 4.

Appendix A includes the radiological characterization report prepared by Environmental Restoration Group, Inc. (ERG), under contract to Stantec. Appendix B includes photographs of features at the Site and the surrounding area, Appendix C.1 includes soil/sediment sample field forms, Appendix C.2 includes borehole logs, and Appendix C.3 includes water sample field forms.

3.2 SUMMARY OF SITE CLEARANCE ACTIVITIES

The Site Clearance activities consisted of two tasks: a desktop study and field investigations. The desktop study was completed prior to field investigations, and the findings of the desktop study were used to guide field investigations. The Site Clearance activities are detailed in the *Site Clearance Data Report* and are described below.

3.2.1 Desktop Study

The desktop study included:

- Review of historical aerial photographs (USGS, 2016).
- Review of current aerial photographs for identification of buildings, homes and other structures, and potential haul roads within 0.25 miles of the Site.
- Review of topographic and geologic maps.
- Review of information related to surface water features and water wells on the Navajo Nation within a one-mile radius of the Site, provided by: (1) the Navajo Nation Department of Water Resources (NNDWR, 2016); and (2) ESRI Shapefiles data contained in the *2007 AUM Atlas*.
- Review of previous studies, information related to potential past mining, and reclamation activities.
- Identification of the predominant wind direction in the region of the Site.

Based on the list above, the following findings were identified during the desktop study:

- Historical photographs (USGS, 2016) for the Site were selected from 1954, 1965, 1997, and 2005 for comparison against a current image (BING®, 2018). The selected historical photographs are shown in Figure 3-1a. Comparison of the historical photographs to the current photograph showed no visual evidence of past exploration or reclamation at the Site. Figure 3-1b compares the aerial photograph from 1965 and the current image. The 1965 photograph is presented because it provides the best resolution of what the Site looked like in the past. There are no discernable differences between the two images presented in Figure 3-1b.
- The current aerial photograph review confirmed that one home-site was located to the east of and within 0.25 miles of the Site, as shown in Figure 2-1. Numerous dirt roads were identified within 0.25 miles of the Site, refer to Figure 2-1. The roads were identified by the current aerial

photograph review, historical document review, and visual identification during the Site Clearance field investigations (refer to Section 3.2.2.1).

- Two potential water features were identified based on the review of information provided by the NNDWR and the *2007 AUM Atlas*, refer to Table 3-1a, Table 3-1b, and Figure 2-1.
- The predominant regional winds were from the southwest (refer to Section 2.2.3 and Figure 1-1).

Previous studies and information related to past exploration are discussed in Sections 2.1.1 and 2.1.4.

3.2.2 Field Investigations

3.2.2.1 Site Mapping

The *Site Clearance Work Plan* specified that the following features at and near the Site, if present, should be mapped, marked, and/or their presence confirmed:

- Claim boundaries and the 100-ft buffers of the claim boundaries
- Roads, fences/gates, utilities: haul roads to a distance of 0.25 miles or to the intersection with the next major road, whichever is closer
- Structures, homes, buildings, livestock pens, etc.
- Surface water and water well locations: surface water channels that drain the Site to a distance of 0.25 miles away from the Site or to the confluence with a major drainage, whichever is closer; surface water features and water wells identified within a one-mile radius of the Site
- Topographic features
- Potential background reference areas
- Type of ground cover, including rock, soil, waste rock, etc.
- Physical hazards

Based on the list above, the following site features were mapped during field investigations:

- Claim boundaries – 100-ft buffers of the claim boundaries, as shown in Figure 2-6, were marked in the field with stakes and/or flagging and mapped with a global positioning system (GPS).
- Topographic features – The mapped area can be divided into two primary topographic areas: the flat to hilly topographic highland and the volcanic vent ridge (refer to Appendix B photograph numbers 1, 2, 3, 4, and 5).

- Drainages – Drainages were mapped on-site as shown in Figure 2-6. The northern half of the Site had numerous small, incised, shallow, ephemeral drainages that drained to the southwest and northeast. Flow directions depended on whether the drainage was located on the southwest or northeast side of the volcanic vent ridge. These drainage patterns were generally dendritic and terminated within either the residual soil, colluvium, and or alluvium. The southern portion of the Site had small, shallow, ephemeral drainages that drained to the west and southwest. These drainage patterns were generally parallel and drained toward the Bidahochi Wash (refer to Figure 2-1). These drainages were ephemeral and were dry during the RSE investigation activities.

- Roads – Two historical roads were mapped to the west and south of the Site, as shown in Figures 2-1 and 2-6. The southernmost road was also visible in the 1954 photograph presented in Figure 3-1a. The historical roads do not access the area within the claim boundary and the reason they were built is unknown.

- Livestock – Field personnel did not observe any livestock within 100-ft of the Site at the time of field investigations. However, visual signs of previous livestock grazing were observed on the Site. Cattle were observed grazing 0.25 miles to the east of the Site, and horses and sheep were observed at the livestock pond/trough 0.40 miles northeast of the Site. Livestock corrals were also present near the home-site.

- Structures – One home-site was located east of and within 0.25 miles of the Site, as shown in Figure 2-6.

- Water features – Field personnel assessed the two potential water features identified from the desktop study, as shown in Figure 2-1. The water features and field personnel observations are included in Table 3-1a. In addition, during site mapping activities field personnel identified an overflow pond associated with windmill well 07T-517, as described in Table 3-1a.

- Ground cover – Bedrock outcrops were mapped on-site that were primarily located along the volcanic vent ridge in the northern and eastern areas of the Site (refer to Section 2.2.2 and Appendix B photograph numbers 1, 2, 3, 4, and 5). Additionally, some bedrock outcrops were present in the central portions of the Site. A siltstone outcrop located in the southeast corner of the claim boundary had the highest gamma measurements when the site gamma radiation survey was conducted in October 2015. Outside areas of exposed bedrock, the ground surface at the Site was generally covered with residual soil/colluvium consisting of sand, silt, and clay with minor inter-bedded gravels and some minor alluvium. Little to no true alluvium was observed at the Site, except the one drainage in the northwest corner of the Site that is shown as Quaternary deposits on Figure 2-5a and as a drainage on Figure 2-7. Other drainages contain primarily soil and colluvium. During site mapping field personnel observed a change in vegetation and soil color approximately 0.02 acres in size located in the southeast portion of the Site. Field personnel could not identify if the vegetation and soil color change area were due to historical exploration activities or natural processes. A subsequent site visit revealed that the vegetation change area was a result of shallow, dry soils not suitable for plant growth, which was a function of the geology, slope angle, and slope aspect. The subsequent site visit also revealed that the soil color change, within the vegetation change area, was attributed to outcrops of siltstone that are a lighter gray color than the surrounding soils produced from the weathering of the siltstone. Therefore, the vegetation change and soil color change area were determined to be the result of natural

processes and not attributable to historical exploration activities. Ground cover and vegetation observed on-site are also discussed in Sections 2.2.2.2 and 2.2.5, respectively.

Field personnel did not observe evidence of the rim stripping reported by Chenoweth (1990) or the locations where six rock samples were collected, or six exploratory rotary boreholes were drilled reported by Wenrich-Verbeek et al. (1980 and 1982). A figure included in Wenrich-Verbeek et al. (1982) showed two rock sample locations. The two locations were georeferenced (approximate) and are shown as Potential Rock Sample Locations in Figure 2-6. Additionally, sample coordinates were provided for the rock sample locations in Wenrich Verbeek et al. (1980); however, the coordinates were the same single set/match for all six sample locations (Latitude 35-22-56n, Longitude 110-3-43W). This sample location is shown in Figure 2-6 as the Potential Rock Sample Location (per Coordinates). This location differs from the georeferenced locations developed from the Wenrich-Verbeek et al. (1982) figure.

In June 2018, the USEPA provided the Trust with a copy of a NNDWR database that was generated in 2018. The USEPA stated that there were discrepancies between the NNDWR water feature locations in the 2018 database and those provided in the 2016 NNDWR database used by the Trust. This information was provided after Site Characterization activities had occurred and was therefore not included in the RSE for the Site. Comparison of the 2018 NNDWR database against the 2016 NNDWR database and the *2007 AUM Atlas* will require additional field work and it is recommended that this be addressed in any future studies for the Site.

3.2.2.2 Potential Background Reference Area Evaluation

The desktop study findings and field investigation observations were used to identify two potential background reference areas (BG-1 and BG-2) for the Site, as shown in Figure 3-2. BG-1 and BG-2 were also selected as suitable background reference areas for the Site for the following reasons:

- BG-1 encompassed an area of 1,943 ft^2 (approximately 0.04 acres), was located 500 ft south of the Site, and was upwind and hydrologically cross-gradient from the Site. Geologically, the weathered siltstone and mudstone in BG-1 represented the weathered siltstone and mudstone derived from the Tertiary vent deposits west of the volcanic vent ridge at the Site, as discussed in Section 2.2.2 and shown in Figures 2-5a and 2-5b. The vegetation and ground cover at BG-1 were similar to the Site.

- BG-2 encompassed an area of 1,097 ft^2 (approximately 0.03 acres) and was located 400 ft southeast of the Site. BG-2 was upwind/crosswind and hydrologically cross-gradient from the Site. Geologically, the volcanic vent deposit rocks and colluvium in BG-2 represented the top of the ridge along the east side of the Site, as discussed in Section 2.2.2 and shown in Figures 2-5a and 2-5b. The vegetation and ground cover at BG-2 were similar to the Site.

The potential background reference areas were selected based on *MARSSIM* guidance (i.e., similar geology and ground conditions, upwind of the Site, distance from the Site, etc.) to:

1. Represent undisturbed conditions at the Site (e.g., pre-mining conditions)

2. Provide a basis for establishing the ILs

The approved *RSE Work Plan* did not specify any minimum or maximum size criteria for these areas. Stantec does not view the size of the selected background reference areas as affecting the validity of the background concentrations. The sizes were based on professional judgment that the identified areas were generally representative of the Site.

The background reference areas were selected in areas outside of the Site that were considered to be representative of the general conditions observed at the Site. However, an important consideration is that the background gamma radiation and metals concentrations within soil and bedrock can be variable and often contain a wider range of concentrations than what was measured at the selected background reference areas. The ILs derived from the background reference areas provide a useful reference for comparison to the Site.

3.2.2.3 Biological Surveys

The objective of the biological surveys was to determine if identified species of concern or potential federal or Navajo Nation Threatened and Endangered (T&E) species and/or critical habitat are present on or near the Site. Biological (vegetation and wildlife) clearance was required at the Site before RSE activities could begin, to determine if the RSE activities could affect potential species of concern or federal or Navajo Nation listed T&E species and/or critical habitat. The Site biological evaluation reports, the *NNDFW Biological Resources Compliance Form*, and the US Fish and Wildlife Service (USFWS) consultation email are provided in Appendix E.

The Federal Endangered Species Act (ESA) of 1973, 16 U.S.C. §1531 et seq., requires that each Federal agency confer with the USFWS on any agency action that is likely to jeopardize the continued existence of any proposed T&E species or result in the destruction or adverse modification of critical habitat proposed to be designated for such species 16 U.S.C. §1536(a)(4). An "action area", as defined in the regulations implementing the ESA, includes "all areas to be affected directly or indirectly by the Federal action and not merely the immediate area involved in the action". 50 C.F.R §402.2.

The vegetation and wildlife surveys were conducted according to guidelines of the ESA and the NNDFW-Navajo Natural Heritage Program (NNHP), including the procedures set forth in the Biological Resource Land Use Clearance Policies and Procedures, RCS-44-08 (NNDFW, 2008), the Species Accounts document (NNHP, 2008), and the USFWS survey protocols and recommendations (USFWS, 1996).

Based on the results of the vegetation and wildlife surveys, the NNDFW's opinion was that the RSE Baseline Studies and Site Characterization Activities,

> "with applicable conditions, [were] in compliance with Tribal and Federal laws protecting biological resources including the Navajo Endangered Species and

> Environmental Policy Codes, US Endangered Species, Migratory Bird Treaty, Eagle Protection and National Environmental Policy Acts".

A copy of the *NNDFW Biological Resources Compliance Form* is included in Appendix E. In addition, after the Trust submitted the results of the biological survey, USEPA consulted with John Nystedt of the USFWS on August 26, 2016, and received an email response on August 29, 2016 stating:

> "Based on the information you [Stantec] provided [i.e., there is no habitat for any Federally listed species in the action area], we [the USFWS] believe no endangered or threatened species or critical habitat will be affected by the project; nor is this project likely to jeopardize the continued existence of any proposed species or adversely modify any proposed critical habitat" (Nystedt, 2016).

A copy of the Nystedt email is included in Appendix E. In light of the results of the biological surveys described below, the USFWS recommended no further action from the USFWS for the project unless the project or regulations change, or a new species is listed.

Vegetation Survey - In July 2016, Redente performed a summer vegetation survey as part of the Site Clearance field investigations. Complete details of the vegetation survey, including the *NNDFW Biological Resources Compliance Form*, are included in Appendix E and summarized below.

In preparation for the vegetation survey, Redente submitted data requests for species of concern to the NNDFW and NNHP, and for Federal T&E species, to the USFWS. The NNDFW-NNHP responded to MWH (now Stantec) by letter dated November 19, 2015. The letter provided a list of species of concern known to occur within the proximity of the Site and included their status as either Navajo Nation Endangered Species List (NNESL), and/or Federally Endangered, Federally Threatened, or Federal Candidate. The NNESL species were further classified as G2, G3, or G4[6]. A copy of this letter is included in Appendix E. A spring vegetation survey was not required for the Site because the species of concern data provided by NNDFW-NNHP did not include listed potential plant species that require a spring survey.

The NNDFW listed two T&E plant species that may occur on-site; Arizona rose sage (G4) and Parish's alkali grass (G4). The USFWS did not list any T&E plant species that may occur on-site. Parish's alkali grass is a native annual grass that grows in a series of widely disjunct populations ranging from southern California to eastern Arizona and western New Mexico in alkaline springs, seeps, and seasonally wet areas that occur at the heads of drainages or on gentle slopes at elevations from 2,600 ft to 7,200 ft amsl. Arizona rose sage is a native perennial shrub found in desert shrublands and pinyon-juniper communities on basalt or soils derived from basalt at

[6] G2 classification includes endangered species or subspecies whose prospect of survival or recruitment are in jeopardy, G3 classification includes endangered species or subspecies whose prospect of survival or recruitment are likely to be in jeopardy in the foreseeable future, and G4 classification are "candidates" and includes those species or subspecies which may be endangered but for which sufficient information is lacking to support being listed (refer to Appendix E).

elevations from 5,500 ft to 6,500 ft amsl. The general distribution of Arizona rose sage is within the Apache, Navajo, and Coconino Counties in Arizona with specific Navajo Nation distribution north of Dilkon, Arizona (approximately 16 miles west of the Site).

Before beginning the Site vegetation survey, Redente reviewed the ecologic and taxonomic information for the T&E species to understand ecological characteristics of the species, habitat requirements, and key taxonomic indicators for proper identification (Arizona Native Plant Society, 2000). Redente also reviewed currently accepted resource agency protocols and guidelines for conducting and reporting botanical inventories for special status plant species (USFWS, 1996). Based on the review, Parish's alkali grass was eliminated from further evaluation because there was no potential for it to occur on the Site due to lack of suitable habitat. An experienced Redente botanist with local flora knowledge conducted the rare plant survey. The botanist walked transect lines on the Site with emphasis on areas with suitable habitat for the remaining T&E species (Arizona rose sage), specifically basalt derived soils.

The Redente botanist did not identify Arizona rose sage at the Site, based on observations he made during the on-site survey, even though the Site was a likely habitat for the T&E species. Observed vegetation communities on-site were predominantly desert grassland with sporadic shrubs.

During a Site visit Agency personnel noted the presence of ring-shaped vegetation patterns near the Site. Stantec conferred with an experienced botanist and confirmed that the ring-shaped vegetation is a natural growth pattern, typical of the Muhlenbergia genus. This is a common process in dryland environments as it increases the availability of water to the plants in the circle when water is scarce.

Wildlife Survey - In May 2016, Adkins performed a wildlife evaluation survey as part of the Site Clearance field investigations. The completed wildlife survey, including the *NNDFW Biological Resources Compliance Form*, are included in Appendix E and are summarized below.

Adkins performed the survey under a permit issued by NNDFW for the purpose of assessing habitat potential for ESA-listed or NNESL animal species. Adkins biologists with experience identifying local wildlife species led the field survey, which consisted of walking transects 10 ft apart throughout the Site, including a 100-ft buffer beyond the claim boundary. The surrounding areas were visually inspected with binoculars for nests, raptors, or signs of raptor use.

The wildlife evaluation was performed for species listed as NNESL, Federally Endangered, Federally Threatened, or Federal Candidate, and species protected under the Migratory Bird Treaty Act (MBTA) that have the potential to occur on-site. Prior to the start of the wildlife survey, Adkins submitted data requests to USFWS and NNDFW for animal species listed under the ESA. The NNESL species were further classified as G2, G3, or G4. The USFWS included six ESA-species with the potential to occur in the area of the Site; two birds (California condor, yellow-billed cuckoo), one fish (roundtail chub), two mammals (black-footed ferret, gray wolf), and one reptile (northern Mexican gartersnake). The NNDFW included five birds: mountain plover (G4), golden eagle (G3), ferruginous hawk (G3), American peregrine falcon (G4), and western

burrowing owl (G4). All species on the USFWS list and the mountain plover from the NNDFW list were eliminated from further evaluation because there was no potential for those species to occur on the Site due to lack of suitable habitat. Based on the preparation data, four birds (golden eagle, ferruginous hawk, American peregrine falcon, and western burrowing owl) remained as species of concern warranting further analysis during the Site survey.

In addition, Adkins reviewed species protected under the MBTA that have the potential to occur in the area of the Site. The MBTA review resulted in the potential for identification of 15 bird species in addition to those listed above, known as "Priority Birds of Conservation Concern with the Potential to Occur"[7] in the areas of the Site: black-throated sparrow, Brewer's sparrow, gray vireo, loggerhead shrike, mountain bluebird, mourning dove, sage sparrow, sage thrasher, scaled quail, Swainson's hawk, vesper sparrow, bald eagle, Bendire's thrasher, pinyon jay, and prairie falcon. These 15 MBTA bird species were added for further analysis during the survey for effects to potential habitat.

During the initial survey Adkins determined that a rock formation with steep sandstone cliffs and numerous cavities located approximately 0.25 miles to the south-southeast of the Site may provide potential nesting habitat for golden eagle, ferruginous hawk, American peregrine falcon, active common raven, and prairie falcon. Also during the initial survey, Adkins determined the open gently sloping areas surrounding the Site were a potential habitat for western burrowing owl and observed an active burrowing owl nest approximately 0.16 miles northeast of the Site.

Adkins conducted two follow up surveys also in May 2016, to examine the cliff faces for signs of use. Adkins observed an active common raven nest, an active prairie falcon nest, and several old, inactive nests of unknown species located within the rock formation east of the Site. Adkins determined that the small size of the old nests made it unlikely they belonged to either golden eagle or ferruginous hawk. Also during the follow up surveys, Adkins returned to the active burrowing owl nest to verify the nest status.

The wildlife survey revealed three NNESL species of concern that have the potential to occur within or near the Site based on habitat suitability or actual recorded observation: golden eagle, ferruginous hawk, and western burrowing owl. Based on these findings Adkins recommended seasonal avoidance (during breeding season) of the burrowing owl nest area, where for small groups and pedestrian activity a 0.12 mile buffer was recommended and for large groups, or where machinery will be used, a 0.25 mile buffer was recommended. Adkins also recommended the use of best management practices to protect potential habitat during RSE activities, specifically: (1) confining equipment travel to within the boundaries of the Site; (2) minimizing travel corridors as much as possible; (3) limiting truck and equipment travel within the Site when surfaces are wet and soil may become deeply rutted; and (4) using previously disturbed areas

[7] USFWS, 2008. Birds of Conservation Concern 2008. United States Department of Interior, Fish and Wildlife Service, Division of Migratory Bird Management, Arlington, Virginia. 85 pp.

for travel when possible. The recommended best management practices were followed to protect potential habitat during RSE activities.

3.2.2.4 Cultural Resource Survey

In April 2016, Dinétahdóó conducted a cultural resource survey as part of the Site Clearance field investigations. Navajo Nation Historic Preservation Department (NNHPD) issued a Class B permit to Dinétahdóó on behalf of the Trust to conduct the cultural resource survey. Following the cultural resource survey, the NNHPD issued a Cultural Resources Compliance Form that included a "Notification to Proceed" with RSE field work. A copy of the Cultural Resources Compliance Form is included in Appendix E. According to NNHPD, this form is the equivalent of a "permit" to conduct the work (NNHPD, 2018[8]).

The survey included the areas within the claim boundary and the 100-ft claim boundary buffer, as shown in Figure 2-6. The survey identified seven isolated occurrences. For confidentiality reasons, details regarding the isolated occurrences are not provided herein. NNHPD can be contacted for additional information. NNHPD contact information is located on the *Cultural Resource Compliance Form* included in Appendix E.

Based on the survey findings, Dinétahdóó recommended archaeological clearance for the area it surveyed with the stipulation that RSE activities be halted at any time if cultural resources were encountered. Stantec complied with Dinétahdóó's recommendations while conducting RSE activities on–site. In addition, the USEPA consulted with the NNHPD on August 9, 2016 regarding the survey findings and proposed a finding of "no historic properties present." NNHPD did not respond to USEPA's consultation.

Dinétahdóó also escorted field personnel during: (1) the collection of subsurface soil samples at the background reference areas (refer to Section 3.3.1.1); and (2) during Site Characterization borehole subsurface soil/sediment sample collection in locations outside the 100-ft buffer (refer to Section 3.3.2.2). The Trust and NNHPD agreed that Dinétahdóó's archeologist would be present because the subsurface sample locations were outside of the area originally surveyed during the Site Clearance cultural resource survey.

3.3 SUMMARY OF REMOVAL SITE EVALUATION ACTIVITIES

The RSE activities consisted of two additional tasks following the Site Clearance Activities: Baseline Studies and Site Characterization activities. The Baseline Studies included a Background Reference Area Study, Site gamma survey, and Gamma Correlation Study. The results of the Baseline Studies were used to plan and prepare the Site Characterization field investigations, which included surface and subsurface soil and sediment sampling, and surface water and well water sampling. Results of the RSE activities are presented in Section 4.0. Baseline Studies and Site Characterization activities are summarized in Sections 3.3.1 and 3.3.2, respectively.

[8] Call with Sadie Hoskie, Tamara Billie of NNHPD, and Linda Reeves, June 8, 2018.

3.3.1 Baseline Studies Activities

3.3.1.1 Background Reference Area Study

The Background Reference Area Study activities were completed at the background reference areas selected for the Site. Refer to Section 3.2.2.2 for an explanation of the selection of the background reference areas for the Site. The Background Reference Area Study included a surface gamma survey, static surface and subsurface gamma measurements, surface soil sampling, and subsurface soil sampling. The soil sample locations in the background reference areas were initially selected using a triangular grid, set on a random origin. Where possible, samples were collected at the center points of the triangles. However, in some instances, the actual sample locations had to be moved in the field if sampling was not possible (e.g., the location consisted of exposed bedrock or there was a large bush blocking access). In these cases, the closest accessible location was selected instead.

The background reference areas were selected based on a variety of factors, including *MARSSIM* criteria, which indicated whether the area was representative of unmined locations, regardless of the sizes of the areas. These factors are described in this RSE report and accompanying appendices. The objectives of the background reference area study were to measure gamma radiation levels emitted by naturally occurring, undisturbed uranium-series radionuclides, and concentrations of other naturally occurring constituents. The results were used to establish background gamma levels and concentrations of Ra-226 and specific metals (uranium, arsenic, molybdenum, selenium, and vanadium). The soil sampling locations at the background reference areas are presented in Figure 3-3. Field personnel performed the Background Reference Area Study in accordance with the *RSE Work Plan,* Sections 4.2, 4.4, and 4.5.

The surface gamma surveys at BG-1 and BG-2 were completed in May 2016. ERG performed the surface gamma surveys using Ludlum Model 44-10 2-inch by 2-inch sodium iodide (NaI) high-energy gamma detectors (the detectors). Each detector was coupled to a Ludlum Model 2221 ratemeter/scaler that in turn was coupled to a Trimble ProXRT GPS unit with a NOMAD 900 series datalogger. The detector tagged individual gamma measurements with associated geopositions recorded using the Universal Transverse Mercator Zone 12 North coordinate system. ERG matched and calibrated the detector to a National Institute of Standards and Technology-traceable cesium-137 check source, and function-checked the equipment prior-to and after each workday. ERG performed the surveys by walking the background reference areas with the detector carried by hand, along transects that varied depending on encountered topography. The gamma measurements were collected with the height of the detector varying from 1 ft to 2 ft above ground surface (ags) with an average height of 1.5 ft ags to accommodate vegetation, rocks, or other surface features. If field personnel encountered an immovable obstruction (e.g., a tree) during the surface gamma surveys they went around the obstruction. Subsequent to each workday, ERG downloaded the gamma measurements to a computer and secure server.

The same equipment used for the surface gamma surveys was also used to collect static one-minute gamma measurements at the ground surface and down-hole (subsurface) at borehole locations S852-BG1-011 (BG-1) and S852-BG2-011 (BG-2). Refer to Appendix C.2 for borehole logs. Static gamma measurements were categorized as surface measurements where they were collected at ground surface (0.0 ft) and as subsurface measurements where depths were below ground surface due to the influence of downhole geometric effects on subsurface static gamma measurements (refer to Section 4.1). Gamma measurements were collected according to the methods described in the *RSE Work Plan,* Section 4.2 and Appendix E.

Soil samples collected as part of the background study are detailed in Table 3-2 and sample locations are shown in Figure 3-3. Soil samples were categorized as surface samples where sample depths ranged from 0.0 to 0.5 ft bgs and as subsurface samples where sample depths were greater than 0.5 ft bgs. Field personnel collected the following samples from the background reference areas:

- BG-1 – In October and November 2016, 11 surface soil grab samples were collected from 11 locations and one subsurface soil grab sample from borehole location S852-BG1-011.
- BG-2 – In October and November 2016, 11 surface soil grab samples were collected from 11 locations. The borehole at BG-2 (S852-BG2-011) could not be advanced beyond 0.4 ft bgs due to refusal, so no subsurface samples were collected at BG-2.

The lack of subsurface soil samples from BG-2 will not affect the derivation of Ra-226 or metal ILs because the Ra-226 and metals ILs (i.e., surface and subsurface) were based on surface soil samples (refer to Section 4.1).

Samples were shipped to a USEPA approved laboratory, ALS Environmental Laboratories in Fort Collins, Colorado for analyses. Samples were collected according to the methods described in the *RSE Work Plan,* Section 3.8.1.1. The results of the surface gamma survey, static surface and subsurface gamma measurements, and surface and subsurface soil sample analytical results provided background reference data to guide the Site Characterization surface and subsurface soil and sediment sampling (refer to Section 3.3.2). The Background Reference Area Study results are presented in Section 4.1. The ERG survey report in Appendix A provides further details on the gamma surveys. Field forms, including borehole logs, are provided in Appendix C.1 and C.2.

3.3.1.2 Site Gamma Radiation Surveys

Baseline Studies activities included a surface gamma survey of the Site in accordance with the *RSE Work Plan,* Section 4.2 and Appendix E. The approximate centerlines of the historical roads were surveyed, but the shoulders were not, due to miscommunication with the field personnel. This is identified as a potential data gap in Section 4. 9.

The surface gamma survey was used to evaluate the extent of potential mining-related impacts or areas containing elevated radionuclides associated with uranium mineralization. In addition, surface and subsurface soil and sediment samples, and surface water and well water samples were also collected and used to evaluate mining-related impacts (refer to Section 3.3.2).

In November 2016, the surface gamma survey was performed using the methods and equipment described in Section 3.3.1.1. The surface gamma survey included the claim area, a 100-ft buffer around the claim area, and roads and drainages out to approximately 0.25 miles from the Site. The *RSE Work Plan* specified that the surface gamma survey would be an iterative process where the surface gamma survey would be extended laterally until gamma measurements appeared to be within background levels. Subsequent to each workday, the gamma measurements were evaluated by ERG and Stantec, and compared to the background reference areas to determine if additional surface gamma surveying was needed.

The full areal extent of the surface gamma survey is referred to as the Survey Area, as shown in Figure 3-4. The Survey Area was 32.3 acres and was subdivided into two separate survey areas, as shown in Figure 3-4, based on *MARSSIM* criteria, including different geologic conditions on-site. Survey Area A is within the weathered siltstone and mudstone derived from the Tertiary sedimentary vent deposits west of the volcanic vent ridge at the Site (based on BG-1) and Survey Area B is within the Tertiary volcanic vent deposit rocks and colluvium/residual soil on the top of the ridge along the east side of the Site (based on BG-2).

It was necessary to subdivide the Survey Area based on geologic conditions and present the findings in Section 4.0 based on the subdivision, because geologic formations can have different geochemical compositions (i.e., gamma levels and concentrations of Ra-226, uranium, arsenic, molybdenum, selenium, and vanadium). The surface gamma survey results are presented in Section 4.2. The ERG survey report in Appendix A provides further detailed information on the surface gamma survey.

3.3.1.3 Gamma Correlation Study

Baseline Studies activities included a Gamma Correlation Study in accordance with the *RSE Work Plan,* Section 4.3. The objectives of the Gamma Correlation Study were to determine correlations between the following constituents to use as screening tools for site assessments:

- Gamma measurements (in cpm) and concentrations of Ra-226 in surface soils (in picocuries per gram [pCi/g])
- Gamma measurements (in cpm) and exposure rates (in microRoentgens per hour [µR/hr])

Two regression analyses were conducted for these correlations. The first regression analysis was performed using co-located high-density surface gamma measurements and laboratory concentrations of Ra-226 in surface soils to develop a correlation equation (refer to Section 4.2.2). The correlation equation allows for Ra-226 concentrations in soil and sediment to be estimated (predicted) based on gamma measurements in the field.

This correlation equation was not used in the field to estimate Ra-226 concentrations or to evaluate the extent of Ra-226 concentrations. The correlation was used to develop a site-specific prediction for Ra-226 concentrations from the actual gamma survey data, as presented in Section 4.2.2. The correlation can be used as a site-specific field screening tool during site assessments, using the same gamma survey methods as in this RSE (e.g., walkover gamma

survey) and based on site-specific conditions. The data related to the correlations are provided in Appendices A and C.

The second regression analysis was performed using co-located static one-minute gamma measurements and exposure rates to develop an exposure-rate correlation equation. Exposure rates can be predicted, based on gamma measurements, using the developed exposure-rate correlation equation. The exposure rate correlation also provides a standard by which future gamma measurements can be compared to previous gamma measurements, if those previous gamma measurements were also correlated with exposure. In addition, exposure rates can be used to provide an estimate of gamma radiation levels when an exposure meter is used as a health and safety tool for field personnel working on-site. The exposure rate correlation was not used for Site Characterization. Because the exposure rates are not part of the data analyses for the RSE report, a summary of the exposure rate correlation is not presented in this report. Appendix A provides a discussion of the correlations and the regression equations for both correlations.

In November 2016, field personnel identified five areas for the Gamma Correlation Study, as shown in Figure 3-5, by considering the results of the Site surface gamma survey (described in Section 3.3.1.2), field conditions (e.g., suitable terrain), and feasibility of sampling. To minimize variability when determining a correlation between gamma measurements (in cpm) and concentrations of Ra-226 in soil, the study area soils must: (1) represent a specific gamma measurement within the range of gamma measurements collected at the Survey Area; and (2) be as homogenous as possible with respect to soil type, and gamma measurement within the correlation area. At each area, field personnel completed a high-density surface gamma survey (intended to cover 100 percent of the survey area) and collected one five-point composite surface soil sample per area (refer to Table 3-2). Field personnel made a field modification from the *RSE Work Plan* by adjusting the size of the 900 ft^2 area smaller at three of the Gamma Correlation Study locations, to minimize the variability of gamma measurements observed. The area used for the Gamma Correlation Study is shown in Figure 3-5, where the box shown at the five study locations represents a 900 ft^2 area in comparison to the actual area covered for the study, as shown by the extent of the gamma measurements within each area.

Field personnel collected, logged, classified, packaged, and shipped the samples in accordance with the *RSE Work Plan,* Sections 4.4, 4.9, 4.11, and Appendix E. Soil samples were collected for analyses of Ra-226 and isotopic thorium, as described in the *RSE Work Plan,* Section 3.4.1.

The objectives of the thorium analyses were for site characterization and evaluation of potential effects of thorium on the correlation. The data can be used to assess the potential effects of thorium-232 (Th-232) series radioisotopes on the correlation of gamma measurements to concentrations of Ra-226 in surface soils (i.e., if gamma-emitting radioisotopes in the Th-232 series, such as actinium-228, lead-212, and thallium-208, are impacting gamma measurements at the Site), as discussed in Section 4.2.2. Uranium, radium, and thorium occur in three natural decay series (uranium-238 [U-238], Th-232, and U-235), each of which include significant gamma

emitters (USEPA, 2007b). Therefore, in order to develop a correlation between gamma radiation and Ra-226 concentrations, the gamma radiation from each significant decay series present at the Site, may need to be taken into account. Typically, only U-238, and sometimes Th-232, are present in significant quantities. The contribution from the U-235 decay series to gamma measurements can be excluded because U-235 is only approximately 0.72 percent of the total uranium concentration. If the Th-232 decay series is present in significant quantities, it should be accounted for in the correlation to accurately predict Ra-226 concentrations based on all significant sources of gamma radiation.

3.3.1.4 Secular Equilibrium

The Gamma Correlation Study soil samples (refer to Section 3.3.1.3) were also analyzed for thorium-230 (Th-230), in accordance with the *RSE Work Plan,* Section 3.4.1. The activities of Th-230 and Ra-226 can be compared to evaluate the status of secular equilibrium within the U-238 decay series (USEPA, 2007b). The U-238 decay series is in secular equilibrium when the radioactivity of a parent radionuclide (e.g., U-238) is equal to its decay products (refer to Appendix A). If the U-238 decay series is out of secular equilibrium, the quantities of the daughter products become depleted. This could be considered for potential site assessments (e.g., when evaluating the contribution of the daughter products to the total risk related to U-238 during a human health and/or ecological risk assessment). As part of the RSE, the secular equilibrium evaluation was a general indicator (e.g., screening level assessment) of the status of equilibrium at the sites. It was not used to characterize the extent of constituents of potential concern (COPCs) at the Site. The secular equilibrium evaluation is discussed here only because Th-230 was included in the isotopic thorium analysis.

3.3.2 Site Characterization Activities and Assessment

3.3.2.1 Surface Soil and Sediment Sampling

Site Characterization activities included surface soil and sediment sampling and associated laboratory analyses. The soil and sediment surface sampling locations within the Survey Area were selected based on professional judgment (i.e., non-randomly) to evaluate concentrations of Ra-226 and metals in relation to the surface gamma survey measurements and site features (e.g., historical mining features and geologic features). Based on the surface gamma survey results and site features, a limited number of samples were collected and analyzed where the gamma survey measurements were within background levels, mining and or exploration-related features were not present, and no ground disturbance was observed. The results were compared to the site-specific ILs and published regional concentrations to support the overall evaluation of potential mining impacts (refer to Section 4.3). Soil/sediment samples were categorized as surface samples where sample depths ranged from 0.0 to 0.5 ft bgs and as subsurface samples where sample depths were greater than 0.5 ft bgs. Samples collected in drainages were classified as sediment samples.

In November 2016, samples were collected from the locations shown in Figure 3-6 and are summarized in Table 3-2. Fourteen surface soil/sediment grab samples were collected from each

of the 14 locations in the Survey Area (11 from Survey Area A and three from Survey Area B). Field personnel collected, logged, classified, packaged, and shipped the samples in accordance with the *RSE Work Plan,* Sections 4.4, 4.9, 4.11, and Appendix E. Samples were shipped to ALS Environmental Laboratories in Fort Collins, Colorado for analyses of: Ra-226, uranium, arsenic, molybdenum, selenium, and vanadium, as described in the *RSE Work Plan,* Section 4.13.1. The surface soil and sediment analytical results are presented in Section 4.3. Field forms are provided in Appendix C.1 and the laboratory analytical data, data validation reports, and Data Usability Report for the analyses are provided in Appendix F.

3.3.2.2 Subsurface Soil and Sediment Sampling

Site Characterization activities included subsurface soil and sediment sampling and associated laboratory analyses. Similar to the surface soil/sediment sampling discussed in Section 3.3.2.1, subsurface sampling locations were selected based on professional judgment (i.e., non-randomly) to evaluate concentrations of Ra-226 and metals in relation to the surface gamma survey measurements and site features (e.g., historical mining features and geologic features). Grab samples were collected with the intent to characterize specific intervals of interest (e.g., material within zones with elevated static gamma measurements). Additionally, surface and subsurface static gamma measurements were collected in the borehole using the same equipment as described in Section 3.3.1.1. Static gamma measurements were collected by holding the detector in the borehole for a one-minute integrated count and are not comparable to the surface gamma survey measurements, which were collected as a walkover survey.

Eight boreholes (six in Survey Area A and two in Survey Area B) were advanced through the unconsolidated deposits (from 0.5 ft to 2.0 ft bgs; refer to Table 3-2 and Appendix C.2) until borehole refusal on a hard surface, cobbles, or bedrock. Field personnel manually advanced the subsurface boreholes to a desired sample depth by using a 3-inch diameter hand auger. The boreholes were advanced through sand and silt, with varying amounts gravel (refer to Appendix C.2 for borehole information). A drill rig was not employed at the Site because mining-related disturbances were not observed at the Site.

In November 2016, samples were collected from the locations shown in Figure 3-6 and are summarized in Table 3-2. Eight subsurface soil/sediment grab samples were collected from seven borehole locations in the Survey Area (multiple subsurface samples were collected from borehole S852-SCX-002). Seven samples were collected from Survey Area A and one from Survey Area B.

Field personnel logged, classified, packaged, and shipped the samples in accordance with the *RSE Work Plan,* Sections 4.5, 4.9, 4.11, and Appendix E. Samples were shipped to ALS Environmental Laboratories in Fort Collins, Colorado for analyses of Ra-226, uranium, arsenic, molybdenum, selenium, and vanadium, as described in the *RSE Work Plan,* Section 4.13.1. The subsurface analytical results are presented in Section 4.3. Field forms, including borehole logs showing static gamma measurements and Ra-226 analytical results, are provided in

Appendix C.2. The laboratory analytical data, data validation reports, and Data Usability Report for the analyses are provided in Appendix F.

3.3.2.3 Surface Water and Well Water Sampling

Two potential water features (i.e., surface water and water wells) were identified during the Site Clearance desktop study and one water feature (an overflow pond) was identified during site mapping, as shown in Figure 2-1 and Table 3-1a. Two of the three water features were sampled as detailed below.

On October 20, 2016, a well water sample (S852-WL-001) was collected from the water well identified as 07T-517 in the NNDWR database and the *2007 AUM Atlas*. Water well 07T-517 was completed in November 1958 at a total depth of 137 ft bgs, and was screened from 44.5 ft to 67 ft bgs (refer to Table 3-1b for additional well build specifications). Water well 07T-517 was a windmill well located 0.40 miles northeast from the Site. Water from the well was pumped into a water tank and a pipe was fed from the water tank to an animal trough. Refer to Appendix B photograph number 6. The pipe had a valve on the end and the valve could be opened to fill the trough. To collect the well water sample field personnel opened the valve and collected the well water sample directly from the flow coming out of the valve, prior to the water pouring into the trough. The water tank and water well were not accessible to field personnel for them to collect the well water sample from either of these locations. The water within the trough was representative of the well water that community members used for livestock.

On November 8, 2016, a surface water sample (S852-WS-001) was collected from the pond identified by Stantec as S852-Pond-1. The pond was an overflow pond associated with water well 07T-517. The pond was located approximately 80 ft southwest of the water well. A second pipe (overflow pipe) was connected to the water tank associated with water well 07T-517 and the pond was fed from this overflow pipe. Field personnel collected the pond sample directly from the overflow pond.

Field personnel visited the location of TEST H T35 and no well or borehole was observed. The field personnel also spoke to nearby residents who stated that no well exists in that area.

The water samples collected for dissolved metals analyses were sampled and field filtered using a peristaltic pump, Teflon® tubing, and 0.45-micron inline filter in the field at the time of sample collection per the *RSE Work Plan*, Section 4.6.1. All other analyses did not require in-field filtering. The samples were collected, packaged, and shipped in accordance with the *RSE Work Plan,* Sections 4.6, 4.9, 4.11, and Appendix E. ACZ Laboratories, Inc. in Steamboat Springs, Colorado conducted the mercury analysis and ALS Environmental Laboratories in Fort Collins, Colorado conducted all other analyses including Ra-226 and Radium-228 (Ra-228), adjusted gross alpha, and the following total and dissolved metals: antimony, arsenic, barium, beryllium, cadmium, chromium, cobalt, copper, lead, molybdenum, nickel, selenium, silver, thallium, uranium, vanadium, and zinc.

Additional general water quality analyses or field measurements included: total dissolved solids (TDS), anions (carbonate, bicarbonate, chloride, and sulfate), cations (sodium and calcium), and field measurements (pH, conductivity, turbidity, temperature, salinity, and oxidation reduction potential). Table 3-3 provides a summary of the water analyses. Per the *RSE Work Plan*, if well water or surface water sample analyte concentrations are above the established ILs then those sample areas would be considered for additional characterization in the future. Surface water and well water analytical results are presented in Section 4.8. Field forms are provided in Appendix C.3 and the laboratory analytical data and Data Usability Report for the analyses are provided in Appendix F. Investigation of groundwater is not included in the scope of this RSE.

3.3.3 Identification of TENORM Areas

Areas at the Site where TENORM is present were identified using multiple lines of evidence including:

1. Historical Data Review
    a. Aerial photographs
    b. USAEC records (do not exist for the Site)
    c. Reclamation records (do not exist for the Site)
    d. Other documents relevant to the Site, including those in the *2007 AUM Atlas*
    e. Interviews with residents living closest to the Site (for those sites where residents were available for interview)
    f. Consultation and site visits with NAML staff to identify reclamation features, for those sites reclaimed by NAML (does not exist for the Site)
2. Geology/Geomorphology
    a. Hydrology/transport pathways with drainage delineation
    b. Site-specific geologic mapping including areas of mineralization
    c. Topography
3. Disturbance Mapping
    a. Exploration (does not exist for the Site)
    b. Mining (does not exist for the Site)
    c. Reclamation (does not exist for the Site)

4. Site Characterization

    a. Surface gamma surveys and subsurface static gamma measurements

    b. Soil and sediment sampling and analyses

Any areas where TENORM was not observed are considered to contain NORM, because soil and/or rock at the Site contain some amount of natural uranium and its daughter products. This area was explored for mining because of the high levels of naturally occurring uranium ore. The areas containing NORM are presented in Section 4.6.

3.4 DATA MANAGEMENT AND DATA QUALITY ASSESSMENT

This section summarizes the data management and data quality assessment activities performed for the RSE.

3.4.1 Data Management

The DMP included in the *RSE Work Plan* describes the plan for the generation, validation, and distribution of project data deliverables. Successful data management comes from coordinating data collection, quality control, storage, access, reduction, evaluation, and reporting. A summary of the data management activities performed as part of the RSE process included:

- **Database** – Field-collected and laboratory analytical RSE data were stored in an Oracle SQL relational database, which increased data handling efficiency by using previously developed data entry, validation, and reporting tools. The Oracle SQL database was also used to export project data to a tabular format that can be used in a spreadsheet (e.g., Excel) and to the USEPA Scribe database format.

- **Scribe** – The Stantec Data Manager/Data Administrator was responsible for meeting the project data transfer requirements from the Oracle SQL database to Scribe, which is a software tool developed by the USEPA's Environmental Response Team to assist in the process of managing environmental data. Stantec maintained an Oracle SQL database and exported data from the Oracle SQL database to a Scribe compatible format following completion of each field investigation phase. Custom data queries and "crosswalk" export routines were built in Oracle SQL, to facilitate data export to the Scribe database format with the required frequency.

- **Geographic Information System (GIS)** – Spatial data collected during the RSE (e.g., sample locations and gamma measurements) were stored in a dedicated File Geodatabase for use in the project GIS. The geodatabase format enforces data integrity, version control, file size compression, and ease of sharing to preserve GIS output quality. Periodic geodatabase backups were performed to identify accidentally deleted or otherwise corrupt information that were then repaired or recovered, if applicable.

3.4.2 Data Quality Assessment

The QAPP, included in the *RSE Work Plan*, Appendix B, was followed for RSE data quality assessment, where the QAPP presents QA/QC requirements designed to meet the RSE DQOs. Data quality refers to the level of reliability associated with a particular data set or data point. The Data Usability Report included in Appendix F.1 provides a summary of the data quality assessment activities and qualified data for the RSE. A summary of findings, from the data quality assessment, are included below.

- **Data Verification** – The data were verified to confirm that standard operating procedures (SOPs) specified in the *RSE Work Plan* and *FSP* were followed and that the measurement systems were performed in accordance with the criteria specified in the QAPP. Any deviations or modifications from the *RSE Work Plan* are described in the appropriate RSE report sections. The USEPA definition (USEPA, 2002) for data verification is provided in the glossary.

- **Data Validation** – The data were validated to confirm that the results of data collection activities support the objectives of the RSE as documented in the QAPP. The data quality assessment process was then applied using the validated data and determined that the quality of the data satisfies the intended use. The USEPA definition (USEPA, 2002) for data validation is provided in the glossary. A copy of the Data Usability Report is included in Appendix F.1 and a summary of the validation results is presented below:

    - **Precision** Based on the matrix spike/matrix spike duplicate (MS/MSD) sample, laboratory control sample/laboratory control sample duplicate (LCS/LCSD) sample, laboratory duplicate sample, and field duplicate results, the data are precise as qualified.

    - **Accuracy** Based on the initial calibration (ICAL), initial calibration verification (ICV), continuing calibration verification (CCV), MS/MSD, and LCS, the data are accurate as qualified.

    - **Representativeness** Based on the results of the sample preservation and holding time evaluation, the method and initial/continuing calibration blank (ICB/CCB) sample results, the field duplicate sample evaluation, and the reporting limit evaluation, the data are considered representative of the Site as qualified.

    - **Completeness** All media and QC sample results were valid and collected as scheduled (i.e., as planned in the *RSE Work Plan*); therefore, completeness for these is 100 percent.

    - **Comparability** Standard methods of sample collection and standard units of measure were used during this project. The analyses performed by the laboratory were in accordance with current USEPA methodology and the QAPP.

Based on the results of the data validation, all data are considered valid as qualified.

4.0 FINDINGS AND DISCUSSION

4.1 BACKGROUND REFERENCE AREA STUDY RESULTS AND CALCULATION OF INVESTIGATION LEVELS

The results of the background reference area surface gamma survey are shown in Figure 4-1a with sample locations in the background reference areas shown for BG-1 and BG-2 on Figures 4-1b and 4-1c, respectively. Analytical results of the samples collected from BG-1 and BG-2 are summarized in Table 4-1. The gamma measurements and surface soil sample analytical results collected from BG-1 and BG-2 were evaluated statistically to calculate ILs (refer to Appendix D) for each corresponding Survey Area (i.e., Survey Area A and Survey Area B, respectively). As previously discussed in Section 3.3.1.2, the Site was subdivided into two separate Survey Areas based on the geologic formations on-site.

Statistical evaluation of the gamma measurements and soil sample analytical results included identifying potential outlier values, interpreting boxplots and probability plots, comparing group means between the background reference areas and the respective Survey Area data, and calculating descriptive statistics for each of the background reference areas. The descriptive statistics included the 95 percent upper confidence limit (UCL) on the mean gamma measurements and Ra-226/metals concentrations, and the 95-95 upper tolerance limits (UTLs). The data were analyzed using R statistical programming packages and ProUCL 5.1 software (USEPA, 2016c).

The DQOs presented in the RSE Work Plan indicate that the ILs would be developed using the 95 percent UCL on the mean of the background sample results. However, the 95-95 UTL was used as the basis for the ILs instead because it better reflects the natural variability in the background data and lends itself to single-point comparisons to the Survey Area data. This was a change from the *RSE Work Plan*, as agreed upon with the Agencies, prior to the change. The UTL represents a 95 percent UCL for the 95th percentile of a background dataset whereby Survey Area results above this value are not considered representative of background conditions. The UTL is a statistical parameter for the entire population of the variable, whereas the actual results are from a sample of the population. UTLs were calculated in accordance with USEPA's *ProUCL 5.1 Technical Guidance*, Sections 3.4 and 5.3.3 (USEPA, 2015). Appendix D presents a comprehensive discussion on the derivation of the ILs for the Site, which are presented below. The *RSE Work Plan* also stated that gamma radiation measurements from the background surface and subsurface soil would be combined to develop the IL for surface gamma radiation at the Site. However, the surface gamma radiation ILs were instead developed from the surface gamma survey data only. The Agencies have commented that this should be noted as a deviation from the *RSE Work Plan*. The subsurface static gamma measurements were excluded from the derivation of the surface gamma IL for two reasons: (1) they were collected using a different method (static one-minute measurements versus a walkover gamma survey); and

(2) because of the downhole geometric effects that influence subsurface static gamma measurements (refer to the discussion of geometric effects below).

The ILs for Survey Area A (i.e., the weathered siltstone and mudstone derived from the Tertiary sedimentary vent deposits west of the volcanic vent ridge at the Site; refer to Figures 2-5b and 3-4) were established using statistical analysis of background data collected from BG-1 (refer to Figure 3-3) and are as follows:

- Arsenic 23.1 milligram per kilogram (mg/kg)
- Molybdenum 45.0 mg/kg
- Selenium 31.9 mg/kg
- Uranium 16.0 mg/kg
- Vanadium 141 mg/kg
- Ra-226 5.48 pCi/g
- Surface gamma measurements – 15,388 cpm

The ILs for Survey Area B (i.e., the Tertiary volcanic vent deposit rocks and colluvium/residual soil on the top of the ridge along the east side of the Site; refer to Figures 2-5b and 3-4) were established using statistical analysis of background data collected from BG-2 (refer to Figure 3-3) and are as follows:

- Arsenic 14.9 mg/kg
- Molybdenum 98.0 mg/kg
- Selenium 3.11 mg/kg
- Uranium 3.17 mg/kg
- Vanadium 66.5 mg/kg
- Ra-226 2.46 pCi/g
- Surface gamma measurements – 17,702 cpm

It is important to note that comparisons to the IL (i.e., 1.5 times the IL) are provided for context, and evaluations of: (1) areas of the Site; (2) samples or; (3) TENORM that exceed the ILs, which are based on the statistically derived IL values.

In addition to the surface gamma survey performed in background reference areas, subsurface static gamma measurements were collected in the boreholes completed at BG-1 and BG-2. These measurements were used to establish a subsurface static gamma screening levels for

Survey Areas A and B. Where possible, the selected subsurface static gamma screening level value for Survey Areas A and B met the following criteria: (1) it was the lowest value measured at or below 1 ft bgs and (2) it was not directly measured on bedrock. The subsurface static gamma screening levels from BG-1 and BG-2 provides a comparison and assessment tool for Survey Areas A and B and are included as ILs for the Site.

However, it is important to consider that the subsurface static gamma IL is based on a single measurement, and it is not statistically derived. For this reason, subsurface static gamma IL exceedances should be considered in conjunction with additional lines of evidence including: (1) down-hole trends of static gamma measurements; (2) changes in lithology within the borehole; and (3) a qualitative comparison of subsurface static gamma measurements to Ra-226 and/or metals concentrations in subsurface samples.

Subsurface static gamma measurements from BG-1 and BG-2 are summarized in Table 4-2 and in Appendix C.2. Two subsurface static gamma measurements were evaluated to identify the subsurface static gamma IL for Survey Area A. Measurements of 16,859 and 19,407 cpm were collected from BG-1 borehole S852-BG1-011, at down-hole depths of 0.5 and 0.75 ft bgs, respectively. The lowest measured value (16,859 cpm) was selected as the subsurface static gamma IL for Survey Area A. The BG-1 lowest measured value was collected at 0.5 ft bgs. However, this measurement may be more representative of unconsolidated material than the higher measurement of 19,407 cpm (collected at 0.75 ft bgs), which was collected at the interface of unconsolidated material and bedrock. One subsurface static gamma measurement of 17,287 cpm was collected from BG-2 borehole S852-BG2-011 and was selected as the subsurface static gamma IL for Survey Area B.

It is important to consider that the subsurface static gamma IL measurements may be elevated relative to the surface gamma IL because increases in static gamma measurements with depth can result from the detector being in closer proximity to bedrock that has naturally elevated concentrations of radionuclides, and/or geometric effects. Geometric effects are the result of the detector measuring gamma radiation from all directions, regardless of whether it is in a borehole or suspended in air. Gamma radiation measured with the detector held at the ground surface is primarily from the ground beneath the detector. As the detector is advanced down the borehole it measures gamma radiation from the surrounding material emanating from an increasing number of angles. Therefore, as the detector is lowered in the borehole it will generally measure increasingly higher values to a certain depth given a constant source. At approximately 1 ft to 2 ft bgs, the detector is essentially surrounded by solid ground and further increases related to borehole geometry are not expected. Because downhole geometric effects influence static gamma measurements just below ground surface, static gamma measurements collected at or greater than 0.1 ft bgs are considered subsurface.

Due to the differing geometric effects, surface static gamma measurements at borehole locations may only be qualitatively compared to subsurface static gamma measurements, and the subsurface static gamma IL does not apply to the surface static gamma measurements. Instances where the surface static gamma measurement is greater than subsurface static

gamma measurements suggest higher levels of radionuclides and may be indicative of the presence of TENORM at the surface, but additional lines of evidence are generally needed to support that conclusion.

The Site gamma measurements, and soil and sediment sample analytical results were compared to their respective ILs to confirm COPCs (refer to Section 4.4) and to identify areas of the Site where ILs are exceeded (refer to Section 4.5). The calculated ILs provide a line of evidence to evaluate potential mining-related impacts.

4.2 SITE GAMMA RADIATION SURVEY RESULTS AND PREDICTED RADIUM-226 CONCENTRATIONS

4.2.1 Site Gamma Radiation Results

4.2.1.1 Surface Gamma Survey

Results of the Site surface gamma survey are shown in Figure 4-1a where the calculated surface gamma ILs for each background reference area are used to set bin ranges with color coding to illustrate the spatial extent and patterns of surface gamma measurements within the entire Survey Area. The bins ranges were based on the minimum site gamma measurement, the background reference area ILs, and the maximum site gamma measurement. The maximum survey measurement was 115,157 cpm, which was greater than six times the maximum IL (i.e., BG-2 IL of 17,702 cpm), and was measured within the volcanic vent deposits (refer to Figure 4-1c).

The spatial distribution of surface gamma measurements and IL exceedances are shown in Figures 4-1b and 4-1c for Survey Areas A and B, respectively. Surface gamma measurements were generally highest in two areas: (1) along the north and northeastern extent of Survey Area A and associated with the weathered siltstone and mudstone deposits west of the volcanic vent ridge; and (2) within Survey Area B and associated with the volcanic vent deposits along the east side of the Site. Elevated gamma measurements on the northeast area of the Site outside the claim boundary near the home-site are located on a slope and may be associated with surface-water or wind transport of mineralized materials originating from a small area to the north and the volcanic vent ridge.

Three potential data gaps were identified for the surface gamma survey, as listed below:

1. The gamma survey was not extended laterally northeast and east of the Site until gamma measurements were within the background level because of professional judgement that the area was not mining impacted.

2. The approximate centerlines of the historical roads were surveyed, but the shoulders were not, due to miscommunication with the field personnel.

3. The gamma survey was not extended laterally from the upper portion of the drainage south of the Site where gamma measurements were greater than the IL as the result of an oversight.

4.2.1.2 Subsurface Gamma Survey

Surface and subsurface static gamma measurements were collected at all eight borehole locations. Surface and subsurface static gamma measurement locations are shown in Figures 4-1b and 4-1c for Survey Areas A and B, respectively. Measurements and corresponding measurement depths are provided in Table 4-2 and are shown on the borehole logs in Appendix C.2. Surface and subsurface static gamma measurements from the boreholes are presented below by Survey Area:

- Survey Area A – The subsurface static gamma IL (16,859 cpm) was exceeded in soil/sediment in five of the six boreholes in Survey Area A. The subsurface gamma IL was not exceeded at borehole S852-SCX-005 (terminated at 0.75 ft bgs due to refusal on bedrock). Locations where subsurface static gamma measurements exceeded the IL were located along the north and northeastern extent of Survey Area A or downgradient from this extent. These locations were associated with the weathered siltstone and mudstone west of the volcanic vent ridge. The maximum subsurface static measurement in Survey Area A (159,636 cpm) was measured in soil at 0.71 ft bgs in borehole S852-SCX-006, located on the volcanic vent ridge. In general, surface and subsurface static gamma measurements were less than five times the IL and increased with depth.

- Survey Area B – The subsurface static gamma IL (17,287 cpm) was exceeded in soil in both boreholes in Survey Area B. Locations where subsurface static gamma measurements exceeded the IL were associated with the volcanic vent deposits along the east side of the Site. The maximum subsurface static measurement in Survey Area B (409,042 cpm) was measured in soil at 0.5 ft bgs in borehole S852-SCX-002, located on the volcanic vent ridge and west of the watershed divide (refer to Figure 4-1c). In general, surface and subsurface static gamma measurements were greater than 10 times the IL. Subsurface static gamma measurements increased with depth at borehole S852-SCX-008 and initially increased with depth then decreased with depth at borehole S852-SCX-002.

4.2.2 Gamma Correlation Results

The high-density surface gamma measurements and concentrations of Ra-226 in surface soils obtained from the Gamma Correlation Study (refer to Section 3.3.1.3) were used to develop a correlation equation, using regression analysis, between the mean gamma measurements and Ra-226 concentrations measured in the co-located composite surface soil samples. This correlation is meant to be used as a general screening tool, and provides approximate predicted Ra-226 concentrations.

Analytical results of the correlation samples, which were used to develop the correlation equation, are presented in Table 4-3. The mean value of the gamma survey results from the correlation plots, with their corresponding Ra-226 concentrations and a graph showing the linear regression line and adjusted Pearson's Correlation Coefficient (R^2) value for the correlation, are

shown in Figure 4-2a. The regression produced an adjusted R^2 value of 0.82 which is within the acceptance criterion of 0.8 to 1.0 described in the *RSE Work Plan* and indicates that surface gamma results correlate with Ra-226 concentrations in soil. The correlation model may have been influenced by the limited number of correlation sample locations. Users of the regression equation should be aware of the limitations of the dataset and be cautious when estimating Ra-226 concentrations. The correlation equation to convert gamma measurements in cpm to predicted surface soil Ra-226 concentrations in pCi/g for the Site is:

$$\text{Gamma (cpm)} = 655 \times \text{Surface Soil Ra-226 (pCi/g)} + 14{,}592$$

The predicted Ra-226 concentrations in soil, as calculated from the gamma measurements using the developed correlation equation, are shown in Figure 4-2a. Ra-226 concentrations predicted using gamma measurements lower than the minimum (9,067 cpm) and greater than the maximum (47,049 cpm) mean gamma measurements from the Gamma Correlation Study are extrapolated from the regression model and are therefore uncertain. Using the correlation equation, the predicted Ra-226 concentration associated with the minimum mean gamma measurement is -8.4 pCi/g and the concentration associated with the maximum mean gamma measurement is 49.6 pCi/g. Therefore, predicted Ra-226 concentrations less than -8.4 pCi/g and greater than 49.6 pCi/g should be limited to qualitative use only. Negative values for Ra-226 are a function of the linear regression equation and are not physically possible. The correlation locations were intentionally selected to be focused on the lower range of gamma measurements observed at the Site. Mean gamma measurements for correlation locations ranged from 9,067 to 47,049 cpm. The correlation was focused on the lower range because future Removal or Remedial Action decisions are more critical at lower Ra-226 concentrations where the limits of remediation may be defined.

The correlation equation predicted Ra-226 concentrations that were less than zero for gamma survey measurements below 14,592 cpm. The predicted Ra-226 concentrations are shown in Figure 4-2a and the values less than zero are primarily located outside the area of the volcanic vent ridge. The elevated predicted Ra-226 concentrations occur in the same areas where the elevated surface gamma measurements occur (refer to Section 4.2.1). This is because the predicted Ra-226 concentrations are based on a correlation with the gamma measurements. Predicted Ra-226 concentrations in the Survey Area range from -13.8 to 153.5 pCi/g, with a mean of 1.2 pCi/g, and a standard deviation of 10.0 pCi/g. Bin ranges in Figure 4-2a are based on these mean and standard deviation values.

The gamma correlation was not used for the Site Characterization, which instead relied on actual gamma radiation measurements and soil analytical results. However, predicted Ra-226 concentrations were compared to the Ra-226 laboratory concentrations measured in surface soil samples collected at surface and borehole locations, as shown in Figure 4-2b. The correlation results were also compared to investigation levels, as shown in Figure 4-2c. Per the Agencies, these comparisons can be used for site characterization and are one of many analyses that can be used to interpret the data (NNEPA, 2018a).

When comparing the predicted Ra-226 concentrations to the Ra-226 laboratory concentrations, soil/sediment sample locations are generally not co-located with specific gamma measurement locations (refer to Figure 4-2b). Therefore, the measured Ra-226 laboratory concentrations can only be qualitatively compared to the nearby predicted Ra-226 concentrations. At 11 of the 18 sample locations, the measured Ra-226 laboratory concentrations were within the applicable predicted Ra-226 bin ranges. For four of the seven sample locations where laboratory Ra-226 concentrations did not fall within the applicable predicted Ra-226 bin range, the predicted Ra-226 concentrations were lower than the Ra-226 laboratory concentrations. At the remaining three locations predicted Ra-226 concentrations were higher than the Ra-226 laboratory concentrations. Most of these sample locations had Ra-226 laboratory concentrations and predicted Ra-226 concentrations that were within approximately one standard deviation (10.0 pCi/g) of each other. However two sample locations (S852-CX-004 and -SCX-008) had notable differences between the predicted and laboratory Ra-226 concentrations; the Ra-226 laboratory concentration at S852-SCX-008 was lower than the predicted value and the laboratory Ra-226 concentration at -CX-004 was higher than the predicted Ra-226 value. Both locations were located within Survey Area A and near the contact with the volcanics. In general, the differences observed between the predicted and actual Ra-226 values at the Site are likely a function of the natural heterogeneity in Ra-226 concentrations and gamma radiation measurements. This natural heterogeneity affects the correlation based on the five Gamma Correlation Study areas, and the predicted values, based on the subsequent gamma measurements.

The predicted Ra-226 concentrations were also compared to the Ra-226 ILs from each Survey Area, as shown in Figure 4-2c. The symbols for surface sample locations and boreholes where Ra-226 concentrations in surface soil/sediment samples exceeded the IL are highlighted with yellow halos. The predicted Ra-226 concentrations exceeded the Ra-226 ILs for the areas of the Site directly adjacent to and within the volcanics. In addition, for every soil/sediment sample location within the area where the predicted Ra-226 concentrations exceeded the ILs, the surface sample contained Ra-226 concentrations that exceeded the Ra-226 IL. The area of the Site where predicted Ra-226 values exceeded the ILs is compared to surface gamma IL exceedances in Section 4.5.

The correlation soil samples were also analyzed for thorium isotopes Th-232 and Th-228. The objectives of the thorium analyses were to assess the potential effects of Th-232 series radioisotopes on the correlation of gamma measurements to concentrations of Ra-226 in surface soils (i.e., to evaluate whether gamma-emitting radioisotopes in the Th-232 series are impacting gamma measurements at the Site). The justification for the analysis is provided in Section 3.3.1.3. A multivariate linear regression (MLR) model was performed by ERG to relate the gamma count rate to multiple soil radionuclides simultaneously. The MLR and results are described extensively in Appendix A. ERG identified that the thorium series radionuclides do not affect the prediction of concentrations of Ra-226 from gamma survey measurements at the Site.

4.2.2.1 Secular Equilibrium Results

The activities of Th-230 and Ra-226 were compared to consider whether the uranium series is in secular equilibrium at the Site (refer to Section 3.3.1.4 and Appendix A). A linear regression was performed on the dataset (refer to Appendix A Figure 9). The p-value for the regression slope is significant (i.e., $p < 0.05$) and the adjusted R^2 meets the study DQO (adjusted $R^2 > 0.8$), indicating that Ra-226 and Th-230 exist in equilibrium. However, when compared to a y=x line (this line represents a perfect 1:1 ratio between Th-230 and Ra-226, indicating secular equilibrium), the y=x line falls partially outside of the 95% UCL bands of the Th-230/Ra-226 regression, indicating Ra-226 and Th-230 are not in secular equilibrium at the Site (refer to figures in Appendix A). This may be a consideration in the future if a human health and/or ecological risk assessment is performed.

4.3 SOIL METALS AND RADIUM-226 ANALYTICAL RESULTS

A total of 14 surface soil/sediment grab samples (10 soil and four sediment) from 14 locations and eight subsurface soil/sediment grab samples (five soil and two sediment) from seven borehole locations were collected at the Site (refer to Table 3-2). The metals and Ra-226 analytical results for each Survey Area are compared to their respective ILs and presented in Tables 4-4a and 4-4b. Figure 4-3 presents the spatial patterns, both laterally and vertically, of metals and Ra-226 detections and IL exceedances in the soil/sediment samples.

Ra-226 and/or metals concentrations exceeded their respective ILs in 10 of 14 surface soil/sediment samples and six of 8 subsurface soil/sediment samples within the Survey Area. The maximum Ra-226 and metals concentrations were detected in samples collected from the area associated with the volcanic vent deposits on the top and just downgradient of the ridge along the east side of the Site. Surface and subsurface soil/sediment IL exceedances for each analyte are described below. Presented sample counts include normal samples and do not include duplicate samples.

- Ra-226
    - Survey Area A - the Ra-226 IL (5.48 pCi/g) was exceeded in seven of 11 surface soil/sediment samples and three of five subsurface soil/sediment samples from five boreholes. Survey Area A Ra-226 concentrations ranged from 1.41 to 44 pCi/g and the maximum concentration was in a subsurface soil sample collected from borehole S852-SCX-007 at a depth of 0 to 0.9 ft bgs. The highest concentrations occurred in samples collected from the area west of the watershed divide line and associated with the weathered siltstone and mudstone west of the volcanic vent ridge at the Site.
    - Survey Area B - the Ra-226 IL (2.46 pCi/g) was exceeded in three of three surface soil samples and three of three subsurface soil samples from two boreholes. Survey Area B Ra-226 concentrations ranged from 66.9 to 445 pCi/g and the maximum concentration was in a surface soil sample collected from S852-SCX-002, concentrations notably decreased in the subsurface samples at this location. The highest concentrations

occurred in samples collected from the area west of the watershed divide line and associated with the volcanic vent deposits along the east side of the Site.

- Uranium
  - Survey Area A - the uranium IL (16.0 mg/kg) was exceeded in three of 11 surface soil/sediment samples and two of five subsurface soil/sediment samples from two boreholes. Survey Area A uranium concentrations ranged from 3 to 84 mg/kg and the maximum concentration was in a subsurface soil sample collected from borehole S852-SCX-007 at a depth of 0 to 0.9 ft bgs. The highest concentrations occurred in samples collected from the area west of the watershed divide line and associated with the weathered siltstone and mudstone west of the volcanic vent ridge at the Site.
  - Survey Area B - the uranium IL (3.17 pCi/g) was exceeded in three of three surface soil samples and three of three subsurface soil samples from two boreholes. Survey Area B uranium concentrations ranged from 96 to 370 mg/kg and the maximum concentration was in a surface soil sample collected from S852-SCX-002, concentrations notably decreased in the subsurface samples at this location. The highest concentrations occurred in samples collected from the area west of the watershed divide line and associated with the volcanic vent deposits along the east side of the Site.

As a broader point of reference, a regional study of the Western US documented uranium concentrations in soil that ranged from 0.68 to 7.9 mg/kg, with a mean value of 2.5 mg/kg (USGS, 1984). Uranium concentrations exceeded the maximum the regional value in 15 out 22 Survey Area soil/sediment samples.

- Arsenic
  - Survey Area A - the arsenic IL (23.1 mg/kg) was exceeded in four of 11 surface soil/sediment samples and three of five subsurface soil/sediment samples from five boreholes. Survey Area A arsenic concentrations ranged from 5.4 to 44 mg/kg and the maximum concentration was in a surface soil sample collected from S852-CX-004. The highest concentrations occurred in samples collected from the area west of the watershed divide line and associated with the weathered siltstone and mudstone west of the volcanic vent ridge at the Site.
  - Survey Area B - the arsenic IL (14.9 mg/kg) was exceeded in three of three surface soil samples and three of three subsurface soil samples from two boreholes. Survey Area B arsenic concentrations ranged from 28 to 170 mg/kg and the maximum concentration was detected in two locations: a surface soil sample collected from S852-CX-009 and a subsurface soil sample collected from borehole S852-SCX-008 at a depth of 0 to 0.8 ft bgs. Concentrations in samples collected at S852-SCX-002 notably decreased 73 mg/kg in the surface sample to 28 mg/kg in the sample collected from 1.0 to 1.5 ft bgs. The highest concentrations occurred in samples collected from the area west of the watershed divide line and associated with the volcanic vent deposits along the east side of the Site.

As a broader point of reference, a regional study of the Western US documented arsenic concentrations in soil that ranged from less than 0.10 to 97 mg/kg, with a mean value of 5.5

mg/kg (USGS, 1984). Arsenic concentrations were within the typical range of regional values in 20 of 22 Survey Area soil/sediment samples and exceeded the maximum the regional value in 2 soil samples.

- Molybdenum
    - Survey Area A - the molybdenum IL (45.0 mg/kg) was exceeded in five of 11 surface soil/sediment samples and was not exceeded in any of the five subsurface soil/sediment samples collected from five boreholes. Survey Area A molybdenum concentrations ranged from 8.6 to 250 mg/kg and the maximum concentration was in a surface soil sample collected from S852-SCX-004. The highest concentrations occurred in samples collected from the areas east of and west of the watershed divide line and associated with the weathered siltstone and mudstone west of the volcanic vent ridge at the Site.
    - Survey Area B - the molybdenum IL (98.0 mg/kg) was exceeded in two of three surface soil samples and two of three subsurface soil samples from one borehole. Survey Area B molybdenum concentrations ranged from 69 to 1200 mg/kg and the maximum concentration was in a surface soil sample collected from S852-SCX-002, concentrations notably decreased in the subsurface samples at this location. The highest concentrations occurred in samples collected from the area west of the watershed divide line and associated with the volcanic vent deposits along the east side of the Site.

As a broader point of reference, a regional study of the Western US documented molybdenum concentrations in soil that ranged from less than 3 to 7 mg/kg, with a mean value of 0.85 mg/kg (USGS, 1984). Molybdenum concentrations exceeded the maximum the regional value in all Survey Area soil/sediment samples.

- Selenium
    - Survey Area A - the selenium IL (31.9 mg/kg) was not exceeded in any of the surface or subsurface soil/sediment samples. Survey Area A selenium concentrations ranged from 0 to 6.5 mg/kg and the maximum concentration was in a subsurface soil sample collected from borehole S852-SCX-007 at a depth of 0 to 0.9 ft bgs. The highest concentrations occurred in samples collected from the area west of the watershed divide line and associated with the weathered siltstone and mudstone west of the volcanic vent ridge at the Site.
    - Survey Area B - the selenium IL (3.11 mg/kg) was exceeded in three of three surface soil samples and three of three subsurface soil samples from two boreholes. Survey Area B selenium concentrations ranged from 3.5 to 5.5 mg/kg and the maximum concentration was in a surface soil sample collected from S852-SCX-002. The highest concentrations occurred in samples collected from the area west of the watershed divide line and associated with the volcanic vent deposits along the east side of the Site.

As a broader point of reference, a regional study of the Western US documented selenium concentrations in soil that typically ranged from less than 0.10 to 4.3 mg/kg, with a mean value of 0.23 mg/kg (USGS, 1984). Selenium concentrations were within the typical range of regional

values in 19 of 22 Survey Area soil/sediment samples and exceeded the maximum the regional value in 3 soil samples.

- Vanadium
    - Survey Area A - the vanadium IL (141.0 mg/kg) was not exceeded in any of the surface or subsurface soil/sediment samples. Survey Area A vanadium concentrations ranged from 6.8 to 46 mg/kg and the maximum concentration was in a subsurface soil sample collected from borehole S852-SCX-007 at a depth of 0 to 0.9 ft bgs. The highest concentrations occurred in samples collected from the area west of the watershed divide line and associated with the weathered siltstone and mudstone west of the volcanic vent ridge at the Site.
    - Survey Area B - the vanadium IL (66.5 mg/kg) was not exceeded in any of the surface or subsurface soil/sediment samples. Survey Area B vanadium concentrations ranged from 36 to 50 mg/kg and the maximum concentration was in a surface soil sample collected from S852-CX-009. The highest concentrations occurred in samples collected from the area west of the watershed divide line and associated with the volcanic vent deposits along the east side of the Site.

As a broader point of reference, a regional study of the Western US documented vanadium concentrations in soil that ranged from 7 to 500 mg/kg, with a mean value of 70 mg/kg (USGS, 1984). Vanadium concentrations were within the typical range of regional values in the Survey Area soil/sediment samples.

Of note, mineralized rocks associated with the Hopi Butte diatremes tend to have low-grade deposits of uranium and high molybdenum, selenium, and arsenic concentrations (Chenoweth and Malan, 1973 and Shoemaker et al., 1962). Therefore, the Survey Area A and B exceedances of ILs for these analytes aligns with the presence of mineralized rock (i.e., NORM).

4.4 CONSTITUENTS OF POTENTIAL CONCERN

Based on the results presented in Sections 4.2 and 4.3, arsenic, molybdenum, uranium, and Ra-226 concentrations in soil, and gamma radiation measurements, exceed their respective ILs in both Survey Areas A and B and are confirmed as COPCs for the Site. In addition, selenium concentrations in soil exceed the selenium IL and selenium is also confirmed as a COPC for the Site.

4.5 AREAS THAT EXCEED THE INVESTIGATION LEVELS

The approximate lateral extent of surface gamma IL exceedances in soil/sediment is 13.7 acres, as shown in Figure 4-4a. To estimate this area, polygons were contoured around portions of the Site that had multiple, contiguous surface gamma IL exceedances and then the total area within the polygons was calculated. Figures 4-4b and 4-4c show larger scale views of each of the two Survey Areas to better display those areas with multiple, contiguous surface gamma IL exceedances. Two sample locations within Survey Area B (S852-CX-009 and -SCX-008) were not

co-located with surface gamma measurements that exceeded the surface gamma IL. Static gamma measurements and Ra-226, arsenic, and uranium concentrations at these locations were greater than 10 times their respective ILs.

Figure 4-5 shows the vertical extent of IL exceedances in each borehole by incorporating information from each location, including: (1) depth to bedrock; (2) total borehole depth; and (3) depth range of IL exceedances. Table 4-5 lists the IL exceedances identified at each borehole location and Figure 4-5 also shows the surface gamma IL exceedances for reference.

IL exceedances in metals and Ra-226 concentrations at surface and subsurface sample locations were typically, but not always co-located with surface gamma survey measurements and/or subsurface static gamma measurements that also exceeded their ILs. Variations occur due to natural variability and the different field methods. For example, a small piece of mineralized rock or petrified wood may have been collected in a soil sample but may not have been detected by the gamma meter in the gamma survey due to distance from the meter, the depth below ground surface, or because the gamma meter measures radiation over a larger area than the discrete soil sample location.

The lateral extent of the IL exceedances (for surface gamma data) shown in Figure 4-4a were compared to the predicted Ra-226 concentrations that exceeded ILs in Figure 4-2c. Predicted Ra-226 concentrations exceeded the Ra-226 IL in a smaller area of the Site than the surface gamma IL exceedances. Surface gamma IL exceedances covered approximately one half of the Site while predicted Ra-226 exceedances covered 30 to 40 percent of the Site. One notable difference was that surface gamma measurements exceeded the IL in portions of the drainage that starts near sample S852-CX-006 (refer to Figure 3-6) where the predicted Ra-226 concentrations did not exceed the IL.

4.6 AREAS OF TENORM AND NORM

A multiple lines of evidence approach was used to evaluate the Site and distinguish if TENORM is present within the Survey Area, as described in Section 3.3.3. Based on this evaluation, there is no TENORM present at the Site, and the IL exceedances are considered NORM.

The RSE data that supports the conclusion that there is no TENORM at the Site includes:

- Historical Data Review Conclusion
    - Local residents that were interviewed stated that they were the leaseholders for the Site sometime between 1950 and 1960 and during that time period they had a dispute with two men interested in the mine site after the two men had staked and surveyed the mine area (Dinétahdóó, 2016). The residents stated that the dispute prevented any mining from occurring at the Site. However, they did remember some drilling activities occurring at the Site to test the quality of the ore.
    - Historical document review indicated exploration workings on-site consisted of exploration rim stripping (also referred to as a small prospect pit) on the northwest rim of

the diatreme and six rotary boreholes drilled along the eastern rim of the diatreme. The drilling results suggested that the Site was not favorable for generating economically viable ore in a mineable configuration (Wenrich-Verbeek et al., 1980 and 1982).

- Historical document review indicated the Site was reported as an inactive, raw prospect that had no uranium production (Wenrich-Verbeek et al., 1982).
- Historical document review indicated no ore was shipped from the Site (Wenrich-Verbeek et al., 1982).

- Geology/geomorphology
  - Bedrock at the Site consisted of mineralized rocks associated with the Hopi Butte diatremes, which tend to have low-grade deposits of uranium and high molybdenum, selenium, and arsenic concentrations, all of which are confirmed COPCs for the Site. Additionally, portions of the Site consisted of shallow or outcropping bedrock. Therefore, the geology and geomorphology of the Site was conducive to the presence of NORM at or near the ground surface.

- Disturbance Mapping –
  - Field personnel did not observe features on-site indicative of historical mining or historical exploration activities, and there was no observable evidence of the rim stripping reported by Chenoweth (1990) or the six rock sample locations and six exploratory rotary boreholes reported by Wenrich-Verbeek, et al. (1980 and 1982). The exact locations of the boreholes or where the rim stripping may have occurred are unknown.
  - The Trust provided information to the Agencies regarding the lack of observable evidence related to the historical mining or historical exploration activities at the Site during an in-person meeting in Window Rock, AZ on July 30, 2018 and through subsequent email communications. Following review of information provided by the Trust, the Agencies provided the following information: (1) because field personnel did not observe any ground disturbances at the Site that were indicative that drilling occurred, and the Trust was unable to identify coordinates for borehole locations or a figure that shows the locations of boreholes, "…agencies conclude that the potential rock samples locations should not be identified as TENORM." and (2) "However, this statement might be reconsidered in future after finding of exact location of six boreholes as indicated in Wenrick [*sic*]-Verbeek, 1980 and 1982 documents." (NNEPA, 2018b)[9].

- Site Characterization
  - No waste rock that would be evidence of rim stripping or drilling was observed in any of the boreholes that were advanced at this Site, and none was observed at the ground surface.

[9] NNEPA, 2018b. Letter from the Navajo Nation Environmental Protection Agency to Sadie Hoskie, Trustee. Subject: Agency Response to Navajo Nation AUM Environmental Response Trustee-First Phase Request for Hoskie Tso No.1 Potential Exploration Area. September 7, 2018.

- Exceedances of ILs in the Survey Area can be attributed to bedrock at the Site consisting of mineralized rocks associated with the Hopi Butte diatremes, which tend to have low-grade deposits of uranium and high molybdenum, selenium, and arsenic concentrations, all of which are confirmed COPCs for the Site.

4.7 TENORM VOLUME ESTIMATE

The results of the RSE activities and the lines of evidence summarized in Section 4.6 indicate that there is no TENORM at the Site.

4.8 SURFACE WATER AND WELL WATER ANALYTICAL RESULTS

The surface water and well water samples collected as part of the Site Characterization activities were analyzed for the constituents listed in Section 3.3.2.3. Two of the three potential water features were sampled. The locations of these water features are shown in Figure 2-1 and included the following:

- Water well 07T-517 (sample S852-WL-001) located approximately 0.40 miles northeast of the Site
- Overflow pond S852-Pond-1 (sample S852-WS-001) located 80 ft southwest of water well 07T-517

The analytical results from these samples were compared to the water ILs, which are defined as the lowest value from the following regulations/standards: the National Secondary Drinking Water Regulations (NSDWR), the Navajo Nation Surface Water Quality Standards, the Navajo Drinking Water maximum contaminant levels (MCLs), and/or the National Primary Drinking Water Regulations. The water ILs are shown in Table 4-6a and the analytical results compared to the water ILs are shown in Table 4-6b.

Analytical results indicated that the sample from water well 07T-517 (S852-WL-001) exceeded the arsenic, TDS, chloride, and sulfate ILs. Arsenic, chloride, and sulfate concentrations were all less than 2.0 times their respective ILs and TDS was 2.8 times the IL. Analytical results indicated that the sample from the overflow pond S852-Pond-1 (S852-WS-001) exceeded the arsenic, uranium, TDS, chloride, and sulfate ILs. Uranium and chloride concentrations were less than 2.0 times their respective ILs, arsenic concentrations were 2.5 times the IL, TDS concentrations were 6.0 times the IL, and sulfate concentrations were 3.6 times the IL. In addition, the pH of the well water sample was 8.44 and the pH of the overflow pond was 9.58, which was indicative of basic conditions. Based on these results arsenic, TDS, chloride, and sulfate are confirmed COPCs for water well 07T-517 and arsenic, uranium, TDS, chloride, and sulfate are confirmed COPCs for the overflow pond.

However, because the results of the RSE investigations indicate that no mining occurred at the Site, it is likely that the IL exceedances in the well water and pond are the result of natural processes (i.e., contact with mineralized bedrock) and are not related to historical mining

activities. To further support this conclusion, Wenrich-Verbeek et al. (1982) reported that high-uranium-bearing spring and well waters occur sporadically throughout the Hopi Buttes region and that the diatremes are the major aquifer in the region. Wenrich-Verbeek et al. (1982) also reported that the high concentrations of uranium in groundwater, in the Hopi Buttes region, is attributed to the carbonate lake-bed sediments within the diatremes. It should be noted that the high pH measured in water from the water well and the overflow pond may be attributable to the geochemical composition of the carbonate lake-bed sediments within the diatremes, which can contribute to basic conditions. The laboratory analytical data and Data Usability Report are provided in Appendix F.

4.9 POTENTIAL DATA GAPS AND SUPPLEMENTAL STUDIES

4.9.1 Data Gaps

Three potential data gaps were identified based on the Site Clearance and RSE data collection and analyses for the Site. These data gaps can be considered for subsequent evaluations in support of future Removal or Remedial Action evaluations at the Site.

1. The gamma survey was not extended laterally northeast and east of the Site until gamma measurements were within the background level due to professional judgement that the area was not mining impacted. Because there is no evidence that mining occurred at the Site (other than minor exploration) that would result in TENORM being present, it may not be necessary to extend the gamma survey.

2. Only the approximate centerlines of the historical roads were surveyed. The road shoulders were not surveyed due to a miscommunication with the field team.

3. The gamma survey was not extended laterally from the upper portion of the drainage south of the Site where gamma measurements were greater than the IL as the result of an oversight.

4.9.2 Supplemental Studies

Following review of the RSE report data and discussions with the Agencies, a limited number of items were identified for supplemental work to be considered for subsequent evaluations in support of future Removal or Remedial Action evaluations at the Site, as follows:

1. Additional correlation studies may be needed to refine the relationship between gamma and Ra-226.

2. The USEPA identified that there were potential discrepancies between the NNDWR database used for this study (received from NNDWR in 2016) and a 2018 version of the NNDWR database that the USEPA reviewed. It is recommended that the two databases be compared (with additional field work, if necessary) to confirm the locations of water features.

5.0 SUMMARY AND CONCLUSIONS

This report details the purpose and objectives, field investigation activities, findings, and conclusions of the Site Clearance and RSE activities conducted for the Site between October 2015 and November 2016. The Site is known as the Hoskie Tso No.1 site and is also identified by the USEPA as AUM identification #852 in the *2007 AUM Atlas*.

The primary objective of this RSE is to provide data required to evaluate relevant site conditions. The purpose of the RSE data (e.g., the review of relevant information and the collection of historical data) is to determine the volume of TENORM at the Site in excess of ILs. ILs are based on the background gamma measurements (in cpm), and Ra-226 and metals concentrations, determined through statistical analyses, that are used to evaluate potential mining-related impacts. The RSE included historical data review, visual observations, surface gamma surveys, surface and subsurface static gamma measurements, and soil/sediment sampling and analyses. Surface water and well water samples were also collected as part of the RSE to evaluate potential mining-related impacts. An estimate of areas containing TENORM was made based on an evaluation of the RSE information/data and multiple lines of evidence. The correlation between gamma measurements (in cpm) and concentrations of Ra-226 in surface soils (pCi/g) was developed as a potential field screening tool for future Removal or Remedial Action evaluations. The gamma correlation was not used for the Site Characterization, which relied instead on the actual gamma radiation measurements and soil/sediment analytical results. However, predicted Ra-226 concentrations were compared to the actual Ra-226 laboratory results and ILs from the surface soil/sediment samples at the Agencies' request.

Based on the historical document review for the Site, the following is known about historical exploration activities at the Site: (1) exploration workings on the Site consisted of exploration rim stripping (also referred to as a small prospect pit) on the northwest rim of the diatreme; (2) no ore was shipped from the Site; (3) six rotary boreholes were drilled on-site and the results suggested the Site was not favorable for generating economically viable ore in a mineable configuration.; and (4) the Site was reported as an inactive, raw prospect that had no cumulative uranium production. In addition, field personnel did not observe evidence of the exploratory rim stripping or the six NURE rock samples and six exploratory rotary boreholes. Based on the historical documentation review, observations made by field personnel (i.e. no evidence of waste piles of soil or rock related to mining activities was present at the Site), and record that no ore was shipped from the Site, it is concluded that no active mining occurred at the Site and only minor exploration occurred at the Site.

Two potential background reference areas were considered. The same two background reference areas (BG-1 and BG-2) were selected to develop surface gamma, Ra-226, and metals ILs for the two Survey Areas (Survey Area A and B) at the Site. Subsurface static gamma ILs were also identified for Survey Area A and Survey Area B.

Arsenic, molybdenum, uranium, and Ra-226 concentrations in soil, and gamma radiation measurements, exceed their respective ILs and are confirmed as COPCs for Survey Area A. Arsenic, molybdenum, selenium, uranium, and Ra-226 concentrations in soil, and gamma radiation measurements, exceed their respective ILs and are confirmed as COPCs for Survey Area B.

The Gamma Correlation Study indicated that surface gamma survey results correlate with Ra-226 concentrations in soil. Therefore, gamma surveys could be used during site assessments as a field screening tool to estimate Ra-226 concentrations in soil, where sampling or gamma surveys are not available. Additional correlation studies may be needed to refine the relationship between gamma and Ra-226.

Surface gamma measurements and Ra-226 and metals concentrations were generally highest in two areas: (1) along the north and northeastern extent of Survey Area A and associated with the weathered siltstone and mudstone west of the volcanic vent ridge at the Site; and (2) within Survey Area B and associated with the volcanic vent deposits along the east side of the Site. The maximum gamma survey measurement was 115,157 cpm, which was more than six times the maximum IL and occurred within the volcanic vent deposits. The highest Ra-226 and metals concentrations were detected in samples collected from the area associated with the volcanic vent deposits along the east side of the Site. Surface and subsurface soil/sediment IL exceedances for each analyte are described below.

Based on the data analyses performed for this RSE report along with the multiple lines of evidence, no TENORM was present at the Site.

Well water and surface water samples were collected from one windmill well (07T-517) and one surface water over flow pond (S852-Pond-1). Analytical results indicated that the sample from water well 07T-517 (S852-WL-001) exceeded the arsenic, TDS, chloride, and sulfate ILs. Arsenic, chloride, and sulfate concentrations were all less than 2.0 times their respective ILs and TDS was 2.8 times the IL. Analytical results indicated that the sample from the overflow pond S852-Pond-1 (S852-WS-001) exceeded the arsenic, uranium, TDS, chloride, and sulfate ILs. Uranium and chloride concentrations were less than 2.0 times their respective ILs, arsenic concentrations were 2.5 times the IL, TDS concentrations were 6.0 times the IL, and sulfate concentrations were 3.6 times the IL. In addition, the pH of the well water sample was 8.44 and the pH of the overflow pond was 9.58, which was indicative of basic conditions. Based on these results arsenic, TDS, chloride, and sulfate are confirmed COPCs for water well 07T-517 and arsenic, uranium, TDS, chloride, and sulfate are confirmed COPCs for the overflow pond. However, because the results of the RSE investigations indicate that no mining occurred at the Site, it is assumed that the IL exceedances and high pH in the well water and pond are the result of natural processes (i.e., contact with mineralized bedrock) and are not related to historical mining activities or human disturbance of naturally occurring uranium-bearing minerals

Three potential data gaps were identified based on the Site Clearance and RSE data collection and analyses for the Site, as listed in Section 4.9.

6.0 ESTIMATE OF REMOVAL SITE EVALUATION COSTS

The Hoskie Tso No. 1 RSE was performed in accordance with the requirements of the *Trust Agreement* to characterize existing site conditions. Project costs related to the RSE include the planning and implementation of the scope of work stipulated in the *Site Clearance Work Plan* and *RSE Work Plan,* and community outreach. Stantec's costs associated with the Hoskie Tso No. 1 RSE were $456,555. In addition, Administrative costs provided by the Trust were estimated currently at $191,500[10,11]. Administrative costs will change due to continued community outreach and close out activities.

[10] This cost is based on an approved budget of May 8, 2018; Administrative work, including community communications, are not yet complete.
[11] Administrative costs were averaged across all Sites.

7.0 REFERENCES

American Heritage Dictionary, 2016®. American Heritage Dictionary of the English Language, Fifth edition. Published by Houghton Mifflin Harcourt Publishing Company.

Arizona Native Plant Society, 2000. Arizona Rare Plant Field Guide. US Government Printing Office. Washington, D.C.

BING® Maps, 2018. BING Maps imagery web mapping service [Webpage] located at https://www.bing.com/maps. Accessed June 2018.

Chenoweth, W.L. and Malan, R.C., 1973. The Uranium Deposits of Northeastern Arizona. US Atomic Energy Commission Grand Junction, Colorado. June.

Chenoweth, W.L. 1990. The Geology and Production History of the Morale Uranium Mine, Hopi Buttes Area, Navajo County, Arizona: Arizona Geological Survey contributed Report CR-90D, p. 14. July.

Dinétahdóó Cultural Resource Management, 2016. DCRM 2016-08 A Cultural Resources Inventory of Two Abandoned Uranium Mines (Hoskie Tso No. 1 and Boyd Tisi No. 2) in Indian Wells and Cameron Chapter, Navajo Nation. August.

Encyclopedia Britannica, 2017. [Webpage] located at https://www.britannica.com/place/Colorado-Plateau. Accessed June 05, 2017.

English Oxford Dictionary, 2018. [Webpage] located at https://en.oxforddictionaries.com/definition/geomorphology. Accessed January 16, 2018.

ESRI World Imagery Map Service, 2018. [Webpage] located at (http://www.esri.com/data/imagery. June.

Glossary of Mining Terms, 2018. [Webpage] located at http://www.coaleducation.org/glossary.htm. Accessed March 2018.

Hendricks, T.J., 2001. An Aerial Radiological Survey of Abandoned Uranium Mines in the Navajo Nation. Overview of Acquisition and Processing Methods used for Aerial Measurements of Radiation Data for the USEPA by the US Department of Energy under IAG DW 8955235-01-5. Survey conducted in Arizona, New Mexico, Utah.

Kiver, E.P. and Harris, D.V., 1999. Geology of US Parklands (5th ed.). John Wile & Sons. ISBN0-471-33218-6.

MWH, now part of Stantec Consulting Services Inc. (formerly MWH Americas, Inc.) (MWH), 2016a. Site Clearance Work Plan, Navajo Nation Abandoned Uranium Mines Environmental Response Trust. April.

MWH, 2016b. Navajo Nation AUM Environmental Response Trust – First Phase Removal Site Evaluation Work Plan. October.

MWH, 2016c. Hoskie Tso No. 1 Site Clearance Data Report – Revision 1, Navajo Nation Abandoned Uranium Mines Environmental Response Trust. December 2016.

Navajo Abandoned Mine Lands Reclamation Department (NAML), 2002. The Navajo Nation Navajo Abandoned Mine Lands Reclamation Program Central Navajo Abandoned Mine Lands (AML) Reclamation Project Proposal Documents. June.

National Park Service, 2017. [Webpage] located at https://science.nature.nps.gov/im/units/scpn/climate/climate.cfm. Accessed 2017 August 21.

Navajo Nation Department of Fish and Wildlife (NNDFW), 2008. Biological Resource Land Use Clearance Policies and Procedures, RCS-44-08. September 10.

Navajo Nation Division of Natural Resources (NNDNR), 2006. GIS Section; Navajo Nation BIA Agency, Grazing, and Chapter Boundaries. Map. February.

Navajo Nation Environmental Protection Agency (NNEPA), 2015. September 2015 Public Comment Draft-Navajo Nation Surface Water Quality Standards.

NNEPA, 2018a. Letter and Agency Feedback on Navajo Nation AUM Environmental Response Trustee – First Phase Responses to Comments on the Draft Final Hoskie Tso No.1 RSE Report. February 13, 2018.

NNEPA, 2018b. Letter from the Navajo Nation Environmental Protection Agency to Sadie Hoskie, Trustee. Subject: Agency Response to Navajo Nation AUM Environmental Response Trustee-First Phase Request for Hoskie Tso No.1 Potential Exploration Area. September 7, 2018.

Navajo Natural Heritage Program (NNHP), 2008. *Species Accounts*, Navajo Nation Endangered Species List, version 3.08.

Navajo Nation Historic Preservation Department (NNHPD), 2016. The Navajo Nation Permit Package 2016, Section Three: Fieldwork, Report Standard and Guidelines.

NNHPD, 2018. Call with Sadie Hoskie, Tamara Billie of NNHPD, and Linda Reeves, June 8, 2018.

Navajo National Primary Drinking Water Regulations (NNPDWR), 2015. Part II: Maximum Contaminant Levels Navajo NNPDWR. http://navajopublicwater.org/NNPDWR2.html. Accessed 2015 September 14.

Natural Resources Conservation Service (NRCS), 2017. [Webpage] located at https://websoilsurvey.nrcs.usda.gov/app/. Accessed 2017 April 10.

Nystedt, J., 2016. "Re: Navajo Nation AUM Environmental Response Trust--First Phase." E-mail Message to Justin Peterson (Stantec). November 07. (Included in Appendix E of this RSE report)

Peirce, H.W., S.B. Keith, and J.C. Wilt, 1970. *Coal, Oil, Natural Gas, Helium, and Uranium in Arizona*. The Arizona Bureau of Mines Bulletin 182.

Scarborough, R.B., 1981. Radioactive Occurrences and Uranium Production in Arizona, Final Report. Arizona Bureau of Geology and Mineral Technology Geological Survey Branch, Tucson, Arizona. p. 155.

Schaetzl, R., and Thompson, M.L., 2015. Soils: Genesis and geomorphology. 2nd ed. Cambridge Univ. Press, Cambridge, UK.

Shoemaker, E.M., C.H. Roach, and F.M. Byers, Jr., 1962. Diatremes and Uranium Deposits in the Hopi Buttes, Arizona, in Petrographic studies-a volume in honor of A. F. Buddington: New York, Geol. Soc. America, p. 327-355.

Stantec Consulting Services Inc. (Stantec), 2017. Hoskie Tso No. 1 Site Baseline Studies Field Report. May.

Ulrich, G.E., Billingsley, R.H., Wolfe, E.W., Nealey, L.D., and Sutton, R.L., 1984. Geologic Map: Map Showing Geology, Structure, and Uranium Deposits of the Flagstaff 1°x2° Quadrangle, Arizona.

United States (US), 2015. Settlement Agreement between the United States of America and the Navajo Nation, April 8. USGS National Geologic Map Database. [Webpage] located at https://ngmdb.usgs.gov. Accessed February 23, 2017.

US Department of Energy, 2011. Fernald Preserve 2010 Site Environmental Report. Doc. No. S07409. Page vi. May.

US Environmental Protection Agency (USEPA), 1992. National Oil and Hazardous Substances Pollution Contingency Plan. Publication 9200.2-14. January.

USEPA, 2000. Multi-Agency Radiation Survey and Site Investigation Manual (MARSSIM), EPA 402-R-97-016, Rev. 1.

USEPA, 2002. Guidance on Environmental Data Verification and Data Validation. EPA QA/G-8, November.

USEPA, 2006. Guidance on Systematic Planning Using the Data Quality Objectives Process, EPA/240/B- 06/001, February.

USEPA, 2007a. Abandoned Uranium Mines and the Navajo Nation. Navajo Nation AUM Screening Assessment Report and Atlas with Geospatial Data. Prepared for U.S. Environmental Agency, Region 9 through an Interagency Agreement with U.S. Army Corps of Engineers. Prepared by TerraSpectra Geomatics in cooperation with Navajo Nation Environmental Protection Agency and Navajo Abandoned Mine Lands Reclamation Program. August.

USEPA, 2007b. Technologically Enhanced Naturally Occurring Radioactive Materials From Uranium Mining, Volumes I and II (EPA 402-R-05-007).

USEPA, 2013. Federal Actions to Address Impacts of Uranium Contamination in the Navajo Nation – Five Year Plan Summary Report, January.

USEPA, 2015. ProUCL Version 5.1 Technical Guide, Statistical Software for Environmental Applications for Data Sets with and without Nondetect Observations, September. https://www.epa.gov/sites/production/files/2016-05/documents/proucl_5.1_tech-guide.pdf

USEPA, 2016a. "Table of Regulated Drinking Water Contaminants", Groundwater and Drinking Water. 7 June 2016. Web 6 June 2016. https://www.epa.gov/ground-water-and-drinking-water/table-regulated-drinking-water-contaminants. Accessed 2016 June 7.

USEPA, 2016b. "Table of Secondary Drinking Water Standards", Secondary Drinking Water Standards: Guidance for Nuisance Chemicals. https://www.epa.gov/dwstandardsregulations/secondary-drinking-water-standards-guidance-nuisance-chemicals. Accessed 7 June.

USEPA, 2016c. ProUCL 5.1.00 Software.

USEPA, 2017. Technologically Enhanced Naturally Occurring Radioactive Materials (TENORM). [Webpage] located at https://www.epa.gov/radiation/technologically-enhanced-naturally-occurring-radioactive-materials-tenorm. Accessed July 19, 2017

US Fish and Wildlife Service (USFWS). 1996. Guidelines for Conducting and Reporting Botanical Inventories for Federally Listed, Proposed, and Candidate Plants. Sacramento Fish and Wildlife Office, Sacramento, California.

USFWS, 1998. Final Endangered Species Act (ESA) Section 7 Consultation Handbook, March 1998. https://www.fws.gov/endangered/esalibrary/ pdf/esa_section7_handbook.pdf

USFWS, 2008. Birds of Conservation Concern 2008. United States Department of Interior, Fish and Wildlife Service, Division of Migratory Bird Management, Arlington, Virginia. 85 pp.

US Geological Survey (USGS), 1984. Element Concentrations in Soils and Other Surficial Materials of the Conterminous United States. US Geological Survey Professional Paper 1270.

USGS, 2003. Flow Origin, Drainage Area, and Hydrologic Characteristics for Headwater Streams in the Mountain top Coal-Mining Region of Southern West Virginia, 2000-01.

USGS, 2016. EarthExplorer [Webpage] located at https://earthexplorer.usgs.gov/. Accessed January 2016.

Wenrich, K.J. and Mascarenas, J.F., 1982. Maps Showing Uranium-Bearing Diatremes of the Hopi Buttes, Arizona.

Wenrich-Verbeek, K.J., C.S. Spirakis, G.H. Billingsley, R. Hereford, L.D. Nealey, G.E. Ulrich, E.R. Verbeek, and E.W. Wolfe, 1980. National Uranium Resource Evaluation, Flagstaff quadrangle, Arizona: Preliminary Report. January.

Wenrich-Verbeek, K.J., C.S. Spirakis, G.H. Billingsley, R. Hereford, L.D. Nealey, G.E. Ulrich, E.R. Verbeek, and E.W. Wolfe, 1982. National Uranium Resource Evaluation, Flagstaff quadrangle, Arizona: US Department of Energy Final Report PGJ-014(82).

Western Regional Climate Center, 2017. [Webpage] located at http://www.wrcc.dri.edu/cgi-bin/cliMAIN.pl?az1634. Accessed 2017 January 23.

Weston Solutions, Inc., 2012. Navajo Abandoned Uranium Mine Site Screen Report, Hoskie Tso No. 1, April.

World Heritage Encyclopedia, 2017. [Webpage] located at
http://www.worldheritage.org/article/WHEBN0014241395/Mineralization%20(geology)
Accessed December 28, 2017

TABLES

Table 3-1a
Identified Potential Water Features
Hoskie Tso No.1
Removal Site Evaluation Report - Final
Navajo Nation AUM Environmental Response Trust - First Phase

Identified Water Feature	Source of Identified Water Feature	Water Feature Identification	Field Sample Identification	Field Personnel Observations
Windmill Well	2007 AUM Atlas[1], NNDWR	07T-517	S852-WL-001	Windmill well, water tank, water trough, and pond were observed at this location. Water sample (S852-WL-001) was collected from the valve at the trough on October 20, 2016. Of note, the *2007 AUM Atlas* coordinates for this location are 0.22 miles to the north west of the actual observed location made by field personnel. The location presented on Figure 2-1 is where field personnel observed the water well was located.
Well - Pond	Stantec/Trust	S852-Pond-1	S852-WS-001	Overflow pond associated with 07T-517 well. This location was sampled as part of the RSE on November 8, 2016, sample location ID S852-WS-001.
No Feature	2007 AUM Atlas[1], NNDWR	Test H T35	NA	Field personnel visited the location of TEST H T35 and no well or borehole was present. Personnel also spoke to nearby residents who stated that no well exists in that area.

Notes
AUM - abandoned uranium mine
ID - identification
NA - Water feature not sampled
NNDWR - Navajo Nation Department of Water Resources
[1] USEPA, 2007a

Table 3-1b
Water Well Specifications for 07T-517
Hoskie Tso No. 1
Removal Site Evaluation Report - Final
Navajo Nation AUM Environmental Response Trust - First Phase

Description	Water Well Information
Tribal Well Number	07T-517
Easting[1]	585759.87
Northing[1]	3916291.2
Operator	Tribe Operations and Maintenance
Well Completed Date	11/6/1958
Elevation (ft amsl)	5670
Well Depth (ft bgs)	137
Well Type	Water Well
Well Status	Active
Well Use	Domestic
Well Borehole Diameter (inches)	10
Well Casing Diameter (inches)	8
Top of Well Casing (ft bgs)	0
Bottom of Well Casing (ft bgs)	67
Well Build Material	Unknown
Top of Well Screen Perforation (ft bgs)	44.5
Bottom of Well Screen Perforation (ft bgs)	67

Notes
ft - feet
ft amsl - feet above mean sea level
ft bgs - feet below ground surface
[1] Coordinate System: NAD 1983 UTM Zone 12N

Table 3-2
Soil and Sediment Sampling Summary
Hoskie Tso No. 1
Removal Site Evaluation Report - Final
Navajo Nation AUM Environmental Response Trust - First Phase

Sample Location	Sample Depth (ft bgs)	Sample Media	Sample Category	Sample Collection Method	Survey Area	Sample Date	Easting[1]	Northing[1]	Sample Types Metals, Total	Ra-226	Thorium
Background Reference Area Study - Background Area 1											
S852-BG1-001	0 - 0.5	soil	SF	grab	NA	10/20/2016	585307.46	3915373.96	N;FD	N;FD	--
S852-BG1-002	0 - 0.5	soil	SF	grab	NA	10/20/2016	585307.67	3915377.65	N	N	--
S852-BG1-003	0 - 0.5	soil	SF	grab	NA	10/20/2016	585305.25	3915379.54	N	N	--
S852-BG1-004	0 - 0.5	soil	SF	grab	NA	10/20/2016	585302.06	3915378.22	N	N	--
S852-BG1-005	0 - 0.5	soil	SF	grab	NA	10/20/2016	585299.62	3915380.22	N	N	--
S852-BG1-006	0 - 0.5	soil	SF	grab	NA	10/20/2016	585296.27	3915379.42	N	N	--
S852-BG1-007	0 - 0.5	soil	SF	grab	NA	10/20/2016	585293.69	3915381.43	N	N	--
S852-BG1-008	0 - 0.5	soil	SF	grab	NA	10/20/2016	585294.13	3915384.45	N	N	--
S852-BG1-009	0 - 0.5	soil	SF	grab	NA	10/20/2016	585291.63	3915386.98	N	N	--
S852-BG1-010	0 - 0.5	soil	SF	grab	NA	10/20/2016	585300.77	3915374.88	N	N	--
S852-BG1-011	0 - 0.5	soil	SF	grab	NA	11/15/2016	585301.10	3915380.37	N	N	--
S852-BG1-011	0.5 - 0.8	soil	SB	grab	NA	11/15/2016	585301.10	3915380.37	N	N	--
Background Reference Area Study - Background Area 2											
S852-BG2-001	0 - 0.5	soil	SF	grab	NA	10/20/2016	585428.32	3915441.20	N;FD	N;FD	--
S852-BG2-002	0 - 0.5	soil	SF	grab	NA	10/20/2016	585429.99	3915442.43	N	N	--
S852-BG2-003	0 - 0.5	soil	SF	grab	NA	10/20/2016	585432.40	3915441.12	N	N	--
S852-BG2-004	0 - 0.5	soil	SF	grab	NA	10/20/2016	585434.98	3915442.50	N	N	--
S852-BG2-005	0 - 0.5	soil	SF	grab	NA	10/20/2016	585437.00	3915441.60	N	N	--
S852-BG2-006	0 - 0.5	soil	SF	grab	NA	10/20/2016	585429.09	3915438.10	N	N	--
S852-BG2-007	0 - 0.5	soil	SF	grab	NA	10/20/2016	585430.42	3915437.25	N	N	--
S852-BG2-008	0 - 0.5	soil	SF	grab	NA	10/20/2016	585432.46	3915439.20	N	N	--
S852-BG2-009	0 - 0.5	soil	SF	grab	NA	10/20/2016	585435.00	3915437.41	N;MS;MSD	N	--
S852-BG2-010	0 - 0.5	soil	SF	grab	NA	10/20/2016	585437.05	3915438.92	N	N	--
S852-BG2-011	0 - 0.4	soil	SF	grab	NA	11/15/2016	585433.65	3915441.45	N	N	--
Correlation											
S852-C01-001	0 - 0.5	soil	SF	5-point composite	NA	11/14/2016	585395.48	3915589.86	--	N;FD	N;FD
S852-C02-001	0 - 0.5	soil	SF	5-point composite	NA	11/14/2016	585346.75	3915634.97	--	N	N
S852-C03-001	0 - 0.5	soil	SF	5-point composite	NA	11/14/2016	585289.96	3915651.24	--	N	N
S852-C04-001	0 - 0.5	soil	SF	5-point composite	NA	11/14/2016	585214.63	3915693.48	--	N	N
S852-C05-001	0 - 0.5	soil	SF	5-point composite	NA	11/14/2016	585284.36	3915788.06	--	N	N
Characterization											
S852-CX-001	0 - 0.5	sediment	SF	grab	A	11/14/2016	585135.97	3915705.05	N;MS;MSD	N	--
S852-CX-002	0 - 0.5	soil	SF	grab	A	11/14/2016	585201.87	3915816.89	N	N	--
S852-CX-003	0 - 0.5	soil	SF	grab	A	11/14/2016	585372.91	3915808.81	N	N	--
S852-CX-004	0 - 0.5	soil	SF	grab	A	11/14/2016	585344.62	3915774.76	N	N	--
S852-CX-005	0 - 0.5	soil	SF	grab	A	11/14/2016	585272.38	3915751.62	N	N	--
S852-CX-006	0 - 0.5	soil	SF	grab	A	11/14/2016	585350.27	3915645.37	N	N	--
S852-CX-007	0 - 0.5	soil	SF	grab	B	11/14/2016	585394.97	3915595.86	N	N	--
S852-CX-008	0 - 0.5	soil	SF	grab	A	11/14/2016	585348.04	3915533.22	N;FD	N;FD	--
S852-CX-009	0 - 0.5	soil	SF	grab	B	11/14/2016	585390.48	3915521.62	N	N	--
S852-CX-010	0 - 0.5	sediment	SF	grab	A	11/14/2016	585201.94	3915459.15	N	N	--
S852-SCX-001	0 - 0.5	sediment	SF	grab	A	11/15/2016	585072.96	3915635.79	N;MS;MSD	N	--
S852-SCX-001	1.5 - 2	sediment	SB	grab	A	11/15/2016	585072.96	3915635.79	N	N	--
S852-SCX-002	0 - 0.5	soil	SF	grab	B	11/14/2016	585390.40	3915594.93	N	N	--
S852-SCX-002	0.5 - 1	soil	SB	grab	B	11/14/2016	585390.40	3915594.93	N	N	--
S852-SCX-002	1 - 1.5	soil	SB	grab	A	11/14/2016	585390.40	3915594.93	N	N	--
S852-SCX-003	0 - 0.5	soil	SF	grab	A	11/14/2016	585297.47	3915838.01	N	N	--
S852-SCX-003	0.5 - 1.5	soil	SB	grab	A	11/14/2016	585297.47	3915838.01	N	N	--
S852-SCX-004	0 - 0.5	sediment	SF	grab	A	11/15/2016	585220.95	3915805.76	N	N	--
S852-SCX-005	0 - 0.8	sediment	SB	grab	A	11/15/2016	585229.34	3915510.21	N	N	--
S852-SCX-006	0 - 0.7	soil	SB	grab	A	11/14/2016	585350.75	3915721.01	N	N	--
S852-SCX-007	0 - 0.9	soil	SB	grab	A	11/14/2016	585337.89	3915617.88	N	N	--
S852-SCX-008	0 - 0.8	soil	SB	grab	B	11/14/2016	585397.33	3915520.75	N	N	--

Notes

--	Not Sampled
N	Normal
FD	Field Duplicate
MS	Matrix Spike
MSD	Matrix Spike Duplicate
NA	Not Applicable
Ra-226	Radium 226
SB	Subsurface Sample
SF	Surface Sample
ft bgs	Feet below ground surface

[1] Coordinate System: NAD 1983 UTM Zone 12N

Table 3-3
Water Sampling Summary
Hoskie Tso No. 1
Removal Site Evaluation Report - Final
Navajo Nation AUM Environmental Response Trust - First Phase

Field Sample Identification	Water Feature Identification	Sample Date	Easting[1]	Northing[1]	Sample Types: Ra-226	Ra-228	Gross Alpha	Metals, Dissolved	Metals, Total	TDS	Anions	Cations
Surface Water												
S852-WS-001	S852-Pond-1	11/8/2016	585744.63	3916283.72	N	N	N	N	N	N	N	N
Well Water												
S852-WL-001	07T-517	10/20/2016	585759.87	3916291.21	N	N	N	N	N	N	N	N

Notes

N	Normal
Ra-226	Radium 226
Ra-228	Radium 228
TDS	Total Dissolved Solids

[1] Coordinate System: NAD 1983 UTM Zone 12N

Table 4-1
Background Reference Area Soil Sample Analytical Results
Hoskie Tso No. 1
Removal Site Evaluation Report - Final
Navajo Nation AUM Environmental Response Trust - First Phase

Location Identification	S852-BG1-001	S852-BG1-001 Dup	S852-BG1-002	S852-BG1-003	S852-BG1-004	S852-BG1-005	S852-BG1-006	S852-BG1-007	S852-BG1-008	S852-BG1-009	S852-BG1-010
Date Collected	10/20/2016	10/20/2016	10/20/2016	10/20/2016	10/20/2016	10/20/2016	10/20/2016	10/20/2016	10/20/2016	10/20/2016	10/20/2016
Depth (feet)	0 - 0.5	0 - 0.5	0 - 0.5	0 - 0.5	0 - 0.5	0 - 0.5	0 - 0.5	0 - 0.5	0 - 0.5	0 - 0.5	0 - 0.5
Analyte (Units)											
Metals[1] (mg/kg)											
Arsenic	12	13	15	19	19	13	15	10	13	14	7.9
Molybdenum	6	6.4	14	9.9	8.2	7.7	11	3.2	9.4	41	12
Selenium	6	6.2	1.4	2	2.3	1.9	2.4	19	1.8	5	8.2
Uranium	7.7	8.4	8.9	6	5.8	4.3	13	6.8	13	6.2	6.9
Vanadium	32	33	32	47	53	36	31	27	33	140	46
Radionuclides (pCi/g)											
Radium-226	3.64 ± 0.56	3.56 ± 0.53	4.66 ± 0.69	3.42 ± 0.52	3.6 ± 0.55	3.05 ± 0.47	4.78 ± 0.7 J-	4.52 ± 0.71 J-	3.82 ± 0.61	3.2 ± 0.56 J-	3.37 ± 0.55 J-

Notes
Bold Bold result indicates positively identified compound
mg/kg milligrams per kilogram
pCi/g picocuries per gram
[1] Analysis required sample dilution of 10 times; reported values have been converted to non-diluted value
J- Data are estimated due to associated quality control data

Table 4-1
Background Reference Area Soil Sample Analytical Results
Hoskie Tso No. 1
Removal Site Evaluation Report - Final
Navajo Nation AUM Environmental Response Trust - First Phase

Location Identification	S852-BG1-011	S852-BG1-011	S852-BG2-001	S852-BG2-001 Dup	S852-BG2-002	S852-BG2-003	S852-BG2-004	S852-BG2-005	S852-BG2-006	S852-BG2-007
Date Collected	11/15/2016	11/15/2016	10/20/2016	10/20/2016	10/20/2016	10/20/2016	10/20/2016	10/20/2016	10/20/2016	10/20/2016
Depth (feet)	0 - 0.5	0.5 - 0.8	0 - 0.5	0 - 0.5	0 - 0.5	0 - 0.5	0 - 0.5	0 - 0.5	0 - 0.5	0 - 0.5
Analyte (Units)										
Metals[1] (mg/kg)										
Arsenic	12	19	11	11	10	9.8	9.6	8.4	12	10
Molybdenum	8	8.3	61	64	59	46	62	52	76	47
Selenium	2.4	2.5	2.2	2.5	2.3	1.8	2.1	2.1	2.1	2
Uranium	4.2	6.7	2.6	3	2.7	2.2	2.3	2.1	2.4	2.2
Vanadium	38	56	50	53	51	41	46	42	47	44
Radionuclides (pCi/g)										
Radium-226	3.36 ± 0.56	2.58 ± 0.44	1.94 ± 0.35	1.88 ± 0.38	2.09 ± 0.37	1.86 ± 0.34	1.87 ± 0.33	1.29 ± 0.31	2.05 ± 0.36	1.49 ± 0.29

Notes
Bold Bold results indicates positively identified compound
mg/kg milligrams per kilogram
pCi/g picocuries per gram
[1] Analysis required sample dilution of 10 times; reported values have been converted to non-diluted value
J- Data are estimated due to associated quality control data

Table 4-1
Background Reference Area Soil Sample Analytical Results
Hoskie Tso No. 1
Removal Site Evaluation Report - Final
Navajo Nation AUM Environmental Response Trust - First Phase

Location Identification	S852-BG2-008	S852-BG2-009	S852-BG2-010	S852-BG2-011
Date Collected	10/20/2016	10/20/2016	10/20/2016	11/15/2016
Depth (feet)	0 - 0.5	0 - 0.5	0 - 0.5	0 - 0.4
Analyte (Units)				
Metals[1] (mg/kg)				
Arsenic	11	6.9	6.6	12
Molybdenum	72	30 J-	28	64
Selenium	1.8	1.1	1.5	2.6
Uranium	2.1	1.7	1.9	2.7
Vanadium	44	28	32	56
Radionuclides (pCi/g)				
Radium-226	1.6 ± 0.3	1.82 ± 0.37	1.77 ± 0.32	1.83 ± 0.33

Notes
Bold Bolded result indicates positively identified compound
mg/kg milligrams per kilogram
pCi/g picocuries per gram
[1] Analysis required sample dilution of 10 times; reported values have been converted to non-diluted value
J- Data are estimated due to associated quality control data

Table 4-2
Static Gamma Measurement Summary
Hoskie Tso No.1
Removal Site Evaluation Report - Final
Navajo Nation AUM Environmental Response Trust - First Phase

Sample Location	Survey Area	Subsurface Static Gamma Investigation Level (cpm)	Sample Depth (ft bgs)	Media	Static Gamma Measurement (cpm)
S852-BG1-011	Background Area 1	*	0.00	soil	13,753
S852-BG1-011	Background Area 1	*	0.50	soil	16,859
S852-BG1-011	Background Area 1	*	0.75	soil	19,407**
S852-BG2-011	Background Area 2	*	0.00	soil	15,300
S852-BG2-011	Background Area 2	*	0.40	soil	17,287**
S852-SCX-001	A	--	0.00	sediment	12,090
S852-SCX-001	A	16,859	0.50	sediment	15,173
S852-SCX-001	A	16,859	1.00	sediment	18,213
S852-SCX-001	A	16,859	1.50	sediment	20,512
S852-SCX-001	A	16,859	2.00	sediment	20,715**
S852-SCX-003	A	--	0.00	soil	25,862
S852-SCX-003	A	16,859	0.50	soil	33,895
S852-SCX-003	A	16,859	1.00	soil	37,203
S852-SCX-003	A	16,859	1.50	soil	34,246**
S852-SCX-004	A	--	0.00	sediment	18,830
S852-SCX-004	A	16,859	0.46	sediment	25,640**
S852-SCX-005	A	--	0.00	sediment	12,483
S852-SCX-005	A	16,859	0.63	sediment	13,215
S852-SCX-005	A	16,859	0.75	sediment	12,188**
S852-SCX-006	A	--	0.00	soil	53,725
S852-SCX-006	A	16,859	0.58	soil	140,128
S852-SCX-006	A	16,859	0.71	soil	159,636**
S852-SCX-007	A	--	0.00	soil	55,849
S852-SCX-007	A	16,859	0.50	soil	97,882
S852-SCX-007	A	16,859	0.92	soil	88,837**
S852-SCX-008	B	--	0.00	soil	57,607
S852-SCX-008	B	17,287	0.56	soil	124,664
S852-SCX-008	B	17,287	0.81	soil	121,556**
S852-SCX-002	B	--	0.00	soil	352,040
S852-SCX-002	B	17,287	0.50	soil	409,042
S852-SCX-002	B	17,287	1.00	soil	427,712
S852-SCX-002	B	17,287	1.50	soil	222,461**

Notes

Bold	Bolded result indicates measurement exceeds subsurface gamma investigation level
*	The subsurface gamma investigation levels are derived from the background area measurements, refer to Section 4.1 of the RSE report
**	Measurement collected at interface of unconsolidated material and refusal material (e.g., bedrock)
--	The subsurface gamma investigation level does not apply to surface static gamma measurements
IL	Investigation Level
RSE	Removal Site Investigation
cpm	counts per minute
ft bgs	feet below ground surface

Table 4-3
Gamma Correlation Study Soil Sample Analytical Results
Hoskie Tso No. 1
Removal Site Evaluation Report - Final
Navajo Nation AUM Environmental Response Trust - First Phase

Location Identification	S852-C01-001	S852-C01-001 Dup	S852-C02-001	S852-C03-001	S852-C04-001	S852-C05-001
Date Collected	11/14/2016	11/14/2016	11/14/2016	11/14/2016	11/14/2016	11/14/2016
Depth (feet)	0 - 0.5	0 - 0.5	0 - 0.5	0 - 0.5	0 - 0.5	0 - 0.5
Analyte (Units)						
Radionuclides (pCi/g)						
Radium-226	53.6 ± 6.4	55.6 ± 6.6 J+	16.7 ± 2.1	1.24 ± 0.3	0.92 ± 0.23	7.37 ± 0.97
Thorium-228	1.23 ± 0.22	1.21 ± 0.21	1.18 ± 0.21	0.59 ± 0.12	0.59 ± 0.12	0.47 ± 0.11
Thorium-230	36.5 ± 5.7	36.8 ± 5.7	12.6 ± 2	0.9 ± 0.17	0.89 ± 0.16	4.58 ± 0.74
Thorium-232	1.29 ± 0.22	1.16 ± 0.2	1.12 ± 0.2	0.6 ± 0.12	0.52 ± 0.1	0.48 ± 0.1

Notes
Bold Bold result indicates positively identified compound
pCi/g picocuries per gram
J+ Data are estimated and are potentially biased high due to associated quality control data

Table 4-4a
Site Characterization Soil and Sediment Sample Analytical Results for Survey Area A
Hoskie Tso No. 1
Removal Site Evaluation Report - Final
Navajo Nation AUM Environmental Response Trust - First Phase

Location Identification		S852-CX-001	S852-CX-002	S852-CX-003	S852-CX-004	S852-CX-005	S852-CX-006	S852-CX-008	S852-CX-008 Dup	S852-CX-010	S852-SCX-001	S852-SCX-001	S852-SCX-003	S852-SCX-003	S852-SCX-004
Date Collected		11/14/2016	11/14/2016	11/14/2016	11/14/2016	11/14/2016	11/14/2016	11/14/2016	11/14/2016	11/14/2016	11/15/2016	11/15/2016	11/14/2016	11/14/2016	11/15/2016
Depth (feet)		0 - 0.5	0 - 0.5	0 - 0.5	0 - 0.5	0 - 0.5	0 - 0.5	0 - 0.5	0 - 0.5	0 - 0.5	0 - 0.5	1.5 - 2	0 - 0.5	0.5 - 1.5	0 - 0.5
Sample Category		surface	surface	surface	surface	surface	surface	surface	surface	surface	surface	subsurface	surface	subsurface	surface
Sample Collection Method		grab	grab	grab	grab	grab	grab	grab	grab	grab	grab	grab	grab	grab	grab
Media		sediment	soil	soil	soil	soil	soil	soil	soil	sediment	sediment	sediment	soil	soil	sediment
Analyte (Units)	Investigation Level														
Metals[1] (mg/kg)															
Arsenic	23.1	10	38	23	26	28	23	5.4	6	14	8 J-	10	11	7.6	44
Molybdenum	45.0	23	140	100	130	45	36	8.6	6.7	14	13 J-	21	18	12	250
Selenium	31.9	1.7	1.1	2.5	2.2	<1.1	2.1	<1.1	<1.1	1.3	1.1 J-	1.2	1.3	1.1	3.6
Uranium	16.0	4.7	12	16	23	20	13	3.7	3.9	4.7	3	4.9	11	6	15
Vanadium	141.0	21	14	32	22	15	30	20	19	34	18	20	22	22	6.8
Radionuclides (pCi/g)															
Radium-226	5.48	3.08 ± 0.53 J+	6.8 ± 0.93	10.5 ± 1.4	17.6 ± 2.2	10.4 ± 1.3	11.5 ± 1.5	2.43 ± 0.43	2.36 ± 0.39	2.84 ± 0.46	1.41 ± 0.34	2.42 ± 0.42	7.11 ± 0.94	6.5 ± 0.87	8.1 ± 1.1

Notes
Bold Bold result indicates positively identified compound
Shaded Shaded result indicates result greater than or equal to the investigation level
mg/kg milligrams per kilogram
pCi/g picocuries per gram
[1] Analysis required sample dilution of 10 times; reported values have been converted to non-diluted value
< Result not detected above associated laboratory reporting limit
J- No dilution required for analysis. Data are estimated and potentially biased low due to associated quality control data
J+ Data are estimated and are potentially biased high due to associated quality control data

Table 4-4a
Site Characterization Soil and Sediment Sample Analytical Results for Survey Area A
Hoskie Tso No. 1
Removal Site Evaluation Report - Final
Navajo Nation AUM Environmental Response Trust - First Phase

Location Identification		S852-SCX-005	S852-SCX-006	S852-SCX-007
Date Collected		11/15/2016	11/14/2016	11/14/2016
Depth (feet)		0 - 0.8	0 - 0.7	0 - 0.9
Sample Category		subsurface	subsurface	subsurface
Sample Collection Method		grab	grab	grab
Media		sediment	soil	soil
Analyte (Units)	Investigation Level			
Metals[1] (mg/kg)				
Arsenic	23.1	15	40	33
Molybdenum	45.0	20	43	30
Selenium	31.9	1.2	5.5	6.5
Uranium	16.0	6	77	84
Vanadium	141.0	28	22	46
Radionuclides (pCi/g)				
Radium-226	5.48	3.67 ± 0.57	26.9 ± 3.3	44 ± 5.3 J+

Notes

Bold	Bolded result indicates positively identified compound
Shaded	Shaded result indicates result greater than or equal to the investigation level
mg/kg	milligrams per kilogram
pCi/g	picocuries per gram
[1]	Analysis required sample dilution of 10 times; reported values have been converted to non-diluted value
<	Result not detected above associated laboratory reporting limit
J-	No dilution required for analysis. Data are estimated and are potentially biased low due to associated quality control data
J+	Data are estimated and are potentially biased high due to associated quality control data

Table 4-4b
Site Characterization Soil Sample Analytical Results for Survey Area B
Hoskie Tso No. 1
Removal Site Evaluation Report - Final
Navajo Nation AUM Environmental Response Trust - First Phase

Location Identification		S852-CX-007	S852-CX-009	S852-SCX-002	S852-SCX-002	S852-SCX-002	S852-SCX-008
Date Collected		11/14/2016	11/14/2016	11/14/2016	11/14/2016	11/14/2016	11/14/2016
Depth (feet)		0 - 0.5	0 - 0.5	0-0.5	0.5 - 1	1 - 1.5	0 - 0.8
Sample Category		surface	surface	surface	subsurface	subsurface	subsurface
Sample Collection Method		grab	grab	grab	grab	grab	grab
Media		soil	soil	soil	soil	soil	soil
Analyte (Units)	Investigation Level						
Metals[1] (mg/kg)							
Arsenic	14.9	37	170	73	57	28	170
Molybdenum	98.0	470	69	1200	850	450	71
Selenium	3.11	4	3.9	5.5	3.6	3.5	4.1
Uranium	3.17	270	160	370	170	190	96
Vanadium	66.5	48	50	47	36	38	42
Radionuclides (pCi/g)							
Radium-226	2.46	116 ± 14 J+	126 ± 15	445 ± 52 J+	229 ± 27 J+	122 ± 14 J+	66.9 ± 8

Notes
Bold Bold result indicates positively identified compound
Shaded Shaded result indicates result greater than or equal to the investigation level
mg/kg milligrams per kilogram
pCi/g picocuries per gram
[1] Analysis required sample dilution of 10 times; reported values have been converted to non-diluted value
J+ Data are estimated and are potentially biased high due to associated quality control data.

Stantec
NAVAJO NATION AUM Environmental Response Trust-First Phase

Table 4-5
Summary of Investigation Level Exceedances in Soil/Sediment at Borehole Locations
Hoskie Tso No.1
Removal Site Evaluation Report - Final
Navajo Nation AUM Environmental Response Trust - First Phase

Sample Location	Survey Area	Investigation Level Exceedances
S852-SCX-001	A	Static Gamma
S852-SCX-002	B	As, Mo, Se, U, Ra-226, Static Gamma
S852-SCX-003	A	Ra-226, Static Gamma
S852-SCX-004	A	As, Mo, Ra-226, Static Gamma
S852-SCX-006	A	As, U, Ra-226, Static Gamma
S852-SCX-007	A	As, U, Ra-226, Static Gamma
S852-SCX-008	B	As, Se, U, Ra-226, Static Gamma

Notes
As - Arsenic
Mo - Molybdenum
Ra-226 - Radium 226
Se- Selenium
U - Uranium
V - Vanadium

Table 4-6a
Water Sampling Investigation Level Derivation
Hoskie Tso No.1
Removal Site Evaluation Report - Final
Navajo Nation AUM Environmental Response Trust - First Phase

Analyte (Units)	USEPA MCL [a]	USEPA Secondary Standard [b]	Navajo Nation Surface Water Quality Standards [c]	Navajo Nation Primary Drinking Water MCL[d]	Investigation Level
Radionuclides (pCi/L)					
Ra-226 [e]	5	*	5	5	5
Ra-228 [e]	5	*	5	5	5
Gross Alpha	15	*	15	15	15
Metals (ng/L)					
Mercury	2000	*	2000	2000	2000
Metals (µg/L)					
Antimony	6	*	5.6	6	5.6
Arsenic	10	*	10	10	10
Barium	2000	*	2000	2000	2000
Beryllium	4	*	4	4	4
Cadmium	5	*	5	5	5
Chromium, Total	100	*	100	100	100
Cobalt	*	*	*	*	*
Copper	1300	*	1300	*	1300
Lead	15	*	15	15	15
Molybdenum	*	*	*	*	*
Nickel	*	*	610	*	610
Selenium	50	*	50	50	50
Silver	*	100	35	*	35
Thallium	2	*	2	2	2
Uranium	30	*	30	30	30
Vanadium	*	*	*	*	*
Zinc	*	5000	2100	*	2100
General Chemistry Parameters (mg/L) [f]					
Bicarbonate	*	*	*	*	*
Calcium	*	*	*	*	*
Carbonate	*	*	*	*	*
Chloride	*	250	*	*	250
Sodium	*	*	*	*	*
Sulfate	*	250	*	*	250
TDS	*	500	*	*	500

Notes

Bold – indicates the most conservative value to be used for comparison.

[a] "Table of Regulated Drinking Water Contaminants", Groundwater and Drinking Water (USEPA, 2016a).

[b] "Table of Secondary Drinking Water Standards", Secondary Drinking Water Standards: Guidance for Nuisance Chemicals (USEPA, 2016b).

[c] Navajo Nation Surface Water Quality Standards (NNEPA, 2015)

[d] Maximum Contaminant Levels Navajo Nation Primary Drinking Water Regulations (NNPDWR, 2015)

[e] The MCL for Ra-226 and Ra-228 have a combined limit of 5 pCi/L, and are not individually 5pCi/L

[f] Collected data will be used for water quality analysis purposes

* USEPA primary (MCL), secondary standard, Navajo Nation Surface Water Quality Standards, or Navajo Drinking Water MCLs are not established for these analytes.

MCL - maximum contaminant level
µg/L - micrograms per liter
mg/L - milligrams per liter
ng/L - nanograms per liter
pCi/L - picocuries per liter
TDS - Total Dissolved Solids
Ra-226 - Radium 226
Ra-228 - Radium 228
USEPA - Unites States Environmental Protection Agency

Table 4-6b
Water Sampling Analytical Results
Hoskie Tso No. 1
Removal Site Evaluation Report - Final
Navajo Nation AUM Environmental Response Trust - First Phase

Analyte (Units)	Water Feature Identification / Field Sample Identification / Date Collected / Matrix / Preparation	07T-517 S852-WL-001 10/20/2016 Well Water Total	07T-517 S852-WL-001 10/20/2016 Well Water Dissolved	S852-Pond-1 S852-WS-001 11/8/2016 Surface Water Total	S852-Pond-1 S852-WS-001 11/8/2016 Surface Water Dissolved
	Investigation Level				
Radionuclides (pCi/L)					
Ra-226	5 [1]	0 ± 0.086	NS	0.142 ± 0.097	NS
Ra-228	5 [1]	0 ± 0.25	NS	4.1 ± 1.1	NS
Gross Alpha	--	9.9 ± 3.4	NS	28.3 ± 8.6 B	NS
Adjusted Gross Alpha [2]	15	NA	NS	NA	NS
Gross Beta	--	6.6 ± 2.6	NS	73 ± 14	NS
Metals (ng/L)					
Mercury	2000	<0.5	<0.5	9.7	1.5
Metals [3] (µg/L)					
Antimony	5.6	<0.3	0.61	0.61	0.79
Arsenic	10	15	15	25	24
Barium	2000	1.9	1.9	270	190
Beryllium	4	<0.5	<0.5	1.2	0.7
Cadmium	5	<0.3	<0.3	<0.3	<0.3
Chromium, Total	100	<10	<10	<10	<10
Cobalt	--	<1	<1	7.1	4.3
Copper	1300	17	15	19	13
Lead	15	0.52	0.55	10	6.4
Molybdenum	--	48	47	98	98
Nickel	610	*<4*	5.3	19	12
Selenium	50	25	25	20	20
Silver	35	<0.1	<0.1	<0.1	<0.1
Thallium	2	<0.2	<0.2	<0.2	<0.2
Uranium	30	25	25	46	45
Vanadium	--	42	40	76	66
Zinc	2100	150	130	110	65
General Chemistry Parameters (mg/L)					
TDS	500	1400	NS	3000	NS
Carbonate	--	<20	NS	120	NS
Bicarbonate	--	270	NS	380	NS
Chloride	250	270 D	NS	480 D	NS
Sulfate	250	460 D	NS	900 D	NS
Calcium	--	11 D	11 D	42 D	34 D
Sodium	--	490 D	490 D	820 D	820 D
Field Parameters					
Oxidation Reduction Potential(millivolts)	--	107.3	NS	132.7	NS
pH(pH units)	--	8.44	NS	9.28	NS
Salinity(pptv)	--	0.75	NS	4.81	NS
Specific Conductivity(µS/cm)	--	1724	NS	6924	NS
Temperature(°C)	--	17.7	NS	14.9	NS
Turbidity(NTU)	--	3.35	NS	531	NS

Notes

Bold	Bold result indicates positively identified compound
Shaded	Shaded result indicates result or reporting limit greater than or equal to the investigation level
B	Analyte detected in an associated blank
D	Analysis required a standard sample dilution of 10 times; reported values have been converted to non-dilute value
<	Result not detected above associated laboratory reporting limit
°C	Degrees Celsius
µg/L	micrograms per liter
µS/cm	microSiemens per centimeter
mg/L	milligrams per liter
ng/L	nanograms per liter
NTU	nephelometric turbidity unit
pptv	parts per thousand by volume
pCi/L	picocuries per liter
--	Not established
NA	Adjusted Gross Alpha result is not applicable because it was negative, refer to note [2]
NS	Not scheduled
Ra-226	Radium 226
Ra-228	Radium 228
TDS	Total Dissolved Solids
1	The Investigation Level for Ra-226 and Ra-228 have a combined limit of 5 pCi/L, and are not individually 5pCi/L
2	Adjusted Gross Alpha = Gross alpha concentration - uranium concentration, using the conversion factor of 0.6757 to convert uranium µg/L to pCi/L (U.S. Department of Energy, 2011)
3	Analysis required sample dilution of 10 times; reported values have been converted to non-diluted value

Stantec

NAVAJO NATION
AUM Environmental Response Trust-First Phase

FIGURES

FIGURE ACRONYMS/ABBREVIATIONS

As	arsenic
BG	potential background reference area
bgs	below ground surface
cpm	counts per minute
ft	feet
IL	investigation level
mg/kg	milligrams per kilogram
Mo	molybdenum
NA	not applicable
NAD	North American Datum
pCi/g	picocuries per gram
Ra	radium-226
Ra-226	radium-226
Se	selenium
TENORM	Technologically Enhanced Naturally Occurring Radioactive Materials
uk	unknown
U	uranium
UTL	upper tolerance limit
UTM	Universal Transverse Mercator
V	vanadium

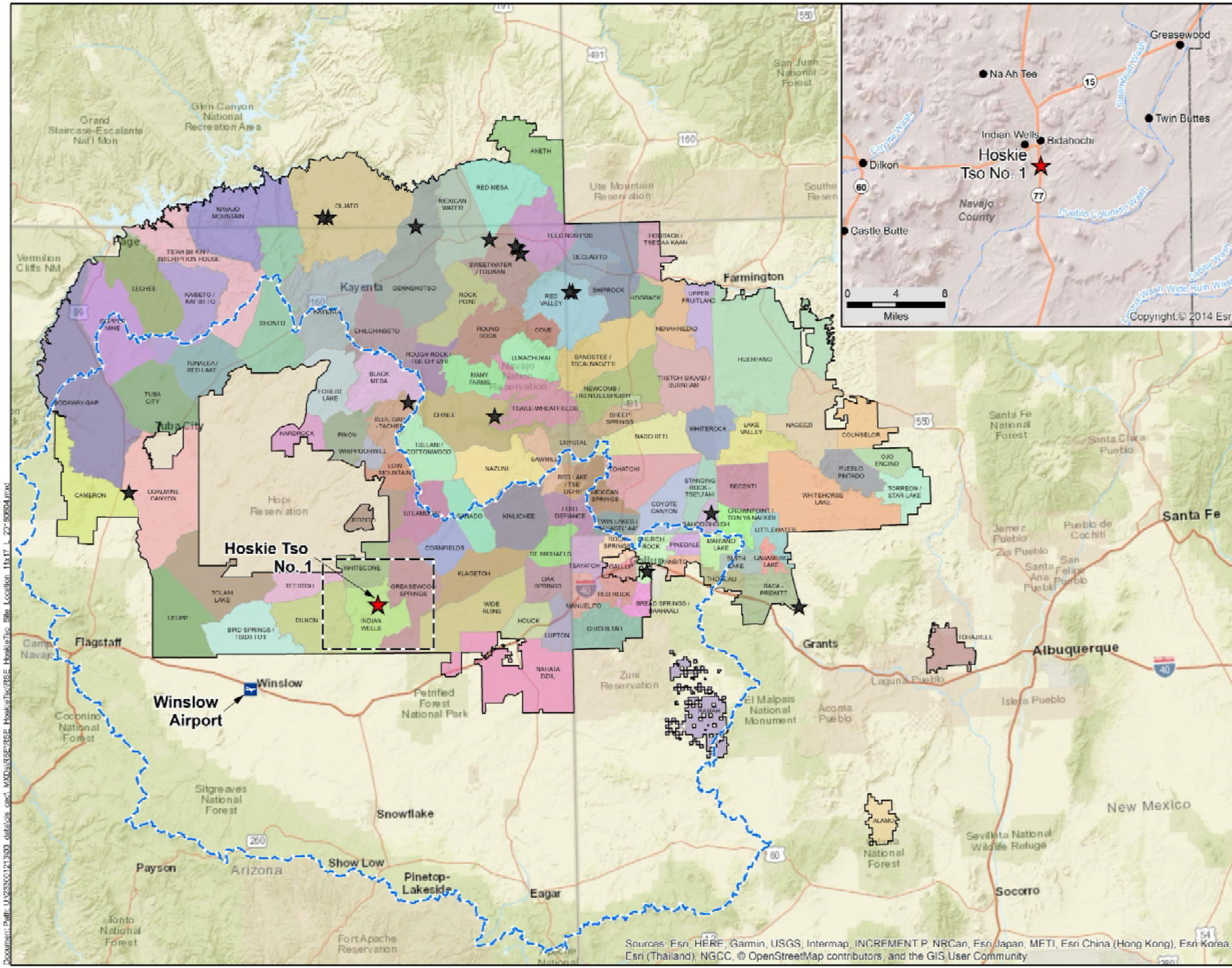

NAVAJO NATION
AUM Environmental Response Trust-First Phase

LEGEND

- Hoskie Tso No. 1 Mine Site
- Priority Abandoned Uranium Mine (AUM) Site
- Populated Place
- State Highway
- Intermittent Stream
- Little Colorado River Valley Watershed
- Navajo Nation Boundary
- Navajo Nation Chapter

Winslow Airport, Arizona Wind Rose (KINW), 1996-2006

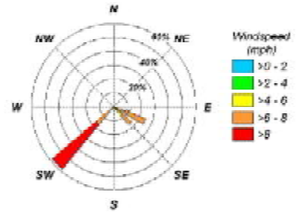

REFERENCES:
Coordinate System: NAD 1983 UTM Zone 12N

Basemap: ESRI World Street Map and World Shaded Relief accessed 06/2018.

Wind Rose: USEPA, 2007a

N W E S

0 25 50
Miles

TITLE: Site Location

PROJECT: Removal Site Evaluation
Hoskie Tso No. 1 Mine Site

DATE: 6/7/2018

DOCUMENT NAME: Removal Site Evaluation Report

Stantec

AUTHOR: CBB | REVIEWER: EDZ

FIGURE: 1-1

Document Path: U:\238001213\03_data\is_gis_MXDs\RSE\RSE_HoskieTso\RSE_HoskieTso_Site_Location_11x17_L_20180604.mxd

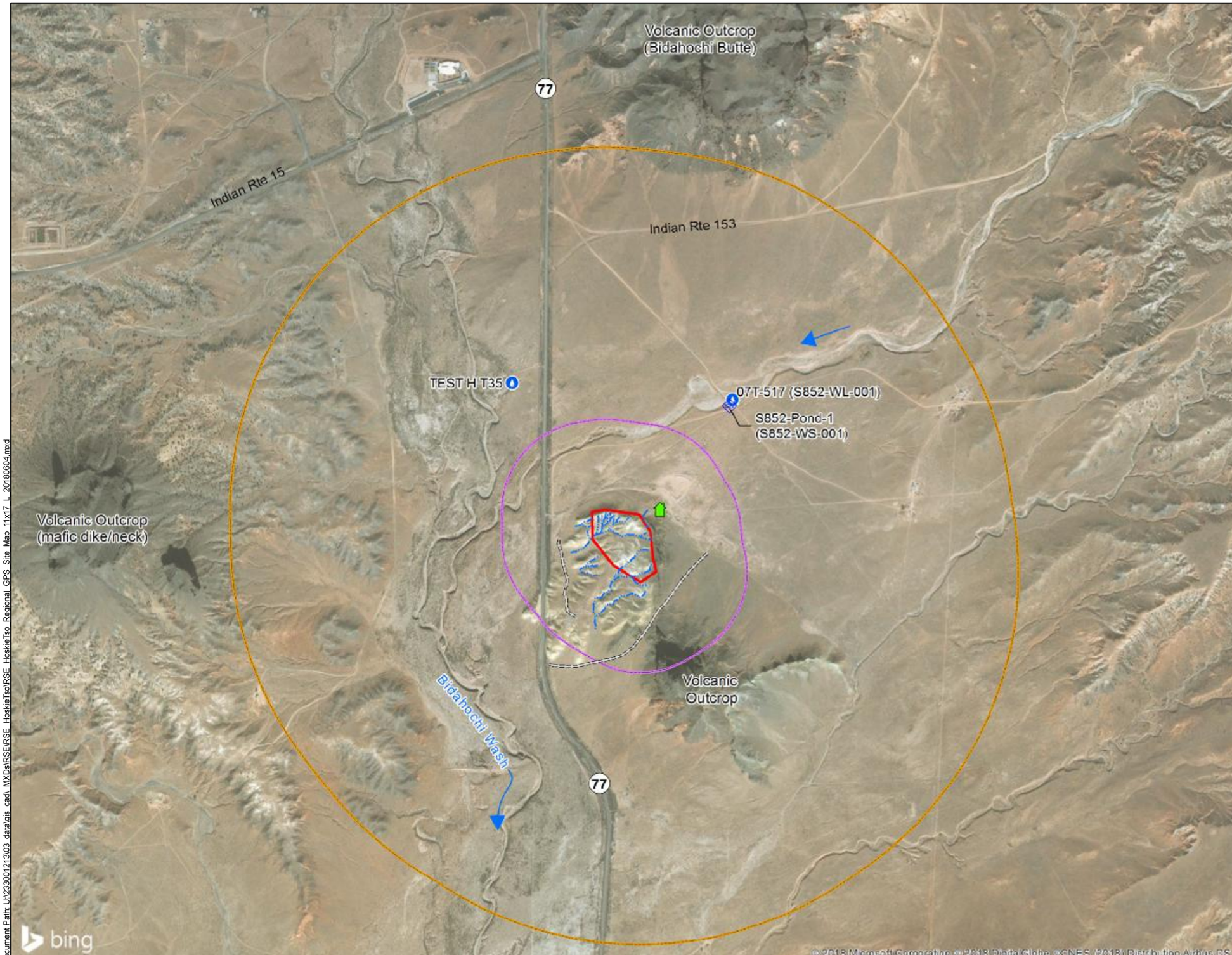

NAVAJO NATION
AUM Environmental Response Trust-First Phase

LEGEND

- Site Clearance Identified Potential Water Feature[1]
- Surface Water Sample
- Water Well
- Habitable Building
- Flow Direction
- Drainage
- Historical Road
- Pond
- Claim Boundary
- 1/4-Mile Claim Boundary Buffer
- 1-Mile Claim Boundary Buffer

NOTE:

1. Potential water features and identification names identified in 2007 AUM Atlas and/or in database provided by the Navajo Nation Department of Water Resources.

REFERENCES:

Coordinate System: NAD 1983 UTM Zone 12N

Basemap image accessed from BING Maps imagery web mapping service (http://www.bing.com/maps) on 06/2018.

N W E S

0 1,400 2,800
Feet

TITLE:

Site Features

PROJECT:

Removal Site Evaluation
Hoskie Tso No. 1 Mine Site

DATE: 6/7/2018

DOCUMENT NAME: Removal Site Evaluation Report

Stantec

AUTHOR: CBB

REVIEWER: EDZ

FIGURE: 2-1

Document Path: U:\233001213\03_data\gis_cad_MXDs\RSE\RSE_HoskieTso\RSE_HoskieTso_Regional_GPS_Site_Map_11x17_L_20180604.mxd

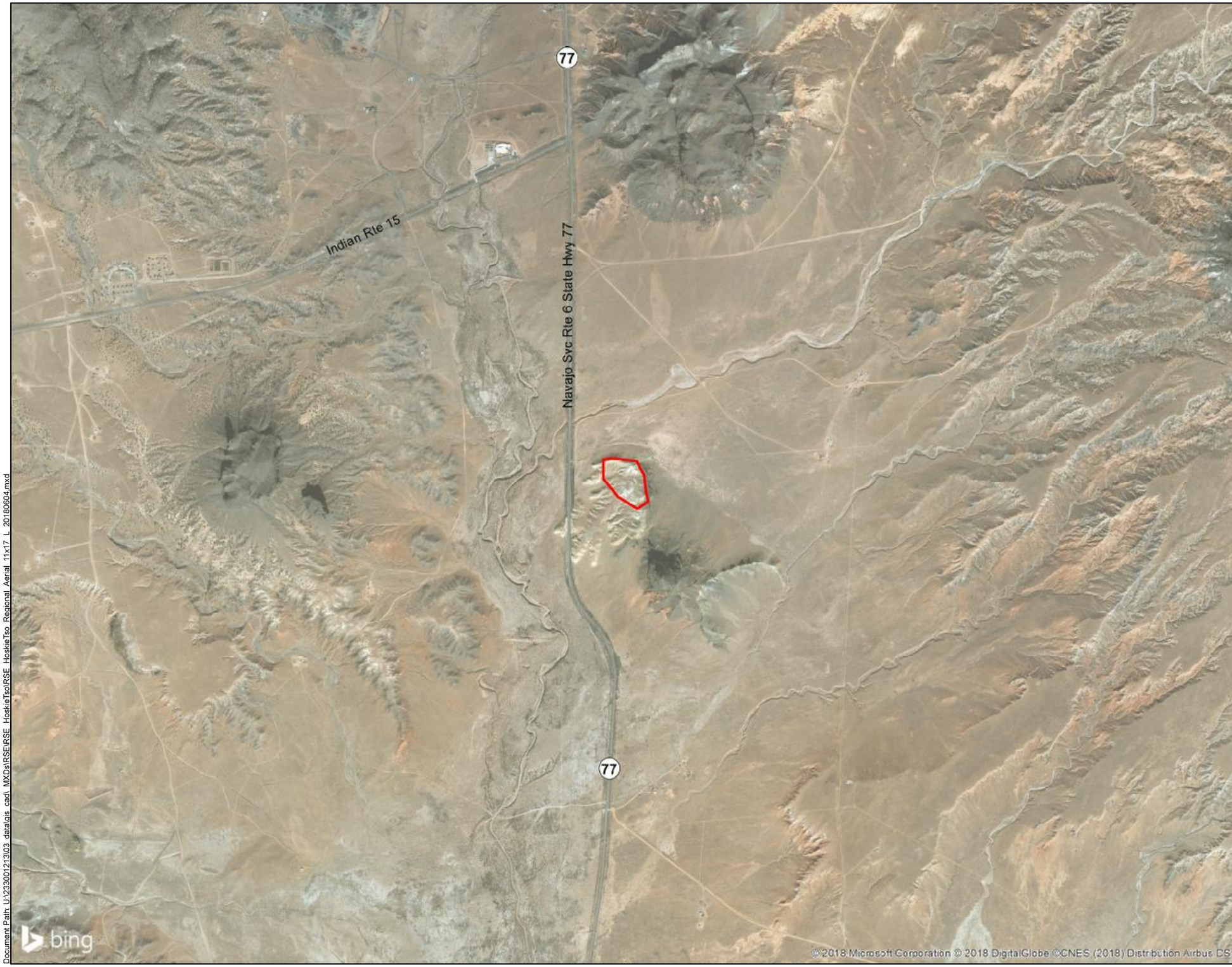

NAVAJO NATION
AUM Environmental Response Trust-First Phase

LEGEND

Claim Boundary

REFERENCES:
Coordinate System: NAD 1983 UTM Zone 12N

Basemap image accessed from BING Maps imagery web mapping service (http://www.bing.com/maps) on 06/2018.

N
W E
S

0 2,000 4,000
Feet

TITLE:
Regional Aerial Photograph

PROJECT:
Removal Site Evaluation
Hoskie Tso No. 1 Mine Site

DATE: 6/7/2018

DOCUMENT NAME: Removal Site Evaluation Report

Stantec

AUTHOR: CBB

REVIEWER: EDZ

FIGURE: 2-2

Document Path: U:\233001213\03_data\gis_cad_MXDs\RSE\RSE_HoskieTso\RSE_HoskieTso_Regional_Aerial_11x17_L_20180604.mxd

NAVAJO NATION
AUM Environmental Response Trust-First Phase

LEGEND

Claim Boundary

REFERENCES:
Coordinate System: NAD 1983 UTM Zone 12N

Basemap: ESRI USA Topo Maps service accessed 06/2018.

N
W E
S

0 2,000 4,000
Feet

TITLE:
Regional Topographic Map

PROJECT:
Removal Site Evaluation
Hoskie Tso No. 1 Mine Site

DATE: 6/5/2018

DOCUMENT NAME: Removal Site Evaluation Report

Stantec

AUTHOR: CBB
REVIEWER: EDZ

FIGURE: 2-3

Document Path: U:\235501213\03_data\is_gis_MXDs\R3\E\R3E_HoskieTso_USGS_Topo_11x17_L_20170604.mxd

DEPARTMENT OF THE INTERIOR
UNITED STATES GEOLOGICAL SURVEY

PREPARED IN COOPERATION WITH THE
UNITED STATES DEPARTMENT OF ENERGY

MISCELLANEOUS INVESTIGATIONS SERIES
MAP I–1446 (SHEET 1 of 2)

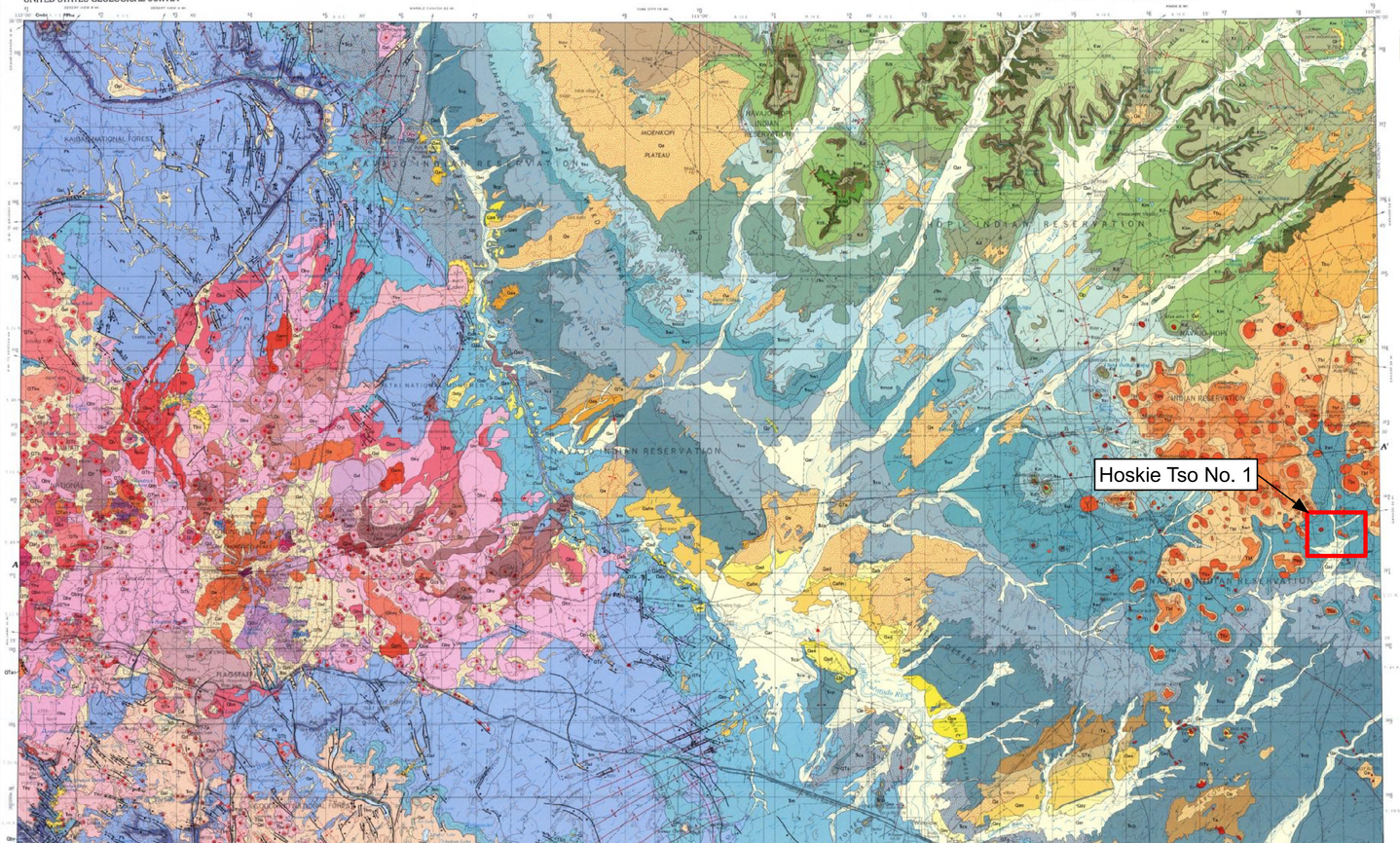

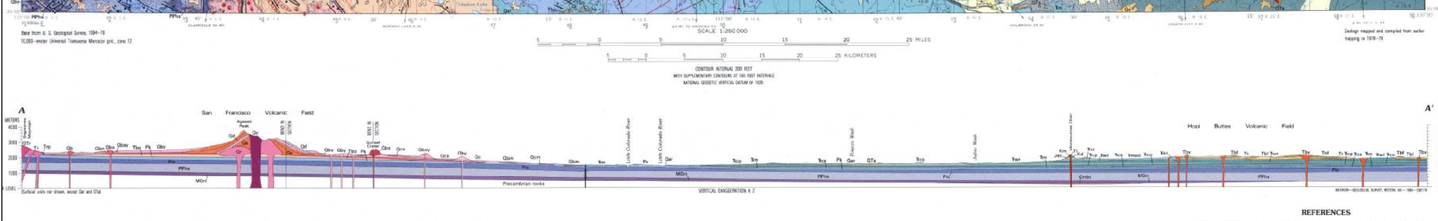

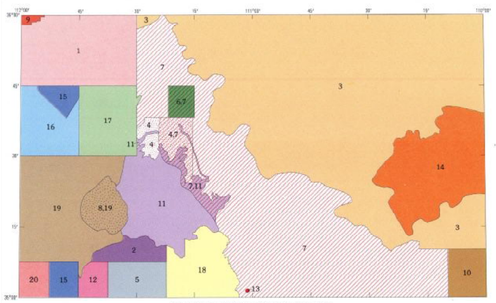

INDEX MAP SHOWING GEOLOGIC SOURCES

GEOLOGIC SOURCES

1. G. H. Billingsley, C. W. Barnes, and G. E. Ulrich, unpub. mapping, 1:62,500,1979.
2. G. H. Billingsley, unpub. mapping, 1:24,000, 1979.
3. Cooley and others, 1969, pl. 1, sheets 2 and 4, 1:125,000.
4. Gusset, 1962, pl. 20, 1:63,360.
5. R. L. Eastwood and L. D. Nealey, unpub. mapping, 1:24,000, 1979.
6. Haines and Bowles, 1976, 1:24,000.
7. Hereford, 1979, 1:250,000.
8. R. F. Holm, unpub. mapping, 1:24,000, 1980.
9. Hunkins and others, 1976, 1:62,500.
10. Mann, 1976, pl. 1, 1:250,000.
11. Moore and Wolfe, 1976, 1:50,000.
12. L. D. Nealey and E. W. Wolfe, unpub. mapping, 1:24,000, 1979.
13. Shoemaker, 1960, figure 2, 1:25,000.
14. R. L. Sutton, unpub. mapping, 1:62,500, 1968.
15. G. E. Ulrich, unpub. mapping, 1:24,000, 1979.
16. G. E. Ulrich and E. W. Wolfe, unpub. mapping, 1:50,000, 1979.
17. Ulrich and Bailey, 1974, 1:50,000.
18. J. Weber, unpub. mapping, 1:24,000, 1979.
19. E. W. Wolfe, G. E. Ulrich, and C. G. Newhall, unpub. mapping, 1:50,000, 1975–1979.
20. E. W. Wolfe and D. A. Hahn, unpub. mapping, 1:24,000, 1979.

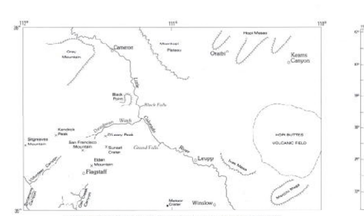

GEOGRAPHIC FEATURES IN THE FLAGSTAFF 1° x 2° QUADRANGLE, ARIZONA

INDEX MAP SHOWING AREA OF FLAGSTAFF QUADRANGLE AND OTHER PUBLISHED 1° x 2° QUADRANGLES

CORRELATION OF MAP UNITS

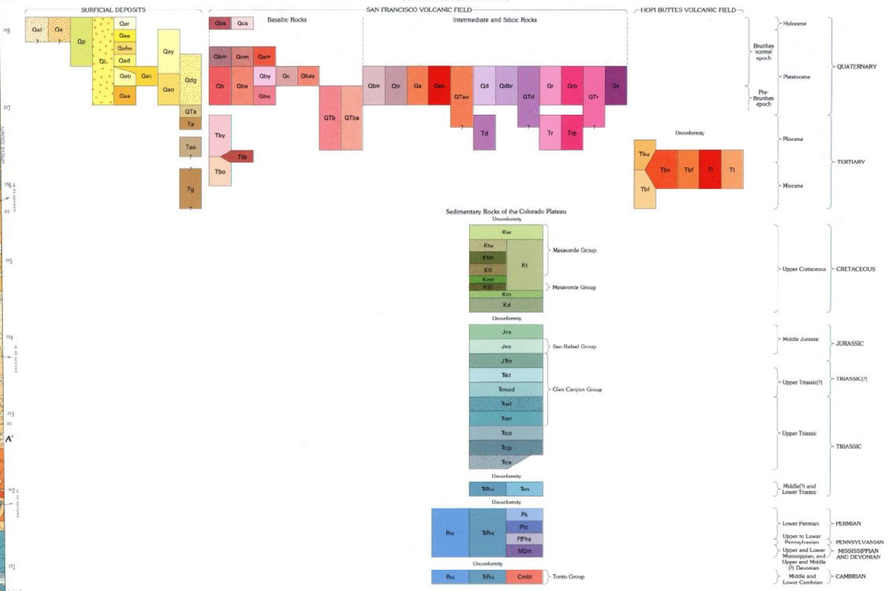

DESCRIPTION OF MAP UNITS

SURFICIAL DEPOSITS

Qal SILT, SAND, GRAVEL, AND BOULDERS (HOLOCENE AND PLEISTOCENE)—Includes alluvium, colluvium, and eolian, glacial, and glaciofluvial (on San Francisco Mountain) deposits. Postdates bounding faults

Qe EOLIAN DEPOSITS (HOLOCENE TO PLEISTOCENE)—Sand, well-sorted. Forms extensive sand sheet between zero and more than 40 ft (13 m) thick. Most are derived from the modern floodplain of the Little Colorado River; some are derived from older alluvial deposits.

Qp PLAYA DEPOSITS (HOLOCENE TO PLEISTOCENE)—Silt and clay, thinly stratified on flat floor of shallow, undrained desert lake basin

Qc LANDSLIDE DEPOSITS (HOLOCENE AND PLEISTOCENE)—Unsorted rock debris, ranging in diameter from less than 1 to 30 ft (0.1–10 m) commonly occurring as large slump blocks

Qam ALLUVIUM (HOLOCENE)—Sand, silt, and clay with minor interbedded gravel. Recent floodplain deposits of the Little Colorado River and tributaries entering from the northeast

Qae ALLUVIAL UNIT E (PLEISTOCENE)—Gravel and sand, 10 to 20 ft (3–6 m) thick. Occurs 5 to 20 ft (2–6 m) above present channel of Little Colorado River

Qafm ALLUVIAL UNIT M (PLEISTOCENE)—Silt, clay, and sand deposited as valley fill upstream from Grand Falls. Valley fill resulted from damming of the Little Colorado River by basalt flow (Qtm) from Merriam Crater area

Qad ALLUVIAL UNIT D (PLEISTOCENE)—Gravelly sand and interbedded sand and silt, locally with large blocks of limestone derived from the Permian Kaibab Formation. Unit 120 ft (40 m) thick near Black Falls

Qac ALLUVIAL UNIT C (PLEISTOCENE)—Silt, clay, and sand with several thin interbedded pebbly gravels, 100–120 ft (33–40 m) thick near Cameron. Deposition of this unit was caused by damming of the Little Colorado River at Cameron by basalt flow (Basche, 1937) of Tanner age (0.53 ± 0.08 m.y., Damon and others, 1974)

Qab ALLUVIAL UNIT B (PLEISTOCENE)—Gravelly sand with interbedded sand and silt. 100–120 ft (33–40 m) thick near Black Falls

Qaa ALLUVIAL UNIT A (PLEISTOCENE)—Gravelly sand with interbedded sand and silt. 115 ft (38 m) thick near Black Falls

Qay YOUNGER ALLUVIUM (PLEISTOCENE)—Includes alluvial units E, D, and the upper part of B, undifferentiated

Qao OLDER ALLUVIUM (PLEISTOCENE)—Includes the lower part of alluvial unit B, all of unit A, and the Quaternary part of unit QTa, undifferentiated

Qdg GRAVEL AT DEADMAN WASH (PLEISTOCENE)—Gravel, pebble- to boulder-size, rounded to subrounded, with interbedded sand; clasts of silicic, intermediate, and mafic rocks derived from San Francisco Mountain; 20 to 80 ft (6–26 m) thick. Occurs as 3 separate deposits along Deadman Wash, one of which is overlain by a basalt flow dated at 0.50 ± 0.11 m.y. (P. E. Damon, written commun., 1979)

QTa ALLUVIUM (PLEISTOCENE TO PLIOCENE)—Interbedded sand, silt, and clay with some interbedded gravel; 130 to 160 ft (43–53 m) thick near Rincon Basin

Ta ALLUVIUM (PLIOCENE)—Sand, silt, and clay deposits with some interbedded gravel, 130 ft (43 m) thick near Rincon Basin. Possibly equivalent to the alluvium beneath the basalt flow on Black Point (Haines and Bowles, 1976) which has been dated at 2.43 ± 0.32 m.y. (P. E. Damon and others, 1974)

Tsd OLDER TERTIARY ALLUVIUM (PLIOCENE)—Sand, gravel, and silt on Moenkopi Plateau. Contains pebbles, cobbles, and small boulders derived from the Cretaceous rocks on Black Mesa

Tg SANDSTONE AND GRAVEL (MIOCENE)—Weakly consolidated interbedded sand and gravel; contains clasts of Paleozoic and Precambrian rocks as much as 2 ft (0.6 m) in diameter. Underlies Miocene basalts in Sycamore and Oak Creek Canyons

ROCKS OF SAN FRANCISCO VOLCANIC FIELD

Principally basalt flows and pyroclastic deposits of alkali-olivine to basaltic types surrounding localized centers of intermediate to silicic lavas and pyroclastic deposits having calc-alkalic affinities

Qbs BASALT OF SUNSET CRATER ERUPTIVE SEQUENCE (HOLOCENE)—Time of eruption determined from stratigraphic, dendrochronologic, and paleomagnetic data (Smiley, 1958; Shoemaker, written commun., 1977) was approximately A.D. 1065 to 1250

Qcs BASALTIC CINDER AND ASH BLANKET FROM ERUPTION OF SUNSET CRATER (HOLOCENE)—Shown only where underlying unit cannot be seen or interpreted from topography

Qbm BASALT OF MERRIAM AGE (PLEISTOCENE)—Dated at 150,000 years old or less, by P. E. Damon, unpub. data, 1979). Flow surface is rough and unweathered; vent is sharp rimmed

Qcm BASALTIC CINDER AND ASH BLANKET FROM VENT OF MERRIAM AGE (PLEISTOCENE)—Shown only where underlying unit cannot be seen or interpreted from topography. Locally includes alluvium

Qam BASALTIC ANDESITE OF MERRIAM AGE (PLEISTOCENE)—Flow surface is very fresh and generally blocky. Cone is sharp rimmed with spatter. Composition similar to pre-Merriam basaltic andesites (see Qba); locally aphyric. Three K-Ar ages range from 51,000 to 68,000 yrs (Bakst, 1974, and P. E. Damon, unpub., 1979 data)

Qb BASALT OF PRE-MERRIAM AGE (PLEISTOCENE)—Flow is undissected and lies close to level of present drainage

Qba BASALTIC ANDESITE OF PRE-MERRIAM AGE (PLEISTOCENE)—Andesite of basaltic texture; commonly contains sieved plagioclase, augite, and olivine in partly glassy groundmass. Quartz, amphibole, or hypersthene may be present

Qby BASALT OF PRE-MERRIAM AGE AND WITHIN THE BRUNHES EPOCH (PLEISTOCENE)—Normal polarity and less than approximately 0.7 m.y. Includes flows of Tappan age (0.2–0.7 m.y.) (Moore and others, 1976)

Qbo BASALT OF PRE-BRUNHES AGE (PLEISTOCENE)—Normal or reversed polarity and between approximately 0.7 and 1.8 m.y. old. Includes most flows of Woodhouse age (0.8–3.0 m.y.) (Moore and others, 1976)

Qc BASALTIC CINDER AND ASH BLANKET FROM VENTS OF BRUNHES AGE (PLEISTOCENE)—Shown only where underlying unit cannot be seen or interpreted from topography. Locally includes alluvium

Qbay BASALTIC ANDESITE OF PRE-MERRIAM AGE AND WITHIN THE BRUNHES EPOCH (PLEISTOCENE)—Composition similar to other pre-Merriam basaltic andesite (see Qba)

QTb BASALT (PLEISTOCENE OR POSSIBLY PLIOCENE)—Flow or cone with uncertain stratigraphic relation to rocks of known age. Unit mapped west of San Francisco Mountain

QTba BASALTIC ANDESITE (PLEISTOCENE OR UPPER PLIOCENE)—Flow or cone with uncertain age; occurs at western edge of mapped area. Composition similar to pre-Merriam basaltic andesite (see Qba)

Qbm BENMOREITE (PLEISTOCENE)—High-sodium, commonly aphyric andesite; forms flow, cone, or dome west or southwest of San Francisco Mountain

Qbr TRACHYTE (PLEISTOCENE)—Large, thick (800 ft, 120 m) aphyric flow on northwest side of Kendrick Peak

Qa ANDESITE FLOW, FLOW BRECCIA, OR TUFF BRECCIA (PLEISTOCENE)—Associated with San Francisco Mountain stratovolcano

Qap ANDESITE PYROCLASTIC DEPOSITS OF O'LEARY PEAK (PLEISTOCENE)—Vent materials erupted through the O'Leary Peak dacite dome

QTan ANDESITE FLOW OR CORE (PLEISTOCENE OR PLIOCENE)—Occurring on and west of Kendrick Peak. K-Ar ages range from 1.4 to 2.5 m.y. (E. H. McKee, unpub. data, 1979) but most mapped units are believed to be Pleistocene

Qd DACITE FLOW OR DOME (PLEISTOCENE)—Associated principally with San Francisco Mountain stratovolcano and O'Leary Peak domes

Qdbr DACITE PYROCLASTIC FLOW BRECCIA (PLEISTOCENE)—From vents in San Francisco Mountain and Elden Mountain volcanoes

QTd DACITE FLOW OR DOME (PLEISTOCENE OR UPPER PLIOCENE)—Associated with Kendrick Peak volcanoes. K-Ar ages range from 1.8 to 2.6 m.y. (E. H. McKee, unpub. data, 1979)

Qr RHYOLITE FLOW OR DOME (PLEISTOCENE)—Locally with marginal rhyolite breccia or pumice

Qrp RHYOLITE PYROCLASTIC DEPOSITS (PLEISTOCENE)—Predominantly air-fall deposits on northeast side of San Francisco Mountain; K-Ar age is 0.80 m.y. (G. A. Izett and C. W. Naeser, written commun., 1979)

QTr RHYOLITE (PLEISTOCENE OR UPPER PLIOCENE)—Dome or flow with uncertain age; associated with rhyolite of Tertiary age (Sitgreaves Mountain) and Quaternary age (Kendrick Peak)

Qtu VENT FLOWS, BRECCIAS, TUFF, AND INTRUSIVE ANDESITE, DACITE, AND RHYOLITE—Combined units form part of vent complex exposed at head of central valley in San Francisco Mountain stratovolcano

Tby BASALT (PLIOCENE)—Generally smooth, alluvial-covered flows with dissected margins. Dated units are approximately 5 to 2 m.y. old (Damon and others, 1974, and Damon, unpub. data, 1979). Includes some older basalts (Tbo) at base of unit on upper walls of Sycamore Canyon

Tbb BASALTIC TUFF AND TUFF BRECCIA (PLIOCENE)—Deposits of cinders, hydrated basaltic glass, and accessory and accidental xenoliths in Sycamore and Oak Creek Canyon areas. Age is between 4.2 and 4.9 m.y. in Volunteer Canyon (Damon and others, 1974). Locally includes older basalt flows in Sycamore and Oak Creek Canyons

Tbo OLDEST BASALTS OF SAN FRANCISCO VOLCANIC FIELD (PLIOCENE AND MIOCENE)—Informally called rim basalts; in Volunteer Canyon unit includes the alluvium beneath the basalt flow on Black Point (Haines and Bowles, 1976) which has been dated at 2.43 ± 0.32 m.y. (P. E. Damon, unpub. data, 1979)

Tbf Monchiquite lava flow—Alkalic lamprophyre containing clinopyroxene, olivine, biotite, and analcite. Extends beyond its source in some cases as much as several kilometers. Ages are 7 to 6 m.y. (P. E. Damon, unpub. data, 1979)

Tbi Dike or neck—Monchiquite similar to lava flows (Tbf); commonly includes tuff breccia. Age range is same as for vent deposits (Tbv)

Tbb Bedded monchiquite tuff—Mostly lacustrine or air-fall in origin; may extend several kilometers from the eruptive source

SEDIMENTARY ROCKS OF THE COLORADO PLATEAU

Kw WEPO FORMATION OF MESAVERDE GROUP (UPPER CRETACEOUS)—Alternating beds of olive-gray siltstone, coal, and yellowish-gray sandstone. Thickness 0–350 ft (0–107 m)

Kt TOROVEA FORMATION OF MESAVERDE GROUP (UPPER CRETACEOUS)

Kbu Upper sandstone member—Yellowish-gray to pale-orange, fine-grained to very coarse grained sandstone. Thickness 0–80 ft (0–24 m)

Kbm Middle carbonaceous mudstone member—Variegated mudstone. Thickness 0–100 ft (0–30 m)

Kbl Lower sandstone member—Light-brown to pale-yellowish-gray, low to medium-grained sandstone. Thickness 0–120 feet (0–37 m)

Kt Tongue of Torova Formation—Sandstone. Intertongues with Mancos Shale. Mapped in the Padilla Mesa area. Thickness 0–250 ft (0–76 m)

Km MANCOS SHALE (UPPER CRETACEOUS)—Light- to dark-gray claystone and siltstone. Thickness 165–775 ft (50–235 m)

Kmu Upper tongue—Light- to dark-gray claystone and siltstone. Mapped in the Padilla Mesa area. Thickness 0–500 ft (0–15 m)

Kd DAKOTA SANDSTONE (UPPER CRETACEOUS)—Tan, brown, and gray sandstone, conglomeratic sandstone, and conglomerate. Thickness 0–90 ft (0–27 m). Pinches out to southeast

Jcw COW SPRINGS SANDSTONE (MIDDLE JURASSIC)—Greenish-gray to light-yellowish-gray, fine- to medium-grained, cross-stratified sandstone. Thickness 0–285 ft (0–87 m) where exposed; 470 ft (143 m) thick in well at Kaserie Canyon. Pinches out to southeast

Jec ENTRADA SANDSTONE AND CARMEL FORMATION (MIDDLE JURASSIC)—Reddish-brown siltstone and sandstone, and white cross-stratified sandstone. Thickness 0–395 ft (0–120 m)

JTRn NAVAJO SANDSTONE (JURASSIC AND TRIASSIC?)—Grayish-orange-pink, even-grained, thickly cross-stratified sandstone. Thickness 0–465 ft (0–142 m). Pinches out to east

TRk KAYENTA FORMATION (UPPER TRIASSIC?)—Silty facies, grayish-red mudstone, siltstone, and silty sandstone. Thickness 0–600 ft (0–183 m). Pinches out to southeast

TRmd DINOSAUR CANYON SANDSTONE MEMBER OF MOENAVE FORMATION (UPPER TRIASSIC?)—Orangish-red, cross-stratified and flat-bedded sandstone and sandy siltstone. Thickness 100–400 ft (30–122 m). Pinches out eastward beneath Hopi Buttes volcanic field

TRw WINGATE SANDSTONE (UPPER TRIASSIC)

TRwl Lukachukai Member—Reddish-brown fine-grained, cross-stratified sandstone. Thickness 0–250 ft (0–76 m). Pinches out to northwest

TRwr Rock Point Member—Reddish-brown siltstone and mudstone. Thickness 0–800 ft (0–245 m). Pinches out to northwest

TRco CHINLE FORMATION (UPPER TRIASSIC)

TRcu Owl Rock Member—Mottled light-gray and grayish-pink interbedded limestone and calcareous siltstone. Thickness from 200 ft (100 m) near Little Colorado River to 620 ft (190 m) beneath Black Mesa

TRcp Petrified Forest Member—Claystone, siltstone, and minor sandstone, variegated. Thickness 0–920 ft (0–280 m)

TRcs Shinarump Member—Light-gray to yellowish-gray sandstone and conglomerate. Thickness 0–70 ft (0–21 m)

TRm MORENCI FORMATION (MIDDLE? AND LOWER TRIASSIC)—Reddish-brown mudstone, siltstone, silty sandstone, and sandstone. Thickness 0–270 ft (0–113 m)

TRPzu MIDDLE(?) AND LOWER TRIASSIC AND PALEOZOIC SEDIMENTARY ROCKS, UNDIVIDED—Sandstone, shale, siltstone, limestone, dolomite, limestone, and dolomite; upturned on east side of Slate Mountain rhyolite dome (Qs)

Pzu PALEOZOIC SEDIMENTARY ROCKS, UNDIVIDED—Sandstone, shale, siltstone, limestone, dolomitic limestone, and dolomite; upturned around northern part of Elden Mountain dacite dome (Qd)

Pk KAIBAB FORMATION (LOWER PERMIAN)—Yellowish-gray to light-gray silty dolomite, dolomitic sandstone, minor sandstone and dolomitic limestone. Locally map unit includes lower part of Moenkopi Formation. Thickness 0–510 ft (0–155 m). Thickest in southwest corner of area; pinches out eastward

Pkc TOROWEAP FORMATION AND COCONINO SANDSTONE (LOWER PERMIAN)—Light-colored, cross-stratified sandstone; facies of siltstone, sandstone, and dolomite occur in the Toroweap on western edge of map. Coconino laterally equivalent to De Chelly Sandstone to north and east. Thickness 360–1,050 ft (110–320 m)

PIPha HERMIT SHALE (LOWER PERMIAN AND SUPAI FORMATION (LOWER PERMIAN TO LOWER PENNSYLVANIAN—Combined thickness: 1,230–2385 ft (375–727 m)

Hermit Shale—Reddish shale and interbedded sandstone and shale. Present in southwest corner only

Supai Formation—Reddish siltstone, cross-stratified sandstone; some limestone in the lower part

MDH REDWALL LIMESTONE (UPPER AND LOWER MISSISSIPPIAN) AND TEMPLE BUTTE LIMESTONE (UPPER AND MIDDLE? DEVONIAN)—Combined thickness 0–665 ft (0–203 m). Units pinch out to southeast

Redwall Limestone—Massive light-gray limestone and dolomite

Temple Butte Limestone—Dolomite, reddish siltstone, sandy limestone, and gray sandstone.

Ꞓmbt MUAV LIMESTONE AND BRIGHT ANGEL SHALE (MIDDLE CAMBRIAN AND TAPEATS SANDSTONE (MIDDLE AND LOWER CAMBRIAN OF TONTO GROUP—Tonto Group absent in subsurface in southern half of area. Combined thickness 0–340 ft (0–104 m)

Muav Limestone—Mottled-gray and purple dolomitic limestone. Lower part of Muav intertongues with upper part of Bright Angel

Bright Angel Shale—Mainly green, purple, and reddish-brown siltstone interbedded with light-brown sandstone in the lower part

Tapeats Sandstone—Medium- to coarse-grained sandstone and pebble conglomerate, commonly crossbedded

REFERENCES

Baksi, A. K, 1974, K-Ar study of the S. P. flow: Canadian Journal of Earth Science, v. 11, p. 1350–1356.

Cooley, M. E., Harshbarger, J. W., Akers, J. P., and Hardt, W. F., 1969, Regional hydrogeology of the Navajo and Hopi Indian Reservations, Arizona, New Mexico, and Utah: U. S. Geological Survey Professional Paper 521–A, 61 p.

Cooper, O. J., 1962, Ground water in the Wupatki and Sunset Crater National Monuments, Coconino County, Arizona: U. S. Geological Survey Water-Supply Paper 1475–a, p. 357–374.

Damon, P. E., Shafiqullah, M., and Leventhal, J. S., 1974, K-Ar chronology for the San Francisco volcanic field and rate of erosion of the Little Colorado River: in Karlstrom T. N. V., Swanz, G. A., and Eastwood, R. L., eds., pt. 1 of Geology of Northern Arizona: Geological Society of America Guidebook for Rocky Mountain Section Meeting, Flagstaff, Arizona, v. 6, no. 5, p. 221–235. [Ages have been corrected for recently revised decay constants.]

Haines, D. V., and Bowles, C. G., 1976, Preliminary geologic map of the Wupatki NE quadrangle, Arizona: U. S. Geological Survey, Open-File Report 76–757, scale 1:24,000.

Hereford, Richard, 1979, Preliminary geologic map of the Little Colorado River Valley between Cameron and Winslow, Arizona: U. S. Geological Survey Open-File Report 79–1574 scale 1:250,000.

Hunkins, P. W., Billingsley, G. H., Breed, W. J., Sears, J. S., Ford, T. D., Clark, M. D., Babcock, R. S., and Brown, E. H., 1976, Geologic map of the Grand Canyon National Park, Arizona: Grand Canyon Natural History Association and Museum of Northern Arizona, scale 1:62,500.

Mann, L. J., 1976, Ground Water resources and water use in southern Navajo County, Arizona: Arizona Water Commission Bulletin 10, 106 p.

Moore, R. B., and Wolfe, E. W., 1976, Geologic map of the eastern San Francisco volcanic field, Arizona: U. S. Geological Survey Miscellaneous Investigations Series Map I–963, scale 1:50,000.

Moore, R. B., Wolfe, E. W., and Ulrich, G. E., 1976, Volcanic rocks of the eastern and northern parts of the San Francisco volcanic field, Arizona: U. S. Geological Survey Journal of Research, v. 4, no. 5, p. 549–560.

Reiche, Parry, 1937, Quaternary deformation in the Cameron district of the plateau province: American Journal of Science, v. 34, no. 200, p. 128–138.

Shoemaker, E. M., 1960, Penetration mechanics of high velocity meteorites, illustrated by Meteor Crater, Arizona: International Geological Congress, 21st Session, pt. 18, Copenhagen, p. 418–434.

Smiley, T. L., 1958, The geology and dating of Sunset Crater, Flagstaff, Arizona, in Guidebook of the Black Mesa Basin: New Mexico Geological Society, 9th Field Conference Guidebook, p. 186–190.

Ulrich, G. E., and Bailey, N. G., 1974, Geologic map of the SP Mountain quadrangle, Coconino County, Arizona: U. S. Geological Survey Open-File Report 74–5, scale 1:50,000.

Wilson, E. D., Moore, R. T., and Cooper, J. R., 1969, Geologic map of Arizona: Arizona Bureau of Mines and U. S. Geological Survey, scale 1:500,000.

Geologic Map
MAP SHOWING GEOLOGY, STRUCTURE, AND URANIUM DEPOSITS OF THE FLAGSTAFF 1° x 2° QUADRANGLE, ARIZONA

Compiled by
G. E. Ulrich, G. H. Billingsley, Richard Hereford, E. W. Wolfe,
L. D. Nealey, and R. L. Sutton

1984

NAVAJO NATION
AUM Environmental
Response Trust-First Phase

TITLE:	Regional Geology
PROJECT:	Removal Site Evaluation Hoskie Tso No. 1 Mine Site
DATE: 6/5/2018	DOCUMENT NAME: Removal Site Evaluation Report
Stantec	AUTHOR: CBB / REVIEWER: EDZ
	FIGURE: 2-4

Document Path: U:\235001213\03_data\gis_cad_MXD\ArcRSE\RSE_Hoskie Tso_Geology_22x34_1_20180605.mxd

NOTE:

Based on field observations at the Site, bedrock units shown are near surface (typically within 1 foot), but do not necessarily outcrop and may be overlain by minor Q deposits.

REFERENCES:

Coordinate System: NAD 1983 UTM Zone 12N

Basemap image accessed from BING Maps imagery web mapping service (http://www.bing.com/maps) on 06/2018.

Geology adapted from Shoemaker et al., (1962):
Shoemaker, E.M., Roach, C.H., and Byers, F.M., Jr., 1962, Diatremes and Uranium Deposits in the Hope Buttes, Arizona, in Engel, A.E.J, and others, eds., Petrographic Studies - - A volume in honor of A.F. Buddington: Geological Society of America, p., 327-355.

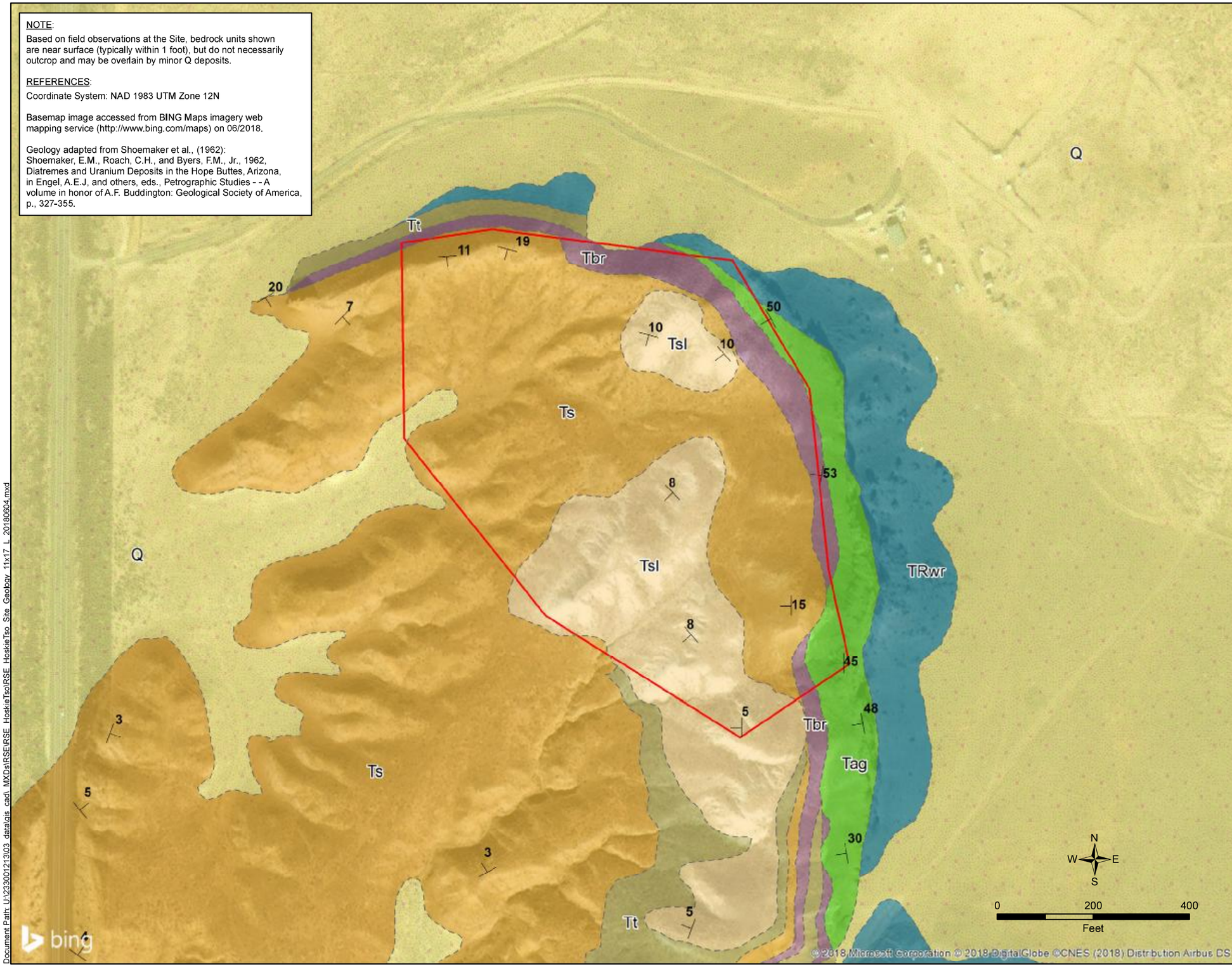

NAVAJO NATION
AUM Environmental Response Trust-First Phase

LEGEND

Strike and Dip of Beds

Geologic Contact (Inferred)

Claim Boundary

Site Geology

HOLOCENE / PLEISTOCENE

Q: Quaternary Deposits – Undifferentiated (Pleistocene and Holocene) – includes sandy to gravelly colluvial and alluvial deposits, and eolian sand deposits.

TERTIARY

Ts: Sedimentary rocks (Tertiary) – includes siltstone, claystone, and carbonate rocks

Tsl: Siltstone (Tertiary), laminated, light colored

Tt: Tuff (Tertiary) – Limburgite tuff including tuff breccia

Tbr: Breccia (Tertiary) Comprised of angular blocks of the Rock Point Member of the Wingate Sandstone, and subordinate blocks of limburgite in a tuff matrix

Tag: Limburgite Agglomerate (Tertiary) composed of intrusive monchiquite and limburgite tuff and tuff breccia

TRIASSIC

TRwr: Wingate Sandstone (Upper Triassic) Rock Point Member – Reddish brown siltstone and mudstone

TITLE: Detailed Site Geology

PROJECT: Removal Site Evaluation
Hoskie Tso No. 1 Mine Site

DATE: 6/5/2018

DOCUMENT NAME: Removal Site Evaluation Report

Stantec

AUTHOR: CBB

REVIEWER: EDZ

FIGURE: 2-5a

Document Path: U:\233001213\03_data\gis_cad_MXDs\RSE\RSE_HoskieTso\RSE_HoskieTso_Site_Geology_11x17_L_20180604.mxd

NOTE:

Based on field observations at the Site, bedrock units shown are near surface (typically within 1 foot), but do not necessarily outcrop and may be overlain by minor Q deposits.

REFERENCES:

Coordinate System: NAD 1983 UTM Zone 12N

Basemap image accessed from BING Maps imagery web mapping service (http://www.bing.com/maps) on 09/2018.

Geology adapted from Shoemaker et al., (1962):
Shoemaker, E.M., Roach, C.H., and Byers, F.M., Jr., 1962, Diatremes and Uranium Deposits in the Hope Buttes, Arizona, in Engel, A.E.J, and others, eds., Petrographic Studies - - A volume in honor of A.F. Buddington: Geological Society of America, p., 327-355.

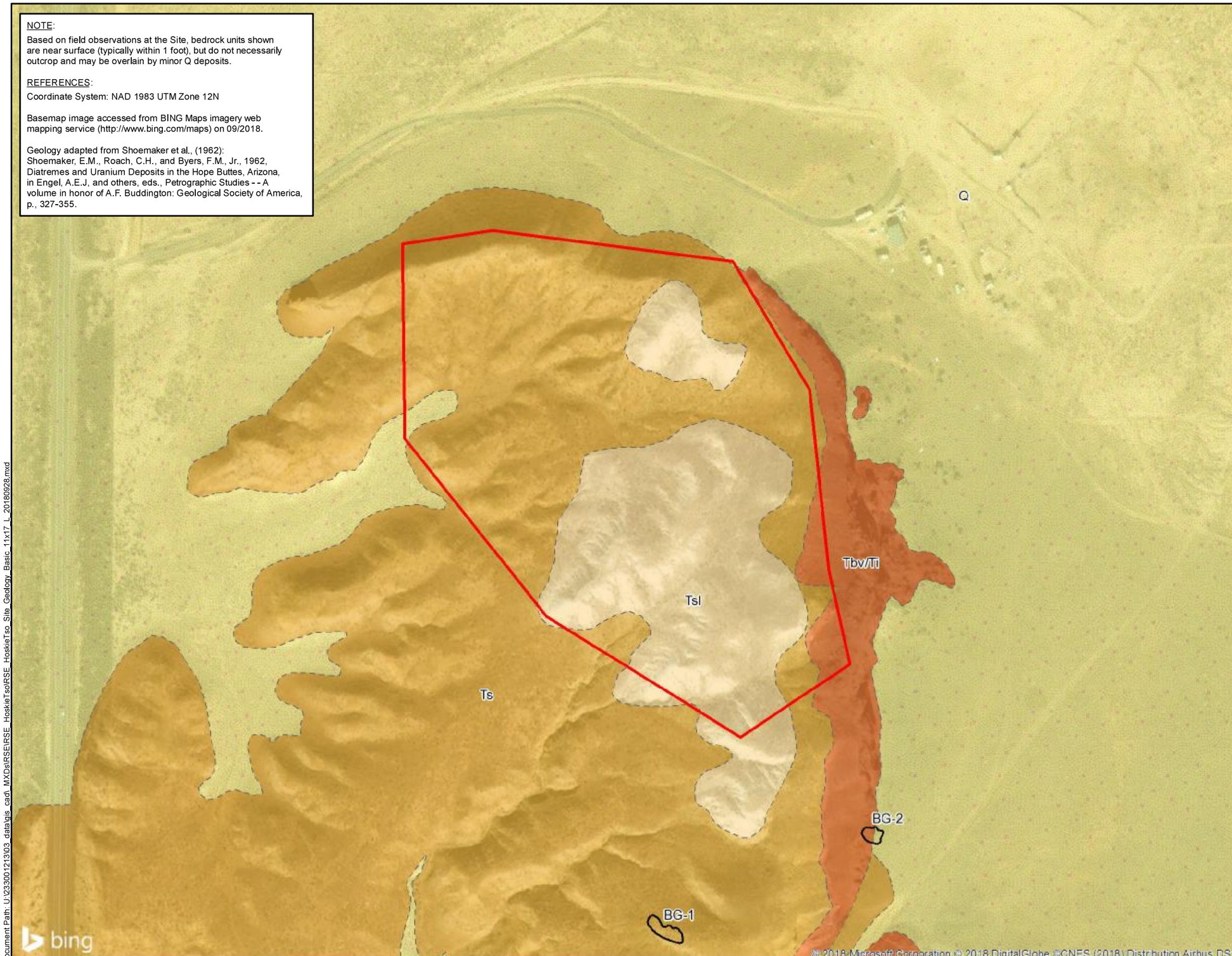

NAVAJO NATION
AUM Environmental Response Trust-First Phase

LEGEND

Claim Boundary

Potential Background Reference Area

Geologic Contact (Inferred)

Site Geology

QUATERNARY

Q: Quaternary Deposits – Undifferentiated (Pleistocene and Holocene) – includes sandy to gravelly colluvial and alluvial deposits, and eolian sand deposits.

TERTIARY

Tbv/Ti: Volcanic vent deposits – cincludes tuff breccia, agglomerate, and lacustrine deposits in maar craters. Lava flows may cover vents and other deposits

Ts: Sedimentary rocks (Tertiary) – includes siltstone, claystone, and carbonate rocks

Tsl: Siltstone (Tertiary), laminated, light colored

N
W E
S

0 200 400
Feet

TITLE:
Simplified Site Geology

PROJECT:
Removal Site Evaluation
Hoskie Tso No. 1 Mine Site

DATE: 9/28/2018

DOCUMENT NAME: Removal Site Evaluation Report

AUTHOR: CBB

REVIEWER: EDZ

Stantec

FIGURE: 2-5b

Document Path: U:\233001213\03_data\gis_cad_MXDs\RSE\RSE_HoskieTso\RSE_HoskieTso_Site_Geology_Basic_11x17_L_20180928.mxd

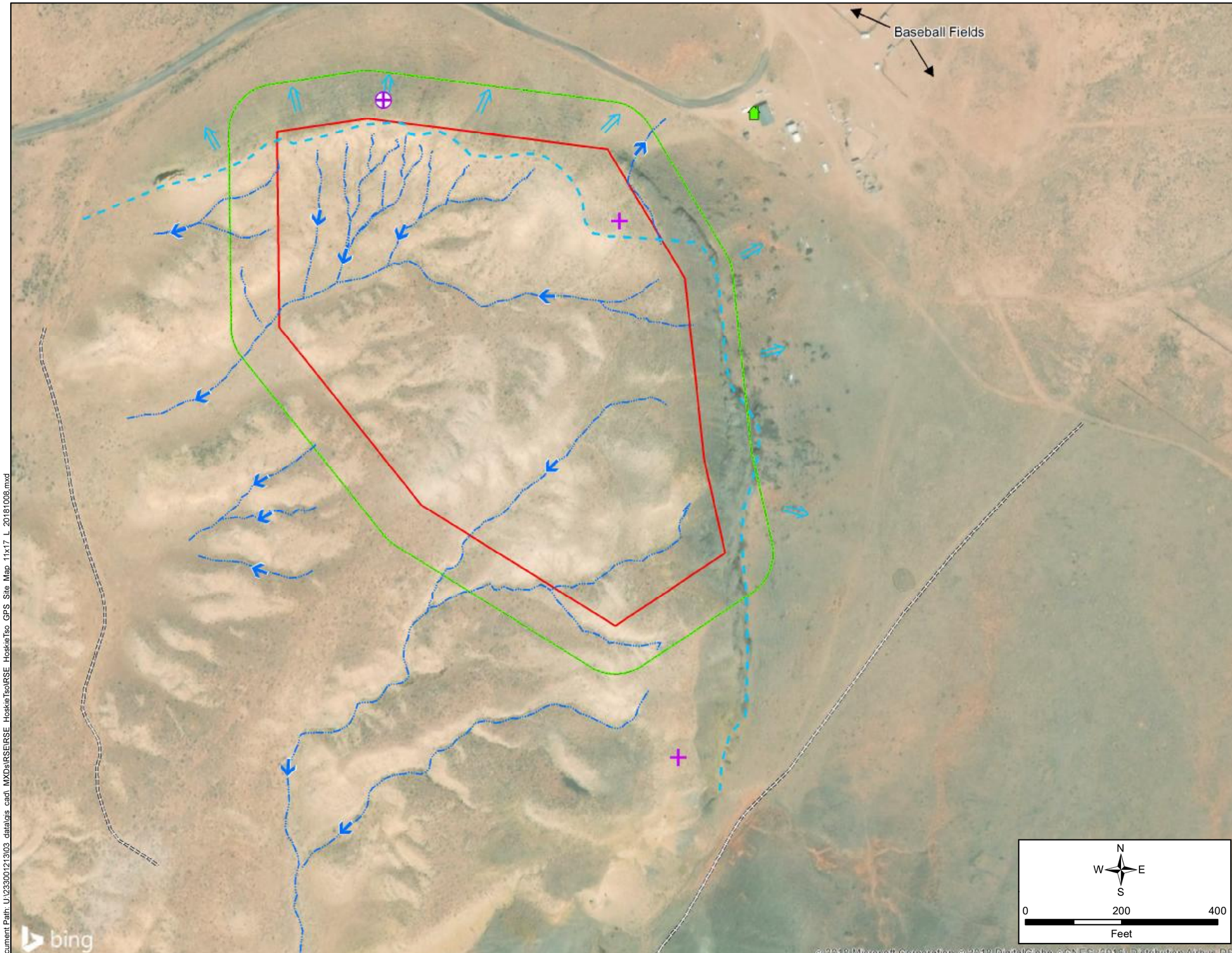

NAVAJO NATION
AUM Environmental Response Trust-First Phase

LEGEND

- Potential Rock Sample Location[1]
- Potential Rock Sample Location (per Coordinates)[2]
- Habitable Building
- Flow Direction
- Approximate Overland Water Flow Direction
- Approximate Watershed Divide Line
- Drainage
- Historical Road
- Claim Boundary
- 100-Foot Claim Buffer

NOTES:

1. Approximate rock sample locations estimated based on figure provided in Uranium-Occurrence Report (Wenrich-Verbeek, 1982).

2. Rock sample location based on coordinates provided in Appendix B-1 (Wenrich-Verbeek, 1980). The same coordinates were provided for the six rock samples described in the report.

3. BING image may exhibit slight shift of 10 - 15' in the East-West direction.

REFERENCES:

Coordinate System: NAD 1983 UTM Zone 12N

Basemap image accessed from BING Maps imagery web mapping service (http://www.bing.com/maps) on 10/2018.

TITLE:

Site Map

PROJECT:

Removal Site Evaluation
Hoskie Tso No. 1 Mine Site

DATE:	DOCUMENT NAME:	
10/8/2018	Removal Site Evaluation Report	
Stantec	AUTHOR: CBB	REVIEWER: EDZ
	FIGURE: 2-6	

Document Path: U:\233001213\03_data\gis_cad_MXDs\RSE\RSE_HoskieTso\RSE_HoskieTso_GPS_Site_Map_11x17_L_20181008.mxd

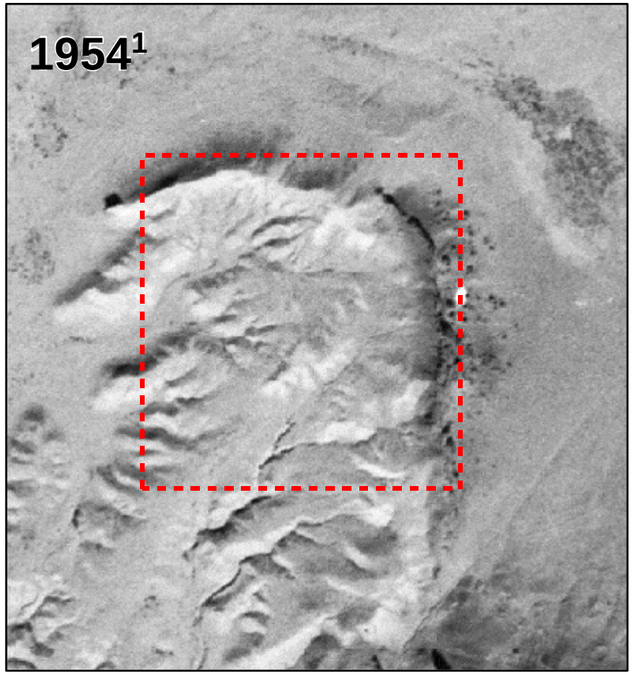

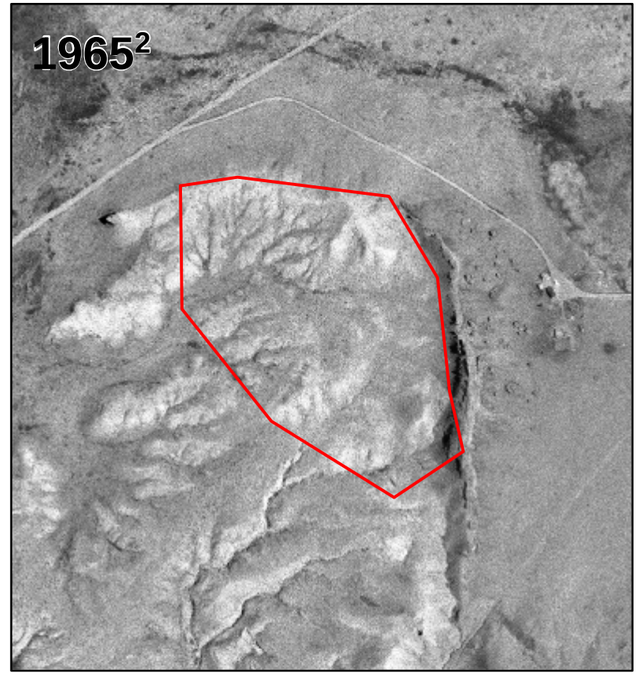

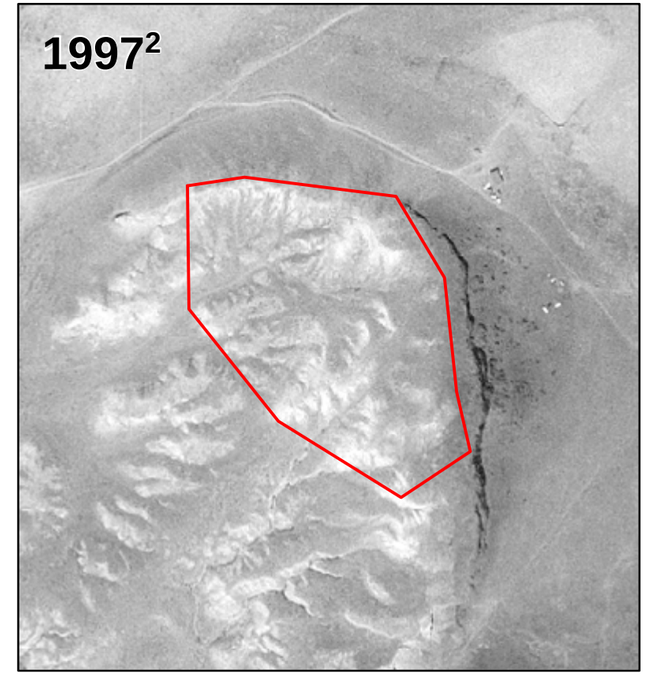

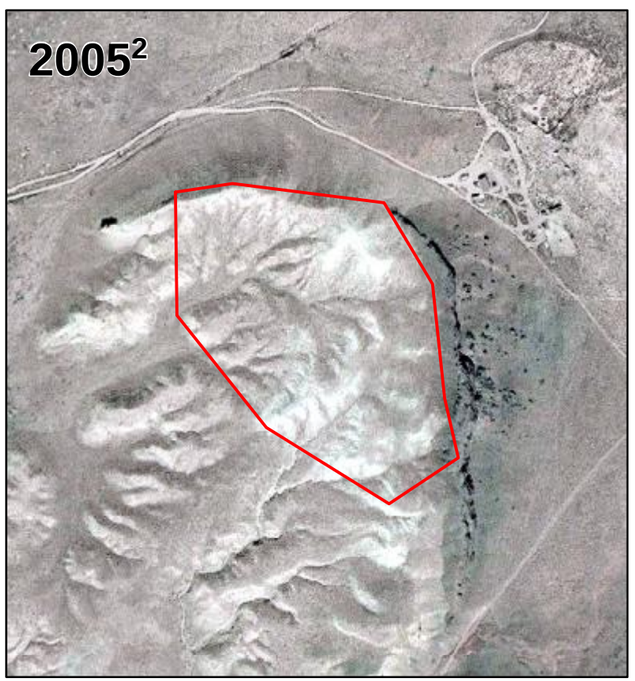

NAVAJO NATION
AUM Environmental Response Trust-First Phase

LEGEND

Hoskie Tso No. 1 Claim Boundary

Approximate Site Location, not georeferenced

NOTES:

1. Image is not georeferenced, scale not available.

2. Image is georeferenced. Scale bar applies to these image frames only.

3. Basemap image accessed from BING Maps imagery web mapping service (http://www.bing.com/maps) on 06/2018.

REFERENCES:

Coordinate System: NAD 1983 UTM Zone 12N

Historical Aerial Imagery downloaded from https://earthexplorer.usgs.gov/ (01/2016).

N
W E
S

0 500 1,000
Feet

TITLE:
Historical Aerial Photograph Comparison

PROJECT:
Removal Site Evaluation
Hoskie Tso No. 1 Mine Site

DATE: 6/7/2018

DOCUMENT NAME: Removal Site Evaluation Report

Stantec

AUTHOR: EDZ

REVIEWER: CBB

FIGURE: 3-1a

Document Path: U:\233001213\03_data\gis_cad_MXDs\RSE\RSE_HoskieTso\RSE_HoskieTso_Historical_Aerial_Compilation_11x17_L_20180604.mxd

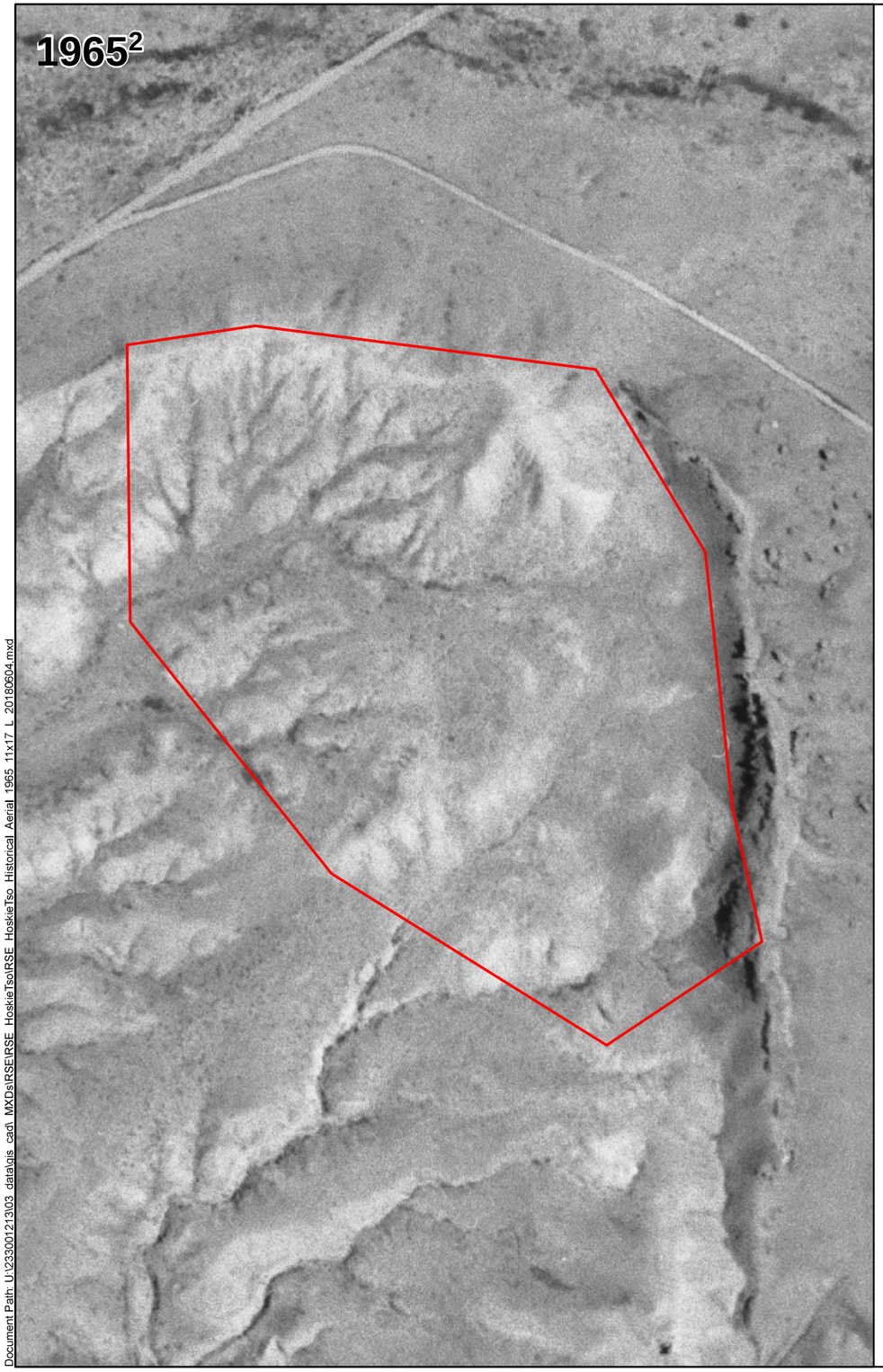

NAVAJO NATION
AUM Environmental Response Trust-First Phase

LEGEND

Claim Boundary

REFERENCES:

1. Coordinate System: NAD 1983 UTM Zone 12N

2. 1965 aerial image downloaded from https://earthexplorer.usgs.gov/ (01/2016) and georeferenced using current image from BING (03/2016).

3. Basemap image accessed from BING Maps imagery web mapping service (http://www.bing.com/maps) on 06/2018.

N
W E
S

0 200 400
Feet

TITLE:
1965 Historical Aerial Photograph Comparison

PROJECT:
Removal Site Evaluation
Hoskie Tso No. 1 Mine Site

DATE: 6/5/2018

DOCUMENT NAME: Removal Site Evaluation Report

Stantec

AUTHOR: CBB

REVIEWER: EDZ

FIGURE: 3-1b

Document Path: U:\233001213\03_data\gis_cad_MXDs\RSE\RSE_HoskieTso\RSE_HoskieTso_Historical_Aerial_1965_11x17_L_20180604.mxd

NAVAJO NATION
AUM Environmental Response Trust-First Phase

LEGEND

Potential Background Reference Area

Claim Boundary

REFERENCES:
Coordinate System: NAD 1983 UTM Zone 12N

Basemap image accessed from BING Maps imagery web mapping service (http://www.bing.com/maps) on 09/2018.

N
W E
S

0 300 600
Feet

TITLE:
Potential Background Reference Areas

PROJECT:
Removal Site Evaluation
Hoskie Tso No. 1 Mine Site

DATE: 9/28/2018

DOCUMENT NAME: Removal Site Evaluation Report

Stantec

AUTHOR: CBB

REVIEWER: EDZ

FIGURE: 3-2

Document Path: U:\233001213\03_data\gis_cad_MXDs\RSE\RSE_HoskieTso\RSE_HoskieTso_Background_Areas_Final_11x17_L_20180928.mxd

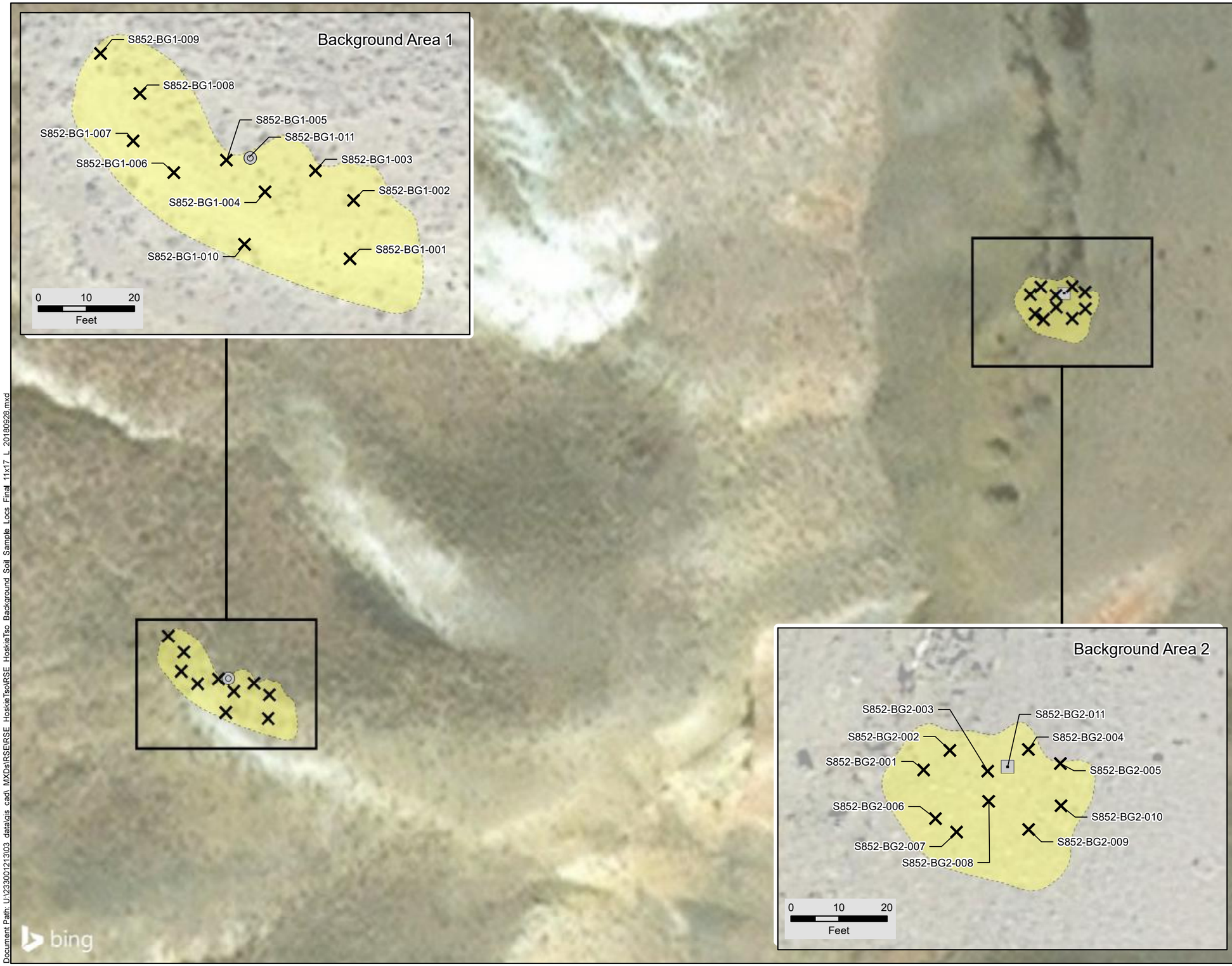

NAVAJO NATION
AUM Environmental Response Trust-First Phase

LEGEND

- Surface Sample Location
- Borehole Location - Surface and Subsurface Samples
- Borehole Location - Surface Samples Only
- Background Reference Area

REFERENCES:
Coordinate System: NAD 1983 UTM Zone 12N

Basemap image accessed from BING Maps imagery web mapping service (http://www.bing.com/maps) on 09/2018.

N W E S

0 50 100
Feet

TITLE:
Background Reference Areas - Sample Locations

PROJECT:
Removal Site Evaluation
Hoskie Tso No. 1 Mine Site

DATE: 9/28/2018

DOCUMENT NAME: Removal Site Evaluation Report

Stantec

AUTHOR: CBB

REVIEWER: EDZ

FIGURE: 3-3

Document Path: U:\233001213\03_data\gis_cad_MXDs\RSE\RSE_HoskieTso\RSE_HoskieTso_Background_Soil_Sample_Locs_Final_11x17_L_20180928.mxd

Background Reference Area associated with Survey Area	
Survey Area	Background Reference Area
A	BG-1
B	BG-2

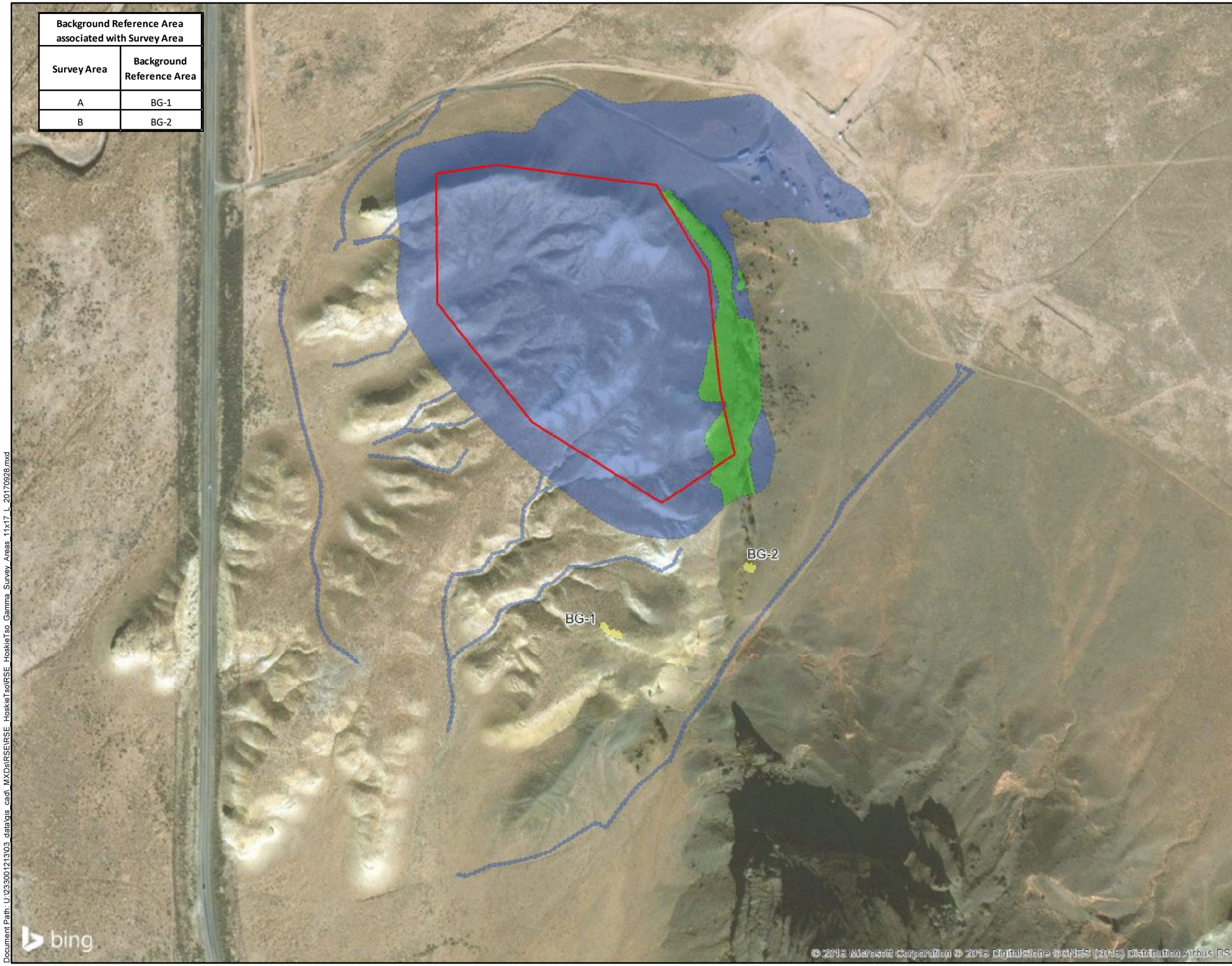

NAVAJO NATION
AUM Environmental Response Trust-First Phase

LEGEND

- Background Reference Area
- Survey Area A
- Survey Area B
- Claim Boundary

NOTE:
Gamma survey area is approximately 32.3 acres.

REFERENCES:
Coordinate System: NAD 1983 UTM Zone 12N

Basemap image accessed from BING Maps imagery web mapping service (http://www.bing.com/maps) on 09/2018.

N
W E
S

0 300 600
Feet

TITLE:
Gamma Radiation Survey Areas

PROJECT:
Removal Site Evaluation
Hoskie Tso No. 1 Mine Site

DATE: 9/28/2018

DOCUMENT NAME: Removal Site Evaluation Report

Stantec

AUTHOR: CBB
REVIEWER: EDZ

FIGURE: 3-4

Document Path: U:\233001213\03_data\gis_cad_MXDs\RSE\RSE_HoskieTso\RSE_HoskieTso_Gamma_Survey_Areas_11x17_L_20170928.mxd

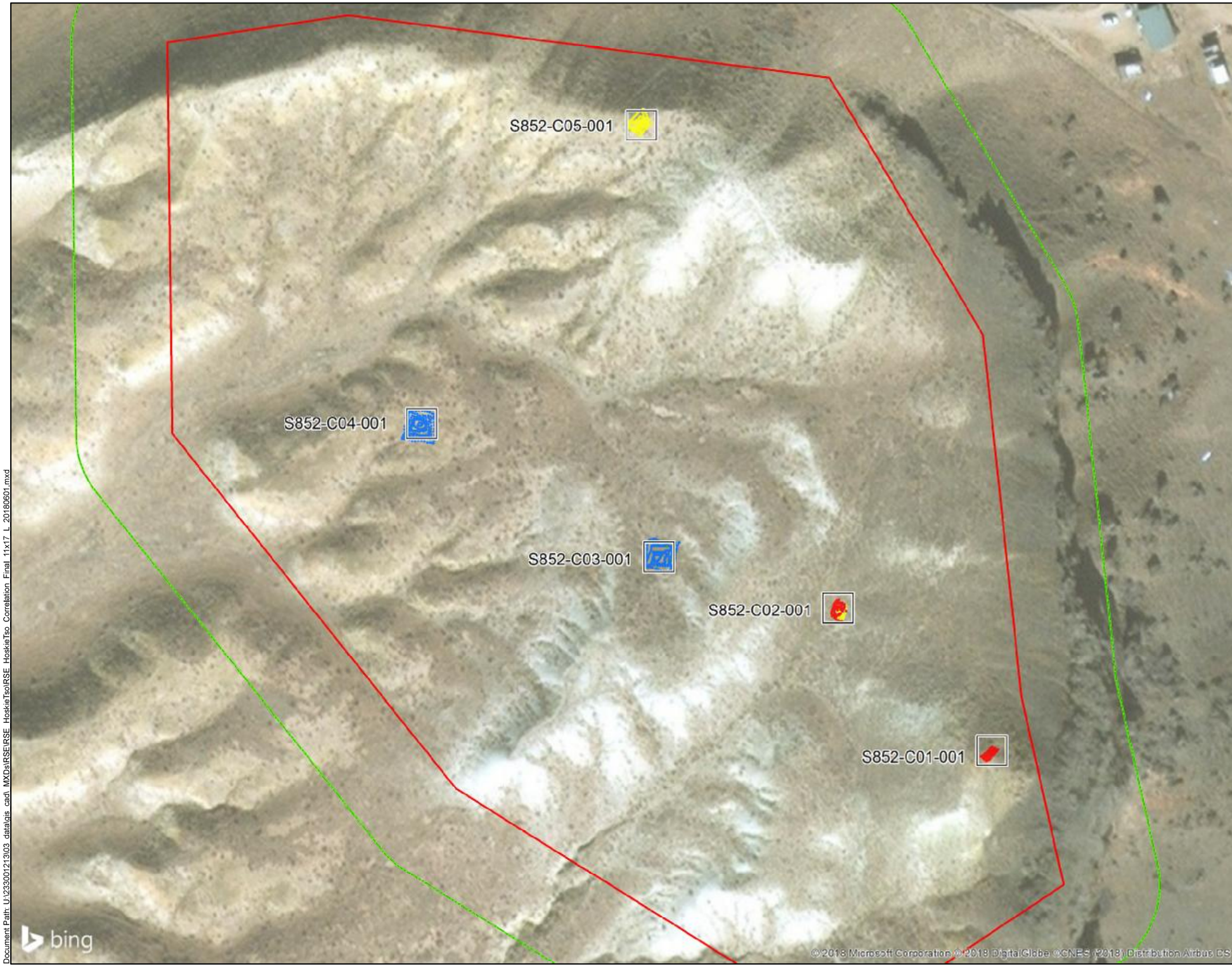

NAVAJO NATION
AUM Environmental Response Trust-First Phase

LEGEND

- S852-C01-001 Correlation Location (30' x 30')
- Claim Boundary
- 100-Foot Claim Buffer

Gamma Survey
Counts per Minute (CPM)

- 7,157 - 15,388 (Minimum to BG-1 UTL)
- 15,389 - 17,702 (>BG-1 UTL to BG-2 UTL)
- 17,703 - 30,776 (>BG-2 UTL to 2x BG-1 UTL)
- 30,777 - 61,543 (>2x BG-1 UTL to Maximum)

NOTE:
Each correlation sample consists of five grab samples collected from 0.0 - 0.5 feet below ground surface, composited together for laboratory analysis.

REFERENCES:
Coordinate System: NAD 1983 UTM Zone 12N

Basemap image accessed from BING Maps imagery web mapping service (http://www.bing.com/maps) on 06/2018.

N W E S

0 100 200
Feet

TITLE:
Gamma Correlation Study Locations

PROJECT:
Removal Site Evaluation
Hoskie Tso No. 1 Mine Site

DATE: 6/11/2018

DOCUMENT NAME: Removal Site Evaluation Report

Stantec

AUTHOR: CBB
REVIEWER: EDZ

FIGURE: 3-5

Document Path: U:\233001213\03_data\gis_cad_MXDs\RSE\RSE_HoskieTso\RSE_HoskieTso_Correlation_Final_11x17_L_20180601.mxd

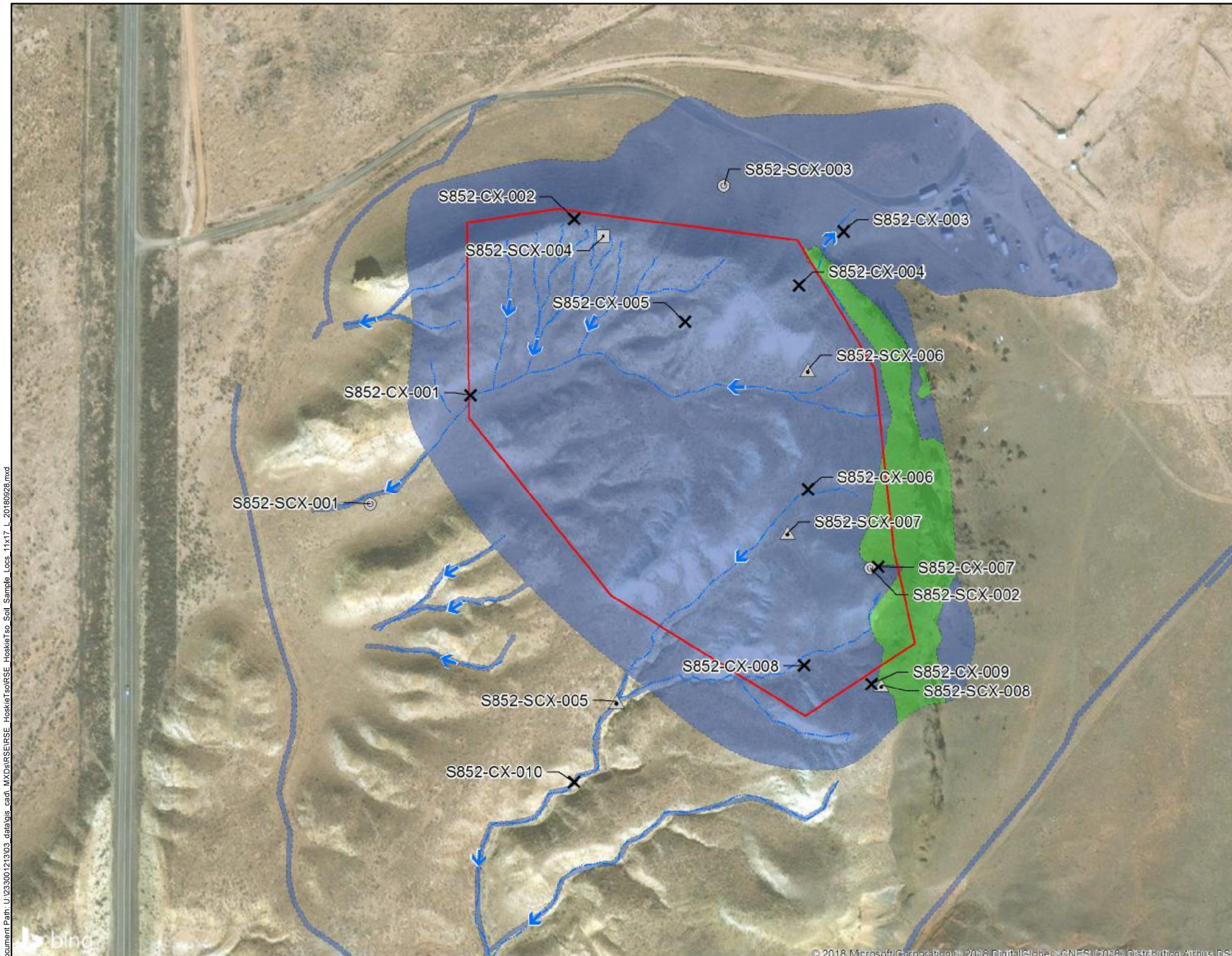

NAVAJO NATION
AUM Environmental Response Trust-First Phase

LEGEND

- Surface Sample Location
- Borehole Location - Surface and Subsurface Samples
- Borehole Location - Surface Samples Only
- Borehole Location - Subsurface Samples Only
- Flow Direction
- Drainage
- Survey Area A
- Survey Area B
- Claim Boundary

NOTES:

1. Samples collected in boreholes S852-SCX-005 through S852-SCX-008 extended from ground surface to depths below 0.5 ft bgs,

2. Surface and subsurface static gamma measurements were collected at all borehole locations.

3. Surface samples range from 0.0 - 0.5 feet below ground surface (ft bgs)

4. Subsurface samples range from 0.5 - 2.0 ft bgs

5. Static gamma measurements range from 0.0 - 2.0 ft bgs

REFERENCES:

Coordinate System: NAD 1983 UTM Zone 12N

Basemap image accessed from BING Maps imagery web mapping service (http://www.bing.com/maps) on 09/2018.

N W E S

0 200 400
Feet

TITLE:
Site Characterization Surface and Subsurface Sample Locations

PROJECT:
Removal Site Evaluation
Hoskie Tso No. 1 Site

DATE: 9/28/2018

DOCUMENT NAME: Removal Site Evaluation Report

Stantec

AUTHOR: CBB
REVIEWER: EDZ

FIGURE: 3-6

Document Path: U:\233001213\03_data\gis_cad_MXDs\RSE\RSE_HoskieTso\RSE_HoskieTso_Soil_Sample_Locs_11x17_L_20180928.mxd

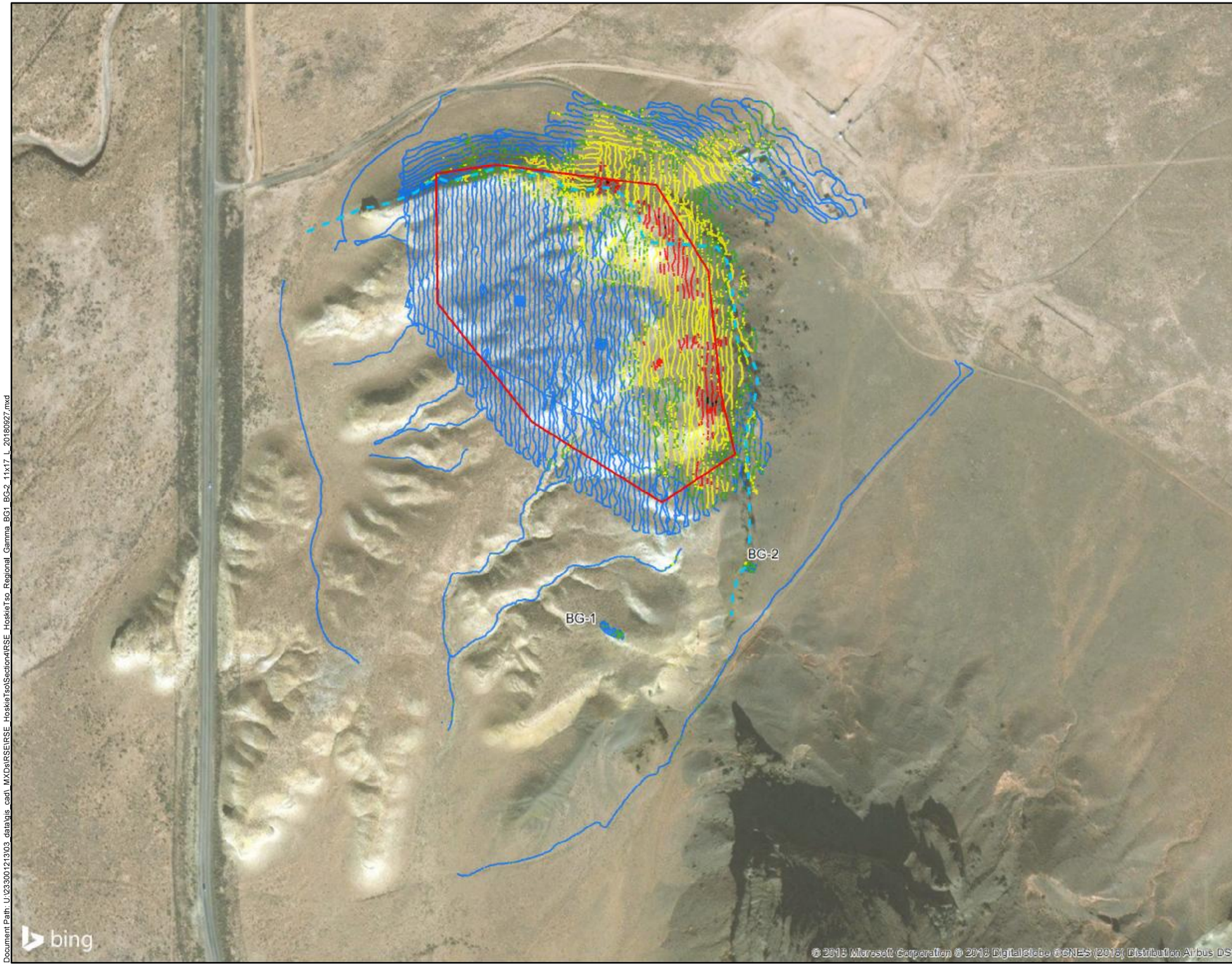

NAVAJO NATION
AUM Environmental Response Trust-First Phase

LEGEND

Claim Boundary

Approximate Watershed Divide Line

Gamma Survey

Counts per Minute (CPM)

- 5,577 - 15,388 (Minimum to BG-1 IL)
- 15,389 - 17,702 (>BG-1 IL to BG-2 IL)
- 17,703 - 30,776 (>BG-2 IL to 2x BG-1 IL)
- 30,777 - 76,940 (>2x BG-1 IL to 5x BG-1 IL)
- 76,941 - 115,157 (>5x BG-1 IL to Maximum)

NOTE:
Refer to Figure 3-4 for Survey Area Delineation

REFERENCES:
Coordinate System: NAD 1983 UTM Zone 12N

Basemap image accessed from BING Maps imagery web mapping service (http://www.bing.com/maps) on 09/2018.

N W E S

0 300 600
Feet

TITLE:
Gamma Radiation Survey Results

PROJECT:
Removal Site Evaluation
Hoskie Tso No. 1 Mine Site

DATE: 9/27/2018

DOCUMENT NAME: Removal Site Evaluation Report

Stantec

AUTHOR: CBB

REVIEWER: EDZ

FIGURE: 4-1a

Document Path: U:\233001213\03_data\gis_cad_MXDs\RSE\RSE_HoskieTsoSection4\RSE_HoskieTso_Regional_Gamma_BG1_BG-2_11x17_L_20180927.mxd

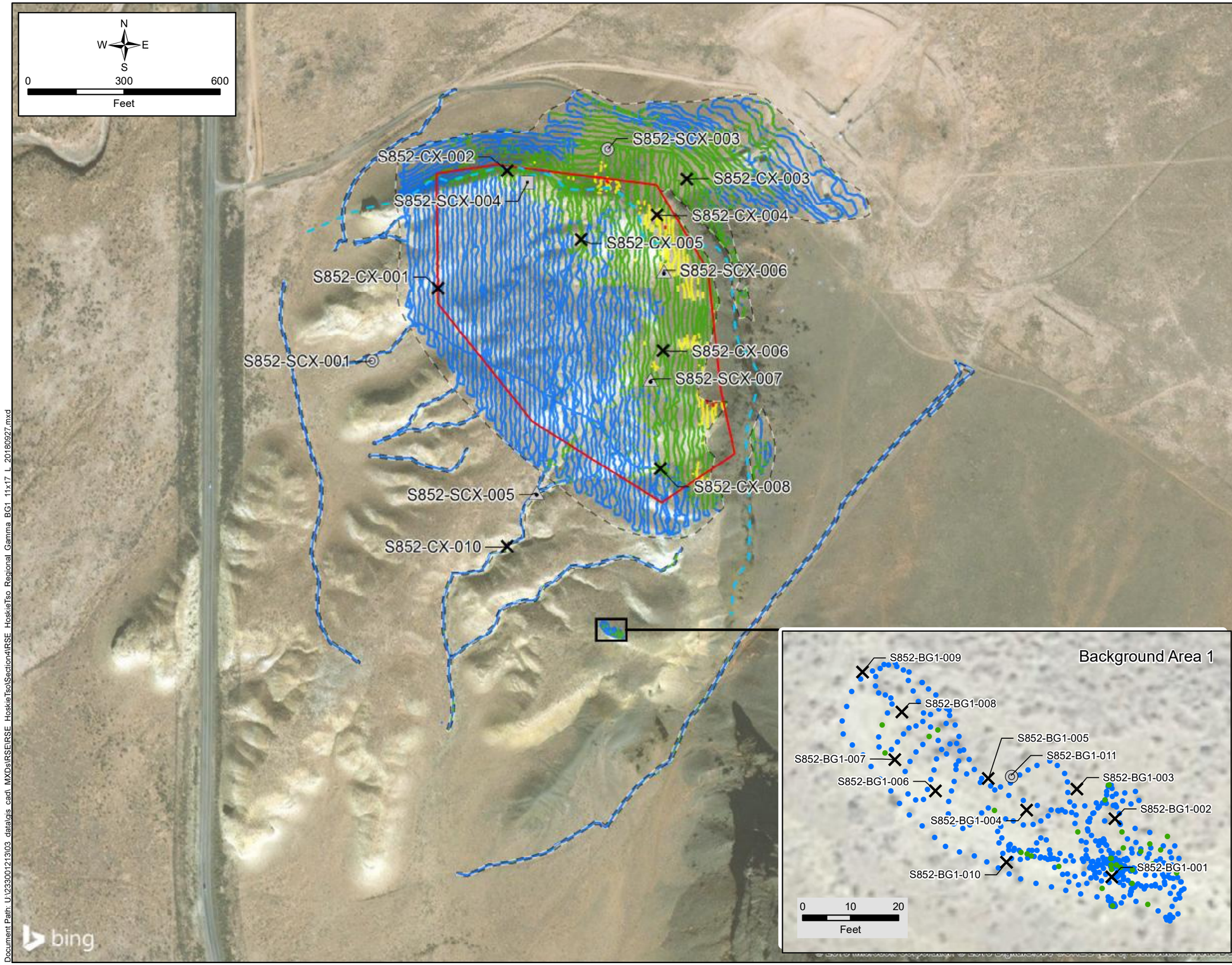

NAVAJO NATION
AUM Environmental Response Trust-First Phase

LEGEND

- Surface Sample Location
- Borehole Location - Surface and Subsurface Samples
- Borehole Location - Surface Samples Only
- Borehole Location - Subsurface Samples Only[1]
- Approximate Watershed Divide Line
- Survey Area A
- Claim Boundary

Gamma Survey

Counts per Minute (CPM)

- 5,577 - 15,388 (Minimum to BG-1 IL)
- 15,389 - 30,776 (>BG-1 IL to 2x BG-1 IL)
- 30,777 - 76,940 (>2x BG-1 IL to 5x BG-1 IL)
- 76,941 - 109,631 (>5x BG-1 IL to Maximum)

NOTE:

1. Subsurface sample extends from ground surface to > 0.5 ft bgs.

REFERENCES:

Coordinate System: NAD 1983 UTM Zone 12N

Basemap image accessed from BING Maps imagery web mapping service (http://www.bing.com/maps) on 10/2018.

TITLE: Gamma Radiation Survey Results for Survey Area A

PROJECT: Removal Site Evaluation Hoskie Tso No. 1 Mine Site

DATE: 10/2/2018

DOCUMENT NAME: Removal Site Evaluation Report

AUTHOR: CBB

REVIEWER: EDZ

Stantec

FIGURE: 4-1b

Document Path: U:\233001213\03_data\gis_cad_MXDs\RSE\RSE_HoskieTso\Section4\RSE_HoskieTso_Regional_Gamma_BG1_11x17_L_20180927.mxd

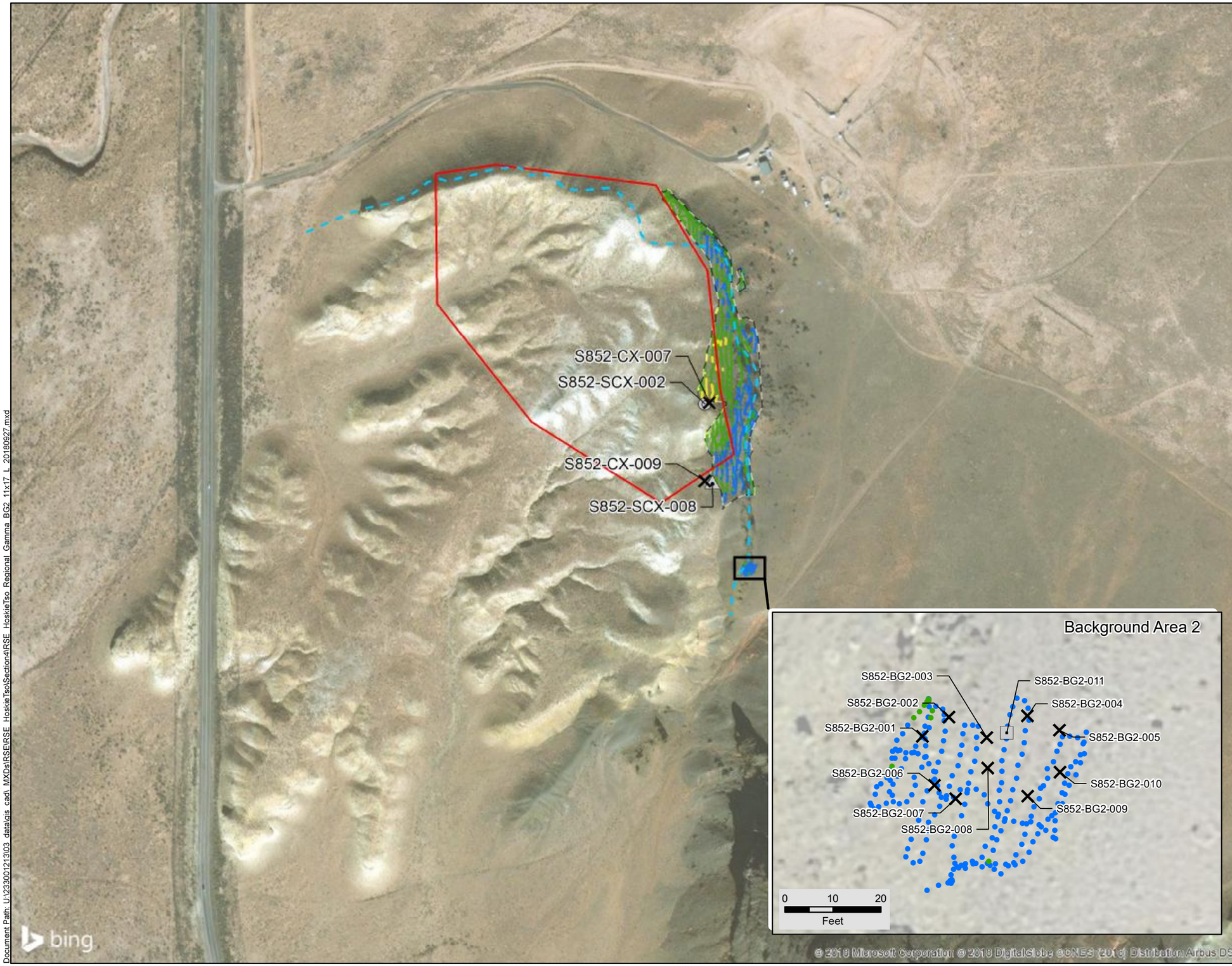

NAVAJO NATION
AUM Environmental Response Trust-First Phase

LEGEND

- Surface Sample Location
- Borehole Location - Surface and Subsurface Samples
- Borehole Location - Surface Samples Only
- Borehole Location - Subsurface Samples Only[1]
- Approximate Watershed Divide Line
- Survey Area B
- Claim Boundary

Gamma Survey

Counts per Minute (CPM)

- 11,165 - 17,702 (Minimum to BG-2 IL)
- 17,703 - 35,404 (>BG-2 IL to 2x BG-2 IL)
- 35,405 - 88,510 (>2x BG-2 IL to 5x BG-2 IL)
- 88,511 - 115,157 (>10x BG-2 IL to Maximum)

REFERENCES:
Coordinate System: NAD 1983 UTM Zone 12N

Basemap image accessed from BING Maps imagery web mapping service (http://www.bing.com/maps) on 10/2018.

N W E S

0 300 600
Feet

TITLE:
Gamma Radiation Survey Results for Survey Area B

PROJECT:
Removal Site Evaluation
Hoskie Tso No. 1 Mine Site

DATE: 10/2/2018

DOCUMENT NAME: Removal Site Evaluation Report

AUTHOR: CBB

REVIEWER: EDZ

Stantec

FIGURE: 4-1c

Document Path: U:\233001213\03_data\gis_cad_MXDs\RSE\RSE_HoskieTso\Section4\RSE_HoskieTso_Regional_Gamma_BG2_11x17_L_20180927.mxd

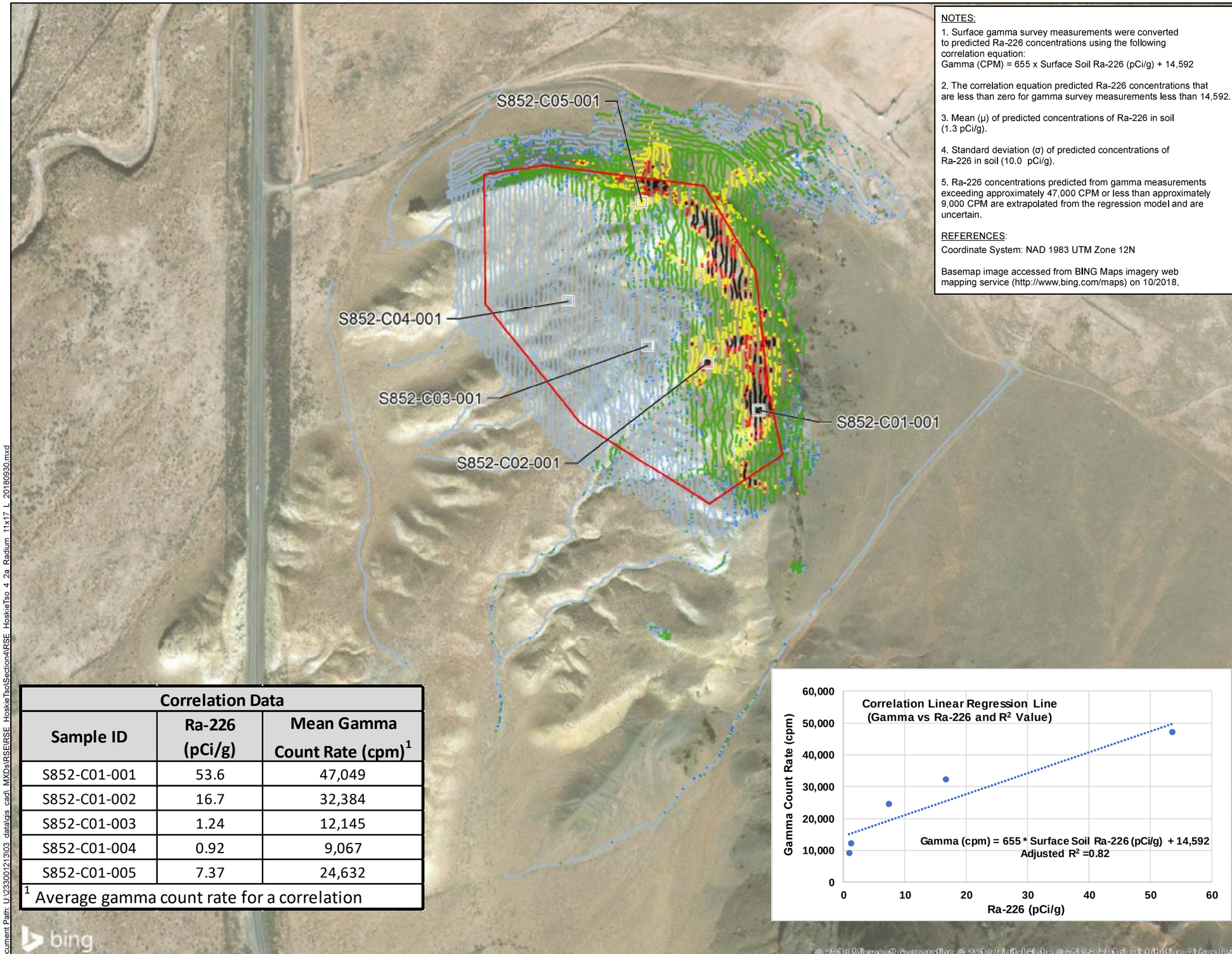

NOTES:

1. Surface gamma survey measurements were converted to predicted Ra-226 concentrations using the following correlation equation:
Gamma (CPM) = 655 x Surface Soil Ra-226 (pCi/g) + 14,592

2. The correlation equation predicted Ra-226 concentrations that are less than zero for gamma survey measurements less than 14,592.

3. Mean (μ) of predicted concentrations of Ra-226 in soil (1.3 pCi/g).

4. Standard deviation (σ) of predicted concentrations of Ra-226 in soil (10.0 pCi/g).

5. Ra-226 concentrations predicted from gamma measurements exceeding approximately 47,000 CPM or less than approximately 9,000 CPM are extrapolated from the regression model and are uncertain.

REFERENCES:

Coordinate System: NAD 1983 UTM Zone 12N

Basemap image accessed from BING Maps imagery web mapping service (http://www.bing.com/maps) on 10/2018.

Correlation Data		
Sample ID	Ra-226 (pCi/g)	Mean Gamma Count Rate (cpm)[1]
S852-C01-001	53.6	47,049
S852-C01-002	16.7	32,384
S852-C01-003	1.24	12,145
S852-C01-004	0.92	9,067
S852-C01-005	7.37	24,632

[1] Average gamma count rate for a correlation

NAVAJO NATION
AUM Environmental Response Trust-First Phase

LEGEND

Claim Boundary

S852-C01-001 Correlation Location (30' x 30')

Predicted Ra-226 Concentration (pCi/g)

- Less than 0[2]
- 0 - 1.3 (μ)[3]
- 1.4 - 11.3 (μ + 1σ[4])
- 11.4 - 21.3 (μ + 2σ)
- 21.4 - 31.3 (μ + 3σ)
- 31.4 - 153.5

N W E S

0 300 600
Feet

TITLE:
Predicted Concentrations of Ra-226 in Soil Using the Correlation Equation

PROJECT:
Removal Site Evaluation
Hoskie Tso No. 1 Mine Site

DATE: 10/1/2018

DOCUMENT NAME: Removal Site Evaluation Report

Stantec

AUTHOR: CBB

REVIEWER: EDZ

FIGURE: 4-2a

Document Path: U:\233001213\03_data\gis_cad_MXDs\RSE\RSE_HoskieTsoSection4\RSE_HoskieTso_4_2a_Radium_11x17_L_20180930.mxd

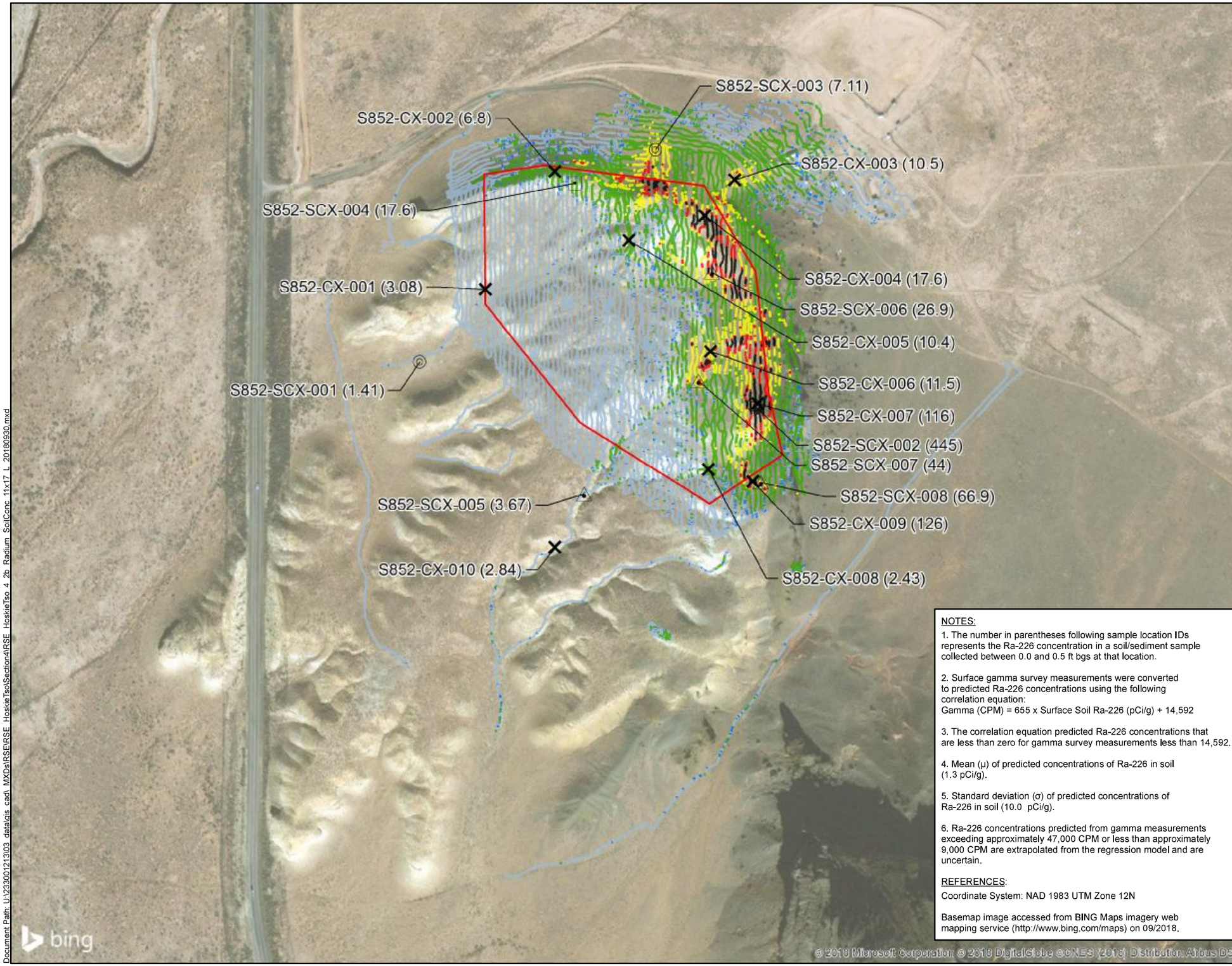

NOTES:

1. The number in parentheses following sample location IDs represents the Ra-226 concentration in a soil/sediment sample collected between 0.0 and 0.5 ft bgs at that location.

2. Surface gamma survey measurements were converted to predicted Ra-226 concentrations using the following correlation equation:
Gamma (CPM) = 655 x Surface Soil Ra-226 (pCi/g) + 14,592

3. The correlation equation predicted Ra-226 concentrations that are less than zero for gamma survey measurements less than 14,592.

4. Mean (μ) of predicted concentrations of Ra-226 in soil (1.3 pCi/g).

5. Standard deviation (σ) of predicted concentrations of Ra-226 in soil (10.0 pCi/g).

6. Ra-226 concentrations predicted from gamma measurements exceeding approximately 47,000 CPM or less than approximately 9,000 CPM are extrapolated from the regression model and are uncertain.

REFERENCES:

Coordinate System: NAD 1983 UTM Zone 12N

Basemap image accessed from BING Maps imagery web mapping service (http://www.bing.com/maps) on 09/2018.

NAVAJO NATION
AUM Environmental Response Trust-First Phase

LEGEND

- Surface Sample Location
- Borehole Location - Surface and Subsurface Samples
- Borehole Location - Surface Samples Only
- Borehole Location - Subsurface Samples Only
- Claim Boundary

Predicted Ra-226 Concentration (pCi/g)

- Less than 0[3]
- 0 - 1.3 (μ)[4]
- 1.4 - 11.3 (μ + 1σ[5])
- 11.4 - 21.3 (μ + 2σ)
- 21.4 - 31.3 (μ + 3σ)
- 31.4 - 153.5.4

N W E S

0 300 600
Feet

TITLE:
Predicted Ra-226 Concentrations in Soil Compared to Ra-226 Concentrations in Soil/Sediment

PROJECT:
Removal Site Evaluation
Hoskie Tso No. 1 Mine Site

DATE: 9/30/2018

DOCUMENT NAME: Removal Site Evaluation Report

Stantec

AUTHOR: CBB
REVIEWER: EDZ

FIGURE: 4-2b

Document Path: U:\233001213\03_data\gis_cad_MXDs\RSE\RSE_HoskieTsoSection4\RSE_HoskieTso_4_2b_Radium_SoilConc_11x17_L_20180930.mxd

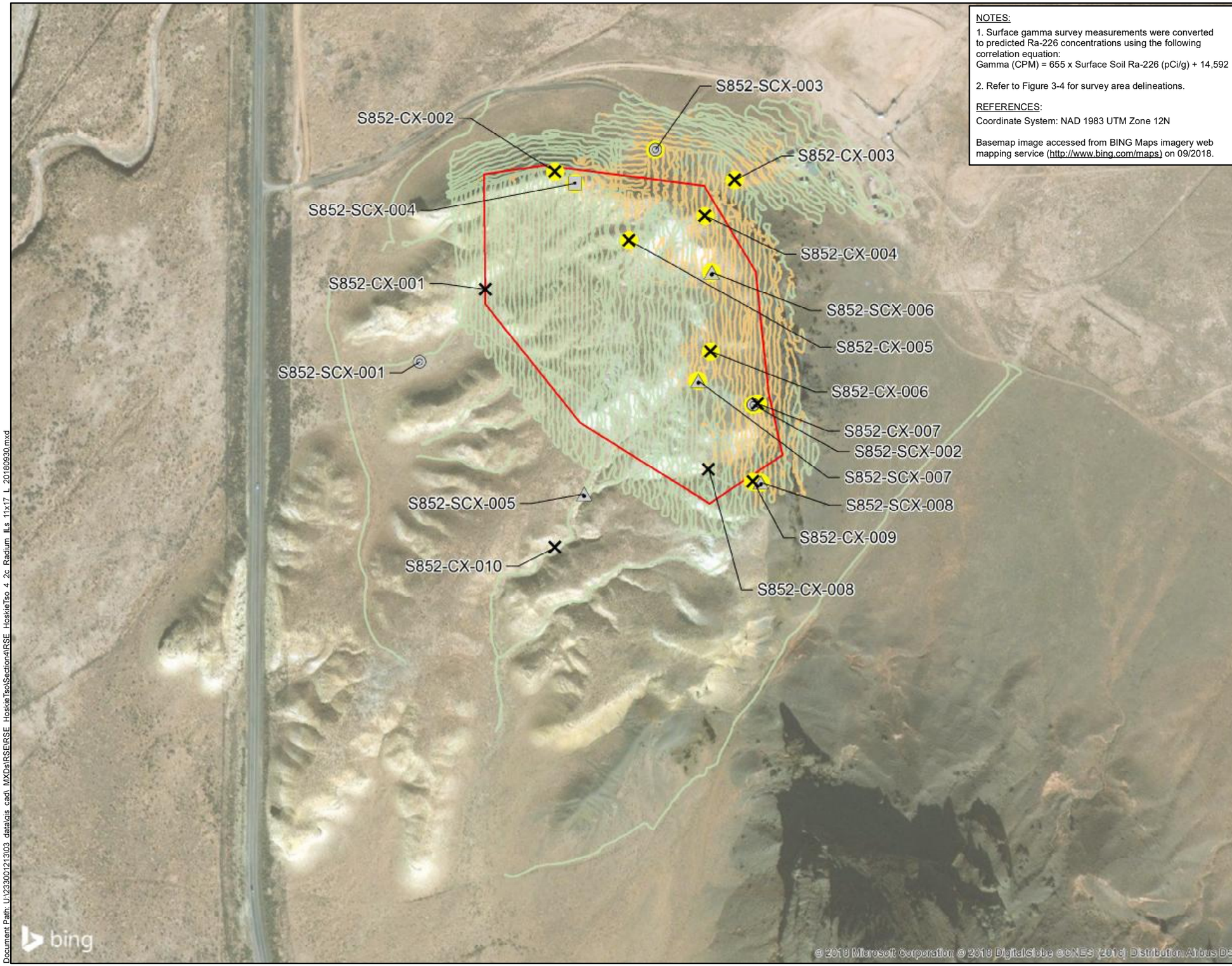

NOTES:

1. Surface gamma survey measurements were converted to predicted Ra-226 concentrations using the following correlation equation:
Gamma (CPM) = 655 x Surface Soil Ra-226 (pCi/g) + 14,592

2. Refer to Figure 3-4 for survey area delineations.

REFERENCES:

Coordinate System: NAD 1983 UTM Zone 12N

Basemap image accessed from BING Maps imagery web mapping service (http://www.bing.com/maps) on 09/2018.

NAVAJO NATION
AUM Environmental Response Trust-First Phase

LEGEND

- Surface Sample Location
- Borehole Location - Surface and Subsurface Samples
- Borehole Location - Surface Samples Only
- Borehole Location - Subsurface Samples Only
- Ra-226 IL Exceedance in Surface Soil
- Claim Boundary

Predicted Ra-226 Concentration (pCi/g)

IL Not Exceeded
Survey Area A: -13.8 - 5.5
Survey Area B: -5.2 - 2.5

IL Exceeded
Survey Area A: 5.6 - 145.1
Survey Area B: 2.6 - 153.5

N
W E
S

0 300 600
Feet

TITLE:
Predicted Ra-226 Concentrations in Soil Compared to Ra-226 ILs

PROJECT:
Removal Site Evaluation
Hoskie Tso No. 1 Mine Site

DATE: 9/30/2018

DOCUMENT NAME: Removal Site Evaluation Report

Stantec

AUTHOR: CBB
REVIEWER: EDZ

FIGURE: 4-2c

Document Path: U:\233001213\03_data\gis_cad_MXDs\RSE\RSE_HoskieTso\Section4\RSE_HoskieTso_4_2c_Radium_ILs_11x17_L_20180930.mxd

Soil and Sediment Investigation Levels		
Analyte (Units)	**Survey Area**	
Metals (mg/kg)	**Survey Area A IL**	**Survey Area B IL**
Arsenic (As)	23.1	14.9
Molybdenum (Mo)	45.0	98.0
Selenium (Se)	31.9	3.11
Uranium (U)	16.0	3.17
Vanadium (V)	141.0	66.5
Radionuclides (pCi/g)	**Survey Area A IL**	**Survey Area B IL**
Radium-226 (Ra)	5.48	2.46

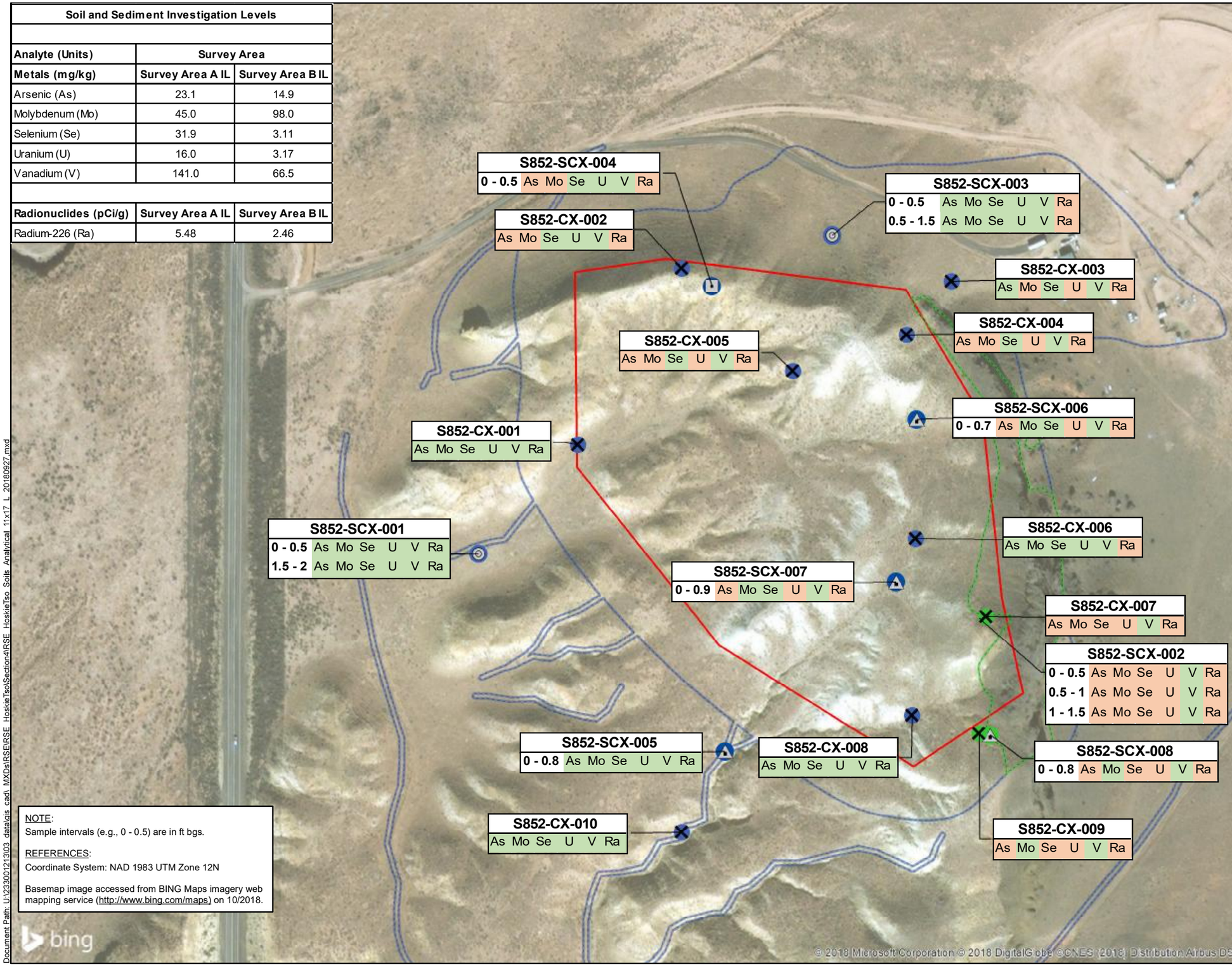

NOTE:
Sample intervals (e.g., 0 - 0.5) are in ft bgs.

REFERENCES:
Coordinate System: NAD 1983 UTM Zone 12N

Basemap image accessed from BING Maps imagery web mapping service (http://www.bing.com/maps) on 10/2018.

NAVAJO NATION
AUM Environmental Response Trust-First Phase

LEGEND

- Survey Area A - Surface Sample Location
- Survey Area B - Surface Sample Location
- Survey Area A - Borehole Location - Surface and Subsurface Samples
- Survey Area A - Borehole Location - Surface Samples Only
- Survey Area A - Borehole Location - Subsurface Samples Only
- Survey Area B - Borehole Location - Subsurface Samples Only
- Survey Area A
- Survey Area B
- Claim Boundary
- Investigation Level Not Exceeded
- Investigation Level Exceeded

N W E S

0 200 400
Feet

TITLE:
Surface and Subsurface Metals and Ra-226 Analytical Results

PROJECT:
Removal Site Evaluation
Hoskie Tso No. 1 Site

DATE: 10/2/2018

DOCUMENT NAME: Removal Site Evaluation Report

Stantec

AUTHOR: CBB

REVIEWER: EDZ

FIGURE: 4-3

Document Path: U:\233001213\03_data\gis_cad_MXDs\RSE\RSE_HoskieTso\Section4\RSE_HoskieTso_Soils_Analytical_11x17_L_20180927.mxd

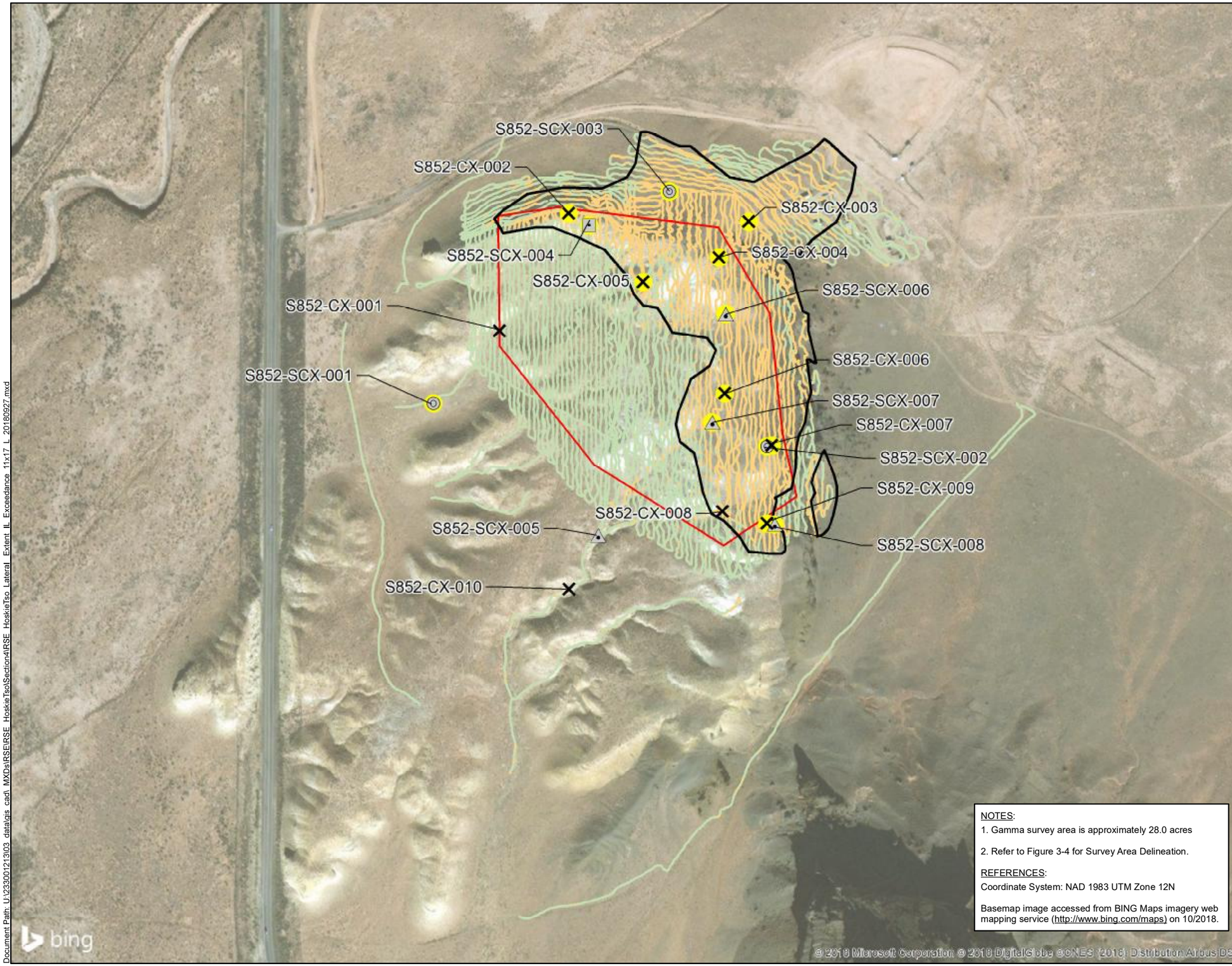

NAVAJO NATION
AUM Environmental Response Trust-First Phase

LEGEND

- Surface Sample Location
- Borehole Location - Surface and Subsurface Samples
- Borehole Location - Surface Samples Only
- Borehole Location - Subsurface Samples Only
- IL Exceedance in Unconsolidated Material at Location
- Approximate Area where Surface Gamma IL is Exceeded (13.7 acres)
- Claim Boundary

Gamma Survey[1]

Counts per Minute (CPM)

IL Not Exceeded
Survey Area A: 5,577 - 15,388
Survey Area B: 11,165 - 17,702

IL Exceeded
Survey Area A: 15,389 - 109,631
Survey Area B: 17,703 - 114,157

N W E S

0 300 600
Feet

NOTES:
1. Gamma survey area is approximately 28.0 acres
2. Refer to Figure 3-4 for Survey Area Delineation.

REFERENCES:
Coordinate System: NAD 1983 UTM Zone 12N
Basemap image accessed from BING Maps imagery web mapping service (http://www.bing.com/maps) on 10/2018.

TITLE:
Lateral Extent of Surface and Subsurface IL Exceedances

PROJECT:
Removal Site Evaluation
Hoskie Tso No. 1 Mine Site

DATE: 10/2/2018

DOCUMENT NAME: Removal Site Evaluation Report

Stantec

AUTHOR: CBB
REVIEWER: EDZ

FIGURE: 4-4a

Document Path: U:\233001213\03_data\gis_cad_MXDs\RSE\RSE_HoskieTso\Section4\RSE_HoskieTso_Lateral_Extent_IL_Exceedance_11x17_L_20180927.mxd

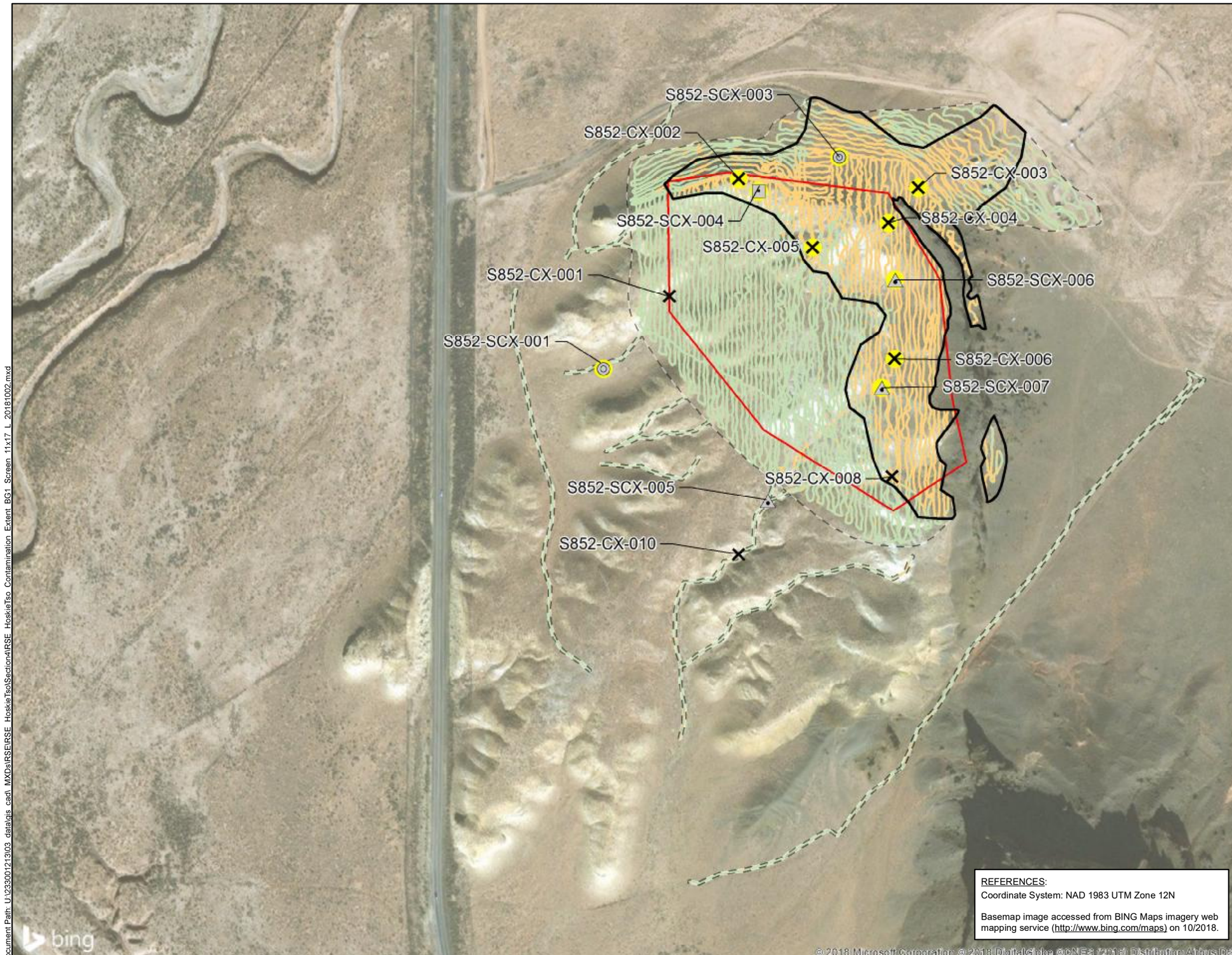

REFERENCES:
Coordinate System: NAD 1983 UTM Zone 12N

Basemap image accessed from BING Maps imagery web mapping service (http://www.bing.com/maps) on 10/2018.

NAVAJO NATION
AUM Environmental Response Trust-First Phase

LEGEND

- Surface Sample Location
- Borehole Location - Surface and Subsurface Samples
- Borehole Location - Surface Samples Only
- Borehole Location - Subsurface Samples Only
- IL Exceedance in Unconsolidated Material at Location
- Approximate Area where Surface Gamma IL is Exceeded (12.2 acres)
- Survey Area A
- Claim Boundary

Gamma Survey[1]
Counts per Minute (CPM)

- IL Not Exceeded 5,577 - 15,388
- IL Exceeded 15,389 - 109,631

N W E S

0 300 600
Feet

TITLE:
Survey Area A Lateral Extent of Surface and Subsurface IL Exceedances

PROJECT:
Removal Site Evaluation
Hoskie Tso No. 1 Mine Site

DATE: 10/2/2018

DOCUMENT NAME: Removal Site Evaluation Report

Stantec

AUTHOR: CBB
REVIEWER: EDZ

FIGURE: 4-4b

Document Path: U:\233001213\03_data\gis_cad_MXDs\RSE\RSE_HoskieTso\Section4\RSE_HoskieTso_Contamination_Extent_BG1_Screen_11x17_L_20181002.mxd

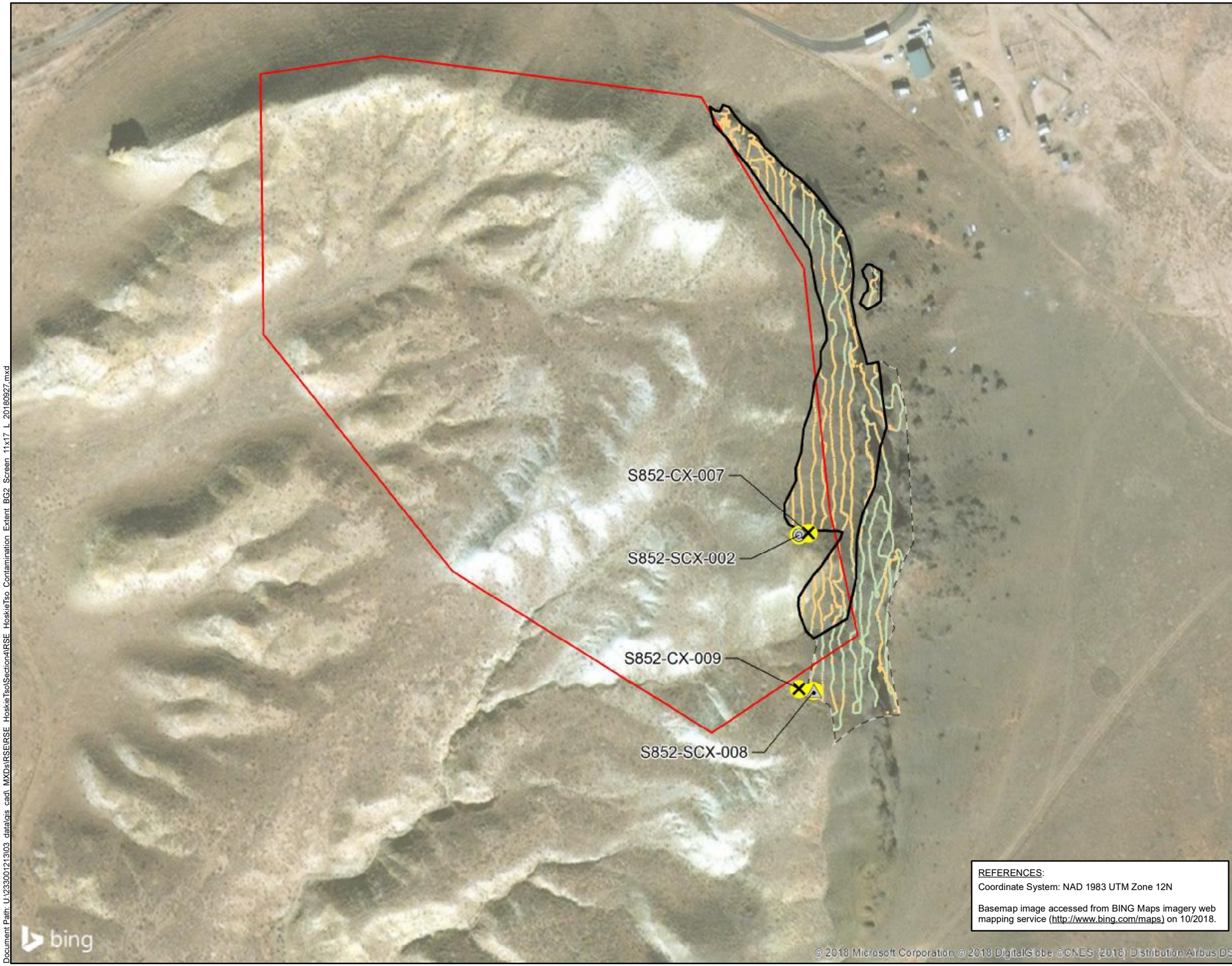

NAVAJO NATION
AUM Environmental Response Trust-First Phase

LEGEND

- Surface Sample Location
- Borehole Location - Surface and Subsurface Samples
- Borehole Location - Surface Samples Only
- Borehole Location - Subsurface Samples Only
- IL Exceedance in Unconsolidated Material at Location
- Approximate Area where Surface Gamma IL is Exceeded (1.5 acres)
- Survey Area B
- Claim Boundary

Gamma Survey[1]
Counts per Minute (CPM)

- IL Not Exceeded 11,165 - 17,702
- IL Exceeded 17,703 - 114,157

N W E S

0 150 300
Feet

REFERENCES:
Coordinate System: NAD 1983 UTM Zone 12N

Basemap image accessed from BING Maps imagery web mapping service (http://www.bing.com/maps) on 10/2018.

TITLE:
Survey Area B Lateral Extent of Surface and Subsurface IL Exceedances

PROJECT:
Removal Site Evaluation
Hoskie Tso No. 1 Mine Site

DATE: 10/2/2018

DOCUMENT NAME: Removal Site Evaluation Report

Stantec

AUTHOR: CBB
REVIEWER: EDZ

FIGURE: 4-4c

Document Path: U:\233001213\03_data\gis_cad_MXDs\RSE\RSE_HoskieTso\Section4\RSE_HoskieTso_Contamination_Extent_BG2_Screen_11x17_L_20180927.mxd

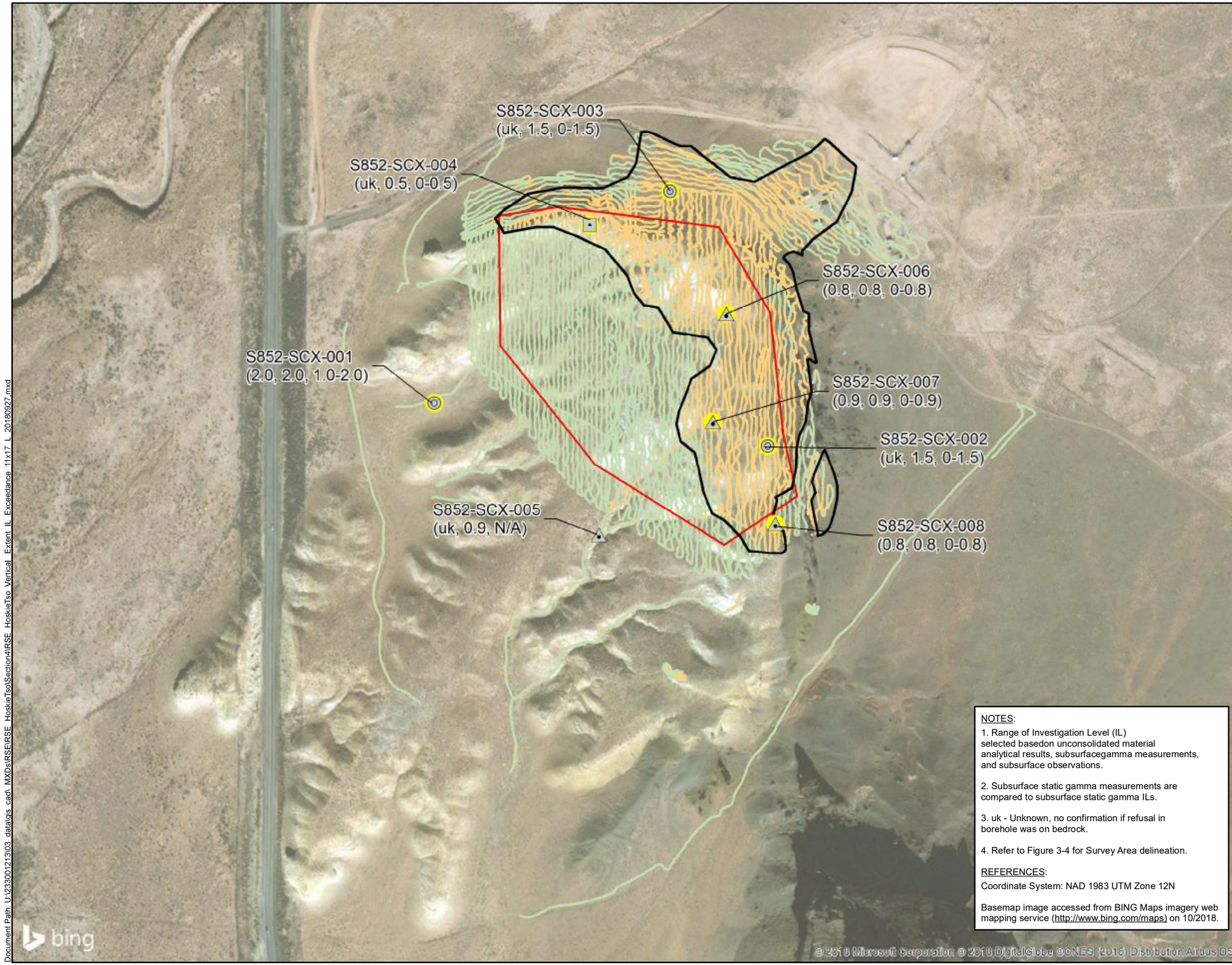

NOTES:

1. Range of Investigation Level (IL) selected basedon unconsolidated material analytical results, subsurfacegamma measurements, and subsurface observations.

2. Subsurface static gamma measurements are compared to subsurface static gamma ILs.

3. uk - Unknown, no confirmation if refusal in borehole was on bedrock.

4. Refer to Figure 3-4 for Survey Area delineation.

REFERENCES:

Coordinate System: NAD 1983 UTM Zone 12N

Basemap image accessed from BING Maps imagery web mapping service (http://www.bing.com/maps) on 10/2018.

NAVAJO NATION
AUM Environmental Response Trust-First Phase

LEGEND

- Borehole Location - Surface and Subsurface Samples (Depth of Bedrock, Borehole Depth, Depth Range of IL Exceedance in Unconsolidated Material[1])
- Borehole Location - Surface Samples Only (Depth of Bedrock, Borehole Depth, Depth Range of IL Exceedance in Unconsolidated Material[1])
- Borehole Location - Subsurface Samples Only (Depth of Bedrock, Borehole Depth, Depth Range of IL Exceedance in Unconsolidated Material[1])
- IL Exceedance in Unconsolidated Material at Location
- Approximate Area where Surface Gamma IL is Exceeded (13.7 acres)
- Claim Boundary

Gamma Survey[1]

Counts per Minute (CPM)

IL Not Exceeded
Survey Area A: 5,577 - 15,388
Survey Area B: 11,165 - 17,702

IL Exceeded
Survey Area A: 15,389 - 109,631
Survey Area B: 17,703 - 114,157

N W E S

0 300 600
Feet

TITLE:
Vertical Extent of IL Exceedances in Unconsolidated Material

PROJECT:
Removal Site Evaluation
Hoskie Tso No. 1 Mine Site

DATE: 10/2/2018

DOCUMENT NAME: Removal Site Evaluation Report

Stantec

AUTHOR: CBB
REVIEWER: EDZ

FIGURE: 4-5

Document Path: U:\233001213\03_data\gis_cad_MXDs\RSE\RSE_HoskieTso\Section4\RSE_HoskieTso_Vertical_Extent_IL_Exceedance_11x17_L_20180927.mxd

APPENDICES

Appendix A Radiological Characterization of the Hoskie Tso No.1 Abandoned Uranium Mine

Radiological Characterization of the Hoskie Tso No. 1 Abandoned Uranium Mine

September 18, 2018

prepared for:

Stantec Consulting Services Inc.

2130 Resort Drive, Suite 350
Steamboat Springs, CO 80487

prepared by:

Environmental Restoration Group, Inc.

8809 Washington St. NE
Suite 150
Albuquerque, NM 87113

Contents

Executive Summary v

1.0 Introduction 1

2.0 GPS-Based Gamma Surveys 2

2.1 Background Reference Areas 4

2.2 Survey Area (including extended) 7

3.0 Correlation Studies 10

3.1 Radium-226 and thorium concentrations in surface soils and gamma count rates 10

3.2 Equilibrium in the uranium series 16

3.3 Exposure rates and gamma count rates 18

4.0 Deviations to RSE Work Plan 22

5.0 Conclusions 22

6.0 References 23

Tables

Table 1 Detection systems used in the GPS-Based gamma surveys

Table 2 Summary statistics for gamma count rates in the potential Background Reference Areas

Table 3 Summary statistics for gamma count rates in the Survey Area

Table 4 Gamma count rates and associated concentrations of radium-226 in samples of surface soils obtained in the correlation study

Table 5 Concentrations of isotopes of thorium in samples of surface soils obtained in the correlation study

Table 6 Predicted concentrations of radium-226 in the Survey Area

Table 7 Co-located gamma count rate and exposure rate measurements

Table 8 Predicted exposure rates in potential Background Reference Areas

Table 9 Predicted exposure rates in the Survey Area

Figures

Figure 1 Location of the Hoskie Tso No. 1 Abandoned Uranium Mine

Figure 2 Gamma count rates in the Background Reference Areas

Figure 3 Histograms of gamma count rates in the Background Reference Areas

Figure 4 Gamma count rates in the Survey Area

Figure 5 Histogram of gamma count rates in the Survey Area

Figure 6 Box plot of gamma count rates in the Survey Area

Figure 7 GPS-based gamma count rate measurements made for the correlation study

Figure 8 Correlation of gamma count rates and concentrations of radium-226 in surface soils

Figure 9 Predicted concentrations of radium-226 in the Survey Area

Figure 10 Evaluation of secular equilibrium in the uranium decay series

Figure 11 Correlation of gamma count rates and exposure rates

Figure 12 Predicted exposure rates in the Survey Area

Appendices

Appendix A Instrument calibration and completed function check forms

Appendix B Exposure Rate Measurements

Appendix C Technical Memo from ERG to Stantec. "Statistical Analysis of the Navajo Trustee Mines Dataset: Multivariate Linear Regression for Evaluation of Gamma Correlation with Ra-226 and Evaluation of Secular Equilibrium Between Ra-226 and Th-230".

Appendix D Preliminary Report "Radiological Characterization of Hoskie Tso No 1. Abandoned Uranium Mine"

Acronyms

AUM	abandoned uranium mine
BG1	Background Reference Area 1
BG2	Background Reference Area 2
bgs	below ground surface
cpm	counts per minute
EPA	U.S. Environmental Protection Agency
ERG	Environmental Restoration Group, Inc.
ft	foot
GPS	global positioning system
MDC	minimum detectable concentration
µg/kg	micrograms per kilogram
µR/h	microRoentgens per hour
pCi/g	picocuries per gram
R^2	Pearson's Correlation Coefficient
RSE	removal site evaluation
σ	standard deviation
Stantec	Stantec Consulting Services Inc.

Executive Summary

This report addresses the radiological characterization of the Hoskie Tso No.1 abandoned uranium mine (AUM) located in the Indian Wells Chapter of the Navajo Nation near Indian Wells, Arizona and Utah. It documents part of the implementation of the Navajo Nation AUM Environmental Response Trust, First Phase, as described in the Removal Site Evaluation Work Plan (RSE Work Plan: MWH, 2016). The work was performed by Environmental Restoration Group, Inc. (ERG) of Albuquerque, New Mexico and MWH, now part of Stantec Consulting Services Inc. (Stantec) in accordance with the Navajo Nation AUM Environmental Response Trust – First Phase.

This report provides the results of a 1) Global Positioning System (GPS)-based gamma radiation (gamma) survey and 2) comparisons of the gamma count rates at this AUM to exposure rates and concentrations of radium-226 in surface soils. The field activities addressed in this report were conducted on May 5, 2016; and November 12, 14, and 15, 2016. They included a GPS-based radiological survey of land surfaces over a Survey Area consisting of the mine claim area out to a 100-foot (ft) buffer; and roads and drainages within a 0.25-mile radius of the 100-ft buffer; and correlation studies. The Survey Area was extended beyond the 100-ft buffer where elevated gamma count rates were observed.

The discussion of the results of soil sampling in this report is limited to concentrations of radium-226 and isotopes of thorium in samples taken from surface soils, as part of correlation studies. The objective of the analysis of thorium isotopes was to 1) assess the potential effects of thorium-232 and thorium-228 on the correlation of gamma count rates to concentrations of radium-226 in surface soils; and 2) evaluate thorium-230 and radium-226 activities to indicate the status of equilibrium in the uranium decay series. These and additional results for the RSE are addressed in the "Hoskie Tso No.1 Removal Site Evaluation Report" (Stantec, 2018).

The findings of the RSE pertaining to these activities are:

- The horizontal extent and magnitude of materials were delineated sufficiently to support additional characterization of the subsurface.
- Gamma count rates are highest along the eastern and northeastern edges of the site.
- Two potential Background Reference Areas were established.
- The mean relationship between gamma count rates and concentrations of radium-226 in surface soils (0 to 0.5 ft below ground surface) is described by a linear regression model:

$$\text{Gamma Count Rate (cpm)} = 655 \times [\text{radium-226 (pCi/g)}] + 14592$$

- The distribution of concentrations of radium-226 in surface soils predicted using this model is rightward tailed. The values in the Survey Area range from -13.8 to 153.5 pCi/g, with a central tendency (median) of -1.0 pCi/g.

- The thorium series radionuclides do not appear to affect the prediction of concentrations of radium-226 from gamma count rates.

- There is evidence that the uranium series radionuclides are in equilibrium, but not secular equilibrium.

- The relationship between gamma count rates and exposure rates is described by a linear regression model

$$\text{Exposure Rate } (\mu R/h) = \text{Gamma Count Rate (cpm)} \times 6\times10^{-4} + 5.2797$$

- The distribution of exposure rates predicted using this model is rightward tailed. The values in the Survey Area range from 8.6 to 73.8, with a central tendency (median) of 13.6 µR/h.

1.0 Introduction

This report addresses the radiological characterization of the Hoskie Tso No.1 abandoned uranium mine (AUM) located in the Indian Wells Chapter of the Navajo Nation near Indian Wells, Arizona. It documents part of the implementation of the Navajo Nation AUM Environmental Response Trust, First Phase, as described in the Removal Site Evaluation Work Plan (RSE Work Plan: MWH, 2016). The work was performed by Environmental Restoration Group, Inc. (ERG) of Albuquerque, New Mexico and MWH, now part of Stantec Consulting Services Inc. (Stantec) in accordance with the Navajo Nation AUM Environmental Response Trust – First Phase.

The activities described here focus on the characterization of gamma radiation (gamma) emitted by uranium series radionuclides in surface soils at the AUM. This report provides the results of a 1) Global Positioning System (GPS)-based gamma radiation (gamma) survey and 2) comparisons of gamma count rates to exposure rates and concentrations of radium-226 in surface soils, and 3) an assessment of equilibrium in the uranium series.

The objective of the correlation between field gamma count rate and surface soil concentrations of radium-226 was to use field instrumentation to predict surface soil concentrations of radium-226. The objective of the correlation between field gamma count rate and exposure rate was to use field instrumentation to predict exposure rates.

The field activities were conducted on May 5, 2016; and November 12, 14, and 15, 2016 in accordance with the methods described in the RSE Work Plan. They include a GPS-based radiological survey of land surfaces over an approximately 32.3-acre Survey Area consisting of the potential mine claim area out to a 100-foot (ft) buffer, roads and drainages within a 0.25-mile radius of the 100-ft buffer, and areas where the survey was extended; and correlation studies. Section 3.0 of the RSE Work Plan provides the data quality objectives (DQOs) for the project.

The discussion of the results of soil sampling in this report is limited to concentrations of radium-226 and isotopes of thorium in samples taken from surface soils, as part of correlation studies. The objective of the analysis of thorium isotopes was to 1) assess the potential effects of thorium-232 and thorium-228 on the correlation of gamma count rates to concentrations of radium-226 in surface soils; and 2) evaluate thorium-230 and radium-226 activities to indicate the status of equilibrium in the uranium decay series. These and additional results for the RSE are addressed in the “Hoskie Tso No.1 Removal Site Evaluation Report” (Stantec, 2018).

Figure 1 shows the location of the AUM. Background information that is pertinent to the characterization of this AUM is presented in the “Hoskie Tso No.1 Site Clearance Data Report” (MWH, 2018).

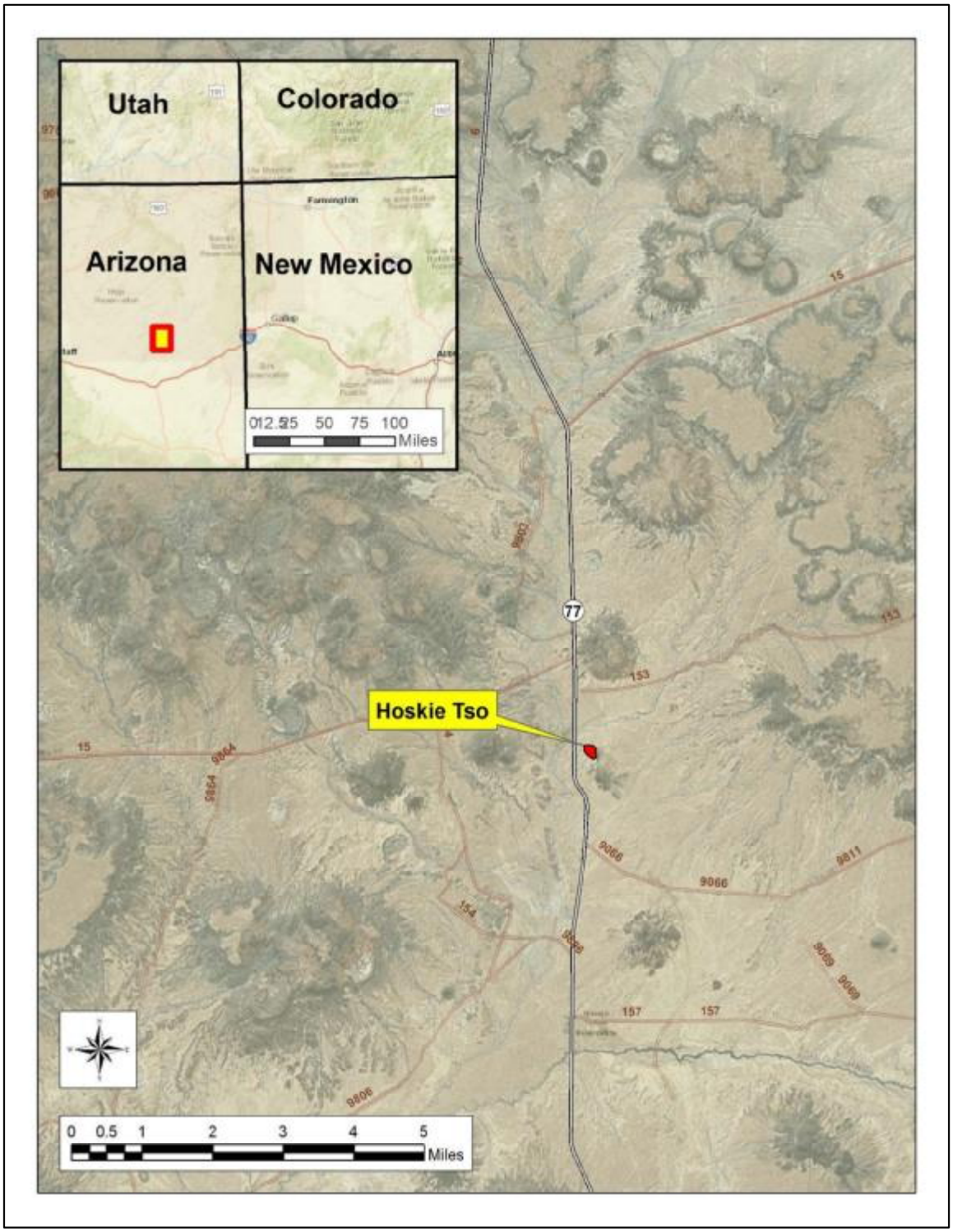

Figure 1. Location of the Hoskie Tso No.1 Abandoned Uranium Mine

2.0 GPS-Based Gamma Surveys

This section addresses the GPS-based surveys conducted in two potential Background Reference Areas and the Survey Area. The survey was extended to bound areas in which elevated count rates were observed. Table 1 lists the detection systems used in the survey. Pursuant to the approved RSE Work Plan, detectors were function checked each day to ensure the instruments were stable to the limits prescribed by the Work Plan. Detector normalization was not performed as it was not addressed by the RSE Work Plan. Appendix A presents the completed function check forms and calibration certificates for the instruments. Standard operating procedures (SOPs) are discussed in Section 4.2 of the RSE Work Plan and are provided in Appendix E therein. ERG followed the quality assurance and control requirements stipulated in the approved Work Plan.

The 2x2 sodium iodide (NaI) detectors used in this investigation are sensitive to sub-surface radium-226 decay products and other gamma emitting radionuclides. The purpose of the gamma correlation was to estimate radium-226 concentrations in the upper 15 cm of soil. ERG selected correlation plots based on the range of gamma radiation levels observed. If subsurface soil concentrations of gamma emitting radionuclides were variable between correlation locations, this variability would be included in the regression model, and if the magnitude of the effect were sufficiently large, it would result in failure of the DQOs related to the regression analysis.

Table 1. Detection systems used in the GPS-Based gamma surveys.

Survey Area	Ludlum Model 44-10	Ludlum Model 2221 Ratemeter/Scaler
Potential Background Reference Areas	PR303727[a]	254772[a]
Survey Area	PR303727	254772
	PR295014	196086
	PR150507	282966

Notes:
[a] Detection system used in the correlation studies described in Section 3.0.

2.1 Background Reference Areas

Two potential Background Reference Areas were surveyed, the locations and results of which are depicted on Figure 2. BG1 in the figure is Background Reference Area 1. BG2 is Background Reference Area 2.

Table 2 lists a summary of the gamma count rates, which in BG1 ranged from 10,781 to 17,208 counts per minute (cpm), with a mean and median of 13,450 and 13,355 cpm, respectively. The gamma count rates in BG2 ranged from 12,528 to 19,395 cpm, with a mean and median of 15,158 and 14,900 cpm, respectively.

Figure 3 depicts histograms of the gamma count rates in BG1 (Figure 3a) and BG2 (Figure 3b). The red and green lines on the figure are theoretical normal and lognormal distributions, respectively. They are presented to show what could be expected if the distributions were normal or lognormal.

Table 2. Summary statistics for gamma count rates in the potential Background Reference Areas.

			Gamma Count Rate (cpm)			
Potential Background Reference Area	**n**	**Minimum**	**Maximum**	**Mean**	**Median**	**Standard Deviation**
1	476	10,781	17,208	13,450	13,335	1098
2	160	12,528	19,395	15,158	14,900	1,368

Notes:
cpm = counts per minute

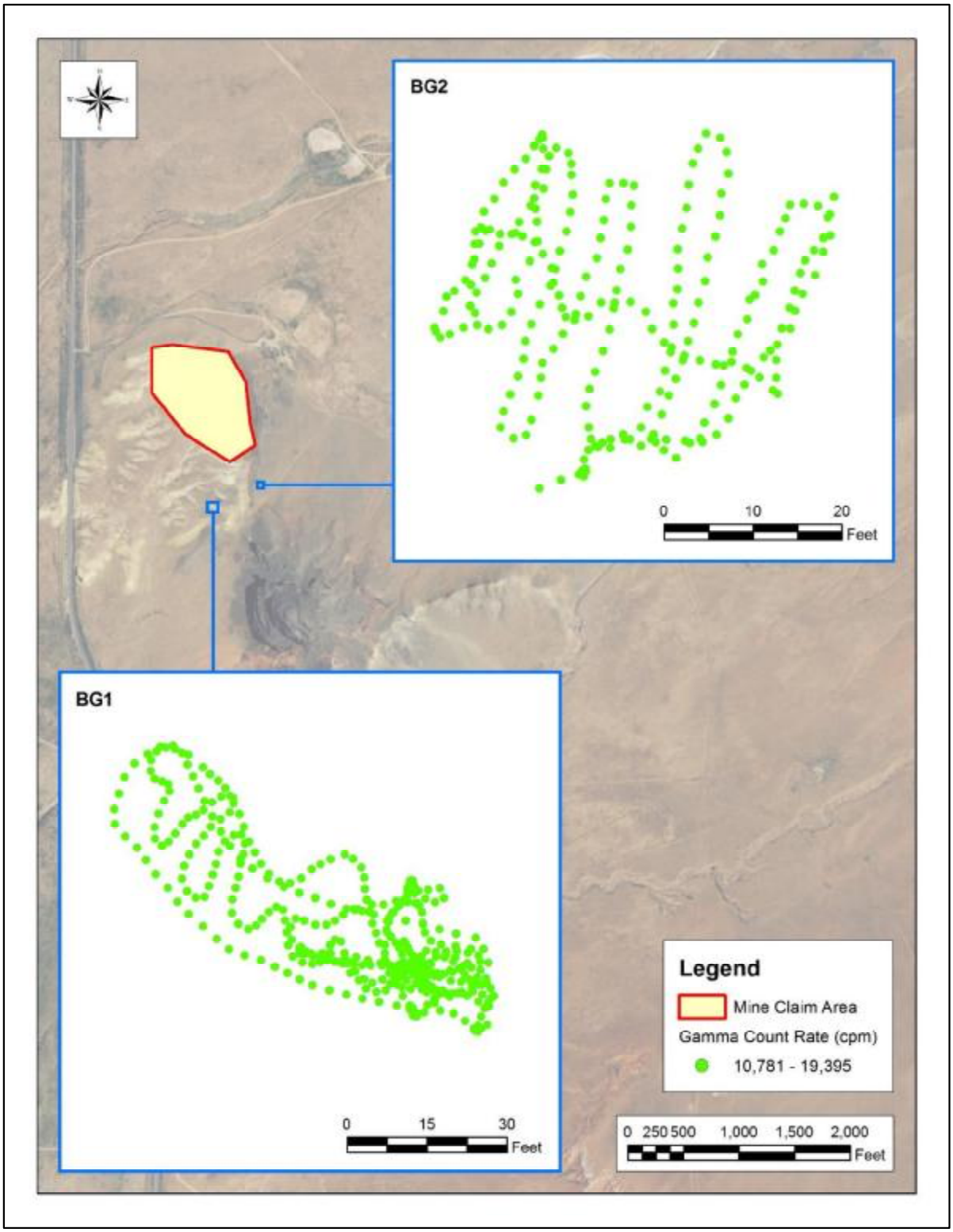

Figure 2. Gamma count rates in the potential Background Reference Areas.

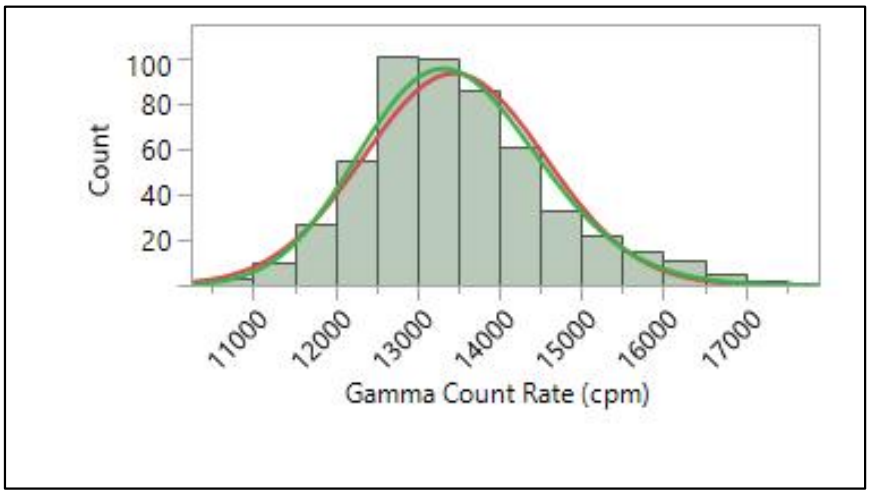

a. Background Reference Area 1

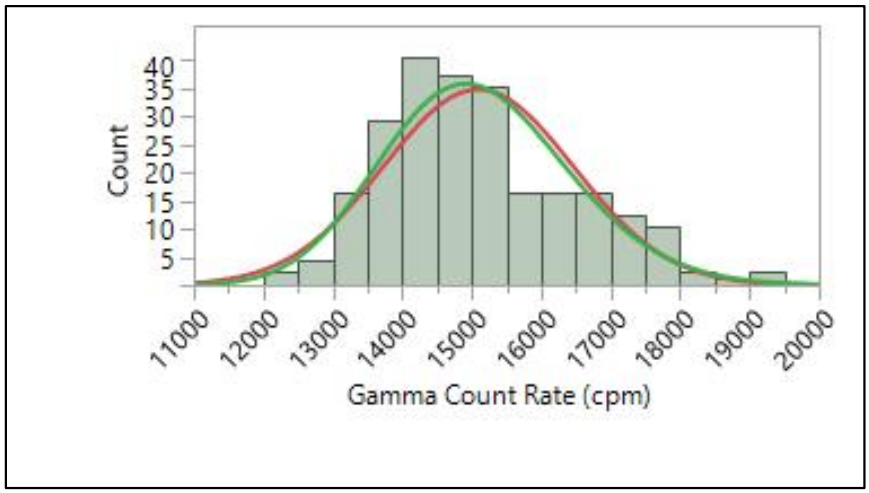

b. Background Reference Area 2

Figure 3. Histograms of gamma count rates in the Background Reference Areas.

2.2 Survey Area (including extended)

The gamma count rates observed in the Survey Area are depicted in Figure 4. The highest count rates were observed along the east and northeast edges of the mine claim, along a contiguous ridge extending north to south.

Figure 5 is a histogram of the gamma count rate measurements made in the Survey Area. The red and green lines on the figure are theoretical normal and lognormal distributions, respectively. They are presented to show what could be expected if the distributions were normal or lognormal. The distribution of the right-tailed set of measurements, evaluated using U.S. Environmental Protection Agency (EPA) software ProUCL, is not defined. The box plot in Figure 6 depicts cutoffs as horizontal bars, from left to right, for the following values or percentiles: minimum, 0.5, 2.5, 10, 25, 50, 75, 90, 97.5, 99.5, and maximum. The 25th, 50th, and 75th percentiles --the three horizontal lines of the box inside the box plot are 11,453, 13,968 and 17,381 cpm, respectively.

Table 3 is a statistical summary of the measurements, which range from 5,577 to 115,157 cpm and have a central tendency (median) of 13,968 cpm.

Table 3. Summary statistics for gamma count rates in the Survey Area.

Parameter	Gamma Count Rate (cpm)
n	36,600
Minimum	5,577
Maximum	115,157
Mean	15,411
Median	13,968
Standard Deviation	6,549

Notes:
cpm = counts per minute

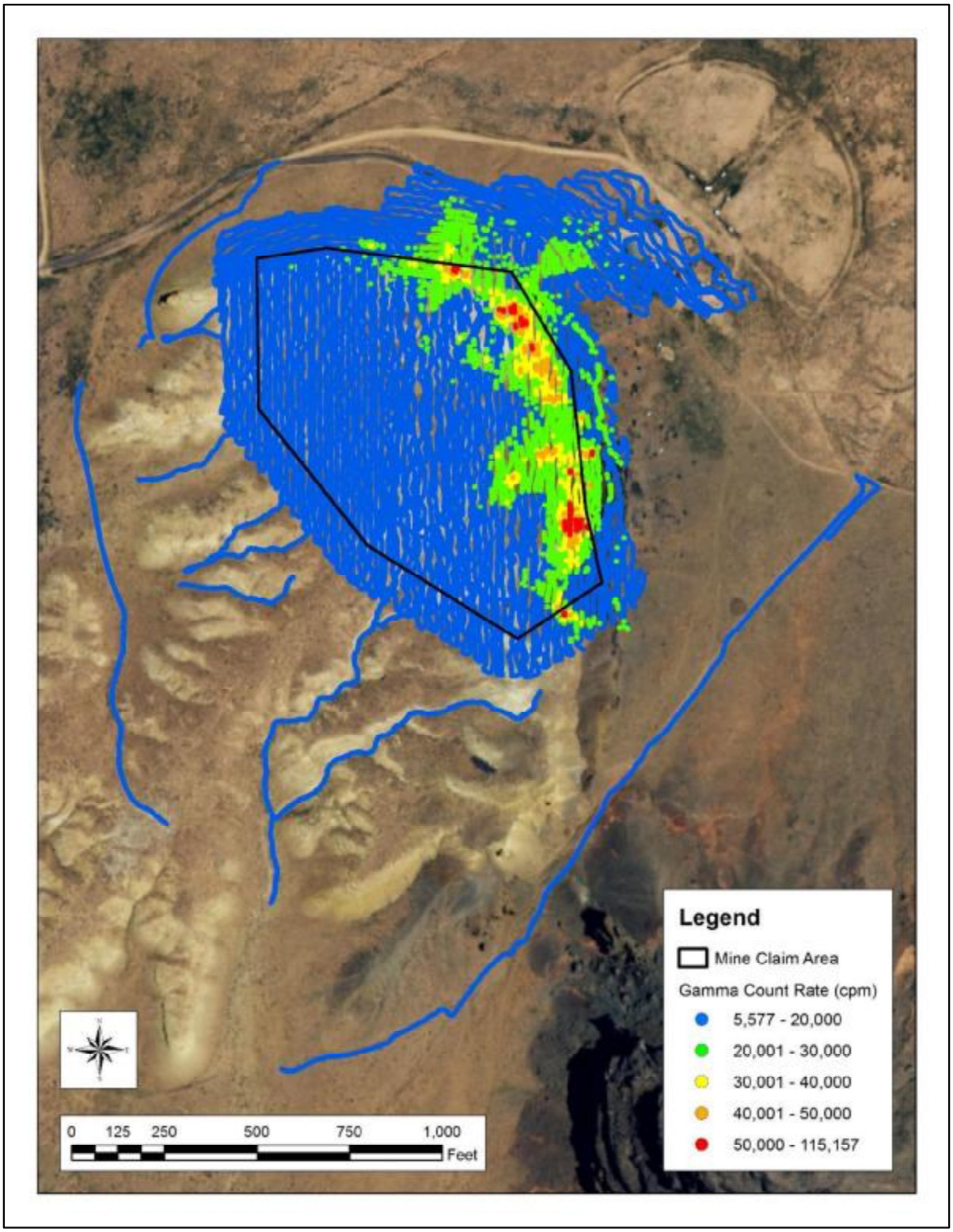

Figure 4. Gamma count rates in the Survey Area.

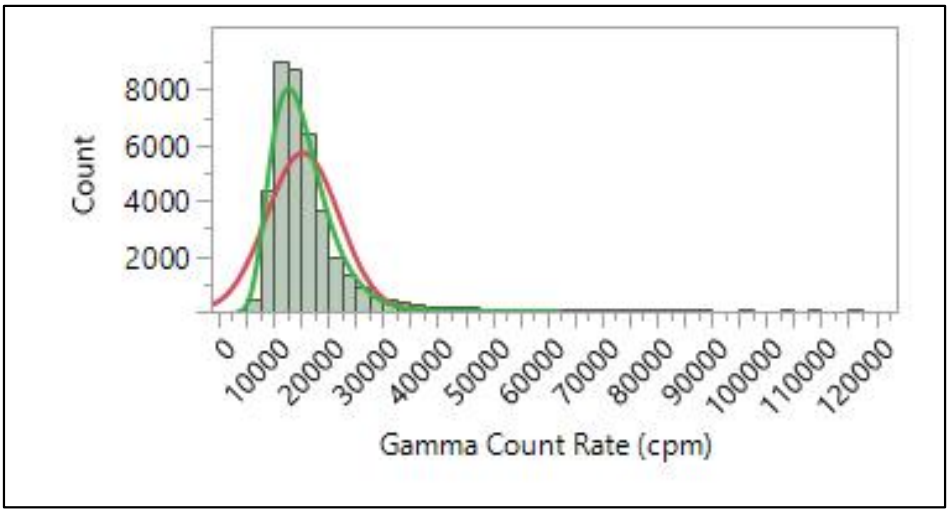

Figure 5. Histogram of gamma count rates in the Survey Area.

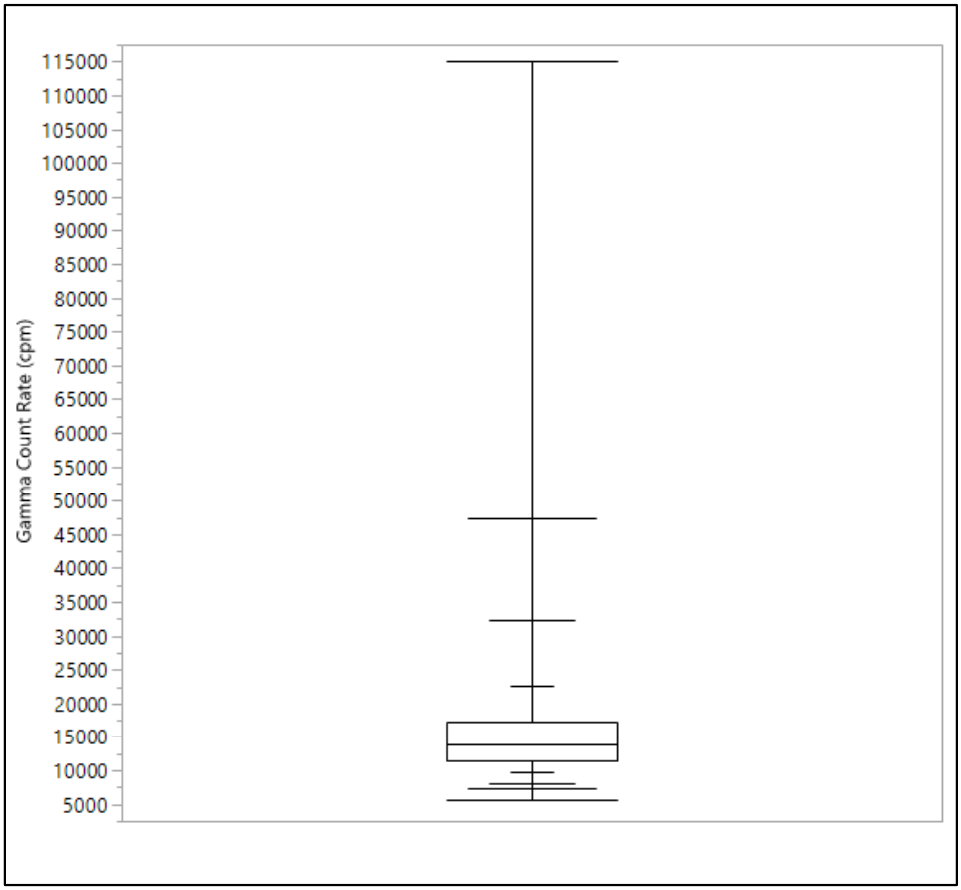

Figure 6. Box plot of gamma count rates in the Survey Area.

3.0 Correlation Studies

The following sections address the activities under two types of correlation studies outlined in the RSE Work Plan: comparisons of 1) radium-226 concentrations in surface soils and gamma count rates and 2) exposure rates and gamma count rates. GPS-based gamma count rate measurements were made over small areas for the former study. The means of the measurements were used in this case. Static gamma count rate measurements, co-located with exposure rate measurements, were used in the latter study.

3.1 Radium-226 and thorium concentrations in surface soils and gamma count rates

On November 14, 2016 field personnel made GPS-based gamma count rates measurements and collected five-point composite samples of surface soils in each of five areas at the AUM. These areas were selected using criteria established in the RSE Work Plan. No DQO was established for homogeneity of the correlation plots and as described in Section 4.3 and Appendix E of the RSE Work Plan, homogeneity of the correlation plots was evaluated qualitatively. Sub-samples were collected from the correlation plot centroid and at each corner of the plot. The activities were performed contemporaneously, by area and all on the same day, such that variations in the gamma count rate measurements could be limited largely to those posed by the soils and rocks at the locations. Figure 7 shows the GPS-based gamma count rate measurements in the five areas (labeled with location identifiers).

The soil samples were analyzed by ALS Laboratories in Ft Collins, CO for radium-226 and isotopic thorium. The latter analysis was included to assess the potential effects of thorium series isotopes on the correlation and evaluate thorium-230 and radium-226 activities to indicate the status of equilibrium in the uranium decay series. Table 4 lists the results of the measurements and radium-226 concentrations in the soil samples. The means of the gamma count rate measurements range from 9,067 to 47,049 cpm. The concentrations of radium-226 range from 0.92 to 53.6 picocuries per gram (pCi/g).

Table 5 lists the concentrations of isotopes of thorium (thorium-228, -230, and -232) in the same soil samples.

Laboratory analytical results are presented in Appendix F.2, Laboratory Analytical Data and Data Validation Report, in “Hoskie Tso No. 1 Removal Site Evaluation Report” (Stantec, 2018).

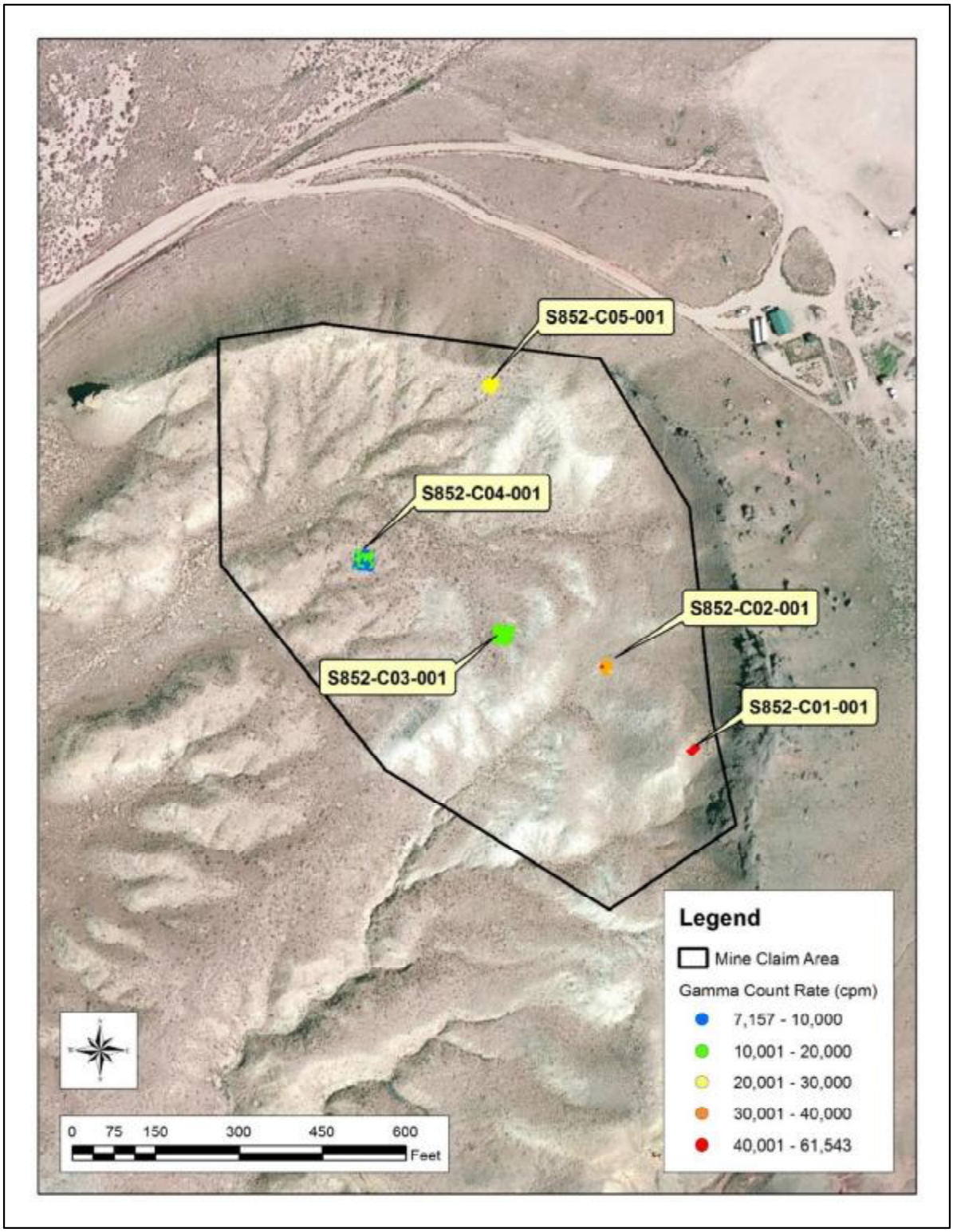

Figure 7. GPS-based gamma count rate measurements made for the correlation study.

Table 4. Gamma count rates and associated concentrations of radium-226 in samples of surface soils obtained in the correlation study.

		Gamma Count Rate (cpm)				Ra-226 (pCi/g)		
Location	Area (m^2)	Mean	Minimum	Maximum	σ	Result	Error ±2σ	MDC
S852-C01-001	22.7	47,049	39,307	61,543	4,564	53.6	6.4	1.1
S852-C02-001	38.9	32,384	27,116	40,084	2,650	16.7	2.1	0.6
S852-C03-001	114.5	12,145	10,032	15,652	1,001	1.24	0.3	0.44
S852-C04-001	122.9	9,067	7,157	13,584	989	0.92	0.23	0.38
S852-C05-001	56.4	24,632	20,118	28,415	1,657	7.37	0.97	0.46

Notes:
cpm = counts per minute
MDC = minimum detectable concentration
m^2 =square meters
pCi/g = picocuries per gram
σ = standard deviation

Table 5. Concentrations of isotopes of thorium in samples of surface soils obtained in the correlation study.

	Thorium-228 (pCi/g)			Thorium-230 (pCi/g)			Thorium-232 (pCi/g)		
Sample ID	Result	Error ± 2σ	MDC	Result	Error ± 2σ	MDC	Result	Error ± 2σ	MDC
S852-C01-001	1.23	0.22	0.04	36.5	5.7	0.1	1.29	0.22	0.01
S852-C02-001	1.18	0.21	0.05	12.6	2	0.1	1.12	0.2	0.01
S852-C03-001	0.59	0.12	0.03	0.9	0.17	0.08	0.6	0.12	0.02
S852-C04-001	0.59	0.12	0.05	0.89	0.16	0.07	0.52	0.1	0.01
S852-C05-001	0.47	0.11	0.07	4.58	0.74	0.08	0.48	0.1	0.03

Notes:
MDC = minimum detectable concentration
pCi/g = picocuries per gram
σ = standard deviation

A model was made of the results in Table 4, predicting the concentrations of radium-226 in surface soils from the mean gamma count rate in each area. The mean relationship between the measurements, shown in Figure 8, is a linear function with an adjusted Pearson's Correlation Coefficient (adjusted R^2) of 0.82, as expressed in the equation:

$$\text{Gamma Count Rate (cpm)} = 655 \times [\text{radium-226 (pCi/g)}] + 14592$$

The root mean square error and p-value for the model are 5.1×10^3 and 0.022, respectively; these parameters are not data quality objectives (DQOs) and are included only as information. The R^2 value for this model exceeds the project DQO of 0.8.

This equation was used to convert the gamma count rate measurements observed in the gamma surveys to predicted concentrations of radium-226. Table 6 presents summary statistics for the predicted concentrations of radium-226 in the Survey Area. The range of the predicted concentrations of radium-226 in the Survey Area is -13.8 to 153.5 pCi/g, with a mean and median of 1.2 and -1.0 pCi/g,

respectively. Note that the radium-226 concentrations predicted from gamma count rate measurements exceeding approximately 47,000 cpm are extrapolated from the regression model and are outside of the correlation dataset and therefore inherently uncertain. While the gamma correlation equation can be used to convert gamma count rates to concentrations of Ra-226 in soil, the resulting radium concentrations are highly uncertain estimates, as the wide prediction interval bands illustrated in Figure 8 demonstrate. Users of the regression equation should be aware of the limitations of the dataset and be cautious when estimating radium-226 concentrations.

Table 6. Predicted concentrations of radium-226 in the Survey Area.

Parameter	Radium-226 (pCi/g)
n	36,600
Minimum	-13.8
Maximum	153.5
Mean	1.2
Median	-1.0
Standard Deviation	10.0

Notes:
pCi/g = picocuries per gram

Figure 9 shows the predicted concentrations of radium-226, the spatial and numerical distribution of which mirror those depicted in Figure 4.

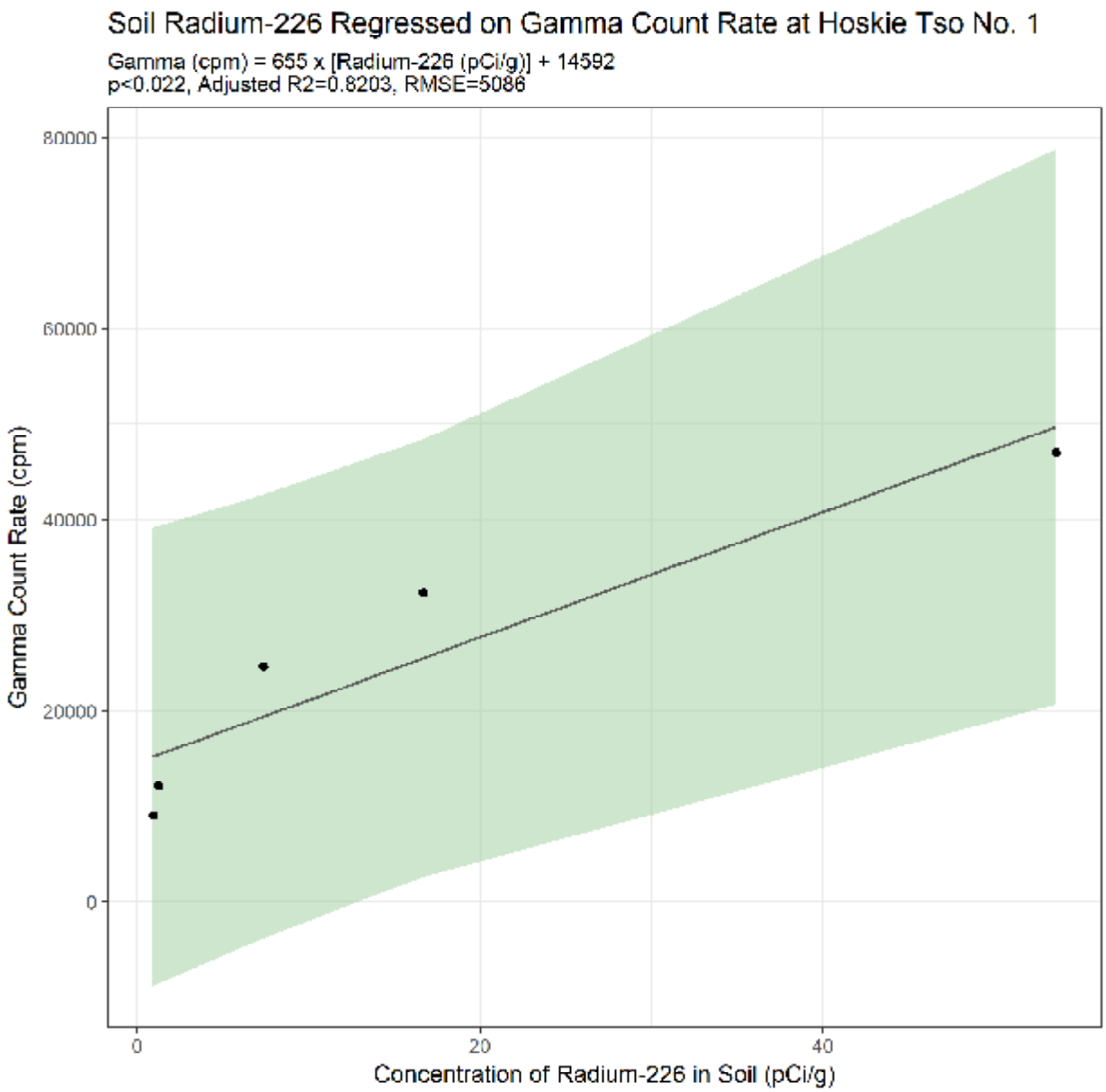

Figure 8. Correlation of gamma count rates and concentrations of radium-226 in surface soils (black line) with 95% upper prediction level bands plotted (shaded area).

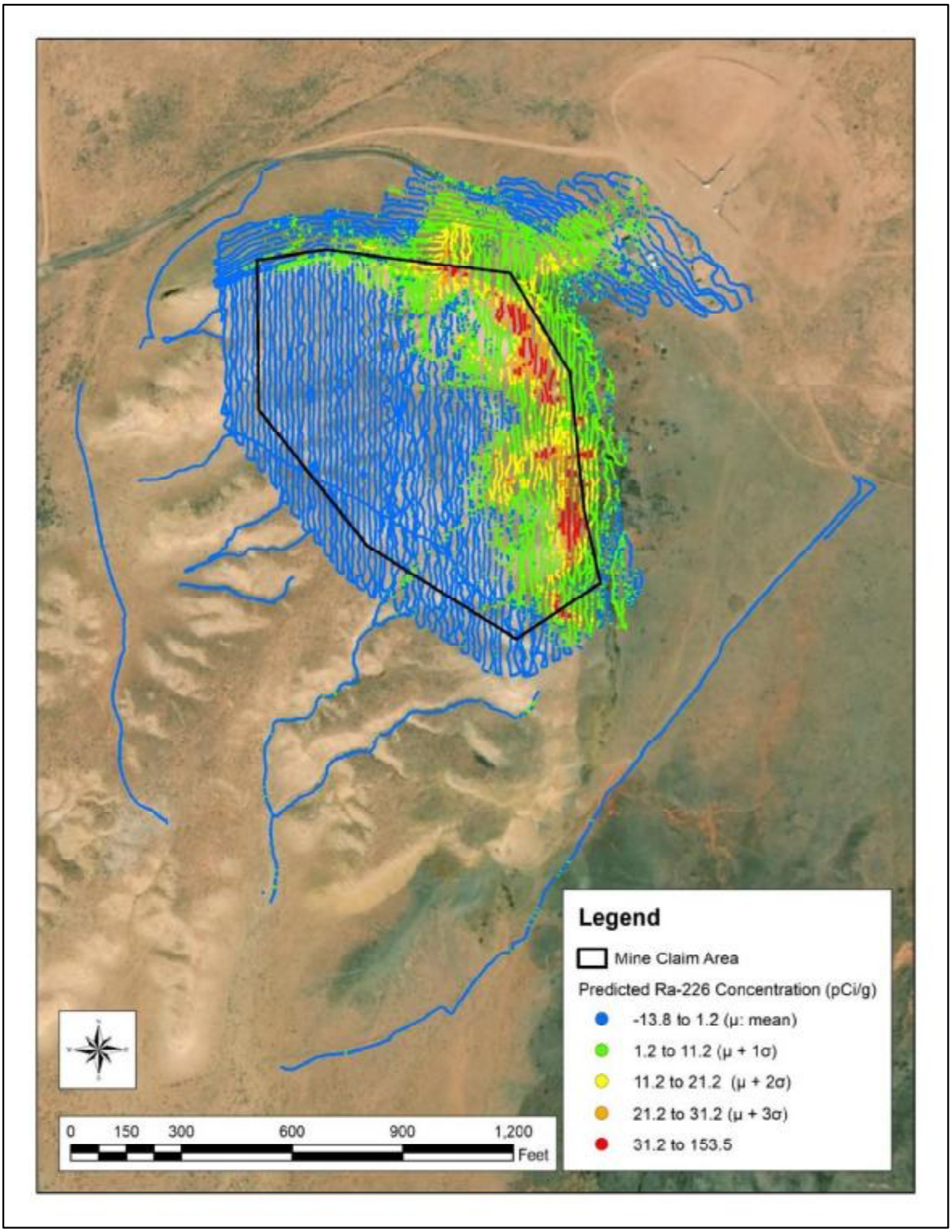

Figure 9. Predicted concentrations of radium-226 in the Survey Area.

Soil concentrations of potassium-40 (K-40) were not expected to be spatially variable within the site, and therefore this radionuclide was not separately accounted for in the RSE Work Plan. If K-40 concentrations did vary, this variability would be included in the regression model and, if the magnitude of the effect were sufficiently large, would result in failure of DQOs related to the regression analysis.

A multivariate linear regression (MLR) was used to evaluate the influence of thorium-232 and thorium-228, isotopes in the thorium series, on the average gamma count rate in the correlation locations. The MLR model was first run using radium-226, thorium-232, and thorium-228 as predictors of gamma count rate. The model failed to produce results because thorium-232 and thorium-228 are colinear. The MLR model was subsequently run without thorium-228. For the second model, the p-values for radium-226 and thorium-232 were both greater than 0.05 (0.29 and 0.63 respectively) and therefore not significant predictors of gamma count rate collectively. Thorium-232 and radium-226 were then each modelled individually as a predictor of gamma count rate. The p-value for thorium-232 coefficient was 0.05 with an adjusted R^2 of 0.68. The thorium-232 coefficient is significant, but the R^2 value does not meet the project DQO. Subsequently we conclude that thorium-232 and thorium-228 concentrations in soil are not significant predictors of gamma count rate. Finally, the p-value for radium-226 as a predictor of gamma count rate was significant ($p = 0.022$), as described above, and the adjusted R^2 value (0.82) exceeded the applicable project DQO ($R^2 > 0.8$).

The depletion of radon-222 in surface soil due to environmental factors is assumed to be relatively constant across the correlation locations (i.e., the loss is a fixed fraction of the available source). Provided this is the case, any loss of radon-222 in surface soil is unimportant and accounted for within the statistical model. If the loss is not a consistent fraction at each correlation location, it is one of many potential correlation confounders that are all linked to spatial heterogeneity of the environmental conditions, and especially spatial heterogeneity of the soil matrix.

The presence of heterogeneous concentrations of gamma emitting radionuclides in sub-surface soil can affect the gamma correlation model. If subsurface soil concentrations of gamma emitting radionuclides were variable between correlation locations, this variability would be included in the regression model, and if the magnitude of the effect were sufficiently large, it would result in failure of the DQOs related to the regression analysis.

3.2 Equilibrium in the uranium series

Secular equilibrium is a condition that occurs when the half-life of a decay-product nuclide is significantly shorter than that of its parent nuclide. After a period of ingrowth equal to approximately seven times the half-life of the decay product, the two nuclides effectively decay with the half-life of the parent. When two radionuclides are in secular equilibrium, their activities are equal.

Equilibrium, for the purpose of this report, is defined as a condition whereby a parent nuclide and its decay product are present in the environment at a fixed ratio, but this ratio – for whatever reason – is not a one-to-one relationship indicative of secular equilibrium. Most commonly, an equilibrium condition results from an environmental process which chemically selects for and transports one nuclide

(parent or decay product) away from the other nuclide. Because a consistent fraction of one nuclide has been removed, the two nuclides are present at a fixed ratio other than one-to-one.

Determination of secular equilibrium for an AUM can be an important part of the risk assessment process, as the assumed fraction of radium-226 decay products present in the environment greatly influences a hypothetical receptor's radiation dose and mortality risk. However, it is also acceptable and conservative to assume secular equilibrium between radium-226 and its decay products for the purpose of risk assessment, and therefore to avoid the need to conclusively determine the secular equilibrium status of an AUM. Thus, an inconclusive result regarding secular equilibrium is not a study data gap, as the risk assessment phase may still proceed, provided that conservative assumptions are included regarding equilibrium concentrations of radium-226 decay products.

Regardless, the RSE Work Plan specified that an evaluation of secular equilibrium would be made at each of the 16 Trust AUMs, and so a robust statistical examination of secular equilibrium status for thorium-230 and radium-226 was conducted. The RSE Work Plan did not require an evaluation of equilibrium condition of uranium-238 and uranium-234 because the natural activity abundance for these isotopes is expected and therefore assumed. Likewise, thorium-234 and protactinium-234m were not evaluated since their half-lives are sufficiently short that secular equilibrium can be assumed. Uranium-235 is not in the uranium-238 decay therefore it wasn't evaluated. The ratio of thorium-230 to radium-226 can be evaluated even though different analytical methods were used to measure activity concentrations. Radium-226 was measured by EPA method 901.1m, which is a total activity method and thorium-230 was measured by alpha spectroscopy following digestion with hydrofluoric acid, which is also a total-activity method. Thus, it is appropriate to compare the two results.

The evaluation of secular equilibrium for each mine site proceeded as follows:

1. Construction of a figure that depicts soil concentrations of Th-230 plotted against soil concentrations of Ra-226.
2. Simple linear regression is performed on the dataset; the p-value and the adjusted R^2 are recorded. The resulting linear model and the 95% UCL bands are plotted on the figure generated in step 1.
3. The line y=x is added to the figure generated in step 2 (this line represents a perfect 1:1 ratio between Th-230 to Ra-226, indicative of secular equilibrium).
4. An examination of the model and the figure is made sequentially:
    a. If the p-value for the regression slope is insignificant (i.e., $p > 0.05$) or the adjusted R^2 does not meet the study's data quality objective (Adjusted $R^2 > 0.8$), ERG concludes that there is insufficient evidence to conclude that Ra-226 and Th-230 are in equilibrium (secular or otherwise).

b. If the p-value for the regression slope is significant (i.e., $p < 0.05$) and the adjusted R^2 meets the DQO (Adjusted $R^2 > 0.8$) there are two possible conditions, which are evaluated via visual examination of the figure generated in step 3.

   i. If the y=x line falls fully within the bounds of the 95% UCL bands on the regression, ERG concludes that there is evidence that Ra-226 and Th-230 are in secular equilibrium at the site.

   ii. If the y=x line falls partially or completely outside the bounds of the 95% UCL bands on the regression, ERG concludes that there is evidence that Ra-226 and Th-230 are in equilibrium, but not secular equilibrium at the site.

Based on this method, ERG concludes there is evidence that thorium-230 and radium-226 are in equilibrium, but not secular equilibrium (Figure 10).

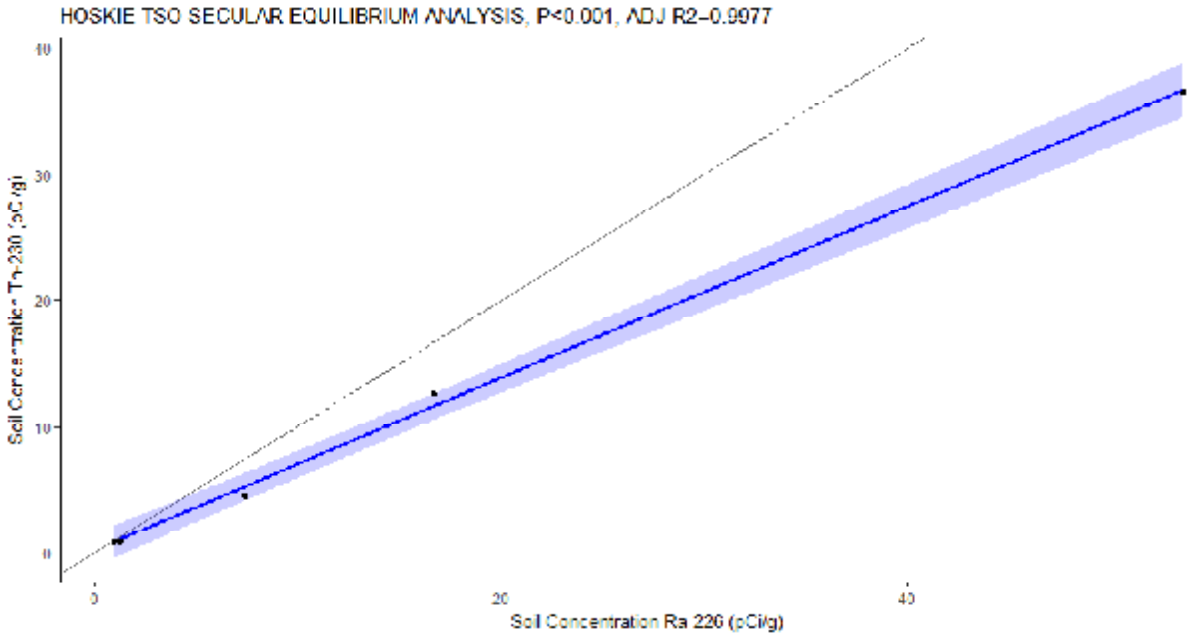

Figure 10. Evaluation of secular equilibrium in the uranium decay series.

3.3 Exposure rates and gamma count rates

Field personnel made co-located one-minute static count rate and exposure rate measurements at the five locations within the Survey Area, representing the range of gamma count rates obtained in the GPS-based gamma survey. Figure 7 shows the locations of the co-located measurements, which were made in the centers of the areas.

The gamma count rate and exposure rate measurements were made on November 14, 2016 at 0.5 m and 1 m above the ground surface, respectively. The gamma count rate measurements were made using one of the three sodium iodide detection system used in the GPS-based gamma survey of the AUM

(Serial Number PR303727/254772). The exposure rate measurements were made using a Reuter Stokes Model RSS-131 high pressure ionization chamber (HPIC) at six-second intervals for about 10 minutes. The exposure rate used in the comparison was the mean of these measurements, less those occurring in initial instrument spikes. The HPIC was in current calibration and function checked before and after use. A correction factor of 1.02 was applied to the measured value per the manufacturer's recommendation by the software of the unit. Calibration forms for the HPIC are provided in Appendix A.

Table 7 presents the results for the two types of measurements made at each of the five locations. Appendix B presents the individual (one second) exposure rate measurements.

The best predictive relationship between the measurements is linear with a R^2 of 0.9968. The root mean square error and p-value for the correlation are 0.5934 and <0.0001, respectively; these parameters are not DQOs and are included only as information.

The following equation is the linear regression (shown in Figure 11) between the mean exposure rate and gamma count rate results in Table 7 that was generated using MS Excel:

$$\text{Exposure Rate } (\mu R/h) = 6\times10^{-4} \text{ (Gamma Count Rate [cpm])} + 5.2797$$

Figure 12 presents the exposure rates predicted from the gamma count rate measurements, the spatial and numerical distribution of which mirror those depicted in Figure 4.

Table 8 and 9 present summary statistics for the predicted exposure rates in the two Background Reference Areas and Survey Area, respectively. The range of predicted exposure rates at BG1 is 11.8 to 15.6 µR/h, with a mean and median of 13.4 and 13.3 µR/h, respectively. The range of predicted exposure rates at BG2 is 12.6 to 16.9 µR/h, with a mean and median of 14.3 and 14.2 µR/h, respectively. The range of predicted exposure rates in the Survey Area is 8.6 to 73.8 µR/h, with a mean and median of 14.5 and 13.6 µR/h, respectively.

Table 7. Co-located gamma count rate and exposure rate measurements.

Location	Gamma Count Rate[a] (cpm)	Exposure Rate (µR/h)
S852-C01-001	45,803	33.1
S852-C02-001	33,510	24.7
S852-C03-001	12,355	12.9
S852-C04-001	9,036	10.9
S852-C05-001	25,375	19.8

Notes:
[a]The gamma count rate is a one-minute, static measurement made at the center of the plot
cpm = counts per minute
µR/h = microRoentgens per hour

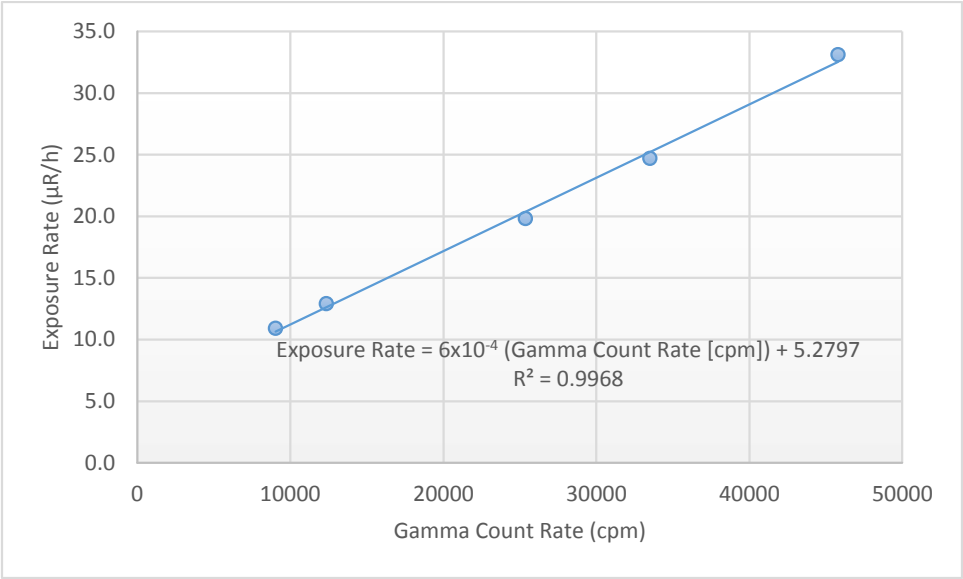

Figure 11. Correlation of gamma count rates and exposure rates.

Table 8. Predicted exposure rates in potential Background Reference Areas

Parameter	Exposure Rate (µR/h)	
	BG1	BG2
n	326	238
Minimum	11.8	12.6
Maximum	15.6	16.9
Mean	13.4	14.3
Median	13.3	14.2
Standard Deviation	0.6	0.8

Notes:
µR/h = microRoentgens per hour

Table 9. Predicted exposure rates in the Survey Area.

Parameter	Exposure Rate (µR/h)
n	36,600
Minimum	8.6
Maximum	73.8
Mean	14.5
Median	13.6
Standard Deviation	3.9

Notes:
µR/h = microRoentgens per hour

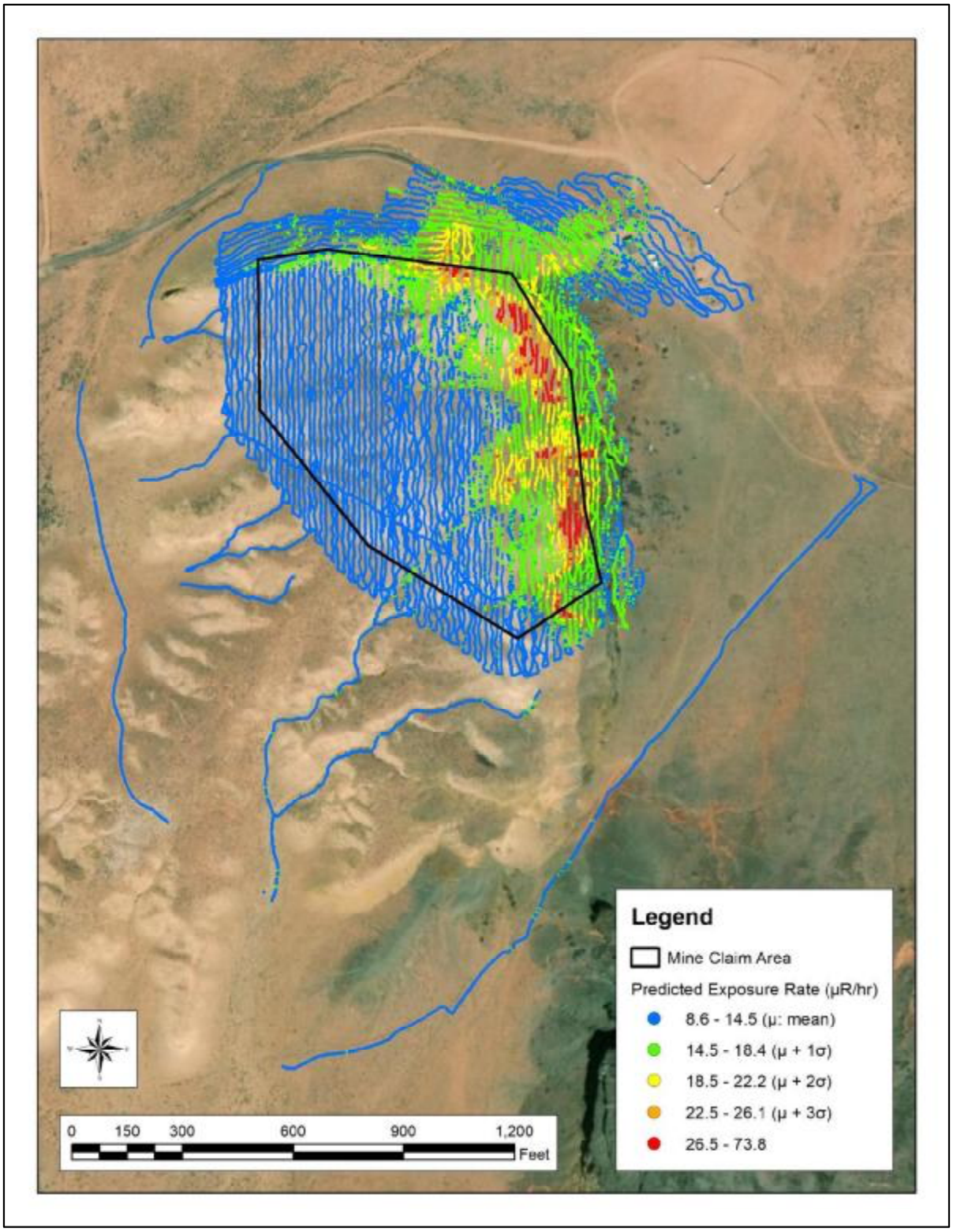

Figure 12. Predicted exposure rates in the Survey Area.

4.0 Deviations to RSE Work Plan

The RSE Work Plan specifies that the comparison of gamma count rates and radium concentrations in surface soils was to occur in 900 square foot areas. Field personnel adjusted the areas as necessary, to minimize the variability of gamma count rates observed, particularly where the spatial distribution of waste rock was heterogeneous.

5.0 Conclusions

The findings of the RSE pertaining to these activities are:

- The horizontal extent and magnitude of potentially mining-related materials were delineated sufficiently to support additional characterization of the subsurface.
- Gamma count rates are highest along the eastern and northeastern edges of the site.
- Two potential Background Reference Areas were established.
- The relationship between gamma count rates and concentrations of radium-226 in surface soils (0 to 0.5 ft below ground surface) is described by a linear regression model:

$$\text{Gamma Count Rate (cpm)} = 655 \times [\text{radium-226 (pCi/g)}] + 14592$$

- The distribution of concentrations of radium-226 in surface soils predicted using this model is rightward tailed. The values in the Survey Area range from -13.8 to 153.5 pCi/g, with a central tendency (median) of -1.0 pCi/g.
- The thorium series radionuclides do not appear to affect the prediction of concentrations of radium-226 from gamma count rates.
- There is evidence that thorium-230 and radium-226 are in equilibrium, but not secular equilibrium.
- The relationship between gamma count rates and exposure rates is described by a linear regression model

$$\text{Exposure Rate (}\mu\text{R/h)} = \text{Gamma Count Rate (cpm)} \times 6\text{x}10\text{-}4 + 5.2797$$

- The distribution of exposure rates predicted using this model is rightward tailed. The values in the Survey Area range from 8.6 to 73.8, with a central tendency (median) of 13.6 µR/h.
- Further work is recommended to support a robust gamma correlation.

6.0 References

MWH, 2016. Navajo Nation AUM Environmental Response Trust, First Phase, Removal Site Evaluation Work Plan, October 24, 2016.

Stantec, 2018. Hoskie Tso No.1 Removal Site Evaluation Report, (will be finalized in October 2018).

Appendix A Instrument calibration and completed function check forms

Certificate of Calibration

Calibration and Voltage Plateau

Environmental Restoration Group, Inc.
8809 Washington St NE, Suite 150
Albuquerque, NM 87113
(505) 298-4224
www.ERGoffice.com

Meter:	Manufacturer:	Ludlum	Model Number:	2221r	Serial Number:	254772
Detector:	Manufacturer:	Ludlum	Model Number:	44-10	Serial Number:	PR303727

- ☑ Mechanical Check
- ☑ F/S Response Check
- ☑ Geotropism
- ☑ Meter Zeroed
- ☑ THR/WIN Operation
- ☑ Reset Check
- ☑ Audio Check
- ☑ Battery Check (Min 4.4 VDC)

HV Check (+/- 2.5%): ☑ 500 V ☑ 1000 V ☑ 1500 V

Cable Length: ☐ 39-inch ☑ 72-inch ☐ Other:

Source Distance: ☐ Contact ☑ 6 inches ☐ Other:

Source Geometry ☑ Side ☐ Below ☐ Other:

Threshold: 10 mV

Window:

Barometric Pressure:	24.6	inches Hg
Temperature:	73	°F
Relative Humidity:	20	%

Instrument found within tolerance: ☑ Yes ☐ No

Range/Multiplier	Reference Setting	"As Found Reading"	Meter Reading	Integrated 1-Min. Count	Log Scale Cour
x 1000	400	400	400	398773	400
x 1000	100	100	100		100
x 100	400	400	400	39887	400
x 100	100	100	100		100
x 10	400	400	400	3988	400
x 10	100	100	100		100
x 1	400	400	400	399	400
x 1	100	100	100		100

High Voltage	Source Counts	Background
700	53957	
800	65946	
900	69049	
950	69687	
1000	70240	9925
1050	70288	
1100	71224	
1150	71563	
1200	71161	

Voltage Plateau

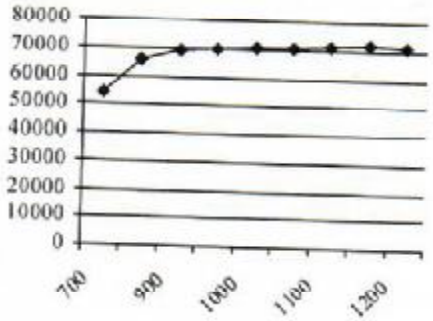

Comments: HV Plateau Scaler Count Time = 1-min. Recommended HV = 1000

Reference Instruments and/or Sources:

Ludlum pulser serial number: ☐ 97743 ☑ 201932

☐ Alpha Source: Th-230 @ 12,800 dpm (1/4/12) sn: 4098-03

☐ Beta Source: Tc-99 @ 17,700 dpm (1/4/12) sn: 4099-03

Fluke multimeter serial number: ☐ 8749012

☑ Gamma Source Cs-137 @ 5.2 uCi (1/4/12) sn: 4097-03

☐ Other Source:

Calibrated By:

Reviewed By:

Calibration Date: 1-20-16

Calibration Due 1-20-17

Date: 1/20/16

ERG Form ITC. 101.A

This calibration conforms to the requirements and acceptable calibration

Certificate of Calibration

Calibration and Voltage Plateau

Environmental Restoration Group, Inc.
8800 Washington St NE, Suite 150
Albuquerque, NM 87113
(505) 298-4224
www.ERGoffice.com

Meter:	Manufacturer:	Ludlum	Model Number:	2221r	Serial Number:	196086
Detector:	Manufacturer:	Ludlum	Model Number:	44-10	Serial Number:	PR295014

✔ Mechanical Check ✔ THR/WIN Operation
✔ F/S Response Check ✔ Reset Check
✔ Geotropism ✔ Audio Check
✔ Meter Zeroed ✔ Battery Check (Min 4.4 VDC)

HV Check (+/- 2.5%): ✔ 500 V ✔ 1000 V ✔ 1500 V
Cable Length: 39-inch ✔ 72-inch Other:

Source Distance: Contact ✔ 6 inches Other:
Source Geometry: ✔ Side Below Other:

Threshold: 10 mV
Window:

Barometric Pressure: 24.78 inches Hg
Temperature: 74 °F
Relative Humidity: 20 %

Instrument found within tolerance: ✔ Yes No

Range/Multiplier	Reference Setting	"As Found Reading"	Meter Reading	Integrated 1-Min. Count	Log Scale Count
x 1000	400	400	400	399802	400
x 1000	100	100	100		100
x 100	400	400	400	39989	400
x 100	100	100	100		100
x 10	400	400	400	3999	400
x 10	100	100	100		100
x 1	400	400	400	400	400
x 1	100	100	100		100

High Voltage	Source Counts	Background
700	28456	
800	53330	
900	64430	
950	66209	
1000	68333	
1050	69077	
1100	69121	8924
1150	69973	
1200	70155	

Voltage Plateau

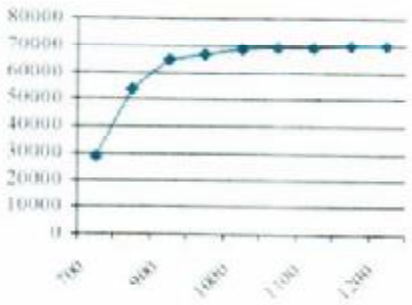

Comments: HV Plateau Scaler Count Time = 1-min. Recommended HV = 1100

Reference Instruments and/or Sources:

Ludlum pulser serial number: 97743 ✔ 201932
Alpha Source: Th-230 @ 12,800 dpm (1/4/12) sn: 4098-03
Beta Source: Tc-99 @ 17,700 dpm (1/4/12) sn: 4099-03

Fluke multimeter serial number: 87490128
✔ Gamma Source Cs-137 @ 5.2 uCi (1/4/12) sn: 4097-03
Other Source:

Calibrated By: [illegible]
Calibration Date: 7/20/16 Calibration Due: 7/20/17

Reviewed By: [illegible]
Date: 7/20/16

ERG Form ITC-101.A

This calibration conforms to the requirements and acceptable calibration conditions of ANSI N323A-1997

Certificate of Calibration

Calibration and Voltage Plateau

Environmental Restoration Group, Inc.
8809 Washington St NE, Suite 150
Albuquerque, NM 87113
(505) 298-4224
www.ERGoffice.com

Meter: Manufacturer: Ludlum Model Number: 2221r Serial Number: 282966

Detector: Manufacturer: Ludlum Model Number: 44-10 Serial Number: PR150507

- [x] Mechanical Check
- [x] F/S Response Check
- [x] Geotropism
- [x] Meter Zeroed
- [x] THR/WIN Operation
- [x] Reset Check
- [x] Audio Check
- [x] Battery Check (Min 4.4 VDC)

HV Check (+/- 2.5%): [x] 500 V [x] 1000 V [x] 1500 V

Cable Length: [ ] 39-inch [ ] 72-inch [x] Other: 60"

Source Distance: [ ] Contact [x] 6 inches [ ] Other:

Source Geometry: [x] Side [ ] Below [ ] Other:

Threshold: 10 mV

Window:

Barometric Pressure: 24.89 inches Hg

Temperature: 73 °F

Relative Humidity: 20 %

Instrument found within tolerance: [x] Yes [ ] No

Range/Multiplier	Reference Setting	"As Found Reading"	Meter Reading	Integrated 1-Min. Count	Log Scale Count
x 1000	400	400	400	398753	400
x 1000	100	100	100		100
x 100	400	400	400	39879	400
x 100	100	100	100		100
x 10	400	400	400	3989	400
x 10	100	100	100		100
x 1	400	400	400	399	400
x 1	100	100	100		100

High Voltage	Source Counts	Background
700	56463	
800	64304	
900	68534	
950	69331	
1000	69868	9696
1050	70054	
1100	70609	
1150	70681	
1200	71955	

Voltage Plateau

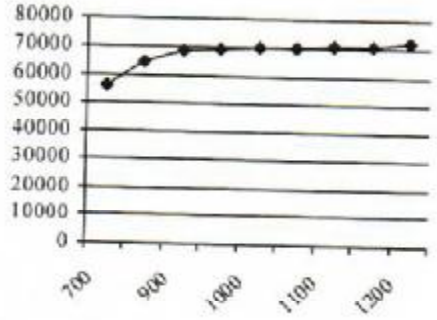

Comments: HV Plateau Scaler Count Time = 1-min. Recommended HV = 1000

Reference Instruments and/or Sources:

Ludlum pulser serial number: [ ] 97743 [x] 201932

[ ] Alpha Source: Th-230 @ 12,800 dpm (1/4/12) sn: 4098-03

[ ] Beta Source: Tc99 @ 17,700 dpm (1/4/12) sn: 4099-03

Fluke multimeter serial number: [ ] 87490128

[x] Gamma Source Cs-137 @ 5.2 uCi (1/4/12) sn: 4097-03

[ ] Other Source:

alibrated By:

eviewed By:

Calibration Date: 10-31-16 Calibration Due: 10-31-17

Date: 10/31/16

ERG Form ITC. 101.A

This calibration conforms to the requirements and acceptable calibration conditions of ANSI N323A - 1997

K&S Associates, Inc.
1926 Elm Tree Drive
Nashville, Tennessee 37210-3718
Phone 800-522-2325 Fax 615-871-0656

ACCREDITED
CALIBRATION CERT #1866.01

CALIBRATION REPORT

SUBMITTED BY: ERG
8809 Washington Street Northeast
Suite 150
Albuquerque, NM 87113

INSTRUMENT: Reuter Stokes RSS-131, #07J00KM1

REPORT NUMBER: 161866
TEST NUMBER(S) M161588
REPORT DATE: June 29, 2016

The CALIBRATION COEFFICIENTS contained in this report were obtained by intercomparison with instruments calibrated by, or directly traceable to, the National Institute of Standards and Technology (NIST). K• S Associates, Inc. is licensed by the State of Tennessee (R-19075-G97, R-19136-B00) to perform calibrations, and is recognized by the Health Physics Society (HPS) as an ACCREDITED INSTRUMENT CALIBRATION LABORATORY. As part of the accreditation K • S participates in a measurement assurance program conducted by the HPS and NIST. K • S also certifies that the calibration was performed using quality policies, methods and procedures that meet or exceed the requirements of ISO/IEC 17025:2005.

This laboratory is accredited by the American Association for Laboratory Accreditation (A2LA) and the results shown in this report have been determined in accordance with the laboratory's terms of accreditation unless stated otherwise in this report

The CALIBRATION COEFFICIENTS stated herein are valid under the conditions specified. It is the instrument user's responsibility to perform the appropriate constancy tests prior to shipment and after return from calibration. It is also the responsibility of the user to assure that the interpretation of the information in this report is consistent with that intended by K • S Associates, Inc.

This report may not be reproduced except in full without the written permission of K• S Associates, Inc.

K&S Associates, Inc
Nashville, Tennessee 37210-3718

ACCREDITED

CALIBRATION CERTIFICATE

Calibration Date: 6/27/2016 Report Number: 161866 Test Number: M161588

K&S certifies that the environmental radiation monitor identified below has been calibrated for radiation measurement using collimated radiation sources whose output has been calibrated with instruments calibrated by or directly traceable to the National Institute of Standards and Technology. K&S is accredited by the American Association for Laboratory Accreditation to perform environmental level calibrations and further certifies that the calibration was performed using accredited policies and procedures (SI 25) that meet or exceed the requirements of ISO/IEC 17025:2005.

Sensor Type: 100 mR/h

Serial Number: 07J00KM1

Average Calibration Coefficient for the range of 0.012 mR/h – 0.220 mR/h*:
1.02 mR/"mR" reading
(Measured at 4 points)

Calibration Coefficient for the 50.0 mR/h point*:
1.12 mR/"mR" reading

Calibration Coefficient for the 80.0 mR/h point*:
1.10 mR/"mR" reading

Found RAC: 2.169e-8

*Multiply the reading in **mR/h** by the Calibration Coefficient to obtain true **mR/h**.

Calibrated By: Richard Hardison Reviewed By: Angela Hoyer

Title: Calibration Technician Title: Calibration Physicist

Log: M-53 Page: 73

K&S Associates, Inc
Nashville, Tennessee 37210-3718

ACCREDITED

AS FOUND DATA
Reuter-Stokes Chamber Calibration

June 27, 2016 *Test Number M161588*

CHAMBER:

Mfgr: Reuter Stokes
Model: RSS-131
Serial: 07J00KM1

SUBMITTED BY:

ERG

Albuquerque, NM

ORIENTATION/CONDITIONS:

Serial number away from source

"True" background exposure rate of 6.7 uR/h, instrument reading was 0.0076 mR/h

ATMOSPHERIC COMMUNICATION: SEALED

POLARIZING POTENTIAL 401V

LEAKAGE: negligible

BEAM QUALITY

BEAM		EXPOSURE RATE		CALIBRATION COEFFICIENT	UNCERT	LOG
CsEn220	(11mCi)	0.22mR/h	N_x=	1.00 mR/h/rdg	11%	M-53 73
CsEn80	(11mCi)	0.08mR/h	N_x=	1.03 mR/h/rdg	11%	
CsEnv12	(1mCi)	0.012mR/h	N_x=	1.01 mR/h/rdg	11%	
CsEnv15	(1mCi)	0.015mR/h	N_x=	1.02 mR/h/rdg	11%	
Cs199m	(20 Ci)	50mR/h	N_x=	1.12 mR/h/rdg	8%	
Cs252m	(20 Ci)	80mR/h	N_x=	1.10 mR/h/rdg	8%	

Comments Batt: 6.1V. Temp: 24.6 deg C. K&S Environment: Temp:21 deg C . RH 59%. Press: 752 mmHg;
Report Number: 161866
Refer to Appendix I of this report for details on PIC ionization chamber calibrations. Procedure: SI 25
RAC Found: 2.169e-8

Calibrated By Richard Hardison **Reviewed By:**

Title: Calibration Technician **Title:** Calibration Physicist

Checked By: **Prepared By:** REH

Form RSS

ERG

Single-Channel Function Check Log

Environmental Restoration Group, Inc
8809 Washington St. NE, Suite 150
Albuquerque, NM 87113
(505) 298-4224

METER	
Manufacturer:	Ludlum
Model:	2221
Serial No.:	254772
Cal. Due Date:	7-9-17

DETECTOR	
Manufacturer:	Ludlum
Model:	44-10
Serial No.:	PR303727
Cal. Due Date:	7-9-17

Comments:
NNGRT

Source: Cs-137 Activity: 5.12 uCi Source Date: 6-6-94 Distance to Source: 6 inches

Serial No.: 333-94 Emission Rate: NA cpm/emissions

Date	Time	Battery	High Voltage	Threshhold	Source Counts	BKG Counts	Net Counts	Initials	Note(s): Project reference points
11-9-16	0729	5.6	1009	100	47673	8821	38852	NW	Occurrence B
11-9-16	1415	5.4	1002	99	46465	7541	38924	NW	Chinle lot
11-10-16	0820	5.6	1011	100	47628	9750	37878	NW	Claim 28
11-10-16	1632	5.4	1002	99	50634	8930	41704	NW	Claim 28 (2nd location)
11-11-16	0816	5.5	1010	100	49034	9824	39210	NW	Claim 28
11-11-16	1555	5.4	1002	99	48985	8643	40342	NW	Occurrence B
11-12-16	0819	5.5	1009	100	49296	9054	40242	NW	Hoskie Tso
11-12-16	1340	5.3	1002	99	49800	8556	41244	NW	Hoskie Tso
11-14-16	0818	5.5	1012	100	47737	9609	38128	NW	Hoskie Tso
11-14-16	1637	5.3	1002	99	47714	9150	38564	NW	Hoskie Tso (2nd location)
11-16-16	0809	5.4	1011	100	49413	12340	37073	NW	Standing Rock
11-16-16	1510	5.3	1003	99	49649	11268	38381	NW	Gallup lot

Reviewed by: MM Review Date: 11/29/16

ERG

Single-Channel Function Check Log

Environmental Restoration Group, Inc.
8809 Washington St. NE, Suite 150
Albuquerque, NM 87113
(505) 298-4224

METER	
Manufacturer:	Ludlum
Model:	2221
Serial No.:	196086
Cal. Due Date:	7-9-17

DETECTOR	
Manufacturer:	Ludlum
Model:	44-10
Serial No.:	PR295014
Cal. Due Date:	7-9-17

Comments:
NNERT

Source: Cs-137 Activity: 5.12 uCi Source Date: 6-6-94 Distance to Source: 6 inches

Serial No.: 333-94 Emission Rate: NA cpm/emissions

Date	Time	Battery	High Voltage	Threshhold	Source Counts	BKG Counts	Net Counts	Initials	Note(s): Project reference points
11-8-16	0805	6.0	1109	100	49571	9246	40325	NW	Claim 28
11-8-16	1641	5.8	1104	100	45893	6864	39029	NW	Chinle lot
11-9-16	0724	5.8	1110	101	46451	8453	37998	NW	Occupance B
11-9-16	1425	5.8	1104	100	47096	6903	40193	NW	Chinle lot
11-10-16	0826	5.8	1109	100	47011	9425	37586	NW	Claim 28
11-10-16	1628	5.7	1103	100	48672	8509	40163	NW	Claim 28 (2nd location)
11-12-16	0834	5.7	1109	101	47463	9188	38275	NW	Moshie Tsu
11-12-16	1347	5.6	1101	101	48929	8265	40664	NW	Moshie Tsu
11-14-16	1218	5.7	1105	100	48870	8074	40796	NW	Moshie Tsu
11-14-16	1639	5.7	1105	100	47696	9068	38628	NW	Moshie Tsu (2nd location.)
11-15-16	0834	5.7	1110	101	50555	~~9175~~ 9150 NW	41405	NW	Moshie Tsu
11-15-16	1142	5.5	1101	100	48004	8598	39406	NW	Moshie Tsu

Reviewed by: MN Review Date: 11/29/16

ERG

Single-Channel Function Check Log

Environmental Restoration Group, Inc
8809 Washington St. NE, Suite 150
Albuquerque, NM 87113
(505) 298-4224

METER	
Manufacturer:	Ludlum
Model:	2221
Serial No.:	196086
Cal. Due Date:	7-9-17

DETECTOR	
Manufacturer:	Ludlum
Model:	44-10
Serial No.:	PR295014
Cal. Due Date:	7-9-17

Comments:
NNERT

Source: Cs-137 Activity: 5.12 uCi Source Date: 6-6-94 Distance to Source: 6 inches

Serial No.: 333-94 Emission Rate: NA cpm/emissions

Date	Time	Battery	High Voltage	Threshhold	Source Counts	BKG Counts	Net Counts	Initials	Note(s): Project Reference Points
11-16-16	0812	5.7	1110	101	49614	11731	37883	NW	Standing Rock
11-16-16	1515	5.6	1104	100	48046	10720	37326	NW	Gallup lot
11-18-16	0826	5.7	1116	102	51120	13035	38085	NW	Standing Rock
11-18-16	1512	5.6	1106	101	48583	10155	38428	NW	Gallup lot
11-19-16	0817	5.6	1115	102	44225	4772	39453	NW	Eunice Becente
11-19-16	1403	5.5	1102	100	43512	4751	38761	NW	Eunice Bicente

12-6-16

Reviewed by: MM Review Date: 11/29/16

ERG

Single-Channel Function Check Log

Environmental Restoration Group, Inc.
8809 Washington St. NE, Suite 150
Albuquerque, NM 87113
(505) 298-4224

METER	
Manufacturer:	Ludlum
Model:	2221
Serial No.:	282966
Cal. Due Date:	10-31-17

DETECTOR	
Manufacturer:	Ludlum
Model:	44-10
Serial No.:	PR150507
Cal. Due Date:	10-31-17

Comments:
NNERG

Source: Cs-137 Activity: 5.12 uCi Source Date: 6-6-94 Distance to Source: 6 inches

Serial No.: 333-94 Emission Rate: NA cpm/emissions

Date	Time	Battery	High Voltage	Threshhold	Source Counts	BKG Counts	Net Counts	Initials	Note(s): Project Reference Points
11-12-16	0827	5.7	1010	102	48550	9744	38806	NW	Moshin Tsa
11-12-16	1351	5.6	1000	101	47089	8725	38364	NW	Moshin Tsa
11-16-16	0826	5.7	1011	102	50569	12266	38303	NW	Standing Rock
11-16-16	1518	5.6	1006	103	50039	11202	38837	NW	Gallup lot
11-18-16	0836	5.7	1017	104	52221	13620	38601	NW	Standing Rock
11-18-16	1530	5.6	1009	103	48820	10831	37989	NW	Gallup lot
11-19-16	0812	5.6	1016	104	44700	4940	39760	NW	Eunice Becenti
11-19-16	1407	5.5	1004	102	44961	4975	39986	NW	Eunice Becenti
					12-6-16				

Reviewed by: MM Review Date: 11/29/16

ERG

Single-Channel Function Check Log

Environmental Restoration Group, Inc
8809 Washington St. NE, Suite 150
Albuquerque, NM 87113
(505) 299-4224

METER	
Manufacturer:	GE
Model:	RSS-131
Serial No.:	07J00KM1
Cal. Due Date:	6-29-17

DETECTOR	
Manufacturer:	SAME AS METER
Model:	
Serial No.:	
Cal. Due Date:	

Comments:
NNEAT

Source: Cs-137 Activity: 5.12 uCi Source Date: 6-6-94 Distance to Source: Contact-housing

Serial No.: 333-94 Emission Rate: NA cpm/emissions

Date	Time	Battery	High Voltage	Threshhold	Source Counts (µR/h)	BKG Counts (µR/h)	Net Counts	Initials	Note(s): Project reference points
11-14-16	0530	~6.3	~400	NA	~27	~10	~17	NW	Doubletree Flagstaff-room
11-14-16	2005	~6.3	~400	NA	~29	~11	~18	NW	Best Western Holbrook-room
11-18-16	0623	~6.3	~400	NA	~27	~11	~16	NW	Best Western Gallup-room
11-18-16	1532	~6.2	~400	NA	~27	~11	~16	NW	Best Western Gallup-room

12-6-16

Reviewed by: MA Review Date: 11-29-16

Appendix B Exposure Rate Measurements

Date and Time	Exposure Rate (mR/h)	Location	Date and Time	Exposure Rate (mR/h)	Location
11/14/2016 10:34	0.0577	Correlation Location 1	11/14/2016 10:40	0.0331	Correlation Location 1
11/14/2016 10:34	0.1037	Correlation Location 1	11/14/2016 10:40	0.0331	Correlation Location 1
11/14/2016 10:34	0.0972	Correlation Location 1	11/14/2016 10:40	0.0328	Correlation Location 1
11/14/2016 10:34	0.0738	Correlation Location 1	11/14/2016 10:40	0.0327	Correlation Location 1
11/14/2016 10:34	0.056	Correlation Location 1	11/14/2016 10:40	0.0331	Correlation Location 1
11/14/2016 10:35	0.0453	Correlation Location 1	11/14/2016 10:40	0.0332	Correlation Location 1
11/14/2016 10:35	0.0393	Correlation Location 1	11/14/2016 10:40	0.0324	Correlation Location 1
11/14/2016 10:35	0.0359	Correlation Location 1	11/14/2016 10:40	0.032	Correlation Location 1
11/14/2016 10:35	0.0341	Correlation Location 1	11/14/2016 10:40	0.0322	Correlation Location 1
11/14/2016 10:35	0.0336	Correlation Location 1	11/14/2016 10:40	0.0328	Correlation Location 1
11/14/2016 10:35	0.0334	Correlation Location 1	11/14/2016 10:41	0.0336	Correlation Location 1
11/14/2016 10:35	0.0332	Correlation Location 1	11/14/2016 10:41	0.0335	Correlation Location 1
11/14/2016 10:35	0.033	Correlation Location 1	11/14/2016 10:41	0.0332	Correlation Location 1
11/14/2016 10:35	0.033	Correlation Location 1	11/14/2016 10:41	0.0335	Correlation Location 1
11/14/2016 10:35	0.0331	Correlation Location 1	11/14/2016 10:41	0.0336	Correlation Location 1
11/14/2016 10:36	0.033	Correlation Location 1	11/14/2016 10:41	0.0334	Correlation Location 1
11/14/2016 10:36	0.0328	Correlation Location 1	11/14/2016 10:41	0.034	Correlation Location 1
11/14/2016 10:36	0.0331	Correlation Location 1	11/14/2016 10:41	0.0341	Correlation Location 1
11/14/2016 10:36	0.0331	Correlation Location 1	11/14/2016 10:41	0.0341	Correlation Location 1
11/14/2016 10:36	0.0332	Correlation Location 1	11/14/2016 10:41	0.0336	Correlation Location 1
11/14/2016 10:36	0.0332	Correlation Location 1	11/14/2016 10:42	0.0332	Correlation Location 1
11/14/2016 10:36	0.0335	Correlation Location 1	11/14/2016 10:42	0.0332	Correlation Location 1
11/14/2016 10:36	0.0337	Correlation Location 1	11/14/2016 10:42	0.0335	Correlation Location 1
11/14/2016 10:36	0.0336	Correlation Location 1	11/14/2016 10:42	0.0336	Correlation Location 1
11/14/2016 10:36	0.0337	Correlation Location 1	11/14/2016 10:42	0.0336	Correlation Location 1
11/14/2016 10:37	0.0332	Correlation Location 1	11/14/2016 10:42	0.0334	Correlation Location 1
11/14/2016 10:37	0.0328	Correlation Location 1	11/14/2016 10:42	0.0332	Correlation Location 1
11/14/2016 10:37	0.0328	Correlation Location 1	11/14/2016 10:42	0.0334	Correlation Location 1
11/14/2016 10:37	0.0328	Correlation Location 1	11/14/2016 10:42	0.0331	Correlation Location 1
11/14/2016 10:37	0.0324	Correlation Location 1	11/14/2016 10:42	0.0328	Correlation Location 1
11/14/2016 10:37	0.0322	Correlation Location 1	11/14/2016 10:43	0.0331	Correlation Location 1
11/14/2016 10:37	0.0322	Correlation Location 1	11/14/2016 10:43	0.0332	Correlation Location 1
11/14/2016 10:37	0.0322	Correlation Location 1	11/14/2016 10:43	0.033	Correlation Location 1
11/14/2016 10:37	0.0322	Correlation Location 1	11/14/2016 10:43	0.033	Correlation Location 1
11/14/2016 10:37	0.0322	Correlation Location 1	11/14/2016 10:43	0.0332	Correlation Location 1
11/14/2016 10:38	0.0327	Correlation Location 1	11/14/2016 10:43	0.0332	Correlation Location 1
11/14/2016 10:38	0.0328	Correlation Location 1	11/14/2016 10:43	0.0335	Correlation Location 1
11/14/2016 10:38	0.0328	Correlation Location 1	11/14/2016 10:43	0.0334	Correlation Location 1
11/14/2016 10:38	0.033	Correlation Location 1	11/14/2016 10:43	0.0331	Correlation Location 1
11/14/2016 10:38	0.0332	Correlation Location 1	11/14/2016 10:43	0.0328	Correlation Location 1
11/14/2016 10:38	0.0334	Correlation Location 1	11/14/2016 10:44	0.033	Correlation Location 1
11/14/2016 10:38	0.0332	Correlation Location 1	11/14/2016 10:44	0.0331	Correlation Location 1
11/14/2016 10:38	0.033	Correlation Location 1	11/14/2016 10:44	0.0334	Correlation Location 1
11/14/2016 10:38	0.0326	Correlation Location 1	11/14/2016 10:44	0.0332	Correlation Location 1
11/14/2016 10:38	0.0322	Correlation Location 1	11/14/2016 10:44	0.0335	Correlation Location 1
11/14/2016 10:39	0.033	Correlation Location 1	11/14/2016 10:44	0.0332	Correlation Location 1
11/14/2016 10:39	0.0332	Correlation Location 1	11/14/2016 10:44	0.0326	Correlation Location 1
11/14/2016 10:39	0.0332	Correlation Location 1	11/14/2016 10:44	0.0326	Correlation Location 1
11/14/2016 10:39	0.0328	Correlation Location 1	11/14/2016 10:44	0.0328	Correlation Location 1
11/14/2016 10:39	0.0324	Correlation Location 1	11/14/2016 10:44	0.0332	Correlation Location 1
11/14/2016 10:39	0.0326	Correlation Location 1	11/14/2016 10:45	0.0339	Correlation Location 1
11/14/2016 10:39	0.0327	Correlation Location 1	11/14/2016 10:45	0.0334	Correlation Location 1
11/14/2016 10:39	0.0326	Correlation Location 1	11/14/2016 10:45	0.0328	Correlation Location 1
11/14/2016 10:39	0.0327	Correlation Location 1	11/14/2016 10:45	0.0326	Correlation Location 1
11/14/2016 10:39	0.033	Correlation Location 1	11/14/2016 10:45	0.033	Correlation Location 1

Hoskie Tso No. 1. Exposure Rate Measurements for Correlation

Date and Time	Exposure Rate (mR/h)	Location
11/14/2016 10:45	0.0335	Correlation Location 1
11/14/2016 11:10	0.0562	Correlation Location 2
11/14/2016 11:10	0.1	Correlation Location 2
11/14/2016 11:10	0.0911	Correlation Location 2
11/14/2016 11:10	0.0671	Correlation Location 2
11/14/2016 11:10	0.0484	Correlation Location 2
11/14/2016 11:11	0.037	Correlation Location 2
11/14/2016 11:11	0.0309	Correlation Location 2
11/14/2016 11:11	0.0277	Correlation Location 2
11/14/2016 11:11	0.026	Correlation Location 2
11/14/2016 11:11	0.0256	Correlation Location 2
11/14/2016 11:11	0.0251	Correlation Location 2
11/14/2016 11:11	0.0244	Correlation Location 2
11/14/2016 11:11	0.024	Correlation Location 2
11/14/2016 11:11	0.0242	Correlation Location 2
11/14/2016 11:11	0.0247	Correlation Location 2
11/14/2016 11:12	0.0244	Correlation Location 2
11/14/2016 11:12	0.0242	Correlation Location 2
11/14/2016 11:12	0.0241	Correlation Location 2
11/14/2016 11:12	0.0241	Correlation Location 2
11/14/2016 11:12	0.0244	Correlation Location 2
11/14/2016 11:12	0.0249	Correlation Location 2
11/14/2016 11:12	0.0249	Correlation Location 2
11/14/2016 11:12	0.0245	Correlation Location 2
11/14/2016 11:12	0.0243	Correlation Location 2
11/14/2016 11:12	0.0244	Correlation Location 2
11/14/2016 11:13	0.0244	Correlation Location 2
11/14/2016 11:13	0.0245	Correlation Location 2
11/14/2016 11:13	0.0243	Correlation Location 2
11/14/2016 11:13	0.0245	Correlation Location 2
11/14/2016 11:13	0.0253	Correlation Location 2
11/14/2016 11:13	0.0255	Correlation Location 2
11/14/2016 11:13	0.0249	Correlation Location 2
11/14/2016 11:13	0.0247	Correlation Location 2
11/14/2016 11:13	0.0249	Correlation Location 2
11/14/2016 11:13	0.0249	Correlation Location 2
11/14/2016 11:14	0.0253	Correlation Location 2
11/14/2016 11:14	0.0253	Correlation Location 2
11/14/2016 11:14	0.0251	Correlation Location 2
11/14/2016 11:14	0.0251	Correlation Location 2
11/14/2016 11:14	0.0251	Correlation Location 2
11/14/2016 11:14	0.0249	Correlation Location 2
11/14/2016 11:14	0.0244	Correlation Location 2
11/14/2016 11:14	0.0237	Correlation Location 2
11/14/2016 11:14	0.0235	Correlation Location 2
11/14/2016 11:14	0.0237	Correlation Location 2
11/14/2016 11:15	0.0244	Correlation Location 2
11/14/2016 11:15	0.0245	Correlation Location 2
11/14/2016 11:15	0.0252	Correlation Location 2
11/14/2016 11:15	0.0252	Correlation Location 2
11/14/2016 11:15	0.0249	Correlation Location 2
11/14/2016 11:15	0.0245	Correlation Location 2
11/14/2016 11:15	0.0244	Correlation Location 2
11/14/2016 11:15	0.0247	Correlation Location 2
11/14/2016 11:15	0.0247	Correlation Location 2
11/14/2016 11:15	0.0253	Correlation Location 2

Date and Time	Exposure Rate (mR/h)	Location
11/14/2016 11:16	0.0254	Correlation Location 2
11/14/2016 11:16	0.0251	Correlation Location 2
11/14/2016 11:16	0.0247	Correlation Location 2
11/14/2016 11:16	0.0245	Correlation Location 2
11/14/2016 11:16	0.0247	Correlation Location 2
11/14/2016 11:16	0.0249	Correlation Location 2
11/14/2016 11:16	0.0247	Correlation Location 2
11/14/2016 11:16	0.0244	Correlation Location 2
11/14/2016 11:16	0.0244	Correlation Location 2
11/14/2016 11:16	0.0242	Correlation Location 2
11/14/2016 11:17	0.0242	Correlation Location 2
11/14/2016 11:17	0.0243	Correlation Location 2
11/14/2016 11:17	0.0244	Correlation Location 2
11/14/2016 11:17	0.0245	Correlation Location 2
11/14/2016 11:17	0.0251	Correlation Location 2
11/14/2016 11:17	0.0254	Correlation Location 2
11/14/2016 11:17	0.0249	Correlation Location 2
11/14/2016 11:17	0.0247	Correlation Location 2
11/14/2016 11:17	0.0247	Correlation Location 2
11/14/2016 11:17	0.0244	Correlation Location 2
11/14/2016 11:18	0.0245	Correlation Location 2
11/14/2016 11:18	0.0245	Correlation Location 2
11/14/2016 11:18	0.0247	Correlation Location 2
11/14/2016 11:18	0.0255	Correlation Location 2
11/14/2016 11:18	0.0259	Correlation Location 2
11/14/2016 11:18	0.0258	Correlation Location 2
11/14/2016 11:18	0.0253	Correlation Location 2
11/14/2016 11:18	0.0249	Correlation Location 2
11/14/2016 11:18	0.0249	Correlation Location 2
11/14/2016 11:18	0.0247	Correlation Location 2
11/14/2016 11:19	0.0245	Correlation Location 2
11/14/2016 11:19	0.0247	Correlation Location 2
11/14/2016 11:19	0.0249	Correlation Location 2
11/14/2016 11:19	0.0249	Correlation Location 2
11/14/2016 11:19	0.0249	Correlation Location 2
11/14/2016 11:19	0.0251	Correlation Location 2
11/14/2016 11:19	0.0249	Correlation Location 2
11/14/2016 11:19	0.0249	Correlation Location 2
11/14/2016 11:19	0.0247	Correlation Location 2
11/14/2016 11:19	0.0249	Correlation Location 2
11/14/2016 11:20	0.0247	Correlation Location 2
11/14/2016 11:20	0.0245	Correlation Location 2
11/14/2016 11:20	0.0247	Correlation Location 2
11/14/2016 11:20	0.0247	Correlation Location 2
11/14/2016 11:20	0.0247	Correlation Location 2
11/14/2016 11:20	0.0247	Correlation Location 2
11/14/2016 11:20	0.0245	Correlation Location 2
11/14/2016 11:20	0.0245	Correlation Location 2
11/14/2016 11:20	0.0245	Correlation Location 2
11/14/2016 11:20	0.0245	Correlation Location 2
11/14/2016 11:21	0.0247	Correlation Location 2
11/14/2016 11:21	0.0247	Correlation Location 2
11/14/2016 11:21	0.0247	Correlation Location 2
11/14/2016 11:21	0.0249	Correlation Location 2
11/14/2016 11:21	0.0252	Correlation Location 2
11/14/2016 11:41	0.0542	Correlation Location 3

Hoskie Tso No. 1. Exposure Rate Measurements for Correlation

Date and Time	Exposure Rate (mR/h)	Location
11/14/2016 11:41	0.0945	Correlation Location 3
11/14/2016 11:41	0.0823	Correlation Location 3
11/14/2016 11:41	0.0561	Correlation Location 3
11/14/2016 11:41	0.0364	Correlation Location 3
11/14/2016 11:41	0.0245	Correlation Location 3
11/14/2016 11:42	0.0182	Correlation Location 3
11/14/2016 11:42	0.0152	Correlation Location 3
11/14/2016 11:42	0.0139	Correlation Location 3
11/14/2016 11:42	0.0134	Correlation Location 3
11/14/2016 11:42	0.0129	Correlation Location 3
11/14/2016 11:42	0.0129	Correlation Location 3
11/14/2016 11:42	0.0128	Correlation Location 3
11/14/2016 11:42	0.0126	Correlation Location 3
11/14/2016 11:42	0.0122	Correlation Location 3
11/14/2016 11:42	0.0122	Correlation Location 3
11/14/2016 11:43	0.0126	Correlation Location 3
11/14/2016 11:43	0.0127	Correlation Location 3
11/14/2016 11:43	0.0131	Correlation Location 3
11/14/2016 11:43	0.0136	Correlation Location 3
11/14/2016 11:43	0.0139	Correlation Location 3
11/14/2016 11:43	0.0132	Correlation Location 3
11/14/2016 11:43	0.0129	Correlation Location 3
11/14/2016 11:43	0.0132	Correlation Location 3
11/14/2016 11:43	0.0135	Correlation Location 3
11/14/2016 11:43	0.0133	Correlation Location 3
11/14/2016 11:44	0.0129	Correlation Location 3
11/14/2016 11:44	0.0123	Correlation Location 3
11/14/2016 11:44	0.0122	Correlation Location 3
11/14/2016 11:44	0.0124	Correlation Location 3
11/14/2016 11:44	0.013	Correlation Location 3
11/14/2016 11:44	0.0133	Correlation Location 3
11/14/2016 11:44	0.0134	Correlation Location 3
11/14/2016 11:44	0.0131	Correlation Location 3
11/14/2016 11:44	0.0127	Correlation Location 3
11/14/2016 11:44	0.0126	Correlation Location 3
11/14/2016 11:45	0.013	Correlation Location 3
11/14/2016 11:45	0.0135	Correlation Location 3
11/14/2016 11:45	0.0133	Correlation Location 3
11/14/2016 11:45	0.0134	Correlation Location 3
11/14/2016 11:45	0.0137	Correlation Location 3
11/14/2016 11:45	0.0136	Correlation Location 3
11/14/2016 11:45	0.0129	Correlation Location 3
11/14/2016 11:45	0.0126	Correlation Location 3
11/14/2016 11:45	0.0127	Correlation Location 3
11/14/2016 11:45	0.0129	Correlation Location 3
11/14/2016 11:46	0.0127	Correlation Location 3
11/14/2016 11:46	0.0126	Correlation Location 3
11/14/2016 11:46	0.0123	Correlation Location 3
11/14/2016 11:46	0.0122	Correlation Location 3
11/14/2016 11:46	0.0122	Correlation Location 3
11/14/2016 11:46	0.0127	Correlation Location 3
11/14/2016 11:46	0.0129	Correlation Location 3
11/14/2016 11:46	0.0129	Correlation Location 3
11/14/2016 11:46	0.0131	Correlation Location 3
11/14/2016 11:46	0.0133	Correlation Location 3
11/14/2016 11:47	0.0134	Correlation Location 3
11/14/2016 11:47	0.0134	Correlation Location 3
11/14/2016 11:47	0.0137	Correlation Location 3
11/14/2016 11:47	0.0136	Correlation Location 3
11/14/2016 11:47	0.0132	Correlation Location 3
11/14/2016 11:47	0.0129	Correlation Location 3
11/14/2016 11:47	0.0124	Correlation Location 3
11/14/2016 11:47	0.012	Correlation Location 3
11/14/2016 11:47	0.0114	Correlation Location 3
11/14/2016 11:47	0.0117	Correlation Location 3
11/14/2016 11:48	0.0124	Correlation Location 3
11/14/2016 11:48	0.0131	Correlation Location 3
11/14/2016 11:48	0.0133	Correlation Location 3
11/14/2016 11:48	0.0131	Correlation Location 3
11/14/2016 11:48	0.0131	Correlation Location 3
11/14/2016 11:48	0.0134	Correlation Location 3
11/14/2016 11:48	0.0133	Correlation Location 3
11/14/2016 11:48	0.013	Correlation Location 3
11/14/2016 11:48	0.0129	Correlation Location 3
11/14/2016 11:48	0.0126	Correlation Location 3
11/14/2016 11:49	0.0127	Correlation Location 3
11/14/2016 11:49	0.0128	Correlation Location 3
11/14/2016 11:49	0.0126	Correlation Location 3
11/14/2016 11:49	0.0127	Correlation Location 3
11/14/2016 11:49	0.0132	Correlation Location 3
11/14/2016 11:49	0.0137	Correlation Location 3
11/14/2016 11:49	0.0134	Correlation Location 3
11/14/2016 11:49	0.0132	Correlation Location 3
11/14/2016 11:49	0.013	Correlation Location 3
11/14/2016 11:49	0.0126	Correlation Location 3
11/14/2016 11:50	0.0126	Correlation Location 3
11/14/2016 11:50	0.0124	Correlation Location 3
11/14/2016 11:50	0.0122	Correlation Location 3
11/14/2016 11:50	0.0123	Correlation Location 3
11/14/2016 11:50	0.0128	Correlation Location 3
11/14/2016 11:50	0.013	Correlation Location 3
11/14/2016 11:50	0.0131	Correlation Location 3
11/14/2016 11:50	0.013	Correlation Location 3
11/14/2016 11:50	0.0134	Correlation Location 3
11/14/2016 11:50	0.0135	Correlation Location 3
11/14/2016 11:51	0.0133	Correlation Location 3
11/14/2016 11:51	0.0134	Correlation Location 3
11/14/2016 11:51	0.0131	Correlation Location 3
11/14/2016 11:51	0.0123	Correlation Location 3
11/14/2016 11:51	0.0122	Correlation Location 3
11/14/2016 11:51	0.0123	Correlation Location 3
11/14/2016 11:51	0.0124	Correlation Location 3
11/14/2016 11:51	0.0123	Correlation Location 3
11/14/2016 11:51	0.0124	Correlation Location 3
11/14/2016 11:51	0.0127	Correlation Location 3
11/14/2016 11:52	0.013	Correlation Location 3
11/14/2016 11:52	0.0129	Correlation Location 3
11/14/2016 11:52	0.0124	Correlation Location 3
11/14/2016 12:13	0.0536	Correlation Location 4
11/14/2016 12:13	0.0934	Correlation Location 4
11/14/2016 12:13	0.081	Correlation Location 4
11/14/2016 12:13	0.0551	Correlation Location 4

Hoskie Tso No. 1. Exposure Rate Measurements for Correlation

Date and Time	Exposure Rate (mR/h)	Location
11/14/2016 12:13	0.0359	Correlation Location 4
11/14/2016 12:14	0.0241	Correlation Location 4
11/14/2016 12:14	0.017	Correlation Location 4
11/14/2016 12:14	0.0137	Correlation Location 4
11/14/2016 12:14	0.0121	Correlation Location 4
11/14/2016 12:14	0.0114	Correlation Location 4
11/14/2016 12:14	0.0112	Correlation Location 4
11/14/2016 12:14	0.0114	Correlation Location 4
11/14/2016 12:14	0.0114	Correlation Location 4
11/14/2016 12:14	0.0111	Correlation Location 4
11/14/2016 12:14	0.0111	Correlation Location 4
11/14/2016 12:15	0.0112	Correlation Location 4
11/14/2016 12:15	0.0112	Correlation Location 4
11/14/2016 12:15	0.011	Correlation Location 4
11/14/2016 12:15	0.0109	Correlation Location 4
11/14/2016 12:15	0.0106	Correlation Location 4
11/14/2016 12:15	0.011	Correlation Location 4
11/14/2016 12:15	0.0111	Correlation Location 4
11/14/2016 12:15	0.0111	Correlation Location 4
11/14/2016 12:15	0.0114	Correlation Location 4
11/14/2016 12:15	0.0114	Correlation Location 4
11/14/2016 12:16	0.0109	Correlation Location 4
11/14/2016 12:16	0.0105	Correlation Location 4
11/14/2016 12:16	0.0106	Correlation Location 4
11/14/2016 12:16	0.0111	Correlation Location 4
11/14/2016 12:16	0.0114	Correlation Location 4
11/14/2016 12:16	0.0111	Correlation Location 4
11/14/2016 12:16	0.0111	Correlation Location 4
11/14/2016 12:16	0.0111	Correlation Location 4
11/14/2016 12:16	0.011	Correlation Location 4
11/14/2016 12:16	0.0111	Correlation Location 4
11/14/2016 12:17	0.011	Correlation Location 4
11/14/2016 12:17	0.0112	Correlation Location 4
11/14/2016 12:17	0.0111	Correlation Location 4
11/14/2016 12:17	0.0109	Correlation Location 4
11/14/2016 12:17	0.0106	Correlation Location 4
11/14/2016 12:17	0.0106	Correlation Location 4
11/14/2016 12:17	0.0105	Correlation Location 4
11/14/2016 12:17	0.0105	Correlation Location 4
11/14/2016 12:17	0.0105	Correlation Location 4
11/14/2016 12:17	0.0108	Correlation Location 4
11/14/2016 12:18	0.0115	Correlation Location 4
11/14/2016 12:18	0.0118	Correlation Location 4
11/14/2016 12:18	0.0116	Correlation Location 4
11/14/2016 12:18	0.0109	Correlation Location 4
11/14/2016 12:18	0.0104	Correlation Location 4
11/14/2016 12:18	0.0105	Correlation Location 4
11/14/2016 12:18	0.0106	Correlation Location 4
11/14/2016 12:18	0.0105	Correlation Location 4
11/14/2016 12:18	0.0106	Correlation Location 4
11/14/2016 12:18	0.0106	Correlation Location 4
11/14/2016 12:19	0.0109	Correlation Location 4
11/14/2016 12:19	0.0111	Correlation Location 4
11/14/2016 12:19	0.0111	Correlation Location 4
11/14/2016 12:19	0.011	Correlation Location 4
11/14/2016 12:19	0.0109	Correlation Location 4

Date and Time	Exposure Rate (mR/h)	Location
11/14/2016 12:19	0.0111	Correlation Location 4
11/14/2016 12:19	0.0115	Correlation Location 4
11/14/2016 12:19	0.0116	Correlation Location 4
11/14/2016 12:19	0.0114	Correlation Location 4
11/14/2016 12:19	0.011	Correlation Location 4
11/14/2016 12:20	0.0105	Correlation Location 4
11/14/2016 12:20	0.0106	Correlation Location 4
11/14/2016 12:20	0.0111	Correlation Location 4
11/14/2016 12:20	0.011	Correlation Location 4
11/14/2016 12:20	0.0106	Correlation Location 4
11/14/2016 12:20	0.0106	Correlation Location 4
11/14/2016 12:20	0.011	Correlation Location 4
11/14/2016 12:20	0.0111	Correlation Location 4
11/14/2016 12:20	0.011	Correlation Location 4
11/14/2016 12:20	0.0109	Correlation Location 4
11/14/2016 12:21	0.0109	Correlation Location 4
11/14/2016 12:21	0.011	Correlation Location 4
11/14/2016 12:21	0.0111	Correlation Location 4
11/14/2016 12:21	0.0111	Correlation Location 4
11/14/2016 12:21	0.0109	Correlation Location 4
11/14/2016 12:21	0.0105	Correlation Location 4
11/14/2016 12:21	0.0105	Correlation Location 4
11/14/2016 12:21	0.0105	Correlation Location 4
11/14/2016 12:21	0.0106	Correlation Location 4
11/14/2016 12:21	0.0108	Correlation Location 4
11/14/2016 12:22	0.0106	Correlation Location 4
11/14/2016 12:22	0.011	Correlation Location 4
11/14/2016 12:22	0.0109	Correlation Location 4
11/14/2016 12:22	0.0108	Correlation Location 4
11/14/2016 12:22	0.0109	Correlation Location 4
11/14/2016 12:22	0.0109	Correlation Location 4
11/14/2016 12:22	0.011	Correlation Location 4
11/14/2016 12:22	0.0111	Correlation Location 4
11/14/2016 12:22	0.0112	Correlation Location 4
11/14/2016 12:22	0.0111	Correlation Location 4
11/14/2016 12:23	0.0111	Correlation Location 4
11/14/2016 12:23	0.0114	Correlation Location 4
11/14/2016 12:23	0.0111	Correlation Location 4
11/14/2016 12:23	0.011	Correlation Location 4
11/14/2016 12:23	0.0108	Correlation Location 4
11/14/2016 12:23	0.0105	Correlation Location 4
11/14/2016 12:23	0.0103	Correlation Location 4
11/14/2016 12:23	0.0103	Correlation Location 4
11/14/2016 12:23	0.0105	Correlation Location 4
11/14/2016 12:23	0.0108	Correlation Location 4
11/14/2016 12:24	0.0109	Correlation Location 4
11/14/2016 12:24	0.0109	Correlation Location 4
11/14/2016 12:24	0.0105	Correlation Location 4
11/14/2016 12:48	0.0555	Correlation Location 5
11/14/2016 12:48	0.0978	Correlation Location 5
11/14/2016 12:48	0.087	Correlation Location 5
11/14/2016 12:48	0.062	Correlation Location 5
11/14/2016 12:48	0.0431	Correlation Location 5
11/14/2016 12:48	0.0317	Correlation Location 5
11/14/2016 12:48	0.0259	Correlation Location 5
11/14/2016 12:48	0.0225	Correlation Location 5

Hoskie Tso No. 1. Exposure Rate Measurements for Correlation

Date and Time	Exposure Rate (mR/h)	Location
11/14/2016 12:49	0.021	Correlation Location 5
11/14/2016 12:49	0.0205	Correlation Location 5
11/14/2016 12:49	0.0201	Correlation Location 5
11/14/2016 12:49	0.0199	Correlation Location 5
11/14/2016 12:49	0.0198	Correlation Location 5
11/14/2016 12:49	0.0197	Correlation Location 5
11/14/2016 12:49	0.0197	Correlation Location 5
11/14/2016 12:49	0.0198	Correlation Location 5
11/14/2016 12:49	0.0196	Correlation Location 5
11/14/2016 12:49	0.0198	Correlation Location 5
11/14/2016 12:50	0.0197	Correlation Location 5
11/14/2016 12:50	0.0196	Correlation Location 5
11/14/2016 12:50	0.0192	Correlation Location 5
11/14/2016 12:50	0.0192	Correlation Location 5
11/14/2016 12:50	0.0194	Correlation Location 5
11/14/2016 12:50	0.0198	Correlation Location 5
11/14/2016 12:50	0.02	Correlation Location 5
11/14/2016 12:50	0.02	Correlation Location 5
11/14/2016 12:50	0.02	Correlation Location 5
11/14/2016 12:50	0.02	Correlation Location 5
11/14/2016 12:51	0.02	Correlation Location 5
11/14/2016 12:51	0.02	Correlation Location 5
11/14/2016 12:51	0.0194	Correlation Location 5
11/14/2016 12:51	0.0192	Correlation Location 5
11/14/2016 12:51	0.0196	Correlation Location 5
11/14/2016 12:51	0.0202	Correlation Location 5
11/14/2016 12:51	0.0202	Correlation Location 5
11/14/2016 12:51	0.02	Correlation Location 5
11/14/2016 12:51	0.0199	Correlation Location 5
11/14/2016 12:51	0.0196	Correlation Location 5
11/14/2016 12:52	0.0197	Correlation Location 5
11/14/2016 12:52	0.0198	Correlation Location 5
11/14/2016 12:52	0.0196	Correlation Location 5
11/14/2016 12:52	0.0194	Correlation Location 5
11/14/2016 12:52	0.019	Correlation Location 5
11/14/2016 12:52	0.0189	Correlation Location 5
11/14/2016 12:52	0.0192	Correlation Location 5
11/14/2016 12:52	0.0194	Correlation Location 5
11/14/2016 12:52	0.0198	Correlation Location 5
11/14/2016 12:52	0.02	Correlation Location 5
11/14/2016 12:53	0.0198	Correlation Location 5
11/14/2016 12:53	0.0194	Correlation Location 5
11/14/2016 12:53	0.0198	Correlation Location 5
11/14/2016 12:53	0.02	Correlation Location 5
11/14/2016 12:53	0.0197	Correlation Location 5
11/14/2016 12:53	0.0194	Correlation Location 5
11/14/2016 12:53	0.019	Correlation Location 5
11/14/2016 12:53	0.0194	Correlation Location 5
11/14/2016 12:53	0.0198	Correlation Location 5
11/14/2016 12:53	0.0197	Correlation Location 5
11/14/2016 12:54	0.02	Correlation Location 5
11/14/2016 12:54	0.02	Correlation Location 5
11/14/2016 12:54	0.02	Correlation Location 5
11/14/2016 12:54	0.02	Correlation Location 5
11/14/2016 12:54	0.0198	Correlation Location 5
11/14/2016 12:54	0.0194	Correlation Location 5
11/14/2016 12:54	0.0194	Correlation Location 5
11/14/2016 12:54	0.0194	Correlation Location 5
11/14/2016 12:54	0.0196	Correlation Location 5
11/14/2016 12:54	0.02	Correlation Location 5
11/14/2016 12:55	0.0206	Correlation Location 5
11/14/2016 12:55	0.0208	Correlation Location 5
11/14/2016 12:55	0.0209	Correlation Location 5
11/14/2016 12:55	0.021	Correlation Location 5
11/14/2016 12:55	0.0202	Correlation Location 5
11/14/2016 12:55	0.0201	Correlation Location 5
11/14/2016 12:55	0.0201	Correlation Location 5
11/14/2016 12:55	0.02	Correlation Location 5
11/14/2016 12:55	0.02	Correlation Location 5
11/14/2016 12:55	0.02	Correlation Location 5
11/14/2016 12:56	0.0201	Correlation Location 5
11/14/2016 12:56	0.0204	Correlation Location 5
11/14/2016 12:56	0.0201	Correlation Location 5
11/14/2016 12:56	0.0199	Correlation Location 5
11/14/2016 12:56	0.0197	Correlation Location 5
11/14/2016 12:56	0.02	Correlation Location 5
11/14/2016 12:56	0.0202	Correlation Location 5
11/14/2016 12:56	0.0201	Correlation Location 5
11/14/2016 12:56	0.02	Correlation Location 5
11/14/2016 12:56	0.0194	Correlation Location 5
11/14/2016 12:57	0.0194	Correlation Location 5
11/14/2016 12:57	0.0194	Correlation Location 5
11/14/2016 12:57	0.0197	Correlation Location 5
11/14/2016 12:57	0.0199	Correlation Location 5
11/14/2016 12:57	0.0196	Correlation Location 5
11/14/2016 12:57	0.0197	Correlation Location 5
11/14/2016 12:57	0.02	Correlation Location 5
11/14/2016 12:57	0.02	Correlation Location 5
11/14/2016 12:57	0.02	Correlation Location 5
11/14/2016 12:57	0.0197	Correlation Location 5
11/14/2016 12:58	0.0196	Correlation Location 5
11/14/2016 12:58	0.0194	Correlation Location 5
11/14/2016 12:58	0.0194	Correlation Location 5
11/14/2016 12:58	0.0198	Correlation Location 5
11/14/2016 12:58	0.02	Correlation Location 5
11/14/2016 12:58	0.02	Correlation Location 5
11/14/2016 12:58	0.02	Correlation Location 5
11/14/2016 12:58	0.0199	Correlation Location 5
11/14/2016 12:58	0.02	Correlation Location 5
11/14/2016 12:58	0.0202	Correlation Location 5

Hoskie Tso No. 1. Exposure Rate Measurements for Correlation

Appendix C Technical Memo from ERG to Stantec. "Statistical Analysis of the Navajo Trustee Mines Dataset: Multivariate Linear Regression for Evaluation of Gamma Correlation with Ra-226 and Evaluation of Secular Equilibrium Between Ra-226 and Th-230".

Environmental Restoration Group, Inc.
8809 Washington St NE, Suite 150
Albuquerque, NM 87113

ph: (505) 298-4224
fax: (505) 797-1404
www.ERGoffice.com

Memo

To: Kirsty Woods, Program Director, Stantec

From: Liz Ruedig, PhD, CHP, and Mike Schierman, CHP, Environmental Restoration Group

Date: 7/31/2018

Re: Statistical Analysis of the Navajo Trustee Mines Dataset: Multivariate Linear Regression for Evaluation of Gamma Correlation with Ra-226 and Evaluation of Secular Equilibrium Between Ra-226 and Th-230

Multivariate Linear Regression for Evaluation of Gamma Count Rate with Ra-226 Concentrations in Surface Soil

Due to a large number of reviewer comments at the sixteen Navajo Trust Abandoned Uranium Mines (AUMs) concerning the influence of gamma-emitting radionuclides not within the uranium-238 decay series on the correlation between dynamic gamma count rate and soil concentration of radium-226, Environmental Restoration Group has performed multivariate linear regression (MLR), relating gamma count rate to multiple soil radionuclides simultaneously. MLR models the influence of a set of predictor variables (in this case, soil concentrations of several gamma-emitting radionuclides, or surrogates for these radionuclides) on a single response variable (in this case, dynamic gamma count rate), accounting for the influence of each predictor variable upon the response variable independently of the other predictor variables within the set.

In a MLR, it is possible to distinguish from a large set of variables the subset that significantly predicts a response variable. This is done by evaluating potential models on a number of criteria:

1. **The multi-collinearity of predictor variables.**

   Predictor variables that are linearly related to each other (i.e., variables y and x, where y may also be mathematically expressed as some multiple of x) produce a condition known as multicollinearity, where the matrix math used to solve the multivariate linear regression becomes irreducible. A physical example of multicollinearity occurs when modelling the influence of two radionuclides in equilibrium with each other (e.g., Th-230 and Ra-226) on a single response variable (e.g., gamma count rate). In order to compute a mathematical solution to the regression model, one of the multicollinear variables must be removed from the regression matrix. The multicollinear variables are identifiable by a large variance inflation factor (VIF), typically greater than 7, but in cases of near-perfect multicollinearity, often much greater than this value (e.g., > 100).

   It is also possible to identify multicollinear predictor variables by regressing two suspect variables upon each other. A high degree of correlation (i.e., $p < 0.05$ and high adjusted R^2) between the two variables suggests that the predictor variables are multicollinear, and that one variable should be eliminated from the multivariate regression prior to analysis.

2. **The p-value of predictor variables**

   For a variable to be considered a significant predictor of the response variable, the p-value of its slope (as calculated in an ANOVA table) must be significant (i.e., $p < 0.05$). In a MLR, the adjusted R^2 value for individual predictor variables is not indicative of overall model quality.

For the Navajo Trust AUMs there are three potential gamma-contributing radionuclides (defined as radionuclides that emit gamma radiation, or whose short-lived decay products emit gamma radiation) present in soil: thorium-232, radium-226 and, thorium-228. Thorium-230, which does not emit gamma radiation, was excluded as a potentially significant gamma-contributing radionuclide.

A MLR model: gamma = radium-226 + thorium-228 + thorium-232 was run for each AUM. For 15 of the 16 mines, thorium-232 and thorium-228 were multicollinear. On this basis, thorium-228 was excluded from the MLR. No multicollinearity was detected at Barton 3. However, none of the predictor variables was a significant predictor of gamma count rate ($p > 0.05$) for the complete model. As such, analysis for all 16 AUMs proceeded by removing thorium-228 from the set of predictor variables and running a new MLR model: gamma = radium-226 + thorium-232. None of the 16 models exhibited multicollinearity with the reduced model. After accounting for the effect of radium-226, thorium-232 was not a significant predictor of gamma count rate at any of the 16 AUMs. Radium-226 was a significant predictor ($p < 0.05$) of gamma count rate (after accounting for the influence of thorium-232 and thorium-228) at some of the AUMs (six of 16 AUMs).

Since neither predictor variable (thorium-232 or radium-226) was unambiguously a predictor in the MLR, two univariate regression models were performed as a final step: gamma = radium-226 and gamma = thorium-232. Thorium-232 was a significant predictor of gamma count rate ($p < 0.05$) only at Standing Rock, which is not unexpected given the geological conditions at this AUM. At all other sites, thorium-232 (and thorium-228 by association) were not significant predictors of gamma count rate ($p > 0.05$). By way of contrast, radium-226 was a significant predictor of the gamma count rate ($p < 0.05$) at 13 of the 16 AUMs. At three AUMs (Mitten, NA-0928, and Tsosie 1) none of the measured radionuclides significantly predicted the gamma count rate. Additionally, the adjusted R^2 values for the correlation models at the three AUMs, plus Claim 28, fail to meet the specified data quality objective (DQO) of greater than 0.8.

The failure to construct statistically defensible correlation models at four AUMs has been identified as a data gap in the relevant AUM report. The unsatisfactory correlation result at these locations is likely due to the small number of correlation locations, or environmental conditions at the AUMs (e.g., spatial heterogeneity in radionuclide concentration in soil, topographic features influencing gamma count rate, etc.), or some combination thereof.

Note that while the statistical measures (i.e., conformance with the study DQO of $R^2 > 0.8$) associated with these regressions can be improved by fitting a power curve to the data, and reporting unadjusted R^2 values, with only five data points at each AUM, ERG does not believe that any statistical correlation model is sufficiently robust to make meaningful inferences concerning soil radium-226 concentration from the gamma scanning data. ERG believes that linear functions – not power curves – best mimic the conceptual model for the physical processes governing the observed data. Fitting any other function in an effort to achieve the study DQO for R^2 is not a statistically rigorous approach, and improving R^2 does not commensurately improve a statistical model's predictive ability. Figure *1* compares the result of fitting a linear versus a power function to the available correlation data for one AUM (Hoskie Tso); the other AUM results are similar.

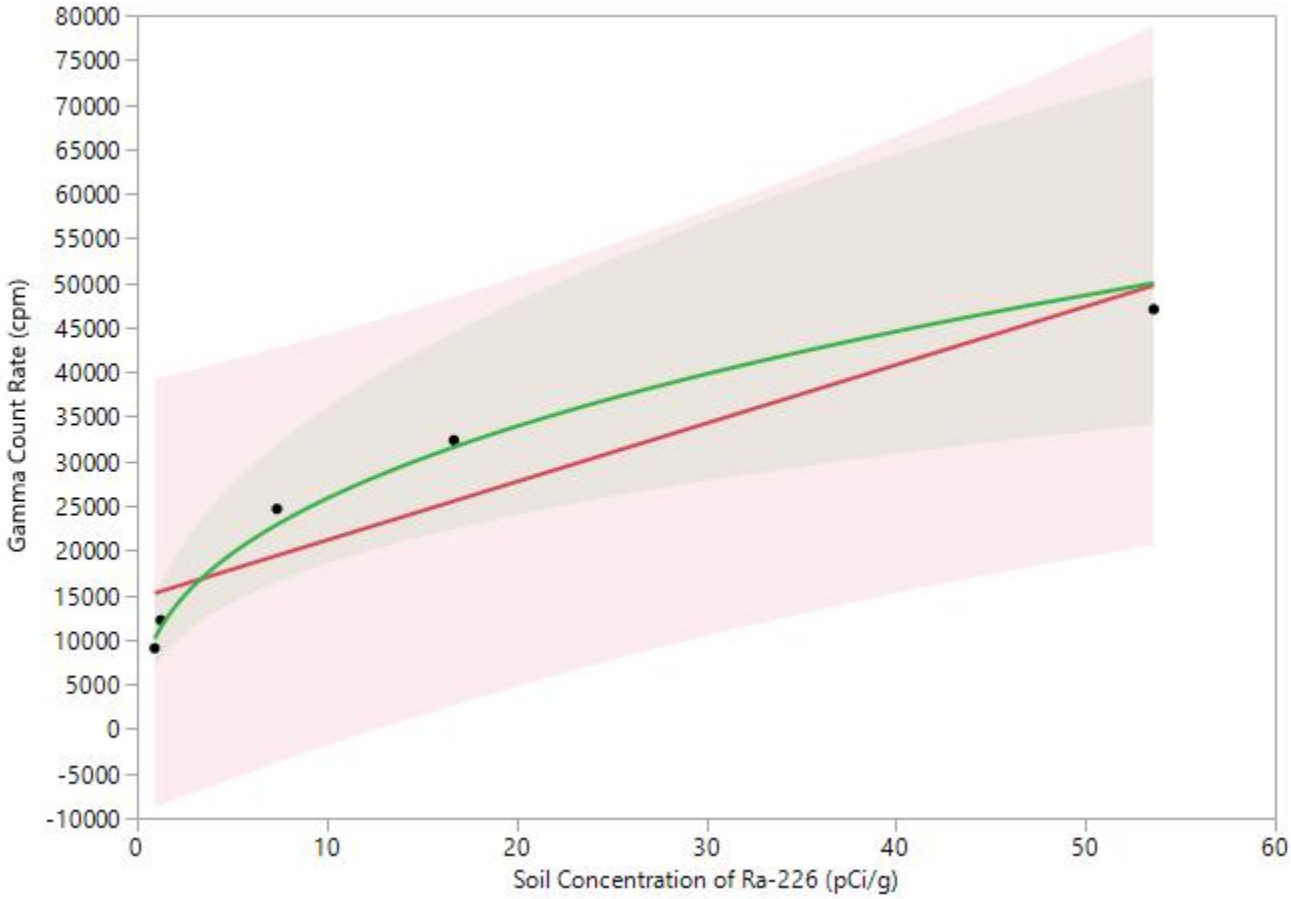

Figure 1. Regression models (linear versus power curve) for gamma count rate regressed on radium-226 showing 95% UPLs (upper prediction limits). Both models meet the study DQO for adjusted R^2 (greater than 0.8). Gamma count rate is not an especially strong predictor of soil concentration of radium-226 for either function.

ERG has updated the individual AUM reports with linear correlation functions and reported the more robust measures of statistical performance described in this memo.

Evaluation of Secular Equilibrium Between Ra-226 and Th-230

Secular equilibrium is a condition that occurs when the half-life of a decay-product nuclide is significantly shorter than that of its parent nuclide. After a period of ingrowth equal to approximately seven times the half-life of the decay product, the two nuclides effectively decay with the half-life of the parent. When two radionuclides are in secular equilibrium, their activities are equal.

Equilibrium, for the purpose of this report, is defined as a condition whereby a parent nuclide and its decay product are present in the environment at a fixed ratio, but this ratio – for whatever reason – is not a one-to-one relationship indicative of secular equilibrium. Most commonly, an equilibrium condition results from an environmental process which chemically selects for and

transports one nuclide (parent or decay product) away from the other nuclide. Because a consistent fraction of one nuclide has been removed, the two nuclides are present at a fixed ratio other than one-to-one.

Determination of secular equilibrium for an AUM can be an important part of the risk assessment process, as the assumed fraction of radium-226 decay products present in the environment greatly influences a hypothetical receptor's radiation dose and mortality risk. However, it is also acceptable and conservative to assume secular equilibrium between radium-226 and its decay products for the purpose of risk assessment, and therefore to avoid the need to conclusively determine the secular equilibrium status of an AUM. Thus, an inconclusive result regarding secular equilibrium is not a study data gap, as the risk assessment phase may still proceed, provided that conservative assumptions are included regarding equilibrium concentrations of radium-226 decay products.

Regardless, the Navajo Nation AUM Environmental Response Trust RSE workplan specified that an evaluation of secular equilibrium would be made at each of the 16 Trust AUMs, and so a robust statistical examination of secular equilibrium status for radium-226 and its decay products at each AUM was conducted. One method of evaluating equilibrium between Ra-226 and Th-230 is to calculate the ratio (φ) between the two nuclides for each soil sample location, i.e.,

$$\varphi = \frac{\left[{}^{226}Ra\right]}{\left[{}^{230}Th\right]}$$

When φ is unity, the two nuclides may be said to be in secular equilibrium. Sometimes, φ is averaged over a number of locations, and if the average is unity, the population of measurement locations is said to be in secular equilibrium. Similarly, if φ is consistently some number other than one, it may be concluded that the measured population is in equilibrium. This approach does not account for the statistical uncertainty associated with making inferences across a population, nor the bias introduced into the measurement by averaging a potentially large number of ratios. It is also difficult to establish defensible cutoffs for whether Ra-226 and Th-230 are in secular equilibrium at a particular site using a ratio approach, as there is no objective basis for concluding, e.g., that φ must be between 0.8 and 1.2 (versus any other range of values for φ) for secular equilibrium to occur.

Due to a large number of reviewer comments concerning secular equilibrium within the RSE reports, Environmental Restoration Group opted to re-evaluate equilibrium at each mine site using a more robust statistical method: simple linear regression. This was done after confirming the methods to analyze Ra-226 (EPA Method 901.1) and Th-230 (alpha spectroscopy following sample digestion with hydrofluoric acid) are both total-activity methods with comparable results (L. Steere, ALS personal email communication, July 25, 2018). Evaluation of secular equilibrium for each mine site proceeded as follows:

1. Construction of a figure that depicts soil concentrations of Th-230 plotted against soil concentrations of Ra-226.

2. Simple linear regression is performed on the dataset; the p-value and the adjusted R^2 are recorded. The resulting linear model and the 95% UCL (upper confidence limit) bands are plotted on the figure generated in step 1.

3. The line y=x is added to the figure generated in step 2 (this line represents a perfect 1:1 ratio between Th-230 to Ra-226, indicative of secular equilibrium).

4. An examination of the model and the figure is made sequentially:

    a. If the p-value for the regression slope is insignificant (i.e., $p > 0.05$) or the adjusted R^2 does not meet the study's data quality objective (Adjusted $R^2 > 0.8$), ERG concludes that there is insufficient evidence to conclude that Ra-226 and Th-230 are in equilibrium (secular or otherwise) therefore, it is listed as inconclusive (no equilibrium). Figure *2* depicts the regression result for an AUM (Mitten) that failed to meet the p-value and adjusted R^2 criteria.

    b. If the p-value for the regression slope is significant (i.e., $p < 0.05$) and the adjusted R^2 meets the DQO (Adjusted $R^2 > 0.8$) there are two possible conditions, which are evaluated via visual examination of the figure generated in step 3.

        i. If the y=x line falls fully within the bounds of the 95% UCL bands on the regression, ERG concludes that there is evidence that Ra-226 and Th-230 are in secular equilibrium at the site. Figure *3* depicts the regression result for an AUM (Harvey Blackwater) where there is evidence that Ra-226 and Th-230 are in secular equilibrium.

        ii. If the y=x line falls partially or completely outside the bounds of the 95% UCL bands on the regression, ERG concludes that there is evidence that Ra-226 and Th-230 are in equilibrium, but not secular equilibrium at the site. Figure *4* depicts the regression result for an AUM (Alongo Mines) where there is evidence that Ra-226 and Th-230 are in equilibrium, but not secular equilibrium.

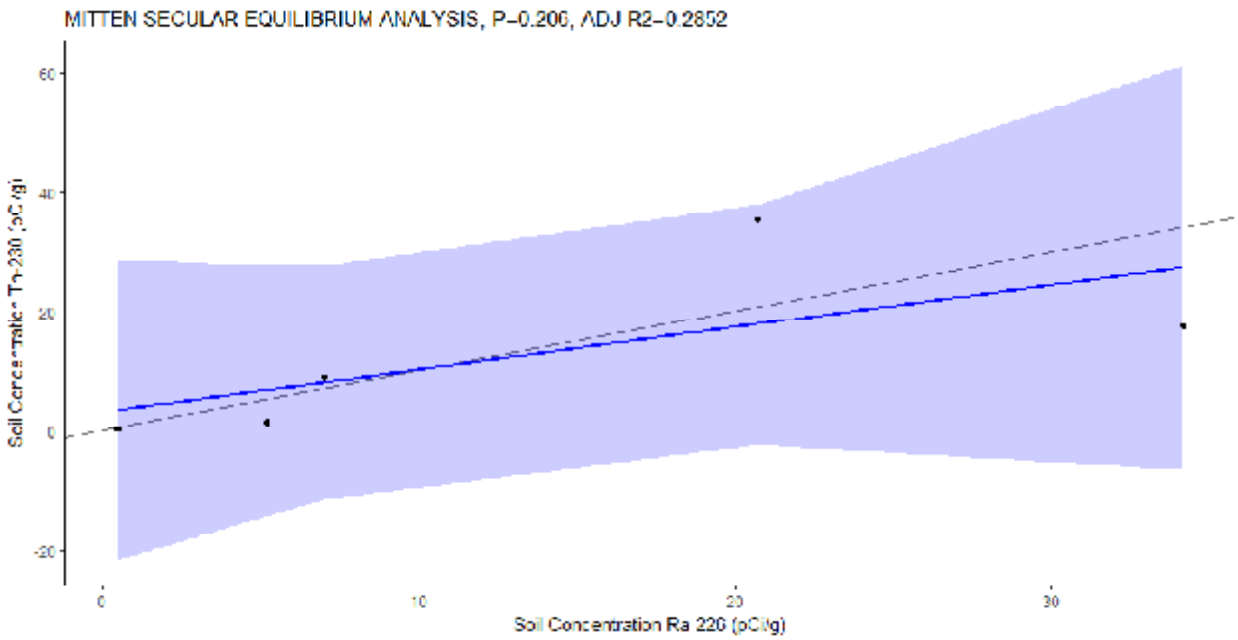

Figure 2. Result for Mitten secular equilibrium analysis, showing failure to meet p-value and adjusted R^2 criteria, i.e., the data are poorly correlated.

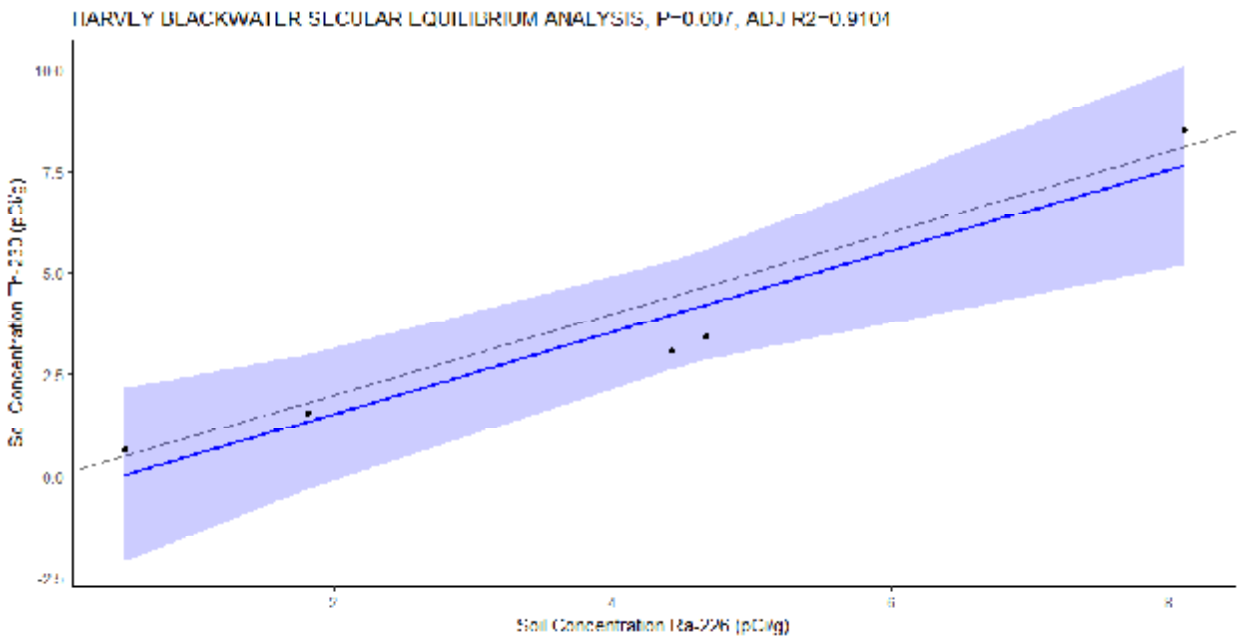

Figure 3. Result for Harvey Blackwater secular equilibrium analysis, showing excellent correlation between the data and the y=x line, i.e., Th-230 and Ra-226 are in secular equilibrium.

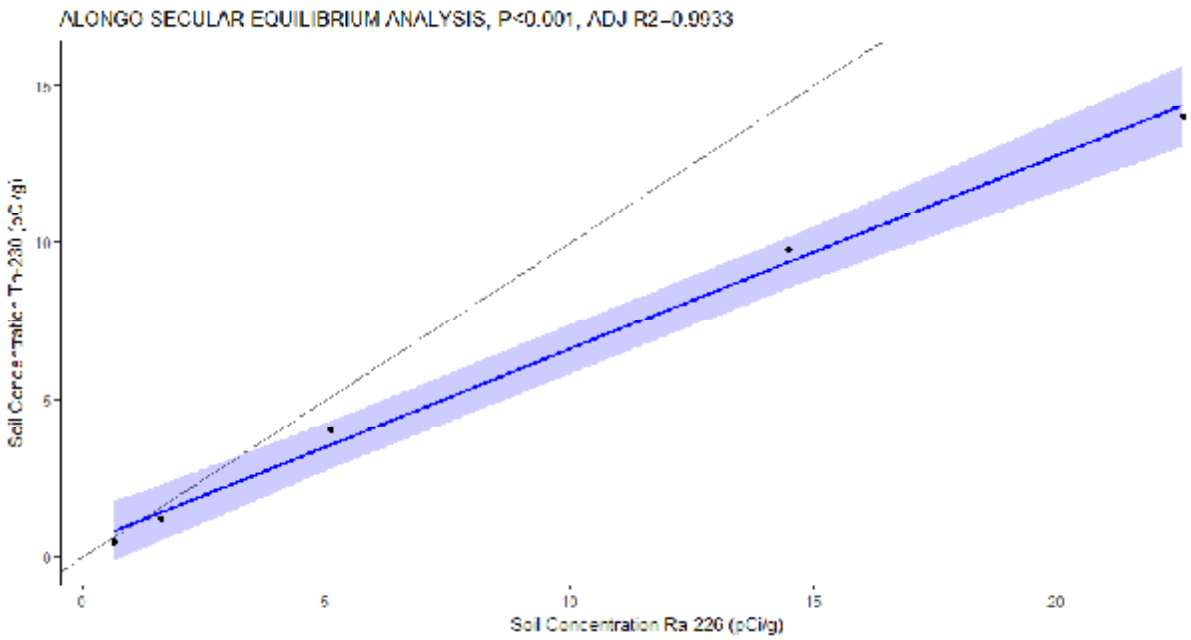

Figure 4. Result for Alongo Mines secular equilibrium analysis, showing excellent correlation between the data, but poor agreement with the y=x line, i.e., Th-230 and Ra-226 are in equilibrium, but not secular equilibrium.

ERG tested for secular equilibrium at each of the 16 Navajo AUMs using the process described above. The results are summarized in Table 1 and in the RSE report for each AUM, respectively. ERG concluded that the data provide evidence that that Ra-226 and Th-230 are in secular equilibrium in soils at two mines (Harvey Blackwater and NA-0928). At one mine (Mitten) there was insufficient evidence to draw any conclusions regarding equilibrium. At the remaining sites, there is evidence that Ra-226 and Th-230 are in equilibrium.

Table 1. Results of secular equilibrium analysis for each of the 16 Navajo Trust AUMs.

Mine	p-value	Adjusted R^2	Conclusion
Alongo Mine	<0.001	0.99	Equilibrium
Barton 3	<0.001	0.98	Equilibrium
Boyd Tisi	<0.001	0.99	Equilibrium
Charles Keith	<0.001	0.99	Equilibrium
Claim 28	<0.001	0.99	Equilibrium
Eunice Becenti	<0.001	0.99	Equilibrium
Harvey Blackwater	0.008	0.91	Secular Equilibrium
Hoskie Tso	<0.001	0.99	Equilibrium
Mitten	0.2	0.29	No Equilibrium
NA-0904	0.001	0.98	Equilibrium
NA-0928	0.002	0.97	Secular Equilibrium
Oak 124-125	<0.001	0.99	Equilibrium
Occurrence B	<0.001	0.98	Equilibrium
Section 26	0.002	0.96	Equilibrium
Standing Rock	0.008	0.91	Equilibrium
Tsosie 1	0.02	0.86	Equilibrium

Appendix D Preliminary Report "Radiological Characterization of Hoskie Tso No 1. Abandoned Uranium Mine"

Disclaimer: Data and analytical methods used in this Preliminary Report are superseded by the Final Report.

Radiological Characterization of the Hoskie Tso No. 1 Abandoned Uranium Mine

Preliminary

September 26, 2017

prepared for:

Stantec Consulting Services Inc.

2130 Resort Drive, Suite 350
Steamboat Springs, CO 80487

prepared by:

Environmental Restoration Group, Inc.

8809 Washington St. NE
Suite 150
Albuquerque, NM 87113

Contents

Executive Summary v

1.0 Introduction 1

2.0 GPS-Based Gamma Surveys 1

2.1 Background Reference Areas 3

2.2 Survey Area (including extended) 6

3.0 Correlation Studies 9

3.1 Radium-226 and thorium concentrations in surface soils and gamma count rates 9

3.2 Equilibrium in the uranium series 14

3.3 Exposure rates and gamma count rates 14

4.0 Deviations to RSE Work Plan 19

5.0 Conclusions 19

6.0 References 20

Tables

Table 1 Detection systems used in the GPS-Based gamma surveys

Table 2 Summary statistics for gamma count rates in the potential Background Reference Areas

Table 3 Summary statistics for gamma count rates in the Survey Area

Table 4 Gamma count rates and associated concentrations of radium-226 in samples of surface soils obtained in the correlation study

Table 5 Concentrations of isotopes of thorium in samples of surface soils obtained in the correlation study

Table 6 Predicted concentrations of radium-226 in the Survey Area

Table 7 Co-located gamma count rate and exposure rate measurements

Table 8 Predicted exposure rates in potential Background Reference Area 1

Table 9 Predicted exposure rates in potential Background Reference Area 2

Table 10 Predicted exposure rates in the Survey Area

Figures

Figure 1 Location of the Hoskie Tso No. 1 Abandoned Uranium Mine

Figure 2 Gamma count rates in the Background Reference Areas

Figure 3 Histograms of gamma count rates in the Background Reference Areas

Figure 4 Gamma count rates in the Survey Area

Figure 5 Histogram of gamma count rates in the Survey Area

Figure 6 Box plot of gamma count rates in the Survey Area

Figure 7 GPS-based gamma count rate measurements made for the correlation study

Figure 8 Correlation of gamma count rates and concentrations of radium-226 in surface soils

Figure 9 Predicted concentrations of radium-226 in the Survey Area

Figure 10 Correlation of gamma count rates and exposure rates

Figure 11 Predicted exposure rates in the Survey Area

Appendices

Appendix A Instrument calibration and completed function check forms

Appendix B Exposure Rate Measurements

Acronyms

ANSI	American National Standards Institute
AUM	abandoned uranium mine
BG1	Background Reference Area 1
BG2	Background Reference Area 2
bgs	below ground surface
cpm	counts per minute
EPA	U.S. Environmental Protection Agency
ERG	Environmental Restoration Group, Inc.
ft	foot
GPS	global positioning system
MDL	method detection limit
µg/kg	micrograms per kilogram
µR/h	microRoentgens per hour
pCi/g	picocuries per gram
R^2	Pearson's Correlation Coefficient
RSE	removal site evaluation
σ	standard deviation
Stantec	Stantec Consulting Services Inc.

Executive Summary

This report, addressing the radiological characterization of the Hoskie Tso No.1 abandoned uranium mine (AUM) located in the Indian Wells Chapter of the Navajo Nation near Indian Wells, Arizona and Utah, documents part of the implementation of the Navajo Nation AUM Environmental Response Trust, First Phase, as described in the Removal Site Evaluation Work Plan (RSE Work Plan: MWH, 2016a). The work was performed by Environmental Restoration Group, Inc of Albuquerque, New Mexico and MWH, now part of Stantec Consulting Services Inc. (Stantec) in accordance with the Navajo Nation AUM Environmental Response Trust – First Phase.

This report provides the results of a 1) Global Positioning System (GPS)-based gamma radiation (gamma) survey and 2) comparisons of the gamma count rates at this AUM to exposure rates and concentrations of radium-226 in surface soils. The field activities addressed in this report were conducted on May 5, 2016; and November 12, 14, and 15, 2016. They included a GPS-based radiological survey of land surfaces over a Survey Area consisting of the mine claim area out to a 100-foot (ft) buffer; and roads and drainages within a 0.25-mile radius of the 100-ft buffer; and correlation studies. The Survey Area was extended beyond the 100-ft buffer where elevated gamma count rates were observed.

The discussion of the results of soil sampling is limited to a comparison of gamma count rates to concentrations of radium-226 in surface soils. The objective of the analysis of thorium isotopes in the thorium-232 natural decay series was to assess their potential effects on the correlation of gamma count rates to concentrations of radium-226 in surface soils and to evaluate if the uranium decay series is in secular equilibrium. These and additional results for the continuing RSE are addressed in "Hoskie Tso No.1 Site Baseline Studies Field Report" (MWH, 2017) and "Hoskie Tso No.1 Removal Site Evaluation Report" (Stantec, 2017).

The findings of the RSE pertaining to these activities are:

- The horizontal extent and magnitude of potentially mining-related materials were delineated sufficiently to support additional characterization of the subsurface.
- Gamma count rates are highest along the eastern and northeastern edges of the mine claim.
- Two potential Background Reference Areas were established.
- The relationship between gamma count rates and concentrations of radium-226 in surface soils (0 to 0.5 ft below ground surface [bgs]) is described by a power regression model:

  $$\text{Ra-226 Concentration (pCi/g)} = 9\text{x}10^{-11}\,(\text{Gamma Count Rate [in counts per minute, cpm]})^{2.5035}$$

- The distribution of concentrations of radium-226 in surface soils predicted using this model resembles a lognormal distribution. The values in the Survey Area range from 0.2 to 421.9, with a central tendency (median) of 2.1 picocuries per gram.

- The uranium series radionuclides appear not to be in secular equilibrium.

- The relationship between gamma count rates and exposure rates is described by a linear regression model: Exposure Rate (µR/h) = Gamma Count Rate (cpm) x $6x10^{-4}$ + 5.2797

- The distribution of exposure rates predicted using this model resembles a lognormal distribution. The values in the Survey Area range from 8.6 to 74.4, with a central tendency (median) of 13.6 µR/h.

1.0 Introduction

This report, addressing the radiological characterization of the Hoskie Tso No.1 abandoned uranium mine (AUM) located in the Indian Wells Chapter of the Navajo Nation near Indian Wells, Arizona documents part of the implementation of the Navajo Nation AUM Environmental Response Trust, First Phase, as described in the Removal Site Evaluation Work Plan (RSE Work Plan: MWH, 2016a). The work was performed by Environmental Restoration Group, Inc of Albuquerque, New Mexico and MWH, now part of Stantec Consulting Services Inc. (Stantec) in accordance with the Navajo Nation AUM Environmental Response Trust – First Phase.

The activities described here focus on the characterization of gamma radiation (gamma) emitted by uranium series radionuclides in surface soils at the AUM. This report provides the results of a 1) Global Positioning System (GPS)-based gamma radiation (gamma) survey and 2) comparisons of gamma count rates to exposure rates and concentrations of radium-226 in surface soils.

The field activities were conducted on May 5, 2016; and November 12, 14, and 15, 2016 in accordance with the methods described in the RSE Work Plan. The GPS-based radiological survey of land surfaces covered an approximately 30-acre Survey Area that included the mine claim area out to a 100-foot buffer; and roads and drainages within a 0.25-mile radius of the buffer; gamma count rate and exposure rate measurements at fixed points; and gamma count rate measurements and soil sampling for radionuclides and metals in areas centered on these fixed points. The Survey Area was extended beyond the 100-ft buffer where elevated gamma count rates were observed.

The discussion here of the results of soil sampling is limited to a comparison of gamma count rates to concentrations of radium-226 in surface soils and to evaluate if the uranium decay series is in secular equilibrium. These and additional results for the continuing RSE are addressed in “Hoskie Tso No.1 Site Baseline Studies Field Report” (MWH, 2017) and “Hoskie Tso No.1 Removal Site Evaluation Report” (Stantec, 2017).

Figure 1 shows the location of the AUM. Background information that is pertinent to the characterization of this AUM is presented in the “Hoskie Tso No.1 Site Clearance Data Report” (MWH, 2016b).

2.0 GPS-Based Gamma Surveys

This section addresses the GPS-based surveys conducted in two potential Background Reference Areas and the Survey Area. Table 1 lists the detection systems used in the survey, which were function-checked before and after each day of use and within calibration, in accordance with American National Standards Institute (ANSI) Standard N232A (ANSI, 1997). Appendix A presents the completed function check forms and calibration certificates for the instruments.

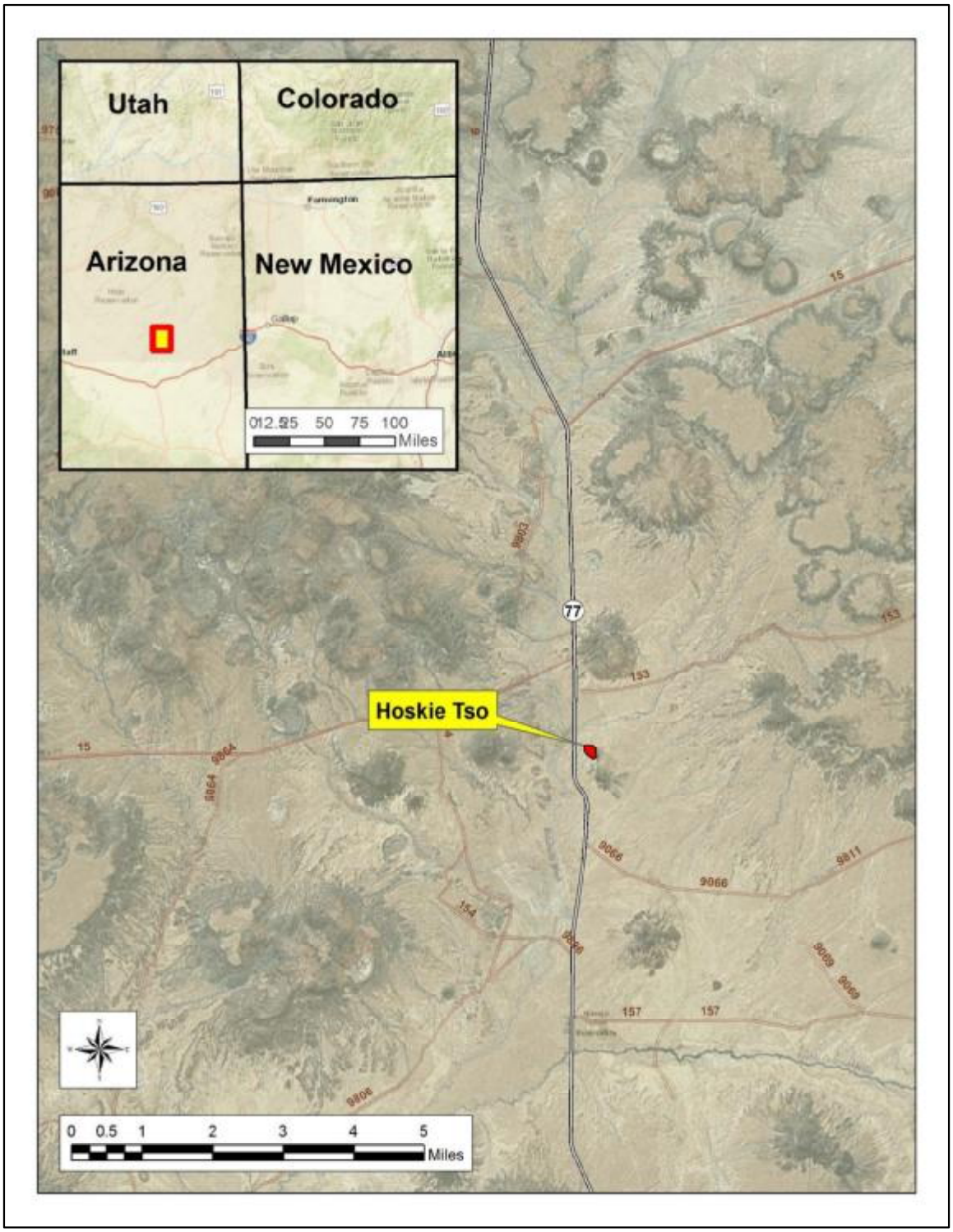

Figure 1. Location of the Hoskie Tso No.1 Abandoned Uranium Mine

Table 1. Detection systems used in the GPS-Based gamma surveys.

Survey Area	Ludlum Model 44-10	Ludlum Model 2221 Ratemeter/Scaler
Potential Background Reference Areas	PR303727[a]	254772[a]
Survey Area	PR303727	254772
	PR295014	196086
	PR150507	282966

Notes:
[a]Detection system used in the correlation studies described in Section 3.0.

2.1 Background Reference Areas

Two potential Background Reference Areas were surveyed, the locations and results of which are depicted on Figure 2. BG1 in the figure is Background Reference Area 1. BG2 is Background Reference Area 2.

Table 2 lists a summary of the gamma count rates, which in BG1 ranged from 10,781 to 17,208 counts per minute (cpm), with a mean and median of 13,451 and 13,355 cpm, respectively. The gamma count rates in BG2 ranged from 12,148 to 19,395 cpm, with a mean and median of 15,095 and 14,900 cpm, respectively.

Figure 3 depicts histograms of the gamma count rates in in BG1 (Figure 3a) and BG2 (Figure 3b). The red and green lines on the figure are theoretical normal and lognormal distributions, respectively. They are presented to show what could be expected if the distributions were normal or lognormal.

Table 2. Summary statistics for gamma count rates in the potential Background Reference Areas.

			Gamma Count Rate (cpm)			
Potential Background Reference Area	**n**	**Minimum**	**Maximum**	**Mean**	**Median**	**Standard Deviation**
1	517	10,781	17,208	13,451	13,355	1,104
2	238	12,148	19,395	15,095	14,900	1,368

Notes:
cpm = counts per minute

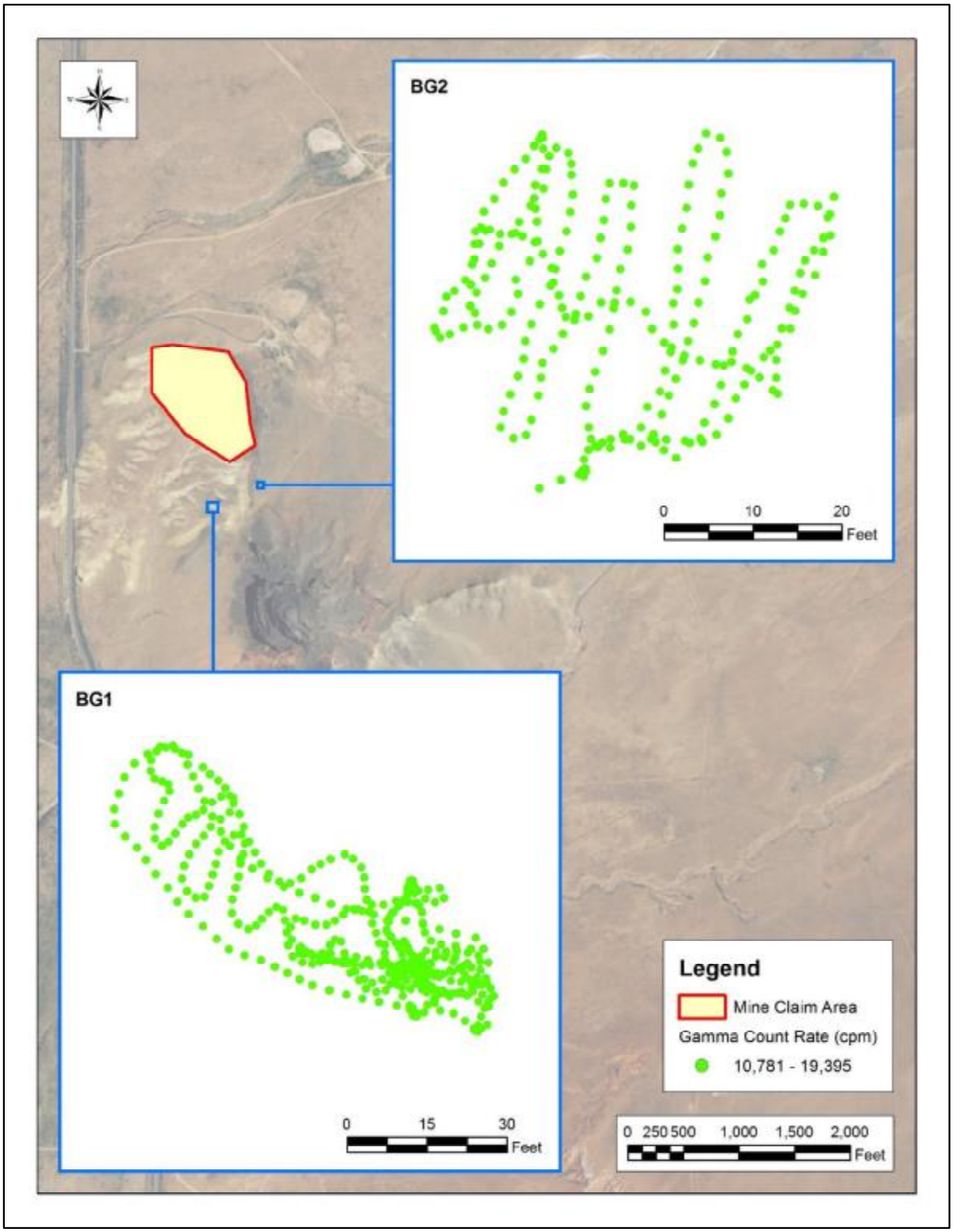

Figure 2. Gamma count rates in the potential Background Reference Areas.

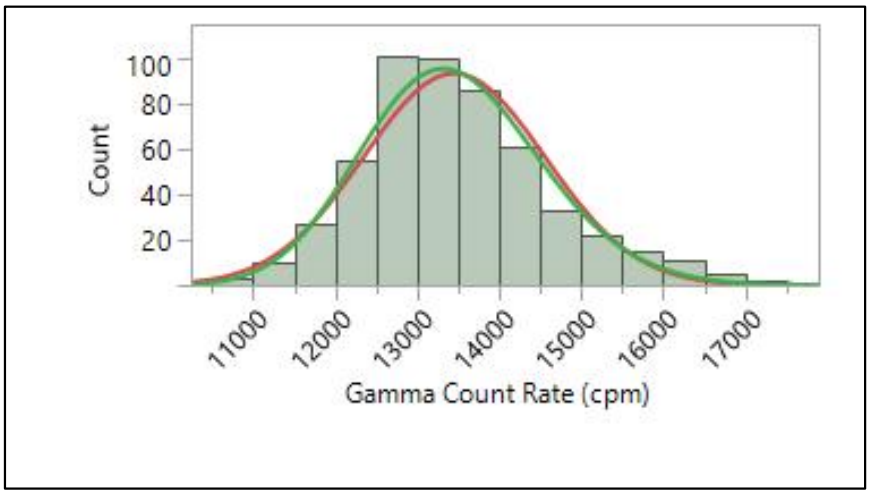

a. Background Reference Area 1

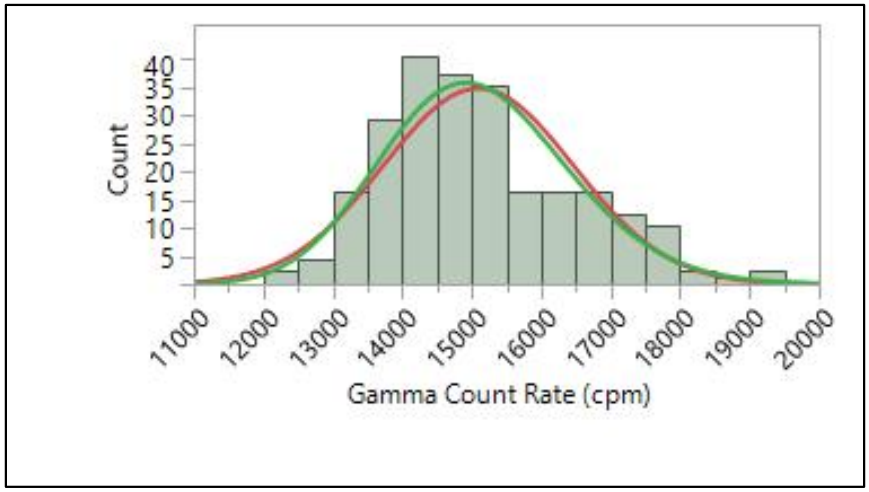

b. Background Reference Area 2

Figure 3. Histograms of gamma count rates in the Background Reference Areas.

2.2 Survey Area (including extended)

The gamma count rates observed in the Survey Area are depicted in Figure 4. The highest count rates were observed along the east and northeast edges of the mine claim, along a contiguous ridge extending north to south.

Figure 5 is a histogram of the gamma count rate measurements made in the Survey Area. The red and green lines on the figure are theoretical normal and lognormal distributions, respectively. They are presented to show what could be expected if the distributions were normal or lognormal. The distribution of the right-tailed set of measurements, evaluated using U.S. Environmental Protection Agency (EPA) software ProUCL, is not defined; i.e., neither normal or logarithmic. The box plot in Figure 6 depicts cutoffs as horizontal bars, from left to right, for the following values or percentiles: minimum, 0.5, 2.5, 10, 25, 50, 75, 90, 97.5, 99.5, and maximum. The 25th, 50th, and 75th percentiles --the three horizontal lines of the box inside the box plot-- are 11,438, 13,944, and 17,401 cpm, respectively.

Table 3 is a statistical summary of the measurements, which range from 5,577 to 115,157 cpm and have a central tendency (median) of 13,944 cpm.

Table 3. Summary statistics for gamma count rates in the Survey Area.

Parameter	Gamma Count Rate (cpm)
n	37,760
Minimum	5,577
Maximum	115,157
Mean	15,437
Median	13,944
Standard Deviation	6,592

Notes:
cpm = counts per minute

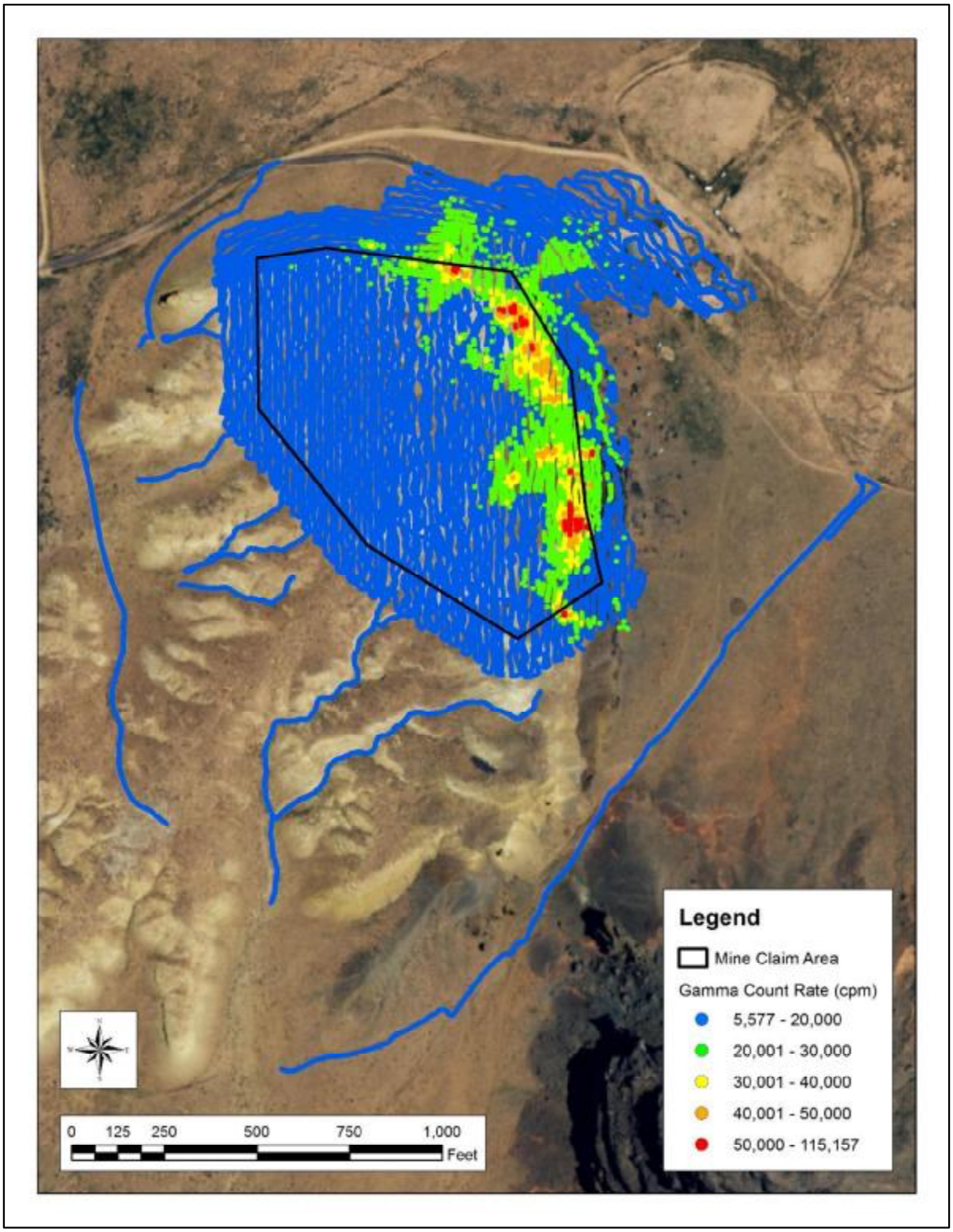

Figure 4. Gamma count rates in the Survey Area.

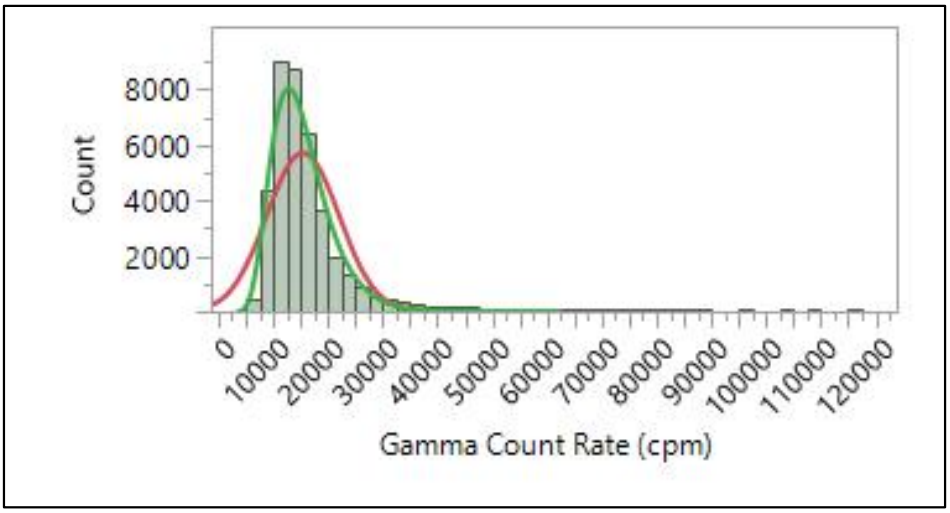

Figure 5. Histogram of gamma count rates in the Survey Area.

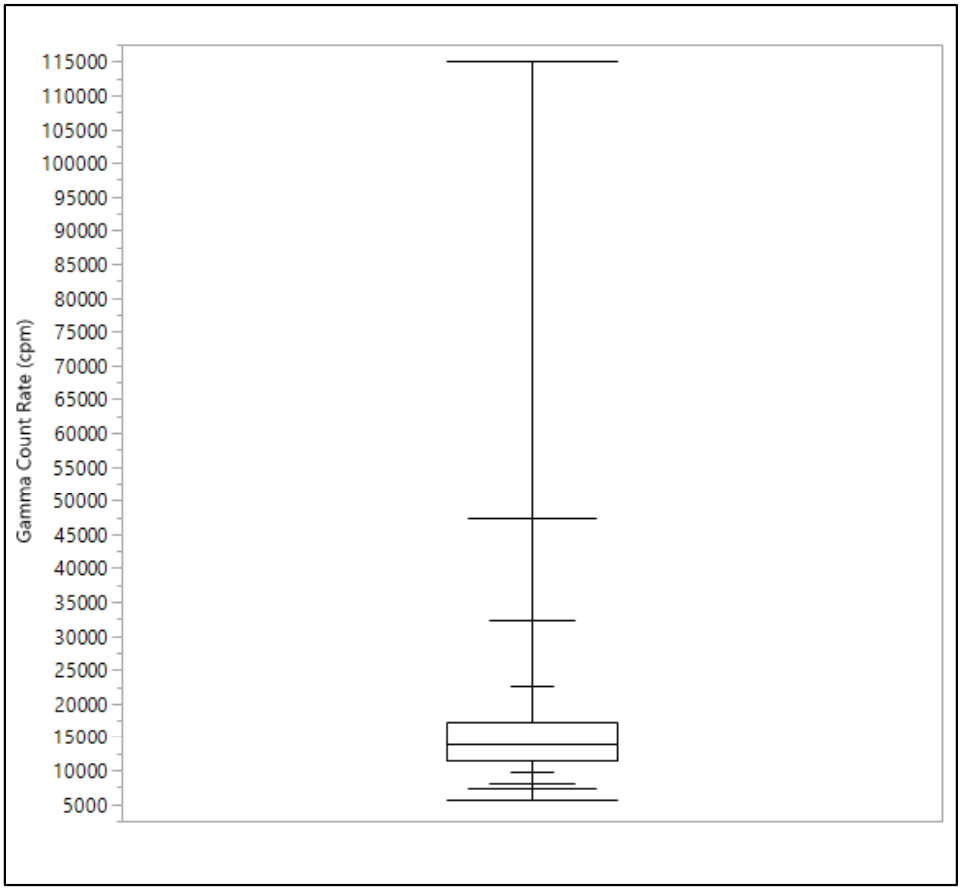

Figure 6. Box plot of gamma count rates in the Survey Area.

3.0 Correlation Studies

The following sections address the activities under two types of correlation studies outlined in the RSE Work Plan: comparisons of 1) radium-226 concentrations in surface soils and gamma count rates and 2) exposure rates and gamma count rates. GPS-based gamma count rate measurements were made over small areas for the former study. The means of the measurements were used in this case. Static gamma count rate measurements, co-located with exposure rate measurements, were used in the latter study.

3.1 Radium-226 and thorium concentrations in surface soils and gamma count rates

On November 14, 2016 field personnel made GPS-based gamma count rates measurements and collected five-point composite samples of surface soils in each of five areas at the AUM. The activities were performed contemporaneously, by area and all on the same day, such that the two could be compared. Figure 7 shows the GPS-based gamma count rate measurements in the five areas (labeled with location identifiers).

The soil samples were analyzed by ALS Laboratories in Ft Collins, CO for radium-226 and isotopic thorium. The latter analysis was included to assess the potential effects of thorium series isotopes on the correlation. Table 4 lists the results of the measurements and radium-226 concentrations in the soil samples. The means of the gamma count rate measurements range from 9,056 to 47,049 cpm. The concentrations of radium-226 range from 0.92 to 53.4 picocuries per gram (pCi/g).

Table 5 lists the concentrations of isotopes of thorium (thorium-228, -230, and -232) in the same soil samples.

Laboratory analytical results are presented in Appendix F, Laboratory Analytical Data and Data Usability Report, in “Hoskie Tso No. 1 Removal Site Evaluation Report” (Stantec, 2017).

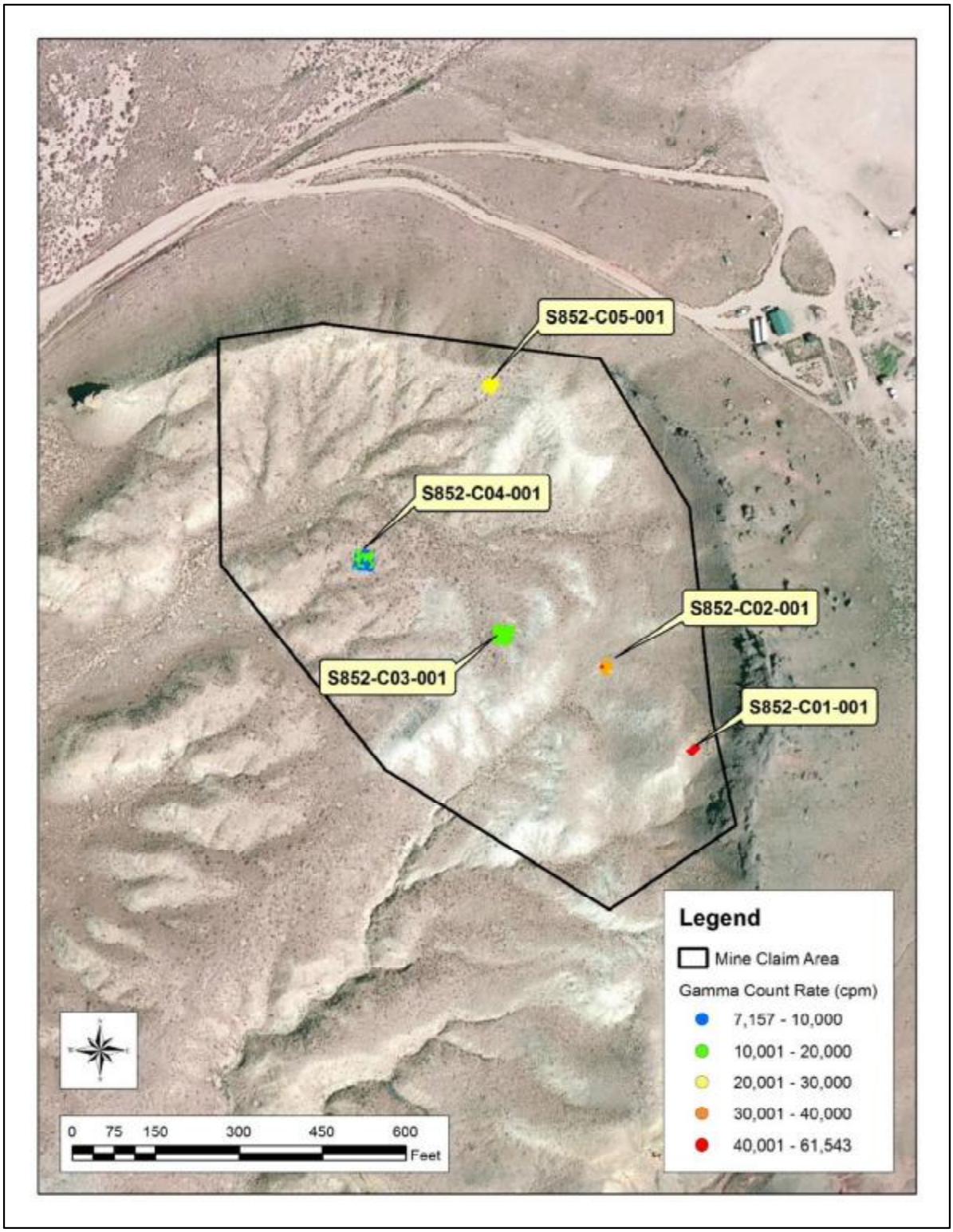

Figure 7. GPS-based gamma count rate measurements made for the correlation study.

Table 4. Gamma count rates and associated concentrations of radium-226 in samples of surface soils obtained in the correlation study.

	Gamma Count Rate (cpm)				Ra-226 (pCi/g)		
Location	Mean	Minimum	Maximum	σ	Result	Error ±1σ	MDL
S852-C01-001	47,049	39,307	61,543	4,539	53.4	6.4	2.3
S852-C02-001	32,372	27,116	40,084	2,620	16.7	2.1	0.5
S852-C03-001	12,196	10,032	17,329	1,084	1.24	0.3	0.5
S852-C04-001	9,056	7,157	13,584	987	0.92	0.23	0.5
S852-C05-001	24,668	20,118	28,415	1,668	7.37	0.97	0.5

Notes:
cpm = counts per minute
MDL = method detection limit
pCi/g = picocuries per gram
σ = standard deviation

Table 5. Concentrations of isotopes of thorium in samples of surface soils obtained in the correlation study.

	Thorium-228 (pCi/g)			Thorium-230 (pCi/g)			Thorium-232 (pCi/g)		
Sample ID	Result	Error ± 1 σ	MDL	Result	Error ± 1 σ	MDL	Result	Error ± 1 σ	MDL
S852-C01-001	1.26	0.23	0.04	37.3	5.8	0.1	1.28	0.22	0.01
S852-C02-001	1.18	0.21	0.1	12.6	2	0.1	1.12	0.2	0.1
S852-C03-001	0.59	0.12	0.1	0.9	0.17	0.1	0.6	0.12	0.1
S852-C04-001	0.59	0.12	0.1	0.89	0.16	0.1	0.52	0.1	0.1
S852-C05-001	0.47	0.11	0.1	4.58	0.74	0.1	0.48	0.1	0.1

Notes:
MDL = method detection limit
pCi/g = picocuries per gram
σ = standard deviation

A model was made of the results in Table 4, predicting the concentrations of radium-226 in surface soils from the mean gamma count rate in each area. The best predictive relationship between the measurements, shown in Figure 8 is a strong, power function with a Pearson's Correlation Coefficient (R^2) of 0.9745, as expressed in the equation:

$$\text{Radium-226 concentration (pCi/g)} = 9 \times 10^{-11} \text{ (Gamma Count Rate [cpm])}^{2.5035}$$

R^2 is a measure of the dependence between two variables, and is expressed as a value between -1 and +1 where +1 is a positive correlation, 0 is no correlation, and -1 is a negative correlation. The root mean square error and p-value for the correlation are 0.2375 and 0.0007, respectively; these parameters are not data quality objectives (DQOs) and are included only as information.

The concentrations of thorium-232 and thorium-228, isotopes in the thorium series, in the correlation samples are similar and at most 1.26 pCi/g. Given these low concentrations and the high R^2 of the power

function, the thorium series radionuclides do not appear to affect the prediction of concentrations of radium-226, using gamma count rates.

This equation was used to convert the gamma count rate measurements observed in the gamma surveys to predicted concentrations of radium-226. Table 6 presents summary statistics for the predicted concentrations of radium-226 in the Survey Area. The range of the predicted concentrations of radium-226 in the Survey Area is 0.2 to 421.9 pCi/g, with a mean and median of 3.9 and 2.1 pCi/g, respectively.

Figure 9 shows the predicted concentrations of radium-226, the spatial and numerical distribution of which mirror those depicted in Figure 4.

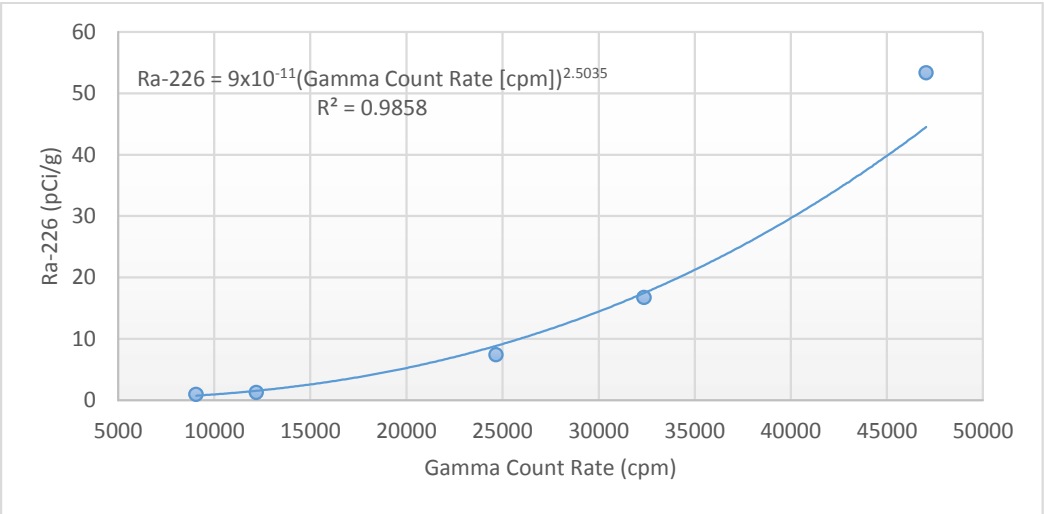

Figure 8. Correlation of gamma count rates and concentrations of radium-226 in surface soils.

Table 6. Predicted concentrations of radium-226 in the Survey Area.

Parameter	Radium-226 (pCi/g)
n	37,760
Minimum	0.2
Maximum	421.9
Mean	3.9
Median	2.1
Standard Deviation	8.6

Notes:
pCi/g = picocuries per gram

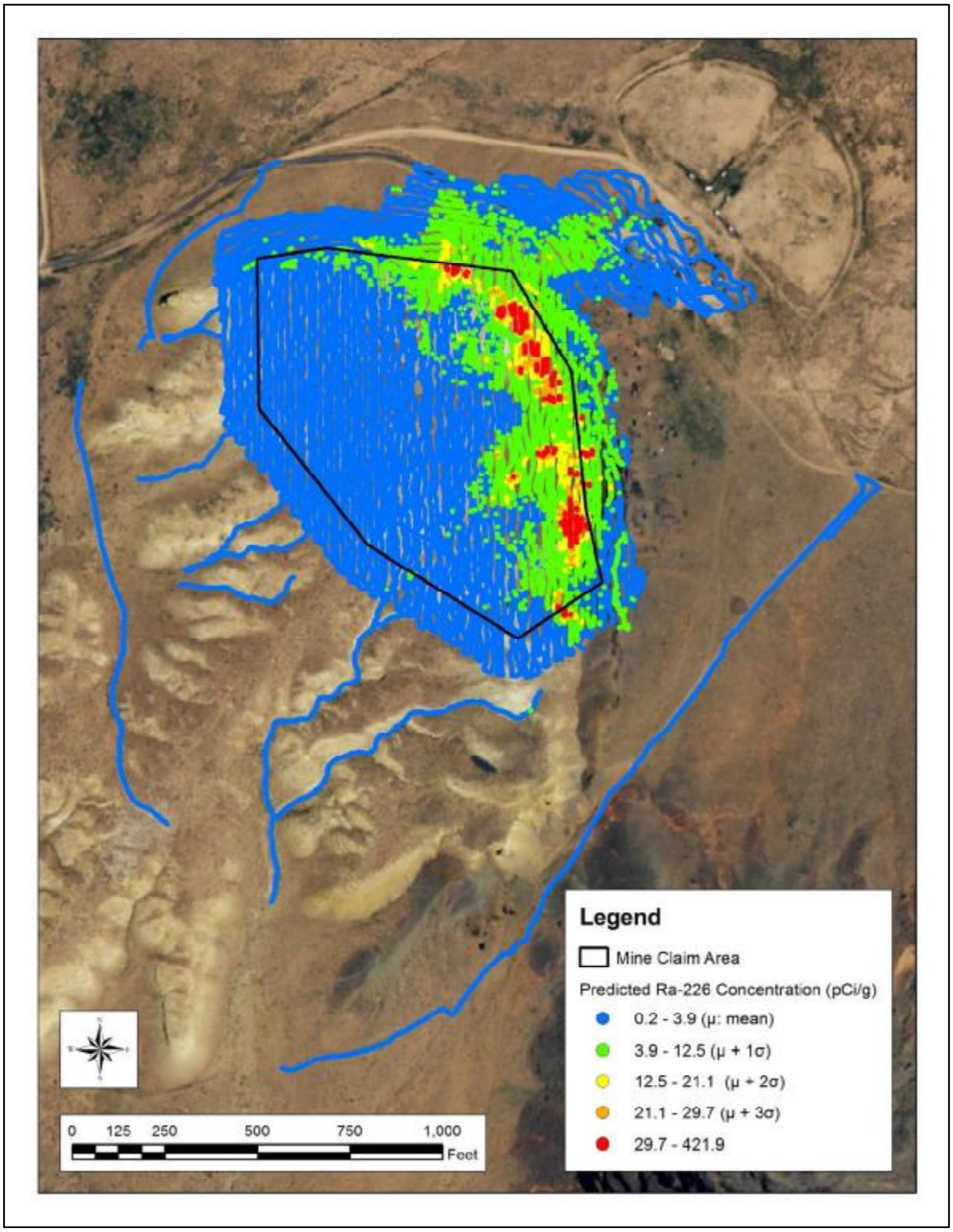

Figure 9. Predicted concentrations of radium-226 in the Survey Area.

3.2 Equilibrium in the uranium series

Secular equilibrium occurs when the activities of a parent radionuclide and its decay product are equal. This can occur in a closed system, when the half-life of the parent radionuclide is much larger than that of the decay product.

The ratio of the concentrations of radium-226 to thorium-230 can be used as an indicator of the status of equilibrium in the uranium series. The half-lives of thorium-230 and radium-226 are 77,000 and 1,600 years, respectively. The ratios in the five correlation samples are 1.5 (Sample S852-C01-001), 1.3 (Sample S852-C02-001), 1.4 (Sample S852-C03-001), 1.0 (Sample S852-C04-001), and 1.6 (Sample S852-C04-001), indicating that thorium-230 is depleted in relation to radium-226 and, by extrapolation, the uranium series itself is not in secular equilibrium.

Note this observation is based on the results of five samples, subject to differing analytical methods. Gamma spectroscopy, the method used to determine the concentration of radium-226, assesses an intact portion of the whole sample as it was collected. The concentration of thorium-230 was determined by alpha spectroscopy of an acid-leached aliquot of the sample.

3.3 Exposure rates and gamma count rates

Field personnel made co-located one-minute static count rate and exposure rate measurements at the five locations within the Survey Area, representing the range of gamma count rates obtained in the GPS-based gamma survey. Figure 7 shows the locations of the co-located measurements, which were made in the centers of the areas.

The gamma count rate and exposure rate measurements were made on November 14, 2016 at 0.5 m and 1 m above the ground surface, respectively. The gamma count rate measurements were made using one of the three sodium iodide detection system used in the GPS-based gamma survey of the AUM (Serial Number PR303727/254772). The exposure rate measurements were made using a Reuter Stokes Model RSS-131 high pressure ionization chamber (HPIC) at six-second intervals for about 10 minutes. The exposure rate used in the comparison was the mean of these measurements, less those occurring in initial instrument spikes. The HPIC was in current calibration and function checked before and after use. Calibration forms for the HPIC are provided in Appendix A.

Table 7 presents the results for the two types of measurements made at each of the five locations. Appendix B presents the individual (one second) exposure rate measurements.

The Pearson's Correlation Coefficient (R^2) is a measure of the dependence between two variables, and is expressed as a value between -1 and +1 where +1 is a positive correlation, 0 is no correlation, and -1 is a negative correlation. The best predictive relationship between the measurements is linear with a R^2 of 0.9968, strongly indicating a positive correlation. The root mean square error and p-value for the correlation are 0.5934 and <0.0001, respectively; these parameters are not DQOs and are included only as information.

The following equation is the linear regression (shown in Figure 10) between the mean exposure rate and gamma count rate results in Table 7 that was generated using MS Excel:

$$\text{Exposure Rate } (\mu R/h) = 6x10^{-4} \text{ (Gamma Count Rate [cpm])} + 5.2797$$

Figure 11 presents the exposure rates predicted from the gamma count rate measurements, the spatial and numerical distribution of which mirror those depicted in Figure 4.

Tables 8, 9, and 10 present summary statistics for the predicted exposure rates in the two Background Reference Areas and Survey Area, respectively. The range of predicted exposure rates at BG1 is 11.8 to 15.6 µR/h, with a mean and median of 13.4 and 13.3 µR/h, respectively. The range of predicted exposure rates at BG2 is 12.6 to 16.9 µR/h, with a mean and median of 14.3 and 14.2 µR/h, respectively. The range of predicted exposure rates in the Survey Area is 8.6 to 74.4 µR/h, with a mean and median of 14.5 and 13.6 µR/h, respectively.

Table 7. Co-located gamma count rate and exposure rate measurements.

Location	Gamma Count Rate[a] (cpm)	Exposure Rate (µR/h)
S852-C01-001	45,803	33.1
S852-C02-001	33,510	24.7
S852-C03-001	12,355	12.9
S852-C04-001	9,036	10.9
S852-C05-001	25,375	19.8

Notes:
[a]The gamma count rate is a one-minute, static measurement made at the center of the plot
cpm = counts per minute
µR/h = microRoentgens per hour

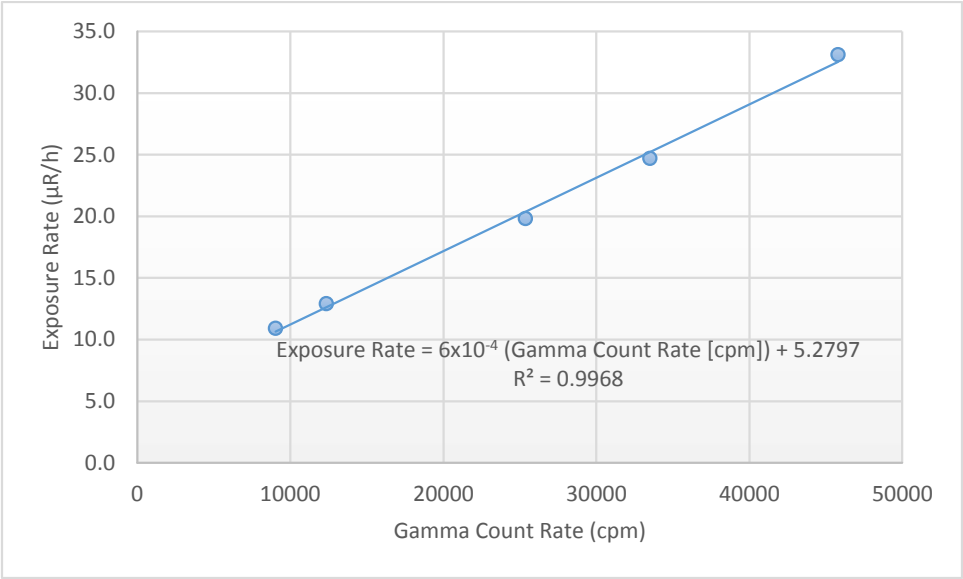

Figure 10. Correlation of gamma count rates and exposure rates.

Table 8. Predicted exposure rates in potential Background Reference Area 1.

Parameter	Exposure Rate (µR/h)
n	326
Minimum	11.8
Maximum	15.6
Mean	13.4
Median	13.3
Standard Deviation	0.6

Notes:
µR/h = microRoentgens per hour

Table 9. Predicted exposure rates in potential Background Reference Area 2.

Parameter	Exposure Rate (µR/h)
n	238
Minimum	12.6
Maximum	16.9
Mean	14.3
Median	14.2
Standard Deviation	0.8

Notes:
µR/h = microRoentgens per hour

Table 10. Predicted exposure rates in the Survey Area.

Parameter	Exposure Rate (µR/h)
n	37,760
Minimum	8.6
Maximum	74.4
Mean	14.5
Median	13.6
Standard Deviation	4.0

Notes:
µR/h = microRoentgens per hour

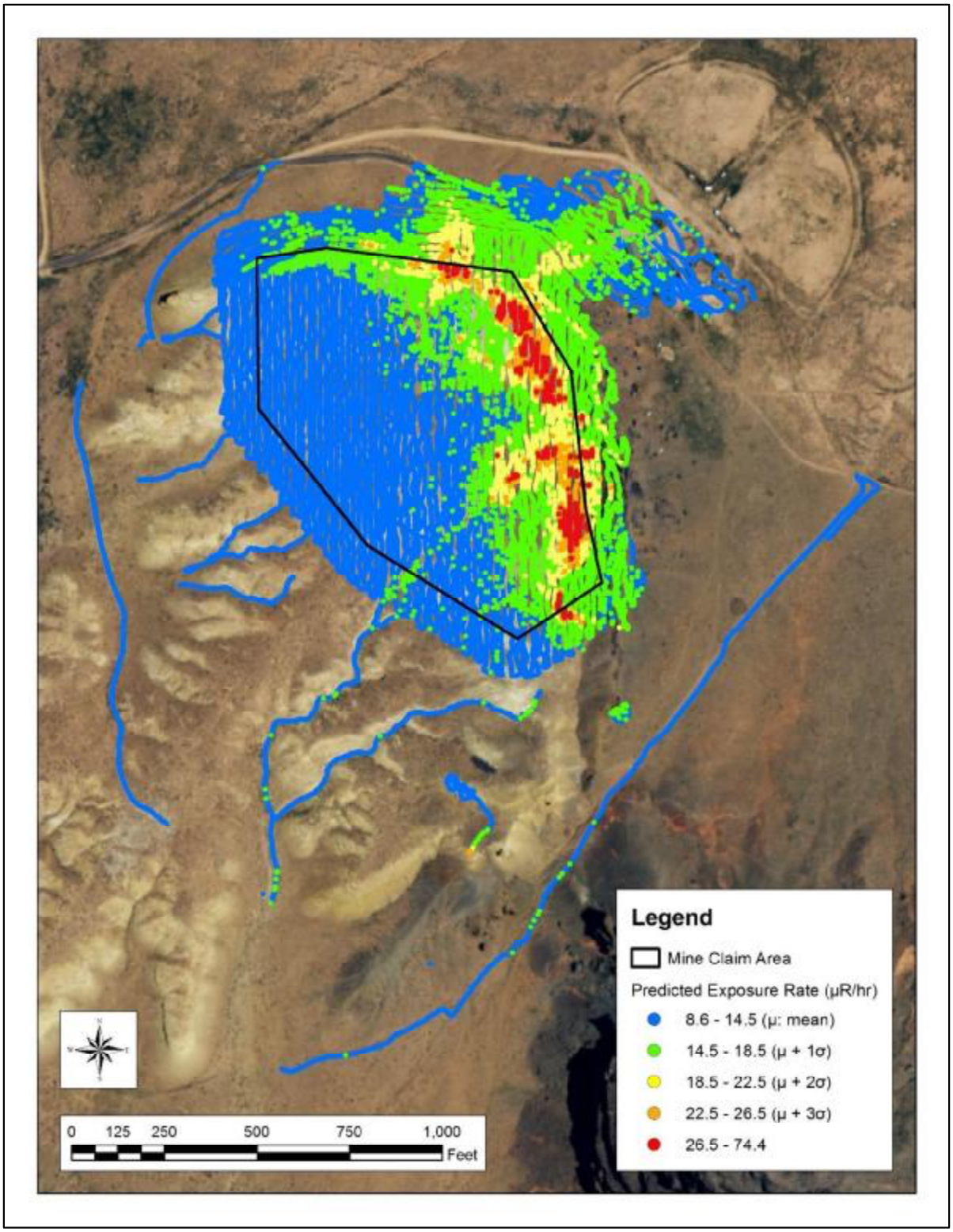

Figure 11. Predicted exposure rates in the Survey Area.

4.0 Deviations to RSE Work Plan

The RSE Work Plan specifies that the comparison of gamma count rates and radium concentrations in surface soils was to occur in 900 square foot areas. Field personnel adjusted the areas as necessary, to minimize the variability of gamma count rates observed, particularly where the spatial distribution of waste rock was heterogeneous.

5.0 Conclusions

The findings of the RSE pertaining to these activities are:

- The horizontal extent and magnitude of potentially mining-related materials were delineated sufficiently to support additional characterization of the subsurface.
- Gamma count rates are highest along the eastern and northeastern edges of the mine claim.
- Two potential Background Reference Areas were established.
- The relationship between gamma count rates and concentrations of radium-226 in surface soils (0 to 0.5 ft bgs) is described by a power regression model:

$$\text{Radium-226 Concentration (pCi/g)} = 9\text{x}10^{-11}\,(\text{Gamma Count Rate[cpm]})^{2.5035}$$

- The distribution of concentrations of radium-226 in surface soils predicted using this model resembles a lognormal distribution. The values in the Survey Area range from 0.2 to 421.9, with a central tendency (median) of 2.1 pCi/g.
- The uranium series radionuclides appear not to be in secular equilibrium.
- The relationship between gamma count rates and exposure rates is described by a linear regression model: Exposure Rate (µR/h) = $6\text{x}10^{-4}$ (Gamma Count Rate [cpm]) + 5.2797
- The distribution of exposure rates predicted using this model resembles a lognormal distribution. The values in the Survey Area range from 8.6 to 74.4, with a central tendency (median) of 13.6 µR/h.

6.0 References

ANSI, 1997. Radiation Protection Instrumentation Test and Calibration, Portable Survey Instruments, American National Standards Institute (ANSI) Standard N232A. June 20, 2014.

MWH, 2016a. Navajo Nation AUM Environmental Response Trust, First Phase, Removal Site Evaluation Work Plan, October 24, 2016.

MWH, 2016b. Hoskie Tso No.1 Site Clearance Data Report, December 2016.

MWH, 2017. Hoskie Tso No.1 Site Baseline Studies Field Report, May 2017.

Stantec, 2017. Hoskie Tso No.1 Removal Site Evaluation Report, September 2017.

Appendix A Instrument calibration and completed function check forms

Certificate of Calibration

Calibration and Voltage Plateau

Environmental Restoration Group, Inc.
8809 Washington St NE, Suite 150
Albuquerque, NM 87113
(505) 298-4224
www.ERGoffice.com

Meter:	Manufacturer:	Ludlum	Model Number:	2221r	Serial Number:	254772
Detector:	Manufacturer:	Ludlum	Model Number:	44-10	Serial Number:	PR303727

- ☑ Mechanical Check
- ☑ F/S Response Check
- ☑ Geotropism
- ☑ Meter Zeroed
- ☑ THR/WIN Operation
- ☑ Reset Check
- ☑ Audio Check
- ☑ Battery Check (Min 4.4 VDC)

HV Check (+/- 2.5%): ☑ 500 V ☑ 1000 V ☑ 1500 V

Cable Length: ☐ 39-inch ☑ 72-inch ☐ Other:

Source Distance: ☐ Contact ☑ 6 inches ☐ Other:

Source Geometry ☑ Side ☐ Below ☐ Other:

Threshold: 10 mV

Window:

Barometric Pressure:	24.6	inches Hg
Temperature:	73	°F
Relative Humidity:	20	%

Instrument found within tolerance: ☑ Yes ☐ No

Range/Multiplier	Reference Setting	"As Found Reading"	Meter Reading	Integrated 1-Min. Count	Log Scale Cour
x 1000	400	400	400	398773	400
x 1000	100	100	100		100
x 100	400	400	400	39887	400
x 100	100	100	100		100
x 10	400	400	400	3988	400
x 10	100	100	100		100
x 1	400	400	400	399	400
x 1	100	100	100		100

High Voltage	Source Counts	Background
700	53957	
800	65946	
900	69049	
950	69687	
1000	70240	9925
1050	70288	
1100	71224	
1150	71563	
1200	71161	

Voltage Plateau

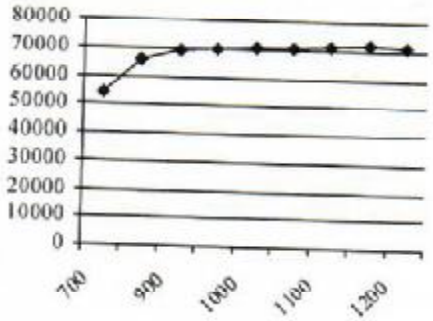

Comments: HV Plateau Scaler Count Time = 1-min. Recommended HV = 1000

Reference Instruments and/or Sources:

Ludlum pulser serial number: ☐ 97743 ☑ 201932

☐ Alpha Source: Th-230 @ 12,800 dpm (1/4/12) sn: 4098-03

☐ Beta Source: Tc-99 @ 17,700 dpm (1/4/12) sn: 4099-03

Fluke multimeter serial number: ☐ 8749012

☑ Gamma Source Cs-137 @ 5.2 uCi (1/4/12) sn: 4097-03

☐ Other Source:

Calibrated By:

Reviewed By:

Calibration Date: 1-20-16

Calibration Due 1-20-17

Date: 1/20/16

ERG Form ITC. 101.A

This calibration conforms to the requirements and acceptable calibration

Certificate of Calibration

Calibration and Voltage Plateau

Environmental Restoration Group, Inc.
8800 Washington St NE, Suite 150
Albuquerque, NM 87113
(505) 298-4224
www.ERGoffice.com

Meter:	Manufacturer:	Ludlum	Model Number:	2221r	Serial Number:	196086
Detector:	Manufacturer:	Ludlum	Model Number:	44-10	Serial Number:	PR295014

✔ Mechanical Check ✔ THR/WIN Operation
✔ F/S Response Check ✔ Reset Check
✔ Geotropism ✔ Audio Check
✔ Meter Zeroed ✔ Battery Check (Min 4.4 VDC)

HV Check (+/- 2.5%): ✔ 500 V ✔ 1000 V ✔ 1500 V
Cable Length: 39-inch ✔ 72-inch Other:

Source Distance: Contact ✔ 6 inches Other:
Source Geometry: ✔ Side Below Other:

Threshold: 10 mV
Window:

Barometric Pressure: 24.78 inches Hg
Temperature: 74 °F
Relative Humidity: 20 %

Instrument found within tolerance: ✔ Yes No

Range/Multiplier	Reference Setting	"As Found Reading"	Meter Reading	Integrated 1-Min. Count	Log Scale Count
x 1000	400	400	400	399802	400
x 1000	100	100	100		100
x 100	400	400	400	39989	400
x 100	100	100	100		100
x 10	400	400	400	3999	400
x 10	100	100	100		100
x 1	400	400	400	400	400
x 1	100	100	100		100

High Voltage	Source Counts	Background
700	28456	
800	53330	
900	64430	
950	66209	
1000	68333	
1050	69077	
1100	69121	8924
1150	69973	
1200	70155	

Voltage Plateau

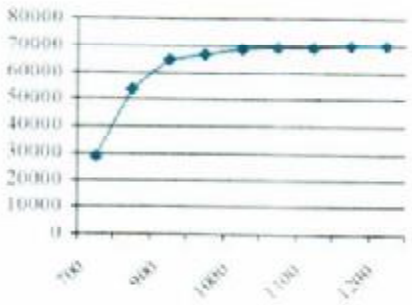

Comments: HV Plateau Scaler Count Time = 1-min. Recommended HV = 1100

Reference Instruments and/or Sources:

Ludlum pulser serial number: 97743 ✔ 201932
Alpha Source: Th-230 @ 12,800 dpm (1/4/12) sn: 4098-03
Beta Source: Tc-99 @ 17,700 dpm (1/4/12) sn: 4099-03

Fluke multimeter serial number: 87490128
✔ Gamma Source Cs-137 @ 5.2 uCi (1/4/12) sn: 4097-03
Other Source:

Calibrated By: [illegible]
Calibration Date: 7/20/16 Calibration Due: 7/20/17

Reviewed By: [illegible]
Date: 7/20/16

ERG Form ITC-101.A

This calibration conforms to the requirements and acceptable calibration conditions of ANSI N323A-1997

Certificate of Calibration

Calibration and Voltage Plateau

Environmental Restoration Group, Inc.
8809 Washington St NE, Suite 150
Albuquerque, NM 87113
(505) 298-4224
www.ERGoffice.com

Meter: Manufacturer: Ludlum Model Number: 2221r Serial Number: 282966

Detector: Manufacturer: Ludlum Model Number: 44-10 Serial Number: PR150507

- [x] Mechanical Check
- [x] F/S Response Check
- [x] Geotropism
- [x] Meter Zeroed
- [x] THR/WIN Operation
- [x] Reset Check
- [x] Audio Check
- [x] Battery Check (Min 4.4 VDC)

HV Check (+/- 2.5%): [x] 500 V [x] 1000 V [x] 1500 V

Cable Length: [ ] 39-inch [ ] 72-inch [x] Other: 60"

Source Distance: [ ] Contact [x] 6 inches [ ] Other:

Source Geometry: [x] Side [ ] Below [ ] Other:

Threshold: 10 mV

Window:

Barometric Pressure: 24.89 inches Hg

Temperature: 73 °F

Relative Humidity: 20 %

Instrument found within tolerance: [x] Yes [ ] No

Range/Multiplier	Reference Setting	"As Found Reading"	Meter Reading	Integrated 1-Min. Count	Log Scale Count
x 1000	400	400	400	398753	400
x 1000	100	100	100		100
x 100	400	400	400	39879	400
x 100	100	100	100		100
x 10	400	400	400	3989	400
x 10	100	100	100		100
x 1	400	400	400	399	400
x 1	100	100	100		100

High Voltage	Source Counts	Background
700	56463	
800	64304	
900	68534	
950	69331	
1000	69868	9696
1050	70054	
1100	70609	
1150	70681	
1200	71955	

Voltage Plateau

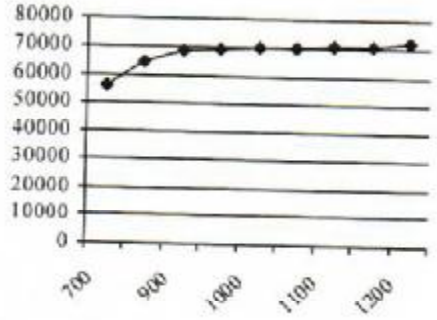

Comments: HV Plateau Scaler Count Time = 1-min. Recommended HV = 1000

Reference Instruments and/or Sources:

Ludlum pulser serial number: [ ] 97743 [x] 201932

[ ] Alpha Source: Th-230 @ 12,800 dpm (1/4/12) sn: 4098-03

[ ] Beta Source: Tc99 @ 17,700 dpm (1/4/12) sn: 4099-03

Fluke multimeter serial number: [ ] 87490128

[x] Gamma Source Cs-137 @ 5.2 uCi (1/4/12) sn: 4097-03

[ ] Other Source:

alibrated By:

eviewed By:

Calibration Date: 10-31-16 Calibration Due: 10-31-17

Date: 10/31/16

ERG Form ITC. 101.A

This calibration conforms to the requirements and acceptable calibration conditions of ANSI N323A - 1997

K&S Associates, Inc.
1926 Elm Tree Drive
Nashville, Tennessee 37210-3718
Phone 800-522-2325 Fax 615-871-0656

ACCREDITED
CALIBRATION CERT #1866.01

CALIBRATION REPORT

SUBMITTED BY: ERG
8809 Washington Street Northeast
Suite 150
Albuquerque, NM 87113

INSTRUMENT: Reuter Stokes RSS-131, #07J00KM1

REPORT NUMBER: 161866
TEST NUMBER(S) M161588
REPORT DATE: June 29, 2016

The CALIBRATION COEFFICIENTS contained in this report were obtained by intercomparison with instruments calibrated by, or directly traceable to, the National Institute of Standards and Technology (NIST). K• S Associates, Inc. is licensed by the State of Tennessee (R-19075-G97, R-19136-B00) to perform calibrations, and is recognized by the Health Physics Society (HPS) as an ACCREDITED INSTRUMENT CALIBRATION LABORATORY. As part of the accreditation K • S participates in a measurement assurance program conducted by the HPS and NIST. K • S also certifies that the calibration was performed using quality policies, methods and procedures that meet or exceed the requirements of ISO/IEC 17025:2005.

This laboratory is accredited by the American Association for Laboratory Accreditation (A2LA) and the results shown in this report have been determined in accordance with the laboratory's terms of accreditation unless stated otherwise in this report

The CALIBRATION COEFFICIENTS stated herein are valid under the conditions specified. It is the instrument user's responsibility to perform the appropriate constancy tests prior to shipment and after return from calibration. It is also the responsibility of the user to assure that the interpretation of the information in this report is consistent with that intended by K • S Associates, Inc.

This report may not be reproduced except in full without the written permission of K• S Associates, Inc.

K&S Associates, Inc
Nashville, Tennessee 37210-3718

ACCREDITED

CALIBRATION CERTIFICATE

Calibration Date: 6/27/2016 Report Number: 161866 Test Number: M161588

K&S certifies that the environmental radiation monitor identified below has been calibrated for radiation measurement using collimated radiation sources whose output has been calibrated with instruments calibrated by or directly traceable to the National Institute of Standards and Technology. K&S is accredited by the American Association for Laboratory Accreditation to perform environmental level calibrations and further certifies that the calibration was performed using accredited policies and procedures (SI 25) that meet or exceed the requirements of ISO/IEC 17025:2005.

Sensor Type: 100 mR/h

Serial Number: 07J00KM1

Average Calibration Coefficient for the range of 0.012 mR/h – 0.220 mR/h*:
1.02 mR/"mR" reading
(Measured at 4 points)

Calibration Coefficient for the 50.0 mR/h point*:
1.12 mR/"mR" reading

Calibration Coefficient for the 80.0 mR/h point*:
1.10 mR/"mR" reading

Found RAC: 2.169e-8

*Multiply the reading in **mR/h** by the Calibration Coefficient to obtain true **mR/h**.

Calibrated By: Richard Hardison Reviewed By: Angela Hoyer

Title: Calibration Technician Title: Calibration Physicist

Log: M-53 Page: 73

K&S Associates, Inc
Nashville, Tennessee 37210-3718

ACCREDITED

AS FOUND DATA
Reuter-Stokes Chamber Calibration

June 27, 2016 *Test Number M161588*

CHAMBER:

Mfgr: Reuter Stokes
Model: RSS-131
Serial: 07J00KM1

SUBMITTED BY:

ERG

Albuquerque, NM

ORIENTATION/CONDITIONS:

Serial number away from source

"True" background exposure rate of 6.7 uR/h, instrument reading was 0.0076 mR/h

ATMOSPHERIC COMMUNICATION: SEALED

POLARIZING POTENTIAL 401V

LEAKAGE: negligible

BEAM QUALITY

BEAM		EXPOSURE RATE		CALIBRATION COEFFICIENT	UNCERT	LOG
CsEn220	(11mCi)	0.22mR/h	N_x=	1.00 mR/h/rdg	11%	M-53 73
CsEn80	(11mCi)	0.08mR/h	N_x=	1.03 mR/h/rdg	11%	
CsEnv12	(1mCi)	0.012mR/h	N_x=	1.01 mR/h/rdg	11%	
CsEnv15	(1mCi)	0.015mR/h	N_x=	1.02 mR/h/rdg	11%	
Cs199m	(20 Ci)	50mR/h	N_x=	1.12 mR/h/rdg	8%	
Cs252m	(20 Ci)	80mR/h	N_x=	1.10 mR/h/rdg	8%	

Comments Batt: 6.1V. Temp: 24.6 deg C. K&S Environment: Temp:21 deg C . RH 59%. Press: 752 mmHg;
Report Number: 161866
Refer to Appendix I of this report for details on PIC ionization chamber calibrations. Procedure: SI 25
RAC Found: 2.169e-8

Calibrated By Richard Hardison **Reviewed By:**

Title: Calibration Technician **Title:** Calibration Physicist

Checked By: **Prepared By:** REH

Form RSS

ERG

Single-Channel Function Check Log

Environmental Restoration Group, Inc
8809 Washington St. NE, Suite 150
Albuquerque, NM 87113
(505) 298-4224

METER	
Manufacturer:	Ludlum
Model:	2221
Serial No.:	254772
Cal. Due Date:	7-9-17

DETECTOR	
Manufacturer:	Ludlum
Model:	44-10
Serial No.:	PR303727
Cal. Due Date:	7-9-17

Comments:
NNGRT

Source: Cs-137 Activity: 5.12 uCi Source Date: 6-6-94 Distance to Source: 6 inches

Serial No.: 333-94 Emission Rate: NA cpm/emissions

Date	Time	Battery	High Voltage	Threshhold	Source Counts	BKG Counts	Net Counts	Initials	Note(s): Project reference points
11-9-16	0729	5.6	1009	100	47673	8821	38852	NW	Occurrence B
11-9-16	1415	5.4	1002	99	46465	7541	38924	NW	Chinle lot
11-10-16	0820	5.6	1011	100	47628	9750	37878	NW	Claim 28
11-10-16	1632	5.4	1002	99	50634	8930	41704	NW	Claim 28 (2nd location)
11-11-16	0816	5.5	1010	100	49034	9824	39210	NW	Claim 28
11-11-16	1555	5.4	1002	99	48985	8643	40342	NW	Occurrence B
11-12-16	0819	5.5	1009	100	49296	9054	40242	NW	Hoskie Tso
11-12-16	1340	5.3	1002	99	49800	8556	41244	NW	Hoskie Tso
11-14-16	0818	5.5	1012	100	47737	9609	38128	NW	Hoskie Tso
11-14-16	1637	5.3	1002	99	47714	9150	38564	NW	Hoskie Tso (2nd location)
11-16-16	0809	5.4	1011	100	49413	12340	37073	NW	Standing Rock
11-16-16	1510	5.3	1003	99	49649	11268	38381	NW	Gallup lot

Reviewed by: MM Review Date: 11/29/16

ERG

Single-Channel Function Check Log

Environmental Restoration Group, Inc.
8809 Washington St. NE, Suite 150
Albuquerque, NM 87113
(505) 298-4224

METER	
Manufacturer:	Ludlum
Model:	2221
Serial No.:	196086
Cal. Due Date:	7-9-17

DETECTOR	
Manufacturer:	Ludlum
Model:	44-10
Serial No.:	PR295014
Cal. Due Date:	7-9-17

Comments:
NNERT

Source: Cs-137 Activity: 5.12 uCi Source Date: 6-6-94 Distance to Source: 6 inches

Serial No.: 333-94 Emission Rate: NA cpm/emissions

Date	Time	Battery	High Voltage	Threshhold	Source Counts	BKG Counts	Net Counts	Initials	Note(s): Project reference points
11-8-16	0805	6.0	1109	100	49571	9246	40325	NW	Claim 28
11-8-16	1641	5.8	1104	100	45893	6864	39029	NW	Chinle lot
11-9-16	0724	5.8	1110	101	46451	8453	37998	NW	Occupance B
11-9-16	1425	5.8	1104	100	47096	6903	40193	NW	Chinle lot
11-10-16	0826	5.8	1109	100	47011	9425	37586	NW	Claim 28
11-10-16	1628	5.7	1103	100	48672	8509	40163	NW	Claim 28 (2nd location)
11-12-16	0834	5.7	1109	101	47463	9188	38275	NW	Moshie Tsu
11-12-16	1347	5.6	1101	101	48929	8265	40664	NW	Moshie Tsu
11-14-16	1218	5.7	1105	100	48870	8074	40796	NW	Moshie Tsu
11-14-16	1639	5.7	1105	100	47696	9068	38628	NW	Moshie Tsu (2nd location.)
11-15-16	0834	5.7	1110	101	50555	~~9175~~ 9150 NW	41405	NW	Moshie Tsu
11-15-16	1142	5.5	1101	100	48004	8598	39406	NW	Moshie Tsu

Reviewed by: MN Review Date: 11/29/16

ERG

Single-Channel Function Check Log

Environmental Restoration Group, Inc
8809 Washington St. NE, Suite 150
Albuquerque, NM 87113
(505) 298-4224

METER	
Manufacturer:	Ludlum
Model:	2221
Serial No.:	196086
Cal. Due Date:	7-9-17

DETECTOR	
Manufacturer:	Ludlum
Model:	44-10
Serial No.:	PR295014
Cal. Due Date:	7-9-17

Comments:
NNERT

Source: Cs-137 Activity: 5.12 uCi Source Date: 6-6-94 Distance to Source: 6 inches

Serial No.: 333-94 Emission Rate: NA cpm/emissions

Date	Time	Battery	High Voltage	Threshhold	Source Counts	BKG Counts	Net Counts	Initials	Note(s): Project Reference Points
11-16-16	0812	5.7	1110	101	49614	11731	37883	NW	Standing Rock
11-16-16	1515	5.6	1104	100	48046	10720	37326	NW	Gallup lot
11-18-16	0826	5.7	1116	102	51120	13035	38085	NW	Standing Rock
11-18-16	1512	5.6	1106	101	48583	10155	38428	NW	Gallup lot
11-19-16	0817	5.6	1115	102	44225	4772	39453	NW	Eunice Becente
11-19-16	1403	5.5	1102	100	43512	4751	38761	NW	Eunice Bicente

12-6-16

Reviewed by: MM Review Date: 11/29/16

ERG

Single-Channel Function Check Log

Environmental Restoration Group, Inc.
8809 Washington St. NE, Suite 150
Albuquerque, NM 87113
(505) 298-4224

METER	
Manufacturer:	Ludlum
Model:	2221
Serial No.:	282966
Cal. Due Date:	10-31-17

DETECTOR	
Manufacturer:	Ludlum
Model:	44-10
Serial No.:	PR150507
Cal. Due Date:	10-31-17

Comments:
NNERG

Source: Cs-137 Activity: 5.12 uCi Source Date: 6-6-94 Distance to Source: 6 inches

Serial No.: 333-94 Emission Rate: NA cpm/emissions

Date	Time	Battery	High Voltage	Threshhold	Source Counts	BKG Counts	Net Counts	Initials	Note(s): Project Reference Points
11-12-16	0827	5.7	1010	102	48550	9744	38806	NW	Moshin Tsa
11-12-16	1351	5.6	1000	101	47089	8725	38364	NW	Moshin Tsa
11-16-16	0826	5.7	1011	102	50569	12266	38303	NW	Standing Rock
11-16-16	1518	5.6	1006	103	50039	11202	38837	NW	Gallup lot
11-18-16	0836	5.7	1017	104	52221	13620	38601	NW	Standing Rock
11-18-16	1530	5.6	1009	103	48820	10831	37989	NW	Gallup lot
11-19-16	0812	5.6	1016	104	44700	4940	39760	NW	Eunice Becenti
11-19-16	1407	5.5	1004	102	44961	4975	39986	NW	Eunice Becenti
					12-6-16				

Reviewed by: MM Review Date: 11/29/16

ERG

Single-Channel Function Check Log

Environmental Restoration Group, Inc
8809 Washington St. NE, Suite 150
Albuquerque, NM 87113
(505) 299-4224

METER	
Manufacturer:	GE
Model:	RSS-131
Serial No.:	07J00KM1
Cal. Due Date:	6-29-17

DETECTOR	
Manufacturer:	SAME AS METER
Model:	
Serial No.:	
Cal. Due Date:	

Comments:
NNEAT

Source: Cs-137 Activity: 5.12 uCi Source Date: 6-6-94 Distance to Source: Contact-housing

Serial No.: 333-94 Emission Rate: NA cpm/emissions

Date	Time	Battery	High Voltage	Threshhold	Source Counts (µR/h)	BKG Counts (µR/h)	Net Counts	Initials	Note(s): Project reference points
11-14-16	0530	~6.3	~400	NA	~27	~10	~17	NW	Doubletree Flagstaff-room
11-14-16	2005	~6.3	~400	NA	~29	~11	~18	NW	Best Western Holbrook-room
11-18-16	0623	~6.3	~400	NA	~27	~11	~16	NW	Best Western Gallup-room
11-18-16	1532	~6.2	~400	NA	~27	~11	~16	NW	Best Western Gallup-room

12-6-16

Reviewed by: MA Review Date: 11-29-16

Appendix B Exposure Rate Measurements

Date and Time	Exposure Rate (mR/h)	Location	Date and Time	Exposure Rate (mR/h)	Location
11/14/2016 10:34	0.0577	Correlation Location 1	11/14/2016 10:40	0.0331	Correlation Location 1
11/14/2016 10:34	0.1037	Correlation Location 1	11/14/2016 10:40	0.0331	Correlation Location 1
11/14/2016 10:34	0.0972	Correlation Location 1	11/14/2016 10:40	0.0328	Correlation Location 1
11/14/2016 10:34	0.0738	Correlation Location 1	11/14/2016 10:40	0.0327	Correlation Location 1
11/14/2016 10:34	0.056	Correlation Location 1	11/14/2016 10:40	0.0331	Correlation Location 1
11/14/2016 10:35	0.0453	Correlation Location 1	11/14/2016 10:40	0.0332	Correlation Location 1
11/14/2016 10:35	0.0393	Correlation Location 1	11/14/2016 10:40	0.0324	Correlation Location 1
11/14/2016 10:35	0.0359	Correlation Location 1	11/14/2016 10:40	0.032	Correlation Location 1
11/14/2016 10:35	0.0341	Correlation Location 1	11/14/2016 10:40	0.0322	Correlation Location 1
11/14/2016 10:35	0.0336	Correlation Location 1	11/14/2016 10:40	0.0328	Correlation Location 1
11/14/2016 10:35	0.0334	Correlation Location 1	11/14/2016 10:41	0.0336	Correlation Location 1
11/14/2016 10:35	0.0332	Correlation Location 1	11/14/2016 10:41	0.0335	Correlation Location 1
11/14/2016 10:35	0.033	Correlation Location 1	11/14/2016 10:41	0.0332	Correlation Location 1
11/14/2016 10:35	0.033	Correlation Location 1	11/14/2016 10:41	0.0335	Correlation Location 1
11/14/2016 10:35	0.0331	Correlation Location 1	11/14/2016 10:41	0.0336	Correlation Location 1
11/14/2016 10:36	0.033	Correlation Location 1	11/14/2016 10:41	0.0334	Correlation Location 1
11/14/2016 10:36	0.0328	Correlation Location 1	11/14/2016 10:41	0.034	Correlation Location 1
11/14/2016 10:36	0.0331	Correlation Location 1	11/14/2016 10:41	0.0341	Correlation Location 1
11/14/2016 10:36	0.0331	Correlation Location 1	11/14/2016 10:41	0.0341	Correlation Location 1
11/14/2016 10:36	0.0332	Correlation Location 1	11/14/2016 10:41	0.0336	Correlation Location 1
11/14/2016 10:36	0.0332	Correlation Location 1	11/14/2016 10:42	0.0332	Correlation Location 1
11/14/2016 10:36	0.0335	Correlation Location 1	11/14/2016 10:42	0.0332	Correlation Location 1
11/14/2016 10:36	0.0337	Correlation Location 1	11/14/2016 10:42	0.0335	Correlation Location 1
11/14/2016 10:36	0.0336	Correlation Location 1	11/14/2016 10:42	0.0336	Correlation Location 1
11/14/2016 10:36	0.0337	Correlation Location 1	11/14/2016 10:42	0.0336	Correlation Location 1
11/14/2016 10:37	0.0332	Correlation Location 1	11/14/2016 10:42	0.0334	Correlation Location 1
11/14/2016 10:37	0.0328	Correlation Location 1	11/14/2016 10:42	0.0332	Correlation Location 1
11/14/2016 10:37	0.0328	Correlation Location 1	11/14/2016 10:42	0.0334	Correlation Location 1
11/14/2016 10:37	0.0328	Correlation Location 1	11/14/2016 10:42	0.0331	Correlation Location 1
11/14/2016 10:37	0.0324	Correlation Location 1	11/14/2016 10:42	0.0328	Correlation Location 1
11/14/2016 10:37	0.0322	Correlation Location 1	11/14/2016 10:43	0.0331	Correlation Location 1
11/14/2016 10:37	0.0322	Correlation Location 1	11/14/2016 10:43	0.0332	Correlation Location 1
11/14/2016 10:37	0.0322	Correlation Location 1	11/14/2016 10:43	0.033	Correlation Location 1
11/14/2016 10:37	0.0322	Correlation Location 1	11/14/2016 10:43	0.033	Correlation Location 1
11/14/2016 10:37	0.0322	Correlation Location 1	11/14/2016 10:43	0.0332	Correlation Location 1
11/14/2016 10:38	0.0327	Correlation Location 1	11/14/2016 10:43	0.0332	Correlation Location 1
11/14/2016 10:38	0.0328	Correlation Location 1	11/14/2016 10:43	0.0335	Correlation Location 1
11/14/2016 10:38	0.0328	Correlation Location 1	11/14/2016 10:43	0.0334	Correlation Location 1
11/14/2016 10:38	0.033	Correlation Location 1	11/14/2016 10:43	0.0331	Correlation Location 1
11/14/2016 10:38	0.0332	Correlation Location 1	11/14/2016 10:43	0.0328	Correlation Location 1
11/14/2016 10:38	0.0334	Correlation Location 1	11/14/2016 10:44	0.033	Correlation Location 1
11/14/2016 10:38	0.0332	Correlation Location 1	11/14/2016 10:44	0.0331	Correlation Location 1
11/14/2016 10:38	0.033	Correlation Location 1	11/14/2016 10:44	0.0334	Correlation Location 1
11/14/2016 10:38	0.0326	Correlation Location 1	11/14/2016 10:44	0.0332	Correlation Location 1
11/14/2016 10:38	0.0322	Correlation Location 1	11/14/2016 10:44	0.0335	Correlation Location 1
11/14/2016 10:39	0.033	Correlation Location 1	11/14/2016 10:44	0.0332	Correlation Location 1
11/14/2016 10:39	0.0332	Correlation Location 1	11/14/2016 10:44	0.0326	Correlation Location 1
11/14/2016 10:39	0.0332	Correlation Location 1	11/14/2016 10:44	0.0326	Correlation Location 1
11/14/2016 10:39	0.0328	Correlation Location 1	11/14/2016 10:44	0.0328	Correlation Location 1
11/14/2016 10:39	0.0324	Correlation Location 1	11/14/2016 10:44	0.0332	Correlation Location 1
11/14/2016 10:39	0.0326	Correlation Location 1	11/14/2016 10:45	0.0339	Correlation Location 1
11/14/2016 10:39	0.0327	Correlation Location 1	11/14/2016 10:45	0.0334	Correlation Location 1
11/14/2016 10:39	0.0326	Correlation Location 1	11/14/2016 10:45	0.0328	Correlation Location 1
11/14/2016 10:39	0.0327	Correlation Location 1	11/14/2016 10:45	0.0326	Correlation Location 1
11/14/2016 10:39	0.033	Correlation Location 1	11/14/2016 10:45	0.033	Correlation Location 1

Hoskie Tso No. 1. Exposure Rate Measurements for Correlation

Date and Time	Exposure Rate (mR/h)	Location
11/14/2016 10:45	0.0335	Correlation Location 1
11/14/2016 11:10	0.0562	Correlation Location 2
11/14/2016 11:10	0.1	Correlation Location 2
11/14/2016 11:10	0.0911	Correlation Location 2
11/14/2016 11:10	0.0671	Correlation Location 2
11/14/2016 11:10	0.0484	Correlation Location 2
11/14/2016 11:11	0.037	Correlation Location 2
11/14/2016 11:11	0.0309	Correlation Location 2
11/14/2016 11:11	0.0277	Correlation Location 2
11/14/2016 11:11	0.026	Correlation Location 2
11/14/2016 11:11	0.0256	Correlation Location 2
11/14/2016 11:11	0.0251	Correlation Location 2
11/14/2016 11:11	0.0244	Correlation Location 2
11/14/2016 11:11	0.024	Correlation Location 2
11/14/2016 11:11	0.0242	Correlation Location 2
11/14/2016 11:11	0.0247	Correlation Location 2
11/14/2016 11:12	0.0244	Correlation Location 2
11/14/2016 11:12	0.0242	Correlation Location 2
11/14/2016 11:12	0.0241	Correlation Location 2
11/14/2016 11:12	0.0241	Correlation Location 2
11/14/2016 11:12	0.0244	Correlation Location 2
11/14/2016 11:12	0.0249	Correlation Location 2
11/14/2016 11:12	0.0249	Correlation Location 2
11/14/2016 11:12	0.0245	Correlation Location 2
11/14/2016 11:12	0.0243	Correlation Location 2
11/14/2016 11:12	0.0244	Correlation Location 2
11/14/2016 11:13	0.0244	Correlation Location 2
11/14/2016 11:13	0.0245	Correlation Location 2
11/14/2016 11:13	0.0243	Correlation Location 2
11/14/2016 11:13	0.0245	Correlation Location 2
11/14/2016 11:13	0.0253	Correlation Location 2
11/14/2016 11:13	0.0255	Correlation Location 2
11/14/2016 11:13	0.0249	Correlation Location 2
11/14/2016 11:13	0.0247	Correlation Location 2
11/14/2016 11:13	0.0249	Correlation Location 2
11/14/2016 11:13	0.0249	Correlation Location 2
11/14/2016 11:14	0.0253	Correlation Location 2
11/14/2016 11:14	0.0253	Correlation Location 2
11/14/2016 11:14	0.0251	Correlation Location 2
11/14/2016 11:14	0.0251	Correlation Location 2
11/14/2016 11:14	0.0251	Correlation Location 2
11/14/2016 11:14	0.0249	Correlation Location 2
11/14/2016 11:14	0.0244	Correlation Location 2
11/14/2016 11:14	0.0237	Correlation Location 2
11/14/2016 11:14	0.0235	Correlation Location 2
11/14/2016 11:14	0.0237	Correlation Location 2
11/14/2016 11:15	0.0244	Correlation Location 2
11/14/2016 11:15	0.0245	Correlation Location 2
11/14/2016 11:15	0.0252	Correlation Location 2
11/14/2016 11:15	0.0252	Correlation Location 2
11/14/2016 11:15	0.0249	Correlation Location 2
11/14/2016 11:15	0.0245	Correlation Location 2
11/14/2016 11:15	0.0244	Correlation Location 2
11/14/2016 11:15	0.0247	Correlation Location 2
11/14/2016 11:15	0.0247	Correlation Location 2
11/14/2016 11:15	0.0253	Correlation Location 2

Date and Time	Exposure Rate (mR/h)	Location
11/14/2016 11:16	0.0254	Correlation Location 2
11/14/2016 11:16	0.0251	Correlation Location 2
11/14/2016 11:16	0.0247	Correlation Location 2
11/14/2016 11:16	0.0245	Correlation Location 2
11/14/2016 11:16	0.0247	Correlation Location 2
11/14/2016 11:16	0.0249	Correlation Location 2
11/14/2016 11:16	0.0247	Correlation Location 2
11/14/2016 11:16	0.0244	Correlation Location 2
11/14/2016 11:16	0.0244	Correlation Location 2
11/14/2016 11:16	0.0242	Correlation Location 2
11/14/2016 11:17	0.0242	Correlation Location 2
11/14/2016 11:17	0.0243	Correlation Location 2
11/14/2016 11:17	0.0244	Correlation Location 2
11/14/2016 11:17	0.0245	Correlation Location 2
11/14/2016 11:17	0.0251	Correlation Location 2
11/14/2016 11:17	0.0254	Correlation Location 2
11/14/2016 11:17	0.0249	Correlation Location 2
11/14/2016 11:17	0.0247	Correlation Location 2
11/14/2016 11:17	0.0247	Correlation Location 2
11/14/2016 11:17	0.0244	Correlation Location 2
11/14/2016 11:18	0.0245	Correlation Location 2
11/14/2016 11:18	0.0245	Correlation Location 2
11/14/2016 11:18	0.0247	Correlation Location 2
11/14/2016 11:18	0.0255	Correlation Location 2
11/14/2016 11:18	0.0259	Correlation Location 2
11/14/2016 11:18	0.0258	Correlation Location 2
11/14/2016 11:18	0.0253	Correlation Location 2
11/14/2016 11:18	0.0249	Correlation Location 2
11/14/2016 11:18	0.0249	Correlation Location 2
11/14/2016 11:18	0.0247	Correlation Location 2
11/14/2016 11:19	0.0245	Correlation Location 2
11/14/2016 11:19	0.0247	Correlation Location 2
11/14/2016 11:19	0.0249	Correlation Location 2
11/14/2016 11:19	0.0249	Correlation Location 2
11/14/2016 11:19	0.0249	Correlation Location 2
11/14/2016 11:19	0.0251	Correlation Location 2
11/14/2016 11:19	0.0249	Correlation Location 2
11/14/2016 11:19	0.0249	Correlation Location 2
11/14/2016 11:19	0.0247	Correlation Location 2
11/14/2016 11:19	0.0249	Correlation Location 2
11/14/2016 11:20	0.0247	Correlation Location 2
11/14/2016 11:20	0.0245	Correlation Location 2
11/14/2016 11:20	0.0247	Correlation Location 2
11/14/2016 11:20	0.0247	Correlation Location 2
11/14/2016 11:20	0.0247	Correlation Location 2
11/14/2016 11:20	0.0247	Correlation Location 2
11/14/2016 11:20	0.0245	Correlation Location 2
11/14/2016 11:20	0.0245	Correlation Location 2
11/14/2016 11:20	0.0245	Correlation Location 2
11/14/2016 11:20	0.0245	Correlation Location 2
11/14/2016 11:21	0.0247	Correlation Location 2
11/14/2016 11:21	0.0247	Correlation Location 2
11/14/2016 11:21	0.0247	Correlation Location 2
11/14/2016 11:21	0.0249	Correlation Location 2
11/14/2016 11:21	0.0252	Correlation Location 2
11/14/2016 11:41	0.0542	Correlation Location 3

Hoskie Tso No. 1. Exposure Rate Measurements for Correlation

Date and Time	Exposure Rate (mR/h)	Location
11/14/2016 11:41	0.0945	Correlation Location 3
11/14/2016 11:41	0.0823	Correlation Location 3
11/14/2016 11:41	0.0561	Correlation Location 3
11/14/2016 11:41	0.0364	Correlation Location 3
11/14/2016 11:41	0.0245	Correlation Location 3
11/14/2016 11:42	0.0182	Correlation Location 3
11/14/2016 11:42	0.0152	Correlation Location 3
11/14/2016 11:42	0.0139	Correlation Location 3
11/14/2016 11:42	0.0134	Correlation Location 3
11/14/2016 11:42	0.0129	Correlation Location 3
11/14/2016 11:42	0.0129	Correlation Location 3
11/14/2016 11:42	0.0128	Correlation Location 3
11/14/2016 11:42	0.0126	Correlation Location 3
11/14/2016 11:42	0.0122	Correlation Location 3
11/14/2016 11:42	0.0122	Correlation Location 3
11/14/2016 11:43	0.0126	Correlation Location 3
11/14/2016 11:43	0.0127	Correlation Location 3
11/14/2016 11:43	0.0131	Correlation Location 3
11/14/2016 11:43	0.0136	Correlation Location 3
11/14/2016 11:43	0.0139	Correlation Location 3
11/14/2016 11:43	0.0132	Correlation Location 3
11/14/2016 11:43	0.0129	Correlation Location 3
11/14/2016 11:43	0.0132	Correlation Location 3
11/14/2016 11:43	0.0135	Correlation Location 3
11/14/2016 11:43	0.0133	Correlation Location 3
11/14/2016 11:44	0.0129	Correlation Location 3
11/14/2016 11:44	0.0123	Correlation Location 3
11/14/2016 11:44	0.0122	Correlation Location 3
11/14/2016 11:44	0.0124	Correlation Location 3
11/14/2016 11:44	0.013	Correlation Location 3
11/14/2016 11:44	0.0133	Correlation Location 3
11/14/2016 11:44	0.0134	Correlation Location 3
11/14/2016 11:44	0.0131	Correlation Location 3
11/14/2016 11:44	0.0127	Correlation Location 3
11/14/2016 11:44	0.0126	Correlation Location 3
11/14/2016 11:45	0.013	Correlation Location 3
11/14/2016 11:45	0.0135	Correlation Location 3
11/14/2016 11:45	0.0133	Correlation Location 3
11/14/2016 11:45	0.0134	Correlation Location 3
11/14/2016 11:45	0.0137	Correlation Location 3
11/14/2016 11:45	0.0136	Correlation Location 3
11/14/2016 11:45	0.0129	Correlation Location 3
11/14/2016 11:45	0.0126	Correlation Location 3
11/14/2016 11:45	0.0127	Correlation Location 3
11/14/2016 11:45	0.0129	Correlation Location 3
11/14/2016 11:46	0.0127	Correlation Location 3
11/14/2016 11:46	0.0126	Correlation Location 3
11/14/2016 11:46	0.0123	Correlation Location 3
11/14/2016 11:46	0.0122	Correlation Location 3
11/14/2016 11:46	0.0122	Correlation Location 3
11/14/2016 11:46	0.0127	Correlation Location 3
11/14/2016 11:46	0.0129	Correlation Location 3
11/14/2016 11:46	0.0129	Correlation Location 3
11/14/2016 11:46	0.0131	Correlation Location 3
11/14/2016 11:46	0.0133	Correlation Location 3
11/14/2016 11:47	0.0134	Correlation Location 3
11/14/2016 11:47	0.0134	Correlation Location 3
11/14/2016 11:47	0.0137	Correlation Location 3
11/14/2016 11:47	0.0136	Correlation Location 3
11/14/2016 11:47	0.0132	Correlation Location 3
11/14/2016 11:47	0.0129	Correlation Location 3
11/14/2016 11:47	0.0124	Correlation Location 3
11/14/2016 11:47	0.012	Correlation Location 3
11/14/2016 11:47	0.0114	Correlation Location 3
11/14/2016 11:47	0.0117	Correlation Location 3
11/14/2016 11:48	0.0124	Correlation Location 3
11/14/2016 11:48	0.0131	Correlation Location 3
11/14/2016 11:48	0.0133	Correlation Location 3
11/14/2016 11:48	0.0131	Correlation Location 3
11/14/2016 11:48	0.0131	Correlation Location 3
11/14/2016 11:48	0.0134	Correlation Location 3
11/14/2016 11:48	0.0133	Correlation Location 3
11/14/2016 11:48	0.013	Correlation Location 3
11/14/2016 11:48	0.0129	Correlation Location 3
11/14/2016 11:48	0.0126	Correlation Location 3
11/14/2016 11:49	0.0127	Correlation Location 3
11/14/2016 11:49	0.0128	Correlation Location 3
11/14/2016 11:49	0.0126	Correlation Location 3
11/14/2016 11:49	0.0127	Correlation Location 3
11/14/2016 11:49	0.0132	Correlation Location 3
11/14/2016 11:49	0.0137	Correlation Location 3
11/14/2016 11:49	0.0134	Correlation Location 3
11/14/2016 11:49	0.0132	Correlation Location 3
11/14/2016 11:49	0.013	Correlation Location 3
11/14/2016 11:49	0.0126	Correlation Location 3
11/14/2016 11:50	0.0126	Correlation Location 3
11/14/2016 11:50	0.0124	Correlation Location 3
11/14/2016 11:50	0.0122	Correlation Location 3
11/14/2016 11:50	0.0123	Correlation Location 3
11/14/2016 11:50	0.0128	Correlation Location 3
11/14/2016 11:50	0.013	Correlation Location 3
11/14/2016 11:50	0.0131	Correlation Location 3
11/14/2016 11:50	0.013	Correlation Location 3
11/14/2016 11:50	0.0134	Correlation Location 3
11/14/2016 11:50	0.0135	Correlation Location 3
11/14/2016 11:51	0.0133	Correlation Location 3
11/14/2016 11:51	0.0134	Correlation Location 3
11/14/2016 11:51	0.0131	Correlation Location 3
11/14/2016 11:51	0.0123	Correlation Location 3
11/14/2016 11:51	0.0122	Correlation Location 3
11/14/2016 11:51	0.0123	Correlation Location 3
11/14/2016 11:51	0.0124	Correlation Location 3
11/14/2016 11:51	0.0123	Correlation Location 3
11/14/2016 11:51	0.0124	Correlation Location 3
11/14/2016 11:51	0.0127	Correlation Location 3
11/14/2016 11:52	0.013	Correlation Location 3
11/14/2016 11:52	0.0129	Correlation Location 3
11/14/2016 11:52	0.0124	Correlation Location 3
11/14/2016 12:13	0.0536	Correlation Location 4
11/14/2016 12:13	0.0934	Correlation Location 4
11/14/2016 12:13	0.081	Correlation Location 4
11/14/2016 12:13	0.0551	Correlation Location 4

Hoskie Tso No. 1. Exposure Rate Measurements for Correlation

Date and Time	Exposure Rate (mR/h)	Location
11/14/2016 12:13	0.0359	Correlation Location 4
11/14/2016 12:14	0.0241	Correlation Location 4
11/14/2016 12:14	0.017	Correlation Location 4
11/14/2016 12:14	0.0137	Correlation Location 4
11/14/2016 12:14	0.0121	Correlation Location 4
11/14/2016 12:14	0.0114	Correlation Location 4
11/14/2016 12:14	0.0112	Correlation Location 4
11/14/2016 12:14	0.0114	Correlation Location 4
11/14/2016 12:14	0.0114	Correlation Location 4
11/14/2016 12:14	0.0111	Correlation Location 4
11/14/2016 12:14	0.0111	Correlation Location 4
11/14/2016 12:15	0.0112	Correlation Location 4
11/14/2016 12:15	0.0112	Correlation Location 4
11/14/2016 12:15	0.011	Correlation Location 4
11/14/2016 12:15	0.0109	Correlation Location 4
11/14/2016 12:15	0.0106	Correlation Location 4
11/14/2016 12:15	0.011	Correlation Location 4
11/14/2016 12:15	0.0111	Correlation Location 4
11/14/2016 12:15	0.0111	Correlation Location 4
11/14/2016 12:15	0.0114	Correlation Location 4
11/14/2016 12:15	0.0114	Correlation Location 4
11/14/2016 12:16	0.0109	Correlation Location 4
11/14/2016 12:16	0.0105	Correlation Location 4
11/14/2016 12:16	0.0106	Correlation Location 4
11/14/2016 12:16	0.0111	Correlation Location 4
11/14/2016 12:16	0.0114	Correlation Location 4
11/14/2016 12:16	0.0111	Correlation Location 4
11/14/2016 12:16	0.0111	Correlation Location 4
11/14/2016 12:16	0.0111	Correlation Location 4
11/14/2016 12:16	0.011	Correlation Location 4
11/14/2016 12:16	0.0111	Correlation Location 4
11/14/2016 12:17	0.011	Correlation Location 4
11/14/2016 12:17	0.0112	Correlation Location 4
11/14/2016 12:17	0.0111	Correlation Location 4
11/14/2016 12:17	0.0109	Correlation Location 4
11/14/2016 12:17	0.0106	Correlation Location 4
11/14/2016 12:17	0.0106	Correlation Location 4
11/14/2016 12:17	0.0105	Correlation Location 4
11/14/2016 12:17	0.0105	Correlation Location 4
11/14/2016 12:17	0.0105	Correlation Location 4
11/14/2016 12:17	0.0108	Correlation Location 4
11/14/2016 12:18	0.0115	Correlation Location 4
11/14/2016 12:18	0.0118	Correlation Location 4
11/14/2016 12:18	0.0116	Correlation Location 4
11/14/2016 12:18	0.0109	Correlation Location 4
11/14/2016 12:18	0.0104	Correlation Location 4
11/14/2016 12:18	0.0105	Correlation Location 4
11/14/2016 12:18	0.0106	Correlation Location 4
11/14/2016 12:18	0.0105	Correlation Location 4
11/14/2016 12:18	0.0106	Correlation Location 4
11/14/2016 12:18	0.0106	Correlation Location 4
11/14/2016 12:19	0.0109	Correlation Location 4
11/14/2016 12:19	0.0111	Correlation Location 4
11/14/2016 12:19	0.0111	Correlation Location 4
11/14/2016 12:19	0.011	Correlation Location 4
11/14/2016 12:19	0.0109	Correlation Location 4

Date and Time	Exposure Rate (mR/h)	Location
11/14/2016 12:19	0.0111	Correlation Location 4
11/14/2016 12:19	0.0115	Correlation Location 4
11/14/2016 12:19	0.0116	Correlation Location 4
11/14/2016 12:19	0.0114	Correlation Location 4
11/14/2016 12:19	0.011	Correlation Location 4
11/14/2016 12:20	0.0105	Correlation Location 4
11/14/2016 12:20	0.0106	Correlation Location 4
11/14/2016 12:20	0.0111	Correlation Location 4
11/14/2016 12:20	0.011	Correlation Location 4
11/14/2016 12:20	0.0106	Correlation Location 4
11/14/2016 12:20	0.0106	Correlation Location 4
11/14/2016 12:20	0.011	Correlation Location 4
11/14/2016 12:20	0.0111	Correlation Location 4
11/14/2016 12:20	0.011	Correlation Location 4
11/14/2016 12:20	0.0109	Correlation Location 4
11/14/2016 12:21	0.0109	Correlation Location 4
11/14/2016 12:21	0.011	Correlation Location 4
11/14/2016 12:21	0.0111	Correlation Location 4
11/14/2016 12:21	0.0111	Correlation Location 4
11/14/2016 12:21	0.0109	Correlation Location 4
11/14/2016 12:21	0.0105	Correlation Location 4
11/14/2016 12:21	0.0105	Correlation Location 4
11/14/2016 12:21	0.0105	Correlation Location 4
11/14/2016 12:21	0.0106	Correlation Location 4
11/14/2016 12:21	0.0108	Correlation Location 4
11/14/2016 12:22	0.0106	Correlation Location 4
11/14/2016 12:22	0.011	Correlation Location 4
11/14/2016 12:22	0.0109	Correlation Location 4
11/14/2016 12:22	0.0108	Correlation Location 4
11/14/2016 12:22	0.0109	Correlation Location 4
11/14/2016 12:22	0.0109	Correlation Location 4
11/14/2016 12:22	0.011	Correlation Location 4
11/14/2016 12:22	0.0111	Correlation Location 4
11/14/2016 12:22	0.0112	Correlation Location 4
11/14/2016 12:22	0.0111	Correlation Location 4
11/14/2016 12:23	0.0111	Correlation Location 4
11/14/2016 12:23	0.0114	Correlation Location 4
11/14/2016 12:23	0.0111	Correlation Location 4
11/14/2016 12:23	0.011	Correlation Location 4
11/14/2016 12:23	0.0108	Correlation Location 4
11/14/2016 12:23	0.0105	Correlation Location 4
11/14/2016 12:23	0.0103	Correlation Location 4
11/14/2016 12:23	0.0103	Correlation Location 4
11/14/2016 12:23	0.0105	Correlation Location 4
11/14/2016 12:23	0.0108	Correlation Location 4
11/14/2016 12:24	0.0109	Correlation Location 4
11/14/2016 12:24	0.0109	Correlation Location 4
11/14/2016 12:24	0.0105	Correlation Location 4
11/14/2016 12:48	0.0555	Correlation Location 5
11/14/2016 12:48	0.0978	Correlation Location 5
11/14/2016 12:48	0.087	Correlation Location 5
11/14/2016 12:48	0.062	Correlation Location 5
11/14/2016 12:48	0.0431	Correlation Location 5
11/14/2016 12:48	0.0317	Correlation Location 5
11/14/2016 12:48	0.0259	Correlation Location 5
11/14/2016 12:48	0.0225	Correlation Location 5

Hoskie Tso No. 1. Exposure Rate Measurements for Correlation

Date and Time	Exposure Rate (mR/h)	Location
11/14/2016 12:49	0.021	Correlation Location 5
11/14/2016 12:49	0.0205	Correlation Location 5
11/14/2016 12:49	0.0201	Correlation Location 5
11/14/2016 12:49	0.0199	Correlation Location 5
11/14/2016 12:49	0.0198	Correlation Location 5
11/14/2016 12:49	0.0197	Correlation Location 5
11/14/2016 12:49	0.0197	Correlation Location 5
11/14/2016 12:49	0.0198	Correlation Location 5
11/14/2016 12:49	0.0196	Correlation Location 5
11/14/2016 12:49	0.0198	Correlation Location 5
11/14/2016 12:50	0.0197	Correlation Location 5
11/14/2016 12:50	0.0196	Correlation Location 5
11/14/2016 12:50	0.0192	Correlation Location 5
11/14/2016 12:50	0.0192	Correlation Location 5
11/14/2016 12:50	0.0194	Correlation Location 5
11/14/2016 12:50	0.0198	Correlation Location 5
11/14/2016 12:50	0.02	Correlation Location 5
11/14/2016 12:50	0.02	Correlation Location 5
11/14/2016 12:50	0.02	Correlation Location 5
11/14/2016 12:50	0.02	Correlation Location 5
11/14/2016 12:51	0.02	Correlation Location 5
11/14/2016 12:51	0.02	Correlation Location 5
11/14/2016 12:51	0.0194	Correlation Location 5
11/14/2016 12:51	0.0192	Correlation Location 5
11/14/2016 12:51	0.0196	Correlation Location 5
11/14/2016 12:51	0.0202	Correlation Location 5
11/14/2016 12:51	0.0202	Correlation Location 5
11/14/2016 12:51	0.02	Correlation Location 5
11/14/2016 12:51	0.0199	Correlation Location 5
11/14/2016 12:51	0.0196	Correlation Location 5
11/14/2016 12:52	0.0197	Correlation Location 5
11/14/2016 12:52	0.0198	Correlation Location 5
11/14/2016 12:52	0.0196	Correlation Location 5
11/14/2016 12:52	0.0194	Correlation Location 5
11/14/2016 12:52	0.019	Correlation Location 5
11/14/2016 12:52	0.0189	Correlation Location 5
11/14/2016 12:52	0.0192	Correlation Location 5
11/14/2016 12:52	0.0194	Correlation Location 5
11/14/2016 12:52	0.0198	Correlation Location 5
11/14/2016 12:52	0.02	Correlation Location 5
11/14/2016 12:53	0.0198	Correlation Location 5
11/14/2016 12:53	0.0194	Correlation Location 5
11/14/2016 12:53	0.0198	Correlation Location 5
11/14/2016 12:53	0.02	Correlation Location 5
11/14/2016 12:53	0.0197	Correlation Location 5
11/14/2016 12:53	0.0194	Correlation Location 5
11/14/2016 12:53	0.019	Correlation Location 5
11/14/2016 12:53	0.0194	Correlation Location 5
11/14/2016 12:53	0.0198	Correlation Location 5
11/14/2016 12:53	0.0197	Correlation Location 5
11/14/2016 12:54	0.02	Correlation Location 5
11/14/2016 12:54	0.02	Correlation Location 5
11/14/2016 12:54	0.02	Correlation Location 5
11/14/2016 12:54	0.02	Correlation Location 5
11/14/2016 12:54	0.0198	Correlation Location 5
11/14/2016 12:54	0.0194	Correlation Location 5
11/14/2016 12:54	0.0194	Correlation Location 5
11/14/2016 12:54	0.0194	Correlation Location 5
11/14/2016 12:54	0.0196	Correlation Location 5
11/14/2016 12:54	0.02	Correlation Location 5
11/14/2016 12:55	0.0206	Correlation Location 5
11/14/2016 12:55	0.0208	Correlation Location 5
11/14/2016 12:55	0.0209	Correlation Location 5
11/14/2016 12:55	0.021	Correlation Location 5
11/14/2016 12:55	0.0202	Correlation Location 5
11/14/2016 12:55	0.0201	Correlation Location 5
11/14/2016 12:55	0.0201	Correlation Location 5
11/14/2016 12:55	0.02	Correlation Location 5
11/14/2016 12:55	0.02	Correlation Location 5
11/14/2016 12:55	0.02	Correlation Location 5
11/14/2016 12:56	0.0201	Correlation Location 5
11/14/2016 12:56	0.0204	Correlation Location 5
11/14/2016 12:56	0.0201	Correlation Location 5
11/14/2016 12:56	0.0199	Correlation Location 5
11/14/2016 12:56	0.0197	Correlation Location 5
11/14/2016 12:56	0.02	Correlation Location 5
11/14/2016 12:56	0.0202	Correlation Location 5
11/14/2016 12:56	0.0201	Correlation Location 5
11/14/2016 12:56	0.02	Correlation Location 5
11/14/2016 12:56	0.0194	Correlation Location 5
11/14/2016 12:57	0.0194	Correlation Location 5
11/14/2016 12:57	0.0194	Correlation Location 5
11/14/2016 12:57	0.0197	Correlation Location 5
11/14/2016 12:57	0.0199	Correlation Location 5
11/14/2016 12:57	0.0196	Correlation Location 5
11/14/2016 12:57	0.0197	Correlation Location 5
11/14/2016 12:57	0.02	Correlation Location 5
11/14/2016 12:57	0.02	Correlation Location 5
11/14/2016 12:57	0.02	Correlation Location 5
11/14/2016 12:57	0.0197	Correlation Location 5
11/14/2016 12:58	0.0196	Correlation Location 5
11/14/2016 12:58	0.0194	Correlation Location 5
11/14/2016 12:58	0.0194	Correlation Location 5
11/14/2016 12:58	0.0198	Correlation Location 5
11/14/2016 12:58	0.02	Correlation Location 5
11/14/2016 12:58	0.02	Correlation Location 5
11/14/2016 12:58	0.02	Correlation Location 5
11/14/2016 12:58	0.0199	Correlation Location 5
11/14/2016 12:58	0.02	Correlation Location 5
11/14/2016 12:58	0.0202	Correlation Location 5

Hoskie Tso No. 1. Exposure Rate Measurements for Correlation

Appendix B Site Photographs

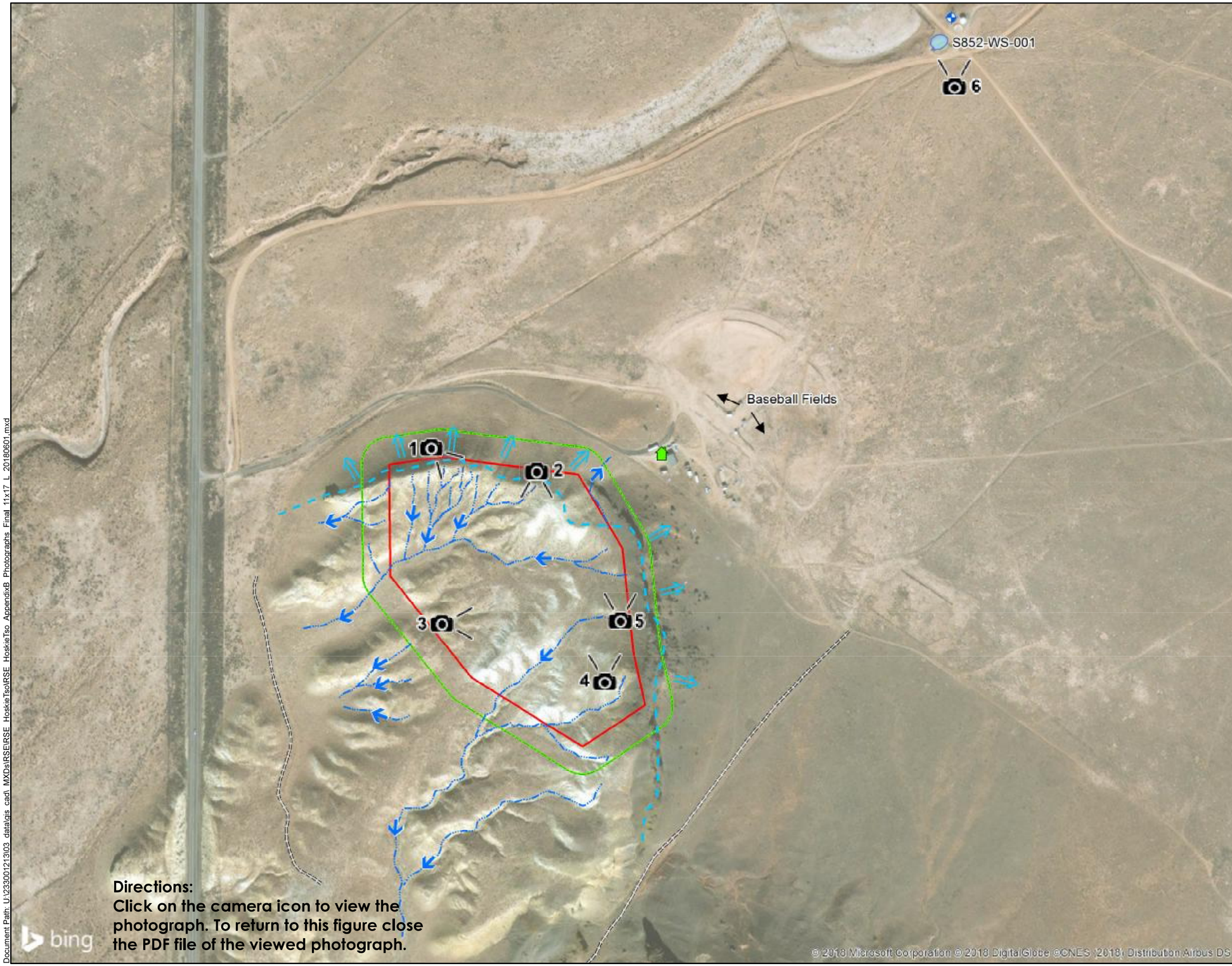

NAVAJO NATION
AUM Environmental Response Trust-First Phase

LEGEND

- Photograph Indicating Direction Taken
- Habitable Building
- Well
- Flow Direction
- Approximate Overland Water Flow Direction
- Approximate Watershed Divide Line
- Drainage
- Historical Road
- Pond
- Claim Boundary
- 100-Foot Claim Buffer

NOTE:
BING image may exhibit slight shift of 10 - 15' in the East-West direction.

REFERENCES:
Coordinate System: NAD 1983 UTM Zone 12N

Basemap image accessed from BING Maps imagery web mapping service (http://www.bing.com/maps) on 06/2018.

N
W E
S

0 350 700
Feet

TITLE:
Site Photographs

PROJECT:
Removal Site Evaluation
Hoskie Tso No. 1 Mine Site

DATE: 6/18/2018

DOCUMENT NAME: Removal Site Evaluation Report

Stantec

AUTHOR: CBB

REVIEWER: EDZ

FIGURE: Appendix B

Document Path: U:\233001213\03_data\gis_cad_MXDs\RSE\RSE_HoskieTso\RSE_HoskieTso_AppendixB_Photographs_Final_11x17_L_20180601.mxd

Appendix C Field Activity Forms

C.1 Soil Sample Field Forms

C.2 Hand Auger Borehole Logs

C.3 Water Sample Field Forms

C.1 Soil Sample Field Forms

SURFACE SOIL SAMPLE LOG FORM

AREA #/NAME Hosku Tso

SAMPLE I.D. S852-BG1-001 S852-BG1-201 (DUP)

SAMPLE COLLECTION DATE 10/20/16

SAMPLE COLLECTION TIME 1332

SAMPLE COLLECTED BY JK

WEATHER CONDITIONS Sunny, 60's

FIELD USCS DESCRIPTIONS Sandy silt with 20-30% shale gravel/cobbles

MAJOR DIVISIONS: ☐ OH ☐ CH ☐ MH ☐ OH ☐ CL ☐ ML ☐ SC
☒ SM ☐ SP ☐ SW ☐ GC ☐ GM ☐ GP ☐ GW

QUALIFIERS: ☐ TRACE ☐ MINOR ☒ SOME; SAND SIZE ☒ FINE ☐ MEDIUM ☐ COARSE

MOISTURE: ☒ DRY ☐ MOIST ☐ WET

SAMPLE CONTAINERS (NUMBER AND TYPE) 4 ziplocs

ANALYSES: Ra-226, metals

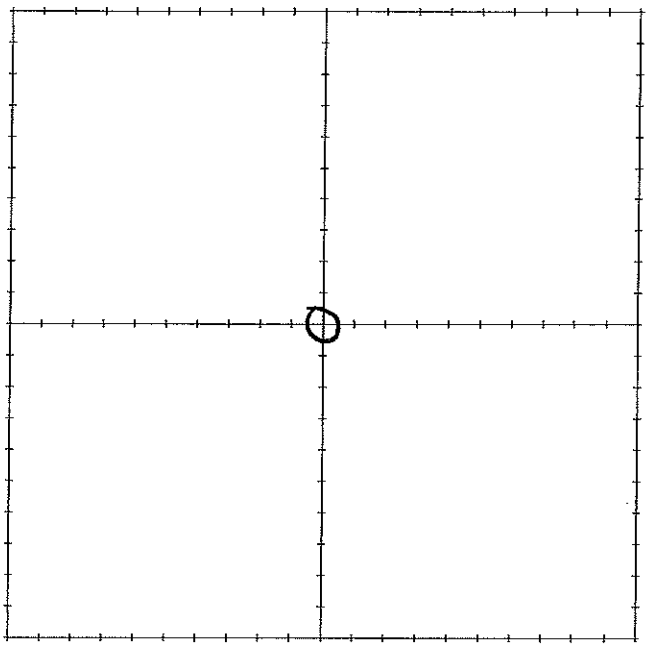

MARK INDIVIDUAL GRAB SAMPLE LOCATIONS IN GRID

MWH

SURFACE SOIL SAMPLE LOG FORM

AREA #/NAME Hoskie Tso

SAMPLE I.D. S852-B621-002

SAMPLE COLLECTION DATE 10/20/16

SAMPLE COLLECTION TIME 1340

SAMPLE COLLECTED BY JK

WEATHER CONDITIONS Sunny, 60's

FIELD USCS DESCRIPTIONS Dry ~~sad~~ sandy silt with 10% shale gravels

MAJOR DIVISIONS: ☐ OH ☐ CH ☐ MH ☐ OH ☐ CL ☐ ML ☐ SC
☒ SM ☐ SP ☐ SW ☐ GC ☐ GM ☐ GP ☐ GW

QUALIFIERS: ☐ TRACE ☐ MINOR ☒ SOME; SAND SIZE ☒ FINE ☐ MEDIUM ☐ COARSE

MOISTURE: ☒ DRY ☐ MOIST ☐ WET

SAMPLE CONTAINERS (NUMBER AND TYPE) 2 ziplocs

ANALYSES: Ra-226, metals

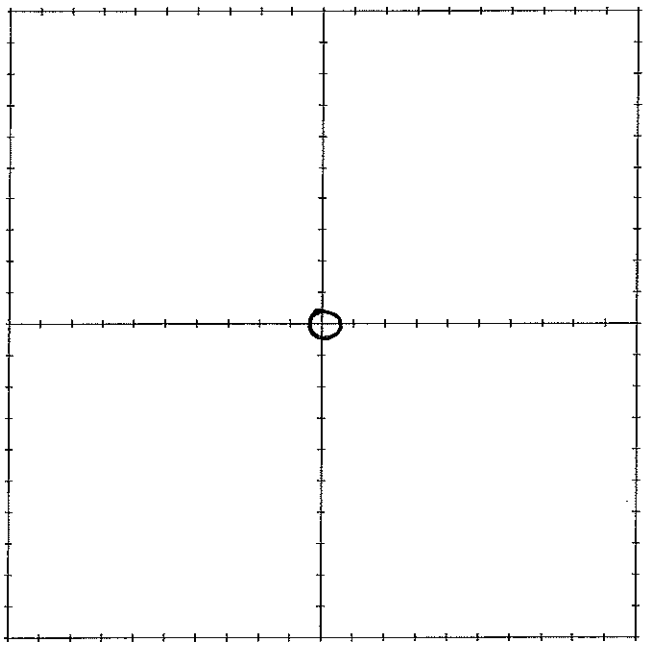

MARK INDIVIDUAL GRAB SAMPLE LOCATIONS IN GRID

MWH

SURFACE SOIL SAMPLE LOG FORM

AREA #/NAME Hooke Tso

SAMPLE I.D. S852-BG1-003

SAMPLE COLLECTION DATE 10/20/16

SAMPLE COLLECTION TIME 1346

SAMPLE COLLECTED BY ~~JTR~~ JK

WEATHER CONDITIONS Sunny 60's

FIELD USCS DESCRIPTIONS Dry silt with some sand, trace-5% gravels

MAJOR DIVISIONS: ☐ OH ☐ CH ☐ MH ☐ OH ☐ CL ☐ ML ☐ SC
☒ SM ☐ SP ☐ SW ☐ GC ☐ GM ☐ GP ☐ GW

QUALIFIERS: ☐ TRACE ☐ MINOR ☒ SOME; SAND SIZE ☒ FINE ☐ MEDIUM ☐ COARSE

MOISTURE: ☒ DRY ☐ MOIST ☐ WET

SAMPLE CONTAINERS (NUMBER AND TYPE) 2 Ziplocs

ANALYSES: Ra-226, metals

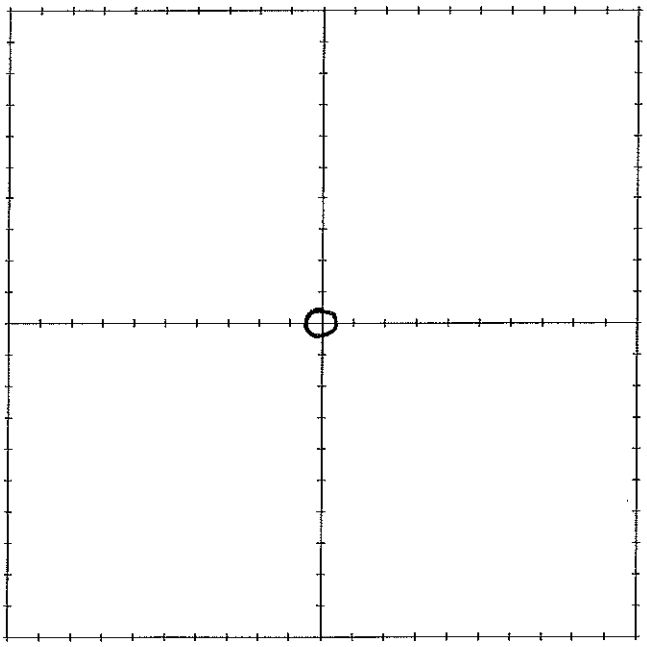

MARK INDIVIDUAL GRAB SAMPLE LOCATIONS IN GRID

SURFACE SOIL SAMPLE LOG FORM

AREA #/NAME Hoskie Tso

SAMPLE I.D. S852-BG1-004

SAMPLE COLLECTION DATE 10/20/16

SAMPLE COLLECTION TIME 1352

SAMPLE COLLECTED BY JK

WEATHER CONDITIONS Sunny, 60°

FIELD USCS DESCRIPTIONS Dry sandy silt, trace - 5% gravels

MAJOR DIVISIONS: ☐ OH ☐ CH ☐ MH ☐ OH ☐ CL ☐ ML ☐ SC
☒ SM ☐ SP ☐ SW ☐ GC ☐ GM ☐ GP ☐ GW

QUALIFIERS: ☐ TRACE ☐ MINOR ☒ SOME; SAND SIZE ☒ FINE ☐ MEDIUM ☐ COARSE

MOISTURE: ☒ DRY ☐ MOIST ☐ WET

SAMPLE CONTAINERS (NUMBER AND TYPE) 2 Ziplocs

ANALYSES: Ra-226, metals

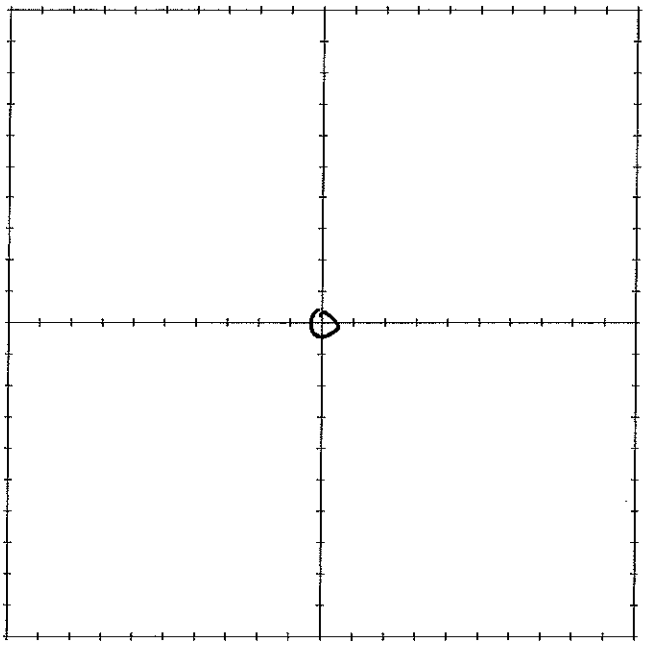

MARK INDIVIDUAL GRAB SAMPLE LOCATIONS IN GRID

SURFACE SOIL SAMPLE LOG FORM

AREA #/NAME Hoskill Tso

SAMPLE I.D. S852-B61-005

SAMPLE COLLECTION DATE ~~1356~~ 10/20/16

SAMPLE COLLECTION TIME 1356

SAMPLE COLLECTED BY JK

WEATHER CONDITIONS Sunny, 60°

FIELD USCS DESCRIPTIONS Dry sandy silt w trace-5% gravels

MAJOR DIVISIONS: ☐ OH ☐ CH ☐ MH ☒ OH ☐ CL ☐ ML ☐ SC
☒ SM ☐ SP ☐ SW ☐ GC ☐ GM ☐ GP ☐ GW

QUALIFIERS: ☐ TRACE ☐ MINOR ☒ SOME; SAND SIZE ☒ FINE ☐ MEDIUM ☐ COARSE

MOISTURE: ☒ DRY ☐ MOIST ☐ WET

SAMPLE CONTAINERS (NUMBER AND TYPE) 2 ziplocs

ANALYSES: Ra-226, metals

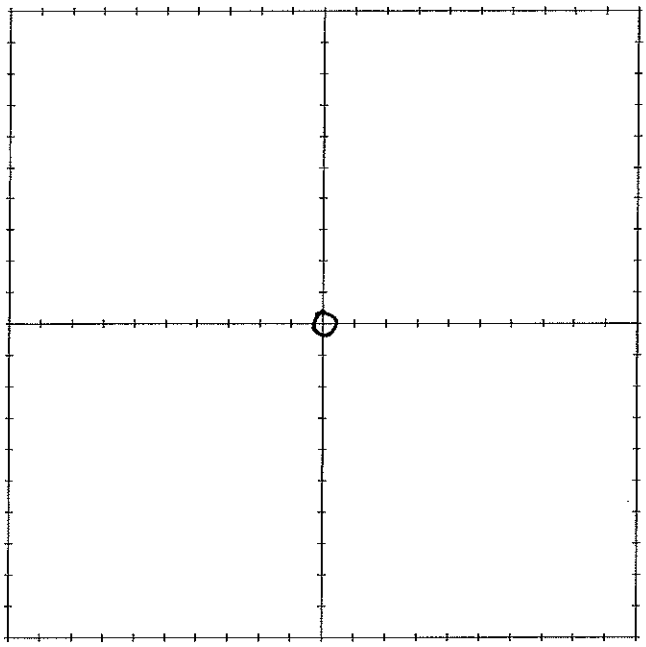

MARK INDIVIDUAL GRAB SAMPLE LOCATIONS IN GRID

MWH

SURFACE SOIL SAMPLE LOG FORM

AREA #/NAME Hoskie Tso

SAMPLE I.D. S852-BG1-006

SAMPLE COLLECTION DATE 10/20/16

SAMPLE COLLECTION TIME 1402

SAMPLE COLLECTED BY JK

WEATHER CONDITIONS Sunny, 60°

FIELD USCS DESCRIPTIONS Dry sandy silt w/ 15% shale gravels

MAJOR DIVISIONS: ☐ OH ☐ CH ☐ MH ☐ OH ☐ CL ☐ ML ☐ SC
☒ SM ☐ SP ☐ SW ☐ GC ☐ GM ☐ GP ☐ GW

QUALIFIERS: ☐ TRACE ☐ MINOR ☒ SOME; SAND SIZE ☒ FINE ☒ MEDIUM ☐ COARSE

MOISTURE: ☒ DRY ☐ MOIST ☐ WET

SAMPLE CONTAINERS (NUMBER AND TYPE) 2 ziplocs

ANALYSES: Ra-226, metals

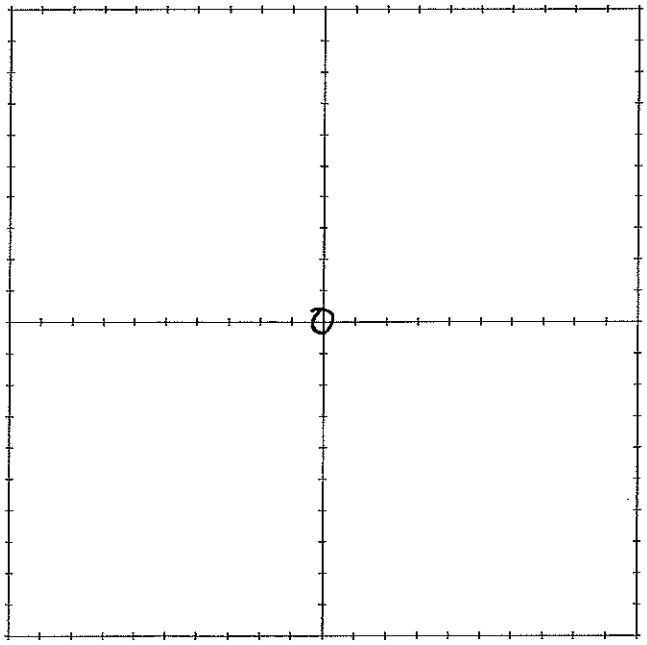

MARK INDIVIDUAL GRAB SAMPLE LOCATIONS IN GRID

MWH

SURFACE SOIL SAMPLE LOG FORM

AREA #/NAME Hoskie Two

SAMPLE I.D. S852-BG1-007

SAMPLE COLLECTION DATE 10/20/16

SAMPLE COLLECTION TIME 1406

SAMPLE COLLECTED BY J.K.

WEATHER CONDITIONS Sunny, 60°

FIELD USCS DESCRIPTIONS Dry gray silt w/ sand, 5-10% shale gravels, popcorn texture, 4 clays

MAJOR DIVISIONS: ☐ OH ☐ CH ☐ MH ☐ OH ☐ CL ☐ ML ☐ SC
☒ SM ☐ SP ☐ SW ☐ GC ☐ GM ☐ GP ☐ GW

QUALIFIERS: ☐ TRACE ☐ MINOR ☒ SOME; SAND SIZE ☒ FINE ☐ MEDIUM ☐ COARSE

MOISTURE: ☒ DRY ☐ MOIST ☐ WET

SAMPLE CONTAINERS (NUMBER AND TYPE) 2 ~~Ziplocs~~ Ziplocs

ANALYSES: Ra-226, metals

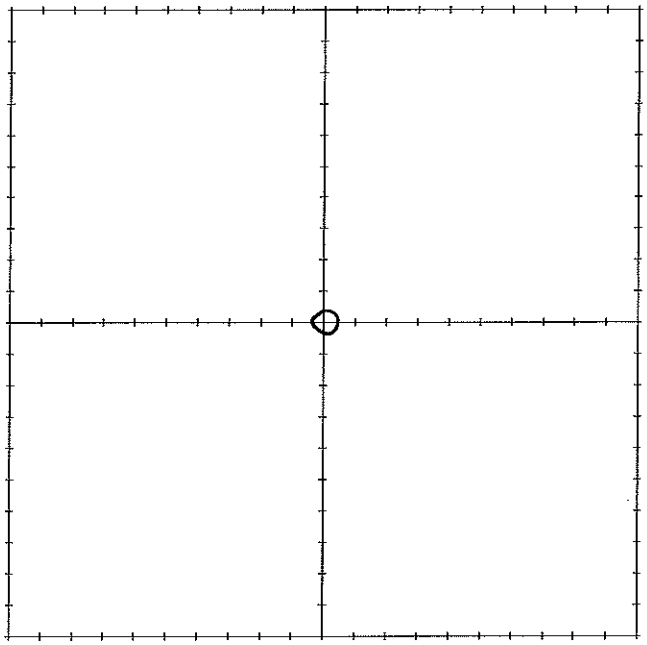

MARK INDIVIDUAL GRAB SAMPLE LOCATIONS IN GRID

SURFACE SOIL SAMPLE LOG FORM

AREA #/NAME Hoskie Tso

SAMPLE I.D. S852-BG1-008

SAMPLE COLLECTION DATE 10/20/16

SAMPLE COLLECTION TIME 1413

SAMPLE COLLECTED BY JK

WEATHER CONDITIONS Sunny 60°

FIELD USCS DESCRIPTIONS Dry silt with sand, ~~to~~ 15% shale gravels, roots

MAJOR DIVISIONS: ☐ OH ☐ CH ☐ MH ☐ OH ☐ CL ☐ ML ☐ SC
☒ SM ☐ SP ☐ SW ☐ GC ☐ GM ☐ GP ☐ GW

QUALIFIERS: ☐ TRACE ☐ MINOR ☒ SOME; SAND SIZE ☒ FINE ☒ MEDIUM ☐ COARSE

MOISTURE: ☒ DRY ☐ MOIST ☐ WET

SAMPLE CONTAINERS (NUMBER AND TYPE) 2 ziplocs

ANALYSES: Ra-226 - Metals

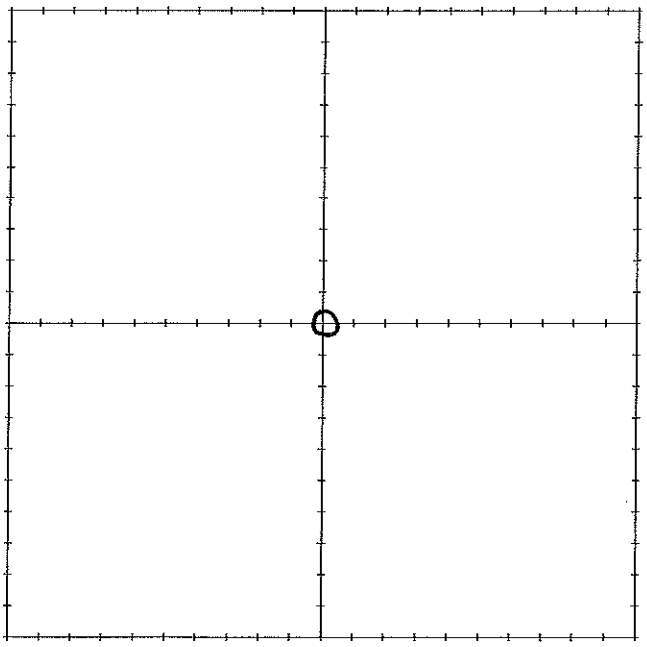

MARK INDIVIDUAL GRAB SAMPLE LOCATIONS IN GRID

MWH

SURFACE SOIL SAMPLE LOG FORM

AREA #/NAME Hoskie TSO

SAMPLE I.D. S852-BG1-009

SAMPLE COLLECTION DATE 10/20/16

SAMPLE COLLECTION TIME 1415

SAMPLE COLLECTED BY JK

WEATHER CONDITIONS Sunny 60°

FIELD USCS DESCRIPTIONS Dry orange-brown silt with sand, trace gravels & minor clays

MAJOR DIVISIONS: ☐ OH ☐ CH ☐ MH ☐ OH ☐ CL ☐ ML ☐ SC
☒ SM ☐ SP ☐ SW ☐ GC ☐ GM ☐ GP ☐ GW

QUALIFIERS: ☐ TRACE ☒ MINOR ☐ SOME; SAND SIZE ☒ FINE ☒ MEDIUM ☐ COARSE

MOISTURE: ☒ DRY ☐ MOIST ☐ WET

SAMPLE CONTAINERS (NUMBER AND TYPE) 2 ziplocs

ANALYSES: Ra-226, metals

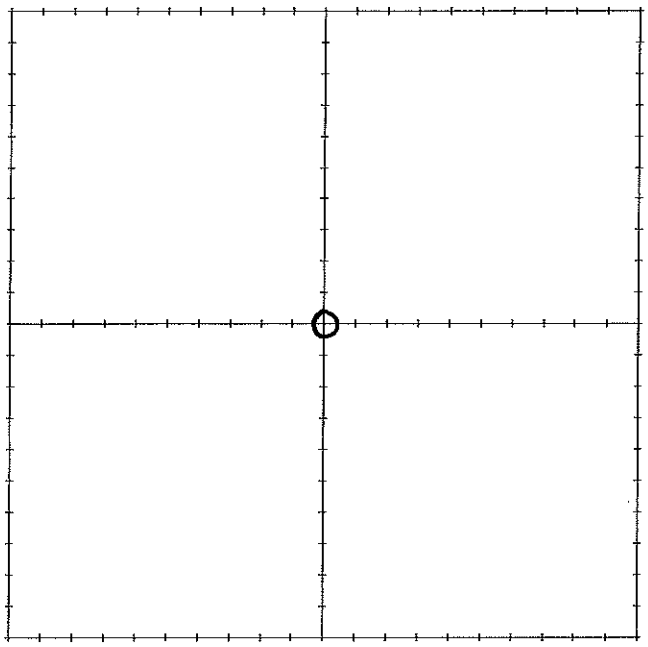

MARK INDIVIDUAL GRAB SAMPLE LOCATIONS IN GRID

MWH

SURFACE SOIL SAMPLE LOG FORM

AREA #/NAME Hoskie Tso

SAMPLE I.D. S852-B621-010

SAMPLE COLLECTION DATE 10/20/16

SAMPLE COLLECTION TIME 1425

SAMPLE COLLECTED BY JK

WEATHER CONDITIONS Sunny, 60°

FIELD USCS DESCRIPTIONS Dry silt w some sand, trace clay & gravels

MAJOR DIVISIONS: ☐ OH ☐ CH ☐ MH ☐ OH ☐ CL ☐ ML ☐ SC
☒ SM ☐ SP ☐ SW ☐ GC ☐ GM ☐ GP ☐ GW

QUALIFIERS: ☐ TRACE ☐ MINOR ☒ SOME; SAND SIZE ☒ FINE ☒ MEDIUM ☐ COARSE

MOISTURE: ☒ DRY ☐ MOIST ☐ WET

SAMPLE CONTAINERS (NUMBER AND TYPE) 2 Ziplocs

ANALYSES: Ra-226, metals

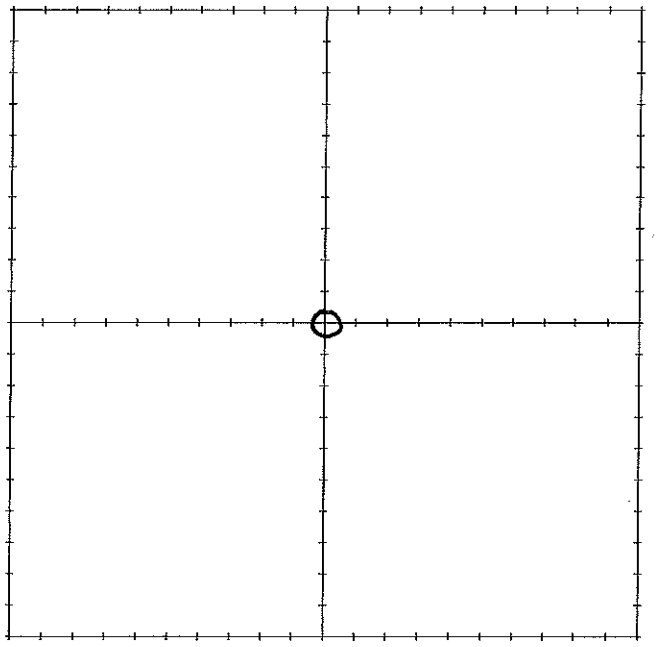

MARK INDIVIDUAL GRAB SAMPLE LOCATIONS IN GRID

MWH

SURFACE SOIL SAMPLE LOG FORM

AREA #/NAME Hoskie Tso

SAMPLE I.D. S852-BG2-001 / 201 (Dup)

SAMPLE COLLECTION DATE 10/20/16

SAMPLE COLLECTION TIME 1451

SAMPLE COLLECTED BY JK

WEATHER CONDITIONS Sunny, 60s

FIELD USCS DESCRIPTIONS Dry silt, minor clay, 15-20% Basalt gravels, minor sand

MAJOR DIVISIONS: ☐ OH ☐ CH ☐ MH ☐ OH ☐ CL ☒ ML ☐ SC
☐ SM ☐ SP ☐ SW ☐ GC ☐ GM ☐ GP ☐ GW

QUALIFIERS: ☐ TRACE ☒ MINOR ☐ SOME; SAND SIZE ☒ FINE ☐ MEDIUM ☐ COARSE

MOISTURE: ☒ DRY ☐ MOIST ☐ WET

SAMPLE CONTAINERS (NUMBER AND TYPE) 2 ziplocs

ANALYSES: Ra-226, metals

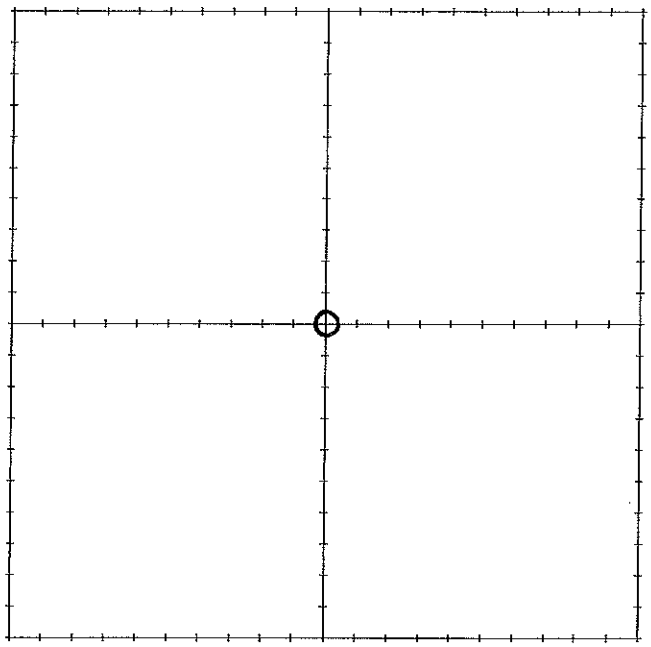

MARK INDIVIDUAL GRAB SAMPLE LOCATIONS IN GRID

MWH

SURFACE SOIL SAMPLE LOG FORM

AREA #/NAME Haskie Tso

SAMPLE I.D. S852-BG2-002

SAMPLE COLLECTION DATE 10/20/16

SAMPLE COLLECTION TIME 1505

SAMPLE COLLECTED BY JK

WEATHER CONDITIONS Sunny, 60's

FIELD USCS DESCRIPTIONS Dry silt with clays/sands & 15% gravel

MAJOR DIVISIONS: ☐ OH ☐ CH ☐ MH ☐ OH ☐ CL ☒ ML ☐ SC
☐ SM ☐ SP ☐ SW ☐ GC ☐ GM ☐ GP ☐ GW

QUALIFIERS: ☐ TRACE ☒ MINOR ☐ SOME; SAND SIZE ☐ FINE ☐ MEDIUM ☐ COARSE

MOISTURE: ☒ DRY ☐ MOIST ☐ WET

SAMPLE CONTAINERS (NUMBER AND TYPE) 2 Ziplocs

ANALYSES: Ra-226, metals

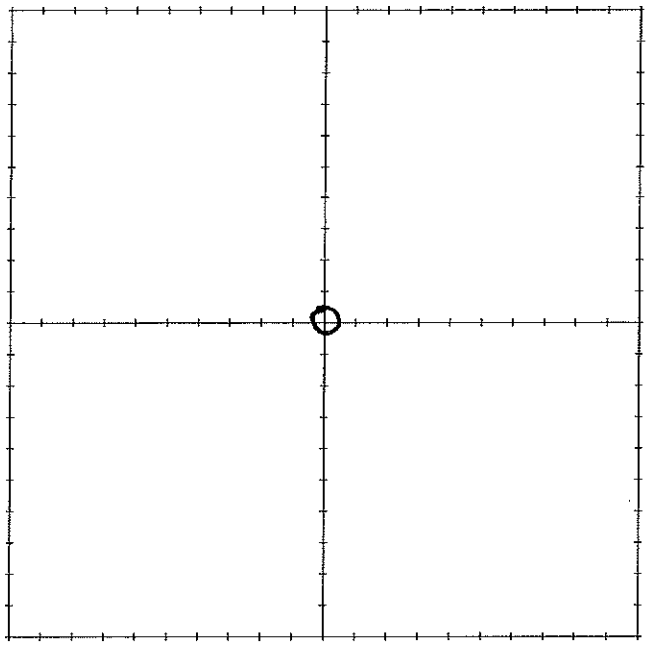

MARK INDIVIDUAL GRAB SAMPLE LOCATIONS IN GRID

MWH

SURFACE SOIL SAMPLE LOG FORM

AREA #/NAME Hoskie Tso

SAMPLE I.D. 3852-BG2-003

SAMPLE COLLECTION DATE 10/20/16

SAMPLE COLLECTION TIME 1510

SAMPLE COLLECTED BY JK

WEATHER CONDITIONS Sunny, 60's

FIELD USCS DESCRIPTIONS Dry silt with clay, 15% sand, 20% gravels

MAJOR DIVISIONS: ☐ OH ☐ CH ☐ MH ☐ OH ☐ CL ☒ ML ☐ SC
☐ SM ☐ SP ☐ SW ☐ GC ☐ GM ☐ GP ☐ GW

QUALIFIERS: ☐ TRACE ☐ MINOR ☒ SOME; SAND SIZE ☒ FINE ☒ MEDIUM ☐ COARSE

MOISTURE: ☒ DRY ☐ MOIST ☐ WET

SAMPLE CONTAINERS (NUMBER AND TYPE) 2 ziplocs

ANALYSES: Ra-226, metals

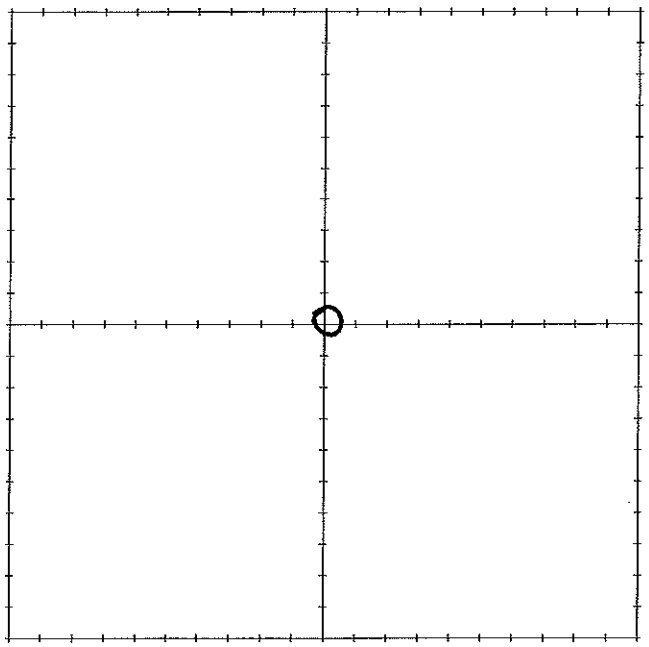

MARK INDIVIDUAL GRAB SAMPLE LOCATIONS IN GRID

MWH

SURFACE SOIL SAMPLE LOG FORM

AREA #/NAME Hoskie Tso

SAMPLE I.D. S&S2 - BG2 - 004

SAMPLE COLLECTION DATE 10/20/14

SAMPLE COLLECTION TIME 1516

SAMPLE COLLECTED BY JK

WEATHER CONDITIONS sunny, 60°

FIELD USCS DESCRIPTIONS Dry silt, trace clay & sand, 20% gravels

MAJOR DIVISIONS: ☐ OH ☐ CH ☐ MH ☐ OH ☐ CL ☒ ML ☐ SC
☐ SM ☐ SP ☐ SW ☐ GC ☐ GM ☐ GP ☐ GW

QUALIFIERS: ☐ TRACE ☐ MINOR ☒ SOME; SAND SIZE ☒ FINE ☐ MEDIUM ☐ COARSE

MOISTURE: ☒ DRY ☐ MOIST ☐ WET

SAMPLE CONTAINERS (NUMBER AND TYPE) 2 ziplocs

ANALYSES: Ra-226, metals

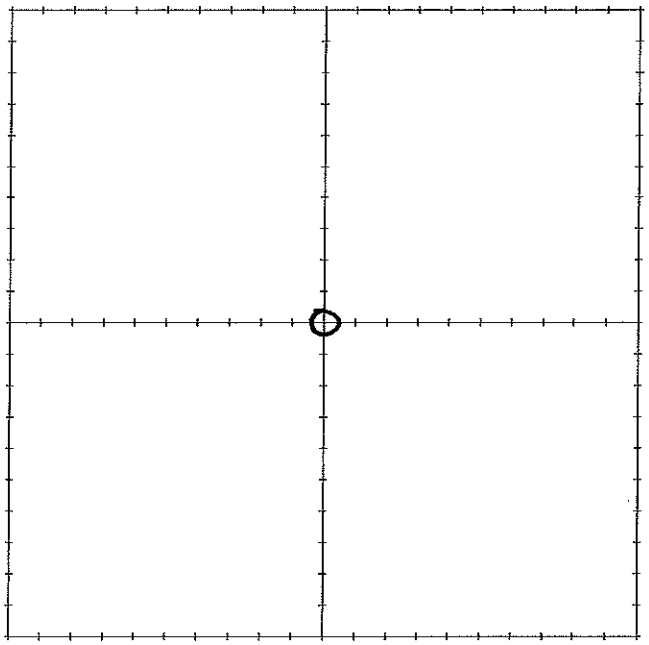

MARK INDIVIDUAL GRAB SAMPLE LOCATIONS IN GRID

MWH

SURFACE SOIL SAMPLE LOG FORM

AREA #/NAME Hoskee Tso

SAMPLE I.D. S&S2 - BG2-005

SAMPLE COLLECTION DATE 10/20/16

SAMPLE COLLECTION TIME 1520

SAMPLE COLLECTED BY JK

WEATHER CONDITIONS Sunny, 60's

FIELD USCS DESCRIPTIONS Dry silt, 10% sand, trace clay, 10% gravels

MAJOR DIVISIONS: ☐ OH ☐ CH ☐ MH ☐ OH ☐ CL ☐ ML ☐ SC
☒ SM ☐ SP ☐ SW ☐ GC ☐ GM ☐ GP ☐ GW

QUALIFIERS: ☐ TRACE ☒ MINOR ☐ SOME; SAND SIZE ☒ FINE ☒ MEDIUM ☐ COARSE

MOISTURE: ☒ DRY ☐ MOIST ☐ WET

SAMPLE CONTAINERS (NUMBER AND TYPE) 2 Ziplocs

ANALYSES: Ra-226, metals

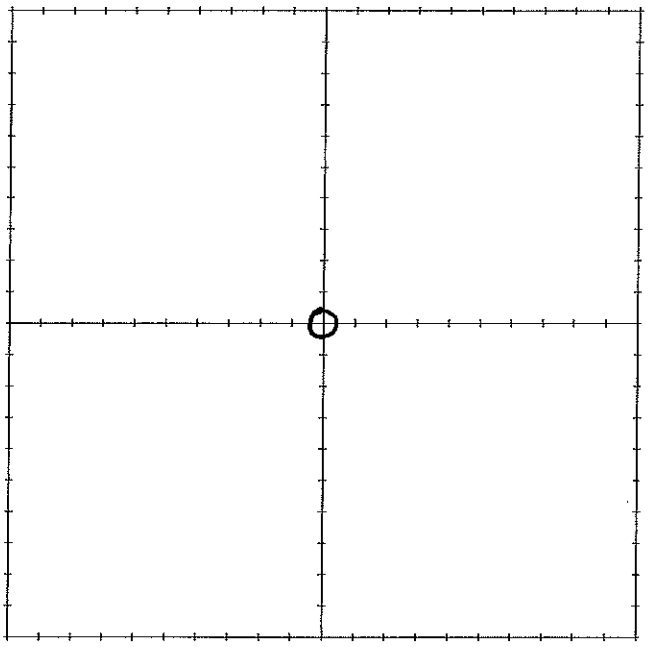

MARK INDIVIDUAL GRAB SAMPLE LOCATIONS IN GRID

SURFACE SOIL SAMPLE LOG FORM

AREA #/NAME Haskie Tso

SAMPLE I.D. ~~TS~~ S852-BG2-006

SAMPLE COLLECTION DATE 10/20/16

SAMPLE COLLECTION TIME 1525

SAMPLE COLLECTED BY JK

WEATHER CONDITIONS sunny, 60°

FIELD USCS DESCRIPTIONS Dry gravelly silt

MAJOR DIVISIONS: ☐ OH ☐ CH ☐ MH ☐ OH ☐ CL ☐ ML ☐ SC
☐ SM ☐ SP ☐ SW ☐ GC, ☒ GM ☐ GP ☐ GW

QUALIFIERS: ☐ TRACE ☐ MINOR ☒ SOME; SAND SIZE ☐ FINE ☐ MEDIUM ☐ COARSE

MOISTURE: ☒ DRY ☐ MOIST ☐ WET

SAMPLE CONTAINERS (NUMBER AND TYPE) 2 ziplocs

ANALYSES: Ra-226, metals

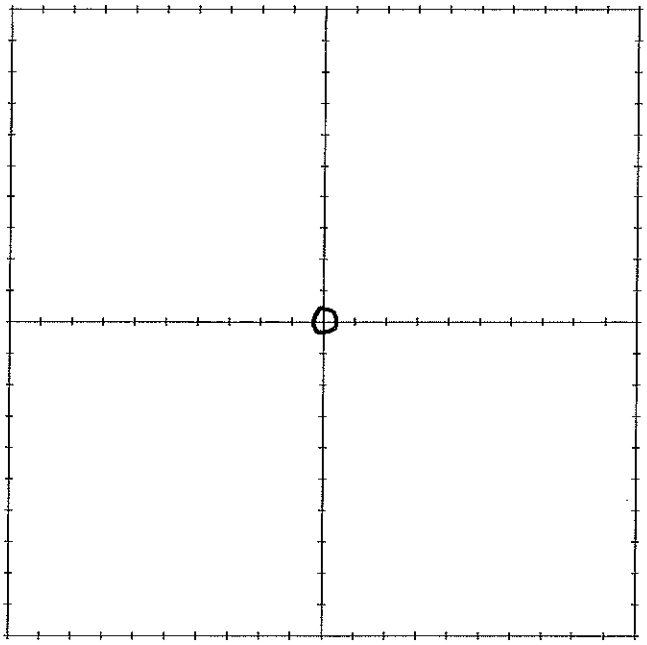

MARK INDIVIDUAL GRAB SAMPLE LOCATIONS IN GRID

MWH

SURFACE SOIL SAMPLE LOG FORM

AREA #/NAME Moskie Tso

SAMPLE I.D. S852-B02-007

SAMPLE COLLECTION DATE 10/20/16

SAMPLE COLLECTION TIME 1530

SAMPLE COLLECTED BY JK

WEATHER CONDITIONS Sunny 60's

FIELD USCS DESCRIPTIONS Gravely silt with Trace clay/sand, less gravel with depth

MAJOR DIVISIONS: ☐ OH ☐ CH ☐ MH ☐ OH ☐ CL ☐ ML ☐ SC
☐ SM ☐ SP ☐ SW ☐ GC ☑ GM ☐ GP ☐ GW

QUALIFIERS: ☐ TRACE ☐ MINOR ☑ SOME; SAND SIZE ☑ FINE ☑ MEDIUM ☐ COARSE

MOISTURE: ☑ DRY ☐ MOIST ☐ WET

SAMPLE CONTAINERS (NUMBER AND TYPE) 2 ziplocs

ANALYSES: Ra-226, metals

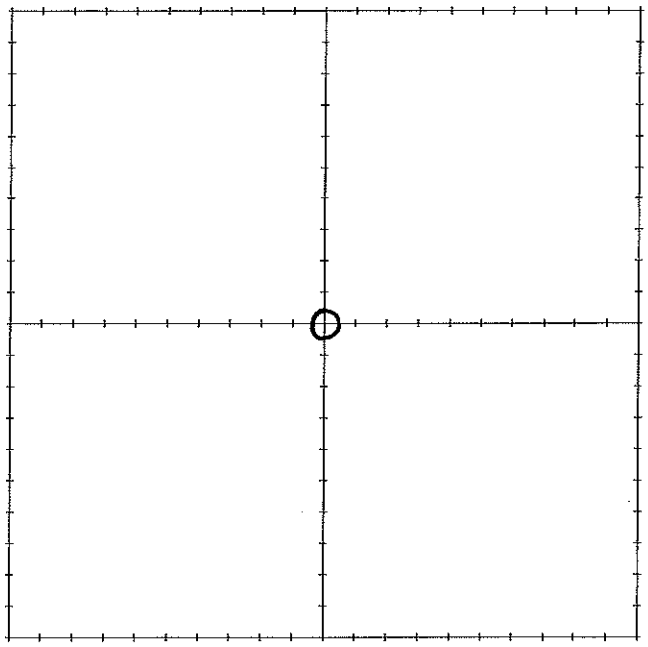

MARK INDIVIDUAL GRAB SAMPLE LOCATIONS IN GRID

MWH

SURFACE SOIL SAMPLE LOG FORM

AREA #/NAME Hoskie Tso

SAMPLE I.D. S852-BG2-008

SAMPLE COLLECTION DATE 10/20/16

SAMPLE COLLECTION TIME 1536

SAMPLE COLLECTED BY JK

WEATHER CONDITIONS Sunny, 60°

FIELD USCS DESCRIPTIONS Silt with 15-20% gravels, minor sand & clay

MAJOR DIVISIONS: ☐ OH ☐ CH ☐ MH ☐ OH ☐ CL ☐ ML ☐ SC
☒ SM ☐ SP ☐ SW ☐ GC ☐ GM ☐ GP ☐ GW

QUALIFIERS: ☐ TRACE ☒ MINOR ☐ SOME; SAND SIZE ☐ FINE ☒ MEDIUM ☐ COARSE

MOISTURE: ☒ DRY ☐ MOIST ☐ WET

SAMPLE CONTAINERS (NUMBER AND TYPE) 2 ziplocs

ANALYSES: R2 - ~~EF~~ 226, metals

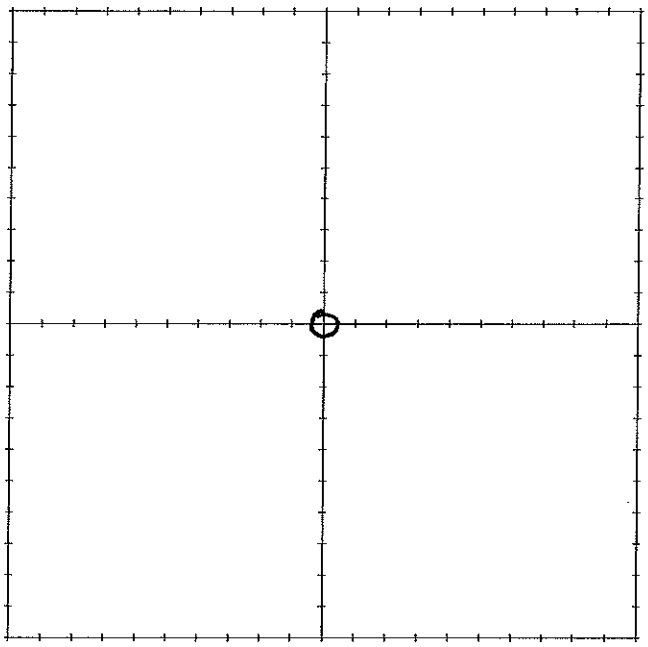

MARK INDIVIDUAL GRAB SAMPLE LOCATIONS IN GRID

MWH

SURFACE SOIL SAMPLE LOG FORM

AREA #/NAME Hoskie Tso

SAMPLE I.D. ~~S852-B002~~ S852-BG2-009/MS/MSD

SAMPLE COLLECTION DATE 10/20/16

SAMPLE COLLECTION TIME 1540

SAMPLE COLLECTED BY KJJ

WEATHER CONDITIONS Sunny, 60's

FIELD USCS DESCRIPTIONS Gravelly silt, trace sand, 20% gravels

MAJOR DIVISIONS: ☐ OH ☐ CH ☐ MH ☐ OH ☐ CL ☐ ML ☐ SC
☐ SM ☐ SP ☐ SW ☐ GC ☒ GM ☐ GP ☐ GW

QUALIFIERS: ☐ TRACE ☒ MINOR ☐ SOME; SAND SIZE ☒ FINE ☒ MEDIUM ☐ COARSE

MOISTURE: ☒ DRY ☐ MOIST ☐ WET

SAMPLE CONTAINERS (NUMBER AND TYPE) 6 ziplocs

ANALYSES: Ra 226, metals

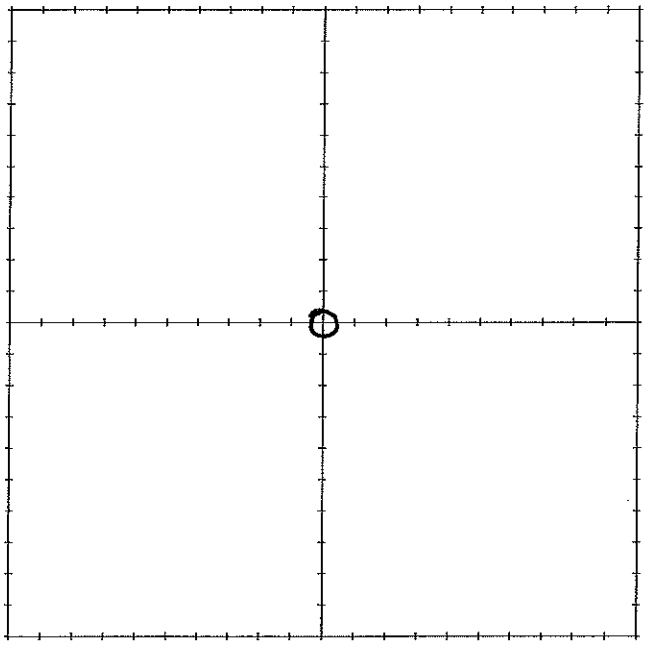

MARK INDIVIDUAL GRAB SAMPLE LOCATIONS IN GRID

MWH

SURFACE SOIL SAMPLE LOG FORM

AREA #/NAME Hoskie Tso

SAMPLE I.D. S852-B52-010

SAMPLE COLLECTION DATE 10/20/16

SAMPLE COLLECTION TIME 1551

SAMPLE COLLECTED BY KJJ

WEATHER CONDITIONS Sunny, 60's

FIELD USCS DESCRIPTIONS brownish silt with fine sand & trace clay, cobbles present

MAJOR DIVISIONS: ☐ OH ☐ CH ☐ MH ☐ OH ☐ CL ☐ ML ☐ SC
☐ SM ☐ SP ☐ SW ☐ GC ☒ GM ☐ GP ☐ GW

QUALIFIERS: ☐ TRACE ☒ MINOR ☐ SOME; SAND SIZE ☒ FINE ☐ MEDIUM ☐ COARSE

MOISTURE: ☒ DRY ☐ MOIST ☐ WET

SAMPLE CONTAINERS (NUMBER AND TYPE) 2 ziplocs

ANALYSES: Ra-226, metals

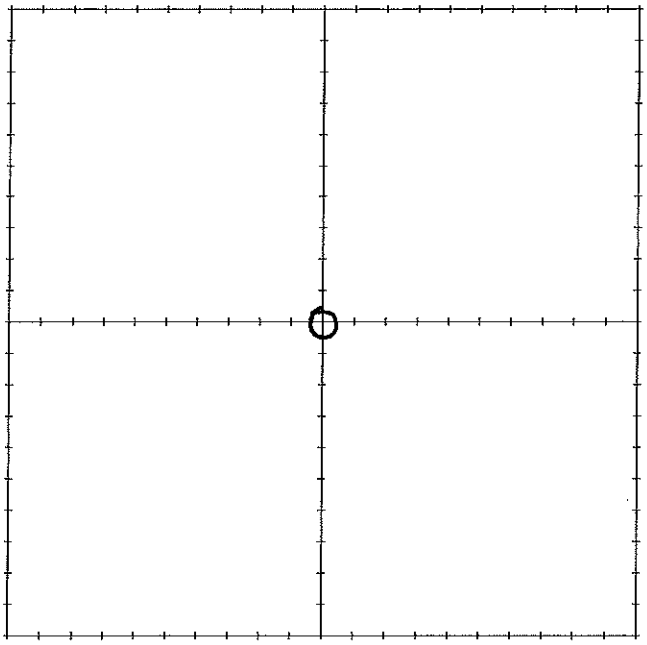

MARK INDIVIDUAL GRAB SAMPLE LOCATIONS IN GRID

MWH

SURFACE SOIL SAMPLE LOG FORM

AREA #/NAME 5852-C01-001 [Hookie Tso #1]

SAMPLE I.D. 5852-C01-001

SAMPLE COLLECTION DATE

SAMPLE COLLECTION TIME

SAMPLE COLLECTED BY N. Randle

WEATHER CONDITIONS

FIELD USCS DESCRIPTIONS

MAJOR DIVISIONS: ❑ OH ❑ CH ❑ MH ❑ OH ❑ CL ❑ ML ❑ SC
❑ SM ❑ SP ❑ SW ❑ GC ❑ GM ❑ GP ❑ GW

QUALIFIERS: ❑ TRACE ❑ MINOR ❑ SOME; SAND SIZE ❑ FINE ❑ MEDIUM ❑ COARSE

MOISTURE: ❑ DRY ❑ MOIST ❑ WET

SAMPLE CONTAINERS (NUMBER AND TYPE) 1 ziplock

ANALYSES: Ra-226, Isotopic Thorium

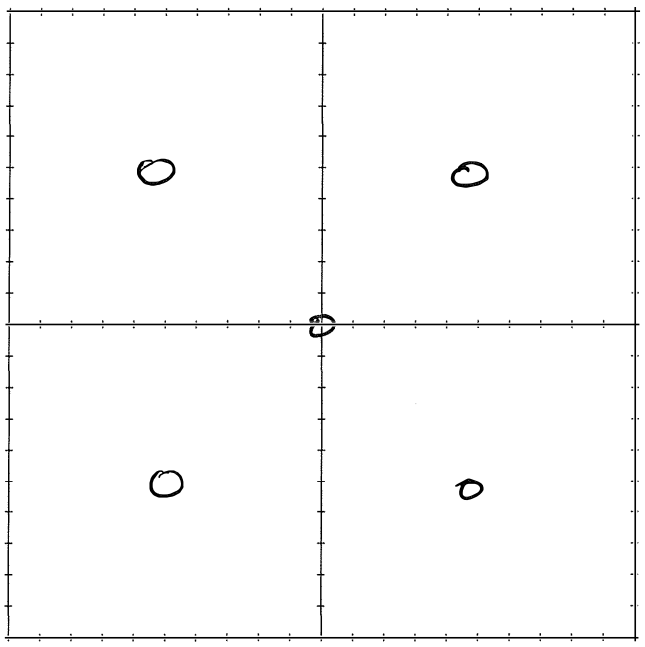

MARK INDIVIDUAL GRAB SAMPLE LOCATIONS IN GRID

SURFACE SOIL SAMPLE LOG FORM

AREA #/NAME 5852-C02-001 (Hoskie Tso #1)

SAMPLE I.D. 5852-C02-001

SAMPLE COLLECTION DATE _____

SAMPLE COLLECTION TIME _____

SAMPLE COLLECTED BY N. Randle

WEATHER CONDITIONS _____

FIELD USCS DESCRIPTIONS _____

MAJOR DIVISIONS: ❑ OH ❑ CH ❑ MH ❑ OH ❑ CL ❑ ML ❑ SC
❑ SM ❑ SP ❑ SW ❑ GC ❑ GM ❑ GP ❑ GW

QUALIFIERS: ❑ TRACE ❑ MINOR ❑ SOME; SAND SIZE ❑ FINE ❑ MEDIUM ❑ COARSE

MOISTURE: ❑ DRY ❑ MOIST ❑ WET

SAMPLE CONTAINERS (NUMBER AND TYPE) 1 Ziplock

ANALYSES: Ra-226, Isotopic Thorium

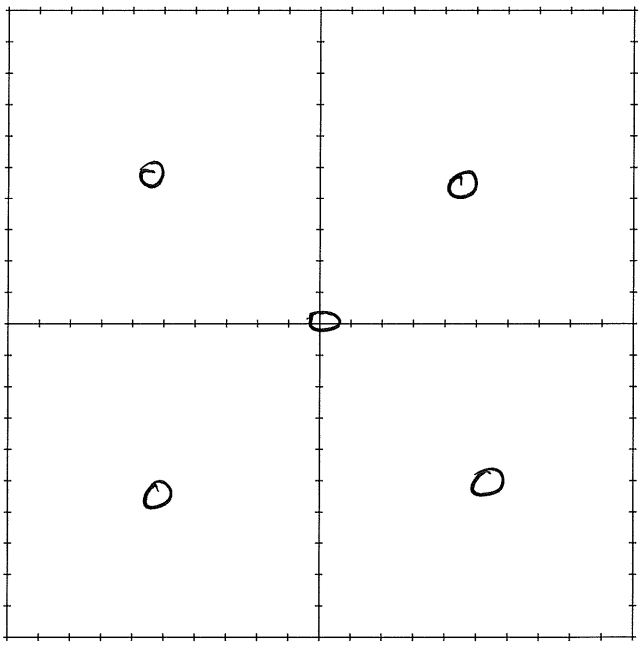

MARK INDIVIDUAL GRAB SAMPLE LOCATIONS IN GRID

SURFACE SOIL SAMPLE LOG FORM

AREA #/NAME S852-C03-001 [Hoskie Tso #1]

SAMPLE I.D. S852-C03-001

SAMPLE COLLECTION DATE

SAMPLE COLLECTION TIME

SAMPLE COLLECTED BY N. Rundle

WEATHER CONDITIONS

FIELD USCS DESCRIPTIONS

MAJOR DIVISIONS: ❑ OH ❑ CH ❑ MH ❑ OH ❑ CL ❑ ML ❑ SC
❑ SM ❑ SP ❑ SW ❑ GC ❑ GM ❑ GP ❑ GW

QUALIFIERS: ❑ TRACE ❑ MINOR ❑ SOME; SAND SIZE ❑ FINE ❑ MEDIUM ❑ COARSE

MOISTURE: ❑ DRY ❑ MOIST ❑ WET

SAMPLE CONTAINERS (NUMBER AND TYPE) 1 Ziplock

ANALYSES: Ra-226, Isotopic Thorium

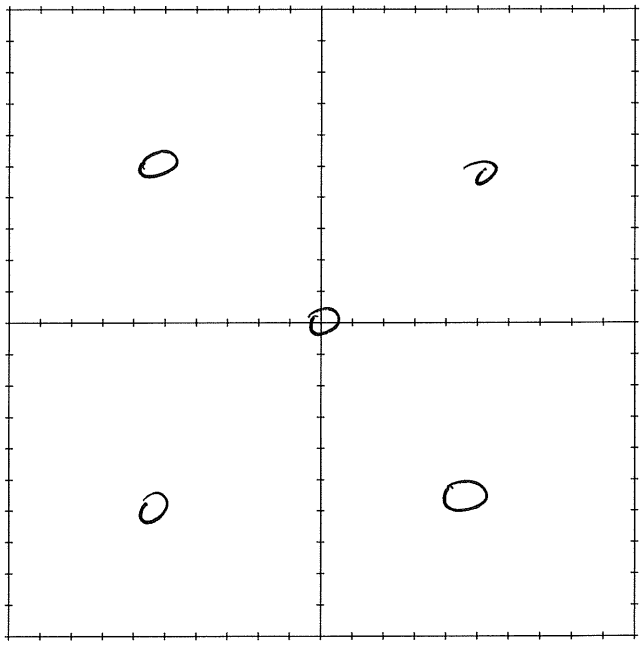

MARK INDIVIDUAL GRAB SAMPLE LOCATIONS IN GRID

MWH

SURFACE SOIL SAMPLE LOG FORM

AREA #/NAME 5852-C04-001 [Hoskie Tso #1]

SAMPLE I.D. 5852-C04-001

SAMPLE COLLECTION DATE _____

SAMPLE COLLECTION TIME _____

SAMPLE COLLECTED BY N. Randle

WEATHER CONDITIONS _____

FIELD USCS DESCRIPTIONS _____

MAJOR DIVISIONS: ❑ OH ❑ CH ❑ MH ❑ OH ❑ CL ❑ ML ❑ SC
❑ SM ❑ SP ❑ SW ❑ GC ❑ GM ❑ GP ❑ GW

QUALIFIERS: ❑ TRACE ❑ MINOR ❑ SOME; SAND SIZE ❑ FINE ❑ MEDIUM ❑ COARSE

MOISTURE: ❑ DRY ❑ MOIST ❑ WET

SAMPLE CONTAINERS (NUMBER AND TYPE) 1 Ziplock

ANALYSES: Ra-226, Isotopic Thorium

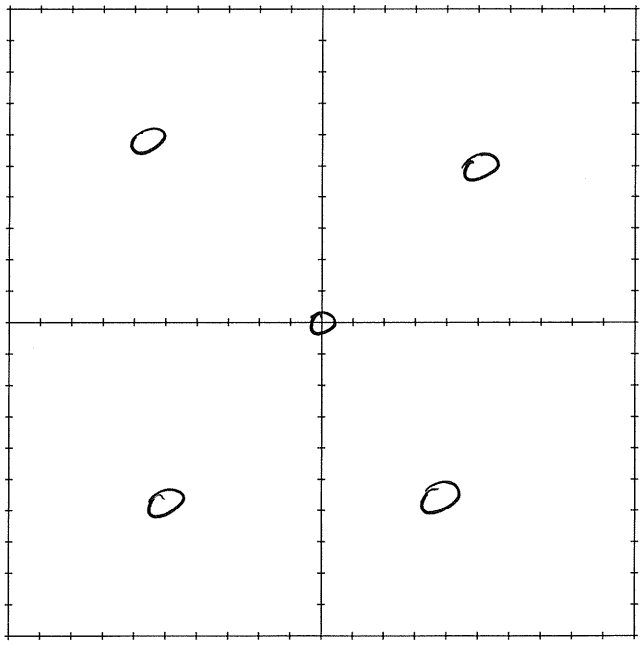

MARK INDIVIDUAL GRAB SAMPLE LOCATIONS IN GRID

MWH

SURFACE SOIL SAMPLE LOG FORM

AREA #/NAME S852-C05-001 [Hoskie Tso #1]

SAMPLE I.D. S852-C05-001

SAMPLE COLLECTION DATE _____

SAMPLE COLLECTION TIME _____

SAMPLE COLLECTED BY N. Randle

WEATHER CONDITIONS _____

FIELD USCS DESCRIPTIONS _____

MAJOR DIVISIONS: ❑ OH ❑ CH ❑ MH ❑ OH ❑ CL ❑ ML ❑ SC
❑ SM ❑ SP ❑ SW ❑ GC ❑ GM ❑ GP ❑ GW

QUALIFIERS: ❑ TRACE ❑ MINOR ❑ SOME; SAND SIZE ❑ FINE ❑ MEDIUM ❑ COARSE

MOISTURE: ❑ DRY ❑ MOIST ❑ WET

SAMPLE CONTAINERS (NUMBER AND TYPE) 1 Ziplock

ANALYSES: Ra-226, Isotopic Thorium

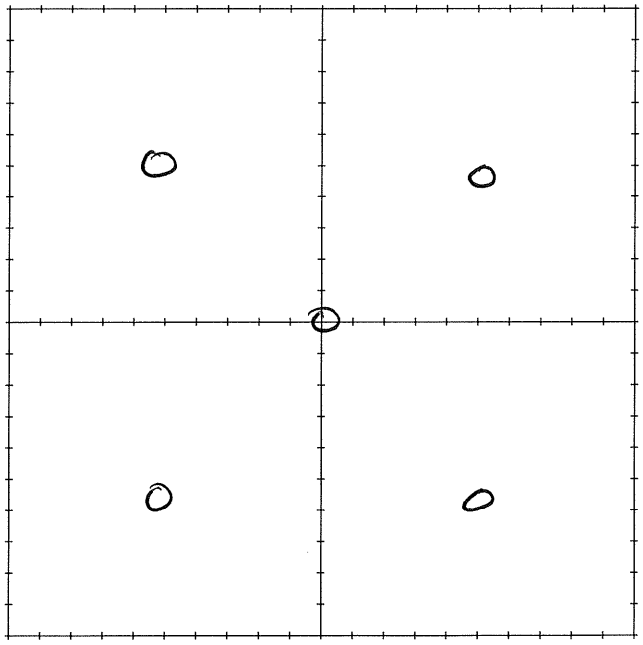

MARK INDIVIDUAL GRAB SAMPLE LOCATIONS IN GRID

SURFACE SOIL SAMPLE LOG FORM

AREA #/NAME 5852-CX-ØØ1 [Hoskie Tso #1]

SAMPLE I.D. 5852-CX-ØØ1

SAMPLE COLLECTION DATE 11/14/2016

SAMPLE COLLECTION TIME 12:10

SAMPLE COLLECTED BY A. Edstrom

WEATHER CONDITIONS ~65° F, Sunny

FIELD USCS DESCRIPTIONS Soft, 5% MC, Light Brown, silty clay w/ trace gravels

MAJOR DIVISIONS: ☐ OH ☐ CH ☐ MH ☐ OH ☐ CL ■ ML ☐ SC
☐ SM ☐ SP ☐ SW ☐ GC ☐ GM ☐ GP ☐ GW

QUALIFIERS: ■ TRACE ☐ MINOR ☐ SOME; SAND SIZE ☐ FINE ■ MEDIUM ☐ COARSE

MOISTURE: ■ DRY ☐ MOIST ☐ WET

SAMPLE CONTAINERS (NUMBER AND TYPE) 1 Ziplock

ANALYSES: Ra-226, Metals

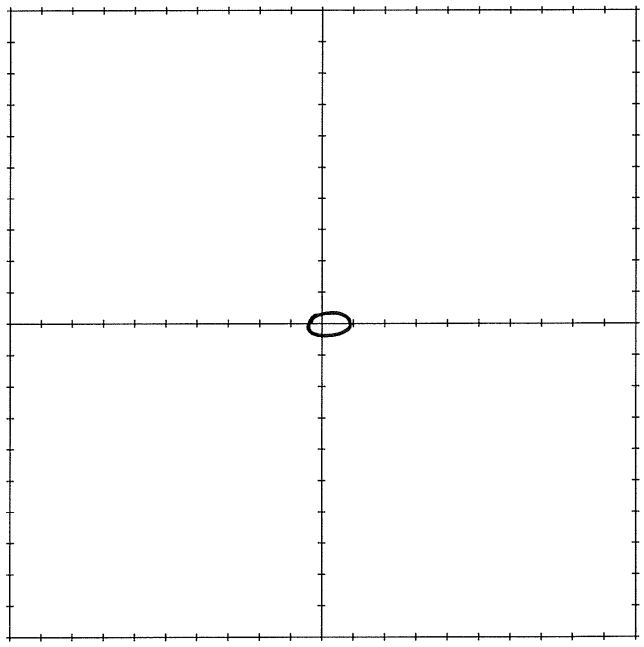

MARK INDIVIDUAL GRAB SAMPLE LOCATIONS IN GRID

MWH

SURFACE SOIL SAMPLE LOG FORM

AREA #/NAME S852-CX-002 [Hoskie Tso #1]

SAMPLE I.D. S852-CX-002

SAMPLE COLLECTION DATE 11/14/2016

SAMPLE COLLECTION TIME 11:50

SAMPLE COLLECTED BY A. Edstrom

WEATHER CONDITIONS Sunny, ~65°F

FIELD USCS DESCRIPTIONS Dense Broken Shale, Light/washed yellow, 10% NC

MAJOR DIVISIONS: ☐ OH ☐ CH ☐ MH ☐ OH ☐ CL ☐ ML ☐ SC
■ SM ☐ SP ☐ SW ☐ GC ☐ GM ☐ GP ☐ GW

QUALIFIERS: ☐ TRACE ☐ MINOR ■ SOME; SAND SIZE ☐ FINE ■ MEDIUM ☐ COARSE

MOISTURE: ☐ DRY ■ MOIST ☐ WET

SAMPLE CONTAINERS (NUMBER AND TYPE) 1 ziplock

ANALYSES: Ra-226, Metals

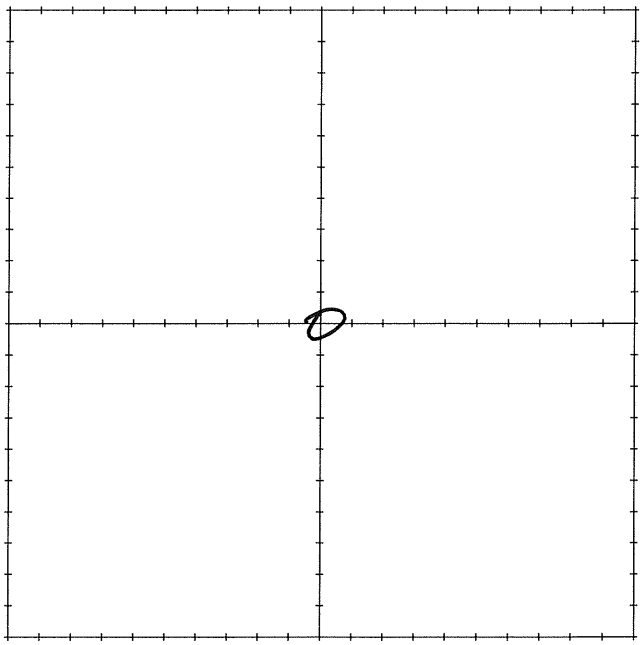

MARK INDIVIDUAL GRAB SAMPLE LOCATIONS IN GRID

MWH

SURFACE SOIL SAMPLE LOG FORM

AREA #/NAME 5852-CX-003 [Hoskin Tso #1]

SAMPLE I.D. 5852-CX-003

SAMPLE COLLECTION DATE 11/14/2016

SAMPLE COLLECTION TIME 11:35

SAMPLE COLLECTED BY A. Edstrom

WEATHER CONDITIONS ~65°F, Sunny

FIELD USCS DESCRIPTIONS Soft, 10% MC, Light/Med Brown, Silty clay

MAJOR DIVISIONS: ☐ OH ☐ CH ☐ MH ☐ OH ☐ CL ■ ML ☐ SC
☐ SM ☐ SP ☐ SW ☐ GC ☐ GM ☐ GP ☐ GW

QUALIFIERS: ☐ TRACE ■ MINOR ☐ SOME; SAND SIZE ■ FINE ☐ MEDIUM ☐ COARSE

MOISTURE: ☐ DRY ■ MOIST ☐ WET

SAMPLE CONTAINERS (NUMBER AND TYPE) 1 Ziplock

ANALYSES: Ra-226, Metals

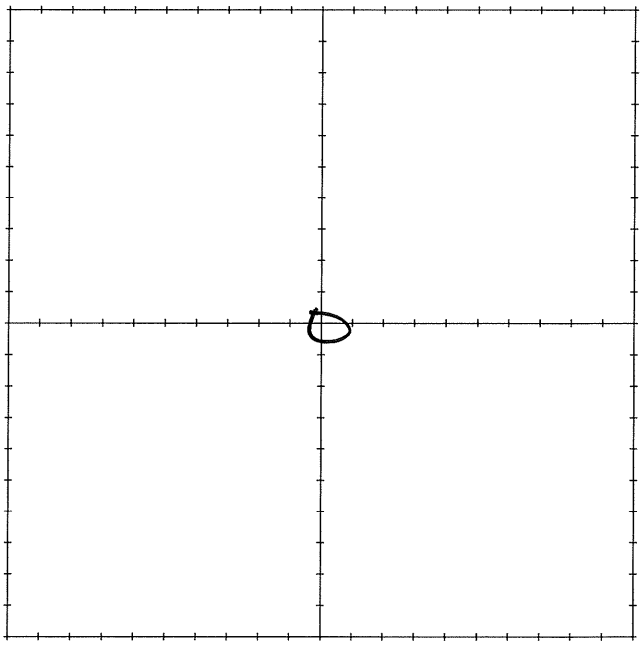

MARK INDIVIDUAL GRAB SAMPLE LOCATIONS IN GRID

MWH

SURFACE SOIL SAMPLE LOG FORM

AREA #/NAME S852-CX-ØØ4 [Hoskie Tso #1]

SAMPLE I.D. S852-CX-ØØ4

SAMPLE COLLECTION DATE 11/14/2016

SAMPLE COLLECTION TIME 11:15

SAMPLE COLLECTED BY A. Edstrom

WEATHER CONDITIONS ~65°F, Sunny

FIELD USCS DESCRIPTIONS soft, 10% MC, mixed cobbles/shales, Light/Dark brown

MAJOR DIVISIONS: ☐ OH ☐ CH ☐ MH ☐ OH ☐ CL ☐ ML ☐ SC
■ SM ☐ SP ☐ SW ☐ GC ☐ GM ☐ GP ☐ GW

QUALIFIERS: ☐ TRACE ☐ MINOR ■ SOME; SAND SIZE ☐ FINE ■ MEDIUM ☐ COARSE

MOISTURE: ☐ DRY ■ MOIST ☐ WET

SAMPLE CONTAINERS (NUMBER AND TYPE) 1 ziplock

ANALYSES: Ra-226, Metals

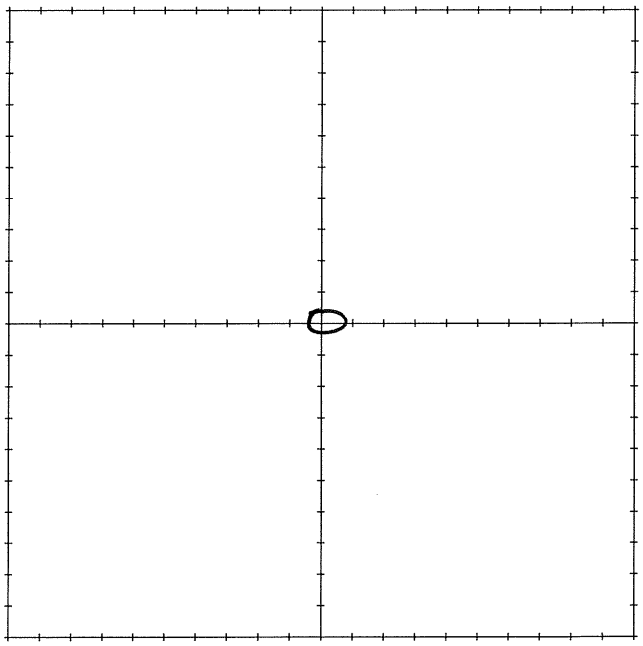

MARK INDIVIDUAL GRAB SAMPLE LOCATIONS IN GRID

MWH

SURFACE SOIL SAMPLE LOG FORM

AREA #/NAME S052-CX-005 [Hoskie Tso #1]

SAMPLE I.D. S052-CX-005

SAMPLE COLLECTION DATE 11/14/2016

SAMPLE COLLECTION TIME 10:50

SAMPLE COLLECTED BY A. Edstrom

WEATHER CONDITIONS ~65°F, Sunny

FIELD USCS DESCRIPTIONS Dense Broken shale, light/washed yellow, ~10% MC

MAJOR DIVISIONS: ☐ OH ☐ CH ☐ MH ☐ OH ☐ CL ☐ ML ☐ SC
■ SM ■ ☐ SW ☐ GC ☐ GM ☐ GP ☐ GW

QUALIFIERS: ☐ TRACE ☐ MINOR ■ SOME; SAND SIZE ☐ FINE ■ MEDIUM ☐ COARSE

MOISTURE: ☐ DRY ■ MOIST ☐ WET

SAMPLE CONTAINERS (NUMBER AND TYPE) 1 Ziplock

ANALYSES: Ra-226, Metals

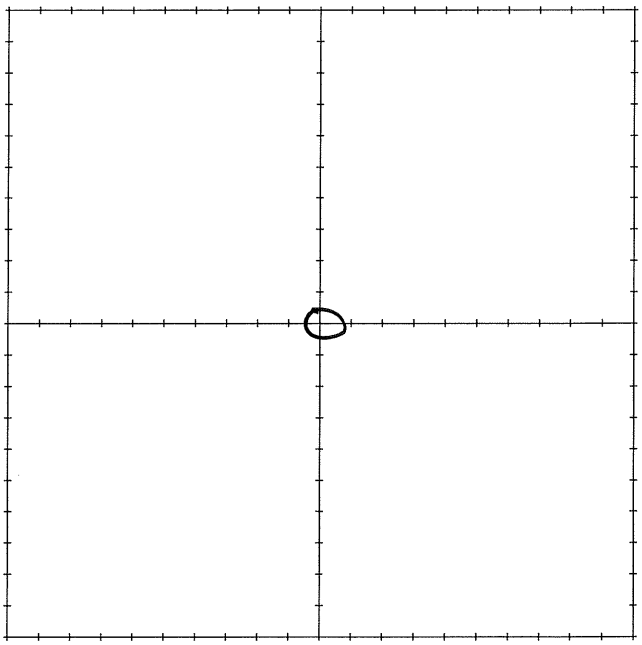

MARK INDIVIDUAL GRAB SAMPLE LOCATIONS IN GRID

MWH

SURFACE SOIL SAMPLE LOG FORM

AREA #/NAME 5852-CX-ØØ6 [Hoskie Tso #1]

SAMPLE I.D. 5852-CX-ØØ6

SAMPLE COLLECTION DATE 11/14/2016

SAMPLE COLLECTION TIME 10:30

SAMPLE COLLECTED BY A. Edstrom

WEATHER CONDITIONS ~65° F, Sunny

FIELD USCS DESCRIPTIONS Soft, 10% moisture, light brown

MAJOR DIVISIONS: ☐ OH ☐ CH ☐ MH ☐ OH ☐ CL ☐ ML ☐ SC
☐ SM ☐ SP ☐ SW ☐ GC ☐ GM ☐ GP ☐ GW

QUALIFIERS: ☐ TRACE ☐ MINOR ■ SOME; SAND SIZE ☐ FINE ■ MEDIUM ☐ COARSE

MOISTURE: ☐ DRY ■ MOIST ☐ WET

SAMPLE CONTAINERS (NUMBER AND TYPE) 1 Ziplock

ANALYSES: Ra-226, Metals

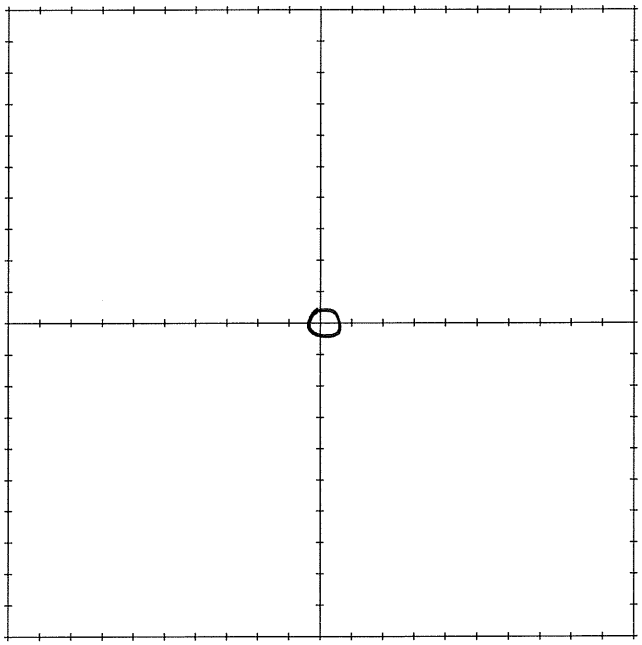

MARK INDIVIDUAL GRAB SAMPLE LOCATIONS IN GRID

MWH

SURFACE SOIL SAMPLE LOG FORM

AREA #/NAME S852-CX-ØØ7 [Hoskie Tso #1]

SAMPLE I.D. S852-CX-ØØ7

SAMPLE COLLECTION DATE 11/14/2016

SAMPLE COLLECTION TIME 10:05

SAMPLE COLLECTED BY A. Edstrom

WEATHER CONDITIONS ~65°F, Sunny

FIELD USCS DESCRIPTIONS Soft/very loose, Dry, Washed yellow/gray

MAJOR DIVISIONS: ☐ OH ☐ CH ☐ MH ☐ OH ☐ CL ☐ ML ■ SC
☐ SM ☐ SP ☐ SW ☐ GC ☐ GM ☐ GP ☐ GW

QUALIFIERS: ☐ TRACE ☐ MINOR ■ SOME; SAND SIZE ☐ FINE ■ MEDIUM ☐ COARSE

MOISTURE: ■ DRY ☐ MOIST ☐ WET

SAMPLE CONTAINERS (NUMBER AND TYPE) 1 Ziplock

ANALYSES: Ra-226, Metals

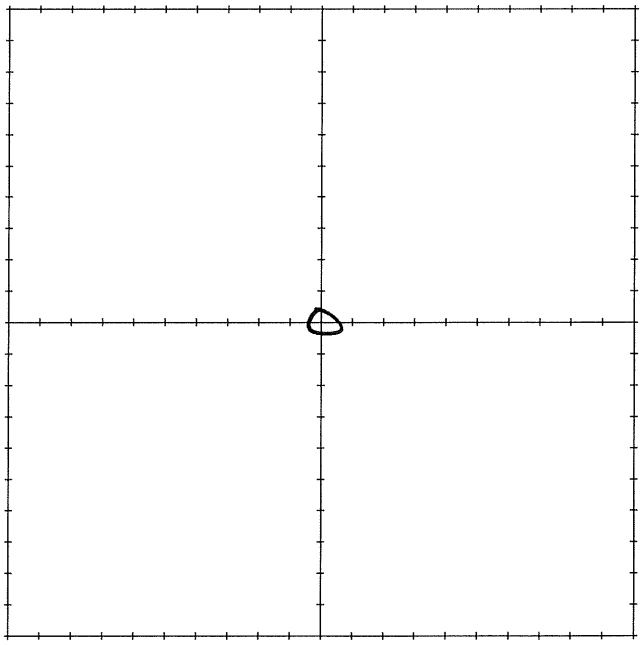

MARK INDIVIDUAL GRAB SAMPLE LOCATIONS IN GRID

MWH

SURFACE SOIL SAMPLE LOG FORM

AREA #/NAME S852-Cx-ØØ8 [Hoskie Tso #1]

SAMPLE I.D. S852-Cx-ØØ8

SAMPLE COLLECTION DATE 11/14/2016

SAMPLE COLLECTION TIME 09:40

SAMPLE COLLECTED BY A. Edstrom

WEATHER CONDITIONS ~65°F, Sunny

FIELD USCS DESCRIPTIONS Soft, ~10% MC, Med/Dark Brown

MAJOR DIVISIONS: ☐ OH ☐ CH ☐ MH ☐ OH ☐ CL ☐ ML ☐ SC
■ SM ☐ SP ☐ SW ☐ GC ☐ GM ☐ GP ☐ GW

QUALIFIERS: ☐ TRACE ■ MINOR ☐ SOME; SAND SIZE ■ FINE ☐ MEDIUM ☐ COARSE

MOISTURE: ☐ DRY ■ MOIST ☐ WET

SAMPLE CONTAINERS (NUMBER AND TYPE) 1 Ziplock

ANALYSES: Ra-226, Metals

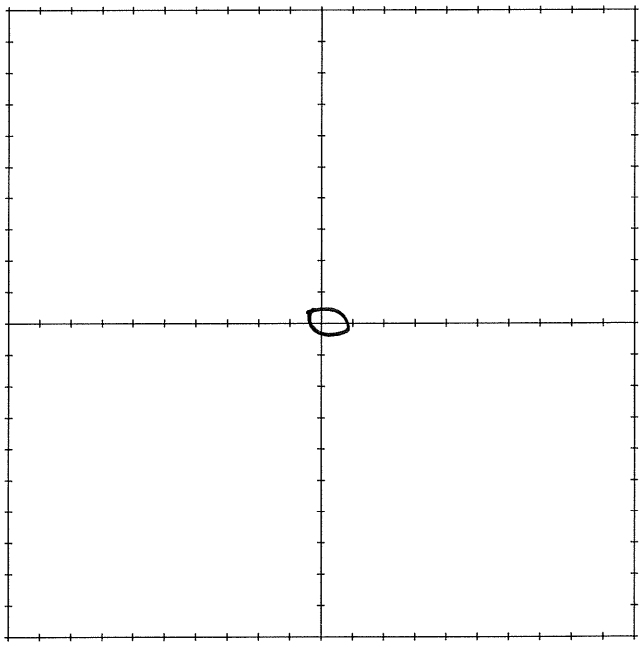

MARK INDIVIDUAL GRAB SAMPLE LOCATIONS IN GRID

MWH

SURFACE SOIL SAMPLE LOG FORM

AREA #/NAME S8052-CX-009 [Hoskie Tso #1]

SAMPLE I.D. S8052-CX-009

SAMPLE COLLECTION DATE 11/14/2016

SAMPLE COLLECTION TIME 13:15

SAMPLE COLLECTED BY A. Edstrom

WEATHER CONDITIONS ~65°F, Sunny

FIELD USCS DESCRIPTIONS Soft/loose gravels, 16% MC, coarse gravel, Light br 50% silt/clay

MAJOR DIVISIONS: ☐ OH ☐ CH ☐ MH ☐ OH ☐ CL ☐ ML ☐ SC
☐ SM ■ SP ☐ SW ☐ GC ☐ GM ■ GP ☐ GW

QUALIFIERS: ☐ TRACE ☐ MINOR ■ SOME; SAND SIZE ☐ FINE ☐ MEDIUM ■ COARSE

MOISTURE: ☐ DRY ■ MOIST ☐ WET

SAMPLE CONTAINERS (NUMBER AND TYPE) 1 Ziplock

ANALYSES: Ra-226, Metals

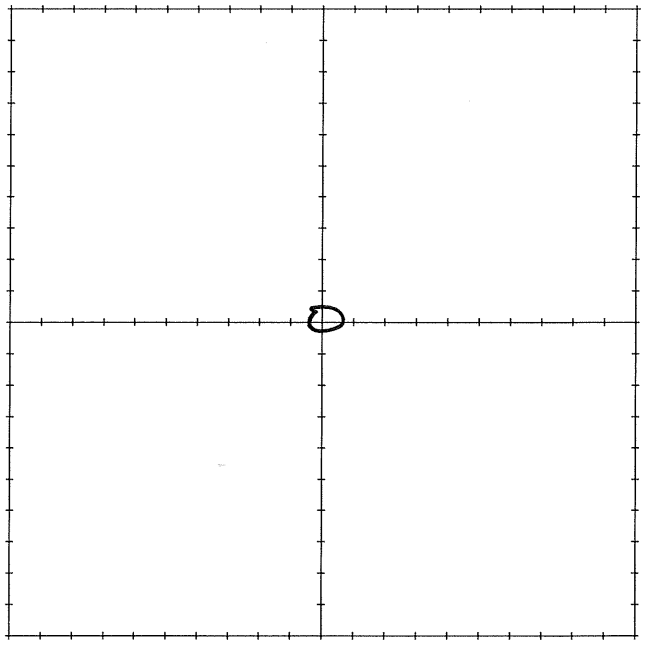

MARK INDIVIDUAL GRAB SAMPLE LOCATIONS IN GRID

MWH

SURFACE SOIL SAMPLE LOG FORM

AREA #/NAME S852-CX-Ø1Ø [Hoskie Tso #1]

SAMPLE I.D. S852-CX-Ø1Ø

SAMPLE COLLECTION DATE 11/14/2016

SAMPLE COLLECTION TIME [redacted] 12:30

SAMPLE COLLECTED BY A. Edstrom

WEATHER CONDITIONS ~65°F Sunny

FIELD USCS DESCRIPTIONS Soft, ~5% MC, Light br/yellow, poorly sorted, clayey silty sand

MAJOR DIVISIONS: ☐ OH ☐ CH ☐ MH ☐ OH ☐ CL ☐ ML ☐ SC
☐ SM ■ SP ☐ SW ☐ GC ☐ GM ☐ GP ☐ GW

QUALIFIERS: ☐ TRACE ☐ MINOR ■ SOME; SAND SIZE ☐ FINE ☐ MEDIUM ■ COARSE

MOISTURE: ■ DRY ☐ MOIST ☐ WET

SAMPLE CONTAINERS (NUMBER AND TYPE) 1 Ziplock

ANALYSES: Ra-226, Metals

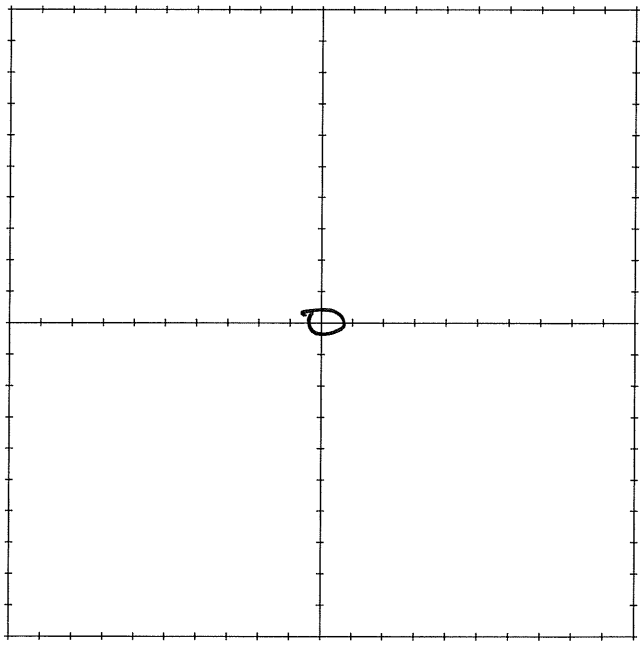

MARK INDIVIDUAL GRAB SAMPLE LOCATIONS IN GRID

MWH

C.2 Hand Auger Borehole Logs

BOREHOLE ID:	**S852-BG1-011**
CLIENT:	NNAUMERT
PROJECT:	Removal Site Evaluation
SITE LOCATION:	Hoskie Tso No. 1

DRILLING CONTRACTOR:	Stantec	COORDINATE SYSTEM:	
DRILLING METHOD:	Hand auger	EASTING: 585301.1	NORTHING: 3915380.37
DRILLING EQUIPMENT:	Hand auger	DATE STARTED: 11/15/2016	DATE STARTED: 11/15/2016
SAMPLING METHOD:	Regular hand auger, 3 inch diameter	TOTAL DEPTH (ft.): 0.75	BOREHOLE ANGLE: 90 degrees
		LOGGED BY: Nicholas Randle	NAD 1983 UTM Zone 12N

DEPTH (feet)	LITHOLOGICAL GRAPHIC	LITHOLOGICAL DESCRIPTION	Gamma (cpm) 0 10000 20000 30000 40000	SAMPLE IDENTIFICATION	SAMPLE INTERVAL (ft bgl)	SAMPLE TYPE	LAB RESULTS RA-226 (pCi/g)
0		SILT WITH GRAVEL (ML): light yellowish brown, laminated, some moderately cemented laminae.	13753	S852-BG1-011-1	0-0.5	grab	3.36
			16859	S852-BG1-011-2	0.5-0.75	grab	2.58
		Terminated hand auger borehole at 0.75 ft. below ground surface. Refusal on well cemented bedrock.	19407				
1							
2							
3							
4							
5							

Notes: cpm = counts per minute
pCi/g = picocuries per gram
grab = grab sample
comp = composite sample
- - - - = approximate contact

BOREHOLE ID:	**S852-BG2-011**
CLIENT:	NNAUMERT
PROJECT:	Removal Site Evaluation
SITE LOCATION:	Hoskie Tso No. 1

DRILLING CONTRACTOR:	Stantec	COORDINATE SYSTEM:	NAD 1983 UTM Zone 12N
DRILLING METHOD:	Hand auger	EASTING: 585433.65	NORTHING: 3915441.44
DRILLING EQUIPMENT:	Hand auger	DATE STARTED: 11/15/2016	DATE STARTED: 11/15/2016
SAMPLING METHOD:	Regular hand auger, 3 inch diameter	TOTAL DEPTH (ft.): 0.4	BOREHOLE ANGLE: 90 degrees
		LOGGED BY:	Nicholas Randle

DEPTH (feet)	LITHOLOGICAL GRAPHIC	LITHOLOGICAL DESCRIPTION	Gamma (cpm) 0 10000 20000 30000 40000	SUBSURFACE SAMPLE INFORMATION: SAMPLE IDENTIFICATION	SAMPLE INTERVAL (ft bgl)	SAMPLE TYPE	LAB RESULTS RA-226 (pCi/g)
0		SILTY GRAVEL (ML): yellowish tan, igneous gravels (basalt).	15300 – 17287	S852-BG2-011-1	0-0.4	grab	1.83
		Terminated hand auger borehole at 0.4 ft. below ground surface. Refusal on hard surface.					
1							
2							
3							
4							
5							

Notes: cpm = counts per minute
pCi/g = picocuries per gram
grab = grab sample
comp = composite sample
- - - - = approximate contact

BOREHOLE ID:	**S852-SCX-001**
CLIENT:	NNAUMERT
PROJECT:	Removal Site Evaluation
SITE LOCATION:	Hoskie Tso No. 1

DRILLING CONTRACTOR:	Stantec	COORDINATE SYSTEM:	NAD 1983 UTM Zone 12N
DRILLING METHOD:	Hand auger	EASTING: 585072.95	NORTHING: 3915635.78
DRILLING EQUIPMENT:	Hand auger	DATE STARTED: 11/15/2016	DATE STARTED: 11/15/2016
SAMPLING METHOD:	Regular hand auger, 3 inch diameter	TOTAL DEPTH (ft.): 2	BOREHOLE ANGLE: 90 degrees
		LOGGED BY:	Nicholas Randle

DEPTH (feet)	LITHOLOGICAL GRAPHIC	LITHOLOGICAL DESCRIPTION	Gamma (cpm)	SAMPLE IDENTIFICATION	SAMPLE INTERVAL (ft bgl)	SAMPLE TYPE	LAB RESULTS RA-226 (pCi/g)
0		SILT WITH SAND (ML): fine sand, with shale fragments.	12090	S852-SCX-001-1	0-0.5	grab	1.41
			15173				
1		SILT WITH GRAVEL (ML): gravels composed of shale.	18213				
			20512	S852-SCX-001-2	1.5-2	grab	2.42
2		Terminated hand auger borehole at 2 ft. below ground surface. Refusal on well cemented / indurated siltstone.	20715				
3							
4							
5							

Gamma (cpm) scale: 0, 10000, 20000, 30000, 40000

Notes: cpm = counts per minute
pCi/g = picocuries per gram
grab = grab sample
comp = composite sample
- - - - = approximate contact

BOREHOLE ID:	**S852-SCX-002**
CLIENT:	NNAUMERT
PROJECT:	Removal Site Evaluation
SITE LOCATION:	Hoskie Tso No. 1

DRILLING CONTRACTOR:	Stantec	COORDINATE SYSTEM:	NAD 1983 UTM Zone 12N
DRILLING METHOD:	Hand auger	EASTING: 585390.39	NORTHING: 3915594.93
DRILLING EQUIPMENT:	Hand auger	DATE STARTED: 11/14/2016	DATE STARTED: 11/14/2016
SAMPLING METHOD:	Regular hand auger, 3 inch diameter	TOTAL DEPTH (ft.): 1.5	BOREHOLE ANGLE: 90 degrees
		LOGGED BY:	Nicholas Randle

DEPTH (feet)	LITHOLOGICAL GRAPHIC	LITHOLOGICAL DESCRIPTION	Gamma (cpm) 0 200000 400000 600000	SUBSURFACE SAMPLE INFORMATION: SAMPLE IDENTIFICATION	SAMPLE INTERVAL (ft bgl)	SAMPLE TYPE	LAB RESULTS RA-226 (pCi/g)
0		SILT WITH SAND (ML): pale yellowish brown, dry.	352040	S852-SCX-002-1	0-0.5	grab	445
			409042	S852-SCX-002-2	0.5-1	grab	229
1		SILT WITH GRAVEL (ML): yellowish-gray, igneous gravels (basalt).	427712	S852-SCX-002-3	1-1.5	grab	122
		Terminated hand auger borehole at 1.5 ft. below ground surface. Refusal on hard surface.	222461				
2							
3							
4							
5							

Notes: cpm = counts per minute
pCi/g = picocuries per gram
grab = grab sample
comp = composite sample
- - - - = approximate contact

BOREHOLE ID:	**S852-SCX-003**
CLIENT:	NNAUMERT
PROJECT:	Removal Site Evaluation
SITE LOCATION:	Hoskie Tso No. 1

DRILLING CONTRACTOR:	Stantec	COORDINATE SYSTEM:	NAD 1983 UTM Zone 12N
DRILLING METHOD:	Hand auger	EASTING: 585297.47	NORTHING: 3915838
DRILLING EQUIPMENT:	Hand auger	DATE STARTED: 11/14/2016	DATE STARTED: 11/14/2016
SAMPLING METHOD:	Regular hand auger, 3 inch diameter	TOTAL DEPTH (ft.): 1.5	BOREHOLE ANGLE: 90 degrees
		LOGGED BY:	Nicholas Randle

DEPTH (feet)	LITHOLOGICAL GRAPHIC	LITHOLOGICAL DESCRIPTION	Gamma (cpm) 0 20000 40000 60000	SUBSURFACE SAMPLE INFORMATION: SAMPLE IDENTIFICATION	SAMPLE INTERVAL (ft bgl)	SAMPLE TYPE	LAB RESULTS RA-226 (pCi/g)
0		HARDPAN: well indurated/cemented shale	25862				
		GRAVELY SILT (ML): dark brown, dry to slightly moist.		S852-SCX-003-1	0-0.5	grab	7.11
		SILT WITH GRAVEL (ML): dark brown, dry.	33895				
1			37203	S852-SCX-003-2	0.5-1.5	grab	6.5
		Terminated hand auger borehole at 1.5 ft. below ground surface. Refusal on hard surface.	34246				
2							
3							
4							
5							

Notes: cpm = counts per minute
pCi/g = picocuries per gram
grab = grab sample
comp = composite sample
- - - - = approximate contact

BOREHOLE ID:	**S852-SCX-004**
CLIENT:	NNAUMERT
PROJECT:	Removal Site Evaluation
SITE LOCATION:	Hoskie Tso No. 1

DRILLING CONTRACTOR:	Stantec	COORDINATE SYSTEM:	NAD 1983 UTM Zone 12N
DRILLING METHOD:	Hand auger	EASTING: 585220.94	NORTHING: 3915805.75
DRILLING EQUIPMENT:	Hand auger	DATE STARTED: 11/15/2016	DATE STARTED: 11/15/2016
SAMPLING METHOD:	Regular hand auger, 3 inch diameter	TOTAL DEPTH (ft.): 0.6	BOREHOLE ANGLE: 90 degrees
		LOGGED BY:	Nicholas Randle

DEPTH (feet)	LITHOLOGICAL GRAPHIC	LITHOLOGICAL DESCRIPTION	Gamma (cpm) 0 10000 20000 30000 40000	SUBSURFACE SAMPLE INFORMATION: SAMPLE IDENTIFICATION	SAMPLE INTERVAL (ft bgl)	SAMPLE TYPE	LAB RESULTS RA-226 (pCi/g)
0		HARDPAN: well indurated/cemented shale.	18830				
		SILT (ML): light yellowish brown, laminated, some moderately cemented laminae.	25640	S852-SCX-004-1	0-0.5	grab	8.1
		Terminated hand auger borehole at 0.5 ft. below ground surface. Refusal on hard surface.					
1							
2							
3							
4							
5							

Notes: cpm = counts per minute
pCi/g = picocuries per gram
grab = grab sample
comp = composite sample
- - - - = approximate contact

BOREHOLE ID:	**S852-SCX-005**
CLIENT:	NNAUMERT
PROJECT:	Removal Site Evaluation
SITE LOCATION:	Hoskie Tso No. 1

DRILLING CONTRACTOR:	Stantec	COORDINATE SYSTEM:	NAD 1983 UTM Zone 12N
DRILLING METHOD:	Hand auger	EASTING: 585229.34	NORTHING: 3915510.21
DRILLING EQUIPMENT:	Hand auger	DATE STARTED: 11/15/2016	DATE STARTED: 11/15/2016
SAMPLING METHOD:	Regular hand auger, 3 inch diameter	TOTAL DEPTH (ft.): 0.9	BOREHOLE ANGLE: 90 degrees
		LOGGED BY:	Nicholas Randle

DEPTH (feet)	LITHOLOGICAL GRAPHIC	LITHOLOGICAL DESCRIPTION	Gamma (cpm) 0 10000 20000 30000 40000	SUBSURFACE SAMPLE INFORMATION: SAMPLE IDENTIFICATION	SAMPLE INTERVAL (ft bgl)	SAMPLE TYPE	LAB RESULTS RA-226 (pCi/g)
0		SANDY SILT (ML): dry, laminated, some moderately cemented laminae.	12483 13215 12188	S852-SCX-005-1	0-0.8	grab	3.67
1		Terminated hand auger borehole at 0.9 ft. below ground surface. Refusal on hard surface.					
2							
3							
4							
5							

Notes: cpm = counts per minute
pCi/g = picocuries per gram
grab = grab sample
comp = composite sample
- - - - = approximate contact

BOREHOLE ID:	**S852-SCX-006**
CLIENT:	NNAUMERT
PROJECT:	Removal Site Evaluation
SITE LOCATION:	Hoskie Tso No. 1

DRILLING CONTRACTOR:	Stantec	COORDINATE SYSTEM:	NAD 1983 UTM Zone 12N
DRILLING METHOD:	Hand auger	EASTING: 585350.74	NORTHING: 3915721.01
DRILLING EQUIPMENT:	Hand auger	DATE STARTED: 11/14/2016	DATE STARTED: 11/14/2016
SAMPLING METHOD:	Regular hand auger, 3 inch diameter	TOTAL DEPTH (ft.): 0.8	BOREHOLE ANGLE: 90 degrees
		LOGGED BY:	Nicholas Randle

DEPTH (feet)	LITHOLOGICAL GRAPHIC	LITHOLOGICAL DESCRIPTION	Gamma (cpm) 0 / 100000 / 200000 / 300000	SUBSURFACE SAMPLE INFORMATION: SAMPLE IDENTIFICATION	SAMPLE INTERVAL (ft bgl)	SAMPLE TYPE	LAB RESULTS RA-226 (pCi/g)
0		HARDPAN: well indurated/cemented shale.	53725				
		Silt (ML): some clay, dry to slightly moist.		S852-SCX-006-1	0-0.7	grab	26.9
		SILT (ML): gray, dry, low to no plasticity.	140128				
		Terminated hand auger borehole at 0.8 ft. below ground surface. Refusal on bedrock.	159636				
1							
2							
3							
4							
5							

Notes: cpm = counts per minute
pCi/g = picocuries per gram
grab = grab sample
comp = composite sample
- - - - = approximate contact

BOREHOLE ID:	**S852-SCX-007**
CLIENT:	NNAUMERT
PROJECT:	Removal Site Evaluation
SITE LOCATION:	Hoskie Tso No. 1

DRILLING CONTRACTOR:	Stantec	COORDINATE SYSTEM:	NAD 1983 UTM Zone 12N
DRILLING METHOD:	Hand auger	EASTING: 585337.89	NORTHING: 3915617.88
DRILLING EQUIPMENT:	Hand auger	DATE STARTED: 11/14/2016	DATE STARTED: 11/14/2016
SAMPLING METHOD:	Regular hand auger, 3 inch diameter	TOTAL DEPTH (ft.): 0.9	BOREHOLE ANGLE: 90 degrees
		LOGGED BY:	Nicholas Randle

DEPTH (feet)	LITHOLOGICAL GRAPHIC	LITHOLOGICAL DESCRIPTION	Gamma (cpm)	SUBSURFACE SAMPLE INFORMATION: SAMPLE IDENTIFICATION	SAMPLE INTERVAL (ft bgl)	SAMPLE TYPE	LAB RESULTS RA-226 (pCi/g)
0		SILT WITH SAND (ML): light tan, dry, fine sand.	55849				
		with roots.	97882	S852-SCX-007-1	0-0.9	grab	44
1		Terminated hand auger borehole at 0.9 ft. below ground surface. Refusal on shale.	88837				
2							
3							
4							
5							

Gamma (cpm) scale: 0, 50000, 100000, 150000, 200000

Notes: cpm = counts per minute
pCi/g = picocuries per gram
grab = grab sample
comp = composite sample
- - - - = approximate contact

BOREHOLE ID:	**S852-SCX-008**
CLIENT:	NNAUMERT
PROJECT:	Removal Site Evaluation
SITE LOCATION:	Hoskie Tso No. 1

DRILLING CONTRACTOR:	Stantec	COORDINATE SYSTEM:	NAD 1983 UTM Zone 12N
DRILLING METHOD:	Hand auger	EASTING: 585397.33	NORTHING: 3915520.74
DRILLING EQUIPMENT:	Hand auger	DATE STARTED: 11/14/2016	DATE STARTED: 11/14/2016
SAMPLING METHOD:	Regular hand auger, 3 inch diameter	TOTAL DEPTH (ft.): 0.8	BOREHOLE ANGLE: 90 degrees
		LOGGED BY:	Nicholas Randle

DEPTH (feet)	LITHOLOGICAL GRAPHIC	LITHOLOGICAL DESCRIPTION	Gamma (cpm) 0 50000 100000 150000 200000	SUBSURFACE SAMPLE INFORMATION: SAMPLE IDENTIFICATION	SAMPLE INTERVAL (ft bgl)	SAMPLE TYPE	LAB RESULTS RA-226 (pCi/g)
0		WELL GRADED GRAVEL (GW): igneous gravels. SILT WITH SAND (ML): very fine sand.	57607				
		GRAVELLY SILT (ML), light yellowish brown, igneous gravels (basalt).	124664	S852-SCX-008-1	0-0.8	grab	66.9
		Terminated hand auger borehole at 0.8 ft. below ground surface. Refusal on basalt cobbles.	121556				
1							
2							
3							
4							
5							

Notes: cpm = counts per minute
pCi/g = picocuries per gram
grab = grab sample
comp = composite sample
- - - - = approximate contact

C.3 Water Sample Field Forms

WATER SAMPLE COLLECTION FORM

Project: Removal Site Evaluation Navajo Nation AUM Environmental Response Trust – First Phase

Date 10/20/2016 **Arrival Time** 1000

Field Personnel

J. Kester, K. Johnson

SITE DESCRIPTION

Entered 12/20/2016

Surface Water ☐ **Well Water** ☒

Station Name Windmill-Hoskie Tso No. 1 **Station Number** OTT-517

Site Description Windmill well & tranks 0.25 miles NE of Hoskie Tso No 1 site

Water Characteristics (color, odor, appearance): Clear No odor, little to no Algae in tank

SAMPLE COLLECTION

Collection Method: 1L bottle, Horizontal-bottle, Swing-sampler, Other( ). Up-stream / Across-stream

Sample ID: S852-WL-001 **Sample Time:** 1055

Field Measurements			
Parameter	Sample 1 (normal sample)	Sample 2 (field dup or MS)	Sample 3 (MSD)
Time	1200		
pH	8.44		
Conductivity (µS/cm)	1724		
Turbidity (NTU)	3.35		
Water Temperature (°C)	17.7		
Salinity	0.75 PPT		
Oxidation Reduction Potential (mV)	107.3		

10/20/2016

SURFACE WATER FLOW MEASUREMENT FORM

Hogkie Tso No. 1

Project: Removal Site Evaluation Navajo Nation AUM Environmental Response Trust – First Phase

Date 10 / 20 / 2016 **Time** 1000 **Station Number** 07T-S17

Field Personnel: J. Kester K. Johnson

Flow by Capture Method

Measurement Number	Time (sec)	Volume (L)
	NOT MEASURED	

Windmill well - Sample from spigot / Trough

WATER SAMPLE COLLECTION FORM

Project: Removal Site Evaluation Navajo Nation AUM Environmental Response Trust – First Phase

Date 11 / 08 / 2016 **Arrival Time** 1015

Field Personnel

K. Johnson C. Holiday

SITE DESCRIPTION

Entered 12/20/2016

Surface Water ☒ **Well Water** ☐

Station Name Haskie Tso Pond (near windmill) **Station Number** NA

Site Description Pond near windmill well. ~20 ft across. Fed by overflow pipe at tank from windmill well

Water Characteristics (color, odor, appearance): Cloudy, Brown.

SAMPLE COLLECTION

Collection Method: 1L bottle, Horizontal-bottle, Swing-sampler, Other( ). Up-stream / Across-stream

Sample ID: S852-LOS-001 **Sample Time:** 1127

Field Measurements			
Parameter	Sample 1 (normal sample)	Sample 2 (field dup or MS)	Sample 3 (MSD)
Time	1143		
pH	9.28		
Conductivity (µS/cm)	6924		
Turbidity (NTU)	531		
Water Temperature (°C)	14.9		
Salinity	4.81		
Oxidation Reduction Potential (mV)	132.7		

SURFACE WATER FLOW MEASUREMENT FORM

Project: Removal Site Evaluation Navajo Nation AUM Environmental Response Trust – First Phase

Date 11 / 08 / 2016 **Time** 1015 **Station Number** Hoskietso POND

Field Personnel: K. Johnson C. Holiday

Flow by Capture Method

Measurement Number	Time (sec)	Volume (L)
NA	/ POND	

Appendix D Statistical Evaluation

STATISTICAL EVALUATION

1.0 INTRODUCTION

This statistical evaluation presents the methods used in, and results of, statistical analyses performed on gamma radiation survey results and soil sample analytical results collected from the Hoskie Tso No. 1 Site (Site). The evaluation includes comparing background reference area and Survey Area data distributions, and documents the decision process followed to select site-specific investigation levels (ILs). The ILs are used to confirm contaminants of potential concern (COPCs) listed in the *RSE Work Plan*, and to support identification of technologically enhanced naturally occurring radioactive materials (TENORM) at the Site.

2.0 EVALUATIONS

The evaluation process included compiling gamma radiation survey results and soil sample analytical results collected from two background reference areas and two Site Survey Areas. Background Area 1 (BG-1) and Background Area 2 (BG-2) are representative of different geology in the region around the Site. BG-1 geologically represents the weathered siltstone and mudstone derived from the Tertiary sedimentary vent deposits west of the volcanic ridge at the Site (referred to as Survey Area A), and BG-2 geologically represents the Tertiary volcanic vent deposit rocks and colluvium/residual soil on the top of the ridge along the east side of the Site (referred to as Survey Area B). Background reference area selection is described in Appendix D.1. The gamma radiation survey data and soil sample analytical results for BG-1, BG-2 and the Survey Areas were evaluated to determine the appropriate ILs for the Site as follows:

1. Identify and examine potential outlier values. Potential outlier values were identified statistically and, if justified upon further examination, removed from a dataset prior to further evaluation and calculations. No data were removed from the dataset for the calculations presented in this appendix.

2. Compare data populations between BG-1, BG-2, and the Survey Areas (boxplots, probability plots, hypothesis testing with Wilcoxon Mann-Whitney test). Soil sample and gamma radiation survey results were compared between BG-1, BG-2, and the Survey Areas qualitatively and quantitatively to evaluate similarity or difference in data distributions between the areas, and as a component of evaluating background reference area adequacy and representativeness.

3. Develop descriptive statistics. Descriptive statistics for gamma survey results and soil sample analytical results (e.g., number of observations, mean, maximum, median, etc.) were generated to facilitate qualitative comparisons of soil sample and gamma radiation survey results from one area to another.

4. Select ILs for the Site based on the results of the statistical evaluations.

3.0 RESULTS

The following sections present the evaluation of potential outlier values in the dataset, calculated descriptive statistics, and comparison of data populations between groups in support of determining ILs for use at the Hoskie Tso No. 1 Site.

3.1 POTENTIAL OUTLIER VALUES

A potential outlier is a data point within a random sample of a population that is different enough from the majority of other values in the sample as to be considered potentially unrepresentative of the population, and therefore requires further inspection and evaluation. Unrepresentative values in a dataset have potential to yield distorted estimates of population parameters of interest (e.g., means, upper confidence limits, upper percentiles). Therefore, potential outliers in the Site data were evaluated further prior to performing data comparisons (Section 3.2) and developing the descriptive statistics (Section 3.3). In the context of this statistical evaluation, extreme values and statistical outliers are referred to as potential outliers.

A potential outlier value in a sample may be a true representative value in the test population (not a "discrepant" value), simply representing a degree of inherent variation present in the population. Furthermore, a statistical determination of one or more potential outliers does not indicate that the measurements are actually discrepant from the rest of the data set. Therefore, general statistical guidance does not recommend that extreme values (potential outliers) be removed from an analysis solely on a statistical basis. Statistical outlier tests can provide supportive information, but a reasonable scientific rationale needs to be identified for the removal of any potential outlier values (e.g., sampling error, records error, or the potential outlier is determined to violate underlying assumptions of the sampling design, such as the targeted geology).

At BG-1 and BG-2, soil samples were collected randomly. Potential outliers in the BG-1 and BG-2 datasets were examined using boxplots, probability plots and statistical testing. Descriptive statistics were then calculated with and without the potential outlier values, as applicable. Finally, the potential outlier values were evaluated to determine if a scientific reason could be found to remove the data points before calculating the final statistics. The results of these evaluations are described in the following sections.

In the Survey Areas at the Site, soil samples were collected using a judgmental sampling approach. Specifically, some sample locations were selected to characterize areas of higher gamma radiation; as a result, potential outlier values are not unexpected. Descriptive statistics and comparisons of Survey Areas A and B to BG-1 and BG-2 are presented for qualitative assessment. However, potential outlier values in the Survey Areas are not evaluated further nor removed from the dataset.

3.1.1 Boxplots

Boxplots depict descriptive statistics from a group of data (Figure 1A). The interquartile range is represented by the bounds of the box, the minimum and maximum values, not including potential outlier values, are depicted by the whiskers (horizontal lines above and below the box), and any potential outliers are identified as singular dots. Potential outliers in this context are defined as values outside 1.5 times the interquartile range above or below the box.

3.1.1.1 Soil Sample Results Boxplots

Figure 1A. Survey Areas A and B, and BG-1 and BG-2 Soil Sample Boxplots

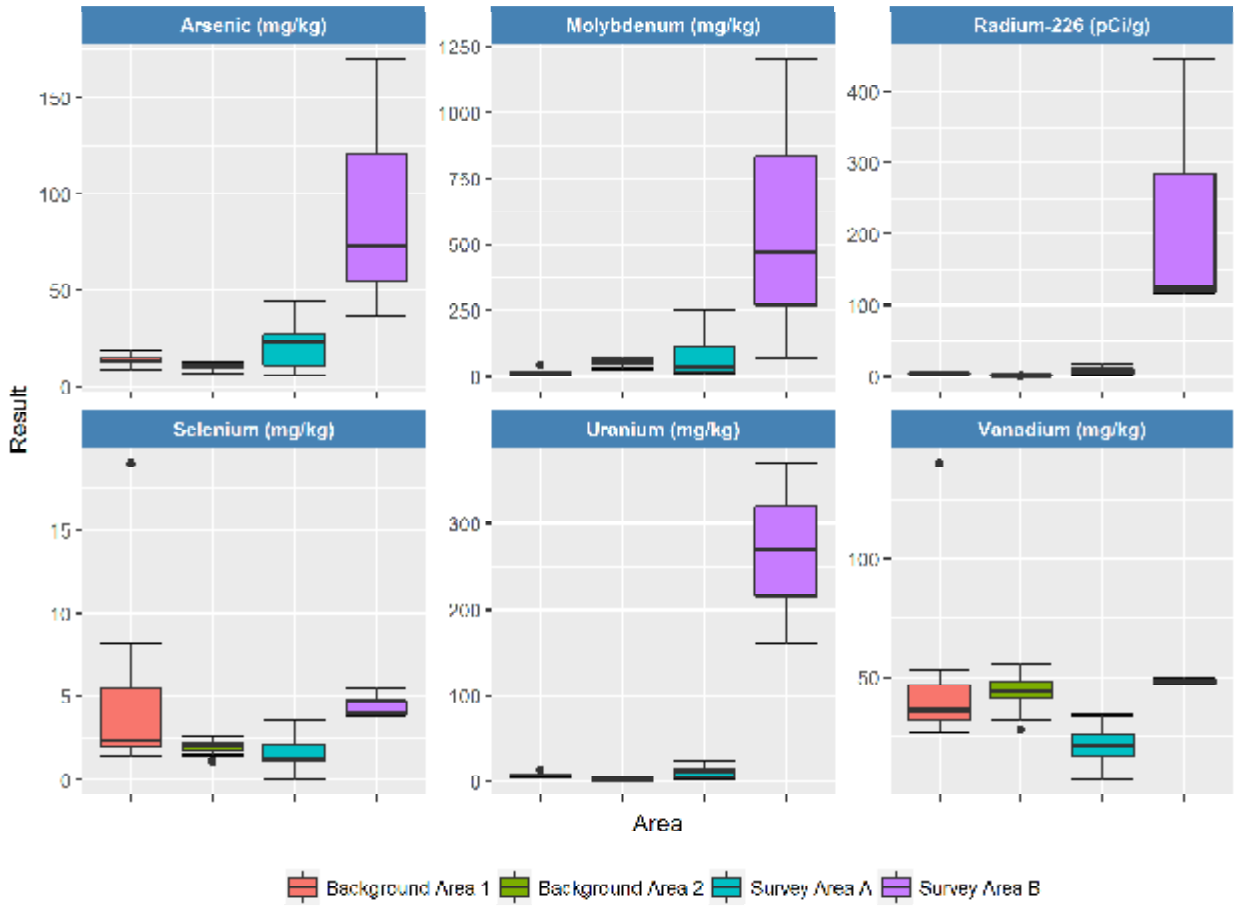

The soil sample boxplots shown on Figure 1A depict differences in the data distribution for analytical constituent concentrations between BG-1, BG-2, and Survey Areas A and B. Some high potential outlier values are shown for BG-1, and low potential outlier values for BG-2. There are no identified potential outliers in either of the Survey Areas at Hoskie Tso No. 1.

Potential outlier values are of greatest concern in the BG-1 and BG-2 datasets, as the data from BG-1 and BG-2 are the data used to determine the ILs. Background reference area data are presented alone in Figure 1B.

Figure 1B. BG-1 and BG-2 Soil Sample Boxplots

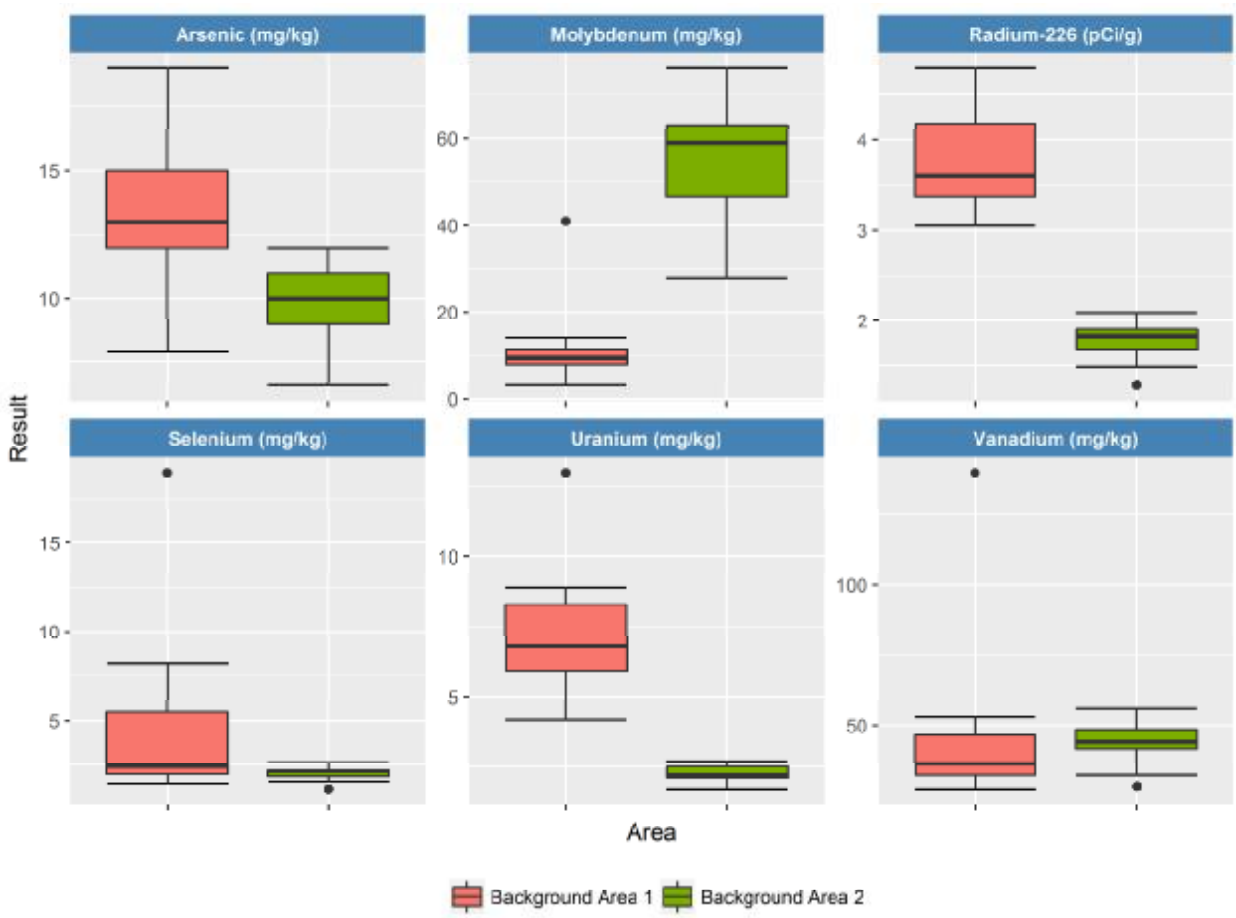

As shown in Figure 1B there are five potential outlier values (i.e., outside 1.5 times the interquartile range) observed in the BG-1 dataset: molybdenum (Mo), selenium (Se), uranium (U) (two values) and vanadium (V). Three low value, potential outliers are present in the BG-2 dataset for Ra-226, selenium and vanadium, as shown on Figure 1B.

3.1.1.2 Gamma Radiation Results Boxplots

Figure 2A. Survey Areas A and B, and BG-1 and BG-2 Gamma Radiation Boxplots

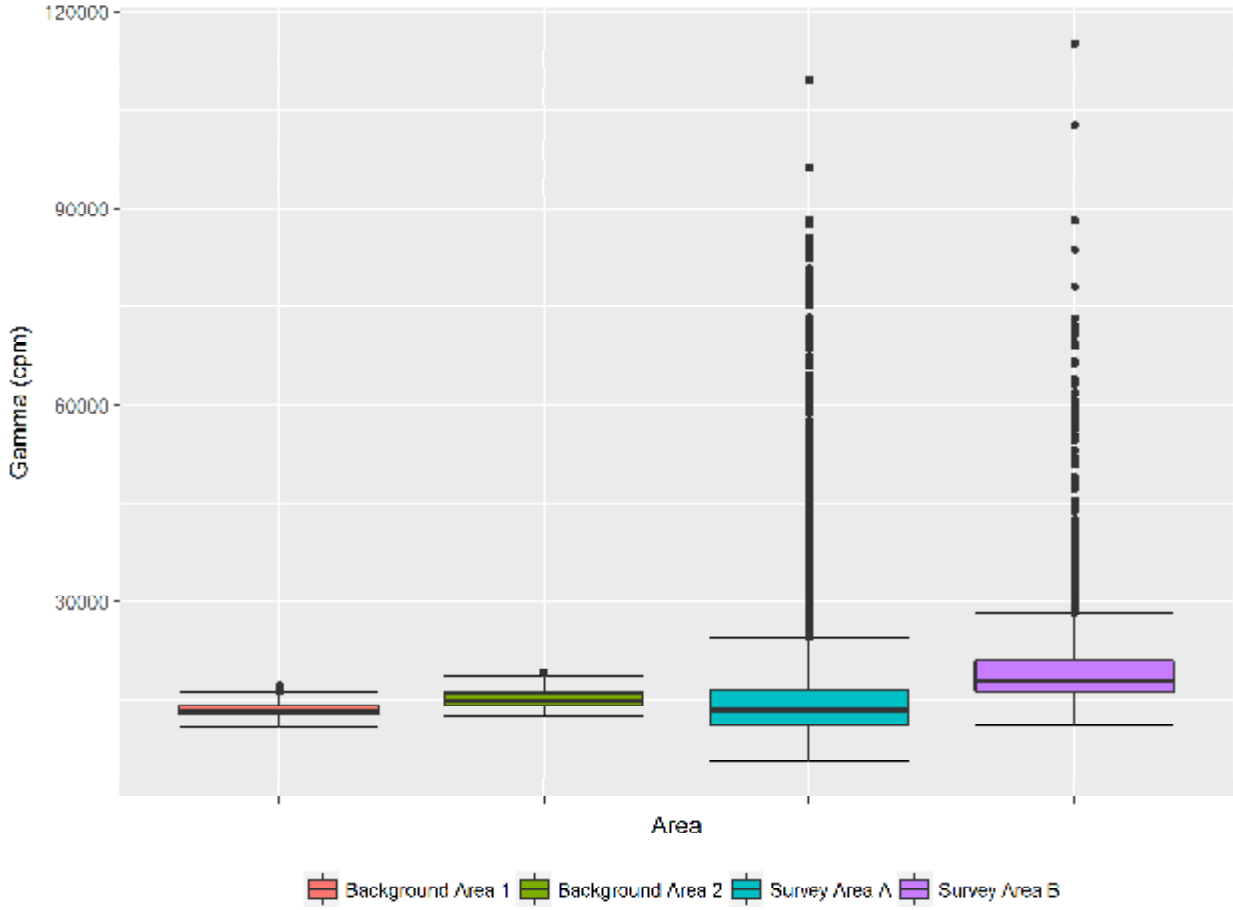

The gamma radiation survey results boxplots shown on Figure 2A depict differences in the data distribution for gamma measurements between BG-1, BG-2, and Survey Areas A and B. The large number of potential outlier values in the Survey Areas A and B boxplots indicate high skewness or possibly log-normally distributed data, instead of outlier values. This has been further evaluated with the use of probability plots in Section 3.1.2 and statistical testing in Section 3.1.4. Based on review of the Site geology, the gamma radiation potential outlier values observed for the Survey Areas on Figure 2A represent localized areas of higher gamma radiation with respect to other parts of the Survey Areas, as would be expected in areas with varying levels of mineralization and naturally occurring radioactive materials (NORM).

Figure 2B. BG-1 and BG-2 Gamma Radiation Boxplots

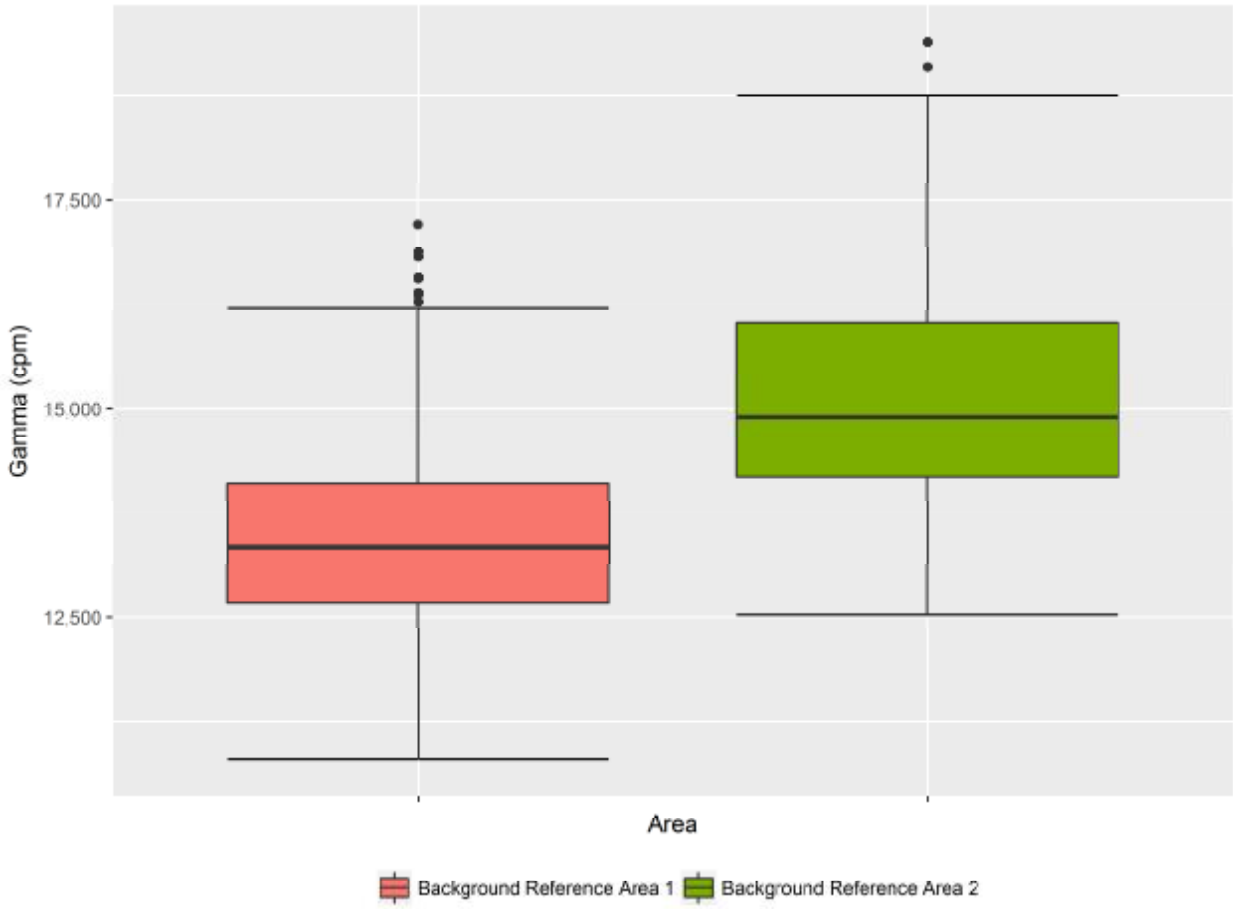

There are eight high value potential outlier values shown for gamma data in the BG-1 dataset and two potential outlier values in the BG-2 dataset, as shown in Figure 2B. The potential outlier values are only slightly higher than the threshold of 1.5 times the interquartile range, and represent a very small proportion of the total BG-1 and BG-2 gamma data values respectively; there is no scientific rationale to reject these data based on the box-plot evaluation alone.

3.1.2 Probability Plots

The normal probability plot is a graphical technique for assessing whether a data set is approximately normally distributed, and where there may be potential outlier values. The data are plotted against a theoretical normal distribution in such a way that the points, if normally distributed, should form an approximate straight line. Curved lines may indicate non-normally or log-normally distributed data, and "S"-shaped lines may indicate two distinct groups within the dataset.

3.1.2.1 Soil Sample Results Probability Plots

Figure 3. BG-1 Soil Sample Probability Plots

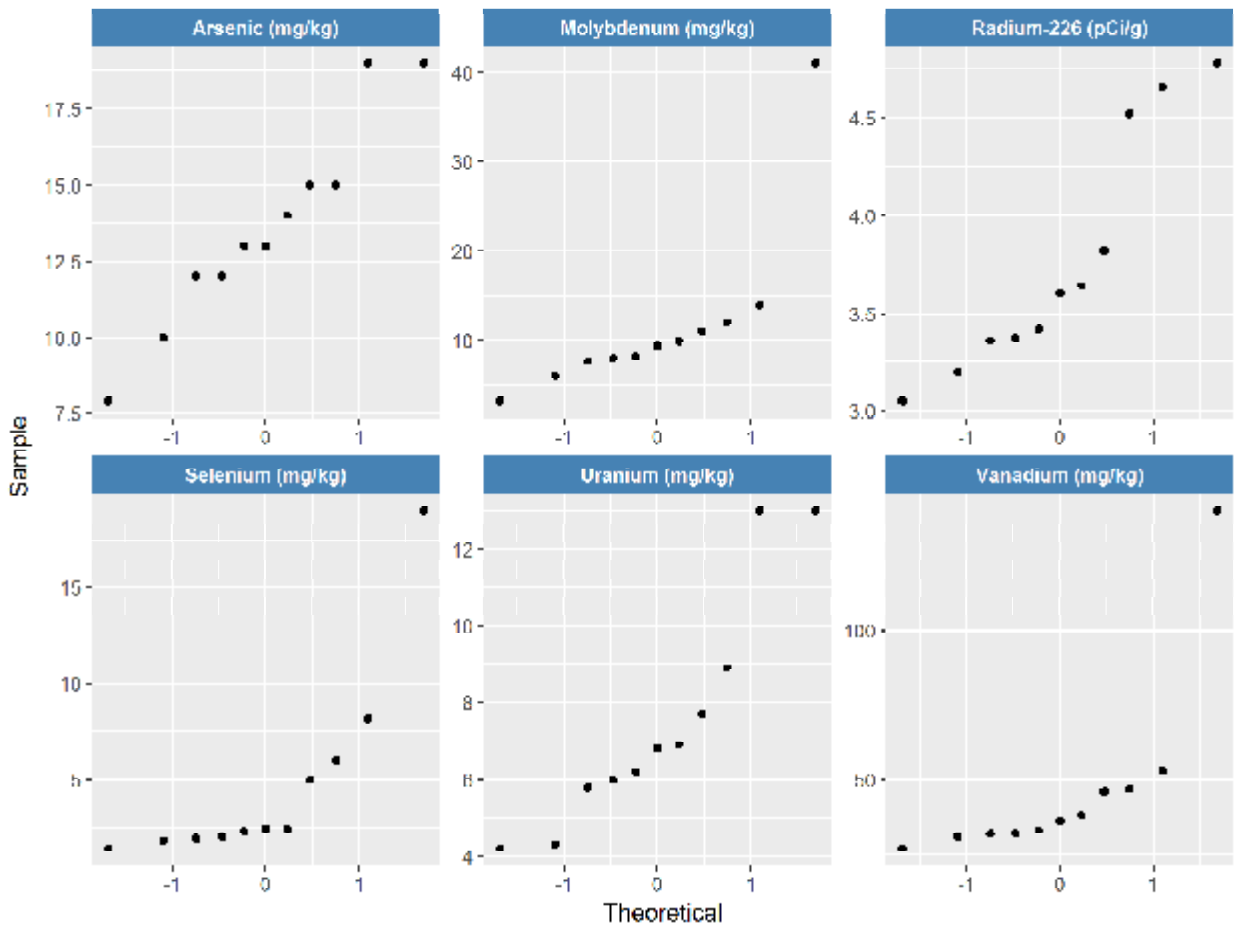

At BG-1 five potential outlier values were identified in the BG-1 soil sample boxplots in Figure 1B: molybdenum, selenium, uranium (2 values) and vanadium. When viewed in the probability plots in Figure 3, these values do appear to be removed from the rest of their respective datasets. These five values were tested for statistical significance as potential outliers in Section 3.1.3.

Figure 4. BG-2 Soil Sample Probability Plots

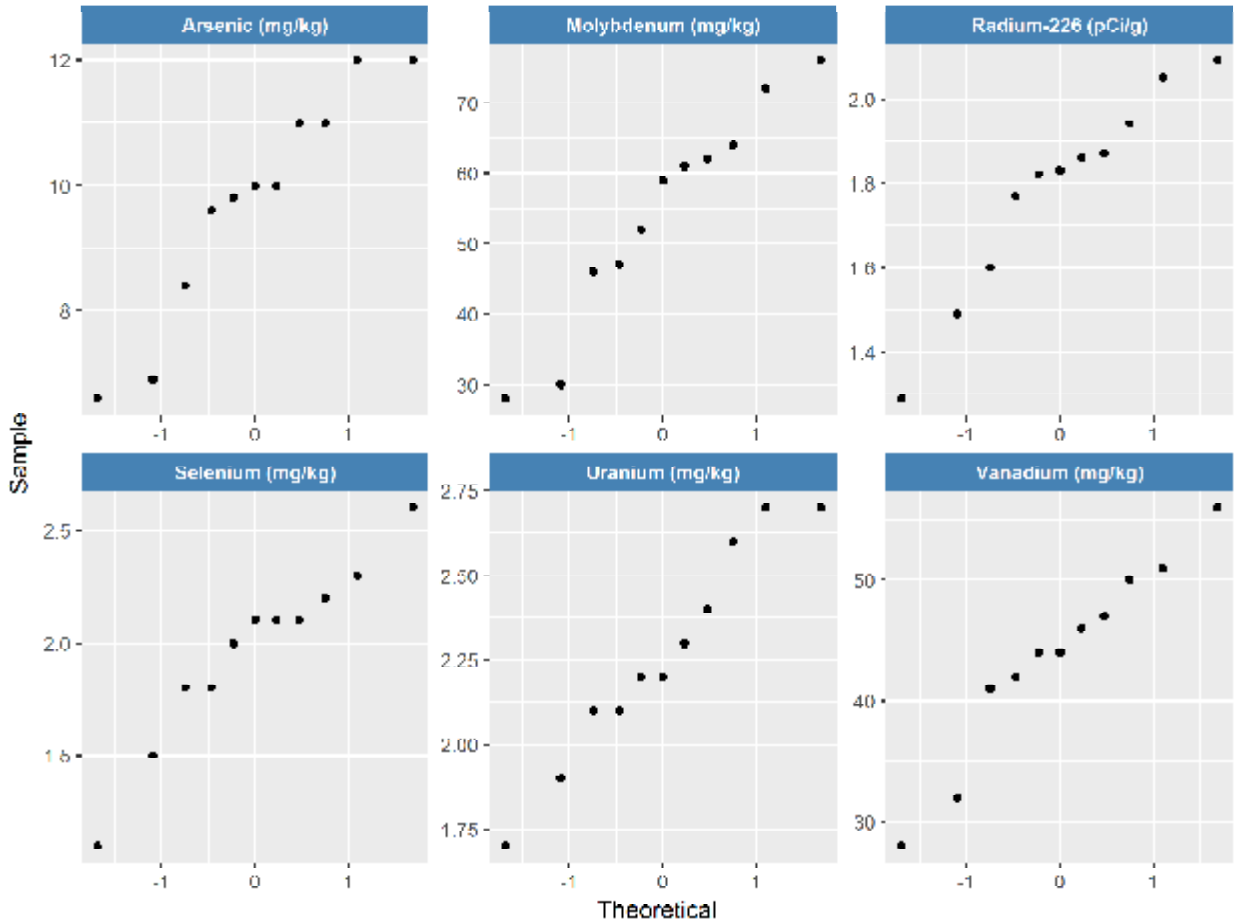

One value each for Ra-226, selenium and vanadium were identified as potential outlier values in the BG-2 soil sample boxplots in Figure 1B. When viewed in the probability plots in Figure 4, these values do not appear to be as far removed from the rest of their respective datasets as they appear in the boxplots. These three values were tested for statistical significance as potential outliers in Section 3.1.3.

3.1.2.2 Gamma Survey Results Probability Plots

Figure 5. Survey Areas A and B, and BG-1 and BG-2 Gamma Probability Plots

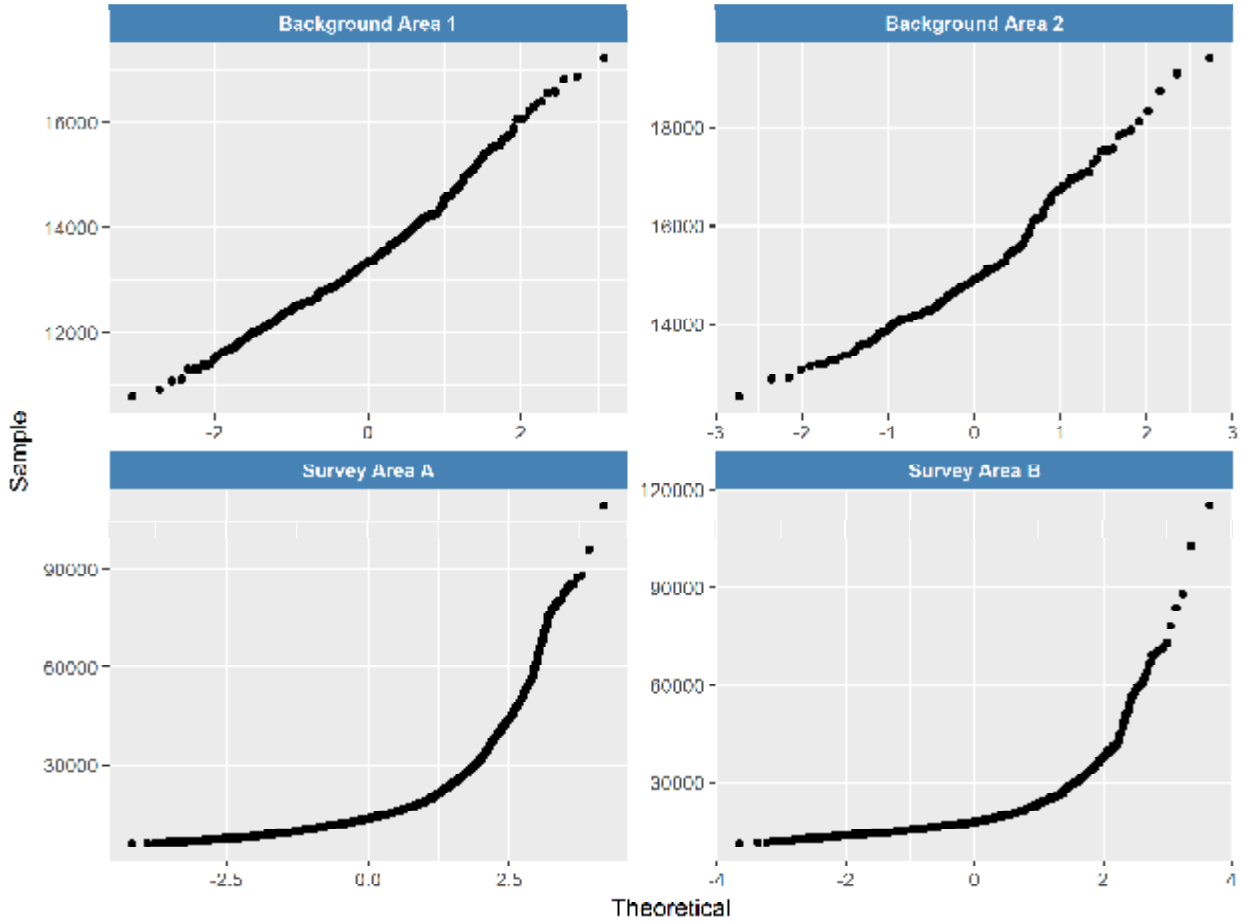

Eight values at BG-1 and two values at BG-2 were identified as gamma radiation potential outliers in the gamma boxplots in Figure 2B. When viewed in the probability plots in Figure 5, these values do not appear to be as far removed from the rest of their respective datasets as they appear in the boxplots.

The shape of the probability plots in Survey Areas A and B confirms that the gamma radiation data are more log-normally distributed than in the background reference areas. This means that these higher values are not potential outliers but rather representative of the spatial variability of gamma radiation in the Survey Areas.

3.1.3 Potential Soil Sample Data Outliers

Five high value, potential outliers are identified in the boxplots in Figure 1B for molybdenum (41 mg/kg), selenium (19 mg/kg), uranium (two values of 13 mg/kg for uranium) and vanadium (140 mg/kg). These values also are shown to deviate from the distribution of the rest of their respective datasets in the probability plots in Figure 3.

Three low values are identified in the boxplots in Figure 1B for Ra-226, selenium and vanadium in BG-2 as potential outlier values of 1.29 mg/kg, 1.1 mg/kg and 28 mg/kg, respectively. These values are not shown to deviate greatly from the distribution of the rest of their respective datasets in the probability plots in Figure 4.

With the exception of uranium at BG-1 (having two values of 13 mg/kg), only one potential outlier value was present in each instance. Dixon's Test (Dixon, 1953) is designed to be used for identifying potential outliers in normally distributed datasets containing only one or two potential outlier values. Therefore, Dixon's Test was performed to the 95% confidence level on the highest and lowest values for each potential outlier constituent in the BG-1 and BG-2 datasets. The results of Dixon's Test are summarized in Table 1.

Table 1. Summary of Dixon's Test on Maximum/Minimum Soil Sample Values

Area_ID	Location ID	Constituent	Q Statistic	Hypothesis	p_Value	Conclusion
Background Area 1 (BG-1)	S852-BG1-009	Mo	0.829	highest value 41 is a potential outlier	< 0.05	Hypothesis accepted
	S852-BG1-007	Se	0.756	highest value 19 is a potential outlier	< 0.05	Hypothesis accepted
	S852-BG1-006	U	0.471	highest value 13 is a potential outlier	> 0.05	Hypothesis rejected
	S852-BG1-009	V	0.853	highest value 140 is a potential outlier	< 0.05	Hypothesis accepted
Background Area 2 (BG-2)	S852-BG2-002	Ra-226	0.408	lowest value 1.29 is a potential outlier	> 0.05	Hypothesis rejected
	S852-BG2-011	Se	0.583	lowest value 1.1 is a potential outlier	> 0.05	Hypothesis rejected
	S852-BG2-011	V	0.565	lowest value 28 is a potential outlier	> 0.05	Hypothesis rejected

The test confirms three of the four potential high outliers observed at BG-1 for molybdenum, selenium and vanadium as statistically significant (p value <0.05). The three potential outliers at BG-2 were not statistically significant.

The three high values from BG-1 were investigated by reviewing sample forms, field notes and laboratory reports. During sampling, the field team noted a change in the texture and color of the soil in the area of S852-BG1-007. A majority of the samples from BG-1 consisted of brown sandy silt with gravels. At the S852-BG1-007 sample point, the soil was gray in color and had a "popcorn" texture which is caused by the shrinking and swelling of clays. Clays were noted in the S852-BG1-009 sample as well. The change in soil type in the area of the two samples may correspond to the increase in molybdenum, selenium, and vanadium values in that part of BG-1. Therefore, while these values are outside the interquartile range of their respective datasets and are deemed potential outliers by Dixon's Test, they were not removed from the dataset because they are considered representative of the varying soil types at BG-1. However, descriptive statistics were calculated with and without these values for comparison (Section 3.3.1).

3.1.4 Potential Gamma Data Outliers

Gamma survey potential outlier values are observed as eight values in the BG-1 dataset and two values in the BG-2 dataset, shown in the boxplots in Figure 2B. When viewed in the probability plots in Figure 5, the values do not appear removed from the remainder of their respective datasets. Additionally, the gamma radiation survey results for BG-1 and BG-2 shown on Figure 5 appear nearly linear, indicating that the normal distribution is a good model for these datasets. Because there are greater than one potential outlier value in each dataset, and the number of values in each dataset is >30, Dixon's Test was not appropriate for testing potential outlier values. Instead, because the values appear to be normally distributed, it was appropriate to identify potential outliers using Z, t and chi squared scoring methods at the 95% confidence level. These tests were performed in the 'Outliers' package in R (Lukasz Komsta (2011)) and the results are summarized in Table 2. The R programming language complements ProUCL in its ability to provide more meaningful and useful graphics and summarizes the results equivalent to ProUCL. Because ProUCL and R packages follow similar statistical procedures, the results are comparable. The interquartile range evaluation (values outside 1.5 times the interquartile range) results are also provided in Table 2.

Table 2. Potential Gamma Outlier Interquartile Range, Z Score, t Score and Chi Squared Score Results

Area	Value (cpm)	Interquartile Range Result	Z Score Result	t Score Result	Chi Sq Score Result
Background Area 1 (BG-1)	17,208	Potential Outlier	Potential Outlier	Potential Outlier	Potential Outlier
	16,878	Potential Outlier	Potential Outlier	Potential Outlier	Potential Outlier
	16,818	Potential Outlier	Potential Outlier	Potential Outlier	Potential Outlier
	16,582	Potential Outlier	Potential Outlier	Potential Outlier	Potential Outlier
	16,549	Potential Outlier	Potential Outlier	Potential Outlier	Potential Outlier
	16,388	Potential Outlier	Potential Outlier	Potential Outlier	Potential Outlier
	16,362	Potential Outlier	Potential Outlier	Potential Outlier	Potential Outlier
	16,277	Potential Outlier	Potential Outlier	Potential Outlier	Potential Outlier
Background Area 2 (BG-2)	19,395	Potential Outlier	Potential Outlier	Potential Outlier	Potential Outlier
	19,098	Potential Outlier	Potential Outlier	Potential Outlier	Potential Outlier

While the eight BG-1 gamma values are deemed potential outliers, they represent eight out of 476 data points (1.7 percent), and there is no physical reason to reject them. However, descriptive statistics were calculated with and without these values for comparison (Section 3.3.2).

Two BG-2 gamma values are deemed potential outliers, and they represent 2 out of 160 data points (1.2 percent), and there is no physical reason to reject them. However, descriptive statistics were calculated with and without these values for comparison (Section 3.3.2).

Figure 2A presents potential outlier values in the gamma dataset for Survey Areas A and B. However, because of the smoothly lognormal distribution of these gamma results as shown in the probability plots (Figure 5), these higher values are not potential outliers; they are representative of the spatial variability of gamma radiation in Survey Areas A and B.

3.2 COMPARE DATA POPULATIONS

Group comparison analyses provide insight into the relative concentrations of constituents between background reference areas and the Survey Areas. Observations made during these analyses may indicate the need for further evaluation or consideration regarding the influence of potential outlier values, and the use of background data. For instance, if two or more background areas were determined to be statistically similar to each other, these data could be combined to calculate more robust statistics. Alternatively, testing of this kind may reveal background concentrations statistically higher than the corresponding Survey Area, requiring additional interpretation or modifications in the use of background reference area datasets. Finally, results of these evaluations are a component of determining background reference area representativeness; though statistical comparisons are not the only factors to be considered in judging representativeness. Factors such as geologic materials, aspect, vegetation cover, and wind direction are all important to the selection of background reference areas.

Group comparisons therefore are considered instructive as a component of the overall evaluation of soil sample and gamma radiation survey results at Hoskie Tso No. 1. Relative data distributions were investigated by evaluating the boxplots and probability plots in Figures 1A through 5, and by hypothesis testing with the non-parametric Mann-Whitney test.

3.2.1 Evaluation of Boxplots

3.2.1.1 Soil Sample Boxplots

The boxplot comparison in Figures 1A and 1B suggests that mean metals and Ra-226 values may differ between the BG-1, BG-2 and the Survey Areas, with most constituents being elevated in the Survey Areas compared to the background reference areas.

When interpreting the soil sample boxplots in Figures 1A and 1B, it is important to note that while eleven samples were used to represent BG-1, BG-2, and Survey Area A in the boxplots, three samples were used to represent Survey Area B. Three data points limit the statistical robustness of hypothesis testing e.g.: Mann-Whitney evaluation. Additionally, samples at BG-1 and BG-2 were collected randomly, while samples in the Survey Areas were collected judgmentally. Therefore, the Mann-Whitney test was performed for BG-1 and BG-2 soil sample results only, and the results of the test are presented in Section 3.2.2.

3.2.1.2 Gamma Radiation Boxplots

The boxplot comparison in Figures 2A and 2B suggests possible differing data distribution in the Survey Areas compared to the background reference areas (normal), and likely differing mean values between BG-1, BG-2 and the Survey Areas A and B for gamma radiation results. This observation is further evaluated in Section 3.2.2 using the non-parametric Mann-Whitney test.

3.2.2 Mann-Whitney Testing

The Mann-Whitney test (Bain and Engelhardt, 1992) is a nonparametric test used for determining whether a difference exists between two or more population distributions. This test is also known as the Wilcoxon Rank Sum (WRS) test. This test evaluates whether measurements from one population consistently tend to be larger (or smaller) than those from the other population. This test was selected over other comparative tests such as the Student's t test and analysis of variance (ANOVA) because it remains robust in the absence of required assumptions that these two tests require, such as normally distributed data and equality of variances.

Soil samples at BG-1 and BG-2 were collected randomly, while soil samples in the Survey Areas A and B were collected judgmentally (see Section 3.1). Mann-Whitney testing is not appropriate for comparative analysis if one or both groups contain data collected using a judgmental approach. Therefore, the Mann-Whitney test was not performed on soil sample data between background reference areas and Survey Areas. Gamma radiation data, however, do represent non-judgmental sampling, and so the Mann-Whitney test was appropriate for comparison between background reference areas and Survey Areas (Table 3). Therefore, the test was performed two-sided on the background reference areas and Survey Area A and B gamma radiation data. The two-sided test accounts for results from one group being lower or higher than any other group (i.e., the hypothesis tested whether the two groups differ, independent of which group is higher). A test result p-value of 0.05 or smaller indicates that a significant difference exists between any two groups that are compared. Results of Mann-Whitney testing are presented in Table 3.

Table 3. Summary of gamma survey Mann-Whitney test results

Comparison	p_Value	Description
Background Area 1 (BG-1) vs Background Area 1 No Potential Outliers	0.655	No Significant Difference
Background Area 2 (BG-2) vs Background Area 2 No Potential Outliers	0.848	No Significant Difference
Background Area 1 (BG-1) vs Background Area 2 (BG-2)	<0.05	Significant Difference
Background Area 1 (BG-1) vs Survey Area A	0.832	No Significant Difference
Background Area 2 (BG-2) vs Survey Area B	<0.05	Significant Difference
Survey Area A vs Survey Area B	<0.05	Significant Difference

The outcome of Mann-Whitney testing for gamma radiation survey results (Table 3) indicate the following:

- The inclusion or removal of potential outlier values has no effect on the results of the Mann-Whitney test from BG-1 or BG-2 data (i.e., no statistically significant difference between groups with and without potential outlier values included).
- Gamma results are statistically elevated in BG-2 with respect to BG-1.
- Gamma results are statistically elevated in Survey Area B with respect to BG-2, which could indicate there are mining-related impacts. However, given that there is no evidence of mining activities at the Site, this result is likely is due to a greater presence of mineralization in Survey Area B, and suggests BG-2 may not fully represent all mineralized conditions present at Survey Area B.
- Gamma results are not statistically elevated in Survey Area A with respect to BG-1. This observation suggests that BG-1 is representative of Survey Area A with regard to gamma radiation, considering that there is no historical evidence that mining occurred at the Site.
- The Mann-Whitney test results indicate that the two background areas are dissimilar with regard to gamma radiation. Therefore, the data sets from the two background reference areas were not combined. The Mann-Whitney test results support the use of separate background reference areas (based on differences in geology) to represent the two Survey Areas.

3.3 DESCRIPTIVE STATISTICS

Descriptive statistics, including the upper confidence limit (UCL) of the mean and the 95-95 upper tolerance limit (UTL) were calculated from gamma survey data and soil sample results. Descriptive statistics are important for any data evaluation to present the basic statistics of any dataset with regards to its limits (maximum and minimum), central tendencies (mean and median) as well as data dispersion (coefficient of variance). The ILs for the Site are taken from the descriptive statistics, namely the 95-95 UTL. The UTL value is selected by ProUCL as the maximum value in the dataset when the data are determined to be non-parametric. The parameters and constituents evaluated include gamma radiation, arsenic, molybdenum, selenium, uranium, vanadium, and Ra-226.

Statistics were calculated using the Environmental Protection Agency (EPA) ProUCL version 5.1 software. Statistical methodology employed by the software is documented in the *ProUCL Version 5.1 Technical Guide Statistical Software for Environmental Applications for Data Sets with and without Nondetect Observations* (EPA, 2015). In the case of non-detect results, ProUCL does not recommend detection limit substitution methods (e.g., 1/2 the detection limit), considering these methods to be imprecise and out of date (EPA, 2015). The software instead calculates descriptive statistics for the detected results only, and follows various methods accordingly to calculate UCL and UTL values based on the percentage of non-detect results present in the dataset and on the distribution of the data (i.e., normal, lognormal, gamma, or unknown distribution).

Descriptive statistics for soil samples and gamma radiation survey results have been calculated with and without the potential outlier values previously identified. Select descriptive statistics for these constituents are presented in Tables 4 and 5.

3.3.1 Soil Sample Analytical Results Summary

As described in Section 3.2.1.1, the mean metals and Ra-226 values differ between the BG-1, BG-2 and Survey Area A and B, with most constituents being elevated in the Survey Areas compared to the background reference areas. It should be noted that the maximum detected concentrations of several of the metals measured in the Survey Areas were greater than the range of metals concentrations typically observed in Western U.S. soils (USGS, 1984):

- Arsenic (mean = 5.5 mg/kg; range <0.10 – 97 mg/kg)
- Molybdenum (mean = 0.85 mg/kg; range <3 – 7 mg/kg)
- Selenium (mean = 0.23 mg/kg; range <0.1 – 4.3 mg/kg)
- Uranium (mean = 2.5 mg/kg; range 0.68 – 7.9 mg/kg)
- Vanadium (mean = 70 mg/kg; range 7 – 500 mg/kg)

As shown in Table 4, maximum detected concentrations of arsenic, molybdenum, selenium, and uranium in the Survey Areas are greater than the typical concentration range reported for Western US soils. Exceptions to the above are vanadium.

3.3.2 Soil Sample Analytical Results Summary

Table 4 presents the descriptive statistics output from the ProUCL software for the soil sample results.

Table 4. Summary of Soil Sampling Results

Area	Statistic	Arsenic (mg/kg)	Molybdenum (mg/kg)	Selenium (mg/kg)	Uranium (mg/kg)	Vanadium (mg/kg)	Radium-226 (pCi/g)
Background Area 1 (BG-1) All Data	Total Number of Observations	11	11	11	11	11	11
	Minimum[1]	7.90	3.20	1.40	4.20	27.0	3.05
	Mean[1]	13.6	11.9	4.76	7.53	46.8	3.77
	Maximum[1]	19.0	41.0	19.0	13.0	140	4.78
	Distribution	Normal	Gamma	Lognormal	Normal	Gamma	Normal
	Coefficient of Variation[1]	0.247	0.852	1.09	0.401	0.682	0.162
	UCL Type	95% Student's-t UCL	95% Adjusted Gamma UCL	95% H-UCL	95% Student's-t UCL	95% Adjusted Gamma UCL	95% Student's-t UCL
	UCL Result	15.5	18.8	8.99	9.18	66.7	4.10
	UTL Type	UTL Normal	UTL Gamma WH	UTL Lognormal	UTL Normal	UTL Gamma WH	UTL Normal
	UTL Result	23.1	45.0	31.9	16.0	141	5.48
Background Area 1 (BG-1) Excluding Potential Outliers[3]	Total Number of Observations	--	10	10	--	10	--
	Minimum[1]	--	3.20	1.40	--	27.0	--
	Mean[1]	--	8.94	3.34	--	37.5	--
	Maximum[1]	--	14.0	8.20	--	53.0	--
	Distribution	--	Normal	Lognormal	--	Normal	--
	Coefficient of Variation[1]	--	0.344	0.679	--	0.225	--
	UCL Type	--	95% Student's-t UCL	95% H-UCL	--	95% Student's-t UCL	--
	UCL Result	--	10.7	5.29	--	42.4	--
	UTL Type	--	UTL Normal	UTL Lognormal	--	UTL Normal	--
	UTL Result	--	17.9	15.5	--	62.0	--
Background Area 2 (BG-2)	Total Number of Observations	11	11	11	11	11	11
	Minimum[1]	6.60	28.0	1.10	1.70	28.0	1.29
	Mean[1]	9.76	54.3	1.96	2.26	43.7	1.78
	Maximum[1]	12.0	76.0	2.60	2.70	56.0	2.09
	Distribution	Normal	Normal	Normal	Normal	Normal	Normal
	Coefficient of Variation[1]	0.187	0.286	0.207	0.141	0.185	0.134
	UCL Type	95% Student's-t UCL	95% Student's-t UCL	95% Student's-t UCL	95% Student's-t UCL	95% Student's-t UCL	95% Student's-t UCL
	UCL Result	10.8	62.8	2.19	2.44	48.2	1.91
	UTL Type	UTL Normal	UTL Normal	UTL Normal	UTL Normal	UTL Normal	UTL Normal
	UTL Result	14.9	98.0	3.11	3.17	66.5	2.46
Survey Area A	Total Number of Observations	11	11	11	11	11	11
	Percent Non-Detects	--	--	18%	--	--	--
	Minimum[1]	5.40	8.60	--	3.00	6.80	1.41
	Minimum Detect[2]	--	--	1.10	--	--	--
	Mean[1]	21.0	70.7	--	11.5	21.4	7.43
	Mean Detects[2]	--	--	1.88	--	--	--
	Maximum[1]	44.0	250	--	23.0	34.0	17.6
	Maximum Detect[2]	--	--	3.60	--	--	--
	Distribution	Normal	Gamma	Normal	Normal	Normal	Normal
	Coefficient of Variation[1]	0.601	1.08	--	0.595	0.383	0.660
	CV Detects[2]	--	--	0.438	--	--	--
	UCL Type	95% Student's-t UCL	95% Adjusted Gamma UCL	95% KM (t) UCL	95% Student's-t UCL	95% Student's-t UCL	95% Student's-t UCL
	UCL Result	27.8	152	2.12	15.2	25.8	10.1
	UTL Type	UTL Normal	UTL Gamma WH	UTL KM Normal	UTL Normal	UTL Normal	UTL Normal
	UTL Result	56.4	448	4.33	30.7	44.4	21.2

Area	Statistic	Arsenic (mg/kg)	Molybdenum (mg/kg)	Selenium (mg/kg)	Uranium (mg/kg)	Vanadium (mg/kg)	Radium-226 (pCi/g)
Survey Area B	Total Number of Observations	3	3	3	3	3	3
	Minimum[1]	37.0	69.0	3.90	160	47.0	116
	Mean[1]	93.3	580	4.47	267	48.3	229
	Maximum[1]	170	1,200	5.50	370	50.0	445
	Distribution	Normal	Normal	Normal	Normal	Normal	Normal
	Coefficient of Variation[1]	0.737	0.989	0.201	0.394	0.032	0.817
	UCL Type	95% Student's-t UCL	95% Student's-t UCL	95% Student's-t UCL	95% Student's-t UCL	95% Student's-t UCL	95% Student's-t UCL
	UCL Result	209	1,546	5.98	444	50.9	545
	UTL Type	UTL Normal	UTL Normal	UTL Normal	UTL Normal	UTL Normal	UTL Normal
	UTL Result	620	4,970	11.3	1,071	60.0	1,662

[1] This statistic is reported by ProUCL when the dataset contains 100 percent detections.
[2] This statistic is reported by ProUCL when non-detect values exist in the dataset. The value reported is calculated using detections only.
[3] No potential statistical outliers were identified for arsenic, uranium or Ra-226 in this area.
CV Coefficient of variation
KM Kapplan Meier
mg/kg Milligrams per kilogram
-- Not applicable
pCi/g Picocuries per gram
WH Wilson Hilferty
Note The UTL result that is shown on the table is based on the output from ProUCL. ProUCL evaluates the data and provides all possible UCLs from its UCL module for three possible data distributions, then identifies a recommended UCL value. ProUCL does not identify a recommended UTL value. The UTLs are therefore based on the distribution of the recommended UCL. Please refer to *ProUCL Version 5.1 Technical Guide Statistical Software for Environmental Applications for Data Sets with and without Non-detect Observations* (EPA, 2015) for further information

3.3.3 Gamma Radiation Results Summary

Table 5 presents the descriptive statistics output from the ProUCL software for the gamma surveys.

Table 5. Summary of Walk-over Gamma Results

Area	Statistic	Gamma (cpm)
Background Area 1 (BG-1) All Data	Total Number of Observations	476
	Minimum	10,781
	Mean	13,450
	Maximum	17,208
	Distribution	Normal
	Coefficient of Variation	0.082
	UCL Type	95% Student's-t UCL
	UCL Result	13,533
	UTL Type	UTL Normal
	UTL Result	15,388
Background Area 1 (BG-1) Excluding Potential Outliers	Total Number of Observations	468
	Minimum	10,781
	Mean	13,395
	Maximum	16,202
	Distribution	Gamma
	Coefficient of Variation	0.076
	UCL Type	95% Approximate Gamma UCL
	UCL Result	13,473
	UTL Type	UTL Gamma WH
	UTL Result	15,248
Background Area 2 (BG-2) All Data	Total Number of Observations	160
	Minimum	12,528
	Mean	15,158
	Maximum	19,395
	Distribution	Normal
	Coefficient of Variation	0.090
	UCL Type	95% Student's-t UCL
	UCL Result	15,337
	UTL Type	UTL Normal
	UTL Result	17,702
Background Area 2 (BG-2) Excluding Potential Outliers	Total Number of Observations	158
	Minimum	12,528
	Mean	15,106
	Maximum	18,749
	Distribution	Normal
	Coefficient of Variation	0.086
	UCL Type	95% Student's-t UCL
	UCL Result	15,277
	UTL Type	UTL Normal
	UTL Result	17,518

Area	Statistic	Gamma (cpm)
Survey Area A	Total Number of Observations	32,534
	Minimum	5,577
	Mean	14,860
	Maximum	109,631
	Distribution	Normal
	Coefficient of Variation	0.424
	UCL Type	95% Student's-t UCL
	UCL Result	14,918
	UTL Type	UTL Normal
	UTL Result	25,316
Survey Area B	Total Number of Observations	4,066
	Minimum	11,165
	Mean	19,821
	Maximum	115,157
	Distribution	Normal
	Coefficient of Variation	0.344
	UCL Type	95% Student's-t UCL
	UCL Result	19,997
	UTL Type	UTL Normal
	UTL Result	31,295

CPM Counts per minute
WH Wilson Hilfer

4.0 INVESTIGATION LEVELS

The calculated 95-95 UTL values described in Section 3.3 and listed in Tables 4 and 5 are used as the ILs for gamma measurement results and soil sampling results because they reflect the natural variability in the background data, and provide an upper limit from background data to be used for single-point comparisons to Survey Area data. Because BG-1 and BG-2 are representative of different geologic units of the Site, data from the background areas were not combined, and separate ILs were calculated for Survey Areas A and B from their respective background area datasets. Although descriptive statistics are presented in Section 3.3 with and without potential outlier values, no scientific reason was identified to remove any of the identified potential outlier values.

4.1 SURVEY AREA A INVESTIGATION LEVELS

The calculated ILs are summarized below.

- Arsenic (mg/kg): 23.1
- Molybdenum (mg/kg): 45.0
- Selenium (mg/kg): 31.9
- Uranium (mg/kg): 16.0
- Vanadium (mg/kg): 141
- Ra-226 (pCi/g): 5.48
- Gamma (cpm): 15,388

4.2 SURVEY AREA B INVESTIGATION LEVELS

- Arsenic (mg/kg): 14.9
- Molybdenum (mg/kg): 98.0
- Selenium (mg/kg): 3.11
- Uranium (mg/kg): 3.17
- Vanadium (mg/kg): 66.5
- Ra-226 (pCi/g): 2.46
- Gamma (cpm): 17,702

5.0 REFERENCES

Bain, L.J. and Engelhardt, M. (1992). *Introduction to probability and Mathematical Statistics*. Second Edition. Duxbury Press, California.

Dixon, W.J. (1953). *Processing Data for Outliers*. Biometrics 9: 74-89.

EPA (2015). *ProUCL Version 5.1 Technical Guide Statistical Software for Environmental Applications for Data Sets with and without Nondetect Observations*. https://www.epa.gov/sites/production/files/2016-05/documents/proucl_5.1_tech-guide.pdf

Lukasz Komsta (2011). *Outliers. Tests for outliers*. R package version 0.14. https://cran.r-project.org/web/packages/outliers/outliers.pdf

R Core Team (2016). *R: A language and environment for statistical computing*. R Foundation for Statistical Computing, Vienna, Austria. URL https://www.R-project.org/.

Schiffler, R.E (1998). *Maximum Z scores and outliers*. Am. Stat. 42, 1, 79-80.

H. Wickham (2009) ggplot2: *Elegant Graphics for Data Analysis*. Springer-Verlag New York.

Appendix E Cultural and Biological Resource Clearance Documents

BIOLOGICAL EVALUATION

For the Proposed:

Hoskie Tso No. 1
Abandon Uranium Mine Project

Sponsored by:

MWH Global / Stantec

Prepared by:

Adkins Consulting, Inc.
180 East 12th Street, Unit 5
Durango, Colorado 81301

Revised August 2016
June 2016

TABLE OF CONTENTS

1. Introduction and Project Background 4
2. Project Description 4
2.1. Location 4
2.2. Estimated Disturbance 5
3. Affected environment 5
3.1. Proposed Project Area (PPA) 5
4. Threatened, Endangered, and Sensitive Species Evaluation 6
4.1. Methods 6
4.2. ESA-Listed Species Analysis and Results 7
4.3. NESL Species Analysis and Results 9
4.4. Migratory Bird Species 12
5. Effects Analysis 14
5.1. Direct and Indirect Effects 14
5.2. Cumulative Effects 16
6. Conclusions 17
7. Recommendations for avoidance 17
8. Supporting Information 18
8.1. Consultation and Coordination 18
8.2. Report Preparers and Certification 18
8.3. References 19

Appendix A. Maps
Appendix B. Photographs
Appendix C. Redente Plant Survey Report
Appendix D. NESL Letter
Appendix E. Notes from Species Specific Surveys

This page intentionally left blank.

1. INTRODUCTION AND PROJECT BACKGROUND

The federal Endangered Species Act (ESA) of 1973, 16 U.S.C. §1531 et seq., requires all federal departments and agencies to conserve threatened, endangered, and critical and sensitive species and the habitats on which they depend, and to consult with the U.S. Fish and Wildlife Service (USFWS) on all actions authorized, funded, or carried out by each agency to ensure that the action will not likely jeopardize the continued existence of any threatened and endangered species or adversely modify critical habitat [USFWS 1998]. This report describes the potential for federal ESA-listed species and Navajo Nation Endangered Species List (NESL) endangered, threatened, candidate, or otherwise designated sensitive flora and fauna to occur in the proposed action area. The action area with regard to the ESA is defined as any area that may be directly or indirectly impacted by the proposed action [50 CFR §402.02]. This report is intended to provide the responsible official with information to make determinations of effect on species with special conservation status.

As the result of settlement by the United States, the Navajo Nation AUM Environmental Response Trust—First Phase was established to evaluate certain abandoned uranium mines located across the Navajo Nation. The project requires investigation of these sites prior to potential remediation activities in the future. MWH Global, a division of Stantec (MWH), will conduct exploratory activities at the Hoskie Tso No. 1 abandoned uranium mine (AUM) such as pedestrian gamma surveys, mapping, well sampling, and surface soil sampling within the mine claim boundaries and surrounding buffer zone. Subsequent earthwork and long term monitoring may be involved after final approval by the Navajo Nation Environmental Protection Agency (NNEPA) in conjunction with the U. S. Environmental Protection Agency (USEPA).

In support of this project, MWH contracted Adkins Consulting, Inc. (ACI) to conduct surveys for ESA-listed fauna and Navajo Nation Endangered Species List (NESL) endangered, threatened, candidate, or otherwise designated sensitive fauna. MWH contracted Redente Ecological Consultants (Redente) to conduct surveys for NESL and ESA-listed plant species. The results of the 2016 Redente biological investigations will be incorporated in Sections 4.2 and 4.3 of this report and can be found in entirety attached as Appendix C. The objectives of the biological surveys were as follows:

- To compile a list of ESA-listed or NESL species potentially occurring in the proposed action area.
- To provide a physical and biological description of the proposed action area.
- To determine the presence of ESA-listed or NESL species in the proposed action area.
- To assess potential impacts the proposed action may have on any ESA-listed or NESL species present in the area.
- To assess potential impacts to species protected under the Migratory Bird Treaty Act (MBTA).

2. PROJECT DESCRIPTION

2.1. Location

Hoskie Tso No. 1 is located in Navajo County Arizona, approximately 35 miles north of Holbrook, Arizona at an elevation of approximately 5,700 feet. Global Positioning System coordinates are 35.3792 N, -110.0616 W NAD 83. The site is located on Navajo Tribal Trust Lands within the Bureau of Indian Affairs (BIA) Fort Defiance Agency. The legal description of the project surface location is as follows: Section 24, Township 23 North, Range 21 East, Gila and Salt River Principal Meridian. Project area maps are provided in Appendix A.

2.2. Estimated Disturbance

MWH proposes a phased approach to scientific investigations at the Hoskie Tso No. 1 AUM. The study area encompasses the claim boundary and a 100-foot perimeter buffer zone for a total of approximately 23.7 acres. Please refer to Appendix A for maps delineating the mine claim boundary and buffer zone.

The project will also include a walkover survey for gamma radiation across a small area known as the "background area". Please refer to Appendix A for a map of the background sample areas. A few soil samples approximately 3 inches in diameter and up to 6 inches deep will be collected by hand in these areas.

- Phase I: Spring of 2016 activity would entail pedestrian biological surveys and land surveying. Fall of 2016 work would entail pedestrian activity including gamma surveys, mapping, well sampling, and surface soil sampling. In 2016, there will be a maximum of 5 people onsite for no more than 5 to 7 days. Surface disturbance would be minimal and noise would be light.

- Phase II: Beginning in 2017, equipment including an excavator or small mobile drilling unit may be used to collect one or more soil samples. Up to 8 people may be onsite all day for a period of one week. Equipment travel would be confined to a temporary travel corridor approximately 20 feet in width. Within the travel corridor, vegetation and surface soil would sustain some disturbance but would not be bladed or bulldozed. During Phase II, noise may be moderate for a short duration, and surface disturbance will be light to moderate but confined to a minimal footprint within the study area. No permanent structures will be left on site.

3. AFFECTED ENVIRONMENT

3.1. Proposed Project Area (PPA)

The proposed project area (PPA) at Hoskie Tso No. 1 includes the mine boundary with a 100-foot buffer zone surrounding the perimeter of the boundary. The affected environment or action area includes any area that may be directly or indirectly impacted by the proposed activities. Project area maps are provided in Appendix A.

3.1.1. Environmental Setting

Project activities would occur in northeastern Arizona located within the USEPA designated Arizona/New Mexico Plateau Level III Ecoregion. The Arizona/New Mexico Plateau occurs primarily in Arizona, Colorado, and New Mexico, with a small portion in Nevada. This ecoregion is approximately 45,870,500 acres, and the elevation ranges from 2,165 to 11,949 feet. The ecoregion's landscapes include low mountains, hills, mesas, foothills, irregular plains, alkaline basins, some sand dunes, and wetlands. This ecoregion is a large transitional region between the semiarid grasslands to the east, the drier shrublands and woodlands to the north, and the lower, hotter, less vegetated areas to the west and south.

Hoskie Tso No. 1 is situated on a rolling, eroded sandstone formation just east of AZ Highway 77 and approximately 1.2 miles south of Bidahochi Butte. Terrain within the PPA boundary is relatively flat to hilly with sandy soils and shallow ephemeral drainages. A large rocky formation with steep sandstone cliffs and numerous cavities is located approximately 0.25 miles to the east of the PPA.

Flora

Vegetation communities found within the region include shrublands with big sagebrush, rabbitbrush, winterfat, shadscale saltbush, and greasewood; and grasslands of blue grama, Western wheatgrass, green needlegrass, and needle-and-thread grass. Higher elevations may support piñon pine and juniper woodlands. The Hoskie Tso No. 1 site is predominantly desert grassland with sporadic shrubs. Vegetative cover is estimated to be approximately 30 percent.

Fauna

Wildlife or evidence of wildlife observed within the PPA included common raven (*Corvus corax*), cottontail rabbit (S*ylvilagus* sp.), coyote (*Canis latrans*), mule deer (*Odocoileus hemionus*), turkey vulture (*Cathartes aura*), Western burrowing owl (*Athene cunicularia hypugaea*), American kestrel (*Falco sparverius*), and prairie falcon (*Falco mexicanus*).

An active Western burrowing owl (*Athene cunicularia hypugaea*) nest was located approximately 0.16 miles northeast of the project area boundary. Pictures of the nest can be found in Appendix B, and the nest location is noted on aerial imagery in Appendix A.

A large rocky formation with steep sandstone cliffs and numerous cavities is located approximately 0.25 miles to the east of the PPA. Surveyors observed an active common raven (*Corvus corax*) nest approximately 0.25 miles south of the PPA on a cliff face. Additionally, surveyors observed an active prairie falcon (*Falco mexicanus*) nest on the eastern most extent of the rocky formation in a ledge half way up a rock spire. The female was seen sitting on the nest and the male flew over making destress calls. ACI biologists observed several old, inactive nests of unknown species located within the rock formation located approximately 0.25 miles to the east of the PPA. Pictures of the nests can be found in Appendix B, and the nest locations are noted on aerial imagery in Appendix A. Further analysis of sensitive species can be found in Section 4 of this document.

Hydrology/Wetlands

Under Executive Orders 11988 and 11990, Federal agencies are required to minimize the destruction, loss, or degradation of wetlands and floodplains, and preserve and enhance their natural and beneficial values. These habitats should be conserved through avoidance, or mitigated to ensure that there would be no net loss of wetlands function and value.

Run-off from precipitation in the project area generally drains southwest into Bidahochi Wash. Bidahochi Wash joins Pueblo Colorado Wash and eventually the Little Colorado River over 40 miles southwest of the PPA. There are no wetlands, seeps, springs, or riparian areas within the proposed project area. The proposed project activities would contribute to a negligible increase in sedimentation down gradient of the project area. This increase is not anticipated to be a factor due to the distance from perennial waters. There is no suitable habitat for ESA-listed fish, nor critical habitats thereof, within greater than 40 miles of the PPA.

Cumulative impacts to surface waters would be negligible. Surface-disturbing activities other than the proposed action that may cause accelerated erosion include, but are not limited to, construction of roads, other facilities, and installation of trenches for utilities; road maintenance such as grading or ditch-cleaning; public recreational activities; vegetation manipulation and management activities; natural and prescribed fires; and livestock grazing. Because the proposed action would have a negligible impact to downstream surface water quality, the cumulative impact also would be negligible when added to other past, present, and reasonably foreseeable activities.

4. THREATENED, ENDANGERED, AND SENSITIVE SPECIES EVALUATION

The Endangered Species Act (ESA) of 1973 requires all federal departments and agencies to conserve threatened, endangered, and critical and sensitive species and the habitats on which they depend, and to consult with the U.S. Fish and Wildlife Service (USFWS) on all actions authorized, funded, or carried out by the agency to ensure that the action will not likely jeopardize the continued existence of any threatened and endangered species or adversely modify critical habitat.

4.1. Methods

4.1.1. Off-site Methods

Prior to conducting fieldwork, ACI compiled data on animal species listed under the ESA. Informal consultation was initiated by requesting an Official Species List from the USFWS Information, Planning, and Conservation System (IPaC) website (http://ecos.fws.gov/ipac/). ACI received the Official Species List (02EAAZ00-2016-SLI-0362) on April 8, 2016. See Table 1 for USFWS-listed threatened, endangered, or candidate species with potential to occur in the PPA.

The Navajo Nation Department of Fish and Wildlife (NNDFW), Navajo Natural Heritage Program (File # 15mwh101) sent MWH a NESL information letter dated 29 December, 2015. The letter suggests biologists determine habitat suitability within the project area for the provided list of species of concern with potential to occur on the 7.5-minute quadrangles containing the project boundaries. The Navajo species of concern listed in the NESL information letter are included in Table 2.a below.

In addition to the above listed species, ACI reviewed species protected under the MBTA with potential to occur in the proposed project and action area (Table 3).

4.1.2. On-site Survey Methods

An on-site pedestrian survey was conducted in April 2016 by ACI personnel under a permit issued by NNDFW. The purpose of the survey was to assess habitat potential for ESA-listed or NESL animal species. Field biologists with considerable experience identifying local wildlife species lead survey crews. The survey consisted of walking transects 15 feet apart throughout the PPA including a survey buffer of approximately 50 feet beyond the PPA edge of disturbance. The surrounding areas were visually inspected with high powered binoculars for nests, raptors, or past signs of raptor use. Weather conditions were clear and visibility was good.

Follow up surveys were conducted at the site specifically targeting golden eagle (*Aquila chrysaetos*), ferruginous hawk (*Buteo regalis*), American peregrine falcon (*Falco peregrinus*), and Western burrowing owl (*Athene cunicularia hypugaea*) following Navajo Natural Heritage Program (NNHP) guidelines. All wildlife species observed in the action area were recorded, and digital photos were taken (Appendix B). Follow up survey details including date, site conditions and methods can be found on summary sheets attached as Appendix E.

Redente conducted surveys for plant species of concern. The results of the 2016 Redente biological investigations will be incorporated in Sections 4.2 and 4.3 of this report and can be found in entirety attached as Appendix C.

4.2. ESA-Listed Species Analysis and Results

4.2.1. Species from the USFWS IPaC Official Species List

Table 1 includes ESA-listed species that have the potential to occur in the project area based on the USFWS IPaC Official Species List. Biologists evaluated habitat suitability within and surrounding the PPA for the species in Table 1.

Table 1: USFWS IPaC Official Species List for the Hoskie Tso No. 1 Project

Species	Status	Occurrence Within Region	Habitat	Potential to Occur within Action Area
BIRDS				

Table 1: USFWS IPaC Official Species List for the Hoskie Tso No. 1 Project

Species	Status	Occurrence Within Region	Habitat	Potential to Occur within Action Area
California Condor (*Gymnogyps californianus*)	Endangered	In northern Arizona, condors are located primarily near the Vermilion cliffs, Grand Canyon and Coconino County.[3]	Large areas of remote country for foraging, roosting, and nesting. Roost on large trees or snags, or on isolated rocky outcrops and cliffs. Nests are located in shallow caves and rock crevices on cliffs where there is minimal disturbance. Foraging habitat includes open grasslands and oak savanna foothills that support populations of large mammals such as deer and cattle.[1]	No potential. Action area does not provide suitable food base for species to occur.
Yellow-Billed Cuckoo (*Coccyzus americanus*)	Threatened	Possible rare summer/breeding occurrences.[2]	In the southwestern U.S., associated with riparian woodlands dominated by cottonwood or willow trees. In New Mexico, native or exotic species may be used.[2]	No potential. Action area does not provide suitable habitat for species to occur.
FISHES				
Roundtail chub (*Gila robusta*)	Proposed Threatened	San Juan and Mancos Rivers. Rarely encountered in recent surveys; some found from Shiprock to near Lake Powell with most between Shiprock and Aneth. [2,3]	Rocky runs, rapids, and pools of creeks and small to large rivers; also large reservoirs in the upper Colorado River system. [3,4]	No potential. Action area does not provide suitable habitat for species to occur.
MAMMALS				
Black-Footed ferret (*Mustela nigripes*)	Experimental Population, Non-Essential	Reintroduced into Coconino County.[1]	Open habitat, including grasslands, steppe, and shrub steppe. Closely associated with prairie dog colonies. At least 40 hectares of prairie dog colony required to support one ferret.[2]	No potential. Action area does not provide suitable habitat for species to occur. Action area does not provide prairie dog colonies of sufficient size

Table 1: USFWS IPaC Official Species List for the Hoskie Tso No. 1 Project

Species	Status	Occurrence Within Region	Habitat	Potential to Occur within Action Area
Gray wolf (*Canus lupus*)	Proposed Experimental	In NE AZ, South of Hwy 60 in Apache, Coconino, and Navajo County; In NW NM, south of I-40 in Cibola, McKinley and Catron County.[2]	Not limited to any particular habitat type. Viable populations occur only where human population density and persecution level are low and prey densities are high. Birthing dens may be on bluffs or slopes among rocks or in enlarged badger holes. In Arizona and New Mexico, diet includes primarily elk and sometimes livestock, deer, rodents, or lagomorphs.[2]	No potential. Action area is outside of range for this species. Lacking prey base and human activity in the area are limiting factors.
REPTILES				
Northern Mexican gartersnake (*Thamnophis eques megalops*)	Threatened	Most of AZ; In SE NM including Carton, Grant and Hildago County [2]	Considered a riparian obligate except during dispersal behavior. Occurs chiefly in the following general habitat types: (1) Source-area wetlands [e.g., cienegas (mid-elevation wetlands with highly organic, reducing (basic or alkaline) soils), stock tanks (small earthen impoundment, etc.]; (2) large river riparian woodlands and forest; and (3) streamside gallery forests (as defined by well-developed broadleaf deciduous riparian forests with limited, if any, herbaceous ground cover or dense grass). Occurs at elevations 130 to 8,497 (ft).	No potential. Action area does not provide suitable habitat for species to occur.

[1]USFWS; [2]NatureServe Explorer; [3]Navajo Endangered Species List, Species Accounts 2008, [4] IUCN Red List, [5]Redente 2016

4.2.2. ESA-Listed Species Eliminated From Further Consideration

Table 1 includes six (6) ESA-listed species that have the potential to occur in the project area based on the USFWS IPaC Official Species List. All of the species in Table 1 have been eliminated from further discussion in this report. There would be no direct, indirect or cumulative impacts to the species in Table 1.

4.3. NESL Species Analysis and Results

4.3.1. Navajo Endangered Species List (NESL) and Species of Concern

Table 2.a lists species of concern with potential to occur on the 7.5-minute quadrangle(s) containing the project boundaries. According to the NESL information letter received from the NFWD found in Appendix

D, the golden eagle (*Aquila chrysaetos*) is known to occur within three miles of project site. Biologists evaluated the potential for species of concern listed in the table below to occur within the project area.

Additionally, the NESL information letter requested that the potential for black-footed ferret (*Mustela nigripes*) be evaluated if prairie dog towns of sufficient size (per NFWD guidelines) occur in the project area, and that potential for Parish's alkali grass (*Puccinellia parishii*) be evaluated if wetland conditions exist that contain white alkaline crusts. Species listed by the USFWS in Table 1 are not reiterated here.

Table 2.a: Navajo Endangered Species List (NESL) and Species of Concern

Species	Status	Habitat Associations	Potential to Occur in Project or Action Area
ANIMALS			
Mountain plover *(Charadrius montanus)*	NESL G4	Typically nests in flat (<2% slope) to slightly rolling expanses of grassland, semi-desert, or badland, in an area with short, sparse vegetation, large bare areas (often >1/3 of total area), and that is typically disturbed (e.g. grazed); may also nest in plowed or fallow cultivation fields. Nest is a scrape in dirt often next to a grass clump or old cow manure pile. Migration habitat is similar to breeding habitat.	No potential. Action area does not provide suitable habitat for species to occur.
Golden eagle (*Aquila chrysaetos*)	NESL G3	In the west, mostly open habitats in mountainous, canyon terrain. Nests primarily on cliffs. [3]	Action area provides potential foraging habitat for species to occur. Rock formation with steep sandstone cliffs and numerous cavities located approximately 0.25 miles to the east of the PPA may provide potential nesting habitat.
Ferruginous hawk (*Buteo regalis*)	NESL G3	Breed in open country, usually prairies, plains and badlands; semi- desert grass-shrub, sagebrush-grass & piñon-juniper plant associations. [3]	Action area provides potential foraging habitat for species to occur. Rock formation with steep sandstone cliffs and numerous cavities located approximately 0.25 miles to the east of the PPA may provide potential nesting habitat.
American peregrine falcon (*Falco peregrinus*)	NESL G4 NM-T	Nests on steep cliffs >30 m tall (typically >45 m) in a scrape on sheltered ledges or potholes. Foraging habitat quality is an important factor; often, but not always, extensive wetland and/or forest habitat is within the falcon's hunting range of <=12 km. Nest in ledges or potholes on cliffs in wooded/forested habitats; Forage over riparian woodlands, coniferous & deciduous forests, shrublands, prairies.[3]	Action area provides marginal potential foraging and nesting habitat for species to occur.

Species	Status	Habitat Associations	Potential to Occur in Project or Action Area
Western burrowing owl (*Athene cunicularia hypugaea*)	NESL G4	Open grasslands and sometimes other open areas (such as vacant lots). Nests in abandoned burrows, such as those dug by prairie dogs. [2,3]	Action area provides suitable habitat for species to occur. An active burrowing owl nest was located approximately 0.16 miles northeast of the project area boundary.
PLANTS			
Arizona Rose Sage (*Salvia pachyphylla* ssp *eremopictus*)	NESL G4	Desert shrublands and Pinion-Juniper communities on basalt or soils derived from the Chinle Formation, from 5500 to 6500 m elevation. On the Navajo Nation often along the base of volcanic plugs, mesa tops and slopes.[3]	Action area provides suitable habitat for species to occur. No individuals found during Redente plant investigations.[5]
Parish's alkali grass (*Puccinellia parishii*)	NESL G4 NM-E	Alkaline springs, seeps, and seasonally wet areas that occur at the heads of drainages or on gentle slopes. Elevation: 2600-7200 feet.[2,3]	No potential. Action area does not provide suitable habitat for species to occur.

Species are listed by the NESL as; Group 2: Endangered (survival or recruitment in jeopardy); Group 3: Endangered (survival or recruitment in jeopardy in foreseeable future); and Group 4: Species of Consideration. NESL Species with New Mexico State Endangered or Threatened status are labeled as NM-T or NM-E.

Sources: Sources: [1]New Mexico Natural Heritage Program 2010, [2]NatureServe Explorer; [3]Navajo Endangered Species List, Species Accounts 2008, [4] IUCN Red List, [5]Redente 2016, [6] Hammerson et al 2004.

4.3.2. NESL Species Eliminated From Further Consideration

Table 2.a includes seven (7) NESL and Navajo Species of Concern that have the potential to occur in the project area based on the general geographical association. The following species have been eliminated from further discussion in this report because the action would not result in direct, indirect or cumulative impacts to these species: Mountain plover *(Charadrius montanus),* Arizona Rose Sage *(Salvia pachyphylla* ssp *eremopictus),* and Parish's alkali grass *(Puccinellia parishii).* None of these species were observed during surveys of the proposed project area or immediate surroundings. Critical habitats of these species do not exist within or adjacent to the proposed project area. There would be no direct, indirect or cumulative impacts to these species.

Habitat potential was assessed for the American peregrine falcon (*Falco peregrinus*) within the action area. ACI biologists determined the rock formation with steep cliffs and numerous cavities located approximately 0.25 miles to the east of the PPA may be potential nesting habitat for this species and conducted follow up surveys to closely examine the cliff faces for any signs of use. Sixteen hours of observation following Navajo Natural Heritage Program (NNHP) protocol were conducted during April 2016. ACI biologists saw no sign of use by this species and concluded the habitat was not likely to be used by American peregrine falcon based on this detailed study. Survey results were discussed with Chad Smith, NNDFW zoologist, and with his concurrence, no further surveys were conducted. The project site was eliminated as potential nesting habitat for the following reasons: the surrounding area does not provide the preferred riparian or forested foraging habitat for this species, and the presence of nesting prairie falcon typically distinguishes habitat from that of American peregrine falcon on Navajo lands (Chad Smith--NNDFW zoologist, personal communication, May 9th, 2016).

4.3.3. NESL Species Warranting Further Analysis

Table 2.b lists NESL and Navajo Species of Concern with potential to occur within the proposed project area based on habitat suitability or actual record of observation.

Table 2.b: NESL and Navajo Species of Concern Warranting Further Analysis

Species	Status	Habitat Associations	Potential to Occur in Project or Action Area
ANIMALS			
Golden eagle (*Aquila chrysaetos*)	NESL G3	In the west, mostly open habitats in mountainous, canyon terrain. Nests primarily on cliffs. [3]	Action area provides potential foraging habitat for species to occur. Rock formation with steep sandstone cliffs and numerous cavities located approximately 0.25 miles to the east of the PPA may provide potential nesting habitat.
Ferruginous hawk (*Buteo regalis*)	NESL G3	Breed in open country, usually prairies, plains and badlands; semi-desert grass-shrub, sagebrush-grass & piñon-juniper plant associations. [3]	Action area provides potential foraging habitat for species to occur. Rock formation with steep sandstone cliffs and numerous cavities located approximately 0.25 miles to the east of the PPA may provide potential nesting habitat.
Western burrowing owl (*Athene cunicularia hypugaea*)	NESL G4	Open grasslands and sometimes other open areas (such as vacant lots). Nests in abandoned burrows, such as those dug by prairie dogs. [3,4]	Action area provides suitable habitat for species to occur. An active burrowing owl nest was located approximately 0.16 miles northeast of the project area boundary.

Species are listed by the NESL as; Group 2: Endangered (survival or recruitment in jeopardy); Group 3: Endangered (survival or recruitment in jeopardy in foreseeable future); and Group 4: Species of Consideration. NESL Species with New Mexico State Endangered or Threatened status are labeled as NM-T or NM-E.

Sources: Sources: [1]New Mexico Natural Heritage Program 2010, [2]NatureServe Explorer; [3]Navajo Endangered Species List, Species Accounts 2008, [4] IUCN Red List, [5]Redente 2016, [6] Hammerson et al 2004.

4.4. Migratory Bird Species

The Migratory Bird Treaty Act (MBTA) implements various treaties and conventions between the U.S. and Canada, Japan, Mexico and the former Soviet Union for the protection of migratory birds. Under the Act, taking, killing or possessing migratory birds is unlawful.

The bald eagle (*Haliaeetus leucocephalus*) was delisted under the ESA on August 9, 2007. Both the bald eagle and golden eagle (*Aquila chrysaetos*) are still protected under the MBTA and Bald and Golden Eagle Protection Act (BGEPA). The BGEPA affords both eagles protection in addition to that provided by the MBTA, in particular, by making it unlawful to "disturb" eagles.

In preparation for conducting the migratory bird survey, information from the New Mexico Partners In Flight website (http://www.hawksaloft.org/pif.shtml), the New Mexico PIF highest priority list of species of concern by vegetation type, the USFWS's Division of Migratory Bird Management website (http://www.fws.gov/migratorybirds/), and the 2002 Birds of Conservation Concern Report for the Southern Rockies/Colorado Plateau Bird Conservation Region (BCR) No. 16, were used to develop a list of high priority migratory bird species with potential to occur in the area of the proposed action. Species addressed previously will not be reiterated here.

Table 3: Priority Birds of Conservation Concern with Potential to Occur in the Project Area

Species Name	Habitat Associations	Potential to Occur in the Project Area
Black-throated sparrow (*Amphispiza bilineata*)	Xeric habitats dominated by open shrubs with areas of bare ground.	Suitable habitat is present within the action area for species to occur.
Brewer's sparrow (*Spizella breweri*)	Closely associated with sagebrush, preferring dense stands broken up with grassy areas.	No suitable habitat is present within the action area for species to occur.
Gray vireo (*Vireo vicinior*)	Open stands of piñon pine and Utah juniper (5,800 – 7,200 ft) with a shrub component and mostly bare ground; antelope bitterbrush, mountain mahogany, Utah serviceberry and big sagebrush often present. Broad, flat or gently sloped canyons, in areas with rock outcroppings, or near ridge-tops.	No suitable habitat is present within the action area for species to occur.
Loggerhead shrike (*Lanius ludovicianus*)	Open country interspersed with improved pastures, grasslands, and hayfields. Nests in sagebrush areas, desert scrub, and woodland edges.	No suitable habitat is present within the action area for species to occur.
Mountain bluebird (*Sialia currucoides*)	Open piñon-juniper woodlands, mountain meadows, and sagebrush shrublands; requires larger trees and snags for cavity nesting.	No suitable habitat is present within the action area for species to occur.
Mourning dove (*Zenaida macroura*)	Open country, scattered trees, and woodland edges. Feeds on ground in grasslands and agricultural fields. Roost in woodlands in the winter. Nests in trees or on ground.	No suitable habitat is present within the action area for species to occur.
Sage sparrow (*Amphispiza belli*)	Large and contiguous areas of tall and dense sagebrush. Negatively associated with seral mosaics and patchy shrublands and abundance of greasewood.	No suitable habitat is present within the action area for species to occur.
Sage thrasher (*Oreoscoptes montanus*)	Shrub-steppe dominated by big sagebrush.	No suitable habitat is present within the action area for species to occur.
Scaled quail (*Callipepla squamata*)	Brushy arroyos, cactus flats, sagebrush or mesquite plains, desert grasslands, Plains grasslands, and agricultural areas. Good breeding habitat has a diverse grass composition, with varied forbs and scattered shrubs.	No suitable habitat present within the action area for species to occur. Lack of diverse grass composition with varied forbs likely a limiting factor.
Swainson's hawk (*Buteo swainsoni*)	A mixture of grassland, cropland, and shrub vegetation; nests on utility poles and in isolated trees in rangeland. Nest densities higher in agricultural areas.	Marginal habitat is present within the action area for species to occur.
Vesper sparrow (*Pooecetes gramineus*)	Dry montane meadows, grasslands, prairie, and sagebrush steppe with grass component; nests on ground at base of grass clumps.	Suitable habitat is present within the action area for species to occur.
Bald eagle (*Haliaeetus leucocephalus*)	Near lakes, rivers and cottonwood galleries. Nests near surface water in large trees. May forage terrestrially in winter	No suitable habitat present within the action area for species to occur.

Bendire's thrasher (*Toxostoma bendirei*)	Typically inhabits sparse desert shrubland & open woodland with scattered shrubs; breeding range in Arizona and in scattered locations in central & western portions of NM; most common in southwest NM.	Marginal habitat is present within the action area for species to occur. Lack of shrub component a limiting factor.
Piñon jay (*Gymnorhinus cyanocephalus*)	Foothills throughout CO and NM wherever large blocks of piñon-juniper woodland habitat occurs.	No suitable habitat present within the action area for species to occur.
Prairie falcon (*Falco mexicanus*)	Arid, open country, grasslands or desert scrub, rangeland; nests on cliff ledges, trees, power structures.	Action area provides potential foraging habitat for species to occur. Rock formation with steep sandstone cliffs and numerous cavities located approximately 0.25 miles to the east of the PPA provides potential nesting habitat--An active nest was observed on the eastern most extent of the rocky formation during the April and May 2016 surveys.

5. EFFECTS ANALYSIS

Effects or impacts can be either long term (permanent or residual) or short term (incidental or temporary). Short-term impacts affect the environment for only a limited period and then the environment reverts rapidly back to pre-action conditions. Long-term impacts are substantial and permanent alterations to the pre-existing environmental condition. Direct effects are those effects that are caused by the action and occur in the same time and place as the action. Indirect effects are those effects that are caused by or will result from the proposed action and are later in time but still reasonably certain to occur (USFWS 1998).

5.1. Direct and Indirect Effects

The PPA includes the claim boundary and a 100-foot perimeter buffer for a total of approximately 23.7 acres. The project will also include a walkover survey for gamma radiation across a small area known as the "background area" (see Appendix A for map). A few soil samples approximately 3 inches in diameter and up to 6 inches deep will be collected by hand in these areas. The proposed action would result in a short term increase in human activity within the PPA at varying degrees depending on the project phase:

- Phase I: Spring of 2016 activity would entail pedestrian biological surveys and land surveying. Fall of 2016 work would entail pedestrian activity including gamma surveys, mapping, well sampling, and surface soil sampling. For this phase, there will be a maximum of 5 people onsite for no more than 5 to 7 days. Surface disturbance would be minimal and noise would be light.

- Phase II: Beginning in 2017, equipment including an excavator or small mobile drilling unit may be used to collect one or more soil samples. Up to 8 people may be onsite all day for a period of one week. Equipment travel would be confined to a temporary travel corridor approximately 20 feet in width. Within the travel corridor, vegetation and surface soil would sustain some disturbance but would not be bladed or bulldozed. During Phase II, noise may be moderate for a short duration, and surface disturbance will be light to moderate but confined to a minimal footprint within the study area. No permanent structures will be left on site.

Best Management Practices (BMPs) incorporated into project design will reduce potential impacts including: confining equipment travel to PPA boundary, minimizing travel corridors as much as practicable, limiting truck and equipment travel within the PPA when surfaces are wet and soil may become deeply rutted, and using previously disturbed areas for travel when possible.

5.1.1. Golden eagle, Ferruginous hawk

Habitat potential was assessed for the golden eagle and ferruginous hawk within the action area. ACI biologists determined the rock formation with steep sandstone cliffs and numerous cavities located approximately 0.25 miles to the east of the PPA may provide be potential nesting habitat for this species and conducted follow up surveys to closely examine the cliff faces for any signs of use. Observations following Navajo Natural Heritage Program (NNHP) protocol were conducted during April 2016. ACI biologists observed several old, inactive nests of unknown species located within the rock formation east of the PPA. Based on the small size of the old nests, it is unlikely they belong to either golden eagle or ferruginous hawk. Pictures of the nests can be found in Appendix B, and the nest locations are noted on aerial imagery in Appendix A.

Phase I:
Noise and surface disturbance will be low and short term during pedestrian survey activity. Adult raptors would not be directly impacted by Phase I because of their mobility and ability to avoid areas of human activity. The area is not currently occupied as a nest territory; Phase I activities that may occur within the breeding season are unlikely to impact nesting behavior. Direct and indirect effects from Phase I are expected to be short term and negligible.

Phase II:
During Phase II, noise may be moderate for a short duration, and surface disturbance will be light to moderate within a minimal footprint at the study area. No permanent structures will be left on site. As of April 2016, the nesting habitat within 0.25 mile of the PPA boundary was not occupied by golden eagle or ferruginous hawk. Phase II activities that may occur within the breeding season are unlikely to impact potential nesting activity in the nearby rock formation due to the distance from the PPA, the short term nature of the disturbance, and the relatively moderate noise level that may occur.

5.1.2. Western burrowing owl

ACI biologists determined the open gently sloping areas surrounding the PPA to be potential habitat for western burrowing owl. During the April 2016 survey of the PPA, surveyors observed an active burrowing owl nest approximately 0.16 miles northeast of the project area boundary. Observations following Navajo Natural Heritage Program (NNHP) protocol were conducted during April and May 2016 to verify nest status. Pictures of the nest burrow can be found in Appendix B, and the nest location is noted on aerial imagery in Appendix A.

Phase I:
Noise and surface disturbance will be low during pedestrian survey activity. Adult wildlife would not be directly impacted by Phase I because of their mobility and ability to avoid areas of human activity. Minor human presence during project activities within the breeding season may disrupt adults from breeding or foraging behavior for a short period of time, but burrows or young would not be directly disturbed. Direct and indirect effects are expected to be short term and minor.

Phase II:
During Phase II, noise may be moderate but for a short duration, and surface disturbance will be light to moderate but confined to a minimal footprint within the study area. No permanent structures will be left on site. The active nest is not expected to be directly impacted during Phase II if activities are confined to the PPA boundary. The increased human presence during project activities within the breeding season may indirectly disturb or displace adults from the nest.

Nest location and project disturbance was discussed with NNDFW, on 23 June 2016. Based on this discussion, NNDFW is allowing a smaller seasonal avoidance buffer for low impact pedestrian activities. Pedestrian surveys involving brief visits (a few days) for collecting of small soil samples with hand tools should observe the .2km (0.12 mile) buffer around the burrowing owl nest during the breeding season. Activities involving large groups of people and vehicles, machinery, or loud equipment should observe the

0.4km (0.25 mile) buffer during the breeding season (1 March-15 August) recommended in the NNDFW Species accounts (Chad Smith--NNDFW zoologist, written communication, June 23rd, 2016).

5.1.3. Migratory Birds

The PPA encompasses approximately 23.7 acres of potential migratory bird habitat in the form of Great Basin Desert scrub. No trees would be removed as a result of the proposed project.

During the April 2016 survey of the PPA, surveyors observed an active common raven (*Corvus corax*) nest and an active prairie falcon (*Falco mexicanus*) nest on the rocky formation approximately 0.25 mile east of the PPA boundary. ACI biologists observed several old, inactive nests of unknown species located within the rock formation as well. Pictures of the nests can be found in Appendix B, and the nest locations are noted on aerial imagery in Appendix A.

Phase I:
Noise and surface disturbance will be low during pedestrian survey activity. Adult migratory birds would not be directly impacted by Phase I because of their mobility and ability to avoid areas of human activity. Minor human presence during project activities within the breeding season may indirectly disturb or displace adults from nests and foraging habitats for a short period of time. Direct and indirect effects are expected to be short term and minor.

Phase II:
Adult migratory birds would not be directly harmed by the activities because of their mobility and ability to avoid areas of human activity. During Phase II, noise may be moderate but for a short duration, and surface disturbance will be light to moderate but confined to a minimal footprint within the study area. No permanent structures will be left on site. No active nests within the PPA are expected to be directly impacted during Phase II if activities occur outside of the typical migratory bird breeding season. The increased human presence during project activities within the breeding season may indirectly disturb or displace adults from nests and foraging habitats for a short period of time. Direct impacts are more likely if surface disturbing activities occur during the breeding season (April 1 through August 15).

Phase II activities that may occur within the breeding season are unlikely to impact potential nesting activity in the nearby rock formation due to the distance from the PPA, the short term nature of the disturbance, and the relatively moderate noise level that may occur.

5.2. Cumulative Effects

Cumulative impacts of an action include the total effects on a resource or ecosystem. Cumulative effects in the context of the Endangered Species Act pertain to non-Federal actions, and are reasonably certain to occur in the action area (USFWS 1998).

5.2.1. Golden eagle, Ferruginous hawk

Additional existing surface disturbances within the action area include unimproved access roads to the residences nearby, all-terrain vehicle use and active wildlife and livestock grazing. Local plant and animal pest control are also activities that may occur in the vicinity. These foreseeable actions would cumulatively impact raptors through habitat loss or contamination. Human activity may also increase available prey base if the activity leads to an increase in rodent population numbers. The intensity of indirect effects would be dependent upon the species, its life history, time of year and/or day and the type and level of human and vehicular activity is occurring.

5.2.2. Western burrowing owl

As stated above in Section 5.2.1, foreseeable human activity in the area would contribute to cumulative effects. With the implementation of seasonal avoidance discussed in Section 5.1.2, no direct or indirect impacts, and therefore no cumulative impacts, are expected from the proposed action.

5.2.3. Migratory Birds

With the implementation of BMPs discussed in Section 5.1, the cumulative impact of the proposed action on migratory birds would be low based on the minimal surface disturbance involved and the availability of adjacent similar habitats.

6. CONCLUSIONS

U.S. Fish and Wildlife Service Listed Species (USFWS)

ACI conducted informal consultation with the USFWS and received an Official Species List for the proposed project area. Qualified ACI biologists evaluated habitat suitability within and surrounding the PPA for these species and concluded the potential does not exist for USFWS-listed species to occur within the proposed project area. No further consultation with the USFWS is required.

Migratory Birds

The proposed action phases would result in varying degrees of noise and surface disturbance within approximately 23.7 acres of potential migratory bird habitat in the form of Great Basin Desert scrub. During Phase I, noise and surface disturbance will be low during pedestrian survey activity. Direct and indirect effects are expected to be short term and negligible. For Phase II, the total surface disturbance is unknown at this point; however equipment movement would be confined to only a few temporary travel corridors. Within the travel corridors, vegetation and surface soil would sustain some disturbance but would not be bladed or bulldozed. Possible direct impacts would be short term and are more likely if surface disturbing activities occur during the breeding season (April 1 through August 15). Effects to potential habitat for migratory birds is anticipated to be minor and short term due to the limited degree of vegetation and soil disruption and the abundance of adjacent habitat for these species.

Wetlands

Under Executive Orders 11988 and 11990, Federal agencies are required to minimize the destruction, loss, or degradation of wetlands and floodplains, and preserve and enhance their natural and beneficial values. These habitats should be conserved through avoidance, or mitigated to ensure that there would be no net loss of wetlands function and value. No impacts to wetlands are anticipated. The proposed project activities would contribute to a negligible increase in sedimentation down gradient of the project area. This increase is not anticipated to be a factor due to the distance from perennial waters. There is no suitable habitat for ESA-listed fish, nor critical habitats thereof, within 20 miles of the PPA.

Navajo Endangered Species List (NESL) and Species of Concern

Three (3) NESL and Navajo species of concern have potential to occur within or near the PPA based on habitat suitability or actual record of observation: golden eagle, ferruginous hawk and western burrowing owl. Based on site surveys, ACI determined there is potential nesting habitat for golden eagle and ferruginous hawk approximately 0.25 mile east of the PPA, and an active burrowing owl nest burrow is located approximately 0.16 mile northeast of the PPA boundary.

Potential effects to these species are discussed in detail in Section 5 above. The short term increased human activity associated with Phase II of the project may have some impact on these species; however, with the implementation of recommendations discussed in Section 7 below, it is unlikely that the proposed action would result in detriment to the three (3) NESL and Navajo species of concern.

7. RECOMMENDATIONS FOR AVOIDANCE

- ACI recommends that the proponent implement standard Best Management Practices (BMPs) designed to protect sensitive wildlife species including confining equipment travel to PPA boundary, minimizing travel corridors as much as practicable, limiting truck and equipment travel within the PPA

when surfaces are wet and soil may become deeply rutted, and using previously disturbed areas for travel when possible.

- For western burrowing owl, NNDFW is recommending project activities adhere to the following seasonal avoidance: pedestrian surveys involving brief visits (a few days) for collecting of small soil samples with hand tools should observe the .2km (0.12 mile) buffer around the burrowing owl nest during the breeding season. Activities involving large groups of people and vehicles, machinery, or loud equipment should observe the 0.4km (0.25 mile) buffer during 1 March to 15 August--the breeding season for this species (Smith, written communication, 2016).

8. SUPPORTING INFORMATION

8.1. Consultation and Coordination

John Nystedt, Fish and Wildlife Biologist/AESO Tribal Coordinator
USFWS AZ Ecological Services Office - Flagstaff Suboffice
Southwest Forest Science Complex, 2500 S Pine Knoll Dr, Rm 232
Flagstaff, AZ 86001

Pam Kyselka, Project Reviewer and
Chad Smith, Zoologist
Navajo Nation Department of Fish and Wildlife
Natural Heritage Program
PO Box 1480
Window Rock, AZ 86515

8.2. Report Preparers and Certification

Adkins Consulting, Inc.
180 E. 12th Street, Unit 5
Durango, Colorado 81301
Lori Gregory, Biologist; Sarah McCloskey, Field Biologist; Arnold Clifford, Lead Field Biologist

It is believed by Adkins Consulting that the proposed action would not violate any of the provisions of the Endangered Species Act of 1973, as amended. Conclusions are based on actual field examination and are correct to the best of my knowledge.

1 August 2016

_____ _____

Lori Gregory
Wildlife Biologist
Adkins Consulting
505.787.4088

Date

8.3. References

Code of Federal Regulations (CFR). Interagency Cooperation - 50 CFR §402 (June 3, 1986). U.S. Government Publishing Office Electronic Code of Federal Regulations. 732 North Capitol Street, NW, Washington, DC. Retrieved from: https://www.gpo.gov/fdsys/search/home.action.

Hammerson, Geoffrey, Frank Solís, Roberto Ibáñez, César Jaramillo, Querube Fuenmayor. 2004. *Lithobates pipiens*. The IUCN Red List of Threatened Species 2004: e.T58695A11814172. http://dx.doi.org/10.2305/IUCN.UK.2004.RLTS.T58695A11814172.en. Downloaded on 10 June 2016.

Heil, Kenneth D. 2000. *Four Corners Invasive and Poisonous Plant Field Guide.* Bureau of Land Management (BLM), Farmington District, and San Juan College, Farmington, New Mexico.

NatureServe. 2015. NatureServe Explorer: An online encyclopedia of life [web application]. Version 7.1. NatureServe, Arlington, Virginia. Available http://explorer.natureserve.org. (Accessed: June 9, 2016).

Navajo Nation Division of Natural Resources, Department of Fish and Wildlife. 2008a. *Navajo Endangered Species List (NESL)*. Resources Committee Resolution No. RCS-41-08. Window Rock, AZ.

Navajo Nation Division of Natural Resources, Department of Fish and Wildlife. 2008b. *Navajo Endangered Species List (NESL) Species Accounts.* Retrieved from: http://www.nndfw.org/nnhp/species_acct.pdf

New Mexico Department of Game and Fish. *BISON-M (Biota Information System of New Mexico).* Available at: http://www.bison-m.org.

New Mexico Natural Heritage Program. 2006. The website of Natural Heritage New Mexico: An online resource. Version 2.0. Albuquerque, New Mexico, USA: University of New Mexico. http://nmnhp.unm.edu.

New Mexico Rare Plant Technical Council. 1999. *New Mexico Rare Plants*. Albuquerque, NM: New Mexico Rare Plants Home Page. http://nmrareplants.unm.edu.

Prall, Dexter . 2015. Navajo Endangered Species List (NESL) Information letter to Eileen Dornfest, MWH Global (File# 15mwh101). Navajo Nation Department of Fish and Wildlife, Natural Heritage Program, Window Rock, AZ.

U.S. Department of Agriculture, Natural Resources Conservation Service (NRCS). 2006. Web Soil Survey. Version 1.1. NRCS. http://websoilsurvey.nrcs.usda.gov/app.

U.S. Fish and Wildlife Service (USFWS), Endangered Species Program. Information, Protection, and Conservation (iPaC). http://ecos.fws.gov/ipac/. Official Species List (02EAAZ00-2016-SLI-0362) dated April 8, 2016

U.S. Fish and Wildlife Service (USFWS) 1998. Final Endangered Species Act (ESA) Section 7 Consultation Handbook, March 1998. https://www.fws.gov/endangered/esa-library/pdf/esa_section7_handbook.pdf

U.S. Fish and Wildlife Service. 2008. *Wetlands Online Mapper.* National Wetlands Inventory (NWI). http://wetlandsfws.er.usgs.gov/wtlnds/launch.html.

APPENDIX A. MAPS

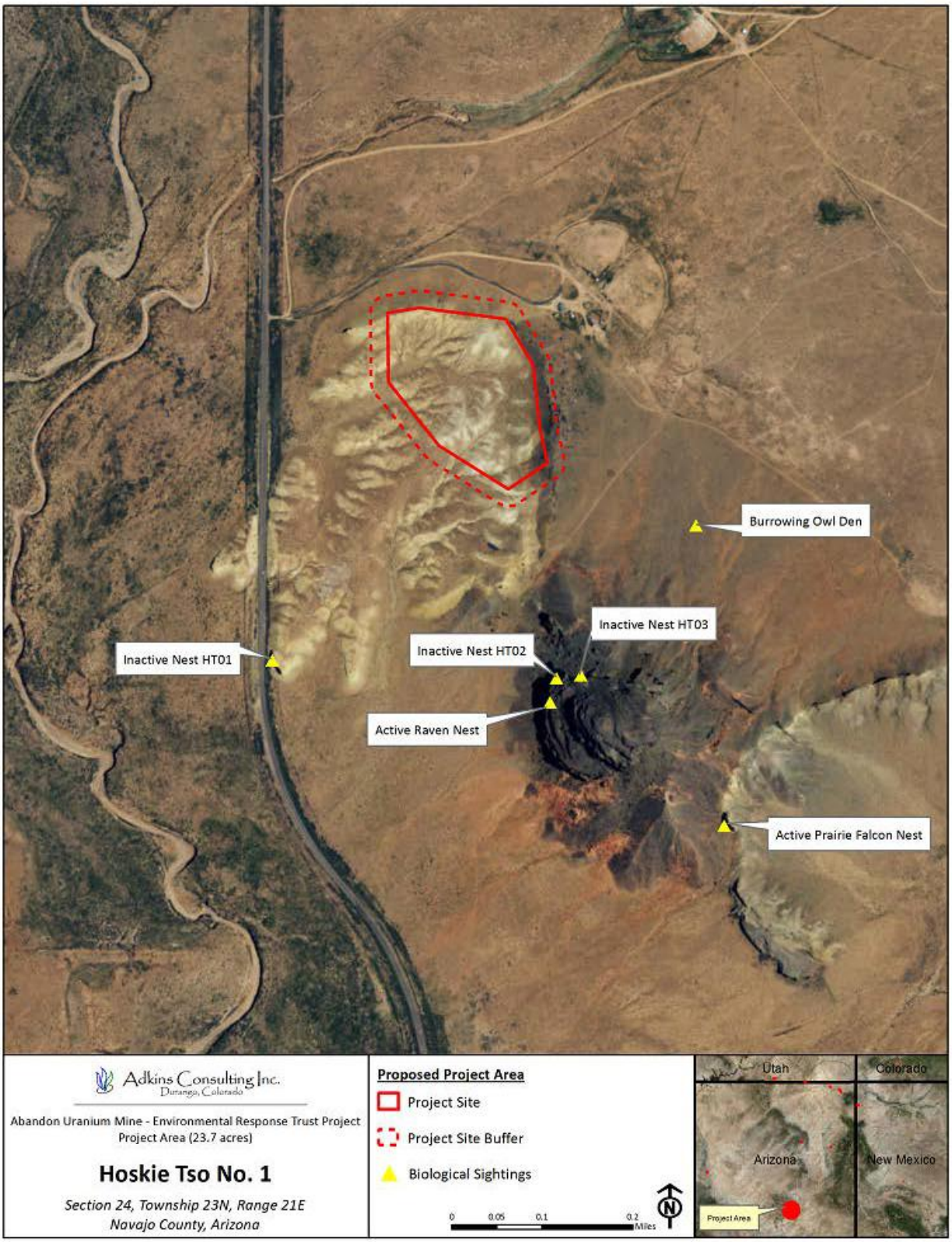

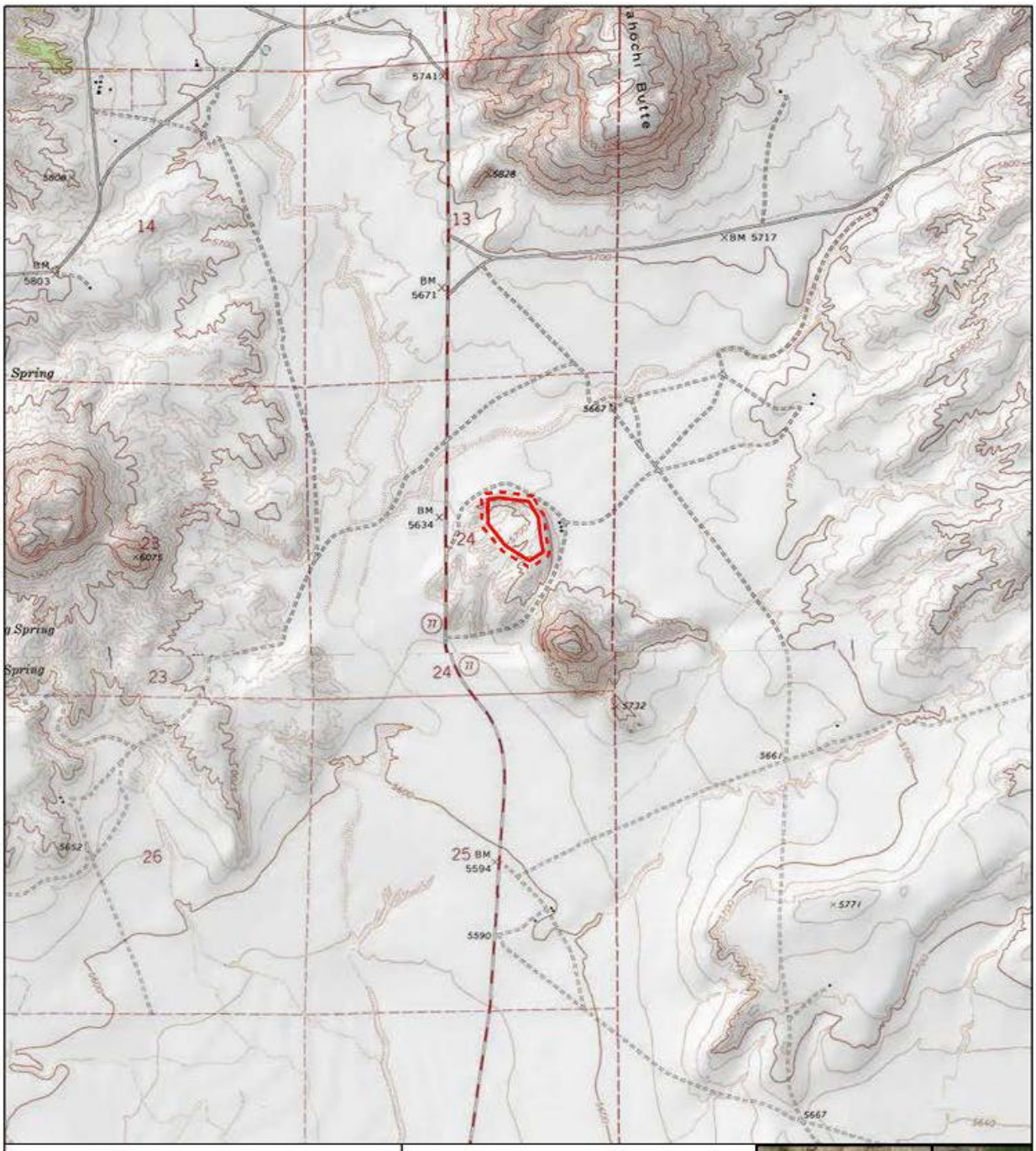

Adkins Consulting Inc.
Durango, Colorado

Abandon Uranium Mine - Environmental Response Trust Project
Project Area (23.7 acres)

Hoskie Tso No. 1

Section 24, Township 23N, Range 21E
Navajo County, Arizona

Proposed Project Area

Project Site

Project Site Buffer

0 0.25 0.5 1 Miles

APPENDIX B. PHOTOGRAPHS

Looking north from southwest side of PPA

View west from north side of PPA

South side of rock formation (0.25 mile from PPA boundary)

East side of rock formation (0.25 mile from PPA boundary)

Nest (HT-01) on south side of PPA near road—appears inactive

Nest (HT-02) on north side of rock formation (0.2 mile from PPA boundary)—appears inactive

Nest (HT-03) on north side of rock formation (0.2 mile from PPA boundary)—appears inactive

Prairie falcon nest—female sitting on nest, male in vicinity

Western burrowing owl nest burrow—confirmed active

APPENDIX C. REDENTE PLANT SURVEY REPORT

Navajo Nation AUM Environmental Response Trust

Plant Survey Report for Species of Concern At Hoskie Tso No. 1 Project Site Navajo County, Arizona August 2016

Prepared by:
Redente Ecological Consultants
1322 Alene Circle
Fort Collins, CO 80525

Table of Contents

INTRODUCTION 1
Purpose of Report 1
Site Location 1
Environmental Setting 1
Climate 1
Soils 1
Plant Community Type 2
Land Use 2
REGULATORY SETTING 2
METHODS 3
Study Area 3
Database Queries and Literature Review 3
Rare Plant Survey Protocols 3
2016 Field Survey 4
RESULTS 4
REFERENCES 6
LIST OF PREPARERS 6

INTRODUCTION

Purpose of Report

A biological survey was conducted at the Hoskie Tso No. 1 site as part of the Navajo Nation AUM Environmental Response Trust Project. The purpose of the survey is to determine if plant species of concern are present within the claim boundary and extending 100 feet around the site. Biological clearance is required at each site prior to any site investigation to determine if the project may affect potential species of concern or potential federal threatened and endangered (T&Es) species and/or critical habitat.

Site Location

Hoskie Tso No. 1 is located in central Navajo County Arizona approximately 0.8 km (0.5 miles) east of Indian Wells, Arizona at an elevation of approximately 1,740 m (5,710 ft). Global Positioning System coordinates are 35° 22' 51" N by 110° 03' 40"W (North American Datum of 1983). The site is located on Tribal Trust Land (TTL).

Environmental Setting

Climate

The climate of the Hoskie Tso No. 1 site is classified as semi-arid, with an average annual precipitation of 258 mm (10.2 in) with the greatest precipitation months occurring between July and October (USDA 2011). Average annual temperature is 13.7° C (57° F).

Soils

The U.S. Department of Agriculture (USDA) Soil Survey of the Chinle Area, Parts of Apache and Navajo Counties, Arizona and San Juan County, New Mexico was published in 2011 in cooperation with the Bureau of Indian Affairs. The survey covers a portion of Navajo County to the north of the Hoskie site, but not close enough to identify the soil mapping unit for this area. Based on the field survey, the portion of the site that is most closely aligned with habitat for the species of concern listed for this area is a ridge and escarpment associated with volcanic activity. Soil on the site was derived from residuum and weathered from basalt.

Plant Community Type

The vegetation on the Hoskie Tso No. 1 site is primarily shrub-grassland. Common species on the site include blue grama (*Bouteloua gracilis*), sand dropseed (*Sporobolus cryptandrus*), galleta (*Pleuraphis jamesii*), Indian ricegrass (*Achnatherum hymenoides*), fourwing saltbush (*Atriplex canescens*), broom snakeweed (*Gutierrezia sarothrae*), Mormon tea (*Ephedra viridis*), black sagebrush (*Artemisia nova*) and *Astragalus* spp.

Land Use

The land type on the Hoskie Tso No. 1 site is rangeland and the principal land use is domestic grazing with sheep.

REGULATORY SETTING

The survey for vegetation species-of-concern was conducted according to the Navajo Natural Heritage Program (NNHP) guidelines and the Endangered Species Act (ESA), including the procedures set forth in the *Biological Resource Land Use Clearance Policies and Procedures* (RCP), RCS-44-08 (NNDFW 2008), the Species Accounts document (NNHP 2008), and the USFWS survey protocols and recommendations. Data requests for species of concern were submitted to the NNHP and for federal T&E species to the USFWS. NNHP responded to the request for species of concern with a letter to MWH dated 19 November 2015. The letter provided a list of species of concern known to occur within the proximity of the project area. The list of species included their status as either NESL (Navajo Endangered Species List), Federally Endangered, Federally Threatened, or Federal Candidate. Species were further classified as G2, G3 or G4. G2 includes endangered species or subspecies whose prospects of survival or recruitment are in jeopardy. G3 includes endangered species or subspecies whose prospects of survival or recruitment are likely to be in jeopardy in the foreseeable future. G4 are “candidates” and includes those species or subspecies which may be endangered but for which we lack sufficient information to support being listed.

The Navajo Natural Heritage Program listed Arizona rose sage (*Salvia pachyphylla* ssp. *eremopictus)* as the one endangered plant species of concern that may occur in the

project area. The USFWS has not listed any threatened or endangered species for this site.

METHODS

Study Area

The area evaluated for plant species of concern was defined by the claim boundary, with an additional 100 foot buffer around all sides.

Database Queries and Literature Review

Prior to initiating field surveys, a target list of all potentially occurring species of concern identified by NNHP and the USFWS was compiled. Ecologic and taxonomic information was reviewed for each species prior to initiating field work to better understand ecological characteristics of the species, habitat requirements and key taxonomic indicators for proper identification (ANPS 2000).

Rare Plant Survey Protocols

The plant survey followed currently accepted resource agency protocols and guidelines, for conducting and reporting botanical inventories for special status plant species (USFWS 1996). According to these protocols, a rare plant survey was conducted by botanists with considerable experience with the local flora. All species observed during the surveys were identified to the degree necessary to correctly identify the species and determine if the plant had special status. The survey was conducted in the summer (July) of 2016 during the appropriate season to observe the phenological characteristics of the special status plant species that were necessary for identification.

The botanical survey team was assisted during the survey by GIS trained staff from MWH with training specifically in the use of the Garmin Montana 600. The GPS operator was also instructed in sight identification of species of concern to help delineate points or polygons and other data collection and data management tasks. GPS units were preloaded for the plant team with background and data files that showed the aerial

photographic base map, the site boundaries, and the study area, so team members could clearly identify their exact location in the field at all times.

2016 Field Survey

The project site was surveyed by a field botanist. The botanist walked "transect" lines through each area and looked for suitable habitat for *Salvia pachyphylla* ssp. *eremopictus,* specifically basalt derived soils. The most emphasis was placed in areas with suitable habitat for the species of concern. If a species of concern was identified, the location would be recorded using the point or polygon feature in the GPS units. Further, the population size was planned to be obtained either by direct counts, estimations, or by sampling the population.

Field botanists documented every field visit on field forms, by area, and took photographs of field conditions and species of concern, if found on site. The botanist also recorded all plant communities and plant species observed during each field visit. Plant community types were also photographed in to document site conditions (Photos #1 and #2).

RESULTS

One plant species of concern, *Salvia pachyphylla* ssp. *eremopictus*, was identified as potentially occurring within the proximity of the project area. *Salvia pachyphylla* ssp. *eremopictus* is a native perennial shrub that is found in desert shrublands and pinyon-juniper communities on basalt or soils derived from the Chinle Formation at elevations between 1,676 and 1,981 m (5,500 and 6,500 ft). It has a general distribution in Apache, Navajo and Coconino Counties in Arizona with specific Navajo Nation distribution north of Dilkon, Arizona, which is west of Hoskie.

The survey at Hoskie Tso No. 1 on July 23, 2016 did not identify *Salvia pachyphylla* ssp. *eremopictus* on the Hoskie site. Habitat for this species was identified on site, but the closest known population occurs to the west and north of the site.

Photo #1—Overview of general landscape and plant community at Hoskie Tso No. 1.

Photo #2—Overview of general landscape and plant community at Hoskie Tso No. 1.

REFERENCES

ANPS. 2000. Arizona Rare Plant Field Guide. U.S. Government Printing Office. Washington, D.C.

Navajo Nation Department of Fish and Wildlife (NNDFW), 2008. Biological Resource Land Use Clearance Policies and Procedures, RCS-44-08. September 10.

Navajo Natural Heritage Program (NNHP), 2008. *Species Accounts*, Navajo Nation Endangered Species List, version 3.08.

USDA. 2011. Soil Survey of Chinle Area, Parts of Apache and Navajo Counties, Arizona and San Juan County, New Mexico. USDA, Natural Resource Conservation Service in cooperation with USDI Bureau of Indian Affairs. Washington, D.C.

USFWS. 1996. Guidelines for Conducting and Reporting Botanical Inventories for Federally Listed, Proposed, and Candidate Plants. Sacramento Fish and Wildlife Office, Sacramento, California.

LIST OF PREPARERS

Redente, Edward F. Plant Ecologist. B.A., M.S. and Ph.D. Over 40 years of experience in plant ecology and plant survey studies throughout the semi-arid and arid western U.S. Author or Co-author of over 200 publications.

APPENDIX D. NESL LETTER

NNHP
Navajo Natural Heritage Program

PO Box 1480
Window Rock, AZ
86515

P 928.871.6472
F 928.871.7603

http://nnhp.nndfw.org

15mwh101

19-November-2015

Eileen Dornfest - Project Manager
MWH Americas
3665 John F Kennedy Parkway
Bldg 1, Suite 206
Ft. Collins, CO 80525

SUBJECT: Navajo Nation AUM Environmental Response Trust (ERT) Project - 16 Abandoned Uranium Mine (AUM) Sites

Eileen Dornfest,

NNHP has performed an analysis of your project in comparison to known biological resources of the Navajo Nation and has included the findings in this letter. The letter is composed of seven parts. The sections as they appear in the letter are:

1. **Known Species** – a list of all species within relative proximity to the project
2. **Potential Species** – a list of potential species based on project proximity to respective suitable habitat
3. **Quadrangles** – an exhaustive list of quads containing the project
4. **Project Summary** – a categorized list of biological resources within relative proximity to the project grouped by individual project site(s) or quads
5. **Conditional Criteria Notes** – additional details concerning various species, habitat, etc.
6. **Personnel Contacts** – a list of employee contacts
7. **Resources** – identifies sources for further information

Known Species lists "species of concern" known to occur within proximity to the project area. Planning for avoidance of these species is expected. If no species are displayed then based upon the records of the Navajo Nation Department of Fish and Wildlife (NNDFW) there are no "species of concern" within proximity to the project. Refer to the Navajo Endangered Species List (NESL) Species Accounts for recommended avoidance measures, biology, and distribution of NESL species on the Navajo Nation (http://nnhp.nndfw.org/sp_account.htm).

Potential Species lists species that are potentially within proximity to the project area and need to be evaluated for presence/absence. If no species are found within the Known or Potential Species lists, the project is not expected to affect any federally listed species, nor significantly impact any tribally listed species or other species of concern. Potential for species has been determined primarily on habitat characteristics and species range information. A thorough habitat analysis, and if necessary, species specific surveys, are required to determine the potential for each species.

Species of concern include protected, candidate, and other rare or otherwise sensitive species, including certain native species and species of economic or cultural significance. For legally protected species, the following tribal and federal statuses are indicated: NESL, federal Endangered Species Act (ESA), Migratory

Bird Treaty Act (MBTA), and Eagle Protection Act (EPA). No legal protection is afforded species with only ESA candidate, NESL group 4 status, and species listed on the Sensitive Species List. Please be aware of these species during surveys and inform the NNDFW of observations. Reported observations of these species and documenting them in project planning and management is important for conservation and may contribute to ensuring they will not be up listed in the future.

In any and all correspondence with NNDFW or NNHP concerning this project please cite the Data Request Code associated with this document. It can be found in this report on the top right corner of the every page. Additionally please cite this code in any biological evaluation documents returned to our office.

1. Known Species *(NESL=Navajo Endangered Species List, FE=Federally Endangered, FT=Federally Threatened, FC=Federal Candidate)*

Species

AMPE = Amsonia peeblesii / Peebles' Blue-star NESL G4
AQCH = Aquila chrysaetos / Golden Eagle NESL G3
CASP = Carex specuicola / Navajo Sedge NESL G3 FT
LIPI = Lithobates pipiens / Northern Leopard Frog NESL G2
PEAMCI = Perognathus amplus cineris / Wupatki Pocket Mouse NESL G4
PUPA = Puccinellia parishii / Parish's Alkali Grass NESL G4
**All or parts of this project currently are within areas protected by the Golden and Bald Eagle Nest Protection Regulations; consult with NNDFW zoologist or EA Reviewer for more information and recommendations.

2. Potential Species

Species

ALGO = Allium gooddingii / Gooding's Onion NESL G3
AMPE = Amsonia peeblesii / Peebles' Blue-star NESL G4
AQCH = Aquila chrysaetos / Golden Eagle NESL G3
ASBE = Astragalus beathii / Beath Milk-vetch NESL G4
ASNA = Astragalus naturitensis / Naturita Milk-vetch NESL G3
ASWE = Asclepias welshii / Welsh's Milkweed NESL G3 FT
ATCU = Athene cunicularia / Burrowing Owl NESL G4
BURE = Buteo regalis / Ferruginous Hawk NESL G3
CASP = Carex specuicola / Navajo Sedge NESL G3 FT
CHMO = Charadrius montanus / Mountain Plover NESL G4
CIME = Cinclus mexicanus / American Dipper NESL G3
CIRY = Cirsium rydbergii / Rydberg's Thistle NESL G4
CYUT = Cystopteris utahensis / Utah Bladder-fern NESL G4
EMTREX = Empidonax traillii extimus / Southwestern Willow Flycatcher NESL G2 FE
ERAC = Erigeron acomanus / Acoma Fleabane NESL G3
ERRH = Erigeron rhizomatus / Rhizome Fleabane/zuni Fleabane NESL G2 FT
ERRO = Errazurizia rotundata / Round Dunebroom NESL G3
ERSI = Erigeron sivinskii / Sivinski's Fleabane NESL G4
FAPE = Falco peregrinus / Peregrine Falcon NESL G4
GIRO = Gila robusta / Roundtail Chub NESL G2
LENA = Lesquerella navajoensis / Navajo Bladderpod NESL G3
LIPI = Lithobates pipiens / Northern Leopard Frog NESL G2
MUNI = Mustela nigripes / Black-footed Ferret NESL G2 FE

PEAMCI = Perognathus amplus cineris / Wupatki Pocket Mouse NESL G4
PLZO = Platanthera zothecina / Alcove Bog-orchid NESL G3
PRSP = Primula specuicola / Cave Primrose NESL G4
PTLU = Ptchocheilus lucius / Colorado Pikeminnow NESL G2
PUPA = Puccinellia parishii / Parish's Alkali Grass NESL G4
SAPAER = Salvia pachyphylla ssp eremopictus / Arizona Rose Sage NESL G4
STOCLU = Strix occidentalis lucida / Mexican Spotted Owl NESL G3 FT
VUMA = Vulpes macrotis / Kit Fox NESL G4
ZIVA = Zigadenus vaginatus / Alcove Death Camass NESL G3

3. Quadrangles (7.5 Minute)

Quadrangles

Cameron SE (35111-G3) / AZ
Dalton Pass (35108-F3) / NM
Del Muerto (36109-B4) / AZ
Dos Lomas (35107-C7) / NM
Gallup East (35108-E6) / NM
Garnet Ridge (36109-H7) / AZ, UT
Horse Mesa (36109-F1) / AZ, NM
Indian Wells (35110-D1) / AZ
Mexican Hat SE (37109-A7) / UT, AZ
Oljeto (37110-A3) / UT, AZ
Toh Atin Mesa East (36109-H3) / AZ, UT
Toh Atin Mesa West (36109-H4) / AZ, UT

4. Project Summary *(EO1 Mile/EO 3 Miles=elements occuring within 1 & 3 miles., MSO=mexican spotted owl PACs, POTS=potential species, RCP=Biological Areas)*

SITE	EO1MI	EO3MI	QUAD	MSO	POTS	AREAS
Alongo Mines	None	AQCH	Horse Mesa (36109-F1) / AZ, NM	None	LIPI, FAPE, EMTREX, CHMO, BURE, ATCU, AQCH, ZIVA, PUPA, PLZO, CIRY, CASP	Area 3
Barton 3	None	None	Toh Atin Mesa West (36109-H4) / AZ, UT	None	PTLU, GIRO, EMTREX, CHMO, BURE, ATCU, AQCH, ZIVA, PLZO, CIRY, CASP	Area 3
Boyd Tisi No. 2 Western	None	AMPE, PEAMCI, LIPI	Cameron SE (35111-G3) / AZ	None	LIPI, PEAMCI, FAPE, EMTREX, BURE, AQCH, ERRO, ASBE, AMPE	Area 3
Charles Keith	None	None	Oljeto (37110-A3) / UT, AZ	None	LIPI, FAPE, EMTREX, CHMO, BURE, AQCH	Area 1, Area 3

SITE	EO1MI	EO3MI	QUAD	MSO	POTS	AREAS
Eunice Becenti	None	None	Gallup East (35108-E6) / NM	None	FAPE, EMTREX, ATCU, AQCH, LENA, ERSI, ERRH, ERAC	Area 3
Harvey Blackwater No. 3	AQCH	AQCH, PUPA	Garnet Ridge (36109-H7) / AZ, UT	None	VUMA, LIPI, FAPE, EMTREX, CIME, BURE, ATCU, AQCH, ZIVA, PUPA, PRSP, PLZO, CIRY, CASP, ASWE	Area 3
Harvey Blackwater No. 3	AQCH	AQCH, PUPA	Mexican Hat SE (37109-A7) / UT, AZ	None	VUMA, FAPE, EMTREX, ATCU, AQCH, ZIVA, PLZO, CIRY, CASP, ASWE	Area 1
Hosikle Tso No. 1	AQCH	AQCH	Indian Wells (35110-D1) / AZ	None	FAPE, CHMO, BURE, ATCU, AQCH, SAPAER	Area 3
Mitten No. 3	None	AQCH	Oljeto (37110-A3) / UT, AZ	None	LIPI, FAPE, EMTREX, CHMO, BURE, AQCH	Area 3
NA-0904	None	AQCH	Toh Atin Mesa East (36109-H3) / AZ, UT	None	STOCLU, LIPI, PTLU, GIRO, FAPE, EMTREX, CHMO, ATCU, AQCH, PUPA	Area 3
NA-0926	None	None	Toh Atin Mesa East (36109-H3) / AZ, UT	None	STOCLU, LIPI, PTLU, GIRO, FAPE, EMTREX, CHMO, ATCU, AQCH, PUPA	Area 3
Oak124, Oak125	AQCH	AQCH	Horse Mesa (36109-F1) / AZ, NM	None	LIPI, FAPE, EMTREX, CHMO, BURE, AQCH, ZIVA, PUPA, PLZO, CIRY, CASP	Area 3
Occurrence B	None	AQCH, CASP	Del Muerto (36109-B4) / AZ	None	LIPI, FAPE, EMTREX, CIME, AQCH, ZIVA, PLZO, CYUT, CIRY, CASP, ALGO	Area 3
Section 26 (Desiddero Group)	None	None	Dos Lomas (35107-C7) / NM	None	FAPE, CHMO, ATCU, AQCH	Area 3
Standing Rock	None	None	Dalton Pass (35108-F3) / NM	None	VUMA, MUNI, FAPE, CHMO, BURE, ATCU, AQCH, ERSI, ASNA	Area 3

SITE	EO1MI	EO3MI	QUAD	MSO	POTS	AREAS
Tsosie 1	AQCH	AQCH	Toh Atin Mesa East (36109-H3) / AZ, UT	None	STOCLU, LIPI, PTLU, GIRO, FAPE, EMTREX, CHMO, AQCH, PUPA	Area 1, Area 3

5. Conditional Criteria Notes *(Recent revisions made please read thoroughly. For certain species, and/or circumstances, please read and comply)*

A. **Biological Resource Land Use Clearance Policies and Procedures (RCP)** - The purpose of the RCP is to assist the Navajo Nation government and chapters ensure compliance with federal and Navajo laws which protect, wildlife resources, including plants, and their habitat resulting in an expedited land use clearance process. After years of research and study, the NNDFW has identified and mapped wildlife habitat and sensitive areas that cover the entire Navajo Nation.
The following is a brief summary of six (6) wildlife areas:
1.***Highly Sensitive Area*** – recommended no development with few exceptions.
2.***Moderately Sensitive Area*** – moderate restrictions on development to avoid sensitive species/habitats.
3.***Less Sensitive Area*** – fewest restrictions on development.
4.***Community Development Area*** – areas in and around towns with few or no restrictions on development.
5.***Biological Preserve*** – no development unless compatible with the purpose of this area.
6.***Recreation Area*** – no development unless compatible with the purpose of this area.
None - outside the boundaries of the Navajo Nation
This is not intended to be a full description of the RCP please refer to the our website for additional information at http://www.nndfw.org/clup.htm.

B. **Raptors** – If raptors are known to occur within 1 mile of project location: Contact Chad Smith at 871-7070 regarding your evaluation of potential impacts and mitigation.
o **Golden and Bald Eagles**- If Golden or Bald Eagle are known to occur within 1 mile of the project, decision makers need to ensure that they are not in violation of the Golden and Bald Eagle Nest Protection Regulations found at http://nnhp.nndfw.org/docs_reps/gben.pdf.
o **Ferruginous Hawks** – Refer to "Navajo Nation Department of Fish and Wildlife's Ferruginous Hawk Management Guidelines for Nest Protection" http://nnhp.nndfw.org/docs_reps.htm for relevant information on avoiding impacts to Ferruginous Hawks within 1 mile of project location.
o **Mexican Spotted Owl** - Please refer to the Navajo Nation Mexican Spotted Owl Management Plan http://nnhp.nndfw.org/docs_reps.htm for relevant information on proper project planning near/within spotted owl protected activity centers and habitat.

C. **Surveys** – Biological surveys need to be conducted during the appropriate season to ensure they are complete and accurate please refer to NN Species Accounts http://nnhp.nndfw.org/sp_account.htm. Surveyors on the Navajo Nation must be permitted by the Director, NNDFW. Contact Jeff Cole at (928) 871-7068 for permitting procedures. Questions pertaining to surveys should be directed to the NNDFW Zoologist (Chad Smith) for animals at 871-7070, and Botanist (Andrea Hazelton) for plants at (928)523-3221. Questions regarding biological evaluation should be directed to Jeff Cole at 871-7068.

D. **Oil/Gas Lease Sales** – Any settling or evaporation pits that could hold contaminants should be lined and covered. Covering pits, with a net or other material, will deter waterfowl and other migratory bird use. Lining pits will protect ground water quality.

E. **Power line Projects** – These projects need to ensure that they do not violate the regulations set forth in the Navajo Nation Raptor Electrocution Prevention Regulations found at http://nnhp.nndfw.org/docs_reps/repr.pdf.

F. **Guy Wires** – Does the project design include guy wires for structural support? If so, and if bird species may occur in relatively high concentrations in the project area, then guy wires should be equipped with highly visual markers to reduce the potential mortality due to bird-guy wire collisions. Examples of visual markers include aviation balls and bird flight diverters. Birds can be expected to occur in relatively high concentrations along migration routes (e.g., rivers, ridges or other distinctive linear topographic features) or where important habitat for breeding, feeding, roosting, etc. occurs. The U.S. Fish and Wildlife Service recommends marking guy wires with at least one marker per 100 meters of wire.

G. **San Juan River** – On 21 March 1994 (Federal Register, Vol. 59, No. 54), the U.S. Fish and Wildlife Service designated portions of the San Juan River (SJR) as critical habitat for Ptychocheilus lucius (Colorado pikeminnow) and Xyrauchen texanus (Razorback sucker). Colorado pikeminnow critical habitat includes the SJR and its 100-year floodplain from the State Route 371 Bridge in T29N, R13W, sec. 17 (New Mexico Meridian) to Neskahai Canyon in the San Juan arm of Lake Powell in T41S, R11E, sec. 26 (Salt Lake Meridian) up to the full pool elevation. Razorback sucker critical habitat includes the SJR and its 100-year floodplain from the Hogback Diversion in T29N, R16W, sec. 9 (New Mexico Meridian) to the full pool elevation at the mouth of Neskahai Canyon on the San Juan arm of Lake Powell in T41S, R11E, sec. 26 (Salt Lake Meridian). All actions carried out, funded or authorized by a federal agency which may alter the constituent elements of critical habitat must undergo section 7 consultation under the Endangered Species Act of 1973, as amended. Constituent elements are those physical and biological attributes essential to a species conservation and include, but are not limited to, water, physical habitat, and biological environment as required for each particular life stage of a species.

H. **Little Colorado River** - On 21 March 1994 (Federal Register, Vol. 59, No. 54) the U.S. Fish and Wildlife Service designated Critical Habitat along portions of the Colorado and Little Colorado Rivers (LCR) for Gila cypha (humpback chub). Within or adjacent to the Navajo Nation this critical habitat includes the LCR and its 100-year floodplain from river mile 8 in T32N R6E, sec. 12 (Salt and Gila River Meridian) to its confluence with the Colorado River in T32N R5E sec. 1 (S&GRM) and the Colorado River and 100-year floodplain from Nautuloid Canyon (River Mile 34) T36N R5E sec. 35 (S&GRM) to its confluence with the LCR. All actions carried out, funded or authorized by a federal agency which may alter the constituent elements of Critical Habitat must undergo section 7 consultation under the Endangered Species Act of 1973, as amended. Constituent elements are those physical and biological attributes essential to a species conservation and include, but are not limited to, water, physical habitat, and biological environment as required for each particular life stage of a species.

I. **Wetlands –** In Arizona and New Mexico, potential impacts to wetlands should also be evaluated. The U.S. Fish & Wildlife Service's National Wetlands Inventory (NWI) maps should be examined to determine whether areas classified as wetlands are located close enough to the project site(s) to be impacted. In cases where the maps are inconclusive (e.g., due to their small scale), field surveys must be completed. For field surveys, wetlands identification and delineation methodology contained in the "Corps of Engineers Wetlands Delineation Manual" (Technical Report Y-87-1) should be used. When wetlands are present, potential impacts must be addressed in an environmental assessment and the Army Corps of Engineers, Phoenix office, must be contacted. NWI maps are available for examination at the Navajo Natural Heritage Program (NNHP) office, or may be purchased through the U.S. Geological Survey (order forms are available through the NNHP). The NNHP has complete coverage of the Navajo Nation, excluding Utah, at 1:100,000 scale; and coverage at 1:24,000 scale in the southwestern portion of the Navajo Nation. In Utah, the U.S. Fish & Wildlife Service's National Wetlands Inventory maps are not yet available for the Utah portion of the Navajo Nation, therefore, field surveys should be completed to determine whether wetlands are located close enough to the project site(s) to be impacted. For field surveys, wetlands identification and delineation methodology contained in the "Corps of Engineers Wetlands Delineation Manual" (Technical Report Y-87-1) should be used. When wetlands are present, potential impacts must be addressed in an environmental assessment and the Army Corps of Engineers, Phoenix office, must be contacted. For more information contact the Navajo Environmental Protection Agency's Water Quality Program.

J. **Life Length of Data Request –** The information in this report was identified by the NNHP and NNDFW's biologists and computerized database, and is based on data available at the time of this response. If project planning takes more than two (02) years from the date of this response, verification of the information provided herein is necessary. It should not be regarded as the final statement on the occurrence of any species, nor should it substitute for on-site surveys. Also, because the NNDFW information is continually updated, any given information response is only wholly appropriate for its respective request.

K. **Ground Water Pumping** - Projects involving the ground water pumping for mining operations, agricultural projects or commercial wells (including municipal wells) will have to provide an analysis on the effects to surface water and address potential impacts on all aquatic and/or wetlands species listed below. NESL Species potentially impacted by ground water pumping: Carex specuicola (Navajo Sedge), Cirsium rydbergii (Rydberg's Thistle), Primula specuicola (Cave Primrose), Platanthera zothecina (Alcove Bog Orchid), Puccinellia parishii (Parish Alkali Grass), Zigadenus vaginatus (Alcove Death Camas), Perityle specuicola (Alcove Rock Daisy), Symphyotrichum welshii (Welsh's American-aster), Coccyzus americanus (Yellow-billed Cuckoo), Empidonax traillii extimus (Southwestern Willow Flycatcher), Rana pipiens (Northern Leopard Frog), Gila cypha (Humpback Chub), Gila robusta (Roundtail Chub), Ptychocheilus lucius (Colorado Pikeminnow), Xyrauchen texanus (Razorback Sucker), Cinclus mexicanus (American Dipper), Speyeria nokomis (Western Seep Fritillary), Aechmophorus clarkia (Clark's Grebe), Ceryle alcyon (Belted Kingfisher), Dendroica petechia (Yellow Warbler), Porzana carolina (Sora), Catostomus discobolus (Bluehead Sucker), Cottus bairdi (Mottled Sculpin), Oxyloma kanabense (Kanab Ambersnail)

6. Personnel Contacts

Wildlife Manager
Sam Diswood
928.871.7062
sdiswood@nndfw.org

Zoologist
Chad Smith
928.871.7070
csmith@nndfw.org

Botanist
Vacant

Biological Reviewer
Pamela Kyselka
928.871.7065
pkyselka@nndfw.org

GIS Supervisor
Dexter D Prall
928.645.2898
prall@nndfw.org

Wildlife Tech
Sonja Detsoi
928.871.6472
sdetsoi@nndfw.org

7. Resources

National Environmental Policy Act

Navajo Endangered Species List:
http://nnhp.nndfw.org/endangered.htm

Species Accounts:
http://nnhp.nndfw.org/sp_account.htm

Biological Investigation Permit Application
http://nnhp.nndfw.org/study_permit.htm

Navajo Nation Sensitive Species List
http://nnhp.nndfw.org/study_permit.htm

Various Species Management and/or Document and Reports
http://nnhp.nndfw.org/docs_reps.htm

Consultant List
(Coming Soon)

Dexter D Prall

Digitally signed by Dexter D Prall
DN: cn=Dexter D Prall, o=Navajo Nation Department of Fish and Wildlife, ou=Navajo Natural Heritage Program, email=prall@nndfw.org, c=US
Date: 2015.11.19 15:56:30 -07'00'

Dexter D Prall, GIS Supervisor - Natural Heritage Program
Navajo Nation Department of Fish and Wildlife

MWH

BUILDING A BETTER WORLD

November 18, 2015

TO: Navajo Natural Heritage Program
Navajo Nation Dept. of Fish and Wildlife
ATTN: Sonja Detsoi and Dexter Prall
P.O. Box 1480
Window Rock, AZ 86515

FROM: MWH Americas
ATTN: Eileen Dornfest, Project Manager
3665 John F Kennedy Parkway
Bldg 1, Suite 206
Ft. Collins, CO 80525
Phone: (970) 377-9410
Fax: (970) 377-9406
E-mail: Eileen.Dornfest@mwhglobal.com

SUBJECT: Request for T and E Information for 16 Abandoned Uranium Mine (AUM) Sites

PROJECT NAME:
Navajo Nation AUM Environmental Response Trust (ERT) Project

LOCATION:
16 AUM Sites (attached in GIS shape files and USGS topographic maps)

SUMMARY DESCRIPTION OF PROJECT:
The work is to be conducted at 16 Abandoned Uranium Mines (AUMs) and includes Removal Site Evaluations (RSEs) according to CERCLA at each of the Sites. The RSEs are site investigations that include the following activities:

- conducting background soil studies
- conducting gamma radiation scans of surface soils
- sampling surface and subsurface soils and sediments related to historic mining operations
- assessing radiation exposure inside mine operations buildings, homes, or other nearby structures (if present at the Sites)
- sampling existing and accessible groundwater wells
- mitigating physical hazards and other interim response actions
- preparing a final written report documenting the work performed and information obtained for each of the Sites

MWH

BUILDING A BETTER WORLD

TOPOGRAPHIC MAPS ATTACHED:

- Blue Gap Quadrangle, Arizona-Apache Co.
- Cameron SE Quadrangle, Arizona-Coconino Co.
- Cameron South Quadrangle, Arizona-Coconino Co.
- Del Muerto Quadrangel, Arizona-Apache Co.
- Five Buttes Quadrangle, Arizona-Navajo Co.
- Garnet Ridge Quadrangle, Arizona-Utah
- Horse Mesa Quadrangle, Arizona-New Mexico
- Indian Wells Quadrangle, Arizona-Navajo Co.
- Tah Chee Wash Quadrangle, Arizona-Apache Co.
- Toh Atin Mesa East Quadrangle, Arizona-Utah
- Toh Atin Mesa West Quadrangle, Arizona-Utah
- Bluewater Quadrangle, New Mexico
- Bread Springs Quadrangle, New Mexico-McKinley Co.
- Dalton Pass Quadrangle, New Mexico-McKinley Co.
- Dos Lomas Quadrangle, New Mexico
- Gallup East Quadrangle, New Mexico-McKinley Co.
- Sand Spring Quadrangle, New Mexico-San Juan Co.
- Standing Rock Quadrangle, New Mexico-McKinley Co.
- Mexican Hat SE Quadrangle, Utah-San Juan Co.
- Oljato Quadrangle, Utah-San Juan Co.

2655 John F Kennedy Pkwy TEL: 970 377 6410
Bldg 1, Suite 208 FAX: 970 377 9408
Fort Collins, CO 80524

APPENDIX E. NOTES FROM SPECIES SPECIFIC SURVEYS

Adkins Consulting Inc. Environmental Permitting Services 180 East 12 Street Suite #5 Durango, CO 81301 Phone: 505-793-1140	DAILY REPORT Field Surveys

PROJECT NAME: NN AUM SITE: Hoskie Tso #1

DATE: 4/27/16

WEATHER: Cloudy, light winds transitioning to gusty at the end of the survey, temps mid 50's

PERSONNEL ONSITE: Sarah McCloskey (Principal Biologist), Field Assistant

==========

CONTRACTORS ONSITE NOTES:

Background: During the previous habitat assessment survey, there was no habitat for any of the NESL listed species within the mine site boundaries, however there is a large rocky formation with steep sandstone cliffs and numerous cavities for raptor species to occur approximately 0.25 miles to the east. Habitat was documented for Peregrine Falcons with marginal potential for Golden Eagles throughout the rocky formation area.

Purpose: In areas where suitable habitat occurs, a formal survey of the species is to be performed following Navajo Nation survey protocols[1] outlined below:

Golden Eagle – A single pedestrian survey with high-power optics for nest sites or breeding adults from 1 MAR-15 JUN.

Peregrine Falcons - Two 8 hours surveys (4 hours before sunset and 4 hours after sunrise the following day) during each period: 1 FEB-30 APR (surveys during egg-laying/incubation discouraged) & 1 MAY-31 JUL (2 survey preferably prior to JUL). Productivity surveys require >=1 additional visits.

Methods: Surveys were performed for Peregrine Falcon and Golden Eagle. Surveyors arrived at the project site at 3:10 p.m. and conducted a thorough survey of the project area as well as the western perimeter of the rocky formation. Surveys included establishing appropriate vantage points, remaining at those points for 20 to 30 minutes listening for calls and using high powered binoculars to examine cliff faces for signs of nesting (ex. whitewash, nests, single or pairs of adults remaining in the area, etc.) until dark. Surveyors left the site at 7:15 p.m.

Findings: Observers located a raven nest along the western wall of the rocky formation. A single American Kestrel was observed flying over the mine site from the north and flew south across the road and disappeared. A single Prairie Falcon was seen flying from the north above the mine site the along the southern face of the cliffs and into a crevice. White wash was present throughout the crevice and surveyors will revisit tomorrow for confirmation of a nest.

Adkins Consulting Inc.
Environmental Permitting Services

180 East 12 Street Suite #5
Durango, CO 81301
Phone: 505-793-1140

DAILY REPORT
Field Surveys

PROJECT NAME: NN AUM SITE: Hoskie Tso #1

DATE: 4/28/16

WEATHER: Party cloudy, calm to light winds for most of the survey, winds picked up to 10-20 mph for approximately 30 minutes before the end of survey temps low 50's

PERSONNEL ONSITE: Sarah McCloskey (Principal Biologist), Field Assistant

==========

CONTRACTORS ONSITE NOTES:

Background: During the previous habitat assessment survey, there was no habitat for any of the NESL listed species within the mine site boundaries, however there is a large rocky formation with steep sandstone cliffs and numerous cavities for raptor species to occur approximately 0.25 miles to the east. Habitat was documented for Peregrine Falcons with marginal potential for Golden Eagles throughout the rocky formation area. Surveys were completed for Golden Eagle last night (4/27/16).

Purpose: In areas where suitable habitat occurs, a formal survey of the species is to be performed following Navajo Nation survey protocols[1] outlined below:

Peregrine Falcons - Two 8 hours surveys (4 hours before sunset and 4 hours after sunrise the following day) during each period: 1 FEB-30 APR (surveys during egg-laying/incubation discouraged) & 1 MAY-31 JUL (2 survey preferably prior to JUL). Productivity surveys require >=1 additional visits.

Methods: Surveyors arrived at the project site at 5:15 a.m. and conducted a thorough survey around the entire rocky formation. Surveys included establishing appropriate vantage points, remaining at those points for 20 to 30 minutes listening for calls and using high powered binoculars to examine cliff faces for signs of nesting (ex. whitewash, nests, single or pairs of adults remaining in the area, etc.) and continuing until 9:15 a.m.

Additional Information: This completes the first of two required surveys before April 30th. Surveyors will return tonight for the pm portion of the second survey.

Findings: The raven nest located yesterday was still active and an additional raven nest (potentially active) nest was observed approximately 100 feet to the north on the same cliff face. An active Prairie Falcon nest was found on the eastern most extent of the rocky formation in a ledge half way up a rock spire. The female was seen sitting on the nest and the male flew over making destress calls.

Adkins Consulting Inc.
Environmental Permitting Services

180 East 12 Street Suite #5
Durango, CO 81301
Phone: 505-793-1140

DAILY REPORT
Field Surveys

PROJECT NAME: NN AUM SITE: Hoskie Tso #1

DATE: 4/29/16

WEATHER: Sunny, calm, temps low 50's to low 60's

PERSONNEL ONSITE: Sarah McCloskey (Principal Biologist), Field Assistant

==========

CONTRACTORS ONSITE NOTES:

Background: During the previous habitat assessment survey, there was no habitat for any of the NESL listed species within the mine site boundaries, however there is a large rocky formation with steep sandstone cliffs and numerous cavities for raptor species to occur approximately 0.25 miles to the east. Habitat was documented for Peregrine Falcons with marginal potential for Golden Eagles throughout the rocky formation area. Surveys were completed for Golden Eagle on (4/27/16).

Purpose: In areas where suitable habitat occurs, a formal survey of the species is to be performed following Navajo Nation survey protocols[1] outlined below:

Peregrine Falcons - Two 8 hours surveys (4 hours before sunset and 4 hours after sunrise the following day) during each period: 1 FEB-30 APR (surveys during egg-laying/incubation discouraged) & 1 MAY-31 JUL (2 survey preferably prior to JUL). Productivity surveys require >=1 additional visits.

Methods: Surveyors arrived at the project site at 5:20 a.m. and conducted a thorough survey around the entire rocky formation. Surveys included establishing appropriate vantage points, remaining at those points for 20 to 30 minutes listening for calls and using high powered binoculars to examine cliff faces for signs of nesting (ex. whitewash, nests, single or pairs of adults remaining in the area, etc.) and continuing until 9:25 a.m.

Additional Information: This completes the second of two required surveys before April 30th. Another set of two complete surveys (evening and following morning) are required before July 31st.

Findings: The raven and Prairie Falcon nests were still active. An American Kestrel was seen perched on a fence near the highway approximately 200 feet southwest of the mine site. It flew off to the south and was not seen again. A potentially active burrowing owl nest was located approximately 0.16 miles northeast of the project area boundary. Surveyors observed the nest for 20 minutes and did not see the owl reemerge, so they approached the mound for sign of nesting. The mound was an old fox den with a large opening and deep cavity and had numerous whitewash stains and feathers around the entrance.

Adkins Consulting Inc.
Environmental Permitting Services

180 East 12 Street Suite #5
Durango, CO 81301
Phone: 505-793-1140

DAILY REPORT
Field Surveys

PROJECT NAME: NN AUM SITE: Hoskie Tso #1

DATE: 5/16/16

WEATHER: Cloudy, light winds, temps high 60's

PERSONNEL ONSITE: Arnold Clifford (Principal Biologist), Sarah McCloskey and Sarah Cowley (Field Assistants)

==========

CONTRACTORS ONSITE NOTES:

Background: During the previous burrowing owl survey on 4/29/16, an adult burrowing owl was observed alongside an abandoned fox den.

Purpose: In areas where suitable habitat occurs, a formal survey of the species is to be performed following Navajo Nation survey protocols[1] outlined below:

Survey during hours of first light to 11 am, and 3 hours before sunset to dusk; no surveys during excessive rain or above 32°C (90°F) ambient temperature. Conduct ≥2 diurnal transect surveys (transects spaced 10 m) in suitable habitat with high-powered optics during 15 MAR-31 JUL; record locations of all burrows with sign of recent owl use (presence of muting, pellets, and/or feathers at suitable burrow); scan area for owls every 100 m with binoculars; remove owl sign at potentially active burrows on first visit; check all potentially active burrows for fresh sign on second visit 2-8 days later.

Methods: Surveys were performed for Peregrine Falcon and Golden Eagle. Surveyors arrived at the project site at 3:10 p.m. and conducted a thorough survey of the project area as well as the western perimeter of the rocky formation. Surveys included establishing appropriate vantage points, remaining at those points for 20 to 30 minutes listening for calls and using high powered binoculars to examine cliff faces for signs of nesting (ex. whitewash, nests, single or pairs of adults remaining in the area, etc.) until dark. Surveyors left the site at 7:15 p.m.

Findings: Observers located a raven nest along the western wall of the rocky formation. A single American Kestrel was observed flying over the mine site from the north and flew south across the road and disappeared. A single Prairie Falcon was seen flying from the north above the mine site the along the southern face of the cliffs and into a crevice. Whitewash was present throughout the crevice.

Adkins Consulting Inc.
Environmental Permitting Services

180 East 12 Street Suite #5
Durango, CO 81301
Phone: 505-793-1140

DAILY REPORT
Field Surveys

PROJECT NAME: NN AUM SITE: Hoskie Tso #1

DATE: 5/24/16

WEATHER: Clear, light winds, temps mid 60's

PERSONNEL ONSITE: Arnold Clifford (Principal Biologist), Sarah McCloskey (Field Assistant)

==========

CONTRACTORS ONSITE NOTES:

Background: During the previous burrowing owl survey on 4/29/16, an adult burrowing owl was observed alongside an abandoned fox den. On 5/16/16 surveyors removed the existing whitewash from the den opening per Navajo Nation survey protocols[1] outlined below.

Purpose: To perform the follow up visit to verify use at the potentially active nest burrow per the Navajo Nation survey protocols[1] outlined below. If new whitewash appears, the burrow will be confirmed as active.

Survey during hours of first light to 11 am, and 3 hours before sunset to dusk; no surveys during excessive rain or above 32°C (90°F) ambient temperature. Conduct ≥2 diurnal transect surveys (transects spaced 10 m) in suitable habitat with high-powered optics during 15 MAR-31 JUL; record locations of all burrows with sign of recent owl use (presence of muting, pellets, and/or feathers at suitable burrow); scan area for owls every 100 m with binoculars; remove owl sign at potentially active burrows on first visit; check all potentially active burrows for fresh sign on second visit 2-8 days later.

Methods: Surveyors arrived at the project site at 6:00 p.m. and observed the burrow for 45 minutes listening for calls and using high powered binoculars to determine presence of Burrowing owls within or around the burrow. Surveyors then visited the burrow site for evidence of new whitewash and took photographs. Surveyors then observed the burrow for an additional 45 minutes listening for calls and using high powered binoculars to determine presence of Burrowing owls within or around the burrow.

Additional Information: Surveyors will revisit site tomorrow (5/25/16) to complete the second and final Burrowing Owl survey for the 2016 season for Hoskie Tso #1.

Findings: New whitewash was observed around the burrow entrance where it had been removed previously. No individuals were seen or hear around the burrow.

THE NAVAJO NATION
HISTORIC PRESERVATION DEPARTMENT
PO Box 4950, Window Rock, Arizona 86515
TEL: (928) 871-7198 FAX: (928) 871-7886

CULTURAL RESOURCE COMPLIANCE FORM

ROUTE COPIES TO:	NNHPD NO.: HPD-16-482
☑ DCRM	OTHER PROJECT NO.: DCRM 2016-08

PROJECT TITLE: A Cultural Resource Inventory of Two Abandoned Uranium Mines (Hoskie Tso No. 1 and Boyd Tisi No. 2) in Indian Wells and Cameron Chapter, Navajo Nation.

LEAD AGENCY: USEPA

SPONSORS: 1. Sadie Hoskie, Trustee, The Navajo Nation AUMs Environmental Response, P.O. Box 3330, Window Rock, AZ 86515
2. MWH Global, Inc., 2130 Resort Dr., STE. 200, Steamboat Springs, Colorado 80487

PROJECT DESCRIPTION: The proposed undertaking will involve the complete Removal Site Evaluations (RSEs) to define the horizontal extent of contamination in surface soils and sediments at two former uranium mine areas. Ground disturbance includes collecting soil & sediment samples for analysis & drilling/minor excavation work. The area of effect is 22.-6-acres (Hoskie Tso No. 1=23.7-acres; Boyd Tisi No. 2=13.3-acres). Ground disturbing activities will be intensive and extensive with the use of heavy equipment.

LAND STATUS:	Navajo Tribal Trust													
CHAPTER:	Indian Wells & Cameron													
LOCATION: Hoskie Tso Mine	*T.*	23	*N.,*	*R.*	21	*E-*	*Sec.*	Unplatted;	Indian Wells	Quadrangle,	Navajo	County	Arizona	G&SRPM
LOCATION Boyd Tisi Mine	*T.*	29	*N.,*	*R.*	10	*E-*	*Sec.*	Unplatted;	Cameron SE	Quadrangle,	Coconino	County	Arizona	G&SRPM

PROJECT ARCHAEOLOGIST:	Jeffrey Begay & Jeremy Begay
NAVAJO ANTIQUITIES PERMIT NO.:	B16041
DATE INSPECTED:	4/20/2016 – 5/4/16
DATE OF REPORT:	6/15/2016
TOTAL ACREAGE INSPECTED:	37.0 – ac
METHOD OF INVESTIGATION:	Class III pedestrian inventory with transects spaced 10-12 m apart.
LIST OF CULTURAL RESOURCES FOUND:	**(8) Isolated Occurrences (IO**
LIST OF ELIGIBLE PROPERTIES:	**None**
LIST OF NON-ELIGIBLE PROPERTIES:	**(8) IO**
LIST OF ARCHAEOLOGICAL RESOURCES:	**None**

EFFECT/CONDITIONS OF COMPLIANCE: No historic properties affected.

In the event of a discovery [*"discovery"* means any previously unidentified or incorrectly identified cultural resources including but not limited to archaeological deposits, human remains, or locations reportedly associated with Native American religious/traditional beliefs or practices], all operations in the immediate vicinity of the discovery must cease, and the Navajo Nation Historic Preservation Department must be notified at (928) 871-7198.

FORM PREPARED BY: **Tamara Billie**
FINALIZED: July 19, 2016

Notification to Proceed	☑ Yes	☐ No		7/20/16
Recommended Conditions:	☐ Yes	☑ No	The Navajo Nation Historic Preservation Office	Date
Navajo Region Approval	☒ Yes	☐ No	Acting BIA – Navajo Regional Office	8-29-16 Date

NNDFW Review No. 15mwh101-ht1

BIOLOGICAL RESOURCES COMPLIANCE FORM
NAVAJO NATION DEPARTMENT OF FISH AND WILDLIFE
P.O. BOX 1480, WINDOW ROCK, ARIZONA 86515-1480

It is the Department's opinion the project described below, with applicable conditions, is in compliance with Tribal and Federal laws protecting biological resources including the Navajo Endangered Species and Environmental Policy Codes, U.S. Endangered Species, Migratory Bird Treaty, Eagle Protection and National Environmental Policy Acts. This form does not preclude or replace consultation with the U.S. Fish and Wildlife Service if a Federally-listed species is affected.

PROJECT NAME & NO.: Hoskie Tso No. 1 - Abandoned Uranium Mine Project

DESCRIPTION: Proposed Phase I & II scientific investigations at an abandoned mine site. Phase I would entail biological and land surveying with a maximum of 5 people onsite for no more than 5-7 days. Disturbance would be light. Phase II would require the use of an excavator or a small mobile drilling unit to collect one or more soil samples with up to 8 people onsite for a period of one week. A temporary travel corridor 20 ft. in width would be necessary to move equipment to the site. Disturbance would be light to moderate. No permanent structures would be left onsite. The proposed project area (mine boundary and buffer) would be approximately 23.2 acres.

LOCATION: 35.3792°N 110.0616°W, Indian Wells Chapter, Navajo County, Arizona

REPRESENTATIVE: Lori Gregory, Adkins Consulting, Inc. for MWH Global/Stantec

ACTION AGENCY: U.S. Environmental Protection Agency and Navajo Nation

B.R. REPORT TITLE / DATE / PREPARER: BE-Hoskie Tso No. 1 Abandoned Uranium Mine Project/AUG 2016/Lori Gregory, Plant Survey Report for Species of Concern At Hoskie Tso No. 1 Project Site/AUG 2016/Redente Ecological Consultants

SIGNIFICANT BIOLOGICAL RESOURCES FOUND: Area 3. Suitable nesting habitat is present in the project area for Migratory Birds not listed under the NESL or ESA. Migratory Birds and their habitats are protected under the Migratory Bird Treaty Act (16 USC §703-712) and Executive Order 13186. Under the EO, all federal agencies are required to consider management impacts to protect migratory non-game birds.

POTENTIAL IMPACTS

NESL SPECIES POTENTIALLY IMPACTED: Aquila chrysaetos (Golden Eagle) G3, GBENPR, BGEPA, MBTA.

FEDERALLY-LISTED SPECIES AFFECTED: NA

OTHER SIGNIFICANT IMPACTS TO BIOLOGICAL RESOURCES: NA

AVOIDANCE / MITIGATION MEASURES: Mitigation measures will be implemented to ensure that there are no impacts to migratory birds that could potentially nest in the project area.

CONDITIONS OF COMPLIANCE*: Phase I and Phase II project activities shall avoid the Golden Eagle (Aquila chrysaetos) breeding season of 15 JAN-15 JUL if the nest is active. Consult with staff zoologist.

FORM PREPARED BY / DATE: Pamela A. Kyselka/17 NOV 2016

COPIES TO: (add categories as necessary)

☒ BIA ☐ _____

2 NTC § 164 Recommendation:	Signature	Date
☐Approval ☒Conditional Approval (with memo) ☐Disapproval (with memo) ☐Categorical Exclusion (with request letter) ☐None (with memo)	Gloria M. Tom, Director, Navajo Nation Department of Fish and Wildlife	11/18/16

*I understand and accept the conditions of compliance, and acknowledge that lack of signature may be grounds for the Department not recommending the above described project for approval to the Tribal Decision-maker.

Representative's signature Date

PRESIDENT
RUSSELL BEGAYE
VICE PRESIDENT
JONATHAN NEZ

NAVAJO FISH AND WILDLIFE P.O. BOX 1480 WINDOW ROCK, AZ 86515

17 November 2016 15mwh101-ht1

Lori Gregory, Wildlife Biologist
Adkins Consulting, Inc.
180 East 12th Street, Unit 5
Durango, Colorado 81301

Dear Lori,

The Navajo Nation Department of Fish and Wildlife (NNDFW) reviewed the Biological Evaluation for the proposed **Hoskie Tso No. 1 AUM-ERT** project located in the Indian Wells Chapter, Arizona. The purpose of this letter is to inform you that we are granting the proposed project a Conditional Approval. Phase I and Phase II project activities shall avoid the Golden Eagle (*Aquila chrysaetos*) breeding season of 15 JAN-15 JUL if the nest is active per Golden & Bald Eagle Nest Protection Regulations.

Please contact me at 928-871-7065 with any questions that you have concerning the review of this project.

Sincerely,

Pamela A. Kyselka, Wildlife Biologist
Navajo Natural Heritage Program

CONCURRENCE

Gloria Tom, Director
Department of Fish and Wildlife

11/18/16
Date

xc: CONS-100-16
BIA

From:	Nystedt, John
To:	Justin Peterson
Cc:	Lori Gregory; Pam Kyselka; tbillie@navajo-nsn.gov; Harrilene Yazzie; Melissa Mata
Subject:	Navajo Nation AUM Environmental Response Trust - -First Phase
Date:	Monday, November 07, 2016 4:08:30 PM
Attachments:	image001.png

Justin,

Thank you for your November 6, 2016, email. This email documents our response regarding the subject project, in compliance with section 7 of the Endangered Species Act of 1973 (ESA) as amended (16 U.S.C. 1531 et seq.). Based on the information you provided, we believe no endangered or threatened species or critical habitat will be affected by this project; nor is this project likely to jeopardize the continued existence of any proposed species or adversely modify any proposed critical habitat. No further review is required for this project at this time. Should project plans change or if new information on the distribution of listed or proposed species becomes available, this determination may need to be reconsidered. In all future communication on this project, please refer to consultation numbers given below.

In keeping with our trust responsibilities to American Indian Tribes, by copy of this email, we will notify the Navajo Nation, which may be affected by the proposed action and encourage you to invite the Bureau of Indian Affairs to participate in the review of your proposed action.

Should you require further assistance or if you have any questions, please contact me as indicated below, or my supervisor, Brenda Smith, at 556-2157. Thank you for your continued efforts to conserve endangered species.

Claim 28	02EAAZ00-2016-SLI-0358
Section 26 (Desiddero Group)	02ENNM00-2016-SLI-0447
Mitten #3	06E23000-2016-SLI-0210
NA-0904	02EAAZ00-2016-SLI-0363
Occurrence B	02EAAZ00-2016-SLI-0361
Standing Rock	02ENNM00-2016-SLI-0448
Alongo Mines	02ENNM00-2016-SLI-0465
Tsosie 1*	02EAAZ00-2016-SLI-0364
Boyd Tisi No. 2 Western	02EAAZ00-2016-SLI-0355
Harvey Blackwater #3	02EAAZ00-2016-SLI-0356 / 06E23000-2016-SLI-0207
Oak 124/125	02ENNM00-2016-SLI-0466
NA-0928	02EAAZ00-2016-SLI-0360
Hoskie Tso #1	02EAAZ00-2016-SLI-0362
Charles Keith	06E23000-2016-SLI-0208
Barton 3	02EAAZ00-2016-SLI-0354
Eunice Becenti	02ENNM00-2016-SLI-0444

* It is our understanding that the Tsosie No. 1 site has been put on hold indefinitely due to access issues. However, provided the results of the survey were negative (i.e., no potential for

any ESA-listed species) then we would come to the same conclusion, above, as for the other 15 projects.

.··..··..··..··...··..··..··..··..··..··..··..··..··...··..··..··..··..··.

Fish and Wildlife Biologist/AESO Tribal Coordinator
USFWS AZ Ecological Services Office - Flagstaff Suboffice
Southwest Forest Science Complex, 2500 S Pine Knoll Dr, Rm 232
Flagstaff, AZ 86001-6381 (928) 556-2160 Fax-2121 Cell:(602) 478-3797
http://www.fws.gov/southwest/es/arizona/

Appendix F Data Usability Report, Laboratory Analytical Data, and Data Validation Reports

F.1 Data Usability Report

F.2 Laboratory Analytical Data and Data Validation Reports

(provided in a separate electronic file due to its file size and length)

F.1 Data Usability Report

DATA USABILITY REPORT

1.0 INTRODUCTION

This data usability report presents a summary of the validation results for the sample data collected from the Hoskie Tso No. 1 site (the Site) as part of the Removal Site Evaluation (RSE) performed for the Navajo Nation AUM Environmental Response Trust—First Phase. The purpose of the validation was to ascertain the data usability measured against the data quality objectives (DQOs) and confirm that results obtained are scientifically defensible.

Samples were collected between October 20, 2016 and November 15, 2016 and were analyzed by ALS Environmental of Ft. Collins, Colorado, for all methods except mercury in water. ACZ Laboratories, Inc. of Steamboat Springs, Colorado, analyzed water samples for mercury. Samples were analyzed for one or more of the following:

- Radium-226 in soil by United States Environmental Protection Agency (USEPA) Method 901.1
- Metals in soil by USEPA Method SW6020
- Isotopic thorium in soil by USDOEAS-06/EMSL/LV
- Radium-226 in water by USEPA Method 903.1
- Radium-228 in water by USEPA Method 904
- Gross alpha/beta in water by USEPA Method 900
- Total and dissolved metals in water by USEPA 200.8
- Total dissolved solids in water by USEPA 160.1
- Alkalinity in water by USEPA 310.1
- Chloride and sulfate in water by USEPA 300.0
- Total and dissolved mercury in water by USEPA Method 1631

Samples were collected and analyzed according to the procedures and specific criteria presented in the *Quality Assurance Project Plan, Navajo Nation AUM Environmental Response Trust (QAPP)* (MWH, 2016).

Project data were validated as follows:

- Laboratory Data Consultants, Inc. (LDC) of Carlsbad, California, performed validation of all radiological soil and water data, plus ten percent of the non-radiological data (Level IV only)
- All non-radiological soil and water data were validated by the Stantec Consulting Services Inc. (Stantec; formerly MWH) Project Chemist (Level III only)
- All samples received Level III data validation
- Ten percent of the sample results for all methods received a more detailed Level IV validation

The analytical data were validated based on the results of the following data evaluation parameters or quality control (QC) samples:

- Compliance with the QAPP
- Sample preservation
- Sample extraction and analytical holding times
- Initial calibration (ICAL), initial calibration verification (ICV), and continuing calibration verification (CCV) results
- Method and initial/continuing calibration blank (ICB/CCB) sample results
- Matrix spike/matrix spike duplicate (MS/MSD) sample results
- Laboratory duplicate results
- Serial dilution (metals analysis only)
- Interference check samples (ICS) (metals analysis only)
- Laboratory control sample (LCS) and laboratory control sample duplicate (LCSD) results
- Field duplicate sample results
- Minimum detectable concentration (radiological analyses only)
- Reporting limits
- Sample result verification
- Completeness evaluation
- Comparability evaluation

Sample results that were qualified due to quality control parameters outside of acceptance criteria are listed on Table F.1-1.

2.0 DATA VALIDATION RESULTS

Stantec reviewed the data validation reports and assessed the qualified data against the DQOs for the project. The following summarizes the data validation findings for each of the data evaluation parameters.

2.1 QUALITY ASSURANCE PROJECT PLAN COMPLIANCE EVALUATION

Based on the data validation, all samples were analyzed following the quality control criteria specified in the QAPP, with the following exception: ALS routinely dilutes all metals samples by a factor of 10 times in order to protect their ICP-MS instrument from the adverse effects of running samples with high total dissolved solids. This also includes running a long series of samples (as is common in a production laboratory) with intermediate dissolved solids. The vulnerable parts of the instrument are the nebulizer, which produces an aerosol, and the cones, which disperse the aerosol. These areas form scaly deposits from the samples in the sample solution, despite the nitric acid and other acids present in the digestate. These parts of the instrument periodically need to be taken apart and cleaned, but in a production setting the laboratory wants to avoid any downtime as much as possible. As an ameliorating factor, the laboratory also takes account of this dilution factor up front in the project planning stages. The laboratory will not quote a reporting limit for this instrument that cannot be achieved after the 10 times dilution required for the instrument. Not all of the requested reporting limits can be met using the laboratory's routine protocol. The dilution is narrated by the laboratory merely as a matter of transparency, as well as for the validator's information. The dilution should have no impact on the project's sensitivity goals.

Sample Preservation Evaluation. All samples were preserved as specified in the QAPP.

Holding Time Evaluation. All analytical holding times were met.

Initial Calibration, Initial Calibration Verification, and Continuing Calibration Verification Evaluation. All ICAL, ICV, and CCV results were within acceptance criteria.

Method Blank Evaluation. No analytes were detected in any method blank, with exception of gross alpha in a preparation blank associated with sample ID S852-WS-001. The sample result was greater than 5 times the blank result. The sample result was qualified with a "B" flag to indicate blank contamination and the sample result may potentially be biased high (see Table F.1-1).

Initial and Continuing Calibration Blank Evaluation. No sample data were qualified due to ICB/CCB data.

Matrix Spike/Matrix Spike Duplicate Samples Evaluation. All MS/MSD recoveries were within acceptance criteria with the exception of a few metals. Table F.1-1 lists the analytes where an MS and/or MSD percent recovery was less than the lower control limits. The sample results were qualified with a "J-" flag to indicate the data are estimated and potentially biased low. All MS/MSD RPDs were within acceptance criteria.

Laboratory Duplicate Sample Evaluation. For some analyses, the laboratory prepared and analyzed a duplicate sample. RPD results were evaluated between the parent and laboratory duplicate samples. One RPD was outside the acceptance criteria for the analysis of molybdenum. The sample result was qualified with a "J" flag to indicate an estimated result.

Serial Dilution Evaluation. All serial dilution percent differences were within acceptance criteria except for one sample for the analysis of molybdenum. The sample result associated with the out-of-compliance serial dilution was already qualified with a "J-" flag for an MS percent recovery noncompliance.

Interference Check Sample Evaluation. All interference check samples were within acceptance criteria.

Laboratory Control Sample/Laboratory Control Sample Duplicate Evaluation. All LCS and LCSD recoveries were within acceptance criteria. All LCS/LCSD RPDs were within acceptance criteria.

Field Duplicate Evaluation. The RPDs were less than the guidance RPD of 30 percent established in the QAPP for all field duplicate pairs.

Minimum Detectable Concentration Evaluation. All minimum detectable concentrations met reporting limits with the exception of eight samples for the analysis of radium-226, three samples for the analysis of gross alpha, and two samples for the analysis of gross beta. However, the reported activity for each of these samples was greater than the achieved minimum detectable concentration and no qualification was needed.

Reporting Limit Evaluation. All sample data were reported to the reporting limit established in the QAPP, with the exception of the metals, as discussed at the beginning of this section related to dilution.

Sample Result Verification. All sample result verifications were acceptable with the exception of eleven samples analyzed for radium-226. The sample density exceeded the limit of +/- 15% of the density of the calibration standard. Cases that exceed the limit of +/- 15% of the density of the calibration standard were qualified with a "J+" flag for those results that may be biased high and a "J-" flag for those results that may be biased low (see Table F.1-1).

Completeness Evaluation. All samples and QC samples were collected as scheduled, resulting in 100 percent sampling completeness for this project. Based on the results of the data validation described in the previous sections, all data are considered valid as qualified. No data were

rejected; consequently, analytical completeness was 100 percent, which met the 95 percent analytical completeness goal established in the QAPP.

Comparability Evaluation. Comparability is a qualitative parameter that expresses the confidence that one data set may be compared to another. For this project, sample collection and analysis followed standard methods and the data were reported using standard units of measure as specified in the QAPP. In addition, QC data for this project indicate the data are comparable. As a result, the data from this project should be comparable to other data collected at this Site using similar sample collection and analytical methodology.

3.0 DATA VALIDATION SUMMARY

Precision. Based on the MS/MSD sample, LCS/LCSD sample, laboratory duplicate sample, and field duplicate results, the data are precise as qualified.

Accuracy. Based on the ICAL, ICV, CCV, MS/MSD, and LCS, the data are accurate as qualified.

Representativeness. Based on the results of the sample preservation and holding time evaluation; the method and ICB/CCB blank sample results; the field duplicate sample evaluation; and the RL evaluation the data are considered representative of the Site as qualified.

Completeness. All media and QC sample results were valid and collected as scheduled; therefore, completeness for this RSE is 100 percent.

Comparability. Standard methods of sample collection and standard units of measure were used during this project. The analysis performed by the laboratory was in accordance with current USEPA methodology and the QAPP.

Based on the results of the data validation, all data are considered valid as qualified.

Table F.1-1
Summary of Qualified Data
Hoskie Tso No. 1
Removal Site Evaluation Report - Final
Navajo Nation AUM Environmental Response Trust - First Phase

Field Sample Identification	Sample Date	Analysis Code	Analyte	Sample Result	Units	QC Type	QC Result	QC Limit	Added Flag	Comment
S852-BG1-006	10/20/16	E901.1	Radium-226	4.78	pCi/g	Result Verification		±15%	J-	Result is estimated, potentially biased low. Sample density differs by more than 15% of LCS density.
S852-BG1-007	10/20/16	E901.1	Radium-226	4.52	pCi/g	Result Verification		±15%	J-	Result is estimated, potentially biased low. Sample density differs by more than 15% of LCS density.
S852-BG1-009	10/20/16	E901.1	Radium-226	3.20	pCi/g	Result Verification		±15%	J-	Result is estimated, potentially biased low. Sample density differs by more than 15% of LCS density.
S852-BG1-010	10/20/16	E901.1	Radium-226	3.37	pCi/g	Result Verification		±15%	J-	Result is estimated, potentially biased low. Sample density differs by more than 15% of LCS density.
S852-BG2-009	10/20/16	SW6020	Molybdenum	30	mg/kg	MS MSD	21% -9%	75% - 125%	J-	Result is estimated, potentially biased low. MS and MSD recoveries below acceptance criteria. Post spike addition %R above acceptance criteria.
S852-C01-201	11/14/16	E901.1	Radium-226	55.6	pCi/g	Result Verification		±15%	J+	Result is estimated, potentially biased high. Sample density differs by more than 15% of LCS density.
S852-CX-001	11/14/16	E901.1	Radium-226	3.08	pCi/g	Result Verification		±15%	J+	Result is estimated, potentially biased high. Sample density differs by more than 15% of LCS density.
S852-CX-007	11/14/16	E901.1	Radium-226	116	pCi/g	Result Verification		±15%	J+	Result is estimated, potentially biased high. Sample density differs by more than 15% of LCS density.

Notes
mg/kg milligrams per kilogram
pCi/g picocuries per gram
pCi/L picocuries per liter
LCS laboratory control sample
LR laboratory replicate (duplicate)
MB method blank
MS matrix spike
MSD matrix spike duplicate
RPD relative percent difference

Table F.1-1
Summary of Qualified Data
Hoskie Tso No. 1
Removal Site Evaluation Report - Final
Navajo Nation AUM Environmental Response Trust - First Phase

Field Sample Identification	Sample Date	Analysis Code	Analyte	Sample Result	Units	QC Type	QC Result	QC Limit	Added Flag	Comment
S852-SCX-001-1	11/15/16	SW6020	Arsenic	8	mg/kg	MS	69%	75% - 125%	J-	Result is estimated, potentially biased low. MS recovery below acceptance criteria.
S852-SCX-001-1	11/15/16	SW6020	Molybdenum	13	mg/kg	MS LR Serial Dilution	71% 42% 13%	75% - 125% 20% 10%	J-	Result is estimated, potentially biased low. MS recovery below acceptance criteria. LR RPD greater than acceptance limit. Serial dilution %D greater than acceptance criteria.
S852-SCX-001-1	11/15/16	SW6020	Selenium	1.1	mg/kg	MS MSD	66% 69%	75% - 125%	J-	Result is estimated, potentially biased low. MS and MSD recoveries below acceptance criteria.
S852-SCX-002-1	11/14/16	E901.1	Radium-226	445	pCi/g	Result Verification		±15%	J+	Result is estimated, potentially biased high. Sample density differs by more than 15% of LCS density.
S852-SCX-002-2	11/14/16	E901.1	Radium-226	229	pCi/g	Result Verification		±15%	J+	Result is estimated, potentially biased high. Sample density differs by more than 15% of LCS density.
S852-SCX-002-3	11/14/16	E901.1	Radium-226	122	pCi/g	Result Verification		±15%	J+	Result is estimated, potentially biased high. Sample density differs by more than 15% of LCS density.
S852-SCX-007-1	11/14/16	E901.1	Radium-226	44.0	pCi/g	Result Verification		±15%	J+	Result is estimated, potentially biased high. Sample density differs by more than 15% of LCS density.
S852-WS-001	11/8/16	E900	Gross alpha	28.3	pCi/L	MB	0.82 pCi/L	NA	B	Analyte detected in associated method blank. Sample concentration greater than five times method blank

Notes
mg/kg milligrams per kilogram
pCi/g picocuries per gram
pCi/L picocuries per liter
LCS laboratory control sample
LR laboratory replicate (duplicate)
MB method blank
MS matrix spike
MSD matrix spike duplicate
RPD relative percent difference