SEMS-RM DOCID # 100016420

Harvey Blackwater No. 3 (#239)

Removal Site Evaluation Report

Final | October 1, 2018

Stantec

NAVAJO NATION
AUM Environmental Response Trust-First Phase

Harvey Blackwater No.3 (#239) Removal Site Evaluation Report - Final

October 1, 2018

Prepared for:

Navajo Nation AUM Environmental Response Trust – First Phase

Prepared by:

Stantec Consulting Services Inc.

Title and Approval Sheet

Titie: Harvey Blackwater No.3 Removal Site Evaluation Report - Final

Approvals

This Removal Site Evaluation Report is approved for implementation without conditions.

Dr. Donald Benn
Navajo Nation Environmental Protection Agency
Executive Director

Date 10/15/18

Linda Reeves
US Environmental Protection Agency, Region 9
Remedial Project Manager

Date 10/16/18

Sadie Hoskie
Navajo Nation AUM Environmental Response Trust – First Phase
Trustee

Date 10/16/2018

Toby Leeson, P.G.
Stantec Consulting Services, Inc.
Project Technical Lead

Date 10/16/2018

Revision Log

Revision No.	Date	Description
0	December 20, 2017	Submission of Draft RSE report to Agencies for review
1	October 1, 2018	Submission of Final RSE report to Agencies

Stantec

NAVAJO NATION

Sign-off Sheet

This document entitled *Harvey Blackwater No.3 Removal Site Evaluation Report* was prepared by MWH, now part of Stantec Consulting Services Inc. (Stantec) on behalf of the Navajo Nation AUM Environmental Response Trust – First Phase (the "Client") for submittal to the Navajo Nation Environmental Protection Agency (NNEPA) and United States Environmental Protection Agency (USEPA) (collectively, the "Agencies"). The material in it reflects Stantec's professional judgment in light of the scope, schedule and other limitations stated in the document and in the contract between Stantec and the Client. The opinions in the document are based on conditions and information existing at the time the document was published and do not take into account any subsequent changes. In preparing the document, Stantec did not verify information supplied to it by others. Any use which a third party makes of this document is the responsibility of such third party. Such third party agrees that Stantec shall not be responsible for costs or damages of any kind, if any, suffered by it or any other third party as a result of decisions made or actions taken based on this document.

Per the *Navajo Nation AUM Environmental Response Trust Agreement – First Phase*, *Section 5.4.1,* (United States [US], 2015) the following certification must be signed by a person who supervised or directed the preparation of the Removal Site Evaluation report: "Under penalty of law, I certify that to the best of my knowledge, after appropriate inquiries of all relevant persons involved in the preparation of this report, the information submitted herein is true, accurate, and complete. I am aware that there are significant penalties for submitting false information, including the possibility of fine and imprisonment for knowing violations."

Prepared by _____

(signature)

Emily Yeager, P.G.

Reviewed by _____

(signature)

Kelly Johnson, PhD, P.G.

Approved by _____

(signature)

Toby Leeson, P.G.

Table of Contents

1.0 INTRODUCTION 1.1
1.1 BACKGROUND 1.1
1.2 OBJECTIVES AND PURPOSE OF THE REMOVAL SITE EVALUATION 1.2
1.3 REPORT ORGANIZATION 1.4

2.0 SITE HISTORY AND PHYSICAL CHARACTERISTICS 2.1
2.1 SITE HISTORY AND LAND USE 2.1
2.1.1 Mining Practices and Background 2.1
2.1.2 Ownership and Surrounding Land Use 2.1
2.1.3 Site Access 2.2
2.1.4 Previous Work at the Site 2.2
2.2 PHYSICAL CHARACTERISTICS 2.4
2.2.1 Regional and Site Physiography 2.4
2.2.2 Geologic Conditions 2.4
2.2.3 Regional Climate 2.6
2.2.4 Surface Water Hydrology 2.6
2.2.5 Vegetation and Wildlife 2.7
2.2.6 Cultural Resources 2.7
2.2.7 Observations of Potential Mining and Reclamation 2.7

3.0 SUMMARY OF SITE INVESTIGATION ACTIVITIES 3.1
3.1 INTRODUCTION 3.1
3.2 SUMMARY OF SITE CLEARANCE ACTIVITIES 3.3
3.2.1 Desktop Study 3.3
3.2.2 Field Investigations 3.4
3.3 SUMMARY OF REMOVAL SITE EVALUATION ACTIVITIES 3.12
3.3.1 Baseline Studies Activities 3.12
3.3.2 Site Characterization Activities and Assessment 3.16
3.3.3 Identification of TENORM Areas 3.19
3.4 DATA MANAGEMENT AND DATA QUALITY ASSESSMENT 3.20
3.4.1 Data Management 3.20
3.4.2 Data Quality Assessment 3.21

4.0 FINDINGS AND DISCUSSION 4.1
4.1 BACKGROUND REFERENCE AREA STUDY RESULTS AND CALCULATION OF INVESTIGATION LEVELS 4.1
4.2 SITE GAMMA RADIATION SURVEY RESULTS AND PREDICTED RADIUM-226 CONCENTRATIONS 4.3
4.2.1 Site Gamma Radiation Results 4.3
4.2.2 Gamma Correlation Results 4.5
4.3 SOIL METALS AND RADIUM-226 ANALYTICAL RESULTS 4.7
4.4 CONSTITUENTS OF POTENTIAL CONCERN 4.10
4.5 AREAS THAT EXCEED THE INVESTIGATION LEVELS 4.10

4.6 AREAS OF TENORM AND NORM 4.11
4.7 TENORM VOLUME ESTIMATE 4.14
4.8 POTENTIAL DATA GAPS AND SUPPLEMENTAL STUDIES 4.15
4.8.1 Data Gaps 4.15
4.8.2 Supplemental Studies 4.16

5.0 SUMMARY AND CONCLUSIONS 5.1

6.0 ESTIMATE OF REMOVAL SITE EVALUATION COSTS 6.1

7.0 REFERENCES 7.1

LIST OF TABLES

Table 3-1 Soil and Sediment Sampling Summary

Table 3-2 Mine Feature Samples and Area

Table 4-1 Background Reference Area Soil Sample Analytical Results

Table 4-2 Static Gamma Measurement Summary

Table 4-3 Gamma Correlation Study Soil and Sediment Sample Analytical Results

Table 4-4 Site Characterization Soil and Sediment Sample Analytical Results

Table 4-5 Summary of Investigation Level Exceedances in Soil/Sediment at Borehole Locations

LIST OF FIGURES

Figure 1-1 Site Location

Figure 2-1 Site Features

Figure 2-2 Historical Mine Drawing Overlay

Figure 2-3 Regional Aerial Photograph

Figure 2-4 Regional Topographic Map

Figure 2-5a Site Map

Figure 2-5b Graded/Disturbed Reclaimed Area Compared to Historical Mine Drawing Overlay

Figure 2-6 Regional Geology

Figure 2-7 Site Geology

Figure 2-8a Cross Section A-A'

Figure 2-8b Cross Section B-B'

Figure 3-1a Historical Aerial Photograph Comparison

Figure 3-1b 1997 Historical Aerial Photograph Comparison

Figure 3-2 Potential Background Reference Areas

Figure 3-3 Background Reference Area - Sample Locations

Figure 3-4 Gamma Radiation Survey Area

Figure 3-5 Gamma Correlation Study Locations

Figure 3-6a Site Characterization Surface and Subsurface Sample Locations

Figure 3-6b Site Characterization Mining Features and Surface and Subsurface Sample Locations

Figure 4-1 Gamma Radiation Survey Results

Figure 4-2a Predicted Concentrations of Ra-226 in Soil Using the Correlation Equation

Figure 4-2b Predicted Ra-226 Concentrations in Soil Compared to Ra-226 Concentrations in Soil/Sediment

Figure 4-2c Predicted Ra-226 Concentrations in Soil Compared to Ra-26 ILs

Figure 4-3 Surface and Subsurface Metals and Ra-226 Analytical Results

Figure 4-4 Lateral Extent of Surface and Subsurface IL Exceedances

Figure 4-5 Vertical Extent of IL Exceedances in Unconsolidated Material

Figure 4-6 TENORM Compared to Lateral Extent of IL Exceedances

Figure 4-7 TENORM Compared to Gamma Radiation Survey Results

Figure 4-8a TENORM that Exceeds ILs

Figure 4-8b TENORM that Exceeds ILs Compared to Mining-Related Features

Figure 4-9 Volume Estimate of TENORM that Exceeds ILs

LIST OF APPENDICES

Appendix A – Radiological Characterization of the Harvey Blackwater No.3 Abandoned Uranium Mine

Appendix B – Site Photographs

Appendix C - Field Activity Forms

C.1 Soil Sample Field Forms

C.2 Drilling and Hand Auger Borehole Logs

Appendix D –Evaluation of RSE Data

D.1 Background Reference Area Selection

D.2 Statistical Evaluation

Appendix E – Cultural and Biological Resource Clearance Documents

Appendix F - Data Usability Report, Laboratory Analytical Data, and Data Validation Reports

F.1 Data Usability Report

F.2 Laboratory Analytical Data and Data Validation Reports

LIST OF ATTACHMENTS – PROVIDED ELECTRONICALLY TO THE AGENCIES

- Site-specific geodatabase
- Tabular database files
- 2017 Cooper aerial survey orthophotographs and data files
- Historical documents referenced in this RSE Report (refer to Section 7 for complete citation)
    - Chenoweth, 1992 – Location, Geologic Setting, and Production History of the Harvey Blackwater Nos. 1,3, and 4 Uranium Mines, Apache County, Arizona, and San Juan County, Utah
    - Hendricks, 2001 – An Aerial Radiological Survey of Abandoned Uranium Mines in the Navajo Nation
    - NAML, 2001 – Monument Valley 4 AML Reclamation Project Proposal Documents
    - NAML, n.d. – Navajo AML Reclamation Program Tuba City AML Reclamation Program GR#807810 – Close Out Report
    - USEPA, 2007a – Abandoned Uranium Mines and the Navajo Nation. Navajo Nation AUM Screening Assessment Report and Atlas with Geospatial Data
    - Weston Solutions, 2012 - Navajo Abandoned Uranium Mine Site Screen Report Harvey Blackwater No.3

Executive Summary

Introduction

The Harvey Blackwater No.3 site (the Site) is located within the Navajo Nation, Tuba City Bureau of Indian Affairs (BIA) Agency, Kayenta Chapter[1] in northeastern Arizona and southeastern Utah. The Site is one of 46 "priority" abandoned uranium mines (AUMs) within the Navajo Nation selected by the United States Environmental Protection Agency (USEPA) in collaboration with the Navajo Nation Environmental Protection Agency (NNEPA) for further evaluation based on radiation levels and potential for water contamination (USEPA, 2013). Mining for uranium occurred prior to, during, and after World War II, when the United States (US) sought a domestic source of uranium located on Navajo lands (USEPA, 2007a).

On April 30, 2015, the *Navajo Nation AUM Environmental Response Trust Agreement – First Phase* (the *Trust Agreement*) became effective. The *Trust Agreement* was made by and among the US, as Settlor and as Beneficiary on behalf of the USEPA, the Navajo Nation, as Beneficiary, and the Trustee, Sadie Hoskie. The *Trust Agreement* was developed in accordance with a settlement on April 8, 2015 between the US and Navajo Nation for the investigation of 16 specified priority AUMs. The priority sites were selected by the US and Navajo Nation, as described in the *Trust Agreement*:

> "based on two primary criteria, specifically, demonstrated levels of Radium-226[2]: (a) at or in excess of 10 times the background levels and the existence of a potentially inhabited structure located within 0.25 miles of AUM features; or (b) at or in excess of two times background levels and the existence of a potentially inhabited structure located within 200 feet (ft)."

The purpose of this report is to summarize the objectives, field investigation activities, findings, and conclusions of Site Clearance and Removal Site Evaluation (RSE) activities conducted between July 2015 and September 2017 at the Site. The primary objectives of the RSEs are to provide data required to evaluate relevant site conditions and to support future removal action evaluations at the Sites. It is not intended to establish cleanup levels or determine cleanup options or potential remedies. The purpose of the RSE data (e.g., the review of relevant information and the collection of data related to historical mining activities) is to determine the volume of technologically enhanced naturally occurring radioactive material (TENORM) at the Site in excess of Investigation Levels (ILs) as a result of historical mining activities. ILs are based on the background gamma measurements (in counts per minute [cpm]), and Radium-226 (Ra-226)

[1] The Site is also located in the Dennehotso Chapter but for the RSE the Trust has been working with the Kayenta Chapter.
[2] The Agencies selected the priority mines based on gamma radiation but the *Trust Agreement* erroneously states "levels of Radium -226".

and metals concentrations, determined through statistical analyses, that are used to evaluate potential mining-related impacts. .

Site History and Physical Characteristics

The Site is located within the Colorado Plateau physiographic province, which is an area of approximately 240,000 square miles in the Four Corners region of Utah, Colorado, Arizona, and New Mexico. Bedrock outcrops on or adjacent to the Site consist of sandstone, mudstone, and conglomerate of the Shinarump Member of the Triassic Chinle Formation. The Site is also located within the San Juan River watershed, an area of approximately 24,600 square miles spanning Utah, Colorado, New Mexico, and Arizona. Topographically the Site is relatively flat and the elevation on-site is approximately 4,800 ft above mean sea level. On-site overland surface water flow, when present, either terminates within the unconsolidated deposits or drains into Cane Valley Wash approximately 1.3 miles southwest of the Site.

Mining on-site occurred from 1954 to 1955 and historical mine workings on-site consisted of a shallow open pit. Total ore production from the Site was 577.08 tons (approximately 1,154,160 pounds) of ore that contained 1,794.40 pounds of 0.15 percent U_3O_8 (uranium oxide) and 514.14 pounds of 0.04 percent V_2O_5 (vanadium oxide). Mining at the Site ended in 1955.

In 2001, the Site was included in a reclamation bid document for the reclamation of 24 AUMs, referred to as the Monument Valley 4 Project (NAML, 2001). NAML submitted a reclamation program closeout report for the Monument Valley 4 Project that stated the Monument Valley 4 Project was complete (NAML, n.d.). The closeout report provided reclamation activity accomplishments by project and not by individual AUM. Therefore, the Trust could not verify that the proposed reclamation activities were done at the Trust Harvey Blackwater Site specifically. However, in 2007 the USEPA listed the Site as reclaimed (USEPA, 2007a). In 2012, Weston Solutions (Weston) performed site screening on behalf of the USEPA. The screening included: (1) recording site observations (i.e., number of homes, water sources, and sensitive environments[3] around the Site); (2) recording the type, number, and reclamation status of mine features; and (3) performing a surface gamma survey.

Summary of Removal Site Evaluation Activities

The Trust's RSE was performed in accordance with the *Site Clearance Work Plan* (MWH, 2016a) and the *Removal Site Evaluation Work Plan* ([*RSE Work Plan*] MWH, 2016b). The *Site Clearance Work Plan* and the *RSE Work Plan* were approved in April and October 2016, respectively, by the NNEPA and the USEPA (collectively, the Agencies). The Trust conducted Site Clearance activities as the initial task for the RSE work to obtain information necessary to develop the *Removal Site Evaluation Work Plan* ([*RSE Work Plan*] MWH, 2016b). Following Site Clearance activities, the Trust conducted two sequential tasks to complete the RSE: Baseline Studies activities and Site

[3] Weston defined sensitive environments as "all sensitive environments located within visible range of the mine site, including: wetlands, endangered species, habitats and approximate locations of sites that may be under protection of the government of the Navajo Nation"

Characterization and Assessment activities. Details of the Site Clearance activities, Baseline Studies activities, and Site Characterization and Assessment activities are as follows:

- **Site Clearance activities** consisted of a desktop study of historical information, site mapping, potential background reference area evaluation, biological (vegetation and wildlife) surveys, and cultural resource survey. Results of the Site Clearance activities provided historical information, site access information, potential background reference area data, and vegetation, wildlife, and cultural clearance of the Site for the Baseline Studies activities and Site Characterization and Assessment activities to commence.

- **Baseline Studies activities** included a background reference area study, site gamma radiation surveys, and a Gamma Correlation Study. Results of the Baseline Studies were used to plan and prepare the Site Characterization Activities and Assessment. Data collected in the background reference area (soil sampling, laboratory analyses, surface gamma surveying, and subsurface static gamma measurements) were used to establish ILs for the Site. Data collected from the site gamma radiation survey were used, along with sampling, to evaluate potential mining-related impacts in areas containing radionuclides. The Gamma Correlation Study objectives were to determine the correlations between:
  (1) gamma measurements and concentrations of Ra-226 in surface soils; and (2) gamma measurements and exposure rates; to use as screening tools for site assessments.

- **Site Characterization and Assessment activities** included surface soil and sediment sampling, and subsurface soil sampling. The results of the surface and subsurface soil and sediment sampling analyses were used to evaluate mining impacts and define the lateral and vertical extent of TENORM at the Site.

Findings and Discussion

Surface and subsurface soil and sediment sampling results. One background reference area was selected to develop surface gamma, subsurface static gamma, Ra-226, and metals ILs for the Site. Arsenic, molybdenum, uranium, vanadium, and Ra-226 concentrations and gamma radiation measurements in soil/sediment exceeded their respective ILs and are confirmed constituents of potential concern (COPCs) for the Site. An IL for selenium was not identified because selenium sample results were non-detect in the background area. However, because selenium was detected in soil/sediment samples from the Survey Area (i.e., the full areal extent of the Site surface gamma survey), it is also confirmed as a COPC for the Site. Based on the data analyses performed for this report along with the multiple lines of evidence, approximately 7.5 acres, out of the 39.2 acres of the Survey Area (i.e., the full areal of the Site surface gamma survey), were estimated to contain TENORM. Of the 7.5 acres that contain TENORM, 5.9 acres contain TENORM exceeding the surface gamma ILs. The volume of TENORM in excess of ILs was estimated to be: (1) 13,950 yd^3 (10,666 cubic meters) when taking into consideration the depth of the historical pit contoured from 1.0 to 4.0 ft bgs; and (2) 15,326 yd^3 (11,718 cubic meters) when taking into consideration the depth of the historical pit contoured from 1.0 to 10.0 ft bgs.

Gamma Correlation Study results. The Gamma Correlation Study indicated that surface gamma survey results correlate with Ra-226 concentrations in soil. Therefore, gamma surveys could be used during site assessments as a field screening tool to estimate Ra-226 concentrations in soil,

where sampling or gamma surveys are not available. The model was made of the correlation results predicting the concentrations of Ra-226 in surface soils from the mean of the gamma measurements in five correlation locations. Additional correlation studies may be needed to refine the relationship between gamma and Ra-226.

Based on the Site Clearance and RSE data collection and analyses for the Site, potential data gaps were identified and are presented in Section 4.8 of this RSE report. These potential data gaps can be taken into consideration for subsequent evaluations in support of future Removal or Remedial Action evaluations at the Site.

Acronyms/Abbreviations

°F	degrees Fahrenheit
e.g.	exempli gratia
etc.	et cetera
ft	feet
ft^2	square feet
i.e.	id est
mg/kg	milligram per kilogram
µR/hr	microRoentgens per hour
pCi/g	picocuries per gram
Adkins	Adkins Consulting Inc.
ags	above ground surface
amsl	above mean sea level
AUM	abandoned uranium mine
bgs	below ground surface
BIA	Bureau of Indian Affairs
CCV	continuing calibration verification
C.F.R	Code of Federal Regulations
COPC	constituent of potential concern
cpm	counts per minute
Dinétahdóó	Dinétahdóó Cultural Resource Management
DMP	Data Management Plan
DQO	Data Quality Objective
ERG	Environmental Restoration Group, Inc.
ESA	Endangered Species Act
FSP	Field Sampling Plan
GIS	geographic information system
GPS	global positioning system
HASP	Health and Safety Plan
ICAL	initial calibration
ICB/CCB	initial/continuing calibration blank
ICV	initial calibration verification
IL	Investigation Level
LCS/LCSD	laboratory control sample/laboratory control sample duplicate

MARSSIM	Multi-agency Radiation Survey and Site Investigation Manual
MBTA	Migratory Bird Treaty Act
Mex-Air	Mex-Air Uranium Company
MLR	Multivariate Linear Regression
MS/MSD	matrix spike/matrix spike duplicate
MWH	MWH, now part of Stantec Consulting Services Inc. (formerly MWH Americas, Inc.)
NaI	sodium iodide
NAML	Navajo Abandoned Mine Lands Reclamation Program
NCP	National Oil and Hazardous Substances Pollution Contingency Plan
NNDFW	Navajo Nation Department of Fish and Wildlife
NNDOJ	Navajo Nation Department of Justice
NNDNR	Navajo Nation Division of Natural Resources
NNDWR	Navajo Nation Department of Water Resources
NNEPA	Navajo Nation Environmental Protection Agency
NNESL	Navajo Nation Endangered Species List
NNHP	Navajo Natural Heritage Program
NNHPD	Navajo Nation Historic Preservation Department
NORM	Naturally Occurring Radioactive Material
QA/QC	quality assurance/quality control
QAPP	Quality Assurance Project Plan
R^2	Pearson's Correlation Coefficient
Ra-226	Radium-226
Redente	Redente Ecological Consultants
RSE	Removal Site Evaluation
SOP	standard operating procedure
Stantec	Stantec Consulting Services Inc.
T&E	threatened and endangered
Th-230	thorium-230
Th-232	thorium-232
TENORM	Technologically Enhanced Naturally Occurring Radioactive Materials
U-235	uranium-235
U-238	uranium-238
U_3O_8	uranium oxide
UCL	upper confidence limit
US	United States
U.S.C.	United States Code
UTL	upper tolerance limit
USAEC	US Atomic Energy Commission
USEPA	US Environmental Protection Agency
USFWS	US Fish and Wildlife Service
USGS	US Geological Survey

V_2O_5	vanadium oxide
Weston	Weston Solutions

Glossary

Alluvium – material deposited by flowing water.

Arroyo – a steep sided gully cut by running water in an arid or semiarid region.

Bin Range – as presented in the RSE report, a range of values to present surface gamma measurement data in relation to: (1) the surface gamma Investigation Level (IL); (2) multiples of the surface gamma IL; or (3) the mean and standard deviation of the predicted Radium-226 (Ra-226) concentrations for the Site based on the correlation equation.

Colluvium – unconsolidated, unsorted, earth material transported under the influence of gravity and deposited on lower slopes (Schaetzl and Thompson, 2015).

Composite sample – "Volumes of material from several of the selected sampling units are physically combined and mixed in an effort to form a single homogeneous sample, which is then analyzed" (USEPA, 2002).

Constituent of potential concern (COPC) – analytes identified in the *RSE Work Plan* where their levels were confirmed based on the results of the RSE.

Data Validation – "an analyte- and sample-specific process that extends the evaluation of data beyond, method, procedural, or contractual compliance (i.e., data verification) to determine the analytical quality of a specific data set" (USEPA, 2002).

Data Verification – "the process of evaluating the completeness, correctness and conformance/compliance of a specific data set against the method, procedural, or contractual requirements" (USEPA, 2002).

Earthworks - human-caused disturbance of the land surface.

Eolian – a deposit that forms as a result of the accumulation of wind-driven products from the weathering of solid bedrock or unconsolidated deposits.

Ephemeral – ephemeral streams flow only in direct response to surface runoff precipitation or melting snow, and their channels are at all times above the water table (USGS, 2003). This concept also applies to ephemeral ponds that contain water in response to surface runoff precipitation or melting snow and are at all times above the water table.

Ethnographic – relating to the scientific description of peoples and cultures with their customs, habits, and mutual differences.

Gamma – a type of radiation that occurs as the result of the natural decay of uranium.

Geomorphology – the physical features of the surface of the earth and their relation to its geologic structures (English Oxford Dictionary, 2018).

Grab sample – a sample collected from a specific location (and depth) at a certain point in time.

Investigation Level (IL) – based on the background gamma measurements (in counts per minute [cpm]) and, Radium-226 (Ra-226) and metals concentrations, determined through statistical analyses, that are used to evaluate potential mining-related impacts.

Isolated Occurrences – in relation to the Site Cultural Resource Survey: Any non-structural remains of a single event: alternately, any non-structural assemblage of approximately 10 or fewer artifacts within an area of approximately 10 square meters or less, especially if it is of questionable human origin or if it appears to be the result of fortuitous causes. The number and/or composition of observed artifact classes are a useful rule of thumb for distinguishing between a site and an isolate (NNHPD, 2016).

Mineralized – economically important metals in the formation of ore bodies that have been geologically deposited. For example, the process of mineralization may introduce metals, such as uranium, into a rock. That rock may then be referred to as possessing uranium mineralization (World Heritage Encyclopedia, 2017).

Naturally occurring radioactive material (NORM) – "materials which may contain any of the primordial radionuclides or radioactive elements as they occur in nature, such as radium, uranium, thorium, potassium, and their radioactive decay products, that are undisturbed as a result of human activities" (USEPA, 2017).

Pan Evaporation – evaporative water losses from a standardized pan.

Radium-226 (Ra-226) – a radioactive isotope of radium that is produced by the natural decay of uranium.

Remedial Action (or remedy) – "those actions consistent with permanent remedy taken instead of, or in addition to, removal action in the event of a release or threatened release of a hazardous substance into the environment, to prevent or minimize the release of hazardous substances so that they do not migrate to cause substantial danger to present or future public health or welfare or the environment…For the purpose of the National Oil and Hazardous Substances Pollution Contingency Plan (NCP), the term also includes enforcement activities related thereto" (USEPA, 1992).

Remove or removal – "the cleanup or removal of released hazardous substances from the environment; such actions as may be necessary taken in the event of the threat of release of hazardous substances into the environment; such actions as may be necessary to monitor, assess, and evaluate the release or threat of release of hazardous substances; the disposal of removed material; or the taking of such other actions as may be necessary to prevent, minimize,

or mitigate damage to the public health or welfare of the United States or to the environment, which may otherwise result from a release or threat of release…" (USEPA, 1992).

Respond or response – "remove, removal, remedy, or remedial action, including enforcement activities related thereto" (USEPA, 1992).

Secular equilibrium – a type of radioactive equilibrium in which the half-life of the precursor (parent) radioisotope is so much longer than that of the product (daughter) that the radioactivity of the daughter becomes equal to that of the parent with time; therefore, the quantity of a radioactive isotope remains constant because its production rate is equal to its decay rate. In secular equilibrium the activity remains constant.

Static gamma measurement – stationary gamma measurement collected for a specific period of time (e.g., 60 seconds).

Technologically enhanced naturally occurring radioactive material (TENORM) – "naturally occurring radioactive materials that have been concentrated or exposed to the accessible environment as a result of human activities such as manufacturing, mineral extraction, or water processing", which includes disturbance from mining activities. Where "technologically enhanced means that the radiological, physical, and chemical properties of the radioactive material have been concentrated or further altered by having been processed, or beneficiated, or disturbed in a way that increases the potential for human and/or environmental exposures" (USEPA, 2017).

Thorium (Th) – "a naturally occurring radioactive metal found at trace levels in soil, rocks, water, plants and animals. Thorium (Th) is solid under normal conditions. There are natural and man-made forms of thorium, all of which are radioactive" (USEPA, 2017).

Th-230 – a radioactive isotope of thorium that is produced by the natural decay of thorium.

Th-232 – a radioactive isotope of thorium that is produced by the natural decay of thorium.

Upper Confidence Limit (UCL) – the upper boundary (or limit) of a confidence interval of a parameter of interest such as the population mean (USEPA, 2015).

Upper Tolerance Limit (UTL) – a confidence limit on a percentile of the population rather than a confidence limit on the mean. For example, a 95 percent one-sided UTL for 95 percent coverage represents the value below which 95 percent of the population values are expected to fall with 95 percent confidence. In other words, a 95 percent UTL with coverage coefficient 95 percent represents a 95 percent UCL for the 95th percentile (USEPA, 2015).

Uranium (U) – a naturally occurring radioactive element that may be present in relatively high concentrations in the geologic materials in the southwest United States.

U-235 – a radioactive isotope of uranium that is produced by the natural decay of uranium.

U-238 – a radioactive isotope of uranium that is produced by the natural decay of uranium.

Walkover gamma radiation survey – referred to as a scanning survey in the Multi-agency Radiation Survey and Site Investigation Manual (*MARSSIM*; USEPA, 2000). A walkover gamma radiation survey is the process by which the operator uses a portable radiation detection instrument to detect the presence of radionuclides on a specific surface (i.e., ground, wall) while continuously moving across the surface at a certain speed and in a certain pattern (USEPA, 2000). Referred to in the RSE report as surface gamma survey after the first mention in the report.

Wind rose – a circular graph depicting average wind speed and direction.

1.0 INTRODUCTION

1.1 BACKGROUND

This report summarizes the purpose and objectives, field investigation activities, findings, and conclusions of Site Clearance and Removal Site Evaluation (RSE) activities conducted between July 2015 and September 2017 at the Harvey Blackwater No.3 site (the Site) located on the border of northeastern Arizona and southeastern Utah, as shown in Figure 1-1. The Site is also identified by the United States Environmental Protection Agency (USEPA) as abandoned uranium mine (AUM) identification #239 in the *Navajo Nation AUM Screening Assessment Report and Atlas with Geospatial Data* (the *2007 AUM Atlas*; USEPA, 2007a). The *2007 AUM Atlas* was prepared for the USEPA in cooperation with the Navajo Nation Environmental Protection Agency (NNEPA) and the Navajo Abandoned Mine Lands Reclamation Program (NAML). The claim boundary polygon (refer to Figure 2-1) used for the RSE encompassed an area of approximately 12.9 acres (561,924 square feet [ft^2]) and was provided as part of the *2007 AUM Atlas*. Per the *2007 AUM Atlas* this polygon and other factors represent the location and surface extent of the AUM.

Stantec Consulting Services Inc. (Stantec; formerly MWH), performed Site Clearance activities in accordance with the *Site Clearance Work Plan* (MWH, 2016a), and performed RSE activities in accordance with the *Removal Site Evaluation Work Plan* ([*RSE Work Plan*] MWH, 2016b). The *Site Clearance Work Plan* and the *RSE Work Plan* were approved in April and October 2016, respectively, by the NNEPA and the USEPA (collectively, the Agencies). Stantec conducted this investigation on behalf of Sadie Hoskie, Trustee pursuant to Section 1.1.21 of the *Navajo Nation AUM Environmental Response Trust Agreement – First Phase* (the *Trust Agreement*), effective April 30, 2015 (United States [US], 2015). The *Trust Agreement* is made by and among the US, as Settlor, and as Beneficiary on behalf of the USEPA, the Navajo Nation, as Beneficiary, and the Trustee. The *Trust Agreement* was developed in accordance with a settlement on April 8, 2015 between the US and Navajo Nation for the investigation of 16 specified "priority" AUMs.

A "Site" is defined in the *Trust Agreement* as:

> "each of the 16 AUMs listed on Appendix A to the Settlement Agreement, including the proximate areas where waste material associated with each such AUM has been deposited, stored, disposed of, placed, or otherwise come to be located." *Trust Agreement*, § 1.1.25.

The Site is one of 46 priority AUMs within the Navajo Nation selected by the USEPA in collaboration with the NNEPA for further evaluation based on radiation levels and potential for water contamination (USEPA, 2013). The 16 priority AUMs included in the *Trust Agreement* are located on Navajo Lands throughout southeastern Utah, northeastern Arizona, and western New

Mexico, as shown in Figure 1-1. The 16 priority AUMs were selected by the US and Navajo Nation, as described in the *Trust Agreement*:

> "based on two primary criteria, specifically, demonstrated levels of Radium-226[4]: (a) at or in excess of 10 times the background levels and the existence of a potentially inhabited structure located within 0.25 miles of AUM features; or (b) at or in excess of two times background levels and the existence of a potentially inhabited structure located within 200 feet (ft)." *Trust Agreement*, Recitals.

In addition, the 16 priority AUMs are, for the purposes of this investigation, a subset of priority mines for which a viable private potentially responsible party has not been identified. Mining for uranium occurred prior to, during, and after World War II, when the US sought a domestic source of uranium located on Navajo lands (USEPA, 2007a). *Trust Agreement*, Recitals.

1.2 OBJECTIVES AND PURPOSE OF THE REMOVAL SITE EVALUATION

The primary objectives of the RSEs are to provide data required to evaluate relevant site conditions and to support future removal action evaluations at the Sites. It is not intended to establish cleanup levels or determine cleanup options or potential remedies. The purpose of the RSE data (e.g., the review of relevant information and the collection of data related to historical mining activities) is to determine the volume of technologically enhanced naturally occurring radioactive material (TENORM) at the Site in excess of Investigation Levels (ILs) as a result of historical mining activities. ILs are based on the background gamma measurements (in counts per minute [cpm]), and Radium-226 (Ra-226) and metals concentrations, determined through statistical analyses, that are used to evaluate potential mining-related impacts. The USEPA (2017) defines TENORM as:

> "naturally occurring radioactive materials that have been concentrated or exposed to the accessible environment as a result of human activities such as manufacturing, mineral extraction, or water processing" (mine waste or other mining-related disturbance).
>
> "Technologically enhanced means that the radiological, physical, and chemical properties of the radioactive material have been concentrated or further altered by having been processed, or beneficiated, or disturbed in a way that increases the potential for human and/or environmental exposures."

An understanding of the extent and volume of TENORM that exceeds the ILs at the Site is key information for future Removal or Remedial Action evaluations, including whether, and to what extent, a Response Action is warranted under federal and Navajo law. Definitions presented in the glossary for "Removal", "Remedial Action", and "Response" are defined in 40 Code of

[4] The Agencies selected the priority mines based on gamma radiation but the *Trust Agreement* erroneously states "levels of Radium -226".

Federal Regulations (CFR) Section 300.5 of the National Oil and Hazardous Substances Pollution Contingency Plan (NCP; USEPA, 1992).

The Trust conducted Site Clearance activities to obtain information necessary to develop the *RSE Work Plan*. Site Clearance activities consisted of two separate tasks: a "desktop" study (e.g., literature and historical documentation review) and field activities.

Desktop study – included review of readily available and reasonably ascertainable information including:

- Historical and current aerial photographs to identify any potential historical mining features, and to identify if buildings, homes and/or other structures, and potential haul roads were present within 0.25 miles of the Site
- Topographic and geologic maps
- Available data concerning perennial surface water features and water wells
- Previous studies and reclamation activities
- Meteorological data (e.g., predominant wind direction in the region of the Site)

Site Clearance field activities – included the following:

- Site reconnaissance to evaluate in the field: access routes to the Site, location of site boundaries, and observations presented in the Weston Solutions (Weston)(2012) report
- Mapping of site features and boundaries
- Evaluation of potential background reference areas
- Biological surveys (wildlife and vegetation)
- Cultural resource surveys

Following Site Clearance activities, two sequential tasks were conducted to complete the RSE: Baseline Studies and Site Characterization and Assessment. Baseline Studies activities were completed to establish the basis for the Site Characterization and Assessment activities.

Baseline Studies activities – included the following:

- Background Reference Area Study – walkover gamma radiation survey (referred to hereafter as surface gamma survey), subsurface static gamma radiation measurements (referred to hereafter as subsurface static gamma measurements), surface and subsurface soil sampling, and laboratory analyses
- Site gamma survey – surface gamma survey

- Gamma Correlation Study – co-located surface static gamma measurements and exposure-rate measurements at fixed points, high-density surface gamma surveys (intended to cover 100 percent of the survey area), surface soil/sediment sampling, and laboratory analyses

Site Characterization and Assessment Activities– included the following:

- Characterization of surface soils and sediment – surface soil and sediment sampling and laboratory analyses.

- Characterization of subsurface soils – static gamma measurements (at surface and subsurface hand auger and drilling borehole locations), and subsurface sampling and laboratory analyses. Hand auger and drilling borehole locations are referred to hereafter as boreholes.

Details regarding the Site Clearance activities are provided in the *Harvey Blackwater No.3 Site Clearance Data Report* (*Site Clearance Data Report*; MWH, 2016c) and summarized in Section 3.2 of this report. Details regarding the Baseline Study activities are provided in the *Harvey Blackwater No.3 Site Baseline Studies Field Report* (Stantec, 2017) and summarized in Section 3.3 of this report. Details regarding the Site Characterization Activities and Assessment are provided in Section 3.3 of this report. Findings are presented in Section 4.0 of this report.

1.3 REPORT ORGANIZATION

This report presents a comprehensive discussion of all RSE activities, including applicable aspects of the outline suggested in the *Multi-Agency Radiation Survey and Site Investigation Manual – Appendix A* ([*MARSSIM*] USEPA, 2000), and consists of the following sections:

Executive Summary – Presents a concise description of the principal elements of the RSE report.

Section 1.0 <u>Introduction</u> – Describes the purpose and objectives of the RSE process, and organization of this RSE report.

Section 2.0 <u>Site History and Physical Characteristics</u> – Presents the history, land use, and physical characteristics of the Site.

Section 3.0 <u>Summary of Site Investigation Activities</u> – Summarizes the Site Clearance and RSE activities.

Section 4.0 <u>Findings and Discussion</u> – Presents the results of the Site Clearance and RSE activities, areas that exceed ILs, areas of Naturally Occurring Radioactive Material (NORM) and TENORM, and the volume of TENORM that exceeds the ILs. Potential data gaps are also presented, as applicable.

Section 5.0 <u>Summary and Conclusions</u> – Summarizes data and presents conclusions based on results of the investigations completed to date.

Section 6.0 Estimate of Removal Site Evaluation Costs – A statement of actual or estimated costs incurred in complying with the *Trust Agreement*, as required by the *Trust Agreement*.

Section 7.0 References – Lists the reference documents cited in this RSE report.

Tables Included at the end of this RSE report.

Figures Included at the end of this RSE report.

Appendices – Appendices A through F.1 are included at the end of this RSE report and Appendix F.2 is provided as a separate electronic file due to its file size and length.

- **Appendix A** – Includes the radiological characterization report for the Site
- **Appendix B** – Includes photographs of the Site
- **Appendix C** – Includes copies of RSE field activity forms
- **Appendix D** – Provides the potential background reference areas selection and the methods and results of the statistical data evaluation for the Site
- **Appendix E** – Includes the biological evaluation report and the biological and cultural resources compliance forms
- **Appendix F** – Includes the Data Usability Report, laboratory analytical data, and data validation reports for the RSE analyses

Attachments – Site-specific geodatabase, tabular database files, and available historical documents referenced in this RSE report.

2.0 SITE HISTORY AND PHYSICAL CHARACTERISTICS

2.1 SITE HISTORY AND LAND USE

2.1.1 Mining Practices and Background

The Site is located on the Navajo Nation, on the border of northeastern Arizona and southeastern Utah approximately 14 miles northwest of Mexican Water, Arizona, as shown in Figure 1-1 inset.

During the uranium mining boom of the early 1950s, Mr. Harvey Blackwater from Mexican Water, Arizona held five mining claims in northwestern Apache County, Arizona (Chenoweth, 1992). In June 1954, Mr. Blackwater was issued mining Permit No. 142, which covered 130.85 acres and was divided into two mining claims (Claim No. 2 for 65.98 acres and Claim No. 3 for 64.85 acres). The Site (i.e. Harvey Blackwater No.3) being investigated as part of this RSE is located within the acreage of Mr. Blackwater's Claim No.3. The location and size of Claim No.3 is shown in Figure 2 of Chenoweth (1992). In July 1954, Mr. Blackwater assigned mining Permit No. 142 to Mex-Air Uranium Company (Mex-Air) of Farmington, New Mexico. At the time of issuance, mining permits and leases were issued by the Navajo Tribal Council and approved by the Bureau of Indian Affairs (BIA), US Department of the Interior. Only individual Navajos could obtain mining permits, and in turn only permit holders could assign the mining rights to an outside individual or company. Assignments had to be approved by the Tribal Council and the BIA. Any one company or individual could hold no more than 960 acres of tribal land, and both the Navajo Tribe and the permittee were entitled to receive royalties from ore production.

Mex-Air began exploration drilling on Claim No. 3 in areas where previous surface prospecting had located surface radioactive anomalies (Chenoweth, 1992). The exploration drilling located a shallow ore-body. Mine workings on Claim No.3 consisted of a shallow open pit. Between 1954 and 1955, US Atomic Energy Commission (USAEC) records reported that total ore production from Claim No.3 was 577.08 tons (approximately 1,154,160 pounds) of ore that contained 1,794.40 pounds of 0.15 percent U_3O_8 (uranium oxide) and 514.14 pounds of 0.04 percent V_2O_5 (vanadium oxide) (Chenoweth, 1992). Claim No.3 has been idle since the last shipment of ore in 1955. No ore production was reported from Claim No. 2 (Chenoweth, 1992).

2.1.2 Ownership and Surrounding Land Use

The Site is located within the Navajo Nation, Tuba City BIA Agency in Section 3 of Township 41 North, Range 23 East, Gila and Salt River Principal Meridian; and Section 32 of Township 43 South, Range 19 East, Salt Lake Principal Meridian. Land ownership where the Site is located falls under Navajo Trust lands. The Site is located within the Kayenta Chapter[5] of the Navajo Nation, as shown in Figure 1-1, and is in Grazing Unit 8, as designated by the Navajo Nation Division of

[5] The Site is also located in the Dennehotso Chapter but for the RSE the Trust has been working with the Kayenta Chapter.

Natural Resources (NNDNR, 2006). The Site is currently uninhabited. However, two home-sites and one uninhabitable building (an abandoned shed) are located within 0.25 miles of the Site, as shown in Figure 2-1.

2.1.3 Site Access

In 2015, the Navajo Nation Department of Justice (NNDOJ) provided the Trustee with legal access to all Navajo Trust lands to implement work in accordance with the *Trust Agreement*. The Trustee also obtained individual written access agreements from residents living at or near the Site, or with an interest in lands at or near the Site, such as home-site leases and grazing rights, as applicable. In addition, the Trustee consulted with the Kayenta Chapter officials and nearby residents and notified them of the work.

2.1.4 Previous Work at the Site

2.1.4.1 1994 through 1999 Aerial Radiological Surveys

Between 1994 and 1999, aerial radiological surveys were conducted at 41 geographical areas within the Navajo Nation, including the Oljato area, which included the location of the Site (Hendricks, 2001). The surveys were done at the request of the USEPA Region 9 and were performed by the Remote Sensing laboratory, a US Department of Energy facility, National Nuclear Security Administration Nevada Operations Office. The intent of the surveys was to characterize the overall radioactivity levels and excess bismuth-214 activity (i.e., a radioisotope that is an indicator of uranium ore deposits and/or uranium mines) within the surveyed areas. Data collected from the surveys was used to assess the risks (i.e., average gross exposure rate) in mined areas and determine what action, if any, was needed.

The aerial radiological survey for the Oljato area covered approximately 113.59 square miles and included the location of the Site. The aerial radiological survey results for the area within a 0.25 mile radius of the Site indicated a gross exposure rate range of 3 µR/hr to 24 µR/hr and excess bismuth (i.e., bismuth activity greater than approximately 3.5 µR/hr) present in approximately 0.02 square miles (15acres) of the area (*2007 AUM Atlas*). The aerial radiological survey results for the Oljato area indicated a gross exposure rate range of 1.66 µR/hr to 57.95 µR/hr and excess bismuth (i.e., bismuth activity greater than approximately 3.5 µR/hr) present in approximately 0.40 square miles of the 113.59 square miles of the Oljato flight area (Hendricks, 2001).

2.1.4.2 2001 Monument Valley 4 Project Invitation for Reclamation Bids

In 2001, NAML issued an invitation for bids for the reclamation of 24 AUMs, referred to as the Monument Valley 4 Project (NAML, 2001). The Site was included in the Monument Valley 4 Project bid document, which stated that the Site contained 5,100 cubic yards (yd^3) of waste piles and a historical pit with dimensions of 40 ft wide, 120 ft long, and 10 ft deep. The bid document also included a historical drawing of the Site showing the location of 12 waste piles and the historical mining pit. For comparison, the historical NAML (2001) drawing is overlain on

the current image of the Site in Figure 2-2. The dimensions of the historical pit on the NAML (2001) drawing are approximately 100 ft wide and 200 ft long; these measurements contradict those provided in the bid document of 40 ft wide, 120 ft long, and 10 ft deep. On the NAML drawing, the area inclusive of the historical pit and surrounding 11 waste piles is labeled as Waste Area 1, and the area located toward the south end of the Site containing one waste pile is labeled as Waste Area 2 (refer to Figure 2-2). The bid document listed the following reclamation activities needed for the Site:

- Excavation of waste piles throughout the Site
- Placement of the excavated waste pile material into the historical pit
- Cover the historical pit with clean material and re-vegetate the cover

2.1.4.3 Monument Valley 4 Project Closeout Report

NAML submitted a reclamation program closeout report for the Monument Valley 4 Project sometime after December 31, 2002 (NAML, n.d.). The date of submission for the closeout report is unknown. The closeout report covered the reporting period between April 1, 1999 and December 31, 2002. The closeout report stated that the Monument Valley 4 Project was complete and listed the following reclamation activity accomplishments at the 24 AUMs:

- 1,935 linear ft of dangerous highwall reclaimed
- 13.61 acres of dangerous piles/embankments reclaimed
- 3.38 acres of pits reclaimed
- 35 portals reclaimed
- Four vertical openings reclaimed

The closeout report provided reclamation activity accomplishments by project and not by AUM; therefore, the Trust could not verify that the proposed reclamation activities listed above were done at the Trust Site specifically. However, the *2007 AUM Atlas* lists the Site as reclaimed by NAML.

2.1.4.4 2012 Site Screening

In 2012, Weston performed site screening on behalf of the USEPA (Weston, 2012). The screening included: (1) recording site observations (i.e., number of homes, water sources, and sensitive environments[6] around the Site); (2) recording the type, number, and reclamation status of mine features; and (3) performing a surface gamma survey. Weston reported the Site was reclaimed and it observed a reclamation cap located in the northwestern portion of the Site. Weston also

[6] Weston defined sensitive environments as "all sensitive environments located within visible range of the mine site, including: wetlands, endangered species, habitats and approximate locations of sites that may be under protection of the government of the Navajo Nation"

reported two structures (one home-site and one abandoned shed) within 0.25 miles of the Site, one pond within a one-mile radius of the Site and located 0.75 miles southwest of the Site, and no sensitive environments were identified. Based on Weston's performance of a surface gamma survey, Weston determined that the highest gamma measurements were greater than 5.5 times the site-specific background level used for its gamma screening.

2.2 PHYSICAL CHARACTERISTICS

2.2.1 Regional and Site Physiography

The Site is located within the Colorado Plateau physiographic province, which is an area of approximately 240,000 square miles in the Four Corners region of Utah, Colorado, Arizona, and New Mexico. Figure 2-3 presents a current regional aerial photograph (BING® Maps, 2018) of the Site within a portion of the Colorado Plateau. The Colorado Plateau is typically high desert with scattered forests and varying topography having incised drainages, canyons, cliffs, buttes, arroyos, and other features consistent with a regionally uplifted, high-elevation, semi-arid plateau (Encyclopedia Britannica, 2017). The physiographic province landscape includes mountains, hills, mesas, foothills, irregular plains, alkaline basins, some sand dunes, and wetlands. This physiographic province is a large transitional area between the semi-arid grasslands to the east, the drier shrub-lands and woodlands to the north, and the lower, hotter, less-vegetated areas to the west and south.

The Colorado Plateau includes the area drained by the Colorado River and its tributaries: the Green, San Juan, and Little Colorado Rivers (Kiver and Harris, 1999). The physiographic province is composed of six sections: Uinta Basin, High Plateaus, Grand Canyon, Canyon Lands, Navajo, and Datil-Mogollon. The Site is located within the Navajo section.

Figure 2-4 presents the regional US Geological Survey (USGS) topographic map in the vicinity of the Site and shows site topography within a portion of the Colorado Plateau. Regionally the Site is located on the eastern rim of Monument Valley. Topography on-site is relatively flat and the elevation on-site is approximately 4,800 ft above mean sea level (amsl) (refer to Figure 2-4). The Site is also located west of Indian Route 6440 (refer to Figure 2-5a), which crosses Cane Valley Wash, as shown in Figure 2-4. Cane Valley Wash is located approximately 1.3 miles southwest of the Site.

2.2.2 Geologic Conditions

2.2.2.1 Regional Geology

Regionally the Site is located within the Colorado Plateau, which is a massive outcrop of generally flat-lying sedimentary rocks ranging in age from the Paleozoic Era to the Cenozoic Era (USGS, 2017a). The plateau has very little regional structural deformation, compared with the mountainous basin-and-range region to the west, and the sedimentary beds range widely in thickness from less than one inch to hundreds of feet. Changes in paleoclimate and elevation produced alternating occurrences of deserts, streams, lakes, and shallow inland seas; and these

changes contributed to the type of rock deposited in the region. The rock units of the plateau consist of shallow submarine or sub-aerially deposited rocks including sandstone, shale, limestone, mudstone, siltstone, and various other sedimentary rock subtypes.

The Site is located within the Triassic Chinle Formation, which is composed of various rocks of lacustrine and fluvial continental origin, including claystone, sandstone, limestone, siltstone, and conglomerate (USAEC, 1972). Figure 2-6 depicts a regional geology map showing the Site in relation to the regional extent of the Chinle Formation. The Chinle Formation extends over the majority of the Colorado Plateau. In the southern portion of the Colorado Plateau, where the Site is located, the Chinle Formation ranges in thickness from a thin wedge to greater than 1,700 ft thick, but is generally greater than 1,000 ft thick (USAEC, 1972). In the Cenozoic Era, uplift and tilting of the plateau caused rapid down cutting of streams, forming many dramatic outcrops and incised streams characteristic of the region today.

2.2.2.2 Site Geology

Bedrock outcrops on or adjacent to the Site consist of sandstone, mudstone, and conglomerate of the Shinarump Member of the Triassic Chinle Formation, as shown in Figure 2-7 and Appendix B photograph numbers 1 and 2. Ore deposits on-site occurred in the conglomerate and sandstone channel deposits of the Shinarump Member (Chenoweth, 1992).

Unconsolidated deposits on-site (i.e., Quaternary deposits) are eolian deposits, alluvium, and colluvium consisting of silty sand, poorly graded sand, and well graded sand, as shown on the borehole logs in Appendix C.2. Colluvium and eolian deposits overlay bedrock of the Shinarump Member of the Chinle Formation sporadically across the Site and alluvium is present in the drainages (refer to Section 2.2.4). During the Site Characterization field activities, boreholes were advanced through the unconsolidated deposits using either a 3-inch diameter hand auger or a Geoprobe™ 8140LC rotary sonic drilling rig (refer to Section 3.3.2.2 and the borehole logs in Appendix C.2). The unconsolidated deposits ranged in depth from 0.08 ft to 4.0 ft bgs at borehole locations. Unconsolidated deposits on-site are shown in Appendix B photograph number 9.

Two cross-sections for the Site, as shown in Figures 2-8a (north-south) and 2-8b (west-east), were produced using the subsurface borehole information collected during the Site Characterization activities in addition to exposed bedrock observations made by Stantec field personnel (field personnel) (refer to Section 3.3.2.2). The two cross-sections show the extent and orientation of the consolidated and unconsolidated deposits in relation to the historical pit reclamation area (refer to Section 2.1.4 and 2.2.7). The average depth to bedrock for the cross-sectional area is 2.8 ft bgs, and bedrock was measured between 2.0 ft and 4.0 ft bgs around the historical pit (refer to the borehole logs included in Appendix C.2).

According to the US Department of Agriculture (USDA) soil survey for the Navajo Nation, soils on-site that have not been disturbed are classified as Aneth soils consisting of deep, excessively drained soils that form mainly from sandstone (USDA, 1980).

2.2.3 Regional Climate

The Colorado Plateau is located in a zone of arid temperate climates characterized by periods of drought and irregular precipitation, relatively warm to hot growing seasons, and winters with sustained periods of freezing temperatures (National Park Service, 2017). The average monthly high temperature at weather station 425582, Mexican Hat, Utah (Western Regional Climate Center, 2017) located approximately 10 miles northwest of the Site, ranges between 45.1 degrees Fahrenheit (°F) in January to 98.5°F in July. Daily temperature extremes reach as high as 110°F in summer and as low as -17°F in winter. Mexican Hat receives an average annual precipitation of 6.3 inches, with October being the wettest month, averaging 0.83 inches, and June being the driest month, averaging 0.21 inches.

Potential evaporation in the area is greater than the area's average annual precipitation. The potential evaporation noted at the Hite, Utah weather station, located approximately 66 miles northwest of the Site, averages 75 inches of pan evaporation annually (Western Regional Climate Center, 2017). Average wind speeds in the area are generally moderate, although relatively strong winds often accompany occasional frontal activity, especially during late winter and spring months. Blowing dust, soil erosion, and local sand-dune migration/formation are common during dry months. The Cortez, Colorado airport located 72 miles to the northeast of the Site, had the most complete record of wind conditions. A wind rose for the Cortez, Colorado airport is presented on Figure 1-1. The wind rose was produced using data contained in the *2007 AUM Atlas* for the years 1996 to 2006. Predominant winds were from the east northeast (refer to the wind rose on Figure 1-1).

2.2.4 Surface Water Hydrology

The Site is located within the San Juan River watershed, an area of approximately 24,600 square miles spanning Utah, Colorado, New Mexico, and Arizona, as shown in Figure 1-1. On-site surface water flow is controlled by the bedrock outcrops located on the east side of the Site, as shown in Figures 2-5a and 2-7 (labeled as TRcs). Two ephemeral drainages are located on-site and one is located off-site, as follows: one that drains south-southeast along the west side of the outcrops (refer to Appendix B photograph number 3), one that drains southeast along the east side of the outcrops, and one outside the southwest claim boundary that drains southeast. Precipitation run-off on-site terminates within the unconsolidated deposits or drains into Cane Valley Wash approximately 1.3 miles southwest of the Site (refer to Figure 2-1). Cane Valley Wash joins the San Juan River near Mexican Hat, Utah approximately 12 miles northwest of the Site. The nearest perennial water source to the Site is Chinle Creek, approximately 7.5 miles east of the Site (refer to inset on Figure 1-1). Figures 2-1 and 2-5a show the Site drainages and flow directions, and Figure 2-5a shows the approximate overland water flow direction.

Adkins Consulting Inc. (Adkins), under contract to Stantec, performed a wildlife evaluation as part of the Site Clearance field investigations and did not identify any wetlands, seeps, springs, or riparian areas within the Site that would be attractive to wildlife (refer to Appendix E).

2.2.5 Vegetation and Wildlife

In the spring and summer of 2016, biological surveys were conducted as part of Site Clearance activities. In March 2016, Adkins conducted a wildlife survey. In May 2016, Redente Ecological Consultants (Redente), under contract to Stantec, conducted a spring vegetation survey and in July 2016, Redente conducted a summer vegetation survey. Information about each survey is provided in Appendix E, which includes the Site biological evaluation reports and the *Navajo Nation Department of Fish and Wildlife* (NNDFW) *Biological Resources Compliance Form*. A summary of the survey activities and findings are provided in Section 3.2.2.3.

Vegetation communities found within the physiographic transitional area described in Section 2.2.1 include shrublands with big sagebrush, rabbitbrush, winterfat, shadscale saltbush, and greasewood; and grasslands of blue grama, western wheatgrass, green needlegrass, and needle-and-thread grass. Higher elevations may support pinyon pine and juniper woodlands. The vegetation communities on-site included sparsely vegetated shrubland with patches of bare ground (refer to Appendix E). During the surveys, Stantec and/or its subcontractors observed on-site wildlife including common raven and cottontail rabbit (refer to Appendix E).

2.2.6 Cultural Resources

In March 2016, as part of Site Clearance activities, Dinétahdóó Cultural Resource Management (Dinétahdóó), under contract to Stantec, conducted a cultural resource survey and ethnographic and historical data reviews for the Site (Dinétahdóó, 2016). Based on historical and ethnographic data reviews Dinétahdóó did not identify any mining history information for the Site (Dinétahdóó, 2016).

During the 2016 cultural resource survey Dinétahdóó identified one archaeological site, one in-use site, and eight isolated occurrences. Appendix E includes a copy of the *Cultural Resource Compliance Form,* and findings of the cultural resource survey are summarized in Section 3.2.2.4.

2.2.7 Observations of Potential Mining and Reclamation

During RSE activities, field personnel observed the following features indicative of potential mining or reclamation activities at the Site: potential haul roads and two graded/disturbed reclaimed areas. Details regarding these observations are presented in Section 3.2.2.1. These observations were used, along with additional lines of evidence (refer to Section 3.3.3), to identify areas at the Site where TENORM was present (refer to Section 4.6).

3.0 SUMMARY OF SITE INVESTIGATION ACTIVITIES

3.1 INTRODUCTION

This section summarizes Site Clearance and other RSE activities conducted between July 2015 and September 2017. Site Clearance activities were conducted initially to obtain information necessary to develop the *RSE Work Plan*. Site Clearance activities were performed in accordance with the approved *Site Clearance Work Plan.* Resulting RSE activities were performed in accordance with the approved *RSE Work Plan.*

The primary objectives of the RSEs are to provide data required to evaluate relevant site conditions and to support future removal action evaluations at the Sites. It is not intended to establish cleanup levels or determine cleanup options or potential remedies.

The *RSE Work Plan* is comprised of a Field Sampling Plan (FSP), Quality Assurance Project Plan (QAPP), Health and Safety Plan (HASP), and a Data Management Plan (DMP). The FSP guided the fieldwork by defining sampling and data-gathering methods. The QAPP presented quality assurance/quality control (QA/QC) requirements designed to meet Data Quality Objectives (DQOs) for the environmental sampling activities. The HASP listed site hazards, safety procedures and emergency protocols. The DMP described the plan for the generation, management, and distribution of project data deliverables. The FSP, QAPP, HASP, and DMP provided the approved requirements and protocols to be followed for the RSE data collection, data management, and data analyses performed to develop this RSE report. Any deviations or modifications from the *RSE Work Plan* are described in the appropriate RSE report sections.

The RSE process followed applicable aspects of the USEPA DQO Process and *MARSSIM*, to verify that data collected during the RSE activities would be adequate to support reliable decision-making (USEPA, 2006). The USEPA DQO Process is a series of planning steps based on the scientific method for establishing criteria for data quality and developing survey designs. *MARSSIM* provides technical guidance on conducting radiation surveys and site investigations.

The USEPA DQO Process is a seven-step process[7] that was performed as part of the *RSE Work Plan* to identify RSE data objectives. The goal of the USEPA DQO Process is to minimize expenditures related to data collection by eliminating unnecessary, duplicate, or overly precise data and verifies that the type, quantity, and quality of environmental data used in decision making will be appropriate for the intended application. It provides a systematic procedure for defining the criteria that the survey design should satisfy. This approach provides a more effective survey design combined with a basis for judging the usability of the data collected (USEPA, 2006).

[7] (1) State the problem; (2) Identify the goals of the study; (3) Identify the information inputs; (4) Define the boundaries of the study; (5) Develop the analytical approach; (6) Specify the tolerance on decision errors; and (7) Optimize sampling design (USEPA, 2006).

The USEPA DQO Process performed for the RSE is presented in the *RSE Work Plan*, Section 3, and identifies the purpose of the data collected as follows:

1. Background reference area soil sampling, laboratory analyses, surface gamma surveying, and subsurface static gamma measurements to establish background analyte concentrations and gamma measurements, which will be used as the ILs, for the Site.

2. Site sampling (soil and sediment), laboratory analyses, surface gamma surveying, and subsurface static gamma measurements for comparison with ILs, to define the lateral and vertical extent of contamination at the Site to characterize the Site to support future Removal or Remedial Action evaluations.

The USEPA DQO Process was used in conjunction with *MARSSIM* guidance for RSE planning and data collection. Per *MARSSIM* guidance, "planning radiation surveys, using the USEPA DQO Process, can improve radiation survey effectiveness and efficiency, and thereby the defensibility of decisions" (USEPA, 2000).

The applicable aspects of *MARSSIM* incorporated into the RSE process include:

- Historical site assessment
- Determining RSE DQOs
- Selecting background reference areas
- Selecting radiation survey techniques
- Site preparation
- Quality control
- Health and safety
- Survey planning and design
- Baseline surface gamma surveys and subsurface static gamma measurements
- Field measurement methods and instrumentation
- Media sampling and preparation for laboratory analyses

The RSE process also used applicable aspects of *MARSSIM* for interpretation of the RSE results, including:

- Data quality assessment through statistical analyses
- Evaluation of the analytical results
- Quality assurance and quality control

Sections 3.2 and 3.3 summarize the preparation, field investigation methods, and procedures for data collection during the Site Clearance activities and other RSE activities. Activities subsequent to the Site Clearance are described in detail in the *RSE Work Plan,* Section 4. Appendix A includes the radiological characterization report prepared by Environmental Restoration Group, Inc. (ERG), under contract to Stantec. Appendix B includes photographs of features at the Site and the surrounding area, Appendix C.1 includes soil/sediment sample field forms and Appendix C.2 includes borehole logs.

3.2 SUMMARY OF SITE CLEARANCE ACTIVITIES

The Site Clearance activities consisted of two tasks: a desktop study and field investigations. The desktop study was completed prior to field investigations, and the findings of the desktop study were used to guide field investigations. The Site Clearance activities are detailed in the *Site Clearance Data Report* and are described below.

3.2.1 Desktop Study

The desktop study included:

- Review of historical aerial photographs (USGS, 2017b). Photographs were selected based on sufficient scale, quality, resolution, and whether the photograph met one or more of the following criteria:
    - Showed evidence of active mining or grading of the Site, or provided information on how the Site was developed or operated (e.g., haul roads and open pits).
    - Showed evidence of reclamation (e.g., soil covers).
    - Showed significant changes in ground cover compared to current photographs.
- Review of current aerial photographs for identification of buildings, homes and other structures, and potential haul roads within 0.25 miles of the Site.
- Review of topographic and geologic maps.
- Review of information related to surface water features and water wells on the Navajo Nation within a one-mile radius of the Site, provided by: (1) the Navajo Nation Department of Water Resources (NNDWR, 2016); and (2) ESRI Shapefiles data contained in the *2007 AUM Atlas*.
- Review of previous studies, information related to potential past mining, and reclamation activities.
- Identification of the predominant wind direction in the region of the Site.

Based on the list above, the following findings were identified during the desktop study:

- Historical photographs (USGS, 2017b) for the Site were selected from 1951, 1952, 1954, 1967, 1997, and 2005 for comparison against a current image (BING® Maps, 2018). The selected historical photographs are shown in Figure 3-1a. The photographs show evidence that historical mining (i.e., the open pit) occurred on the Site sometime after 1954 and that reclamation activities occurred after 1997. Also in the historical photographs presented in Figure 3-1a, the eastern area of the Site appears to be undisturbed and primarily bedrock. Figure 3-1b presents a comparison of the Site showing the aerial photograph from 1997 and the current image. The1997 historical photograph is presented because it provides the best image of what the Site looked like after the historical mining occurred, but before the reclamation activities occurred, and also shows the historical pit.

- The current aerial photograph review confirmed that two home-sites and one uninhabitable building (an abandoned shed) were located within 0.25 miles of the Site, as shown in Figure 2-1. Numerous dirt roads were identified within 0.25 miles of the Site, refer to Figure 2-3. The road type (i.e., potential haul road or road unrelated to historical mining) was identified by the current aerial photograph review, historical document review, and visual identification during the Site Clearance field investigations (refer to Section 3.2.2.1).

- No water features were identified within a one-mile radius of the Site based the review of information provided by the NNDWR and the *2007 AUM Atlas*.

- The predominant regional winds were from the east northeast (refer to Section 2.2.3 and Figure 1-1).

Previous studies and information related to past mining/reclamation are discussed in Sections 2.1.1 and 2.1.4.

3.2.2 Field Investigations

3.2.2.1 Site Mapping

The *Site Clearance Work Plan* specified that the following features at and near the Site, if present, should be mapped, marked, and/or their presence confirmed:

- Claim boundaries and the 100-ft buffers of the claim boundaries

- Roads, fences/gates, utilities: haul roads to a distance of 0.25 miles or to the intersection with the next major road, whichever is closer

- Structures, homes, buildings, livestock pens, etc.

- Surface water and water well locations: surface water channels that drain the Site to a distance of 0.25 miles away from the Site or to the confluence with a major drainage, whichever is closer; surface water features and water wells identified within a one-mile radius of the Site

- Topographic features

- Potential background reference areas
- Type of ground cover, including rock, soil, waste rock, etc.
- Physical hazards

Based on the list above, the following site features were mapped during field investigations:

- Claim boundaries – 100-ft buffers of the claim boundaries, as shown in Figure 2-5a, were marked in the field with stakes and/or flagging and mapped with a global positioning system (GPS).
- Topographic features – The mapped area was relatively topographically flat, as shown in Figure 2-4.
- Power line and water line – A power line and an underground water line were mapped, as shown in Figure 2-5a. A portion of the power line was mapped along Indian Route 6440. The remainder of the power line was not mapped, but continued northeast and southwest along Indian Route 6440 (Google Earth, 2017). Overhead power lines were not observed on the Site. The water line was marked with blue t-posts and ran from Indian Route 6440 to the home-site located approximately 85 ft west of the Site. A soil berm was built up near the water line, as shown in Appendix B photograph number 10.
- Water line excavation/debris piles – Water line excavation/debris piles (one each) were mapped, as shown in Figured 2-5a (the debris pile is the smaller northwest pile). The water line excavation pile contained rock debris as shown in Appendix B photograph number 5. The two piles were located in areas of observed disturbance, based on the 2005 aerial photograph presented in Figure 3-1a. The areas of disturbance were thought to be related to the excavation and installation of the water line. The debris pile is shown in Appendix B photograph number 4.
- Graded/disturbed reclaimed areas - Two graded/disturbed reclaimed areas (northern and southern) were mapped, as shown in Figure 2-5a. The northern reclaimed area was coincident with Waste Area 1, which included the historical pit and surrounding waste piles (refer to Section 2.1.4 and Figure 2-2). Field personnel mapped the northern reclaimed area as re-vegetated with less vegetation present on the reclaimed area than the surrounding area. The southern reclaimed area was coincident with Waste Area 2, which included a historical waste pile (refer to Section 2.1.4 and Figure 2-2). Field personnel mapped the southern reclaimed area as having different vegetation than was found in the surrounding area. The southern reclaimed area also had a north-south trending area believed to be related to the water line installation. The Navajo Tribal Utility Authority was contacted in December 2017 to identify the date of the water line installation. However, Stantec did not receive a response back from the Navajo Tribal Utility Authority. Based on the historical aerial photograph review, it appeared the water line may have been installed after 1997. The north-south trending area believed to be related to the water line installation can be seen in the 2005 historical aerial photograph and the current historical photograph, shown in Figure 3-1a. The two graded/disturbed reclaimed areas are also shown as earthworks in Figure 2-7. The graded/disturbed reclaimed areas are compared to the historical mine drawings in Figure 2-5b. The graded/disturbed areas encompass nearly all of the features from the historical mine drawing with the exception of one historical waste pile area. The area shown

as a waste pile in the historical drawing was comprised primarily of bedrock during field mapping.

- Potential waste piles – Two potential waste piles consisting of soil were mapped, as shown in Figure 2-5a. The eastern potential waste pile appeared to field personnel to be a small bulldozer push pile. The potential waste pile located west of the water line excavation/debris piles is shown in the foreground of Appendix B photograph number 4.

- Drainages – Three ephemeral drainages were mapped, as shown in Figure 2-5a. Two of the drainages were on-site and one was off-site. One drainage drained to the south-southeast along the west side of the bedrock outcrops (refer to Appendix B photograph number 3), one drainage drained to the southeast along the east side of the bedrock outcrops, and one drainage was outside the southwest claim boundary and drained to the southeast.

- Roads – a portion of Indian Route 6440 was mapped, as shown in Figures 2-1 and 2-5a.

- Potential haul roads – Potential haul roads were mapped, as shown in Figure 2-5a. One potential haul road was a maintained, unpaved road that ran east-west from Indian Route 6440 along the north side of the claim boundary. A second potential haul road was an unimproved road (two-track) that ran north-south along the west side of the claim boundary, and then continued north beyond the 100-ft buffer, as shown in Appendix B photograph number 11.

- Structures – Two home-sites and one uninhabitable building (an abandoned shed) were mapped within 0.25 miles of the Site, as shown in Figure 2-1. The abandoned shed is shown in Appendix B photograph numbers 6 and 7. The use of the abandoned shed is unknown, it was not visible on historical aerial photographs, and nothing was found in or near the building that would suggest it was part of mining operations at the Site.

- Ground cover – Ground cover and vegetation observed on-site are discussed in Sections 2.2.2.2 and 2.2.5, respectively.

Field personnel did not observe the pond identified by Weston (refer to Section 2.1.4) and a local resident was not aware of the presence of a pond in the area where Weston reported the pond's location.

In June 2018, the USEPA provided the Trust with a copy of a NNDWR database that was generated in 2018. The USEPA stated that there were discrepancies between the NNDWR water feature locations in the 2018 database and those provided in the 2016 NNDWR database used by the Trust. This information was provided after Site Characterization activities had occurred and was therefore not included in the RSE for the Site. Comparison of the 2018 NNDWR database against the 2016 NNDWR database and the *2007 AUM Atlas* will require additional field work and it is recommended that this be addressed in future studies for the Site.

3.2.2.2 Potential Background Reference Area Evaluation

The desktop study findings and field investigation observations were used to identify four potential background reference areas (BG-1 through BG-4) for the Site, as shown in Figure 3-2

and Appendix B photograph number 8, and described in Appendix D.1. BG-3 was selected as a suitable surface background reference area for the Site, but BG-3 could not be used as a suitable subsurface background reference area for gamma measurements because the borehole attempted at BG-3 but met refusal on bedrock at 0.3 inches below ground surface (bgs) and subsurface static gamma measurements and subsurface soil samples could not be collected. Therefore, borehole S239-SCX-002, shown in Figure 3-3, was selected to be used as a suitable subsurface background reference area for gamma measurements. S239-SCX-002 was selected because it was geologically similar to BG-3. BG-3 was selected for the following reasons:

- BG-3 encompassed an area of 1,136 ft^2 (approximately 0.03acres), was located 900 ft north of the Site, and was upwind and hydrologically up-gradient from the Site. Geologically, BG-3 represented areas of the Site that had a mix of bedrock outcrops of the Chinle Formation and unconsolidated Quaternary deposits and contained similar ground cover and vegetation.

BG-1, BG-2, and BG-4 were not selected as background reference areas for the Site for the reasons described in Appendix D.1.

The potential background reference areas were selected based on *MARSSIM* guidance (i.e., similar geology and ground conditions, distance from the Site, etc.) to:

1. Represent undisturbed conditions at the Site (e.g., pre-mining conditions)

2. Provide a basis for establishing the ILs

The approved *RSE Work Plan* did not specify any minimum or maximum size criteria for the area. Stantec does not view the size of the selected background reference area as affecting the validity of the background concentrations. The size was based on professional judgment that the identified area was generally representative of the Site.

The background reference area was selected in areas outside of the Site that were considered to be representative of the general conditions observed at the Site. However, an important consideration is that the background gamma radiation and metals concentrations within soil and bedrock can be variable and often contain a wider range of concentrations than what was measured at the selected background reference areas. The ILs derived from the background reference area provide a useful reference for comparison to the Site. However, it will be important to consider the variations in concentrations when conducting site assessment work and/or to support future Removal or Remedial Action evaluations at the Site.

3.2.2.3 Biological Surveys

The objective of the biological surveys was to determine if identified species of concern or potential federal or Navajo Nation Threatened and Endangered (T&E) species and/or critical habitat are present on or near the Site. Biological (vegetation and wildlife) clearance was required at the Site before RSE activities could begin, to determine if the RSE activities could

affect potential species of concern or federal or Navajo Nation listed T&E species and/or critical habitat. The Site biological evaluation reports, the *NNDFW Biological Resources Compliance Form*, and the US Fish and Wildlife Service (USFWS) consultation email are provided in Appendix E.

The Federal Endangered Species Act (ESA) of 1973, 16 U.S.C. §1531 et seq., requires that each Federal agency confer with the USFWS on any agency action that is likely to jeopardize the continued existence of any proposed T&E species or result in the destruction or adverse modification of critical habitat proposed to be designated for such species 16 U.S.C. §1536(a)(4). An "action area", as defined in the regulations implementing the ESA, includes "all areas to be affected directly or indirectly by the Federal action and not merely the immediate area involved in the action". 50 C.F.R §402.2.

The vegetation and wildlife surveys were conducted according to guidelines of the ESA and the NNDFW-Navajo Natural Heritage Program (NNHP), including the procedures set forth in the Biological Resource Land Use Clearance Policies and Procedures, RCS-44-08 (NNDFW, 2008), the Species Accounts document (NNHP, 2008), and the USFWS survey protocols and recommendations (USFWS, 1996).

Based on the results of the vegetation and wildlife surveys, the NNDFW's opinion was that the RSE Baseline Studies and Site Characterization Activities,

> "with applicable conditions, [were] in compliance with Tribal and Federal laws protecting biological resources including the Navajo Endangered Species and Environmental Policy Codes, US Endangered Species, Migratory Bird Treaty, Eagle Protection and National Environmental Policy Acts".

A copy of the *NNDFW Biological Resources Compliance Form* is included in Appendix E. In addition, after the Trust submitted the results of the biological survey, USEPA consulted with John Nystedt of the USFWS on August 26, 2016, and received an email response on August 29, 2016 stating:

> "Based on the information you [Stantec] provided [i.e., there is no habitat for any Federally listed species in the action area], we [the USFWS] believe no endangered or threatened species or critical habitat will be affected by the project; nor is this project likely to jeopardize the continued existence of any proposed species or adversely modify any proposed critical habitat" (Nystedt, 2016).

A copy of the Nystedt email is included in Appendix E. In light of the results of the biological surveys described below, the USFWS recommended no further action from the USFWS for the project unless the project or regulations change, or a new species is listed.

<u>Vegetation Survey</u> - In May 2016, Redente performed a spring vegetation survey and in July 2016, Redente performed a summer vegetation survey, as part of the Site Clearance field investigations. Complete details of the vegetation survey, including the *NNDFW Biological Resources Compliance Form*, are included in Appendix E and summarized below.

In preparation for the vegetation survey, Redente submitted data requests for species of concern to the NNDFW and NNHP, and for Federal T&E species, to the USFWS. The NNDFW-NNHP responded to MWH (now Stantec) by letter dated November 19, 2015. The letter provided a list of species of concern known to occur within the proximity of the Site and included their status as either Navajo Nation Endangered Species List (NNESL), and/or Federally Endangered, Federally Threatened, or Federal Candidate. The NNESL species were further classified as G2, G3, or G4[8]. A copy of this letter is included in Appendix E.

The NNDFW listed five T&E plant species that may occur on-site; alcove death camas (G3), alcove bog-orchid (G3), Rydberg's thistle (G4), Parish's alkali grass (G4), and cave primrose (G4). The USFWS listed two T&E plant species that may occur on-site: Welsh's milkweed and Navajo sedge. Alcove death camas is a native perennial forb that grows in hanging gardens, seeps, and alcoves mostly on the Navajo Sandstone formation. This species is endemic to the Colorado Plateau in southern Utah and northern Arizona at elevations from 3,698 ft to 6,999 ft amsl. Alcove bog-orchid is a native perennial forb that grows in seeps, hanging gardens, and moist stream areas from the desert shrub to the pinyon juniper communities. This species is found in New Mexico, Utah, and Arizona at elevations from 4,003 ft to 7,201 ft amsl. Rydberg's thistle is a native perennial forb that occurs in hanging gardens, seeps, and stream banks below hanging gardens at elevations from 3,297 ft to 6,946 ft amsl. Its distribution includes southern San Juan County, Utah along with Coconino and Apache Counties in Arizona. Parish's alkali grass is a native annual grass that grows in a series of widely discontinuous populations ranging from southern California to eastern Arizona and western New Mexico in alkaline seeps, springs and seasonally wet areas and washes at elevations from 5,000 ft to 7,200 ft amsl. Cave primrose is a native perennial herb that grows in hanging gardens and occasionally along stream-sides from 3,500 ft to 7,200 ft amsl. Its distribution includes Northern Arizona and Southern Utah. Welsh's milkweed is a native herbaceous perennial forb that grows in active sand dunes derived from the Navajo Sandstone formation from 5,000 ft to 6200 ft amsl and occurs in Coconino County, Arizona and south of Monument Valley in both Navajo and Apache Counties, Arizona. Navajo sedge is a native perennial grass-like plant that grows in seeps and hanging gardens primarily on sandstone cliffs and alcoves. Known populations occur at elevations from 4,600 ft to 7,200 ft amsl in San Juan County, Utah and northern Arizona.

Before beginning the Site vegetation survey, Redente reviewed the ecologic and taxonomic information for the T&E species to understand ecological characteristics of the species, habitat requirements, and key taxonomic indicators for proper identification (Arizona Native Plant Society, 2000). Redente also reviewed currently accepted resource agency protocols and guidelines for conducting and reporting botanical inventories for special status plant species (USFWS, 1996). An experienced Redente botanist with local flora knowledge conducted the rare plant survey. The botanist walked transect lines on the Site with emphasis on areas with suitable

[8] G2 classification includes endangered species or subspecies whose prospect of survival or recruitment are in jeopardy, G3 classification includes endangered species or subspecies whose prospect of survival or recruitment are likely to be in jeopardy in the foreseeable future, and G4 classification are "candidates" and includes those species or subspecies which may be endangered but for which sufficient information is lacking to support being listed (refer to Appendix E).

habitat for the T&E species, specifically alkali seeps, seeps and hanging gardens, and active sand dunes.

The Redente botanist did not identify any of the seven T&E species at the Site, based on observations he made during the on-site survey. The botanist concluded he did not identify any of the T&E species at the Site because the Site was not a likely habitat for the T&E species. Observed vegetation communities on-site were sparsely vegetated shrubland with patches of bare ground.

Wildlife Survey - In March 2016, Adkins performed a wildlife evaluation survey as part of the Site Clearance field investigations. The completed wildlife survey, including the *NNDFW Biological Resources Compliance Form*, are included in Appendix E and are summarized below.

Adkins performed the survey under a permit issued by NNDFW for the purpose of assessing habitat potential for ESA-listed or NNESL animal species. Adkins biologists with experience identifying local wildlife species led the field survey, which consisted of walking transects 10 ft apart throughout the Site, including a 100-ft buffer beyond the claim boundary. The surrounding areas were visually inspected with binoculars for nests, raptors, or signs of raptor use.

The wildlife evaluation was performed for species listed as NNESL, Federally Endangered, Federally Threatened, or Federal Candidate, and species protected under the Migratory Bird Treaty Act (MBTA) that have the potential to occur on-site. Prior to the start of the wildlife survey, Adkins submitted data requests to USFWS and NNDFW for animal species listed under the ESA. The NNESL species were further classified as G2, G3, or G4. The USFWS included 13 ESA-species with the potential to occur in the area of the Site; five birds (southwestern willow flycatcher, Mexican spotted owl, Gunnison sage grouse, California condor, yellow-billed cuckoo), five fish (roundtail chub, Colorado pikeminnow, Zuni bluehead sucker, greenback cutthroat trout, razorback sucker), two mammals (black-footed ferret, gray wolf), and one reptile (Mexican gartersnake). The NNDFW included: three birds (American peregrine falcon [G4], golden eagle [G3], western burrowing owl [G4]) and one mammal (kit fox [G4]). All species on the USFWS list and all species from the NNDFW list, with the exception of the golden eagle, were eliminated from further evaluation because there was no potential for those species to occur on the Site due to lack of suitable habitat. Based on the preparation data, one bird remained as species of concern warranting further analysis during the survey: golden eagle.

In addition, Adkins reviewed species protected under the MBTA that have the potential to occur in the area of the Site. The MBTA review resulted in the potential for identification of 17 bird species in addition to those listed above, known as "Priority Birds of Conservation Concern with the Potential to Occur"[9] in the areas of the Site: black-throated sparrow, Brewer's sparrow, gray vireo, loggerhead shrike, mountain bluebird, mourning dove, sage sparrow, sage thrasher, scaled quail, Swainson's hawk, vesper sparrow, bald eagle, Bendire's thrasher, pinyon jay, prairie

[9] USFWS, 2008. Birds of Conservation Concern 2008. United States Department of Interior, Fish and Wildlife Service, Division of Migratory Bird Management, Arlington, Virginia. 85 pp.

falcon, ferruginous hawk, and mountain plover. These 17 MBTA bird species were added for further analysis during the survey for effects to potential habitat.

The wildlife survey revealed one NNESL species of concern that had the potential to occur within or near the Site based on habitat suitability or actual recorded observation: the golden eagle. Based on these findings Adkins recommended the use of best management practices to protect potential habitat during RSE activities, specifically: (1) confining equipment travel to within the boundaries of the Site; (2) minimizing travel corridors as much as possible; (3) limiting truck and equipment travel within the Site when surfaces are wet and soil may become deeply rutted; and (4) using previously disturbed areas for travel when possible. The recommended best management practices were followed to protect potential habitat during RSE activities.

3.2.2.4 Cultural Resource Survey

In March 2016, Dinétahdóó conducted a cultural resource survey as part of the Site Clearance field investigations. Navajo Nation Historic Preservation Department (NNHPD) issued a Class B permit to Dinétahdóó on behalf of the Trust to conduct the cultural resource survey. Following the cultural resource survey, the NNHPD issued a Cultural Resources Compliance Form that included a "Notification to Proceed" with RSE field work. A copy of the Cultural Resources Compliance Form is included in Appendix E. According to NNHPD, this form is the equivalent of a "permit" to conduct the work (NNHPD, 2018[10]).

The survey included the areas within the claim boundary and the 100-ft claim boundary buffer, as shown in Figure 2-5a. The survey identified one archaeological site, one in-use site, and eight isolated occurrences. For confidentiality reasons, details regarding the cultural resource survey findings are not provided herein. NNHPD can be contacted for additional information. NNHPD contact information is located on the *Cultural Resource Compliance Form* included in Appendix E.

Based on the survey findings Dinétahdóó recommended the archaeological site boundaries be flagged and that an archaeologist monitor all ground disturbing activities, including soil sampling, within 50 ft of the archaeological boundaries. Dinétahdóó also recommended archaeological clearance for the remainder of the area it surveyed with the stipulation that RSE activities be halted at any time if cultural resources were encountered. Stantec complied with Dinétahdóó's recommendations while conducting RSE activities on–site.

Dinétahdóó also escorted field personnel during the collection of subsurface samples from S239-SCX-002. The Trust and NNHPD agreed that Dinétahdóó's archeologist would be present because the subsurface sample location was outside of the area originally surveyed during the Site Clearance cultural resource survey.

[10] Call with Sadie Hoskie, Tamara Billie of NNHPD, and Linda Reeves, June 8, 2018.

3.3 SUMMARY OF REMOVAL SITE EVALUATION ACTIVITIES

The RSE activities consisted of two additional tasks following the Site Clearance Activities: Baseline Studies and Site Characterization activities. The Baseline Studies included a Background Reference Area Study, Site gamma survey, and Gamma Correlation Study. The results of the Baseline Studies were used to plan and prepare the Site Characterization field investigations, which included surface soil and sediment sampling, and subsurface soil sampling. Results of the RSE activities are presented in Section 4.0. Baseline Studies and Site Characterization activities are summarized in Sections 3.3.1 and 3.3.2, respectively.

3.3.1 Baseline Studies Activities

3.3.1.1 Background Reference Area Study

The Background Reference Area Study activities were completed at the background reference areas selected for the Site. Refer to Section 3.2.2.2 for an explanation of the selection of the background reference areas for the Site. The Background Reference Area Study included a surface gamma survey and surface soil sampling at BG-3, and static surface and subsurface gamma measurements and subsurface soil sampling at S239-SCX-002. The soil sample locations in background reference area BG-3 were initially selected using a triangular grid, set on a random origin. Where possible, samples were collected at the center points of the triangles. However, in some instances, the actual sample locations had to be moved in the field if sampling was not possible (e.g., the location consisted of exposed bedrock or there was a large bush blocking access). In these cases, the closest accessible location was selected instead.

The background reference areas were selected based on a variety of factors, including *MARSSIM* criteria, which indicated whether the areas were representative of unmined locations, regardless of the sizes of the areas. These factors are described in this RSE report and accompanying appendices. The objectives of the background reference area study were to measure gamma radiation levels emitted by naturally occurring, undisturbed uranium-series radionuclides, and concentrations of other naturally occurring constituents. The results were used to establish background gamma levels and concentrations of Ra-226 and specific metals (uranium, arsenic, molybdenum, selenium, and vanadium). The soil sampling locations at the background reference areas are presented in Figure 3-3. Field personnel performed the Background Reference Area Study in accordance with the *RSE Work Plan,* Sections 4.2, 4.4, and 4.5.

The surface gamma survey at BG-3 was completed in March 2017. ERG performed the surface gamma survey using Ludlum Model 44-10 2-inch by 2-inch sodium iodide (NaI) high-energy gamma detectors (the detectors). Each detector was coupled to a Ludlum Model 2221 ratemeter/scaler that in turn was coupled to a Trimble ProXRT GPS unit with a NOMAD 900 series datalogger. The detector tagged individual gamma measurements with associated geopositions recorded using the Universal Transverse Mercator Zone 12 North coordinate system. ERG matched and calibrated the detector to a National Institute of Standards and Technology-

traceable cesium-137 check source, and function-checked the equipment prior-to and after each workday. ERG performed the survey by walking the background reference area with the detector carried by hand, along transects that varied depending on encountered topography. The gamma measurements were collected with the height of the detector varying from 1ft to 2 ft above ground surface (ags) with an average height of 1.5 ft ags to accommodate vegetation, rocks, or other surface features. If field personnel encountered an immovable obstruction (e.g., a tree) during the surface gamma survey they went around the obstruction. Subsequent to each workday, ERG downloaded the gamma measurements to a computer and secure server.

The same equipment used for the surface gamma survey was also used to collect static one-minute gamma measurements at the ground surface and down-hole (subsurface) at borehole location S239-SCX-002. Refer to Appendix C.2 for borehole logs. Static gamma measurements were categorized as surface measurements where they were collected at ground surface (0.0 ft) and as subsurface measurements where depths were below ground surface due to the influence of downhole geometric effects on subsurface static gamma measurements (refer to Section 4.1). Gamma measurements were collected according to the methods described in the *RSE Work Plan,* Section 4.2 and Appendix E.

Soil samples collected as part of the background study are detailed in Table 3-1 and sample locations are shown in Figure 3-3. Soil samples were categorized as surface samples where sample depths ranged from 0.0 to 0.5 ft bgs and as subsurface samples where sample depths were greater than 0.5 ft bgs. Field personnel collected the following samples:

- BG-3 – In March 2017, 11 surface soil grab samples were collected from 11 locations
- S239-SCX-002 – In October 2016, one surface and one subsurface soil grab sample were collected from the borehole

Samples were shipped to a USEPA approved laboratory, ALS Environmental Laboratories in Fort Collins, Colorado for analyses. Samples were collected according to the methods described in the *RSE Work Plan,* Section 3.8.1.1. The results of the surface gamma survey, static surface and subsurface gamma measurements, and surface and subsurface soil sample analytical results provided background reference data to guide the Site Characterization surface and subsurface soil/sediment sampling (refer to Section 3.3.2). The Background Reference Area Study results are presented in Section 4.1. The ERG survey report in Appendix A provides further details on the gamma surveys. Field forms, including borehole logs, are provided in Appendix C.1 and C.2.

3.3.1.2 Site Gamma Radiation Surveys

Baseline Studies activities included a surface gamma survey of the Site in accordance with the *RSE Work Plan,* Section 4.2 and Appendix E. The shoulders of the potential haul road located outside of the 100-ft buffer were not surveyed, but the approximate centerline was, due to miscommunication with the field personnel. This is identified as a data gap in Section 4.8. Additionally, the potential haul road that ran north-south along the west side of the claim

boundary was not surveyed because field personnel thought it was unlikely the road was associated with past mining activities, as the road ran over rocky ground, was a two-track, and a more direct, substantial road leading east from the Site existed. However, after review of the historical Site photographs it was noted that the road was present in the historical photographs and could not be discounted as a potential haul road. Therefore, this road not being surveyed is identified as a potential data gap in Section 4.8.

The surface gamma survey was used to evaluate the extent of potential mining-related impacts or areas containing elevated radionuclides associated with uranium mineralization. In addition, surface soil and sediment samples and subsurface soil samples were also collected and used to evaluate mining-related impacts (refer to Section 3.3.2).

In October 2016 and September 2017, the surface gamma survey was performed using the methods and equipment described in Section 3.3.1.1. The surface gamma survey included the claim area, a 100-ft buffer around the claim area, and roads and drainages out to approximately 0.25 miles from the Site. The *RSE Work Plan* specified that the surface gamma survey would be an iterative process where the surface gamma survey would be extended laterally until gamma measurements appeared to be within background levels. Subsequent to each workday, the gamma measurements were evaluated by ERG and Stantec, and compared to the background reference areas to determine if additional surface gamma surveying was needed.

The full areal extent of the surface gamma survey was 39.2 acres and is referred to as the Survey Area, as shown in Figure 3-4. The surface gamma survey results are presented in Section 4.2. The ERG survey report in Appendix A provides further detailed information on the surface gamma survey.

3.3.1.3 Gamma Correlation Study

Baseline Studies activities included a Gamma Correlation Study in accordance with the *RSE Work Plan,* Section 4.3. The objectives of the Gamma Correlation Study were to determine correlations between the following constituents to use as screening tools for site assessments:

- Gamma measurements (in cpm) and concentrations of Ra-226 in surface soils (in picocuries per gram [pCi/g])
- Gamma measurements (in cpm) and exposure rates (in microRoentgens per hour [µR/hr])

Two regression analyses were conducted for these correlations. The first regression analysis was performed using co-located high-density surface gamma measurements and laboratory concentrations of Ra-226 in surface soil/sediment to develop a correlation equation (refer to Section 4.2.2). The correlation equation allows for Ra-226 concentrations in soil and sediment to be estimated (predicted) based on gamma measurements in the field.

This correlation equation was not used in the field to estimate Ra-226 concentrations or to evaluate the extent of Ra-226 concentrations. The correlation was used to develop a site-

specific prediction for Ra-226 concentrations from the actual gamma survey data, as presented in Section 4.2.2. The correlation can be used as a site-specific field screening tool during site assessments, using the same gamma survey methods as in this RSE (e.g., walkover gamma survey) and based on site-specific conditions. The data related to the correlations are provided in Appendices A and C.

The second regression analysis was performed using co-located static one-minute gamma measurements and exposure rates to develop an exposure-rate correlation equation. Exposure rates can be predicted, based on gamma measurements, using the developed exposure-rate correlation equation. The exposure rate correlation also provides a standard by which future gamma measurements can be compared to previous gamma measurements, if those previous gamma measurements were also correlated with exposure. In addition, exposure rates can be used to provide an estimate of gamma radiation levels when an exposure meter is used as a health and safety tool for field personnel working on-site. The exposure rate correlation was not used for Site Characterization. Because the exposure rates are not part of the data analyses for the RSE report, a summary of the exposure rate correlation is not presented in this report. Appendix A provides a discussion of the correlations and the regression equations for both correlations.

In October 2016, field personnel identified five areas for the Gamma Correlation Study, as shown in Figure 3-5, by considering the results of the Site surface gamma survey (described in Section 3.3.1.2), field conditions (e.g., suitable terrain), and feasibility of sampling. To minimize variability when determining a correlation between gamma measurements (in cpm) and concentrations of Ra-226 in soil/sediment, the study area soil/sediment must: (1) represent a specific gamma measurement within the range of gamma measurements collected at the Survey Area; and (2) be as homogenous as possible with respect to soil/sediment type, and gamma measurement within the correlation area. At each area, field personnel completed a high-density surface gamma survey (intended to cover 100 percent of the survey area) and collected one five-point composite surface soil/sediment sample per area (refer to Table 3-1). Field personnel made a field modification from the *RSE Work Plan* by adjusting the size of the 900 ft^2 area smaller at four of the Gamma Correlation Study locations, to minimize the variability of gamma measurements observed. The area used for the Gamma Correlation Study is shown in Figure 3-5, where the box shown at the five study locations represents a 900 ft^2 area in comparison to the actual area covered for the study, as shown by the extent of the gamma measurements within each area.

Field personnel collected, logged, classified, packaged, and shipped the samples in accordance with the *RSE Work Plan,* Sections 4.4, 4.9, 4.11, and Appendix E. Soil/sediment samples were collected for analyses of Ra-226 and isotopic thorium, as described in the *RSE Work Plan,* Section 3.4.1.

The objectives of the thorium analyses were for site characterization and evaluation of potential effects of thorium on the correlation. The data can be used to assess the potential effects of thorium-232 (Th-232) series radioisotopes on the correlation of gamma measurements to concentrations of Ra-226 in surface soils (i.e., if gamma-emitting radioisotopes in the Th-232

series, such as actinium-228, lead-212, and thallium-208, are impacting gamma measurements at the Site), as discussed in Section 4.2.2. Uranium, radium, and thorium occur in three natural decay series (uranium-238 [U-238], Th-232, and U-235), each of which include significant gamma emitters (USEPA, 2007b). Therefore, in order to develop a correlation between gamma radiation and Ra-226 concentrations, the gamma radiation from each significant decay series present at the Site, may need to be considered. Typically, only U-238, and sometimes Th-232, are present in significant quantities. The contribution from the U-235 decay series to gamma measurements can be excluded because U-235 is only approximately 0.72 percent of the total uranium concentration. If the Th-232 decay series is present in significant quantities, it should be accounted for in the correlation to accurately predict Ra-226 concentrations based on all significant sources of gamma radiation.

3.3.1.4 Secular Equilibrium

The Gamma Correlation Study soil/sediment samples (refer to Section 3.3.1.3) were also analyzed for thorium-230 (Th-230), in accordance with the *RSE Work Plan,* Section 3.4.1. The activities of Th-230 and Ra-226 can be compared to evaluate the status of secular equilibrium within the U-238 decay series (USEPA, 2007b). The U-238 decay series is in secular equilibrium when the radioactivity of a parent radionuclide (e.g., U-238) is equal to its decay products (refer to Appendix A). If the U-238 decay series is out of secular equilibrium, the quantities of the daughter products become depleted. This could be considered for potential site assessments (e.g., when evaluating the contribution of the daughter products to the total risk related to U-238 during a human health and/or ecological risk assessment). As part of the RSE, the secular equilibrium evaluation was a general indicator (e.g., screening level assessment) of the status of equilibrium at the sites. It was not used to characterize the extent of constituents of potential concern (COPCs) at the Site. The secular equilibrium evaluation is discussed here only because Th-230 was included in the isotopic thorium analysis.

3.3.2 Site Characterization Activities and Assessment

3.3.2.1 Surface Soil and Sediment Sampling

Site Characterization activities included surface soil and sediment sampling and associated laboratory analyses. The soil/sediment surface sampling locations within the Survey Area were selected based on professional judgment (i.e., non-randomly) to evaluate concentrations of Ra-226 and metals in relation to the surface gamma survey measurements and site features (e.g., historical mining features and geologic features). Based on the surface gamma survey results and site features, a limited number of samples were collected and analyzed where the gamma survey measurements were within background levels, mining and or exploration-related features were not present, and no ground disturbance was observed. The results were compared to the site-specific ILs and published regional concentrations to support the overall evaluation of potential mining impacts (refer to Section 4.3). Soil/sediment samples were categorized as surface samples where sample depths ranged from 0.0 to 0.5 ft bgs and as

subsurface samples where sample depths were greater than 0.5 ft bgs. Samples collected in drainages were classified as sediment samples.

In October and November 2016, samples were collected from the locations shown in Figure 3-6a and are summarized in Table 3-1. Sample locations and the locations of mining-related features are shown in Figure 3-6b. The numbers of surface samples collected within specific mine features are listed in Table 3-2. Twenty-one surface soil/sediment grab samples were collected from 21 locations in the Survey Area.

Field personnel collected, logged, classified, packaged, and shipped the samples in accordance with the *RSE Work Plan,* Sections 4.4, 4.9, 4.11, and Appendix E. Samples were shipped to ALS Environmental Laboratories in Fort Collins, Colorado for analyses of: Ra-226, uranium, arsenic, molybdenum, selenium, and vanadium, as described in the *RSE Work Plan,* Section 4.13.1. The surface soil/sediment analytical results are presented in Section 4.3. Field forms are provided in Appendix C.1 and the laboratory analytical data, data validation reports, and Data Usability Report for the analyses are provided in Appendix F.

3.3.2.2 Subsurface Soil Sampling

Site Characterization activities included subsurface soil sampling and associated laboratory analyses. Similar to the surface soil/sediment sampling discussed in Section 3.3.2.1, subsurface sampling locations were selected based on professional judgment (i.e., non-randomly) to evaluate concentrations of Ra-226 and metals in relation to the surface gamma survey measurements and site features (e.g., historical mining features and geologic features). Grab samples were collected with the intent to characterize specific intervals of interest (e.g., material within zones with elevated static gamma measurements). Composite samples were collected to provide a screening level assessment across an interval (e.g., where historical mining features were located). The usefulness of a composite sample may be limited when the sample is collected over an interval with varying soil or rock types or is excessively long (e.g., greater than 5 ft), which tends to dilute the constituent concentrations or sample heterogeneity. Additionally, surface and subsurface static gamma measurements were collected in the boreholes using the same equipment as described in Section 3.3.1.1. Static gamma measurements were collected by holding the detector in the borehole for a one-minute integrated count and are not comparable to the surface gamma survey measurements, which were collected as a walkover survey.

Subsurface samples were collected by advancing subsurface boreholes to a desired sample depth using either a 3-inch diameter hand auger or a Geoprobe™ 8140LC rotary sonic drilling rig (refer to Appendix C.2). Field personnel advanced the hand auger boreholes to the desired sample depth manually, and the sonic drilling rig advanced the boreholes to the desired sample depth. The sonic drilling rig was equipped with a 4-inch diameter sonic core barrel that used cutting rotation and vibration to advance the boreholes. The sonic drilling method is ideal for use in rocky soils to obtain continuous samples in materials that are difficult to sample using other drilling methods (ASTM, 2016). It recovers a continuous and relatively undisturbed core sample

for review and analysis that is representative of the lithological column at that borehole location (refer to Appendix C.2).

Thirteen boreholes were advanced in the Survey Area. Hand auger boreholes were advanced through unconsolidated deposits until refusal on bedrock or the borehole termination reason was unknown for borehole locations S239-SCX-005, -SCX-006, and -SCX-008 (field personnel neglected recording a reason for termination). Sonic boreholes were advanced until competent bedrock was observed. Borehole depths ranged from 0.5 ft to 9 ft bgs, and the depth of unconsolidated deposits to bedrock in boreholes ranged from 0.08 ft to 4ft bgs. The boreholes were advanced through silty sand, poorly graded sand, well graded sand, conglomerate, mudstone, weathered sandstone, and sandstone (refer to Appendix C.2 for borehole logs).

In October and November 2016, samples were collected from the locations shown in Figure 3-6a and are summarized in Table 3-1. Sample locations and the locations of mining-related features are shown in Figure 3-6b. The numbers of subsurface samples collected within specific mine features are listed in Table 3-2. Twenty-three subsurface samples (11 soil, six soil/bedrock, and six bedrock) were collected from 12 borehole locations in the Survey Area. Multiple samples were collected from many of the boreholes. At six of the borehole locations (S239-SCX-0007, -SCX-010, -SCX-014, -SCX-018, -SCX-019, and -SCX-020) only static gamma measurements were collected. Soil samples were not collected from every borehole location, per the *RSE Work Plan*, where samples were not required or intended to be collected at every subsurface borehole location. In some cases, field personnel made professional judgements about where samples should be collected based on multiple observations including: geologic materials, gamma count rates, and distance from other boreholes. Bedrock was at 1.0 ft bgs or less in four of the boreholes (S239-SCX-007, -SCX-014, -SCX-018, and -SCX-020). Borehole S239-SCX-010 was in close proximity to -SCX-005 and -SCX-009 and provided confirmation of the depth to bedrock in that area as well as subsurface static gamma measurements. S239-SCX-020 was placed in an area of the Site where the surface appeared undisturbed and the borehole provided confirmation of the depth to bedrock in that area. Field observations (e.g., depth to bedrock, etc.) from boreholes where samples were not collected, were used in Section 4.0 to evaluate the physical conditions of the subsurface.

The northern reclamation area is slightly mounded, and the high point of the mound was targeted for subsurface sampling to determine the maximum depth of unconsolidated material in the reclamation area. Two subsurface boreholes were advanced in the mounded area, S239-SCX-012 and S239-SCX-021 to a maximum depth of 9.0 ft bgs. Unconsolidated material was observed from the ground surface to 2.5 ft bgs in S239-SCX-012 and from the ground surface to 4.0 ft bgs at S239-SCX-021. After the subsurface sampling activities were completed at the Site and upon further review of the historical reclamation drawings, it was realized that a subsurface sample location was not advanced in the middle of the historical pit as it is shown on the drawing in Figure 2-2. This is identified as a potential data gap in Section 4.8.

Two cross-sections for the Site were produced using the subsurface borehole information, as shown in Figures 2-8a and 2-8b (refer to Section 2.2.2.2). The cross-sections show the extent and

orientation of the consolidated and unconsolidated deposits in relation to the historical pit reclamation area (refer to Section 2.1.4 and 2.2.7). Observations made by field personnel during drilling activities document that the historical pit is constrained on the east side by bedrock. The boreholes located closest to the cross-section lines were used to generate the cross-section figures and all boreholes were used to determine the average unconsolidated material depth to assist with projecting depth to bedrock in relation to the cross-sections.

Cross-section A-A' (refer to Figure 2-8a) is oriented roughly north-south. Lithological descriptions from five sonic boreholes and three hand auger boreholes (refer to Appendix C.2), in conjunction with surface geology observations made by field personnel, were used to model the north-south extent of unconsolidated material and subsurface geology in the historical pit. The average depth to bedrock along cross-section A-A' is 2.8 ft bgs with a slight increase observed in the area west of the historical pit (4.0 ft bgs).

Cross-section B-B' (refer to Figure 2-8b) is oriented roughly west-east. Lithological descriptions from two sonic boreholes (refer to Appendix C.2) in conjunction with surface geology observations made by field personnel, were used to model the west-east extent of unconsolidated material and subsurface geology in the historical pit.

Field personnel logged, classified, packaged, and shipped the samples in accordance with the *RSE Work Plan,* Sections 4.5, 4.9, 4.11, and Appendix E. Samples were shipped to ALS Environmental Laboratories in Fort Collins, Colorado for analyses of Ra-226, uranium, arsenic, molybdenum, selenium, and vanadium, as described in the *RSE Work Plan,* Section 4.13.1. The subsurface analytical results are presented in Section 4.3. Field forms, including borehole logs showing static gamma measurements and Ra-226 analytical results, are provided in Appendix C.2. The laboratory analytical data, data validation reports, and Data Usability Report for the analyses are provided in Appendix F.

3.3.3 Identification of TENORM Areas

Areas at the Site where TENORM is present were identified using multiple lines of evidence including:

1. Historical Data Review
    a. Aerial photographs
    b. USAEC records
    c. Reclamation records
    d. Other documents relevant to the Site, including those in the *2007 AUM Atlas*
    e. Interviews with residents living closest to the Site (for those sites where residents were available for interview)

   f. Consultation and site visits with NAML staff to identify reclamation features (for those sites reclaimed by NAML)

2. Geology/Geomorphology

   a. Hydrology/transport pathways with drainage delineation

   b. Site-specific geologic mapping including areas of mineralization

   c. Topography

3. Disturbance Mapping

   a. Exploration

   b. Mining

   c. Reclamation

4. Site Characterization

   a. Surface gamma surveys and subsurface static gamma measurements

   b. Soil/sediment sampling and analyses

Any areas where TENORM was not observed are considered to contain NORM, because soil and/or rock at the Site contain some amount of natural uranium and its daughter products. This area was mined because of the higher levels of naturally occurring uranium ore. The areas containing NORM and/or TENORM are presented in Section 4.6. The volume of TENORM is presented in Section 4.7. The areas containing NORM and/or TENORM, along with additional findings of the RSE report, are identified to support future Removal or Remedial Action evaluations at the Site.

3.4 DATA MANAGEMENT AND DATA QUALITY ASSESSMENT

This section summarizes the data management and data quality assessment activities performed for the RSE.

3.4.1 Data Management

The DMP included in the *RSE Work Plan* describes the plan for the generation, validation, and distribution of project data deliverables. Successful data management comes from coordinating data collection, quality control, storage, access, reduction, evaluation, and reporting. A summary of the data management activities performed as part of the RSE process included:

- **Database** – Field-collected and laboratory analytical RSE data were stored in an Oracle SQL relational database, which increased data handling efficiency by using previously developed data entry, validation, and reporting tools. The Oracle SQL database was also

used to export project data to a tabular format that can be used in a spreadsheet (e.g., Excel) and to the USEPA Scribe database format.

- **Scribe** – The Stantec Data Manager/Data Administrator was responsible for meeting the project data transfer requirements from the Oracle SQL database to Scribe, which is a software tool developed by the USEPA's Environmental Response Team to assist in the process of managing environmental data. Stantec maintained an Oracle SQL database and exported data from the Oracle SQL database to a Scribe compatible format following completion of each field investigation phase. Custom data queries and "crosswalk" export routines were built in Oracle SQL, to facilitate data export to the Scribe database format with the required frequency.

- **Geographic Information System (GIS)** – Spatial data collected during the RSE (e.g., sample locations and gamma measurements) were stored in a dedicated File Geodatabase for use in the project GIS. The geodatabase format enforces data integrity, version control, file size compression, and ease of sharing to preserve GIS output quality. Periodic geodatabase backups were performed to identify accidentally deleted or otherwise corrupt information that were then repaired or recovered, if applicable.

3.4.2 Data Quality Assessment

The QAPP, included in the *RSE Work Plan*, Appendix B, was followed for RSE data quality assessment, where the QAPP presents QA/QC requirements designed to meet the RSE DQOs. Data quality refers to the level of reliability associated with a particular data set or data point. The Data Usability Report included in Appendix F.1 provides a summary of the data quality assessment activities and qualified data for the RSE. A summary of findings, from the data quality assessment, are included below.

- **Data Verification** – The data were verified to confirm that standard operating procedures (SOPs) specified in the *RSE Work Plan* and *FSP* were followed and that the measurement systems were performed in accordance with the criteria specified in the QAPP. Any deviations or modifications from the *RSE Work Plan* are described in the appropriate RSE report sections. The USEPA definition (USEPA, 2002) for data verification is provided in the glossary.

- **Data Validation** – The data were validated to confirm that the results of data collection activities support the objectives of the RSE as documented in the QAPP. The data quality assessment process was then applied using the validated data and determined that the quality of the data satisfies the intended use. The USEPA definition (USEPA, 2002) for data validation is provided in the glossary. A copy of the Data Usability Report is included in Appendix F.1 and a summary of the validation results is presented below:

    - **Precision** Based on the matrix spike/matrix spike duplicate (MS/MSD) sample, laboratory control sample/laboratory control sample duplicate (LCS/LCSD) sample, laboratory duplicate sample, and field duplicate results, the data are precise as qualified.

    - **Accuracy** Based on the initial calibration (ICAL), initial calibration verification (ICV), continuing calibration verification (CCV), MS/MSD, and LCS, the data are accurate as qualified.

- **Representativeness** Based on the results of the sample preservation and holding time evaluation, the method and initial/continuing calibration blank (ICB/CCB) sample results, the field duplicate sample evaluation, and the reporting limit evaluation, the data are considered representative of the Site as reported.

- **Completeness** All media and QC sample results were valid and collected as scheduled (i.e., as planned in the *RSE Work Plan*); therefore, completeness for these is 100 percent.

- **Comparability** Standard methods of sample collection and standard units of measure were used during this project. The analyses performed by the laboratory were in accordance with current USEPA methodology and the QAPP.

Based on the results of the data validation, all data are considered valid as qualified.

4.0 FINDINGS AND DISCUSSION

4.1 BACKGROUND REFERENCE AREA STUDY RESULTS AND CALCULATION OF INVESTIGATION LEVELS

The results of the background reference area surface gamma survey and sample locations in BG-3 are shown in Figure 4-1. Analytical results of the samples collected from BG-3 and the background subsurface location (S239-SCX-002) are summarized in Table 4-1. The gamma measurements and surface soil sample analytical results collected from BG-3 were evaluated statistically to calculate ILs (refer to Appendix D.2).

Statistical evaluation of the gamma measurements and soil sample analytical results included identifying potential outlier values, interpreting boxplots and probability plots, comparing group means between the background reference areas and the respective Survey Area data, and calculating descriptive statistics for each of the background reference areas. The descriptive statistics included the 95 percent upper confidence limit (UCL) on the mean gamma measurements and Ra-226/metals concentrations, and the 95-95 upper tolerance limits (UTLs). The data were analyzed using R statistical programming packages and ProUCL 5.1 software (USEPA, 2016).

The DQOs presented in the RSE Work Plan indicate that the ILs would be developed using the 95 percent UCL on the mean of the background sample results. However, the 95-95 UTL was used as the basis for the ILs instead because it better reflects the natural variability in the background data and lends itself to single-point comparisons to the Survey Area data. This was a change from the *RSE Work Plan*, as agreed upon with the Agencies, prior to the change. The UTL represents a 95 percent UCL for the 95th percentile of a background dataset whereby Survey Area results above this value are not considered representative of background conditions. The UTL is a statistical parameter for the entire population of the variable, whereas the actual results are from a sample of the population. UTLs were calculated in accordance with USEPA's *ProUCL 5.1 Technical Guidance*, Sections 3.4 and 5.3.3 (USEPA, 2015). Appendix D.2 presents a comprehensive discussion on the derivation of the ILs for the Site, which are presented below. The *RSE Work Plan* also stated that gamma radiation measurements from the background surface and subsurface soil would be combined to develop the IL for surface gamma radiation at the Site. However, the surface gamma radiation ILs were instead developed from the surface gamma survey data only. The Agencies have commented that this should be noted as a deviation from the *RSE Work Plan*. The subsurface static gamma measurements were excluded from the derivation of the surface gamma IL for two reasons: (1) they were collected using a different method (static one-minute measurements versus a walkover gamma survey); and (2) because of the downhole geometric effects that influence subsurface static gamma measurements (refer to the discussion of geometric effects below).

The ILs for the Site are:

- Arsenic 17.8 milligrams per kilogram (mg/kg)
- Molybdenum 1.45 mg/kg
- Selenium – an IL for selenium was not identified because selenium sample results in BG-3 were all non-detect
- Uranium 2.23 mg/kg
- Vanadium 14.0 mg/kg
- Ra-226 2.47 pCi/g
- Surface gamma measurements 9,975 cpm

It is important to note that comparisons to the IL (i.e., 1.5 times the IL) are provided for context, and evaluations of: (1) areas of the Site; (2) samples or; (3) TENORM that exceed the ILs, which are based on the statistically derived IL values.

In addition to the surface gamma survey performed in BG-3, subsurface static gamma measurements were collected in the background reference area borehole S239-SCX-002. These measurements were used to establish a subsurface static gamma screening level for the Survey Area. Where possible, the selected subsurface static gamma screening level value met the following criteria: (1) it was the lowest value measured at or below 1 ft bgs and (2) it was not directly measured on bedrock. The subsurface static gamma screening level from S239-SCX-002 provides a comparison and assessment tool for the Survey Area and is included as an IL for the Site.

However, it is important to consider that the subsurface static gamma IL is based on a single measurement, and it is not statistically derived. For this reason, subsurface static gamma IL exceedances should be considered in conjunction with additional lines of evidence including: (1) down-hole trends of static gamma measurements; (2) changes in lithology within the borehole; and (3) a qualitative comparison of subsurface static gamma measurements to Ra-226 and/or metals concentrations in subsurface samples.

Subsurface static gamma measurements from S239-SCX-002 are summarized in Table 4-2 and in Appendix C.2. Three subsurface static gamma measurements were evaluated to identify the subsurface static gamma IL for the Survey Area. Measurements of 10,298 cpm, 13,051 cpm, and 15,408 cpm were collected from the background reference area borehole S239-SCX-002, at down-hole depths of 0.5, 1.0, and 1.5 ft bgs, respectively. The value measured at 0.5 ft bgs (10,298 cpm) was selected as the subsurface static gamma IL for the Survey Area A instead of one of the values collected at depths of 1.0 ft or 1.5 ft bgs because unconsolidated material from 1.0 to 1.5 ft bgs contained decomposed bedrock and at 1.5 ft bgs sandstone bedrock was encountered (refer to S239-SCX-002 borehole log in Appendix C.2). It should be noted that while

location S239-SCX-002 is within an area identified as exceeding the surface gamma IL (refer to Section 4.2.1), it is still appropriate for use as a background location because the area is assumed to contain NORM and be representative of background conditions at the Site. It is expected that some background areas would include IL exceedances because those ILs are based on the UTL and not the maximum value.

It is important to consider that the subsurface static gamma IL measurements may be elevated relative to the surface gamma IL because increases in static gamma measurements with depth can result from the detector being in closer proximity to bedrock that has naturally elevated concentrations of radionuclides, and/or geometric effects. Geometric effects are the result of the detector measuring gamma radiation from all directions, regardless of whether it is in a borehole or suspended in air. Gamma radiation measured with the detector held at the ground surface is primarily from the ground beneath the detector. As the detector is advanced down the borehole it measures gamma radiation from the surrounding material emanating from an increasing number of angles. Therefore, as the detector is lowered in the borehole it will generally measure increasingly higher values to a certain depth given a constant source. At approximately 1ft to 2 ft bgs, the detector is essentially surrounded by solid ground and further increases related to borehole geometry are not expected. Because downhole geometric effects influence static gamma measurements just below ground surface, static gamma measurements collected at or greater than 0.1 ft bgs are considered subsurface.

Due to the differing geometric effects, surface static gamma measurements at borehole locations may only be qualitatively compared to subsurface static gamma measurements, and the subsurface static gamma IL does not apply to the surface static gamma measurements. Instances where the surface static gamma measurement is greater than subsurface static gamma measurements suggest higher levels of radionuclides and may be indicative of the presence of TENORM at the surface, but additional lines of evidence are generally needed to support that conclusion.

The Site gamma measurements, and soil and sediment sample analytical results were compared to their respective ILs to confirm COPCs (refer to Section 4.4) and to identify areas of the Site where ILs are exceeded (refer to Section 4.5). The calculated ILs provide a line of evidence to evaluate potential mining-related impacts, and to support future Removal or Remedial Action evaluations at the Site.

4.2 SITE GAMMA RADIATION SURVEY RESULTS AND PREDICTED RADIUM-226 CONCENTRATIONS

4.2.1 Site Gamma Radiation Results

4.2.1.1 Surface Gamma Survey

Results of the Site surface gamma survey are shown in Figure 4-1 where the calculated surface gamma ILs for BG-3 were used to set bin ranges with color coding to illustrate the spatial extent

and patterns of surface gamma measurements within the entire Survey Area. The bin ranges were based on the minimum site gamma measurement, the BG-3 IL, and the maximum site gamma measurement. The maximum survey measurement was 163,071 cpm, which was greater than 16 times the IL of 9,975 cpm and was measured on the north/south trending potential haul road along the western claim boundary and nearly coincident with the S239-SCX-005 borehole refer to Figures 3-6b and 4-1).

The spatial distribution of surface gamma measurements and IL exceedances are shown in Figure 4-1. Surface gamma measurements within the Survey Area were greatest along a north-south trending linear pattern. Within the claim boundary, the elevated gamma measurements were coincident with the northern reclaimed area. The northern reclaimed area is also inclusive of the historical pit, which was mined because it is in an area of concentrated mineralized bedrock having naturally elevated uranium concentrations. Outside the claim boundary the elevated surface gamma measurements were coincident with undisturbed mineralized bedrock outcrops (refer to Figure 2-7 [exposed bedrock is labeled TRcs] and 4-1). Gamma measurements not associated with the northeast-southwest trending linear pattern were generally less than five times the surface gamma measurement IL.

Four potential data gaps were identified for the surface gamma survey, as listed below:

1. The shoulders of the of the potential haul road located outside of the 100-ft buffer were not surveyed, but the approximate centerline was, due to miscommunication with the field personnel.

2. A second potential haul road running north of the Site was not surveyed.

3. The survey was not extended laterally from the potential haul roads and drainages where the gamma measurements were greater than the IL due to a miscommunication with the field personnel.

4. The southwest and northeastern extents of the surface gamma survey were extended into undisturbed areas (beyond the 100-ft buffer) in an effort to reach gamma measurements that were within background levels. However, due to the undisturbed mineralized bedrock outcrops in that area, the gamma measurements continued to exceed the background levels and field personnel halted the gamma survey.

4.2.1.2 Subsurface Gamma Survey

Surface and subsurface static gamma measurements were collected at all but one of the 19 borehole locations. Only a surface static gamma measurement was collected at S239-SCX-0007; refer to Appendix C.2. Surface and subsurface static gamma measurement locations are shown in Figure 3-6a. Measurements and corresponding measurement depths are provided in Table 4-2 and are shown on the borehole logs in Appendix C.2. Surface and subsurface static gamma measurements from the boreholes are presented below by Survey Area.

Survey Area subsurface static gamma measurements exceeded the subsurface gamma IL of 10,298 cpm in 18 boreholes, as shown in Table 4-2. In 10 of the 13 boreholes advanced to bedrock, the subsurface gamma IL was exceeded down-hole in overlying soils before the IL was exceeded in bedrock. In three (S239-SCX-014, -SCX-015, and –SCX-020) of the 18 boreholes the subsurface gamma IL was not exceeded in the overlying soils but was exceeded across the soil/bedrock contact. In boreholes where the subsurface gamma IL was exceeded in either soil/bedrock or bedrock, the exceedances were likely due to the mineralized bedrock. The highest subsurface static gamma measurement from soil was 289,237 cpm at borehole S239-SCX-005 (0.75 ft bgs), and the highest static gamma measurement in bedrock was 370,164 cpm at borehole S239-SCX-009 (3.0 ft bgs). The subsurface gamma IL exceedances in overlying soil occur in the same areas as the northern and southern reclaimed areas, shown in Figure 4-1. In addition, the cross-sections depicted in Figures 2-8a and 2-8b also show select static gamma measurements in relation to the subsurface IL.

4.2.2 Gamma Correlation Results

The high-density surface gamma measurements and concentrations of Ra-226 in surface soils obtained from the Gamma Correlation Study (refer to Section 3.3.1.3) were used to develop a correlation equation, using regression analysis, between the mean gamma measurements and Ra-226 concentrations measured in the co-located composite surface soil samples. This correlation is meant to be used as a general screening tool and provides approximate predicted Ra-226 concentrations.

Analytical results of the correlation samples, which were used to develop the correlation equation, are presented in Table 4-3. The mean value of the gamma survey results from the correlation plots, with their corresponding Ra-226 concentrations and a graph showing the linear regression line and adjusted Pearson's Correlation Coefficient (R^2) value for the correlation, are shown in Figure 4-2a. The regression produced an adjusted R^2 value of 0.96 which is within the acceptance criterion of 0.8 to 1.0 described in the *RSE Work Plan* and indicates that surface gamma results correlate with Ra-226 concentrations in soil. The correlation model may have been influenced by the limited number of correlation sample locations. Users of the regression equation should be aware of the limitations of the dataset and be cautious when estimating radium-226 concentrations. The correlation equation to convert gamma measurements in cpm to predicted surface soil Ra-226 concentrations in pCi/g for the Site is:

$$\text{Gamma (cpm)} = 3{,}244 \times \text{Surface Soil Ra-226 (pCi/g)} + 6{,}865$$

The predicted Ra-226 concentrations in soil, as calculated from the gamma measurements using the developed correlation equation, are shown in Figure 4-2a. Ra-226 concentrations predicted using gamma measurements lower than the minimum (7,903 cpm) and greater than the maximum (32,624 cpm) mean gamma measurements from the Gamma Correlation Study are extrapolated from the regression model and are therefore uncertain. Using the correlation equation, the predicted Ra-226 concentration associated with the minimum mean gamma measurement is 0.3 pCi/g and the concentration associated with the maximum mean gamma measurement is 7.9 pCi/g. Therefore, predicted Ra-226 concentrations less than 0.3 pCi/g and

greater than 7.9 pCi/g should be limited to qualitative use only. The correlation locations were intentionally selected to be focused on the lower range of gamma measurements observed at the Site. Mean gamma measurements for correlation locations ranged from 7,903 to 32,624 cpm. The correlation was focused on the lower range because future Removal or Remedial Action decisions are more critical at lower Ra-226 concentrations where the limits of remediation may be defined.

The correlation equation predicted Ra-226 concentrations that were less than zero for gamma survey measurements below 6,865 cpm. Negative values for Ra-226 are a function of the linear regression equation and are not physically possible. The predicted concentrations are shown in Figure 4-2a and the values less than zero are the most prevalent in the eastern portion of the Survey Area. The elevated predicted Ra-226 concentrations shown in Figure 4-2a occur in the same areas where the elevated surface gamma measurements occur (refer to Section 4.2.1). This is because the predicted Ra-226 concentrations are based on a correlation with the gamma measurements. Predicted Ra-226 concentrations in the Survey Area range from -0.8 to 48.2 pCi/g, with a mean of 1.1 pCi/g, and a standard deviation, of 1.7 pCi/g. Bin ranges in Figure 4-2a are based on these mean and standard deviation values.

The gamma correlation was not used for the Site Characterization, which instead relied on actual gamma radiation measurements and soil analytical results. However, predicted Ra-226 concentrations were compared to the Ra-226 laboratory concentrations measured in surface soil samples collected at surface and borehole locations, as shown in Figure 4-2b. The correlation results were also compared to investigation levels, as shown in Figure 4-2c. Per the Agencies, these comparisons can be used for site characterization and are one of many analyses that can be used to interpret the data (NNEPA, 2018).

When comparing the predicted Ra-226 concentrations to the Ra-226 laboratory concentrations, soil/sediment sample locations are generally not co-located with specific gamma measurement locations (refer to Figure 4-2b). Therefore, the measured Ra-226 laboratory concentrations can only be qualitatively compared to the nearby predicted Ra-226 concentrations. With the exception of seven (out of 23) sample locations, the measured Ra-226 laboratory concentrations were within the applicable predicted Ra-226 bin ranges. In four of the seven sample locations where the predicted Ra-226 concentration and the Ra-226 laboratory concentration measured in the soil/sediment sample did not agree, the predicted concentration was lower than the reported laboratory concentration measured in the soil/sediment sample. The remaining three sample locations predicted higher Ra-226 concentrations than the Ra-226 laboratory measurements. Of these seven sample locations, only two locations (S239-SCX-003 and -SCX-008) had notable differences between the predicted and laboratory Ra-226 concentrations. Both of these samples predicted significantly lower Ra-226 concentrations than the soil sample laboratory concentrations and they were located along the northeast-southwest trending area of IL exceedances. The differences observed between the predicted and actual Ra-226 values are likely a function of the natural heterogeneity in Ra-226 concentrations and gamma radiation measurements, which affects the correlation based on the five Gamma Correlation Study areas, and the predicted values, based

on the subsequent gamma measurements. However, the correlation may be useful as a screening tool as it provides a representative estimate of Ra-226 concentrations across the Site similar to the actual results.

The predicted Ra-226 concentrations were also compared to the Ra-226 ILs from each Survey Area, as shown in Figure 4-2c. The symbols for surface sample locations and boreholes where Ra-226 concentrations in surface soil/sediment samples exceeded the IL are highlighted with yellow halos. The predicted Ra-226 concentrations exceeded the Ra-226 ILs for approximately 20 percent of the Site. In addition, every soil/sediment sample location with a Ra-226 laboratory concentration exceeded the Ra-226 IL was within an area where the predicted Ra-226 concentrations exceeded the IL. The area of the Site where predicted Ra-226 values exceeded the ILs is compared to surface gamma IL exceedances in the surface gamma survey in Section 4.5.

The correlation soil samples were also analyzed for thorium isotopes Th-232 and Th-228. The objectives of the thorium analyses were to assess the potential effects of Th-232 series radioisotopes on the correlation of gamma measurements to concentrations of Ra-226 in surface soils (i.e., to evaluate whether gamma-emitting radioisotopes in the Th-232 series are impacting gamma measurements at the Site). The justification for the analysis is provided in Section 3.3.1.3. A multivariate linear regression (MLR) model was performed by ERG to relate the gamma count rate to multiple soil radionuclides simultaneously. The MLR and results are described extensively in Appendix A. ERG identified that the thorium series radionuclides do not affect the prediction of concentrations of Ra-226 from gamma survey measurements at the Site.

4.2.2.1 Secular Equilibrium Results

The activities of Th-230 and Ra-226 were compared to consider whether the uranium series is in secular equilibrium at the Site (refer to Section 3.3.1.4 and Appendix A). A linear regression was performed on the dataset (refer to Appendix A Figure 9). The p-value for the regression slope is significant (i.e., $p < 0.05$) and the adjusted R2 meets the study DQO (adjusted R2 > 0.8), indicating that Ra-226 and Th-230 exist in equilibrium. Additionally, when compared to a y=x line (this line represents a perfect 1:1 ratio between Th-230 and Ra-226, indicating secular equilibrium), the y=x line falls within outside of the 95% UCL bands of the Th-230/Ra-226 regression, indicating Ra-226 and Th-230 are in secular equilibrium at the Site (refer to figures in Appendix A). This may be a consideration in the future if a human health and/or ecological risk assessment is performed.

4.3 SOIL METALS AND RADIUM-226 ANALYTICAL RESULTS

A total of 21 surface soil/sediment grab samples (20 soil and 1 sediment) from 21 locations, 11 subsurface soil grab/composite samples (9 grab and 2 composite) from 9 borehole locations, and 12 samples that contained bedrock from 8 borehole locations were collected at the Site (refer to Table 3-1). The metals and Ra-226 analytical results for the Survey Area are compared to their respective ILs and presented in Tables 4-4. Figure 4-3 presents the spatial patterns, both laterally and vertically, of metals and Ra-226 detections and IL exceedances in the soil/sediment

and bedrock samples. No subsurface soil samples were collected from the (assumed) deepest portion of the historical pit due to an oversight; this has been identified as a data gap in Section 4.8. Sediment samples were not collected from the central drainage because gamma measurements along the drainage were less than background, the drainage is not a well-defined channel (i.e., does not contain substantial amounts of alluvial sediments), and ends approximately 700 ft from the claim boundary. The drainage at the southern end of the Site was not sampled; it was considered to be associated with NORM, including bedrock outcrops and material transported downgradient from the mineralized bedrock outcrop west of the Site.

Ra-226 and metals concentrations exceeded their respective ILs in soil/sediment samples in the same northeast-southwest trending linear pattern where elevated surface gamma measurements occurred (refer to Section 4.2.1), as shown in Figures 4-1 and 4-3. The maximum Ra-226 and metals concentrations were typically detected coincident with the northern reclaimed area and adjacent to the southern reclaimed area. The maximum concentrations for Ra-226, uranium, arsenic, and vanadium were detected in samples coincident with the northern reclaimed area. The maximum concentration of molybdenum was detected west of the claim boundary adjacent to the southern reclaimed area. Selenium was detected at one location west of the claim boundary adjacent to the southern reclaimed area. Presented sample counts include normal samples and do not include duplicate samples. Surface and subsurface soil/sediment IL exceedances for each analyte, with respect to the Survey area, are described below:

- Ra-226 – The Ra-226 IL (2.47 pCi/g) was exceeded in 15 of 21 surface soil/sediment samples and 8 of 11 subsurface soil/sediment samples. Ra-226 concentrations ranged from 0.54 to 231 pCi/g. The highest concentrations occurred coincident with the northern reclaimed area (231 pCi/g at S239-SCX-005), and in soil north of the claim boundary (155 pCi/g at S239-SCX-003). In both cases the highest concentrations occurred in the single subsurface sample at each location, at depths ranging up to 1.75 feet below ground surface. Additionally, Ra-226 was detected in all 12 samples that contained bedrock or boulder material at concentrations ranging from 0.51 to 105 pCi/g.

- Uranium - The uranium IL (2.23 mg/kg) was exceeded in 13 of 21 surface soil/sediment samples and 8 of 11 subsurface soil/sediment samples. Uranium concentrations ranged from 0.8 to 260 mg/kg. The highest concentrations occurred in surface and subsurface samples coincident with the northern reclaimed area (up to 260 mg/kg at S239-CX-010 and -SCX-005), and in subsurface soil north of the claim boundary (220 mg/kg at S239-SCX-003). Where multiple depths were sampled the highest concentrations occurred in subsurface samples, at depths ranging up to 1.75 feet below ground surface; however, the highest concentration occurred in the surface sample S239-CX-010. Uranium IL exceedances were not recorded in the southern reclaimed area. Additionally, uranium was detected in all 12 samples that contained bedrock or boulder material at concentrations ranging from 1 to 270 mg/kg.

As a broader point of reference, a regional study of the Western US documented uranium concentrations in soil that ranged from 0.68 to 7.9 mg/kg, with a mean value of 2.5 mg/kg (USGS, 1984). Uranium concentrations exceeded the maximum regional value in 15 out of 32 survey area soil/sediment samples.

- Arsenic - The arsenic IL (17.8 mg/kg) was exceeded in 2 of 21 surface soil/sediment samples and 2 of 11 subsurface soil/sediment samples. Arsenic concentrations ranged from 1.2 to 53 mg/kg. The exceedances occurred at two locations with the highest concentration detected in the subsurface sample coincident with the northern reclaimed area (53 mg/kg at S239- SCX-005). Arsenic was also detected above the IL west of the claim boundary adjacent to the southern reclaimed area (up to 40 mg/kg) at S239-SCX-008. At both locations, arsenic exceeded the IL in both surface and subsurface samples with the concentrations increasing with depth at S239-SCX-005 and decreasing with depth at S239-SCX-008. Additionally, arsenic was detected in all 12 samples that contained bedrock or boulder material at concentrations ranging from 2.2 to 21 mg/kg.

As a broader point of reference, a regional study of the Western US documented arsenic concentrations in soil that ranged from less than 0.10 to 97 mg/kg, with a mean value of 5.5 mg/kg (USGS, 1984). All arsenic concentrations were within the typical range of regional values in the soil/sediment samples from the survey area.

- Molybdenum - The molybdenum IL (1.45 mg/kg) was exceeded in 19 of 21 surface soil/sediment samples and 10 of 11 subsurface soil/sediment samples. Molybdenum concentrations ranged from 0.7 to 18 mg/kg. The highest concentrations occurred in surface and subsurface soil west of the claim boundary adjacent to the southern reclaimed area (up to 18 mg/kg at S239-SCX-008). Surface soil molybdenum concentrations at S239-SCX-008 (18 mg/kg) slightly exceeded concentrations in the two subsurface samples (16 mg/kg at both depths). Additionally, molybdenum was detected in 11 of 12 samples that contained bedrock or boulder material at concentrations ranging from 2.4 to 77 mg/kg.

As a broader point of reference, a regional study of the Western US documented molybdenum concentrations in soil that ranged from less than 3 to 7 mg/kg, with a mean value of 0.85 mg/kg (USGS, 1984). Molybdenum concentrations exceeded the maximum regional value in 8 out of 32 survey area soil/sediment samples.

- Selenium – Selenium was detected in 1 of 21 surface soil/sediment samples and 2 of 11 subsurface soil/sediment samples at concentrations ranging from 1.2 to 2.7 mg/kg. The surface and subsurface detections all occurred at a single location west of the claim boundary adjacent to the southern reclaimed area (S239-SCX-008). The highest concentration was detected in the shallower of the two subsurface samples. As noted above, a selenium IL was not identified for the survey area because the selenium sample results in BG-3 were all non-detect. Additionally, selenium was detected in 1 of the 12 samples that contained bedrock or boulder material at a concentration of 1.1 mg/kg.

As a broader point of reference, a regional study of the Western US documented selenium concentrations in soil that typically ranged from less than 0.10 to 4.3 mg/kg, with a mean value of 0.23 mg/kg (USGS, 1984). All selenium concentrations were within the typical range of regional values in the soil/sediment samples from the survey area.

- Vanadium - The vanadium concentrations were greater than or equal to the IL (14 mg/kg) in 3 of 21 surface soil/sediment samples and 4 of 11 subsurface soil/sediment samples. Vanadium concentrations ranged from 3.6 to 62 mg/kg. The highest exceedance occurred in the subsurface sample coincident with the northern reclaimed area (62 mg/kg at S239- SCX-005). All other detected vanadium concentrations were less than two time the IL. Additionally, vanadium was detected in all 12 samples that contained bedrock or boulder material at concentrations ranging from 5.9 to 46 mg/kg.

As a broader point of reference, a regional study of the Western US documented vanadium concentrations in soil that ranged from 7 to 500 mg/kg, with a mean value of 70 mg/kg (USGS, 1984). All vanadium concentrations were within the typical range of regional values in soil/sediment samples from the survey area.

4.4 CONSTITUENTS OF POTENTIAL CONCERN

Based on the results presented in Sections 4.2 and 4.3, arsenic, molybdenum, uranium, vanadium, and Ra-226 concentrations and gamma radiation measurements in soil/sediment exceeded their respective ILs and are confirmed COPCs for the Site. An IL for selenium was not identified because selenium sample results were non-detect in BG-3. However, because selenium was detected in soil/sediment samples from the Survey Area, it is also confirmed as a COPC for the Site.

4.5 AREAS THAT EXCEED THE INVESTIGATION LEVELS

The approximate lateral extent of surface gamma IL exceedances is 20.1 acres, as shown in Figure 4-4. To estimate this area, polygons were contoured around portions of the Site that had multiple, contiguous surface gamma IL exceedances and then the total area within the polygons was calculated.

Of note, subsurface soil/sediment sampling was limited inside the historical pit boundary (refer to Section 3.3.2.2); therefore, soil within the historical pit is assumed to exceed Ra-226 and metals ILs. This assumption is based on: (1) IL exceedances in soil occur at the two subsurface sample locations (S239-SCX-012 and S239-SCX-021) just inside the western boundary of the historical pit; and (2) the historical pit reclamation efforts included excavating the waste piles throughout the Site, backfilling the historical pit with the excavated waste pile material, covering the historical pit with clean material and, re-vegetating the cover.

Figure 4-5 shows the vertical extent of IL exceedances in each borehole by incorporating information from each location, including: (1) depth to bedrock; (2) total borehole depth; and

(3) depth range of IL exceedances. Table 4-5 lists the IL exceedances identified at each borehole location and Figure 4-5 also shows the surface gamma IL exceedances for reference.

IL exceedances in metals and Ra-226 concentrations at surface and subsurface sample locations were typically, but not always co-located with surface gamma survey measurements and/or subsurface static gamma measurements that also exceeded their ILs. Variations occur due to natural variability and the different field methods. For example, a small piece of mineralized rock or petrified wood may have been collected in a soil sample but may not have been detected by the gamma meter in the gamma survey due to distance from the meter, the depth below ground surface, or because the gamma meter measures radiation over a larger area than the discrete soil sample location.

The lateral extent of the IL exceedances (for surface gamma data and in boreholes) shown in Figure 4-4 were compared to the predicted Ra-226 concentrations that exceeded ILs in Figure 4-2c. Predicted Ra-226 concentrations exceeded the Ra-226 IL in a smaller area of the Site than the surface gamma IL exceedances. Surface gamma IL exceedances covered the majority of the western portion of the site including the northern and southern reclamation areas, while predicted Ra-226 IL exceedances covered approximately half of that area with the highest predicted concentrations in the northern reclaimed area and southwest of the southern reclaimed area. The most noticeable differences were at and around the southern reclaimed area and adjacent to the northern reclaimed area where much of the predicted Ra-226 concentrations fell below the Ra-226 IL.

4.6 AREAS OF TENORM AND NORM

A multiple lines of evidence approach was used to evaluate the Site and distinguish areas of TENORM from areas of NORM within the Survey Area, as described in Section 3.3.3. Based on this evaluation, 7.5 acres out of the 39.2 acres of the Survey Area, were estimated to contain TENORM at the Site. This estimate is inclusive of the northern and southern reclaimed areas and roads. The area containing TENORM is shown in relation to the lateral extent of IL exceedances in Figure 4-6 and in relation to the gamma measurements in Figure 4-7.

The RSE data that supports the delineation of TENORM at the Site includes:

- Historical Data Review Conclusions
    - Historical document review indicated that the Site was mined by excavating an open pit and generating 5,100 yd^3 of waste pile material that was stockpiled into 12 waste piles on-site. A total of 577 tons of 0.15 percent U_3O_8 were shipped from the Site. Reclamation efforts included excavating the 12 waste piles, backfilling the historical pit with the excavated waste pile material, covering the historical pit with clean material and, re-vegetating the cover.
    - Historical aerial photograph review showed graded/disturbed reclaimed areas that were associated with historical mining and reclamation that occurred on-site.

- Geology/geomorphology
  - Site geology (mineralized bedrock) is conducive to the presence of NORM (e.g., uranium), and the Site geomorphology (shallow or outcropping mineralized bedrock) is conducive to the presence of NORM near to or at the ground surface. Therefore, it is possible for TENORM to be present on the Site if shallow mineralized bedrock was excavated (e.g., during historic mining activities).
  - Ephemeral drainages are present that could transport NORM/TENORM, and the surface gamma survey indicated that the transport of material that exceeds the surface gamma IL occurred in the drainage located southwest of the claim boundary; this drainage flows in a southeast direction. The drainages were undeveloped and did not contain substantial amounts of alluvium; some reaches contained exposed bedrock.
- Disturbance Mapping – Stantec field personnel observed the following features:
  - The roads mapped during Site mapping were included as TENORM because it is unknown if the roads were used for historical mining/reclamation activities or if they were installed after mining/reclamation occurred on-site. The aerial photographs (refer to Figure 3-1a) show evidence that the roads were installed sometime between 1967 and 1997, historical mining (i.e., the open pit) occurred on the Site sometime after 1954, and reclamation activities occurred after 1997. In addition, the northeast-southwest trending portion of the southern reclaimed area that is related to the water line installation (which for the purposes of the RSE was assumed to be installed after mining and reclamation) was included as TENORM. While the water line installation area is assumed to not be mining related, it is included as TENORM because differentiating that area from the area related to historical mining is not practicable.
  - The areas outside of the TENORM boundary that show IL exceedances of gamma measurements and metals are coincident with the northeast-southwest linear trending undisturbed mineralized bedrock outcrops, as shown in Appendix B photograph number 3. These areas show no signs of disturbance due to human activity related to mining, and there is no historical evidence that mining related activities occurred in these areas; therefore, these areas are considered NORM.
- Site Characterization
  - There is visual evidence documented by both Weston Solutions (2012) and Stantec identifying two graded/disturbed reclaimed areas on-site: (1) the northern reclaimed area is coincident with the historical pit and surrounding waste piles; and (2) the southern reclaimed area is coincident with the southern historical waste pile and underground water line (which for the purposes of the RSE was assumed to be installed after mining). The northern reclaimed area covers approximately 3.6 acres and the southern reclaimed area covers approximately 1.1 acres.
  - NAML and Stantec visited the Site in March 2017. NAML confirmed Stantec's conceptual understanding of the Site, that a historical pit and waste piles were present on Site. These

features had been reclaimed, and the location of the reclaimed areas had been identified.

- The results of the Site Characterization indicated exceedances of the ILs occur in the same areas where historical mining and subsequent reclamation occurred.
- No waste rock was visible in any of the boreholes that were advanced at this Site, and no waste rock is visible at the ground surface. However, boreholes were not advanced in the deepest portion of the historical pit, which may contain waste rock; this has been identified as a data gap in Section 4.8.
- Despite its proximity to the road and exceedances of Ra-226 and metals ILs, there was no visual or historical evidence that waste material was present at S239-SCX-003 and the surrounding area. There are surface gamma IL exceedances extending to at least 100 feet from either side of the road that are considered to be NORM. Additionally, there is no evidence of ground surface disturbance or mining activities. Because of this information, it was determined that the elevated Ra-226 and metals were not from mining-related activities along the potential haul road. Therefore, the location around S239-SCX-003 is considered NORM.
- S239-SCX-008 is located west of the mine claim and in an area with contiguous gamma survey IL exceedances. However, there is no visual or historical evidence of mining-related impacts in this area. This area of gamma survey IL exceedances also extends more than 250 feet from the claim boundary and likely up to the cliff face located west of the Site. During site reconnaissance, field personnel measured gamma radiation values up to 320,000 cpm in bedrock on the cliff face. Based on this information, this area, including S239-SCX-008, has been identified as NORM.
- COPC concentrations in the area that contains TENORM that exceeds the ILs are generally similar to the COPC concentrations in areas of NORM located outside the TENORM boundary.
- In samples collected outside the areas of TENORM, soil/sediment sample arsenic, selenium and vanadium results were all within the regional background concentrations. Molybdenum and uranium results were generally within the regional background concentrations. Uranium was above the regional concentrations in both S2239-SCX-003 and -SCX-008, and molybdenum was above in -SCX-008.
- It is important to consider that with the exception of two locations, the subsurface static gamma IL was not used as the only evidence to delineate the vertical extent of TENORM that exceeded the IL at the Site. Samples were not collected in boreholes S239-SCX-010 and -SCX-018 because the boreholes were drilled to provide confirmation of the depth to bedrock. Both boreholes were located in areas where visible ground disturbance was present and -SCX-010 was near boreholes where Ra-226, metals, and subsurface static gamma measurements exceeded their respective ILs.

The area of the Site considered to contain TENORM (i.e., multiple lines of evidence indicated the presence of mining-related impacts) was 7.5 acres, as shown on Figure 4-8a. Portions of the TENORM exceeded one or more IL, where approximately 5.9 acres contained TENORM that

exceeded the surface gamma IL and all sample locations where TENORM exceeded the ILs. TENORM that exceeded the ILs in the Survey Area is shown on Figure 4-8a and is compared to mining-related features in Figure 4-8b.

4.7 TENORM VOLUME ESTIMATE

The volume estimate of TENORM that exceeded one or more ILs is approximately 13,950 yd^3, as shown in Figure 4-9. The volumes and areas of TENORM associated with specific mine features is listed in Table 3-2. This estimate was calculated using ESRI ArcGIS Desktop 10.3.1 Spatial Analyst Extension cut/fill tool (ESRI, 2017) utilizing the USGS (2017c) 10 m National Elevation Dataset coupled with hand-derived contours based on field personnel observations, depth to bedrock in boreholes, gamma measurements, sample analytical data, and historical documentation. Field observations included observations of disturbance, changes in vegetation, estimating/projecting the slope of underlying bedrock, and estimating the shape and topography of waste material and/or soil deposits.

TENORM exceeding the ILs at the Site was split into groups based on the depth or type of material to aid in analysis and describing the basis of the volumes. The locations, volume, and areas of these groups are shown in Figure 4-9. The assumptions that were used to calculate the volume of TENORM with IL exceedances were as follows:

General Assumptions

- It was assumed that subsurface bedrock encountered in boreholes was not previously modified by human activity and is therefore NORM.
- The volume estimate takes into account that not all of the area that contains TENORM that exceeds ILs is uniformly distributed, as some areas include soils less than one foot deep or no soil, where bedrock is exposed.

Group Assumptions

- Group 1 (8,419 yd3) - The depth of the historical pit was contoured from 1.0 to 4.0 ft bgs based on: (1) subsurface sampling results showed that the depth to bedrock west of the historical pit was approximately 4.0 ft bgs (refer to Figure 4-5, S239-SCX-012 and –SCX-021); and (2) bedrock is exposed at the ground surface along the eastern border of the historical pit. However, the NAML (2001) bid document reported that the historical pit was 10.0 ft deep. Taking this depth into consideration within the area of the historical pit, as a scenario, the revised approximate volume of TENORM that exceeds ILs would be 9,9795 yd^3, which is an additional 1,376 yd^3 from the volume estimate using a 4.0 ft pit depth. The volume estimate using a 10.0 ft pit depth was calculated using the same methods as described above. TENORM that exceeds ILs around subsurface location S239-SCX-017, located in the southern reclamation area, was interpreted to cover a small area to a depth of 3.0 ft bgs.
- Group 2 (5,531 yd^3) - TENORM was assumed to extend to 1.0 ft bgs in areas where surface IL gamma measurements were exceeded, but there were no IL exceedances in the subsurface samples.

Historical reclamation planning documents stated that approximately 5,100 yd^3 of mine waste material was present at the Site. NAML proposed to excavate waste piles throughout the Site, place the waste piles in the pit on-site, and cover the historical pit with clean material and revegetate the area. Based on RSE activities, approximately 8,419 yd^3 of TENORM (including cover material) was estimated to be present in the area of the historical pit. The calculated volume is similar to what NAML may have placed in the reclaimed area. However, it is important to consider that the reclamation documents were planning documents and a final volume from reclamation activities was not provided.

4.8 POTENTIAL DATA GAPS AND SUPPLEMENTAL STUDIES

4.8.1 Data Gaps

Six potential data gaps were identified based on the Site Clearance and RSE data collection and analyses for the Site. These data gaps can be considered for subsequent evaluations in support of future Removal or Remedial Action evaluations at the Site.

1. After the subsurface sampling activities were completed at the Site and upon further review of the historical reclamation drawings, it was realized that two subsurface sample locations were advanced on the western edge of the historical pit and a subsurface sample location was not advanced in the middle of the historical pit as it is shown on the drawing in Figures 2-2 and 4-5. Subsurface soil samples in the center of the pit may be warranted for future studies. However, an important consideration is that sufficient data exist to determine the depth of TENORM in the area of the historical pit based on: (1) historical documentation that the depth of the historical pit was 10.0 ft; (2) subsurface sampling results showing that the depth to bedrock along the western side of historical pit was approximately 4.0 ft bgs; and (3) exposed bedrock at the ground surface along the eastern border of the historical pit. This data gap may need to be taken into consideration for support of future Removal or Remedial Action evaluations at the Site.

2. A second potential haul road running north of the Site was not surveyed.

3. The shoulders of the potential haul road located outside of the 100-ft buffer were not surveyed due to miscommunication with the field personnel.

4. The survey was not extended laterally from the potential haul roads and drainages where the gamma measurements were greater than the IL.

5. The southwest and northeastern extents of the surface gamma survey were extended into undisturbed areas (beyond the 100-ft buffer) in an effort to reach gamma measurements that were within background levels. However, due to the undisturbed mineralized bedrock outcrops in that area, the gamma measurements continued to exceed the background levels and field personnel halted the gamma survey.

6. Subsurface soil/sediment samples were not collected within the western waste pile or the drainages at the Site.

4.8.2 Supplemental Studies

Following review of the RSE report data and discussions with the Agencies, a limited number of items were identified for supplemental work to be considered for subsequent evaluations in support of future Removal or Remedial Action evaluations at the Site, as follows:

1. Additional correlation studies may be needed to refine the relationship between gamma and Ra-226

5.0 SUMMARY AND CONCLUSIONS

This report details the purpose and objectives, field investigation activities, findings, and conclusions of the Site Clearance and RSE activities conducted for the Site between July 2015 and September 2017. The Site is known as the Harvey Blackwater No.3 site and is also identified by the USEPA as AUM identification #239 in the *2007 AUM Atlas*.

The primary objectives of the RSEs are to provide data required to evaluate relevant site conditions and to support future removal action evaluations at the Sites. It is not intended to establish cleanup levels or determine cleanup options or potential remedies. The purpose of the RSE data (e.g., the review of relevant information and the collection of data related to historical mining activities) is to determine the volume of TENORM at the Site in excess of ILs as a result of historical mining activities. ILs are based on the background gamma measurements (in cpm), and Ra-226 and metals concentrations, determined through statistical analyses, that are used to evaluate potential mining-related impacts. The RSE included historical data review, visual observations, surface gamma surveys, surface and subsurface static gamma measurements, and soil/sediment sampling and analyses. An estimate of areas containing TENORM was made based on an evaluation of the RSE information/data and multiple lines of evidence. The correlation between gamma measurements (in cpm) and concentrations of Ra-226 in surface soils (pCi/g) was developed as a potential field screening tool for future Removal or Remedial Action evaluations. The gamma correlation was not used for the Site Characterization, which relied instead on the actual gamma radiation measurements and soil/sediment analytical results. However, predicted
Ra-226 concentrations were compared to the actual Ra-226 laboratory results and ILs from the surface soil/sediment samples at the Agencies' request.

Mining on-site occurred from 1954 to 1955 and historical mine workings on-site consisted of a shallow open pit. Total ore production from the Site was 577.08 tons (approximately 1,154,160 pounds) of ore that contained 1,794.40 pounds of 0.15 percent U_3O_8 and 514.14 pounds of 0.04 percent V_2O_5. Mining at the Site ended in 1955.

In 2001, NAML issued an invitation for bids for the reclamation of 24 AUMs, referred to as the Monument Valley 4 Project. The Site was included in the Monument Valley 4 Project bid document. After December 31, 2002, NAML submitted a reclamation program closeout report for the Monument Valley 4 Project. The closeout report stated that the Monument Valley 4 Project was complete. The closeout report provided reclamation activity accomplishments by project and not by AUM; therefore, the Trust could not verify that the proposed reclamation activities listed above were done at the Trust Site specifically. However, the *2007 AUM Atlas* lists the Site as reclaimed by NAML.

Four potential background reference areas were considered. One of the five potential background reference areas (BG-3) was selected to develop surface gamma, Ra-226, and

metals ILs for the Survey Area at the Site. Borehole S239-SCX-002 was used to identify the subsurface static gamma IL for the Survey Area.

Arsenic, molybdenum, uranium, vanadium, and Ra-226 concentrations and gamma radiation measurements in soil/sediment exceeded their respective ILs and are confirmed COPCs for the Site. An IL for selenium was not identified because selenium sample results were non-detect in BG-3. However, because selenium was detected in soil/sediment samples from the Survey Area, it is also confirmed as a COPC for the Site.

Surface gamma measurements and Ra-226 and metals concentrations were generally highest along the northeast-southwest trending linear pattern at the Site. The maximum survey measurement was 163,071 cpm, which was greater than 16 times the IL of 9,975 cpm, and was measured on the north/south trending potential haul road along the western claim boundary. The maximum concentrations for Ra-226, uranium, arsenic, and vanadium were detected in samples coincident with the northern reclaimed area.

Results of the gamma correlation study indicated that surface gamma survey results correlate with Ra-226 concentrations in soil. Therefore, gamma surveys could be used during Site assessments as a field screening tool to estimate Ra-226 concentrations in soil. Additional correlation studies may be needed to refine the relationship between gamma and Ra-226.

Based on the data analysis performed for this RSE report along with the multiple lines of evidence, approximately 7.5 acres out of the 39.2 acres of the Survey Area were estimated to contain TENORM. This estimate is inclusive of areas in the northern and southern reclaimed areas and roads. The areas outside of the TENORM boundary that also contained elevated radiological materials and show no signs of disturbance related to mining are considered NORM. Of the 7.5 acres that contain TENORM, 5.9 acres contain TENORM exceeding the surface gamma ILs and TENORM that exceeded the ILs at all soil/sediment sample locations. The volume of TENORM in excess of ILs was estimated to be: (1) 13,950 yd^3 (10,666 cubic meters) when taking into consideration the depth of the historical pit contoured from 1.0 to 4.0 ft bgs; and (2) 15,326 yd^3 (11,718 cubic meters) when taking into consideration the depth of the historical pit contoured from 1.0 to 10.0 ft bgs. It should be noted that the COPC measurements and concentrations in the area that contains TENORM that exceeded the ILs are generally higher than the COPC measurements and concentrations in the area of NORM located outside the TENORM boundary.

Six potential data gaps were identified based on the Site Clearance and RSE data collection and analyses for the Site, as listed in Section 4.8. These data gaps can be taken into consideration for subsequent evaluations in support of future Removal or Remedial Action evaluations at the Site.

6.0 ESTIMATE OF REMOVAL SITE EVALUATION COSTS

The Harvey Blackwater RSE was performed in accordance with the requirements of the *Trust Agreement* to characterize existing site conditions. Project costs related to the RSE include the planning and implementation of the scope of work stipulated in the *Site Clearance Work Plan* and *RSE Work Plan,* and community outreach. Stantec's costs associated with the Harvey Blackwater RSE were $587,408. Stantec's costs associated with interim actions (sign installation) were $4,000. In addition, Administrative costs provided by the Trust were estimated currently at $191,500[11,12]. Administrative costs will change due to continued community outreach and close out activities.

[11] This cost is based on an approved budget of May 8, 2018; Administrative work, including community communications, are not yet complete.
[12] Administrative costs were averaged across all Sites.

7.0 REFERENCES

Arizona Native Plant Society, 2000. Arizona Rare Plant Field Guide. US Government Printing Office. Washington, D.C.

ASTM, 2016. ASTM D6914 / D6914M-16, Standard Practice for Sonic Drilling for Site Characterization and the Installation of Subsurface Monitoring Devices, ASTM International, West Conshohocken, PA, www.astm.org

BING® Maps, 2018. BING Maps imagery web mapping service [Webpage] located at https://www.bing.com/maps. Accessed June 2018.

Chenoweth, W.L. 1992. Location, Geologic Setting, and Production History of the Harvey Blackwater Nos. 1,3, and 4 Uranium Mines, Apache County, Arizona, and San Juan County, Utah. Arizona Geological Survey, Contributed Report 92-B, May.

Dinétahdóó Cultural Resource Management, 2016. A Cultural Resources Inventory of Eight Abandoned Uranium Mines (Northern Region) for MWH Americas, Inc. in the Western and Shiprock Agencies of the Navajo Nation, in Utah, Arizona, and New Mexico. July.

Encyclopedia Britannica, 2017. [Webpage] located at https://www.britannica.com/place/Colorado-Plateau. Accessed June 05, 2017.

English Oxford Dictionary, 2018. [Webpage] located at https://en.oxforddictionaries.com/definition/geomorphology. Accessed January 16, 2018.

ESRI, 2018. ArcGIS Desktop 10.3.1 Spatial Analyst Extension cut/fill tool. Accessed June 2018.

Google Earth, 2017. 36°59'46.08"N 10°50'12.63"W. Google Earth. Image date March 18, 2016. Image accessed September 14, 2017.

Haynes, D.D., Vogel, J.D., and Wyant, D.G., 1972. Geology, structure, and uranium deposits of the Corez quadrangle, Colorado and Utah: US Geological Survey, Miscellaneous Geologic Investigations Map I-629, Scale 1:250,000.

Hendricks, T.J., 2001. An Aerial Radiological Survey of Abandoned Uranium Mines in the Navajo Nation. Overview of Acquisition and Processing Methods used for Aerial Measurements of Radiation Data for the USEPA by the US Department of Energy under IAG DW 8955235-01-5. Survey conducted in Arizona, New Mexico, Utah.

Kiver, E.P. and Harris, D.V., 1999. Geology of US Parklands (5th ed.). John Wile & Sons. ISBN0-471-33218-6.

MWH, now part of Stantec Consulting Services Inc. (formerly MWH Americas, Inc.) (MWH), 2016a. Site Clearance Work Plan, Navajo Nation Abandoned Uranium Mines Environmental Response Trust. April.

MWH, 2016b. Navajo Nation AUM Environmental Response Trust – First Phase Removal Site Evaluation Work Plan. October.

MWH, 2016c. Harvey Blackwater No.3 Site Clearance Data Report – Revision 1, Navajo Nation Abandoned Uranium Mines Environmental Response Trust. December.

National Park Service, 2017. [Webpage] located at https://science.nature.nps.gov/im/units/scpn/climate/climate.cfm. Accessed 2017 August 21.

Navajo Abandoned Mine Lands (NAML), n.d. Navajo AML Reclamation Program Tuba City AML Reclamation Program GR#807810 – Close Out Report.

NAML, 2001. Monument Valley 4 AML Reclamation Project Proposal Documents, June.

Navajo Nation Department of Fish and Wildlife (NNDFW), 2008. Biological Resource Land Use Clearance Policies and Procedures, RCS-44-08. September 10.

Navajo Nation Division of Natural Resources (NNDNR), 2006. GIS Section; Navajo Nation BIA Agency, Grazing, and Chapter Boundaries. Map. February.

Navajo Nation Environmental Protection Agency (NNEPA), 2018. Letter and Agency Comments on Draft Harvey Blackwater Removal Site Evaluation (RSE) Report. February 2, 2018.

Navajo Natural Heritage Program (NNHP), 2008. *Species Accounts*, Navajo Nation Endangered Species List, version 3.08.

Navajo Nation Historic Preservation Department (NNHPD), 2016. The Navajo Nation Permit Package 2016, Section Three: Fieldwork, Report Standard and Guidelines.

NNHPD, 2018. Call with Sadie Hoskie, Tamara Billie of NNHPD, and Linda Reeves, June 8, 2018.

Nystedt, J., 2016. "Re: Navajo Nation AUM Environmental Response Trust--First Phase." E-mail Message to Justin Peterson (Stantec). November 07. (Included in Appendix E of this RSE report)

O'Sullivan, R.B., Beikman, H.M., 1963. Geology, Structure, and Uranium Deposits of the Shiprock Quadrangle, New Mexico and Arizona. Map I-345.

Schaetzl, R., and Thompson, M.L., 2015. Soils: Genesis and geomorphology. 2nd ed. Cambridge Univ. Press, Cambridge, UK.

Stantec Consulting Services Inc. (Stantec), 2017. Harvey Blackwater No.3 Site Baseline Studies Field Report. May.

United States (US), 2015. Settlement Agreement between the United States of America and the Navajo Nation, April 8.

US Atomic Energy Commission (USAEC), 1972. Stratigraphy and Origin of the Chinle Formation and Related Upper Triassic Strata in the Colorado Plateau Region.

US Department of Agriculture (USDA), 1980. Soil Survey of Navajo Indian Reservation San Juan County, Utah. USDA and USDI-Bureau of Indian Affairs. Washington, D.C.

US Environmental Protection Agency (USEPA), 1992. National Oil and Hazardous Substances Pollution Contingency Plan. Publication 9200.2-14. January.

USEPA, 2000. Multi-Agency Radiation Survey and Site Investigation Manual (MARSSIM), EPA 402-R-97-016, Rev. 1.

USEPA, 2002. Guidance on Environmental Data Verification and Data Validation. EPA QA/G-8, November.

USEPA, 2006. Guidance on Systematic Planning Using the Data Quality Objectives Process, EPA/240/B- 06/001, February.

USEPA, 2007a. Abandoned Uranium Mines and the Navajo Nation. Navajo Nation AUM Screening Assessment Report and Atlas with Geospatial Data. Prepared for U.S. Environmental Agency, Region 9 through an Interagency Agreement with U.S. Army Corps of Engineers. Prepared by TerraSpectra Geomatics in cooperation with Navajo Nation Environmental Protection Agency and Navajo Abandoned Mine Lands Reclamation Program. August.

USEPA, 2007b. Technologically Enhanced Naturally Occurring Radioactive Materials From Uranium Mining, Volumes I and II (EPA 402-R-05-007).

USEPA, 2013. Federal Actions to Address Impacts of Uranium Contamination in the Navajo Nation – Five Year Plan Summary Report, January.

USEPA, 2015. ProUCL Version 5.1 Technical Guide, Statistical Software for Environmental Applications for Data Sets with and without Nondetect Observations, September. https://www.epa.gov/sites/production/files/2016-05/documents/proucl_5.1_tech-guide.pdf

USEPA, 2016. ProUCL 5.1.00 Software.

USEPA, 2017. Technologically Enhanced Naturally Occurring Radioactive Materials (TENORM). [Webpage] located at https://www.epa.gov/radiation/technologically-enhanced-naturally-occurring-radioactive-materials-tenorm. Accessed July19, 2017

US Fish and Wildlife Service (USFWS). 1996. Guidelines for Conducting and Reporting Botanical Inventories for Federally Listed, Proposed, and Candidate Plants. Sacramento Fish and Wildlife Office, Sacramento, California.

USFWS, 1998. Final Endangered Species Act (ESA) Section 7 Consultation Handbook, March 1998. https://www.fws.gov/endangered/esalibrary/ pdf/esa_section7_handbook.pdf

USFWS, 2008. Birds of Conservation Concern 2008. United States Department of Interior, Fish and Wildlife Service, Division of Migratory Bird Management, Arlington, Virginia. 85 pp.

USGS, 1984. Element Concentrations in Soils and Other Surficial Materials of the Conterminous United States. US Geological Survey Professional Paper 1270.

USGS, 2003. Flow Origin, Drainage Area, and Hydrologic Characteristics for Headwater Streams in the Mountain top Coal-Mining Region of Southern West Virginia, 2000-01.

USGS, 2017a. [Webpage] located at https://geomaps.wr.usgs.gov/parks/province/coloplat.html. Accessed November 2017.

USGS, 2017b. EarthExplorer [Webpage] located at https://earthexplorer.usgs.gov/. Accessed January 2017.

USGS, 2017c. 10 meter National Elevation Dataset. Accessed October 2017.

Western Regional Climate Center, 2017. [Webpage] located at http://www.wrcc.dri.edu/cgi-bin/cliMAIN.pl?az1634. Accessed 2017 January 23.

Weston Solutions, Inc., 2012. Navajo Abandoned Uranium Mine Site Screen Report Harvey Blackwater No.3. April.

World Heritage Encyclopedia, 2017. [Webpage] located at http://www.worldheritage.org/article/WHEBN0014241395/Mineralization%20(geology) Accessed December 28, 2017.

TABLES

Table 3-1
Soil and Sediment Sampling Summary
Harvey Blackwater No. 3
Removal Site Evaluation Report - Final
Navajo Nation AUM Environmental Response Trust - First Phase

Sample Location	Sample Depth (ft bgs)	Sample Media	Sample Category	Sample Collection Method	Survey Area	Sample Date	Easting [1]	Northing [1]	Sample Types Metals, Total	Ra-226	Thorium
Background Reference Area Study - S239-SCX-002											
S239-SCX-002	0 - 0.5	soil	SF	grab	NA	10/28/2016	603358.94	4095696.13	N	N	--
S239-SCX-002	0.5 - 1.5	soil	SB	grab	NA	10/28/2016	603358.94	4095696.13	N	N	--
Background Reference Area Study - Background Area 3											
S239-BG3-001	0 - 0.5	soil	SF	grab	NA	3/18/2017	603398.09	4095862.91	N	N	--
S239-BG3-002	0 - 0.5	soil	SF	grab	NA	3/18/2017	603395.61	4095863.37	N;MS;MSD	N	--
S239-BG3-003	0 - 0.5	soil	SF	grab	NA	3/18/2017	603394.80	4095866.00	N;FD	N;FD	--
S239-BG3-004	0 - 0.5	soil	SF	grab	NA	3/18/2017	603398.02	4095868.48	N;FD	N;FD	--
S239-BG3-005	0 - 0.5	soil	SF	grab	NA	3/18/2017	603400.81	4095866.80	N	N	--
S239-BG3-006	0 - 0.5	soil	SF	grab	NA	3/18/2017	603400.68	4095863.97	N	N	--
S239-BG3-007	0 - 0.5	soil	SF	grab	NA	3/18/2017	603396.19	4095871.03	N;FD	N;FD	--
S239-BG3-008	0 - 0.5	soil	SF	grab	NA	3/18/2017	603399.84	4095872.47	N	N	--
S239-BG3-009	0 - 0.5	soil	SF	grab	NA	3/18/2017	603402.45	4095871.75	N	N	--
S239-BG3-010	0 - 0.5	soil	SF	grab	NA	3/18/2017	603402.91	4095868.85	N	N	--
S239-BG3-011	0 - 0.3	soil	SF	grab	NA	3/18/2017	603400.99	4095866.14	N	N	--
Correlation											
S239-C01-001	0 - 0.5	soil	SF	5-point composite	NA	10/27/2016	603153.86	4095268.16	--	N	N
S239-C02-001	0 - 0.5	sediment	SF	5-point composite	NA	10/27/2016	603500.44	4095468.39	--	N	N
S239-C03-001	0 - 0.5	soil	SF	5-point composite	NA	10/27/2016	603239.97	4095590.10	--	N	N
S239-C04-001	0 - 0.5	soil	SF	5-point composite	NA	10/27/2016	603218.67	4095544.57	--	N	N
S239-C05-001	0 - 0.5	soil	SF	5-point composite	NA	10/27/2016	603223.86	4095574.57	--	N	N
Characterization											
S239-CX-001	0 - 0.5	soil	SF	grab	Site Survey Area	10/27/2016	603164.69	4095363.96	N	N	--
S239-CX-002	0 - 0.5	soil	SF	grab	Site Survey Area	10/27/2016	603161.55	4095269.57	N	N	--
S239-CX-003	0 - 0.5	soil	SF	grab	Site Survey Area	10/27/2016	603141.91	4095221.77	N	N	--
S239-CX-004	0 - 0.5	soil	SF	grab	Site Survey Area	10/27/2016	603256.43	4095321.66	N	N	--
S239-CX-005	0 - 0.5	sediment	SF	grab	Site Survey Area	10/27/2016	603495.42	4095469.24	N	N	--
S239-CX-006	0 - 0.5	soil	SF	grab	Site Survey Area	10/27/2016	603262.25	4095627.76	N	N	--
S239-CX-007	0 - 0.5	soil	SF	grab	Site Survey Area	10/27/2016	603238.93	4095591.37	N	N	--
S239-CX-008	0 - 0.5	soil	SF	grab	Site Survey Area	10/27/2016	603258.15	4095543.67	N;FD;MS;MSD	N;FD	--
S239-CX-009	0 - 0.5	soil	SF	grab	Site Survey Area	10/27/2016	603211.86	4095542.71	N	N	--
S239-CX-010	0 - 0.5	soil	SF	grab	Site Survey Area	10/27/2016	603186.92	4095497.37	N	N	--
S239-SCX-003	0 - 0.5	soil	SF	grab	Site Survey Area	10/28/2016	603267.51	4095640.54	N	N	--
S239-SCX-003	0.5 - 1.75	soil	SB	composite	Site Survey Area	10/28/2016	603267.51	4095640.54	N	N	--
S239-SCX-004	0 - 0.5	soil	SF	grab	Site Survey Area	10/28/2016	603311.04	4095528.57	N	N	--
S239-SCX-005	0 - 0.5	soil	SF	grab	Site Survey Area	10/28/2016	603191.70	4095474.06	N	N	--
S239-SCX-005	0.5 - 0.75	soil	SB	grab	Site Survey Area	10/28/2016	603191.70	4095474.06	N	N	--
S239-SCX-006	0 - 0.5	soil	SF	grab	Site Survey Area	10/28/2016	603232.20	4095436.06	N	N	--
S239-SCX-006	0.5 - 1.1	soil	SB	grab	Site Survey Area	10/28/2016	603232.20	4095436.06	N	N	--
S239-SCX-006	1.1 - 1.75	soil	SB	grab	Site Survey Area	10/28/2016	603232.20	4095436.06	N	N	--
S239-SCX-008	0 - 0.5	soil	SF	grab	Site Survey Area	10/28/2016	603131.03	4095259.91	N	N	--
S239-SCX-008	0.5 - 1.1	soil	SB	grab	Site Survey Area	10/28/2016	603131.03	4095259.91	N	N	--
S239-SCX-008	1.1 - 1.6	soil	SB	grab	Site Survey Area	10/28/2016	603131.03	4095259.91	N	N	--
S239-SCX-009	0 - 0.5	soil	SF	grab	Site Survey Area	11/14/2016	603189.77	4095498.40	N;FD	N;FD	--
S239-SCX-009	0.5 - 1.5	soil	SB	grab	Site Survey Area	11/14/2016	603189.77	4095498.40	N	N	--
S239-SCX-009	2.5 - 3	bedrock	SB	grab	Site Survey Area	11/14/2016	603189.77	4095498.40	N	N	--
S239-SCX-011	0 - 0.5	soil	SF	grab	Site Survey Area	11/14/2016	603221.08	4095484.04	N	N	--
S239-SCX-011	0.5 - 4	soil/bedrock	SB	composite	Site Survey Area	11/14/2016	603221.08	4095484.04	N	N	--
S239-SCX-012	0 - 0.5	soil	SF	grab	Site Survey Area	11/14/2016	603226.15	4095532.40	N	N	--
S239-SCX-012	0.5 - 3.5	soil/bedrock	SB	composite	Site Survey Area	11/14/2016	603226.15	4095532.40	N	N	--
S239-SCX-012	1 - 2	soil	SB	grab	Site Survey Area	11/14/2016	603226.15	4095532.40	N	N	--
S239-SCX-013	0 - 0.5	soil	SF	grab	Site Survey Area	11/14/2016	603230.17	4095564.45	N	N	--
S239-SCX-013	0.5 - 4	soil/bedrock	SB	composite	Site Survey Area	11/14/2016	603230.17	4095564.45	N	N	--
S239-SCX-013	1 - 2	soil	SB	grab	Site Survey Area	11/14/2016	603230.17	4095564.45	N	N	--
S239-SCX-013	4 - 4.5	bedrock	SB	grab	Site Survey Area	11/14/2016	603230.17	4095564.45	N	N	--
S239-SCX-015	0 - 0.9	soil	SB	grab	Site Survey Area	11/15/2016	603190.95	4095591.68	N;FD	N;FD	--
S239-SCX-015	0.9 - 2	soil/bedrock	SB	composite	Site Survey Area	11/15/2016	603190.95	4095591.68	N	N	--
S239-SCX-016	0 - 1.7	soil	SB	composite	Site Survey Area	11/15/2016	603232.85	4095439.38	N;MS;MSD	N	--
S239-SCX-016	1.7 - 2.5	bedrock	SB	grab	Site Survey Area	11/15/2016	603232.85	4095439.38	N	N	--
S239-SCX-017	0 - 0.5	soil	SF	grab	Site Survey Area	11/15/2016	603230.73	4095301.31	N;MS;MSD	N	--
S239-SCX-017	0.5 - 3.5	soil/bedrock	SB	composite	Site Survey Area	11/15/2016	603230.73	4095301.31	N	N	--
S239-SCX-017	3 - 3.5	bedrock	SB	grab	Site Survey Area	11/15/2016	603230.73	4095301.31	N	N	--
S239-SCX-021	0 - 0.5	soil	SF	grab	Site Survey Area	11/15/2016	603236.65	4095537.31	N;FD	N;FD	--
S239-SCX-021	1 - 8	soil/bedrock	SB	composite	Site Survey Area	11/15/2016	603236.65	4095537.31	N	N	--
S239-SCX-021	6.5 - 7	bedrock	SB	grab	Site Survey Area	11/15/2016	603236.65	4095537.31	N	N	--
S239-SCX-021	8 - 9	bedrock	SB	grab	Site Survey Area	11/15/2016	603236.65	4095537.31	N	N	--

Notes

--	Not Sampled
N	Normal
FD	Field Duplicate
MS	Matrix Spike
MSD	Matrix Spike Duplicate
NA	Not Applicable
Ra-226	Radium 226
SB	Subsurface Sample
SF	Surface Sample
ft bgs	Feet below ground surface

[1] Coordinate System: NAD 1983 UTM Zone 12N

Table 3-2
Mine Feature Samples and Area
Harvey Blackwater No. 3
Removal Site Evaluation Report - Final
Navajo Nation AUM Environmental Response Trust - First Phase

Mine Feature	Surface Samples	Subsurface Samples	Area (sq. ft)	Volume of TENORM exceeding ILs (yd^3)
Graded / Disturbed Reclaimed Area (North)	8	9	157,728	9,872
Historical Pit	3	5	15,567	2,106
Graded / Disturbed Reclaimed Area (South)	2	2	48,260	1,706
Waste Pile (west)	0	0	573	21
Waste Pile (east)	1	2	1,781	198
Potential Haul Roads	3	1	*	***
Drainages	1	0	**	***

Notes

sq.ft - square feet

yd^3 - cubic yards

ILs - investigation levels

TENORM - technologically enhanced naturally occurring radioactive material

* Area not determined because the width of the potential haul roads vary throughout the Site

** Area not determined because the width of the drainages vary throughout the Site

*** Discrete TENORM volume was not calculated for this feature

Table 4-1
Background Reference Area Soil Sample Analytical Results
Harvey Blackwater No. 3
Removal Site Evaluation Report - Final
Navajo Nation AUM Environmental Response Trust - First Phase

Location Identification	S239-BG3-001	S239-BG3-002	S239-BG3-003	S239-BG3-003 Dup	S239-BG3-004	S239-BG3-004 Dup	S239-BG3-005	S239-BG3-006	S239-BG3-007
Date Collected	3/18/2017	3/18/2017	3/18/2017	3/18/2017	3/18/2017	3/18/2017	3/18/2017	3/18/2017	3/18/2017
Depth (feet)	0 - 0.5	0 - 0.5	0 - 0.5	0 - 0.5	0 - 0.5	0 - 0.5	0 - 0.5	0 - 0.5	0 - 0.5
Analyte (Units)									
Metals [1] (mg/kg)									
Arsenic	3.1	11	1.4	1.3	2.9	2.9	2.6	2.5	4.2
Molybdenum	0.52	1.2	0.32	0.29	0.52	0.58	0.5	0.53	0.59
Selenium	<0.89	<0.94	<0.88	<0.73	<0.82	<0.85	<0.79	<0.85	<0.83
Uranium	0.92	0.83	0.63	0.67	0.8	0.79	2.1	0.8	1.1
Vanadium	5.6	5.8	5.1	4.6	8.5	8.6	5.2	7.4	9.4
Radionuclides (pCi/g)									
Radium-226	1.38 ± 0.26	0.96 ± 0.27	0.99 ± 0.23	0.75 ± 0.19	1.8 ± 0.34	1.65 ± 0.32	0.78 ± 0.23	1.24 ± 0.25	2.05 ± 0.37

Notes
Bold Bolded result indicates positively identified compound
mg/kg milligrams per kilogram
pCi/g picocuries per gram
J- Data are estimated and are potentially biased low due to associated quality control data
[1] Analysis required a standard sample dilution of 10 times; reported values have been converted to non-dilute value
< Result not detected above associated laboratory reporting limit

Stantec
NAVAJO NATION
AUM Environmental Response Trust - First Phase

Table 4-1
Background Reference Area Soil Sample Analytical Results
Harvey Blackwater No. 3
Removal Site Evaluation Report - Final
Navajo Nation AUM Environmental Response Trust - First Phase

Location Identification	S239-BG3-007 Dup	S239-BG3-008	S239-BG3-009	S239-BG3-010	S239-BG3-011	S239-SCX-002	S239-SCX-002
Date Collected	3/18/2017	3/18/2017	3/18/2017	3/18/2017	3/18/2017	10/28/2016	10/28/2016
Depth (feet)	0 - 0.5	0 - 0.5	0 - 0.5	0 - 0.5	0 - 0.3	0 - 0.5	0.5 - 1.5
Analyte (Units)							
Metals [1] (mg/kg)							
Arsenic	5.8	3.1	8.4	2	3	1.8	8
Molybdenum	1.1	0.43	0.7	0.57	0.93	0.62	0.63
Selenium	<1	<0.76	<0.83	<0.89	<0.84	<1	<0.99
Uranium	1	0.88	1.2	0.7	0.77	1.3	2
Vanadium	10	5.5	13	4.8	5.4	5.8	12
Radionuclides (pCi/g)							
Radium-226	2.4 ± 0.38	1.6 ± 0.29	1.57 ± 0.29	0.91 ± 0.24	0.93 ± 0.22	1.02 ± 0.22 J-	2.3 ± 0.37 J-

Notes
Bold Bolded result indicates positively identified compound
mg/kg milligrams per kilogram
pCi/g picocuries per gram
J- Data are estimated and are potentially biased low due to associated quality control data
[1] Analysis required a standard sample dilution of 10 times; reported values have been converted to non-diluted value
< Result not detected above associated laboratory reporting limit

Stantec
NAVAJO NATION
AUM Environmental Response Trust - First Phase

Table 4-2
Static Gamma Measurement Summary
Harvey Blackwater No. 3
Removal Site Evaluation Report - Final
Navajo Nation AUM Environmental Response Trust - First Phase

Sample Location	Survey Area	Subsurface Static Gamma Investigation Level (cpm)	Sample Depth (ft bgs)	Media	Static Gamma Measurement (cpm)
S239-SCX-002	Background Reference Area	*	0	soil	9,020
S239-SCX-002	Background Reference Area	*	0.5	soil	10,298
S239-SCX-002	Background Reference Area	*	1.0	soil	13,051
S239-SCX-002	Background Reference Area	*	1.5	soil	15,408**
S239-SCX-003	Site Survey Area	--	0	soil	19,042
S239-SCX-003	Site Survey Area	10,298	0.5	soil	150,578
S239-SCX-003	Site Survey Area	10,298	1.0	soil	223,378
S239-SCX-003	Site Survey Area	10,298	1.5	soil	229,043
S239-SCX-004	Site Survey Area	--	0	soil	13,469
S239-SCX-004	Site Survey Area	10,298	0.5	soil	21,606
S239-SCX-005	Site Survey Area	--	0	soil	100,181
S239-SCX-005	Site Survey Area	10,298	0.5	soil	235,860
S239-SCX-005	Site Survey Area	10,298	0.75	soil	289,237
S239-SCX-006	Site Survey Area	--	0	soil	17,185
S239-SCX-006	Site Survey Area	10,298	0.7	soil	13,618
S239-SCX-006	Site Survey Area	10,298	1.2	soil	12,154
S239-SCX-006	Site Survey Area	10,298	1.75	soil	12,710
S239-SCX-007	Site Survey Area	--	0	soil	11,819
S239-SCX-008	Site Survey Area	--	0	soil	32,391
S239-SCX-008	Site Survey Area	10,298	0.5	soil	72,774
S239-SCX-008	Site Survey Area	10,298	1.0	soil	87,922
S239-SCX-008	Site Survey Area	10,298	1.6	soil	98,698
S239-SCX-009	Site Survey Area	--	0	soil	101,924
S239-SCX-009	Site Survey Area	10,298	1.0	soil	224,934
S239-SCX-009	Site Survey Area	10,298	2.0	bedrock	348,864
S239-SCX-009	Site Survey Area	10,298	3.0	bedrock	370,164
S239-SCX-010	Site Survey Area	10,298	0.5	soil	29,186
S239-SCX-010	Site Survey Area	10,298	1.5	soil	19,544
S239-SCX-010	Site Survey Area	10,298	2.5	bedrock	17,488
S239-SCX-010	Site Survey Area	10,298	3.5	bedrock	18,266
S239-SCX-011	Site Survey Area	--	0	soil	14,048
S239-SCX-011	Site Survey Area	10,298	1.0	soil	16,640
S239-SCX-011	Site Survey Area	10,298	2.0	soil	15,062
S239-SCX-011	Site Survey Area	10,298	3.0	bedrock	24,642
S239-SCX-011	Site Survey Area	10,298	4.0	bedrock	30,014
S239-SCX-012	Site Survey Area	--	0	soil	17,290
S239-SCX-012	Site Survey Area	10,298	1.0	soil	72,752
S239-SCX-012	Site Survey Area	10,298	2.0	soil	110,866
S239-SCX-012	Site Survey Area	10,298	3.0	bedrock	109,822

Notes

Bold	Bolded result indicates measurement exceeds subsurface gamma investigation level
*	The subsurface gamma investigation levels are derived from the background area measurements, refer to Section 4.1 of the RSE report
**	Measurement collected at interface of unconsolidated material and refusal material (e.g., bedrock)
--	The subsurface gamma investigation level does not apply to surface static gamma measurements
IL	Investigation Level
RSE	Removal Site Investigation
cpm	counts per minute
ft bgs	feet below ground surface
soil/bedrock	measurement collected at soil/bedrock interface

Table 4-2
Static Gamma Measurement Summary
Harvey Blackwater No. 3
Removal Site Evaluation Report - Final
Navajo Nation AUM Environmental Response Trust - First Phase

Sample Location	Survey Area	Subsurface Static Gamma Investigation Level (cpm)	Sample Depth (ft bgs)	Media	Static Gamma Measurement (cpm)
S239-SCX-013	Site Survey Area	--	0	soil	21,056
S239-SCX-013	Site Survey Area	10,298	1.0	soil	73,440
S239-SCX-013	Site Survey Area	10,298	2.0	soil/bedrock	122,002
S239-SCX-013	Site Survey Area	10,298	3.0	bedrock	126,378
S239-SCX-013	Site Survey Area	10,298	4.0	bedrock	320,126
S239-SCX-014	Site Survey Area	--	0	soil	6,756
S239-SCX-014	Site Survey Area	10,298	1.0	bedrock	16,014
S239-SCX-014	Site Survey Area	10,298	2.0	bedrock	14,002
S239-SCX-015	Site Survey Area	--	0	soil	9,964
S239-SCX-015	Site Survey Area	10,298	1.0	soil/bedrock	12,926
S239-SCX-015	Site Survey Area	10,298	2.0	bedrock	13,006
S239-SCX-016	Site Survey Area	--	0	soil	31,158
S239-SCX-016	Site Survey Area	10,298	1.0	soil	72,104
S239-SCX-016	Site Survey Area	10,298	2.0	bedrock	30,070
S239-SCX-016	Site Survey Area	10,298	2.5	bedrock	18,826
S239-SCX-017	Site Survey Area	--	0	soil	9,366
S239-SCX-017	Site Survey Area	10,298	1.0	soil	11,496
S239-SCX-017	Site Survey Area	10,298	2.0	soil	13,592
S239-SCX-017	Site Survey Area	10,298	3.0	soil/bedrock	18,636
S239-SCX-017	Site Survey Area	10,298	4.0	bedrock	18,876
S239-SCX-018	Site Survey Area	10,298	0.5	soil	22,402
S239-SCX-018	Site Survey Area	10,298	1.5	bedrock	25,990
S239-SCX-018	Site Survey Area	10,298	2.5	bedrock	31,600
S239-SCX-018	Site Survey Area	10,298	3.5	bedrock	37,526
S239-SCX-019	Site Survey Area	10,298	0.5	soil	9,960
S239-SCX-019	Site Survey Area	10,298	1.5	soil	12,356
S239-SCX-019	Site Survey Area	10,298	2.5	soil/bedrock	17,294
S239-SCX-019	Site Survey Area	10,298	3.5	bedrock	27,082
S239-SCX-020	Site Survey Area	10,298	0.3	soil	8,202
S239-SCX-020	Site Survey Area	10,298	0.7	soil/bedrock	13,972
S239-SCX-020	Site Survey Area	10,298	1.7	bedrock	26,220
S239-SCX-020	Site Survey Area	10,298	2.7	bedrock	42,396
S239-SCX-021	Site Survey Area	10,298	1.0	soil	27,150
S239-SCX-021	Site Survey Area	10,298	2.0	soil	45,890
S239-SCX-021	Site Survey Area	10,298	3.0	soil	75,228
S239-SCX-021	Site Survey Area	10,298	4.0	soil/bedrock	131,098
S239-SCX-021	Site Survey Area	10,298	5.0	bedrock	126,358
S239-SCX-021	Site Survey Area	10,298	6.0	bedrock	163,088
S239-SCX-021	Site Survey Area	10,298	7.0	bedrock	207,184
S239-SCX-021	Site Survey Area	10,298	8.0	bedrock	159,144
S239-SCX-021	Site Survey Area	10,298	9.0	bedrock	321,848

Notes

Bold	Bolded result indicates measurement exceeds subsurface gamma investigation level
*	The subsurface gamma investigation levels are derived from the background area measurements, refer to Section 4.1 of the RSE report
**	Measurement collected at interface of unconsolidated material and refusal material (e.g., bedrock)
--	The subsurface gamma investigation level does not apply to surface static gamma measurements
IL	Investigation Level
RSE	Removal Site Investigation
cpm	counts per minute
ft bgs	feet below ground surface
soil/bedrock	measurement collected at soil/bedrock interface

Table 4-3
Gamma Correlation Study Soil and Sediment Sample Analytical Results
Harvey Blackwater No. 3
Removal Site Evaluation Report - Final
Navajo Nation AUM Environmental Response Trust - First Phase

Location Identification	S239-C01-001	S239-C02-001	S239-C03-001	S239-C04-001	S239-C05-001
Date Collected	10/27/2016	10/27/2016	10/27/2016	10/27/2016	10/27/2016
Depth (feet)	0 - 0.5	0 - 0.5	0 - 0.5	0 - 0.5	0 - 0.5
Analyte (Units)					
Radionuclides (pCi/g)					
Radium-226	1.81 ± 0.36	0.5 ± 0.15 J-	8.1 ± 1.1 J-	4.67 ± 0.66 J-	4.42 ± 0.63 J-
Thorium-228	0.81 ± 0.15	0.282 ± 0.067	0.399 ± 0.085	0.329 ± 0.071	0.331 ± 0.073
Thorium-230	1.56 ± 0.27	0.62 ± 0.12	8.5 ± 1.3	3.42 ± 0.55	3.09 ± 0.5
Thorium-232	0.69 ± 0.13	0.226 ± 0.053	0.386 ± 0.079	0.351 ± 0.072	0.334 ± 0.07

Notes
Bold Bolded result indicates positively identified compound
pCi/g picocuries per gram
J- Data are estimated and are potentially biased low due to associated quality control data

Table 4-4
Site Characterization Soil and Sediment Sample Analytical Results
Harvey Blackwater No. 3
Removal Site Evaluation Report - Final
Navajo Nation AUM Environmental Response Trust - First Phase

Location Identification		S239-CX-001	S239-CX-002	S239-CX-003	S239-CX-004	S239-CX-005	S239-CX-006	S239-CX-007	S239-CX-008	S239-CX-008 Dup	S239-CX-009
Date Collected		10/27/2016	10/27/2016	10/27/2016	10/27/2016	10/27/2016	10/27/2016	10/27/2016	10/27/2016	10/27/2016	10/27/2016
Depth (feet)		0 - 0.5	0 - 0.5	0 - 0.5	0 - 0.5	0 - 0.5	0 - 0.5	0 - 0.5	0 - 0.5	0 - 0.5	0 - 0.5
Sample Category		surface	surface	surface	surface	surface	surface	surface	surface	surface	surface
Sample Collection Method		grab	grab	grab	grab	grab	grab	grab	grab	grab	grab
Media		soil	soil	soil	soil	sediment	soil	soil	soil	soil	soil
Analyte (Units)											
	Investigation										
Metals[1] (mg/kg)	Level										
Arsenic	17.8	3.9	7.9	1.6	2.9	1.2	2.3	8.8	4.2	3.4	2.5
Molybdenum	1.45	0.7	5.7	1.8	9.8	1.9	1.4	2.6	2	1.7	2.5
Selenium	NA	<0.99	<0.93	<0.9	<0.9	<0.99	<0.92	<0.89	<0.95	<0.92	<0.93
Uranium	2.23	1.6	1.8	1.1	1.2	0.8	6.2	17	7.9 J	5.6	2.5
Vanadium	14	14	8.6	6.2	5.2	3.6	5.4	8.5	6	5.7	5.4
Radionuclides (pCi/g)											
Radium-226	2.47	3.45 ± 0.54	1.72 ± 0.29 J-	1.33 ± 0.3	0.82 ± 0.2 J-	0.54 ± 0.18	3.59 ± 0.54	7.7 ± 1 J-	6.1 ± 0.83	5.51 ± 0.73	2.7 ± 0.44 J-

Notes

Bold	Bolded result indicates positively identified compound
Shaded	Shaded result indicates result greater than or equal to the investigation level
Shaded	Shaded result indicates analyte detected, where that analyte does not have an investigation level
mg/kg	milligrams per kilogram
pCi/g	picocuries per gram
NA	An investigation level for selenium is not identified because selenium sample results in BG-3 were all non-detect
[1]	Analysis required a standard sample dilution of 10 times; reported values have been converted to non-diluted value
<	Result not detected above associated laboratory reporting limit
D	Analysis required non-standard dilution; reported values have been converted to non-diluted value
J	Data are estimated due to associated quality control data
J-	Data are estimated and are potentially biased low due to associated quality control data
J+	Data are estimated and are potentially biased high due to associated quality control data

Table 4-4
Site Characterization Soil and Sediment Sample Analytical Results
Harvey Blackwater No. 3
Removal Site Evaluation Report - Final
Navajo Nation AUM Environmental Response Trust - First Phase

Location Identification		S239-CX-010	S239-SCX-003	S239-SCX-003	S239-SCX-004	S239-SCX-005	S239-SCX-005	S239-SCX-006	S239-SCX-006	S239-SCX-006	S239-SCX-008
Date Collected		10/27/2016	10/28/2016	10/28/2016	10/28/2016	10/28/2016	10/28/2016	10/28/2016	10/28/2016	10/28/2016	10/28/2016
Depth (feet)		0 - 0.5	0 - 0.5	0.5 - 1.75	0 - 0.5	0 - 0.5	0.5 - 0.75	0 - 0.5	0.5 - 1.1	1.1 - 1.75	0 - 0.5
Sample Category		surface	surface	subsurface	surface	surface	subsurface	surface	subsurface	subsurface	surface
Sample Collection Method		grab	grab	composite	grab	grab	grab	grab	grab	grab	grab
Media		soil	soil	soil	soil	soil	soil	soil	soil	soil	soil
Analyte (Units)											
	Investigation										
Metals[1] (mg/kg)	Level										
Arsenic	17.8	16	4.5	13	4	19	53	2.6	2.3	2.5	40
Molybdenum	1.45	5.7	1.5	3.4	1.6	8	12	5.1	2.3	2.3	18
Selenium	NA	<0.96	<0.91	<1	<0.86	<1	<1	<0.85	<0.86	<1	1.3
Uranium	2.23	260 D	24	220 D	13	140 D	220 D	2.2	0.98	1.1	19
Vanadium	14	11	9.3	17	6.3	26	62	6.4	6.6	5.2	9.4
Radionuclides (pCi/g)											
Radium-226	2.47	147 ± 17	30.4 ± 3.7	155 ± 18	10.1 ± 1.3 J-	68.5 ± 8.1	231 ± 27	3.03 ± 0.45 J-	1.07 ± 0.24	1.3 ± 0.27	19.8 ± 2.4 J-

Notes

Bold	Bolded result indicates positively identified compound
Shaded	Shaded result indicates result greater than or equal to the investigation level
Shaded	Shaded result indicates analyte detected, where that analyte does not have an investigation level
mg/kg	milligrams per kilogram
pCi/g	picocuries per gram
NA	An investigation level for selenium is not identified because selenium sample results in BG-3 were all non-detect
[1]	Analysis required a standard sample dilution of 10 times; reported values have been converted to non-diluted value
<	Result not detected above associated laboratory reporting limit
D	Analysis required non-standard dilution; reported values have been converted to non-dilute value
J	Data are estimated due to associated quality control data
J-	Data are estimated and are potentially biased low due to associated quality control data
J+	Data are estimated and are potentially biased high due to associated quality control data

Table 4-4
Site Characterization Soil and Sediment Sample Analytical Results
Harvey Blackwater No. 3
Removal Site Evaluation Report - Final
Navajo Nation AUM Environmental Response Trust - First Phase

Location Identification		S239-SCX-008	S239-SCX-008	S239-SCX-009	S239-SCX-009	S239-SCX-009	S239-SCX-009 Dup	S239-SCX-011	S239-SCX-011	S239-SCX-012	S239-SCX-012
Date Collected		10/28/2016	10/28/2016	11/14/2016	11/14/2016	11/14/2016	11/14/2016	11/14/2016	11/14/2016	11/14/2016	11/14/2016
Depth (feet)		0.5 - 1.1	1.1 - 1.6	0 - 0.5	0.5 - 1.5	2.5 - 3	0 - 0.5	0 - 0.5	0.5 - 4	0 - 0.5	0.5 - 3.5
Sample Category		subsurface	subsurface	surface	subsurface	subsurface	surface	surface	subsurface	surface	subsurface
Sample Collection Method		grab	grab	grab	grab	grab	grab	grab	composite	grab	composite
Media		soil	soil	soil	soil	bedrock	soil	soil	soil/bedrock	soil	soil/bedrock
Analyte (Units)	Investigation Level										
Metals[1] (mg/kg)											
Arsenic	17.8	21	15	12	13	16	12	2.8	4.9	2.5	11
Molybdenum	1.45	16	16	6.9	11	15	6.9	2.5	3	2.7	7.2
Selenium	NA	2.7	1.2	<1	<0.96	1.1	<0.95	<0.95	<1	<1	<1
Uranium	2.23	27	33	52	87 D	270 D	56	4.5	10	2.2	47
Vanadium	14	13	16	16	14	16	16	6.8	14	5.6	10
Radionuclides (pCi/g)											
Radium-226	2.47	18.4 ± 2.3 J-	19.3 ± 2.3	37.2 ± 4.5	57.3 ± 6.8 J-	90 ± 11	38 ± 4.5	2.79 ± 0.44 J-	3.32 ± 0.51	2.22 ± 0.35 J-	19.9 ± 2.5

Notes

Bold	Bolded result indicates positively identified compound
Shaded	Shaded result indicates result greater than or equal to the investigation level
Shaded	Shaded result indicates analyte detected, where that analyte does not have an investigation level
mg/kg	milligrams per kilogram
pCi/g	picocuries per gram
NA	An investigation level for selenium is not identified because selenium sample results in BG-3 were all non-detect
1	Analysis required a standard sample dilution of 10 times; reported values have been converted to non-diluted value
<	Result not detected above associated laboratory reporting limit
D	Analysis required non-standard dilution; reported values have been converted to non-dilute value
J	Data are estimated due to associated quality control data
J-	Data are estimated and are potentially biased low due to associated quality control data
J+	Data are estimated and are potentially biased high due to associated quality control data

Table 4-4
Site Characterization Soil and Sediment Sample Analytical Results
Harvey Blackwater No. 3
Removal Site Evaluation Report - Final
Navajo Nation AUM Environmental Response Trust - First Phase

Location Identification		S239-SCX-012	S239-SCX-013	S239-SCX-013	S239-SCX-013	S239-SCX-013	S239-SCX-015	S239-SCX-015	S239-SCX-015 Dup	S239-SCX-016	S239-SCX-016
Date Collected		11/14/2016	11/14/2016	11/14/2016	11/14/2016	11/14/2016	11/15/2016	11/15/2016	11/15/2016	11/15/2016	11/15/2016
Depth (feet)		1 - 2	0 - 0.5	0.5 - 4	1 - 2	4 - 4.5	0 - 0.9	0.9 - 2	0 - 0.9	0 - 1.7	1.7 - 2.5
Sample Category		subsurface	surface	subsurface	subsurface	subsurface	subsurface	subsurface	surface	subsurface	subsurface
Sample Collection Method		grab	grab	composite	grab	grab	grab	composite	grab	composite	grab
Media		soil	soil	soil/bedrock	soil	bedrock	soil	soil/bedrock	soil	soil	bedrock
Analyte (Units)	Investigation Level										
Metals[1] (mg/kg)											
Arsenic	17.8	11	3.5	11	14	19	2	2.2	1.8	3 J+	5
Molybdenum	1.45	8.1	1.9	2.4	6.7	3.7	0.9	<0.21	0.72	2.5	14
Selenium	NA	<1	<0.99	<1	<1	<1	<1	<1	<1	<1	<1
Uranium	2.23	53	6	68	37	170 D	1.4	1	1.3	15	2.6
Vanadium	14	9.8	6.2	9.7	12	9.7	7.3	46	7	7.4 J+	8.9
Radionuclides (pCi/g)											
Radium-226	2.47	32.7 ± 4	6.1 ± 0.81	37.2 ± 4.5	31.3 ± 3.8	105 ± 12	1.65 ± 0.29	0.51 ± 0.22	1.7 ± 0.31	22.8 ± 2.8	1.86 ± 0.35

Notes

Bold	Bolded result indicates positively identified compound
Shaded	Shaded result indicates result greater than or equal to the investigation level
Shaded	Shaded result indicates analyte detected, where that analyte does not have an investigation level
mg/kg	milligrams per kilogram
pCi/g	picocuries per gram
NA	An investigation level for selenium is not identified because selenium sample results in BG-3 were all non-detect
[1]	Analysis required a standard sample dilution of 10 times; reported values have been converted to non-diluted value
<	Result not detected above associated laboratory reporting limit
D	Analysis required non-standard dilution; reported values have been converted to non-dilute value
J	Data are estimated due to associated quality control data
J-	Data are estimated and are potentially biased low due to associated quality control data
J+	Data are estimated and are potentially biased high due to associated quality control data

Table 4-4
Site Characterization Soil and Sediment Sample Analytical Results
Harvey Blackwater No. 3
Removal Site Evaluation Report - Final
Navajo Nation AUM Environmental Response Trust - First Phase

Location Identification		S239-SCX-017	S239-SCX-017	S239-SCX-017	S239-SCX-021	S239-SCX-021	S239-SCX-021	S239-SCX-021	S239-SCX-021 Dup
Date Collected		11/15/2016	11/15/2016	11/15/2016	11/15/2016	11/15/2016	11/15/2016	11/15/2016	11/15/2016
Depth (feet)		0 - 0.5	0.5 - 3.5	3 - 3.5	0 - 0.5	1 - 8	6.5 - 7	8 - 9	0 - 0.5
Sample Category		surface	subsurface	subsurface	surface	subsurface	subsurface	subsurface	surface
Sample Collection Method		grab	composite	grab	grab	composite	grab	grab	grab
Media		soil	soil/bedrock	bedrock	soil	soil/bedrock	bedrock	bedrock	soil
Analyte (Units)	Investigation Level								
Metals[1] (mg/kg)									
Arsenic	17.8	2	20	21	3	6.7	14	15	3
Molybdenum	1.45	2.4 J	66	77	2.2	6.9	12	9.1	2
Selenium	NA	<0.94	<1	1	<1	<0.95	<1	<1	<1
Uranium	2.23	0.82 J+	3.7	5.5	5.2	29	120 D	49	4.9
Vanadium	14	4.6	5.9	8.3	4.9	6.9	6.5	6.4	4.8
Radionuclides (pCi/g)									
Radium-226	2.47	1.1 ± 0.27	2.06 ± 0.33 J-	2.59 ± 0.4	5.44 ± 0.73	26.9 ± 3.3	66 ± 7.9 J-	22.9 ± 2.8	4.25 ± 0.62

Notes

Bold	Bolded result indicates positively identified compound
Shaded	Shaded result indicates result greater than or equal to the investigation level
Shaded	Shaded result indicates analyte detected, where that analyte does not have an investigation level
mg/kg	milligrams per kilogram
pCi/g	picocuries per gram
NA	An investigation level for selenium is not identified because selenium sample results in BG-3 were all non-detect
[1]	Analysis required a standard sample dilution of 10 times; reported values have been converted to non-diluted value
<	Result not detected above associated laboratory reporting limit
D	Analysis required non-standard dilution; reported values have been converted to non-dilute value
J	Data are estimated due to associated quality control data
J-	Data are estimated and are potentially biased low due to associated quality control data
J+	Data are estimated and are potentially biased high due to associated quality control data

Table 4-5
Summary of Investigation Level Exceedances in Soil/Sediment at Borehole Locations
Harvey Blackwater No.3
Removal Site Evaluation Report - Final
Navajo Nation AUM Environmental Response Trust - First Phase

Sample Location	Investigation Level Exceedances
S239-SCX-003	Ra-226, Mo, V, U, Static Gamma
S239-SCX-004	Ra-226, Mo, U, Static Gamma
S239-SCX-005	Ra-226, As, Mo, V, U, Static Gamma
S239-SCX-006	Ra-226, Mo, Static Gamma
S239-SCX-008	Ra-226, As, Mo, V, U, Static Gamma
S239-SCX-009	Ra-226, Mo, V, U, Static Gamma
S239-SCX-010	Static Gamma[1]
S239-SCX-011	Ra-226, Mo, U, Static Gamma
S239-SCX-012	Ra-226, Mo, U, Static Gamma
S239-SCX-013	Ra-226, Mo, U, Static Gamma
S239-SCX-016	Ra-226, Mo, U, Static Gamma
S239-SCX-017	As, Mo, U, Static Gamma
S239-SCX-018	Static Gamma[1]
S239-SCX-019	Static Gamma[1]
S239-SCX-021	Ra-226, Mo, U, Static Gamma

Notes
1 - No soil samples collected in borehole
As - Arsenic
Mo - Molybdenum
Ra-226 - Radium 226
U - Uranium
V - Vanadium

FIGURES

FIGURE ACRONYMS/ABBREVIATIONS

As	arsenic
BG	potential background reference area
bgs	below ground surface
cpm	counts per minute
ft	feet
IL	investigation level
mg/kg	milligrams per kilogram
Mo	molybdenum
NA	not applicable
NAD	North American Datum
pCi/g	picocuries per gram
Ra	radium-226
Ra-226	radium-226
Se	selenium
TENORM	Technologically Enhanced Naturally Occurring Radioactive Materials
uk	unknown
U	uranium
UTL	upper tolerance limit
UTM	Universal Transverse Mercator
V	vanadium

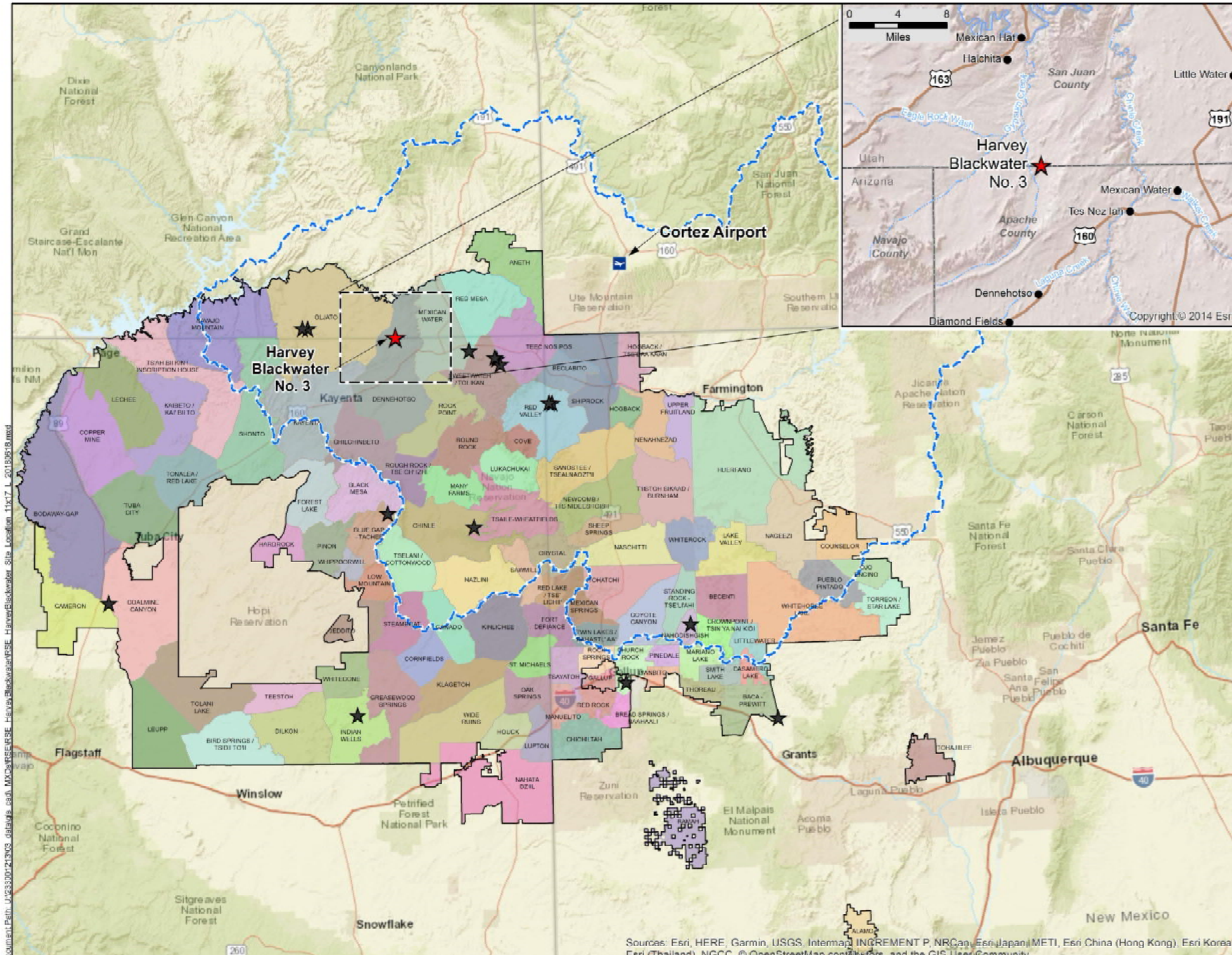

NAVAJO NATION
AUM Environmental Response Trust-First Phase

LEGEND

- Harvey Blackwater No. 3 Mine Site
- Priority Abandoned Uranium Mine (AUM) Site
- Populated Place
- US Highway
- Stream
- Intermittent Stream
- San Juan River Watershed
- Navajo Nation Boundary
- Navajo Nation Chapter

Cortez Airport, Colorado Wind Rose (KCEZ), 1996-2006

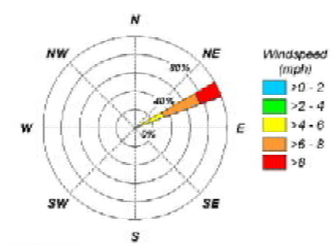

REFERENCES:
Coordinate System: NAD 1983 UTM Zone 12N

Basemap: ESRI World Street Map and World Shaded Relief accessed 06/2018.

Wind Rose: USEPA, 2007a

N W E S

0 25 50
Miles

TITLE: Site Location

PROJECT: Removal Site Evaluation
Harvey Blackwater No. 3 Mine Site

DATE: 6/18/2018

DOCUMENT NAME: Removal Site Evaluation Report

Stantec

AUTHOR: CBB
REVIEWER: EDZ

FIGURE: 1-1

Document Path: J:\233301213\03_data\a_cad\MXDs\RESERVE_Harvey\Blackwater\RSE_HarveyBlackwaterSite_Location_11x17_L_20180618.mxd

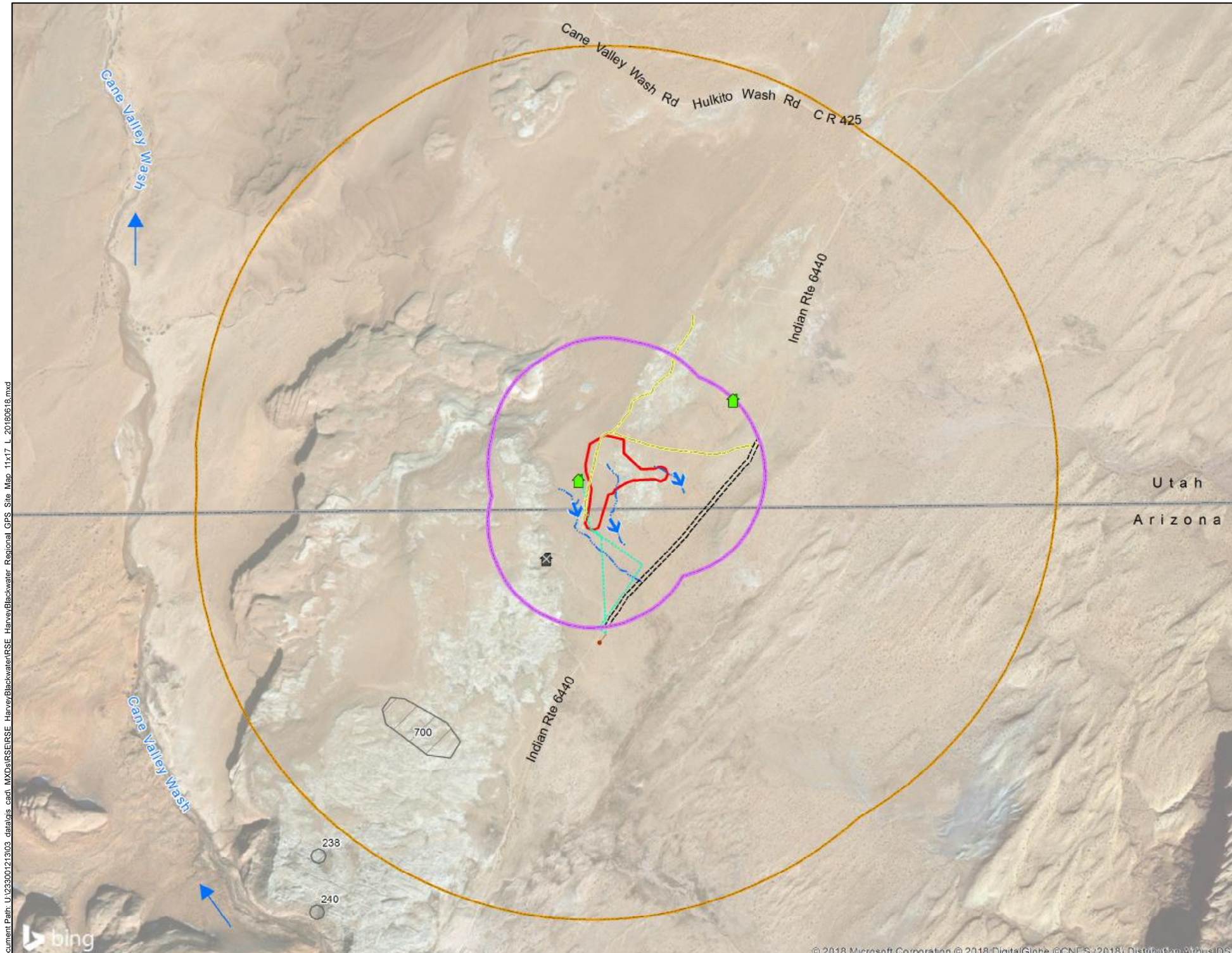

NAVAJO NATION
AUM Environmental Response Trust-First Phase

LEGEND

- Habitable Building
- Uninhabitable Building
- Flow Direction
- Drainage
- Potential Haul Road
- Powerline
- Road
- Water Line
- Claim Boundary
- 1/4-Mile Claim Boundary Buffer
- 1-Mile Claim Boundary Buffer
- Other Claim Boundary
- State Boundary

REFERENCES:
Coordinate System: NAD 1983 UTM Zone 12N

Basemap image accessed from BING Maps imagery web mapping service (http://www.bing.com/maps) on 06/2018.

N W E S

0 1,300 2,600
Feet

TITLE:
Site Features

PROJECT:
Removal Site Evaluation
Harvey Blackwater No. 3 Mine Site

DATE: 6/18/2018

DOCUMENT NAME: Removal Site Evaluation Report

Stantec

AUTHOR: CBB
REVIEWER: EDZ

FIGURE: 2-1

Document Path: U:\233001213\03_data\gis_cad_MXDs\RSE\RSE_Harvey\Blackwater\RSE_Harvey\Blackwater_Regional_GPS_Site_Map_11x17_L_20180618.mxd

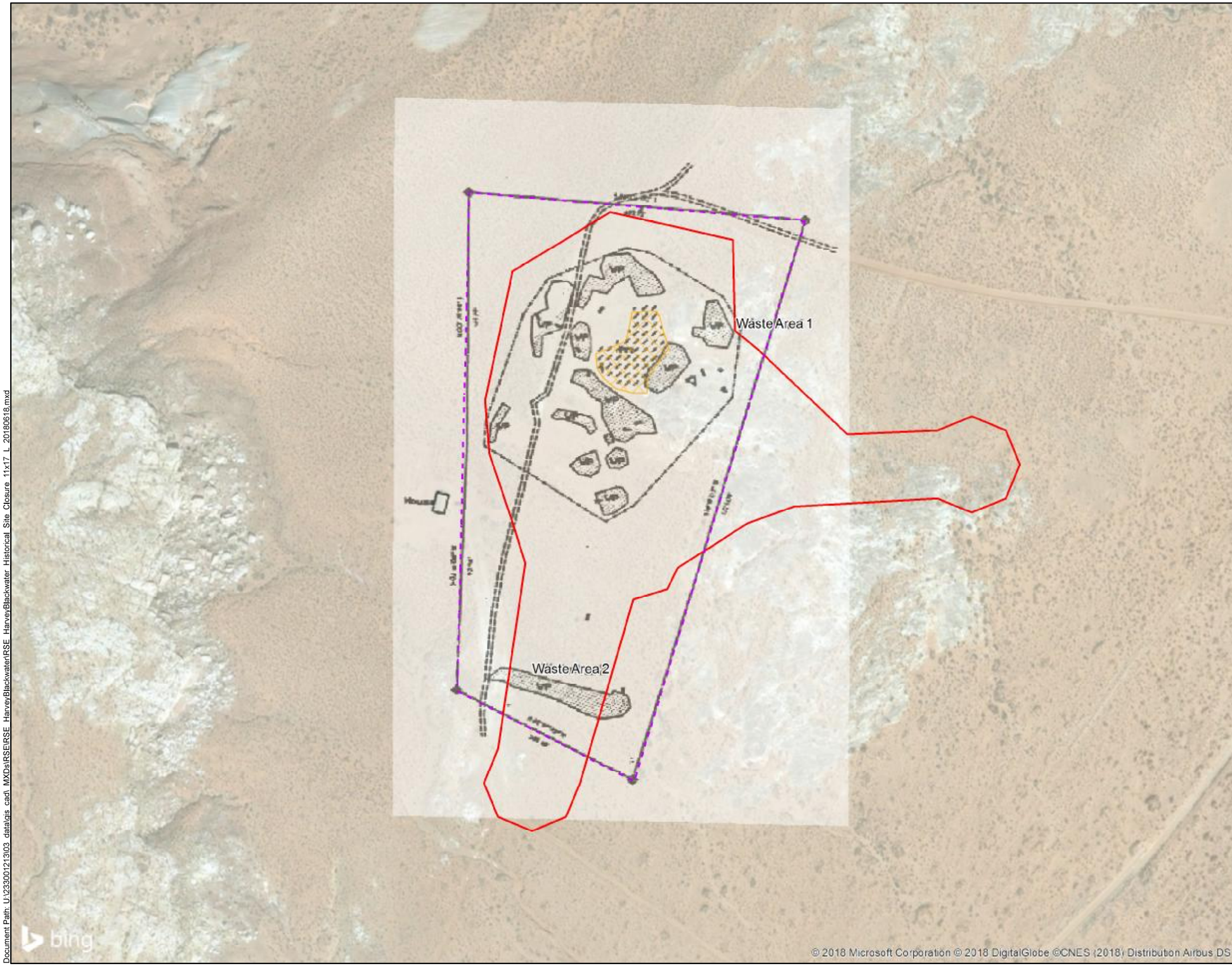

NAVAJO NATION
AUM Environmental Response Trust-First Phase

LEGEND

- Historical Pit[3]
- Claim Boundary
- 2001 NAML Reclamation Bid Document Boundary

NOTES:

1. WP = Waste Pile

2. Location of features displayed on historical overlay should be considered approximate. Reclamation bid document boundary represents the extent of planned reclamation work.

3. Historical mine features digitized based on location of the road intersection and the corner of the house (see note 2). Comparison of the pit outline to the features visible on the 1997 aerial photograph (Figure 3-1b) indicate that the pit outline is actually slightly to the west. Therefore, the pit outline was adjusted to the west on subsequent figures.

REFERENCES:

Historical Site Drawing:
Navajo Abandoned Mine Lands Reclamation Program (NAML), 2001. Monument Valley 4, AML Reclamation Proposal Documents, June.

Coordinate System: NAD 1983 UTM Zone 12N

Basemap image accessed from BING Maps imagery web mapping service (http://www.bing.com/maps) on 06/2018.

N
W E
S

0 200 400
Feet

TITLE:
Historical Mine Drawing Overlay

PROJECT:
Removal Site Evaluation
Harvey Blackwater No. 3 Mine Site

DATE: 6/18/2018

DOCUMENT NAME: Removal Site Evaluation Report

Stantec

AUTHOR: CBB
REVIEWER: EDZ

FIGURE: 2-2

Document Path: U:\233001213\03_data\gis_cad_MXDs\RSE\RSE_HarveyBlackwater\RSE_HarveyBlackwater_Historical_Site_Closure_11x17_L_20180618.mxd

NAVAJO NATION
AUM Environmental Response Trust-First Phase

LEGEND

- Flow Direction
- Road
- Claim Boundary
- Other Claim Boundary
- State Boundary

REFERENCES:
Coordinate System: NAD 1983 UTM Zone 12N

Basemap image accessed from BING Maps imagery web mapping service (http://www.bing.com/maps) on 06/2018.

N W E S

0 2,000 4,000
Feet

TITLE:
Regional Aerial Photograph

PROJECT:
Removal Site Evaluation
Harvey Blackwater No. 3 Mine Site

DATE: 6/18/2018

DOCUMENT NAME: Removal Site Evaluation Report

Stantec

AUTHOR: CBB
REVIEWER: EDZ

FIGURE: 2-3

Document Path: U:\233001213\03_data\gis_cad_MXDs\RSE\RSE_HarveyBlackwater\RSE_HarveyBlackwater_Regional_Aerial_11x17_L_20180618.mxd

NAVAJO NATION
AUM Environmental Response Trust-First Phase

LEGEND

- Claim Boundary
- Other Claim Boundary

REFERENCES:
Coordinate System: NAD 1983 UTM Zone 12N

Basemap: ESRI USA Topo Maps service accessed 06/2018.

N W E S

0 2,000 4,000
Feet

TITLE:
Regional Topographic Map

PROJECT:
Removal Site Evaluation
Harvey Blackwater No. 3 Mine Site

DATE: 6/18/2018	DOCUMENT NAME: Removal Site Evaluation Report	
Stantec	AUTHOR: CBB	REVIEWER: EDZ
	FIGURE: 2-4	

Document Path: U:\233001213\03_data\gis_cad_MXDs\RSE\RSE_HarveyBlackwater\RSE_HarveyBlackwater_Regional_Topo_11x17_v_20180618.mxd

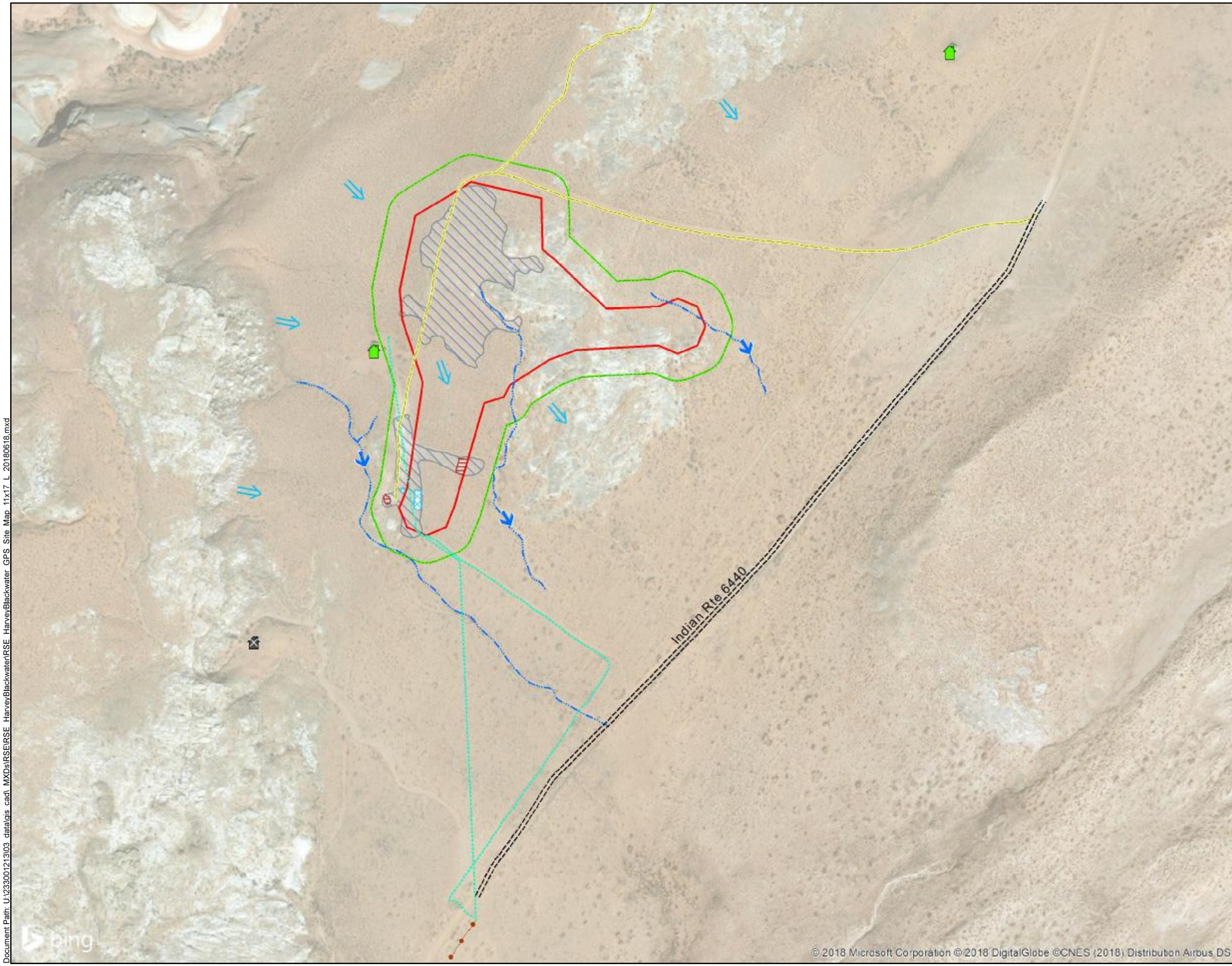

NAVAJO NATION
AUM Environmental Response Trust-First Phase

LEGEND

- Habitable Building
- Uninhabitable Building
- Flow Direction
- Approximate Overland Water Flow Direction
- Drainage
- Potential Haul Road
- Power Line
- Road
- Water Line
- Graded / Disturbed Reclaimed Area
- Potential Waste Pile
- Water Line Excavation / Debris Pile
- Claim Boundary
- 100-Foot Claim Buffer

REFERENCES:
Coordinate System: NAD 1983 UTM Zone 12N

Basemap image accessed from BING Maps imagery web mapping service (http://www.bing.com/maps) on 09/2018.

N
W E
S

0 350 700
Feet

TITLE:
Site Map

PROJECT:
Removal Site Evaluation
Harvey Blackwater No. 3 Mine Site

DATE: 9/12/2018

DOCUMENT NAME: Removal Site Evaluation Report

Stantec

AUTHOR: CBB

REVIEWER: EDZ

FIGURE: 2-5a

Document Path: U:\233001213\03_data\gis_cad_MXDs\RSE\RSE_HarveyBlackwater\RSE_HarveyBlackwater_GPS_Site_Map_11x17_L_20180618.mxd

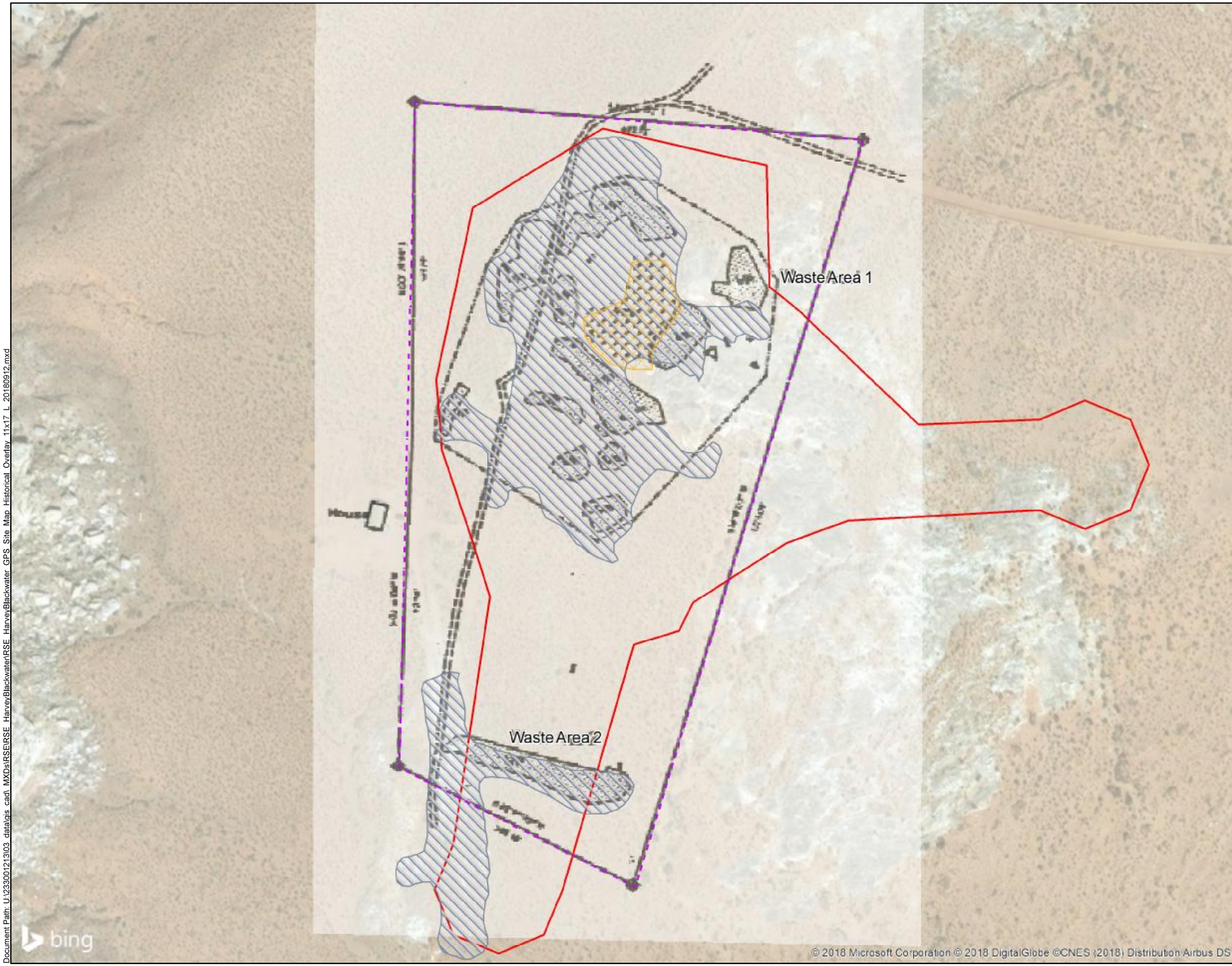

NAVAJO NATION
AUM Environmental Response Trust-First Phase

LEGEND

- Graded / Disturbed Reclaimed Area
- Historical Pit[3]
- Claim Boundary
- 2001 NAML Reclamation Bid Document Boundary

NOTES:

1. WP = Waste Pile

2. Location of features displayed on historical overlay should be considered approximate. Reclamation bid document boundary represents the extent of planned reclamation work.

3. Historical mine features digitized based on location of the road intersection and the corner of the house (see note 2). Comparison of the pit outline to the features visible on the 1997 aerial photograph (Figure 3-1b) indicate that the pit outline is actually slightly to the west. Therefore, the pit outline was adjusted to the west on subsequent figures.

REFERENCES:

Historical Site Drawing:
Navajo Abandoned Mine Lands Reclamation Program (NAML), 2001. Monument Valley 4, AML Reclamation Proposal Documents, June.

Coordinate System: NAD 1983 UTM Zone 12N

Basemap image accessed from BING Maps imagery web mapping service (http://www.bing.com/maps) on 09/2018.

N
W E
S

0 150 300
Feet

TITLE:
Graded / Disturbed Reclaimed Area Compared to Historical Mine Drawing Overlay

PROJECT:
Removal Site Evaluation
Harvey Blackwater No. 3 Mine Site

DATE: 9/12/2018	DOCUMENT NAME: Removal Site Evaluation Report	
Stantec	AUTHOR: CBB	REVIEWER: EDZ
	FIGURE: 2-5b	

Document Path: U:\233001213\03_data\gis_cad_MXDs\RSE\RSE_HarveyBlackwater\RSE_HarveyBlackwater_GPS_Site_Map_Historical_Overlay_11x17_L_20180912.mxd

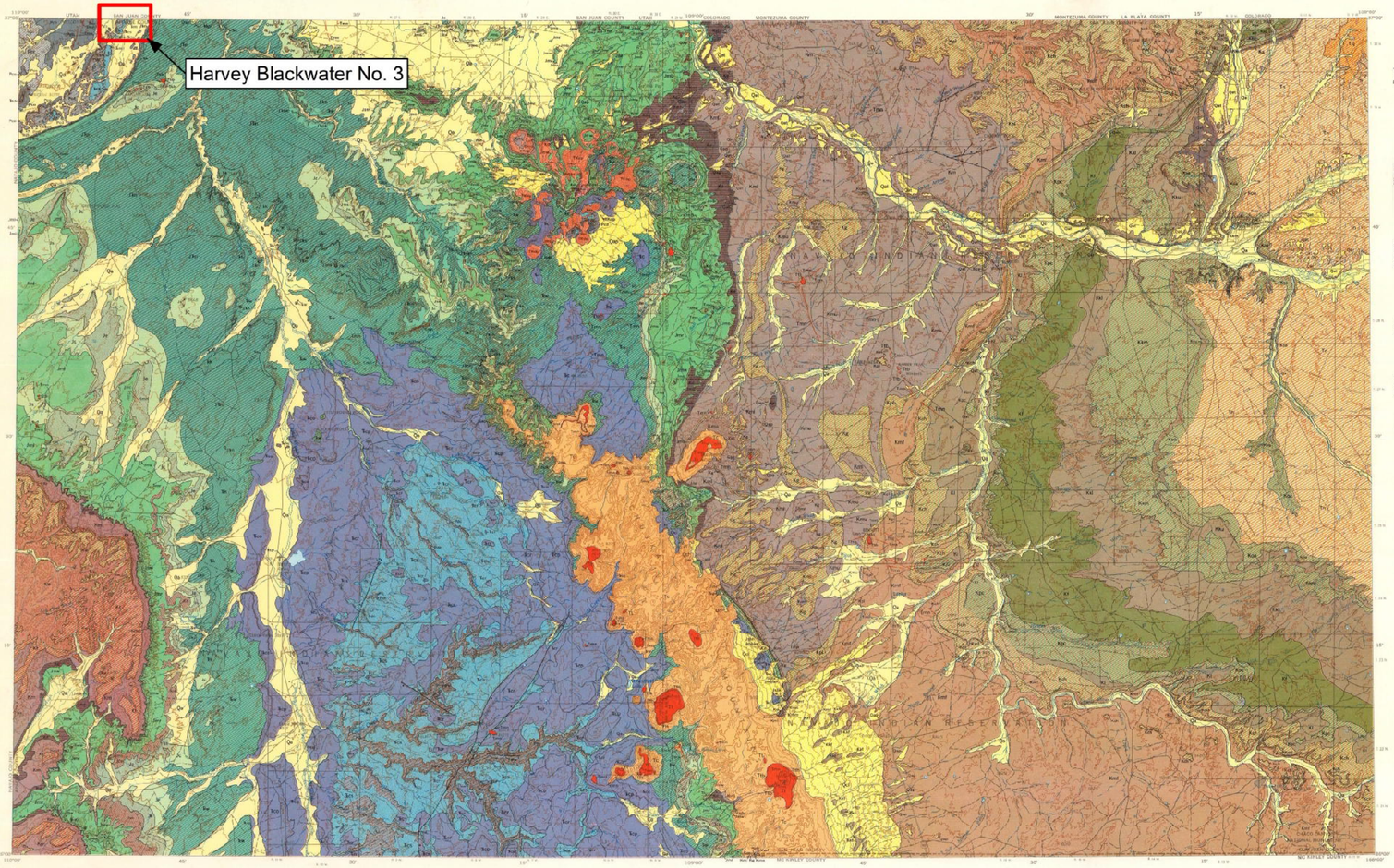
Harvey Blackwater No. 3
SAN JUAN COUNTY
UTAH
COLORADO
MONTEZUMA COUNTY
LA PLATA COUNTY
MC KINLEY COUNTY
SAN JUAN RIVER
Kmf
Kmm
Kkm
Kkf
Kkc
Kmv
Kmb
Kd
Kf
Kp
Kc
Kcc
Kg
Kmc
Km
Kd
Ku
Kl
Kpc
Kcl
Kmf

NOTES:

1. Based on field observations at the Site, bedrock units shown are near surface (typically within 1 foot), but do not necessarily outcrop and may be overlain by minor Q deposits.

2. Nearly all bedrock shown within the claim boundary (TRcs) outcrops at the ground surface.

REFERENCES:

Coordinate System: NAD 1983 UTM Zone 12N

Basemap image accessed from BING Maps imagery web mapping service (http://www.bing.com/maps) on 09/2018.

Geology adapted from Haynes et al. (1972):
Haynes, D.D., Vogel, J.D., and Wyant, D.G., 1972, Geology, structure, and uranium deposits of the Cortez quadrangle, Colorado and Utah: U.S. Geological Survey, Miscellaneous Geologic Investigations Map I-629, scale 1:250,000.

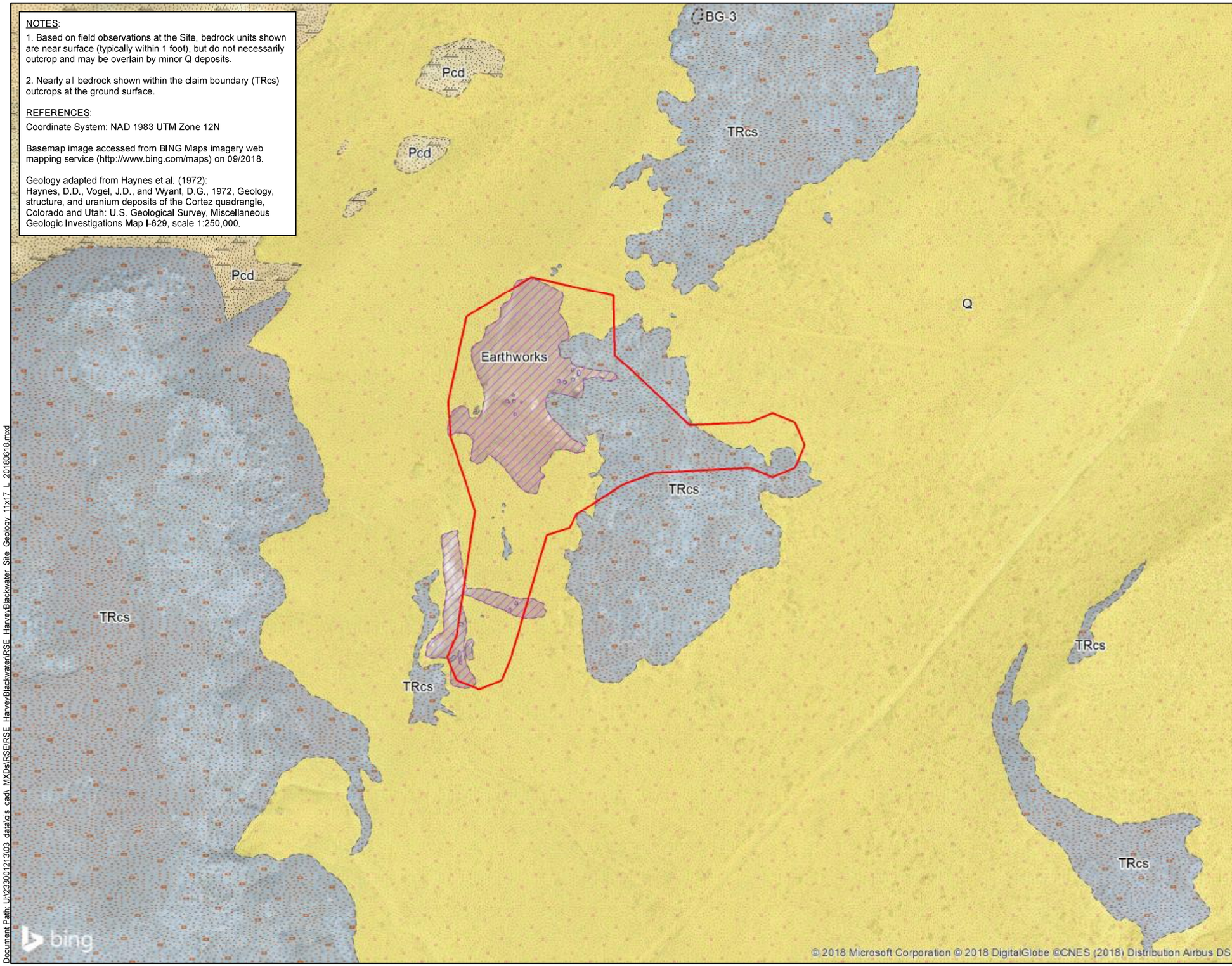

NAVAJO NATION
AUM Environmental Response Trust-First Phase

LEGEND

Potential Background Reference Area

Claim Boundary

Geologic Contact (Inferred)

QUATERNARY

Earthworks: Human-caused disturbance of the land surface related to mining or reclamation

Q: Quaternary Deposits – Undifferentiated (Pleistocene and Holocene) – includes sandy to gravelly colluvial and alluvial deposits, and eolian sand deposits

TRIASSIC

TRcs: Chinle formation (Upper Triassic), Shinarump member - moderate-orange and yellowish-gray sandstone, mudstone, and conglomerate

PERMIAN

Pcd: Cutler formation (Permian), De Chelly sandstone member, buff massive crossbedded sandstone

N
W E
S

0 300 600
Feet

TITLE:
Site Geology

PROJECT:
Removal Site Evaluation
Harvey Blackwater No. 3 Mine Site

DATE: 9/11/2018

DOCUMENT NAME: Removal Site Evaluation Report

Stantec

AUTHOR: CBB

REVIEWER: EDZ

FIGURE: 2-7

Document Path: U:\233001213\03_data\gis_cad_MXDs\RSE\RSE_HarveyBlackwater\RSE_HarveyBlackwater_Site_Geology_11x17_L_20180618.mxd

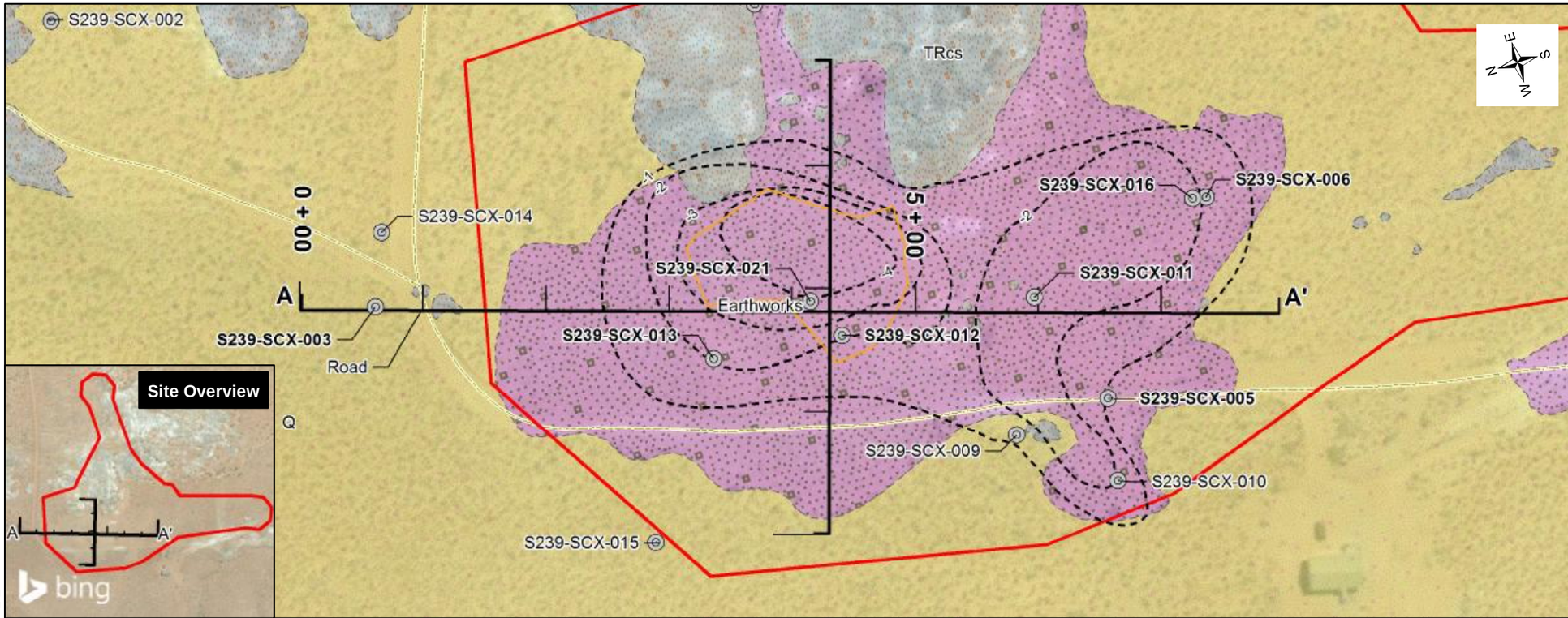

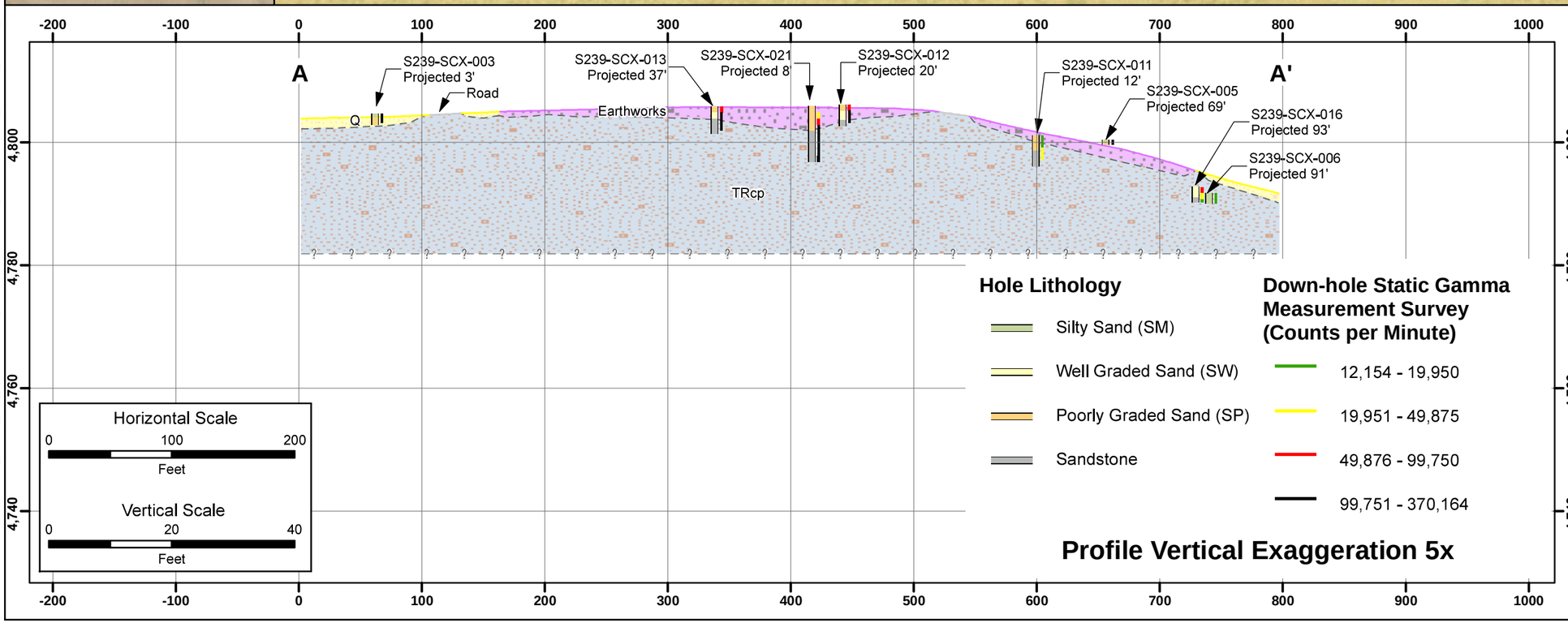

NAVAJO NATION
AUM Environmental Response Trust-First Phase

LEGEND

- Surface and/or Subsurface Borehole Location (SCX; Locations in **Bold** Included in Cross-Section)
- Potential Haul Road
- Estimated Contour for Subsurface Extent of Earthworks or Depth to Bedrock (feet)
- Cross-Section
- Historical Pit[1]
- Claim Boundary
- Geologic Contact (Inferred)

Site Geology

QUATERNARY

- Earthworks: Human-caused disturbance of the land surface related to mining or reclamation
- Q: Quaternary Deposits – Undifferentiated (Pleistocene and Holocene) – includes sandy to gravelly colluvial and alluvial deposits, and eolian sand deposits

TRIASSIC

- TRcs: Chinle formation (Upper Triassic), Shinarump member - moderate-orange and yellowish-gray sandstone, mudstone, and conglomerate

NOTES:

1. Historical pit location should be considered approximate. Location shifted to the west compared to Figure 2-2 based on the visible highwall on the 1997 photograph.

2. Bedrock units shown are near surface (typically within 1 foot), but do not necessarily outcrop and may be overlain by minor residual soils, alluvium, or eolian deposits.

3. Projected distance indicates the distance the borehole was offset from the cross-section line in plan view (not depth) for boreholes that are not located on the cross-section line.

REFERENCES:

Coordinate System: NAD 1983 StatePlane Arizona Central FIPS 0202 Feet

Basemap image accessed from BING Maps imagery web mapping service (http://www.bing.com/maps) on 06/2018.

TITLE:

Cross-Section A - A'

PROJECT:

Removal Site Evaluation
Harvey Blackwater No. 3 Mine Site

DATE:	DOCUMENT NAME:	
6/19/2018	Removal Site Evaluation Report	
	AUTHOR: EDZ	REVIEWER: CBB
	FIGURE: 2-8a	

Stantec

Document Path: U:\233001213\03_data\gis_cad_MXDs\RSE\RSE_HarveyBlackwater\RSE_HarveyBlackwater_SectionA_Gamma_11x17_L_20180618.mxd

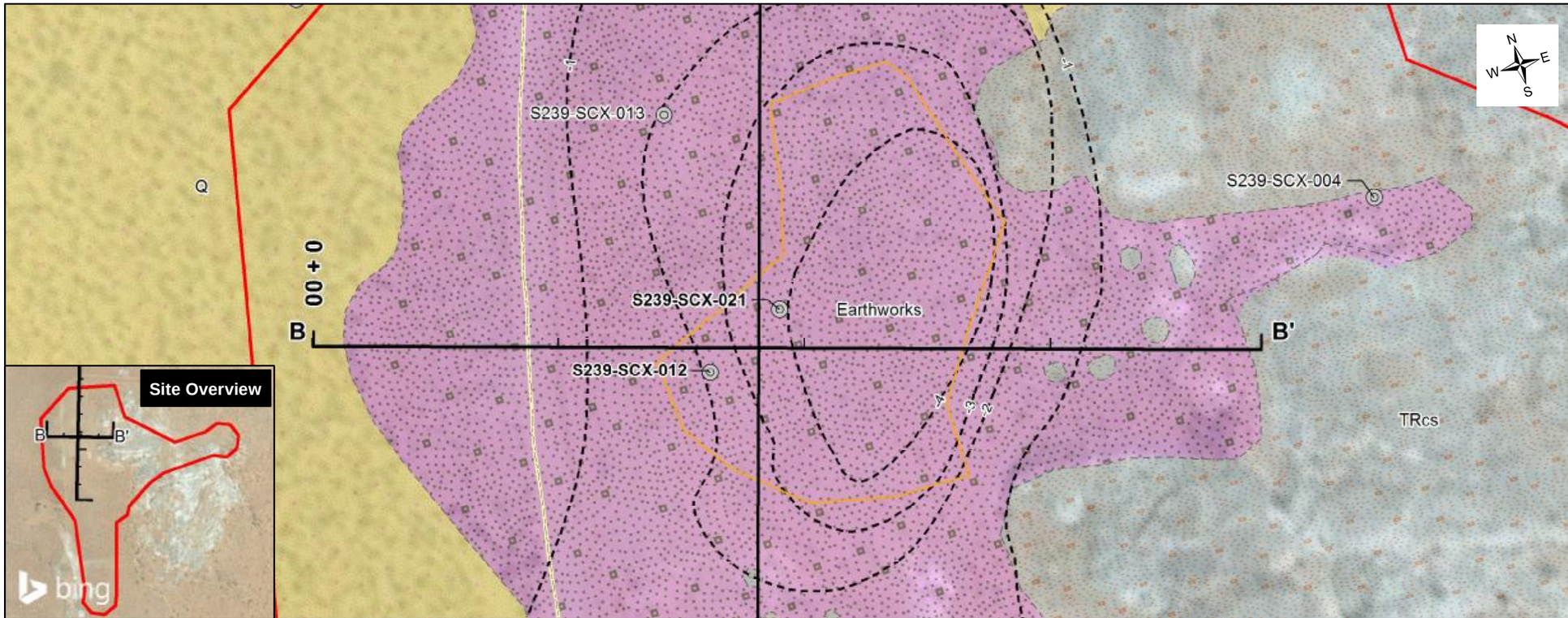

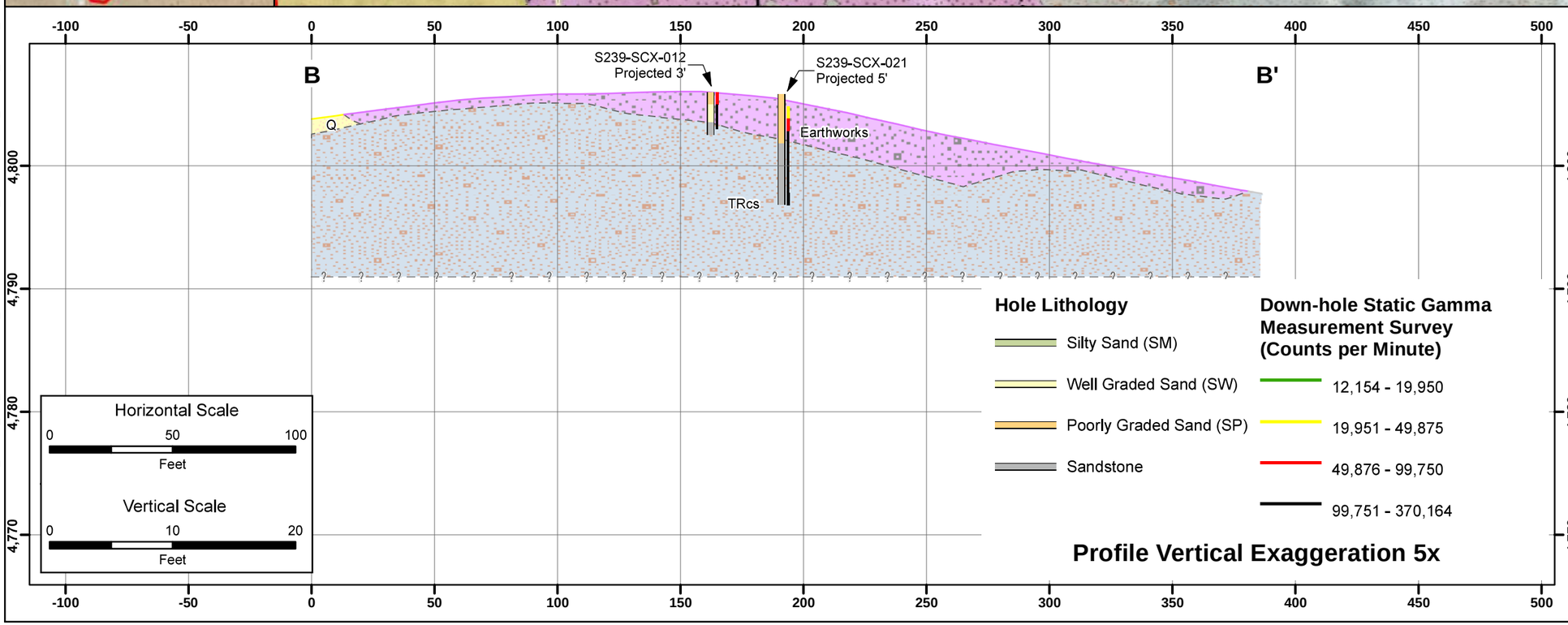

NAVAJO NATION
AUM Environmental Response Trust-First Phase

LEGEND

- Surface and/or Subsurface Borehole Location (SCX; Locations in **Bold** Included in Cross-Section)
- Potential Haul Road
- Estimated Contour for Subsurface Extent of Earthworks or Depth to Bedrock (feet)
- Cross-Section
- Historical Pit[1]
- Claim Boundary
- Geologic Contact (Inferred)

Site Geology

QUATERNARY

- Earthworks: Human-caused disturbance of the land surface related to mining or reclamation
- Q: Quaternary Deposits – Undifferentiated (Pleistocene and Holocene) – includes sandy to gravelly colluvial and alluvial deposits, and eolian sand deposits

TRIASSIC

- TRcs: Chinle formation (Upper Triassic), Shinarump member - moderate-orange and yellowish-gray sandstone, mudstone, and conglomerate

NOTES:

1. Historical pit location should be considered approximate. Location shifted to the west compared to Figure 2-2 based on the visible highwall on the 1997 photograph.

2. Bedrock units shown are near surface (typically within 1 foot), but do not necessarily outcrop and may be overlain by minor residual soils, alluvium, or eolian deposits.

3. Projected distance indicates the distance the borehole was offset from the cross-section line in plan view (not depth) for boreholes that are not located on the cross-section line.

REFERENCES:

Coordinate System: NAD 1983 StatePlane Arizona Central FIPS 0202 Feet

Basemap image accessed from BING Maps imagery web mapping service (http://www.bing.com/maps) on 06/2018.

TITLE:

Cross-Section B - B'

PROJECT:

Removal Site Evaluation
Harvey Blackwater No. 3 Mine Site

DATE:	DOCUMENT NAME:	
6/19/2018	Removal Site Evaluation Report	
	AUTHOR: EDZ	REVIEWER: CBB
	FIGURE: 2-8b	

Stantec

Document Path: U:\233001213\03_data\gis_cad_MXDs\RSE\RSE_HarveyBlackwater\RSE_HarveyBlackwater_SectionB_Gamma_11x17_L_20180618.mxd

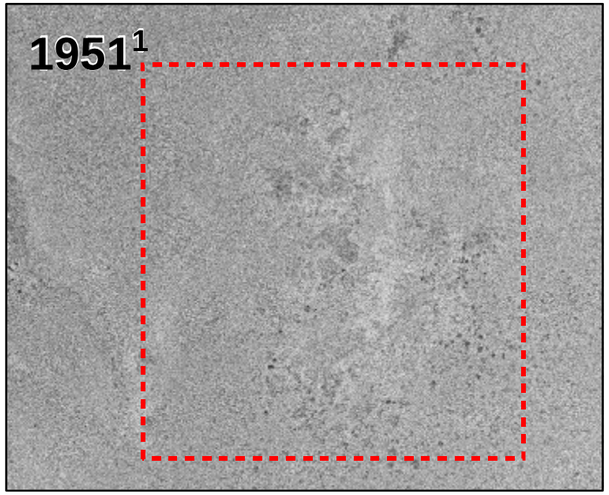

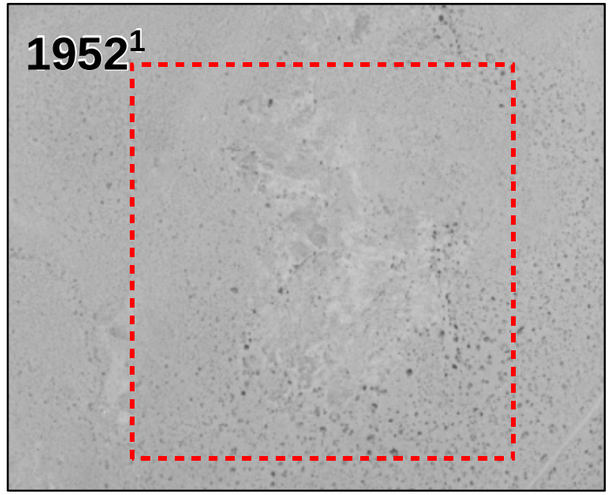

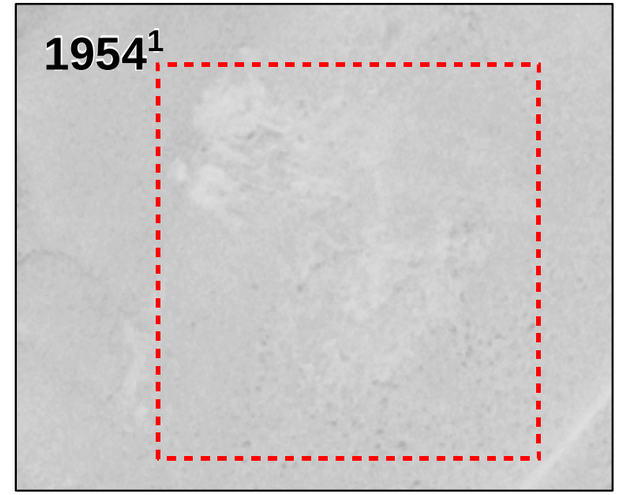

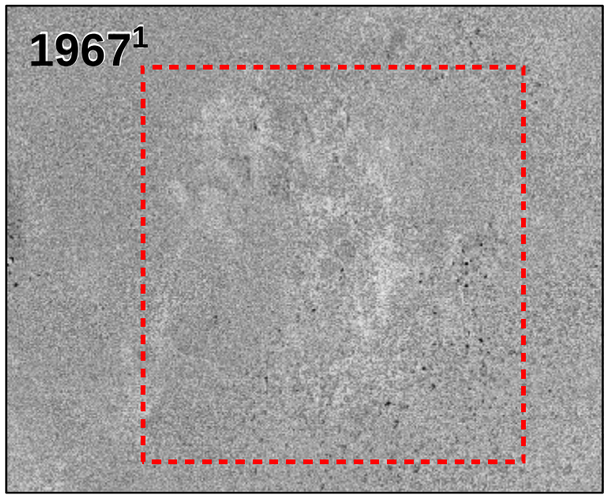

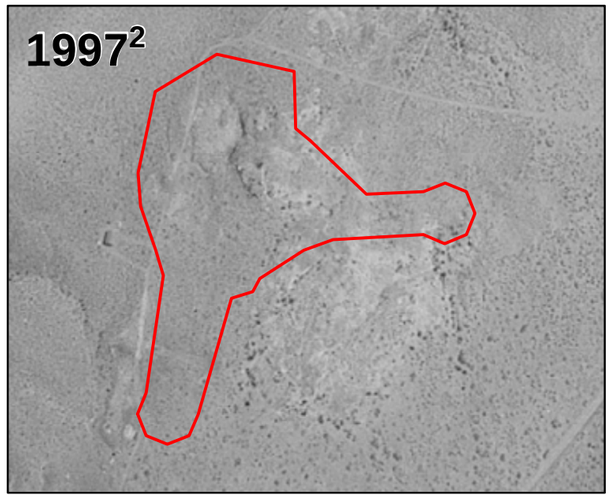

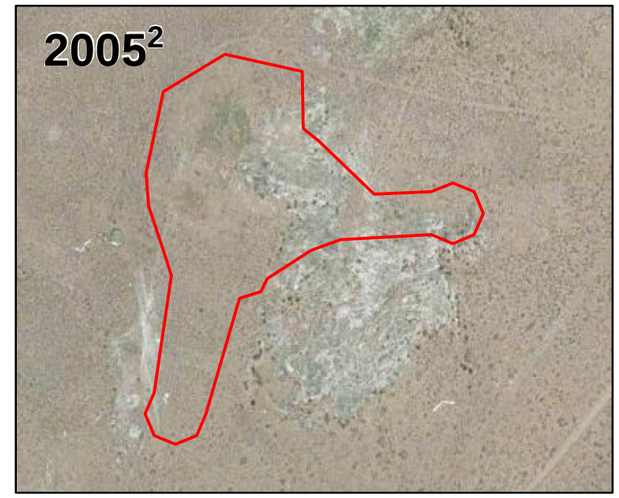

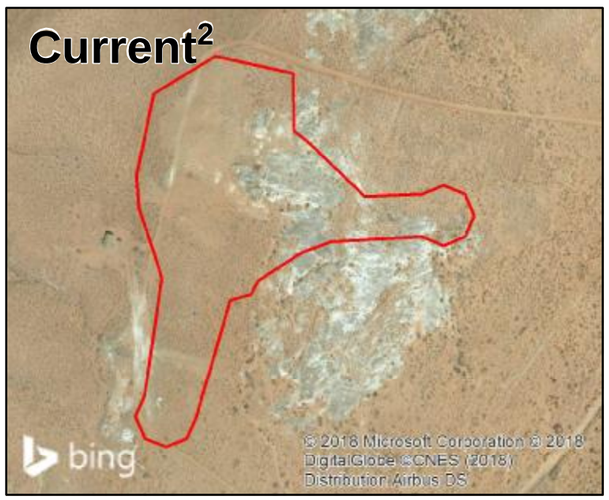

NAVAJO NATION
AUM Environmental Response Trust-First Phase

LEGEND

Harvey Blackwater No. 3 Claim Boundary

Approximate Site Location, not georeferenced

NOTES:

1. Image is not georeferenced, scale not available.

2. Image is georeferenced. Scale bar applies to these image frames only.

REFERENCES:

Coordinate System: NAD 1983 UTM Zone 12N

Historical Aerial Imagery downloaded from https://earthexplorer.usgs.gov/ on January 23, 2017.

Current image accessed from BING Maps imagery web mapping service (http://www.bing.com/maps) on 06/2018.

N
W E
S

0 500 1,000
Feet

TITLE:

Historical Aerial Photograph Comparison

PROJECT:

Removal Site Evaluation
Harvey Blackwater No. 3 Mine Site

DATE: 6/26/2018

DOCUMENT NAME: Removal Site Evaluation Report

Stantec

AUTHOR: EDZ

REVIEWER: CBB

FIGURE: 3-1a

Document Path: U:\233001213\03_data\gis_cad_MXDs\RSE\RSE_HarveyBlackwater\RSE_HarveyBlackwater_Historical_Aerial_Compilation_11x17_L_20180618.mxd

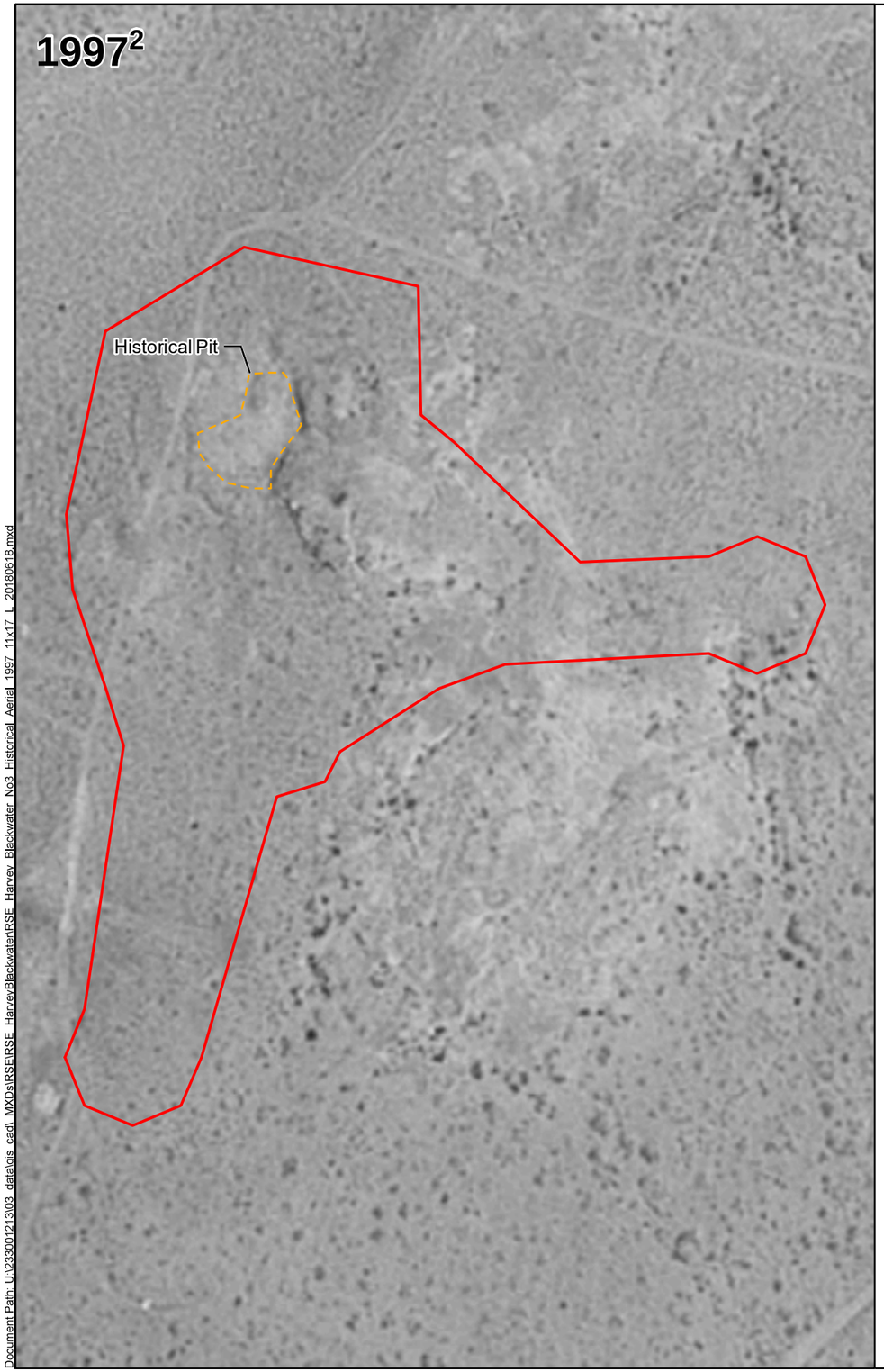

NAVAJO NATION
AUM Environmental Response Trust-First Phase

LEGEND

- Historical Pit[1]
- Graded / Disturbed Reclaimed Area
- Claim Boundary

NOTE:

1. Historical pit location should be considered approximate. Location shifted to the west compared to Figure 2-2 based on the visible highwall on the 1997 photograph.

REFERENCES:

1. Coordinate System: NAD 1983 UTM Zone 12N

2. 1997 aerial image downloaded from https://earthexplorer.usgs.gov/ (01/2017) and georeferenced using current image from BING (03/2016).

3. Current image accessed from BING Maps imagery web mapping service (http://www.bing.com/maps) on 06/2018.

N W E S

0 200 400
Feet

TITLE:
1997 Historical Aerial Photograph Comparison

PROJECT:
Removal Site Evaluation
Harvey Blackwater No. 3 Mine Site

DATE: 6/18/2018

DOCUMENT NAME: Removal Site Evaluation Report

Stantec

AUTHOR: CBB
REVIEWER: EDZ

FIGURE: 3-1b

Document Path: U:\233001213\03_data\gis_cad_MXDs\RSE\RSE_Harvey\Blackwater\RSE_Harvey_Blackwater_No3_Historical_Aerial_1997_11x17_L_20180618.mxd

NAVAJO NATION
AUM Environmental Response Trust-First Phase

LEGEND

Potential Background Reference Area

Claim Boundary

REFERENCES:
Coordinate System: NAD 1983 UTM Zone 12N

Basemap image accessed from BING Maps imagery web mapping service (http://www.bing.com/maps) on 09/2018.

N
W E
S

0 250 500
Feet

TITLE:
Potential Background Reference Areas

PROJECT:
Removal Site Evaluation
Harvey Blackwater No. 3 Mine Site

DATE:	DOCUMENT NAME:
9/11/2018	Removal Site Evaluation Report
Stantec	AUTHOR: CBB / REVIEWER: EDZ
	FIGURE: 3-2

Document Path: U:\233001213\03_data\gis_cad_MXDs\RSE\RSE_HarveyBlackwater\RSE_HarveyBlackwater_Background_Areas_11x17_L_20180618.mxd

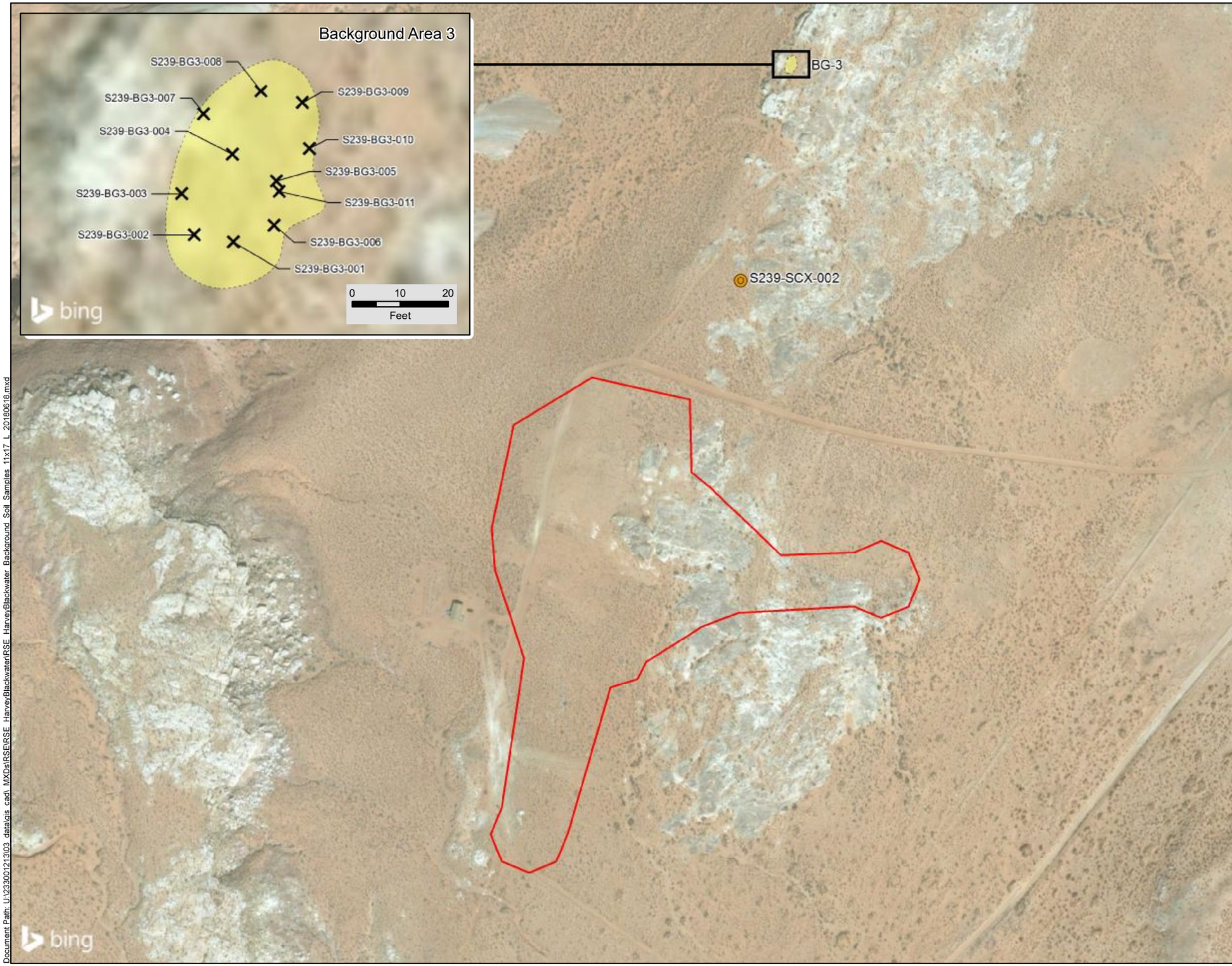

NAVAJO NATION
AUM Environmental Response Trust-First Phase

LEGEND

- Surface Sample Location
- Subsurface Borehole Sample Location for Background Reference
- Background Reference Area
- Claim Boundary

REFERENCES:
Coordinate System: NAD 1983 UTM Zone 12N

Basemap image accessed from BING Maps imagery web mapping service (http://www.bing.com/maps) on 09/2018.

N
W E
S

0 250 500
Feet

TITLE:
Background Reference Area - Sample Locations

PROJECT:
Removal Site Evaluation
Harvey Blackwater No. 3 Mine Site

DATE: 9/11/2018	DOCUMENT NAME: Removal Site Evaluation Report	
Stantec	AUTHOR: CBB	REVIEWER: EDZ
	FIGURE: 3-3	

Document Path: U:\233001213\03_data\gis_cad_MXDs\RSE\RSE_HarveyBlackwater\RSE_HarveyBlackwater_Background_Soil_Samples_11x17_L_20180618.mxd

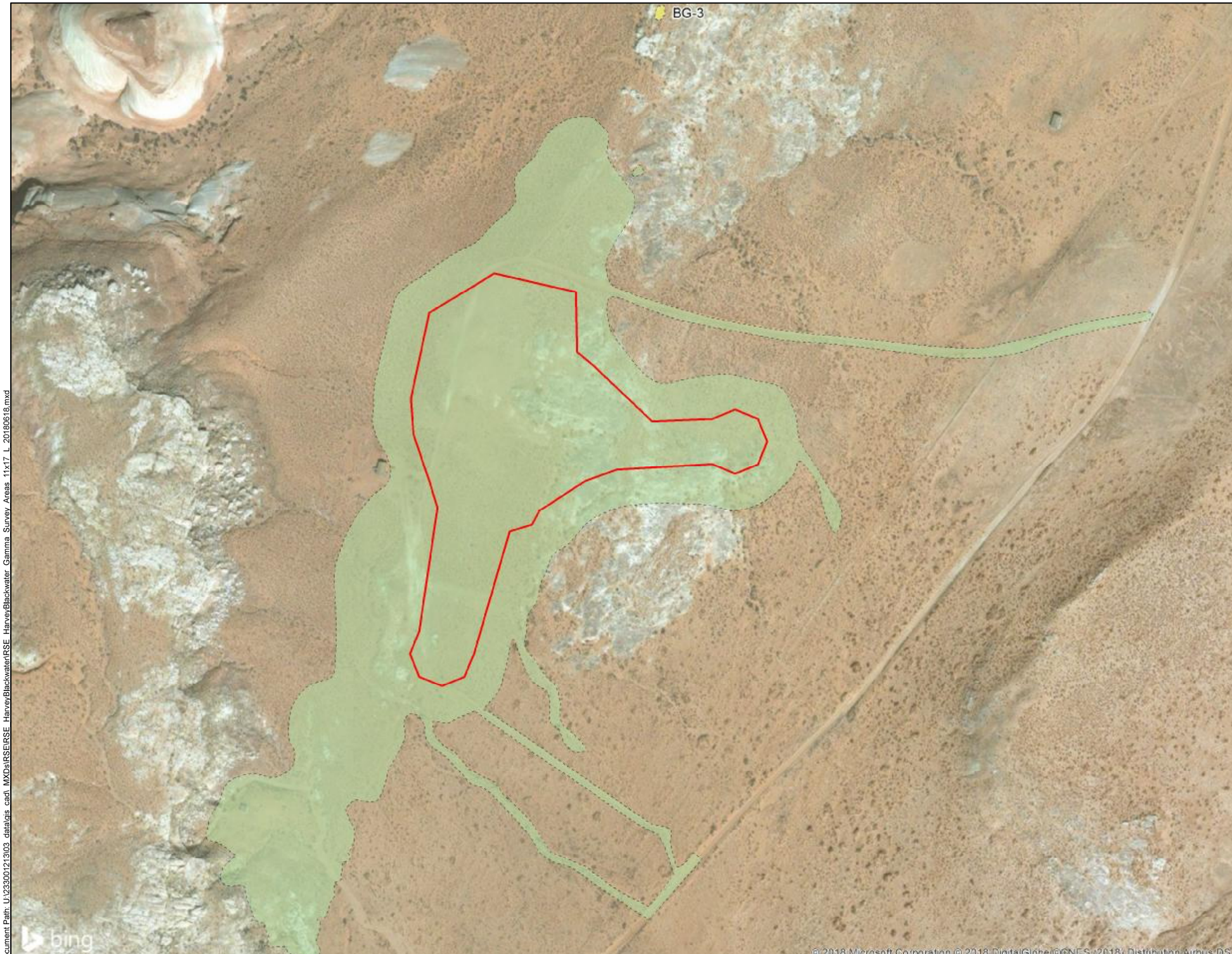

NAVAJO NATION
AUM Environmental Response Trust-First Phase

LEGEND

- Background Reference Area
- Gamma Radiation Survey Area
- Claim Boundary

NOTE:
Gamma survey area is approximately 39.2 acres

REFERENCES:
Coordinate System: NAD 1983 UTM Zone 12N

Basemap image accessed from BING Maps imagery web mapping service (http://www.bing.com/maps) on 09/2018.

N
W E
S

0 300 600
Feet

TITLE:
Gamma Radiation Survey Area

PROJECT:
Removal Site Evaluation
Harvey Blackwater No. 3 Mine Site

DATE: 9/11/2018

DOCUMENT NAME: Removal Site Evaluation Report

Stantec

AUTHOR: CBB
REVIEWER: EDZ

FIGURE: 3-4

Document Path: U:\233001213\03_data\gis_cad_MXDs\RSE\RSE_HarveyBlackwater\RSE_HarveyBlackwater_Gamma_Survey_Areas_11x17_L_20180618.mxd

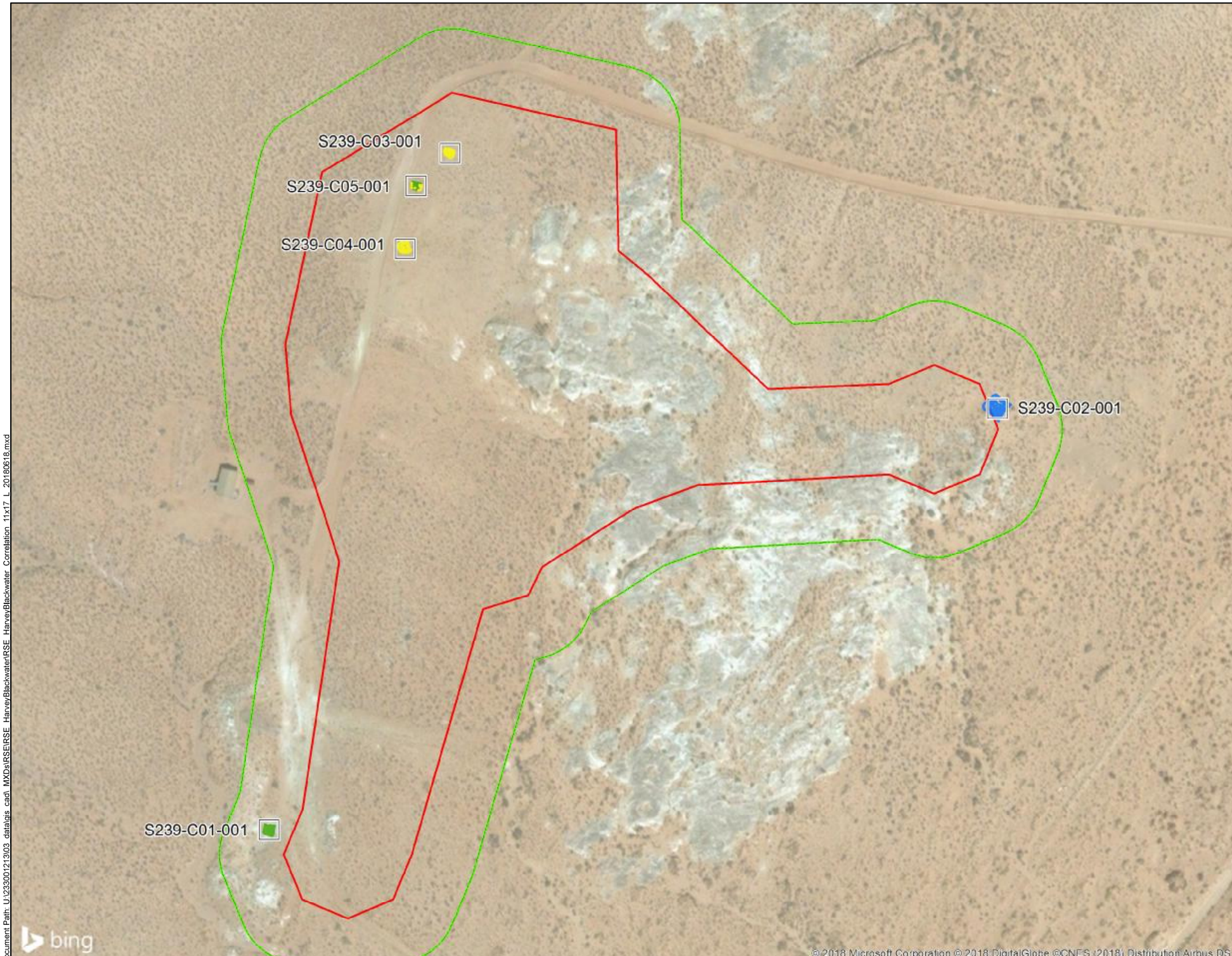

NAVAJO NATION
AUM Environmental Response Trust-First Phase

LEGEND

S239-C01-001 Correlation Location (30' x 30')

Claim Boundary

100-Foot Claim Buffer

Gamma Survey

Counts per Minute (CPM)

- 4,427 - 9,975 (Minimum to BG-3 UTL)
- 9,976 - 19,950 (>BG-3 UTL to 2x BG-3 UTL)
- 19,951 - 41,460 (>2x BG-3 UTL to Maximum)

NOTE:
Each correlation sample consists of five grab samples collected from 0.0 - 0.5 feet below ground surface, composited together for laboratory analysis.

REFERENCES:
Coordinate System: NAD 1983 UTM Zone 12N

Basemap image accessed from BING Maps imagery web mapping service (http://www.bing.com/maps) on 09/2018.

N W E S

0 150 300
Feet

TITLE:
Gamma Correlation Study Locations

PROJECT:
Removal Site Evaluation
Harvey Blackwater No. 3 Mine Site

DATE: 9/11/2018

DOCUMENT NAME: Removal Site Evaluation Report

Stantec

AUTHOR: CBB

REVIEWER: EDZ

FIGURE: 3-5

Document Path: U:\233001213\03_data\gis_cad_MXDs\RSE\RSE_HarveyBlackwater\RSE_HarveyBlackwater_Correlation_11x17_L_20180618.mxd

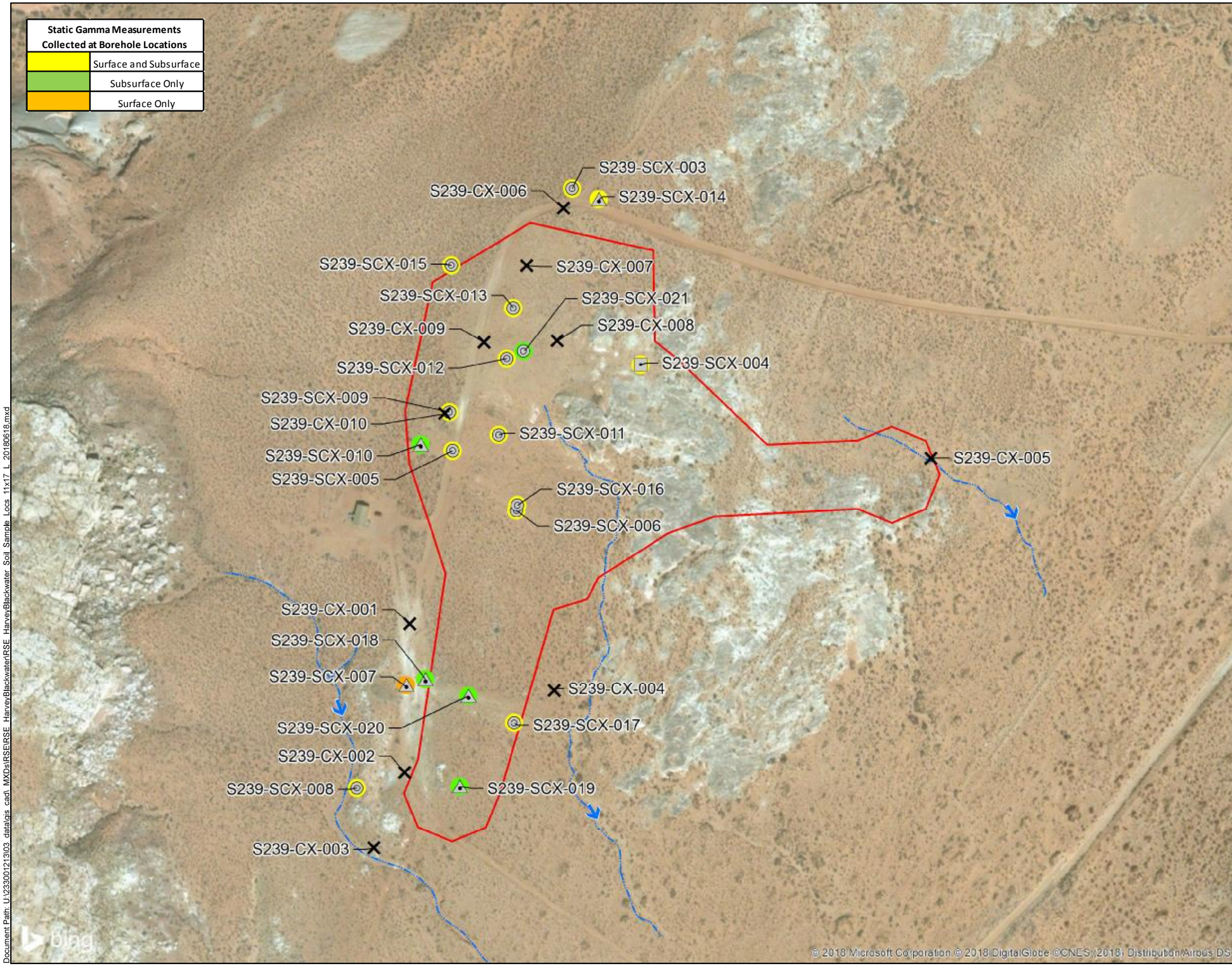

NAVAJO NATION
AUM Environmental Response Trust-First Phase

LEGEND

- Surface Sample Location
- Borehole Location - Surface and Subsurface Samples
- Borehole Location - Surface Samples Only
- Borehole Location - Static Gamma Data Only
- Flow Direction
- Drainage
- Claim Boundary

NOTES:

Surface soil samples range from 0.0 - 0.5 feet below ground surface (ft bgs)

Subsurface soil samples range from 0.5 - 4.0 ft bgs

Static gamma measurements range from 0.0 - 9.0 ft bgs

REFERENCES:

Coordinate System: NAD 1983 UTM Zone 12N

Basemap image accessed from BING Maps imagery web mapping service (http://www.bing.com/maps) on 09/2018.

N W E S

0 200 400
Feet

TITLE:
Site Characterization Surface and Subsurface Sample Locations

PROJECT:
Removal Site Evaluation
Harvey Blackwater No. 3 Mine Site

DATE: 9/12/2018

DOCUMENT NAME: Removal Site Evaluation Report

Stantec

AUTHOR: CBB

REVIEWER: EDZ

FIGURE: 3-6a

Document Path: U:\233001213\03_data\gis_cad_MXDs\RSE\RSE_HarveyBlackwater\RSE_HarveyBlackwater_Soil_Sample_Locs_11x17_L_20180618.mxd

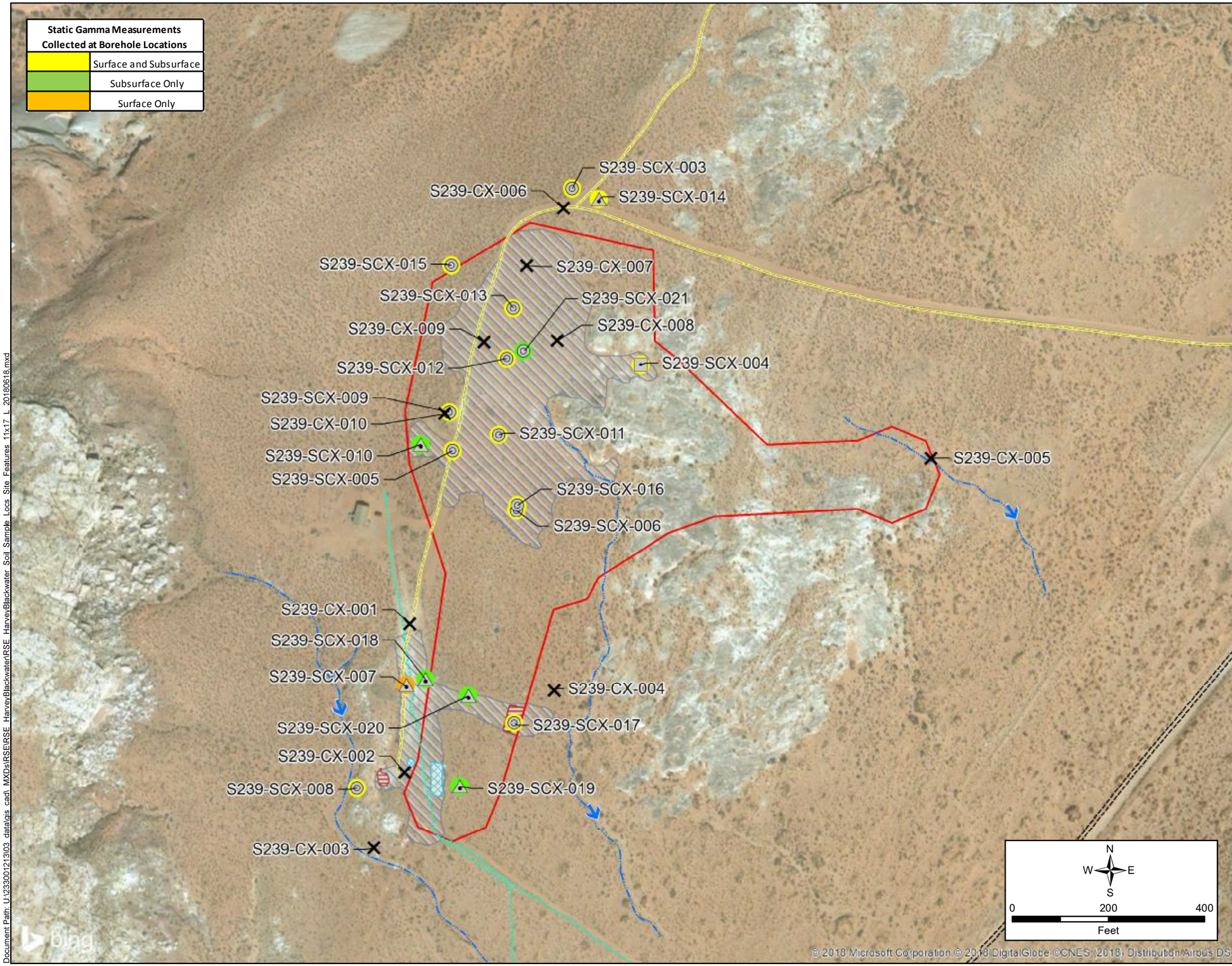

NAVAJO NATION
AUM Environmental Response Trust-First Phase

LEGEND

- Surface Sample Location
- Borehole Location - Surface and Subsurface Samples
- Borehole Location - Surface Samples Only
- Borehole Location - Static Gamma Data Only
- Flow Direction
- Drainage
- Potential Haul Road
- Road
- Water Line
- Graded / Disturbed Reclaimed Area
- Potential Waste Pile
- Water Line Excavation / Debris Pile
- Claim Boundary

NOTES:

Surface soil samples range from 0.0 - 0.5 feet below ground surface (ft bgs)

Subsurface soil samples range from 0.5 - 4.0 ft bgs

Static gamma measurements range from 0.0 - 9.0 ft bgs

REFERENCES:

Coordinate System: NAD 1983 UTM Zone 12N

Basemap image accessed from BING Maps imagery web mapping service (http://www.bing.com/maps) on 06/2018.

TITLE:
Site Characterization
Mining Features and Surface and Subsurface Sample Locations

PROJECT:
Removal Site Evaluation
Harvey Blackwater No. 3 Mine Site

DATE:	DOCUMENT NAME:	
6/19/2018	Removal Site Evaluation Report	
Stantec	AUTHOR: CBB	REVIEWER: EDZ
	FIGURE: 3-6b	

Document Path: U:\233001213\03_data\gis_cad_MXDs\RSE\RSE_HarveyBlackwater\RSE_HarveyBlackwater_Soil_Sample_Locs_Site_Features_11x17_L_20180618.mxd

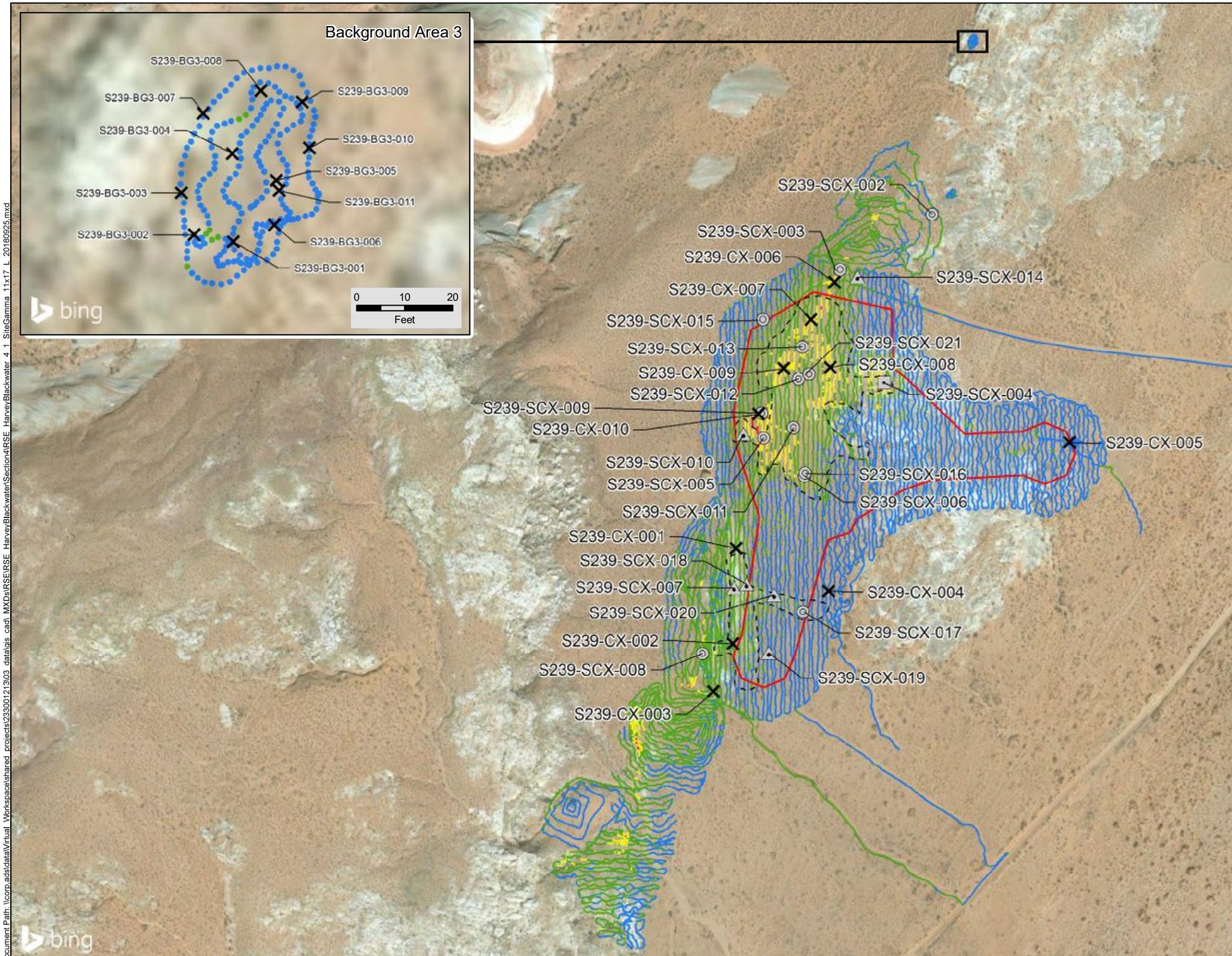

NAVAJO NATION
AUM Environmental Response Trust-First Phase

LEGEND

- Surface Sample Location
- Borehole Location - Surface and Subsurface Samples
- Borehole Location - Surface Samples Only
- Borehole Location - Static Gamma Data Only
- Graded / Disturbed Reclaimed Area
- Claim Boundary

Gamma Survey

Counts per Minute (CPM)

- 4,427 - 9,975 (Minimum to BG-3 IL)
- 9,976 - 19,950 (>BG-3 IL to 2x BG-3 IL)
- 19,951 - 49,875 (>2x BG-3 IL to 5x BG-3 IL)
- 49,876 - 99,750 (>5x BG-3 IL to 10x BG-3 IL)
- 99,751 - 163,071 (>10x BG-3 IL to Maximum)

REFERENCES:

Coordinate System: NAD 1983 UTM Zone 12N

Basemap image accessed from BING Maps imagery web mapping service (http://www.bing.com/maps) on 09/2018.

N W E S

0 350 700
Feet

TITLE:

Gamma Radiation Survey Results

PROJECT:

Removal Site Evaluation
Harvey Blackwater No. 3 Mine Site

DATE: 9/27/2018	DOCUMENT NAME: Removal Site Evaluation Report	
Stantec	AUTHOR: CBB	REVIEWER: EDZ
	FIGURE: 4-1	

Document Path: \\corp.ads\data\Virtual_Workspace\shared_projects\233001213\03_data\gis_cad_MXDs\RSE\RSE_Harvey\Blackwater\Section4\RSE_Harvey\Blackwater_4_1_SiteGamma_11x17_L_20180925.mxd

Correlation Data		
Sample ID	Ra-226 (pCi/g)	Mean Gamma Count Rate (cpm)[1]
S239-C01-001	1.81	13,124
S239-C02-001	0.5	7,903
S239-C03-001	8.1	32,624
S239-C04-001	4.67	24,551
S239-C05-001	4.42	19,387

[1] Average gamma count rate for a correlation

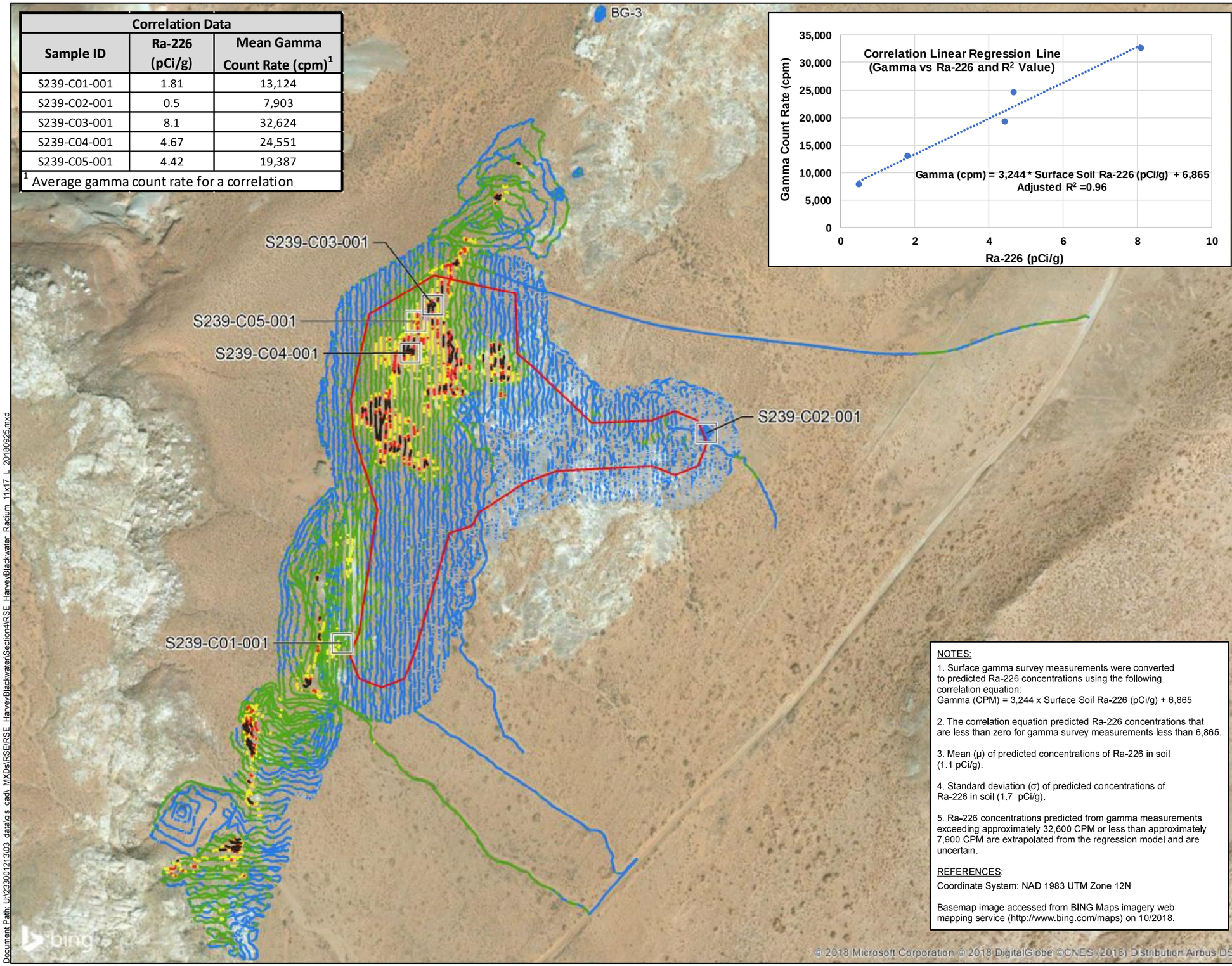

NOTES:

1. Surface gamma survey measurements were converted to predicted Ra-226 concentrations using the following correlation equation:
Gamma (CPM) = 3,244 x Surface Soil Ra-226 (pCi/g) + 6,865

2. The correlation equation predicted Ra-226 concentrations that are less than zero for gamma survey measurements less than 6,865.

3. Mean (μ) of predicted concentrations of Ra-226 in soil (1.1 pCi/g).

4. Standard deviation (σ) of predicted concentrations of Ra-226 in soil (1.7 pCi/g).

5. Ra-226 concentrations predicted from gamma measurements exceeding approximately 32,600 CPM or less than approximately 7,900 CPM are extrapolated from the regression model and are uncertain.

REFERENCES:

Coordinate System: NAD 1983 UTM Zone 12N

Basemap image accessed from BING Maps imagery web mapping service (http://www.bing.com/maps) on 10/2018.

NAVAJO NATION
AUM Environmental Response Trust-First Phase

LEGEND

- S239-C01-001 Correlation Location (30' x 30')
- Claim Boundary

Predicted Ra-226 Concentration[1](pCi/g)

- Less than 0[2]
- 0 - 1.1 (μ)[3]
- 1.2- 2.8 (μ + 1σ[4])
- 2.9 - 4.5 (μ + 2σ)
- 4.6 - 6.2 (μ + 3σ)
- 6.3 - 48.2

N W E S

0 300 600
Feet

TITLE:
Predicted Concentrations of Ra-226 in Soil Using the Correlation Equation

PROJECT:
Removal Site Evaluation
Harvey Blackwater No. 3 Mine Site

DATE: 10/1/2018

DOCUMENT NAME: Removal Site Evaluation Report

Stantec

AUTHOR: CBB

REVIEWER: EDZ

FIGURE: 4-2a

Document Path: U:\233001213\03_data\gis_cad_MXDs\RSE\RSE_HarveyBlackwater\Section4\RSE_HarveyBlackwater_Radium_11x17_L_20180925.mxd

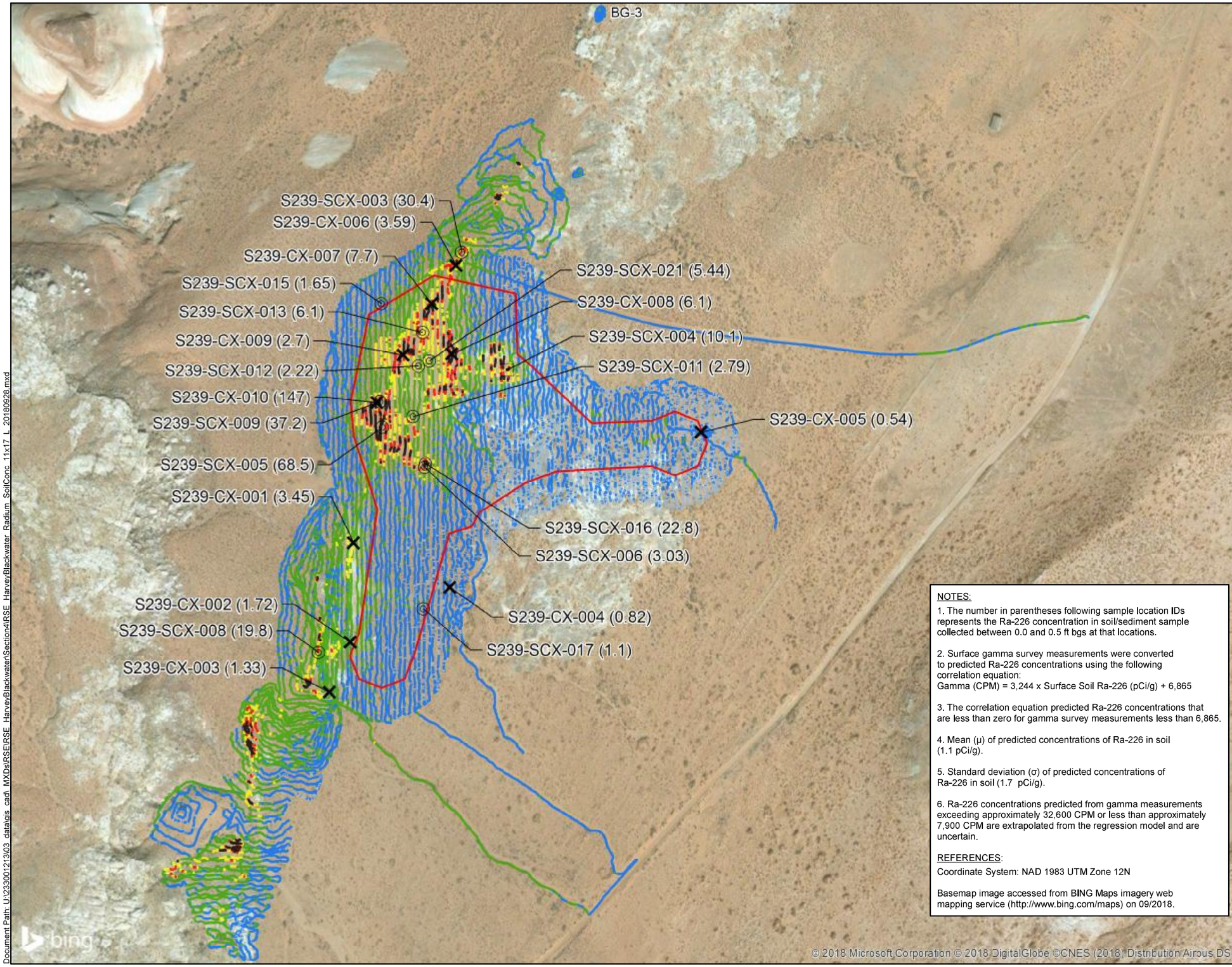

NAVAJO NATION
AUM Environmental Response Trust-First Phase

LEGEND

- Surface Sample Location
- Borehole Location - Surface and Subsurface Samples
- Borehole Location - Surface Samples Only
- Claim Boundary

Predicted Ra-226 Concentration[2](pCi/g)

- Less than 0[3]
- 0 - 1.1 (μ)[4]
- 1.2- 2.8 (μ + 1σ[5])
- 2.9 - 4.5 (μ + 2σ)
- 4.6 - 6.2 (μ + 3σ)
- 6.3 - 48.2

N W E S

0 300 600
Feet

NOTES:

1. The number in parentheses following sample location IDs represents the Ra-226 concentration in soil/sediment sample collected between 0.0 and 0.5 ft bgs at that locations.

2. Surface gamma survey measurements were converted to predicted Ra-226 concentrations using the following correlation equation:
Gamma (CPM) = 3,244 x Surface Soil Ra-226 (pCi/g) + 6,865

3. The correlation equation predicted Ra-226 concentrations that are less than zero for gamma survey measurements less than 6,865.

4. Mean (μ) of predicted concentrations of Ra-226 in soil (1.1 pCi/g).

5. Standard deviation (σ) of predicted concentrations of Ra-226 in soil (1.7 pCi/g).

6. Ra-226 concentrations predicted from gamma measurements exceeding approximately 32,600 CPM or less than approximately 7,900 CPM are extrapolated from the regression model and are uncertain.

REFERENCES:

Coordinate System: NAD 1983 UTM Zone 12N

Basemap image accessed from BING Maps imagery web mapping service (http://www.bing.com/maps) on 09/2018.

TITLE:
Predicted Ra-226 Concentrations in Soil Compared to Ra-226 Concentrations in Soil/Sediment

PROJECT:
Removal Site Evaluation
Harvey Blackwater No. 3 Mine Site

DATE: 9/28/2018

DOCUMENT NAME: Removal Site Evaluation Report

Stantec

AUTHOR: CBB

REVIEWER: EDZ

FIGURE: 4-2b

Document Path: U:\233001213\03_data\gis_cad_MXDs\RSE\RSE_Harvey\Blackwater\Section4\RSE_HarveyBlackwater_Radium_SoilConc_11x17_L_20180928.mxd

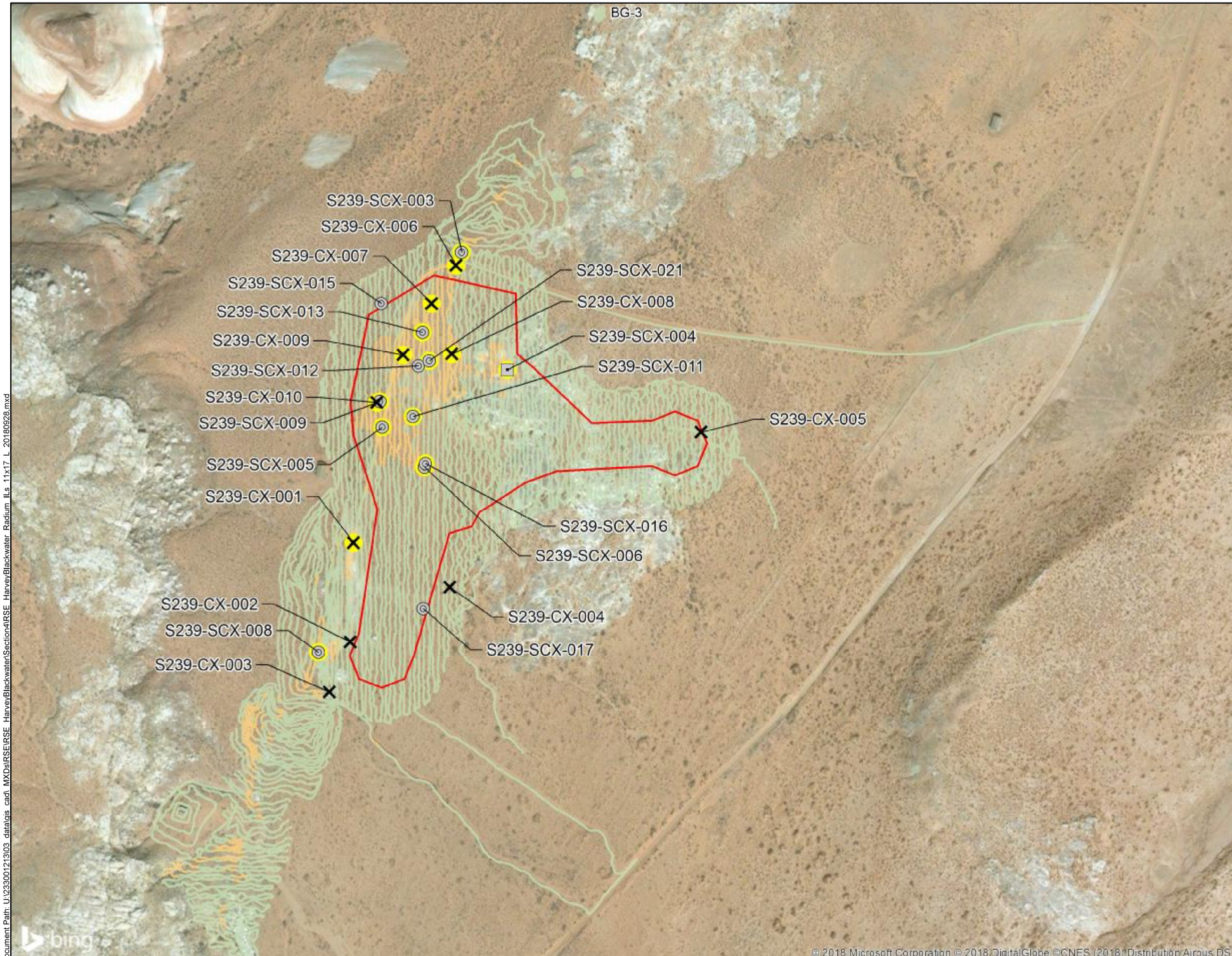

NAVAJO NATION
AUM Environmental Response Trust-First Phase

LEGEND

- Surface Sample Location
- Borehole Location - Surface and Subsurface Samples
- Borehole Location - Surface Samples Only
- Ra-226 IL Exceedance in Surface Soil
- Claim Boundary

Predicted Ra-226 Concentration (pCi/g)

- IL Not Exceeded Survey Area: -0.8 - 2.47
- IL Exceeded Survey Area: 2.48 - 48.2

NOTES:

1. Surface gamma survey measurements were converted to predicted Ra-226 concentrations using the following correlation equation: Gamma (cpm) = 3,244 x Surface Soil Ra-226 (pCi/g) + 6,865

2. Refer to Figure 3-4 for survey area delineation.

REFERENCES:

Coordinate System: NAD 1983 UTM Zone 12N

Basemap image accessed from BING Maps imagery web mapping service (http://www.bing.com/maps) on 09/2018.

N W E S

0 300 600
Feet

TITLE:

Predicted Ra-226 Concentrations in Soil Compared to Ra-226 ILs

PROJECT:

Removal Site Evaluation
Harvey Blackwater No. 3 Mine Site

DATE: 9/28/2018	DOCUMENT NAME: Removal Site Evaluation Report	
Stantec	AUTHOR: CBB	REVIEWER: EDZ
	FIGURE: 4-2c	

Document Path: U:\233001213\03_data\gis_cad_MXDs\RSE\RSE_HarveyBlackwater\Section4\RSE_HarveyBlackwater_Radium_ILs_11x17_L_20180928.mxd

Soil and Sediment Investigation Levels (IL)	
Analyte (Units)	**Investigation Level**
Metals (mg/kg)	
Arsenic (As)	17.8
Molybdenum (Mo)	1.45
Selenium (Se)	NA
Uranium (U)	2.23
Vanadium (V)	14
Radionuclides (pCi/g)	**Investigation Level**
Radium-226 (Ra)	2.47

NA - An investigation level for selenium was not identified because selenium sample results in BG-3 were all non-detect.

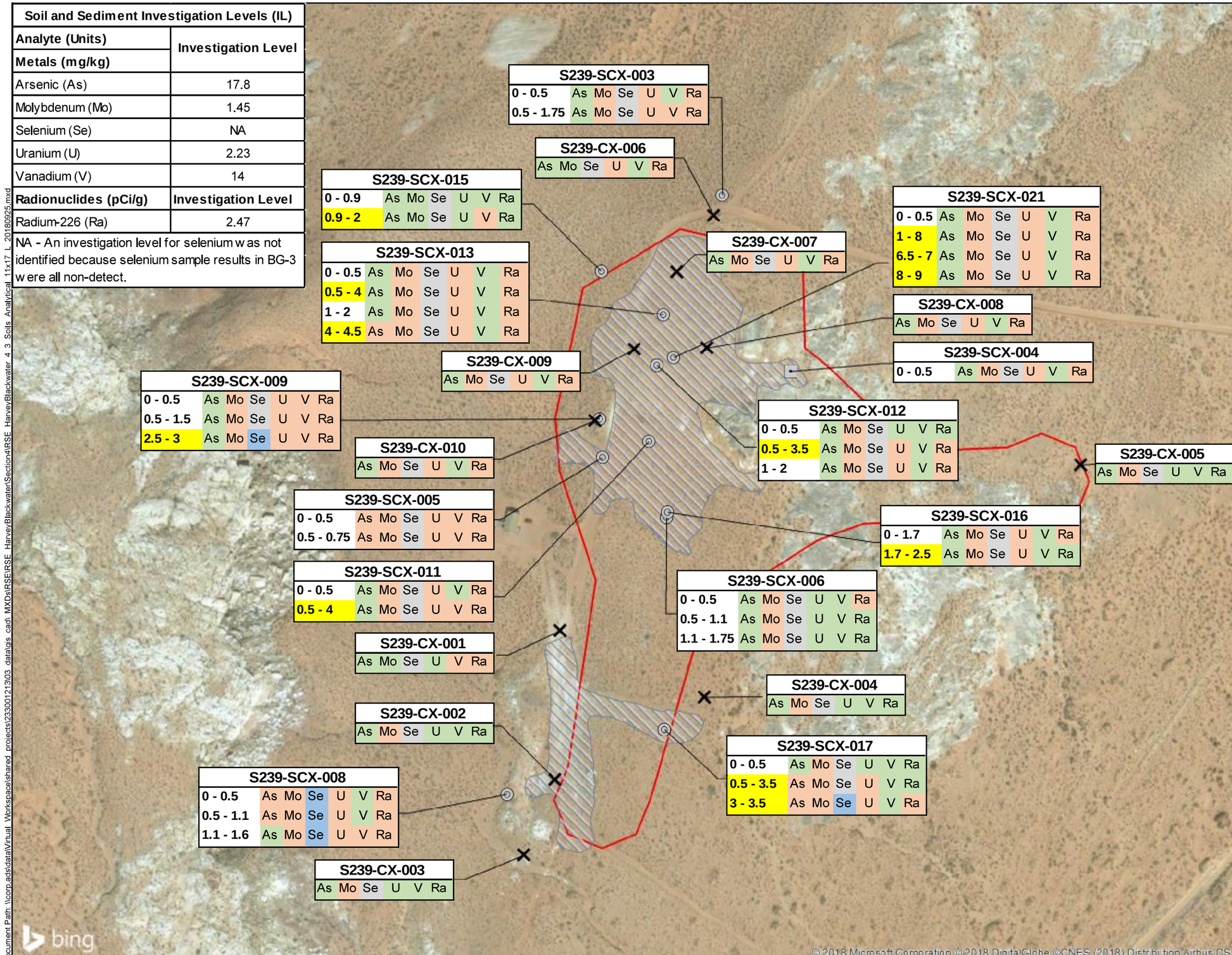

NAVAJO NATION
AUM Environmental Response Trust-First Phase

LEGEND

- Surface Sample Location
- Borehole Location - Surface and Subsurface Samples
- Borehole Location - Surface Samples Only
- Graded / Disturbed Reclaimed Area
- Claim Boundary
- Investigation Level Not Exceeded
- Investigation Level Exceeded
- Analyte Detected - No Investigation Level
- Non-detect - No Investigation Level[2]

NOTES:

1. Sample intervals (e.g., 0 - 0.5) are in ft bgs.
2. No Investigation Level – Analyte was not detected in corresponding background reference area.
3. Highlighted sample intervals are partially or completely within bedrock.

REFERENCES:

Coordinate System: NAD 1983 UTM Zone 12N

Basemap image accessed from BING Maps imagery web mapping service (http://www.bing.com/maps) on 09/2018.

N W E S

0 200 400
Feet

TITLE:
Surface and Subsurface Metals and Ra-226 Analytical Results

PROJECT:
Removal Site Evaluation
Harvey Blackwater No. 3 Mine Site

DATE: 9/27/2018

DOCUMENT NAME: Removal Site Evaluation Report

AUTHOR: CBB

REVIEWER: EDZ

Stantec

FIGURE: 4-3

Document Path: \\corp.ads\data\Virtual_Workspace\shared_projects\233001213\03_data\gis_cad_MXDs\RSE\RSE_Harvey\Blackwater\Section4\RSE_Harvey\Blackwater_4_3_Soils_Analytical_11x17_L_20180925.mxd

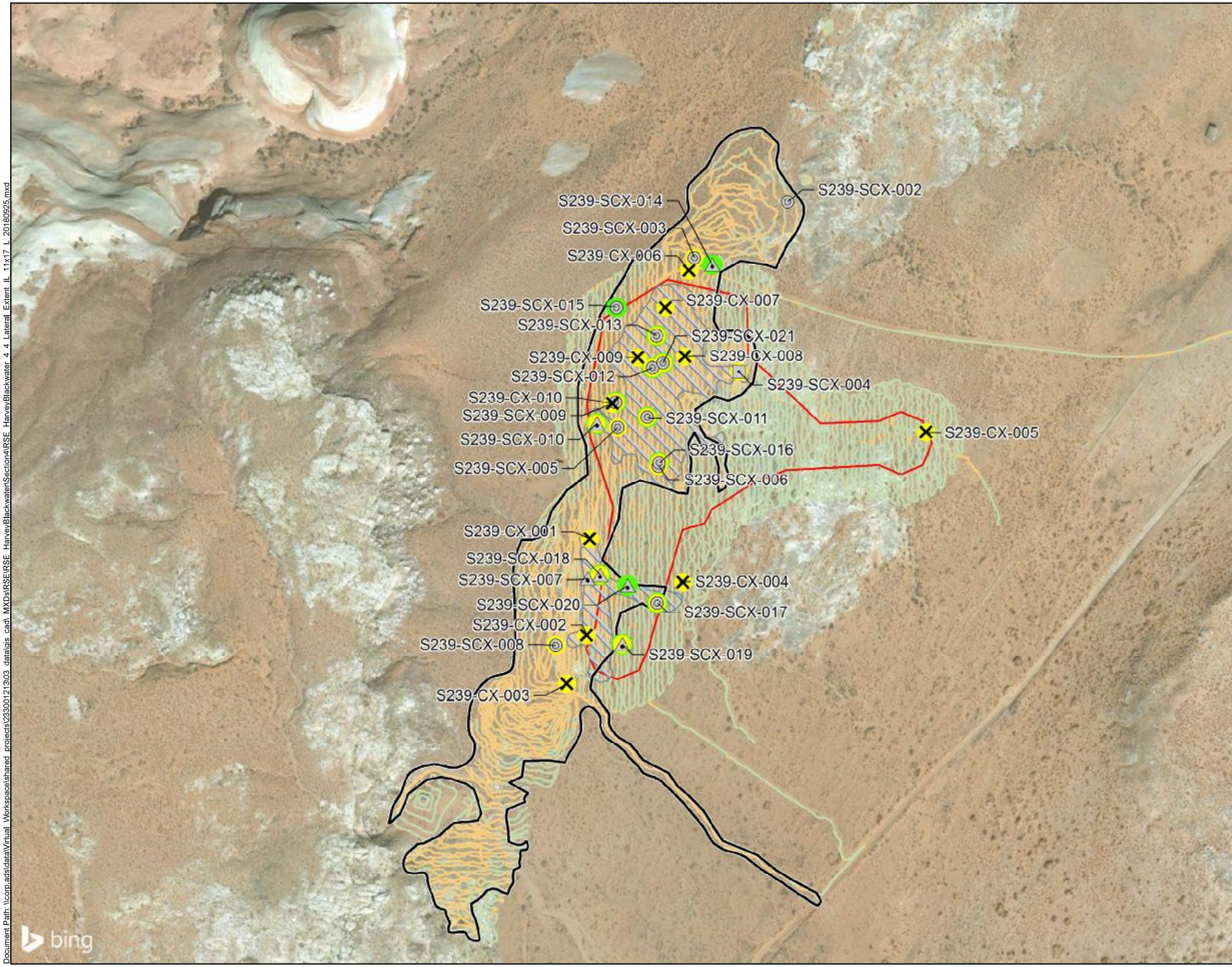

NAVAJO NATION
AUM Environmental Response Trust-First Phase

LEGEND

- Surface Sample Location
- Borehole Location - Surface and Subsurface Samples
- Borehole Location - Surface Samples Only
- Borehole Location - Static Gamma Data Only
- IL Exceedance in Unconsolidated Material at Location
- IL Exceedance in Bedrock in Borehole
- Approximate Area where Surface Gamma IL is Exceeded (20.1 acres)
- Graded / Disturbed Reclaimed Area
- Claim Boundary

Gamma Survey
Counts per Minute (CPM)
- 4,427 - 9,975 (IL Not Exceeded)
- 9,976 - 163,071 (IL Exceeded)

REFERENCES:
Coordinate System: NAD 1983 UTM Zone 12N

Basemap image accessed from BING Maps imagery web mapping service (http://www.bing.com/maps) on 09/2018.

N
W E
S

0 300 600
Feet

TITLE:
Lateral Extent of Surface and Subsurface IL Exceedances

PROJECT:
Removal Site Evaluation
Harvey Blackwater No. 3 Mine Site

DATE: 9/27/2018

DOCUMENT NAME: Removal Site Evaluation Report

Stantec

AUTHOR: CBB
REVIEWER: EDZ

FIGURE: 4-4

Document Path: \\corp.ads\data\Virtual_Workspace\shared_projects\233001213\03_data\gis_cad_MXDs\RSE\RSE_HarveyBlackwater\Section4\RSE_HarveyBlackwater_4_4_Lateral_Extent_IL_11x17_L_20180925.mxd

NOTES:

1. Range of IL exceedance in unconsolidated material selected based on unconsolidated material analytical results, subsurface gamma measurements, and subsurface observations.

2. Subsurface static gamma measurements are compared to the subsurface static gamma ILs.

3. NA = Not Applicable, subsurface soil does not exceed IL.

4. uk = Unknown, no confirmation if refusal in hand augers was on bedrock.

5. Historical pit location should be considered approximate. Location shifted to the west compared to Figure 2-2 based on the visible highwall on the 1997 photograph.

REFERENCES:

Coordinate System: NAD 1983 UTM Zone 12N

Basemap image accessed from BING Maps imagery web mapping service (http://www.bing.com/maps) on 10/2018.

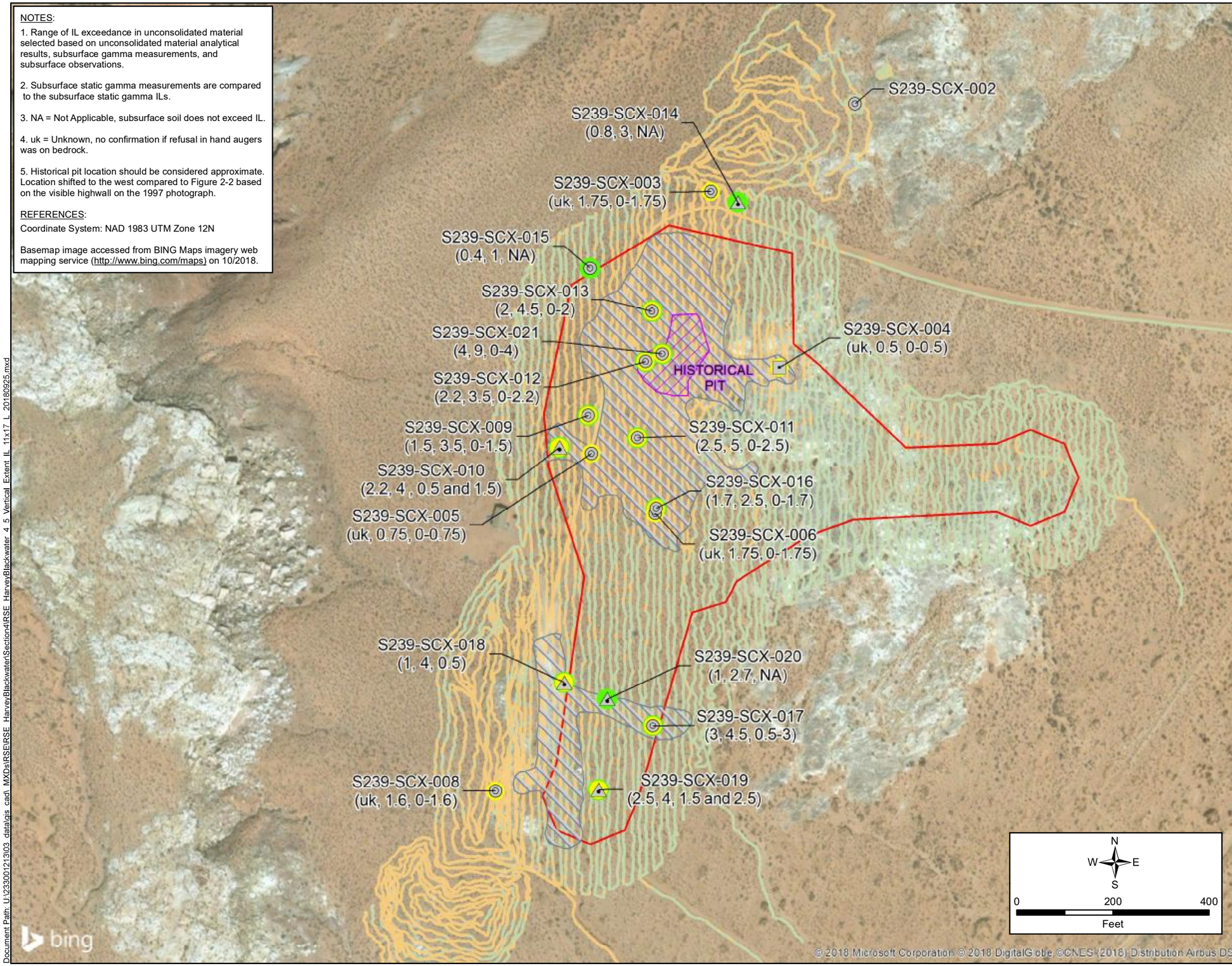

NAVAJO NATION
AUM Environmental Response Trust-First Phase

LEGEND

S239-SCX-013 (2, 4.5, 0-2) — Sample ID (Depth of Bedrock, Borehole Depth, Depth Range of IL Exceedance in Unconsolidated Material or Depth of Gamma IL Exceedance in Unconsolidated Material)

- Borehole Location - Surface and Subsurface Samples
- Borehole Location - Surface Samples Only
- Borehole Location - Static Gamma Data Only
- IL Exceedance in Unconsolidated Material at Location
- IL Exceedance in Bedrock in Borehole
- Historical Pit[5]
- Graded / Disturbed Reclaimed Area
- Claim Boundary

Gamma Survey

Counts per Minute (CPM)

- 4,427 - 9,975 (IL Not Exceeded)
- 9,976 - 163,071 (IL Exceeded)

TITLE: Vertical Extent of IL Exceedances in Unconsolidated Material

PROJECT: Removal Site Evaluation Harvey Blackwater No. 3 Mine Site

DATE: 10/1/2018

DOCUMENT NAME: Removal Site Evaluation Report

Stantec

AUTHOR: CBB

REVIEWER: EDZ

FIGURE: 4-5

Document Path: U:\233001213\03_data\gis_cad_MXDs\RSE\RSE_HarveyBlackwater\Section4\RSE_HarveyBlackwater_4_5_Vertical_Extent_IL_11x17_L_20180925.mxd

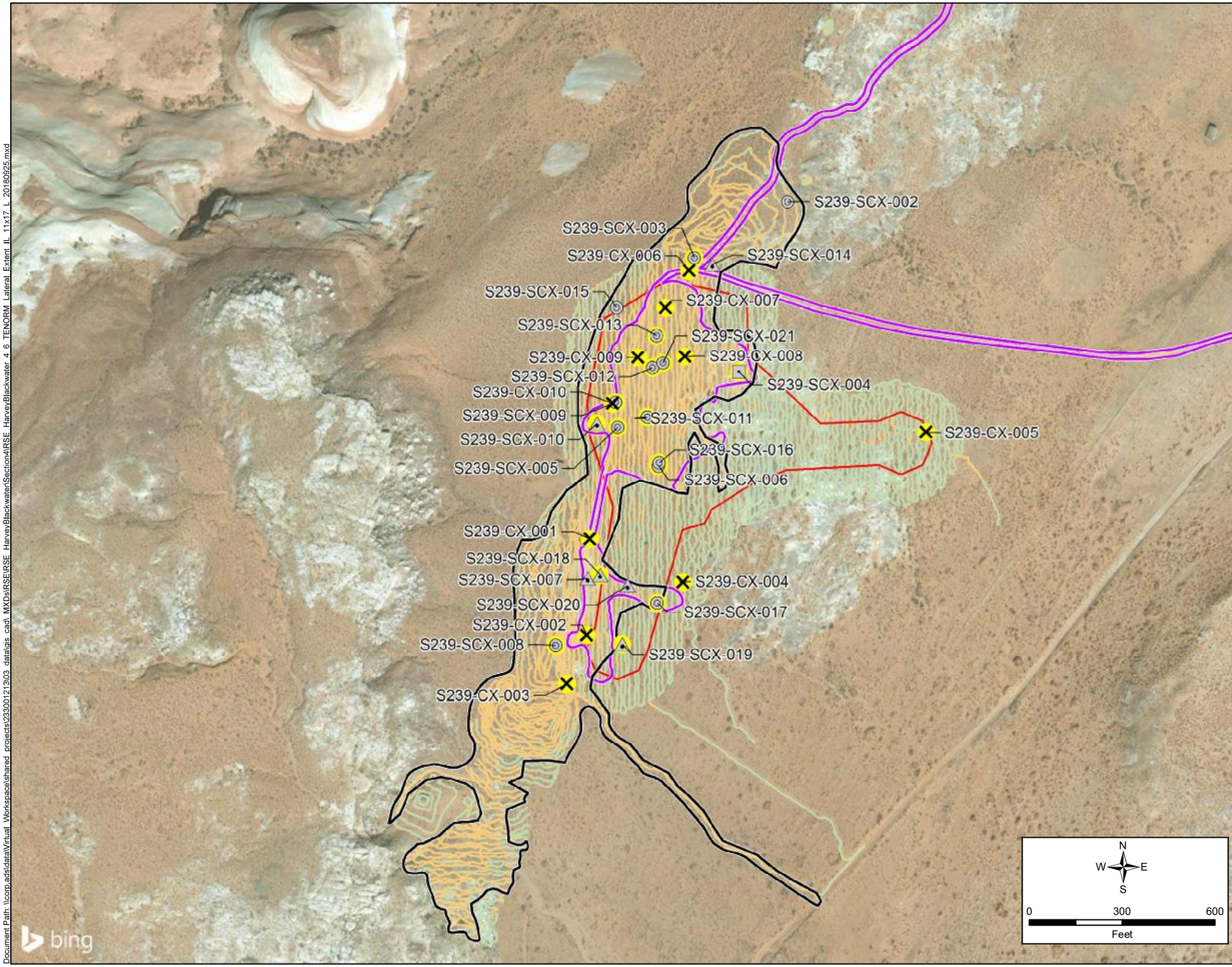

NAVAJO NATION
AUM Environmental Response Trust-First Phase

LEGEND

- Surface Sample Location
- Borehole Location - Surface and Subsurface Samples
- Borehole Location - Surface Samples Only
- Borehole Location - Static Gamma Data Only
- IL Exceedance in Unconsolidated Material at Location
- Approximate Area where Surface Gamma IL is Exceeded (20.1 acres)
- TENORM (7.5 acres)
- Claim Boundary

Gamma Survey[1]

Counts per Minute (CPM)

- 4,427 - 9,975 (IL Not Exceeded)
- 9,976 - 163,071 (IL Exceeded)

NOTES:

1. Gamma survey area is approximately 39.2 acres

REFERENCES:

Coordinate System: NAD 1983 UTM Zone 12N

Basemap image accessed from BING Maps imagery web mapping service (http://www.bing.com/maps) on 09/2018.

TITLE:

TENORM Compared to Lateral Extent of IL Exceedances

PROJECT:

Removal Site Evaluation
Harvey Blackwater No. 3 Mine Site

DATE:	DOCUMENT NAME:
9/27/2018	Removal Site Evaluation Report
	AUTHOR: CBB / REVIEWER: EDZ
Stantec	FIGURE: 4-6

Document Path: \\corp.ads\data\Virtual_Workspace\shared_projects\233001213\03_data\gis_cad_MXDs\RSE\RSE_Harvey\Blackwater\Section4\RSE_Harvey\Blackwater_4_6_TENORM_Lateral_Extent_IL_11x17_L_20180925.mxd

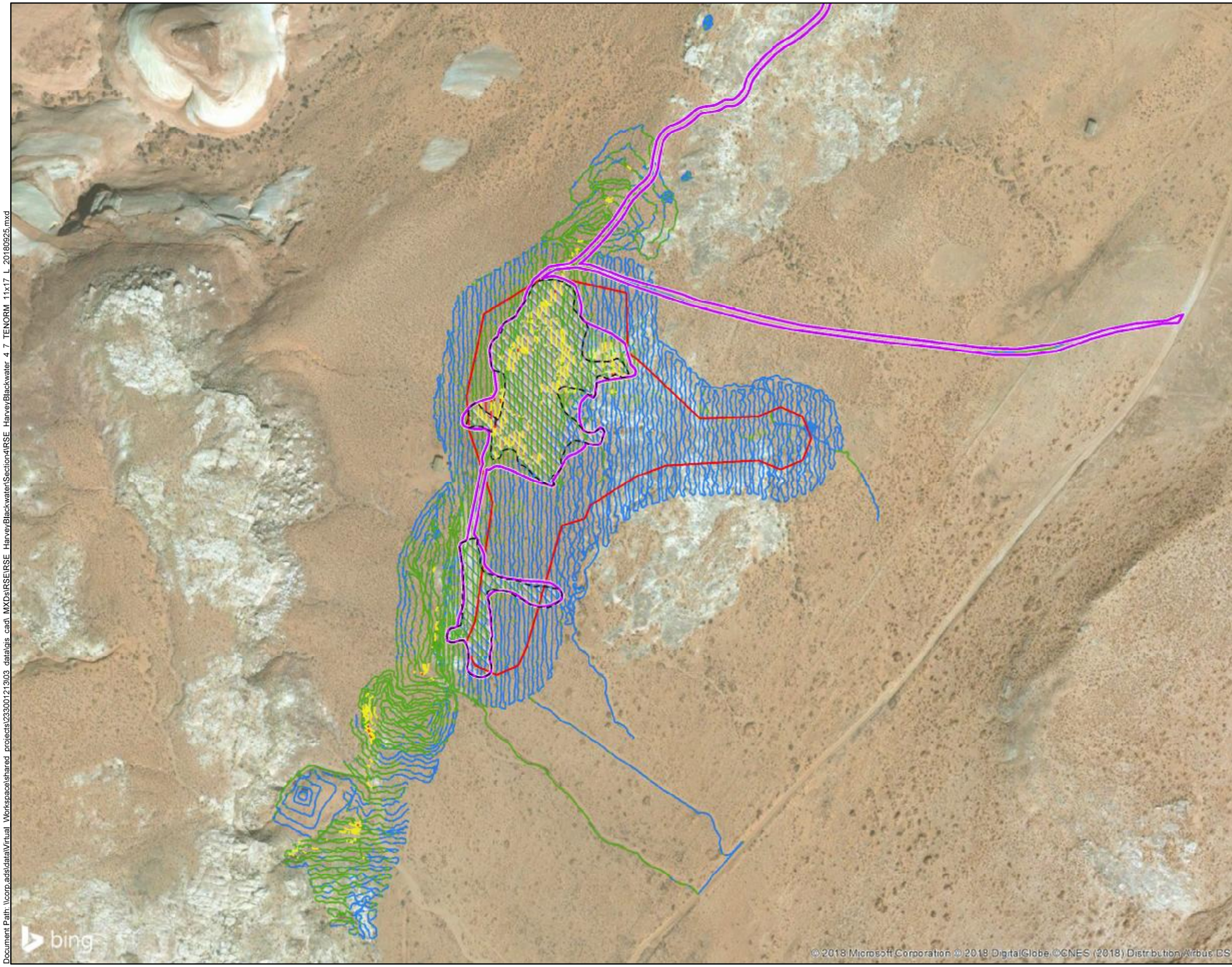

NAVAJO NATION
AUM Environmental Response Trust-First Phase

LEGEND

- TENORM (7.5 acres)
- Graded / Disturbed Reclaimed Area
- Claim Boundary

Gamma Survey

Counts per Minute (CPM)

- 4,427 - 9,975 (Minimum to BG-3 IL)
- 9,976 - 19,950 (>BG-3 IL to 2x BG-3 IL)
- 19,951 - 49,875 (>2x BG-3 IL to 5x BG-3 IL)
- 49,876 - 99,750 (>5x BG-3 IL to 10x BG-3 IL)
- 99,751 - 163,071 (>10x BG-3 IL to Maximum)

REFERENCES:

Coordinate System: NAD 1983 UTM Zone 12N

Basemap image accessed from BING Maps imagery web mapping service (http://www.bing.com/maps) on 09/2018.

N W E S

0 300 600
Feet

TITLE:

TENORM Compared to Gamma Radiation Survey Results

PROJECT:

Removal Site Evaluation
Harvey Blackwater No. 3 Mine Site

DATE:	DOCUMENT NAME:
9/27/2018	Removal Site Evaluation Report
Stantec	AUTHOR: / REVIEWER: EDZ
	FIGURE: 4-7

Document Path: \\corp.ads\data\Virtual_Workspace\shared_projects\233001213\03_data\gis_cad_MXDs\RSE\RSE_HarveyBlackwater\Section4\RSE_HarveyBlackwater_4_7_TENORM_11x17_L_20180925.mxd

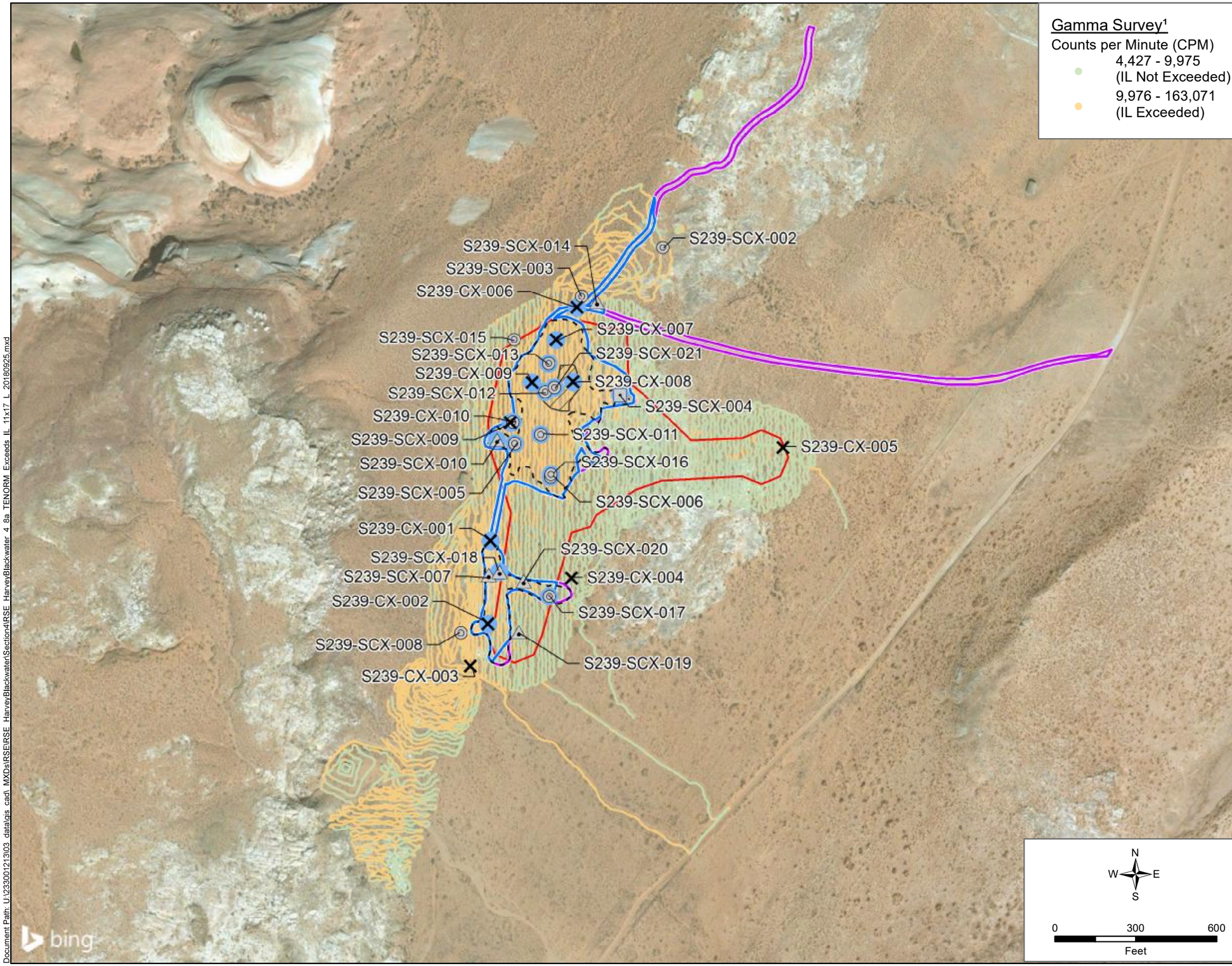

Gamma Survey[1]

Counts per Minute (CPM)

- 4,427 - 9,975 (IL Not Exceeded)
- 9,976 - 163,071 (IL Exceeded)

N
W E
S

0 300 600
Feet

NAVAJO NATION
AUM Environmental Response Trust-First Phase

LEGEND

- Surface Sample Location
- Borehole Location - Surface and Subsurface Samples
- Borehole Location - Surface Samples Only
- Borehole Location - Static Gamma Data Only
- TENORM Exceeding IL in Unconsolidated Material at Location
- Graded / Disturbed Reclaimed Area
- TENORM Area Exceeding Surface Gamma ILs (5.9 acres)
- TENORM (7.5 acres)
- Historical Pit[4]
- Claim Boundary

NOTES:

1. Gamma survey area is approximately 39.2 acres

2. Historical pit location should be considered approximate. Location shifted to the west compared to Figure 2-2 based on the visible highwall on the 1997 photograph.

REFERENCES:

Coordinate System: NAD 1983 UTM Zone 12N

Basemap image accessed from BING Maps imagery web mapping service (http://www.bing.com/maps) on 10/2018.

TITLE:

TENORM that Exceeds ILs

PROJECT:

Removal Site Evaluation
Harvey Blackwater No. 3 Mine Site

DATE:	DOCUMENT NAME:
10/1/2018	Removal Site Evaluation Report
	AUTHOR: CBB / REVIEWER: EDZ
Stantec	FIGURE: 4-8a

Document Path: U:\233001213\03_data\gis_cad_MXDs\RSE\RSE_HarveyBlackwater\Section4\RSE_HarveyBlackwater_4_8a_TENORM_Exceeds_IL_11x17_L_20180925.mxd

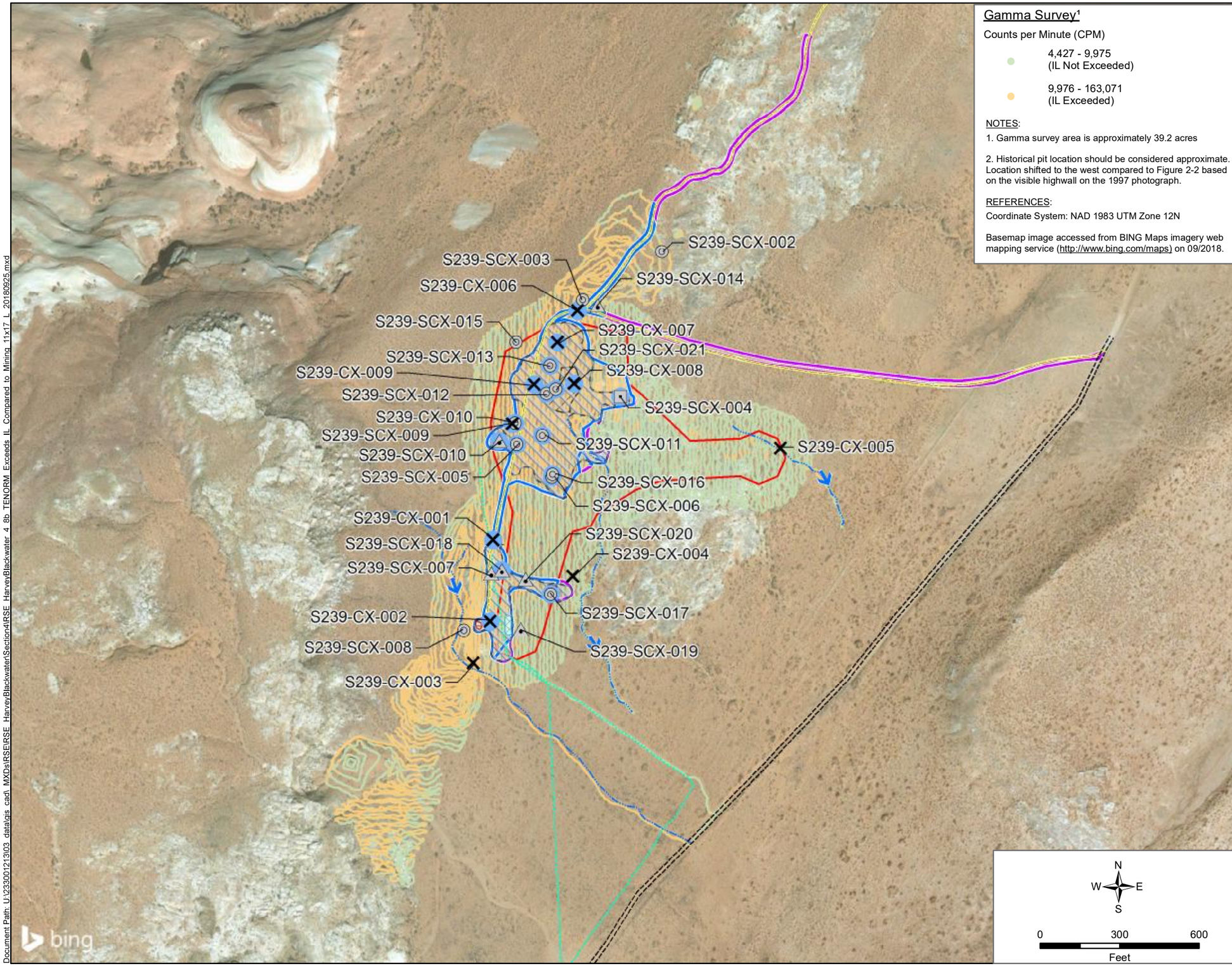

Gamma Survey[1]

Counts per Minute (CPM)

- 4,427 - 9,975 (IL Not Exceeded)
- 9,976 - 163,071 (IL Exceeded)

NOTES:

1. Gamma survey area is approximately 39.2 acres
2. Historical pit location should be considered approximate. Location shifted to the west compared to Figure 2-2 based on the visible highwall on the 1997 photograph.

REFERENCES:

Coordinate System: NAD 1983 UTM Zone 12N

Basemap image accessed from BING Maps imagery web mapping service (http://www.bing.com/maps) on 09/2018.

NAVAJO NATION
AUM Environmental Response Trust-First Phase

LEGEND

- Surface Sample Location
- Borehole Location - Surface and Subsurface Samples
- Borehole Location - Surface Samples Only
- Borehole Location - Static Gamma Data Only
- TENORM Exceeding IL in Unconsolidated Material at Location
- Flow Direction
- Drainage
- Potential Haul Road
- Road
- Water Line
- Graded / Disturbed Reclaimed Area
- Potential Waste Pile
- Water Line Excavation / Debris Pile
- Graded / Disturbed Reclaimed Area
- TENORM Area Exceeding Surface Gamma ILs (5.9 acres)
- TENORM (7.5 acres)
- Historical Pit[4]
- Claim Boundary

TITLE:

TENORM that Exceeds ILs Compared to Mining-Related Features

PROJECT:

Removal Site Evaluation
Harvey Blackwater No. 3 Mine Site

DATE: 9/27/2018	DOCUMENT NAME: Removal Site Evaluation Report	
Stantec	AUTHOR: CBB	REVIEWER: EDZ
	FIGURE: 4-8b	

Document Path: U:\233001213\03_data\gis_cad_MXDs\RSE\RSE_HarveyBlackwater\Section4\RSE_HarveyBlackwater_4_8b_TENORM_Exceeds_IL_Compared_to_Mining_11x17_L_20180925.mxd

Group	Area (square feet)	Volume (cubic yards)
1	108,453	8,419
2	149,348	5,531

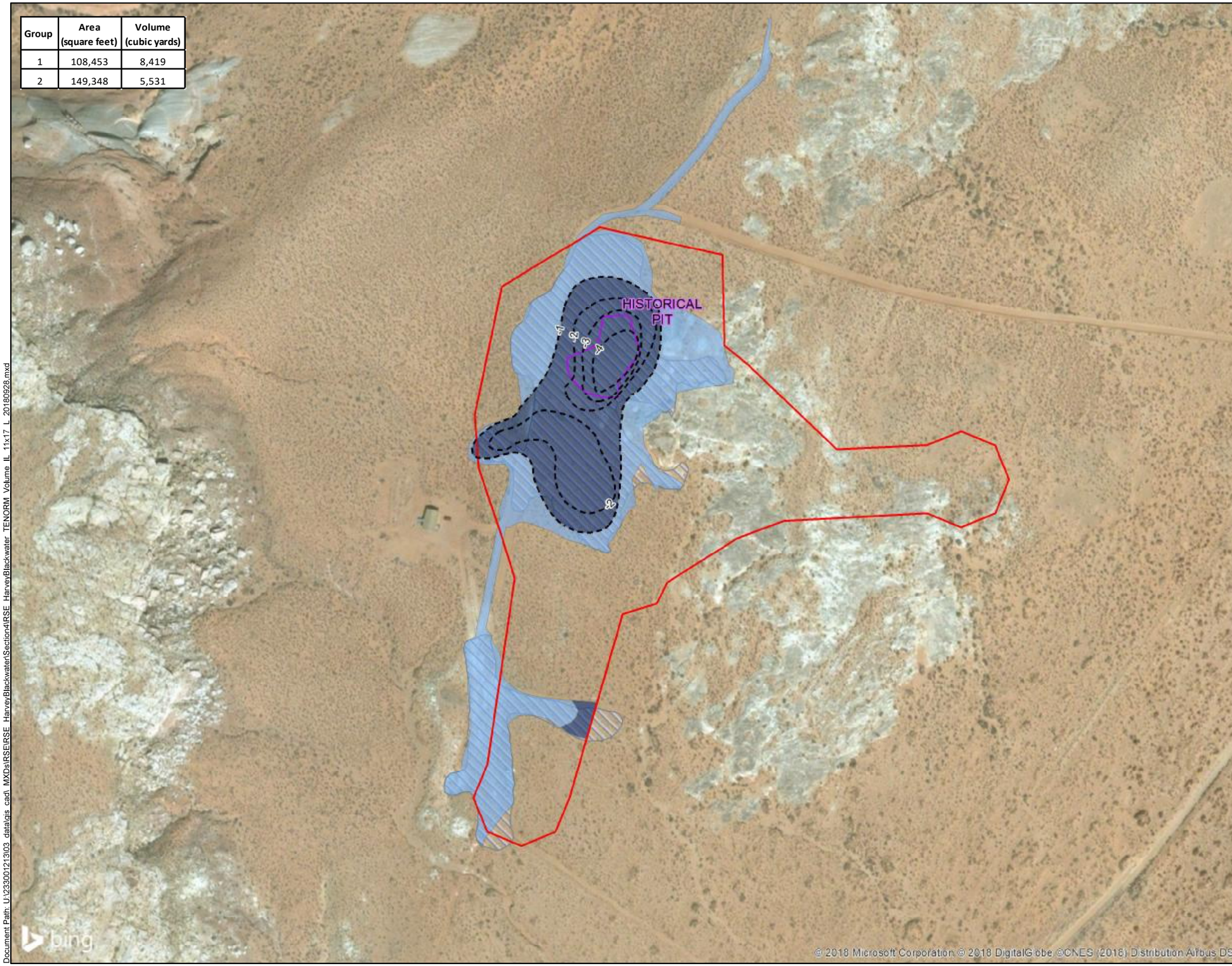

NAVAJO NATION
AUM Environmental Response Trust-First Phase

LEGEND

- Graded / Disturbed Reclaimed Area
- Historical Pit[2]
- Claim Boundary
- Estimated Contour for Subsurface Extent of Earthworks or Depth to Bedrock

Average Depth by Group (feet below ground surface)

- Group 1 - Variable[3]
- Group 2 - 0 to 1.0 ft

NOTES:

1. Depths shown here are based on the ranges and depths shown in Figures 2-8a, 2-8b and 4-4b.

2. Historical pit location should be considered approximate. Location shifted to the west compared to Figure 2-2 based on the visible highwall on the 1997 photograph.

3. Calculating the volume based on the total depth indicated in the reclamation documents (10 feet) adds 1,376 cubic yards of TENORM.

REFERENCES:

Coordinate System: NAD 1983 UTM Zone 12N

Basemap image accessed from BING Maps imagery web mapping service (http://www.bing.com/maps) on 10/2018.

N W E S

0 200 400
Feet

TITLE:
Volume Estimate of TENORM that Exceeds ILs

PROJECT:
Removal Site Evaluation
Harvey Blackwater No. 3 Mine Site

DATE: 10/1/2018

DOCUMENT NAME: Removal Site Evaluation Report

Stantec

AUTHOR: CBB
REVIEWER: EDZ

FIGURE: 4-9

Document Path: U:\233001213\03_data\gis_cad_MXDs\RSE\RSE_HarveyBlackwater\Section4\RSE_HarveyBlackwater_TENORM_Volume_IL_11x17_L_20180928.mxd

APPENDICES

Appendix A Radiological Characterization of the Harvey Blackwater No.3 Abandoned Uranium Mine

Radiological Characterization of the Harvey Blackwater No. 3 Abandoned Uranium Mine

September 19, 2018

prepared for:

Stantec Consulting Services Inc.

2130 Resort Drive, Suite 350
Steamboat Springs, CO 80487

prepared by:

Environmental Restoration Group, Inc.

8809 Washington St. NE
Suite 150
Albuquerque, NM 87113

Contents

Executive Summary v

1.0 Introduction 1

2.0 GPS-Based Gamma Surveys 3

2.1 Potential Background Reference Area 3

2.2 Survey Area (including extended) 6

3.0 Correlation Studies 9

3.1 Radium-226 concentrations in surface soils and gamma count rates 9

3.2 Equilibrium in the uranium series 14

3.3 Exposure rates and gamma count rates 16

4.0 Deviations to RSE Workplan 20

5.0 Conclusions 20

6.0 References 21

Tables

Table 1 Detection systems used in the GPS-Based gamma surveys

Table 2 Summary statistics for gamma count rates in the potential Background Reference Area

Table 3 Summary statistics for gamma count rates in the Survey Area

Table 4 Gamma count rates and associated concentrations of radium-226 in samples of surface soils obtained in the correlation study

Table 5 Concentrations of isotopes of thorium in samples of surface soils obtained in the correlation study

Table 6 Predicted concentrations of radium-226 in the Survey Area

Table 7 Co-located gamma count rate and exposure rate measurements

Table 8 Predicted exposure rates in the potential Background Reference Area

Table 9 Predicted exposure rates in the Survey Area

Figures

Figure 1 Location of the Harvey Blackwater No. 3 Abandoned Uranium Mine

Figure 2 Gamma count rates in the potential Background Reference Area

Figure 3 Histogram of gamma count rates in the potential Background Reference Area

Figure 4 Gamma count rates in the Survey Area

Figure 5 Histogram of gamma count rates in the Survey Area

Figure 6 Box plot of gamma count rates in the Survey Area

Figure 7 GPS-based gamma count rate measurements made for the correlation study

Figure 8 Correlation of gamma count rates and concentrations of radium-226 in surface soils

Figure 9 Predicted concentrations of radium-226 in the Survey Area

Figure 10 Evaluation of secular equilibrium in the uranium decay series.

Figure 11 Correlation of gamma count rates and exposure rates

Figure 12 Predicted exposure rates in the Survey Area

Appendices

Appendix A Instrument calibration and completed function check forms

Appendix B Exposure Rate Measurements

Appendix C Technical Memo from ERG to Stantec. "Statistical Analysis of the Navajo Trustee Mines Dataset: Multivariate Linear Regression for Evaluation of Gamma Correlation with Ra-226 and Evaluation of Secular Equilibrium Between Ra-226 and Th-230"

Appendix D Preliminary Report "Harvey Blackwater No.3 Abandoned Uranium Mine"

Acronyms

AUM	abandoned uranium mine
BG3	Background Reference Area 3
bgs	below ground surface
cpm	counts per minute
DQOs	data quality objectives
ERG	Environmental Restoration Group, Inc.
ft	foot
GPS	global positioning system
MDC	minimum detectable concentration
µR/h	microRoentgens per hour
pCi/g	picocuries per gram
R^2	Pearson's Correlation Coefficient
RSE	removal site evaluation
σ	standard deviation
Stantec	Stantec Consulting Services Inc.

Executive Summary

This report addresses the radiological characterization of the Harvey Blackwater No. 3 abandoned uranium mine (AUM) located in the Dennehotso and Kayenta Chapters in northeastern Arizona and southeastern Utah . It documents part of the implementation of the Navajo Nation AUM Environmental Response Trust, First Phase, Removal Site Evaluation Work Plan (RSE Work Plan). The work was performed by Environmental Restoration Group, Inc. (ERG) of Albuquerque, New Mexico and Stantec Consulting Services Inc. (Stantec) in accordance with the Navajo Nation AUM Environmental Response Trust – First Phase.

This report provides 1) the results of a Global Positioning System (GPS)-based gamma radiation (gamma) survey, 2) comparisons of the gamma count rates at this AUM to exposure rates and concentrations of radium-226 in surface soils, and 3) an assessment of equilibrium in the uranium series. The field activities addressed in this report were conducted on October 15, 27, and 28, 2016; November 2, 2016; and March 18 and September 20, 2017. They included a GPS-based radiological survey of land surfaces over a Survey Area consisting of the mine claim area out to a 100-foot (ft) buffer; and roads and drainages within a 0.25-mile radius of the 100-ft buffer; and correlation studies. The Survey Area was extended beyond the 100-ft buffer where elevated gamma count rates were observed.

The discussion of the results of soil sampling in this report is limited to concentrations of radium-226 and isotopes of thorium in samples taken from surface soils, as part of correlation studies. The objective of the analysis of thorium isotopes was to 1) assess the potential effects of thorium-232 and thorium-228 on the correlation of gamma count rates to concentrations of radium-226 in surface soils; and 2) evaluate thorium-230 and radium-226 activities to indicate the status of equilibrium in the uranium decay series. These and additional results for the RSE are addressed in the "Harvey Blackwater No. 3 Removal Site Evaluation Report" (Stantec, 2018).

The findings of the RSE pertaining to these activities are:

- The horizontal extent and magnitude of mining-related materials were delineated sufficiently to support additional characterization of the subsurface.
- The highest count rates were observed along a recurring exposure of bedrock that runs northeast to southwest through and beyond the mine claim.
- A potential Background Reference Area was established.
- The relationship between gamma count rates and concentrations of radium-226 in surface soils (0 to 0.5 ft below ground surface) is described by a linear regression model:

$$\text{Gamma Count Rate (cpm)} = 3244 \times [\text{radium-226 (pCi/g)}] + 6865$$

- The distribution of concentrations of radium-226 in surface soils predicted using this model is rightward tailed. The values in the Survey Area range from -0.8 to 48.2 pCi/g, with a central tendency (median) of 0.8 pCi/g.

- The thorium series radionuclides do not appear to affect the prediction of concentrations of radium-226 from gamma count rates.

- There is evidence that the uranium series radionuclides are in secular equilibrium.

- The relationship between gamma count rates and exposure rates is described by a linear regression model:

$$\text{Exposure Rate } (\mu R/h) = \text{Gamma Count Rate (cpm)} \times 4 \times 10^{-4} + 7.7$$

- The distribution of exposure rates predicted using this model is rightward tailed. The values in the Survey Area range from 9.5 to 72.9, with a central tendency (median) of 11.5 µR/h.

1.0 Introduction

This report addresses the radiological characterization of the Harvey Blackwater No. 3 abandoned uranium mine (AUM) located in the Dennehotso and Kayenta Chapters in northeastern Arizona and southeastern Utah. It documents part of the implementation of the Navajo Nation AUM Environmental Response Trust, First Phase, Removal Site Evaluation Work Plan (RSE Work Plan: MWH, 2016). The work was performed by Environmental Restoration Group, Inc. (ERG) of Albuquerque, New Mexico and Stantec Consulting Services Inc. (Stantec) in accordance with the Navajo Nation AUM Environmental Response Trust – First Phase.

The activities described here focus on the characterization of uranium series radionuclides in surface soils at the AUM. This report provides 1) the results of a Global Positioning System (GPS)-based gamma radiation (gamma) survey, 2) comparisons of gamma count rates to exposure rates and concentrations of radium-226 in surface soils, and 3) an assessment of equilibrium in the uranium decay series.

The objective of the correlation between field gamma count rate and surface soil concentrations of radium-226 was to use field instrumentation to predict surface soil concentrations of radium-226. The objective of the correlation between field gamma count rate and exposure rate was to use field instrumentation to predict exposure rates.

The field activities addressed in this report were conducted on October 15, 27, and 28, 2016; November 2, 2016; and March 18 and September 20, 2017 in accordance with the methods described in the RSE Work Plan. The GPS-based radiological survey of land surfaces covered an approximately 39-acre Survey Area that included the mine claim area out to a 100-foot buffer; and roads and drainages within a 0.25-mile radius of the buffer; gamma count rate and exposure rate measurements at fixed points; and gamma count rate measurements and soil sampling for radionuclides and metals in areas centered on these fixed points. The Survey Area was extended beyond the 100-ft buffer where elevated gamma count rates were observed. Section 3.0 of the RSE Workplan provides the data quality objectives (DQOs) for the project.

The discussion of the results of soil sampling in this report is limited to concentrations of radium-226 and isotopes of thorium in samples taken from surface soils, as part of correlation studies. The objective of the analysis of thorium isotopes was to 1) assess the potential effects of thorium-232 and thorium-228 on the correlation of gamma count rates to concentrations of radium-226 in surface soils; and 2) evaluate thorium-230 and radium-226 activities to indicate the status of equilibrium in the uranium decay series. These and additional results for the continuing RSE are addressed in the “Harvey Blackwater No. 3 Removal Site Evaluation Report” (Stantec, 2018).

Figure 1 shows the location of the AUM. Background information that is pertinent to the characterization of this AUM is presented in the “Harvey Blackwater No. 3 Removal Site Evaluation Report” (Stantec, 2018).

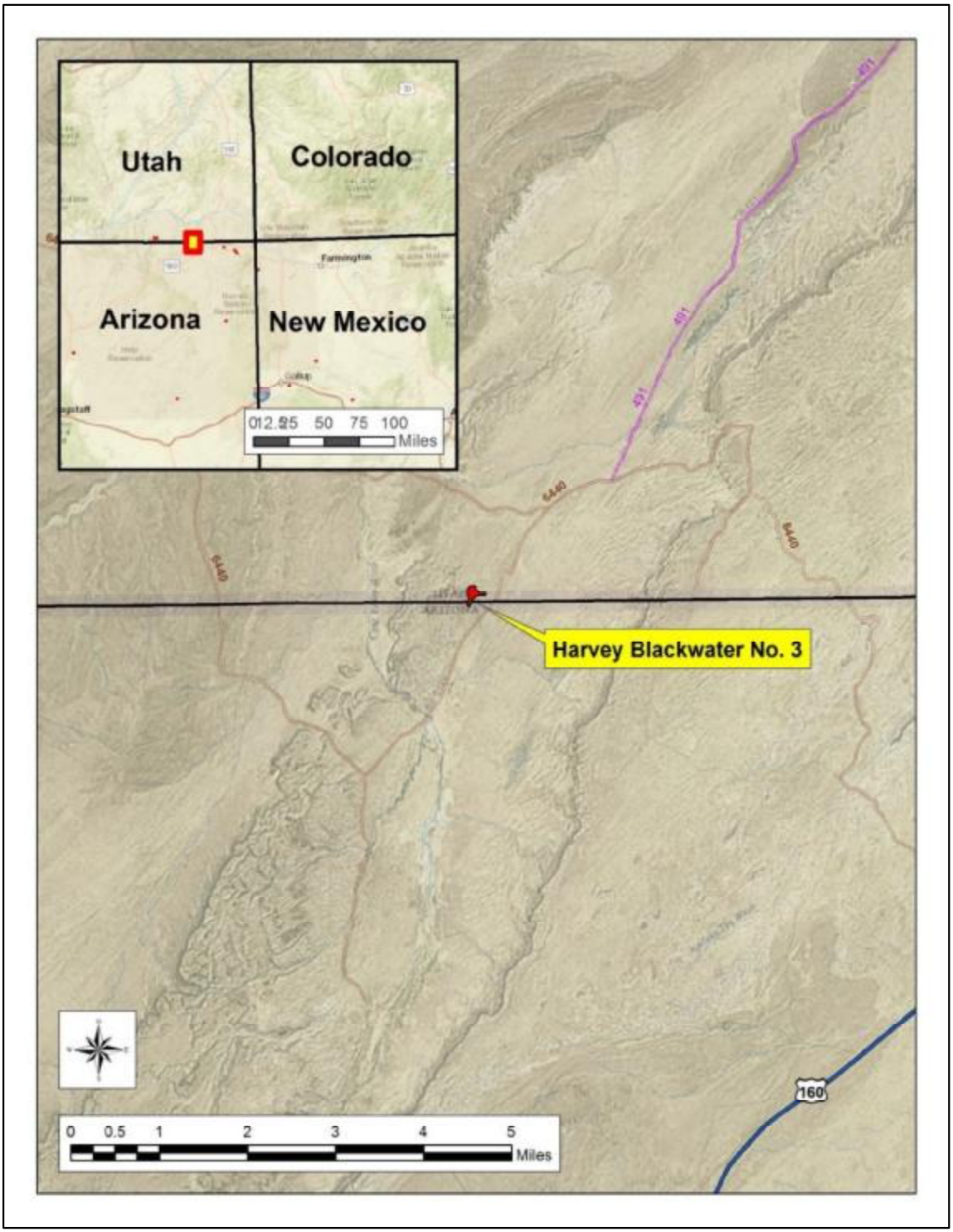

Figure 1. Location of the Harvey Blackwater No. 3 Abandoned Uranium Mine

2.0 GPS-Based Gamma Surveys

This section addresses the GPS-based surveys conducted in a potential Background Reference Area and the Survey Area. The survey was extended to bound areas in which elevated count rates were observed. Table 1 lists the detection systems used in the survey. Pursuant to the approved RSE Work Plan, detectors were function checked each day to ensure the instruments were stable to the limits prescribed by the Work Plan. Detector normalization was not performed as it was not addressed by the RSE Work Plan. Appendix A presents the completed function check forms and calibration certificates for the instruments. Standard operating procedures (SOPs) are discussed in Section 4.2 of the RSE Work Plan and are provided in Appendix E therein. ERG followed the quality assurance and control requirements stipulated in the approved Work Plan.

The 2x2 sodium iodide (NaI) detectors used in this investigation are sensitive to sub-surface radium-226 decay products and other gamma emitting radionuclides. The purpose of the gamma correlation was to estimate radium-226 concentrations in the upper 15 cm of soil. ERG selected correlation plots based on the range of gamma radiation levels observed. If subsurface soil concentrations of gamma emitting radionuclides were variable between correlation locations, this variability would be included in the regression model, and if the magnitude of the effect were sufficiently large, it would result in failure of the DQOs related to the regression analysis.

Table 1. Detection systems used in the GPS-Based gamma surveys.

Survey Area	Ludlum Model 44-10	Ludlum Model 2221 Ratemeter/Scaler
Potential Background Reference Area	PR303727[a]	254772[a]
Survey Area	PR303727	254772
	PR295014	196086
	PR154615	138368
	PR355763	138368

Notes:
[a] Detection system used in the correlation studies described in Section 3.0.

2.1 Potential Background Reference Area

A potential Background Reference Area was surveyed, the location and results of which are depicted on Figure 2. BG3 in Figure 2 is Background Reference Area 3.

Table 2 lists a summary of the gamma count rates, which in BG3 ranged from 6,662 to 10,663 counts per minute (cpm), with a mean and median of 8,584 and 8,606 cpm, respectively.

Figure 3 depicts a histogram of the gamma count rates. The red and green lines on the figure are theoretical normal and lognormal distributions, respectively. They are presented to show what could be expected if the distributions were normal or lognormal.

Table 2. Summary statistics for gamma count rates in the potential Background Reference Area.

	Gamma Count Rate (cpm)				
n	**Min**	**Max**	**Mean**	**Median**	**Standard Deviation**
235	6,662	10,663	8,584	8,606	764

Notes:
cpm = counts per minute

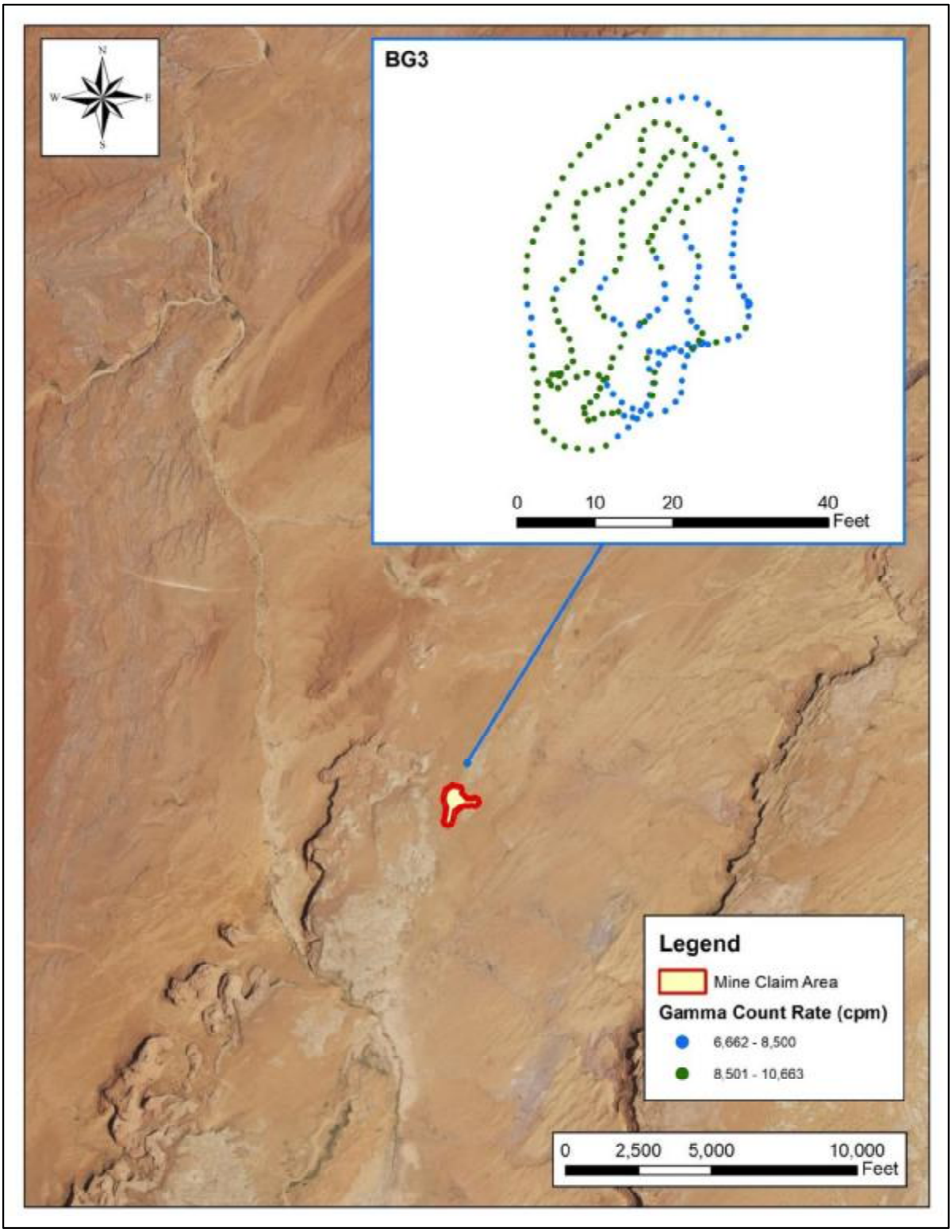

Figure 2. Gamma count rates in the potential Background Reference Area.

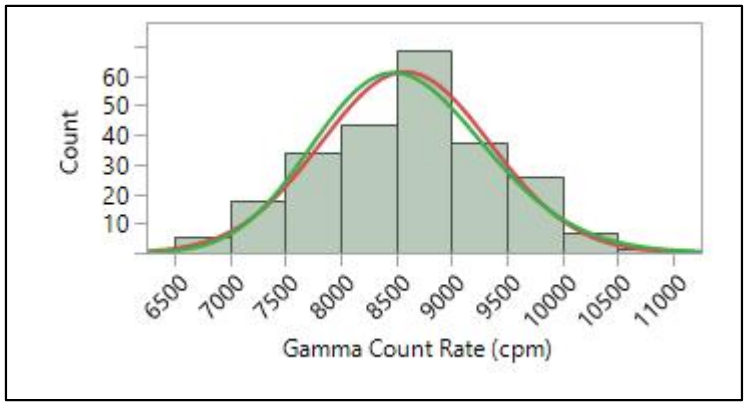

Figure 3. Histogram of gamma count rates in the potential Background Reference Area.

2.2 Survey Area (including extended)

The gamma count rates observed in the Survey Area are depicted in Figure 4. The highest count rates were observed along a recurring exposure of bedrock that runs northeast to southwest through and beyond the mine claim.

Figure 5 is a histogram of the gamma count rate measurements made in the Survey Area, including those made outside the 100-ft buffer. As stated in Section 2.1, the red and green lines on the figure are theoretical normal and lognormal distributions, respectively. They are presented to show what could be expected if the distributions were normal or lognormal. The distribution of the right-tailed set of measurements, evaluated using U.S. Environmental Protection Agency software ProUCL, is not defined. The box plot in Figure 6 depicts cutoffs as horizontal bars, from bottom to top, for the following values or percentiles: minimum, 0.5, 2.5, 10, 25, 50, 75, 90, 97.5, 99.5, and maximum. The 25th, 50th, and 75th percentiles --the three horizontal lines of the box inside the box plot—are 7,887, 9,383, and 11,255 cpm, respectively.

Table 3 is a statistical summary of the measurements, which range from 4,427 to 163,071 cpm and have a central tendency (median) of 9,383 cpm.

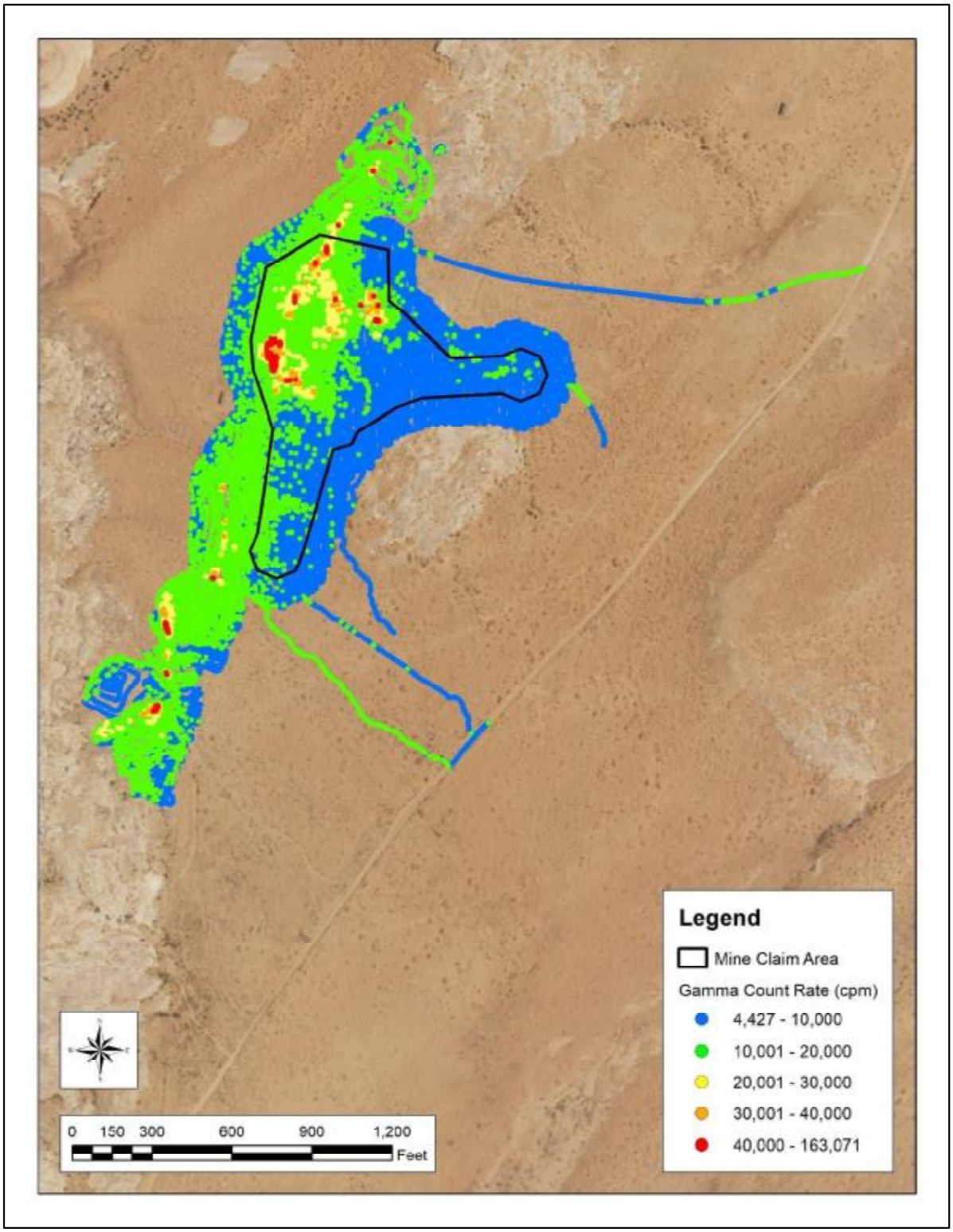

Figure 4. Gamma count rates in the Survey Area.

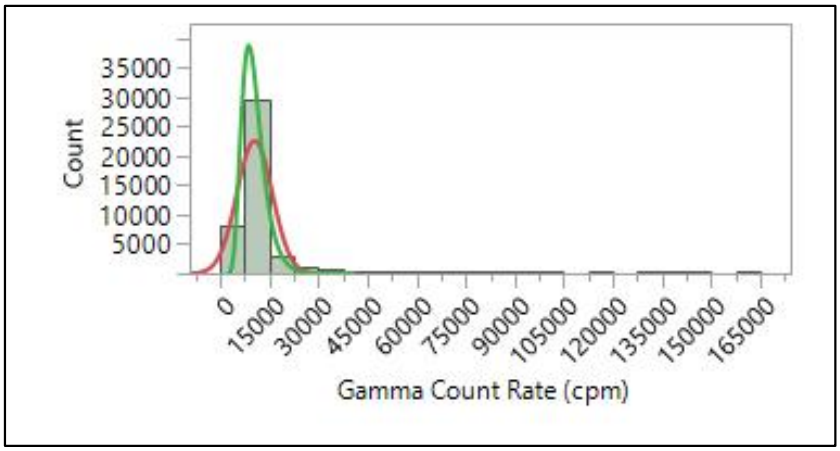

Figure 5. Histogram of gamma count rates in the Survey Area.

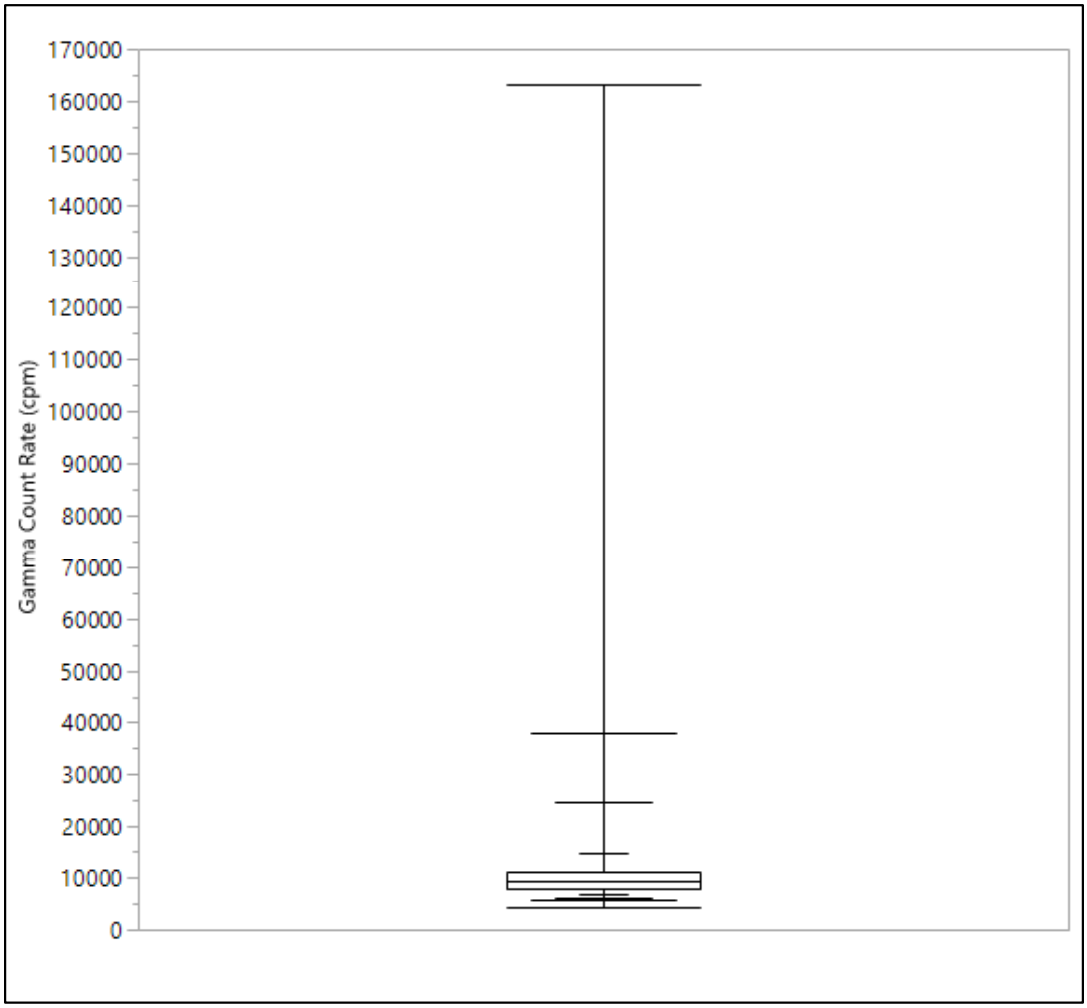

Figure 6. Box plot of gamma count rates in the Survey Area.

Table 3. Summary statistics for gamma count rates in the Survey Area.

Parameter	Gamma Count Rate (cpm)
n	40,738
Minimum	4,427
Maximum	163,071
Mean	10,568
Median	9,383
Standard Deviation	5,396

Notes:
cpm = counts per minute

3.0 Correlation Studies

The following sections address the activities under two types of correlation studies outlined in the RSE Work Plan: comparisons of 1) radium-226 concentrations in surface soils and gamma count rates and 2) exposure rates and gamma count rates. GPS-based gamma count rate measurements were made over small areas for the former study. The means of the measurements were used in this case. Static gamma count rate measurements, co-located with exposure rate measurements, were used in the latter study.

3.1 Radium-226 concentrations in surface soils and gamma count rates

On October 27, 2016 field personnel made GPS-based gamma count rates measurements and collected five-point composite samples of surface soils in each of five areas at the AUM. These areas were selected using criteria established in the RSE Work Plan. No DQO was established for homogeneity of the correlation plots and as described in Section 4.3 and Appendix E of the RSE Work Plan, homogeneity of the correlation plots was evaluated qualitatively. Sub-samples were collected from the correlation plot centroid and at each corner of the plot. The activities were performed contemporaneously, by area and all on the same day, such that the two could be compared. Figure 7 shows the GPS-based gamma count rate measurements in the five areas (labeled with location identifiers).

The soil samples were analyzed by ALS Laboratories in Ft Collins, CO for radium-226 and isotopic thorium. The latter analysis was included to assess the potential effects of thorium series isotopes on the correlation and evaluate thorium-230 and radium-226 activities to indicate the status of equilibrium in the uranium decay series. Table 4 lists the results of the measurements and radium-226 concentrations in the soil samples. The means of the gamma count rate measurements range from 7,903 to 32,624 cpm. The concentrations of radium-226 range from 0.5 to 8.1 picocuries per gram (pCi/g). Table 5 lists the concentrations of isotopes of thorium (thorium-228, -230, and -232) in the same soil samples.

Laboratory analyses are presented in Appendix F.2 of “Harvey Blackwater No. 3 Removal Site Evaluation Report” (Stantec, 2018).

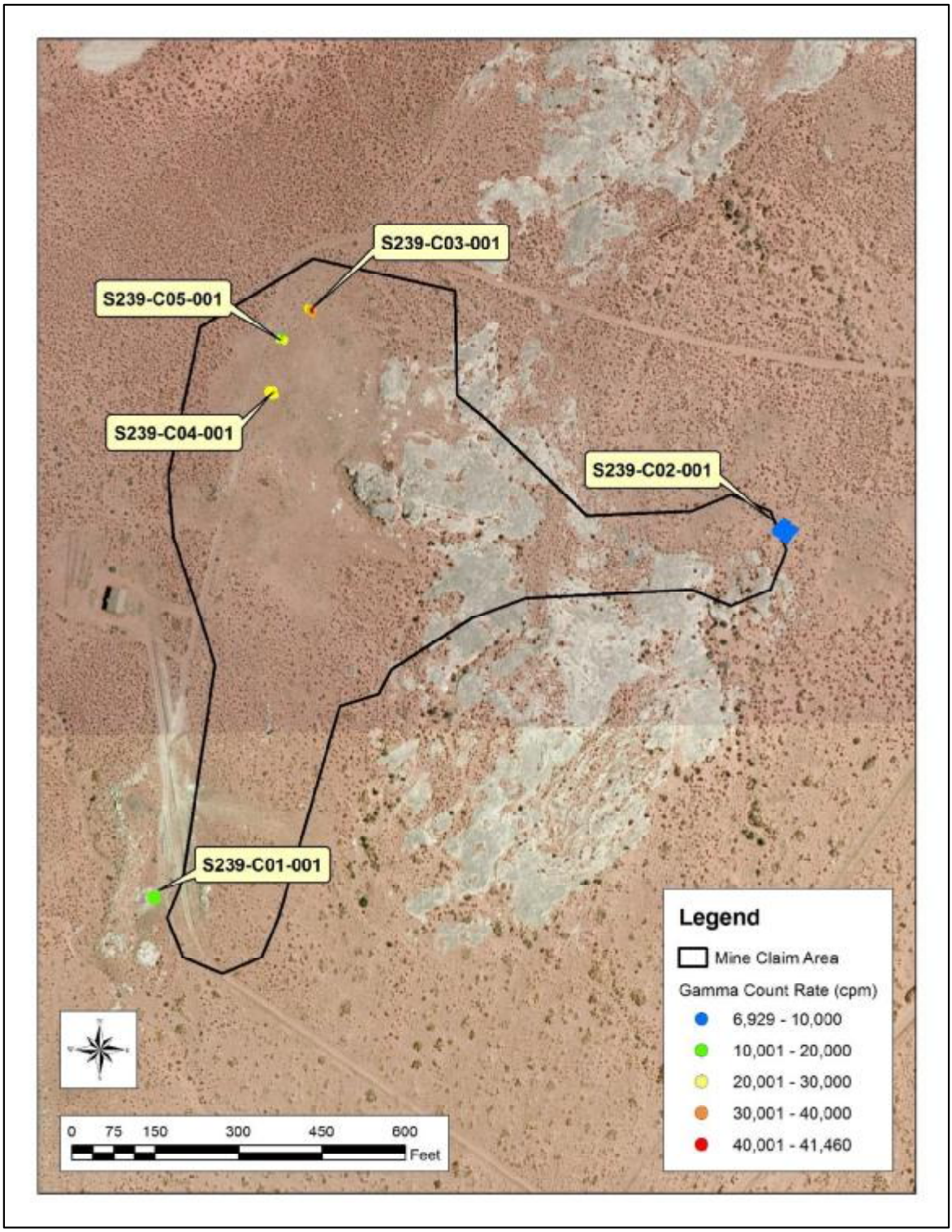

Figure 7. GPS-based gamma count rate measurements made for the correlation study.

Table 4. Gamma count rates and associated concentrations of radium-226 in samples of surface soils obtained in the correlation study.

		Gamma Count Rate (cpm)				Ra-226 (pCi/g)		
Location	Area (m^2)	Mean	Minimum	Maximum	σ	Result	Error ±2σ	MDC
S239-C01-001	31.3	13,124	11,553	14,760	669	1.81	0.36	0.51
S239-C02-001	118.9	7,903	6,929	9,336	406	0.5	0.15	0.24
S239-C03-001	26.2	32,624	23,166	41,460	5,196	8.1	1.1	0.5
S239-C04-001	39.2	24,551	16,640	31,349	3,698	4.67	0.66	0.48
S239-C05-001	23.9	19,387	16,799	23,182	1,354	4.42	0.63	0.44

Notes:
cpm = counts per minute
MDC = minimum detectable concentration
m^2 =square meters
pCi/g = picocuries per gram
σ = standard deviation

Table 5. Concentrations of isotopes of thorium in samples of surface soils obtained in the correlation study.

	Thorium-228			Thorium-230			Thorium-232		
Sample ID	Result	Error ± 2 σ	MDC	Result	Error ± 2 σ	MDC	Result	Error ± 2 σ	MDC
S239-C01-001	0.81	0.15	0.04	1.56	0.27	0.08	0.69	0.13	0.01
S239-C02-001	0.282	0.067	0.042	0.62	0.12	0.07	0.226	0.053	0.013
S239-C03-001	0.399	0.085	0.04	8.5	1.3	0.1	0.386	0.079	0.013
S239-C04-001	0.329	0.071	0.031	3.42	0.55	0.07	0.351	0.072	0.018
S239-C05-001	0.331	0.073	0.036	3.09	0.5	0.07	0.334	0.07	0.016

Notes:
MDC = minimum detectable concentration
pCi/g = picocuries per gram
σ = standard deviation

A model was made of the results in Table 4, predicting the concentrations of radium-226 in surface soils from the mean gamma count rate in each area. The mean relationship between the measurements, shown in Figure 8, is a linear function with an adjusted Pearson's Correlation Coefficient (adjusted R^2) of 0.96, as expressed in the equation:

$$\text{Gamma Count Rate (cpm)} = 3244 \times [\text{radium-226 (pCi/g)}] + 6865$$

The root mean square error and p-value for the model are 1.9×10^3 and 0.002, respectively; these parameters are not data quality objectives (DQOs) and are included only as information. The R^2 value for this model exceeds the project DQO of 0.8.

This equation was used to convert the gamma count rate measurements observed in the gamma surveys to predicted concentrations of radium-226. Table 6 presents summary statistics for the predicted concentrations of radium-226 in the Survey Area. The range of the predicted concentrations

of radium-226 in the Survey Area is -0.8 to 48.2 pCi/g, with a mean and median of 1.1 and 0.8 pCi/g, respectively. While the gamma correlation equation can be used to convert gamma count rates to concentrations of Ra-226 in soil, the resulting radium concentrations are highly uncertain estimates, as the wide prediction interval bands illustrated in Figure 8 demonstrate. Users of the regression equation should be aware of the limitations of the dataset and be cautious when estimating radium-226 concentrations. Figure 9 shows the predicted concentrations of radium-226, the spatial and numerical distribution of which mirror those depicted in Figure 4.

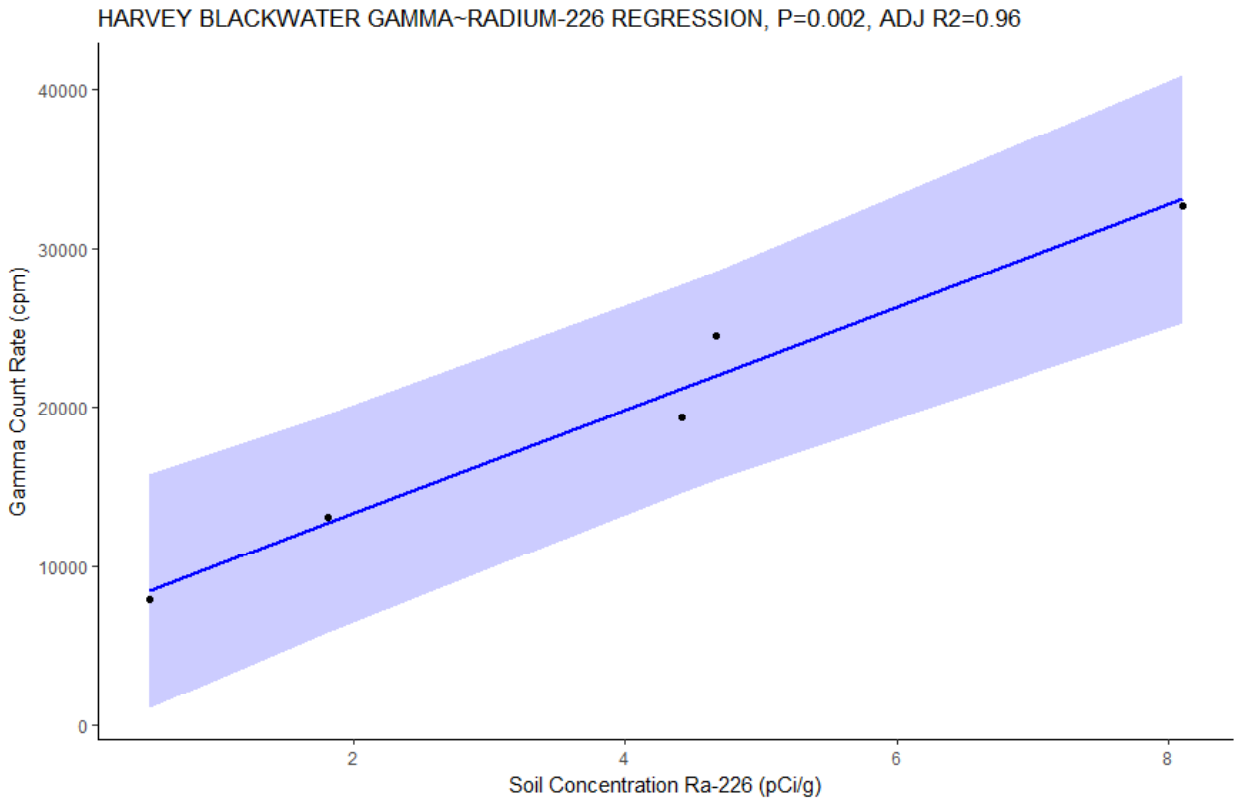

Figure 8. Correlation of gamma count rates and concentrations of radium-226 in surface soils (blue line) with 95% upper prediction level bands plotted (shaded blue area).

Table 6. Predicted concentrations of radium-226 in the Survey Area.

Parameter	Radium-226 (pCi/g)
N	40,738
Minimum	-0.8
Maximum	48.2
Mean	1.1
Median	0.8
Standard Deviation	1.7

Notes:
pCi/g = picocuries per gram

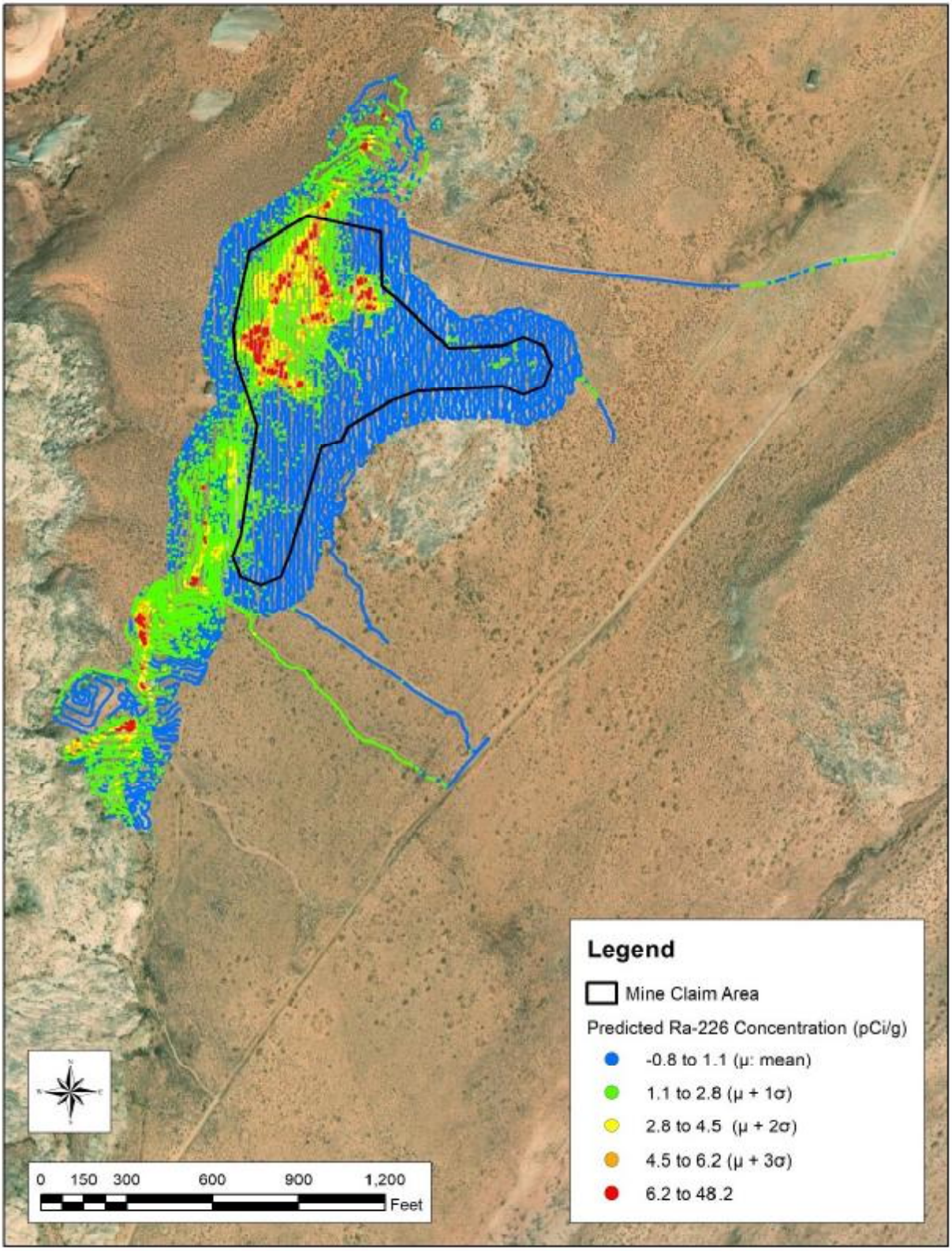

Figure 9. Predicted concentrations of radium-226 in the Survey Area.

Soil concentrations of potassium-40 (K-40) were not expected to be spatially variable within the site, and therefore this radionuclide was not separately accounted for in the RSE Work Plan. If K-40 concentrations did vary, this variability would be included in the regression model and, if the magnitude of the effect were sufficiently large, would result in failure of DQOs related to the regression analysis.

A multivariate linear regression (MLR) was used to evaluate the influence of thorium-232 and thorium-228, isotopes in the thorium series, on the average gamma count rate in the correlation locations. The MLR model was first run using radium-226, thorium-232, and thorium-228 as predictors of gamma count rate. The model failed to produce results because thorium-232 and thorium-228 are colinear. The MLR model was subsequently run without thorium-228. For the second model, the p-values for radium-226 was significant at 0.01, while thorium-232 was not ($p = 0.81$). Thorium-232 and radium-226 were then each modelled individually as a predictor of gamma count rate. The p-value for thorium-232 coefficient was 0.95 with an adjusted R^2 of -0.33. The thorium-232 coefficient is not significant and the R^2 value does not meet the project DQO. Subsequently we conclude that thorium-232 and thorium-228 concentrations in soil are not significant predictors of gamma count rate. Finally, the p-value for radium-226 as a predictor of gamma count rate was significant ($p = 0.002$), as described above, and the adjusted R^2 value (0.96) exceeded the applicable project DQO ($R^2 > 0.8$).

The depletion of radon-222 in surface soil due to environmental factors is assumed to be relatively constant across the correlation locations (i.e., the loss is a fixed fraction of the available source). Provided this is the case, any loss of radon-222 in surface soil is unimportant and accounted for within the statistical model. If the loss is not a consistent fraction at each of the correlation locations, it is one of many potential correlation confounders that are all linked to spatial heterogeneity of the environmental conditions, and especially spatial heterogeneity of the soil matrix.

The presence of heterogeneous concentrations of gamma emitting radionuclides in sub-surface soil can affect the gamma correlation model. If subsurface soil concentrations of gamma emitting radionuclides were variable between correlation locations, this variability would be included in the regression model, and if the magnitude of the effect were sufficiently large, it would result in failure of the DQOs related to the regression analysis.

3.2 Equilibrium in the uranium series

Secular equilibrium is a condition that occurs when the half-life of a decay-product nuclide is significantly shorter than that of its parent nuclide. After a period of ingrowth equal to approximately seven times the half-life of the decay product, the two nuclides effectively decay with the half-life of the parent. When two radionuclides are in secular equilibrium, their activities are equal.

Equilibrium, for the purpose of this report, is defined as a condition whereby a parent nuclide and its decay product are present in the environment at a fixed ratio, but this ratio – for whatever reason – is not a one-to-one relationship indicative of secular equilibrium. Most commonly, an equilibrium condition results from an environmental process which chemically selects for and transports one nuclide

(parent or decay product) away from the other nuclide. Because a consistent fraction of one nuclide has been removed, the two nuclides are present at a fixed ratio other than one-to-one.

Determination of secular equilibrium for an AUM can be an important part of the risk assessment process, as the assumed fraction of radium-226 decay products present in the environment greatly influences a hypothetical receptor's radiation dose and mortality risk. However, it is also acceptable and conservative to assume secular equilibrium between radium-226 and its decay products for the purpose of risk assessment, and therefore to avoid the need to conclusively determine the secular equilibrium status of an AUM. Thus, an inconclusive result regarding secular equilibrium is not a study data gap, as the risk assessment phase may still proceed, provided that conservative assumptions are included regarding equilibrium concentrations of radium-226 decay products.

Regardless, the RSE Work Plan specified that an evaluation of secular equilibrium would be made at each of the 16 Trust AUMs, and so a robust statistical examination of secular equilibrium status for thorium-230 and radium-226 was conducted. The RSE Work Plan did not require an evaluation of equilibrium condition of uranium-238 and uranium-234 because the natural activity abundance for these isotopes is expected and therefore assumed. Likewise, thorium-234 and protactinium-234m were not evaluated since their half-lives are sufficiently short that secular equilibrium can be assumed. Uranium-235 is not in the uranium-238 decay series therefore it wasn't evaluated. The ratio of thorium-230 to radium-226 can be evaluated even though different analytical methods were used to measure activity concentrations. Radium-226 was measured by EPA method 901.1m, which is a total activity method and thorium-230 was measured by alpha spectroscopy following digestion with hydrofluoric acid, which is also a total-activity method. Thus, it is appropriate to compare the two results.

Evaluation of secular equilibrium for each mine site proceeded as follows:

1. Construction of a figure that depicts soil concentrations of Th-230 plotted against soil concentrations of Ra-226.
2. Simple linear regression is performed on the dataset; the p-value and the adjusted R^2 are recorded. The resulting linear model and the 95% UCL bands are plotted on the figure generated in step 1.
3. The line y=x is added to the figure generated in step 2 (this line represents a perfect 1:1 ratio between Th-230 to Ra-226, indicative of secular equilibrium).
4. An examination of the model and the figure is made sequentially:
    a. If the p-value for the regression slope is insignificant (i.e., $p > 0.05$) or the adjusted R^2 does not meet the study's data quality objective (Adjusted $R^2 > 0.8$), ERG concludes that there is insufficient evidence to conclude that Ra-226 and Th-230 are in equilibrium (secular or otherwise).

b. If the p-value for the regression slope is significant (i.e., $p < 0.05$) and the adjusted R^2 meets the DQO (Adjusted $R^2 > 0.8$) there are two possible conditions, which are evaluated via visual examination of the figure generated in step 3.

   i. If the y=x line falls fully within the bounds of the 95% UCL bands on the regression, ERG concludes that there is evidence that Ra-226 and Th-230 are in secular equilibrium at the site.

   ii. If the y=x line falls partially or completely outside the bounds of the 95% UCL bands on the regression, ERG concludes that there is evidence that Ra-226 and Th-230 are in equilibrium, but not secular equilibrium at the site.

Based on this method, ERG concludes there is evidence that thorium-230 and radium-226 are in secular equilibrium (Figure 10).

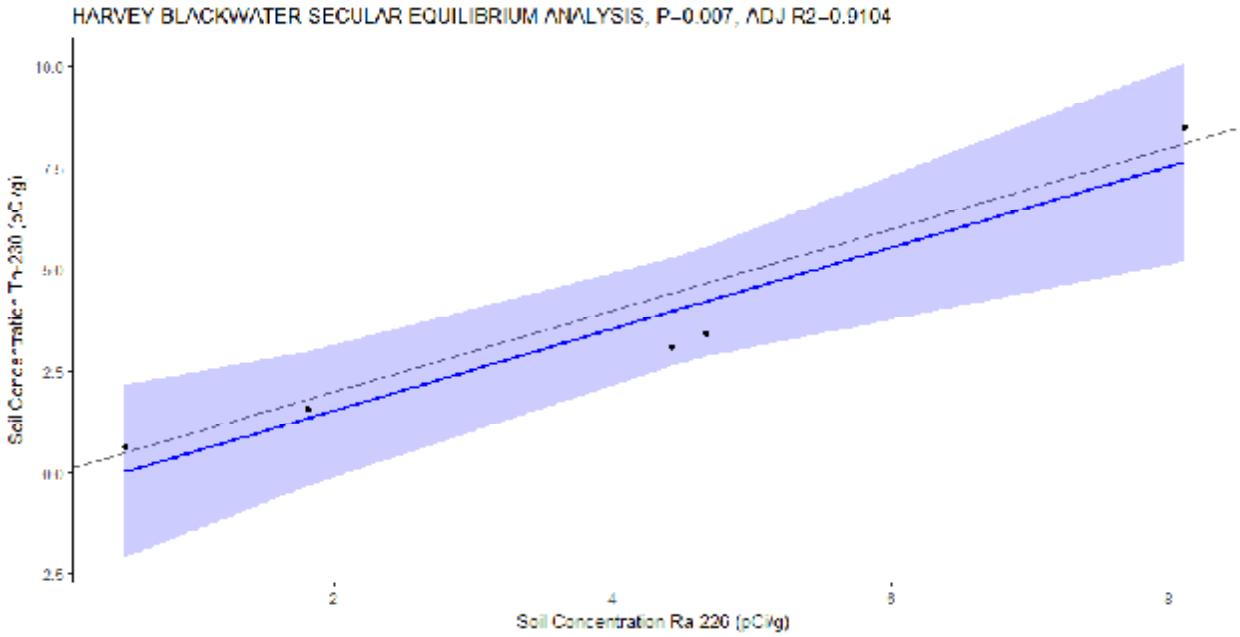

Figure 10. Evaluation of secular equilibrium in the uranium decay series.

3.3 Exposure rates and gamma count rates

Field personnel made co-located one-minute static count rate and exposure rate measurements at five locations within the Survey Area, representing the range of gamma count rates obtained in the GPS-based gamma survey. Figure 7 shows the locations of the co-located measurements, which were made in the centers of the areas.

The gamma count rate and exposure rate measurements were made on October 27, 2016 at 0.5 m and 1 m above the ground surface, respectively. The gamma count rate measurements were made using one of the sodium iodide detection systems used in the GPS-based gamma survey of the AUM (Serial

Numbers PR303727/254772). The exposure rate measurements were made using a Reuter Stokes Model RSS-131 high pressure ionization chamber (HPIC) at six-second intervals for about 10 minutes. The exposure rate used in the comparison was the mean of these measurements, less those occurring in initial instrument spikes. The HPIC was in current calibration and function checked before and after use. A factor of 1.02 was added to the measured value by the software of the unit. Calibration forms for the HPIC are provided in Appendix A.

Table 7 presents the results for the two types of measurements made at each of the five locations. Appendix B presents the individual (one second) exposure rate measurements.

The best predictive relationship between the measurements is linear with a R^2 of 0.98. The root mean square error and p-value for the correlation are 0.837 and 0.0010, respectively; these parameters are not DQOs and are included only as information.

The following equation is the linear regression (shown in Figure 11) between the mean exposure rate and gamma count rate results in Table 7 that was generated using MS Excel:

$$\text{Exposure Rate } (\mu R/h) = 4 \times 10^{-4} \times \text{Gamma Count Rate (cpm)} + 7.7$$

Figure 12 presents the exposure rates predicted from the gamma count rate measurements, the spatial and numerical distribution of which mirror those depicted in Figure 4.

Tables 8 and 9 present summary statistics for the predicted exposure rates in the potential Background Reference Area and Survey Area, respectively. The range of predicted exposure rates at BG3 is 10.3 to 11.9 µR/h, with a mean and median of 11.1 µR/h. The range of predicted exposure rates in the Survey Area is 9.5 to 72.9 µR/h, with a mean and median of 11.9 and 11.5 µR/h, respectively.

Table 7. Co-located gamma count rate and exposure rate measurements.

Location	Gamma Count Rate (cpm)	Exposure Rate (µR/h)
S239-C01-001	12,419	13.1
S239-C02-001	8,453	10
S239-C03-001	42,856	24.4
S239-C04-001	29,363	19
S239-C05-001	18,212	15.7

Notes:
cpm = counts per minute
µR/h = microRoentgens per hour

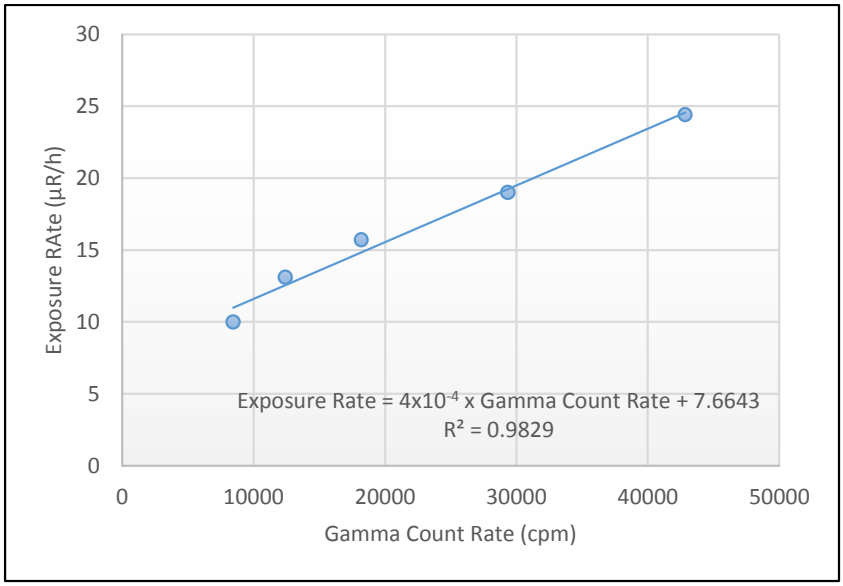

Figure 11. Correlation of gamma count rates and exposure rates.

Table 8. Predicted exposure rates in the potential Background Reference Area.

Parameter	Exposure Rate (µR/h)
n	235
Minimum	10.3
Maximum	11.9
Mean	11.1
Median	11.1
Standard Deviation	0.3

Notes:
µR/h = microRoentgens per hour

Table 9. Predicted exposure rates in the Survey Area.

Parameter	Exposure Rate (µR/h)
n	40,738
Minimum	9.5
Maximum	72.9
Mean	11.9
Median	11.5
Standard Deviation	2.2

Notes:
µR/h = microRoentgens per hour

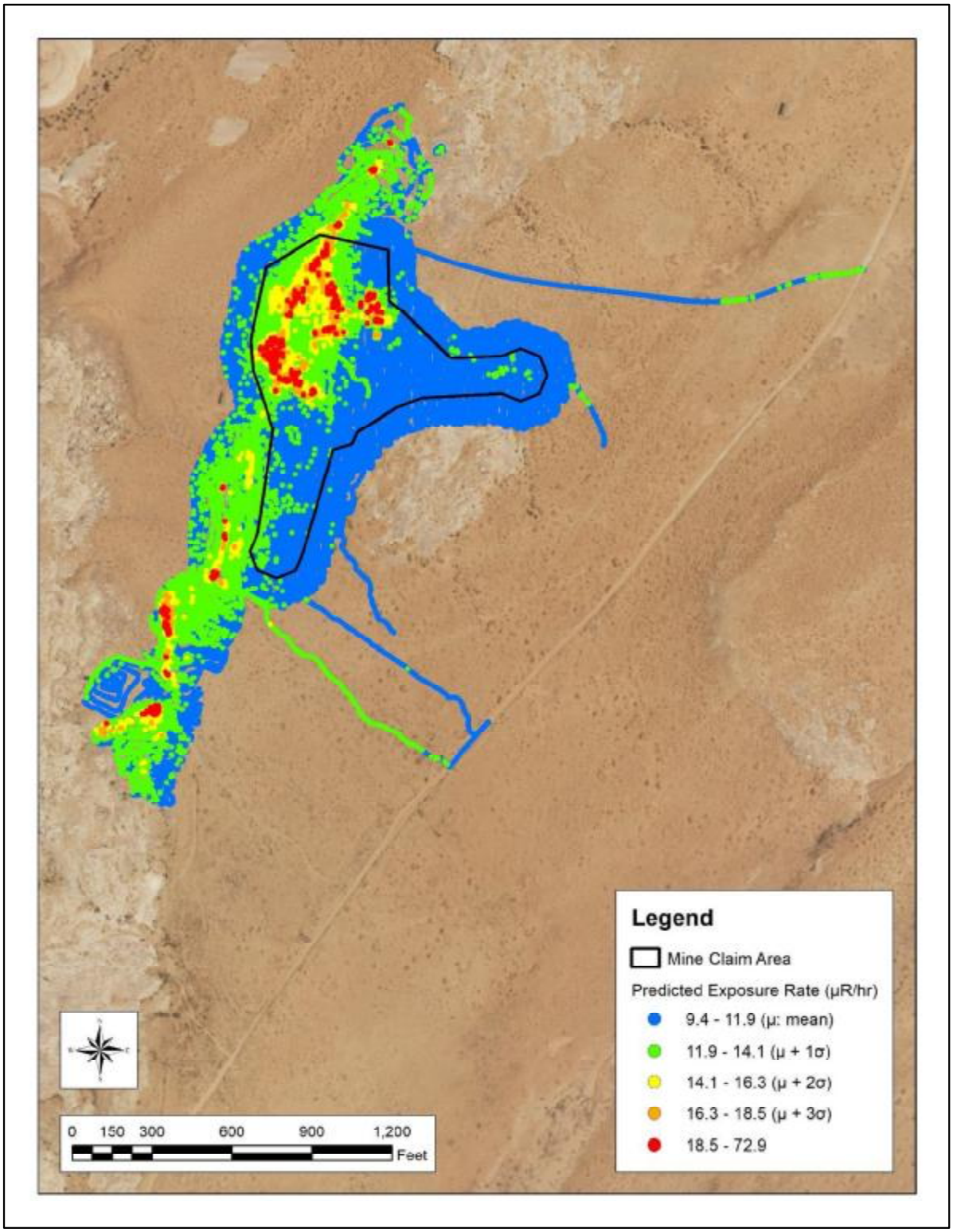

Figure 12. Predicted exposure rates in the Survey Area.

4.0 Deviations to RSE Workplan

The RSE Work Plan specifies that the comparison of gamma count rates and radium concentrations in surface soils was to occur in 900 square foot areas. Field personnel adjusted the areas as necessary, to minimize the variability of gamma count rates observed, particularly where the spatial distribution of waste rock was heterogeneous.

5.0 Conclusions

The findings of the RSE pertaining to these activities are:

- The horizontal extent and magnitude of mining-related materials were delineated sufficiently to support additional characterization of the subsurface.
- The highest count rates were observed along a recurring exposure of bedrock that runs northeast to southwest through and beyond the mine claim.
- A potential Background Reference Area was established.
- The relationship between gamma count rates and concentrations of radium-226 in surface soils (0 to 0.5 ft below ground surface) is described by a linear regression model:

$$\text{Gamma Count Rate (cpm)} = 3244 \times [\text{radium-226 (pCi/g)}] + 6865$$

- The distribution of concentrations of radium-226 in surface soils predicted using this model is rightward tailed. The values in the Survey Area range from -0.8 to 48.2 pCi/g, with a central tendency (median) of 0.8 pCi/g.
- The thorium series radionuclides do not appear to affect the prediction of concentrations of radium-226 from gamma count rates.
- There is evidence that thorium-230 and radium-226 are in secular equilibrium.
- The relationship between gamma count rates and exposure rates is described by a linear regression model:

$$\text{Exposure Rate } (\mu R/h) = \text{Gamma Count Rate (cpm)} \times 4\times10^{-4} + 7.7$$

- The distribution of exposure rates predicted using this model is rightward tailed. The values in the Survey Area range from 9.5 to 72.9, with a central tendency (median) of 11.5 µR/h.
- Further work is recommended to support a robust gamma correlation.

6.0 References

MWH, 2016. Navajo Nation AUM Environmental Response Trust, First Phase, Removal Site Evaluation Work Plan, October 24, 2016.

Stantec, 2018. Harvey Blackwater No. 3 Removal Site Evaluation Report, (will be finalized in October 2018).

Appendix A Instrument calibration and completed function check forms

Certificate of Calibration

Calibration and Voltage Plateau

Environmental Restoration Group, Inc.
8809 Washington St NE, Suite 150
Albuquerque, NM 87113
(505) 298-4224
www.ERGoffice.com

Meter:	Manufacturer:	Ludlum	Model Number:	2221r	Serial Number:	138368
Detector:	Manufacturer:	Ludlum	Model Number:	44-10	Serial Number:	PR154615

✔ Mechanical Check ✔ THR/WIN Operation
✔ F/S Response Check ✔ Reset Check
✔ Geotropism ✔ Audio Check
✔ Meter Zeroed ✔ Battery Check (Min 4.4 VDC)

HV Check (+/- 2.5%): ✔ 500 V ✔ 1000 V ✔ 1500 V
Cable Length: 39-inch ✔ 72-inch Other:

Barometric Pressure: 24.78 inches Hg
Temperature: 74 °F
Relative Humidity: 20 %

Source Distance: Contact ✔ 6 inches Other:
Source Geometry: ✔ Side Below Other:
Threshold: 10 mV
Window:

Instrument found within tolerance: ✔ Yes No

Range Multiplier	Reference Setting	"As Found Reading"	Meter Reading	Integrated 1-Min. Count	Log Scale Count
x 1000	400	400	400	398436	400
x 1000	100	100	100		100
x 100	400	400	400	39845	400
x 100	100	100	100		100
x 10	400	400	400	3984	400
x 10	100	100	100		100
x 1	400	400	400	399	400
x 1	100	100	100		100

High Voltage	Source Counts	Background
700	26998	
800	51037	
900	63340	
950	65550	
1000	67410	
1050	70113	
1100	72217	
1150	72561	9216
1200	72337	

Voltage Plateau

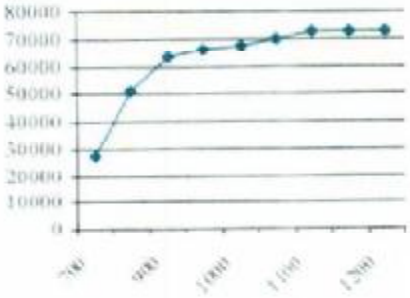

Comments: HV Plateau Scaler Count Time = 1-min. Recommended HV = 1150

Reference Instruments and/or Sources:

Ludlum pulser serial number: 97743 ✔ 201932
Alpha Source: Th-230 @ 12,800 dpm (1/4/12) sn: 4098-03
Beta Source: Tc-99 @ 17,700 dpm (1/4/12) sn: 4099-03

Fluke multimeter serial number: 87490128
✔ Gamma Source Cs-137 @ 5.2 uCi (1/4/12) sn: 4097-03
Other Source:

Calibrated By: [signature] Calibration Date: 7-20-16 Calibration Due: 7-20-17

Reviewed By: [signature] Date: 7/20/16

ERG Form ITC-101.A

This calibration conforms to the requirements and acceptable calibration conditions of ANSI N323A-1997

Certificate of Calibration

Calibration and Voltage Plateau

Environmental Restoration Group, Inc.
8809 Washington St NE, Suite 150
Albuquerque, NM 87113
(505) 298-4224
www.ERGoffice.com

Meter: Manufacturer:	Ludlum	Model Number:	2221r	Serial Number:	138368
Detector: Manufacturer:	Ludlum	Model Number:	44-10	Serial Number:	PR355763

☑ Mechanical Check ☑ THR/WIN Operation
☑ F/S Response Check ☑ Reset Check
☑ Geotropism ☑ Audio Check
☑ Meter Zeroed ☑ Battery Check (Min 4.4 VDC)

HV Check (+/- 2.5%): ☑ 500 V ☑ 1000 V ☑ 1500 V
Cable Length: ☐ 39-inch ☑ 72-inch ☐ Other:

Source Distance: ☐ Contact ☑ 6 inches ☐ Other:
Source Geometry: ☑ Side ☐ Below ☐ Other:

Threshold: 10 mV
Window:

Barometric Pressure: 24.75 inches Hg
Temperature: 76 °F
Relative Humidity: 20 %

Instrument found within tolerance: ☑ Yes ☐ No

Range/Multiplier	Reference Setting	"As Found Reading"	Meter Reading	Integrated 1-Min. Count	Log Scale Count
x 1000	400	400	400	398875	400
x 1000	100	100	100		100
x 100	400	400	400	39883	400
x 100	100	100	100		100
x 10	400	400	400	3988	400
x 10	100	100	100		100
x 1	400	400	400	398	400
x 1	100	100	100		100

High Voltage	Source Counts	Background
700	62275	
800	68049	
900	69726	
950	70112	9509
1000	70068	
1050	71042	
1100	77619	

Voltage Plateau

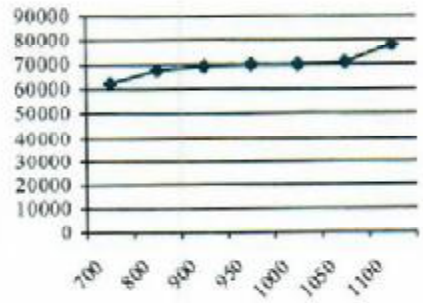

Comments: Comments: HV Plateau Scaler Count Time = 1-min. Recommended HV = 950

Reference Instruments and/or Sources:

Ludlum pulser serial number: ☐ 97743 ☑ 201932
☐ Alpha Source: Th-230 sn: 4098-03@12,800dpm/6,520 cpm (1/4/12)
☐ Beta Source: Tc-99 sn: 4099-03@17,700dpm/11,100cpm(1/4/12)

Fluke multimeter serial number: ☐ 87490128
☑ Gamma Source Cs-137 @ 5.2 uCi (1/4/12) sn: 4097-03
☐ Other Source:

Calibrated By: [signature] Calibration Date: 9/7-17 Calibration Due: 9-17-18

Reviewed By: T.[illegible] Date: 09/08/17

ERG Form ITC. 101.A

This calibration conforms to the requirements and acceptable calibration conditions of ANSI N323A - 1997

Certificate of Calibration

Calibration and Voltage Plateau

Environmental Restoration Group, Inc.
8809 Washington St NE, Suite 150
Albuquerque, NM 87113
(505) 298-4224
www.ERGoffice.com

Meter:	Manufacturer:	Ludlum	Model Number:	2221r	Serial Number:	190206
Detector:	Manufacturer:	Ludlum	Model Number:	44-10	Serial Number:	PR288465

- ☑ Mechanical Check
- ☑ F/S Response Check
- ☑ Geotropism
- ☑ Meter Zeroed
- ☑ THR/WIN Operation
- ☑ Reset Check
- ☑ Audio Check
- ☑ Battery Check (Min 4.4 VDC)

HV Check (+/- 2.5%): ☑ 500 V ☑ 1000 V ☑ 1500 V

Cable Length: ☐ 39-inch ☑ 72-inch ☐ Other:

Source Distance: ☐ Contact ☑ 6 inches ☐ Other:

Source Geometry ☑ Side ☐ Below ☐ Other:

Threshold: 10 mV

Window:

Barometric Pressure: 24.54 inches Hg

Temperature: 71 °F

Relative Humidity: 20 %

Instrument found within tolerance: ☑ Yes ☐ No

Range/Multiplier	Reference Setting	"As Found Reading"	Meter Reading	Integrated 1-Min. Count	Log Scale Co
x 1000	400	400	400	399414	400
x 1000	100	100	100		100
x 100	400	400	400	39954	400
x 100	100	100	100		100
x 10	400	400	400	3996	400
x 10	100	100	100		100
x 1	400	400	400	400	400
x 1	100	100	100		100

High Voltage	Source Counts	Background
700	59266	
800	67330	
900	69690	
950	69728	
1000	71188	10070
1050	71562	
1100	72192	
1150	71326	
1200	71316	

Voltage Plateau

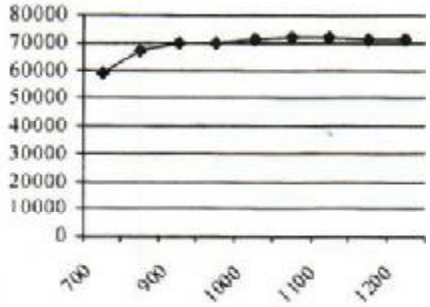

Comments: HV Plateau Scaler Count Time = 1-min. Recommended HV = 1000

Reference Instruments and/or Sources:

Ludlum pulser serial number: ☐ 97743 ☑ 201932

☐ Alpha Source: Th-230 @ 12,800 dpm (1/4/12) sn: 4098-03

☐ Beta Source: Tc-99 @ 17,700 dpm (1/4/12) sn: 4099-03

Fluke multimeter serial number: ☐ 8749012

☑ Gamma Source Cs-137 @ 5.2 uCi (1/4/12) sn: 4097-03

☐ Other Source:

Calibrated By:

Calibration Date: 1-20-16 Calibration Due 1-20-17

Reviewed By:

Date: 1/20/16

ERG Form ITC . 101.A

This calibration conforms to the requirements and acceptable calibration conditions of ANSI N323A - 1997

Certificate of Calibration

Calibration and Voltage Plateau

Environmental Restoration Group, Inc.
8809 Washington St NE, Suite 150
Albuquerque, NM 87113
(505) 298-4224
www.ERGoffice.com

Meter: Manufacturer: Ludlum Model Number: 2221r Serial Number: 196086

Detector: Manufacturer: Ludlum Model Number: 44-10 Serial Number: PR295014

✔ Mechanical Check ✔ THR/WIN Operation
✔ F/S Response Check ✔ Reset Check
✔ Geotropism ✔ Audio Check
✔ Meter Zeroed ✔ Battery Check (Min 4.4 VDC)

HV Check (+/- 2.5%): ✔ 500 V ✔ 1000 V ✔ 1500 V
Cable Length: 39-inch ✔ 72-inch Other:

Barometric Pressure: 24.78 inches Hg
Temperature: 74 °F
Relative Humidity: 20 %

Source Distance: Contact ✔ 6 inches Other:
Source Geometry: ✔ Side Below Other:
Threshold: 10 mV
Window:

Instrument found within tolerance: ✔ Yes No

Range/Multiplier	Reference Setting	"As Found Reading"	Meter Reading	Integrated 1-Min. Count	Log Scale Count
x 1000	400	400	400	399802	400
x 1000	100	100	100		100
x 100	400	400	400	39989	400
x 100	100	100	100		100
x 10	400	400	400	3999	400
x 10	100	100	100		100
x 1	400	400	400	400	400
x 1	100	100	100		100

High Voltage	Source Counts	Background
700	28456	
800	53330	
900	64430	
950	66209	
1000	68333	
1050	69077	
1100	69121	8924
1150	69973	
1200	70155	

Voltage Plateau

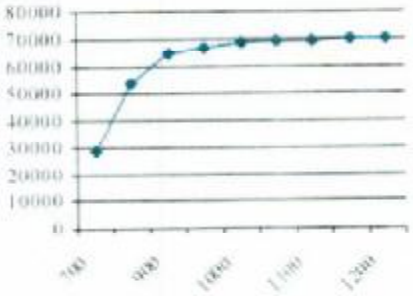

Comments: HV Plateau Scaler Count Time = 1-min. Recommended HV = 1100

Reference Instruments and/or Sources:

Ludlum pulser serial number: 97743 ✔ 201932

Alpha Source: Th-230 @ 12,800 dpm (1/4/12) sn: 4098-03

Beta Source: Tc-99 @ 17,700 dpm (1/4/12) sn: 4099-03

Fluke multimeter serial number: 87490128

✔ Gamma Source Cs-137 @ 5.2 uCi (1/4/12) sn: 4097-03

Other Source:

Calibrated By:

Calibration Date: 7/20/16 Calibration Due: 7/20/17

Reviewed By:

Date: 7/20/16

ERG Form ITC-101.X

This calibration conforms to the requirements and acceptable calibration conditions of ANSI N323A-1997

Certificate of Calibration

Calibration and Voltage Plateau

Environmental Restoration Group, Inc.
8809 Washington St NE, Suite 150
Albuquerque, NM 87113
(505) 298-4224
www.ERGoffice.com

Meter:	Manufacturer:	Ludlum	Model Number:	2221r	Serial Number:	218600
Detector:	Manufacturer:	Ludlum	Model Number:	44-10	Serial Number:	PR174359

- ☑ Mechanical Check
- ☑ F/S Response Check
- ☑ Geotropism
- ☑ Meter Zeroed
- ☑ THR/WIN Operation
- ☑ Reset Check
- ☑ Audio Check
- ☑ Battery Check (Min 4.4 VDC)

HV Check (+/- 2.5%): ☑ 500 V ☑ 1000 V ☑ 1500 V

Cable Length: ☐ 39-inch ☑ 72-inch ☐ Other:

Source Distance: ☐ Contact ☑ 6 inches ☐ Other:

Source Geometry ☑ Side ☐ Below ☐ Other:

Threshold: 10 mV

Window:

Barometric Pressure: 24.57 inches Hg

Temperature: 72 °F

Relative Humidity: 20 %

Instrument found within tolerance: ☑ Yes ☐ No

Range/Multiplier	Reference Setting	"As Found Reading"	Meter Reading	Integrated 1-Min. Count	Log Scale Count
x 1000	400	400	400	398459	400
x 1000	100	100	100		100
x 100	400	400	400	39851	400
x 100	100	100	100		100
x 10	400	400	400	3985	400
x 10	100	100	100		100
x 1	400	400	400	399	400
x 1	100	100	100		100

High Voltage	Source Counts	Background
700	67271	
750	69012	
800	70122	10144
850	70599	
900	71003	
950	73740	
1000	111711	

Voltage Plateau

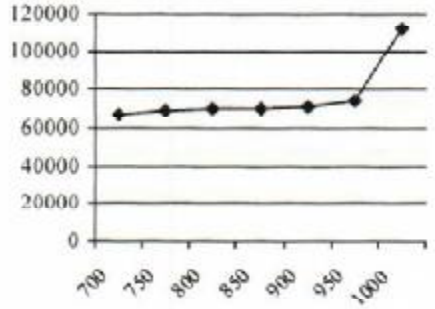

Comments: HV Plateau Scaler Count Time = 1-min. Recommended HV = 800

Reference Instruments and/or Sources:

Ludlum pulser serial number: ☐ 97743 ☑ 201932

☐ Alpha Source: Th-230 @ 12,800 dpm (1/4/12) sn: 4098-03

☐ Beta Source: Tc-99 @ 17,700 dpm (1/4/12) sn: 4099-03

Fluke multimeter serial number: ☐ 8749012

☑ Gamma Source Cs-137 @ 5.2 uCi (1/4/12) sn: 4097-03

☐ Other Source:

Calibrated By:

Calibration Date: 2-15-16 Calibration Due 2-15-17

Reviewed By:

Date: 2/15/16

ERG Form ITC. 101.A

This calibration conforms to the requirements and acceptable calibration conditions of ANSI N323A - 1997

Certificate of Calibration

Calibration and Voltage Plateau

Environmental Restoration Group, Inc.
8809 Washington St NE, Suite 150
Albuquerque, NM 87113
(505) 298-4224
www.ERGoffice.com

Meter:	Manufacturer:	Ludlum	Model Number:	2221r	Serial Number:	254772
Detector:	Manufacturer:	Ludlum	Model Number:	44-10	Serial Number:	PR303727

✔ Mechanical Check ✔ THR/WIN Operation HV Check (+/- 2.5%): ✔ 500 V ✔ 1000 V ✔ 1500 V
✔ F/S Response Check ✔ Reset Check Cable Length: 39-inch ✔ 72-inch Other:
✔ Geotropism ✔ Audio Check
✔ Meter Zeroed ✔ Battery Check (Min 4.4 VDC)

Source Distance: Contact ✔ 6 inches Other: Threshold: 10 mV
Source Geometry: ✔ Side Below Other: Window:

Barometric Pressure: 24.75 inches Hg
Temperature: 74 °F
Relative Humidity: 20 %

Instrument found within tolerance: ✔ Yes No

Range Multiplier	Reference Setting	"As Found Reading"	Meter Reading	Integrated 1-Min. Count	Log Scale Count
x 1000	400	400	400	398857	400
x 1000	100	100	100		100
x 100	400	400	400	39913	400
x 100	100	100	100		100
x 10	400	400	400	3992	400
x 10	100	100	100		100
x 1	400	400	400	399	400
x 1	100	100	100		100

High Voltage	Source Counts	Background
700	53620	
800	64979	
900	67955	
950	67795	
1000	68536	9542
1050	69153	
1100	69331	
1150	69346	
1200	69492	

Voltage Plateau

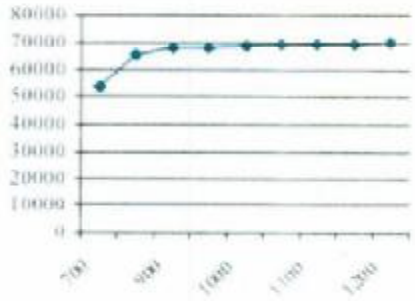

Comments: HV Plateau Scaler Count Time = 1-min. Recommended HV = 1000

Reference Instruments and/or Sources:

Ludlum pulser serial number: 97743 ✔ 201932
Alpha Source: Th-230 @ 12,800 dpm (1/4/12) sn: 4098-03
Beta Source: Tc-99 @ 17,700 dpm (1/4/12) sn: 4099-03

Fluke multimeter serial number: 87490128
✔ Gamma Source: Cs-137 @ 5.2 uCi (1/4/12) sn: 4097-03
Other Source:

Calibrated By: [signature] Calibration Date: 7/20/16 Calibration Due: 7/20/17

Reviewed By: [signature] Date: 7/20/16

ERG Form ITC-101.A

This calibration conforms to the requirements and acceptable calibration conditions of ANSI N323A-1997

Certificate of Calibration

Calibration and Voltage Plateau

Environmental Restoration Group, Inc.
8809 Washington St NE, Suite 150
Albuquerque, NM 87113
(505) 298-4224
www.ERGoffice.com

Meter:	Manufacturer:	Ludlum	Model Number:	2221r	Serial Number:	254772
Detector:	Manufacturer:	Ludlum	Model Number:	44-10	Serial Number:	PR303727

- ✔ Mechanical Check
- ✔ F/S Response Check
- ✔ Geotropism
- ✔ Meter Zeroed
- ✔ THR/WIN Operation
- ✔ Reset Check
- ✔ Audio Check
- ✔ Battery Check (Min 4.4 VDC)

HV Check (+/- 2.5%): ✔ 500 V ✔ 1000 V ✔ 1500 V

Cable Length: ☐ 39-inch ✔ 72-inch ☐ Other:

Source Distance: ☐ Contact ✔ 6 inches ☐ Other:

Source Geometry: ✔ Side ☐ Below ☐ Other:

Threshold: 10 mV

Window:

Barometric Pressure: 24.24 inches Hg

Temperature: 78 °F

Relative Humidity: 20 %

Instrument found within tolerance: ✔ Yes ☐ No

Range/Multiplier	Reference Setting	"As Found Reading"	Meter Reading	Integrated 1-Min. Count	Log Scale Count
x 1000	400	400	400	399859	400
x 1000	100	100	100		100
x 100	400	400	400	39991	400
x 100	100	100	100		100
x 10	400	400	400	4001	400
x 10	100	100	100		100
x 1	400	400	400	400	400
x 1	100	100	100		100

High Voltage	Source Counts	Background
700	52821	
800	65213	
900	68644	
950	69245	
1000	69492	9111
1050	69792	
1100	70472	
1150	71183	
1200	70571	

Voltage Plateau

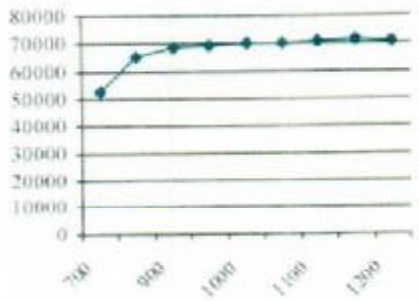

Comments: HV Plateau Scaler Count Time = 1-min. Recommended HV =1000

Reference Instruments and/or Sources:

Ludlum pulser serial number: ☐ 97743 ✔ 201932

☐ Alpha Source: Th-230 @ 12,800 dpm (1/4/12) sn: 4098-03

☐ Beta Source: Tc-99 @ 17.700 dpm (1/4/12) sn: 4099-03

Fluke multimeter serial number: ☐ 87490128

✔ Gamma Source Cs-137 @ 5.2 uCi (1/4/12) sn: 4097-03

☐ Other Source:

Calibrated By:

Reviewed By:

Calibration Date: ~~2 March 17~~ 2/28/17 Calibration Due: ~~2 March 18~~ 2/28/18

Date: 3-1-17

ERG Form ITC. 101.A

This calibration conforms to the requirements and acceptable calibration conditions of ANSI N323A - 1997

Certificate of Calibration

Calibration and Voltage Plateau

Environmental Restoration Group, Inc.
8809 Washington St NE, Suite 150
Albuquerque, NM 87113
(505) 298-4224
www.ERGoffice.com

Meter:	Manufacturer:	Ludlum	Model Number:	2221r	Serial Number:	282966
Detector:	Manufacturer:	Ludlum	Model Number:	44-10	Serial Number:	PR150507

- ☑ Mechanical Check
- ☑ F/S Response Check
- ☑ Geotropism
- ☑ Meter Zeroed
- ☑ THR/WIN Operation
- ☑ Reset Check
- ☑ Audio Check
- ☑ Battery Check (Min 4.4 VDC)

HV Check (+/- 2.5%): ☑ 500 V ☑ 1000 V ☑ 1500 V

Cable Length: ☐ 39-inch ☐ 72-inch ☑ Other: 60"

Source Distance: ☐ Contact ☑ 6 inches ☐ Other:

Source Geometry: ☑ Side ☐ Below ☐ Other:

Threshold: 10 mV

Window:

Barometric Pressure: 24.89 inches Hg

Temperature: 73 °F

Relative Humidity: 20 %

Instrument found within tolerance: ☑ Yes ☐ No

Range/Multiplier	Reference Setting	"As Found Reading"	Meter Reading	Integrated 1-Min. Count	Log Scale Count
x 1000	400	400	400	398753	400
x 1000	100	100	100		100
x 100	400	400	400	39879	400
x 100	100	100	100		100
x 10	400	400	400	3989	400
x 10	100	100	100		100
x 1	400	400	400	399	400
x 1	100	100	100		100

High Voltage	Source Counts	Background
700	56463	
800	64304	
900	68534	
950	69331	
1000	69868	9696
1050	70054	
1100	70609	
1150	70681	
1200	71955	

Voltage Plateau

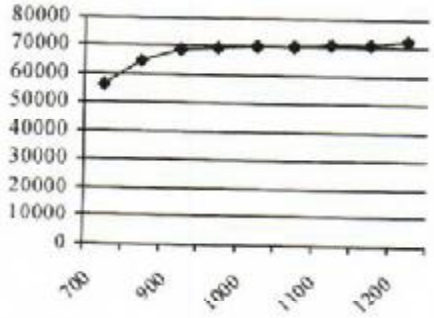

Comments: HV Plateau Scaler Count Time = 1-min. Recommended HV = 1000

Reference Instruments and/or Sources:

Ludlum pulser serial number: ☐ 97743 ☑ 201932

☐ Alpha Source: Th-230 @ 12,800 dpm (1/4/12) sn: 4098-03

☐ Beta Source: Tc99 @ 17,700 dpm (1/4/12) sn: 4099-03

Fluke multimeter serial number: ☐ 87490128

☑ Gamma Source Cs-137 @ 5.2 uCi (1/4/12) sn: 4097-03

☐ Other Source:

Calibrated By:

Reviewed By:

Calibration Date: 10-31-16

Calibration Due: 10-31-17

Date: 10/31/16

ERG Form ITC. 101.A

This calibration conforms to the requirements and acceptable calibration conditions of ANSI N323A - 1997

K&S Associates, Inc.
1926 Elm Tree Drive
Nashville, Tennessee 37210-3718
Phone 800-522-2325 Fax 615-871-0856

ACCREDITED
CALIBRATION CERT #1666.01

CALIBRATION REPORT

SUBMITTED BY: ERG
8809 Washington Street Northeast
Suite 150
Albuquerque, NM 87113

INSTRUMENT: Reuter Stokes RSS-131, #07J00KM1

REPORT NUMBER: 161866

TEST NUMBER(S) M161588

REPORT DATE: June 29, 2016

The CALIBRATION COEFFICIENTS contained in this report were obtained by intercomparison with instruments calibrated by, or directly traceable to, the National Institute of Standards and Technology (NIST). K• S Associates, Inc. is licensed by the State of Tennessee (R-19075-G97, R-19136-B00) to perform calibrations, and is recognized by the Health Physics Society (HPS) as an ACCREDITED INSTRUMENT CALIBRATION LABORATORY. As part of the accreditation K • S participates in a measurement assurance program conducted by the HPS and NIST. K • S also certifies that the calibration was performed using quality policies, methods and procedures that meet or exceed the requirements of ISO/IEC 17025:2005.

This laboratory is accredited by the American Association for Laboratory Accreditation (A2LA) and the results shown in this report have been determined in accordance with the laboratory's terms of accreditation unless stated otherwise in this report

The CALIBRATION COEFFICIENTS stated herein are valid under the conditions specified. It is the instrument user's responsibility to perform the appropriate constancy tests prior to shipment and after return from calibration. It is also the responsibility of the user to assure that the interpretation of the information in this report is consistent with that intended by K • S Associates, Inc.

This report may not be reproduced except in full without the written permission of K• S Associates, Inc.

K&S Associates, Inc
Nashville, Tennessee 37210-3718

ACCREDITED

CALIBRATION CERTIFICATE

Calibration Date: 6/27/2016 Report Number: 161866 Test Number: M161588

K&S certifies that the environmental radiation monitor identified below has been calibrated for radiation measurement using collimated radiation sources whose output has been calibrated with instruments calibrated by or directly traceable to the National Institute of Standards and Technology. K&S is accredited by the American Association for Laboratory Accreditation to perform environmental level calibrations and further certifies that the calibration was performed using accredited policies and procedures (SI 25) that meet or exceed the requirements of ISO/IEC 17025:2005.

Sensor Type: 100 mR/h

Serial Number: 07J00KM1

Average Calibration Coefficient for the range of 0.012 mR/h – 0.220 mR/h*:
1.02 mR/"mR" reading
(Measured at 4 points)

Calibration Coefficient for the 50.0 mR/h point*:
1.12 mR/"mR" reading

Calibration Coefficient for the 80.0 mR/h point*:
1.10 mR/"mR" reading

Found RAC: 2.169e-8

*Multiply the reading in **mR/h** by the Calibration Coefficient to obtain true **mR/h**.

Calibrated By: Richard Harrison Reviewed By: Angela Roper

Title: Calibration Technician Title: Calibration Specialist

Log: M-53 Page: 73

K&S Associates, Inc
Nashville, Tennessee 37210-3718

ACCREDITED

AS FOUND DATA
Reuter-Stokes Chamber Calibration

June 27, 2016 *Test Number* *M161588*

CHAMBER:

Mfgr: Reuter Stokes

Model: RSS-131

Serial: 07J00KM1

SUBMITTED BY:

ERG

Albuquerque, NM

ORIENTATION/CONDITIONS:

Serial number away from source

"True" background exposure rate of 6.7 uR/h, instrument reading was 0.0076 mR/h

ATMOSPHERIC COMMUNICATION: SEALED

POLARIZING POTENTIAL 401V

LEAKAGE: negligible

BEAM QUALITY		EXPOSURE RATE		CALIBRATION COEFFICIENT	UNCERT	LOG
CsEn220	(11mCi)	0.22mR/h	N_x=	1.00 mR/h/rdg	11%	M-53 73
CsEn80	(11mCi)	0.08mR/h	N_x=	1.03 mR/h/rdg	11%	
CsEnv12	(1mCi)	0.012mR/h	N_x=	1.01 mR/h/rdg	11%	
CsEnv15	(1mCi)	0.015mR/h	N_x=	1.02 mR/h/rdg	11%	
Cs199m	(20 Ci)	50mR/h	N_x=	1.12 mR/h/rdg	8%	
Cs252m	(20 Ci)	80mR/h	N_x=	1.10 mR/h/rdg	8%	

Comments Batt: 6.1V, Temp: 24.6 deg C, K&S Environment: Temp:21 deg C , RH 59%, Press: 752 mmHg;
Report Number: 161866
Refer to Appendix I of this report for details on PIC ionization chamber calibrations. Procedure: SI 25
RAC Found: 2.169e-8

Calibrated By Richard Hardison **Reviewed By:**

Title: Calibration Technician **Title:** Calibration Physicist

Checked By: **Prepared By:** RHI

Form RSS

ERG

Single-Channel Function Check Log

Environmental Restoration Group, Inc
8809 Washington St. NE, Suite 150
Albuquerque, NM 87113
(505) 298-4224

METER	
Manufacturer:	Ludlum
Model:	2221
Serial No.	190206
Cal. Due Date:	1-20-17

DETECTOR	
Manufacturer:	Ludlum
Model:	44-10
Serial No.:	PR288465
Cal. Due Date:	1-20-17

Comments:
NNEAT

Source: Cs-137 Activity: 4.81 uCi Source Date: 6-16-94 Distance to Source: 6 inches

Serial No.: 332-94 Emission Rate: NA cpm/emissions

Date	Time	Battery	High Voltage	Threshhold	Source Counts	BKG Counts	Net Counts	Initials	Note(s):
4-6-16	0735	5.6	1012	101	42459 ~~6728~~	6728	35731	NW	Hot Rock Inn lot
4-6-16	1550	5.5	1000	100	41200	6480	34720	NW	Hot Rock Inn lot
4-7-16	0629	5.3	1010	101	41670	7061	34609	NW	Hot Rock Inn lot
4-7-16	1945	5.5	1001	101	40828	6404	34424	NW	Hot Rock Inn lot
4-8-16	0700	5.5	1009	101	42124	6933	35191	NW	Hot Rock Inn lot
4-8-16	1846	5.5	1005	101	42226	7459	34767	NW	Hot Rock Inn lot
					4-8-16				

Reviewed by: MN Review Date: 5/5/16

ERG

Single-Channel Function Check Log

Environmental Restoration Group, Inc.
8809 Washington St. NE, Suite 150
Albuquerque, NM 87113
(505) 298-4224

METER	
Manufacturer:	Ludlum
Model:	2221
Serial No.:	218600
Cal. Due Date:	2-15-17

DETECTOR	
Manufacturer:	Ludlum
Model	44-10
Serial No.:	PR174359
Cal. Due Date:	2-15-17

Comments:
NNSRT

Source: Cs-137 Activity: 4.81 uCi Source Date: 6-16-94 Distance to Source: 6 inches

Serial No.: 332-94 Emission Rate: NA cpm/emissions

Date	Time	Battery	High Voltage	Threshhold	Source Counts	BKG Counts	Net Counts	Initials	Note(s):
4-6-16	0733	5.2	804	98	41823	7148	34675	NV	Hot Rock Im lot
4-6-16	1755	—	—	DID NOT	USE	—	—	NV	—
4-7-16	0624	4.8	804	98	41513	7198	34315	NV	Hot Rock Im lot
4-7-16	1448	—	—	DID NOT	USE	—	—	NV	—

4-8-16

Reviewed by: MV Review Date: 5/05/16

ERG

Single-Channel Function Check Log

Environmental Restoration Group, Inc.
8809 Washington St. NE, Suite 150
Albuquerque, NM 87113
(505) 298-4224

METER	
Manufacturer:	Ludlum
Model:	2221
Serial No.:	138638
Cal. Due Date:	7-5-17

DETECTOR	
Manufacturer:	Ludlum
Model:	44-10
Serial No.:	PR154615
Cal. Due Date:	7-9-17

Comments:
NMERC

Source: Cs-137 Activity: 5.12 uCi Source Date: 6-6-94 Distance to Source: 6 Inches

Serial No.: 333-94 Emission Rate: NA cpm/emissions

Date	Time	Battery	High Voltage	Threshhold	Source Counts	BKG Counts	Net Counts	Initials	Note(s):
10-5-16	0900	5.9	1184	165	46216	7136	39080	NW	Tsosie 1
10-5-16	1546	5.7	1198	155	45357	6266	39091	NW	Tsosie 1
10-8-16	0837	5.7	1182	164	45202	6004	39198	NW	Intersection to Oak 124 & Red Valley
10-8-16	1702	5.6	1128	112	49505	6399	43106	NW	Comfort Suites Farmington
10-12-16	1334	5.7	1139	122	46929	6807	40122	NW	Barton 3
10-12-16	1610	5.6	1130	115	44390	6093	38297	NW	Comfort Suites Farmington
10-13-16	0917	5.6	1129	110	44223	7099	37124	NW	Alonzo
10-13-16	1910	—	—	—	DO NOT USE	—	—	NW	Comfort Suites Farmington
10-15-16	0929	5.7	1173	160	47369	7023	40346	NW	Harvey Blackwater
10-15-16	1821	5.7	1193	163	42767	5769	37598	NW	Red Rock Exp lot
10-26-16	0755	5.7	1223	202	50474	8000	42474	NW	Bagel Tiji
10-26-16	1540	5.6	1152	138	45033	6331	38702	NW	Bagel Tiji

Reviewed by: [signature] Review Date: 11/29/16

ERG

Single-Channel Function Check Log

Environmental Restoration Group, Inc
8809 Washington St. NE, Suite 150
Albuquerque, NM 87113
(505) 298-4224

METER	
Manufacturer:	Ludlum
Model:	2221
Serial No.:	254772
Cal. Due Date:	7-19-17

DETECTOR	
Manufacturer:	Ludlum
Model:	44-10
Serial No.:	PR303727
Cal. Due Date:	7-19-17

Comments:
NNSRT

Source: Cs-137 Activity: 5.12 uCi Source Date: 6-6-94 Distance to Source: 6 inches

Serial No.: 333-94 Emission Rate: NA cpm/emissions

Date	Time	Battery	High Voltage	Threshhold	Source Counts	BKG Counts	Net Counts	Initials	Note(s): Project reference points
10-11-16	0927	5.5	1002	99	45999	6141	39858	NW	NA-0904
10-11-16	1720	5.5	998	99	48630	6576	42054	NW	Comfort Suites Parking Lot
10-12-16	0858	5.5	1003	99	44980	5506	39474	NW	NA-0928
10-12-16	1618	5.5	998	99	43779	6289	37490	NW	Comfort Suites Parking Lot
10-13-16	0911	5.5	1003	99	46726	7375	39351	NW	Alonzo
10-13-16	1910	5.5	990	99	45235	6618	38617	NW	Comfort Suites Parking Lot
10-14-16	0926	5.5	1004	99	45657	7242	38415	NW	Barton 3
10-14-16	1540	5.4	998	99	44751	6480	38271	NW	Comfort Suites Parking Lot
10-15-16	0927	5.5	1001	99	45697	6933	38764	NW	Harvey Blackwater
10-15-16	1324	5.4	996	99	42528	4945	37583	NW	Hot Rock Inn Parking Lot
a 10-24-16	0800	6.2	1005	100	48507	9268	39239	NW	Boyd Tisi
10-24-16	1207	6.0	1001	99	46290	8126	38164	NW	Boyd Tisi

a. changed battery

Reviewed by: MM Review Date: 11/29/16

ERG

Single-Channel Function Check Log

Environmental Restoration Group, Inc
8809 Washington St. NE, Suite 150
Albuquerque, NM 87113
(505) 298-4224

METER	
Manufacturer:	Ludlum
Model:	2221
Serial No.:	196096
Cal. Due Date:	7-11-17

DETECTOR	
Manufacturer:	Ludlum
Model:	44-10
Serial No.:	PR ~~303922~~ 295017 NW
Cal. Due Date:	7-11-17

Comments:
NNERT

Source: Cs-137 Activity: 5.12 uCi Source Date: 6-6-94 Distance to Source: 6 inches

Serial No.: 333-94 Emission Rate: NA cpm/emissions

Date	Time	Battery	High Voltage	Threshhold	Source Counts	BKG Counts	Net Counts	Initials	Note(s): Project reference points
10-15-16	0930	5.4	1100	100	45919	7086	38833	NW	Harvey Blackwater
10-15-16	1828	5.3	1094	100	44133	4794	39339	NW	Hat Rock Inn Lot
10-24-16	0807	5.4	1106	100	47875	8702	39173	NW	Boyd Tisi
10-24-16	1211	5.2	1099	100	45787	8272	37515	NW	Boyd Tisi
10-27-16	1000	5.4	1106	100	48630	8414	40216	NW	Harvey Blackwater
10-27-16	1601	5.2	1099	99	48376	8166	40160	NW	Harvey Blackwater
10-28-16	1401	5.3	1101	100	43141	4755	38386	NW	Mitten No. 3
10-28-16	1700	5.2	1101	99	43075	4698	38377	NW	Mitten No. 3
10-29-16	0814	5.3	1105	100	44174	4908	39266	NW	Mitten No. 3
10-29-16	~~08~~ NW 1346	5.2	1098	100	42452	4621	37831	NW	Mitten No. 3
10-31-16	0835	5.3	1105	101	42258	4609	37649	NW	Mitten No. 3
10-31-16	1655	5.3	1100	100	42630	4963	37667	NW	Goulding's back SUV.

Reviewed by: MN Review Date: 11/29/16

ERG

Single-Channel Function Check Log

Environmental Restoration Group, Inc.
8809 Washington St. NE, Suite 150
Albuquerque, NM 87113
(505) 298-4224

METER	
Manufacturer:	Ludlum
Model:	2221
Serial No.:	254792
Cal. Due Date:	7-19-17

DETECTOR	
Manufacturer:	Ludlum
Model:	44-10
Serial No.:	PR303727
Cal. Due Date:	7-19-17

Comments:
NNEAT

Source: Cs-137 Activity: 5.12 uCi Source Date: 6-6-94 Distance to Source: 6 inches

Serial No.: 333-94 Emission Rate: NA cpm/emissions

Date	Time	Battery	High Voltage	Threshhold	Source Counts	BKG Counts	Net Counts	Initials	Note(s): PROJECT REFERENCE POINT
10-26-16	0637	6.1	1008	99	46974	7833	39141	NW	BOYD TISI
10-26-16	1545	6.1	992	98	42850	5959	36891	NW	BOYD TISI
10-27-16	1005	6.0	1004	99	48059	8561	39498	NW	Harvey Blackwater
10-27-16	1555	5.9	999	99	48564	8465	40099	NW	Harvey Blackwater
10-28-16	0808	5.9	1004	99	46814	9142	37672	NW	Harvey Blackwater
10-28-16	1704	5.8	1000	99	43711	5178	38533	NW	Mitten No. 3
10-29-16	0807	5.9	1005	100	43690	5203	38487	NW	Mitten No. 3
10-29-16	1342	5.8	999	99	44561	4801	39760	NW	Mitten No. 3
10-31-16	0840	5.8	1004	99	42426	5084	37342	NW	Mitten No. 3
10-31-16	1507	5.8	999	99	44206	5069	39137	NW	Goulding's back SUV
11-1-16	0748	5.8	1006	100	44441	4842	39599	NW	Charles Keith
11-1-16	1722	5.7	1003	99	44858	5117	39741	NW	Goulding's back of SUV

Reviewed by: MM Review Date: 11/29/16

ERG

Single-Channel Function Check Log

Environmental Restoration Group, Inc.
8809 Washington St. NE, Suite 150
Albuquerque, NM 87113
(505) 298-4224

METER	
Manufacturer:	Ludlum
Model:	2221
Serial No.:	138368
Cal. Due Date:	7-19-167 NW

DETECTOR	
Manufacturer:	Ludlum
Model:	44-10
Serial No.:	PR154615
Cal. Due Date:	7-19-167 NW

Comments:
NNERT

Source: Cs-137 Activity: 5.12 uCi Source Date: 6-16-94 Distance to Source: 6 in.

Serial No.: 333-94 Emission Rate: NA cpm/emissions

Date	Time	Battery	High Voltage	Threshhold	Source Counts	BKG Counts	Net Counts	Initials	Note(s):
10-28-16	0813	5.6	1162	144	50583	9051	41532	NW	Harvey Blackwater
10-29-16	0815	5.6	1222	199	44566	5053	39513	NW	Mitten No. 3
10-29-16	1338	5.5	1141	125	44503	4794	39709	NW	Mitten No. 3
10-31-16	0846	5.5	1133	111	44824	4753	40071	NW	Mitten No. 3
10-31-16	1502	5.5	1132	114	44994	4883	40111	NW	Goulding's in SUV
11-1-16	0758	5.5	1133	110	45344	4971	40373	NW	Charles Keith
11-1-16	1712	5.3	1120	100	44220	4928	39292	NW	Goulding's in SUV
11-2-16	0826	5.3	1127	103	44389	5834	38555	NW	Charles Keith
11-2-16	1715	5.3	1125	106	43737	5179	38558	NW	Goulding's in SUV
11-3-16	1055	5.3	1125	105	44443	5368	39075	NW	Charles Keith
11-3-16	1842	5.3	1123	104	47047	7583	39464	NW	Chinle Holiday Inn SUV
11-4-16	0900	5.4	1128	104	46230	8402	37828	NW	Occurrence B

Reviewed by: MN Review Date: 11/29/16

(2)

ERG

Single-Channel Function Check Log

Environmental Restoration Group, Inc.
8809 Washington St. NE, Suite 150
Albuquerque, NM 87113
(505) 298-4224

METER	
Manufacturer:	Ludlum
Model:	2221
Serial No.:	196086
Cal. Due Date:	7-9-17

DETECTOR	
Manufacturer:	Ludlum
Model:	44-10
Serial No.:	PR295014
Cal. Due Date:	7-9-17

Comments:
NNERT

Source: Cs-137 Activity: 5.12 uCi Source Date: 6-6-94 Distance to Source: 6 inches

Serial No.: 333-94 Emission Rate: NA cpm/emissions

Date	Time	Battery	High Voltage	Threshhold	Source Counts	BKG Counts	Net Counts	Initials	Note(s): Project reference points
11-1-16	0744	5.3	1107	100	43406	4729	38677	NW	Charles Keith
11-1-16	1718	5.2	1102	99	44319	5332	38987	NW	Goulding's in SUV
11-2-16	0818	5.2	1108	100	43456	5555	37901	NW	Charles Keith
11-2-16	1703	5.1	1101	100	43874	5111	38763	NW	Goulding's in SUV
a 11-3-16	1050	6.2	1107	100	45017	5399	39618	NW	Charles Keith
a 11-3-16	1845	6.2	1104	99	47896	7562	40334	NW	Chinle Holiday Inn SUV
11-4-16	0956	6.2	1109	100	47119	8387	38732	NW	Occurrence B
11-4-16	1147	6.1	1105	100	46025	7972	38053	NW	Occurrence B
11-5-16	1112	6.1	1107	100	47483	8555	38928	NW	Claim 28
11-5-16	1524	6.1	1107	99	46822	7012	39811	NW	Chinle lot in SUV
11-7-16	0822	6.1	1108	100	46734	8744	37990	NW	Claim 28
11-7-16	1829	5.9	1104	99	46382	6448	39934	NW	Chinle lot

a. Changed batteries

Reviewed by: MH Review Date: 11/29/16

ERG

Single-Channel Function Check Log

Environmental Restoration Group, Inc
8809 Washington St NE, Suite 150
Albuquerque, NM 87113
(505) 298-4224

METER	
Manufacturer:	Ludlum
Model:	2221
Serial No.:	282466
Cal. Due Date:	10-31-17

DETECTOR	
Manufacturer:	Ludlum
Model:	44-10
Serial No.:	PR150507
Cal. Due Date:	10-31-17

Comments:
NNEAT

Source: Cs-137 Activity: 5.12 uCi Source Date: 6-6-94 Distance to Source: 6 inches

Serial No.: 333-94 Emission Rate: NA cpm/emissions

Date	Time	Battery	High Voltage	Threshhold	Source Counts	BKG Counts	Net Counts	Initials	Note(s): Project reference point,
11-2-16	0832	6.0	1007	100	43939	6161	37778	NW	Checks keith
11-2-16	1711	6.0	1003	101	44857	5744	39113	NW	Goulding's in SUV
11-4-16	0904	6.0	1008	101	47156	8938	38218	NW	Occurrence B
11-4-16	1152	5.9	1007	101	46787	8341	38446	NW	Occurrence B
11-5-16	1121	6.0	1007	101	47567	9195	38372	NW	Claim 28
11-5-16	1531	5.9	1007	101	46740	7360	39380	NW	Chinle lot in SUV
11-7-16	0810	6.0	1010	104	49757	9136	40621	NW	Claim 28
11-7-16	1832	5.8	1003	100	45791	6809	38982	NW	Chinle lot
11-8-16	0810	5.8	1009	100	49552	9855	39697	NW	Claim 28
11-8-16	1634	5.7	1003	100	48686	7133	41553	NW	Chinle lot
11-10-16	0812	5.8	1012	101	48028	9818	38205	NW	Claim 28
11-10-16	1635	5.7	1003	101	46906	9042	37864	NW	Claim 28 (2nd location)

Reviewed by: NW Review Date: 11/29/16

ERG

Single-Channel Function Check Log

Environmental Restoration Group, Inc.
8809 Washington St. NE, Suite 150
Albuquerque, NM 87113
(505) 298-4224

METER	
Manufacturer:	Ludlum
Model:	2221
Serial No.:	254792
Cal. Due Date:	7-9-17

DETECTOR	
Manufacturer:	Ludlum
Model:	44-10
Serial No.:	PR303727
Cal. Due Date:	7-9-17

Comments:
NNERT

Source: Cs-137 Activity: 5.12 uCi Source Date: 6-6-94 Distance to Source: 6 inches

Serial No.: 33394 Emission Rate: NA cpm/emissions

Date	Time	Battery	High Voltage	Threshhold	Source Counts	BKG Counts	Net Counts	Initials	Note(s): Project reference points
11-2-16	0821	5.7	1008	99	45344	6195	39149	NW	Charles, keith
11-2-16	1721	5.6	1002	99	44348	5346	39002	NW	Goulding's in SUV
11-3-16	1037	5.7	1007	100	43600	5834	37766	NW	Charles keith
11-3-16	1848	5.7	1003	100	46842	7821	39021	NW	Chinle Holiday Inn SUV
11-4-16	0845	5.7	1007	100	48258	8617	39641	NW	Occurrence B
11-4-16	1255	5.5	1003	99	46329	8608	37721	NW	Occurrence B
11-5-16	1108	5.6	1006	99	47858	9264	38594	NW	Claim 28
11-5-16	1527	5.6	1006	99	45039	7398	37641	NW	Chinle lot in SUV
11-7-16	0905	5.7	1008	100	48193	9249	38944	NW	Claim 28
11-7-16	1036	5.6	1003	99	46783	6986	39797	NW	Chinle lot in SUV
11-8-16	0800	5.6	1009	99	47951	9183	38768	NW	Claim 28
11-8-16	1637	5.5	1003	100	45094	6916	38178	NW	Chinle lot

Reviewed by: MM Review Date: 11/29/16

ERG

Single-Channel Function Check Log

Environmental Restoration Group, Inc.
8809 Washington St. NE Suite 150
Albuquerque, NM 87113
(505) 298-4224

METER	
Manufacturer:	Ludlum
Model:	2221
Serial No.:	254772
Cal. Due Date:	2-28-18

DETECTOR	
Manufacturer:	Ludlum
Model:	44-10
Serial No.:	PR 303727
Cal. Due Date:	2-28-18

Comments:
NNERT

Source: Cs-137 Activity: 4 uCi Source Date: 4-18-96 Distance to Source: 6 inches

Serial No.: 544-96 Emission Rate: N/A cpm/emissions

Date	Time	Battery	High Voltage	Threshhold	Source Counts	BKG Counts	Net Counts	Initials	Note(s):
3-16-17	1322	6.2	947	100	40116	7260	32856	NW	Cameron Trading Post lot
3-16-17	1555	6.1	942	99	38642	5986	32657	NW	Boyd Tisi
3-17-17	0812	6.2	951	100	40027	7965	32122	NW	Cameron Trading Post lot
3-17-17	1328	6.1	943	100	42203	10206	31997	NW	Boyd Tisi ~200 ft from BG4
3-18-17	0730	6.1	949	100	38598	6950	31648	NW	Harvey Blackwater
3-18-17	1505	6.0	941	100	35954	5035	30919	NW	Mitten No. 3
3-19-17	0651	6.1	949	99	36982	4952	32030	NW	Goulding's lot
3-19-17	1217	5.9	945	99	36802	5103	31699	NW	Charles Keith south of claim
3-20-17	0955	6.0	950	100	40829	8989	31840	NW	Claim 28
3-20-17	1555	5.9	943	100	37489	5569	32280	NW	Chinle parking lot
3-21-17	0635	5.9	950	100	38433	5735	32698	NW	Chinle lot
3-21-17	1657	5.9	946	100	36797	4997	31800	NW	Goulding's lot

Reviewed by: MN Review Date: 10/17/17

ERG

Single-Channel Function Check Log

Environmental Restoration Group, Inc
8809 Washington St. NE, Suite 150
Albuquerque, NM 87113
(505) 218-4224

METER	
Manufacturer:	Ludlum
Model:	2221
Serial No.:	138368
Cal. Due Date:	9-7-18

DETECTOR	
Manufacturer:	Ludlum
Model:	44-10
Serial No.:	PR355763
Cal. Due Date:	9-7-18

Comments:
NNERT

Source: Cs-137 Activity: 4 uCi Source Date: 4-18-96 Distance to Source: 6 inches

Serial No.: 544-96 Emission Rate: NA cpm/emissions

Date	Time	Battery	High Voltage	Threshhold	Source Counts	BKG Counts	Net Counts	Initials	Note(s):
9-12-17	0914	5.4	950	101	36935	6331	30604	NW	Barton 3
9-12-17	1432	5.3	944	99	38043	6468	31575	NW	Tsosie 1
9-13-17	0906	5.4	951	99	37146	6538	30608	NW	Alonzo
9-13-17	1600	5.3	944	99	35587	5991	29596	NW	Barton 3
9-14-17	0909	5.4	950	100	36080	6176	29904	NW	NA-0904
9-14-17	1255	5.3	948	100	36099	5764	30335	NW	NA-0904
9-15-17	0920	5.4	954	101	35208	5551	29657	NW	Eunice Begay
9-15-17	1729	5.3	957	109	35937	5261	30676	NW	Eunice Begay
9-19-17	0831	5.4	958	105	36467	6034	30433	NW	Section 26 @ trailer
9-19-17	1453	5.3	946	99	44454	14948	29506	NW	Section 26 @ corral
9-20-17	0736	5.3	953	102	37676	6987	30689	NW	Mexican Hat
9-20-17	1611	5.2	947	100	36842	6252	30590	NW	Mexican Hat

Reviewed by: MM Review Date: 10/9/17

ERG

Single-Channel Function Check Log

Environmental Restoration Group, Inc.
8809 Washington St. NE, Suite 150
Albuquerque, NM 87113
(505) 298-4224

METER	
Manufacturer:	GE
Model:	RSS-131
Serial No.:	07J00KM1
Cal. Due Date:	6-29-17

DETECTOR	
Manufacturer:	SAME AS METER
Model:	
Serial No.:	
Cal. Due Date:	

Comments:
NNERT

Source: Cs-137 Activity: 5.12 uCi Source Date: 6-6-94 Distance to Source: Contact-housing

Serial No.: 333-94 Emission Rate: NA cpm/emissions

Date	Time	Battery	High Voltage	Threshhold	Source Counts (mR/h)	BKG Counts (μR/h)	Net Counts	Initials	Note(s): Project reference points
10-26-16	0525	~6.4	~400	NA	~27.8	~10.5	~17.3	NW	Best Western room - Flagstaff
10-26-16	2010	~6.3	~400	NA	~26	~9.5	~16.5	NW	Goulding's room ~~Best Western room - Flagstaff~~
10-27-16	0720	~6.2	~400	NA	~26.7	~10.0	~16.7	NW	Goulding's room
10-27-16	1710	~6.2	~400	NA	~27.0	~10.8	~16.2	NW	Goulding's room
10-31-16	0609	~6.3	~400	NA	~27.0	~10	~16	NW	Goulding's room
10-31-16	1520	~6.3	~400	NA	~26	~10	~16	NW	Goulding's room
11-3-16	0700	~6.2	~400	NA	~26.5	~10.5	~16	NW	Goulding's room
11-3-16	1924	~6.1	~400	NA	~28.8	~12.5	~16.3	NW	Holiday Inn Chinle-room
11-9-16	0615	~6.3	~400	NA	~30	~12.8	~17.2	NW	Holiday Inn-Chinle room
11-9-16	1430	~6.2	~400	NA	~29.5	~12.5	~17	NW	Holiday Inn Chinle-room
11-11-16	0610	~6.4	~400	NA	~31.5	~13.5	~18	NW	Holiday Inn Chinle-room
11-11-16	1825	~6.2	~400	NA	~28	~11	~17	NW	Holiday Inn Chinle-room

Reviewed by: MM Review Date: 11-29-16

Appendix B Exposure Rate Measurements

Date and Time	Exposure Rate (mR/h)	Location	Date and Time	Exposure Rate (mR/h)	Location
10/27/2016 13:26	0.0536	Correlation Location 1	10/27/2016 13:31	0.0128	Correlation Location 1
10/27/2016 13:26	0.0938	Correlation Location 1	10/27/2016 13:31	0.013	Correlation Location 1
10/27/2016 13:26	0.0816	Correlation Location 1	10/27/2016 13:31	0.0129	Correlation Location 1
10/27/2016 13:26	0.0558	Correlation Location 1	10/27/2016 13:32	0.0132	Correlation Location 1
10/27/2016 13:26	0.0368	Correlation Location 1	10/27/2016 13:32	0.0136	Correlation Location 1
10/27/2016 13:26	0.0255	Correlation Location 1	10/27/2016 13:32	0.0139	Correlation Location 1
10/27/2016 13:26	0.019	Correlation Location 1	10/27/2016 13:32	0.014	Correlation Location 1
10/27/2016 13:26	0.0156	Correlation Location 1	10/27/2016 13:32	0.0141	Correlation Location 1
10/27/2016 13:26	0.0142	Correlation Location 1	10/27/2016 13:32	0.0141	Correlation Location 1
10/27/2016 13:26	0.0135	Correlation Location 1	10/27/2016 13:32	0.0136	Correlation Location 1
10/27/2016 13:27	0.0127	Correlation Location 1	10/27/2016 13:32	0.0132	Correlation Location 1
10/27/2016 13:27	0.0123	Correlation Location 1	10/27/2016 13:32	0.0128	Correlation Location 1
10/27/2016 13:27	0.0126	Correlation Location 1	10/27/2016 13:32	0.0126	Correlation Location 1
10/27/2016 13:27	0.0124	Correlation Location 1	10/27/2016 13:33	0.0123	Correlation Location 1
10/27/2016 13:27	0.0127	Correlation Location 1	10/27/2016 13:33	0.0126	Correlation Location 1
10/27/2016 13:27	0.0123	Correlation Location 1	10/27/2016 13:33	0.0124	Correlation Location 1
10/27/2016 13:27	0.0122	Correlation Location 1	10/27/2016 13:33	0.0127	Correlation Location 1
10/27/2016 13:27	0.0126	Correlation Location 1	10/27/2016 13:33	0.0131	Correlation Location 1
10/27/2016 13:27	0.013	Correlation Location 1	10/27/2016 13:33	0.0132	Correlation Location 1
10/27/2016 13:27	0.0133	Correlation Location 1	10/27/2016 13:33	0.0134	Correlation Location 1
10/27/2016 13:28	0.0135	Correlation Location 1	10/27/2016 13:33	0.0136	Correlation Location 1
10/27/2016 13:28	0.0138	Correlation Location 1	10/27/2016 13:33	0.0136	Correlation Location 1
10/27/2016 13:28	0.0141	Correlation Location 1	10/27/2016 13:33	0.0138	Correlation Location 1
10/27/2016 13:28	0.0139	Correlation Location 1	10/27/2016 13:34	0.0135	Correlation Location 1
10/27/2016 13:28	0.0138	Correlation Location 1	10/27/2016 13:34	0.0132	Correlation Location 1
10/27/2016 13:28	0.0135	Correlation Location 1	10/27/2016 13:34	0.0129	Correlation Location 1
10/27/2016 13:28	0.0131	Correlation Location 1	10/27/2016 13:34	0.0128	Correlation Location 1
10/27/2016 13:28	0.0128	Correlation Location 1	10/27/2016 13:34	0.0132	Correlation Location 1
10/27/2016 13:28	0.013	Correlation Location 1	10/27/2016 13:34	0.0133	Correlation Location 1
10/27/2016 13:28	0.0134	Correlation Location 1	10/27/2016 13:34	0.013	Correlation Location 1
10/27/2016 13:29	0.0133	Correlation Location 1	10/27/2016 13:34	0.0129	Correlation Location 1
10/27/2016 13:29	0.0129	Correlation Location 1	10/27/2016 13:34	0.0129	Correlation Location 1
10/27/2016 13:29	0.0128	Correlation Location 1	10/27/2016 13:34	0.013	Correlation Location 1
10/27/2016 13:29	0.0127	Correlation Location 1	10/27/2016 13:35	0.0131	Correlation Location 1
10/27/2016 13:29	0.0127	Correlation Location 1	10/27/2016 13:35	0.0132	Correlation Location 1
10/27/2016 13:29	0.0126	Correlation Location 1	10/27/2016 13:35	0.0133	Correlation Location 1
10/27/2016 13:29	0.0126	Correlation Location 1	10/27/2016 13:35	0.0129	Correlation Location 1
10/27/2016 13:29	0.0129	Correlation Location 1	10/27/2016 13:35	0.0127	Correlation Location 1
10/27/2016 13:29	0.0127	Correlation Location 1	10/27/2016 13:35	0.0127	Correlation Location 1
10/27/2016 13:29	0.0128	Correlation Location 1	10/27/2016 13:35	0.0127	Correlation Location 1
10/27/2016 13:30	0.0129	Correlation Location 1	10/27/2016 13:35	0.0129	Correlation Location 1
10/27/2016 13:30	0.013	Correlation Location 1	10/27/2016 13:35	0.0133	Correlation Location 1
10/27/2016 13:30	0.0133	Correlation Location 1	10/27/2016 13:35	0.0135	Correlation Location 1
10/27/2016 13:30	0.0135	Correlation Location 1	10/27/2016 13:36	0.0131	Correlation Location 1
10/27/2016 13:30	0.0138	Correlation Location 1	10/27/2016 13:36	0.0128	Correlation Location 1
10/27/2016 13:30	0.0142	Correlation Location 1	10/27/2016 13:36	0.0126	Correlation Location 1
10/27/2016 13:30	0.0144	Correlation Location 1	10/27/2016 13:36	0.0124	Correlation Location 1
10/27/2016 13:30	0.0142	Correlation Location 1	10/27/2016 13:36	0.0122	Correlation Location 1
10/27/2016 13:30	0.0139	Correlation Location 1	10/27/2016 13:36	0.0123	Correlation Location 1
10/27/2016 13:30	0.0137	Correlation Location 1	10/27/2016 13:36	0.0133	Correlation Location 1
10/27/2016 13:31	0.0133	Correlation Location 1	10/27/2016 13:36	0.0133	Correlation Location 1
10/27/2016 13:31	0.0135	Correlation Location 1	10/27/2016 13:36	0.0131	Correlation Location 1
10/27/2016 13:31	0.014	Correlation Location 1	10/27/2016 13:36	0.013	Correlation Location 1
10/27/2016 13:31	0.0142	Correlation Location 1	10/27/2016 13:37	0.0127	Correlation Location 1
10/27/2016 13:31	0.0136	Correlation Location 1	10/27/2016 13:37	0.0126	Correlation Location 1
10/27/2016 13:31	0.0133	Correlation Location 1	10/27/2016 13:37	0.0126	Correlation Location 1
10/27/2016 13:31	0.013	Correlation Location 1	10/27/2016 14:03	0.0529	Correlation Location 2

Harvey Blackwater No. 3 Exposure Rate Measurements for Correlation

Date and Time	Exposure Rate (mR/h)	Location	Date and Time	Exposure Rate (mR/h)	Location
10/27/2016 14:03	0.0921	Correlation Location 2	10/27/2016 14:09	0.0099	Correlation Location 2
10/27/2016 14:03	0.0795	Correlation Location 2	10/27/2016 14:09	0.0102	Correlation Location 2
10/27/2016 14:03	0.0536	Correlation Location 2	10/27/2016 14:09	0.0099	Correlation Location 2
10/27/2016 14:03	0.0344	Correlation Location 2	10/27/2016 14:09	0.0092	Correlation Location 2
10/27/2016 14:04	0.0229	Correlation Location 2	10/27/2016 14:09	0.009	Correlation Location 2
10/27/2016 14:04	0.0167	Correlation Location 2	10/27/2016 14:09	0.0093	Correlation Location 2
10/27/2016 14:04	0.0131	Correlation Location 2	10/27/2016 14:09	0.0093	Correlation Location 2
10/27/2016 14:04	0.0111	Correlation Location 2	10/27/2016 14:10	0.0091	Correlation Location 2
10/27/2016 14:04	0.0102	Correlation Location 2	10/27/2016 14:10	0.0091	Correlation Location 2
10/27/2016 14:04	0.01	Correlation Location 2	10/27/2016 14:10	0.0094	Correlation Location 2
10/27/2016 14:04	0.0102	Correlation Location 2	10/27/2016 14:10	0.01	Correlation Location 2
10/27/2016 14:04	0.0104	Correlation Location 2	10/27/2016 14:10	0.0103	Correlation Location 2
10/27/2016 14:04	0.0103	Correlation Location 2	10/27/2016 14:10	0.0104	Correlation Location 2
10/27/2016 14:04	0.01	Correlation Location 2	10/27/2016 14:10	0.0104	Correlation Location 2
10/27/2016 14:05	0.0098	Correlation Location 2	10/27/2016 14:10	0.0105	Correlation Location 2
10/27/2016 14:05	0.0098	Correlation Location 2	10/27/2016 14:10	0.0109	Correlation Location 2
10/27/2016 14:05	0.01	Correlation Location 2	10/27/2016 14:10	0.011	Correlation Location 2
10/27/2016 14:05	0.0102	Correlation Location 2	10/27/2016 14:11	0.0112	Correlation Location 2
10/27/2016 14:05	0.01	Correlation Location 2	10/27/2016 14:11	0.0112	Correlation Location 2
10/27/2016 14:05	0.01	Correlation Location 2	10/27/2016 14:11	0.0105	Correlation Location 2
10/27/2016 14:05	0.01	Correlation Location 2	10/27/2016 14:11	0.0102	Correlation Location 2
10/27/2016 14:05	0.0097	Correlation Location 2	10/27/2016 14:11	0.01	Correlation Location 2
10/27/2016 14:05	0.0096	Correlation Location 2	10/27/2016 14:11	0.0103	Correlation Location 2
10/27/2016 14:05	0.0096	Correlation Location 2	10/27/2016 14:11	0.01	Correlation Location 2
10/27/2016 14:06	0.0096	Correlation Location 2	10/27/2016 14:11	0.0096	Correlation Location 2
10/27/2016 14:06	0.0097	Correlation Location 2	10/27/2016 14:11	0.0094	Correlation Location 2
10/27/2016 14:06	0.0095	Correlation Location 2	10/27/2016 14:11	0.0095	Correlation Location 2
10/27/2016 14:06	0.0096	Correlation Location 2	10/27/2016 14:12	0.0098	Correlation Location 2
10/27/2016 14:06	0.0098	Correlation Location 2	10/27/2016 14:12	0.01	Correlation Location 2
10/27/2016 14:06	0.0099	Correlation Location 2	10/27/2016 14:12	0.0098	Correlation Location 2
10/27/2016 14:06	0.0098	Correlation Location 2	10/27/2016 14:12	0.0095	Correlation Location 2
10/27/2016 14:06	0.0098	Correlation Location 2	10/27/2016 14:12	0.0093	Correlation Location 2
10/27/2016 14:06	0.01	Correlation Location 2	10/27/2016 14:12	0.0096	Correlation Location 2
10/27/2016 14:06	0.01	Correlation Location 2	10/27/2016 14:12	0.0098	Correlation Location 2
10/27/2016 14:07	0.0099	Correlation Location 2	10/27/2016 14:12	0.0098	Correlation Location 2
10/27/2016 14:07	0.0096	Correlation Location 2	10/27/2016 14:12	0.01	Correlation Location 2
10/27/2016 14:07	0.01	Correlation Location 2	10/27/2016 14:12	0.0103	Correlation Location 2
10/27/2016 14:07	0.0106	Correlation Location 2	10/27/2016 14:13	0.0103	Correlation Location 2
10/27/2016 14:07	0.0105	Correlation Location 2	10/27/2016 14:13	0.0108	Correlation Location 2
10/27/2016 14:07	0.0106	Correlation Location 2	10/27/2016 14:13	0.0109	Correlation Location 2
10/27/2016 14:07	0.0105	Correlation Location 2	10/27/2016 14:13	0.0106	Correlation Location 2
10/27/2016 14:07	0.0105	Correlation Location 2	10/27/2016 14:13	0.0103	Correlation Location 2
10/27/2016 14:07	0.0103	Correlation Location 2	10/27/2016 14:13	0.0098	Correlation Location 2
10/27/2016 14:07	0.01	Correlation Location 2	10/27/2016 14:13	0.0096	Correlation Location 2
10/27/2016 14:08	0.01	Correlation Location 2	10/27/2016 14:13	0.0096	Correlation Location 2
10/27/2016 14:08	0.01	Correlation Location 2	10/27/2016 14:13	0.01	Correlation Location 2
10/27/2016 14:08	0.01	Correlation Location 2	10/27/2016 14:13	0.0105	Correlation Location 2
10/27/2016 14:08	0.0102	Correlation Location 2	10/27/2016 14:14	0.0104	Correlation Location 2
10/27/2016 14:08	0.01	Correlation Location 2	10/27/2016 14:14	0.01	Correlation Location 2
10/27/2016 14:08	0.01	Correlation Location 2	10/27/2016 14:14	0.01	Correlation Location 2
10/27/2016 14:08	0.01	Correlation Location 2	10/27/2016 14:14	0.0098	Correlation Location 2
10/27/2016 14:08	0.0103	Correlation Location 2	10/27/2016 14:14	0.01	Correlation Location 2
10/27/2016 14:08	0.01	Correlation Location 2	10/27/2016 14:14	0.0102	Correlation Location 2
10/27/2016 14:08	0.0096	Correlation Location 2	10/27/2016 14:43	0.0556	Correlation Location 3
10/27/2016 14:09	0.0096	Correlation Location 2	10/27/2016 14:43	0.0993	Correlation Location 3
10/27/2016 14:09	0.0097	Correlation Location 2	10/27/2016 14:43	0.0905	Correlation Location 3
10/27/2016 14:09	0.0098	Correlation Location 2	10/27/2016 14:43	0.0665	Correlation Location 3

Harvey Blackwater No. 3 Exposure Rate Measurements for Correlation

Date and Time	Exposure Rate (mR/h)	Location	Date and Time	Exposure Rate (mR/h)	Location
10/27/2016 14:43	0.0479	Correlation Location 3	10/27/2016 14:49	0.0242	Correlation Location 3
10/27/2016 14:43	0.0363	Correlation Location 3	10/27/2016 14:49	0.0239	Correlation Location 3
10/27/2016 14:43	0.0302	Correlation Location 3	10/27/2016 14:49	0.0237	Correlation Location 3
10/27/2016 14:43	0.0267	Correlation Location 3	10/27/2016 14:49	0.0237	Correlation Location 3
10/27/2016 14:44	0.0251	Correlation Location 3	10/27/2016 14:49	0.0239	Correlation Location 3
10/27/2016 14:44	0.0253	Correlation Location 3	10/27/2016 14:49	0.024	Correlation Location 3
10/27/2016 14:44	0.0249	Correlation Location 3	10/27/2016 14:49	0.0242	Correlation Location 3
10/27/2016 14:44	0.0242	Correlation Location 3	10/27/2016 14:50	0.0245	Correlation Location 3
10/27/2016 14:44	0.0235	Correlation Location 3	10/27/2016 14:50	0.0247	Correlation Location 3
10/27/2016 14:44	0.0239	Correlation Location 3	10/27/2016 14:50	0.0247	Correlation Location 3
10/27/2016 14:44	0.0245	Correlation Location 3	10/27/2016 14:50	0.0241	Correlation Location 3
10/27/2016 14:44	0.0249	Correlation Location 3	10/27/2016 14:50	0.0243	Correlation Location 3
10/27/2016 14:44	0.0247	Correlation Location 3	10/27/2016 14:50	0.0243	Correlation Location 3
10/27/2016 14:44	0.0247	Correlation Location 3	10/27/2016 14:50	0.024	Correlation Location 3
10/27/2016 14:45	0.0249	Correlation Location 3	10/27/2016 14:50	0.0237	Correlation Location 3
10/27/2016 14:45	0.0249	Correlation Location 3	10/27/2016 14:50	0.024	Correlation Location 3
10/27/2016 14:45	0.0245	Correlation Location 3	10/27/2016 14:50	0.0242	Correlation Location 3
10/27/2016 14:45	0.0241	Correlation Location 3	10/27/2016 14:51	0.0244	Correlation Location 3
10/27/2016 14:45	0.024	Correlation Location 3	10/27/2016 14:51	0.0245	Correlation Location 3
10/27/2016 14:45	0.024	Correlation Location 3	10/27/2016 14:51	0.0245	Correlation Location 3
10/27/2016 14:45	0.0242	Correlation Location 3	10/27/2016 14:51	0.0247	Correlation Location 3
10/27/2016 14:45	0.0241	Correlation Location 3	10/27/2016 14:51	0.0245	Correlation Location 3
10/27/2016 14:45	0.0241	Correlation Location 3	10/27/2016 14:51	0.0245	Correlation Location 3
10/27/2016 14:45	0.0242	Correlation Location 3	10/27/2016 14:51	0.0245	Correlation Location 3
10/27/2016 14:46	0.0242	Correlation Location 3	10/27/2016 14:51	0.0251	Correlation Location 3
10/27/2016 14:46	0.0241	Correlation Location 3	10/27/2016 14:51	0.0256	Correlation Location 3
10/27/2016 14:46	0.0237	Correlation Location 3	10/27/2016 14:51	0.0255	Correlation Location 3
10/27/2016 14:46	0.0235	Correlation Location 3	10/27/2016 14:52	0.0255	Correlation Location 3
10/27/2016 14:46	0.0237	Correlation Location 3	10/27/2016 14:52	0.0253	Correlation Location 3
10/27/2016 14:46	0.0241	Correlation Location 3	10/27/2016 14:52	0.0251	Correlation Location 3
10/27/2016 14:46	0.0242	Correlation Location 3	10/27/2016 14:52	0.0252	Correlation Location 3
10/27/2016 14:46	0.0244	Correlation Location 3	10/27/2016 14:52	0.0249	Correlation Location 3
10/27/2016 14:46	0.0241	Correlation Location 3	10/27/2016 14:52	0.0247	Correlation Location 3
10/27/2016 14:46	0.024	Correlation Location 3	10/27/2016 14:52	0.0249	Correlation Location 3
10/27/2016 14:47	0.0241	Correlation Location 3	10/27/2016 14:52	0.0245	Correlation Location 3
10/27/2016 14:47	0.0244	Correlation Location 3	10/27/2016 14:52	0.0242	Correlation Location 3
10/27/2016 14:47	0.0242	Correlation Location 3	10/27/2016 14:52	0.0242	Correlation Location 3
10/27/2016 14:47	0.024	Correlation Location 3	10/27/2016 14:53	0.0241	Correlation Location 3
10/27/2016 14:47	0.0241	Correlation Location 3	10/27/2016 14:53	0.0239	Correlation Location 3
10/27/2016 14:47	0.0239	Correlation Location 3	10/27/2016 14:53	0.0243	Correlation Location 3
10/27/2016 14:47	0.0237	Correlation Location 3	10/27/2016 14:53	0.0245	Correlation Location 3
10/27/2016 14:47	0.0241	Correlation Location 3	10/27/2016 14:53	0.0245	Correlation Location 3
10/27/2016 14:47	0.0245	Correlation Location 3	10/27/2016 14:53	0.0247	Correlation Location 3
10/27/2016 14:47	0.0243	Correlation Location 3	10/27/2016 14:53	0.0251	Correlation Location 3
10/27/2016 14:48	0.024	Correlation Location 3	10/27/2016 14:53	0.0249	Correlation Location 3
10/27/2016 14:48	0.024	Correlation Location 3	10/27/2016 14:53	0.0245	Correlation Location 3
10/27/2016 14:48	0.0243	Correlation Location 3	10/27/2016 14:53	0.0243	Correlation Location 3
10/27/2016 14:48	0.0242	Correlation Location 3	10/27/2016 14:54	0.0237	Correlation Location 3
10/27/2016 14:48	0.0239	Correlation Location 3	10/27/2016 14:54	0.0241	Correlation Location 3
10/27/2016 14:48	0.024	Correlation Location 3	10/27/2016 14:54	0.0247	Correlation Location 3
10/27/2016 14:48	0.0245	Correlation Location 3	10/27/2016 14:54	0.0251	Correlation Location 3
10/27/2016 14:48	0.0247	Correlation Location 3	10/27/2016 14:54	0.0253	Correlation Location 3
10/27/2016 14:48	0.0245	Correlation Location 3	10/27/2016 15:14	0.0548	Correlation Location 4
10/27/2016 14:48	0.0242	Correlation Location 3	10/27/2016 15:14	0.0969	Correlation Location 4
10/27/2016 14:49	0.0243	Correlation Location 3	10/27/2016 15:14	0.0866	Correlation Location 4
10/27/2016 14:49	0.0247	Correlation Location 3	10/27/2016 15:14	0.0618	Correlation Location 4
10/27/2016 14:49	0.0245	Correlation Location 3	10/27/2016 15:14	0.0427	Correlation Location 4

Harvey Blackwater No. 3 Exposure Rate Measurements for Correlation

Date and Time	Exposure Rate (mR/h)	Location	Date and Time	Exposure Rate (mR/h)	Location
10/27/2016 15:14	0.0312	Correlation Location 4	10/27/2016 15:20	0.0196	Correlation Location 4
10/27/2016 15:14	0.0251	Correlation Location 4	10/27/2016 15:20	0.02	Correlation Location 4
10/27/2016 15:14	0.022	Correlation Location 4	10/27/2016 15:20	0.0198	Correlation Location 4
10/27/2016 15:14	0.0206	Correlation Location 4	10/27/2016 15:20	0.0192	Correlation Location 4
10/27/2016 15:14	0.0199	Correlation Location 4	10/27/2016 15:20	0.0192	Correlation Location 4
10/27/2016 15:15	0.0197	Correlation Location 4	10/27/2016 15:20	0.0194	Correlation Location 4
10/27/2016 15:15	0.0194	Correlation Location 4	10/27/2016 15:20	0.0192	Correlation Location 4
10/27/2016 15:15	0.0189	Correlation Location 4	10/27/2016 15:20	0.0192	Correlation Location 4
10/27/2016 15:15	0.0184	Correlation Location 4	10/27/2016 15:21	0.019	Correlation Location 4
10/27/2016 15:15	0.019	Correlation Location 4	10/27/2016 15:21	0.019	Correlation Location 4
10/27/2016 15:15	0.0196	Correlation Location 4	10/27/2016 15:21	0.0192	Correlation Location 4
10/27/2016 15:15	0.0194	Correlation Location 4	10/27/2016 15:21	0.0194	Correlation Location 4
10/27/2016 15:15	0.0192	Correlation Location 4	10/27/2016 15:21	0.0196	Correlation Location 4
10/27/2016 15:15	0.0194	Correlation Location 4	10/27/2016 15:21	0.0194	Correlation Location 4
10/27/2016 15:15	0.0192	Correlation Location 4	10/27/2016 15:21	0.0194	Correlation Location 4
10/27/2016 15:16	0.0188	Correlation Location 4	10/27/2016 15:21	0.0194	Correlation Location 4
10/27/2016 15:16	0.0189	Correlation Location 4	10/27/2016 15:21	0.0194	Correlation Location 4
10/27/2016 15:16	0.0192	Correlation Location 4	10/27/2016 15:21	0.0192	Correlation Location 4
10/27/2016 15:16	0.0192	Correlation Location 4	10/27/2016 15:22	0.0189	Correlation Location 4
10/27/2016 15:16	0.019	Correlation Location 4	10/27/2016 15:22	0.0187	Correlation Location 4
10/27/2016 15:16	0.019	Correlation Location 4	10/27/2016 15:22	0.0187	Correlation Location 4
10/27/2016 15:16	0.0194	Correlation Location 4	10/27/2016 15:22	0.0189	Correlation Location 4
10/27/2016 15:16	0.0194	Correlation Location 4	10/27/2016 15:22	0.0188	Correlation Location 4
10/27/2016 15:16	0.019	Correlation Location 4	10/27/2016 15:22	0.0186	Correlation Location 4
10/27/2016 15:16	0.0188	Correlation Location 4	10/27/2016 15:22	0.0185	Correlation Location 4
10/27/2016 15:17	0.0187	Correlation Location 4	10/27/2016 15:22	0.0185	Correlation Location 4
10/27/2016 15:17	0.0185	Correlation Location 4	10/27/2016 15:22	0.019	Correlation Location 4
10/27/2016 15:17	0.0184	Correlation Location 4	10/27/2016 15:22	0.0194	Correlation Location 4
10/27/2016 15:17	0.0185	Correlation Location 4	10/27/2016 15:23	0.0192	Correlation Location 4
10/27/2016 15:17	0.0187	Correlation Location 4	10/27/2016 15:23	0.0186	Correlation Location 4
10/27/2016 15:17	0.0187	Correlation Location 4	10/27/2016 15:23	0.0182	Correlation Location 4
10/27/2016 15:17	0.019	Correlation Location 4	10/27/2016 15:23	0.0184	Correlation Location 4
10/27/2016 15:17	0.0196	Correlation Location 4	10/27/2016 15:23	0.0185	Correlation Location 4
10/27/2016 15:17	0.0198	Correlation Location 4	10/27/2016 15:23	0.0188	Correlation Location 4
10/27/2016 15:17	0.0194	Correlation Location 4	10/27/2016 15:23	0.019	Correlation Location 4
10/27/2016 15:18	0.019	Correlation Location 4	10/27/2016 15:23	0.0188	Correlation Location 4
10/27/2016 15:18	0.0189	Correlation Location 4	10/27/2016 15:23	0.0187	Correlation Location 4
10/27/2016 15:18	0.0188	Correlation Location 4	10/27/2016 15:23	0.019	Correlation Location 4
10/27/2016 15:18	0.0185	Correlation Location 4	10/27/2016 15:24	0.0192	Correlation Location 4
10/27/2016 15:18	0.0184	Correlation Location 4	10/27/2016 15:24	0.019	Correlation Location 4
10/27/2016 15:18	0.0184	Correlation Location 4	10/27/2016 15:24	0.0188	Correlation Location 4
10/27/2016 15:18	0.0185	Correlation Location 4	10/27/2016 15:24	0.0187	Correlation Location 4
10/27/2016 15:18	0.0188	Correlation Location 4	10/27/2016 15:24	0.0186	Correlation Location 4
10/27/2016 15:18	0.0192	Correlation Location 4	10/27/2016 15:24	0.0188	Correlation Location 4
10/27/2016 15:18	0.019	Correlation Location 4	10/27/2016 15:24	0.0188	Correlation Location 4
10/27/2016 15:19	0.0189	Correlation Location 4	10/27/2016 15:24	0.0187	Correlation Location 4
10/27/2016 15:19	0.019	Correlation Location 4	10/27/2016 15:24	0.0185	Correlation Location 4
10/27/2016 15:19	0.0192	Correlation Location 4	10/27/2016 15:24	0.0182	Correlation Location 4
10/27/2016 15:19	0.0197	Correlation Location 4	10/27/2016 15:25	0.0186	Correlation Location 4
10/27/2016 15:19	0.0197	Correlation Location 4	10/27/2016 15:25	0.0189	Correlation Location 4
10/27/2016 15:19	0.0194	Correlation Location 4	10/27/2016 15:25	0.019	Correlation Location 4
10/27/2016 15:19	0.0194	Correlation Location 4	10/27/2016 15:25	0.0187	Correlation Location 4
10/27/2016 15:19	0.0192	Correlation Location 4	10/27/2016 15:25	0.0182	Correlation Location 4
10/27/2016 15:19	0.0192	Correlation Location 4	10/27/2016 15:35	0.0538	Correlation Location 5
10/27/2016 15:19	0.0192	Correlation Location 4	10/27/2016 15:36	0.0945	Correlation Location 5
10/27/2016 15:20	0.0192	Correlation Location 4	10/27/2016 15:36	0.0836	Correlation Location 5
10/27/2016 15:20	0.0192	Correlation Location 4	10/27/2016 15:36	0.059	Correlation Location 5

Harvey Blackwater No. 3 Exposure Rate Measurements for Correlation

Date and Time	Exposure Rate (mR/h)	Location	Date and Time	Exposure Rate (mR/h)	Location
10/27/2016 15:36	0.0398	Correlation Location 5	10/27/2016 15:42	0.0154	Correlation Location 5
10/27/2016 15:36	0.0284	Correlation Location 5	10/27/2016 15:42	0.016	Correlation Location 5
10/27/2016 15:36	0.0225	Correlation Location 5	10/27/2016 15:42	0.016	Correlation Location 5
10/27/2016 15:36	0.0196	Correlation Location 5	10/27/2016 15:42	0.0156	Correlation Location 5
10/27/2016 15:36	0.0178	Correlation Location 5	10/27/2016 15:42	0.0156	Correlation Location 5
10/27/2016 15:36	0.0165	Correlation Location 5	10/27/2016 15:42	0.0156	Correlation Location 5
10/27/2016 15:36	0.0162	Correlation Location 5	10/27/2016 15:42	0.0156	Correlation Location 5
10/27/2016 15:37	0.0161	Correlation Location 5	10/27/2016 15:42	0.0158	Correlation Location 5
10/27/2016 15:37	0.0161	Correlation Location 5	10/27/2016 15:42	0.0156	Correlation Location 5
10/27/2016 15:37	0.0162	Correlation Location 5	10/27/2016 15:42	0.0158	Correlation Location 5
10/27/2016 15:37	0.0165	Correlation Location 5	10/27/2016 15:43	0.0164	Correlation Location 5
10/27/2016 15:37	0.0164	Correlation Location 5	10/27/2016 15:43	0.0163	Correlation Location 5
10/27/2016 15:37	0.0163	Correlation Location 5	10/27/2016 15:43	0.0158	Correlation Location 5
10/27/2016 15:37	0.016	Correlation Location 5	10/27/2016 15:43	0.0153	Correlation Location 5
10/27/2016 15:37	0.0155	Correlation Location 5	10/27/2016 15:43	0.0155	Correlation Location 5
10/27/2016 15:37	0.0155	Correlation Location 5	10/27/2016 15:43	0.0158	Correlation Location 5
10/27/2016 15:37	0.0152	Correlation Location 5	10/27/2016 15:43	0.016	Correlation Location 5
10/27/2016 15:38	0.0152	Correlation Location 5	10/27/2016 15:43	0.0162	Correlation Location 5
10/27/2016 15:38	0.0156	Correlation Location 5	10/27/2016 15:43	0.016	Correlation Location 5
10/27/2016 15:38	0.0156	Correlation Location 5	10/27/2016 15:43	0.016	Correlation Location 5
10/27/2016 15:38	0.0156	Correlation Location 5	10/27/2016 15:44	0.0158	Correlation Location 5
10/27/2016 15:38	0.0156	Correlation Location 5	10/27/2016 15:44	0.0156	Correlation Location 5
10/27/2016 15:38	0.0158	Correlation Location 5	10/27/2016 15:44	0.0154	Correlation Location 5
10/27/2016 15:38	0.0158	Correlation Location 5	10/27/2016 15:44	0.0155	Correlation Location 5
10/27/2016 15:38	0.0156	Correlation Location 5	10/27/2016 15:44	0.0154	Correlation Location 5
10/27/2016 15:38	0.0156	Correlation Location 5	10/27/2016 15:44	0.0154	Correlation Location 5
10/27/2016 15:38	0.0158	Correlation Location 5	10/27/2016 15:44	0.0156	Correlation Location 5
10/27/2016 15:39	0.0162	Correlation Location 5	10/27/2016 15:44	0.0158	Correlation Location 5
10/27/2016 15:39	0.0164	Correlation Location 5	10/27/2016 15:44	0.0158	Correlation Location 5
10/27/2016 15:39	0.0162	Correlation Location 5	10/27/2016 15:44	0.0158	Correlation Location 5
10/27/2016 15:39	0.0158	Correlation Location 5	10/27/2016 15:45	0.0158	Correlation Location 5
10/27/2016 15:39	0.0158	Correlation Location 5	10/27/2016 15:45	0.0158	Correlation Location 5
10/27/2016 15:39	0.0158	Correlation Location 5	10/27/2016 15:45	0.0158	Correlation Location 5
10/27/2016 15:39	0.0158	Correlation Location 5	10/27/2016 15:45	0.0156	Correlation Location 5
10/27/2016 15:39	0.0158	Correlation Location 5	10/27/2016 15:45	0.0156	Correlation Location 5
10/27/2016 15:39	0.0158	Correlation Location 5	10/27/2016 15:45	0.0158	Correlation Location 5
10/27/2016 15:39	0.0156	Correlation Location 5	10/27/2016 15:45	0.0156	Correlation Location 5
10/27/2016 15:40	0.0156	Correlation Location 5	10/27/2016 15:45	0.0156	Correlation Location 5
10/27/2016 15:40	0.0156	Correlation Location 5	10/27/2016 15:45	0.0155	Correlation Location 5
10/27/2016 15:40	0.0158	Correlation Location 5	10/27/2016 15:45	0.0154	Correlation Location 5
10/27/2016 15:40	0.0158	Correlation Location 5	10/27/2016 15:46	0.0153	Correlation Location 5
10/27/2016 15:40	0.0158	Correlation Location 5	10/27/2016 15:46	0.015	Correlation Location 5
10/27/2016 15:40	0.0158	Correlation Location 5	10/27/2016 15:46	0.0154	Correlation Location 5
10/27/2016 15:40	0.0156	Correlation Location 5	10/27/2016 15:46	0.0155	Correlation Location 5
10/27/2016 15:40	0.016	Correlation Location 5	10/27/2016 15:46	0.0155	Correlation Location 5
10/27/2016 15:40	0.0158	Correlation Location 5	10/27/2016 15:46	0.0156	Correlation Location 5
10/27/2016 15:40	0.0156	Correlation Location 5	10/27/2016 15:46	0.0156	Correlation Location 5
10/27/2016 15:41	0.0155	Correlation Location 5			
10/27/2016 15:41	0.0155	Correlation Location 5			
10/27/2016 15:41	0.0156	Correlation Location 5			
10/27/2016 15:41	0.0156	Correlation Location 5			
10/27/2016 15:41	0.0158	Correlation Location 5			
10/27/2016 15:41	0.0156	Correlation Location 5			
10/27/2016 15:41	0.0154	Correlation Location 5			
10/27/2016 15:41	0.0151	Correlation Location 5			
10/27/2016 15:41	0.015	Correlation Location 5			
10/27/2016 15:41	0.0149	Correlation Location 5			

Harvey Blackwater No. 3 Exposure Rate Measurements for Correlation

Appendix C Technical Memo from ERG to Stantec. "Statistical Analysis of the Navajo Trustee Mines Dataset: Multivariate Linear Regression for Evaluation of Gamma Correlation with Ra-226 and Evaluation of Secular Equilibrium Between Ra-226 and Th-230"

Environmental Restoration Group, Inc.
8809 Washington St NE, Suite 150
Albuquerque, NM 87113

ph: (505) 298-4224
fax: (505) 797-1404
www.ERGoffice.com

Memo

To: Kirsty Woods, Program Director, Stantec

From: Liz Ruedig, PhD, CHP, and Mike Schierman, CHP, Environmental Restoration Group

Date: 7/31/2018

Re: Statistical Analysis of the Navajo Trustee Mines Dataset: Multivariate Linear Regression for Evaluation of Gamma Correlation with Ra-226 and Evaluation of Secular Equilibrium Between Ra-226 and Th-230

Multivariate Linear Regression for Evaluation of Gamma Count Rate with Ra-226 Concentrations in Surface Soil

Due to a large number of reviewer comments at the sixteen Navajo Trust Abandoned Uranium Mines (AUMs) concerning the influence of gamma-emitting radionuclides not within the uranium-238 decay series on the correlation between dynamic gamma count rate and soil concentration of radium-226, Environmental Restoration Group has performed multivariate linear regression (MLR), relating gamma count rate to multiple soil radionuclides simultaneously. MLR models the influence of a set of predictor variables (in this case, soil concentrations of several gamma-emitting radionuclides, or surrogates for these radionuclides) on a single response variable (in this case, dynamic gamma count rate), accounting for the influence of each predictor variable upon the response variable independently of the other predictor variables within the set.

In a MLR, it is possible to distinguish from a large set of variables the subset that significantly predicts a response variable. This is done by evaluating potential models on a number of criteria:

1. **The multi-collinearity of predictor variables.**

   Predictor variables that are linearly related to each other (i.e., variables y and x, where y may also be mathematically expressed as some multiple of x) produce a condition known as multicollinearity, where the matrix math used to solve the multivariate linear regression becomes irreducible. A physical example of multicollinearity occurs when modelling the influence of two radionuclides in equilibrium with each other (e.g., Th-230 and Ra-226) on a single response variable (e.g., gamma count rate). In order to compute a mathematical solution to the regression model, one of the multicollinear variables must be removed from the regression matrix. The multicollinear variables are identifiable by a large variance inflation factor (VIF), typically greater than 7, but in cases of near-perfect multicollinearity, often much greater than this value (e.g., > 100).

   It is also possible to identify multicollinear predictor variables by regressing two suspect variables upon each other. A high degree of correlation (i.e., $p < 0.05$ and high adjusted R^2) between the two variables suggests that the predictor variables are multicollinear, and that one variable should be eliminated from the multivariate regression prior to analysis.

2. **The p-value of predictor variables**

   For a variable to be considered a significant predictor of the response variable, the p-value of its slope (as calculated in an ANOVA table) must be significant (i.e., $p < 0.05$). In a MLR, the adjusted R^2 value for individual predictor variables is not indicative of overall model quality.

For the Navajo Trust AUMs there are three potential gamma-contributing radionuclides (defined as radionuclides that emit gamma radiation, or whose short-lived decay products emit gamma radiation) present in soil: thorium-232, radium-226 and, thorium-228. Thorium-230, which does not emit gamma radiation, was excluded as a potentially significant gamma-contributing radionuclide.

A MLR model: gamma = radium-226 + thorium-228 + thorium-232 was run for each AUM. For 15 of the 16 mines, thorium-232 and thorium-228 were multicollinear. On this basis, thorium-228 was excluded from the MLR. No multicollinearity was detected at Barton 3. However, none of the predictor variables was a significant predictor of gamma count rate ($p > 0.05$) for the complete model. As such, analysis for all 16 AUMs proceeded by removing thorium-228 from the set of predictor variables and running a new MLR model: gamma = radium-226 + thorium-232. None of the 16 models exhibited multicollinearity with the reduced model. After accounting for the effect of radium-226, thorium-232 was not a significant predictor of gamma count rate at any of the 16 AUMs. Radium-226 was a significant predictor ($p < 0.05$) of gamma count rate (after accounting for the influence of thorium-232 and thorium-228) at some of the AUMs (six of 16 AUMs).

Since neither predictor variable (thorium-232 or radium-226) was unambiguously a predictor in the MLR, two univariate regression models were performed as a final step: gamma = radium-226 and gamma = thorium-232. Thorium-232 was a significant predictor of gamma count rate ($p < 0.05$) only at Standing Rock, which is not unexpected given the geological conditions at this AUM. At all other sites, thorium-232 (and thorium-228 by association) were not significant predictors of gamma count rate ($p > 0.05$). By way of contrast, radium-226 was a significant predictor of the gamma count rate ($p < 0.05$) at 13 of the 16 AUMs. At three AUMs (Mitten, NA-0928, and Tsosie 1) none of the measured radionuclides significantly predicted the gamma count rate. Additionally, the adjusted R^2 values for the correlation models at the three AUMs, plus Claim 28, fail to meet the specified data quality objective (DQO) of greater than 0.8.

The failure to construct statistically defensible correlation models at four AUMs has been identified as a data gap in the relevant AUM report. The unsatisfactory correlation result at these locations is likely due to the small number of correlation locations, or environmental conditions at the AUMs (e.g., spatial heterogeneity in radionuclide concentration in soil, topographic features influencing gamma count rate, etc.), or some combination thereof.

Note that while the statistical measures (i.e., conformance with the study DQO of $R^2 > 0.8$) associated with these regressions can be improved by fitting a power curve to the data, and reporting unadjusted R^2 values, with only five data points at each AUM, ERG does not believe that any statistical correlation model is sufficiently robust to make meaningful inferences concerning soil radium-226 concentration from the gamma scanning data. ERG believes that linear functions – not power curves – best mimic the conceptual model for the physical processes governing the observed data. Fitting any other function in an effort to achieve the study DQO for R^2 is not a statistically rigorous approach, and improving R^2 does not commensurately improve a statistical model's predictive ability. Figure *1* compares the result of fitting a linear versus a power function to the available correlation data for one AUM (Hoskie Tso); the other AUM results are similar.

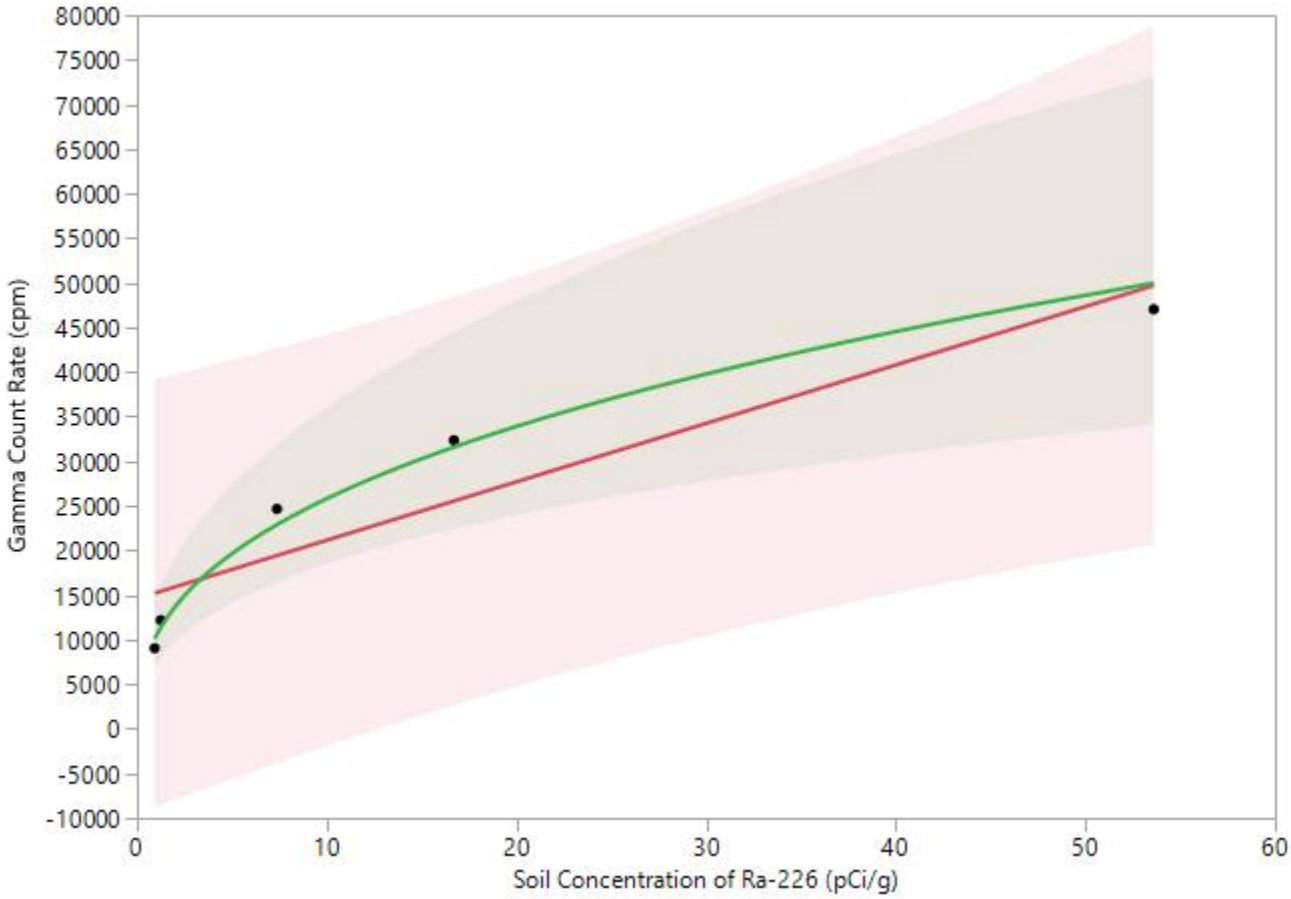

Figure 1. Regression models (linear versus power curve) for gamma count rate regressed on radium-226 showing 95% UPLs (upper prediction limits). Both models meet the study DQO for adjusted R^2 (greater than 0.8). Gamma count rate is not an especially strong predictor of soil concentration of radium-226 for either function.

ERG has updated the individual AUM reports with linear correlation functions and reported the more robust measures of statistical performance described in this memo.

Evaluation of Secular Equilibrium Between Ra-226 and Th-230

Secular equilibrium is a condition that occurs when the half-life of a decay-product nuclide is significantly shorter than that of its parent nuclide. After a period of ingrowth equal to approximately seven times the half-life of the decay product, the two nuclides effectively decay with the half-life of the parent. When two radionuclides are in secular equilibrium, their activities are equal.

Equilibrium, for the purpose of this report, is defined as a condition whereby a parent nuclide and its decay product are present in the environment at a fixed ratio, but this ratio – for whatever reason – is not a one-to-one relationship indicative of secular equilibrium. Most commonly, an equilibrium condition results from an environmental process which chemically selects for and

transports one nuclide (parent or decay product) away from the other nuclide. Because a consistent fraction of one nuclide has been removed, the two nuclides are present at a fixed ratio other than one-to-one.

Determination of secular equilibrium for an AUM can be an important part of the risk assessment process, as the assumed fraction of radium-226 decay products present in the environment greatly influences a hypothetical receptor's radiation dose and mortality risk. However, it is also acceptable and conservative to assume secular equilibrium between radium-226 and its decay products for the purpose of risk assessment, and therefore to avoid the need to conclusively determine the secular equilibrium status of an AUM. Thus, an inconclusive result regarding secular equilibrium is not a study data gap, as the risk assessment phase may still proceed, provided that conservative assumptions are included regarding equilibrium concentrations of radium-226 decay products.

Regardless, the Navajo Nation AUM Environmental Response Trust RSE workplan specified that an evaluation of secular equilibrium would be made at each of the 16 Trust AUMs, and so a robust statistical examination of secular equilibrium status for radium-226 and its decay products at each AUM was conducted. One method of evaluating equilibrium between Ra-226 and Th-230 is to calculate the ratio (φ) between the two nuclides for each soil sample location, i.e.,

$$\varphi = \frac{\left[{}^{226}Ra\right]}{\left[{}^{230}Th\right]}$$

When φ is unity, the two nuclides may be said to be in secular equilibrium. Sometimes, φ is averaged over a number of locations, and if the average is unity, the population of measurement locations is said to be in secular equilibrium. Similarly, if φ is consistently some number other than one, it may be concluded that the measured population is in equilibrium. This approach does not account for the statistical uncertainty associated with making inferences across a population, nor the bias introduced into the measurement by averaging a potentially large number of ratios. It is also difficult to establish defensible cutoffs for whether Ra-226 and Th-230 are in secular equilibrium at a particular site using a ratio approach, as there is no objective basis for concluding, e.g., that φ must be between 0.8 and 1.2 (versus any other range of values for φ) for secular equilibrium to occur.

Due to a large number of reviewer comments concerning secular equilibrium within the RSE reports, Environmental Restoration Group opted to re-evaluate equilibrium at each mine site using a more robust statistical method: simple linear regression. This was done after confirming the methods to analyze Ra-226 (EPA Method 901.1) and Th-230 (alpha spectroscopy following sample digestion with hydrofluoric acid) are both total-activity methods with comparable results (L. Steere, ALS personal email communication, July 25, 2018). Evaluation of secular equilibrium for each mine site proceeded as follows:

1. Construction of a figure that depicts soil concentrations of Th-230 plotted against soil concentrations of Ra-226.

2. Simple linear regression is performed on the dataset; the p-value and the adjusted R^2 are recorded. The resulting linear model and the 95% UCL (upper confidence limit) bands are plotted on the figure generated in step 1.

3. The line y=x is added to the figure generated in step 2 (this line represents a perfect 1:1 ratio between Th-230 to Ra-226, indicative of secular equilibrium).

4. An examination of the model and the figure is made sequentially:

    a. If the p-value for the regression slope is insignificant (i.e., $p > 0.05$) or the adjusted R^2 does not meet the study's data quality objective (Adjusted $R^2 > 0.8$), ERG concludes that there is insufficient evidence to conclude that Ra-226 and Th-230 are in equilibrium (secular or otherwise) therefore, it is listed as inconclusive (no equilibrium). Figure *2* depicts the regression result for an AUM (Mitten) that failed to meet the p-value and adjusted R^2 criteria.

    b. If the p-value for the regression slope is significant (i.e., $p < 0.05$) and the adjusted R^2 meets the DQO (Adjusted $R^2 > 0.8$) there are two possible conditions, which are evaluated via visual examination of the figure generated in step 3.

        i. If the y=x line falls fully within the bounds of the 95% UCL bands on the regression, ERG concludes that there is evidence that Ra-226 and Th-230 are in secular equilibrium at the site. Figure *3* depicts the regression result for an AUM (Harvey Blackwater) where there is evidence that Ra-226 and Th-230 are in secular equilibrium.

        ii. If the y=x line falls partially or completely outside the bounds of the 95% UCL bands on the regression, ERG concludes that there is evidence that Ra-226 and Th-230 are in equilibrium, but not secular equilibrium at the site. Figure *4* depicts the regression result for an AUM (Alongo Mines) where there is evidence that Ra-226 and Th-230 are in equilibrium, but not secular equilibrium.

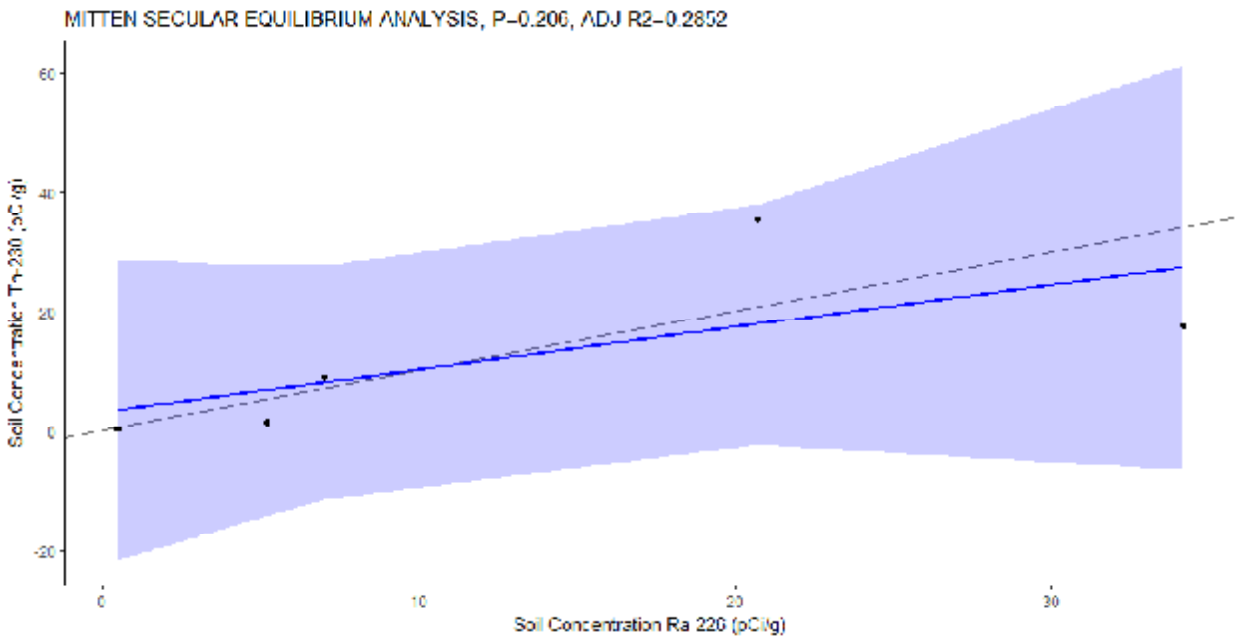

Figure 2. Result for Mitten secular equilibrium analysis, showing failure to meet p-value and adjusted R^2 criteria, i.e., the data are poorly correlated.

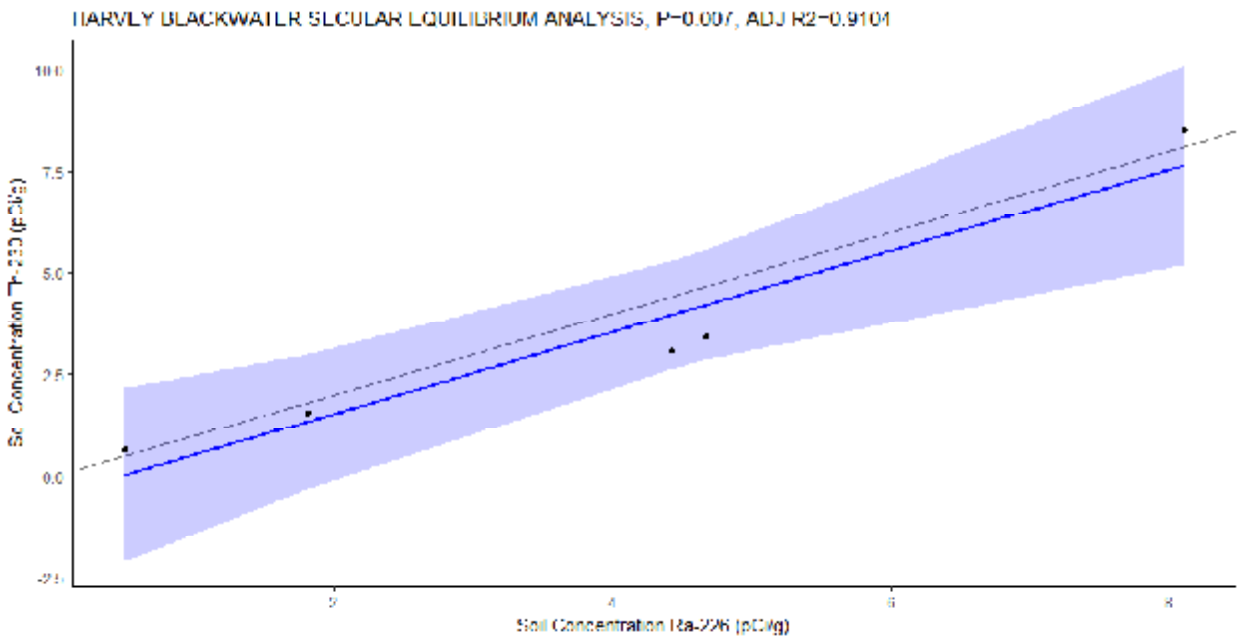

Figure 3. Result for Harvey Blackwater secular equilibrium analysis, showing excellent correlation between the data and the y=x line, i.e., Th-230 and Ra-226 are in secular equilibrium.

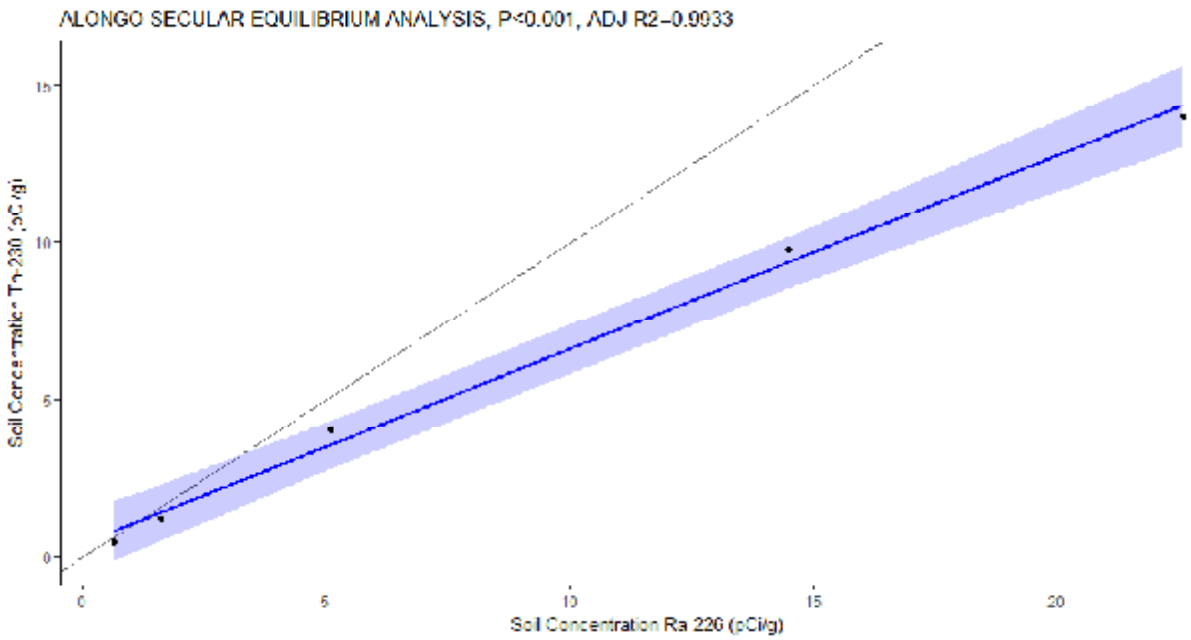

Figure 4. Result for Alongo Mines secular equilibrium analysis, showing excellent correlation between the data, but poor agreement with the y=x line, i.e., Th-230 and Ra-226 are in equilibrium, but not secular equilibrium.

ERG tested for secular equilibrium at each of the 16 Navajo AUMs using the process described above. The results are summarized in Table 1 and in the RSE report for each AUM, respectively. ERG concluded that the data provide evidence that that Ra-226 and Th-230 are in secular equilibrium in soils at two mines (Harvey Blackwater and NA-0928). At one mine (Mitten) there was insufficient evidence to draw any conclusions regarding equilibrium. At the remaining sites, there is evidence that Ra-226 and Th-230 are in equilibrium.

Table 1. Results of secular equilibrium analysis for each of the 16 Navajo Trust AUMs.

Mine	p-value	Adjusted R^2	Conclusion
Alongo Mine	<0.001	0.99	Equilibrium
Barton 3	<0.001	0.98	Equilibrium
Boyd Tisi	<0.001	0.99	Equilibrium
Charles Keith	<0.001	0.99	Equilibrium
Claim 28	<0.001	0.99	Equilibrium
Eunice Becenti	<0.001	0.99	Equilibrium
Harvey Blackwater	0.008	0.91	Secular Equilibrium
Hoskie Tso	<0.001	0.99	Equilibrium
Mitten	0.2	0.29	No Equilibrium
NA-0904	0.001	0.98	Equilibrium
NA-0928	0.002	0.97	Secular Equilibrium
Oak 124-125	<0.001	0.99	Equilibrium
Occurrence B	<0.001	0.98	Equilibrium
Section 26	0.002	0.96	Equilibrium
Standing Rock	0.008	0.91	Equilibrium
Tsosie 1	0.02	0.86	Equilibrium

Appendix D Preliminary Report “Harvey Blackwater No.3 Abandoned Uranium Mine”

Disclaimer: Data and analytical methods used in this Preliminary Report are superseded by the Final Report.

Radiological Characterization of the Harvey Blackwater No. 3 Abandoned Uranium Mine

Preliminary

October 20, 2017

prepared for:

Stantec Consulting Services Inc.

2130 Resort Drive, Suite 350
Steamboat Springs, CO 80487

prepared by:

Environmental Restoration Group, Inc.

8809 Washington St. NE
Suite 150
Albuquerque, NM 87113

Contents

Executive Summary v

1.0 Introduction 1

2.0 GPS-Based Gamma Surveys 3

2.1 Potential Background Reference Area 3

2.2 Survey Area (including extended) 5

3.0 Correlation Studies 8

3.1 Radium-226 concentrations in surface soils and gamma count rates 8

3.2 Equilibrium in the uranium series 13

3.3 Exposure rates and gamma count rates 13

4.0 Deviations to RSE Workplan 17

5.0 Conclusions 17

6.0 References 18

Tables

Table 1 Detection systems used in the GPS-Based gamma surveys

Table 2 Summary statistics for gamma count rates in the potential Background Reference Area

Table 3 Summary statistics for gamma count rates in the Survey Area

Table 4 Gamma count rates and associated concentrations of radium-226 in samples of surface soils obtained in the correlation study

Table 5 Concentrations of isotopes of thorium in samples of surface soils obtained in the correlation study

Table 6 Predicted concentrations of radium-226 in the Survey Area

Table 7 Co-located gamma count rate and exposure rate measurements

Table 8 Predicted exposure rates in the potential Background Reference Area

Table 9 Predicted exposure rates in the Survey Area

Figures

Figure 1 Location of the Harvey Blackwater No. 3 Abandoned Uranium Mine

Figure 2 Gamma count rates in the potential Background Reference Area

Figure 3 Histogram of gamma count rates in the potential Background Reference Area

Figure 4 Gamma count rates in the Survey Area

Figure 5 Histogram of gamma count rates in the Survey Area

Figure 6 Box plot of gamma count rates in the Survey Area

Figure 7 GPS-based gamma count rate measurements made for the correlation study

Figure 8 Correlation of gamma count rates and concentrations of radium-226 in surface soils

Figure 9 Predicted concentrations of radium-226 in the Survey Area

Figure 10 Correlation of gamma count rates and exposure rates

Figure 11 Predicted exposure rates in the Survey Area

Appendices

Appendix A Instrument calibration and completed function check forms

Appendix B Exposure Rate Measurements

Acronyms

ANSI	American National Standards Institute
AUM	abandoned uranium mine
BG3	Background Reference Area 3
bgs	below ground surface
cpm	counts per minute
DQOs	data quality objectives
ERG	Environmental Restoration Group, Inc.
ft	foot
GPS	global positioning system
MDL	method detection limit
µR/h	microRoentgens per hour
pCi/g	picocuries per gram
R^2	Pearson's Correlation Coefficient
RSE	removal site evaluation
σ	standard deviation
Stantec	Stantec Consulting Services Inc.

Executive Summary

This report addresses the radiological characterization of the Harvey Blackwater No. 3 abandoned uranium mine (AUM) located in the Kayenta Chapter of the Navajo Nation in Monument Valley, Arizona and Utah. It documents part of the implementation of the Navajo Nation AUM Environmental Response Trust, First Phase, Removal Site Evaluation Work Plan (RSE Work Plan). The work was performed by Environmental Restoration Group, Inc. of Albuquerque, New Mexico and Stantec Consulting Services Inc. (Stantec) in accordance with the Navajo Nation AUM Environmental Response Trust – First Phase.

This report provides 1) the results of a Global Positioning System (GPS)-based gamma radiation (gamma) survey, 2) comparisons of the gamma count rates at this AUM to exposure rates and concentrations of radium-226 in surface soils, and 3) an assessment of equilibrium in the uranium series. The field activities addressed in this report were conducted on October 15, 27, and 28, 2016; November 2, 2016; and March 18 and September 20, 2017. They included a GPS-based radiological survey of land surfaces over a Survey Area consisting of the mine claim area out to a 100-foot (ft) buffer; and roads and drainages within a 0.25-mile radius of the 100-ft buffer; and correlation studies. The Survey Area was extended beyond the 100-ft buffer where elevated gamma count rates were observed.

The discussion of the results of soil sampling in this report is limited to concentrations of radium-226 and isotopes of thorium in samples taken from surface soils, as part of correlation studies. The objective of the analysis of thorium isotopes was to 1) assess the potential effects of thorium-232 and thorium-228 on the correlation of gamma count rates to concentrations of radium-226 in surface soils; and 2) evaluate thorium-230 and radium-226 activities to indicate the status of equilibrium in the uranium decay series. These and additional results for the continuing RSE are addressed in "Harvey Blackwater No. 3 Removal Site Evaluation Report" (Stantec, 2017).

The findings of the RSE pertaining to these activities are:

- The horizontal extent and magnitude of mining-related materials were delineated sufficiently to support additional characterization of the subsurface.

- The highest count rates were observed along a recurring exposure of bedrock that runs northeast to southwest through and beyond the mine claim.

- A potential Background Reference Area was established.

- The relationship between gamma count rates and concentrations of radium-226 in surface soils (0 to 0.5 ft below ground surface [bgs]) is described by a power regression model:

  Radium-226 (picocuries per gram [pCi/g]) = $5 \times 10^{-8} \times$ Gamma Count Rate (cpm)$^{1.8283}$

- The distribution of concentrations of radium-226 in surface soils predicted using this model resembles a lognormal distribution. The values in the Survey Area range from 0.2 to 169.3, with a central tendency (median) of 0.9 pCi/g.

- The relationship between gamma count rates and exposure rates is described by a linear regression model:

  Exposure Rate (µR/h) = Gamma Count Rate (cpm) x 4×10^{-4} + 7.7

- The distribution of exposure rates predicted using this model resembles a lognormal distribution. The values in the Survey Area range from 9.5 to 72.9, with a central tendency (median) of 11.5 µR/h.

1.0 Introduction

This report addresses the radiological characterization of the Harvey Blackwater No. 3 abandoned uranium mine (AUM) located in the Kayenta Chapter of the Navajo Nation in Monument Valley, Arizona and Utah. It documents part of the implementation of the Navajo Nation AUM Environmental Response Trust, First Phase, Removal Site Evaluation Work Plan (RSE Work Plan: MWH, 2016). The work was performed by Environmental Restoration Group, Inc. of Albuquerque, New Mexico and Stantec Consulting Services Inc. (Stantec) in accordance with the Navajo Nation AUM Environmental Response Trust – First Phase.

The activities described here focus on the characterization of uranium series radionuclides in surface soils at the AUM. This report provides 1) the results of a Global Positioning System (GPS)-based gamma radiation (gamma) survey, 2) comparisons of gamma count rates to exposure rates and concentrations of radium-226 in surface soils, and 3) an assessment of equilibrium in the uranium decay series.

The field activities addressed in this report were conducted on October 15, 27, and 28, 2016; November 2, 2016; and March 18 and September 20, 2017 in accordance with the methods described in the RSE Work Plan. The GPS-based radiological survey of land surfaces covered an approximately 37-acre Survey Area that included the mine claim area out to a 100-foot buffer; and roads and drainages within a 0.25-mile radius of the buffer; gamma count rate and exposure rate measurements at fixed points; and gamma count rate measurements and soil sampling for radionuclides and metals in areas centered on these fixed points. The Survey Area was extended beyond the 100-ft buffer where elevated gamma count rates were observed.

The discussion of the results of soil sampling in this report is limited to concentrations of radium-226 and isotopes of thorium in samples taken from surface soils, as part of correlation studies. The objective of the analysis of thorium isotopes was to 1) assess the potential effects of thorium-232 and thorium-228 on the correlation of gamma count rates to concentrations of radium-226 in surface soils; and 2) evaluate thorium-230 and radium-226 activities to indicate the status of equilibrium in the uranium decay series. These and additional results for the continuing RSE are addressed in “Harvey Blackwater No. 3 Removal Site Evaluation Report” (Stantec, 2017).

Figure 1 shows the location of the AUM. Background information that is pertinent to the characterization of this AUM is presented in the “Harvey Blackwater No. 3 Removal Site Evaluation Report” (Stantec, 2017).

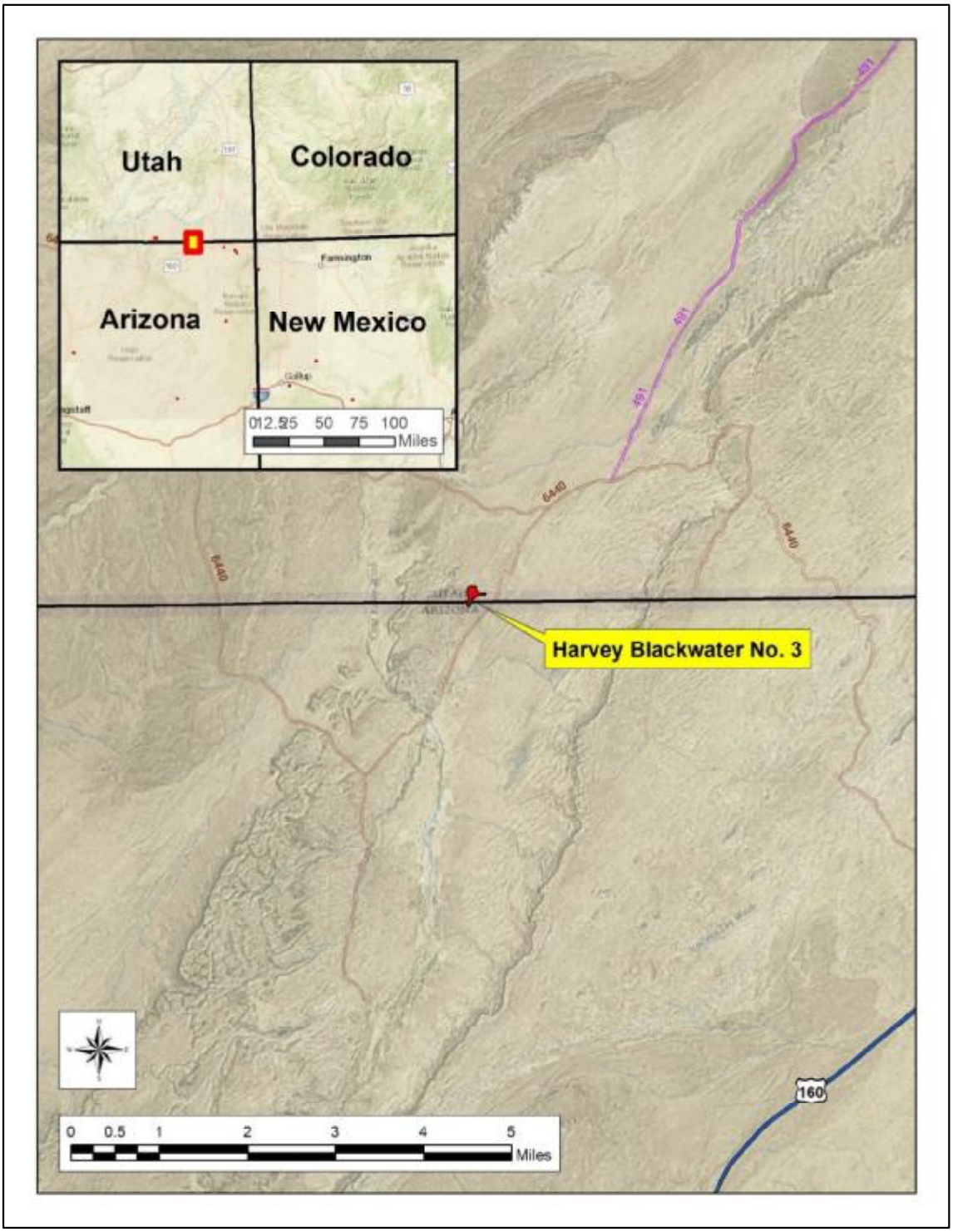

Figure 1. Location of the Harvey Blackwater No. 3 Abandoned Uranium Mine

2.0 GPS-Based Gamma Surveys

This section addresses the GPS-based surveys conducted in a potential Background Reference Area and the Survey Area. Table 1 lists the detection systems used in the survey, which were function-checked before and after each day of use and within calibration, in accordance with American National Standards Institute (ANSI) Standard N232A (ANSI, 1997). Appendix A presents the completed function check forms and calibration certificates for the instruments.

Table 1. Detection systems used in the GPS-Based gamma surveys.

Survey Area	Ludlum Model 44-10	Ludlum Model 2221 Ratemeter/Scaler
Potential Background Reference Area	PR303727[a]	254772[a]
Survey Area	PR303727	254772
	PR295014	196086
	PR154615	138368
	PR355763	138368

Notes:
[a]Detection system used in the correlation studies described in Section 3.0.

2.1 Potential Background Reference Area

A potential Background Reference Area was surveyed, the location and results of which are depicted on Figure 2. BG3 in the figure is Background Reference Area 3.

Table 2 lists a summary of the gamma count rates, which in BG3 ranged from 6,662 to 10,663 counts per minute (cpm), with a mean and median of 8,584 and 8,606 cpm, respectively.

Figure 3 depicts a histogram of the gamma count rates. The red and green lines on the figure are theoretical normal and lognormal distributions, respectively. They are presented to show what could be expected if the distributions were normal or lognormal.

Table 2. Summary statistics for gamma count rates in the potential Background Reference Area.

	Gamma Count Rate (cpm)				
n	Min	Max	Mean	Median	Standard Deviation
235	6,662	10,663	8,584	8,606	764

Notes:
cpm = counts per minute

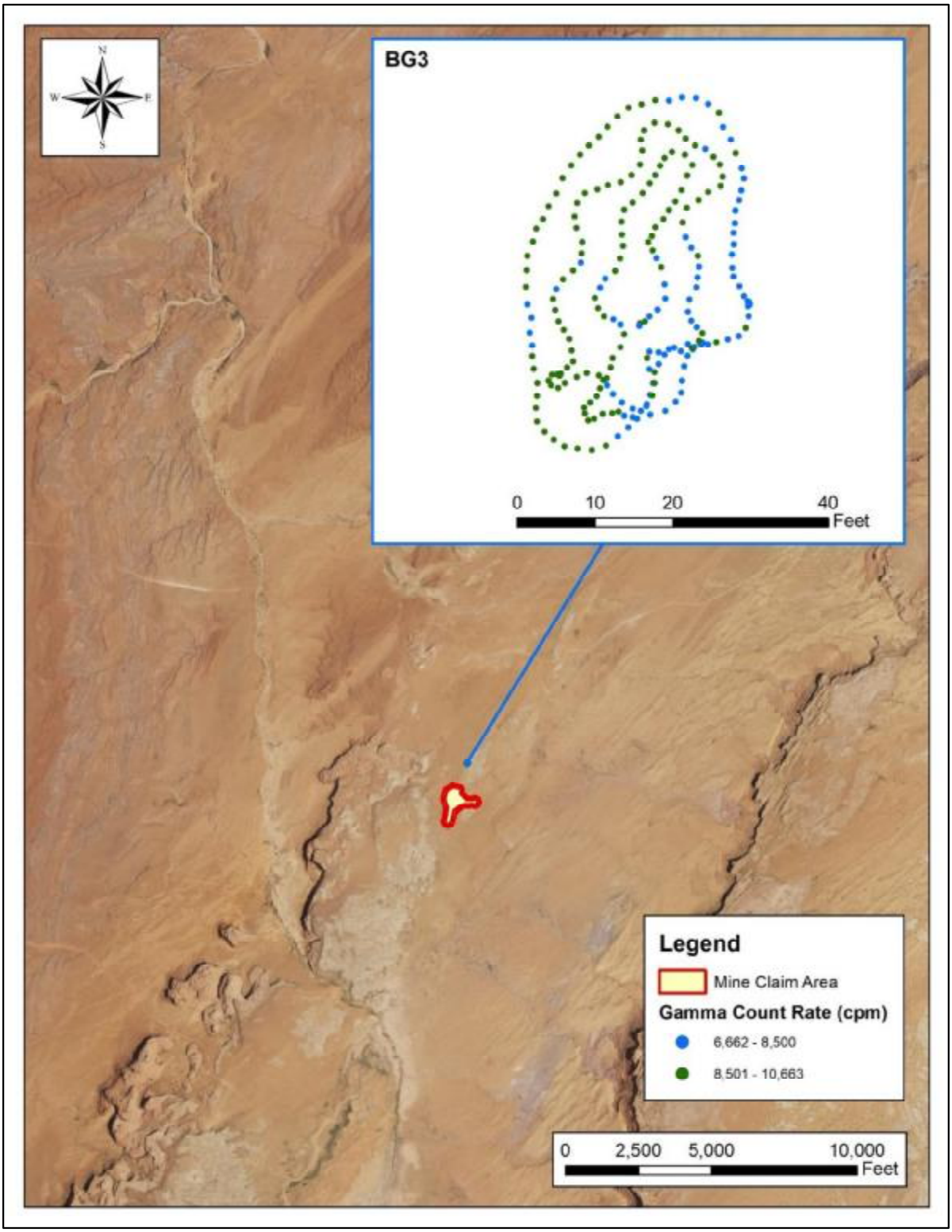

Figure 2. Gamma count rates in the potential Background Reference Area.

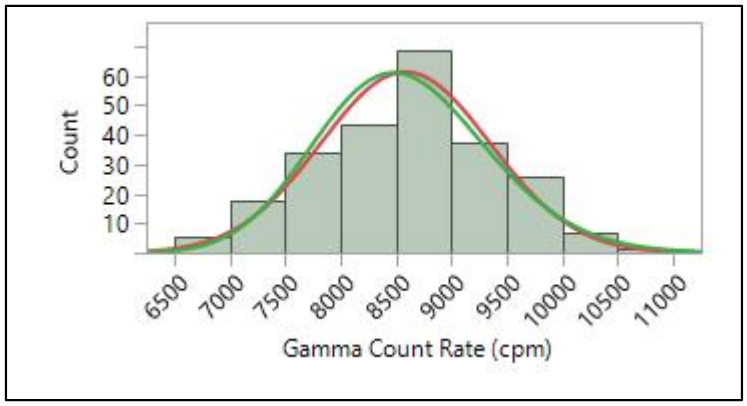

Figure 3. Histogram of gamma count rates in the potential Background Reference Area.

2.2 Survey Area (including extended)

The gamma count rates observed in the Survey Area are depicted in Figure 4. The highest count rates were observed along a recurring exposure of bedrock that runs northeast to southwest through and beyond the mine claim.

Figure 5 is a histogram of the gamma count rate measurements made in the Survey Area, including those made outside the 100-ft buffer. As stated in Section 2.1, the red and green lines on the figure are theoretical normal and lognormal distributions, respectively. They are presented to show what could be expected if the distributions were normal or lognormal. The distribution of the right-tailed set of measurements, evaluated using U.S. Environmental Protection Agency software ProUCL, is not defined; i.e., neither normal or logarithmic. The box plot in Figure 6 depicts cutoffs as horizontal bars, from bottom to top, for the following values or percentiles: minimum, 0.5, 2.5, 10, 25, 50, 75, 90, 97.5, 99.5, and maximum. The 25th, 50th, and 75th percentiles --the three horizontal lines of the box inside the box plot—are 7,887, 9,383, and 11,255 cpm, respectively.

Table 3 is a statistical summary of the measurements, which range from 4,427 to 163,071 cpm and have a central tendency (median) of 9,383 cpm.

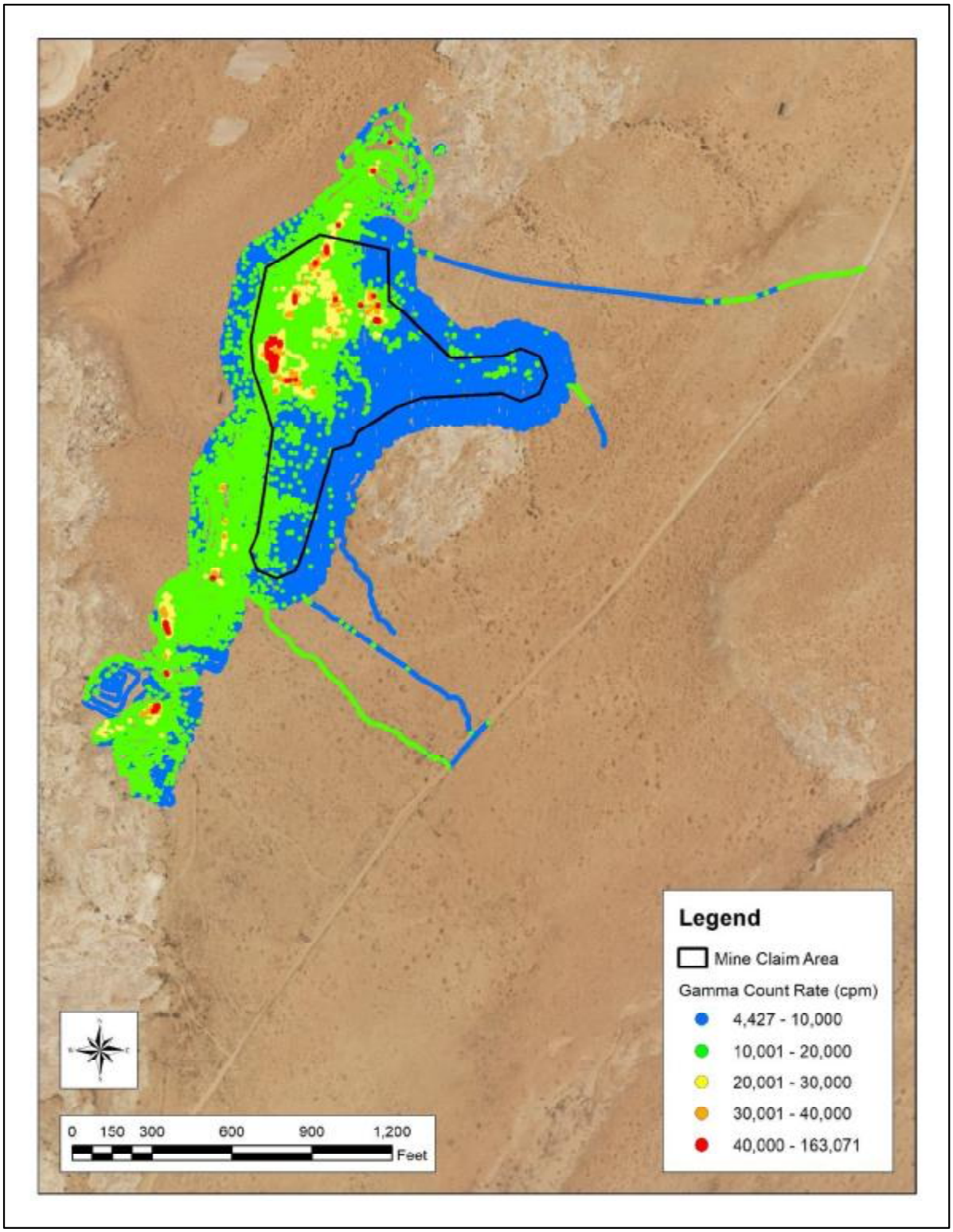

Figure 4. Gamma count rates in the Survey Area.

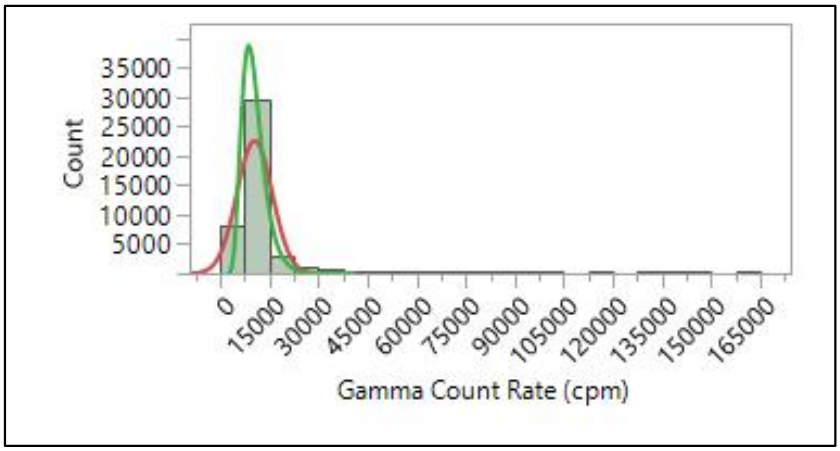

Figure 5. Histogram of gamma count rates in the Survey Area.

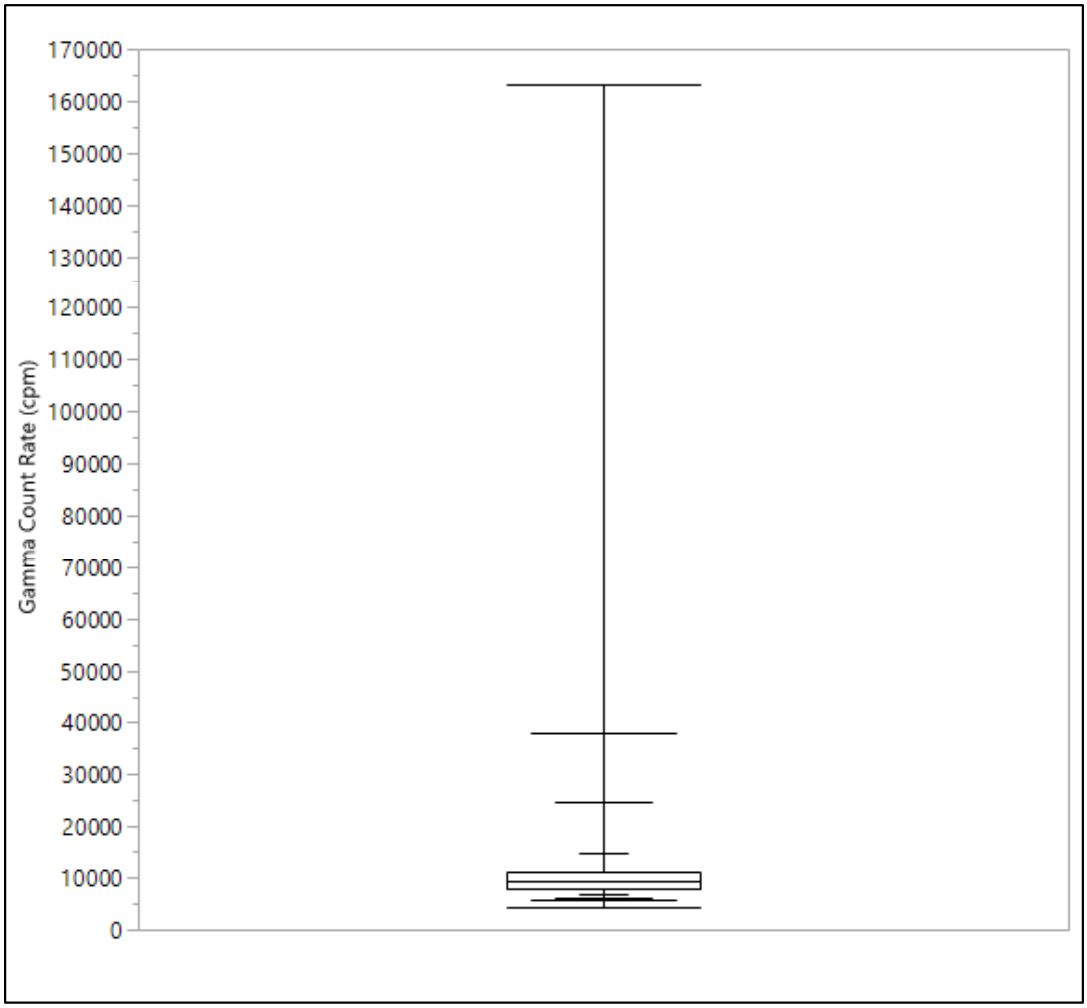

Figure 6. Box plot of gamma count rates in the Survey Area.

Table 3. Summary statistics for gamma count rates in the Survey Area.

Parameter	Gamma Count Rate (cpm)
n	40,738
Minimum	4,427
Maximum	163,071
Mean	10,568
Median	9,383
Standard Deviation	5,396

Notes:
cpm = counts per minute

3.0 Correlation Studies

The following sections address the activities under two types of correlation studies outlined in the RSE workplan: comparisons of 1) radium-226 concentrations in surface soils and gamma count rates and 2) exposure rates and gamma count rates. GPS-based gamma count rate measurements were made over small areas for the former study. The means of the measurements were used in this case. Static gamma count rate measurements, co-located with exposure rate measurements, were used in the latter study.

3.1 Radium-226 concentrations in surface soils and gamma count rates

On October 27, 2016 field personnel made GPS-based gamma count rates measurements and collected five-point composite samples of surface soils in each of five areas at the AUM. The activities were performed contemporaneously, by area and all on the same day, such that the two could be compared. Figure 7 shows the GPS-based gamma count rate measurements in the five areas (labeled with location identifiers).

The soil samples were analyzed by ALS Laboratories in Ft Collins, CO for radium-226 and isotopic thorium. Table 4 lists the results of the measurements and radium-226 concentrations in the soil samples. The means of the gamma count rate measurements range from 7,900 to 32,623 cpm. The concentrations of radium-226 range from 0.59 to 8.1 picocuries per gram (pCi/g).

Table 5 lists the concentrations of isotopes of thorium (thorium-228, -230, and -232) in the same soil samples.

Laboratory analyses are presented in Appendix F of “Harvey Blackwater No. 3 Removal Site Evaluation Report” (Stantec, 2017).

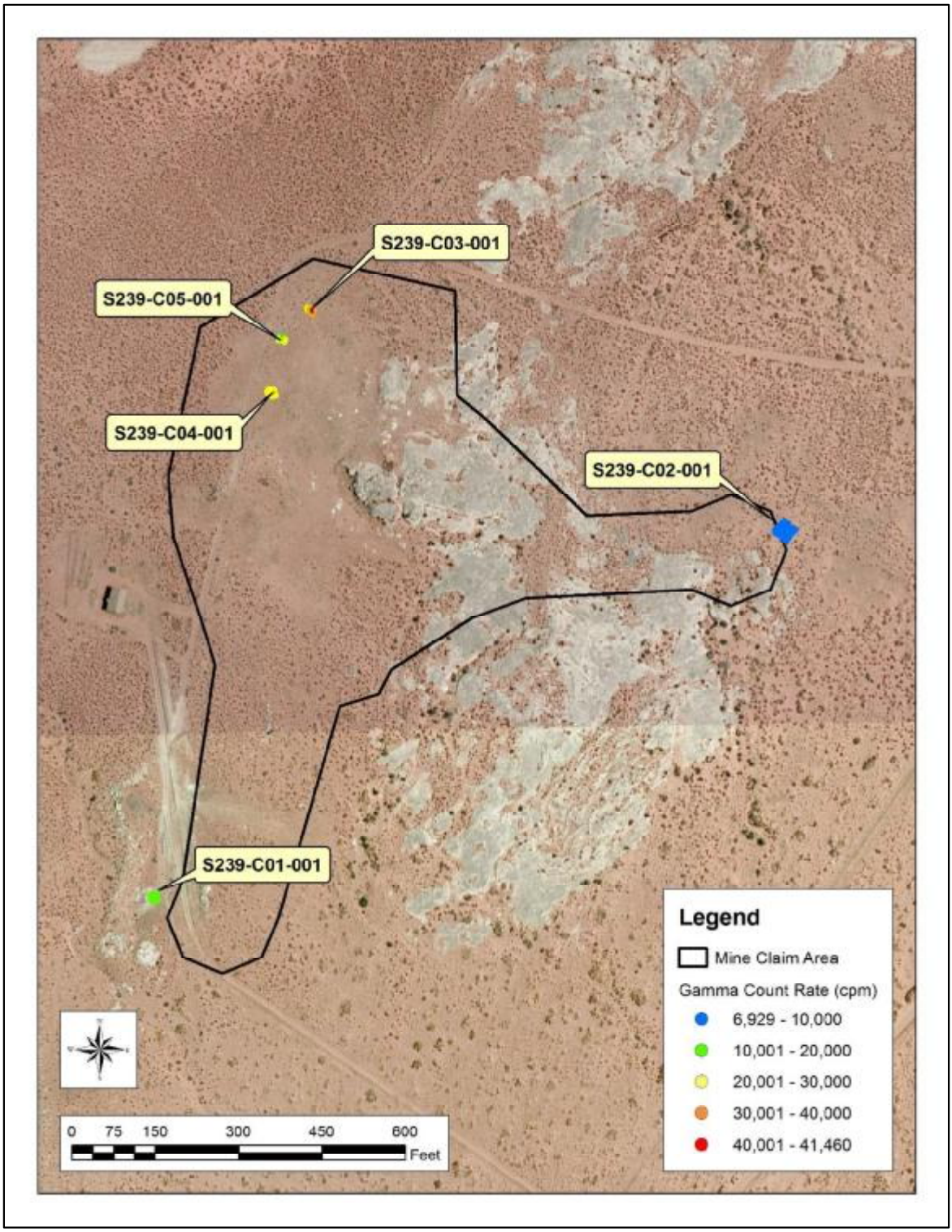

Figure 7. GPS-based gamma count rate measurements made for the correlation study.

Table 4. Gamma count rates and associated concentrations of radium-226 in samples of surface soils obtained in the correlation study.

	Gamma Count Rate (cpm)				Ra-226 (pCi/g)		
Location	Mean	Minimum	Maximum	σ	Result	Error ±1σ	MDL
S239-C01-001	13,124	11,553	14,760	669	1.81	0.36	0.51
S239-C02-001	7,900	6,929	9,336	406	0.59	0.17	0.29
S239-C03-001	32,623	23,166	41,460	5,157	8.1	1.1	0.5
S239-C04-001	24,551	16,640	31,349	3,673	4.67	0.66	0.48
S239-C05-001	19,387	16,799	23,182	1,343	4.42	0.63	0.44

Notes:
cpm = counts per minute
MDL = method detection limit
pCi/g = picocuries per gram
σ = standard deviation

Table 5. Concentrations of isotopes of thorium in samples of surface soils obtained in the correlation study.

	Thorium-228			Thorium-230			Thorium-232		
Sample ID	Result	Error ± 1 σ	MDL	Result	Error ± 1 σ	MDL	Result	Error ± 1 σ	MDL
S239-C01-001	0.81	0.15	0.04	1.56	0.27	0.08	0.69	0.13	0.01
S239-C02-001	0.282	0.067	0.042	0.62	0.12	0.07	0.226	0.053	0.013
S239-C03-001	0.399	0.085	0.04	8.5	1.3	0.1	0.386	0.079	0.013
S239-C04-001	0.329	0.071	0.031	3.42	0.55	0.07	0.351	0.072	0.018
S239-C05-001	0.331	0.073	0.036	3.09	0.5	0.07	0.334	0.07	0.016

Notes:
MDL = method detection limit
pCi/g = picocuries per gram
σ = standard deviation

A model was made of the results in Table 4, predicting the concentrations of radium-226 in surface soils from the mean gamma count rate in each area. The best predictive relationship between the measurements, shown in **Figure 8**, is a strong, power function with a Pearson's Correlation Coefficient (R^2) of 0.9745, as expressed in the equation:

$$\text{Radium-226 concentration (pCi/g)} = 5 \times 10^{-8} \times \text{Gamma Count Rate (cpm)}^{1.8283}$$

R^2 is a measure of the dependence between two variables, and is expressed as a value between -1 and +1 where +1 is a positive correlation, 0 is no correlation, and -1 is a negative correlation. The root mean square error and p-value for the correlation are 0.189 and 0.0017, respectively; these parameters are not data quality objectives (DQOs) and are included only as information.

The concentrations of thorium-232 and thorium-228, isotopes in the thorium series, in the correlation samples are similar and at most 0.81 pCi/g. Given these low concentrations and the high R^2 of the power

function, the thorium series radionuclides do not appear to affect the prediction of concentrations of radium-226, using gamma count rates.

This equation was used to convert the gamma count rate measurements observed in the gamma surveys to predicted concentrations of radium-226. **Table 6** presents summary statistics for the predicted concentrations of radium-226 in the Survey Area. The range of the predicted concentrations of radium-226 in the Survey Area is 0.2 to 169.3 pCi/g, with a mean and median of 1.3 and 0.9 pCi/g, respectively.

Figure 9 shows the predicted concentrations of radium-226, the spatial and numerical distribution of which mirror those depicted in Figure 4.

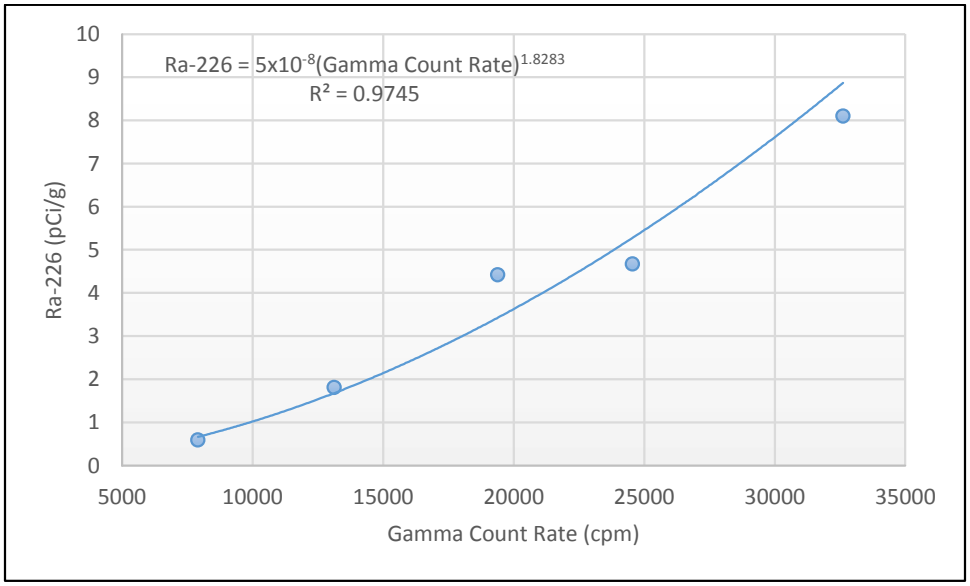

Figure 8. Correlation of gamma count rates and concentrations of radium-226 in surface soils.

Table 6. Predicted concentrations of radium-226 in the Survey Area.

Parameter	Radium-226 (pCi/g)
N	40,738
Minimum	0.2
Maximum	169.3
Mean	1.3
Median	0.9
Standard Deviation	2.7

Notes:
pCi/g = picocuries per gram

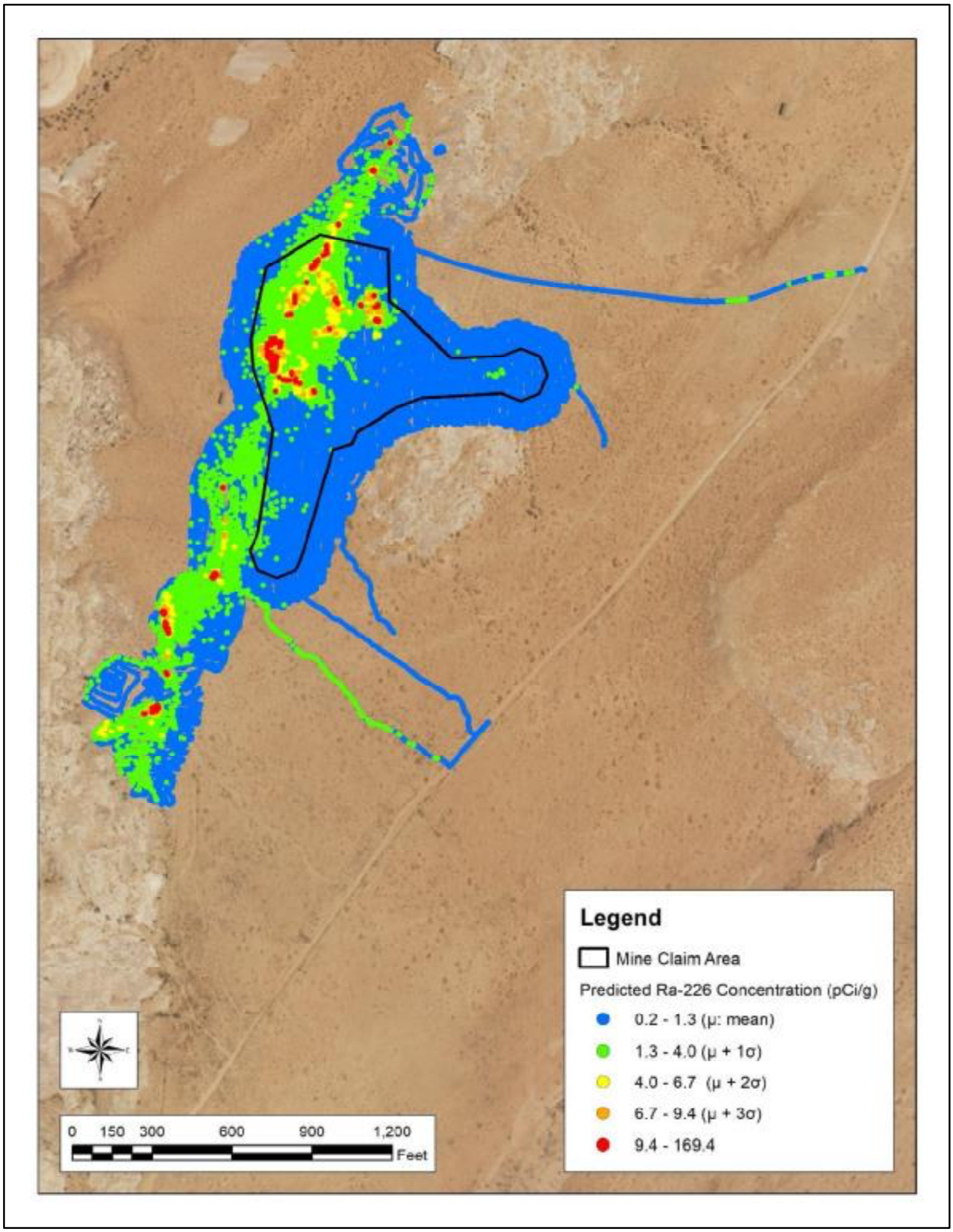

Figure 9. Predicted concentrations of radium-226 in the Survey Area.

3.2 Equilibrium in the uranium series

Secular equilibrium occurs when the activities of a parent radionuclide and its decay product are equal. This can occur in a closed system, when the half-life of the parent radionuclide is much larger than that of the decay product.

The ratio of the concentrations of radium-226 to thorium-230 can be used as an indicator of the status of equilibrium in the uranium series. The half-lives of thorium-230 and radium-226 are 77,000 and 1,600 years, respectively. The ratios in the five correlation samples are 1.2 (Sample S239-C01-001), 1.0 (Sample S239-C02-001), 1.0 (Sample S239-C03-001), 1.4 (Sample S239-C04-001), and 1.4 (Sample S239-C05-001), indicating that thorium-230 is potentially depleted in relation to radium-226 and, by extrapolation, the uranium series itself is not in secular equilibrium.

Note this observation is based on the results of five samples, subject to differing analytical methods. Gamma spectroscopy, the method used to determine the concentration of radium-226, assesses an intact portion of the whole sample as it was collected. The concentration of thorium-230 was determined by alpha spectroscopy of an acid-leached aliquot of the sample.

3.3 Exposure rates and gamma count rates

Field personnel made co-located one-minute static count rate and exposure rate measurements at five locations within the Survey Area, representing the range of gamma count rates obtained in the GPS-based gamma survey. Figure 7 shows the locations of the co-located measurements, which were made in the centers of the areas.

The gamma count rate and exposure rate measurements were made on October 27, 2016 at 0.5 m and 1 m above the ground surface, respectively. The gamma count rate measurements were made using one of the sodium iodide detection systems used in the GPS-based gamma survey of the AUM (Serial Numbers PR303727/254772). The exposure rate measurements were made using a Reuter Stokes Model RSS-131 high pressure ionization chamber (HPIC) at six-second intervals for about 10 minutes. The exposure rate used in the comparison was the mean of these measurements, less those occurring in initial instrument spikes. The HPIC was in current calibration and function checked before and after use. Calibration forms for the HPIC are provided in Appendix A.

Table 7 presents the results for the two types of measurements made at each of the five locations. Appendix B presents the individual (one second) exposure rate measurements.

The Pearson's Correlation Coefficient (R^2) is a measure of the dependence between two variables, and is expressed as a value between -1 and +1 where +1 is a positive correlation, 0 is no correlation, and -1 is a negative correlation. The best predictive relationship between the measurements is linear with a R^2 of 0.9829, strongly indicating a positive correlation. The root mean square error and p-value for the correlation are 0.837 and 0.0010, respectively; these parameters are not DQOs and are included only as information.

The following equation is the linear regression (shown in **Figure 10**) between the mean exposure rate and gamma count rate results in Table 7 that was generated using MS Excel:

$$\text{Exposure Rate } (\mu R/h) = 4x10^{-4} \text{ x Gamma Count Rate (cpm)} + 7.7$$

Figure 11 presents the exposure rates predicted from the gamma count rate measurements, the spatial and numerical distribution of which mirror those depicted in Figure 4.

Tables 8 and 8 present summary statistics for the predicted exposure rates in the potential Background Reference Area and AUM, respectively. The range of predicted exposure rates at BG3 is 10.3 to 11.9 µR/h, with a mean and median of 11.1 µR/h. The range of predicted exposure rates in the Survey Area is 9.5 to 72.9 µR/h, with a mean and median of 11.9 and 11.5 µR/h, respectively.

Table 7. Co-located gamma count rate and exposure rate measurements.

Location	Gamma Count Rate (cpm)	Exposure Rate (µR/h)
S239-C01-001	12,419	13.1
S239-C02-001	8,453	10
S239-C03-001	42,856	24.4
S239-C04-001	29,363	19
S239-C05-001	18,212	15.7

Notes:
cpm = counts per minute
µR/h = microRoentgens per hour

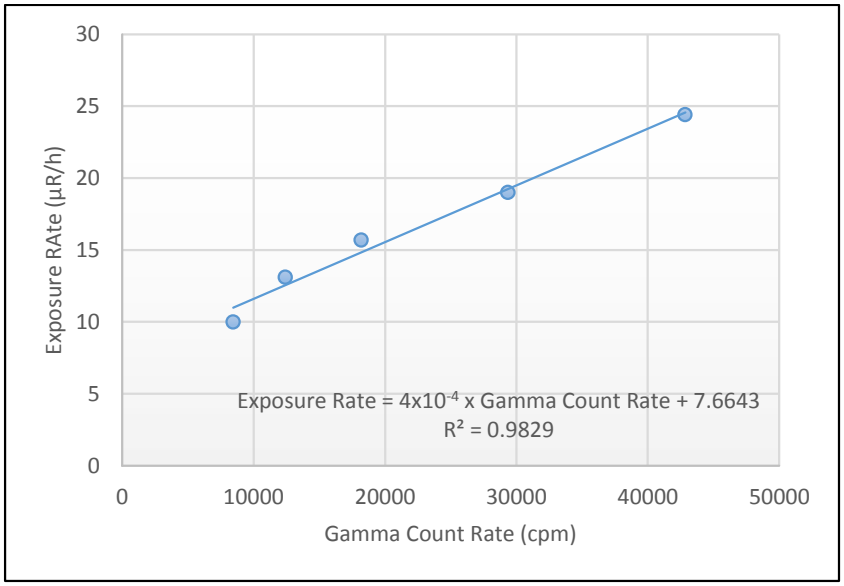

Figure 10. Correlation of gamma count rates and exposure rates.

Table 8. Predicted exposure rates in the potential Background Reference Area.

Parameter	Exposure Rate (µR/h)
n	235
Minimum	10.3
Maximum	11.9
Mean	11.1
Median	11.1
Standard Deviation	0.3

Notes:
µR/h = microRoentgens per hour

Table 9. Predicted exposure rates in the Survey Area.

Parameter	Exposure Rate (µR/h)
n	40,738
Minimum	9.5
Maximum	72.9
Mean	11.9
Median	11.5
Standard Deviation	2.2

Notes:
µR/h = microRoentgens per hour

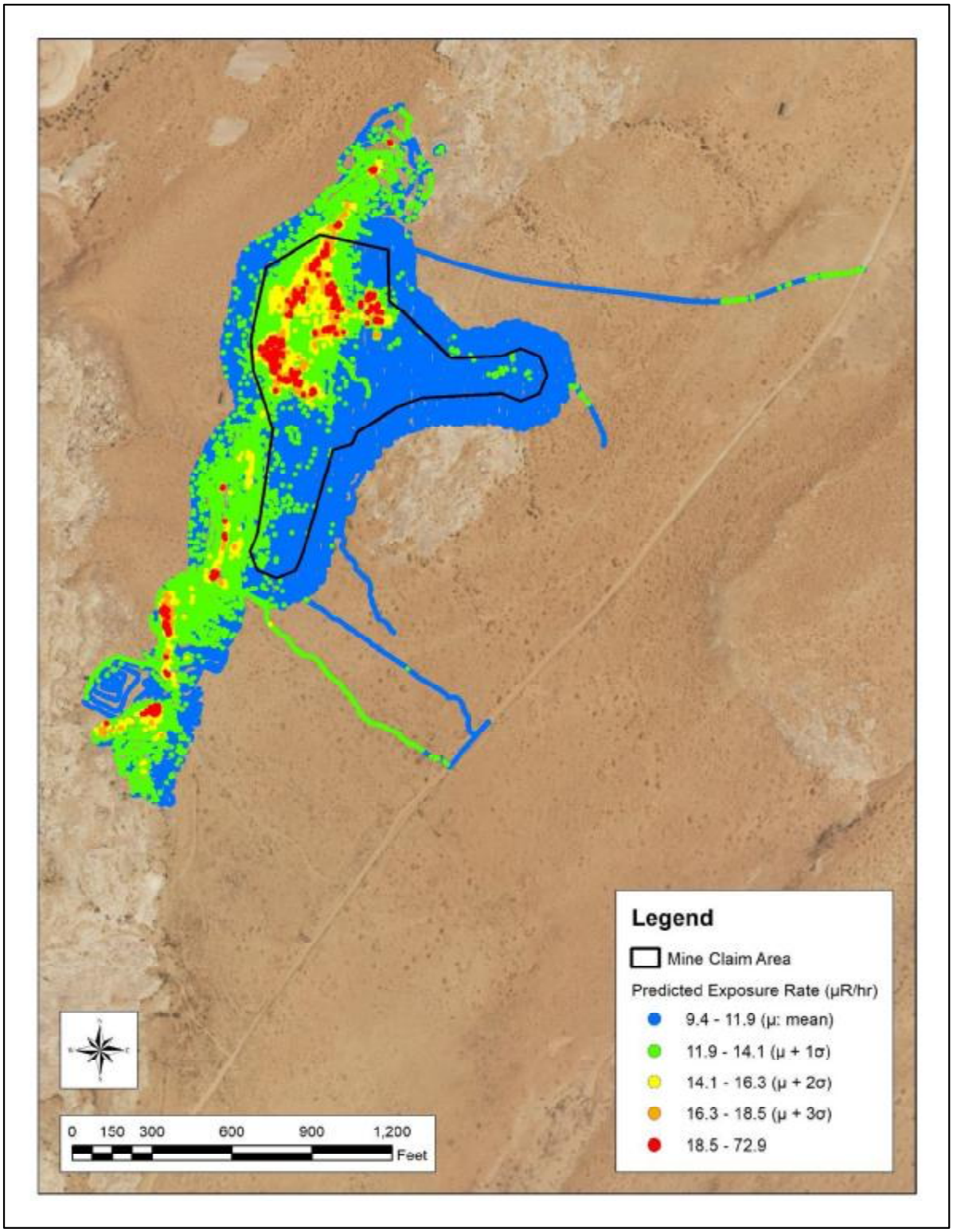

Figure 11. Predicted exposure rates in the Survey Area.

4.0 Deviations to RSE Workplan

The RSE Workplan specifies that the comparison of gamma count rates and radium concentrations in surface soils was to occur in 900 square foot areas. Field personnel adjusted the areas as necessary, to minimize the variability of gamma count rates observed, particularly where the spatial distribution of waste rock was heterogeneous.

5.0 Conclusions

The findings of the RSE pertaining to these activities are:

- The horizontal extent and magnitude of mining-related materials were delineated sufficiently to support additional characterization of the subsurface.

- The highest count rates were observed along a recurring exposure of bedrock that runs northeast to southwest through and beyond the mine claim.

- A potential Background Reference Area was established.

- The relationship between gamma count rates and concentrations of radium-226 in surface soils (0 to 0.5 ft bgs) is described by a power regression model:

  Radium-226 (pCi/g) = $5 \times 10^{-8} \times$ Gamma Count Rate (cpm)$^{1.8283}$

- The distribution of concentrations of radium-226 in surface soils predicted using this model resembles a lognormal distribution. The values in the Survey Area range from 0.2 to 169.3, with a central tendency (median) of 0.9 pCi/g.

- The relationship between gamma count rates and exposure rates is described by a linear regression model:

  Exposure Rate (µR/h) = Gamma Count Rate (cpm) x 4×10^{-4} + 7.7

- The distribution of exposure rates predicted using this model resembles a lognormal distribution. The values in the Survey Area range from 9.5 to 72.9, with a central tendency (median) of 11.5 µR/h.

6.0 References

ANSI, 1997. Radiation Protection Instrumentation Test and Calibration, Portable Survey Instruments, American National Standards Institute (ANSI) Standard N232A. June 20, 2014.

MWH, 2016. Navajo Nation AUM Environmental Response Trust, First Phase, Removal Site Evaluation Work Plan, October 24, 2016.

Stantec, 2017. Harvey Blackwater No. 3 Removal Site Evaluation Report, October 2017.

Appendix A Instrument calibration and completed function check forms

Certificate of Calibration

Calibration and Voltage Plateau

Environmental Restoration Group, Inc.
8809 Washington St NE, Suite 150
Albuquerque, NM 87113
(505) 298-4224
www.ERGoffice.com

Meter:	Manufacturer:	Ludlum	Model Number:	2221r	Serial Number:	138368
Detector:	Manufacturer:	Ludlum	Model Number:	44-10	Serial Number:	PR154615

✔ Mechanical Check ✔ THR/WIN Operation
✔ F/S Response Check ✔ Reset Check
✔ Geotropism ✔ Audio Check
✔ Meter Zeroed ✔ Battery Check (Min 4.4 VDC)

HV Check (+/- 2.5%): ✔ 500 V ✔ 1000 V ✔ 1500 V
Cable Length: 39-inch ✔ 72-inch Other:

Barometric Pressure: 24.78 inches Hg
Temperature: 74 °F
Relative Humidity: 20 %

Source Distance: Contact ✔ 6 inches Other:
Source Geometry: ✔ Side Below Other:
Threshold: 10 mV
Window:

Instrument found within tolerance: ✔ Yes No

Range Multiplier	Reference Setting	"As Found Reading"	Meter Reading	Integrated 1-Min. Count	Log Scale Count
x 1000	400	400	400	398436	400
x 1000	100	100	100		100
x 100	400	400	400	39845	400
x 100	100	100	100		100
x 10	400	400	400	3984	400
x 10	100	100	100		100
x 1	400	400	400	399	400
x 1	100	100	100		100

High Voltage	Source Counts	Background
700	26998	
800	51037	
900	63340	
950	65550	
1000	67410	
1050	70113	
1100	72217	
1150	72561	9216
1200	72337	

Voltage Plateau

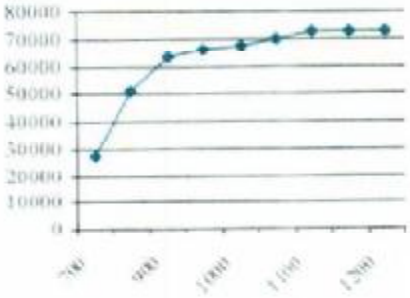

Comments: HV Plateau Scaler Count Time = 1-min. Recommended HV = 1150

Reference Instruments and/or Sources:

Ludlum pulser serial number: 97743 ✔ 201932
Alpha Source: Th-230 @ 12,800 dpm (1/4/12) sn: 4098-03
Beta Source: Tc-99 @ 17,700 dpm (1/4/12) sn: 4099-03

Fluke multimeter serial number: 87490128
✔ Gamma Source Cs-137 @ 5.2 uCi (1/4/12) sn: 4097-03
Other Source:

Calibrated By: [signature] Calibration Date: 7-20-16 Calibration Due: 7-20-17

Reviewed By: [signature] Date: 7/20/16

ERG Form ITC-101.A

This calibration conforms to the requirements and acceptable calibration conditions of ANSI N323A-1997

Certificate of Calibration

Calibration and Voltage Plateau

Environmental Restoration Group, Inc.
8809 Washington St NE, Suite 150
Albuquerque, NM 87113
(505) 298-4224
www.ERGoffice.com

Meter: Manufacturer:	Ludlum	Model Number:	2221r	Serial Number:	138368
Detector: Manufacturer:	Ludlum	Model Number:	44-10	Serial Number:	PR355763

☑ Mechanical Check ☑ THR/WIN Operation
☑ F/S Response Check ☑ Reset Check
☑ Geotropism ☑ Audio Check
☑ Meter Zeroed ☑ Battery Check (Min 4.4 VDC)

HV Check (+/- 2.5%): ☑ 500 V ☑ 1000 V ☑ 1500 V
Cable Length: ☐ 39-inch ☑ 72-inch ☐ Other:

Source Distance: ☐ Contact ☑ 6 inches ☐ Other:
Source Geometry: ☑ Side ☐ Below ☐ Other:

Threshold: 10 mV
Window:

Barometric Pressure: 24.75 inches Hg
Temperature: 76 °F
Relative Humidity: 20 %

Instrument found within tolerance: ☑ Yes ☐ No

Range/Multiplier	Reference Setting	"As Found Reading"	Meter Reading	Integrated 1-Min. Count	Log Scale Count
x 1000	400	400	400	398875	400
x 1000	100	100	100		100
x 100	400	400	400	39883	400
x 100	100	100	100		100
x 10	400	400	400	3988	400
x 10	100	100	100		100
x 1	400	400	400	398	400
x 1	100	100	100		100

High Voltage	Source Counts	Background
700	62275	
800	68049	
900	69726	
950	70112	9509
1000	70068	
1050	71042	
1100	77619	

Voltage Plateau

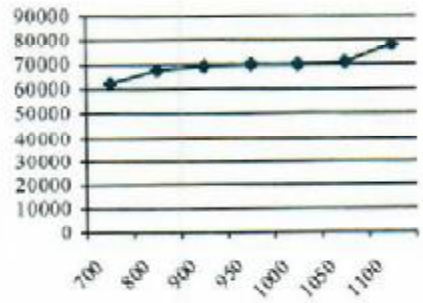

Comments: Comments: HV Plateau Scaler Count Time = 1-min. Recommended HV = 950

Reference Instruments and/or Sources:

Ludlum pulser serial number: ☐ 97743 ☑ 201932
☐ Alpha Source: Th-230 sn: 4098-03@12,800dpm/6,520 cpm (1/4/12)
☐ Beta Source: Tc-99 sn: 4099-03@17,700dpm/11,100cpm(1/4/12)

Fluke multimeter serial number: ☐ 87490128
☑ Gamma Source Cs-137 @ 5.2 uCi (1/4/12) sn: 4097-03
☐ Other Source:

Calibrated By: [signature] Calibration Date: 9/7-17 Calibration Due: 9-17-18

Reviewed By: T.[illegible] Date: 09/08/17

ERG Form ITC. 101.A

This calibration conforms to the requirements and acceptable calibration conditions of ANSI N323A - 1997

Certificate of Calibration

Calibration and Voltage Plateau

Environmental Restoration Group, Inc.
8809 Washington St NE, Suite 150
Albuquerque, NM 87113
(505) 298-4224
www.ERGoffice.com

Meter:	Manufacturer:	Ludlum	Model Number:	2221r	Serial Number:	190206
Detector:	Manufacturer:	Ludlum	Model Number:	44-10	Serial Number:	PR288465

- ☑ Mechanical Check
- ☑ F/S Response Check
- ☑ Geotropism
- ☑ Meter Zeroed
- ☑ THR/WIN Operation
- ☑ Reset Check
- ☑ Audio Check
- ☑ Battery Check (Min 4.4 VDC)

HV Check (+/- 2.5%): ☑ 500 V ☑ 1000 V ☑ 1500 V

Cable Length: ☐ 39-inch ☑ 72-inch ☐ Other:

Source Distance: ☐ Contact ☑ 6 inches ☐ Other:

Source Geometry ☑ Side ☐ Below ☐ Other:

Threshold: 10 mV

Window:

Barometric Pressure: 24.54 inches Hg

Temperature: 71 °F

Relative Humidity: 20 %

Instrument found within tolerance: ☑ Yes ☐ No

Range/Multiplier	Reference Setting	"As Found Reading"	Meter Reading	Integrated 1-Min. Count	Log Scale Co
x 1000	400	400	400	399414	400
x 1000	100	100	100		100
x 100	400	400	400	39954	400
x 100	100	100	100		100
x 10	400	400	400	3996	400
x 10	100	100	100		100
x 1	400	400	400	400	400
x 1	100	100	100		100

High Voltage	Source Counts	Background
700	59266	
800	67330	
900	69690	
950	69728	
1000	71188	10070
1050	71562	
1100	72192	
1150	71326	
1200	71316	

Voltage Plateau

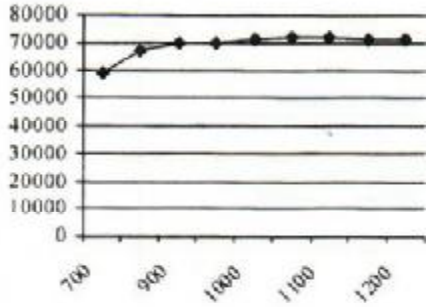

Comments: HV Plateau Scaler Count Time = 1-min. Recommended HV = 1000

Reference Instruments and/or Sources:

Ludlum pulser serial number: ☐ 97743 ☑ 201932

☐ Alpha Source: Th-230 @ 12,800 dpm (1/4/12) sn: 4098-03

☐ Beta Source: Tc-99 @ 17,700 dpm (1/4/12) sn: 4099-03

Fluke multimeter serial number: ☐ 8749012

☑ Gamma Source Cs-137 @ 5.2 uCi (1/4/12) sn: 4097-03

☐ Other Source:

Calibrated By:

Calibration Date: 1-20-16 Calibration Due 1-20-17

Reviewed By:

Date: 1/20/16

ERG Form ITC . 101.A

This calibration conforms to the requirements and acceptable calibration conditions of ANSI N323A - 1997

Certificate of Calibration

Calibration and Voltage Plateau

Environmental Restoration Group, Inc.
8809 Washington St NE, Suite 150
Albuquerque, NM 87113
(505) 298-4224
www.ERGoffice.com

Meter: Manufacturer: Ludlum Model Number: 2221r Serial Number: 196086

Detector: Manufacturer: Ludlum Model Number: 44-10 Serial Number: PR295014

✔ Mechanical Check ✔ THR/WIN Operation
✔ F/S Response Check ✔ Reset Check
✔ Geotropism ✔ Audio Check
✔ Meter Zeroed ✔ Battery Check (Min 4.4 VDC)

HV Check (+/- 2.5%): ✔ 500 V ✔ 1000 V ✔ 1500 V
Cable Length: 39-inch ✔ 72-inch Other:

Barometric Pressure: 24.78 inches Hg
Temperature: 74 °F
Relative Humidity: 20 %

Source Distance: Contact ✔ 6 inches Other:
Source Geometry: ✔ Side Below Other:
Threshold: 10 mV
Window:

Instrument found within tolerance: ✔ Yes No

Range/Multiplier	Reference Setting	"As Found Reading"	Meter Reading	Integrated 1-Min. Count	Log Scale Count
x 1000	400	400	400	399802	400
x 1000	100	100	100		100
x 100	400	400	400	39989	400
x 100	100	100	100		100
x 10	400	400	400	3999	400
x 10	100	100	100		100
x 1	400	400	400	400	400
x 1	100	100	100		100

High Voltage	Source Counts	Background
700	28456	
800	53330	
900	64430	
950	66209	
1000	68333	
1050	69077	
1100	69121	8924
1150	69973	
1200	70155	

Voltage Plateau

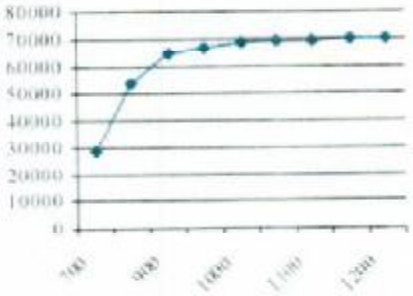

Comments: HV Plateau Scaler Count Time = 1-min. Recommended HV = 1100

Reference Instruments and/or Sources:

Ludlum pulser serial number: 97743 ✔ 201932

Alpha Source: Th-230 @ 12,800 dpm (1/4/12) sn: 4098-03

Beta Source: Tc-99 @ 17,700 dpm (1/4/12) sn: 4099-03

Fluke multimeter serial number: 87490128

✔ Gamma Source Cs-137 @ 5.2 uCi (1/4/12) sn: 4097-03

Other Source:

Calibrated By:

Calibration Date: 7/20/16 Calibration Due: 7/20/17

Reviewed By:

Date: 7/20/16

ERG Form ITC-101.X

This calibration conforms to the requirements and acceptable calibration conditions of ANSI N323A-1997

Certificate of Calibration

Calibration and Voltage Plateau

Environmental Restoration Group, Inc.
8809 Washington St NE, Suite 150
Albuquerque, NM 87113
(505) 298-4224
www.ERGoffice.com

Meter:	Manufacturer:	Ludlum	Model Number:	2221r	Serial Number:	218600
Detector:	Manufacturer:	Ludlum	Model Number:	44-10	Serial Number:	PR174359

- ☑ Mechanical Check
- ☑ F/S Response Check
- ☑ Geotropism
- ☑ Meter Zeroed
- ☑ THR/WIN Operation
- ☑ Reset Check
- ☑ Audio Check
- ☑ Battery Check (Min 4.4 VDC)

HV Check (+/- 2.5%): ☑ 500 V ☑ 1000 V ☑ 1500 V

Cable Length: ☐ 39-inch ☑ 72-inch ☐ Other:

Source Distance: ☐ Contact ☑ 6 inches ☐ Other:

Source Geometry ☑ Side ☐ Below ☐ Other:

Threshold: 10 mV

Window:

Barometric Pressure: 24.57 inches Hg

Temperature: 72 °F

Relative Humidity: 20 %

Instrument found within tolerance: ☑ Yes ☐ No

Range/Multiplier	Reference Setting	"As Found Reading"	Meter Reading	Integrated 1-Min. Count	Log Scale Count
x 1000	400	400	400	398459	400
x 1000	100	100	100		100
x 100	400	400	400	39851	400
x 100	100	100	100		100
x 10	400	400	400	3985	400
x 10	100	100	100		100
x 1	400	400	400	399	400
x 1	100	100	100		100

High Voltage	Source Counts	Background
700	67271	
750	69012	
800	70122	10144
850	70599	
900	71003	
950	73740	
1000	111711	

Voltage Plateau

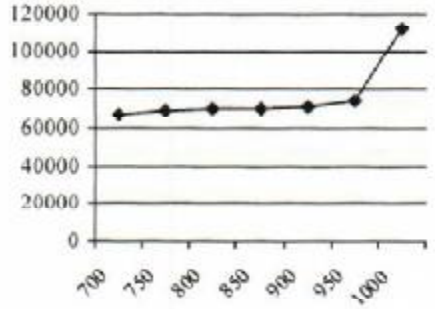

Comments: HV Plateau Scaler Count Time = 1-min. Recommended HV = 800

Reference Instruments and/or Sources:

Ludlum pulser serial number: ☐ 97743 ☑ 201932

☐ Alpha Source: Th-230 @ 12,800 dpm (1/4/12) sn: 4098-03

☐ Beta Source: Tc-99 @ 17,700 dpm (1/4/12) sn: 4099-03

Fluke multimeter serial number: ☐ 8749012

☑ Gamma Source Cs-137 @ 5.2 uCi (1/4/12) sn: 4097-03

☐ Other Source:

Calibrated By:

Calibration Date: 2-15-16 Calibration Due 2-15-17

Reviewed By:

Date: 2/15/16

ERG Form ITC. 101.A

This calibration conforms to the requirements and acceptable calibration conditions of ANSI N323A - 1997

Certificate of Calibration

Calibration and Voltage Plateau

Environmental Restoration Group, Inc.
8809 Washington St NE, Suite 150
Albuquerque, NM 87113
(505) 298-4224
www.ERGoffice.com

Meter:	Manufacturer:	Ludlum	Model Number:	2221r	Serial Number:	254772
Detector:	Manufacturer:	Ludlum	Model Number:	44-10	Serial Number:	PR303727

✔ Mechanical Check ✔ THR/WIN Operation HV Check (+/- 2.5%): ✔ 500 V ✔ 1000 V ✔ 1500 V
✔ F/S Response Check ✔ Reset Check Cable Length: 39-inch ✔ 72-inch Other:
✔ Geotropism ✔ Audio Check
✔ Meter Zeroed ✔ Battery Check (Min 4.4 VDC)

Source Distance: Contact ✔ 6 inches Other: Threshold: 10 mV
Source Geometry: ✔ Side Below Other: Window:

Barometric Pressure: 24.75 inches Hg
Temperature: 74 °F
Relative Humidity: 20 %

Instrument found within tolerance: ✔ Yes No

Range Multiplier	Reference Setting	"As Found Reading"	Meter Reading	Integrated 1-Min. Count	Log Scale Count
x 1000	400	400	400	398857	400
x 1000	100	100	100		100
x 100	400	400	400	39913	400
x 100	100	100	100		100
x 10	400	400	400	3992	400
x 10	100	100	100		100
x 1	400	400	400	399	400
x 1	100	100	100		100

High Voltage	Source Counts	Background
700	53620	
800	64979	
900	67955	
950	67795	
1000	68536	9542
1050	69153	
1100	69331	
1150	69346	
1200	69492	

Voltage Plateau

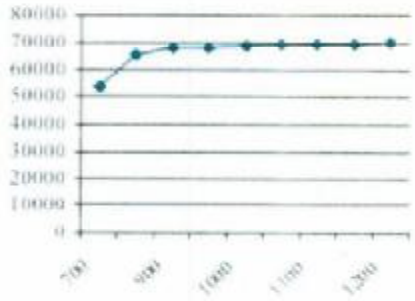

Comments: HV Plateau Scaler Count Time = 1-min. Recommended HV = 1000

Reference Instruments and/or Sources:

Ludlum pulser serial number: 97743 ✔ 201932
Alpha Source: Th-230 @ 12,800 dpm (1/4/12) sn: 4098-03
Beta Source: Tc-99 @ 17,700 dpm (1/4/12) sn: 4099-03

Fluke multimeter serial number: 87490128
✔ Gamma Source: Cs-137 @ 5.2 uCi (1/4/12) sn: 4097-03
Other Source:

Calibrated By: [signature] Calibration Date: 7/20/16 Calibration Due: 7/20/17

Reviewed By: [signature] Date: 7/20/16

ERG Form ITC-101.A

This calibration conforms to the requirements and acceptable calibration conditions of ANSI N323A-1997

Certificate of Calibration

Calibration and Voltage Plateau

Environmental Restoration Group, Inc.
8809 Washington St NE, Suite 150
Albuquerque, NM 87113
(505) 298-4224
www.ERGoffice.com

Meter:	Manufacturer:	Ludlum	Model Number:	2221r	Serial Number:	254772
Detector:	Manufacturer:	Ludlum	Model Number:	44-10	Serial Number:	PR303727

- ✔ Mechanical Check
- ✔ F/S Response Check
- ✔ Geotropism
- ✔ Meter Zeroed
- ✔ THR/WIN Operation
- ✔ Reset Check
- ✔ Audio Check
- ✔ Battery Check (Min 4.4 VDC)

HV Check (+/- 2.5%): ✔ 500 V ✔ 1000 V ✔ 1500 V

Cable Length: ☐ 39-inch ✔ 72-inch ☐ Other:

Source Distance: ☐ Contact ✔ 6 inches ☐ Other:

Source Geometry: ✔ Side ☐ Below ☐ Other:

Threshold: 10 mV

Window:

Barometric Pressure: 24.24 inches Hg

Temperature: 78 °F

Relative Humidity: 20 %

Instrument found within tolerance: ✔ Yes ☐ No

Range/Multiplier	Reference Setting	"As Found Reading"	Meter Reading	Integrated 1-Min. Count	Log Scale Count
x 1000	400	400	400	399859	400
x 1000	100	100	100		100
x 100	400	400	400	39991	400
x 100	100	100	100		100
x 10	400	400	400	4001	400
x 10	100	100	100		100
x 1	400	400	400	400	400
x 1	100	100	100		100

High Voltage	Source Counts	Background
700	52821	
800	65213	
900	68644	
950	69245	
1000	69492	9111
1050	69792	
1100	70472	
1150	71183	
1200	70571	

Voltage Plateau

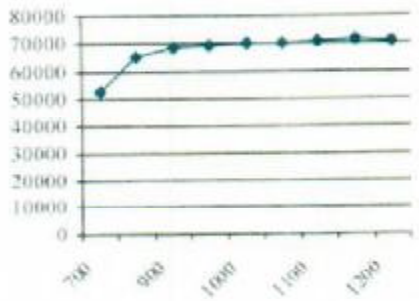

Comments: HV Plateau Scaler Count Time = 1-min. Recommended HV =1000

Reference Instruments and/or Sources:

Ludlum pulser serial number: ☐ 97743 ✔ 201932

☐ Alpha Source: Th-230 @ 12,800 dpm (1/4/12) sn: 4098-03

☐ Beta Source: Tc-99 @ 17.700 dpm (1/4/12) sn: 4099-03

Fluke multimeter serial number: ☐ 87490128

✔ Gamma Source Cs-137 @ 5.2 uCi (1/4/12) sn: 4097-03

☐ Other Source:

Calibrated By:

Reviewed By:

Calibration Date: ~~2 March 17~~ 2/28/17 Calibration Due: ~~2 March 18~~ 2/28/18

Date: 3-1-17

ERG Form ITC. 101.A

This calibration conforms to the requirements and acceptable calibration conditions of ANSI N323A - 1997

Certificate of Calibration

Calibration and Voltage Plateau

Environmental Restoration Group, Inc.
8809 Washington St NE, Suite 150
Albuquerque, NM 87113
(505) 298-4224
www.ERGoffice.com

Meter:	Manufacturer:	Ludlum	Model Number:	2221r	Serial Number:	282966
Detector:	Manufacturer:	Ludlum	Model Number:	44-10	Serial Number:	PR150507

- ☑ Mechanical Check
- ☑ F/S Response Check
- ☑ Geotropism
- ☑ Meter Zeroed
- ☑ THR/WIN Operation
- ☑ Reset Check
- ☑ Audio Check
- ☑ Battery Check (Min 4.4 VDC)

HV Check (+/- 2.5%): ☑ 500 V ☑ 1000 V ☑ 1500 V

Cable Length: ☐ 39-inch ☐ 72-inch ☑ Other: 60"

Source Distance: ☐ Contact ☑ 6 inches ☐ Other:

Source Geometry: ☑ Side ☐ Below ☐ Other:

Threshold: 10 mV

Window:

Barometric Pressure: 24.89 inches Hg

Temperature: 73 °F

Relative Humidity: 20 %

Instrument found within tolerance: ☑ Yes ☐ No

Range/Multiplier	Reference Setting	"As Found Reading"	Meter Reading	Integrated 1-Min. Count	Log Scale Count
x 1000	400	400	400	398753	400
x 1000	100	100	100		100
x 100	400	400	400	39879	400
x 100	100	100	100		100
x 10	400	400	400	3989	400
x 10	100	100	100		100
x 1	400	400	400	399	400
x 1	100	100	100		100

High Voltage	Source Counts	Background
700	56463	
800	64304	
900	68534	
950	69331	
1000	69868	9696
1050	70054	
1100	70609	
1150	70681	
1200	71955	

Voltage Plateau

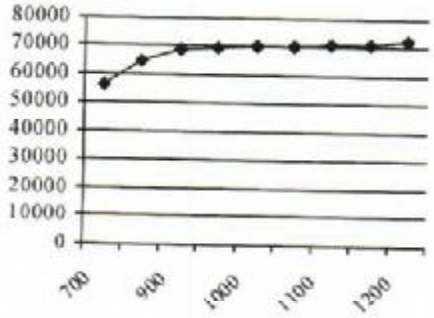

Comments: HV Plateau Scaler Count Time = 1-min. Recommended HV = 1000

Reference Instruments and/or Sources:

Ludlum pulser serial number: ☐ 97743 ☑ 201932

☐ Alpha Source: Th-230 @ 12,800 dpm (1/4/12) sn: 4098-03

☐ Beta Source: Tc99 @ 17,700 dpm (1/4/12) sn: 4099-03

Fluke multimeter serial number: ☐ 87490128

☑ Gamma Source Cs-137 @ 5.2 uCi (1/4/12) sn: 4097-03

☐ Other Source:

Calibrated By:

Reviewed By:

Calibration Date: 10-31-16

Calibration Due: 10-31-17

Date: 10/31/16

ERG Form ITC. 101.A

This calibration conforms to the requirements and acceptable calibration conditions of ANSI N323A - 1997

K&S Associates, Inc.
1926 Elm Tree Drive
Nashville, Tennessee 37210-3718
Phone 800-522-2325 Fax 615-871-0856

ACCREDITED
CALIBRATION CERT #1666.01

CALIBRATION REPORT

SUBMITTED BY: ERG
8809 Washington Street Northeast
Suite 150
Albuquerque, NM 87113

INSTRUMENT: Reuter Stokes RSS-131, #07J00KM1

REPORT NUMBER: 161866

TEST NUMBER(S) M161588

REPORT DATE: June 29, 2016

The CALIBRATION COEFFICIENTS contained in this report were obtained by intercomparison with instruments calibrated by, or directly traceable to, the National Institute of Standards and Technology (NIST). K• S Associates, Inc. is licensed by the State of Tennessee (R-19075-G97, R-19136-B00) to perform calibrations, and is recognized by the Health Physics Society (HPS) as an ACCREDITED INSTRUMENT CALIBRATION LABORATORY. As part of the accreditation K • S participates in a measurement assurance program conducted by the HPS and NIST. K • S also certifies that the calibration was performed using quality policies, methods and procedures that meet or exceed the requirements of ISO/IEC 17025:2005.

This laboratory is accredited by the American Association for Laboratory Accreditation (A2LA) and the results shown in this report have been determined in accordance with the laboratory's terms of accreditation unless stated otherwise in this report

The CALIBRATION COEFFICIENTS stated herein are valid under the conditions specified. It is the instrument user's responsibility to perform the appropriate constancy tests prior to shipment and after return from calibration. It is also the responsibility of the user to assure that the interpretation of the information in this report is consistent with that intended by K • S Associates, Inc.

This report may not be reproduced except in full without the written permission of K• S Associates, Inc.

K&S Associates, Inc
Nashville, Tennessee 37210-3718

ACCREDITED

CALIBRATION CERTIFICATE

Calibration Date: 6/27/2016 Report Number: 161866 Test Number: M161588

K&S certifies that the environmental radiation monitor identified below has been calibrated for radiation measurement using collimated radiation sources whose output has been calibrated with instruments calibrated by or directly traceable to the National Institute of Standards and Technology. K&S is accredited by the American Association for Laboratory Accreditation to perform environmental level calibrations and further certifies that the calibration was performed using accredited policies and procedures (SI 25) that meet or exceed the requirements of ISO/IEC 17025:2005.

Sensor Type: 100 mR/h

Serial Number: 07J00KM1

Average Calibration Coefficient for the range of 0.012 mR/h – 0.220 mR/h*:
1.02 mR/"mR" reading
(Measured at 4 points)

Calibration Coefficient for the 50.0 mR/h point*:
1.12 mR/"mR" reading

Calibration Coefficient for the 80.0 mR/h point*:
1.10 mR/"mR" reading

Found RAC: 2.169e-8

*Multiply the reading in **mR/h** by the Calibration Coefficient to obtain true **mR/h**.

Calibrated By: Richard Harrison Reviewed By: Angela Roper

Title: Calibration Technician Title: Calibration Specialist

Log: M-53 Page: 73

K&S Associates, Inc
Nashville, Tennessee 37210-3718

ACCREDITED

AS FOUND DATA
Reuter-Stokes Chamber Calibration

June 27, 2016 *Test Number* *M161588*

CHAMBER:

Mfgr: Reuter Stokes

Model: RSS-131

Serial: 07J00KM1

SUBMITTED BY:

ERG

Albuquerque, NM

ORIENTATION/CONDITIONS:

Serial number away from source

"True" background exposure rate of 6.7 uR/h, instrument reading was 0.0076 mR/h

ATMOSPHERIC COMMUNICATION: SEALED

POLARIZING POTENTIAL 401V

LEAKAGE: negligible

BEAM QUALITY		EXPOSURE RATE		CALIBRATION COEFFICIENT	UNCERT	LOG
CsEn220	(11mCi)	0.22mR/h	N_x=	1.00 mR/h/rdg	11%	M-53 73
CsEn80	(11mCi)	0.08mR/h	N_x=	1.03 mR/h/rdg	11%	
CsEnv12	(1mCi)	0.012mR/h	N_x=	1.01 mR/h/rdg	11%	
CsEnv15	(1mCi)	0.015mR/h	N_x=	1.02 mR/h/rdg	11%	
Cs199m	(20 Ci)	50mR/h	N_x=	1.12 mR/h/rdg	8%	
Cs252m	(20 Ci)	80mR/h	N_x=	1.10 mR/h/rdg	8%	

Comments Batt: 6.1V, Temp: 24.6 deg C, K&S Environment: Temp:21 deg C , RH 59%, Press: 752 mmHg;
Report Number: 161866
Refer to Appendix I of this report for details on PIC ionization chamber calibrations. Procedure: SI 25
RAC Found: 2.169e-8

Calibrated By Richard Hardison **Reviewed By:**

Title: Calibration Technician **Title:** Calibration Physicist

Checked By: **Prepared By:** RHI

Form RSS

ERG

Single-Channel Function Check Log

Environmental Restoration Group, Inc
8809 Washington St. NE, Suite 150
Albuquerque, NM 87113
(505) 298-4224

METER	
Manufacturer:	Ludlum
Model:	2221
Serial No.	190206
Cal. Due Date:	1-20-17

DETECTOR	
Manufacturer:	Ludlum
Model:	44-10
Serial No.:	PR288465
Cal. Due Date:	1-20-17

Comments:
NNEAT

Source: Cs-137 Activity: 4.81 uCi Source Date: 6-16-94 Distance to Source: 6 inches

Serial No.: 332-94 Emission Rate: NA cpm/emissions

Date	Time	Battery	High Voltage	Threshhold	Source Counts	BKG Counts	Net Counts	Initials	Note(s):
4-6-16	0735	5.6	1012	101	42459 ~~6728~~	6728	35731	NW	Hot Rock Inn lot
4-6-16	1550	5.5	1000	100	41200	6480	34720	NW	Hot Rock Inn lot
4-7-16	0629	5.3	1010	101	41670	7061	34609	NW	Hot Rock Inn lot
4-7-16	1945	5.5	1001	101	40828	6404	34424	NW	Hot Rock Inn lot
4-8-16	0700	5.5	1009	101	42124	6933	35191	NW	Hot Rock Inn lot
4-8-16	1846	5.5	1005	101	42226	7459	34767	NW	Hot Rock Inn lot
					4-8-16				

Reviewed by: MN Review Date: 5/5/16

ERG

Single-Channel Function Check Log

Environmental Restoration Group, Inc.
8809 Washington St. NE, Suite 150
Albuquerque, NM 87113
(505) 298-4224

METER	
Manufacturer:	Ludlum
Model:	2221
Serial No.:	218600
Cal. Due Date:	2-15-17

DETECTOR	
Manufacturer:	Ludlum
Model	44-10
Serial No.:	PR174359
Cal. Due Date:	2-15-17

Comments:
NNSRT

Source: Cs-137 Activity: 4.81 uCi Source Date: 6-16-94 Distance to Source: 6 inches

Serial No.: 332-94 Emission Rate: NA cpm/emissions

Date	Time	Battery	High Voltage	Threshhold	Source Counts	BKG Counts	Net Counts	Initials	Note(s):
4-6-16	0733	5.2	804	98	41823	7148	34675	NV	Hot Rock Im lot
4-6-16	1755	—	—	DID NOT	USE	—	—	NV	—
4-7-16	0624	4.8	804	98	41513	7198	34315	NV	Hot Rock Im lot
4-7-16	1448	—	—	DID NOT	USE	—	—	NV	—

4-8-16

Reviewed by: MV Review Date: 5/05/16

ERG

Single-Channel Function Check Log

Environmental Restoration Group, Inc.
8809 Washington St. NE, Suite 150
Albuquerque, NM 87113
(505) 298-4224

METER	
Manufacturer:	Ludlum
Model:	2221
Serial No.:	138638
Cal. Due Date:	7-5-17

DETECTOR	
Manufacturer:	Ludlum
Model:	44-10
Serial No.:	PR154615
Cal. Due Date:	7-9-17

Comments:
NMERC

Source: Cs-137 Activity: 5.12 uCi Source Date: 6-6-94 Distance to Source: 6 Inches

Serial No.: 333-94 Emission Rate: NA cpm/emissions

Date	Time	Battery	High Voltage	Threshhold	Source Counts	BKG Counts	Net Counts	Initials	Note(s):
10-5-16	0900	5.9	1184	165	46216	7136	39080	NW	Tsosie 1
10-5-16	1546	5.7	1198	155	45357	6266	39091	NW	Tsosie 1
10-8-16	0837	5.7	1182	164	45202	6004	39198	NW	Intersection to Oak 124 & Red Valley
10-8-16	1702	5.6	1128	112	49505	6399	43106	NW	Comfort Suites Farmington
10-12-16	1334	5.7	1139	122	46929	6807	40122	NW	Barton 3
10-12-16	1610	5.6	1130	115	44390	6093	38297	NW	Comfort Suites Farmington
10-13-16	0917	5.6	1129	110	44223	7099	37124	NW	Alonzo
10-13-16	1910	—	—	—	DO NOT USE	—	—	NW	Comfort Suites Farmington
10-15-16	0929	5.7	1173	160	47369	7023	40346	NW	Harvey Blackwater
10-15-16	1821	5.7	1193	163	42767	5769	37598	NW	Red Rock Exp lot
10-26-16	0755	5.7	1223	202	50474	8000	42474	NW	Bagel Tiji
10-26-16	1540	5.6	1152	138	45033	6331	38702	NW	Bagel Tiji

Reviewed by: [signature] Review Date: 11/29/16

ERG

Single-Channel Function Check Log

Environmental Restoration Group, Inc
8809 Washington St. NE, Suite 150
Albuquerque, NM 87113
(505) 298-4224

METER	
Manufacturer:	Ludlum
Model:	2221
Serial No.:	254772
Cal. Due Date:	7-19-17

DETECTOR	
Manufacturer:	Ludlum
Model:	44-10
Serial No.:	PR303727
Cal. Due Date:	7-19-17

Comments:
NNSRT

Source: Cs-137 Activity: 5.12 uCi Source Date: 6-6-94 Distance to Source: 6 inches

Serial No.: 333-94 Emission Rate: NA cpm/emissions

Date	Time	Battery	High Voltage	Threshhold	Source Counts	BKG Counts	Net Counts	Initials	Note(s): Project reference points
10-11-16	0927	5.5	1002	99	45999	6141	39858	NW	NA-0904
10-11-16	1720	5.5	998	99	48630	6576	42054	NW	Comfort Suites Parking Lot
10-12-16	0858	5.5	1003	99	44980	5506	39474	NW	NA-0928
10-12-16	1618	5.5	998	99	43779	6289	37490	NW	Comfort Suites Parking Lot
10-13-16	0911	5.5	1003	99	46726	7375	39351	NW	Alonzo
10-13-16	1910	5.5	990	99	45235	6618	38617	NW	Comfort Suites Parking Lot
10-14-16	0926	5.5	1004	99	45657	7242	38415	NW	Barton 3
10-14-16	1540	5.4	998	99	44751	6480	38271	NW	Comfort Suites Parking Lot
10-15-16	0927	5.5	1001	99	45697	6933	38764	NW	Harvey Blackwater
10-15-16	1324	5.4	996	99	42528	4945	37583	NW	Hot Rock Inn Parking Lot
a 10-24-16	0800	6.2	1005	100	48507	9268	39239	NW	Boyd Tisi
10-24-16	1207	6.0	1001	99	46290	8126	38164	NW	Boyd Tisi

a. changed battery

Reviewed by: MM Review Date: 11/29/16

ERG

Single-Channel Function Check Log

Environmental Restoration Group, Inc
8809 Washington St. NE, Suite 150
Albuquerque, NM 87113
(505) 298-4224

METER	
Manufacturer:	Ludlum
Model:	2221
Serial No.:	196096
Cal. Due Date:	7-11-17

DETECTOR	
Manufacturer:	Ludlum
Model:	44-10
Serial No.:	PR ~~303922~~ 295017 NW
Cal. Due Date:	7-11-17

Comments:
NNERT

Source: Cs-137 Activity: 5.12 uCi Source Date: 6-6-94 Distance to Source: 6 inches

Serial No.: 333-94 Emission Rate: NA cpm/emissions

Date	Time	Battery	High Voltage	Threshhold	Source Counts	BKG Counts	Net Counts	Initials	Note(s): Project reference points
10-15-16	0930	5.4	1100	100	45919	7086	38833	NW	Harvey Blackwater
10-15-16	1828	5.3	1094	100	44133	4794	39339	NW	Hat Rock Inn Lot
10-24-16	0807	5.4	1106	100	47875	8702	39173	NW	Boyd Tisi
10-24-16	1211	5.2	1099	100	45787	8272	37515	NW	Boyd Tisi
10-27-16	1000	5.4	1106	100	48630	8414	40216	NW	Harvey Blackwater
10-27-16	1601	5.2	1099	99	48376	8166	40160	NW	Harvey Blackwater
10-28-16	1401	5.3	1101	100	43141	4755	38386	NW	Mitten No. 3
10-28-16	1700	5.2	1101	99	43075	4698	38377	NW	Mitten No. 3
10-29-16	0814	5.3	1105	100	44174	4908	39266	NW	Mitten No. 3
10-29-16	~~08~~ NW 1346	5.2	1098	100	42452	4621	37831	NW	Mitten No. 3
10-31-16	0835	5.3	1105	101	42258	4609	37649	NW	Mitten No. 3
10-31-16	1655	5.3	1100	100	42630	4963	37667	NW	Goulding's back SUV.

Reviewed by: MN Review Date: 11/29/16

ERG

Single-Channel Function Check Log

Environmental Restoration Group, Inc.
8809 Washington St. NE, Suite 150
Albuquerque, NM 87113
(505) 298-4224

METER	
Manufacturer:	Ludlum
Model:	2221
Serial No.:	254792
Cal. Due Date:	7-19-17

DETECTOR	
Manufacturer:	Ludlum
Model:	44-10
Serial No.:	PR303727
Cal. Due Date:	7-19-17

Comments:
NNEAT

Source: Cs-137 Activity: 5.12 uCi Source Date: 6-6-94 Distance to Source: 6 inches

Serial No.: 333-94 Emission Rate: NA cpm/emissions

Date	Time	Battery	High Voltage	Threshhold	Source Counts	BKG Counts	Net Counts	Initials	Note(s): PROJECT REFERENCE POINT
10-26-16	0637	6.1	1008	99	46974	7833	39141	NW	BOYD TISI
10-26-16	1545	6.1	992	98	42850	5959	36891	NW	BOYD TISI
10-27-16	1005	6.0	1004	99	48059	8561	39498	NW	Harvey Blackwater
10-27-16	1555	5.9	999	99	48564	8465	40099	NW	Harvey Blackwater
10-28-16	0808	5.9	1004	99	46814	9142	37672	NW	Harvey Blackwater
10-28-16	1704	5.8	1000	99	43711	5178	38533	NW	Mitten No. 3
10-29-16	0807	5.9	1005	100	43690	5203	38487	NW	Mitten No. 3
10-29-16	1342	5.8	999	99	44561	4801	39760	NW	Mitten No. 3
10-31-16	0840	5.8	1004	99	42426	5084	37342	NW	Mitten No. 3
10-31-16	1507	5.8	999	99	44206	5069	39137	NW	Goulding's back SUV
11-1-16	0748	5.8	1006	100	44441	4842	39599	NW	Charles Keith
11-1-16	1722	5.7	1003	99	44858	5117	39741	NW	Goulding's back of SUV

Reviewed by: MM Review Date: 11/29/16

ERG

Single-Channel Function Check Log

Environmental Restoration Group, Inc.
8809 Washington St. NE, Suite 150
Albuquerque, NM 87113
(505) 298-4224

METER	
Manufacturer:	Ludlum
Model:	2221
Serial No.:	138368
Cal. Due Date:	7-19-167 NW

DETECTOR	
Manufacturer:	Ludlum
Model:	44-10
Serial No.:	PR154615
Cal. Due Date:	7-19-167 NW

Comments:
NNERT

Source: Cs-137 Activity: 5.12 uCi Source Date: 6-16-94 Distance to Source: 6 in.

Serial No.: 333-94 Emission Rate: NA cpm/emissions

Date	Time	Battery	High Voltage	Threshhold	Source Counts	BKG Counts	Net Counts	Initials	Note(s):
10-28-16	0813	5.6	1162	144	50583	9051	41532	NW	Harvey Blackwater
10-29-16	0815	5.6	1222	199	44566	5053	39513	NW	Mitten No. 3
10-29-16	1338	5.5	1141	125	44503	4794	39709	NW	Mitten No. 3
10-31-16	0846	5.5	1133	111	44824	4753	40071	NW	Mitten No. 3
10-31-16	1502	5.5	1132	114	44994	4883	40111	NW	Goulding's in SUV
11-1-16	0758	5.5	1133	110	45344	4971	40373	NW	Charles Keith
11-1-16	1712	5.3	1120	100	44220	4928	39292	NW	Goulding's in SUV
11-2-16	0826	5.3	1127	103	44389	5834	38555	NW	Charles Keith
11-2-16	1715	5.3	1125	106	43737	5179	38558	NW	Goulding's in SUV
11-3-16	1055	5.3	1125	105	44443	5368	39075	NW	Charles Keith
11-3-16	1842	5.3	1123	104	47047	7583	39464	NW	Chinle Holiday Inn SUV
11-4-16	0900	5.4	1128	104	46230	8402	37828	NW	Occurrence B

Reviewed by: MN Review Date: 11/29/16

(2)

ERG

Single-Channel Function Check Log

Environmental Restoration Group, Inc.
8809 Washington St. NE, Suite 150
Albuquerque, NM 87113
(505) 298-4224

METER	
Manufacturer:	Ludlum
Model:	2221
Serial No.:	196086
Cal. Due Date:	7-9-17

DETECTOR	
Manufacturer:	Ludlum
Model:	44-10
Serial No.:	PR295014
Cal. Due Date:	7-9-17

Comments:
NNERT

Source: Cs-137 Activity: 5.12 uCi Source Date: 6-6-94 Distance to Source: 6 inches

Serial No.: 333-94 Emission Rate: NA cpm/emissions

Date	Time	Battery	High Voltage	Threshhold	Source Counts	BKG Counts	Net Counts	Initials	Note(s): Project reference points
11-1-16	0744	5.3	1107	100	43406	4729	38677	NW	Charles Keith
11-1-16	1718	5.2	1102	99	44319	5332	38987	NW	Goulding's in SUV
11-2-16	0818	5.2	1108	100	43456	5555	37901	NW	Charles Keith
11-2-16	1703	5.1	1101	100	43874	5111	38763	NW	Goulding's in SUV
a 11-3-16	1050	6.2	1107	100	45017	5399	39618	NW	Charles Keith
a 11-3-16	1845	6.2	1104	99	47896	7562	40334	NW	Chinle Holiday Inn SUV
11-4-16	0956	6.2	1109	100	47119	8387	38732	NW	Occurrence B
11-4-16	1147	6.1	1105	100	46025	7972	38053	NW	Occurrence B
11-5-16	1112	6.1	1107	100	47483	8555	38928	NW	Claim 28
11-5-16	1524	6.1	1107	99	46822	7012	39811	NW	Chinle lot in SUV
11-7-16	0822	6.1	1108	100	46734	8744	37990	NW	Claim 28
11-7-16	1829	5.9	1104	99	46382	6448	39934	NW	Chinle lot

a. Changed batteries

Reviewed by: MH Review Date: 11/29/16

ERG

Single-Channel Function Check Log

Environmental Restoration Group, Inc
8809 Washington St NE, Suite 150
Albuquerque, NM 87113
(505) 298-4224

METER	
Manufacturer:	Ludlum
Model:	2221
Serial No.:	282466
Cal. Due Date:	10-31-17

DETECTOR	
Manufacturer:	Ludlum
Model:	44-10
Serial No.:	PR150507
Cal. Due Date:	10-31-17

Comments:
NNEAT

Source: Cs-137 Activity: 5.12 uCi Source Date: 6-6-94 Distance to Source: 6 inches

Serial No.: 333-94 Emission Rate: NA cpm/emissions

Date	Time	Battery	High Voltage	Threshhold	Source Counts	BKG Counts	Net Counts	Initials	Note(s): Project reference point,
11-2-16	0832	6.0	1007	100	43939	6161	37778	NW	Checks keith
11-2-16	1711	6.0	1003	101	44857	5744	39113	NW	Goulding's in SUV
11-4-16	0904	6.0	1008	101	47156	8938	38218	NW	Occurrence B
11-4-16	1152	5.9	1007	101	46787	8341	38446	NW	Occurrence B
11-5-16	1121	6.0	1007	101	47567	9195	38372	NW	Claim 28
11-5-16	1531	5.9	1007	101	46740	7360	39380	NW	Chinle lot in SUV
11-7-16	0810	6.0	1010	104	49757	9136	40621	NW	Claim 28
11-7-16	1832	5.8	1003	100	45791	6809	38982	NW	Chinle lot
11-8-16	0810	5.8	1009	100	49552	9855	39697	NW	Claim 28
11-8-16	1634	5.7	1003	100	48686	7133	41553	NW	Chinle lot
11-10-16	0812	5.8	1012	101	48028	9818	38205	NW	Claim 28
11-10-16	1635	5.7	1003	101	46906	9042	37864	NW	Claim 28 (2nd location)

Reviewed by: NW Review Date: 11/29/16

ERG

Single-Channel Function Check Log

Environmental Restoration Group, Inc.
8809 Washington St. NE, Suite 150
Albuquerque, NM 87113
(505) 298-4224

METER	
Manufacturer:	Ludlum
Model:	2221
Serial No.:	254792
Cal. Due Date:	7-9-17

DETECTOR	
Manufacturer:	Ludlum
Model:	44-10
Serial No.:	PR303727
Cal. Due Date:	7-9-17

Comments:
NNERT

Source: Cs-137 Activity: 5.12 uCi Source Date: 6-6-94 Distance to Source: 6 inches

Serial No.: 33394 Emission Rate: NA cpm/emissions

Date	Time	Battery	High Voltage	Threshhold	Source Counts	BKG Counts	Net Counts	Initials	Note(s): Project reference points
11-2-16	0821	5.7	1008	99	45344	6195	39149	NW	Charles, keith
11-2-16	1721	5.6	1002	99	44348	5346	39002	NW	Goulding's in SUV
11-3-16	1037	5.7	1007	100	43600	5834	37766	NW	Charles keith
11-3-16	1848	5.7	1003	100	46842	7821	39021	NW	Chinle Holiday Inn SUV
11-4-16	0845	5.7	1007	100	48258	8617	39641	NW	Occurrence B
11-4-16	1255	5.5	1003	99	46329	8608	37721	NW	Occurrence B
11-5-16	1108	5.6	1006	99	47858	9264	38594	NW	Claim 28
11-5-16	1527	5.6	1006	99	45039	7398	37641	NW	Chinle lot in SUV
11-7-16	0905	5.7	1008	100	48193	9249	38944	NW	Claim 28
11-7-16	1036	5.6	1003	99	46783	6986	39797	NW	Chinle lot in SUV
11-8-16	0800	5.6	1009	99	47951	9183	38768	NW	Claim 28
11-8-16	1637	5.5	1003	100	45094	6916	38178	NW	Chinle lot

Reviewed by: MM Review Date: 11/29/16

ERG

Single-Channel Function Check Log

Environmental Restoration Group, Inc.
8809 Washington St. NE Suite 150
Albuquerque, NM 87113
(505) 298-4224

METER	
Manufacturer:	Ludlum
Model:	2221
Serial No.:	254772
Cal. Due Date:	2-28-18

DETECTOR	
Manufacturer:	Ludlum
Model:	44-10
Serial No.:	PR 303727
Cal. Due Date:	2-28-18

Comments:
NNERT

Source: Cs-137 Activity: 4 uCi Source Date: 4-18-96 Distance to Source: 6 inches

Serial No.: 544-96 Emission Rate: N/A cpm/emissions

Date	Time	Battery	High Voltage	Threshhold	Source Counts	BKG Counts	Net Counts	Initials	Note(s):
3-16-17	1322	6.2	947	100	40116	7260	32856	NW	Cameron Trading Post lot
3-16-17	1555	6.1	942	99	38642	5986	32657	NW	Boyd Tisi
3-17-17	0812	6.2	951	100	40027	7965	32122	NW	Cameron Trading Post lot
3-17-17	1328	6.1	943	100	42203	10206	31997	NW	Boyd Tisi ~200 ft from BG4
3-18-17	0730	6.1	949	100	38598	6950	31648	NW	Harvey Blackwater
3-18-17	1505	6.0	941	100	35954	5035	30919	NW	Mitten No. 3
3-19-17	0651	6.1	949	99	36982	4952	32030	NW	Goulding's lot
3-19-17	1217	5.9	945	99	36802	5103	31699	NW	Charles Keith south of claim
3-20-17	0955	6.0	950	100	40829	8989	31840	NW	Claim 28
3-20-17	1555	5.9	943	100	37489	5569	32280	NW	Chinle parking lot
3-21-17	0635	5.9	950	100	38433	5735	32698	NW	Chinle lot
3-21-17	1657	5.9	946	100	36797	4997	31800	NW	Goulding's lot

Reviewed by: MN Review Date: 10/17/17

ERG

Single-Channel Function Check Log

Environmental Restoration Group, Inc
8809 Washington St. NE, Suite 150
Albuquerque, NM 87113
(505) 218-4224

METER	
Manufacturer:	Ludlum
Model:	2221
Serial No.:	138368
Cal. Due Date:	9-7-18

DETECTOR	
Manufacturer:	Ludlum
Model:	44-10
Serial No.:	PR355763
Cal. Due Date:	9-7-18

Comments:
NNERT

Source: Cs-137 Activity: 4 uCi Source Date: 4-18-96 Distance to Source: 6 inches

Serial No.: 544-96 Emission Rate: NA cpm/emissions

Date	Time	Battery	High Voltage	Threshhold	Source Counts	BKG Counts	Net Counts	Initials	Note(s):
9-12-17	0914	5.4	950	101	36935	6331	30604	NW	Barton 3
9-12-17	1432	5.3	944	99	38043	6468	31575	NW	Tsosie 1
9-13-17	0906	5.4	951	99	37146	6538	30608	NW	Alonzo
9-13-17	1600	5.3	944	99	35587	5991	29596	NW	Barton 3
9-14-17	0909	5.4	950	100	36080	6176	29904	NW	NA-0904
9-14-17	1255	5.3	948	100	36099	5764	30335	NW	NA-0904
9-15-17	0920	5.4	954	101	35208	5551	29657	NW	Eunice Begay
9-15-17	1729	5.3	957	109	35937	5261	30676	NW	Eunice Begay
9-19-17	0831	5.4	958	105	36467	6034	30433	NW	Section 26 @ trailer
9-19-17	1453	5.3	946	99	44454	14948	29506	NW	Section 26 @ corral
9-20-17	0736	5.3	953	102	37676	6987	30689	NW	Mexican Hat
9-20-17	1611	5.2	947	100	36842	6252	30590	NW	Mexican Hat

Reviewed by: MM Review Date: 10/9/17

ERG

Single-Channel Function Check Log

Environmental Restoration Group, Inc.
8809 Washington St. NE, Suite 150
Albuquerque, NM 87113
(505) 298-4224

METER	
Manufacturer:	GE
Model:	RSS-131
Serial No.:	07J00KM1
Cal. Due Date:	6-29-17

DETECTOR	
Manufacturer:	SAME AS METER
Model:	
Serial No.:	
Cal. Due Date:	

Comments:
NNERT

Source: Cs-137 Activity: 5.12 uCi Source Date: 6-6-94 Distance to Source: Contact-housing

Serial No.: 333-94 Emission Rate: NA cpm/emissions

Date	Time	Battery	High Voltage	Threshhold	Source Counts (mR/h)	BKG Counts (μR/h)	Net Counts	Initials	Note(s): Project reference points
10-26-16	0525	~6.4	~400	NA	~27.8	~10.5	~17.3	NW	Best Western room - Flagstaff
10-26-16	2010	~6.3	~400	NA	~26	~9.5	~16.5	NW	Goulding's room ~~Best Western room - Flagstaff~~
10-27-16	0720	~6.2	~400	NA	~26.7	~10.0	~16.7	NW	Goulding's room
10-27-16	1710	~6.2	~400	NA	~27.0	~10.8	~16.2	NW	Goulding's room
10-31-16	0609	~6.3	~400	NA	~27.0	~10	~16	NW	Goulding's room
10-31-16	1520	~6.3	~400	NA	~26	~10	~16	NW	Goulding's room
11-3-16	0700	~6.2	~400	NA	~26.5	~10.5	~16	NW	Goulding's room
11-3-16	1924	~6.1	~400	NA	~28.8	~12.5	~16.3	NW	Holiday Inn Chinle-room
11-9-16	0615	~6.3	~400	NA	~30	~12.8	~17.2	NW	Holiday Inn-Chinle room
11-9-16	1430	~6.2	~400	NA	~29.5	~12.5	~17	NW	Holiday Inn Chinle-room
11-11-16	0610	~6.4	~400	NA	~31.5	~13.5	~18	NW	Holiday Inn Chinle-room
11-11-16	1825	~6.2	~400	NA	~28	~11	~17	NW	Holiday Inn Chinle-room

Reviewed by: MM Review Date: 11-29-16

Appendix B Exposure Rate Measurements

Date and Time	Exposure Rate (mR/h)	Location	Date and Time	Exposure Rate (mR/h)	Location
10/27/2016 13:26	0.0536	Correlation Location 1	10/27/2016 13:31	0.0128	Correlation Location 1
10/27/2016 13:26	0.0938	Correlation Location 1	10/27/2016 13:31	0.013	Correlation Location 1
10/27/2016 13:26	0.0816	Correlation Location 1	10/27/2016 13:31	0.0129	Correlation Location 1
10/27/2016 13:26	0.0558	Correlation Location 1	10/27/2016 13:32	0.0132	Correlation Location 1
10/27/2016 13:26	0.0368	Correlation Location 1	10/27/2016 13:32	0.0136	Correlation Location 1
10/27/2016 13:26	0.0255	Correlation Location 1	10/27/2016 13:32	0.0139	Correlation Location 1
10/27/2016 13:26	0.019	Correlation Location 1	10/27/2016 13:32	0.014	Correlation Location 1
10/27/2016 13:26	0.0156	Correlation Location 1	10/27/2016 13:32	0.0141	Correlation Location 1
10/27/2016 13:26	0.0142	Correlation Location 1	10/27/2016 13:32	0.0141	Correlation Location 1
10/27/2016 13:26	0.0135	Correlation Location 1	10/27/2016 13:32	0.0136	Correlation Location 1
10/27/2016 13:27	0.0127	Correlation Location 1	10/27/2016 13:32	0.0132	Correlation Location 1
10/27/2016 13:27	0.0123	Correlation Location 1	10/27/2016 13:32	0.0128	Correlation Location 1
10/27/2016 13:27	0.0126	Correlation Location 1	10/27/2016 13:32	0.0126	Correlation Location 1
10/27/2016 13:27	0.0124	Correlation Location 1	10/27/2016 13:33	0.0123	Correlation Location 1
10/27/2016 13:27	0.0127	Correlation Location 1	10/27/2016 13:33	0.0126	Correlation Location 1
10/27/2016 13:27	0.0123	Correlation Location 1	10/27/2016 13:33	0.0124	Correlation Location 1
10/27/2016 13:27	0.0122	Correlation Location 1	10/27/2016 13:33	0.0127	Correlation Location 1
10/27/2016 13:27	0.0126	Correlation Location 1	10/27/2016 13:33	0.0131	Correlation Location 1
10/27/2016 13:27	0.013	Correlation Location 1	10/27/2016 13:33	0.0132	Correlation Location 1
10/27/2016 13:27	0.0133	Correlation Location 1	10/27/2016 13:33	0.0134	Correlation Location 1
10/27/2016 13:28	0.0135	Correlation Location 1	10/27/2016 13:33	0.0136	Correlation Location 1
10/27/2016 13:28	0.0138	Correlation Location 1	10/27/2016 13:33	0.0136	Correlation Location 1
10/27/2016 13:28	0.0141	Correlation Location 1	10/27/2016 13:33	0.0138	Correlation Location 1
10/27/2016 13:28	0.0139	Correlation Location 1	10/27/2016 13:34	0.0135	Correlation Location 1
10/27/2016 13:28	0.0138	Correlation Location 1	10/27/2016 13:34	0.0132	Correlation Location 1
10/27/2016 13:28	0.0135	Correlation Location 1	10/27/2016 13:34	0.0129	Correlation Location 1
10/27/2016 13:28	0.0131	Correlation Location 1	10/27/2016 13:34	0.0128	Correlation Location 1
10/27/2016 13:28	0.0128	Correlation Location 1	10/27/2016 13:34	0.0132	Correlation Location 1
10/27/2016 13:28	0.013	Correlation Location 1	10/27/2016 13:34	0.0133	Correlation Location 1
10/27/2016 13:28	0.0134	Correlation Location 1	10/27/2016 13:34	0.013	Correlation Location 1
10/27/2016 13:29	0.0133	Correlation Location 1	10/27/2016 13:34	0.0129	Correlation Location 1
10/27/2016 13:29	0.0129	Correlation Location 1	10/27/2016 13:34	0.0129	Correlation Location 1
10/27/2016 13:29	0.0128	Correlation Location 1	10/27/2016 13:34	0.013	Correlation Location 1
10/27/2016 13:29	0.0127	Correlation Location 1	10/27/2016 13:35	0.0131	Correlation Location 1
10/27/2016 13:29	0.0127	Correlation Location 1	10/27/2016 13:35	0.0132	Correlation Location 1
10/27/2016 13:29	0.0126	Correlation Location 1	10/27/2016 13:35	0.0133	Correlation Location 1
10/27/2016 13:29	0.0126	Correlation Location 1	10/27/2016 13:35	0.0129	Correlation Location 1
10/27/2016 13:29	0.0129	Correlation Location 1	10/27/2016 13:35	0.0127	Correlation Location 1
10/27/2016 13:29	0.0127	Correlation Location 1	10/27/2016 13:35	0.0127	Correlation Location 1
10/27/2016 13:29	0.0128	Correlation Location 1	10/27/2016 13:35	0.0127	Correlation Location 1
10/27/2016 13:30	0.0129	Correlation Location 1	10/27/2016 13:35	0.0129	Correlation Location 1
10/27/2016 13:30	0.013	Correlation Location 1	10/27/2016 13:35	0.0133	Correlation Location 1
10/27/2016 13:30	0.0133	Correlation Location 1	10/27/2016 13:35	0.0135	Correlation Location 1
10/27/2016 13:30	0.0135	Correlation Location 1	10/27/2016 13:36	0.0131	Correlation Location 1
10/27/2016 13:30	0.0138	Correlation Location 1	10/27/2016 13:36	0.0128	Correlation Location 1
10/27/2016 13:30	0.0142	Correlation Location 1	10/27/2016 13:36	0.0126	Correlation Location 1
10/27/2016 13:30	0.0144	Correlation Location 1	10/27/2016 13:36	0.0124	Correlation Location 1
10/27/2016 13:30	0.0142	Correlation Location 1	10/27/2016 13:36	0.0122	Correlation Location 1
10/27/2016 13:30	0.0139	Correlation Location 1	10/27/2016 13:36	0.0123	Correlation Location 1
10/27/2016 13:30	0.0137	Correlation Location 1	10/27/2016 13:36	0.0133	Correlation Location 1
10/27/2016 13:31	0.0133	Correlation Location 1	10/27/2016 13:36	0.0133	Correlation Location 1
10/27/2016 13:31	0.0135	Correlation Location 1	10/27/2016 13:36	0.0131	Correlation Location 1
10/27/2016 13:31	0.014	Correlation Location 1	10/27/2016 13:36	0.013	Correlation Location 1
10/27/2016 13:31	0.0142	Correlation Location 1	10/27/2016 13:37	0.0127	Correlation Location 1
10/27/2016 13:31	0.0136	Correlation Location 1	10/27/2016 13:37	0.0126	Correlation Location 1
10/27/2016 13:31	0.0133	Correlation Location 1	10/27/2016 13:37	0.0126	Correlation Location 1
10/27/2016 13:31	0.013	Correlation Location 1	10/27/2016 14:03	0.0529	Correlation Location 2

Harvey Blackwater No. 3 Exposure Rate Measurements for Correlation

Date and Time	Exposure Rate (mR/h)	Location	Date and Time	Exposure Rate (mR/h)	Location
10/27/2016 14:03	0.0921	Correlation Location 2	10/27/2016 14:09	0.0099	Correlation Location 2
10/27/2016 14:03	0.0795	Correlation Location 2	10/27/2016 14:09	0.0102	Correlation Location 2
10/27/2016 14:03	0.0536	Correlation Location 2	10/27/2016 14:09	0.0099	Correlation Location 2
10/27/2016 14:03	0.0344	Correlation Location 2	10/27/2016 14:09	0.0092	Correlation Location 2
10/27/2016 14:04	0.0229	Correlation Location 2	10/27/2016 14:09	0.009	Correlation Location 2
10/27/2016 14:04	0.0167	Correlation Location 2	10/27/2016 14:09	0.0093	Correlation Location 2
10/27/2016 14:04	0.0131	Correlation Location 2	10/27/2016 14:09	0.0093	Correlation Location 2
10/27/2016 14:04	0.0111	Correlation Location 2	10/27/2016 14:10	0.0091	Correlation Location 2
10/27/2016 14:04	0.0102	Correlation Location 2	10/27/2016 14:10	0.0091	Correlation Location 2
10/27/2016 14:04	0.01	Correlation Location 2	10/27/2016 14:10	0.0094	Correlation Location 2
10/27/2016 14:04	0.0102	Correlation Location 2	10/27/2016 14:10	0.01	Correlation Location 2
10/27/2016 14:04	0.0104	Correlation Location 2	10/27/2016 14:10	0.0103	Correlation Location 2
10/27/2016 14:04	0.0103	Correlation Location 2	10/27/2016 14:10	0.0104	Correlation Location 2
10/27/2016 14:04	0.01	Correlation Location 2	10/27/2016 14:10	0.0104	Correlation Location 2
10/27/2016 14:05	0.0098	Correlation Location 2	10/27/2016 14:10	0.0105	Correlation Location 2
10/27/2016 14:05	0.0098	Correlation Location 2	10/27/2016 14:10	0.0109	Correlation Location 2
10/27/2016 14:05	0.01	Correlation Location 2	10/27/2016 14:10	0.011	Correlation Location 2
10/27/2016 14:05	0.0102	Correlation Location 2	10/27/2016 14:11	0.0112	Correlation Location 2
10/27/2016 14:05	0.01	Correlation Location 2	10/27/2016 14:11	0.0112	Correlation Location 2
10/27/2016 14:05	0.01	Correlation Location 2	10/27/2016 14:11	0.0105	Correlation Location 2
10/27/2016 14:05	0.01	Correlation Location 2	10/27/2016 14:11	0.0102	Correlation Location 2
10/27/2016 14:05	0.0097	Correlation Location 2	10/27/2016 14:11	0.01	Correlation Location 2
10/27/2016 14:05	0.0096	Correlation Location 2	10/27/2016 14:11	0.0103	Correlation Location 2
10/27/2016 14:05	0.0096	Correlation Location 2	10/27/2016 14:11	0.01	Correlation Location 2
10/27/2016 14:06	0.0096	Correlation Location 2	10/27/2016 14:11	0.0096	Correlation Location 2
10/27/2016 14:06	0.0097	Correlation Location 2	10/27/2016 14:11	0.0094	Correlation Location 2
10/27/2016 14:06	0.0095	Correlation Location 2	10/27/2016 14:11	0.0095	Correlation Location 2
10/27/2016 14:06	0.0096	Correlation Location 2	10/27/2016 14:12	0.0098	Correlation Location 2
10/27/2016 14:06	0.0098	Correlation Location 2	10/27/2016 14:12	0.01	Correlation Location 2
10/27/2016 14:06	0.0099	Correlation Location 2	10/27/2016 14:12	0.0098	Correlation Location 2
10/27/2016 14:06	0.0098	Correlation Location 2	10/27/2016 14:12	0.0095	Correlation Location 2
10/27/2016 14:06	0.0098	Correlation Location 2	10/27/2016 14:12	0.0093	Correlation Location 2
10/27/2016 14:06	0.01	Correlation Location 2	10/27/2016 14:12	0.0096	Correlation Location 2
10/27/2016 14:06	0.01	Correlation Location 2	10/27/2016 14:12	0.0098	Correlation Location 2
10/27/2016 14:07	0.0099	Correlation Location 2	10/27/2016 14:12	0.0098	Correlation Location 2
10/27/2016 14:07	0.0096	Correlation Location 2	10/27/2016 14:12	0.01	Correlation Location 2
10/27/2016 14:07	0.01	Correlation Location 2	10/27/2016 14:12	0.0103	Correlation Location 2
10/27/2016 14:07	0.0106	Correlation Location 2	10/27/2016 14:13	0.0103	Correlation Location 2
10/27/2016 14:07	0.0105	Correlation Location 2	10/27/2016 14:13	0.0108	Correlation Location 2
10/27/2016 14:07	0.0106	Correlation Location 2	10/27/2016 14:13	0.0109	Correlation Location 2
10/27/2016 14:07	0.0105	Correlation Location 2	10/27/2016 14:13	0.0106	Correlation Location 2
10/27/2016 14:07	0.0105	Correlation Location 2	10/27/2016 14:13	0.0103	Correlation Location 2
10/27/2016 14:07	0.0103	Correlation Location 2	10/27/2016 14:13	0.0098	Correlation Location 2
10/27/2016 14:07	0.01	Correlation Location 2	10/27/2016 14:13	0.0096	Correlation Location 2
10/27/2016 14:08	0.01	Correlation Location 2	10/27/2016 14:13	0.0096	Correlation Location 2
10/27/2016 14:08	0.01	Correlation Location 2	10/27/2016 14:13	0.01	Correlation Location 2
10/27/2016 14:08	0.01	Correlation Location 2	10/27/2016 14:13	0.0105	Correlation Location 2
10/27/2016 14:08	0.0102	Correlation Location 2	10/27/2016 14:14	0.0104	Correlation Location 2
10/27/2016 14:08	0.01	Correlation Location 2	10/27/2016 14:14	0.01	Correlation Location 2
10/27/2016 14:08	0.01	Correlation Location 2	10/27/2016 14:14	0.01	Correlation Location 2
10/27/2016 14:08	0.01	Correlation Location 2	10/27/2016 14:14	0.0098	Correlation Location 2
10/27/2016 14:08	0.0103	Correlation Location 2	10/27/2016 14:14	0.01	Correlation Location 2
10/27/2016 14:08	0.01	Correlation Location 2	10/27/2016 14:14	0.0102	Correlation Location 2
10/27/2016 14:08	0.0096	Correlation Location 2	10/27/2016 14:43	0.0556	Correlation Location 3
10/27/2016 14:09	0.0096	Correlation Location 2	10/27/2016 14:43	0.0993	Correlation Location 3
10/27/2016 14:09	0.0097	Correlation Location 2	10/27/2016 14:43	0.0905	Correlation Location 3
10/27/2016 14:09	0.0098	Correlation Location 2	10/27/2016 14:43	0.0665	Correlation Location 3

Harvey Blackwater No. 3 Exposure Rate Measurements for Correlation

Date and Time	Exposure Rate (mR/h)	Location	Date and Time	Exposure Rate (mR/h)	Location
10/27/2016 14:43	0.0479	Correlation Location 3	10/27/2016 14:49	0.0242	Correlation Location 3
10/27/2016 14:43	0.0363	Correlation Location 3	10/27/2016 14:49	0.0239	Correlation Location 3
10/27/2016 14:43	0.0302	Correlation Location 3	10/27/2016 14:49	0.0237	Correlation Location 3
10/27/2016 14:43	0.0267	Correlation Location 3	10/27/2016 14:49	0.0237	Correlation Location 3
10/27/2016 14:44	0.0251	Correlation Location 3	10/27/2016 14:49	0.0239	Correlation Location 3
10/27/2016 14:44	0.0253	Correlation Location 3	10/27/2016 14:49	0.024	Correlation Location 3
10/27/2016 14:44	0.0249	Correlation Location 3	10/27/2016 14:49	0.0242	Correlation Location 3
10/27/2016 14:44	0.0242	Correlation Location 3	10/27/2016 14:50	0.0245	Correlation Location 3
10/27/2016 14:44	0.0235	Correlation Location 3	10/27/2016 14:50	0.0247	Correlation Location 3
10/27/2016 14:44	0.0239	Correlation Location 3	10/27/2016 14:50	0.0247	Correlation Location 3
10/27/2016 14:44	0.0245	Correlation Location 3	10/27/2016 14:50	0.0241	Correlation Location 3
10/27/2016 14:44	0.0249	Correlation Location 3	10/27/2016 14:50	0.0243	Correlation Location 3
10/27/2016 14:44	0.0247	Correlation Location 3	10/27/2016 14:50	0.0243	Correlation Location 3
10/27/2016 14:44	0.0247	Correlation Location 3	10/27/2016 14:50	0.024	Correlation Location 3
10/27/2016 14:45	0.0249	Correlation Location 3	10/27/2016 14:50	0.0237	Correlation Location 3
10/27/2016 14:45	0.0249	Correlation Location 3	10/27/2016 14:50	0.024	Correlation Location 3
10/27/2016 14:45	0.0245	Correlation Location 3	10/27/2016 14:50	0.0242	Correlation Location 3
10/27/2016 14:45	0.0241	Correlation Location 3	10/27/2016 14:51	0.0244	Correlation Location 3
10/27/2016 14:45	0.024	Correlation Location 3	10/27/2016 14:51	0.0245	Correlation Location 3
10/27/2016 14:45	0.024	Correlation Location 3	10/27/2016 14:51	0.0245	Correlation Location 3
10/27/2016 14:45	0.0242	Correlation Location 3	10/27/2016 14:51	0.0247	Correlation Location 3
10/27/2016 14:45	0.0241	Correlation Location 3	10/27/2016 14:51	0.0245	Correlation Location 3
10/27/2016 14:45	0.0241	Correlation Location 3	10/27/2016 14:51	0.0245	Correlation Location 3
10/27/2016 14:45	0.0242	Correlation Location 3	10/27/2016 14:51	0.0245	Correlation Location 3
10/27/2016 14:46	0.0242	Correlation Location 3	10/27/2016 14:51	0.0251	Correlation Location 3
10/27/2016 14:46	0.0241	Correlation Location 3	10/27/2016 14:51	0.0256	Correlation Location 3
10/27/2016 14:46	0.0237	Correlation Location 3	10/27/2016 14:51	0.0255	Correlation Location 3
10/27/2016 14:46	0.0235	Correlation Location 3	10/27/2016 14:52	0.0255	Correlation Location 3
10/27/2016 14:46	0.0237	Correlation Location 3	10/27/2016 14:52	0.0253	Correlation Location 3
10/27/2016 14:46	0.0241	Correlation Location 3	10/27/2016 14:52	0.0251	Correlation Location 3
10/27/2016 14:46	0.0242	Correlation Location 3	10/27/2016 14:52	0.0252	Correlation Location 3
10/27/2016 14:46	0.0244	Correlation Location 3	10/27/2016 14:52	0.0249	Correlation Location 3
10/27/2016 14:46	0.0241	Correlation Location 3	10/27/2016 14:52	0.0247	Correlation Location 3
10/27/2016 14:46	0.024	Correlation Location 3	10/27/2016 14:52	0.0249	Correlation Location 3
10/27/2016 14:47	0.0241	Correlation Location 3	10/27/2016 14:52	0.0245	Correlation Location 3
10/27/2016 14:47	0.0244	Correlation Location 3	10/27/2016 14:52	0.0242	Correlation Location 3
10/27/2016 14:47	0.0242	Correlation Location 3	10/27/2016 14:52	0.0242	Correlation Location 3
10/27/2016 14:47	0.024	Correlation Location 3	10/27/2016 14:53	0.0241	Correlation Location 3
10/27/2016 14:47	0.0241	Correlation Location 3	10/27/2016 14:53	0.0239	Correlation Location 3
10/27/2016 14:47	0.0239	Correlation Location 3	10/27/2016 14:53	0.0243	Correlation Location 3
10/27/2016 14:47	0.0237	Correlation Location 3	10/27/2016 14:53	0.0245	Correlation Location 3
10/27/2016 14:47	0.0241	Correlation Location 3	10/27/2016 14:53	0.0245	Correlation Location 3
10/27/2016 14:47	0.0245	Correlation Location 3	10/27/2016 14:53	0.0247	Correlation Location 3
10/27/2016 14:47	0.0243	Correlation Location 3	10/27/2016 14:53	0.0251	Correlation Location 3
10/27/2016 14:48	0.024	Correlation Location 3	10/27/2016 14:53	0.0249	Correlation Location 3
10/27/2016 14:48	0.024	Correlation Location 3	10/27/2016 14:53	0.0245	Correlation Location 3
10/27/2016 14:48	0.0243	Correlation Location 3	10/27/2016 14:53	0.0243	Correlation Location 3
10/27/2016 14:48	0.0242	Correlation Location 3	10/27/2016 14:54	0.0237	Correlation Location 3
10/27/2016 14:48	0.0239	Correlation Location 3	10/27/2016 14:54	0.0241	Correlation Location 3
10/27/2016 14:48	0.024	Correlation Location 3	10/27/2016 14:54	0.0247	Correlation Location 3
10/27/2016 14:48	0.0245	Correlation Location 3	10/27/2016 14:54	0.0251	Correlation Location 3
10/27/2016 14:48	0.0247	Correlation Location 3	10/27/2016 14:54	0.0253	Correlation Location 3
10/27/2016 14:48	0.0245	Correlation Location 3	10/27/2016 15:14	0.0548	Correlation Location 4
10/27/2016 14:48	0.0242	Correlation Location 3	10/27/2016 15:14	0.0969	Correlation Location 4
10/27/2016 14:49	0.0243	Correlation Location 3	10/27/2016 15:14	0.0866	Correlation Location 4
10/27/2016 14:49	0.0247	Correlation Location 3	10/27/2016 15:14	0.0618	Correlation Location 4
10/27/2016 14:49	0.0245	Correlation Location 3	10/27/2016 15:14	0.0427	Correlation Location 4

Harvey Blackwater No. 3 Exposure Rate Measurements for Correlation

Date and Time	Exposure Rate (mR/h)	Location	Date and Time	Exposure Rate (mR/h)	Location
10/27/2016 15:14	0.0312	Correlation Location 4	10/27/2016 15:20	0.0196	Correlation Location 4
10/27/2016 15:14	0.0251	Correlation Location 4	10/27/2016 15:20	0.02	Correlation Location 4
10/27/2016 15:14	0.022	Correlation Location 4	10/27/2016 15:20	0.0198	Correlation Location 4
10/27/2016 15:14	0.0206	Correlation Location 4	10/27/2016 15:20	0.0192	Correlation Location 4
10/27/2016 15:14	0.0199	Correlation Location 4	10/27/2016 15:20	0.0192	Correlation Location 4
10/27/2016 15:15	0.0197	Correlation Location 4	10/27/2016 15:20	0.0194	Correlation Location 4
10/27/2016 15:15	0.0194	Correlation Location 4	10/27/2016 15:20	0.0192	Correlation Location 4
10/27/2016 15:15	0.0189	Correlation Location 4	10/27/2016 15:20	0.0192	Correlation Location 4
10/27/2016 15:15	0.0184	Correlation Location 4	10/27/2016 15:21	0.019	Correlation Location 4
10/27/2016 15:15	0.019	Correlation Location 4	10/27/2016 15:21	0.019	Correlation Location 4
10/27/2016 15:15	0.0196	Correlation Location 4	10/27/2016 15:21	0.0192	Correlation Location 4
10/27/2016 15:15	0.0194	Correlation Location 4	10/27/2016 15:21	0.0194	Correlation Location 4
10/27/2016 15:15	0.0192	Correlation Location 4	10/27/2016 15:21	0.0196	Correlation Location 4
10/27/2016 15:15	0.0194	Correlation Location 4	10/27/2016 15:21	0.0194	Correlation Location 4
10/27/2016 15:15	0.0192	Correlation Location 4	10/27/2016 15:21	0.0194	Correlation Location 4
10/27/2016 15:16	0.0188	Correlation Location 4	10/27/2016 15:21	0.0194	Correlation Location 4
10/27/2016 15:16	0.0189	Correlation Location 4	10/27/2016 15:21	0.0194	Correlation Location 4
10/27/2016 15:16	0.0192	Correlation Location 4	10/27/2016 15:21	0.0192	Correlation Location 4
10/27/2016 15:16	0.0192	Correlation Location 4	10/27/2016 15:22	0.0189	Correlation Location 4
10/27/2016 15:16	0.019	Correlation Location 4	10/27/2016 15:22	0.0187	Correlation Location 4
10/27/2016 15:16	0.019	Correlation Location 4	10/27/2016 15:22	0.0187	Correlation Location 4
10/27/2016 15:16	0.0194	Correlation Location 4	10/27/2016 15:22	0.0189	Correlation Location 4
10/27/2016 15:16	0.0194	Correlation Location 4	10/27/2016 15:22	0.0188	Correlation Location 4
10/27/2016 15:16	0.019	Correlation Location 4	10/27/2016 15:22	0.0186	Correlation Location 4
10/27/2016 15:16	0.0188	Correlation Location 4	10/27/2016 15:22	0.0185	Correlation Location 4
10/27/2016 15:17	0.0187	Correlation Location 4	10/27/2016 15:22	0.0185	Correlation Location 4
10/27/2016 15:17	0.0185	Correlation Location 4	10/27/2016 15:22	0.019	Correlation Location 4
10/27/2016 15:17	0.0184	Correlation Location 4	10/27/2016 15:22	0.0194	Correlation Location 4
10/27/2016 15:17	0.0185	Correlation Location 4	10/27/2016 15:23	0.0192	Correlation Location 4
10/27/2016 15:17	0.0187	Correlation Location 4	10/27/2016 15:23	0.0186	Correlation Location 4
10/27/2016 15:17	0.0187	Correlation Location 4	10/27/2016 15:23	0.0182	Correlation Location 4
10/27/2016 15:17	0.019	Correlation Location 4	10/27/2016 15:23	0.0184	Correlation Location 4
10/27/2016 15:17	0.0196	Correlation Location 4	10/27/2016 15:23	0.0185	Correlation Location 4
10/27/2016 15:17	0.0198	Correlation Location 4	10/27/2016 15:23	0.0188	Correlation Location 4
10/27/2016 15:17	0.0194	Correlation Location 4	10/27/2016 15:23	0.019	Correlation Location 4
10/27/2016 15:18	0.019	Correlation Location 4	10/27/2016 15:23	0.0188	Correlation Location 4
10/27/2016 15:18	0.0189	Correlation Location 4	10/27/2016 15:23	0.0187	Correlation Location 4
10/27/2016 15:18	0.0188	Correlation Location 4	10/27/2016 15:23	0.019	Correlation Location 4
10/27/2016 15:18	0.0185	Correlation Location 4	10/27/2016 15:24	0.0192	Correlation Location 4
10/27/2016 15:18	0.0184	Correlation Location 4	10/27/2016 15:24	0.019	Correlation Location 4
10/27/2016 15:18	0.0184	Correlation Location 4	10/27/2016 15:24	0.0188	Correlation Location 4
10/27/2016 15:18	0.0185	Correlation Location 4	10/27/2016 15:24	0.0187	Correlation Location 4
10/27/2016 15:18	0.0188	Correlation Location 4	10/27/2016 15:24	0.0186	Correlation Location 4
10/27/2016 15:18	0.0192	Correlation Location 4	10/27/2016 15:24	0.0188	Correlation Location 4
10/27/2016 15:18	0.019	Correlation Location 4	10/27/2016 15:24	0.0188	Correlation Location 4
10/27/2016 15:19	0.0189	Correlation Location 4	10/27/2016 15:24	0.0187	Correlation Location 4
10/27/2016 15:19	0.019	Correlation Location 4	10/27/2016 15:24	0.0185	Correlation Location 4
10/27/2016 15:19	0.0192	Correlation Location 4	10/27/2016 15:24	0.0182	Correlation Location 4
10/27/2016 15:19	0.0197	Correlation Location 4	10/27/2016 15:25	0.0186	Correlation Location 4
10/27/2016 15:19	0.0197	Correlation Location 4	10/27/2016 15:25	0.0189	Correlation Location 4
10/27/2016 15:19	0.0194	Correlation Location 4	10/27/2016 15:25	0.019	Correlation Location 4
10/27/2016 15:19	0.0194	Correlation Location 4	10/27/2016 15:25	0.0187	Correlation Location 4
10/27/2016 15:19	0.0192	Correlation Location 4	10/27/2016 15:25	0.0182	Correlation Location 4
10/27/2016 15:19	0.0192	Correlation Location 4	10/27/2016 15:35	0.0538	Correlation Location 5
10/27/2016 15:19	0.0192	Correlation Location 4	10/27/2016 15:36	0.0945	Correlation Location 5
10/27/2016 15:20	0.0192	Correlation Location 4	10/27/2016 15:36	0.0836	Correlation Location 5
10/27/2016 15:20	0.0192	Correlation Location 4	10/27/2016 15:36	0.059	Correlation Location 5

Harvey Blackwater No. 3 Exposure Rate Measurements for Correlation

Date and Time	Exposure Rate (mR/h)	Location	Date and Time	Exposure Rate (mR/h)	Location
10/27/2016 15:36	0.0398	Correlation Location 5	10/27/2016 15:42	0.0154	Correlation Location 5
10/27/2016 15:36	0.0284	Correlation Location 5	10/27/2016 15:42	0.016	Correlation Location 5
10/27/2016 15:36	0.0225	Correlation Location 5	10/27/2016 15:42	0.016	Correlation Location 5
10/27/2016 15:36	0.0196	Correlation Location 5	10/27/2016 15:42	0.0156	Correlation Location 5
10/27/2016 15:36	0.0178	Correlation Location 5	10/27/2016 15:42	0.0156	Correlation Location 5
10/27/2016 15:36	0.0165	Correlation Location 5	10/27/2016 15:42	0.0156	Correlation Location 5
10/27/2016 15:36	0.0162	Correlation Location 5	10/27/2016 15:42	0.0156	Correlation Location 5
10/27/2016 15:37	0.0161	Correlation Location 5	10/27/2016 15:42	0.0158	Correlation Location 5
10/27/2016 15:37	0.0161	Correlation Location 5	10/27/2016 15:42	0.0156	Correlation Location 5
10/27/2016 15:37	0.0162	Correlation Location 5	10/27/2016 15:42	0.0158	Correlation Location 5
10/27/2016 15:37	0.0165	Correlation Location 5	10/27/2016 15:43	0.0164	Correlation Location 5
10/27/2016 15:37	0.0164	Correlation Location 5	10/27/2016 15:43	0.0163	Correlation Location 5
10/27/2016 15:37	0.0163	Correlation Location 5	10/27/2016 15:43	0.0158	Correlation Location 5
10/27/2016 15:37	0.016	Correlation Location 5	10/27/2016 15:43	0.0153	Correlation Location 5
10/27/2016 15:37	0.0155	Correlation Location 5	10/27/2016 15:43	0.0155	Correlation Location 5
10/27/2016 15:37	0.0155	Correlation Location 5	10/27/2016 15:43	0.0158	Correlation Location 5
10/27/2016 15:37	0.0152	Correlation Location 5	10/27/2016 15:43	0.016	Correlation Location 5
10/27/2016 15:38	0.0152	Correlation Location 5	10/27/2016 15:43	0.0162	Correlation Location 5
10/27/2016 15:38	0.0156	Correlation Location 5	10/27/2016 15:43	0.016	Correlation Location 5
10/27/2016 15:38	0.0156	Correlation Location 5	10/27/2016 15:43	0.016	Correlation Location 5
10/27/2016 15:38	0.0156	Correlation Location 5	10/27/2016 15:44	0.0158	Correlation Location 5
10/27/2016 15:38	0.0156	Correlation Location 5	10/27/2016 15:44	0.0156	Correlation Location 5
10/27/2016 15:38	0.0158	Correlation Location 5	10/27/2016 15:44	0.0154	Correlation Location 5
10/27/2016 15:38	0.0158	Correlation Location 5	10/27/2016 15:44	0.0155	Correlation Location 5
10/27/2016 15:38	0.0156	Correlation Location 5	10/27/2016 15:44	0.0154	Correlation Location 5
10/27/2016 15:38	0.0156	Correlation Location 5	10/27/2016 15:44	0.0154	Correlation Location 5
10/27/2016 15:38	0.0158	Correlation Location 5	10/27/2016 15:44	0.0156	Correlation Location 5
10/27/2016 15:39	0.0162	Correlation Location 5	10/27/2016 15:44	0.0158	Correlation Location 5
10/27/2016 15:39	0.0164	Correlation Location 5	10/27/2016 15:44	0.0158	Correlation Location 5
10/27/2016 15:39	0.0162	Correlation Location 5	10/27/2016 15:44	0.0158	Correlation Location 5
10/27/2016 15:39	0.0158	Correlation Location 5	10/27/2016 15:45	0.0158	Correlation Location 5
10/27/2016 15:39	0.0158	Correlation Location 5	10/27/2016 15:45	0.0158	Correlation Location 5
10/27/2016 15:39	0.0158	Correlation Location 5	10/27/2016 15:45	0.0158	Correlation Location 5
10/27/2016 15:39	0.0158	Correlation Location 5	10/27/2016 15:45	0.0156	Correlation Location 5
10/27/2016 15:39	0.0158	Correlation Location 5	10/27/2016 15:45	0.0156	Correlation Location 5
10/27/2016 15:39	0.0158	Correlation Location 5	10/27/2016 15:45	0.0158	Correlation Location 5
10/27/2016 15:39	0.0156	Correlation Location 5	10/27/2016 15:45	0.0156	Correlation Location 5
10/27/2016 15:40	0.0156	Correlation Location 5	10/27/2016 15:45	0.0156	Correlation Location 5
10/27/2016 15:40	0.0156	Correlation Location 5	10/27/2016 15:45	0.0155	Correlation Location 5
10/27/2016 15:40	0.0158	Correlation Location 5	10/27/2016 15:45	0.0154	Correlation Location 5
10/27/2016 15:40	0.0158	Correlation Location 5	10/27/2016 15:46	0.0153	Correlation Location 5
10/27/2016 15:40	0.0158	Correlation Location 5	10/27/2016 15:46	0.015	Correlation Location 5
10/27/2016 15:40	0.0158	Correlation Location 5	10/27/2016 15:46	0.0154	Correlation Location 5
10/27/2016 15:40	0.0156	Correlation Location 5	10/27/2016 15:46	0.0155	Correlation Location 5
10/27/2016 15:40	0.016	Correlation Location 5	10/27/2016 15:46	0.0155	Correlation Location 5
10/27/2016 15:40	0.0158	Correlation Location 5	10/27/2016 15:46	0.0156	Correlation Location 5
10/27/2016 15:40	0.0156	Correlation Location 5	10/27/2016 15:46	0.0156	Correlation Location 5
10/27/2016 15:41	0.0155	Correlation Location 5			
10/27/2016 15:41	0.0155	Correlation Location 5			
10/27/2016 15:41	0.0156	Correlation Location 5			
10/27/2016 15:41	0.0156	Correlation Location 5			
10/27/2016 15:41	0.0158	Correlation Location 5			
10/27/2016 15:41	0.0156	Correlation Location 5			
10/27/2016 15:41	0.0154	Correlation Location 5			
10/27/2016 15:41	0.0151	Correlation Location 5			
10/27/2016 15:41	0.015	Correlation Location 5			
10/27/2016 15:41	0.0149	Correlation Location 5			

Harvey Blackwater No. 3 Exposure Rate Measurements for Correlation

Appendix B Site Photographs

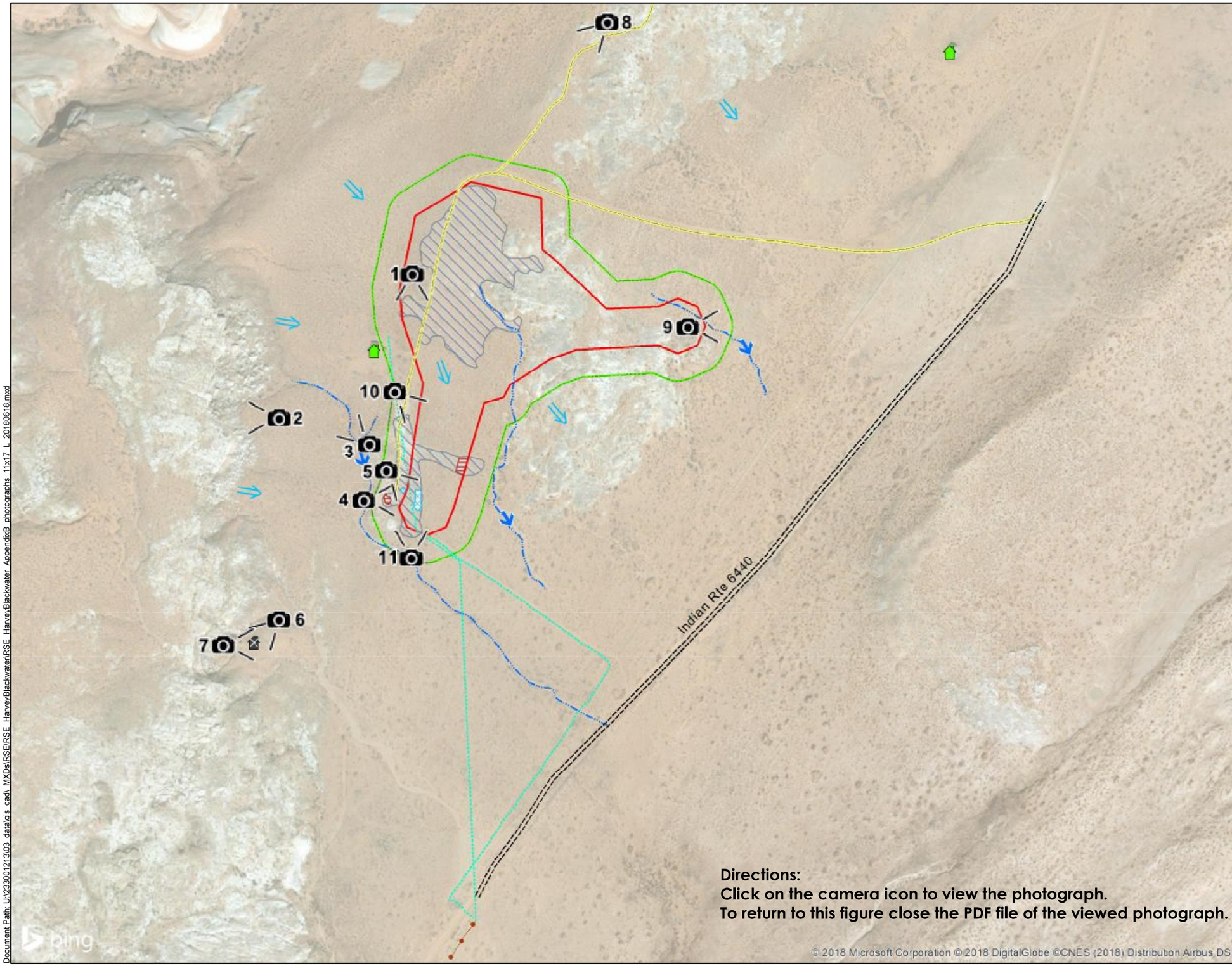

Directions:
Click on the camera icon to view the photograph.
To return to this figure close the PDF file of the viewed photograph.

NAVAJO NATION
AUM Environmental Response Trust-First Phase

LEGEND

- Photograph Indicating Direction Taken
- Habitable Building
- Uninhabitable Building
- Flow Direction
- Approximate Overland Water Flow Direction
- Drainage
- Potential Haul Road
- Power Line
- Road
- Water Line
- Graded / Disturbed Reclaimed Area
- Potential Waste Pile
- Water Line Excavation / Debris Pile
- Claim Boundary
- 100-Foot Claim Buffer

REFERENCES:
Coordinate System: NAD 1983 UTM Zone 12N

Basemap image accessed from BING Maps imagery web mapping service (http://www.bing.com/maps) on 06/2018.

N W E S

0 350 700
Feet

TITLE:
Site Photographs

PROJECT:
Removal Site Evaluation
Harvey Blackwater No. 3 Mine Site

DATE: 6/19/2018

DOCUMENT NAME: Removal Site Evaluation Report

Stantec

AUTHOR: CBB
REVIEWER: EDZ

FIGURE: Appendix B

Document Path: U:\233001213\03_data\gis_cad_MXDs\RSE\RSE_HarveyBlackwater\RSE_HarveyBlackwater_AppendixB_photographs_11x17_L_20180618.mxd

Appendix C Field Activity Forms

C.1 Soil Sample Field Forms

C.2 Drilling and Hand Auger Borehole Logs

C.1 Soil Sample Field Forms

SURFACE SOIL SAMPLE LOG FORM

AREA #/NAME S239-BG1-001 (Harry Blackmon)

SAMPLE I.D. S239-BG1-001

SAMPLE COLLECTION DATE 10/15/16

SAMPLE COLLECTION TIME 1008

SAMPLE COLLECTED BY Chee

WEATHER CONDITIONS 80's, sunny

FIELD USCS DESCRIPTIONS Red fine sand

MAJOR DIVISIONS: ☐ OH ☐ CH ☐ MH ☐ OH ☐ CL ☐ ML ☐ SC
☒ SM ☐ SP ☐ SW ☐ GC ☐ GM ☐ GP ☐ GW

QUALIFIERS: ☐ TRACE ☐ MINOR ☐ SOME; SAND SIZE ☐ FINE ☐ MEDIUM ☐ COARSE

MOISTURE: ☒ DRY ☐ MOIST ☐ WET

SAMPLE CONTAINERS (NUMBER AND TYPE) 1, Ziploc

ANALYSES: Ra-226, Metals

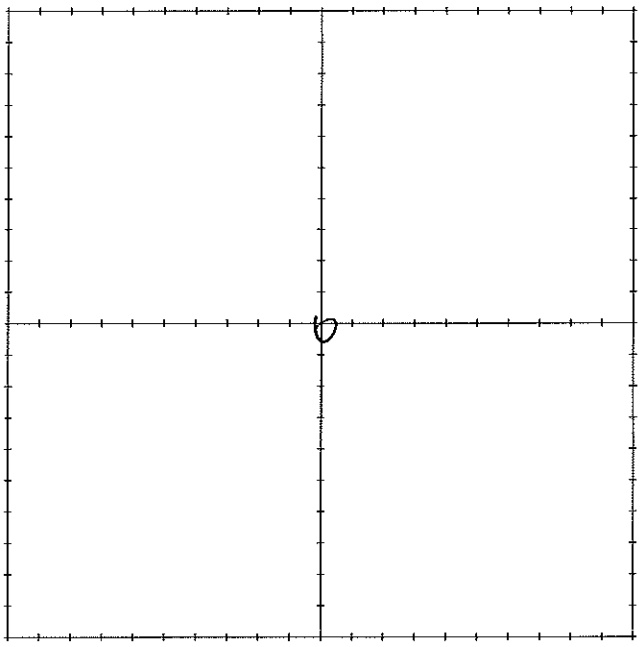

MARK INDIVIDUAL GRAB SAMPLE LOCATIONS IN GRID

MWH

SURFACE SOIL SAMPLE LOG FORM

AREA #/NAME 5239-BG1-002 (Harvey Blakmter)

SAMPLE I.D. 5239-BG1-002

SAMPLE COLLECTION DATE 10/15/16

SAMPLE COLLECTION TIME 1014

SAMPLE COLLECTED BY C Lee

WEATHER CONDITIONS 80's, sunny

FIELD USCS DESCRIPTIONS Red fine sand

MAJOR DIVISIONS: ☐ OH ☐ CH ☐ MH ☐ OH ☐ CL ☐ ML ☐ SC
☒ SM ☐ SP ☐ SW ☐ GC ☐ GM ☐ GP ☐ GW

QUALIFIERS: ☐ TRACE ☐ MINOR ☐ SOME; SAND SIZE ☐ FINE ☐ MEDIUM ☐ COARSE

MOISTURE: ☒ DRY ☐ MOIST ☐ WET

SAMPLE CONTAINERS (NUMBER AND TYPE) 1 ziplock

ANALYSES: Ra-226, Metals

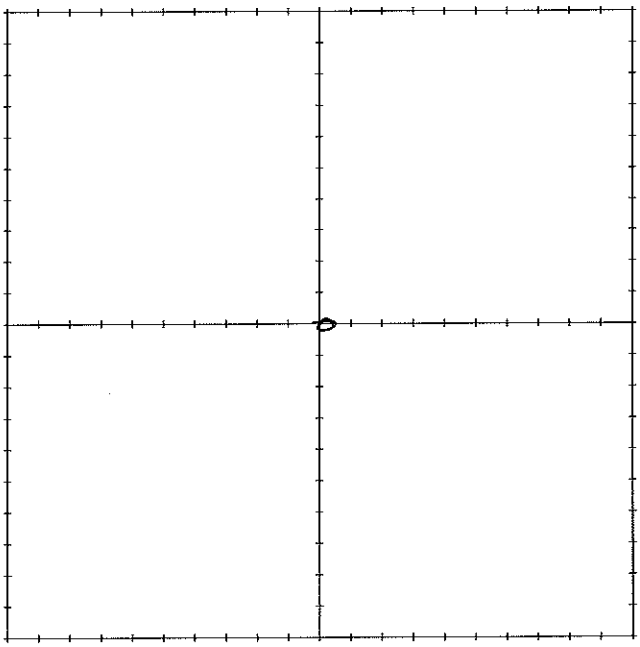

MARK INDIVIDUAL GRAB SAMPLE LOCATIONS IN GRID

MWH

SURFACE SOIL SAMPLE LOG FORM

AREA #/NAME S239-BG1-003 (Harvey Blackwater)

SAMPLE I.D. S239-BG1-003

SAMPLE COLLECTION DATE 10/15/16

SAMPLE COLLECTION TIME 1019

SAMPLE COLLECTED BY L. Lee

WEATHER CONDITIONS 80's, sunny

FIELD USCS DESCRIPTIONS Red fine sand

MAJOR DIVISIONS: ☐ OH ☐ CH ☐ MH ☐ OH ☐ CL ☐ ML ☐ SC
☒ SM ☐ SP ☐ SW ☐ GC ☐ GM ☐ GP ☐ GW

QUALIFIERS: ☐ TRACE ☐ MINOR ☐ SOME; SAND SIZE ☐ FINE ☐ MEDIUM ☐ COARSE

MOISTURE: ☒ DRY ☐ MOIST ☐ WET

SAMPLE CONTAINERS (NUMBER AND TYPE) 1, ziplock

ANALYSES: Ra-226, Metals

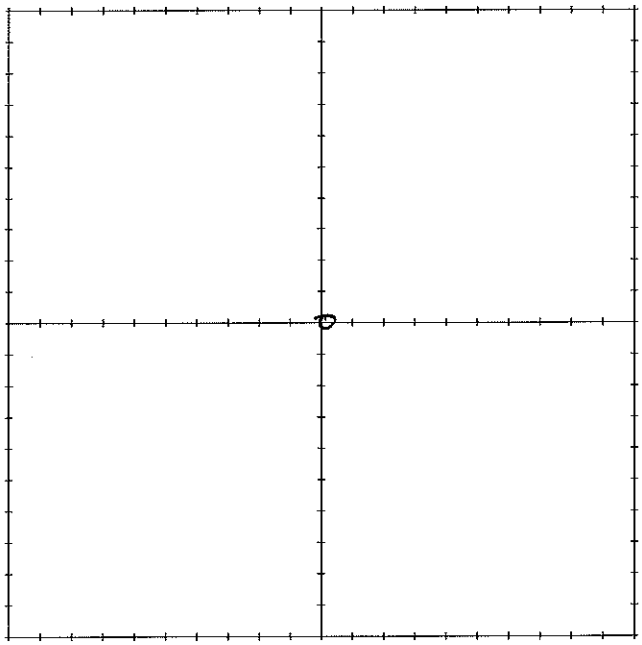

MARK INDIVIDUAL GRAB SAMPLE LOCATIONS IN GRID

MWH

SURFACE SOIL SAMPLE LOG FORM

AREA #/NAME 5239-BG1-004 (Harvey Blackwater)

SAMPLE I.D. 5239-BG1-004

SAMPLE COLLECTION DATE 10/15/16

SAMPLE COLLECTION TIME 1022

SAMPLE COLLECTED BY C. Lee

WEATHER CONDITIONS 80's, sunny

FIELD USCS DESCRIPTIONS Red fine sand

MAJOR DIVISIONS: ☐ OH ☐ CH ☐ MH ☐ OH ☐ CL ☐ ML ☐ SC
☒ SM ☐ SP ☐ SW ☐ GC ☐ GM ☐ GP ☐ GW

QUALIFIERS: ☐ TRACE ☐ MINOR ☐ SOME; SAND SIZE ☐ FINE ☐ MEDIUM ☐ COARSE

MOISTURE: ☒ DRY ☐ MOIST ☐ WET

SAMPLE CONTAINERS (NUMBER AND TYPE) 1 ziplock

ANALYSES: Ra-226, Metals

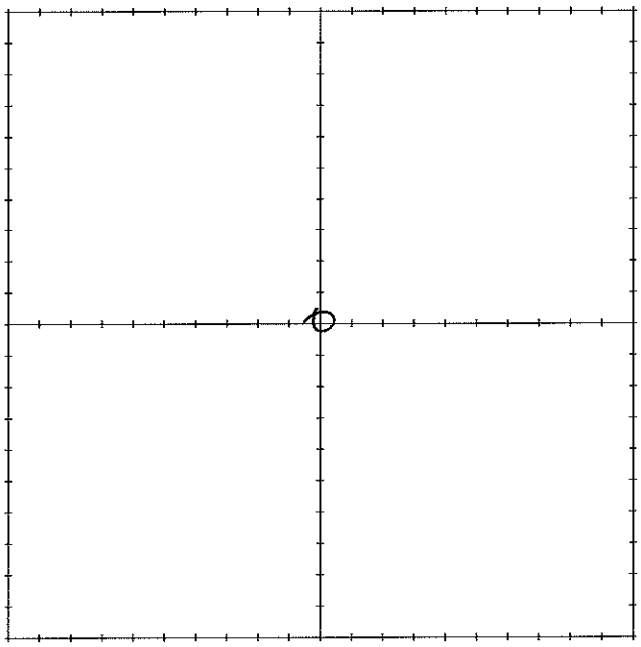

MARK INDIVIDUAL GRAB SAMPLE LOCATIONS IN GRID

MWH

SURFACE SOIL SAMPLE LOG FORM

AREA #/NAME S239-BG1-005 (Harvey Blackwater)

SAMPLE I.D. S239-BG1-005

SAMPLE COLLECTION DATE 10/15/16

SAMPLE COLLECTION TIME 1026

SAMPLE COLLECTED BY C. Lee

WEATHER CONDITIONS 80's, sunny

FIELD USCS DESCRIPTIONS Red fine sand

MAJOR DIVISIONS: ☐ OH ☐ CH ☐ MH ☐ OH ☐ CL ☐ ML ☐ SC
☒ SM ☐ SP ☐ SW ☐ GC ☐ GM ☐ GP ☐ GW

QUALIFIERS: ☐ TRACE ☐ MINOR ☐ SOME; SAND SIZE ☐ FINE ☐ MEDIUM ☐ COARSE

MOISTURE: ☒ DRY ☐ MOIST ☐ WET

SAMPLE CONTAINERS (NUMBER AND TYPE) 1 ziploc

ANALYSES: Ra-226, Metals

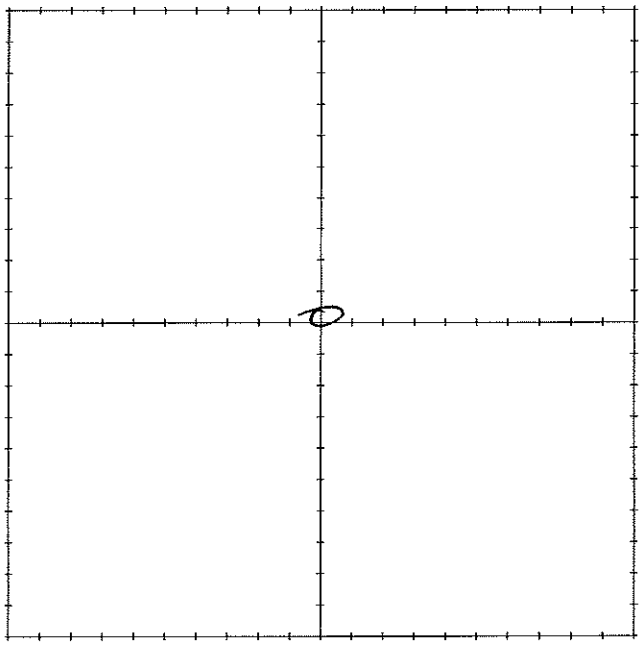

MARK INDIVIDUAL GRAB SAMPLE LOCATIONS IN GRID

SURFACE SOIL SAMPLE LOG FORM

AREA #/NAME S239-B61-006 (Harry Blackwater)

SAMPLE I.D. S239-B61-006

SAMPLE COLLECTION DATE 10/15/16

SAMPLE COLLECTION TIME 1029

SAMPLE COLLECTED BY C. Lee

WEATHER CONDITIONS 80's, sunny

FIELD USCS DESCRIPTIONS Red fine sand

MAJOR DIVISIONS: ☐ OH ☐ CH ☐ MH ☐ OH ☐ CL ☐ ML ☐ SC
☒ SM ☐ SP ☐ SW ☐ GC ☐ GM ☐ GP ☐ GW

QUALIFIERS: ☐ TRACE ☐ MINOR ☐ SOME; SAND SIZE ☐ FINE ☐ MEDIUM ☐ COARSE

MOISTURE: ☒ DRY ☐ MOIST ☐ WET

SAMPLE CONTAINERS (NUMBER AND TYPE) 1 ziploc

ANALYSES: Ra-226, Metals

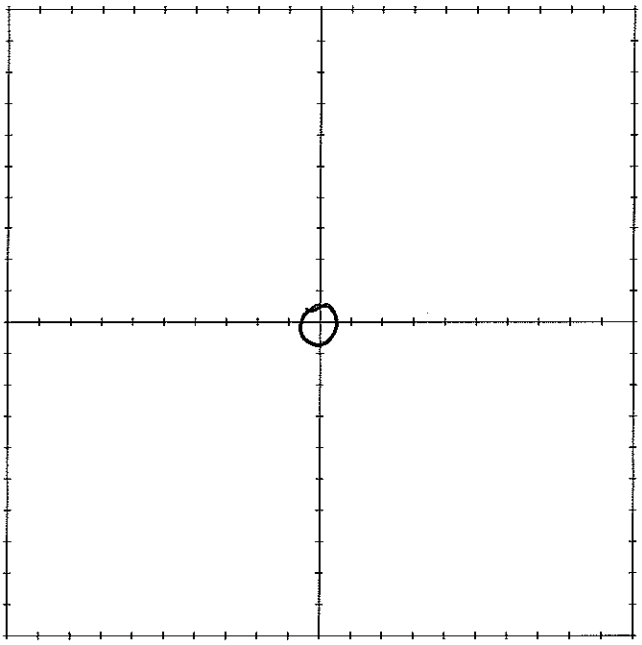

MARK INDIVIDUAL GRAB SAMPLE LOCATIONS IN GRID

SURFACE SOIL SAMPLE LOG FORM

AREA #/NAME S239-BG1-206 (Harry Blanchter)

SAMPLE I.D. S239-BG1-206

SAMPLE COLLECTION DATE 10/15/16

SAMPLE COLLECTION TIME 1029

SAMPLE COLLECTED BY C. Lee

WEATHER CONDITIONS 80's sunny

FIELD USCS DESCRIPTIONS Red fine sand

MAJOR DIVISIONS: ☐ OH ☐ CH ☐ MH ☐ OH ☐ CL ☐ ML ☐ SC
☒ SM ☐ SP ☐ SW ☐ GC ☐ GM ☐ GP ☐ GW

QUALIFIERS: ☐ TRACE ☐ MINOR ☐ SOME; SAND SIZE ☐ FINE ☐ MEDIUM ☐ COARSE

MOISTURE: ☒ DRY ☐ MOIST ☐ WET

SAMPLE CONTAINERS (NUMBER AND TYPE) 1 ziplock

ANALYSES: Ra-226, Metals

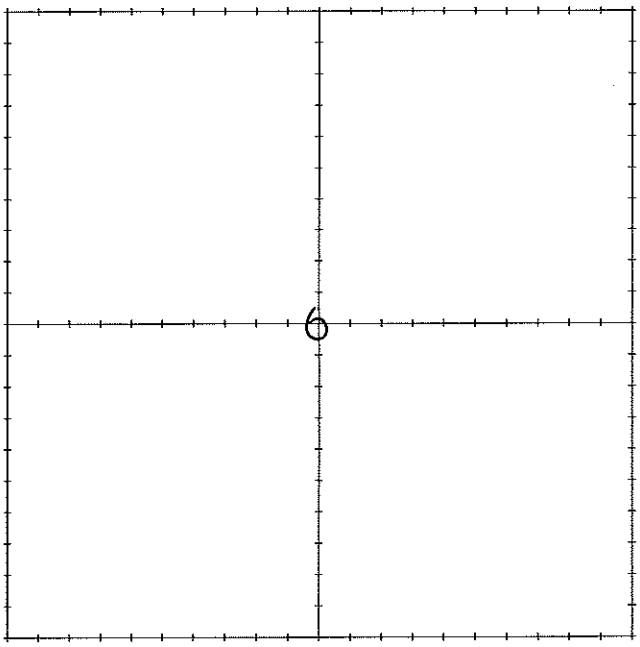

MARK INDIVIDUAL GRAB SAMPLE LOCATIONS IN GRID

MWH

SURFACE SOIL SAMPLE LOG FORM

AREA #/NAME S239-BG1-007 (Harvey Blanmeter)

SAMPLE I.D. S239-BG1-007

SAMPLE COLLECTION DATE 10/15/16

SAMPLE COLLECTION TIME 1037

SAMPLE COLLECTED BY C. Lee

WEATHER CONDITIONS 80's sunny

FIELD USCS DESCRIPTIONS Red fine sand

MAJOR DIVISIONS: ☐ OH ☐ CH ☐ MH ☐ OH ☐ CL ☐ ML ☐ SC
☒ SM ☐ SP ☐ SW ☐ GC ☐ GM ☐ GP ☐ GW

QUALIFIERS: ☐ TRACE ☐ MINOR ☐ SOME; SAND SIZE ☐ FINE ☐ MEDIUM ☐ COARSE

MOISTURE: ☒ DRY ☐ MOIST ☐ WET

SAMPLE CONTAINERS (NUMBER AND TYPE) 1 ziploc

ANALYSES: Ra-226, Metals

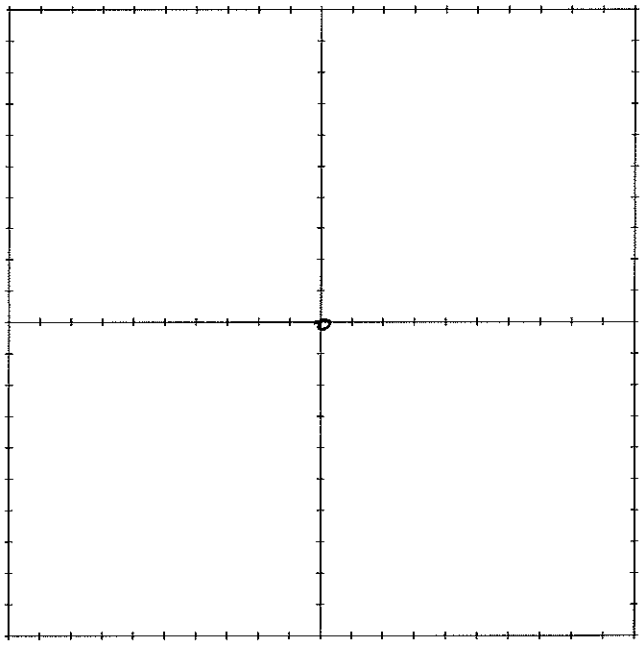

MARK INDIVIDUAL GRAB SAMPLE LOCATIONS IN GRID

SURFACE SOIL SAMPLE LOG FORM

AREA #/NAME 5239-BG1-008 (Hanny Blakeister)

SAMPLE I.D. 5239-BG1-008

SAMPLE COLLECTION DATE 10/15/16

SAMPLE COLLECTION TIME 1042

SAMPLE COLLECTED BY C Lee

WEATHER CONDITIONS 80's sunny

FIELD USCS DESCRIPTIONS Red fine sand

MAJOR DIVISIONS: ☐ OH ☐ CH ☐ MH ☐ OH ☐ CL ☐ ML ☐ SC
☒ SM ☐ SP ☐ SW ☐ GC ☐ GM ☐ GP ☐ GW

QUALIFIERS: ☐ TRACE ☐ MINOR ☐ SOME; SAND SIZE ☐ FINE ☐ MEDIUM ☐ COARSE

MOISTURE: ☒ DRY ☐ MOIST ☐ WET

SAMPLE CONTAINERS (NUMBER AND TYPE) 1 ziplock

ANALYSES: Ra-226, Metals

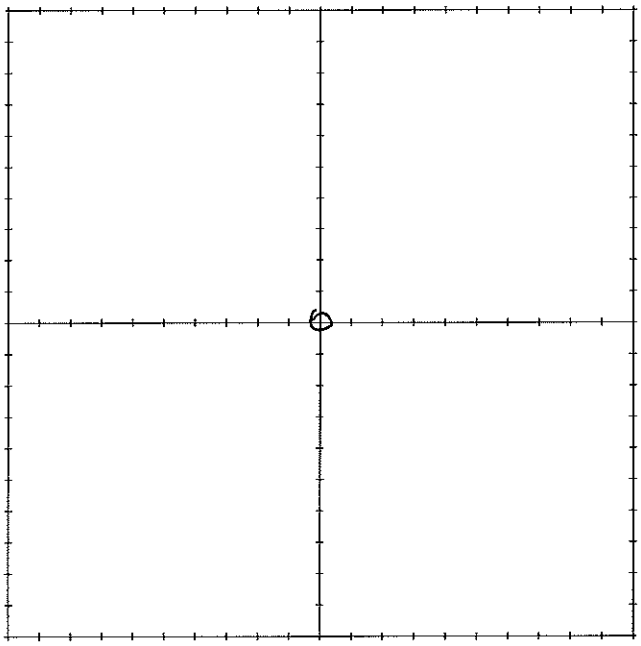

MARK INDIVIDUAL GRAB SAMPLE LOCATIONS IN GRID

SURFACE SOIL SAMPLE LOG FORM

AREA #/NAME S239-BG1-009 (Harvey Blackwater)

SAMPLE I.D. S239-BG1-009

SAMPLE COLLECTION DATE 10/15/16

SAMPLE COLLECTION TIME 1046

SAMPLE COLLECTED BY C. Lee

WEATHER CONDITIONS 80's sunny

FIELD USCS DESCRIPTIONS Red fine sand

MAJOR DIVISIONS: ☐ OH ☐ CH ☐ MH ☐ OH ☐ CL ☐ ML ☐ SC
☒ SM ☐ SP ☐ SW ☐ GC ☐ GM ☐ GP ☐ GW

QUALIFIERS: ☐ TRACE ☐ MINOR ☐ SOME; SAND SIZE ☐ FINE ☐ MEDIUM ☐ COARSE

MOISTURE: ☒ DRY ☐ MOIST ☐ WET

SAMPLE CONTAINERS (NUMBER AND TYPE) 1 ziplock

ANALYSES: Ra-226, Metals

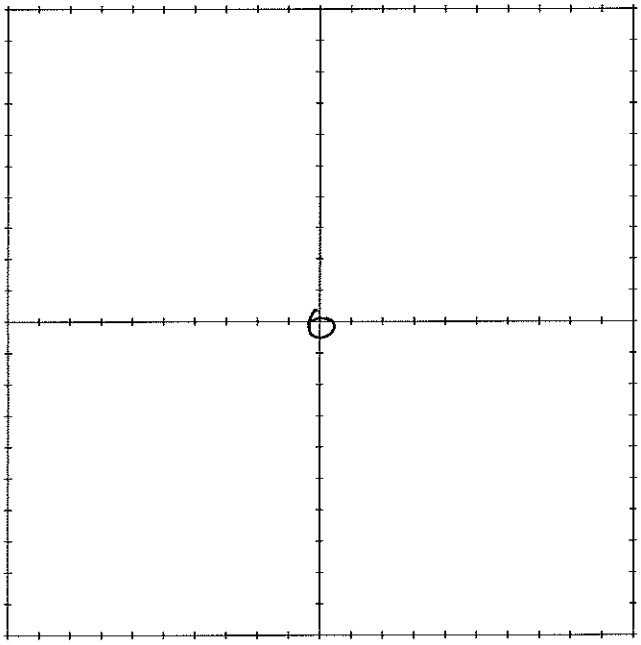

MARK INDIVIDUAL GRAB SAMPLE LOCATIONS IN GRID

SURFACE SOIL SAMPLE LOG FORM

AREA #/NAME 5239-B61-010 (Harvey Blackwater)

SAMPLE I.D. 5239-B61-010

SAMPLE COLLECTION DATE 10/15/16

SAMPLE COLLECTION TIME 1052

SAMPLE COLLECTED BY C. Lee

WEATHER CONDITIONS 80's sunny

FIELD USCS DESCRIPTIONS Red fine sand

MAJOR DIVISIONS: ☐ OH ☐ CH ☐ MH ☐ OH ☐ CL ☐ ML ☐ SC
☒ SM ☐ SP ☐ SW ☐ GC ☐ GM ☐ GP ☐ GW

QUALIFIERS: ☐ TRACE ☐ MINOR ☐ SOME; SAND SIZE ☐ FINE ☐ MEDIUM ☐ COARSE

MOISTURE: ☒ DRY ☐ MOIST ☐ WET

SAMPLE CONTAINERS (NUMBER AND TYPE) 1 Ziplock

ANALYSES: Ra-226, Metals

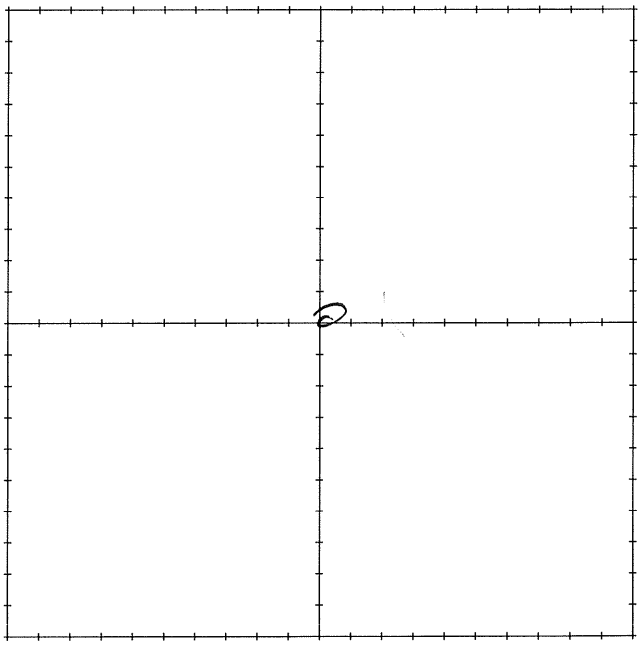

MARK INDIVIDUAL GRAB SAMPLE LOCATIONS IN GRID

MWH

SURFACE SOIL SAMPLE LOG FORM

AREA #/NAME S239 - BG2-001 (Hanny Blackwater)

SAMPLE I.D. S239 - BG2-001

SAMPLE COLLECTION DATE 10/15/16

SAMPLE COLLECTION TIME 1117

SAMPLE COLLECTED BY L. Rodriguez

WEATHER CONDITIONS 80's, sunny

FIELD USCS DESCRIPTIONS Red fine sand

MAJOR DIVISIONS: ☐ OH ☐ CH ☐ MH ☐ OH ☐ CL ☐ ML ☐ SC
☒ SM ☐ SP ☐ SW ☐ GC ☐ GM ☐ GP ☐ GW

QUALIFIERS: ☐ TRACE ☐ MINOR ☐ SOME; SAND SIZE ☐ FINE ☐ MEDIUM ☐ COARSE

MOISTURE: ☒ DRY ☐ MOIST ☐ WET

SAMPLE CONTAINERS (NUMBER AND TYPE) 1, ziplock

ANALYSES: Ra-226, Metals

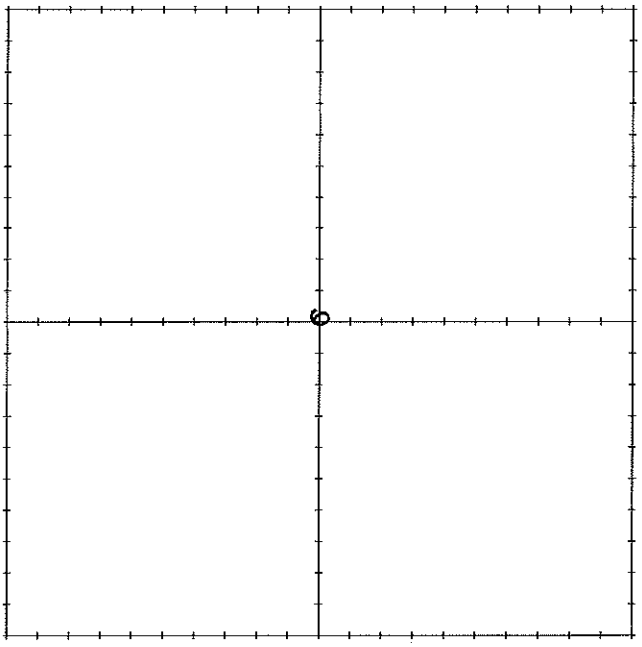

MARK INDIVIDUAL GRAB SAMPLE LOCATIONS IN GRID

MWH

SURFACE SOIL SAMPLE LOG FORM

AREA #/NAME S239-BG2-002 (Heavy Blasting)

SAMPLE I.D. S239-BG2-002

SAMPLE COLLECTION DATE 10/15/16

SAMPLE COLLECTION TIME 1122

SAMPLE COLLECTED BY L. Rodgers / C. Lee

WEATHER CONDITIONS 80's, sunny

FIELD USCS DESCRIPTIONS Red fine sand

MAJOR DIVISIONS: ☐ OH ☐ CH ☐ MH ☐ OH ☐ CL ☐ ML ☐ SC
☒ SM ☐ SP ☐ SW ☐ GC ☐ GM ☐ GP ☐ GW

QUALIFIERS: ☐ TRACE ☐ MINOR ☐ SOME; SAND SIZE ☐ FINE ☐ MEDIUM ☐ COARSE

MOISTURE: ☒ DRY ☐ MOIST ☐ WET

SAMPLE CONTAINERS (NUMBER AND TYPE) 1, ziplock

ANALYSES: Ra-226, Metals

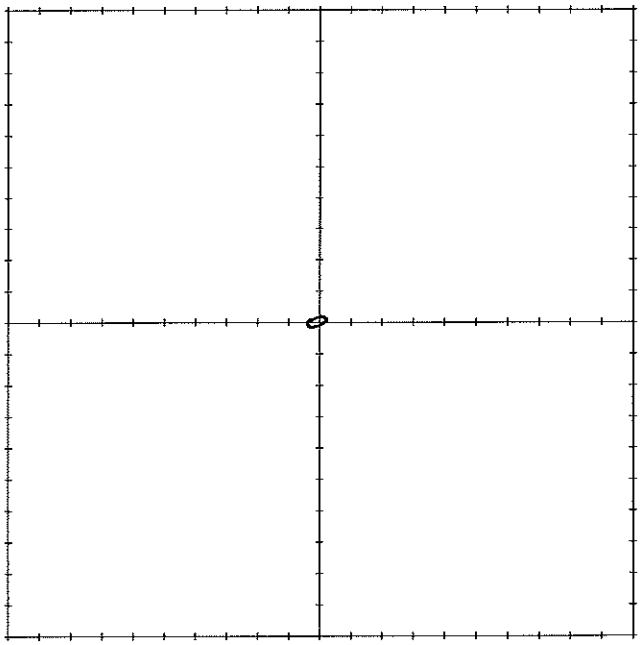

MARK INDIVIDUAL GRAB SAMPLE LOCATIONS IN GRID

MWH

SURFACE SOIL SAMPLE LOG FORM

AREA #/NAME S239-BG2-003 (Harvey Blackwater)

SAMPLE I.D. S239-BG2-003

SAMPLE COLLECTION DATE 10/15/16

SAMPLE COLLECTION TIME 1120

SAMPLE COLLECTED BY C Lee

WEATHER CONDITIONS 80's, sunny

FIELD USCS DESCRIPTIONS Red fine sand

MAJOR DIVISIONS: ☐ OH ☐ CH ☐ MH ☐ OH ☐ CL ☐ ML ☐ SC
☒ SM ☐ SP ☐ SW ☐ GC ☐ GM ☐ GP ☐ GW

QUALIFIERS: ☐ TRACE ☐ MINOR ☐ SOME; SAND SIZE ☐ FINE ☐ MEDIUM ☐ COARSE

MOISTURE: ☒ DRY ☐ MOIST ☐ WET

SAMPLE CONTAINERS (NUMBER AND TYPE) 1 ziplock

ANALYSES: Ra-226, Metals

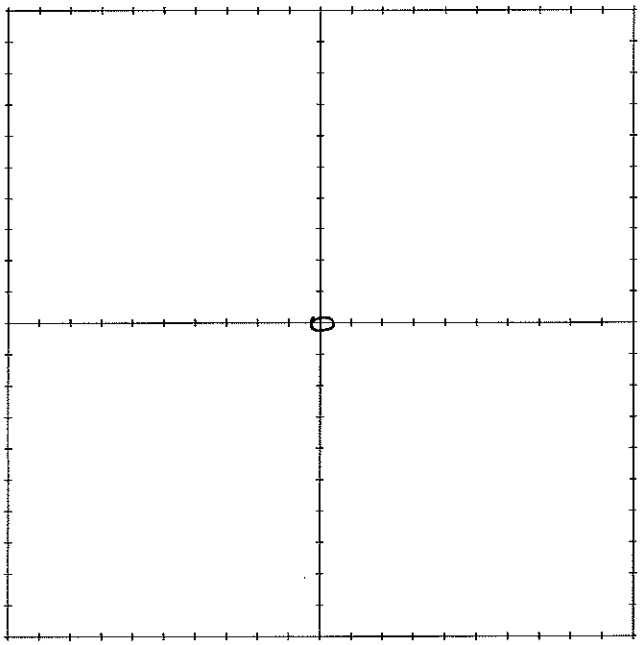

MARK INDIVIDUAL GRAB SAMPLE LOCATIONS IN GRID

SURFACE SOIL SAMPLE LOG FORM

AREA #/NAME S239-BG2-004 (Harry Blackburn)

SAMPLE I.D. S239-BG2-004

SAMPLE COLLECTION DATE 10/15/16

SAMPLE COLLECTION TIME 1129

SAMPLE COLLECTED BY C. Lee

WEATHER CONDITIONS 80's, sunny

FIELD USCS DESCRIPTIONS Red fine sand

MAJOR DIVISIONS: ☐ OH ☐ CH ☐ MH ☐ OH ☐ CL ☐ ML ☐ SC
☒ SM ☐ SP ☐ SW ☐ GC ☐ GM ☐ GP ☐ GW

QUALIFIERS: ☐ TRACE ☐ MINOR ☐ SOME; SAND SIZE ☐ FINE ☐ MEDIUM ☐ COARSE

MOISTURE: ☒ DRY ☐ MOIST ☐ WET

SAMPLE CONTAINERS (NUMBER AND TYPE) 1, ziplock

ANALYSES: Ra-226, Metals

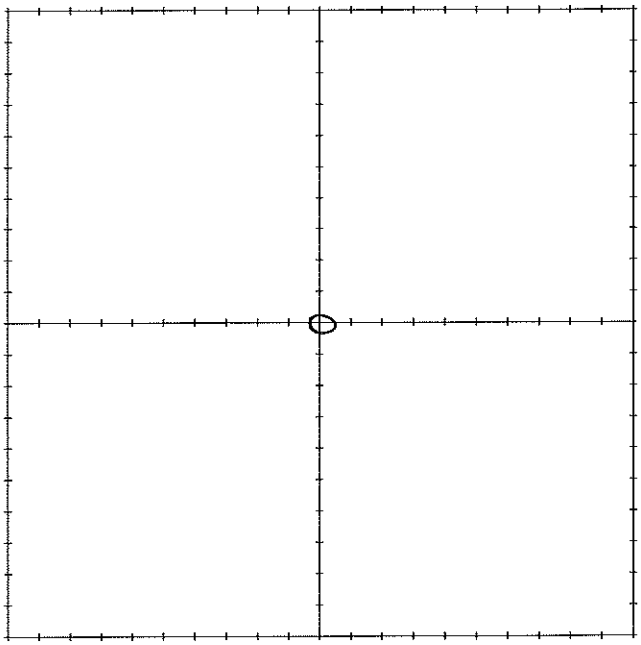

MARK INDIVIDUAL GRAB SAMPLE LOCATIONS IN GRID

MWH

SURFACE SOIL SAMPLE LOG FORM

AREA #/NAME S239-BG2-005 (Harvey Blackwater)

SAMPLE I.D. S239-BG2-005

SAMPLE COLLECTION DATE 10/15/16

SAMPLE COLLECTION TIME 1134

SAMPLE COLLECTED BY L Lee

WEATHER CONDITIONS 80's, sunny

FIELD USCS DESCRIPTIONS Red fine sand

MAJOR DIVISIONS: ☐ OH ☐ CH ☐ MH ☐ OH ☐ CL ☐ ML ☐ SC
☒ SM ☐ SP ☐ SW ☐ GC ☐ GM ☐ GP ☐ GW

QUALIFIERS: ☐ TRACE ☐ MINOR ☐ SOME; SAND SIZE ☐ FINE ☐ MEDIUM ☐ COARSE

MOISTURE: ☒ DRY ☐ MOIST ☐ WET

SAMPLE CONTAINERS (NUMBER AND TYPE) 1 ziploc

ANALYSES: Ra-226, Metals

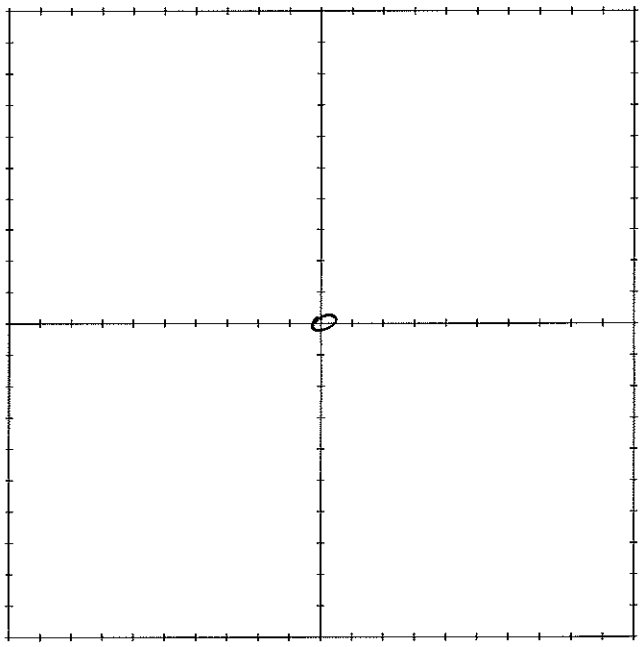

MARK INDIVIDUAL GRAB SAMPLE LOCATIONS IN GRID

SURFACE SOIL SAMPLE LOG FORM

AREA #/NAME S239-BG2-006 (Harry Blackwater)

SAMPLE I.D. S239-BG2-006

SAMPLE COLLECTION DATE 10/15/16

SAMPLE COLLECTION TIME 1138

SAMPLE COLLECTED BY C. Lee

WEATHER CONDITIONS 80's, Sunny

FIELD USCS DESCRIPTIONS Tan/red fine sand, some coarser grains

MAJOR DIVISIONS: ☐ OH ☐ CH ☐ MH ☐ OH ☐ CL ☐ ML ☐ SC
☒ SM ☐ SP ☐ SW ☐ GC ☐ GM ☐ GP ☐ GW

QUALIFIERS: ☒ TRACE ☐ MINOR ☐ SOME; SAND SIZE ☐ FINE ☐ MEDIUM ☒ COARSE

MOISTURE: ☒ DRY ☐ MOIST ☐ WET

SAMPLE CONTAINERS (NUMBER AND TYPE) 1 Ziplock

ANALYSES: Ra-226, Metals

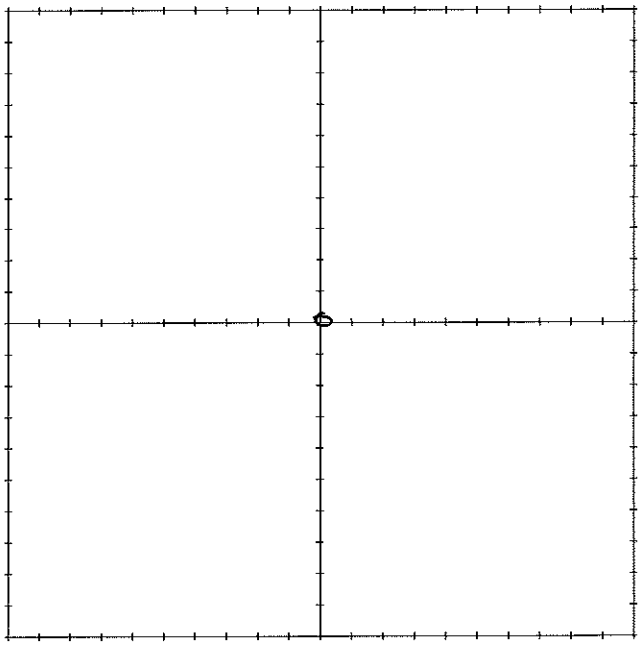

MARK INDIVIDUAL GRAB SAMPLE LOCATIONS IN GRID

MWH

SURFACE SOIL SAMPLE LOG FORM

AREA #/NAME S239-BG2-D06 (Handy Blackwater)

SAMPLE I.D. S239-BG2-206

SAMPLE COLLECTION DATE 10/15/16

SAMPLE COLLECTION TIME 1138

SAMPLE COLLECTED BY C. Lee

WEATHER CONDITIONS 80's, Sunny

FIELD USCS DESCRIPTIONS Red/tan fine sand, some coarser grained material

MAJOR DIVISIONS: ☐ OH ☐ CH ☐ MH ☐ OH ☐ CL ☐ ML ☐ SC
☒ SM ☐ SP ☐ SW ☐ GC ☐ GM ☐ GP ☐ GW

QUALIFIERS: ☒ TRACE ☐ MINOR ☐ SOME; SAND SIZE ☐ FINE ☐ MEDIUM ☒ COARSE

MOISTURE: ☒ DRY ☐ MOIST ☐ WET

SAMPLE CONTAINERS (NUMBER AND TYPE) 1, 2 ziplock

ANALYSES: Ra-226, Metals

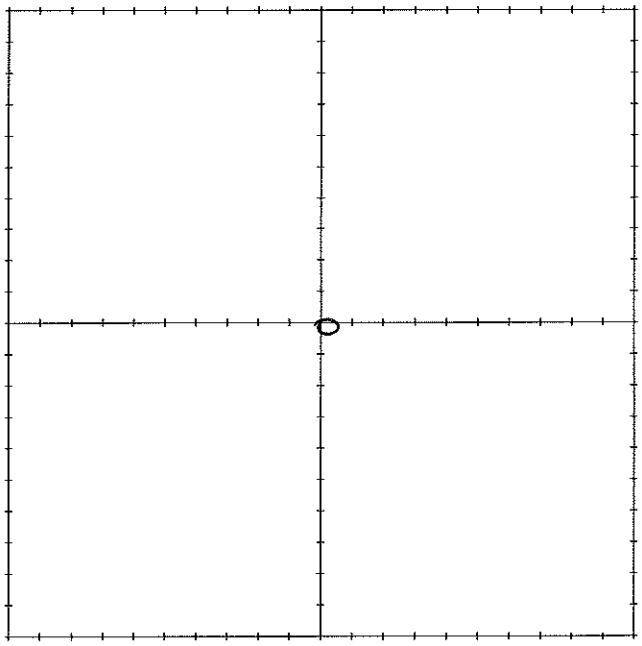

MARK INDIVIDUAL GRAB SAMPLE LOCATIONS IN GRID

MWH

SURFACE SOIL SAMPLE LOG FORM

AREA #/NAME S239-BG2-007 (Harry Blackmatw)

SAMPLE I.D. S239-BG2-007

SAMPLE COLLECTION DATE 10/15/16

SAMPLE COLLECTION TIME 1147

SAMPLE COLLECTED BY C Lee

WEATHER CONDITIONS 80's, Sunny

FIELD USCS DESCRIPTIONS Red fine sand

MAJOR DIVISIONS: ☐ OH ☐ CH ☐ MH ☐ OH ☐ CL ☐ ML ☐ SC
☒ SM ☐ SP ☐ SW ☐ GC ☐ GM ☐ GP ☐ GW

QUALIFIERS: ☐ TRACE ☐ MINOR ☐ SOME; SAND SIZE ☐ FINE ☐ MEDIUM ☐ COARSE

MOISTURE: ☒ DRY ☐ MOIST ☐ WET

SAMPLE CONTAINERS (NUMBER AND TYPE) 1 ziplock

ANALYSES: Ra-226, Metals

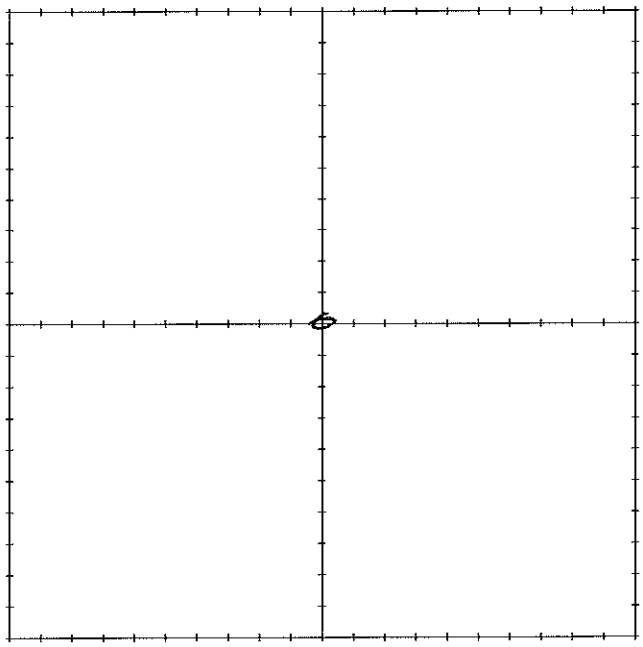

MARK INDIVIDUAL GRAB SAMPLE LOCATIONS IN GRID

SURFACE SOIL SAMPLE LOG FORM

AREA #/NAME S239-BG2-008 (Henry Blackwater)

SAMPLE I.D. S239-BG2-008

SAMPLE COLLECTION DATE 10/15/16

SAMPLE COLLECTION TIME 1153

SAMPLE COLLECTED BY C. Lee

WEATHER CONDITIONS 80's, sunny

FIELD USCS DESCRIPTIONS Red fine sand, some coarse metals

MAJOR DIVISIONS: ☐ OH ☐ CH ☐ MH ☐ OH ☐ CL ☐ ML ☐ SC
☒ SM ☐ SP ☐ SW ☐ GC ☐ GM ☐ GP ☐ GW

QUALIFIERS: ☒ TRACE ☐ MINOR ☐ SOME; SAND SIZE ☐ FINE ☐ MEDIUM ☒ COARSE

MOISTURE: ☒ DRY ☐ MOIST ☐ WET

SAMPLE CONTAINERS (NUMBER AND TYPE) 1, 2 ziplock

ANALYSES: Ra-226, Metals

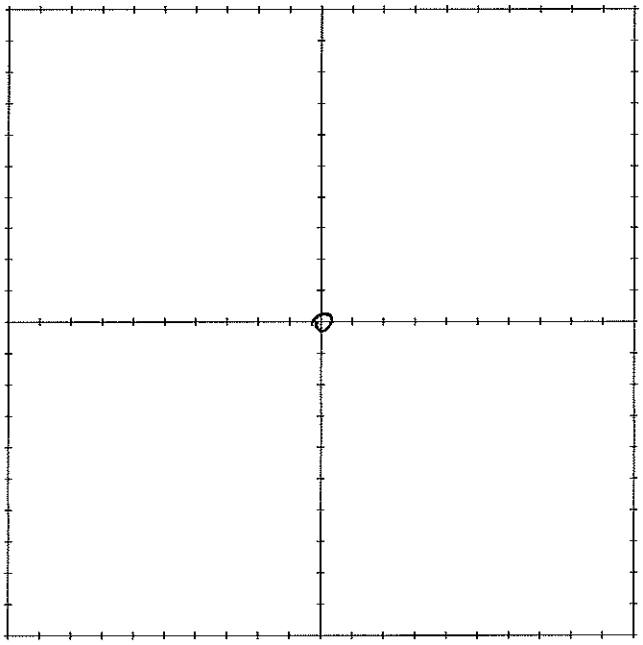

MARK INDIVIDUAL GRAB SAMPLE LOCATIONS IN GRID

MWH

SURFACE SOIL SAMPLE LOG FORM

AREA #/NAME 5239-BG2-009 (Hang Blackwater)

SAMPLE I.D. 5239-BG2-009

SAMPLE COLLECTION DATE 10/15/16

SAMPLE COLLECTION TIME 1200

SAMPLE COLLECTED BY C. Lee

WEATHER CONDITIONS 80's, sunny

FIELD USCS DESCRIPTIONS Red fine sand

MAJOR DIVISIONS: ☐ OH ☐ CH ☐ MH ☐ OH ☐ CL ☐ ML ☐ SC
☒ SM ☐ SP ☐ SW ☐ GC ☐ GM ☐ GP ☐ GW

QUALIFIERS: ☐ TRACE ☐ MINOR ☐ SOME; SAND SIZE ☐ FINE ☐ MEDIUM ☐ COARSE

MOISTURE: ☒ DRY ☐ MOIST ☐ WET

SAMPLE CONTAINERS (NUMBER AND TYPE) 1, ziplock

ANALYSES: Ra-226, Metals

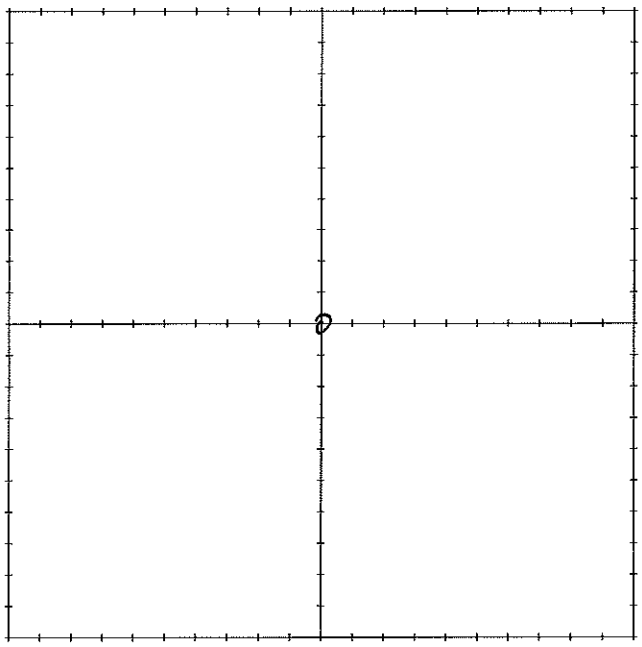

MARK INDIVIDUAL GRAB SAMPLE LOCATIONS IN GRID

MWH

SURFACE SOIL SAMPLE LOG FORM

AREA #/NAME S239-BG2-010 (Harvey Blackwater)

SAMPLE I.D. S239-BG2-010

SAMPLE COLLECTION DATE 10/15/16

SAMPLE COLLECTION TIME 1205

SAMPLE COLLECTED BY C. Lee

WEATHER CONDITIONS 80's, Sunny

FIELD USCS DESCRIPTIONS

MAJOR DIVISIONS: ☐ OH ☐ CH ☐ MH ☐ OH ☐ CL ☐ ML ☐ SC
☒ SM ☐ SP ☐ SW ☐ GC ☐ GM ☐ GP ☐ GW

QUALIFIERS: ☐ TRACE ☐ MINOR ☐ SOME; SAND SIZE ☐ FINE ☐ MEDIUM ☐ COARSE

MOISTURE: ☒ DRY ☐ MOIST ☐ WET

SAMPLE CONTAINERS (NUMBER AND TYPE) 1 ziplock

ANALYSES: Ra-226, Metals

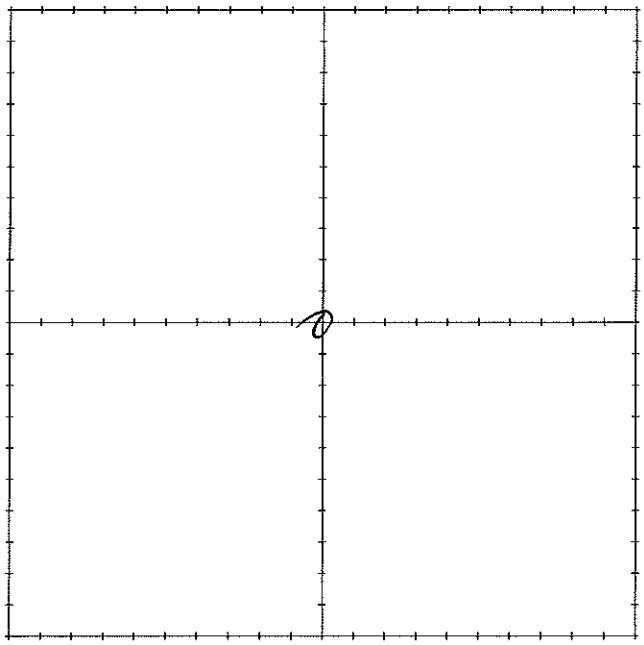

MARK INDIVIDUAL GRAB SAMPLE LOCATIONS IN GRID

MWH

SURFACE SOIL SAMPLE LOG FORM

AREA #/NAME S239-BG2-010 (Hanny Blackwater)

SAMPLE I.D. S239-BG2-010 MSD

SAMPLE COLLECTION DATE 10/15/16

SAMPLE COLLECTION TIME 1205

SAMPLE COLLECTED BY C. Lee

WEATHER CONDITIONS 80's, sunny

FIELD USCS DESCRIPTIONS Red fine sand

MAJOR DIVISIONS: ☐ OH ☐ CH ☐ MH ☐ OH ☐ CL ☐ ML ☐ SC
☒ SM ☐ SP ☐ SW ☐ GC ☐ GM ☐ GP ☐ GW

QUALIFIERS: ☐ TRACE ☐ MINOR ☐ SOME; SAND SIZE ☐ FINE ☐ MEDIUM ☐ COARSE

MOISTURE: ☒ DRY ☐ MOIST ☐ WET

SAMPLE CONTAINERS (NUMBER AND TYPE) 1 ziplock

ANALYSES: Ra-226, Metals

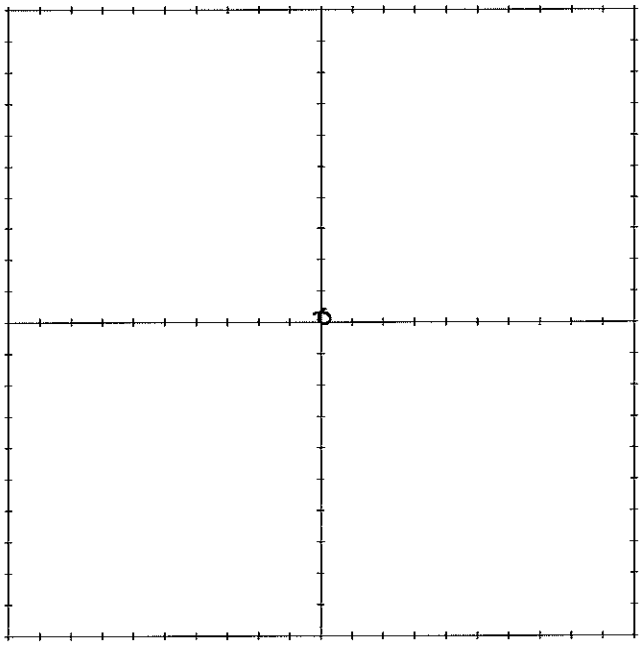

MARK INDIVIDUAL GRAB SAMPLE LOCATIONS IN GRID

MWH

SURFACE SOIL SAMPLE LOG FORM

AREA #/NAME S239-B72-010 (Harvey Blackwater)

SAMPLE I.D. S239-B72-010 MS

SAMPLE COLLECTION DATE 10/15/16

SAMPLE COLLECTION TIME 1203

SAMPLE COLLECTED BY C. Lee

WEATHER CONDITIONS 80's, sunny

FIELD USCS DESCRIPTIONS Red fine sand

MAJOR DIVISIONS: ☐ OH ☐ CH ☐ MH ☐ OH ☐ CL ☐ ML ☐ SC
☒ SM ☐ SP ☐ SW ☐ GC ☐ GM ☐ GP ☐ GW

QUALIFIERS: ☐ TRACE ☐ MINOR ☐ SOME; SAND SIZE ☐ FINE ☐ MEDIUM ☐ COARSE

MOISTURE: ☒ DRY ☐ MOIST ☐ WET

SAMPLE CONTAINERS (NUMBER AND TYPE) 1, ziplock

ANALYSES: Ra-226, Metals

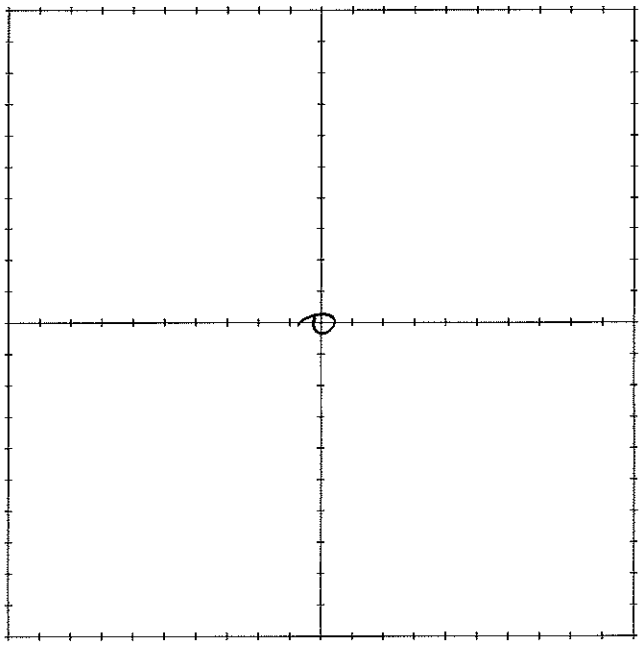

MARK INDIVIDUAL GRAB SAMPLE LOCATIONS IN GRID

SURFACE SOIL SAMPLE LOG FORM

AREA #/NAME Harvey Blackwater / BG3

SAMPLE I.D. 5239 - BG3 - 001

SAMPLE COLLECTION DATE 3-18-17

SAMPLE COLLECTION TIME 0930

SAMPLE COLLECTED BY J. Peterson

WEATHER CONDITIONS warm

FIELD USCS DESCRIPTIONS Poorly graded fine sand

MAJOR DIVISIONS: ☐ OH ☐ CH ☐ MH ☐ OH ☐ CL ☐ ML ☐ SC
☐ SM ☑ SP ☐ SW ☐ GC ☐ GM ☐ GP ☐ GW

QUALIFIERS: ☑ TRACE ☐ MINOR ☐ SOME; SAND SIZE ☑ FINE ☐ MEDIUM ☐ COARSE

MOISTURE: ☑ DRY ☐ MOIST ☐ WET

SAMPLE CONTAINERS (NUMBER AND TYPE) Baggie (1)

ANALYSES: Ra-226, Metals

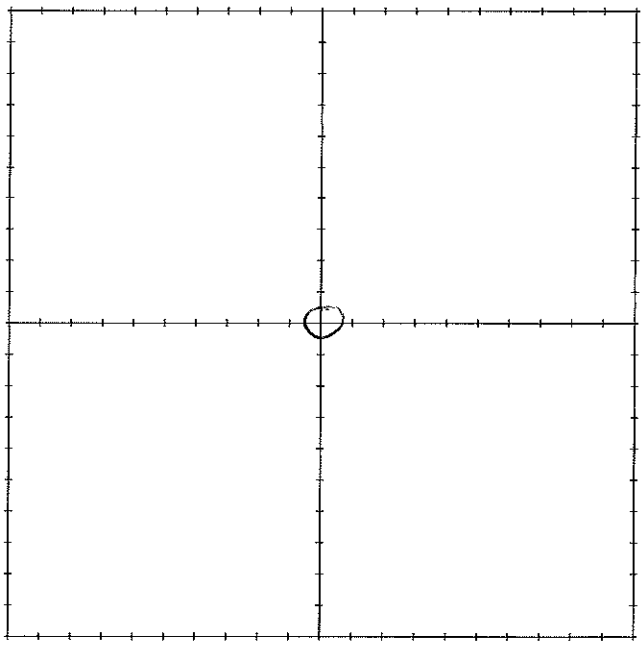

MARK INDIVIDUAL GRAB SAMPLE LOCATIONS IN GRID

MWH

SURFACE SOIL SAMPLE LOG FORM

AREA #/NAME Harvey Blackwater / BG3

SAMPLE I.D. 5239-BG3-002 MS/MSD

SAMPLE COLLECTION DATE 3-18-17

SAMPLE COLLECTION TIME 0935

SAMPLE COLLECTED BY J. Peterson

WEATHER CONDITIONS warm

FIELD USCS DESCRIPTIONS Poorly graded fine sand

MAJOR DIVISIONS: ☐ OH ☐ CH ☐ MH ☐ OH ☐ CL ☐ ML ☐ SC
☐ SM ☑ SP ☐ SW ☐ GC ☐ GM ☐ GP ☐ GW

QUALIFIERS: ☑ TRACE ☐ MINOR ☐ SOME; SAND SIZE ☑ FINE ☐ MEDIUM ☐ COARSE

MOISTURE: ☑ DRY ☐ MOIST ☐ WET

SAMPLE CONTAINERS (NUMBER AND TYPE) Baggies (3)

ANALYSES: Ra-226, metals

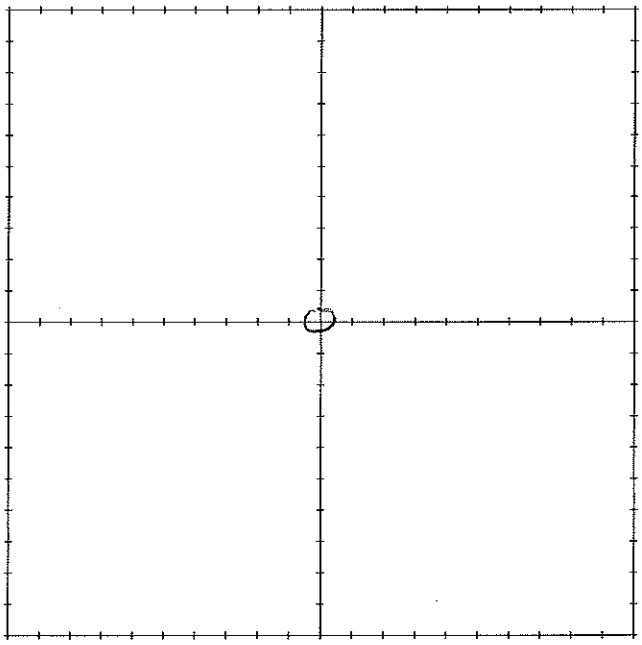

MARK INDIVIDUAL GRAB SAMPLE LOCATIONS IN GRID

MWH

SURFACE SOIL SAMPLE LOG FORM

AREA #/NAME Harvey Blackwater / BG3

SAMPLE I.D. 5239-BG3-003 DUP-203

SAMPLE COLLECTION DATE 3-18-17

SAMPLE COLLECTION TIME 0940

SAMPLE COLLECTED BY J. Peterson

WEATHER CONDITIONS warm

FIELD USCS DESCRIPTIONS Poorly graded fine sand

MAJOR DIVISIONS: ☐ OH ☐ CH ☐ MH ☐ OH ☐ CL ☐ ML ☐ SC
☐ SM ☑ SP ☐ SW ☐ GC ☐ GM ☐ GP ☐ GW

QUALIFIERS: ☑ TRACE ☐ MINOR ☐ SOME; SAND SIZE ☑ FINE ☐ MEDIUM ☐ COARSE

MOISTURE: ☑ DRY ☐ MOIST ☐ WET

SAMPLE CONTAINERS (NUMBER AND TYPE) Baggies (2)

ANALYSES: Ra-226, metals

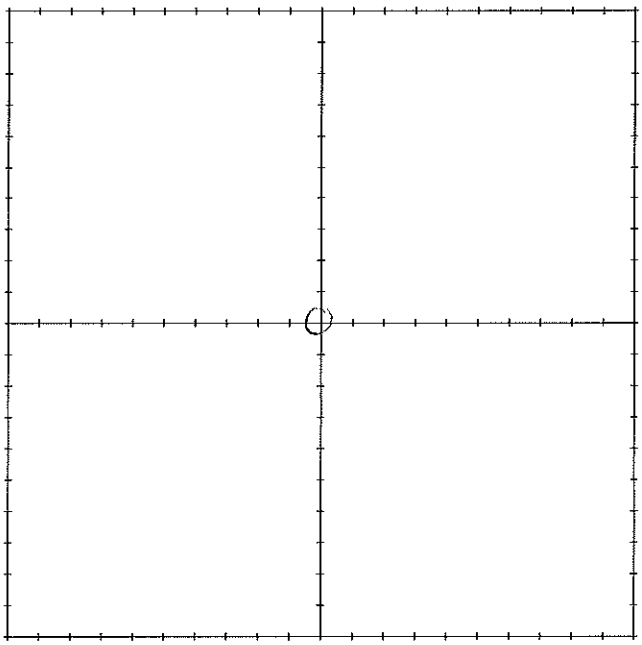

MARK INDIVIDUAL GRAB SAMPLE LOCATIONS IN GRID

MWH

SURFACE SOIL SAMPLE LOG FORM

AREA #/NAME Harvey Blackwater / BG3

SAMPLE I.D. S239-BG3-004 DUP-204

SAMPLE COLLECTION DATE 3-18-17

SAMPLE COLLECTION TIME 0945

SAMPLE COLLECTED BY J. Peterson

WEATHER CONDITIONS warm

FIELD USCS DESCRIPTIONS poorly graded fine sand

MAJOR DIVISIONS: ☐ OH ☐ CH ☐ MH ☐ OH ☐ CL ☐ ML ☐ SC
☐ SM ☑ SP ☐ SW ☐ GC ☐ GM ☐ GP ☐ GW

QUALIFIERS: ☑ TRACE ☐ MINOR ☐ SOME; SAND SIZE ☑ FINE ☐ MEDIUM ☐ COARSE

MOISTURE: ☑ DRY ☐ MOIST ☐ WET

SAMPLE CONTAINERS (NUMBER AND TYPE) Baggies (2)

ANALYSES: Ra-226, metals

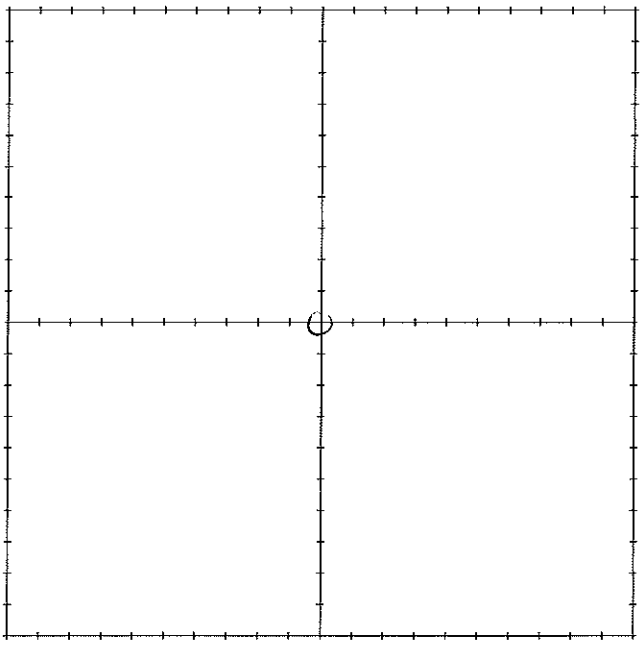

MARK INDIVIDUAL GRAB SAMPLE LOCATIONS IN GRID

MWH

SURFACE SOIL SAMPLE LOG FORM

AREA #/NAME: Harvey Blackwater / B63

SAMPLE I.D.: S239-B63-005

SAMPLE COLLECTION DATE: 3-18-17

SAMPLE COLLECTION TIME: 0950

SAMPLE COLLECTED BY: J. Peterson

WEATHER CONDITIONS: warm

FIELD USCS DESCRIPTIONS: Poorly graded fine sand

MAJOR DIVISIONS: ☐ OH ☐ CH ☐ MH ☐ OH ☐ CL ☐ ML ☐ SC
☐ SM ☑ SP ☐ SW ☐ GC ☐ GM ☐ GP ☐ GW

QUALIFIERS: ☑ TRACE ☐ MINOR ☐ SOME; SAND SIZE ☑ FINE ☐ MEDIUM ☐ COARSE

MOISTURE: ☑ DRY ☐ MOIST ☐ WET

SAMPLE CONTAINERS (NUMBER AND TYPE): Baggie (1)

ANALYSES: Ra-226, metals

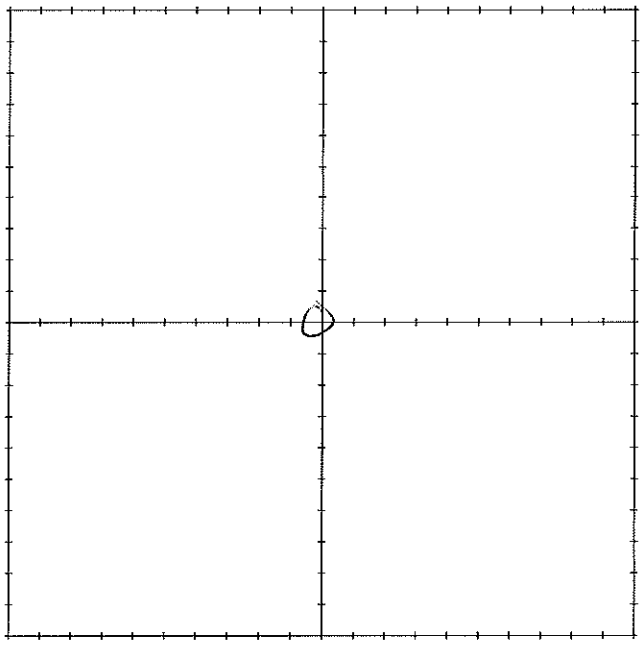

MARK INDIVIDUAL GRAB SAMPLE LOCATIONS IN GRID

MWH

SURFACE SOIL SAMPLE LOG FORM

AREA #/NAME Harvey Blackwater / BG3

SAMPLE I.D. 5239-BG3-006

SAMPLE COLLECTION DATE 3-18-17

SAMPLE COLLECTION TIME 0955

SAMPLE COLLECTED BY J. Peterson

WEATHER CONDITIONS Warm

FIELD USCS DESCRIPTIONS Poorly graded fine sand

MAJOR DIVISIONS: ☐ OH ☐ CH ☐ MH ☐ OH ☐ CL ☐ ML ☐ SC
☐ SM ☑ SP ☐ SW ☐ GC ☐ GM ☐ GP ☐ GW

QUALIFIERS: ☑ TRACE ☐ MINOR ☐ SOME; SAND SIZE ☑ FINE ☐ MEDIUM ☐ COARSE

MOISTURE: ☑ DRY ☐ MOIST ☐ WET

SAMPLE CONTAINERS (NUMBER AND TYPE) Baggie (1)

ANALYSES: Ra-226, metals

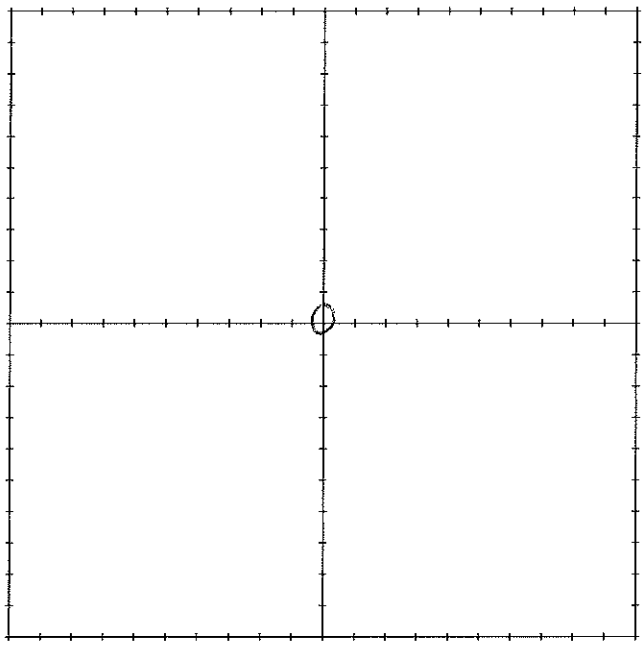

MARK INDIVIDUAL GRAB SAMPLE LOCATIONS IN GRID

MWH

SURFACE SOIL SAMPLE LOG FORM

AREA #/NAME Harvey Blackwater / BG3

SAMPLE I.D. S239-BG3-007 DUP-207

SAMPLE COLLECTION DATE 3-18-17

SAMPLE COLLECTION TIME 1000

SAMPLE COLLECTED BY J. Peterson

WEATHER CONDITIONS warm

FIELD USCS DESCRIPTIONS Poorly graded fine sand

MAJOR DIVISIONS: ☐ OH ☐ CH ☐ MH ☐ OH ☐ CL ☐ ML ☐ SC
☐ SM ☑ SP ☐ SW ☐ GC ☐ GM ☐ GP ☐ GW

QUALIFIERS: ☑ TRACE ☐ MINOR ☐ SOME; SAND SIZE ☑ FINE ☐ MEDIUM ☐ COARSE

MOISTURE: ☑ DRY ☐ MOIST ☐ WET

SAMPLE CONTAINERS (NUMBER AND TYPE) Baggies (2)

ANALYSES: Ra-226, metals

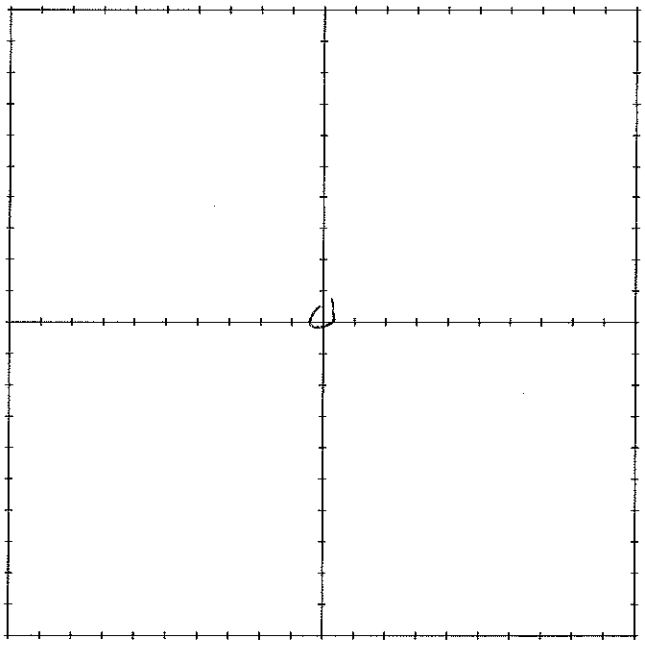

MARK INDIVIDUAL GRAB SAMPLE LOCATIONS IN GRID

MWH

SURFACE SOIL SAMPLE LOG FORM

AREA #/NAME Harvey Blackwater / BG3

SAMPLE I.D. 5239-BG3-008

SAMPLE COLLECTION DATE 3-18-17

SAMPLE COLLECTION TIME 1005

SAMPLE COLLECTED BY J. Petersson

WEATHER CONDITIONS warm

FIELD USCS DESCRIPTIONS Poorly graded fine sand

MAJOR DIVISIONS: ☐ OH ☐ CH ☐ MH ☐ OH ☐ CL ☐ ML ☐ SC
☐ SM ☑ SP ☐ SW ☐ GC ☐ GM ☐ GP ☐ GW

QUALIFIERS: ☑ TRACE ☐ MINOR ☐ SOME; SAND SIZE ☑ FINE ☐ MEDIUM ☐ COARSE

MOISTURE: ☑ DRY ☐ MOIST ☐ WET

SAMPLE CONTAINERS (NUMBER AND TYPE) Baggie (1)

ANALYSES: Ra-226, metals

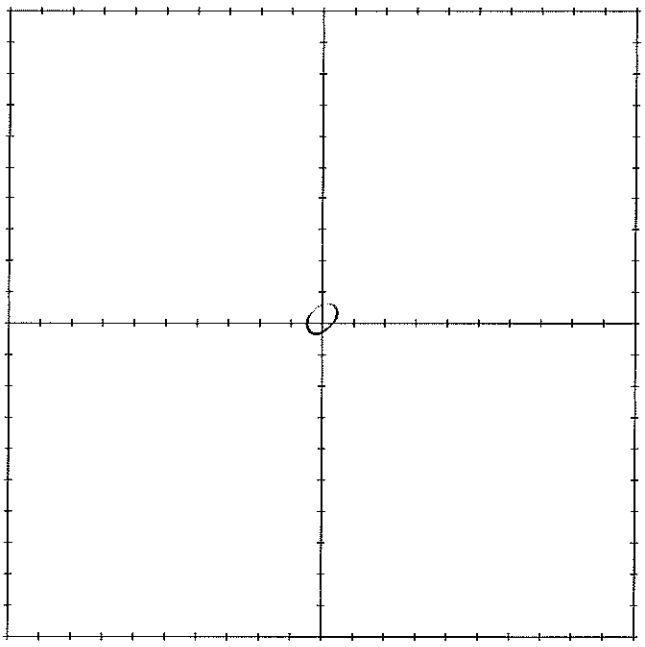

MARK INDIVIDUAL GRAB SAMPLE LOCATIONS IN GRID

SURFACE SOIL SAMPLE LOG FORM

AREA #/NAME Harvey Blackwater / B63

SAMPLE I.D. 5239-B63-009

SAMPLE COLLECTION DATE 3-18-17

SAMPLE COLLECTION TIME 1010

SAMPLE COLLECTED BY J. Peterson

WEATHER CONDITIONS warm

FIELD USCS DESCRIPTIONS poorly graded fine sands

MAJOR DIVISIONS: ☐ OH ☐ CH ☐ MH ☐ OH ☐ CL ☐ ML ☐ SC
☐ SM ☑ SP ☐ SW ☐ GC ☐ GM ☐ GP ☐ GW

QUALIFIERS: ☑ TRACE ☐ MINOR ☐ SOME; SAND SIZE ☑ FINE ☐ MEDIUM ☐ COARSE

MOISTURE: ☑ DRY ☐ MOIST ☐ WET

SAMPLE CONTAINERS (NUMBER AND TYPE) Baggie (1)

ANALYSES: Ra-226, metals

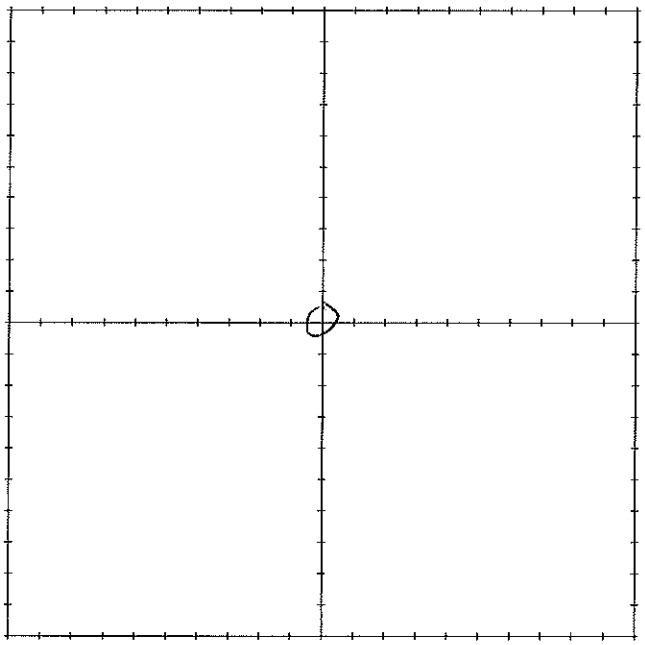

MARK INDIVIDUAL GRAB SAMPLE LOCATIONS IN GRID

MWH

SURFACE SOIL SAMPLE LOG FORM

AREA #/NAME Harvey Blackwater / BG-3

SAMPLE I.D. 5239-BG3-010

SAMPLE COLLECTION DATE 3-18-17

SAMPLE COLLECTION TIME 1015

SAMPLE COLLECTED BY J. Peterson

WEATHER CONDITIONS warm

FIELD USCS DESCRIPTIONS Poorly graded fine sand

MAJOR DIVISIONS: ☐ OH ☐ CH ☐ MH ☐ OH ☐ CL ☐ ML ☐ SC
☐ SM ☑ SP ☐ SW ☐ GC ☐ GM ☐ GP ☐ GW

QUALIFIERS: ☑ TRACE ☐ MINOR ☐ SOME; SAND SIZE ☑ FINE ☐ MEDIUM ☐ COARSE

MOISTURE: ☑ DRY ☐ MOIST ☐ WET

SAMPLE CONTAINERS (NUMBER AND TYPE) Baggie (1)

ANALYSES: Ra-226, metals

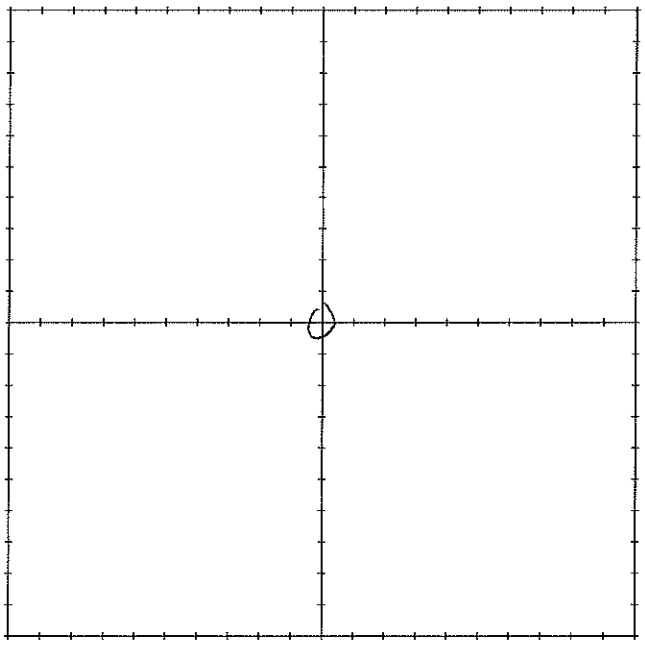

MARK INDIVIDUAL GRAB SAMPLE LOCATIONS IN GRID

MWH

SURFACE SOIL SAMPLE LOG FORM

AREA #/NAME Harvey Blackwater /BG3

SAMPLE I.D. S239- BG3- 11 -1 (0-0.3 ft)

SAMPLE COLLECTION DATE 3-18-17

SAMPLE COLLECTION TIME 1020

SAMPLE COLLECTED BY J. Peterson

WEATHER CONDITIONS warm

FIELD USCS DESCRIPTIONS poorly graded fine sand

MAJOR DIVISIONS: ☐ OH ☐ CH ☐ MH ☐ OH ☐ CL ☐ ML ☐ SC
☐ SM ☑ SP ☐ SW ☐ GC ☐ GM ☐ GP ☐ GW

QUALIFIERS: ☑ TRACE ☐ MINOR ☐ SOME; SAND SIZE ☑ FINE ☐ MEDIUM ☐ COARSE

MOISTURE: ☑ DRY ☐ MOIST ☐ WET

SAMPLE CONTAINERS (NUMBER AND TYPE) Baggie (1)

ANALYSES: Ra-226, metals

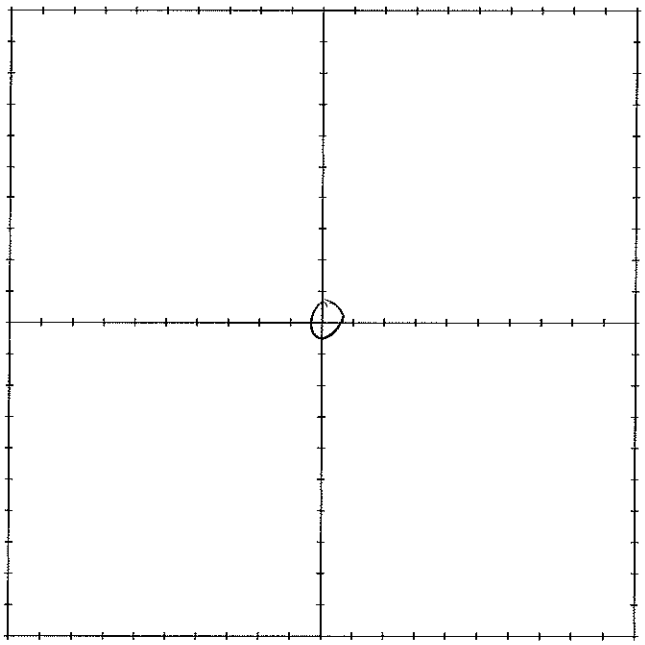

MARK INDIVIDUAL GRAB SAMPLE LOCATIONS IN GRID

SURFACE SOIL SAMPLE LOG FORM

AREA #/NAME Harvey Blackwater / BG3

SAMPLE I.D. 5239 - BG3 - 001

SAMPLE COLLECTION DATE 3-18-17

SAMPLE COLLECTION TIME 0930

SAMPLE COLLECTED BY J. Peterson

WEATHER CONDITIONS warm

FIELD USCS DESCRIPTIONS Poorly graded fine sand

MAJOR DIVISIONS: ☐ OH ☐ CH ☐ MH ☐ OH ☐ CL ☐ ML ☐ SC
☐ SM ☑ SP ☐ SW ☐ GC ☐ GM ☐ GP ☐ GW

QUALIFIERS: ☑ TRACE ☐ MINOR ☐ SOME; SAND SIZE ☑ FINE ☐ MEDIUM ☐ COARSE

MOISTURE: ☑ DRY ☐ MOIST ☐ WET

SAMPLE CONTAINERS (NUMBER AND TYPE) Baggie (1)

ANALYSES: Ra-226, Metals

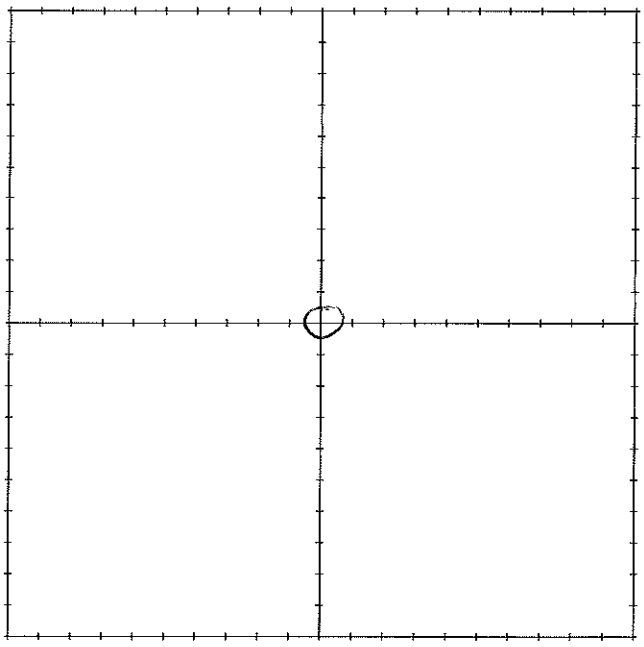

MARK INDIVIDUAL GRAB SAMPLE LOCATIONS IN GRID

MWH

SURFACE SOIL SAMPLE LOG FORM

AREA #/NAME Harvey Blackwater / BG3

SAMPLE I.D. 5239-BG3-002 MS/MSD

SAMPLE COLLECTION DATE 3-18-17

SAMPLE COLLECTION TIME 0935

SAMPLE COLLECTED BY J. Peterson

WEATHER CONDITIONS warm

FIELD USCS DESCRIPTIONS Poorly graded fine sand

MAJOR DIVISIONS: ☐ OH ☐ CH ☐ MH ☐ OH ☐ CL ☐ ML ☐ SC
☐ SM ☑ SP ☐ SW ☐ GC ☐ GM ☐ GP ☐ GW

QUALIFIERS: ☑ TRACE ☐ MINOR ☐ SOME; SAND SIZE ☑ FINE ☐ MEDIUM ☐ COARSE

MOISTURE: ☑ DRY ☐ MOIST ☐ WET

SAMPLE CONTAINERS (NUMBER AND TYPE) Baggies (3)

ANALYSES: Ra-226, metals

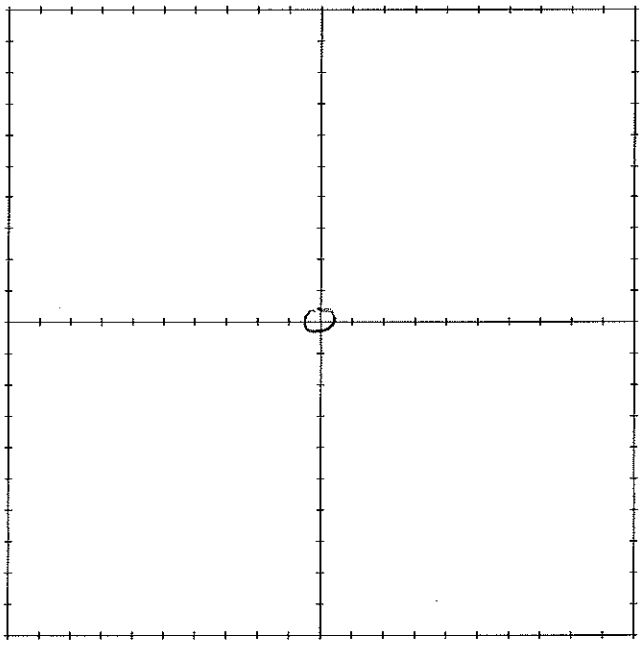

MARK INDIVIDUAL GRAB SAMPLE LOCATIONS IN GRID

MWH

SURFACE SOIL SAMPLE LOG FORM

AREA #/NAME Harvey Blackwater / BG3

SAMPLE I.D. 5239-BG3-003 DUP-203

SAMPLE COLLECTION DATE 3-18-17

SAMPLE COLLECTION TIME 0940

SAMPLE COLLECTED BY J. Peterson

WEATHER CONDITIONS warm

FIELD USCS DESCRIPTIONS Poorly graded fine sand

MAJOR DIVISIONS: ☐ OH ☐ CH ☐ MH ☐ OH ☐ CL ☐ ML ☐ SC
☐ SM ☑ SP ☐ SW ☐ GC ☐ GM ☐ GP ☐ GW

QUALIFIERS: ☑ TRACE ☐ MINOR ☐ SOME; SAND SIZE ☑ FINE ☐ MEDIUM ☐ COARSE

MOISTURE: ☑ DRY ☐ MOIST ☐ WET

SAMPLE CONTAINERS (NUMBER AND TYPE) Baggies (2)

ANALYSES: Ra-226, metals

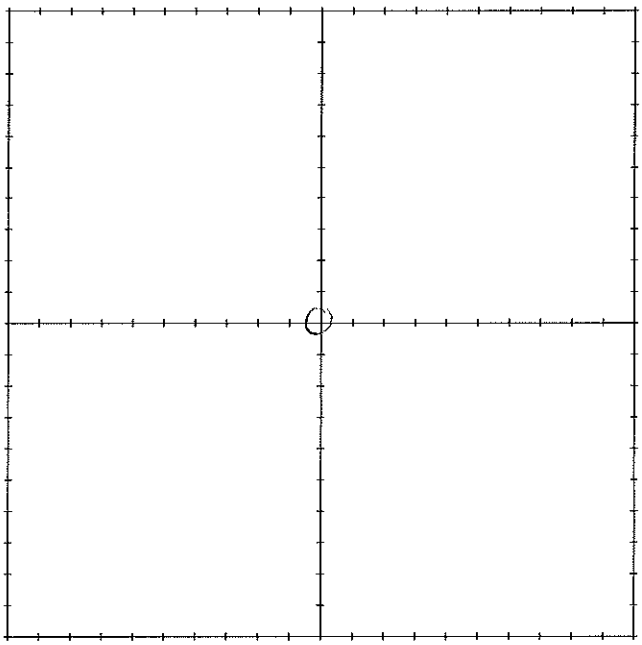

MARK INDIVIDUAL GRAB SAMPLE LOCATIONS IN GRID

MWH

SURFACE SOIL SAMPLE LOG FORM

AREA #/NAME Harvey Blackwater / BG3

SAMPLE I.D. S239-BG3-004 DUP-204

SAMPLE COLLECTION DATE 3-18-17

SAMPLE COLLECTION TIME 0945

SAMPLE COLLECTED BY J. Peterson

WEATHER CONDITIONS warm

FIELD USCS DESCRIPTIONS poorly graded fine sand

MAJOR DIVISIONS: ☐ OH ☐ CH ☐ MH ☐ OH ☐ CL ☐ ML ☐ SC
☐ SM ☑ SP ☐ SW ☐ GC ☐ GM ☐ GP ☐ GW

QUALIFIERS: ☑ TRACE ☐ MINOR ☐ SOME; SAND SIZE ☑ FINE ☐ MEDIUM ☐ COARSE

MOISTURE: ☑ DRY ☐ MOIST ☐ WET

SAMPLE CONTAINERS (NUMBER AND TYPE) Baggies (2)

ANALYSES: Ra-226, metals

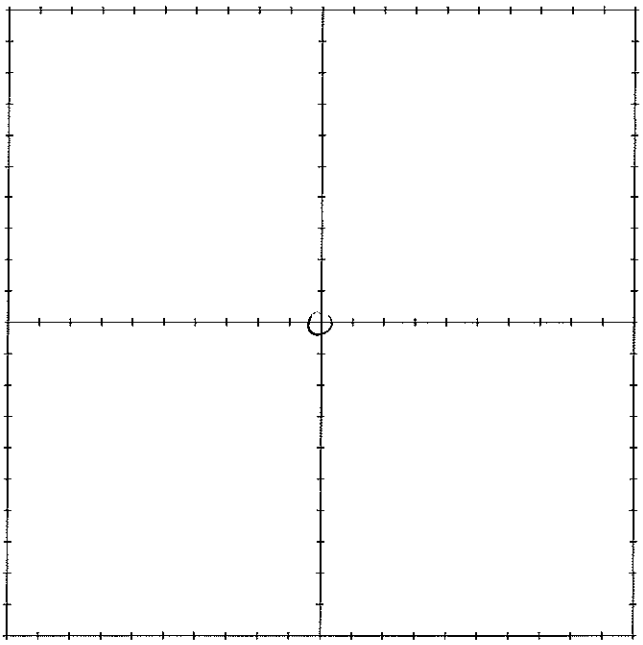

MARK INDIVIDUAL GRAB SAMPLE LOCATIONS IN GRID

MWH

SURFACE SOIL SAMPLE LOG FORM

AREA #/NAME: Harvey Blackwater / B63

SAMPLE I.D.: S239-B63-005

SAMPLE COLLECTION DATE: 3-18-17

SAMPLE COLLECTION TIME: 0950

SAMPLE COLLECTED BY: J. Peterson

WEATHER CONDITIONS: warm

FIELD USCS DESCRIPTIONS: Poorly graded fine sand

MAJOR DIVISIONS: ☐ OH ☐ CH ☐ MH ☐ OH ☐ CL ☐ ML ☐ SC
☐ SM ☑ SP ☐ SW ☐ GC ☐ GM ☐ GP ☐ GW

QUALIFIERS: ☑ TRACE ☐ MINOR ☐ SOME; SAND SIZE ☑ FINE ☐ MEDIUM ☐ COARSE

MOISTURE: ☑ DRY ☐ MOIST ☐ WET

SAMPLE CONTAINERS (NUMBER AND TYPE): Baggie (1)

ANALYSES: Ra-226, metals

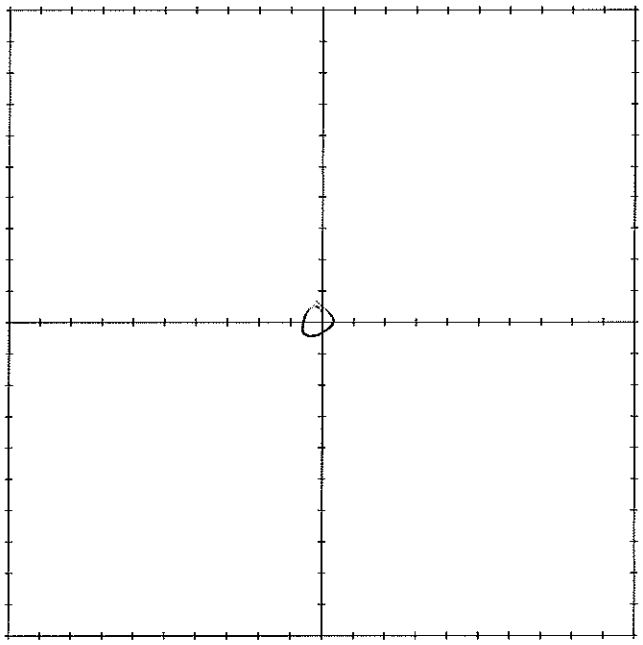

MARK INDIVIDUAL GRAB SAMPLE LOCATIONS IN GRID

MWH

SURFACE SOIL SAMPLE LOG FORM

AREA #/NAME Harvey Blackwater / BG3

SAMPLE I.D. 5239-BG3-006

SAMPLE COLLECTION DATE 3-18-17

SAMPLE COLLECTION TIME 0955

SAMPLE COLLECTED BY J. Peterson

WEATHER CONDITIONS Warm

FIELD USCS DESCRIPTIONS Poorly graded fine sand

MAJOR DIVISIONS: ☐ OH ☐ CH ☐ MH ☐ OH ☐ CL ☐ ML ☐ SC
☐ SM ☑ SP ☐ SW ☐ GC ☐ GM ☐ GP ☐ GW

QUALIFIERS: ☑ TRACE ☐ MINOR ☐ SOME; SAND SIZE ☑ FINE ☐ MEDIUM ☐ COARSE

MOISTURE: ☑ DRY ☐ MOIST ☐ WET

SAMPLE CONTAINERS (NUMBER AND TYPE) Baggie (1)

ANALYSES: Ra-226, metals

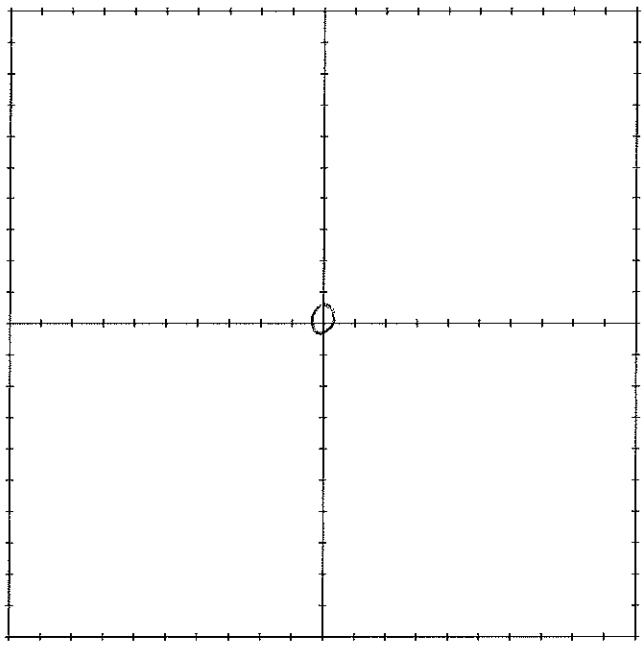

MARK INDIVIDUAL GRAB SAMPLE LOCATIONS IN GRID

MWH

SURFACE SOIL SAMPLE LOG FORM

AREA #/NAME Harvey Blackwater / BG3

SAMPLE I.D. S239-BG3-007 DUP-207

SAMPLE COLLECTION DATE 3-18-17

SAMPLE COLLECTION TIME 1000

SAMPLE COLLECTED BY J. Peterson

WEATHER CONDITIONS warm

FIELD USCS DESCRIPTIONS Poorly graded fine sand

MAJOR DIVISIONS: ☐ OH ☐ CH ☐ MH ☐ OH ☐ CL ☐ ML ☐ SC
☐ SM ☑ SP ☐ SW ☐ GC ☐ GM ☐ GP ☐ GW

QUALIFIERS: ☑ TRACE ☐ MINOR ☐ SOME; SAND SIZE ☑ FINE ☐ MEDIUM ☐ COARSE

MOISTURE: ☑ DRY ☐ MOIST ☐ WET

SAMPLE CONTAINERS (NUMBER AND TYPE) Baggies (2)

ANALYSES: Ra-226, metals

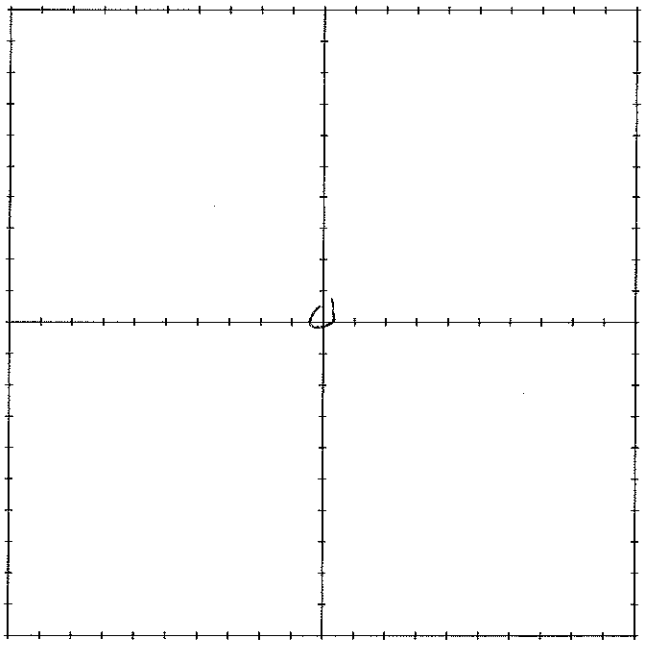

MARK INDIVIDUAL GRAB SAMPLE LOCATIONS IN GRID

MWH

SURFACE SOIL SAMPLE LOG FORM

AREA #/NAME Harvey Blackwater / BG3

SAMPLE I.D. 5239-BG3-008

SAMPLE COLLECTION DATE 3-18-17

SAMPLE COLLECTION TIME 1005

SAMPLE COLLECTED BY J. Petersson

WEATHER CONDITIONS warm

FIELD USCS DESCRIPTIONS Poorly graded fine sand

MAJOR DIVISIONS: ☐ OH ☐ CH ☐ MH ☐ OH ☐ CL ☐ ML ☐ SC
☐ SM ☑ SP ☐ SW ☐ GC ☐ GM ☐ GP ☐ GW

QUALIFIERS: ☑ TRACE ☐ MINOR ☐ SOME; SAND SIZE ☑ FINE ☐ MEDIUM ☐ COARSE

MOISTURE: ☑ DRY ☐ MOIST ☐ WET

SAMPLE CONTAINERS (NUMBER AND TYPE) Baggie (1)

ANALYSES: Ra-226, metals

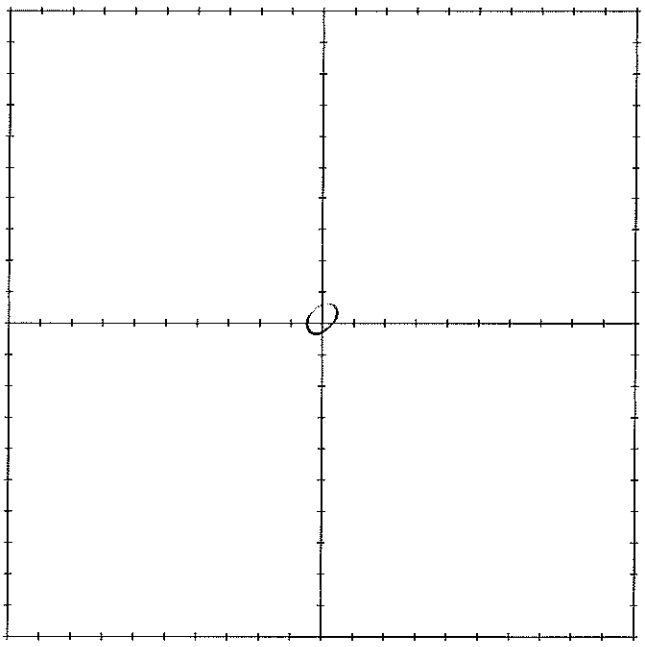

MARK INDIVIDUAL GRAB SAMPLE LOCATIONS IN GRID

SURFACE SOIL SAMPLE LOG FORM

AREA #/NAME Harvey Blackwater / B63

SAMPLE I.D. 5239-B63-009

SAMPLE COLLECTION DATE 3-18-17

SAMPLE COLLECTION TIME 1010

SAMPLE COLLECTED BY J. Peterson

WEATHER CONDITIONS warm

FIELD USCS DESCRIPTIONS poorly graded fine sands

MAJOR DIVISIONS: ☐ OH ☐ CH ☐ MH ☐ OH ☐ CL ☐ ML ☐ SC
☐ SM ☑ SP ☐ SW ☐ GC ☐ GM ☐ GP ☐ GW

QUALIFIERS: ☑ TRACE ☐ MINOR ☐ SOME; SAND SIZE ☑ FINE ☐ MEDIUM ☐ COARSE

MOISTURE: ☑ DRY ☐ MOIST ☐ WET

SAMPLE CONTAINERS (NUMBER AND TYPE) Baggie (1)

ANALYSES: Ra-226, metals

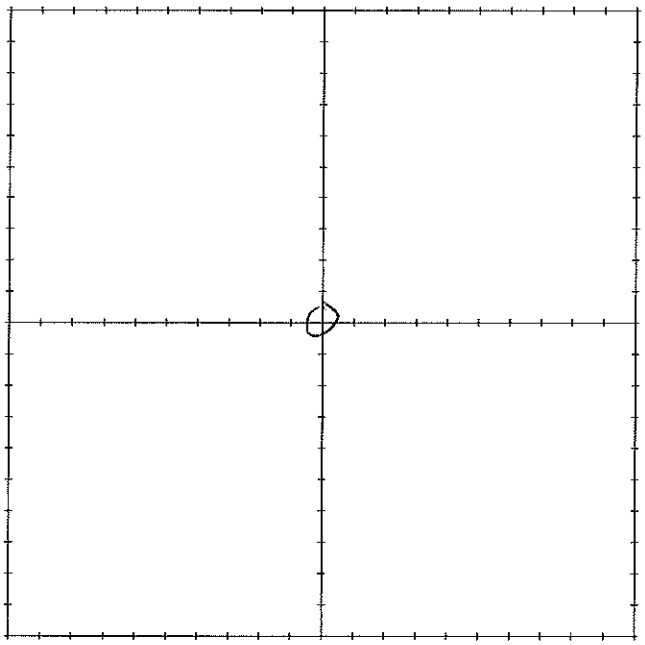

MARK INDIVIDUAL GRAB SAMPLE LOCATIONS IN GRID

MWH

SURFACE SOIL SAMPLE LOG FORM

AREA #/NAME Harvey Blackwater / BG-3

SAMPLE I.D. 5239-BG3-010

SAMPLE COLLECTION DATE 3-18-17

SAMPLE COLLECTION TIME 1015

SAMPLE COLLECTED BY J. Peterson

WEATHER CONDITIONS warm

FIELD USCS DESCRIPTIONS Poorly graded fine sand

MAJOR DIVISIONS: ☐ OH ☐ CH ☐ MH ☐ OH ☐ CL ☐ ML ☐ SC
☐ SM ☑ SP ☐ SW ☐ GC ☐ GM ☐ GP ☐ GW

QUALIFIERS: ☑ TRACE ☐ MINOR ☐ SOME; SAND SIZE ☑ FINE ☐ MEDIUM ☐ COARSE

MOISTURE: ☑ DRY ☐ MOIST ☐ WET

SAMPLE CONTAINERS (NUMBER AND TYPE) Baggie (1)

ANALYSES: Ra-226, metals

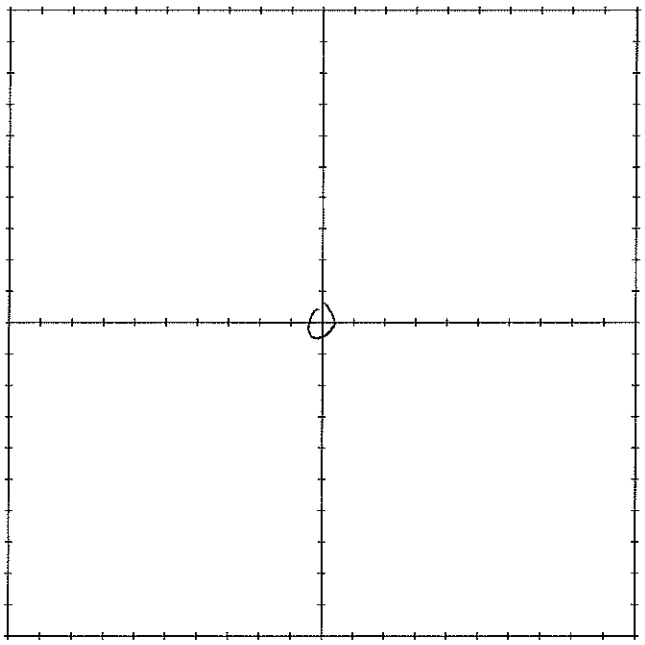

MARK INDIVIDUAL GRAB SAMPLE LOCATIONS IN GRID

MWH

SURFACE SOIL SAMPLE LOG FORM

AREA #/NAME Harvey Blackwater /BG3

SAMPLE I.D. S239- BG3- 11 -1 (0-0.3 ft)

SAMPLE COLLECTION DATE 3-18-17

SAMPLE COLLECTION TIME 1020

SAMPLE COLLECTED BY J. Peterson

WEATHER CONDITIONS warm

FIELD USCS DESCRIPTIONS poorly graded fine sand

MAJOR DIVISIONS: ☐ OH ☐ CH ☐ MH ☐ OH ☐ CL ☐ ML ☐ SC
☐ SM ☑ SP ☐ SW ☐ GC ☐ GM ☐ GP ☐ GW

QUALIFIERS: ☑ TRACE ☐ MINOR ☐ SOME; SAND SIZE ☑ FINE ☐ MEDIUM ☐ COARSE

MOISTURE: ☑ DRY ☐ MOIST ☐ WET

SAMPLE CONTAINERS (NUMBER AND TYPE) Baggie (1)

ANALYSES: Ra-226, metals

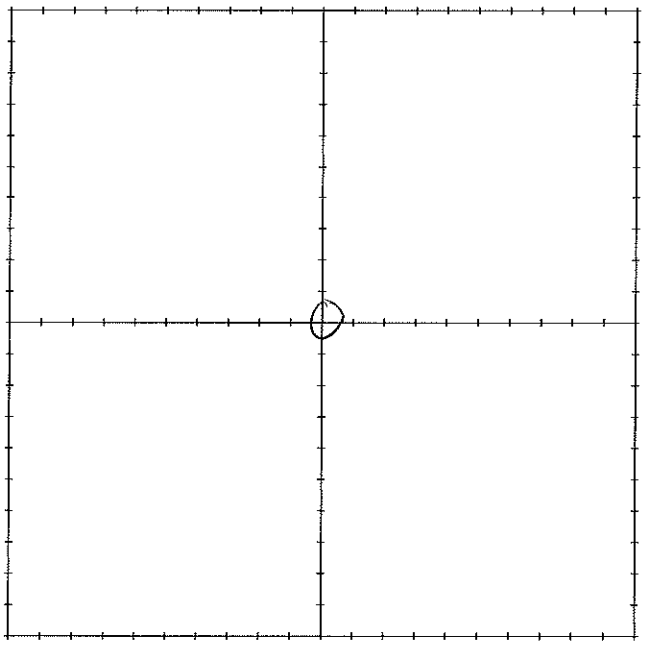

MARK INDIVIDUAL GRAB SAMPLE LOCATIONS IN GRID

SURFACE SOIL SAMPLE LOG FORM

AREA #/NAME 5239-601-001 (Hemry Blackwater)

SAMPLE I.D. 5239-601-001

SAMPLE COLLECTION DATE 10/27/16

SAMPLE COLLECTION TIME 1325

SAMPLE COLLECTED BY C. Lee

WEATHER CONDITIONS 70's, Sunny

FIELD USCS DESCRIPTIONS Fine gray sand, minor silt, trace coarse sand

MAJOR DIVISIONS: ☐ OH ☐ CH ☐ MH ☐ OH ☐ CL ☐ ML ☐ SC
☐ SM ☒ SP ☐ SW ☐ GC ☐ GM ☐ GP ☐ GW

QUALIFIERS: ☐ TRACE ☐ MINOR ☒ SOME; SAND SIZE ☐ FINE ☐ MEDIUM ☒ COARSE

MOISTURE: ☒ DRY ☐ MOIST ☐ WET

SAMPLE CONTAINERS (NUMBER AND TYPE) 1 ziplock

ANALYSES: Ra-226, Isotopic Thorium

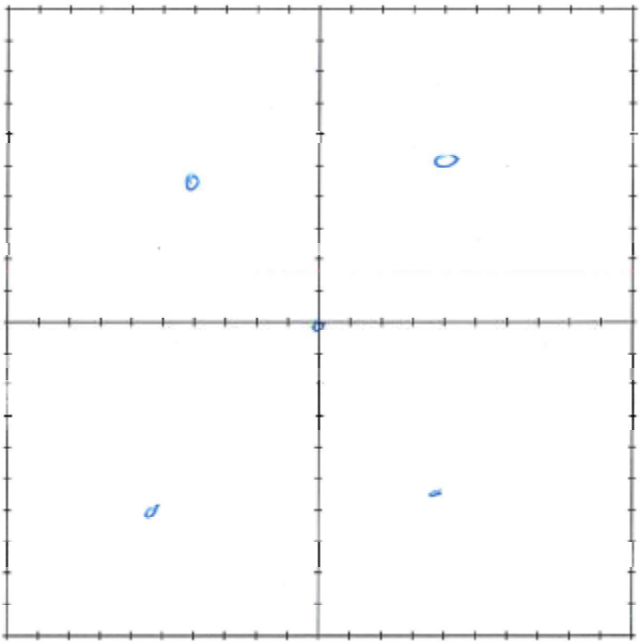

MARK INDIVIDUAL GRAB SAMPLE LOCATIONS IN GRID

MWH

SURFACE SOIL SAMPLE LOG FORM

AREA #/NAME S239-C02-001 (Harvey Blackwater)

SAMPLE I.D. S239-C02-001

SAMPLE COLLECTION DATE 10/27/16

SAMPLE COLLECTION TIME 1405

SAMPLE COLLECTED BY C Lee

WEATHER CONDITIONS 70's sunny

FIELD USCS DESCRIPTIONS Fine red/brown sand

MAJOR DIVISIONS: ☐ OH ☐ CH ☐ MH ☐ OH ☐ CL ☐ ML ☐ SC
☒ SM ☐ SP ☐ SW ☐ GC ☐ GM ☐ GP ☐ GW

QUALIFIERS: ☐ TRACE ☐ MINOR ☐ SOME; SAND SIZE ☐ FINE ☐ MEDIUM ☐ COARSE

MOISTURE: ☒ DRY ☐ MOIST ☐ WET

SAMPLE CONTAINERS (NUMBER AND TYPE) 1 ziplock

ANALYSES: Ra-226, Isotopic Thorium

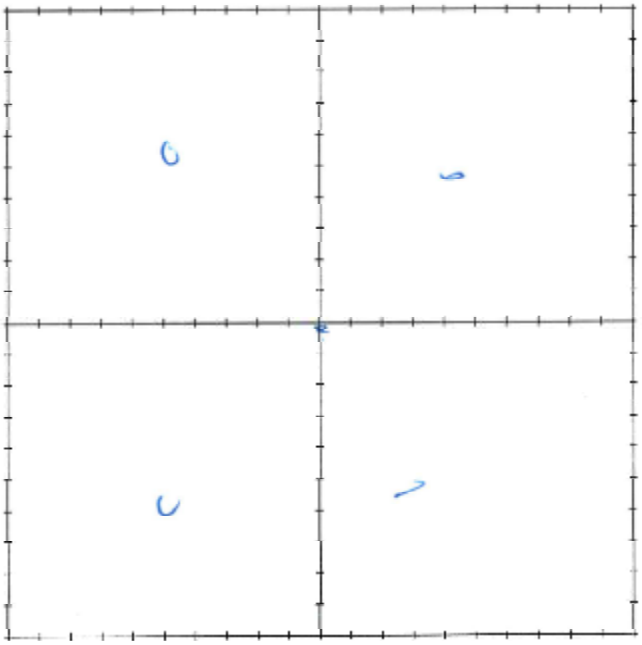

MARK INDIVIDUAL GRAB SAMPLE LOCATIONS IN GRID

MWH

SURFACE SOIL SAMPLE LOG FORM

AREA #/NAME 5239-103-001 (Harry Blackstone)

SAMPLE I.D. 5239-103-001

SAMPLE COLLECTION DATE 10/27/10

SAMPLE COLLECTION TIME 1440

SAMPLE COLLECTED BY C Lee

WEATHER CONDITIONS 70's Sunny

FIELD USCS DESCRIPTIONS Fine red sand

MAJOR DIVISIONS: ☐ OH ☐ CH ☐ MH ☐ OH ☐ CL ☐ ML ☐ SC
☑ SM ☐ SP ☐ SW ☐ GC ☐ GM ☐ GP ☐ GW

QUALIFIERS: ☐ TRACE ☐ MINOR ☐ SOME; SAND SIZE ☐ FINE ☐ MEDIUM ☐ COARSE

MOISTURE: ☑ DRY ☐ MOIST ☐ WET

SAMPLE CONTAINERS (NUMBER AND TYPE) 1 ziplock

ANALYSES: Ra-226, Isotopic Thorium

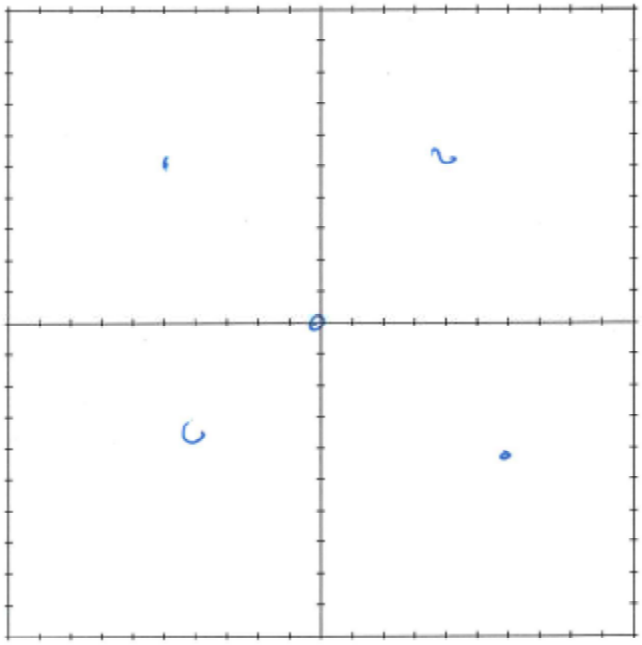

MARK INDIVIDUAL GRAB SAMPLE LOCATIONS IN GRID

MWH

SURFACE SOIL SAMPLE LOG FORM

AREA #/NAME S239-004-001 (Heavy Blockhouse)

SAMPLE I.D. S239-004-001

SAMPLE COLLECTION DATE 10/27/16

SAMPLE COLLECTION TIME 1510

SAMPLE COLLECTED BY C Lee

WEATHER CONDITIONS 70's sunny

FIELD USCS DESCRIPTIONS Fine red sand, trace medium sand

MAJOR DIVISIONS: ☐ OH ☐ CH ☐ MH ☐ OH ☐ CL ☐ ML ☐ SC
☒ SM ☐ SP ☐ SW ☐ GC ☐ GM ☐ GP ☐ GW

QUALIFIERS: ☒ TRACE ☐ MINOR ☐ SOME; SAND SIZE ☐ FINE ☒ MEDIUM ☐ COARSE

MOISTURE: ☐ DRY ☐ MOIST ☐ WET

SAMPLE CONTAINERS (NUMBER AND TYPE) 1 ziplock

ANALYSES: Ra-226, Isotopic Thorium

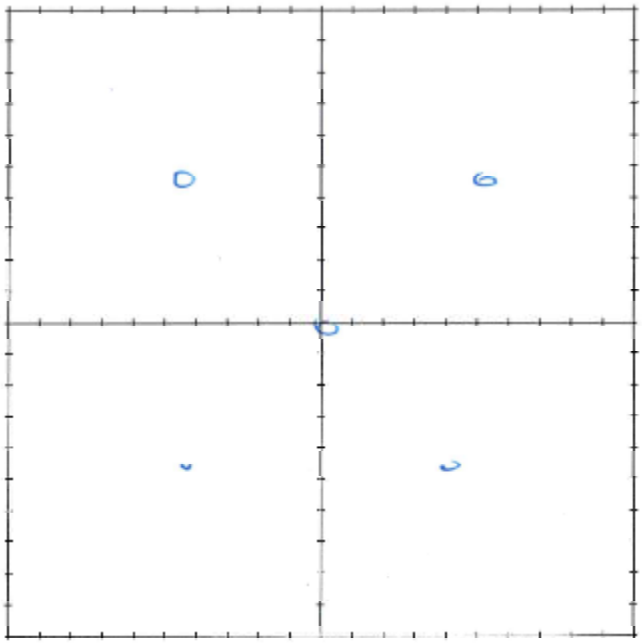

MARK INDIVIDUAL GRAB SAMPLE LOCATIONS IN GRID

MWH

SURFACE SOIL SAMPLE LOG FORM

AREA #/NAME 5239-005-001 (Hammy Blackstar)

SAMPLE I.D. 5239-005-001

SAMPLE COLLECTION DATE 10/27/16

SAMPLE COLLECTION TIME 1535

SAMPLE COLLECTED BY C Lee

WEATHER CONDITIONS 70's sunny

FIELD USCS DESCRIPTIONS Fine red sand

MAJOR DIVISIONS: ☐ OH ☐ CH ☐ MH ☐ OH ☐ CL ☐ ML ☐ SC
☑ SM ☐ SP ☐ SW ☐ GC ☐ GM ☐ GP ☐ GW

QUALIFIERS: ☐ TRACE ☐ MINOR ☐ SOME; SAND SIZE ☐ FINE ☐ MEDIUM ☐ COARSE

MOISTURE: ☑ DRY ☐ MOIST ☐ WET

SAMPLE CONTAINERS (NUMBER AND TYPE) 1 ziplock

ANALYSES: Ra-226, Isotopic Thorium

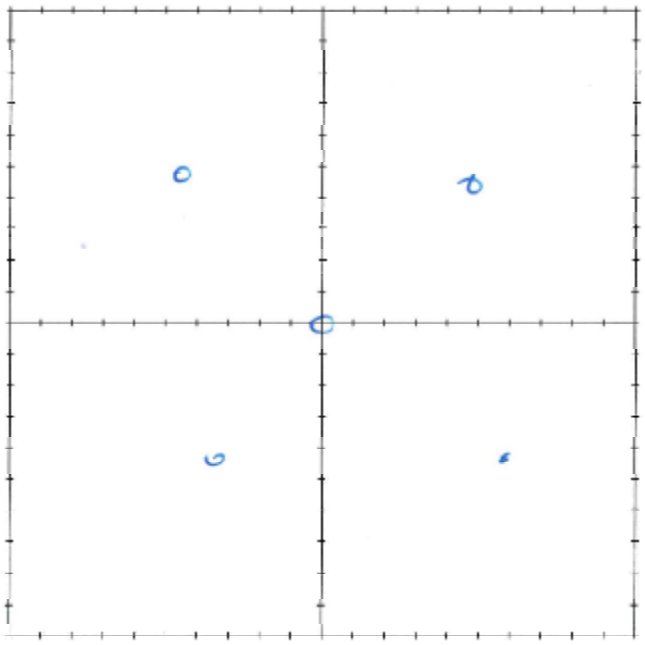

MARK INDIVIDUAL GRAB SAMPLE LOCATIONS IN GRID

MWH

SURFACE SOIL SAMPLE LOG FORM

AREA #/NAME 5239-CX-001 (Harry Blackwater)

SAMPLE I.D. 5239-CX-001

SAMPLE COLLECTION DATE 10/27/16

SAMPLE COLLECTION TIME 1320

SAMPLE COLLECTED BY L. Rodgers

WEATHER CONDITIONS 70's, sunny

FIELD USCS DESCRIPTIONS Fine gray/red sand, gravels (<.25")

MAJOR DIVISIONS: ☐ OH ☐ CH ☐ MH ☐ OH ☐ CL ☐ ML ☐ SC
☐ SM ☒ SP ☐ SW ☐ GC ☐ GM ☐ GP ☐ GW

QUALIFIERS: ☐ TRACE ☒ MINOR ☐ SOME; SAND SIZE ☐ FINE ☐ MEDIUM ☒ COARSE

MOISTURE: ☒ DRY ☐ MOIST ☐ WET

SAMPLE CONTAINERS (NUMBER AND TYPE) 1 Ziplock

ANALYSES: Ra226, Metals

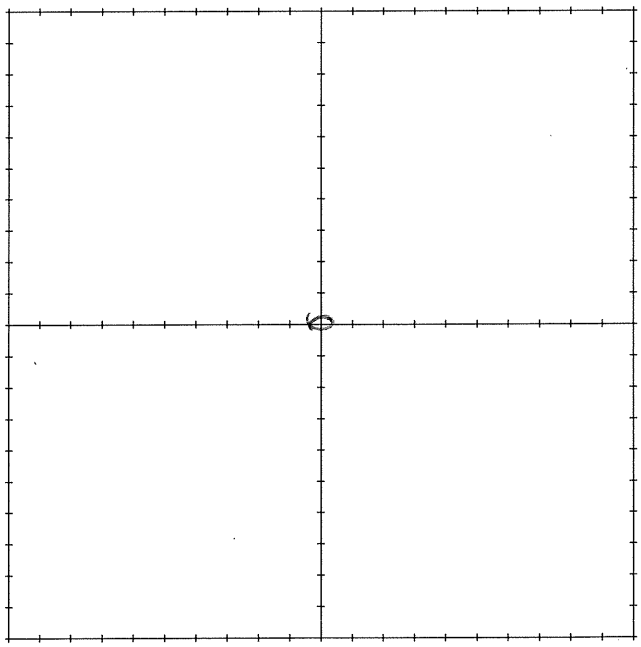

MARK INDIVIDUAL GRAB SAMPLE LOCATIONS IN GRID

MWH

SURFACE SOIL SAMPLE LOG FORM

AREA #/NAME 8239-CX-002 (Hanny Blakwater)

SAMPLE I.D. 5239-CX-002

SAMPLE COLLECTION DATE 10/27/16

SAMPLE COLLECTION TIME 1335

SAMPLE COLLECTED BY L. Rodgers

WEATHER CONDITIONS 70's, sunny

FIELD USCS DESCRIPTIONS Fine red sand, trace gravels (<.25")

MAJOR DIVISIONS: ☐ OH ☐ CH ☐ MH ☐ OH ☐ CL ☐ ML ☐ SC
☐ SM ☒ SP ☐ SW ☐ GC ☐ GM ☐ GP ☐ GW

QUALIFIERS: ☒ TRACE ☐ MINOR ☐ SOME; SAND SIZE ☐ FINE ☐ MEDIUM ☒ COARSE

MOISTURE: ☒ DRY ☐ MOIST ☐ WET

SAMPLE CONTAINERS (NUMBER AND TYPE) 1 Ziplock

ANALYSES: Ra-226, Natural

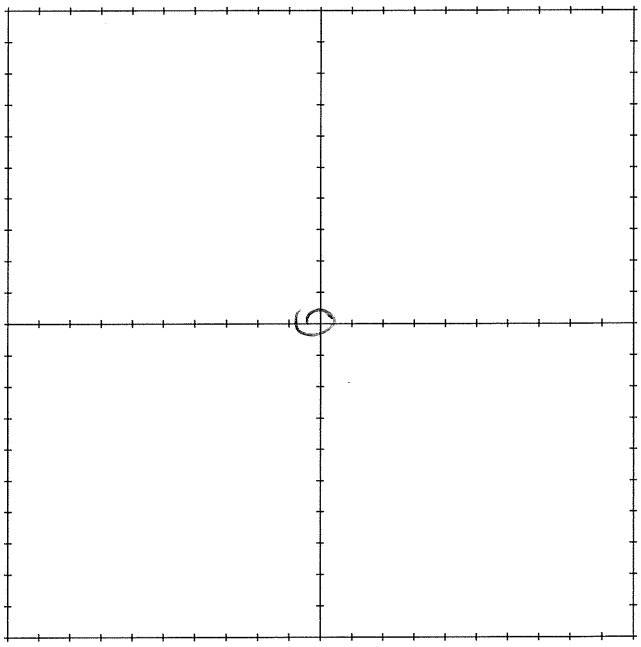

MARK INDIVIDUAL GRAB SAMPLE LOCATIONS IN GRID

MWH

SURFACE SOIL SAMPLE LOG FORM

AREA #/NAME S239-CX-003 (Harry Blackmtn)

SAMPLE I.D. S239-CX-003

SAMPLE COLLECTION DATE 10/27/10

SAMPLE COLLECTION TIME 1353

SAMPLE COLLECTED BY L. Rodgin

WEATHER CONDITIONS 70's, sunny

FIELD USCS DESCRIPTIONS Fine med sand

MAJOR DIVISIONS: ☐ OH ☐ CH ☐ MH ☐ OH ☐ CL ☐ ML ☐ SC
☒ SM ☐ SP ☐ SW ☐ GC ☐ GM ☐ GP ☐ GW

QUALIFIERS: ☐ TRACE ☐ MINOR ☐ SOME; SAND SIZE ☐ FINE ☐ MEDIUM ☐ COARSE

MOISTURE: ☒ DRY ☐ MOIST ☐ WET

SAMPLE CONTAINERS (NUMBER AND TYPE) 1 ziplock

ANALYSES: Ra-226, Metals

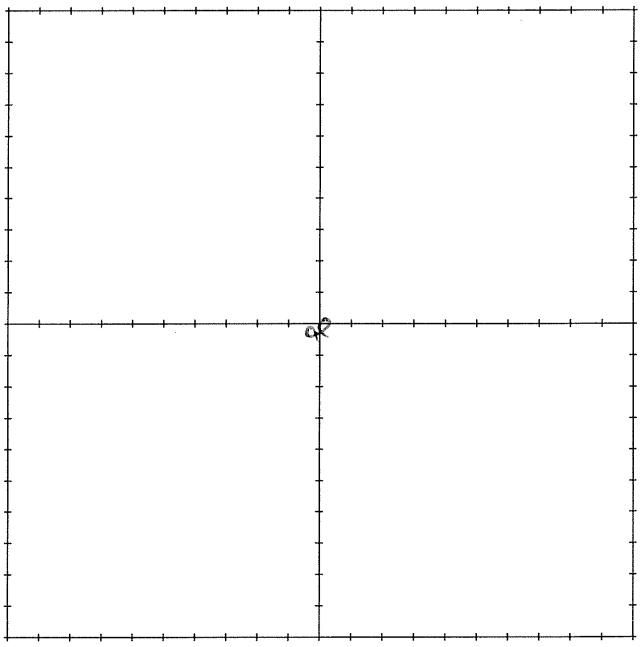

MARK INDIVIDUAL GRAB SAMPLE LOCATIONS IN GRID

MWH

SURFACE SOIL SAMPLE LOG FORM

AREA #/NAME S239-CX-004 (Harry Blackstone)

SAMPLE I.D. S239-CX-004

SAMPLE COLLECTION DATE 10/27/16

SAMPLE COLLECTION TIME 1408

SAMPLE COLLECTED BY L. Rodiger

WEATHER CONDITIONS [illegible]

FIELD USCS DESCRIPTIONS Fine sand

MAJOR DIVISIONS: ☐ OH ☐ CH ☐ MH ☐ OH ☐ CL ☐ ML ☐ SC
☒ SM ☒ SP ☐ SW ☐ GC ☐ GM ☐ GP ☐ GW

QUALIFIERS: ☐ TRACE ☐ MINOR ☐ SOME; SAND SIZE ☐ FINE ☐ MEDIUM ☐ COARSE

MOISTURE: ☒ DRY ☐ MOIST ☐ WET

SAMPLE CONTAINERS (NUMBER AND TYPE) 1 ziplock

ANALYSES: Ra-226, Metals

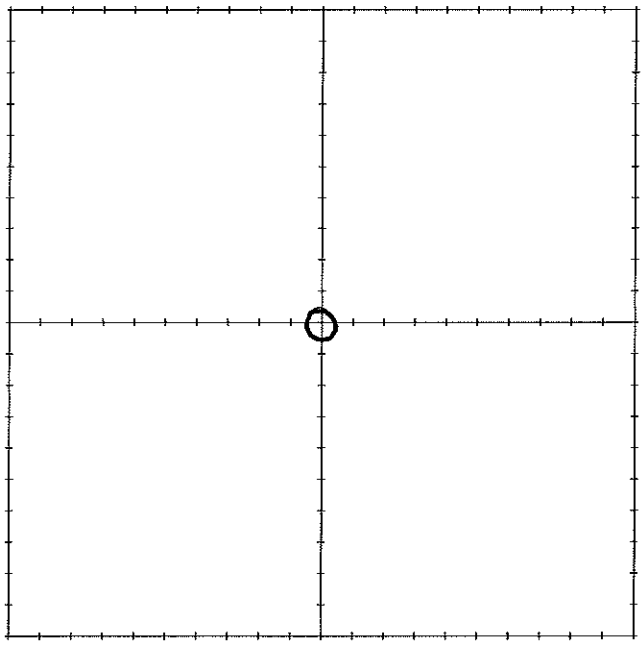

MARK INDIVIDUAL GRAB SAMPLE LOCATIONS IN GRID

SURFACE SOIL SAMPLE LOG FORM

AREA #/NAME S239-CX-005 (Hanny Blanchard)

SAMPLE I.D. S239-CX-005

SAMPLE COLLECTION DATE 10/27/16

SAMPLE COLLECTION TIME 1422

SAMPLE COLLECTED BY L. Rodgers

WEATHER CONDITIONS 70's, Sunny

FIELD USCS DESCRIPTIONS Fine med sand

MAJOR DIVISIONS: ☐ OH ☐ CH ☐ MH ☐ OH ☐ CL ☐ ML ☐ SC
☒ SM ☐ SP ☐ SW ☐ GC ☐ GM ☐ GP ☐ GW

QUALIFIERS: ☐ TRACE ☐ MINOR ☐ SOME; SAND SIZE ☐ FINE ☐ MEDIUM ☐ COARSE

MOISTURE: ☒ DRY ☐ MOIST ☐ WET

SAMPLE CONTAINERS (NUMBER AND TYPE) 1 ziplock

ANALYSES: Ra-226, Metals

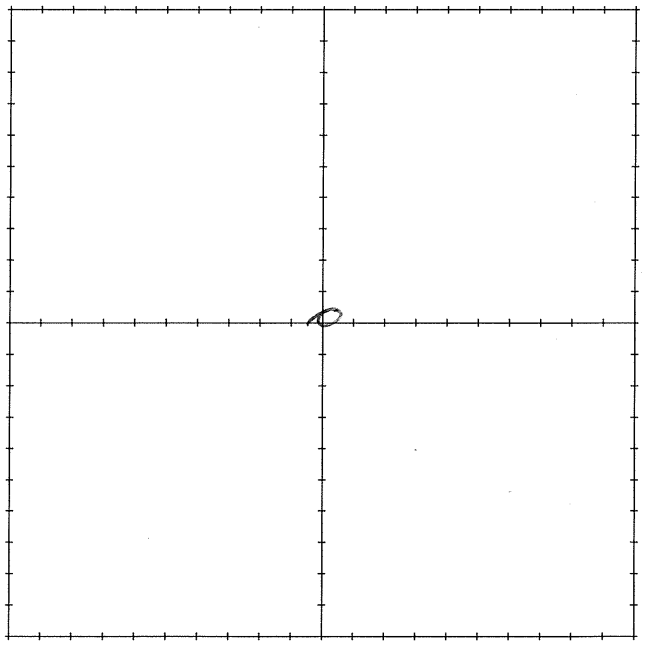

MARK INDIVIDUAL GRAB SAMPLE LOCATIONS IN GRID

MWH

SURFACE SOIL SAMPLE LOG FORM

AREA #/NAME 8239-CX-006 (Hanny) Blumbach

SAMPLE I.D. 8239-CX-006

SAMPLE COLLECTION DATE 10/27/10

SAMPLE COLLECTION TIME 1438

SAMPLE COLLECTED BY L. Rodgers

WEATHER CONDITIONS 70's, sunny

FIELD USCS DESCRIPTIONS Fine red sand

MAJOR DIVISIONS: ☐ OH ☐ CH ☐ MH ☐ OH ☐ CL ☐ ML ☐ SC
☒ SM ☐ SP ☐ SW ☐ GC ☐ GM ☐ GP ☐ GW

QUALIFIERS: ☐ TRACE ☐ MINOR ☐ SOME; SAND SIZE ☐ FINE ☐ MEDIUM ☐ COARSE

MOISTURE: ☒ DRY ☐ MOIST ☐ WET

SAMPLE CONTAINERS (NUMBER AND TYPE) 1 ziplock

ANALYSES: Ra-226, Metals.

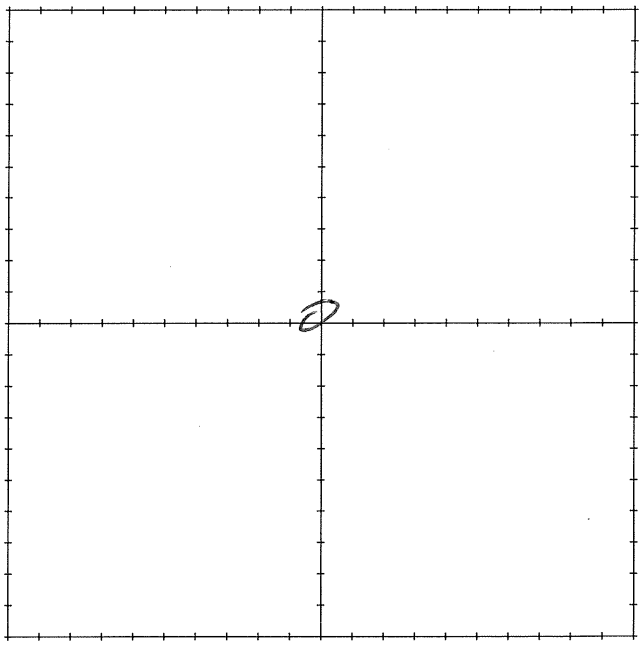

MARK INDIVIDUAL GRAB SAMPLE LOCATIONS IN GRID

MWH

SURFACE SOIL SAMPLE LOG FORM

AREA #/NAME S239-CX-007 (Ham & Bleuter)

SAMPLE I.D. S239-CX-007

SAMPLE COLLECTION DATE 10/27/16

SAMPLE COLLECTION TIME 1448

SAMPLE COLLECTED BY L. Rodriguez

WEATHER CONDITIONS 70's Sunny

FIELD USCS DESCRIPTIONS Fine red/tan sand

MAJOR DIVISIONS: ☐ OH ☐ CH ☐ MH ☐ OH ☐ CL ☐ ML ☐ SC
☒ SM ☐ SP ☐ SW ☐ GC ☐ GM ☐ GP ☐ GW

QUALIFIERS: ☐ TRACE ☐ MINOR ☐ SOME; SAND SIZE ☐ FINE ☐ MEDIUM ☐ COARSE

MOISTURE: ☒ DRY ☐ MOIST ☐ WET

SAMPLE CONTAINERS (NUMBER AND TYPE) 1 ziploc

ANALYSES: Ra-226, Metals

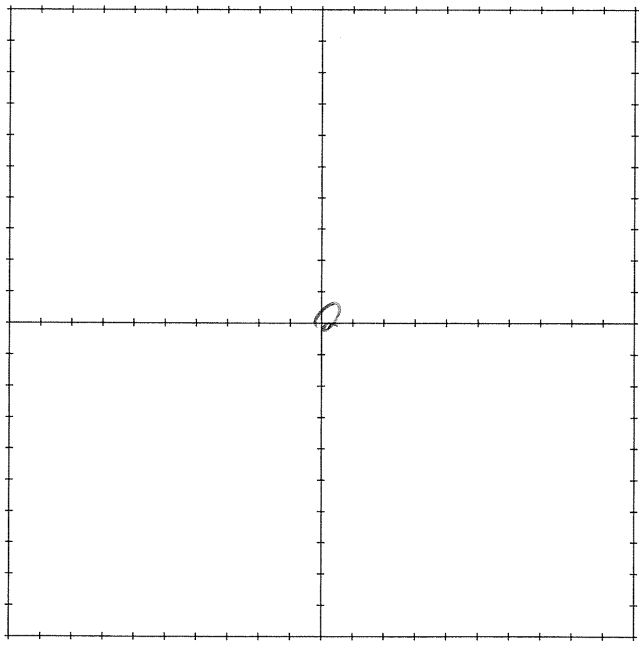

MARK INDIVIDUAL GRAB SAMPLE LOCATIONS IN GRID

MWH

SURFACE SOIL SAMPLE LOG FORM

AREA #/NAME S239-CX-008 (Harvey Blaemtr)

SAMPLE I.D. S239-CX-008, 208, MS, MSD

SAMPLE COLLECTION DATE 10/27/16

SAMPLE COLLECTION TIME 1500

SAMPLE COLLECTED BY L. Rodriguez

WEATHER CONDITIONS 70's sunny

FIELD USCS DESCRIPTIONS Fine red sand

MAJOR DIVISIONS: ☐ OH ☐ CH ☐ MH ☐ OH ☐ CL ☐ ML ☐ SC
☒ SM ☐ SP ☐ SW ☐ GC ☐ GM ☐ GP ☐ GW

QUALIFIERS: ☐ TRACE ☐ MINOR ☐ SOME; SAND SIZE ☐ FINE ☐ MEDIUM ☐ COARSE

MOISTURE: ☒ DRY ☐ MOIST ☐ WET

SAMPLE CONTAINERS (NUMBER AND TYPE) 1 ziplock

ANALYSES: Ra-226, Metals

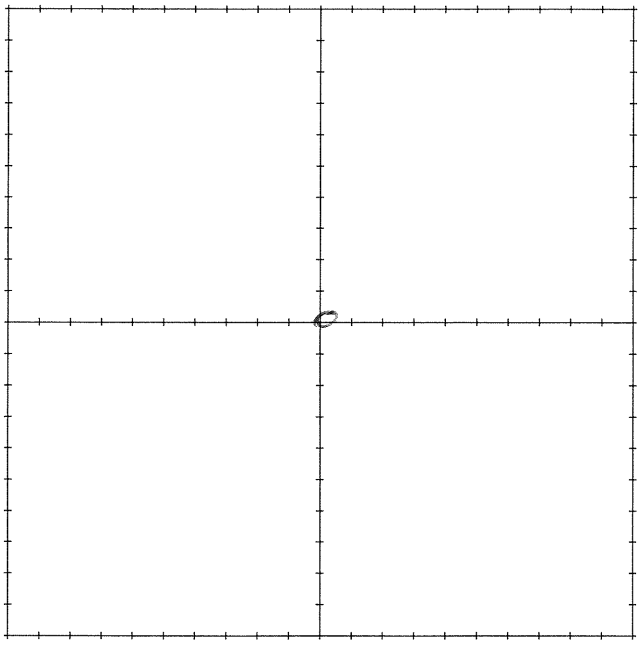

MARK INDIVIDUAL GRAB SAMPLE LOCATIONS IN GRID

MWH

SURFACE SOIL SAMPLE LOG FORM

AREA #/NAME 8239-CX-009 (Harvey Blanton)

SAMPLE I.D. 8239-CX-009

SAMPLE COLLECTION DATE 10/27/16

SAMPLE COLLECTION TIME 1522

SAMPLE COLLECTED BY L. Rodriguez

WEATHER CONDITIONS 70's sunny

FIELD USCS DESCRIPTIONS Fine red sand

MAJOR DIVISIONS: ☐ OH ☐ CH ☐ MH ☐ OH ☐ CL ☐ ML ☐ SC
☒ SM ☐ SP ☐ SW ☐ GC ☐ GM ☐ GP ☐ GW

QUALIFIERS: ☐ TRACE ☐ MINOR ☐ SOME; SAND SIZE ☐ FINE ☐ MEDIUM ☐ COARSE

MOISTURE: ☒ DRY ☐ MOIST ☐ WET

SAMPLE CONTAINERS (NUMBER AND TYPE) 1 ziplock

ANALYSES: Ra-226, Moisture

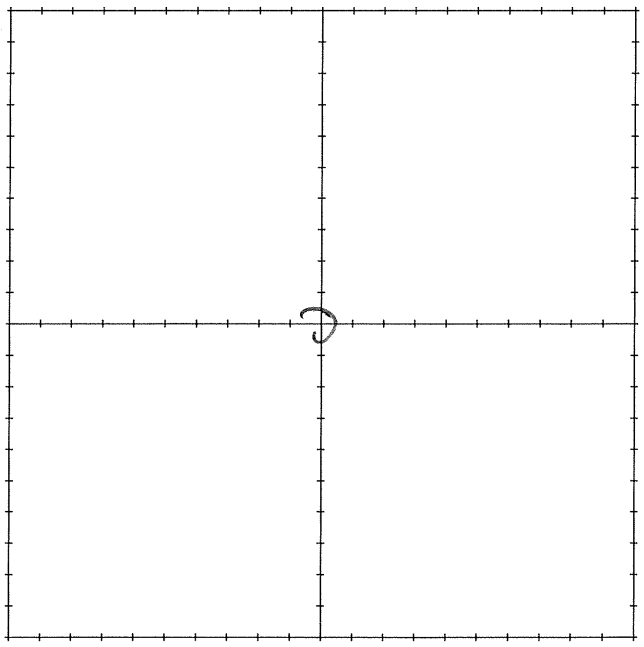

MARK INDIVIDUAL GRAB SAMPLE LOCATIONS IN GRID

MWH

SURFACE SOIL SAMPLE LOG FORM

AREA #/NAME S239-CX-010 (Hamy Blackhawk)

SAMPLE I.D. S239-CX-010

SAMPLE COLLECTION DATE 10/27/16

SAMPLE COLLECTION TIME 1535

SAMPLE COLLECTED BY L. Rodiger

WEATHER CONDITIONS 70's sunny

FIELD USCS DESCRIPTIONS Fine med sand

MAJOR DIVISIONS: ☐ OH ☐ CH ☐ MH ☐ OH ☐ CL ☐ ML ☐ SC
☒ SM ☐ SP ☐ SW ☐ GC ☐ GM ☐ GP ☐ GW

QUALIFIERS: ☐ TRACE ☐ MINOR ☐ SOME; SAND SIZE ☐ FINE ☐ MEDIUM ☐ COARSE

MOISTURE: ☒ DRY ☐ MOIST ☐ WET

SAMPLE CONTAINERS (NUMBER AND TYPE) 1 ziplock

ANALYSES: Ra-226, Metals

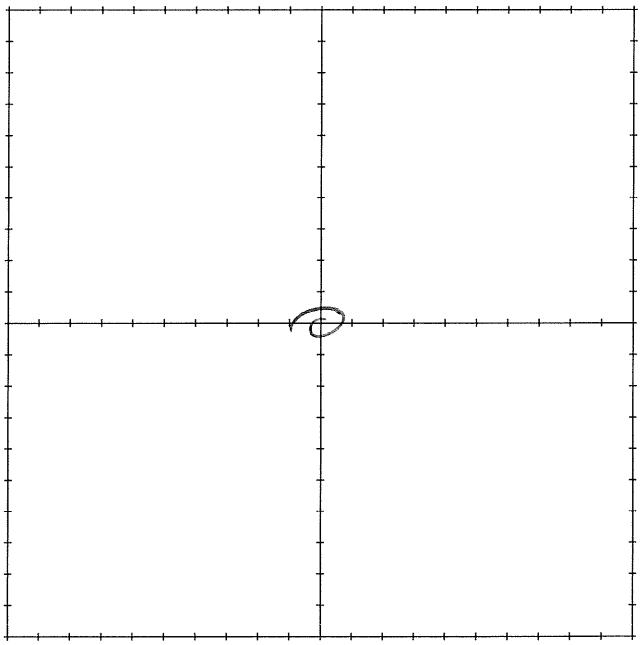

MARK INDIVIDUAL GRAB SAMPLE LOCATIONS IN GRID

MWH

C.2 Drilling and Hand Auger Borehole Logs

BOREHOLE ID:	**S239-SCX-001 (BG-1)**
CLIENT:	NNAUMERT
PROJECT:	Removal Site Evaluation
SITE LOCATION:	Harvey Blackwater No. 3

DRILLING CONTRACTOR:	Stantec	COORDINATE SYSTEM:	NAD 1983 UTM Zone 12N
DRILLING METHOD:	Hand auger	EASTING: 603078.46	NORTHING: 4095631.37
DRILLING EQUIPMENT:	Hand auger	DATE STARTED: 10/28/2016	DATE STARTED: 10/28/2016
SAMPLING METHOD:	Regular hand auger, 3 inch diameter	TOTAL DEPTH (ft.):1.6	BOREHOLE ANGLE: 90 degrees
		LOGGED BY:	Luis Rodriguez

DEPTH (feet)	LITHOLOGICAL GRAPHIC	LITHOLOGICAL DESCRIPTION	Gamma (cpm)	SAMPLE IDENTIFICATION	SAMPLE INTERVAL (ft bgl)	SAMPLE TYPE	LAB RESULTS RA-226 (pCi/g)
0		SILTY SAND (SM): fine sand, moist.	9155				
				S239-SCX-001-1	0-0.5	grab	0.84
			11753				
1			13101	S239-SCX-001-2	0.5-1.5	grab	0.79
			13957				
		Terminated hand auger borehole at 1.6 ft. below ground surface. Reason for borehole termination unknown.					
2							
3							
4							
5							

Gamma (cpm) scale: 0, 25000, 50000, 75000, 100000

Notes: cpm = counts per minute
pCi/g = picocuries per gram
grab = grab sample
comp = composite sample
- - - - = approximate contact

BOREHOLE ID:	**S239-SCX-002 (BG-2)**
CLIENT:	NNAUMERT
PROJECT:	Removal Site Evaluation
SITE LOCATION:	Harvey Blackwater No. 3

DRILLING CONTRACTOR:	Stantec	COORDINATE SYSTEM:	NAD 1983 UTM Zone 12N
DRILLING METHOD:	Hand auger	EASTING: 603358.94	NORTHING: 4095696.13
DRILLING EQUIPMENT:	Hand auger	DATE STARTED: 10/28/2016	DATE STARTED: 10/28/2016
SAMPLING METHOD:	Regular hand auger, 3 inch diameter	TOTAL DEPTH (ft.):1.5	BOREHOLE ANGLE: 90 degrees
		LOGGED BY:	Luis Rodriguez

DEPTH (feet)	LITHOLOGICAL GRAPHIC	LITHOLOGICAL DESCRIPTION	Gamma (cpm)	SAMPLE IDENTIFICATION	SAMPLE INTERVAL (ft bgl)	SAMPLE TYPE	LAB RESULTS RA-226 (pCi/g)
0		SILTY SAND (SM): red, dry to moist, fine sand.	9020	S239-SCX-002-1	0-0.5	grab	1.02
			10298				
1		POORLY GRADED SAND (SP): red and gray, fine sand, trace fine gravels. Decomposed bedrock.	13051	S239-SCX-002-2	0.5-1.5	grab	2.3
		Terminated hand auger borehole at 1.5 ft. below ground surface. Refusal on sandstone bedrock.	15408				
2							
3							
4							
5							

Gamma (cpm) scale: 0, 25000, 50000, 75000, 100000

Notes: cpm = counts per minute
pCi/g = picocuries per gram
grab = grab sample
comp = composite sample
- - - - = approximate contact

BOREHOLE ID:	**S239-SCX-003**
CLIENT:	NNAUMERT
PROJECT:	Removal Site Evaluation
SITE LOCATION:	Harvey Blackwater No. 3

DRILLING CONTRACTOR:	Stantec	COORDINATE SYSTEM:	NAD 1983 UTM Zone 12N
DRILLING METHOD:	Hand auger	EASTING: 603267.5	NORTHING: 4095640.53
DRILLING EQUIPMENT:	Hand auger	DATE STARTED: 10/28/2016	DATE STARTED: 10/28/2016
SAMPLING METHOD:	Regular hand auger, 3 inch diameter	TOTAL DEPTH (ft.):1.75	BOREHOLE ANGLE: 90 degrees
		LOGGED BY:	Luis Rodriguez

DEPTH (feet)	LITHOLOGICAL GRAPHIC	LITHOLOGICAL DESCRIPTION	Gamma (cpm) 0 100000 200000 300000 400000	SAMPLE IDENTIFICATION	SAMPLE INTERVAL (ft bgl)	SAMPLE TYPE	LAB RESULTS RA-226 (pCi/g)
0		SILTY SAND (SM): red, dry to moist.	19042	S239-SCX-003-1	0-0.5	grab	30.4
			150578				
1		POORLY GRADED SAND (SP): red, dry to moist, fine sand, trace gravels of gray rock fragments.	223378	S239-SCX-003-2	0.5-1.75	comp	155
			229043				
2		Terminated hand auger borehole at 1.75 ft. below ground surface. Refusal on bedrock.					
3							
4							
5							

Notes: cpm = counts per minute
pCi/g = picocuries per gram
grab = grab sample
comp = composite sample
- - - - = approximate contact

BOREHOLE ID:	**S239-SCX-004**
CLIENT:	NNAUMERT
PROJECT:	Removal Site Evaluation
SITE LOCATION:	Harvey Blackwater No. 3

DRILLING CONTRACTOR:	Stantec	COORDINATE SYSTEM:	NAD 1983 UTM Zone 12N
DRILLING METHOD:	Hand auger	EASTING: 603311.04	NORTHING: 4095528.56
DRILLING EQUIPMENT:	Hand auger	DATE STARTED: 10/28/2016	DATE STARTED: 10/28/2016
SAMPLING METHOD:	Regular hand auger, 3 inch diameter	TOTAL DEPTH (ft.): 0.5	BOREHOLE ANGLE: 90 degrees
		LOGGED BY:	Luis Rodriguez

DEPTH (feet)	LITHOLOGICAL GRAPHIC	LITHOLOGICAL DESCRIPTION	Gamma (cpm) 0 25000 50000 75000 100000	SAMPLE IDENTIFICATION	SAMPLE INTERVAL (ft bgl)	SAMPLE TYPE	LAB RESULTS RA-226 (pCi/g)
0		SILTY SAND (SM): reddish-brown, fine sand, slightly moist.	13469	S239-SCX-004-1	0-0.5	grab	10.1
		Terminated hand auger borehole at 0.5 ft. below ground surface. Refusal on bedrock.	21606				
1							
2							
3							
4							
5							

Notes: cpm = counts per minute
pCi/g = picocuries per gram
grab = grab sample
comp = composite sample
- - - - = approximate contact

BOREHOLE ID:	**S239-SCX-005**
CLIENT:	NNAUMERT
PROJECT:	Removal Site Evaluation
SITE LOCATION:	Harvey Blackwater No. 3

DRILLING CONTRACTOR:	Stantec	COORDINATE SYSTEM:	NAD 1983 UTM Zone 12N
DRILLING METHOD:	Hand auger	EASTING: 603191.69	NORTHING: 4095474.06
DRILLING EQUIPMENT:	Hand auger	DATE STARTED: 10/28/2016	DATE STARTED: 10/28/2016
SAMPLING METHOD:	Regular hand auger, 3 inch diameter	TOTAL DEPTH (ft.): 0.75	BOREHOLE ANGLE: 90 degrees
		LOGGED BY:	Luis Rodriguez

DEPTH (feet)	LITHOLOGICAL GRAPHIC	LITHOLOGICAL DESCRIPTION	Gamma (cpm) 0 200000 400000 600000	SUBSURFACE SAMPLE INFORMATION: SAMPLE IDENTIFICATION	SAMPLE INTERVAL (ft bgl)	SAMPLE TYPE	LAB RESULTS RA-226 (pCi/g)
0		SILTY SAND (SM): red, dry to moist, fine sand, trace gravels of rock fragments.	100181	S239-SCX-005-1	0-0.5	grab	68.5
		POORLY GRADED SAND (SP): tan to gray, dry to moist, trace gravels of rock fragments.	235860	S239-SCX-005-2	0.5-0.75	grab	231
		Terminated hand auger borehole at 0.75 ft. below ground surface. Reason for borehole termination unknown.	289237				
1							
2							
3							
4							
5							

Notes: cpm = counts per minute
pCi/g = picocuries per gram
grab = grab sample
comp = composite sample
- - - - = approximate contact

BOREHOLE ID:	**S239-SCX-006**
CLIENT:	NNAUMERT
PROJECT:	Removal Site Evaluation
SITE LOCATION:	Harvey Blackwater No. 3

DRILLING CONTRACTOR:	Stantec	COORDINATE SYSTEM:	NAD 1983 UTM Zone 12N
DRILLING METHOD:	Hand auger	EASTING: 603232.2	NORTHING: 4095436.05
DRILLING EQUIPMENT:	Hand auger	DATE STARTED: 10/28/2016	DATE STARTED: 10/28/2016
SAMPLING METHOD:	Regular hand auger, 3 inch diameter	TOTAL DEPTH (ft.):1.75	BOREHOLE ANGLE: 90 degrees
		LOGGED BY:	Luis Rodriguez

DEPTH (feet)	LITHOLOGICAL GRAPHIC	LITHOLOGICAL DESCRIPTION	Gamma (cpm)	SAMPLE IDENTIFICATION	SAMPLE INTERVAL (ft bgl)	SAMPLE TYPE	LAB RESULTS RA-226 (pCi/g)
0		SILTY SAND (SM): red, dry to moist, fine sand.	17185	S239-SCX-006-1	0-0.5	grab	3.03
			13618	S239-SCX-006-2	0.5-1.1	grab	1.07
1			12154	S239-SCX-006-3	1.1-1.75	grab	1.3
			12710				
2		Terminated hand auger borehole at 1.75 ft. below ground surface. Reason for borehole termination unknown.					
3							
4							
5							

Gamma (cpm) scale: 0, 25000, 50000, 75000, 100000

Notes: cpm = counts per minute
pCi/g = picocuries per gram
grab = grab sample
comp = composite sample
- - - - = approximate contact

BOREHOLE ID:	**S239-SCX-007**
CLIENT:	NNAUMERT
PROJECT:	Removal Site Evaluation
SITE LOCATION:	Harvey Blackwater No. 3

DRILLING CONTRACTOR:	Stantec	COORDINATE SYSTEM:	NAD 1983 UTM Zone 12N
DRILLING METHOD:	Hand auger	EASTING: 603162.1	NORTHING: 4095325.2
DRILLING EQUIPMENT:	Hand auger	DATE STARTED: 10/28/2016	DATE STARTED: 10/28/2016
SAMPLING METHOD:	Regular hand auger, 3 inch diameter	TOTAL DEPTH (ft.): 0.08	BOREHOLE ANGLE: 90 degrees
		LOGGED BY:	Luis Rodriguez

DEPTH (feet)	LITHOLOGICAL GRAPHIC	LITHOLOGICAL DESCRIPTION	Gamma (cpm) 0 25000 50000 75000 100000	SUBSURFACE SAMPLE INFORMATION: SAMPLE IDENTIFICATION	SAMPLE INTERVAL (ft bgl)	SAMPLE TYPE	LAB RESULTS RA-226 (pCi/g)
0		Refusal at 1 in. bleached sandstone bedrock. Terminated hand auger borehole at 1in. (0.08 ft) below ground surface. Refusal on sandstone bedrock.	11819	No Sample			No Sample Collected. No Results Available.
1							
2							
3							
4							
5							

Notes: cpm = counts per minute
pCi/g = picocuries per gram
grab = grab sample
comp = composite sample
- - - - = approximate contact

BOREHOLE ID:	**S239-SCX-008**
CLIENT:	NNAUMERT
PROJECT:	Removal Site Evaluation
SITE LOCATION:	Harvey Blackwater No. 3

DRILLING CONTRACTOR:	Stantec	COORDINATE SYSTEM:	NAD 1983 UTM Zone 12N
DRILLING METHOD:	Hand auger	EASTING: 603131.02	NORTHING: 4095259.91
DRILLING EQUIPMENT:	Hand auger	DATE STARTED: 10/28/2016	DATE STARTED: 10/28/2016
SAMPLING METHOD:	Regular hand auger, 3 inch diameter	TOTAL DEPTH (ft.):1.6	BOREHOLE ANGLE: 90 degrees
		LOGGED BY:	Luis Rodriguez

DEPTH (feet)	LITHOLOGICAL GRAPHIC	LITHOLOGICAL DESCRIPTION	Gamma (cpm)	SAMPLE IDENTIFICATION	SAMPLE INTERVAL (ft bgl)	SAMPLE TYPE	LAB RESULTS RA-226 (pCi/g)
0		SILTY SAND (SM): fine to medium grained sand, red, dry to moist, trace gravels.	32391				
				S239-SCX-008-1	0-0.5	grab	19.8
			72774				
				S239-SCX-008-2	0.5-1.1	grab	18.4
1			87922				
				S239-SCX-008-3	1.1-1.6	grab	19.3
			98698				
		Terminated hand auger borehole at 1.6 ft. below ground surface. Reason for borehole termination unknown.					
2							
3							
4							
5							

Gamma (cpm) scale: 0, 50000, 100000, 150000, 200000

Notes: cpm = counts per minute
pCi/g = picocuries per gram
grab = grab sample
comp = composite sample
- - - - = approximate contact

BOREHOLE ID:	**S239-SCX-009**
CLIENT:	NNAUMERT
PROJECT:	Removal Site Evaluation
SITE LOCATION:	Harvey Blackwater No. 3

DRILLING CONTRACTOR:	National Drilling	COORDINATE SYSTEM:	NAD 1983 UTM Zone 12N
DRILLING METHOD:	Rotary Sonic	EASTING: 603189.77	NORTHING: 4095498.39
DRILLING EQUIPMENT:	Geoprobe 8140LC	DATE STARTED: 11/14/2016	DATE STARTED: 11/14/2016
SAMPLING METHOD:	Sonic Core Barrel, 4 inch diameter	TOTAL DEPTH (ft.): 3.5	BOREHOLE ANGLE: 90 degrees
		LOGGED BY:	Justin Peterson

DEPTH (feet)	LITHOLOGICAL GRAPHIC	LITHOLOGICAL DESCRIPTION	Gamma (cpm) 0 200000 400000 600000	SAMPLE IDENTIFICATION	SAMPLE INTERVAL (ft bgl)	SAMPLE TYPE	LAB RESULTS RA-226 (pCi/g)
0		WELL GRADED SAND (SW): reddish-brown and buff, loose, dry, fine to medium sand, calcite rich. Increasing gravel fraction at 0.7-ft bgs.	101924	S239-SCX-009-01 S239-SCX-209-01	0-0.5	grab	37.2 38
1			224934	S239-SCX-009-02	0.5-1.5	grab	57.3
2		SANDSTONE: buff, fine- to medium-grained, slightly weathered (W2), strong (R4), moderately hard (H4), thinly bedded with ripple marks visible in surface outcrops.	348864				
3			370164	S239-SCX-009-03	2.5-3	grab	90
4		Terminated borehole at 3.5 ft. below ground surface in sandstone.					
5							
6							
7							
8							
9							
10							

Notes: cpm = counts per minute
pCi/g = picocuries per gram
grab = grab sample
comp = composite sample
- - - - = approximate contact

BOREHOLE ID:	**S239-SCX-010**
CLIENT:	NNAUMERT
PROJECT:	Removal Site Evaluation
SITE LOCATION:	Harvey Blackwater No. 3

DRILLING CONTRACTOR:	National Drilling	COORDINATE SYSTEM:	NAD 1983 UTM Zone 12N
DRILLING METHOD:	Rotary Sonic	EASTING: 603171.44	NORTHING: 4095477.89
DRILLING EQUIPMENT:	Geoprobe 8140LC	DATE STARTED: 11/14/2016	DATE STARTED: 11/14/2016
SAMPLING METHOD:	Sonic Core Barrel, 4 inch diameter	TOTAL DEPTH (ft.): 4	BOREHOLE ANGLE: 90 degrees
		LOGGED BY:	Justin Peterson

DEPTH (feet)	LITHOLOGICAL GRAPHIC	LITHOLOGICAL DESCRIPTION	Gamma (cpm)	SUBSURFACE SAMPLE INFORMATION: SAMPLE IDENTIFICATION	SAMPLE INTERVAL (ft bgl)	SAMPLE TYPE	LAB RESULTS RA-226 (pCi/g)
0		WELL GRADED SAND (SW): reddish-brown, loose, dry, predominantly medium sand, gravels (5-10%).	29186	No Sample			No Sample Collected. No Results Available.
1		grades to reddish-gray, increasing gravels.					
		grades to gray and buff.	19544				
2		SANDSTONE: weathered bedrock.					
		buff, fine- to medium-grained, slightly weathered (W2), strong (R4), moderately hard (H4).	17488				
3			18266				
4		Terminated borehole at 4 ft. below ground surface in sandstone.					
5							
6							
7							
8							
9							
10							

Gamma (cpm) scale: 0, 25000, 50000, 75000, 100000

Notes: cpm = counts per minute
pCi/g = picocuries per gram
grab = grab sample
comp = composite sample
- - - - = approximate contact

BOREHOLE ID:	**S239-SCX-011**
CLIENT:	NNAUMERT
PROJECT:	Removal Site Evaluation
SITE LOCATION:	Harvey Blackwater No. 3

DRILLING CONTRACTOR:	National Drilling	COORDINATE SYSTEM:	NAD 1983 UTM Zone 12N
DRILLING METHOD:	Rotary Sonic	EASTING: 603221.07	NORTHING: 4095484.04
DRILLING EQUIPMENT:	Geoprobe 8140LC	DATE STARTED: 11/14/2016	DATE STARTED: 11/14/2016
SAMPLING METHOD:	Sonic Core Barrel, 4 inch diameter	TOTAL DEPTH (ft.): 5	BOREHOLE ANGLE: 90 degrees
		LOGGED BY:	Justin Peterson

DEPTH (feet)	LITHOLOGICAL DESCRIPTION	Gamma (cpm)	SAMPLE IDENTIFICATION	SAMPLE INTERVAL (ft bgl)	SAMPLE TYPE	LAB RESULTS RA-226 (pCi/g)
0	POORLY GRADED SAND (SP): reddish brown, loose, dry, 95% fine to medium grained sand, trace silt and gravels.	14048	S239-SCX-011-01	0-0.5	grab	2.79
1	with woody debris.	16640				
2		15062	S239-SCX-011-02	0.5-4	comp	3.32
2.5	SANDSTONE: buff, fine- to medium-grained, slightly weathered (W2), strong (R4), moderately hard (H4).					
3		24642				
3.5	grades to fresh (W1).					
4		30014				
5	Terminated borehole at 5 ft. below ground surface in sandstone.					
6						
7						
8						
9						
10						

Gamma (cpm) scale: 0, 25000, 50000, 75000, 100000

Notes: cpm = counts per minute
pCi/g = picocuries per gram
grab = grab sample
comp = composite sample
- - - - = approximate contact

BOREHOLE ID:	**S239-SCX-012**
CLIENT:	NNAUMERT
PROJECT:	Removal Site Evaluation
SITE LOCATION:	Harvey Blackwater No. 3

DRILLING CONTRACTOR:	National Drilling	COORDINATE SYSTEM:	NAD 1983 UTM Zone 12N
DRILLING METHOD:	Rotary Sonic	EASTING: 603226.14	NORTHING: 4095532.39
DRILLING EQUIPMENT:	Geoprobe 8140LC	DATE STARTED: 11/14/2016	DATE STARTED: 11/14/2016
SAMPLING METHOD:	Sonic Core Barrel, 4 inch diameter	TOTAL DEPTH (ft.): 3.5	BOREHOLE ANGLE: 90 degrees
		LOGGED BY:	Justin Peterson

DEPTH (feet)	LITHOLOGICAL GRAPHIC	LITHOLOGICAL DESCRIPTION	Gamma (cpm)	SAMPLE IDENTIFICATION	SAMPLE INTERVAL (ft bgl)	SAMPLE TYPE	LAB RESULTS RA-226 (pCi/g)
0		POORLY GRADED SAND (SP): reddish-brown, loose, dry, 90% fine to medium grained sand, 10% coarse sand and silt.	17290	S239-SCX-012-01	0-0.5	grab	2.22
1		WELL GRADED SAND (SW): buff, medium dense, dry, 15% to 10 % gravels.	72752	S239-SCX-012-04	1-2	grab	32.7
2		weathered bedrock.	110866				
		SANDSTONE: buff, fine- to medium-grained, slightly weathered (W2), strong (R4), moderately hard (H4).		S239-SCX-012-02	0.5-3.5	comp	19.9
3		grades to fresh (W1).	109822				
		Terminated borehole at 3.5 ft. below ground surface in sandstone.					
4							
5							
6							
7							
8							
9							
10							

Gamma (cpm) scale: 0, 50000, 100000, 150000, 200000

Notes: cpm = counts per minute
pCi/g = picocuries per gram
grab = grab sample
comp = composite sample
- - - - = approximate contact

BOREHOLE ID:	**S239-SCX-013**
CLIENT:	NNAUMERT
PROJECT:	Removal Site Evaluation
SITE LOCATION:	Harvey Blackwater No. 3

DRILLING CONTRACTOR:	National Drilling	COORDINATE SYSTEM:	NAD 1983 UTM Zone 12N
DRILLING METHOD:	Rotary Sonic	EASTING: 603230.16	NORTHING: 4095564.45
DRILLING EQUIPMENT:	Geoprobe 8140LC	DATE STARTED: 11/14/2016	DATE STARTED: 11/14/2016
SAMPLING METHOD:	Sonic Core Barrel, 4 inch diameter	TOTAL DEPTH (ft.): 4.5	BOREHOLE ANGLE: 90 degrees
		LOGGED BY:	Justin Peterson

DEPTH (feet)	LITHOLOGICAL GRAPHIC	LITHOLOGICAL DESCRIPTION	Gamma (cpm)	SAMPLE IDENTIFICATION	SAMPLE INTERVAL (ft bgl)	SAMPLE TYPE	LAB RESULTS RA-226 (pCi/g)
0		POORLY GRADED SAND (SP): reddish-brown, loose, dry, 90% fine to medium grained sand, 10% trace coarse sand and gravel, subrounded.	21056	S239-SCX-013-01	0-0.5	grab	6.1
1		WELL GRADED SAND (SW): light olive-gray, medium dense, dry.	73440	S239-SCX-013-02	1-2	grab	31.3
2		SANDSTONE: light greenish-gray, fine- to medium-grained, highly weathered to decomposed from 2-3 feet, grades to slightly weathered (W2) becoming fresh with depth, strong (R4), moderately hard (H4), very thinly bedded.	122002				
3		light green and gray, fine to medium sand, strong (R4), slightly weathered (W2), becoming fresh with depth, moderately hard (H4), very thin bedding.	126378	S239-SCX-013-03	0.5-4	comp	37.2
4			320126	S239-SCX-013-04	4-4.5	grab	105
		Terminated borehole at 4.5 ft. below ground surface in sandstone.					
5							
6							
7							
8							
9							
10							

Notes: cpm = counts per minute
pCi/g = picocuries per gram
grab = grab sample
comp = composite sample
- - - - = approximate contact

BOREHOLE ID:	**S239-SCX-014**
CLIENT:	NNAUMERT
PROJECT:	Removal Site Evaluation
SITE LOCATION:	Harvey Blackwater No. 3

DRILLING CONTRACTOR:	National Drilling	COORDINATE SYSTEM:	NAD 1983 UTM Zone 12N
DRILLING METHOD:	Rotary Sonic	EASTING: 603284.54	NORTHING: 4095633.65
DRILLING EQUIPMENT:	Geoprobe 8140LC	DATE STARTED: 11/14/2016	DATE STARTED: 11/15/2016
SAMPLING METHOD:	Sonic Core Barrel, 4 inch diameter	TOTAL DEPTH (ft.): 3	BOREHOLE ANGLE: 90 degrees
		LOGGED BY:	Justin Peterson

DEPTH (feet)	LITHOLOGICAL GRAPHIC	LITHOLOGICAL DESCRIPTION	Gamma (cpm) 0 25000 50000 75000 100000	SUBSURFACE SAMPLE INFORMATION: SAMPLE IDENTIFICATION	SAMPLE INTERVAL (ft bgl)	SAMPLE TYPE	LAB RESULTS RA-226 (pCi/g)
0		POORLY GRADED SAND (SP): reddish-brown, loose, dry, 90% fine to medium grained sand.	6756				
1		SANDSTONE: buff, fine- to medium-grained, slightly weathered (W2), strong (R4), moderately hard (H4).	16014	No Sample			No Sample Collected. No Results Available.
2			14002				
3		Terminated borehole at 3 ft. below ground surface in sandstone.					
4							
5							
6							
7							
8							
9							
10							

Notes: cpm = counts per minute
pCi/g = picocuries per gram
grab = grab sample
comp = composite sample
- - - - = approximate contact

BOREHOLE ID:	**S239-SCX-015**
CLIENT:	NNAUMERT
PROJECT:	Removal Site Evaluation
SITE LOCATION:	Harvey Blackwater No. 3

DRILLING CONTRACTOR:	National Drilling	COORDINATE SYSTEM:	NAD 1983 UTM Zone 12N
DRILLING METHOD:	Rotary Sonic	EASTING: 603190.94	NORTHING: 4095591.68
DRILLING EQUIPMENT:	Geoprobe 8140LC	DATE STARTED: 11/15/2016	DATE STARTED: 11/15/2016
SAMPLING METHOD:	Sonic Core Barrel, 4 inch diameter	TOTAL DEPTH (ft.): 2	BOREHOLE ANGLE: 90 degrees
		LOGGED BY:	Justin Peterson

DEPTH (feet)	LITHOLOGICAL GRAPHIC	LITHOLOGICAL DESCRIPTION	Gamma (cpm)	SAMPLE IDENTIFICATION	SAMPLE INTERVAL (ft bgl)	SAMPLE TYPE	LAB RESULTS RA-226 (pCi/g)
0		WELL GRADED SAND (SW): reddish brown, loose, dry.	9964				
		weathered bedrock.		S239-SCX-015-01 S239-SCX-215-01	0-0.9	grab	1.65 1.7
1		SANDSTONE: buff, fine- to medium- grained sand, strong (R4), slightly weathered (W2), moderately hard (H4), thinly bedded.	12926	S239-SCX-015-02	0.9-2	comp	0.51
		grades to fresh (W1).					
2		Terminated borehole at 2 ft. below ground surface in sandstone.	13006				
3							
4							
5							
6							
7							
8							
9							
10							

Gamma (cpm): 0, 25000, 50000, 75000, 100000

Notes: cpm = counts per minute
pCi/g = picocuries per gram
grab = grab sample
comp = composite sample
- - - - = approximate contact

BOREHOLE ID:	**S239-SCX-016**
CLIENT:	NNAUMERT
PROJECT:	Removal Site Evaluation
SITE LOCATION:	Harvey Blackwater No. 3

DRILLING CONTRACTOR:	National Drilling	COORDINATE SYSTEM:	NAD 1983 UTM Zone 12N
DRILLING METHOD:	Rotary Sonic	EASTING: 603232.84	NORTHING: 4095439.38
DRILLING EQUIPMENT:	Geoprobe 8140LC	DATE STARTED: 11/15/2016	DATE STARTED: 11/15/2016
SAMPLING METHOD:	Sonic Core Barrel, 4 inch diameter	TOTAL DEPTH (ft.): 2.5	BOREHOLE ANGLE: 90 degrees
		LOGGED BY:	Justin Peterson

DEPTH (feet)	LITHOLOGICAL GRAPHIC	LITHOLOGICAL DESCRIPTION	Gamma (cpm) 0 / 25000 / 50000 / 75000 / 100000	SAMPLE IDENTIFICATION	SAMPLE INTERVAL (ft bgl)	SAMPLE TYPE	LAB RESULTS RA-226 (pCi/g)
0		WELL GRADED SAND (SW): reddish-brown, loose, dry, medium sand (80%), fine sand (15%), trace sub-angular to sub-rounded gravels.	31158				
1			72104	S239-SCX-016-01	0-1.7	comp	22.8
2		SANDSTONE: buff, slightly weathered (W2), strong (R4), moderately hard (H4), thinly bedded, moderately to highly weathered at top.	30070	S239-SCX-016-02	1.7-2.5	grab	1.86
		Terminated borehole at 2.5 ft. below ground surface in sandstone.	18826				
3							
4							
5							
6							
7							
8							
9							
10							

Notes: cpm = counts per minute
pCi/g = picocuries per gram
grab = grab sample
comp = composite sample
- - - - = approximate contact

BOREHOLE ID:	**S239-SCX-017**
CLIENT:	NNAUMERT
PROJECT:	Removal Site Evaluation
SITE LOCATION:	Harvey Blackwater No. 3

DRILLING CONTRACTOR:	National Drilling	COORDINATE SYSTEM:	NAD 1983 UTM Zone 12N
DRILLING METHOD:	Rotary Sonic	EASTING: 603230.73	NORTHING: 4095301.3
DRILLING EQUIPMENT:	Geoprobe 8140LC	DATE STARTED: 11/15/2016	DATE STARTED: 11/15/2016
SAMPLING METHOD:	Sonic Core Barrel, 4 inch diameter	TOTAL DEPTH (ft.): 4.5	BOREHOLE ANGLE: 90 degrees
		LOGGED BY:	Justin Peterson

DEPTH (feet)	LITHOLOGICAL GRAPHIC	LITHOLOGICAL DESCRIPTION	Gamma (cpm)	SAMPLE IDENTIFICATION	SAMPLE INTERVAL (ft bgl)	SAMPLE TYPE	LAB RESULTS RA-226 (pCi/g)
0		WELL GRADED SAND (SW): reddish-brown, loose, dry, 80% fine to medium sand, trace organics and gravels.	9366	S239-SCX-017-01	0-0.5	grab	1.1
1		mottled gray, light olive-brown, and yellowish-brown, medium dense, dry, fine to coarse sands, sub-angular to sub-rounded gravels of mixed composition.	11496	S239-SCX-017-02	0.5-3.5	comp	2.06
2			13592				
3		SANDSTONE: light buff, slightly weathered (W2), strong (R4), moderately hard (H4), conglomerate beds with sandy matrix.	18636	S239-SCX-017-04	3-3.5	grab	2.59
4			18876				
5		Terminated borehole at 4.5 ft. below ground surface in sandstone.					
6							
7							
8							
9							
10							

Gamma (cpm) scale: 0, 25000, 50000, 75000, 100000

Notes: cpm = counts per minute
pCi/g = picocuries per gram
grab = grab sample
comp = composite sample
- - - - = approximate contact

BOREHOLE ID:	**S239-SCX-018**
CLIENT:	NNAUMERT
PROJECT:	Removal Site Evaluation
SITE LOCATION:	Harvey Blackwater No. 3

DRILLING CONTRACTOR:	National Drilling	COORDINATE SYSTEM:	NAD 1983 UTM Zone 12N
DRILLING METHOD:	Rotary Sonic	EASTING: 603174.49	NORTHING: 4095328.87
DRILLING EQUIPMENT:	Geoprobe 8140LC	DATE STARTED: 11/15/2016	DATE STARTED: 11/15/2016
SAMPLING METHOD:	Sonic Core Barrel, 4 inch diameter	TOTAL DEPTH (ft.): 3.5	BOREHOLE ANGLE: 90 degrees
		LOGGED BY:	Justin Peterson

DEPTH (feet)	LITHOLOGICAL GRAPHIC	LITHOLOGICAL DESCRIPTION	Gamma (cpm)	SUBSURFACE SAMPLE INFORMATION: SAMPLE IDENTIFICATION	SAMPLE INTERVAL (ft bgl)	SAMPLE TYPE	LAB RESULTS RA-226 (pCi/g)
0		SILTY SAND (SM): light gray, medium dense, dry to moist, 50% fine sands, 50% fines. laminated to very thinly bedded, locally oxidized yellow.	22402	No Sample			No Sample Collected. No Results Available.
1		MUDSTONE: light gray with dark gray laminations, residual soil at contact (R6) grading to highly weathered (W4), very weak (R1), soft (H6), laminated and deformed beds	25990				
2			31600				
3			37526				
		Terminated borehole at 3.5 ft. below ground surface in mudstone					
4							
5							
6							
7							
8							
9							
10							

Gamma (cpm) scale: 0, 25000, 50000, 75000, 100000

Notes: cpm = counts per minute
pCi/g = picocuries per gram
grab = grab sample
comp = composite sample
- - - - = approximate contact

BOREHOLE ID:	**S239-SCX-019**
CLIENT:	NNAUMERT
PROJECT:	Removal Site Evaluation
SITE LOCATION:	Harvey Blackwater No. 3

DRILLING CONTRACTOR:	National Drilling	COORDINATE SYSTEM:	NAD 1983 UTM Zone 12N
DRILLING METHOD:	Rotary Sonic	EASTING: 603196.28	NORTHING: 4095260.77
DRILLING EQUIPMENT:	Geoprobe 8140LC	DATE STARTED: 11/15/2016	DATE STARTED: 11/15/2016
SAMPLING METHOD:	Sonic Core Barrel, 4 inch diameter	TOTAL DEPTH (ft.): 4	BOREHOLE ANGLE: 90 degrees
		LOGGED BY:	Justin Peterson

DEPTH (feet)	LITHOLOGICAL GRAPHIC	LITHOLOGICAL DESCRIPTION	Gamma (cpm) 0 25000 50000 75000 100000	SUBSURFACE SAMPLE INFORMATION: SAMPLE IDENTIFICATION	SAMPLE INTERVAL (ft bgl)	SAMPLE TYPE	LAB RESULTS RA-226 (pCi/g)
0		POORLY GRADED SAND (SP): reddish brown, loose, dry, 90% fine to medium sand, trace organics and coarse sand.	9960	No Sample			No Sample Collected. No Results Available.
1			12356				
2		WELL GRADED SAND (SW): gray, yellow, assorted colors, dense, dry, well graded, subrounded sands and gravels. Residual soil from underlying conglomerate.					
		CONGLOMERATE: gray, assorted colors, highly weathered (W4), weak (R2), bedded sands and gravels.	17294				
3							
		MUDSTONE: gray and dark gray laminations, fine- to very fine-grained moderately weathered (W3), weak (R2), laminations from 2 to 5 mm. Mudstone - conglomerate mix	27082				
4		Terminated borehole at 4 ft. below ground surface in mudstone.					
5							
6							
7							
8							
9							
10							

Notes: cpm = counts per minute
pCi/g = picocuries per gram
grab = grab sample
comp = composite sample
- - - - = approximate contact

BOREHOLE ID:	**S239-SCX-020**
CLIENT:	NNAUMERT
PROJECT:	Removal Site Evaluation
SITE LOCATION:	Harvey Blackwater No. 3

DRILLING CONTRACTOR:	National Drilling	COORDINATE SYSTEM:	NAD 1983 UTM Zone 12N
DRILLING METHOD:	Rotary Sonic	EASTING: 603201.7	NORTHING: 4095318.32
DRILLING EQUIPMENT:	Geoprobe 8140LC	DATE STARTED: 11/15/2016	DATE STARTED: 11/15/2016
SAMPLING METHOD:	Sonic Core Barrel, 4 inch diameter	TOTAL DEPTH (ft.): 2.7	BOREHOLE ANGLE: 90 degrees
		LOGGED BY:	Justin Peterson

DEPTH (feet)	LITHOLOGICAL GRAPHIC	LITHOLOGICAL DESCRIPTION	Gamma (cpm) 0 25000 50000 75000 100000	SUBSURFACE SAMPLE INFORMATION: SAMPLE IDENTIFICATION	SAMPLE INTERVAL (ft bgl)	SAMPLE TYPE	LAB RESULTS RA-226 (pCi/g)
0		POORLY GRADED SAND (SP), reddish-brown, loose, dry, fine to medium sand (80%), 15% coarse sands and gravels.	8202				
			13972				
1		SANDSTONE WITH CONGLOMERATE: buff with dark gray, assorted colors, fresh (W1), strong (R4), hard (H3), interbedded sandstone and conglomerate.		No Sample			No Sample Collected. No Results Available.
			26220				
2							
			42396				
		Terminated borehole at 2.7 ft. below ground surface. Refusal on conglomerate.					
3							
4							
5							
6							
7							
8							
9							
10							

Notes: cpm = counts per minute
pCi/g = picocuries per gram
grab = grab sample
comp = composite sample
- - - - = approximate contact

BOREHOLE ID:	**S239-SCX-021**
CLIENT:	NNAUMERT
PROJECT:	Removal Site Evaluation
SITE LOCATION:	Harvey Blackwater No. 3

DRILLING CONTRACTOR:	National Drilling	COORDINATE SYSTEM:	NAD 1983 UTM Zone 12N
DRILLING METHOD:	Rotary Sonic	EASTING: 603236.64	NORTHING: 4095537.31
DRILLING EQUIPMENT:	Geoprobe 8140LC	DATE STARTED: 11/15/2016	DATE STARTED: 11/15/2016
SAMPLING METHOD:	Sonic Core Barrel, 4 inch diameter	TOTAL DEPTH (ft.): 9	BOREHOLE ANGLE: 90 degrees
		LOGGED BY:	Justin Peterson

DEPTH (feet)	LITHOLOGICAL GRAPHIC	LITHOLOGICAL DESCRIPTION	Gamma (cpm)
0		POORLY GRADED SAND (SP): reddish-brown, loose, dry, fine to medium sand (80%), trace course sand and gravels, gravels composed of chert, sandstone and petrified wood.	
1			27150
		grades to light reddish-brown, grades finer with increased fine sand.	
2			45890
3			75228
4		SANDSTONE: buff, completely weathered to residual soil (W5-W6) at top grading to highly weathered (W4), moderately strong (R3), moderately hard (H4), fine- to medium-grained, residual bedding.	131098
5			126358
6		grades to slightly weathered (W2), strong (R4).	163088
7			207184
8			159144
9		Terminated borehole at 9 ft. below ground surface in sandstone.	321848
10			

Gamma (cpm) scale: 0, 200000, 400000, 600000

SUBSURFACE SAMPLE INFORMATION

SAMPLE IDENTIFICATION	SAMPLE INTERVAL (ft bgl)	SAMPLE TYPE	LAB RESULTS RA-226 (pCi/g)
S239-SCX-021-01 S239-SCX-221-01	0-0.5	grab	5.44 4.25
S239-SCX-021-02	1-8	comp	26.9
S239-SCX-021-04	6.5-7	grab	66
S239-SCX-021-03	8-9	grab	22.9

Notes: cpm = counts per minute
pCi/g = picocuries per gram
grab = grab sample
comp = composite sample
- - - - = approximate contact

Appendix D Evaluation of RSE Data

D.1 Background Reference Area Selection

D.2 Statistical Evaluation

BACKGROUND REFERENCE AREA SELECTION

1.0 INTRODUCTION

This appendix presents the rationale for selection of the background reference area for the Harvey Blackwater No. 3 Site (Site). To select the background reference area for the Site, personnel considered geology, predominant wind direction, hydrologic influence, similarities of vegetation and ground cover, distance from the Site, and visual evidence of impacts due to mining (or other anthropogenic sources) in accordance with the *Multi-Agency Radiation Survey and Site Investigation Manual – Appendix A* ([MARSSIM] USEPA, 2000).

2.0 POTENTIAL BACKGROUND REFERENCE AREAS

The potential background reference area study was initiated during the Site Clearance desktop study and field investigations. In April 2016, three potential background reference areas (hereafter referred to as BG-1, BG-2, and BG-4[1]) were identified for the Site, and gamma surveys of the three areas were completed. These background areas were identified to represent unconsolidated Quaternary deposits (BG-1 and BG-4) and a mix of Quaternary deposits and exposed bedrock of the Chinle Formation (BG-2) at the Site. Following data review during generation of the *Harvey Blackwater No. 3 Site Clearance Data Report* (MWH, 2016a), it was determined that BG-4 was not a good candidate for the Site (see Section 3.0 below). Samples were then collected at BG-1 and BG-2 in October 2016. For reference, BG-2 is shown in Appendix B photograph number 8. Following the Site Characterization program at the Site, it was determined that BG-1 also may not best represent the Site (see Section 3.0). During further review of the Baseline Studies data, it was decided that BG-2 and the surface soil samples could not be used to represent the Site, as described in Section 3.0 below. Consequently, one additional potential background reference area was evaluated (hereafter referred to as BG-3) to represent the Quaternary deposits and exposed bedrock of the Chinle Formation, and a gamma survey and sample collection were conducted in March 2017.

The locations of the four potential background reference areas (BG-1, BG-2, BG-3, and BG-4) are shown along with the Site geology in Figure D.1-1. The potential background reference areas are described below.

- BG-1 encompasses an area of 364 ft^2 (approximately 0.01 acres), is located 450 ft northwest of the Site, and is crosswind and hydrologically upgradient of the Site. Geologically, BG-1 represents areas on-site covered by unconsolidated Quaternary deposits, and contains similar vegetation.

[1] The background reference area designations used in this RSE Report have been revised from the *Harvey Blackwater No. 3 Site Clearance Data Report* (MWH, 2016a).

- BG-2 encompasses an area of 1,232 ft^2 (approximately 0.03 acres), is located 600 ft north of the Site, and is upwind and hydrologically upgradient of the Site. Geologically, BG-2 represents areas on the Site that have Chinle Formation bedrock outcrops and unconsolidated Quaternary deposits, and contains similar vegetation.

- BG-3 encompasses an area of 1,136 ft^2 (approximately 0.03 acres), is located 900 ft north of the Site, and is upwind and hydrologically upgradient of the Site. Geologically, BG-3 represents areas on the Site that have Chinle Formation bedrock outcrops and unconsolidated Quaternary deposits, and contains similar vegetation.

- BG-4 encompasses an area of 634ft^2 (approximately 0.01 acres), is located 175 ft northwest of the Site, and is crosswind and hydrologically upgradient of the Site. Geologically, BG-4 represents areas on-site covered by unconsolidated Quaternary deposits, and contains similar vegetation.

The potential background reference area evaluation included a walkover gamma survey, static surface gamma measurements (at borehole locations in BG-1 and BG-2, and S239-BG3-011 at BG-3), and surface soil sampling at BG-1, BG-2, and BG-3. Static subsurface gamma measurements and subsurface soil samples were collected in borehole S239-SCX-001 at BG-1. Refusal on bedrock at 0.3 inches below ground surface (bgs) at BG-3 meant subsurface static gamma measurements and subsurface soil samples could not be collected. Field personnel collected the following surface and subsurface samples, as shown in Figure D.1-2 and summarized in Table D.1-1.

- BG-1: Eleven surface soil grab samples from 11 locations, one subsurface soil grab sample from hand auger location S239-SCX-001.

- BG-2: Eleven surface soil grab samples from 11 locations, one subsurface soil grab sample from hand auger location S239-SCX-002 south of BG-2.

- BG-3: Eleven surface soil grab samples from 11 locations.

Samples were categorized as surface soil samples where sample depths ranged from 0.0-0.5 ft bgs and as subsurface samples where sample depths were greater than 0.5 ft bgs. Table D.1-2 provides the results of the sample analyses. It is important to note that sample analyses for BG-1 and BG-2 are included in this appendix and not in the tables in the RSE Report. Tables D.1-3 and D.1-4 provide descriptive statistics for the metals/Ra-226 concentrations and the surface gamma measurements, respectively. Field forms, including borehole logs, are provided in Appendix C of the RSE Report.

The gamma survey measurements for the four potential background reference areas are shown in Figure D.1-2. The same equipment used for the walkover gamma survey was also used for static one-minute gamma measurements at the ground surface at hand auger locations S239-SCX-001 (BG-1), S239-SCX-002 (south of BG-2), and S239-BG3-011 (BG-3). Subsurface static gamma measurements were collected at the hand auger locations at BG-1 and south of BG-2. Gamma measurements were collected according to the methods described in the *Removal Site Evaluation Work Plan* (MWH, 2016b).

3.0 SELECTION OF BACKGROUND REFERENCE AREA

Subsequent to performing the gamma surveys at BG-4, it was not selected as a background reference area due to it being redundant with BG-1 and being closer to the Site than BG-1. During Site Characterization, field personnel determined that bedrock was more prevalent at the Site and closer to the surface (generally less than 1 to 3 feet bgs) than was presumed during selection of BG-1 in April 2016. Although, BG-1 is geologically similar to the Site areas that have unconsolidated deposits, a background area containing near-surface bedrock and shallow unconsolidated deposits (e.g., BG-2 or BG-3) was considered more representative of the Site.

BG-2 was considered representative of the Site; however due to an abundance of exposed bedrock in the area, the field team moved samples (S239-BG2-005, S239-BG2-006, S239-BG2-007, and S239-BG2-010) over to the nearest area where residual soils were present (see Figure D.1-2). These samples were therefore considered to be collected judgmentally. It was therefore decided that the surface samples from BG-2 should be excluded from development of investigation levels, and BG-2 should not be used as the selected background reference area. Additionally, while reviewing potential subsurface hand auger locations at BG-2, the cultural resources subcontractor, Dinétahdóó, recommended that the hand auger borehole location should be stepped out from BG-2 to avoid a nearby archeological finding. Therefore, the subsurface background location, S239-SCX-002, was advanced south of BG-2, as shown in Figure D.1-2.

BG-3 is similar to BG-2 and was selected as the background reference area for the Site. It contains bedrock outcrops within the potential background reference area, represents the Site geologically, and is located upwind and hydrologically upgradient from the Site. BG-3 surface gamma survey measurements and surface soil sample results were used for the remainder of the RSE for the Site. Due to refusal of the hand auger boring at 0.3 inches bgs and the inability to collect subsurface static gamma measurements and a subsurface soil sample from BG-3 (at S239-BG3-011), the auger location from BG-2 (S239-SCX-002) was used for a comparison to subsurface static gamma and soil sample data collected during Site Characterization at the Site.

4.0 REFERENCES

MWH, 2016a. Harvey Blackwater No. 3 Site Clearance Data Report – Revision 1, Navajo Nation Abandoned Uranium Mines Environmental Response Trust. December.

MWH, 2016b. Navajo Nation AUM Environmental Response Trust – First Phase Removal Site Evaluation Work Plan. October.

Stantec Consulting Services Inc. (Stantec), 2017. Harvey Blackwater No. 3 Site Baseline Studies Field Report. May.

USEPA, 2000. Multi-Agency Radiation Survey and Site Investigation Manual (MARSSIM), EPA 402-R-97-016, Rev. 1.

Table D.1-1
Potential Background Reference Area Soil Sampling Summary
Harvey Blackwater No. 3
Removal Site Evaluation Report - Final
Navajo Nation AUM Environmental Response Trust - First Phase

Sample Location	Sample Depth (ft bgs)	Sample Category	Sample Collection Method	Sample Date	Easting [1]	Northing [1]	Sample Types Metals, Total	Ra-226
Background Reference Area Study - Background Area 1								
S239-BG1-001	0 - 0.5	SF	G	10/15/2016	603077.521	4095630.53	N;MS;MSD	N
S239-BG1-002	0 - 0.5	SF	G	10/15/2016	603075.939	4095631.59	N	N
S239-BG1-003	0 - 0.5	SF	G	10/15/2016	603075.884	4095633	N	N
S239-BG1-004	0 - 0.5	SF	G	10/15/2016	603076.707	4095633.89	N	N
S239-BG1-005	0 - 0.5	SF	G	10/15/2016	603077.65	4095634.64	N	N
S239-BG1-006	0 - 0.5	SF	G	10/15/2016	603078.852	4095634.38	N;FD	N;FD
S239-BG1-007	0 - 0.5	SF	G	10/15/2016	603079.232	4095633.21	N	N
S239-BG1-008	0 - 0.5	SF	G	10/15/2016	603077.935	4095632.09	N	N
S239-BG1-009	0 - 0.5	SF	G	10/15/2016	603077.791	4095630.73	N	N
S239-BG1-010	0 - 0.5	SF	G	10/15/2016	603075.93	4095631.91	N	N
S239-SCX-001	0 - 0.5	SF	G	10/28/2016	603078.468	4095631.38	N	N
S239-SCX-001	0.5 - 1.5	SB	G	10/28/2016	603078.468	4095631.38	N	N
Background Reference Area Study - Background Area 2								
S239-BG2-001	0 - 0.5	SF	G	10/15/2016	603368.296	4095771.95	N	N
S239-BG2-002	0 - 0.5	SF	G	10/15/2016	603368.798	4095775.46	N	N
S239-BG2-003	0 - 0.5	SF	G	10/15/2016	603370.936	4095777.19	N	N
S239-BG2-004	0 - 0.5	SF	G	10/15/2016	603373.188	4095779.4	N	N
S239-BG2-005	0 - 0.5	SF	G	10/15/2016	603377.437	4095770.85	N	N
S239-BG2-006	0 - 0.5	SF	G	10/15/2016	603380.135	4095773.34	N;FD	N;FD
S239-BG2-007	0 - 0.5	SF	G	10/15/2016	603382.206	4095775.04	N	N
S239-BG2-008	0 - 0.5	SF	G	10/15/2016	603374.772	4095777.96	N	N
S239-BG2-009	0 - 0.5	SF	G	10/15/2016	603371.104	4095780.01	N	N
S239-BG2-010	0 - 0.5	SF	G	10/15/2016	603374.259	4095767.75	N;MS;MSD	N
Background Reference Area Study - S239-SCX-002								
S239-SCX-002	0 - 0.5	SF	G	10/28/2016	603358.944	4095696.13	N	N
S239-SCX-002	0.5 - 1.5	SB	G	10/28/2016	603358.944	4095696.13	N	N
Background Reference Area Study - Background Area 3								
S239-BG3-001	0 - 0.5	SF	G	3/18/2017	603398.089	4095862.91	N	N
S239-BG3-002	0 - 0.5	SF	G	3/18/2017	603395.612	4095863.37	N;MS;MSD	N
S239-BG3-003	0 - 0.5	SF	G	3/18/2017	603394.803	4095866	N;FD	N;FD
S239-BG3-004	0 - 0.5	SF	G	3/18/2017	603398.021	4095868.48	N;FD	N;FD
S239-BG3-005	0 - 0.5	SF	G	3/18/2017	603400.81	4095866.8	N	N
S239-BG3-006	0 - 0.5	SF	G	3/18/2017	603400.678	4095863.97	N	N
S239-BG3-007	0 - 0.5	SF	G	3/18/2017	603396.185	4095871.03	N;FD	N;FD
S239-BG3-008	0 - 0.5	SF	G	3/18/2017	603399.839	4095872.47	N	N
S239-BG3-009	0 - 0.5	SF	G	3/18/2017	603402.454	4095871.75	N	N
S239-BG3-010	0 - 0.5	SF	G	3/18/2017	603402.906	4095868.85	N	N
S239-BG3-011	0 - 0.3	SF	G	3/18/2017	603400.99	4095866.14	N	N

Notes

N	Normal
FD	Field Duplicate
MS	Matrix Spike
MSD	Matrix Spike Duplicate
Ra-226	Radium 226
G	Grab Sample
SB	Subsurface Sample
SF	Surface Sample
ft bgs	feet below ground surface

[1] Coordinate System: NAD 1983 UTM Zone 12N

Table D.1-2
Potential Background Reference Area Soil Sample Analytical Results
Harvey Blackwater No. 3
Removal Site Evaluation Report - Final
Navajo Nation AUM Environmental Response Trust - First Phase

Location Identification	S239-BG1-001	S239-BG1-002	S239-BG1-003	S239-BG1-004	S239-BG1-005	S239-BG1-006	S239-BG1-006 Dup	S239-BG1-007	S239-BG1-008	S239-BG1-009	S239-BG1-010
Date Collected	10/15/2016	10/15/2016	10/15/2016	10/15/2016	10/15/2016	10/15/2016	10/15/2016	10/15/2016	10/15/2016	10/15/2016	10/15/2016
Depth (feet)	0 - 0.5	0 - 0.5	0 - 0.5	0 - 0.5	0 - 0.5	0 - 0.5	0 - 0.5	0 - 0.5	0 - 0.5	0 - 0.5	0 - 0.5
Sample Category	surface	surface	surface	surface	surface	surface	surface	surface	surface	surface	surface
Sample Collection Method	grab	grab	grab	grab	grab	grab	grab	grab	grab	grab	grab
Media	soil	soil	soil	soil	soil	soil	soil	soil	soil	soil	soil
Analyte (Units)											
Metals [1] (mg/kg)											
Arsenic	2	1.6	1.6	0.99	2	1.8	1.2	1.2	1.1	1.4	1
Molybdenum	1.2 J	0.54	0.67	0.39	1.1	1	0.99	0.55	0.48	0.42	0.45
Selenium	<0.99	<0.98	<1	<0.89	<1	<0.98	<0.86	<0.97	<0.9	<0.97	<0.98
Uranium	0.63 J+	0.8	0.41	0.32	0.5	0.56	0.52	0.43	0.4	0.61	0.39
Vanadium	8.8	6.2	4.5	4.2	5.5	5.3	4.4	4.6	4.1	6.9	4.6
Radionuclides (pCi/g)											
Radium-226	0.88 ± 0.21 J-	0.54 ± 0.19 J-	0.57 ± 0.19 J-	0.47 ± 0.16 J-	0.51 ± 0.19 J-	0.52 ± 0.18 J-	0.49 ± 0.19 J-	0.63 ± 0.18 J-	0.5 ± 0.18 J-	0.45 ± 0.18 J-	0.53 ± 0.2

Notes
Bold Bolded result indicates positively identified compound
mg/kg milligrams per kilogram
pCi/g picocuries per gram
[1] Analysis required a standard sample dilution of 10 times; reported values have been converted to non-dilute values
[2] Sample location was moved south of BG-2 to avoid a nearby archeological finding
< Result not detected above associated laboratory reporting limit
J Data are estimated due to associated quality control data
J- Data are estimated and are potentially biased low due to associated quality control data
J+ Data are estimated and are potentially biased high due to associated quality control data

Table D.1-2
Potential Background Reference Area Soil Sample Analytical Results
Harvey Blackwater No. 3
Removal Site Evaluation Report - Final
Navajo Nation AUM Environmental Response Trust - First Phase

Location Identification	S239-SCX-001	S239-SCX-001	S239-BG2-001	S239-BG2-002	S239-BG2-003	S239-BG2-004	S239-BG2-005	S239-BG2-006	S239-BG2-006 Dup	S239-BG2-007	S239-BG2-008
Date Collected	10/28/2016	10/28/2016	10/15/2016	10/15/2016	10/15/2016	10/15/2016	10/15/2016	10/15/2016	10/15/2016	10/15/2016	10/15/2016
Depth (feet)	0 - 0.5	0.5 - 1.5	0 - 0.5	0 - 0.5	0 - 0.5	0 - 0.5	0 - 0.5	0 - 0.5	0 - 0.5	0 - 0.5	0 - 0.5
Sample Category	surface	surface	surface	surface	surface	surface	surface	surface	surface	surface	surface
Matrix	grab	grab	grab	grab	grab	grab	grab	grab	grab	grab	grab
Test ID	soil	soil	soil	soil	soil	soil	soil	soil	soil	soil	soil
Analyte (Units)											
Metals [1] (mg/kg)											
Arsenic	3.8	3.5	1.6	1.5	3.2	1.7	3.4	2.6	2	3.5	2.2
Molybdenum	0.44	0.4	0.55	0.33	0.63	0.54	0.83	0.26	0.21	0.37	0.7
Selenium	<1	<0.93	<1	<0.87	<0.96	<0.94	<1	<0.98	<1	<1	<0.98
Uranium	1.1	0.81	0.85	0.69	0.96	1.1	2.1	0.96	0.76	0.94	1.2
Vanadium	13	12	6.8	3.6	6.5	5.2	6.7	4.5	3.9	6.1	8.4
Radionuclides (pCi/g)											
Radium-226	0.84 ± 0.21	0.79 ± 0.25	1.24 ± 0.25 J-	0.91 ± 0.22 J-	1.04 ± 0.25 J-	1.13 ± 0.22 J-	1.23 ± 0.27 J-	0.85 ± 0.21 J-	1.16 ± 0.24 J-	0.98 ± 0.23	1.88 ± 0.36

Notes
Bold Bolded result indicates positively identified compound
mg/kg milligrams per kilogram
pCi/g picocuries per gram
[1] Analysis required a standard sample dilution of 10 times; reported values have been converted to non-dilute values
[2] Sample location was moved south of BG-2 to avoid a nearby archeological finding
< Result not detected above associated laboratory reporting limit
J Data are estimated due to associated quality control data
J- Data are estimated and are potentially biased low due to associated quality control data
J+ Data are estimated and are potentially biased high due to associated quality control data

Table D.1-2
Potential Background Reference Area Soil Sample Analytical Results
Harvey Blackwater No. 3
Removal Site Evaluation Report - Final
Navajo Nation AUM Environmental Response Trust - First Phase

Location Identification	S239-BG2-009	S239-BG2-010	S239-SCX-002[2]	S239-SCX-002[2]	S239-BG3-001	S239-BG3-002	S239-BG3-003	S239-BG3-003 Dup	S239-BG3-004	S239-BG3-004 Dup	S239-BG3-005
Date Collected	10/15/2016	10/15/2016	10/28/2016	10/28/2016	3/18/2017	3/18/2017	3/18/2017	3/18/2017	3/18/2017	3/18/2017	3/18/2017
Depth (feet)	0 - 0.5	0 - 0.5	0 - 0.5	0.5 - 1.5	0 - 0.5	0 - 0.5	0 - 0.5	0 - 0.5	0 - 0.5	0 - 0.5	0 - 0.5
Sample Category	surface	surface	surface	subsurface	surface	surface	surface	surface	surface	surface	surface
Matrix	grab	grab	grab	grab	grab	grab	grab	grab	grab	grab	grab
Test ID	soil	soil	soil	soil	soil	soil	soil	soil	soil	soil	soil
Analyte (Units)											
Metals [1] (mg/kg)											
Arsenic	2	2.1 J+	1.8	8	3.1	11	1.4	1.3	2.9	2.9	2.6
Molybdenum	0.61	0.76	0.62	0.63	0.52	1.2	0.32	0.29	0.52	0.58	0.5
Selenium	<0.86	<0.99	<1	<0.99	<0.89	<0.94	<0.88	<0.73	<0.82	<0.85	<0.79
Uranium	1	1.2 J+	1.3	2	0.92	0.83	0.63	0.67	0.8	0.79	2.1
Vanadium	4.7	6 J	5.8	12	5.6	5.8	5.1	4.6	8.5	8.6	5.2
Radionuclides (pCi/g)											
Radium-226	0.79 ± 0.19 J-	1.11 ± 0.26 J-	1.02 ± 0.22 J-	2.3 ± 0.37 J-	1.38 ± 0.26	0.96 ± 0.27	0.99 ± 0.23	0.75 ± 0.19	1.8 ± 0.34	1.65 ± 0.32	0.78 ± 0.23

Notes
Bold Bolded result indicates positively identified compound
mg/kg milligrams per kilogram
pCi/g picocuries per gram
[1] Analysis required a standard sample dilution of 10 times; reported values have been converted to non-dilute values
[2] Sample location was moved south of BG-2 to avoid a nearby archeological finding
< Result not detected above associated laboratory reporting limit
J Data are estimated due to associated quality control data
J- Data are estimated and are potentially biased low due to associated quality control data
J+ Data are estimated and are potentially biased high due to associated quality control data

Table D.1-2
Potential Background Reference Area Soil Sample Analytical Results
Harvey Blackwater No. 3
Removal Site Evaluation Report - Final
Navajo Nation AUM Environmental Response Trust - First Phase

Location Identification	S239-BG3-006	S239-BG3-007	S239-BG3-007 Dup	S239-BG3-008	S239-BG3-009	S239-BG3-010	S239-BG3-011
Date Collected	3/18/2017	3/18/2017	3/18/2017	3/18/2017	3/18/2017	3/18/2017	3/18/2017
Depth (feet)	0 - 0.5	0 - 0.5	0 - 0.5	0 - 0.5	0 - 0.5	0 - 0.5	0 - 0.3
Sample Category	surface	surface	surface	surface	surface	surface	surface
Matrix	grab	grab	grab	grab	grab	grab	grab
Test ID	soil	soil	soil	soil	soil	soil	soil
Analyte (Units)							
Metals [1] (mg/kg)							
Arsenic	2.5	4.2	5.8	3.1	8.4	2	3
Molybdenum	0.53	0.59	1.1	0.43	0.7	0.57	0.93
Selenium	<0.85	<0.83	<1	<0.76	<0.83	<0.89	<0.84
Uranium	0.8	1.1	1	0.88	1.2	0.7	0.77
Vanadium	7.4	9.4	10	5.5	13	4.8	5.4
Radionuclides (pCi/g)							
Radium-226	1.24 ± 0.25	2.05 ± 0.37	2.4 ± 0.38	1.6 ± 0.29	1.57 ± 0.29	0.91 ± 0.24	0.93 ± 0.22

Notes
Bold Bolded result indicates positively identified compound
mg/kg milligrams per kilogram
pCi/g picocuries per gram
[1] Analysis required a standard sample dilution of 10 times; reported values have been converted to non-dilute values
[2] Sample location was moved south of BG-2 to avoid a nearby archeological finding
< Result not detected above associated laboratory reporting limit
J Data are estimated due to associated quality control data
J- Data are estimated and are potentially biased low due to associated quality control data
J+ Data are estimated and are potentially biased high due to associated quality control data

Table D.1-3
Soil and Sediment Sampling Summary
Harvey Blackwater No. 3
Removal Site Evaluation Report - Final
Navajo Nation AUM Environmental Response Trust - First Phase

Statistic	Arsenic (mg/kg)	Molybdenum (mg/kg)	Selenium (mg/kg)	Uranium (mg/kg)	Vanadium (mg/kg)	Radium-226 (pCi/g)
Background Reference Area Study - Background Area 1 - Quaternary Deposits						
Total Number of Observations	11	11	11	11	11	11
Percent Non-Detects	--	--	1	--	--	--
Minimum[1]	0.99	0.39	--	0.32	4.1	0.45
Minimum Detect[2]	--	--	--	--	--	--
Mean[1]	1.68	0.66	--	0.56	6.16	0.59
Mean Detects[2]	--	--	--	--	--	--
Median[1]	1.6	0.54	--	0.5	5.3	0.53
Maximum[1]	3.8	1.2	--	1.1	13	0.88
Maximum Detect[2]	--	--	--	--	--	--
Distribution	Gamma	Gamma	Not Calculated	Normal	Normal	Gamma
Coefficient of Variation[1]	0.473	0.451	--	0.405	0.434	0.246
UCL Type	95% Adjusted Gamma UCL	95% Adjusted Gamma UCL	Not Calculated	95% Student's-t UCL	95% Student's-t UCL	95% Adjusted Gamma UCL
UCL Result	2.227	0.878	Not Calculated	0.683	7.613	0.682
UTL Type	UTL Gamma WH	UTL Gamma WH	--	UTL Normal	UTL Normal	UTL Gamma WH
UTL Result	4.285	1.71	--	1.196	13.67	1.034
Background Reference Area Study - Background Area 2 - Chinle Formation and Quaternary Deposits						
Total Number of Observations	11	11	11	11	11	11
Percent Non-Detects	--	--	1	--	--	--
Minimum[1]	1.5	0.26	--	0.69	3.6	0.79
Minimum Detect[2]	--	--	--	--	--	--
Mean[1]	2.33	0.56	--	1.12	5.85	1.11
Mean Detects[2]	--	--	--	--	--	--
Median[1]	2.1	0.61	--	1	6	1.04
Maximum[1]	3.5	0.83	--	2.1	8.4	1.88
Maximum Detect[2]	--	--	--	--	--	--
Distribution	Normal	Normal	Not Calculated	Normal	Normal	Normal
Coefficient of Variation[1]	0.316	0.319	--	0.33	0.225	0.266
UCL Type	95% Student's-t UCL	95% Student's-t UCL	Not Calculated	95% Student's-t UCL	95% Student's-t UCL	95% Student's-t UCL
UCL Result	2.73	0.662	Not Calculated	1.32	6.564	1.268
UTL Type	UTL Normal	UTL Normal	--	UTL Normal	UTL Normal	UTL Normal
UTL Result	4.4	1.069	--	2.157	9.545	1.935

Table D.1-3
Soil and Sediment Sampling Summary
Harvey Blackwater No. 3
Removal Site Evaluation Report - Final
Navajo Nation AUM Environmental Response Trust - First Phase

Statistic	Arsenic (mg/kg)	Molybdenum (mg/kg)	Selenium (mg/kg)	Uranium (mg/kg)	Vanadium (mg/kg)	Radium-226 (pCi/g)
Background Reference Area Study - Background Area 3 - Chinle Formation and Quaternary Deposits						
Total Number of Observations	11	11	11	11	11	11
Percent Non-Detects	--	--	100%	--	--	--
Minimum[1]	1.40	0.32	--	0.63	4.80	0.780
Minimum Detect[2]	--	--	--	--	--	--
Mean[1]	4.02	0.62	--	0.98	6.88	1.29
Mean Detects[2]	--	--	--	--	--	--
Median[1]	3.00	0.53	--	0.83	5.60	1.24
Maximum[1]	11.00	1.20	--	2.10	13.0	2.05
Maximum Detect[2]	--	--	--	--	--	--
Distribution	Lognormal	Gamma	Not Calculated	Gamma	Normal	Normal
Coefficient of Variation[1]	0.735	0.399	--	0.418	0.367	0.324
UCL Type	95% H-UCL	95% Adjusted Gamma UCL	Not Calculated	95% Adjusted Gamma UCL	95% Student's-t UCL	95% Student's-t UCL
UCL Result	6.16	0.80	Not Calculated	1.24	8.26	1.52
UTL Type	UTL Lognormal	UTL Gamma WH	--	UTL Gamma WH	UTL Normal	UTL Normal
UTL Result	17.80	1.45	--	2.230	14.0	2.47

Notes

mg/kg	Milligrams per kilogram
--	Not applicable
pCi/g	Picocuries per gram
WH	Wilson Hilferty

[1] This statistic is reported by ProUCL when the dataset contains 100 percent detections.
[2] This statistic is reported by ProUCL when non-detect values exist in the dataset. The value reported is calculated using detections only.

Table D.1-4
Surface Gamma Survey Summary
Harvey Blackwater No. 3
Removal Site Evaluation Report - Final
Navajo Nation AUM Environmental Response Trust - First Phase

Geologic Formation Statistic	Background Reference Area 1 (BG-1) Quaternary Deposits	Background Reference Area 2 (BG-2) Quaternary Deposits	Background Reference Area 3 (BG-3) Quaternary Deposits & Chinle Formation	Background Reference Area 4 (BG-4) Quaternary Deposits
Total Number of Observations	314	142	235	189
Minimum	5347	5522	6662	5696
Mean	6771	6494	8585	7398
Median	6784	6475	8606	7355
Maximum	8459	8108	10663	9252
Distribution	Normal	Normal	Normal	Normal
Coefficient of Variation	0.0864	0.0801	0.089	0.0975
UCL Type	95% Student's-t UCL	95% Student's-t UCL	95% Student's-t UCL	95% Student's-t UCL
UCL Result	6825	6566	8667	7484
UTL Type	UTL Normal	UTL Normal	UTL Normal	UTL Normal
UTL Result	7821	7469	9975	8725

Notes

cpm	Counts per minute
UCL	Upper confidence limit
UTL	Upper tolerance limit

NOTE:

1. Based on field observations at the Site, bedrock units shown are near surface (typically within 1 foot), but do not necessarily outcrop and may be overlain by minor Q deposits.

2. Nearly all bedrock shown within the claim boundary (TRcs) outcrops at the ground surface.

REFERENCES:

Coordinate System: NAD 1983 UTM Zone 12N

Wind Rose: NAML, 2007

Basemap image accessed from BING Maps imagery web mapping service (http://www.bing.com/maps) on 09/2018.

Geology adapted from Haynes et al. (1972):
Haynes, D.D., Vogel, J.D., and Wyant, D.G., 1972, Geology, structure, and uranium deposits of the Cortez quadrangle, Colorado and Utah: U.S. Geological Survey, Miscellaneous Geologic Investigations Map I-629, scale 1:250,000.

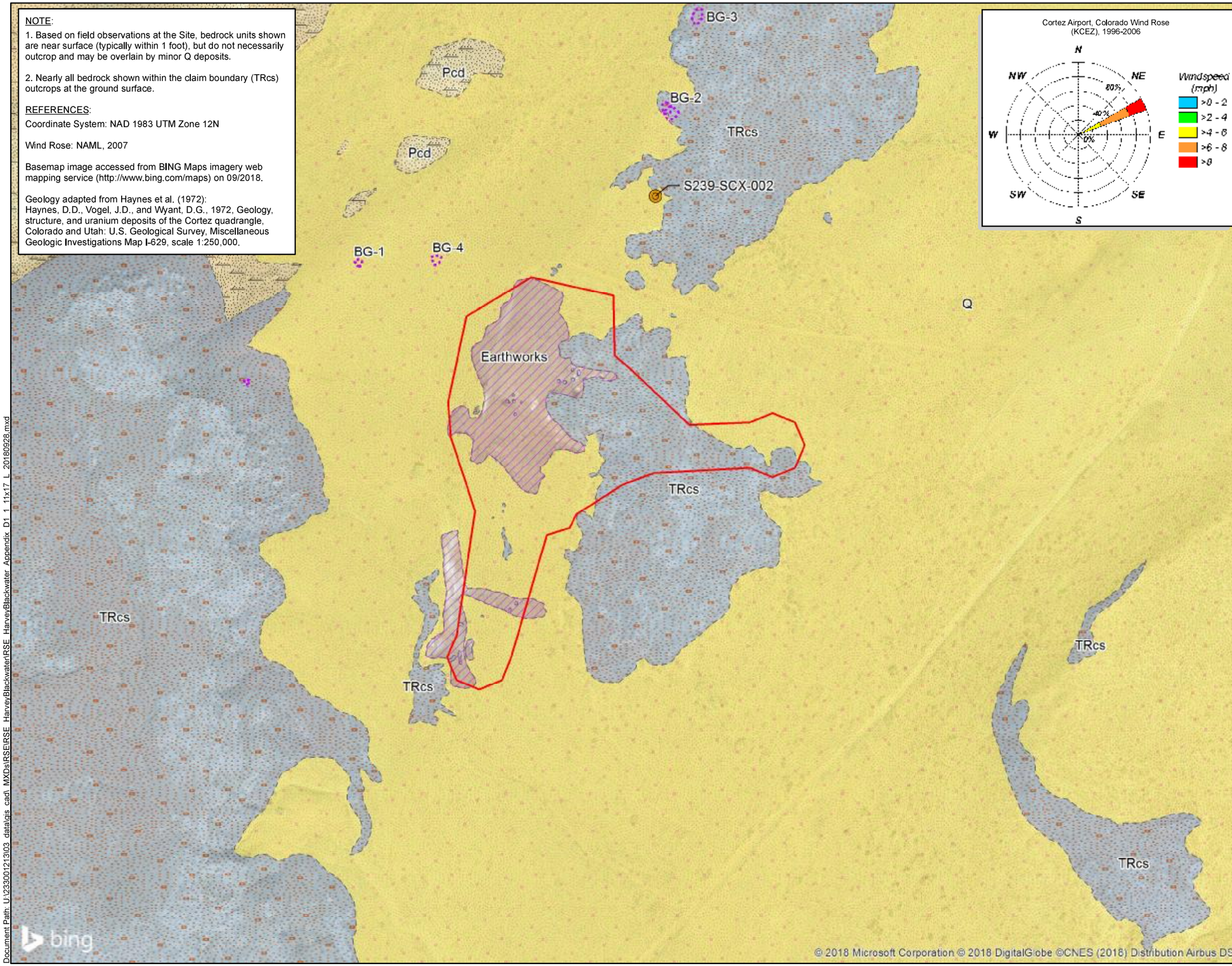

NAVAJO NATION
AUM Environmental Response Trust-First Phase

LEGEND

- Subsurface Borehole Location for Background Reference
- Potential Background Reference Area
- Claim Boundary
- Geologic Contact (Inferred)

QUATERNARY

- Earthworks: Human-caused disturbance of the land surface related to mining or reclamation
- Q: Quaternary Deposits – Undifferentiated (Pleistocene and Holocene) – includes sandy to gravelly colluvial and alluvial deposits, and eolian sand deposits

TRIASSIC

- TRcs: Chinle formation (Upper Triassic), Shinarump member - moderate-orange and yellowish-gray sandstone, mudstone, and conglomerate

PERMIAN

- Pcd: Cutler formation (Permian), De Chelly sandstone member, buff massive crossbedded sandstone

N
W E
S

0 300 600
Feet

TITLE:
Geologic Map and Potential Background Reference Areas

PROJECT:
Removal Site Evaluation
Harvey Blackwater No. 3 Mine Site

DATE: 9/28/2018

DOCUMENT NAME: Removal Site Evaluation Report

Stantec

AUTHOR: CBB
REVIEWER: EDZ

FIGURE: D.1-1

Document Path: U:\233001213\03_data\gis_cad_MXDs\RSE\RSE_HarveyBlackwater\RSE_HarveyBlackwater_Appendix_D1_1_11x17_L_20180928.mxd

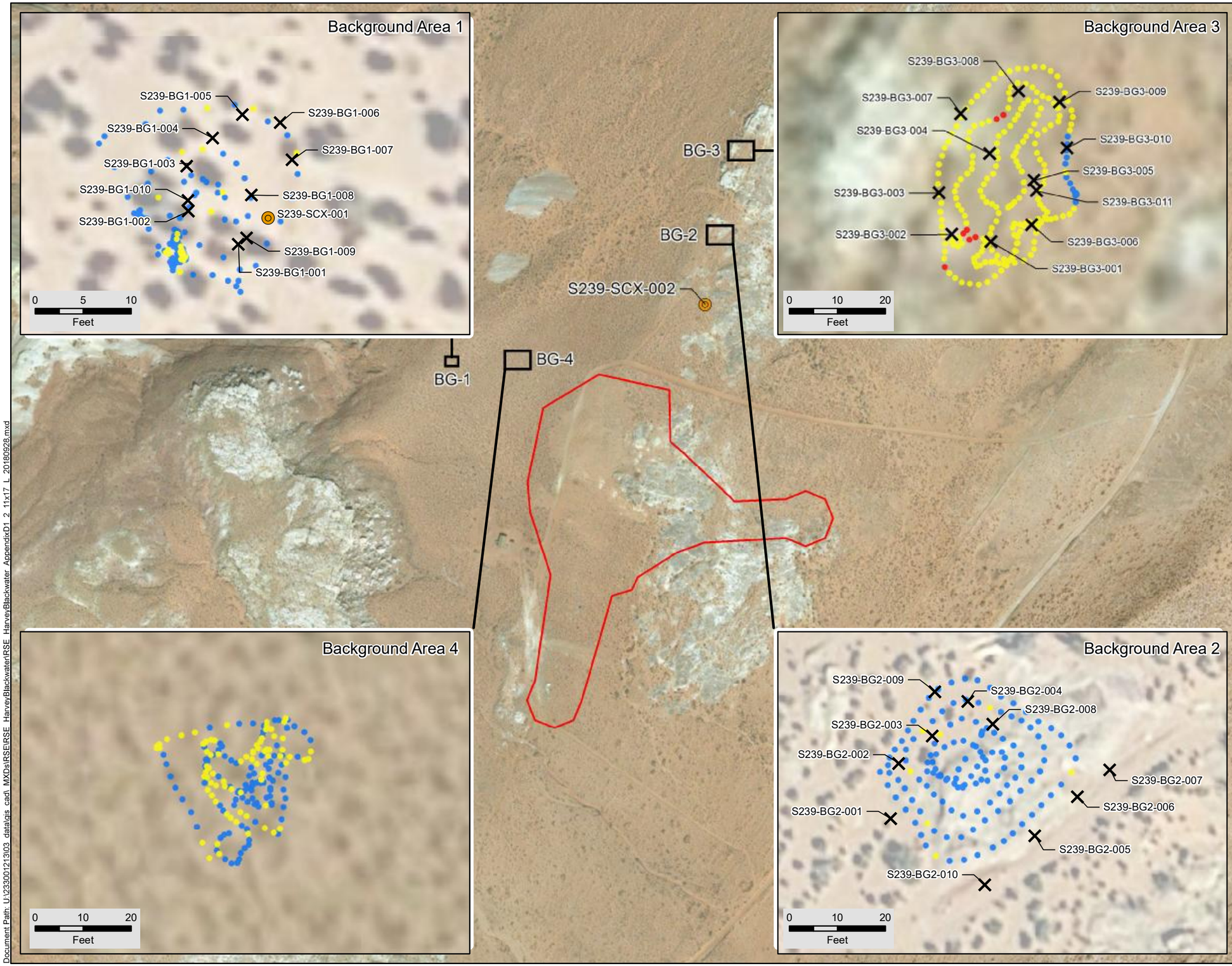

NAVAJO NATION
AUM Environmental Response Trust-First Phase

LEGEND

- Surface Sample Location
- Subsurface Borehole Location for Background Reference
- Claim Boundary

Gamma Survey
Counts per Minute (CPM)

- 5,347 - 7,500
- 7,501 - 10,000
- 10,001 - 10,663

REFERENCES:
Coordinate System: NAD 1983 UTM Zone 12N

Basemap image accessed from BING Maps imagery web mapping service (http://www.bing.com/maps) on 09/2018.

N W E S

0 350 700
Feet

TITLE:
Potential Background Reference Area Gamma Radiation Survey Results and Soil Sample Locations

PROJECT:
Removal Site Evaluation
Harvey Blackwater No. 3 Mine Site

DATE: 9/28/2018

DOCUMENT NAME: Removal Site Evaluation Report

Stantec

AUTHOR: CBB
REVIEWER: EDZ

FIGURE: D.1-2

Document Path: U:\233001213\03_data\gis_cad_MXDs\RSE\RSE_HarveyBlackwater\RSE_HarveyBlackwater_AppendixD1_2_11x17_L_20180928.mxd

STATISTICAL EVALUATION

1.0 INTRODUCTION

This statistical evaluation presents the methods used in, and results of, statistical analyses performed on gamma radiation survey results and soil sample analytical results collected from the Harvey Blackwater No. 3 Site (Site), and Background Reference Area 3 (BG-3), selected to represent site conditions as described in Appendix D.1. The statistical evaluation includes a comparison of the Survey Area and BG-3 data distributions, and documents the decision process followed to select site-specific investigation levels (ILs). The ILs are used to confirm contaminants of potential concern (COPCs) listed in the *RSE Work Plan*, and to support identification of technologically enhanced naturally occurring radioactive materials (TENORM) at the Site.

2.0 EVALUATIONS

The evaluation process included compiling the results for gamma radiation surveys and soil sample analytical results for both BG-3 and the Survey Area. The gamma radiation survey data and soil sample analytical results for BG-3 and the Survey Area were evaluated to determine the appropriate ILs for the Site as follows:

1. Identify and examine potential outlier values. Potential outlier values were identified statistically and, if justified upon further examination, removed from a dataset prior to further evaluation and calculations. No data were removed from the dataset for the calculations presented in this appendix.

2. Compare data populations between BG-3 and the Survey Area (boxplots, probability plots, hypothesis testing with Wilcoxon Mann-Whitney test). Soil sample and gamma radiation survey results were compared between BG-3 and the Survey Area qualitatively and quantitatively to evaluate similarity or difference in data distributions between the areas, and as a component of evaluating background reference area adequacy and representativeness.

3. Develop descriptive statistics. Descriptive statistics for gamma survey results and soil sample analytical results (e.g., number of observations, mean, maximum, and median) were generated to facilitate qualitative comparisons of soil sample and gamma radiation survey results from one area to another.

4. Select ILs for the Site based on the results of the statistical evaluations.

3.0 RESULTS

The following sections present the evaluation of potential outlier values in the dataset, calculated descriptive statistics, and comparison of data populations between groups in support of determining ILs for use at the Site.

3.1 POTENTIAL OUTLIER VALUES

A potential outlier is a data point within a random sample of a population that is different enough from the majority of other values in the sample as to be considered potentially unrepresentative of the population, and therefore requires further inspection and evaluation. Unrepresentative values in a dataset have potential to yield distorted estimates of population parameters of interest (e.g., means, upper confidence limits, upper percentiles). Therefore, potential outliers in the Site data were evaluated further prior to performing data comparisons (Section 3.2) and developing the descriptive statistics (Section 3.3). In the context of this statistical evaluation, extreme values and statistical outliers are referred to as potential outliers.

A potential outlier value in a sample may be a true representative value in the test population (not a "discrepant" value), simply representing a degree of inherent variation present in the population. Furthermore, a statistical determination of one or more potential outliers does not indicate that the measurements are actually discrepant from the rest of the data set. Therefore, general statistical guidance does not recommend that extreme values (potential outliers) be removed from an analysis solely on a statistical basis. Statistical outlier tests can provide supportive information, but a reasonable scientific rationale needs to be identified for the removal of any potential outlier values (e.g., sampling error, records error, or the potential outlier is determined to violate underlying assumptions of the sampling design, such as the targeted geology).

At BG-3, soil samples were collected randomly. Potential outliers in the BG-3 dataset were examined using boxplots, probability plots and statistical testing. Descriptive statistics were then calculated with and without the potential outlier values, as applicable. Finally, the potential outlier values were evaluated to determine if a reason could be found to remove the data points before calculating final statistics. The results of these evaluations are described in the following sections.

In the Survey Area at the Site, soil samples were collected judgmentally. Specifically, some sample locations were selected to characterize areas of higher gamma radiation and, as a result, potential outlier values are not unexpected. Potential outliers in this context mean values that are well-separated from the majority of the data set coming from the far/extreme tails of the data distribution (USEPA, 2016a). Descriptive statistics and comparisons to BG-3 are still presented for qualitative assessment. However, potential outlier values in the Survey Area are not evaluated further nor removed from the dataset.

3.1.1 Boxplots

Box plots depict descriptive statistics from a group of data (Figure 1A). The interquartile range is represented by the bounds of the box, the minimum and maximum values, not including potential outlier values (extreme values), are depicted by the whiskers (vertical lines), and any potential outliers are identified as singular dots. Potential outliers in this context are defined as values outside 1.5 times the interquartile range above or below the box.

3.1.1.1 Soil Sample Results Boxplots

Figure 1A. Survey Area and Background Reference Area 3 (BG-3) Soil Sample Boxplots

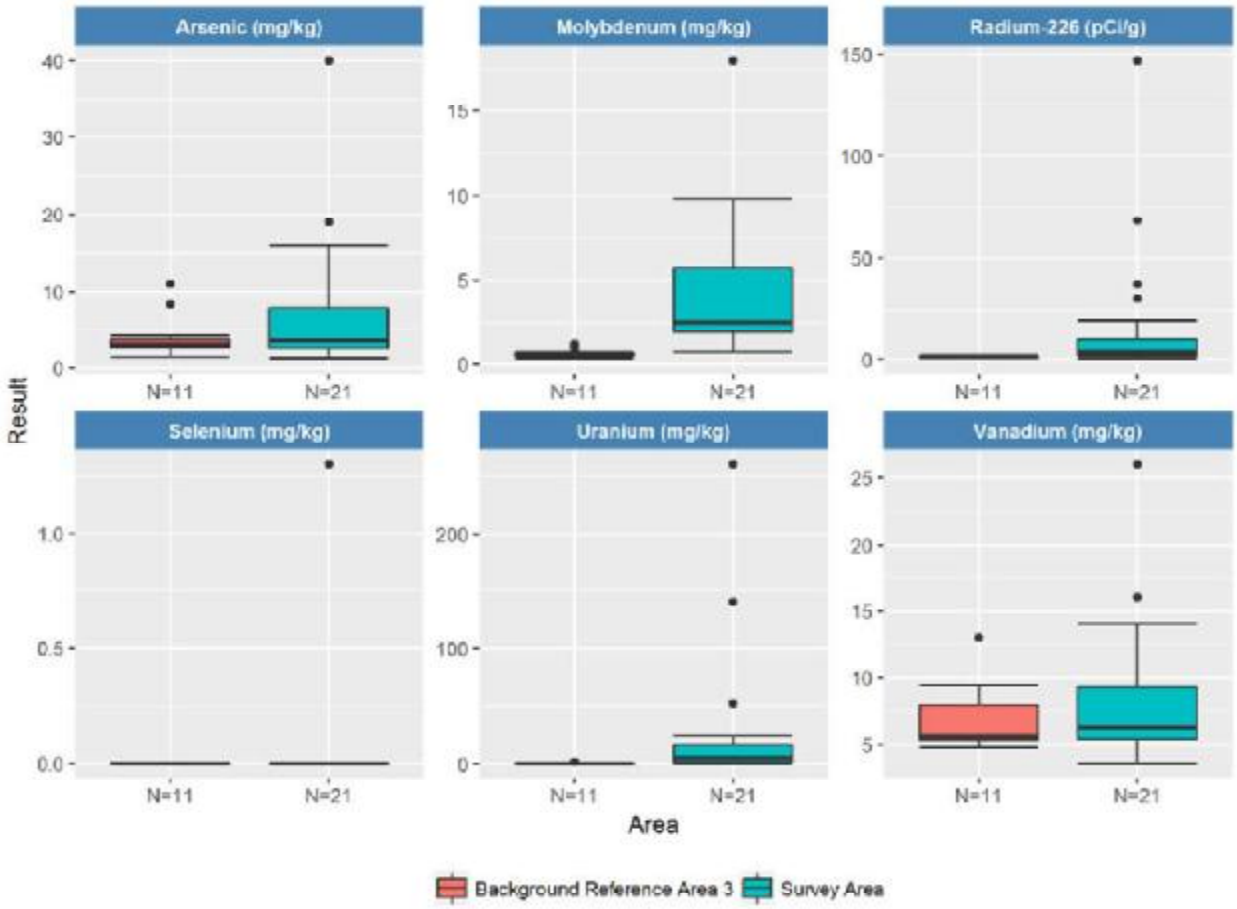

The soil sample boxplots shown on Figure 1A depict differences in the data distribution for analytical constituent concentrations between BG-3 and the Survey Area. Some potential outlier values are shown for both BG-3 and the Survey Area at the Site.

Potential outlier values are of greatest concern in the BG-3 dataset as the data from BG-3 are used to determine the ILs. Background reference area data are presented alone in Figure 1B.

Figure 1B. Background Reference Area 3 (BG-3) Soil Sample Boxplots

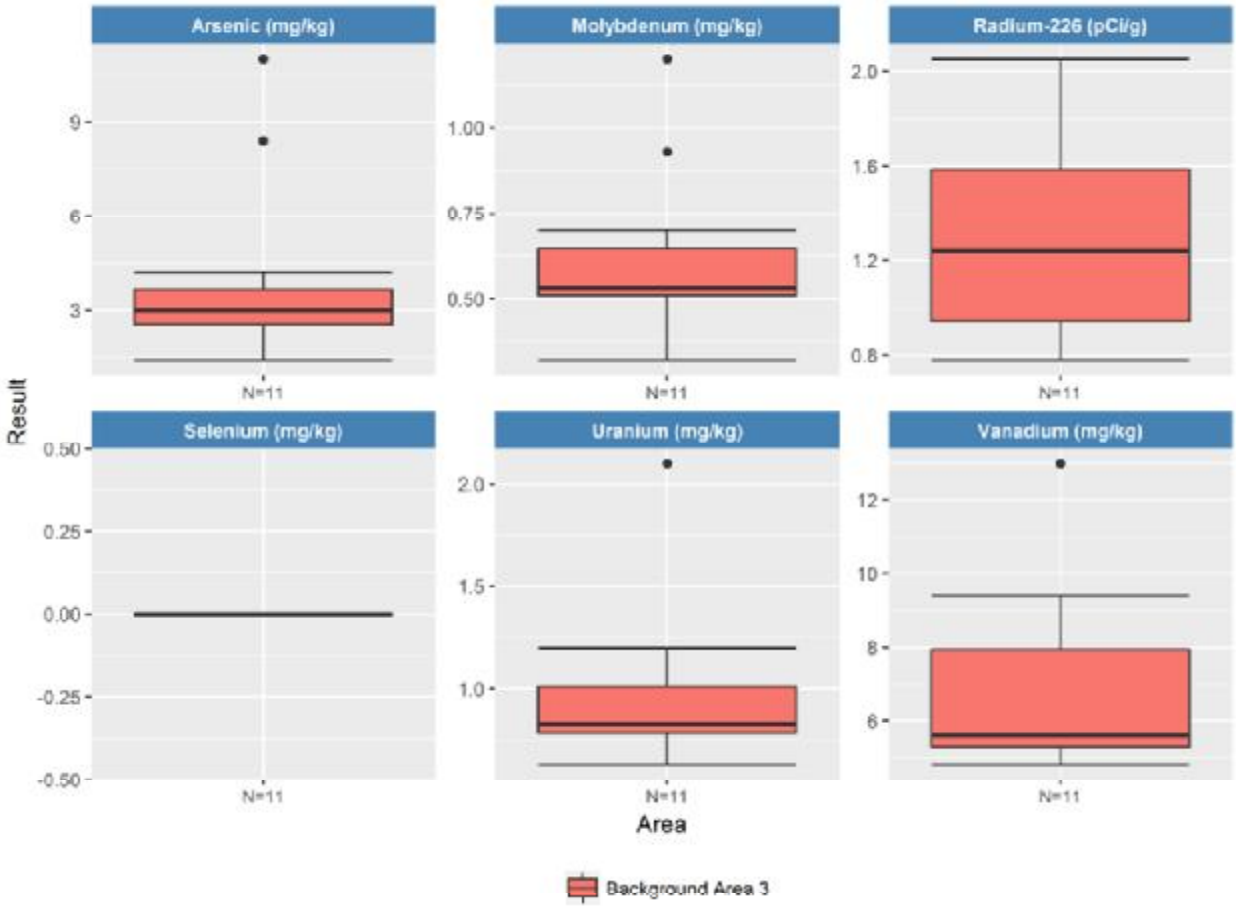

Two values each for arsenic (As) and molybdenum (Mo), and one value each for uranium (U) and vanadium (V), are identified as potential outliers (i.e., outside 1.5 times the interquartile range) in the boxplots in Figure 1B for the BG-3 dataset.

3.1.1.2 Gamma Radiation Results Boxplots

Figure 2A. Survey Area and Background Reference Area 3 (BG-3) Gamma Radiation Boxplots

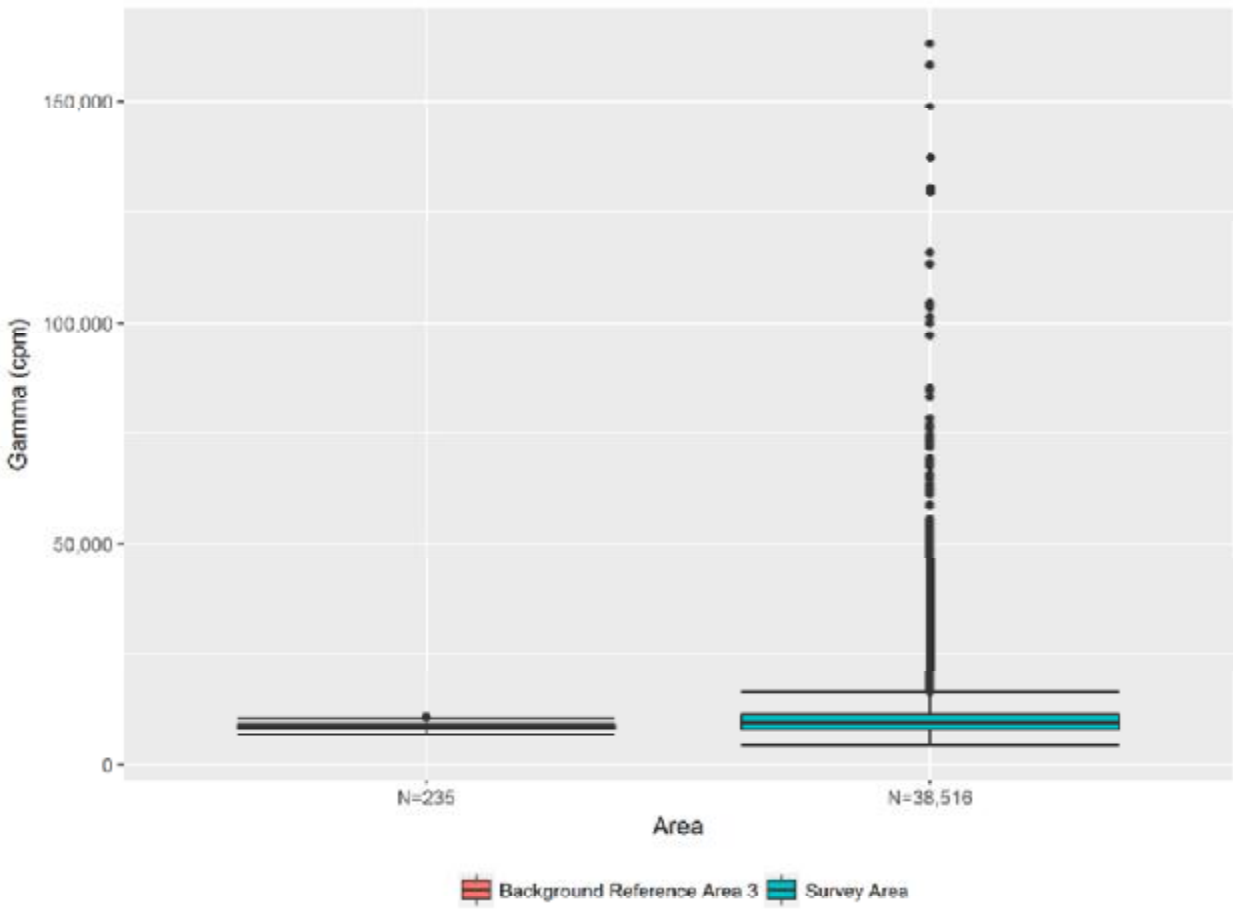

The gamma radiation survey result boxplots shown on Figure 2A depict differences in the data distribution for gamma measurements between BG-3 and the Survey Area. The large number of potential outlier values in the Survey Area boxplot indicate high skewness or possibly non-normally distributed data, instead of outlier values. This has been further evaluated with the use of probability plots in Section 3.1.2 and statistical testing in Section 3.1.4. Based on Site geology, the gamma radiation potential outlier values observed for the Survey Area data on Figure 2A represent localized areas of higher gamma radiation with respect to other parts of the Survey Area, as would be expected in areas with varying levels of mineralization, NORM and potential TENORM.

Figure 2B. Background Reference Area 3 (BG-3) Gamma Radiation Boxplots

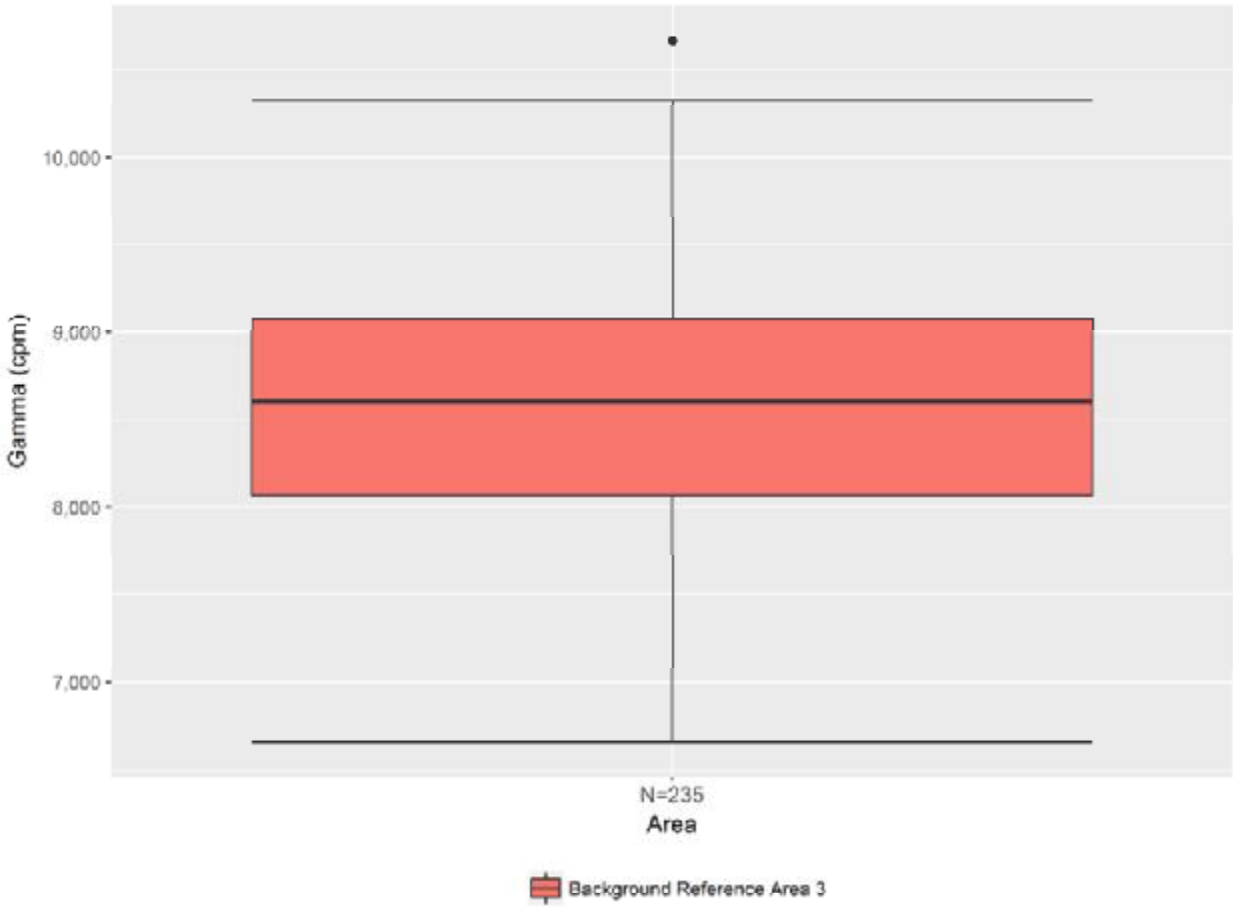

As shown in Figure 2B, there is one potential outlier value shown in the BG-3 gamma dataset; however, it is not very high, represents a very small proportion of the total BG-3 gamma data values, and there is no other compelling rationale to reject the value based on the boxplot evaluation alone.

3.1.2 Probability Plots

The normal probability plot is a graphical technique for assessing whether a data set is approximately normally distributed, and where there may be potential outlier values. The data are plotted against a theoretical normal distribution in such a way that the points, if normally distributed, form an approximate straight line. Curved lines may indicate non-normally or log-normally distributed data, and "S"-shaped lines may indicate two distinct groups within the dataset.

3.1.2.1 Soil Sample Results Probability Plots

Figure 3 depicts the probability plots for metals and Ra-226 results at BG-3.

Figure 3. Background Reference Area 3 (BG-3) Soil Sample Probability Plots

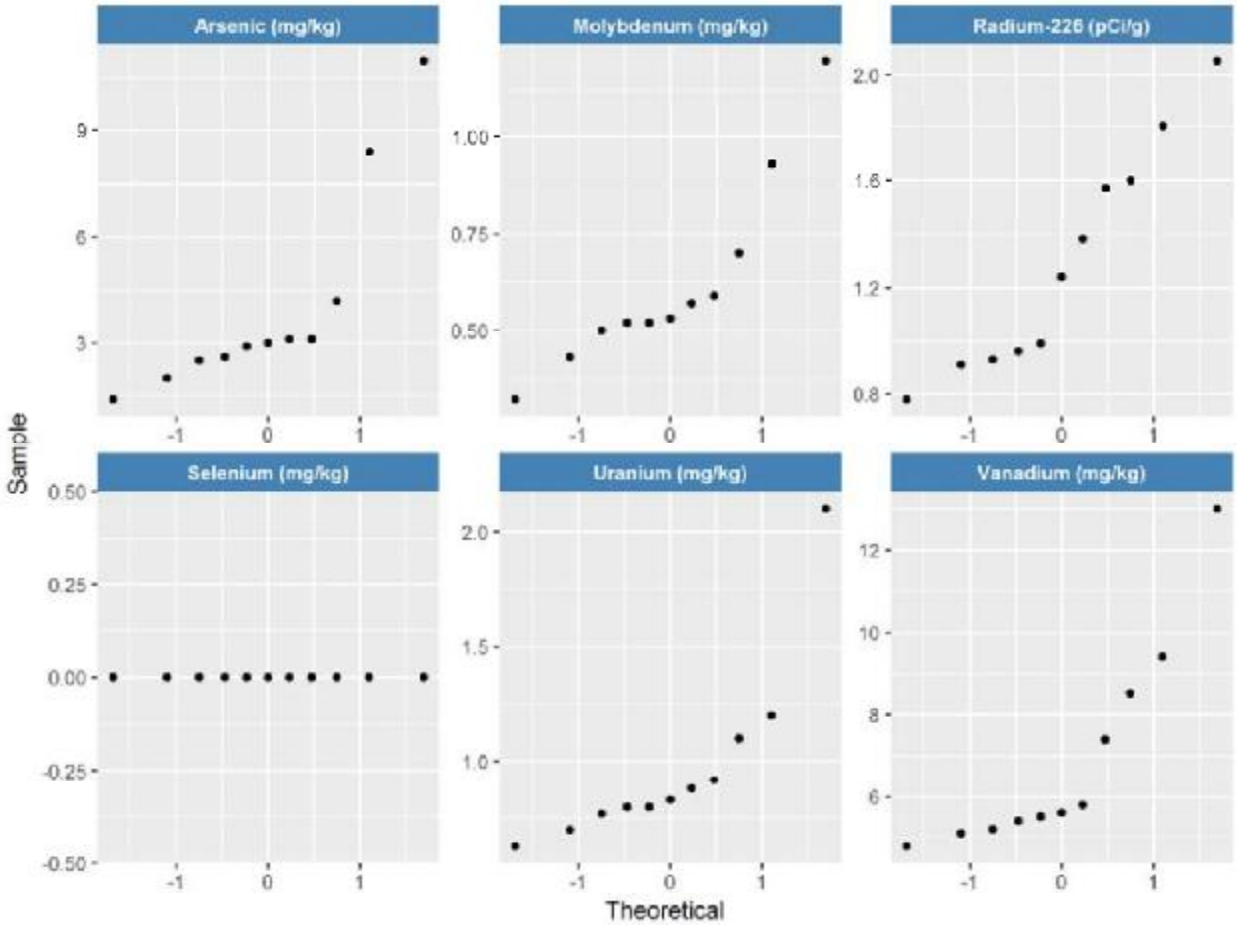

Two values each for arsenic and molybdenum, and one value each for uranium and vanadium were identified as potential outliers in the boxplots in Figure 1B. When viewed in the probability plots in Figure 3, several of these values do appear to be distant from the rest of their respective datasets. These six values were tested for statistical significance in Section 3.1.3. All 11 soil samples at BG-3 were non-detect for selenium (Se).

3.1.2.2 Gamma Survey Results Probability Plots

Figure 4 depicts the probability plots for gamma radiation results at BG-3 and the Survey Area.

Figure 4. Survey Area and Background Reference Area 3 (BG-3) Gamma Probability Plots

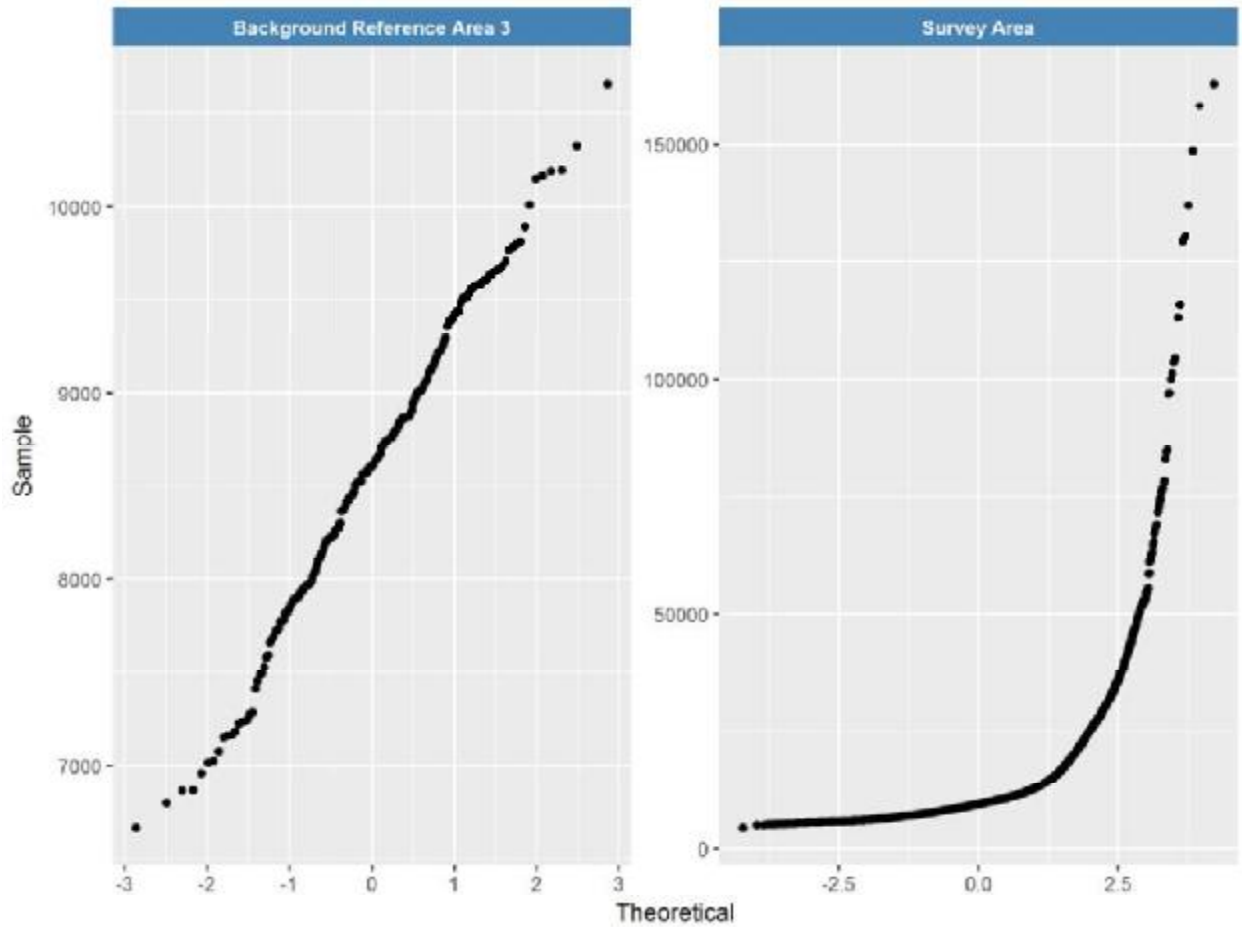

Gamma survey results indicate generally normal distribution of data in BG-3 and likely non-normal distribution in the Survey Area (Figure 4). When viewed in the probability plot, the highest BG-3 gamma value, identified as a potential outlier in the boxplot in Figure 2B, does not appear far removed from, or out of line with, the distribution of the rest of the dataset, suggesting it is representative of BG-3.

The shape and smoothness of the probability plot for the Survey Area gamma results confirms that the gamma radiation data are more log-normally distributed than the BG-3 gamma results. This suggests that these higher values are not potential outlier values but rather are representative of the spatial variability of gamma radiation in the Survey Area. As shown in Figure 4-1 of the RSE Report, there are isolated areas within the Survey Area where elevated gamma measurements were recorded indicating localized areas of higher mineralization.

3.1.3 Potential Soil Sample Data Outliers

Six high results, two values each for arsenic and molybdenum, and one value each for uranium and vanadium, are identified in the boxplots in Figure 1B. These values are:

- Arsenic: 11 mg/kg, 8.4 mg/kg
- Molybdenum: 1.2 mg/kg, 0.93 mg/kg
- Uranium: 2.1 mg/kg
- Vanadium: 13 mg/kg

The highest two arsenic values and the highest uranium value do appear to be potential outliers relative to the rest of their respective datasets when viewed in the probability plots in Figure 3. The molybdenum values and vanadium values appear to conform to the general distribution of their respective BG-3 datasets. However, each of these six values was tested for statistical significance.

Dixon's Test (Dixon, 1953) is designed to be used for datasets containing only one or two potential outlier values. Therefore, Dixon's Test was performed to the 95% confidence level on each of the six soil sample potential outlier values for arsenic, molybdenum, uranium and vanadium in the BG-3 datasets. The results of Dixon's Test are summarized in Table 1.

Table 1. Summary of Dixon's Test on Maximum Values

Constituent	Location ID	Method	Hypothesis	p_Value	Conclusion
As	S239-BG3-002	Dixon Test for potential outliers	high value 11 is a potential outlier	< 0.05	Hypothesis accepted
	239-BG3-009	Dixon Test for potential outliers	high value 8.4 is a potential outlier	< 0.05	Hypothesis accepted
Mo	S239-BG3-002	Dixon Test for potential outliers	high value 1.2 is a potential outlier	< 0.05	Hypothesis accepted
	S239-BG3-011	Dixon Test for potential outliers	high value 0.93 is a potential outlier	> 0.05	Hypothesis rejected
U	S239-BG3-005	Dixon Test for potential outliers	high value 2.1 is a potential outlier	< 0.05	Hypothesis accepted
V	S239-BG3-009	Dixon Test for potential outliers	high value 13 is a potential outlier	> 0.05	Hypothesis rejected

The test confirms that the two highest arsenic values (11 mg/kg and 8.4 mg/kg), the highest molybdenum value (1.2 mg/kg), and the highest uranium value (2.1 mg/kg) are statistically significant (p value <0.05). The statistically significant potential outlier values were further investigated by reviewing sample forms, field notes and laboratory reports. Field staff interviews and field notes indicated nothing abnormal about the locations where these samples were collected, and the laboratory dataset showed that no data quality flags were applied to these values that would call their accuracy into question.

Therefore, while these four values are outside the interquartile range of their respective datasets (Figure 1B), do not appear to conform to their respective dataset distributions in the probability plots (Figure 3), and are deemed potential statistical outliers by Dixon's Test, these values were not removed from the BG-3 datasets because they are considered representative of the natural variation at BG-3, and no scientific reason was found to justify removing them from their respective datasets. However, descriptive statistics were calculated with and without these values for comparison (Section 3.3.1).

3.1.4 Potential Gamma Data Outliers

In the Figure 2B boxplot, one gamma survey potential outlier value is shown for the BG-3 dataset. When viewed in the probability plot in Figure 4, the value appears to conform to the general distribution of the BG-3 gamma dataset (i.e., the data forms a straight line). Because the number of values in the BG-3 gamma dataset is >30, Dixon's Test was not appropriate for testing potential outliers. Instead, because the values appear to be generally normally distributed, it was appropriate to identify potential outliers using Z, t and chi squared scoring methods at the 95% confidence level. These tests were performed in the 'Outliers' package in R (Lukasz Komsta, 2011), and the results are summarized in Table 2. The R programming language complements ProUCL in its ability to provide more meaningful and useful graphics and summarizes the results equivalent to ProUCL. Because ProUCL and R packages follow similar statistical procedures, the results are comparable. The interquartile range evaluation (values outside 1.5 times the interquartile range) results are also provided in Table 2.

Table 2. Potential Gamma Outlier Interquartile Range, Z Score, t Score and Chi Squared Score Results

Value (cpm)	Interquartile Range Result	Z Score Result	t Score Result	Chi Sq Score Result
10,663	High	Potential Outlier	Potential Outlier	Potential Outlier

Cpm Counts per minute

This single potential outlier value represents 0.4 percent of the 235 result dataset. Nothing in the field notes or the gamma data records indicates a scientific reason (e.g., data handling error and equipment malfunction) for this value to be excluded from the dataset, and there is no record of anomalous soil or other material at BG-3. Therefore, this value is considered representative of the natural variation present at the BG-3 area, and there is no basis to remove the value from the BG-3 gamma dataset. However, descriptive statistics were calculated with and without this value for comparison (Section 3.3.2).

Potential outlier values in the gamma dataset for the Survey Area appear in the Figure 2A boxplot. However, because of the non-linear shape and continuous distribution of gamma results shown in the probability plot in Figure 4, these values are thought to be representative of the heterogeneous nature of radioactive materials within the Survey Area and are not outlier values. Indeed, Figure 4-1 of the RSE Report shows that while gamma results for the majority of

the Survey Area are within the range of background, localized areas of elevated gamma results associated with mineralized areas are also present.

3.2 COMPARE DATA POPULATIONS

Group comparison analyses provide insight into the relative concentrations of constituents between a background reference area and the Survey Area. Observations made during these analyses may indicate the need for further evaluation or discussion regarding the influence of potential outlier values, and the use of background data. For instance, if two or more background reference areas were determined to be statistically similar to each other, these data could be combined to calculate more robust statistics (not a factor in this evaluation, as one background reference area was selected to represent the Survey Area). Alternatively, testing of this kind may reveal background concentrations statistically higher than corresponding Survey Area concentrations, requiring additional interpretation or modifications in the use of background reference area datasets. Finally, results of these evaluations are a component of determining background reference area representativeness, though statistical comparisons are not the only factors to be considered in judging representativeness. Factors such as geologic materials, topographic gradient, distance from the site being represented, wind direction and non-impacted condition are all important to the selection of background reference areas.

Group comparisons, therefore, are considered instructive as a component of the overall evaluation of soil sample and gamma radiation survey results collected from BG-3 and the Survey Area. Relative data distributions were investigated by evaluating the boxplots and probability plots in Figures 1A through 4, and by hypothesis testing with the non-parametric Mann-Whitney test, as applicable.

3.2.1 Evaluation of Boxplots

3.2.1.1 Soil Sample Boxplots

When interpreting the soil sample boxplots in Figure 1B, it is important to note that samples at BG-3 were collected randomly, while samples in the Survey Area were collected judgmentally. Observations from the boxplots in Figure 1B indicate:

- Arsenic. Arsenic results appear elevated in the Survey Area with respect to BG-3.
- Molybdenum. Molybdenum results appear elevated in the Survey Area with respect to BG-3.
- Ra-226. Ra-226 results appear elevated in the Survey Area with respect to BG-3.
- Selenium. All results for selenium in BG-3 are non-detect.
- Uranium. Uranium results appear elevated in the Survey Area with respect to BG-3.

- Vanadium. Vanadium results appear slightly elevated in the Survey Area with respect to BG-3, though the boxplots in Figure 1A mostly overlap as a result of larger variance in the Survey Area vanadium results.

3.2.1.2 Gamma Radiation Boxplots and Probability Plots

The boxplot comparison in Figures 2A and 2B suggests that median and interquartile range values are similar between BG-3 and the Survey Area. Gamma radiation data distributions between BG-3 and the Survey Area are not similar (normal vs. non-normal, respectively). These observations are verified in Section 3.2.2 using the non-parametric Mann-Whitney test.

3.2.2 Mann-Whitney Testing

The Mann-Whitney test (Bain and Engelhardt, 1992) is a nonparametric test used for determining whether a difference exists between two or more population distributions. This test is also known as the Wilcoxon Rank Sum (WRS) test. This test evaluates whether measurements from one population consistently tend to be larger (or smaller) than those from another population. This test was selected over other comparative tests such as the Student's t test and analysis of variance (ANOVA) because it remains robust in the absence of required assumptions that these two tests require such as normally distributed data and equality of variances.

Soil samples at BG-3 were collected randomly, while soil samples in the Survey Area were collected judgmentally (see Section 3.1). Mann-Whitney testing is not appropriate for comparative analysis if one or both groups contain data collected using a judgmental approach. Therefore, the Mann-Whitney test was not performed for soil sample data between BG-3 and the Survey Area. Gamma radiation data, however, do represent non-judgmental sampling, and so the Mann-Whitney test was appropriate for comparison between BG-3 and the Survey Area (Table 3). Therefore, the test was performed 2-sided on the BG-3 and Survey Area gamma radiation data. The two-sided test accounts for results from one group being lower or higher than any other group (i.e., the hypothesis tested is whether two groups differ, independent of which group is higher). A test result p-value of 0.05 or smaller indicates that a significant difference exists between any two groups that are compared. Results of Mann-Whitney testing are presented in Table 3.

Table 3. Summary of Gamma Survey Mann-Whitney Test Results

Comparison	p_Value	Description
Background Reference Area 3 (BG-3) vs Survey Area	<0.05	Significant Difference
Background Reference Area 3 (BG-3) vs Background Reference Area 3 (BG-3) Potential Outlier Excluded	0.937	No Significant Difference
Background Reference Area 3 (BG-3) Potential Outlier Excluded vs Survey Area	<0.05	Significant Difference

The results of the Mann-Whitney testing on gamma radiation survey results in Table 3 indicate the following:

- Gamma results are statistically elevated in the Survey Area with respect to BG-3. This result is likely due to the presence of radiation coincident with historic mining activity and waste piles in the northwest portions of the Survey Area. In addition, BG-3 may not fully represent the degree of natural mineralization present at the Survey Area (see RSE Report Section 3.2.2.2 and Appendix D.1). This latter point does not prohibit use of the gamma ILs calculated from BG-3, but this observation should be considered as Site conditions are further evaluated for remediation.
- The inclusion or removal of potential outlier values has no effect on the results of the Mann-Whitney test between BG-3 and the Survey Area (i.e., there is a statistically significant difference in gamma results between BG-3 and the Survey Area with and without potential outlier values included).

3.3 DESCRIPTIVE STATISTICS

Descriptive statistics, including the upper confidence limit (UCL) of the mean and the 95-95 upper tolerance limit (UTL), were calculated from gamma survey data and soil sample results. Descriptive statistics are important for any data evaluation to present the basic statistics of a dataset with regards to its limits (maximum and minimum), central tendencies (mean and median) as well as data dispersion (coefficient of variance). The ILs for the Site also are taken from the descriptive statistics, namely the 95-95 UTL. The UTL value is selected by ProUCL as the maximum value in the dataset when the data are determined to be non-parametric. The parameters and constituents evaluated include gamma radiation, arsenic, molybdenum, selenium, uranium, vanadium, and Ra-226.

Statistics were calculated using Environmental Protection Agency (EPA) ProUCL version 5.1 software. Statistical methodology employed by the software is documented in the *ProUCL Version 5.1 Technical Guide Statistical Software for Environmental Applications for Data Sets with and without Nondetect Observations* (EPA, 2015). In the case of non-detect results, ProUCL does not recommend detection limit substitution methods (e.g., 1/2 the detection limit), considering these methods to be imprecise and out of date (EPA, 2015). The software instead calculates descriptive statistics for the detected results only, and follows various methods accordingly to calculate UCL and UTL values based on the percentage of non-detect results present in the dataset and on the distribution of the data (i.e., normal, lognormal, gamma, or unknown distribution).

Descriptive statistics for soil samples and gamma radiation survey results have been calculated with and without the potential outlier values previously identified, as applicable. Select descriptive statistics for these constituents are presented in Tables 4 and 5.

3.3.1 Soil Sample Analytical Results Summary

Table 4 presents the descriptive statistics output from the ProUCL software for the soil sample results.

Table 4. Summary of Soil Sampling Results

Area	Statistic	Arsenic (mg/kg)	Molybdenum (mg/kg)	Selenium (mg/kg)	Uranium (mg/kg)	Vanadium (mg/kg)	Radium-226 (pCi/g)
Background Reference Area 3 (BG-3) All Data	Total Number of Observations	11	11	11	11	11	11
	Percent Non-Detects	--	--	100%	--	--	--
	Minimum[1]	1.40	0.320	--	0.630	4.80	0.780
	Minimum Detect[2]	--	--	--	--	--	--
	Mean[1]	4.02	0.619	--	0.975	6.88	1.29
	Mean Detects[2]	--	--	--	--	--	--
	Median[1]	3.00	0.530	--	0.830	5.60	1.24
	Maximum[1]	11.0	1.20	--	2.10	13.0	2.05
	Maximum Detect[2]	--	--	--	--	--	--
	Distribution	Lognormal	Gamma	Not Calculated	Gamma	Normal	Normal
	Coefficient of Variation[1]	0.735	0.399	--	0.418	0.367	0.324
	UCL Type	95% H-UCL	95% Adjusted Gamma UCL	Not Calculated	95% Adjusted Gamma UCL	95% Student's-t UCL	95% Student's-t UCL
	UCL Result	6.16	0.795	Not Calculated	1.24	8.26	1.52
	UTL Type	UTL Lognormal	UTL Gamma WH	--	UTL Gamma WH	UTL Normal	UTL Normal
	UTL Result	17.8	1.45	--	2.23	14.0	2.47
Background Reference Area 3 (BG-3) Excluding Potential Outliers[3]	Total Number of Observations	9	10	--	10	--	--
	Minimum[1]	1.40	0.320	--	0.630	--	--
	Mean[1]	2.76	0.561	--	0.863	--	--
	Median[1]	2.90	0.525	--	0.815	--	--
	Maximum[1]	4.20	0.930	--	1.20	--	--
	Distribution	Normal	Normal	--	Normal	--	--
	Coefficient of Variation[1]	0.284	0.291	--	0.201	--	--
	UCL Type	95% Student's-t UCL	95% Student's-t UCL	--	95% Student's-t UCL	--	--
	UCL Result	3.24	0.656	--	0.964	--	--
	UTL Type	UTL Normal	UTL Normal	--	UTL Normal	--	--
	UTL Result	5.13	1.04	--	1.37	--	--
Survey Area	Total Number of Observations	15	15	15	15	15	15
	Percent Non-Detects	--	--	93%	--	--	--
	Minimum[1]	1.20	0.700	--	0.800	3.60	0.540
	Minimum Detect[2]	--	--	1.30	--	--	--
	Mean[1]	8.09	4.55	--	33.2	8.75	20.5
	Mean Detects[2]	--	--	1.30	--	--	--
	Median[1]	4.00	2.50	--	6.20	6.40	3.59
	Maximum[1]	40.0	18.0	--	260	26.0	147
	Maximum Detect[2]	--	--	1.30	--	--	--
	Distribution	Lognormal	Gamma	Not Calculated	Unknown	Gamma	Gamma
	Coefficient of Variation[1]	1.27	1.01	--	2.16	0.624	1.92
	UCL Type	95% H-UCL	95% Adjusted Gamma UCL	Not Calculated	99% Chebyshev (Mean, Sd) UCL	95% Adjusted Gamma UCL	95% Adjusted Gamma UCL
	UCL Result	15.8	7.43	Not Calculated	218	11.6	49.1
	UTL Type	UTL Lognormal	UTL Gamma WH	--	UTL Non-Parametric	UTL Gamma WH	UTL Gamma WH
	UTL Result	59.3	20.4	Not Calculated	260	24.2	148

[1] This statistic is reported by ProUCL when the dataset contains 100 percent detections.
[2] This statistic is reported by ProUCL when non-detect values exist in the dataset. The value reported is calculated using detections only.
[3] No potential outlier values were identified for selenium (100 percent non-detect), vanadium or Ra-226 in this area.

CV Coefficient of variation
KM Kapplan Meier
mg/kg Milligrams per kilogram
-- Not applicable
pCi/g Picocuries per gram
WH Wilson Hilferty

Note: The UTL result that is shown on the table is based on the output from ProUCL. ProUCL evaluates the data and provides all possible UCLs from its UCL module for three possible data distributions, then identifies a recommended UCL value. ProUCL does not identify a recommended UTL value. The UTLs are therefore based on the distribution of the recommended UCL. Please refer to *ProUCL Version 5.1 Technical Guide Statistical Software for Environmental Applications for Data Sets with and without Non-detect Observations* (EPA, 2015) for further information

As described in Section 3.2.1.1, arsenic, molybdenum, uranium, vanadium and Ra-226 results appear elevated in the Survey Area relative to BG-3. Selenium results were 93% non-detect in the Survey Area and all non-detect in BG-3. However, an important consideration when comparing concentrations of metals and Ra-226 between BG-3 and the Survey Area is that the background reference area was selected to be representative of the geology present in the region around the Site, whereas the Site was selected as a mine claim because it is in an area of mineralized bedrock likely to have localized, naturally elevated uranium concentrations (see RSE Report Section 3.2.2.2).

In addition, soil sampling for metals and Ra-226 in the background reference area was conducted in a random manner, whereas soil sampling for metals and Ra-226 in the Survey Area was performed judgmentally. As a result of this sampling approach, it is not surprising that some metals and Ra-226 concentrations in the Survey Area appear to be elevated relative to concentrations in BG-3. It should be noted, however, that concentrations of several of the metals measured in the Survey Area are within the range of metals concentrations typically observed in Western US soils (United States Geological Survey [USGS], 1984):

- Arsenic (mean = 5.5 mg/kg; range <0.10 – 97 mg/kg)
- Molybdenum (mean = 0.85 mg/kg; range <3 – 7 mg/kg)
- Selenium (mean = 0.23 mg/kg; range <0.1 – 4.3 mg/kg)
- Uranium (mean = 2.5 mg/kg; range 0.68 – 7.9 mg/kg)
- Vanadium (mean = 70 mg/kg; range 7 – 500 mg/kg)

A regional background concentration is not available for Ra-226, though concentrations of Ra-226 are expected to track with uranium concentrations.

As shown in Table 4, maximum detected concentrations of arsenic, selenium and vanadium in the Survey Area are within typical ranges reported for Western US soils. Exceptions to the above are molybdenum, uranium and Ra-226; elevated concentrations of these constituents in the Survey Area are likely attributable to residual uranium concentrations and Ra-226 activities associated with mining activity and the historic waste piles in the northwest portions of the Survey Area, as well as a higher degree of natural mineralization within the Survey Area relative to BG-3.

3.3.2 Gamma Radiation Results Summary

Table 5 presents the descriptive statistics output from the ProUCL software for the gamma radiation survey results.

Table 5. Summary of Walk-over Gamma Results

Area	Statistic	Gamma (cpm)
Background Reference Area 3 (BG-3) All Data	Total Number of Observations	235
	Minimum	6,662
	Mean	8,585
	Median	8,606
	Maximum	10,663
	Distribution	Normal
	Coefficient of Variation	0.089
	UCL Type	95% Student's-t UCL
	UCL Result	8,667
	UTL Type	UTL Normal
	UTL Result	9,975
Background Reference Area 3 (BG-3) Excluding Potential Outliers	Total Number of Observations	234
	Minimum	6,662
	Mean	8,576
	Median	8,606
	Maximum	10,323
	Distribution	Normal
	Coefficient of Variation	0.088
	UCL Type	95% Student's-t UCL
	UCL Result	8,657
	UTL Type	UTL Normal
	UTL Result	9,947
Survey Area	Total Number of Observations	40,738
	Minimum	4,427
	Mean	10,568
	Median	9,383
	Maximum	163,071
	Distribution	Normal
	Coefficient of Variation	0.511
	UCL Type	95% Student's-t UCL
	UCL Result	10,611
	UTL Type	UTL Normal
	UTL Result	19,512

cpm Counts per minute
WH Wilson Hilferty

As noted for metals and Ra-226 in Section 3.3.1, gamma results measured within the Survey Area appear to be elevated relative to gamma results measured in BG-3 because the background reference area was selected to represent the geology present in the region around the Site, whereas the Site was selected as a mine claim because it is in an area of mineralized bedrock with localized naturally elevated uranium concentrations. Therefore, it's not surprising that gamma results within the Survey Area are higher than gamma results at BG-3. Elevated gamma results in portions of the Survey Area are attributable to historic waste piles, as well as a higher degree of natural mineralization within the Survey Area relative to BG-3.

4.0 INVESTIGATION LEVELS

The calculated 95-95 UTL values described in Section 3.3 are used as the ILs for gamma measurement results and soil sampling results because they reflect the natural variability in the background data, and provide an upper limit from background data to be used for single-point comparisons to Survey Area data. The calculated ILs are summarized below.

The ILs for analytical results of soil samples and gamma radiation results in the Survey Area are based on the 95-95 UTL values calculated for BG-3, as presented in Tables 4 and 5 in Section 3.3. IL values are as follows:

- Arsenic (mg/kg): 17.8
- Molybdenum (mg/kg): 1.45
- Selenium (mg/kg): None (all results non-detect)
- Uranium (mg/kg): 2.23
- Vanadium (mg/kg): 14.0
- Ra-226 (pCi/g): 2.47
- Gamma radiation measurements (cpm): 9,975

5.0 REFERENCES

Bain, L.J. and Engelhardt, M. (1992). *Introduction to probability and Mathematical Statistics*. Second Edition. Duxbury Press, California.

Dixon, W.J. (1953). *Processing Data for Outliers*. Biometrics 9: 74-89.

EPA, (2015). *ProUCL Version 5.1 Technical Guide Statistical Software for Environmental Applications for Data Sets with and without Nondetect Observations*. https://www.epa.gov/sites/production/files/2016-05/documents/proucl_5.1_tech-guide.pdf

Lukasz Komsta (2011). *Outliers: Tests for outliers*. R package version 0.14. https://CRAN.R-project.org/package=outliers

R Core Team (2016). *R: A language and environment for statistical computing*. R Foundation for Statistical Computing, Vienna, Austria. URL https://www.R-project.org/.

Schiffler, R.E (1998). *Maximum Z scores and outliers*. Am. Stat. 42, 1, 79-80.

H. Wickham (2009). ggplot2: *Elegant Graphics for Data Analysis*. Springer-Verlag New York.

Appendix E Cultural and Biological Resource Clearance Documents

BIOLOGICAL EVALUATION

For the Proposed:

Harvey Blackwater No. 3
Abandon Uranium Mine - Environmental Response Trust Project

Sponsored by:

MWH Global / Stantec

Prepared by:

Adkins Consulting, Inc.
180 East 12th Street, Unit 5
Durango, Colorado 81301

Revised August 2016
June 2016

TABLE OF CONTENTS

1. Introduction and Project Background 1
2. Project Description 1
2.1. Location 1
2.2. Estimated Disturbance 2
3. Affected environment 2
3.1. Proposed Project Area (PPA) 2
4. Threatened, Endangered, and Sensitive Species Evaluation 3
4.1. Methods 3
4.2. ESA-Listed Species Analysis and Results 4
4.3. NESL Species Analysis and Results 8
4.4. Migratory Bird Species 10
5. Effects Analysis 12
5.1. Direct and Indirect Effects 12
5.2. Cumulative Effects 14
6. Conclusions 14
7. Recommendations for avoidance 15
8. Supporting Information 15
8.1. Consultation and Coordination 15
8.2. Report Preparers and Certification 15
8.3. References 16

Appendix A. Maps
Appendix B. Photographs
Appendix C. Redente Plant Survey Report
Appendix D. NESL Letter

This page intentionally left blank.

1. INTRODUCTION AND PROJECT BACKGROUND

The federal Endangered Species Act (ESA) of 1973, 16 U.S.C. §1531 et seq., requires all federal departments and agencies to conserve threatened, endangered, and critical and sensitive species and the habitats on which they depend, and to consult with the U.S. Fish and Wildlife Service (USFWS) on all actions authorized, funded, or carried out by each agency to ensure that the action will not likely jeopardize the continued existence of any threatened and endangered species or adversely modify critical habitat [USFWS 1998]. This report describes the potential for federal ESA-listed species and Navajo Nation Endangered Species List (NESL) endangered, threatened, candidate, or otherwise designated sensitive flora and fauna to occur in the proposed action area. The action area with regard to the ESA is defined as any area that may be directly or indirectly impacted by the proposed action [50 CFR §402.02]. This report is intended to provide the responsible official with information to make determinations of effect on species with special conservation status.

As the result of settlement by the United States, the Navajo Nation AUM Environmental Response Trust—First Phase was established to evaluate certain abandoned uranium mines located across the Navajo Nation. The project requires investigation of these sites prior to potential remediation activities in the future. MWH Global, a division of Stantec (MWH), will conduct exploratory activities at the Harvey Blackwater No. 3 abandoned uranium mine (AUM) such as pedestrian gamma surveys, mapping, well sampling, and surface soil sampling within the mine claim boundaries and surrounding buffer zone. Subsequent earthwork and long term monitoring may be involved after final approval by the Navajo Nation Environmental Protection Agency (NNEPA) in conjunction with the U. S. Environmental Protection Agency (USEPA).

In support of this project, MWH contracted Adkins Consulting, Inc. (ACI) to conduct surveys for ESA-listed fauna and Navajo Nation Endangered Species List (NESL) endangered, threatened, candidate, or otherwise designated sensitive fauna. MWH contracted Redente Ecological Consultants (Redente) to conduct surveys for NESL and ESA-listed plant species. The results of the 2016 Redente biological investigations will be incorporated in Sections 4.2 and 4.3 of this report and can be found in entirety attached as Appendix C. The objectives of the biological surveys were as follows:

- To compile a list of ESA-listed or NESL species potentially occurring in the proposed action area.
- To provide a physical and biological description of the proposed action area.
- To determine the presence of ESA-listed or NESL species in the proposed action area.
- To assess potential impacts the proposed action may have on any ESA-listed or NESL species present in the area.
- To assess potential impacts to species protected under the Migratory Bird Treaty Act (MBTA).

2. PROJECT DESCRIPTION

2.1. Location

Harvey Blackwater No. 3 is located in both Apache County, Arizona and San Juan County, Utah, approximately 14 miles northwest of Mexican Water, Arizona at an elevation of approximately 4,772 feet. Global Positioning System coordinates are 36° 59.980’ N by 109° 50.372’ W NAD 83. The site is located on Navajo Tribal Trust Lands within the Bureau of Indian Affairs (BIA) Tuba City Agency. The legal description of the project surface location is as follows: Section 3, Township 41 North, Range 23 East, Gila and Salt River Principal Meridian; and Section 32, Township 43 South, Range 19 East, Salt Lake Principal Meridian. Project area maps are provided in Appendix A.

2.2. Estimated Disturbance

MWH proposes a phased approach to scientific investigations at the Harvey Blackwater No. 3 AUM. The study area encompasses the claim boundary and a 100-foot perimeter buffer zone for a total of approximately 23.2 acres. Please refer to Appendix A for maps delineating the mine claim boundary and buffer zone.

The project will also include a walkover survey for gamma radiation across a small area known as the "background area". Please refer to Appendix A for a map of the background sample areas. A few soil samples approximately 3 inches in diameter and up to 6 inches deep will be collected by hand in these areas.

- Phase I: Spring of 2016 activity would entail pedestrian biological surveys and land surveying. Fall of 2016 work would entail pedestrian activity including gamma surveys, mapping, well sampling, and surface soil sampling. In 2016 there will be a maximum of 5 people onsite for no more than 5 to 7 days. Surface disturbance would be minimal and noise would be light.

- Phase II: Beginning in 2017, equipment including an excavator or small mobile drilling unit may be used to collect one or more soil samples. Up to 8 people may be onsite all day for a period of one week. Equipment travel would be confined to a temporary travel corridor approximately 20 feet in width. Within the travel corridor, vegetation and surface soil would sustain some disturbance but would not be bladed or bulldozed. During Phase II, noise may be moderate for a short duration, and surface disturbance will be light to moderate but confined to a minimal footprint within the study area. No permanent structures will be left on site.

3. AFFECTED ENVIRONMENT

3.1. Proposed Project Area (PPA)

The proposed project area (PPA) at Harvey Blackwater No. 3 includes the mine boundary and a 100-foot perimeter buffer zone for a total of approximately 23.2 acres. The affected environment or action area includes any area that may be directly or indirectly impacted by the proposed activities. Project area maps are provided in Appendix A.

3.1.1. Environmental Setting

Project activities would occur in northern Arizona / Southern Utah located within the USEPA designated Colorado Plateau Level III Ecoregion. The Colorado Plateau ecoregion is located Utah and Colorado with extensions in New Mexico and Arizona. It has an area of 32,387 square miles. The Colorado Plateau is an uplifted, eroded, and deeply dissected tableland. Its benches, mesas, buttes, salt valleys, cliffs, and canyons are formed in and underlain by thick layers of sedimentary rock. The ecoregion has a broad latitudinal range, from the Uinta Basin in the north to the arid canyon lands along the border of Arizona and New Mexico.

Harvey Blackwater No. 3 is situated in gently rolling sagebrush terrain between Genevieve's Arch and Yazzie Mesa to the southwest and Garnet Ridge to the east. Small weathered sandstone outcrops are located just west and southwest of the PPA boundary, and Indian Service Route 6440 as well as several other dirt roads are located within 1000 feet of the site.

Flora

Vegetation communities found within the region include shrublands with big sagebrush, rabbitbrush, winterfat, shadscale saltbush, and greasewood; and grasslands of blue grama, Western wheatgrass, green needlegrass, and needle-and-thread grass. Higher elevations may support piñon pine and juniper woodlands. The Harvey Blackwater No. 3 site is sparsely vegetated shrubland with patches of bare ground and previous disturbance.

Fauna

Wildlife or evidence of wildlife observed within the PPA included common raven (*Corvus corax*) and cottontail rabbit (S*ylvilagus* sp.). No signs of consistent raptor use such as whitewash or nests were observed. No prairie dog (*Cynomys* sp.) burrows were recorded within the PPA or immediate vicinity. Further analysis of sensitive species can be found in Section 4 of this document.

Hydrology/Wetlands

Under Executive Orders 11988 and 11990, Federal agencies are required to minimize the destruction, loss, or degradation of wetlands and floodplains, and preserve and enhance their natural and beneficial values. These habitats should be conserved through avoidance, or mitigated to ensure that there would be no net loss of wetlands function and value.

Run-off from precipitation in the project area generally drains into Cane Valley Wash approximately 1.3 miles south of the PPA. Cane Valley Wash joins the San Juan River near Mexican Hat, Utah approximately 12 miles northwest of the PPA. The nearest perennial / intermittent water source is Chinle Creek, approximately 7.5 miles east of the PPA. There are no wetlands, seeps, springs, or riparian areas within the proposed project area. The proposed project activities would contribute to a negligible increase in sedimentation down gradient of the project area. This increase is not anticipated to be a factor due to the distance from perennial waters. There is no suitable habitat for ESA-listed fish, nor critical habitats thereof, within 12 miles of the PPA.

Cumulative impacts to surface waters would be negligible. Surface-disturbing activities other than the proposed action that may cause accelerated erosion include, but are not limited to, construction of roads, other facilities, and installation of trenches for utilities; road maintenance such as grading or ditch-cleaning; public recreational activities; vegetation manipulation and management activities; natural and prescribed fires; and livestock grazing. Because the proposed action would have a negligible impact to downstream surface water quality, the cumulative impact also would be negligible when added to other past, present, and reasonably foreseeable activities.

4. THREATENED, ENDANGERED, AND SENSITIVE SPECIES EVALUATION

The Endangered Species Act (ESA) of 1973 requires all federal departments and agencies to conserve threatened, endangered, and critical and sensitive species and the habitats on which they depend, and to consult with the U.S. Fish and Wildlife Service (USFWS) on all actions authorized, funded, or carried out by the agency to ensure that the action will not likely jeopardize the continued existence of any threatened and endangered species or adversely modify critical habitat.

4.1. Methods

4.1.1. Off-site Methods

Prior to conducting fieldwork, ACI compiled data on animal species listed under the ESA. Informal consultation was initiated by requesting an Official Species List from the USFWS Information, Planning, and Conservation System (IPaC) website (http://ecos.fws.gov/ipac/). ACI received the Official Species Lists (02EAAZ00-2016-SLI-0356 and 06E23000-2016-SLI-0207) on April 7, 2016. See Table 1 for USFWS-listed threatened, endangered, or candidate species with potential to occur in the PPA.

The Navajo Nation Department of Fish and Wildlife (NNDFW), Navajo Natural Heritage Program (File # 15mwh101) sent MWH a NESL information letter dated 29 December, 2015. The letter suggests biologists determine habitat suitability within the project area for the provided list of species of concern with potential to occur on the 7.5-minute quadrangles containing the project boundaries. The Navajo species of concern listed in the NESL information letter are included in Table 2.a below.

In addition to the above listed species, ACI reviewed species protected under the MBTA with potential to occur in the proposed project and action area (Table 3).

4.1.2. On-site Survey Methods

An on-site pedestrian survey was conducted in March 2016 by ACI personnel under a permit issued by NNDFW. The purpose of the survey was to assess habitat potential for ESA-listed or NESL animal species. Field biologists with considerable experience identifying local wildlife species lead survey crews. The survey consisted of walking transects ten feet apart throughout the PPA including a survey buffer of approximately 50 feet beyond the PPA edge of disturbance. The surrounding areas were visually inspected with binoculars for nests, raptors, or past signs of raptor use. Weather conditions were clear with a slight breeze. All plant and wildlife species observed in the action area were recorded, and digital photos were taken (Appendix B).

Redente conducted surveys for plant species of concern. The results of the 2016 Redente biological investigations will be incorporated in Sections 4.2 and 4.3 of this report and can be found in entirety attached as Appendix C.

4.2. ESA-Listed Species Analysis and Results

4.2.1. Species from the USFWS IPaC Official Species List

Table 1 includes ESA-listed species that have the potential to occur in the project area based on the USFWS IPaC Official Species List. Biologists evaluated habitat suitability within and surrounding the PPA for the species in Table 1.

Table 1: USFWS Species List for the Harvey Blackwater No. 3 Project

Species	Status	Occurrence Within Region	Habitat	Potential to Occur within Action Area
BIRDS				
Southwestern Willow Flycatcher (*Empidonax traillii extimus*)	Endangered with Designated Critical Habitat	Summer/breeding range.[2]	Breeds in dense riparian habitat.[2]	No potential. Action area does not provide suitable habitat for species to occur.
Mexican spotted owl (*Strix occidentalis lucida*)	Threatened with Designated Critical Habitat	Year-round range.[1]	Mixed conifer forests. Typically where unlogged, uneven-aged, closed-canopy forests occur in steep canyons.[1]	No potential. Action area does not provide suitable habitat for species to occur.
Western Yellow-Billed Cuckoo (*Coccyzus americanus*)	Threatened	Possible rare summer/breeding occurrences.[2]	In the southwestern U.S., associated with riparian woodlands dominated by cottonwood or willow trees. In New Mexico, native or exotic species may be used.[2]	No potential. Action area does not provide suitable habitat for species to occur.

Table 1: USFWS Species List for the Harvey Blackwater No. 3 Project

Species	Status	Occurrence Within Region	Habitat	Potential to Occur within Action Area
California condor *(Gymnogyps californianus)*	Experimental Population, NonEssential	In northern Arizona, condors are located primarily near the Vermilion cliffs, Grand Canyon and Coconnino County.[3]	Large areas of remote country for foraging, roosting, and nesting. Roost on large trees or snags, or on isolated rocky outcrops and cliffs. Nests are located in shallow caves and rock crevices on cliffs where there is minimal disturbance. Foraging habitat includes open grasslands and oak savanna foothills that support populations of large mammals such as deer and cattle.[1]	No potential. Action area does not provide suitable habitat for species to occur.
Gunnison sage-grouse *(Centrocercus minimus)*	Threatened	Utah population is near Monticello[1]	Sagebrush with a diversity of grasses and forbs and healthy wetland and riparian ecosystems. Requires sagebrush for cover and fall and winter food.	No potential. Action area does not provide suitable habitat for species to occur. Significant sagebrush, diverse forbs, grasses and wetland habitat is lacking. Previous disturbance in the area is also a limiting factor.
FISHES				
Roundtail chub *(Gila robusta)*	Proposed Threatened	San Juan and Mancos Rivers. Rarely found in recent surveys; some found from Shiprock to near Lake Powell with most between Shiprock and Aneth. [2,3]	Rocky runs, rapids, and pools of creeks and small to large rivers; also large reservoirs in the upper Colorado River system.[2]	No potential. No perennial waters in or near the PPA. Action area is within the San Juan River watershed; however, negligible effects from the project to any drainage system are expected.

Table 1: USFWS Species List for the Harvey Blackwater No. 3 Project

Species	Status	Occurrence Within Region	Habitat	Potential to Occur within Action Area
Colorado pikeminnow *(Ptychocheilus lucius)*	Endangered	Upper Colorado River from WY to NM. On the Navajo Nation documented throughout the San Juan River (SJR), from Shiprock to Lake Powell; mouth of the Mancos River used during spring runoff.[3]	Backwaters and flooded riparian areas during spring runoff, and migrate large distances (15-64 km in the SJR) to spawn in riffle-run areas with cobble/gravel substrates. Young-of-year use warm backwaters along shorelines. Irrigation canals and ponds connected to SJR may be potential habitat.[3]	No potential. No perennial waters in or near the PPA. Action area is within the San Juan River watershed; however, negligible effects from the project to any drainage system are expected.
Zuni Bluehead Sucker (*Catostomus discobolus yarrowi*)	Endangered	Native to headwater streams of the Little Colorado River in east-central AZ and west-central NM; current range in NM is limited to the upper Río Nutria drainage.[2]	Low-velocity pools and pool-runs with seasonally dense perilithic and eriphytic algae, particularly shady, cobble/boulder/bedrock substrates in streams with frequent runs and pools.[2]	No potential. Action area does not provide suitable habitat for species to occur.
Greenback Cutthroat trout *(Oncorhynchus clarki stomias)*	Threatened	San Juan County Utah[1]	Cold water streams and cold water lakes with adequate stream spawning habitat present during spring. Generally require clear, cold, well-oxygenated water.[1]	No potential. No perennial waters in or near the PPA. Action area is within the San Juan River watershed; however, negligible effects from the project to any drainage system are expected.
Razorback sucker *(Xyrauchen texanus)*	Endangered	Known to occur in San Juan River.[2]	Slow areas, backwaters, and eddies of medium to large rivers and their impound-ments. Often associated with sand, mud, and rock substrate in areas with sparse aquatic vegetation, where temperatures are moderate to warm.[2]	No potential. No perennial waters in or near the PPA. Action area is within the San Juan River watershed; however, negligible effects from the project to any drainage system are expected.
PLANTS				

Table 1: USFWS Species List for the Harvey Blackwater No. 3 Project

Species	Status	Occurrence Within Region	Habitat	Potential to Occur within Action Area
Navajo sedge *(Carex specuicola)*	Threatened	From the Navajo Creek drainage in Coconino Co, east to the Tsegi Canyon Watershed in Navajo Co, south to the Rock Point/Mexican Water & Canyon de Chelly National Monument, Apache Co, AZ area. Also known from Chinle Creek, San Juan Co, UT.[3]	Typically found in seeps and hanging gardens, on vertical sandstone cliffs and alcoves. Known populations occur from 4600ft to 7200ft.[3]	No potential. Action area does not provide suitable habitat for species to occur. No species found during the 2016 Redente surveys.[5]
Welsh's milkweed *(Asclepias welshii)*	Threatened	In Apache County, from Kayenta east to highway 191and north to the Utah boarder.[1]	Coral pink sand dunes.[1]	No potential. Action area does not provide suitable habitat for species to occur. No species found during the 2016 Redente surveys.[5]
MAMMALS				
Black-Footed ferret *(Mustela nigripes)*	Experimental Population, Non-Essential	Reintroduced into Coconino County.[1]	Open habitat, including grasslands, steppe, and shrub steppe. Closely associated with prairie dog colonies. At least 40 hectares of prairie dog colony required to support one ferret.[2]	No potential. Action area does not provide suitable habitat for species to occur. Action area does not provide prairie dog colonies of sufficient size
Gray wolf *(Canis lupus)*	Proposed Experimental Population, NonEssential	In NE AZ, South of Hwy 60 in Apache, Coconino, and Navajo County; In NW NM, south of I-40 in Cibola, McKinley and Catron County.[2]	Not limited to any particular habitat type. Viable populations occur only where human population density and persecution level are low and prey densities are high. Birthing dens may be on bluffs or slopes among rocks or in enlarged badger holes. In Arizona and New Mexico, diet includes primarily elk and sometimes livestock, deer, rodents, or lagomorphs.[2]	No potential. Action area is outside of range for this species. No dens suitable for this species were found in the action area. Lack of prey density also a limiting factor.
REPTILES				

Table 1: USFWS Species List for the Harvey Blackwater No. 3 Project

Species	Status	Occurrence Within Region	Habitat	Potential to Occur within Action Area
Northern Mexican gartersnake *(Thamnophis eques megalops)*	Threatened	Most of AZ; In SE NM including Carton, Grant and Hildago County [2]	Considered a riparian obligate except during dispersal behavior. Occurs chiefly in the following general habitat types: (1) Source-area wetlands [e.g., cienegas (mid-elevation wetlands with highly organic, reducing (basic or alkaline) soils), stock tanks (small earthen impoundment, etc.]; (2) large river riparian woodlands and forest; and (3) streamside gallery forests (as defined by well-developed broadleaf deciduous riparian forests with limited, if any, herbaceous ground cover or dense grass). Occurs at elevations from 130 to 8,497 (ft).	No potential. Action area does not provide suitable habitat for species to occur.

[1]USFWS; [2]NatureServe Explorer; [3]Navajo Endangered Species List, Species Accounts 2008, [4] IUCN Red List, [5]Redente 2016

4.2.2. ESA-Listed Species Eliminated From Further Consideration

Table 1 includes fifteen (15) ESA-listed species that may occur in the project area based on the USFWS IPaC Official Species Lists. All of the species in Table 1 have been eliminated from further discussion in this report. None of the species in Table 1 were observed during surveys of the proposed project area or immediate surroundings.

4.3. NESL Species Analysis and Results

4.3.1. Navajo Endangered Species List (NESL) and Species of Concern

Table 2.a lists species of concern with potential to occur on the 7.5-minute quadrangle(s) containing the project boundaries. According to the NESL information letter received from the NFWD found in Appendix D, Golden eagle (*Aquila chrysaetos*) are known to occur within 1-mile of the project site and Parish's Alkali Grass (*Puccinellia parishii*) within 3-miles of the project site. Biologists evaluated the potential for species of concern listed in the table below to occur within the project area.

Additionally, the NESL information letter requested that the potential for black-footed ferret (*Mustela nigripes*) be evaluated if prairie dog towns of sufficient size (per NFWD guidelines) occur in the project area, and that potential for Parish's alkali grass (*Puccinellia parishii*) be evaluated if wetland conditions exist that contain white alkaline crusts. Species listed by the USFWS in Table 1 are not reiterated here.

Table 2.a: Navajo Endangered Species List (NESL) and Species of Concern

Species	Status	Habitat Associations	Potential to Occur in Project or Action Area
ANIMALS			
Kit fox (*Vulpes macrotis*)	NESL G4	Desert grassland or desert scrub w/ soft, alluvial or silty-clay soils often w/ sparse shrubs and grasses.[3,4]	No potential. Action area does not provide suitable habitat for species to occur.
Black-footed ferret (*Mustela nigripes*)	USFWS Endangered	Open habitat, including grasslands, steppe, and shrub steppe. Closely associated with prairie dog colonies. At least 40 hectares of prairie dog colony required to support one ferret.[1]	No potential. Action area does not provide suitable habitat for species to occur. Action area does not provide prairie dog colonies of sufficient size
Western burrowing owl (*Athene cunicularia hypugaea*)	NESL G4	Open grasslands and sometimes other open areas (such as vacant lots). Nests in abandoned burrows, such as those dug by prairie dogs.[3,4]	No potential. Action area does not provide suitable habitat for species to occur.
American peregrine falcon (*Falco peregrinus*)	NESL G4 NM-T	Nest in ledges or potholes on cliffs in wooded/forested habitats; Forage over riparian woodlands, coniferous & deciduous forests, shrublands, prairies.	No potential. Action area does not provide suitable habitat for species to occur.
Golden eagle (*Aquila chrysaetos*)	NESL G3	In the west, mostly open habitats in mountainous, canyon terrain. Nests primarily on cliffs.[1,3]	Action area provides suitable foraging habitat for species to occur.
PLANTS			
Parish's alkali grass (*Puccinellia parishii*)	NESL G4 NM-E	Alkaline springs, seeps, and seasonally wet areas that occur at the heads of drainages or on gentle slopes. Elevation: 2600-7200 feet.[2,3]	No potential. Action area does not provide suitable habitat for species to occur. No species found during the 2016 Redente surveys.[5]
Rydberg's Thistle (*Cirsium rydbergii*)	NESL G4	Hanging gardens, seeps and sometimes stream banks below hanging gardens, 3300-6500 ft.[3]	No potential. Action area does not provide suitable habitat for species to occur. No species found during the 2016 Redente surveys.[5]
Cave Primrose (*Primula specuicola*)	NESL G4	Hanging gardens and occasionally streamsides below; mainly in alcoves in Entrada and Navajo Sandstone formations at 3500 to 7200ft. [3]	No potential. Action area does not provide suitable habitat for species to occur. No species found during the 2016 Redente surveys.[5]
Alcove Bog-orchid (*Platanthera zothecina*)	NESL G3	Seeps, hanging gardens, and moist stream areas from the desert shrub to pinion-juniper & Ponderosa pine/mixed conifer communities. Known populations occur between 4000 and 7200ft elevation. [3]	No potential. Action area does not provide suitable habitat for species to occur. No species found during the 2016 Redente surveys.[5]
Alcove Death Camass (*Zigadenus vaginatus*)	NESL G3	Hanging gardens in seeps and alcoves, mostly on Navajo Sandstone, 3700 – 6700ft. [3]	No potential. Action area does not provide suitable habitat for species to occur. No species found during the 2016 Redente surveys.[5]

Species	Status	Habitat Associations	Potential to Occur in Project or Action Area

Species are listed by the NESL as; Group 2: Endangered (survival or recruitment in jeopardy); Group 3: Endangered (survival or recruitment in jeopardy in foreseeable future); and Group 4: Species of Consideration. NESL Species with New Mexico State Endangered or Threatened status are labeled as NM-T or NM-E.

Sources: Sources: [1]New Mexico Natural Heritage Program 2010, [2]NatureServe Explorer; [3]Navajo Endangered Species List, Species Accounts 2008, [4] IUCN Red List, [5]Redente 2016, [6] Hammerson et al 2004.

4.3.2. NESL Species Eliminated From Further Consideration

Table 2.a includes ten (10) NESL and Navajo Species of Concern that have the potential to occur in the project area based on general geographical association. The following species have been eliminated from further discussion in this report because the action area does not provide suitable habitat for them to occur: Kit fox (*Vulpes macrotis*), Black-footed ferret (*Mustela nigripes*), Western burrowing owl (*Athene cunicularia hypugaea*), American peregrine falcon (*Falco peregrinus*), Parish's alkali grass (*Puccinellia parishii*), Rydberg's Thistle (*Cirsium rydbergii*), Cave Primrose (*Primula specuicola*), Alcove death camass (*Zigadenus vaginatus*), and Alcove bog orchid (*Platanthera zothecina*). None of these species were observed during surveys of the proposed project area or immediate surroundings. There would be no direct, indirect or cumulative impacts to these species.

4.3.3. NESL Species Warranting Further Analysis

Table 2.b lists NESL and Navajo Species of Concern with potential to occur within the proposed project area based on habitat suitability or actual record of observation.

Table 2.b: NESL and Navajo Species of Concern Warranting Further Analysis

Species	Status	Habitat Associations	Potential to Occur in Project or Action Area
ANIMALS			
Golden eagle (*Aquila chrysaetos*)	NESL G3	In the west, mostly open habitats in mountainous, canyon terrain. Nests primarily on cliffs.[1,3]	Action area provides suitable foraging habitat for species to occur.

Species are listed by the NESL as; Group 2: Endangered (survival or recruitment in jeopardy); Group 3: Endangered (survival or recruitment in jeopardy in foreseeable future); and Group 4: Species of Consideration. NESL Species with New Mexico State Endangered or Threatened status are labeled as NM-T or NM-E.

Sources: Sources: [1]New Mexico Natural Heritage Program 2010, [2]NatureServe Explorer; [3]Navajo Endangered Species List, Species Accounts 2008, [4] IUCN Red List, [5]Redente 2016, [6] Hammerson et al 2004.

4.4. Migratory Bird Species

The Migratory Bird Treaty Act (MBTA) implements various treaties and conventions between the U.S. and Canada, Japan, Mexico and the former Soviet Union for the protection of migratory birds. Under the Act, taking, killing or possessing migratory birds is unlawful.

The bald eagle (*Haliaeetus leucocephalus*) was delisted under the ESA on August 9, 2007. Both the bald eagle and golden eagle (*Aquila chrysaetos*) are still protected under the MBTA and Bald and Golden Eagle Protection Act (BGEPA). The BGEPA affords both eagles protection in addition to that provided by the MBTA, in particular, by making it unlawful to "disturb" eagles.

In preparation for conducting the migratory bird survey, information from the New Mexico Partners In Flight website (http://www.hawksaloft.org/pif.shtml), the New Mexico PIF highest priority list of species of concern by vegetation type, the USFWS's Division of Migratory Bird Management website (http://www.fws.gov/migratorybirds/), and the 2002 Birds of Conservation Concern Report for the Southern Rockies/Colorado Plateau Bird Conservation Region (BCR) No. 16, were used to develop a list of high priority migratory bird species with potential to occur in the area of the proposed action. Species addressed previously will not be reiterated here.

Table 3: Priority Birds of Conservation Concern with Potential to Occur in the Project Area

Species Name	Habitat Associations	Potential to Occur in the Project Area
Black-throated sparrow (*Amphispiza bilineata*)	Xeric habitats dominated by open shrubs with areas of bare ground.	Suitable habitat is present within the action area for species to occur.
Brewer's sparrow (*Spizella breweri*)	Closely associated with sagebrush, preferring dense stands broken up with grassy areas.	No suitable habitat is present within the action area for species to occur.
Gray vireo (*Vireo vicinior*)	Open stands of piñon pine and Utah juniper (5,800 – 7,200 ft) with a shrub component and mostly bare ground; antelope bitterbrush, mountain mahogany, Utah serviceberry and big sagebrush often present. Broad, flat or gently sloped canyons, in areas with rock outcroppings, or near ridge-tops.	No suitable habitat is present within the action area for species to occur.
Loggerhead shrike (*Lanius ludovicianus*)	Open country interspersed with improved pastures, grasslands, and hayfields. Nests in sagebrush areas, desert scrub, and woodland edges.	Suitable habitat is present within the action area for species to occur.
Mountain bluebird (*Sialia currucoides*)	Open piñon-juniper woodlands, mountain meadows, and sagebrush shrublands; requires larger trees and snags for cavity nesting.	No suitable habitat is present within the action area for species to occur.
Mourning dove (*Zenaida macroura*)	Open country, scattered trees, and woodland edges. Feeds on ground in grasslands and agricultural fields. Roost in woodlands in the winter. Nests in trees or on ground.	Suitable habitat is present within the action area for species to occur.
Sage sparrow (*Amphispiza belli*)	Large and contiguous areas of tall and dense sagebrush. Negatively associated with seral mosaics and patchy shrublands and abundance of greasewood.	No suitable habitat is present within the action area for species to occur.
Sage thrasher (*Oreoscoptes montanus*)	Shrub-steppe dominated by big sagebrush.	Marginal habitat is present within the action area for species to occur. Lack of significant sagebrush shrubland likely a limiting factor.
Scaled quail (*Callipepla squamata*)	Brushy arroyos, cactus flats, sagebrush or mesquite plains, desert grasslands, Plains grasslands, and agricultural areas. Good breeding habitat has a diverse grass composition, with varied forbs and scattered shrubs.	No suitable habitat present within the action area for species to occur. Lack of diverse grass composition with varied forbs likely a limiting factor.

Swainson's hawk (*Buteo swainsoni*)	A mixture of grassland, cropland, and shrub vegetation; nests on utility poles and in isolated trees in rangeland. Nest densities higher in agricultural areas.	No suitable habitat present within the action area for species to occur.
Vesper sparrow (*Pooecetes gramineus*)	Dry montane meadows, grasslands, prairie, and sagebrush steppe with grass component; nests on ground at base of grass clumps.	No suitable habitat present within the action area for species to occur. Lack of significant grassland/prairie component a limiting factor.
Bald eagle (*Haliaeetus leucocephalus*)	Near lakes, rivers and cottonwood galleries. Nests near surface water in large trees. May forage terrestrially in winter	No suitable habitat present within the action area for species to occur.
Bendire's thrasher (*Toxostoma bendirei*)	Typically inhabits sparse desert shrubland & open woodland with scattered shrubs; breeds in scattered locations in central & western portions of NM; most common in southwest NM.	Suitable habitat is present within the action area for species to occur. However, likely out of species typical range.
Piñon jay (*Gymnorhinus cyanocephalus*)	Foothills throughout CO and NM wherever large blocks of piñon-juniper woodland habitat occurs.	No suitable habitat present within the action area for species to occur.
Prairie falcon (*Falco mexicanus*)	Arid, open country, grasslands or desert scrub, rangeland; nests on cliff ledges, trees, power structures.	Action area provides potential foraging habitat for species to occur.
Ferruginous hawk (*Buteo regalis*)	Breed in open country, usually prairies, plains and badlands; semi- desert grass-shrub, sagebrush-grass & piñon-juniper plant associations.	No suitable habitat present within the action area for species to occur.
Mountain plover (*Charadrius montanus*).	Typically nests in flat (<2% slope) to slightly rolling expanses of grassland, semi-desert, or badland, in an area with short, sparse vegetation, large bare areas (often >1/3 of total area), and that is typically disturbed (e.g. grazed); may also nest in plowed or fallow cultivation fields. Nest is a scrape in dirt often next to a grass clump or old cow manure pile. Migration habitat is similar to breeding habitat.	No suitable habitat present within the action area for species to occur.

5. EFFECTS ANALYSIS

Effects or impacts can be either long term (permanent or residual) or short term (incidental or temporary). Short-term impacts affect the environment for only a limited period and then the environment reverts rapidly back to pre-action conditions. Long-term impacts are substantial and permanent alterations to the pre-existing environmental condition. Direct effects are those effects that are caused by the action and occur in the same time and place as the action. Indirect effects are those effects that are caused by or will result from the proposed action and are later in time but still reasonably certain to occur (USFWS 1998).

5.1. Direct and Indirect Effects

The PPA encompasses the claim boundary and a 100-foot perimeter buffer zone for a total of approximately 23.2 acres. The project will also include a walkover survey for gamma radiation across a small area known as the "background area" (see Appendix A for map). A few soil samples approximately

3 inches in diameter and up to 6 inches deep will be collected by hand in these areas. The proposed action would result in a short term increase in human activity within the PPA at varying degrees depending on the project phase:

- Phase I: Spring of 2016 activity would entail pedestrian biological surveys and land surveying. During 2016, work would entail pedestrian activity including gamma surveys, mapping, well sampling, and surface soil sampling. For this phase, there will be a maximum of 5 people onsite for no more than 5 to 7 days. Surface disturbance would be minimal and noise would be light.

- Phase II: Beginning in 2017, equipment including an excavator or small mobile drilling unit may be used to collect one or more soil samples. Up to 8 people may be onsite all day for a period of one week. Equipment travel would be confined to a temporary travel corridor approximately 20 feet in width. Within the travel corridor, vegetation and surface soil would sustain some disturbance but would not be bladed or bulldozed. During Phase II, noise may be moderate for a short duration, and surface disturbance will be light to moderate but confined to a minimal footprint within the study area. No permanent structures will be left on site.

Best Management Practices (BMPs) incorporated into project design will reduce potential impacts including: confining equipment travel to PPA boundary, minimizing travel corridors as much as practicable, limiting truck and equipment travel within the PPA when surfaces are wet and soil may become deeply rutted, and using previously disturbed areas for travel when possible.

5.1.1. Golden eagle

Due to the mobility of adult raptors and the lack of appropriate nesting sites in the vicinity of the proposed project area, it is unlikely that the proposed project would result in 1) injury to a raptor, 2) a decrease in its productivity, by substantially interfering with normal breeding, feeding, or sheltering behavior, or 3) nest abandonment, by substantially interfering with normal breeding, feeding, or sheltering behavior. Short term audial and visual disturbances associated with the Phase II activity could cause minor indirect habitat loss by temporarily deterring raptors from using available habitat adjacent to the proposed project area.

5.1.2. Migratory Birds

The PPA encompasses approximately 23.2 acres of potential migratory bird habitat in the form of Great Basin Desert scrub. No trees would be removed as a result of the proposed project.

<u>Phase I:</u>
Noise and surface disturbance will be low during pedestrian survey activity. Adult migratory birds would not be directly impacted by Phase I because of their mobility and ability to avoid areas of human activity. Minor human presence during project activities within the breeding season may indirectly disturb or displace adults from nests and foraging habitats for a short period of time. Direct and indirect effects are expected to be short term and negligible.

<u>Phase II:</u>
Adult migratory birds would not be directly harmed by the activities because of their mobility and ability to avoid areas of human activity. During Phase II, noise may be moderate but for a short duration, and surface disturbance will be light to moderate but confined to a minimal footprint within the study area. No permanent structures will be left on site. Direct impacts are more likely if surface disturbing activities occur during the breeding season (April 1 through August 15); however, surface disturbance will be confined to a minimal footprint (likely less than one acre) within the study area. The increased human presence during project activities within the breeding season may indirectly disturb or displace adults from nests and foraging habitats for a short period of time.

5.2. Cumulative Effects

Cumulative impacts of an action include the total effects on a resource or ecosystem. Cumulative effects in the context of the Endangered Species Act pertain to non-Federal actions, and are reasonably certain to occur in the action area (USFWS 1998).

5.2.1. Golden eagle

Additional existing surface disturbances within the action area include unimproved access roads to the residences nearby, all-terrain vehicle use and active wildlife and livestock grazing. These foreseeable actions would cumulatively impact raptors through habitat loss or contamination. The intensity of indirect effects would be dependent upon the species, its life history, time of year and/or day and the type and level of human and vehicular activity is occurring.

5.2.2. Migratory Birds

With the implementation of BMPs discussed in Section 5.1, the cumulative impact of the proposed action on migratory birds would be low based on the minimal surface disturbance involved and the availability of adjacent similar habitats.

6. CONCLUSIONS

U.S. Fish and Wildlife Service Listed Species (USFWS)

ACI conducted informal consultation with the USFWS and received an Official Species List for the proposed project area. Qualified ACI biologists evaluated habitat suitability within and surrounding the PPA for these species and concluded the potential does not exist for USFWS-listed species to occur within the proposed project area. No further consultation with the USFWS is required.

Migratory Birds

The proposed action phases would result in short term activity within approximately 23.2 acres of potential migratory bird habitat in the form of Great Basin Desert scrub. During Phase I, noise and surface disturbance will be low during pedestrian survey activity. Direct and indirect effects are expected to be short term and negligible. For Phase II, the total surface disturbance is unknown at this point; however equipment movement would be confined to only a few temporary travel corridors. Within the travel corridors, vegetation and surface soil would sustain some disturbance but would not be bladed or bulldozed. Possible direct impacts would be short term and are more likely if surface disturbing activities occur during the breeding season (April 1 through August 15). Effects to potential habitat for migratory birds is anticipated to be minor and short term due to the limited degree of vegetation and soil disruption (likely less than one acre) and the abundance of adjacent habitat for these species.

Wetlands

Under Executive Orders 11988 and 11990, Federal agencies are required to minimize the destruction, loss, or degradation of wetlands and floodplains, and preserve and enhance their natural and beneficial values. These habitats should be conserved through avoidance, or mitigated to ensure that there would be no net loss of wetlands function and value. No impacts to wetlands are anticipated. The proposed project activities would contribute to a negligible increase in sedimentation down gradient of the project area. This increase is not anticipated to be a factor due to the distance from perennial waters. There is no suitable habitat for ESA-listed fish, nor critical habitats thereof, within 12 miles of the PPA.

Navajo Endangered Species List (NESL) and Species of Concern

One (1) NESL and Navajo species of concern has potential to occur within the PPA based on habitat suitability or actual record of observation. Based on site surveys, ACI determined the PPA contains

potential foraging habitat for golden eagle. Due to the mobility of adult raptors and the lack of appropriate nesting sites in the vicinity of the proposed project area, it is unlikely that the proposed project would result in detriment to raptors.

7. RECOMMENDATIONS FOR AVOIDANCE

ACI recommends that the proponent implement standard Best Management Practices (BMPs) designed to protect sensitive wildlife species during project activity including: confining equipment travel to PPA boundary, minimizing travel corridors as much as practicable, limiting truck and equipment travel within the PPA when surfaces are wet and soil may become deeply rutted, and using previously disturbed areas for travel when possible.

8. SUPPORTING INFORMATION

8.1. Consultation and Coordination

John Nystedt, Fish and Wildlife Biologist/AESO Tribal Coordinator
USFWS AZ Ecological Services Office - Flagstaff Suboffice
Southwest Forest Science Complex, 2500 S Pine Knoll Dr, Rm 232
Flagstaff, AZ 86001

Pam Kyselka, Project Reviewer and
Chad Smith, Zoologist
Navajo Nation Department of Fish and Wildlife
Natural Heritage Program
PO Box 1480
Window Rock, AZ 86515

8.2. Report Preparers and Certification

Adkins Consulting, Inc.
180 E. 12th Street, Unit 5
Durango, Colorado 81301
Lori Gregory, Biologist; Sarah McCloskey, Field Biologist; Arnold Clifford, Lead Field Biologist

It is believed by Adkins Consulting that the proposed action would not violate any of the provisions of the Endangered Species Act of 1973, as amended. Conclusions are based on actual field examination and are correct to the best of my knowledge.

1 August 2016

Lori Gregory
Wildlife Biologist
Adkins Consulting
505.787.4088

Date

8.3. References

Code of Federal Regulations (CFR). Interagency Cooperation - 50 CFR §402 (June 3, 1986). U.S. Government Publishing Office Electronic Code of Federal Regulations. 732 North Capitol Street, NW, Washington, DC. Retrieved from: https://www.gpo.gov/fdsys/search/home.action.

Hammerson, Geoffrey, Frank Solís, Roberto Ibáñez, César Jaramillo, Querube Fuenmayor. 2004. *Lithobates pipiens*. The IUCN Red List of Threatened Species 2004: e.T58695A11814172. http://dx.doi.org/10.2305/IUCN.UK.2004.RLTS.T58695A11814172.en. Downloaded on 10 June 2016.

Heil, Kenneth D. 2000. *Four Corners Invasive and Poisonous Plant Field Guide.* Bureau of Land Management (BLM), Farmington District, and San Juan College, Farmington, New Mexico.

NatureServe. 2015. NatureServe Explorer: An online encyclopedia of life [web application]. Version 7.1. NatureServe, Arlington, Virginia. Available http://explorer.natureserve.org. (Accessed: June 9, 2016).

Navajo Nation Division of Natural Resources, Department of Fish and Wildlife. 2008a. *Navajo Endangered Species List (NESL)*. Resources Committee Resolution No. RCS-41-08. Window Rock, AZ.

Navajo Nation Division of Natural Resources, Department of Fish and Wildlife. 2008b. *Navajo Endangered Species List (NESL) Species Accounts.* Retrieved from: http://www.nndfw.org/nnhp/species_acct.pdf

New Mexico Department of Game and Fish. *BISON-M (Biota Information System of New Mexico).* Available at: http://www.bison-m.org.

New Mexico Natural Heritage Program. 2006. The website of Natural Heritage New Mexico: An online resource. Version 2.0. Albuquerque, New Mexico, USA: University of New Mexico. http://nmnhp.unm.edu.

New Mexico Rare Plant Technical Council. 1999. *New Mexico Rare Plants*. Albuquerque, NM: New Mexico Rare Plants Home Page. http://nmrareplants.unm.edu.

Prall, Dexter. 2015. Navajo Endangered Species List (NESL) Information letter to Eileen Dornfest, MWH Global (File# 15mwh101). Navajo Nation Department of Fish and Wildlife, Natural Heritage Program, Window Rock, AZ.

U.S. Department of Agriculture, Natural Resources Conservation Service (NRCS). 2006. Web Soil Survey. Version 1.1. NRCS. http://websoilsurvey.nrcs.usda.gov/app.

U.S. Fish and Wildlife Service (USFWS), Endangered Species Program. Information, Protection, and Conservation (iPaC). http://ecos.fws.gov/ipac/. Official Species List (02EAAZ00-2016-SLI-0356 and 06E23000-2016-SLI-0207) dated April 8, 2016

U.S. Fish and Wildlife Service (USFWS) 1998. Final Endangered Species Act (ESA) Section 7 Consultation Handbook, March 1998. https://www.fws.gov/endangered/esa-library/pdf/esa_section7_handbook.pdf

U.S. Fish and Wildlife Service. 2008. *Wetlands Online Mapper.* National Wetlands Inventory (NWI). http://wetlandsfws.er.usgs.gov/wtlnds/launch.html.

APPENDIX A. MAPS

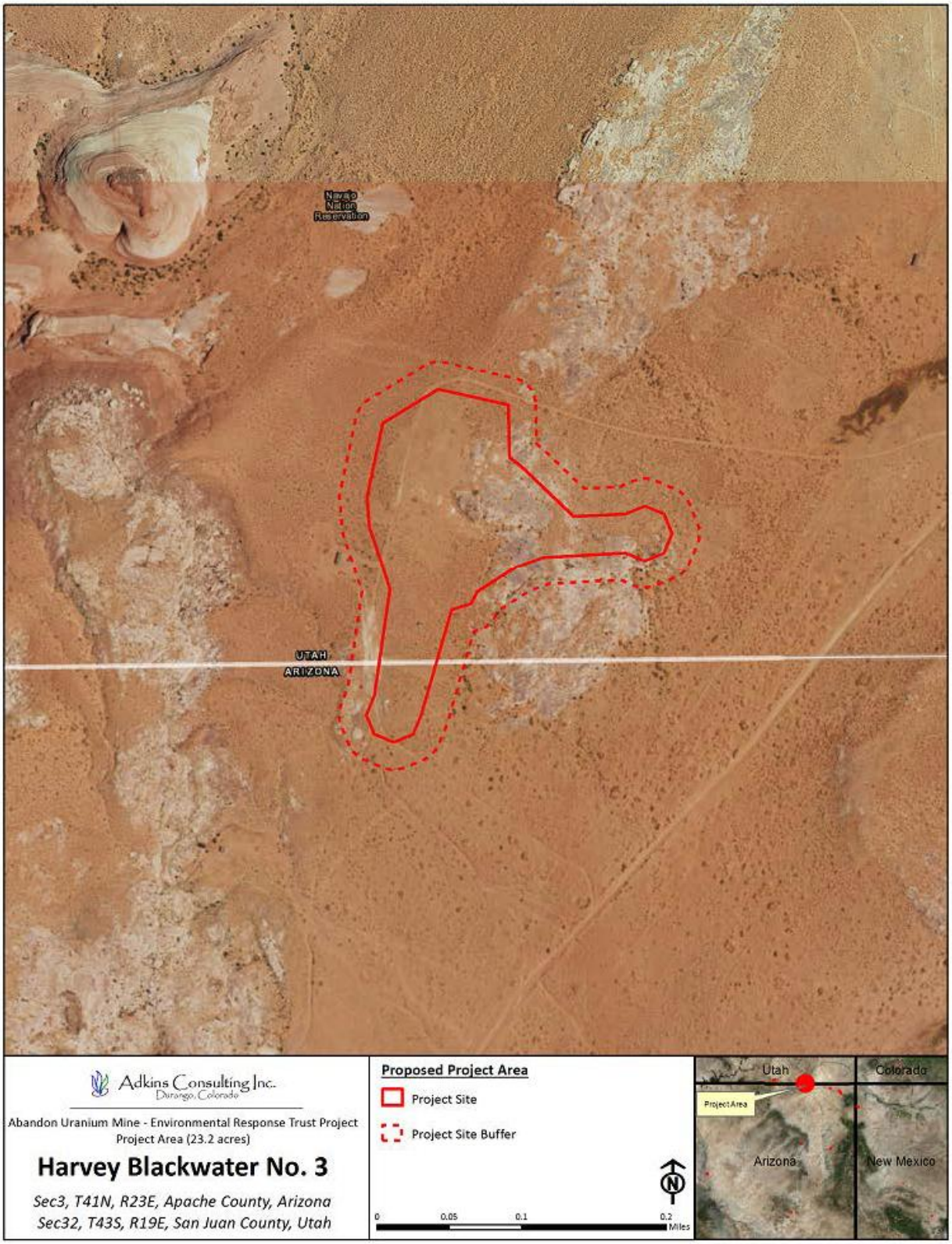

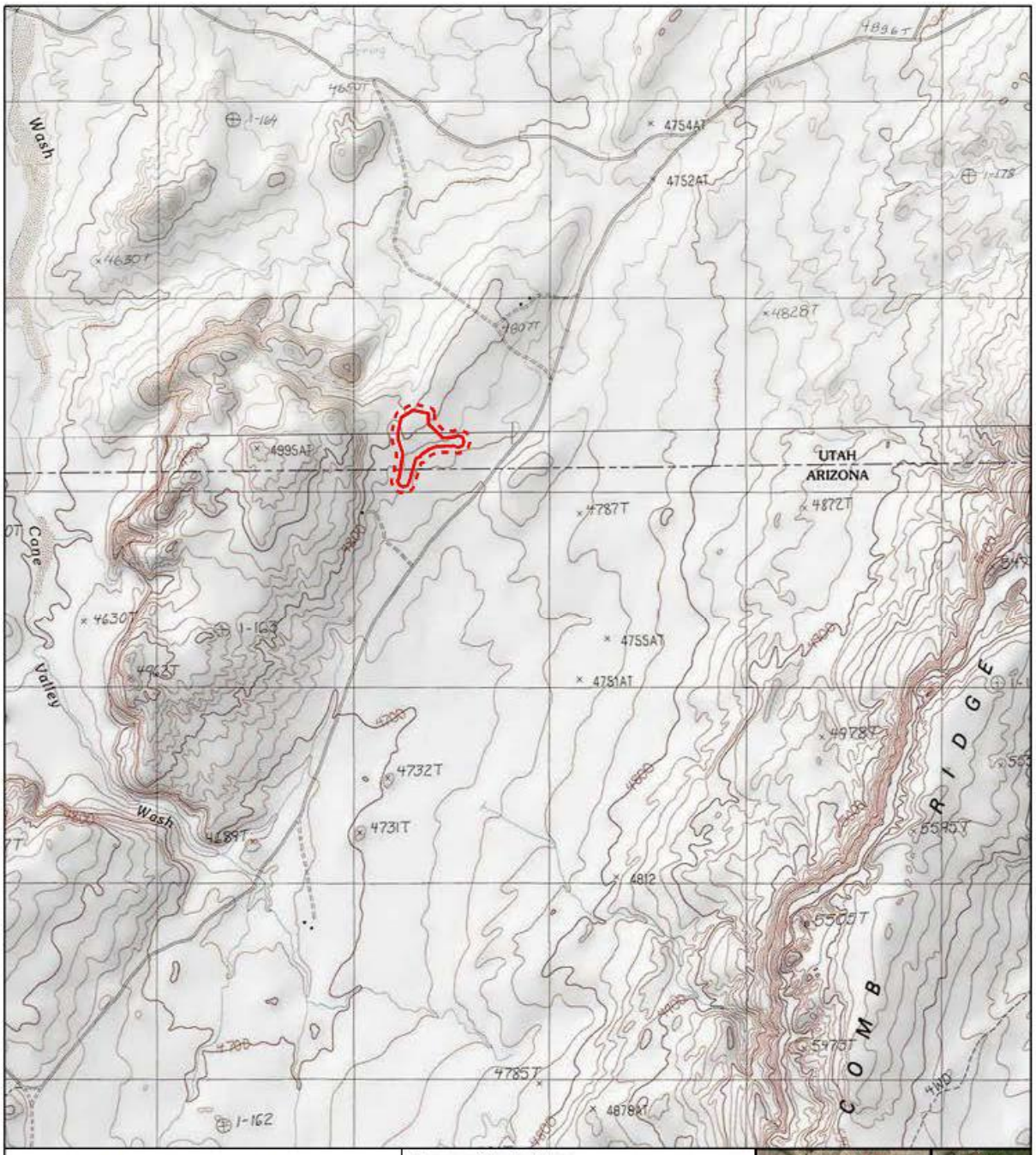

Adkins Consulting Inc.
Durango, Colorado

Abandon Uranium Mine - Environmental Response Trust Project
Project Area (23.2 acres)

Harvey Blackwater No. 3

Sec3, T41N, R23E, Apache County, Arizona
Sec32, T43S, R19E, San Juan County, Utah

Proposed Project Area

Project Site

Project Site Buffer

0 0.25 0.5 1 Miles

APPENDIX B. PHOTOGRAPHS

View south from PPA

View northeast from PPA

View north from PPA

View southwest from PPA

APPENDIX C. REDENTE PLANT SURVEY REPORT

Navajo Nation AUM Environmental Response Trust

Plant Survey Report for Species of Concern At Harvey Blackwater No. 3 Project Site San Juan County, Utah August 2016

Prepared by:
Redente Ecological Consultants
1322 Alene Circle
Fort Collins, CO 80525

TABLE OF CONTENTS

INTRODUCTION 1
Purpose of Report 1
Site Location 1
Environmental Setting 1
Climate 1
Soils 1
Plant Community Type 2
Land Use 2
REGULATORY SETTING 2
METHODS 3
Study Area 3
Database Queries and Literature Review 3
Rare Plant Survey Protocols 3
2016 Field Survey 4
RESULTS 5
REFERENCES 7
LIST OF PREPARERS 7

INTRODUCTION

Purpose of Report

A biological survey was conducted at the Harvey Blackwater No. 3 site as part of the Navajo Nation AUM Environmental Response Trust Project. The purpose of the survey is to determine if plant species of concern are present within the claim boundary and extending 100 feet around the site. Biological clearance is required at each site prior to any site investigation to determine if the project may affect potential species-of-concern or potential federal threatened and endangered (T&Es) species and/or critical habitat.

Site Location

Harvey Blackwater No. 3 is located in San Juan County Utah, approximately 18.5 m (11.5 miles) south of Mexican Hat, Utah at an elevation of approximately 1,463 m (4,800 ft). Global Positioning System coordinates are 36º 59' 57" N by 109º 50' 23" W (North American Datum of 1983). The site is located on Tribal Trust Land (TTL).

Environmental Setting

Climate

The climate of the Harvey Blackwater No. 3 site is classified as arid, with an average annual precipitation of 170 mm (6.7 in) with the greatest precipitation months occurring between July and October (USDA 1980). Average annual temperature is 14.2º C (57.5º F).

Soils

The U.S. Department of Agriculture (USDA) Soil Survey for the Navajo Indian Reservation—San Juan County, Utah was published in 1980 in cooperation with the Bureau of Indian Affairs. The survey includes the area where Harvey Blackwater No. 3 is located. The Aneth soil series is the primary series on the Harvey Blackwater No. 3 site. This soil series consists of deep, excessively drained soils that form mainly from sandstone. Aneth soils are on valley bottoms and terraces with slopes that range from 0 to 8%.

Plant Community Type

The vegetation on the Harvey Blackwater No. 3 site is part of the Colorado Plateau Shrub-Grassland type (USDA 1980). The most common species on the site include blue grama (*Bouteloua gracilis*), Indian ricegrass (*Achnatherum hymenoides*), galleta (*Pleuraphis jamesii*), sand dropseed (*Sporobolus cryptandrus*), needle and thread (*Hesperostipa comata*), broom snakeweed (*Gutierrizia sarathrae*), shadscale saltbush (Atriplex confertifolia), fourwing saltbush (*Atriplex canescens*), and Mormon tea (*Ephedra viridis*),

Land Use

The land type on the Harvey Blackwater No. 3 site is rangeland and the principal land uses are domestic grazing and wildlife habitat.

REGULATORY SETTING

The survey for vegetation species-of-concern was conducted according to the Navajo Natural Heritage Program (NNHP) guidelines and the Endangered Species Act (ESA), including the procedures set forth in the *Biological Resource Land Use Clearance Policies and Procedures* (RCP), RCS-44-08 (NNDFW 2008), the Species Accounts document (NNHP 2008), and the USFWS survey protocols and recommendations. Data requests for species of concern were submitted to the NNHP and for federal T&E species to the USFWS. NNHP responded to the request for species of concern with a letter to MWH dated 19 November 2015. The letter provided a list of species of concern known to occur within the proximity of the project area. The list of species included their status as either NESL (Navajo Endangered Species List), Federally Endangered, Federally Threatened, or Federal Candidate. Species were further classified as G2, G3 or G4. G2 includes endangered species or subspecies whose prospects of survival or recruitment are in jeopardy. G3 includes endangered species or subspecies whose prospects of survival or recruitment are likely to be in jeopardy in the foreseeable future. G4 are “candidates” and includes those species or subspecies which may be endangered but for which we lack sufficient information to support being listed.

The Navajo Natural Heritage Program identified seven plant species of concern that may occur in the project area— Parish's alkaligrass (*Puccinellia parishii*), Alcove death camas (*Zigadenus vaginatus*), Alcove bog-orchid (*Platanthera zothecina*), Rydberg's thistle (*Cirsium rydbergii*), cave primrose (*Primula specuicola*), Welsh's milkweed (*Asclepias welshii*), and Navajo sedge (*Carex specuicola*). The USFWS also listed Navajo sedge as a threatened species that may occur in the area.

METHODS

Study Area

The area evaluated for plant species of concern was defined by the claim boundary, with an additional 100 foot buffer around all sides.

Database Queries and Literature Review

Prior to initiating field surveys, a target list of all potentially occurring species of concern identified by NNHP and the USFWS was compiled. Ecologic and taxonomic information was reviewed for each species prior to initiating field work to better understand ecological characteristics of the species, habitat requirements and key taxonomic indicators for proper identification (ANPS 2000).

Rare Plant Survey Protocols

The plant survey followed currently accepted resource agency protocols and guidelines, for conducting and reporting botanical inventories for special status plant species (USFWS 1996). According to these protocols, rare plant surveys were conducted by botanists with considerable experience with the local flora. All species observed during the surveys were identified to the degree necessary to correctly identify the species and determine if the plant had special status. The survey was conducted in the spring (May) and summer (July) of 2016 during the appropriate season to observe the phenological characteristics of the special status plant species that were necessary for identification (Table 1).

Table 1. Species of Concern and Survey Period

Species of Concern	Survey Period
Rydberg's thistle (*Cirsium rydbergii*)	May
Parish's alkaligrass (*Puccinellia parishii*)	May
Cave primrose (*Primula specuicola*)	May
Alcove death camas (*Zigadenus vaginatus*)	July
Alcove bog-orchid (*Platanthera zothecina*)	July
Navajo sedge (*Carex specuicola*)	July
Welsh's milkweed (*Asclepias welshii*)	July

The botanical survey team was assisted during the survey by GIS trained staff from MWH with training specifically in the use of the Trimble GeoExplorer 6000 Series and the Garmin Montana 600. The GPS operator was also instructed in sight identification of species of concern to help delineate points or polygons and other data collection and data management tasks. GPS units were preloaded for the plant team with background and data files that showed the aerial photographic base map, the site boundaries, and the study area, so team members could clearly identify their exact location in the field at all times.

2016 Field Survey

The project site was surveyed by a field botanist. The botanist walked meandering "transect" lines through each area and looked for suitable habitat for these species, such as alkali seeps for *Puccinellia parishii,* seeps and hanging gardens for *Cirsium rydbergii, Platanthera zothecina, Zigadenus vaginatus*, *Carex specuicola*, and *Primula specuicola,* and active sand dunes for *Asclepias welshii*. The most emphasis was placed in areas with suitable habitat for the species of concern. If a species of concern was identified, the location would be recorded using the point or polygon feature in the GPS units. Further, the population size was planned to be obtained either by direct counts, estimations, or by sampling the population.

Field botanists documented every field visit on field forms, by area, and took photographs of field conditions and species of concern, if found on site. The botanist also recorded all plant communities and plant species observed during each field visit. Plant community types were also photographed to document site conditions (Photos #1 and #2).

RESULTS

A total of 7 plant species of concern were identified as potentially occurring within the proximity of the project area. These species included *Puccinellia parishii*, *Zigadenus vaginatus Platanthera zothecina*, *Cirsium rydbergii*, *Primula specuicola*, *Asclepias welshii*, and *Carex specuicola*.

Zigadenus vaginatus is a native perennial forb that grows in hanging gardens in seeps and alcoves, mostly on Navajo sandstone. This species is endemic to the Colorado Plateau in southern Utah and northern Arizona at elevations between 1,127 and 2,042 m (3,698 and 6,999 ft). *Puccinellia parishii* is a native annual grass that grows in a series of widely disjunct populations ranging from southern California to eastern Arizona and western New Mexico in alkaline seeps, springs and seasonally wet areas and washes at elevations between 1,525 and 2,195 m (5,003 and 7,201 ft). *Platanthera zothecina* is a native perennial forb that grows in seeps, hanging gardens and moist stream areas from the desert shrub to the Pinyon-Juniper communities. This species is found in New Mexico, Utah and Arizona at elevations between 1,220 and 2,195 m (4,003 and 7,201 ft). *Cirsium rydbergii* is a native perennial forb that occurs in hanging gardens, seeps and stream banks below hanging gardens at elevations between 1,005 and 1,980 m (3,297 and 6,946 ft). Its distribution includes southern San Juan County along with Coconino and Apache Counties in Arizona. *Carex specuicola* is a native perennial grass-like plant that grows in seeps and hanging gardens primarily on sandstone cliffs and alcoves. Known populations occur at elevations between 1,402 and 2,195 m (4,600 and 7,201 ft) in San Juan County and northern Arizona. *Primula specuicola* is a native perennial herb that grows in hanging gardens and occasionally along streamsides between 1,067 and 2,195 m (3,500 and 7,200 ft). It is endemic to Northern Arizona and Southern Utah. Asclepias welshii is a native herbaceous perennial forb that grows in active sand dunes derived from Navajo

sandstone between 1,524 and 1,890 m (5,000 and 6200 ft). It has been found in Coconino County and south of Monument Valley in both Navajo and Apache Counties.

The survey at Harvey Blackwater No. 3 on May 6 and July 21, 2016 did not identify any of the seven species that have been listed as potential species of concern for this site. Many of the species occur in seeps, alcoves or hanging gardens (i.e. *Zigadenus vaginatus*, (*Puccinellia parishii*, *Platanthera zothecina*, *Cirsium rydbergii*, *Primula specuicola*, and *Carex specuicola*) that were not found on the site. There were seasonally wet areas, but there was no evidence of alkalinity on the soil surface from salt accumulation, a characteristic important for *Puccinellia parishii*. Finally, there were no active sand dunes present at Harvey Blackwater No. 3, which is required habitat for Asclepias welshii.

Photo #1—Overview of general landscape and plant community at Harvey Blackwater No. 3.

Photo #2—Overview of general landscape and plant community at Harvey Blackwater No. 3.

REFERENCES

ANPS. 2000. Arizona Rare Plant Field Guide. U.S. Government Printing Office. Washington, D.C.

Navajo Nation Department of Fish and Wildlife (NNDFW), 2008. Biological Resource Land Use Clearance Policies and Procedures, RCS-44-08. September 10.

Navajo Natural Heritage Program (NNHP), 2008. *Species Accounts*, Navajo Nation Endangered Species List, version 3.08.

USDA. 1980. Soil Survey of Navajo Indian Reservation San Juan County, Utah. USDA and USDI-Bureau of Indian Affairs. Washington, D.C.

USFWS. 1996. Guidelines for Conducting and Reporting Botanical Inventories for Federally Listed, Proposed, and Candidate Plants. Sacramento Fish and Wildlife Office, Sacramento, California.

LIST OF PREPARERS

Redente, Edward F. Plant Ecologist. B.A., M.S. and Ph.D. Over 40 years of experience in plant ecology and plant survey studies throughout the semi-arid and arid western U.S. Author or Co-author of over 200 publications.

APPENDIX D. NESL LETTER

NNHP
Navajo Natural Heritage Program

PO Box 1480
Window Rock, AZ
86515

P 928.871.6472
F 928.871.7603

http://nnhp.nndfw.org

15mwh101

19-November-2015

Eileen Dornfest - Project Manager
MWH Americas
3665 John F Kennedy Parkway
Bldg 1, Suite 206
Ft. Collins, CO 80525

SUBJECT: Navajo Nation AUM Environmental Response Trust (ERT) Project - 16 Abandoned Uranium Mine (AUM) Sites

Eileen Dornfest,

NNHP has performed an analysis of your project in comparison to known biological resources of the Navajo Nation and has included the findings in this letter. The letter is composed of seven parts. The sections as they appear in the letter are:

1. **Known Species** – a list of all species within relative proximity to the project
2. **Potential Species** – a list of potential species based on project proximity to respective suitable habitat
3. **Quadrangles** – an exhaustive list of quads containing the project
4. **Project Summary** – a categorized list of biological resources within relative proximity to the project grouped by individual project site(s) or quads
5. **Conditional Criteria Notes** – additional details concerning various species, habitat, etc.
6. **Personnel Contacts** – a list of employee contacts
7. **Resources** – identifies sources for further information

Known Species lists "species of concern" known to occur within proximity to the project area. Planning for avoidance of these species is expected. If no species are displayed then based upon the records of the Navajo Nation Department of Fish and Wildlife (NNDFW) there are no "species of concern" within proximity to the project. Refer to the Navajo Endangered Species List (NESL) Species Accounts for recommended avoidance measures, biology, and distribution of NESL species on the Navajo Nation (http://nnhp.nndfw.org/sp_account.htm).

Potential Species lists species that are potentially within proximity to the project area and need to be evaluated for presence/absence. If no species are found within the Known or Potential Species lists, the project is not expected to affect any federally listed species, nor significantly impact any tribally listed species or other species of concern. Potential for species has been determined primarily on habitat characteristics and species range information. A thorough habitat analysis, and if necessary, species specific surveys, are required to determine the potential for each species.

Species of concern include protected, candidate, and other rare or otherwise sensitive species, including certain native species and species of economic or cultural significance. For legally protected species, the following tribal and federal statuses are indicated: NESL, federal Endangered Species Act (ESA), Migratory

Bird Treaty Act (MBTA), and Eagle Protection Act (EPA). No legal protection is afforded species with only ESA candidate, NESL group 4 status, and species listed on the Sensitive Species List. Please be aware of these species during surveys and inform the NNDFW of observations. Reported observations of these species and documenting them in project planning and management is important for conservation and may contribute to ensuring they will not be up listed in the future.

In any and all correspondence with NNDFW or NNHP concerning this project please cite the Data Request Code associated with this document. It can be found in this report on the top right corner of the every page. Additionally please cite this code in any biological evaluation documents returned to our office.

1. Known Species *(NESL=Navajo Endangered Species List, FE=Federally Endangered, FT=Federally Threatened, FC=Federal Candidate)*

Species

AMPE = Amsonia peeblesii / Peebles' Blue-star NESL G4
AQCH = Aquila chrysaetos / Golden Eagle NESL G3
CASP = Carex specuicola / Navajo Sedge NESL G3 FT
LIPI = Lithobates pipiens / Northern Leopard Frog NESL G2
PEAMCI = Perognathus amplus cineris / Wupatki Pocket Mouse NESL G4
PUPA = Puccinellia parishii / Parish's Alkali Grass NESL G4
**All or parts of this project currently are within areas protected by the Golden and Bald Eagle Nest Protection Regulations; consult with NNDFW zoologist or EA Reviewer for more information and recommendations.

2. Potential Species

Species

ALGO = Allium gooddingii / Gooding's Onion NESL G3
AMPE = Amsonia peeblesii / Peebles' Blue-star NESL G4
AQCH = Aquila chrysaetos / Golden Eagle NESL G3
ASBE = Astragalus beathii / Beath Milk-vetch NESL G4
ASNA = Astragalus naturitensis / Naturita Milk-vetch NESL G3
ASWE = Asclepias welshii / Welsh's Milkweed NESL G3 FT
ATCU = Athene cunicularia / Burrowing Owl NESL G4
BURE = Buteo regalis / Ferruginous Hawk NESL G3
CASP = Carex specuicola / Navajo Sedge NESL G3 FT
CHMO = Charadrius montanus / Mountain Plover NESL G4
CIME = Cinclus mexicanus / American Dipper NESL G3
CIRY = Cirsium rydbergii / Rydberg's Thistle NESL G4
CYUT = Cystopteris utahensis / Utah Bladder-fern NESL G4
EMTREX = Empidonax traillii extimus / Southwestern Willow Flycatcher NESL G2 FE
ERAC = Erigeron acomanus / Acoma Fleabane NESL G3
ERRH = Erigeron rhizomatus / Rhizome Fleabane/zuni Fleabane NESL G2 FT
ERRO = Errazurizia rotundata / Round Dunebroom NESL G3
ERSI = Erigeron sivinskii / Sivinski's Fleabane NESL G4
FAPE = Falco peregrinus / Peregrine Falcon NESL G4
GIRO = Gila robusta / Roundtail Chub NESL G2
LENA = Lesquerella navajoensis / Navajo Bladderpod NESL G3
LIPI = Lithobates pipiens / Northern Leopard Frog NESL G2
MUNI = Mustela nigripes / Black-footed Ferret NESL G2 FE

PEAMCI = Perognathus amplus cineris / Wupatki Pocket Mouse NESL G4
PLZO = Platanthera zothecina / Alcove Bog-orchid NESL G3
PRSP = Primula specuicola / Cave Primrose NESL G4
PTLU = Ptchocheilus lucius / Colorado Pikeminnow NESL G2
PUPA = Puccinellia parishii / Parish's Alkali Grass NESL G4
SAPAER = Salvia pachyphylla ssp eremopictus / Arizona Rose Sage NESL G4
STOCLU = Strix occidentalis lucida / Mexican Spotted Owl NESL G3 FT
VUMA = Vulpes macrotis / Kit Fox NESL G4
ZIVA = Zigadenus vaginatus / Alcove Death Camass NESL G3

3. Quadrangles (7.5 Minute)

Quadrangles

Cameron SE (35111-G3) / AZ
Dalton Pass (35108-F3) / NM
Del Muerto (36109-B4) / AZ
Dos Lomas (35107-C7) / NM
Gallup East (35108-E6) / NM
Garnet Ridge (36109-H7) / AZ, UT
Horse Mesa (36109-F1) / AZ, NM
Indian Wells (35110-D1) / AZ
Mexican Hat SE (37109-A7) / UT, AZ
Oljeto (37110-A3) / UT, AZ
Toh Atin Mesa East (36109-H3) / AZ, UT
Toh Atin Mesa West (36109-H4) / AZ, UT

4. Project Summary *(EO1 Mile/EO 3 Miles=elements occuring within 1 & 3 miles., MSO=mexican spotted owl PACs, POTS=potential species, RCP=Biological Areas)*

SITE	EO1MI	EO3MI	QUAD	MSO	POTS	AREAS
Alongo Mines	None	AQCH	Horse Mesa (36109-F1) / AZ, NM	None	LIPI, FAPE, EMTREX, CHMO, BURE, ATCU, AQCH, ZIVA, PUPA, PLZO, CIRY, CASP	Area 3
Barton 3	None	None	Toh Atin Mesa West (36109-H4) / AZ, UT	None	PTLU, GIRO, EMTREX, CHMO, BURE, ATCU, AQCH, ZIVA, PLZO, CIRY, CASP	Area 3
Boyd Tisi No. 2 Western	None	AMPE, PEAMCI, LIPI	Cameron SE (35111-G3) / AZ	None	LIPI, PEAMCI, FAPE, EMTREX, BURE, AQCH, ERRO, ASBE, AMPE	Area 3
Charles Keith	None	None	Oljeto (37110-A3) / UT, AZ	None	LIPI, FAPE, EMTREX, CHMO, BURE, AQCH	Area 1, Area 3

SITE	EO1MI	EO3MI	QUAD	MSO	POTS	AREAS
Eunice Becenti	None	None	Gallup East (35108-E6) / NM	None	FAPE, EMTREX, ATCU, AQCH, LENA, ERSI, ERRH, ERAC	Area 3
Harvey Blackwater No. 3	AQCH	AQCH, PUPA	Garnet Ridge (36109-H7) / AZ, UT	None	VUMA, LIPI, FAPE, EMTREX, CIME, BURE, ATCU, AQCH, ZIVA, PUPA, PRSP, PLZO, CIRY, CASP, ASWE	Area 3
Harvey Blackwater No. 3	AQCH	AQCH, PUPA	Mexican Hat SE (37109-A7) / UT, AZ	None	VUMA, FAPE, EMTREX, ATCU, AQCH, ZIVA, PLZO, CIRY, CASP, ASWE	Area 1
Hoskie Tso No. 1	AQCH	AQCH	Indian Wells (35110-D1) / AZ	None	FAPE, CHMO, BURE, ATCU, AQCH, SAPAER	Area 3
Mitten No. 3	None	AQCH	Oljeto (37110-A3) / UT, AZ	None	LIPI, FAPE, EMTREX, CHMO, BURE, AQCH	Area 3
NA-0904	None	AQCH	Toh Atin Mesa East (36109-H3) / AZ, UT	None	STOCLU, LIPI, PTLU, GIRO, FAPE, EMTREX, CHMO, ATCU, AQCH, PUPA	Area 3
NA-0926	None	None	Toh Atin Mesa East (36109-H3) / AZ, UT	None	STOCLU, LIPI, PTLU, GIRO, FAPE, EMTREX, CHMO, ATCU, AQCH, PUPA	Area 3
Oak124, Oak125	AQCH	AQCH	Horse Mesa (36109-F1) / AZ, NM	None	LIPI, FAPE, EMTREX, CHMO, BURE, AQCH, ZIVA, PUPA, PLZO, CIRY, CASP	Area 3
Occurrence B	None	AQCH, CASP	Del Muerto (36109-B4) / AZ	None	LIPI, FAPE, EMTREX, CIME, AQCH, ZIVA, PLZO, CYUT, CIRY, CASP, ALGO	Area 3
Section 26 (Desiddero Group)	None	None	Dos Lomas (35107-C7) / NM	None	FAPE, CHMO, ATCU, AQCH	Area 3
Standing Rock	None	None	Dalton Pass (35108-F3) / NM	None	VUMA, MUNI, FAPE, CHMO, BURE, ATCU, AQCH, ERSI, ASNA	Area 3

SITE	EO1MI	EO3MI	QUAD	MSO	POTS	AREAS
Tsosie 1	AQCH	AQCH	Toh Atin Mesa East (36109-H3) / AZ, UT	None	STOCLU, LIPI, PTLU, GIRO, FAPE, EMTREX, CHMO, AQCH, PUPA	Area 1, Area 3

5. Conditional Criteria Notes *(Recent revisions made please read thoroughly. For certain species, and/or circumstances, please read and comply)*

A. **Biological Resource Land Use Clearance Policies and Procedures (RCP)** - The purpose of the RCP is to assist the Navajo Nation government and chapters ensure compliance with federal and Navajo laws which protect, wildlife resources, including plants, and their habitat resulting in an expedited land use clearance process. After years of research and study, the NNDFW has identified and mapped wildlife habitat and sensitive areas that cover the entire Navajo Nation.
The following is a brief summary of six (6) wildlife areas:
1.***Highly Sensitive Area*** – recommended no development with few exceptions.
2.***Moderately Sensitive Area*** – moderate restrictions on development to avoid sensitive species/habitats.
3.***Less Sensitive Area*** – fewest restrictions on development.
4.***Community Development Area*** – areas in and around towns with few or no restrictions on development.
5.***Biological Preserve*** – no development unless compatible with the purpose of this area.
6.***Recreation Area*** – no development unless compatible with the purpose of this area.
None - outside the boundaries of the Navajo Nation
This is not intended to be a full description of the RCP please refer to the our website for additional information at http://www.nndfw.org/clup.htm.

B. **Raptors** – If raptors are known to occur within 1 mile of project location: Contact Chad Smith at 871-7070 regarding your evaluation of potential impacts and mitigation.
o **Golden and Bald Eagles**- If Golden or Bald Eagle are known to occur within 1 mile of the project, decision makers need to ensure that they are not in violation of the Golden and Bald Eagle Nest Protection Regulations found at http://nnhp.nndfw.org/docs_reps/gben.pdf.
o **Ferruginous Hawks** – Refer to "Navajo Nation Department of Fish and Wildlife's Ferruginous Hawk Management Guidelines for Nest Protection" http://nnhp.nndfw.org/docs_reps.htm for relevant information on avoiding impacts to Ferruginous Hawks within 1 mile of project location.
o **Mexican Spotted Owl** - Please refer to the Navajo Nation Mexican Spotted Owl Management Plan http://nnhp.nndfw.org/docs_reps.htm for relevant information on proper project planning near/within spotted owl protected activity centers and habitat.

C. **Surveys** – Biological surveys need to be conducted during the appropriate season to ensure they are complete and accurate please refer to NN Species Accounts http://nnhp.nndfw.org/sp_account.htm. Surveyors on the Navajo Nation must be permitted by the Director, NNDFW. Contact Jeff Cole at (928) 871-7068 for permitting procedures. Questions pertaining to surveys should be directed to the NNDFW Zoologist (Chad Smith) for animals at 871-7070, and Botanist (Andrea Hazelton) for plants at (928)523-3221. Questions regarding biological evaluation should be directed to Jeff Cole at 871-7068.

D. **Oil/Gas Lease Sales** – Any settling or evaporation pits that could hold contaminants should be lined and covered. Covering pits, with a net or other material, will deter waterfowl and other migratory bird use. Lining pits will protect ground water quality.

E. **Power line Projects** – These projects need to ensure that they do not violate the regulations set forth in the Navajo Nation Raptor Electrocution Prevention Regulations found at http://nnhp.nndfw.org/docs_reps/repr.pdf.

F. **Guy Wires** – Does the project design include guy wires for structural support? If so, and if bird species may occur in relatively high concentrations in the project area, then guy wires should be equipped with highly visual markers to reduce the potential mortality due to bird-guy wire collisions. Examples of visual markers include aviation balls and bird flight diverters. Birds can be expected to occur in relatively high concentrations along migration routes (e.g., rivers, ridges or other distinctive linear topographic features) or where important habitat for breeding, feeding, roosting, etc. occurs. The U.S. Fish and Wildlife Service recommends marking guy wires with at least one marker per 100 meters of wire.

G. **San Juan River** – On 21 March 1994 (Federal Register, Vol. 59, No. 54), the U.S. Fish and Wildlife Service designated portions of the San Juan River (SJR) as critical habitat for Ptychocheilus lucius (Colorado pikeminnow) and Xyrauchen texanus (Razorback sucker). Colorado pikeminnow critical habitat includes the SJR and its 100-year floodplain from the State Route 371 Bridge in T29N, R13W, sec. 17 (New Mexico Meridian) to Neskahai Canyon in the San Juan arm of Lake Powell in T41S, R11E, sec. 26 (Salt Lake Meridian) up to the full pool elevation. Razorback sucker critical habitat includes the SJR and its 100-year floodplain from the Hogback Diversion in T29N, R16W, sec. 9 (New Mexico Meridian) to the full pool elevation at the mouth of Neskahai Canyon on the San Juan arm of Lake Powell in T41S, R11E, sec. 26 (Salt Lake Meridian). All actions carried out, funded or authorized by a federal agency which may alter the constituent elements of critical habitat must undergo section 7 consultation under the Endangered Species Act of 1973, as amended. Constituent elements are those physical and biological attributes essential to a species conservation and include, but are not limited to, water, physical habitat, and biological environment as required for each particular life stage of a species.

H. **Little Colorado River** - On 21 March 1994 (Federal Register, Vol. 59, No. 54) the U.S. Fish and Wildlife Service designated Critical Habitat along portions of the Colorado and Little Colorado Rivers (LCR) for Gila cypha (humpback chub). Within or adjacent to the Navajo Nation this critical habitat includes the LCR and its 100-year floodplain from river mile 8 in T32N R6E, sec. 12 (Salt and Gila River Meridian) to its confluence with the Colorado River in T32N R5E sec. 1 (S&GRM) and the Colorado River and 100-year floodplain from Nautuloid Canyon (River Mile 34) T36N R5E sec. 35 (S&GRM) to its confluence with the LCR. All actions carried out, funded or authorized by a federal agency which may alter the constituent elements of Critical Habitat must undergo section 7 consultation under the Endangered Species Act of 1973, as amended. Constituent elements are those physical and biological attributes essential to a species conservation and include, but are not limited to, water, physical habitat, and biological environment as required for each particular life stage of a species.

I. **Wetlands** – In Arizona and New Mexico, potential impacts to wetlands should also be evaluated. The U.S. Fish & Wildlife Service's National Wetlands Inventory (NWI) maps should be examined to determine whether areas classified as wetlands are located close enough to the project site(s) to be impacted. In cases where the maps are inconclusive (e.g., due to their small scale), field surveys must be completed. For field surveys, wetlands identification and delineation methodology contained in the "Corps of Engineers Wetlands Delineation Manual" (Technical Report Y-87-1) should be used. When wetlands are present, potential impacts must be addressed in an environmental assessment and the Army Corps of Engineers, Phoenix office, must be contacted. NWI maps are available for examination at the Navajo Natural Heritage Program (NNHP) office, or may be purchased through the U.S. Geological Survey (order forms are available through the NNHP). The NNHP has complete coverage of the Navajo Nation, excluding Utah, at 1:100,000 scale; and coverage at 1:24,000 scale in the southwestern portion of the Navajo Nation. In Utah, the U.S. Fish & Wildlife Service's National Wetlands Inventory maps are not yet available for the Utah portion of the Navajo Nation, therefore, field surveys should be completed to determine whether wetlands are located close enough to the project site(s) to be impacted. For field surveys, wetlands identification and delineation methodology contained in the "Corps of Engineers Wetlands Delineation Manual" (Technical Report Y-87-1) should be used. When wetlands are present, potential impacts must be addressed in an environmental assessment and the Army Corps of Engineers, Phoenix office, must be contacted. For more information contact the Navajo Environmental Protection Agency's Water Quality Program.

J. **Life Length of Data Request** – The information in this report was identified by the NNHP and NNDFW's biologists and computerized database, and is based on data available at the time of this response. If project planning takes more than two (02) years from the date of this response, verification of the information provided herein is necessary. It should not be regarded as the final statement on the occurrence of any species, nor should it substitute for on-site surveys. Also, because the NNDFW information is continually updated, any given information response is only wholly appropriate for its respective request.

K. **Ground Water Pumping** - Projects involving the ground water pumping for mining operations, agricultural projects or commercial wells (including municipal wells) will have to provide an analysis on the effects to surface water and address potential impacts on all aquatic and/or wetlands species listed below. NESL Species potentially impacted by ground water pumping: Carex specuicola (Navajo Sedge), Cirsium rydbergii (Rydberg's Thistle), Primula specuicola (Cave Primrose), Platanthera zothecina (Alcove Bog Orchid), Puccinellia parishii (Parish Alkali Grass), Zigadenus vaginatus (Alcove Death Camas), Perityle specuicola (Alcove Rock Daisy), Symphyotrichum welshii (Welsh's American-aster), Coccyzus americanus (Yellow-billed Cuckoo), Empidonax traillii extimus (Southwestern Willow Flycatcher), Rana pipiens (Northern Leopard Frog), Gila cypha (Humpback Chub), Gila robusta (Roundtail Chub), Ptychocheilus lucius (Colorado Pikeminnow), Xyrauchen texanus (Razorback Sucker), Cinclus mexicanus (American Dipper), Speyeria nokomis (Western Seep Fritillary), Aechmophorus clarkia (Clark's Grebe), Ceryle alcyon (Belted Kingfisher), Dendroica petechia (Yellow Warbler), Porzana carolina (Sora), Catostomus discobolus (Bluehead Sucker), Cottus bairdi (Mottled Sculpin), Oxyloma kanabense (Kanab Ambersnail)

6. Personnel Contacts

Wildlife Manager
Sam Diswood
928.871.7062
sdiswood@nndfw.org

Zoologist
Chad Smith
928.871.7070
csmith@nndfw.org

Botanist
Vacant

Biological Reviewer
Pamela Kyselka
928.871.7065
pkyselka@nndfw.org

GIS Supervisor
Dexter D Prall
928.645.2898
prall@nndfw.org

Wildlife Tech
Sonja Detsoi
928.871.6472
sdetsoi@nndfw.org

7. Resources

National Environmental Policy Act

Navajo Endangered Species List:
http://nnhp.nndfw.org/endangered.htm

Species Accounts:
http://nnhp.nndfw.org/sp_account.htm

Biological Investigation Permit Application
http://nnhp.nndfw.org/study_permit.htm

Navajo Nation Sensitive Species List
http://nnhp.nndfw.org/study_permit.htm

Various Species Management and/or Document and Reports
http://nnhp.nndfw.org/docs_reps.htm

Consultant List
(Coming Soon)

Dexter D Prall

Digitally signed by Dexter D Prall
DN: cn=Dexter D Prall, o=Navajo Nation Department of Fish and Wildlife, ou=Navajo Natural Heritage Program, email=prallenndfw.org, c=US
Date: 2015.11.19 15:56:30 -07'00'

Dexter D Prall, GIS Supervisor - Natural Heritage Program
Navajo Nation Department of Fish and Wildlife

MWH

BUILDING A BETTER WORLD

November 18, 2015

TO: Navajo Natural Heritage Program
Navajo Nation Dept. of Fish and Wildlife
ATTN: Sonja Detsoi and Dexter Prall
P.O. Box 1480
Window Rock, AZ 86515

FROM: MWH Americas
ATTN: Eileen Dornfest, Project Manager
3665 John F Kennedy Parkway
Bldg 1, Suite 206
Ft. Collins, CO 80525
Phone: (970) 377-9410
Fax: (970) 377-9406
E-mail: Eileen.Dornfest@mwhglobal.com

SUBJECT: Request for T and E Information for 16 Abandoned Uranium Mine (AUM) Sites

PROJECT NAME:
Navajo Nation AUM Environmental Response Trust (ERT) Project

LOCATION:
16 AUM Sites (attached in GIS shape files and USGS topographic maps)

SUMMARY DESCRIPTION OF PROJECT:
The work is to be conducted at 16 Abandoned Uranium Mines (AUMs) and includes Removal Site Evaluations (RSEs) according to CERCLA at each of the Sites. The RSEs are site investigations that include the following activities:

- conducting background soil studies
- conducting gamma radiation scans of surface soils
- sampling surface and subsurface soils and sediments related to historic mining operations
- assessing radiation exposure inside mine operations buildings, homes, or other nearby structures (if present at the Sites)
- sampling existing and accessible groundwater wells
- mitigating physical hazards and other interim response actions
- preparing a final written report documenting the work performed and information obtained for each of the Sites

MWH

BUILDING A BETTER WORLD

TOPOGRAPHIC MAPS ATTACHED:

- Blue Gap Quadrangle, Arizona-Apache Co.
- Cameron SE Quadrangle, Arizona-Coconino Co.
- Cameron South Quadrangle, Arizona-Coconino Co.
- Del Muerto Quadrangel, Arizona-Apache Co.
- Five Buttes Quadrangle, Arizona-Navajo Co.
- Garnet Ridge Quadrangle, Arizona-Utah
- Horse Mesa Quadrangle, Arizona-New Mexico
- Indian Wells Quadrangle, Arizona-Navajo Co.
- Tah Chee Wash Quadrangle, Arizona-Apache Co.
- Toh Atin Mesa East Quadrangle, Arizona-Utah
- Toh Atin Mesa West Quadrangle, Arizona-Utah
- Bluewater Quadrangle, New Mexico
- Bread Springs Quadrangle, New Mexico-McKinley Co.
- Dalton Pass Quadrangle, New Mexico-McKinley Co.
- Dos Lomas Quadrangle, New Mexico
- Gallup East Quadrangle, New Mexico-McKinley Co.
- Sand Spring Quadrangle, New Mexico-San Juan Co.
- Standing Rock Quadrangle, New Mexico-McKinley Co.
- Mexican Hat SE Quadrangle, Utah-San Juan Co.
- Oljato Quadrangle, Utah-San Juan Co.

THE NAVAJO NATION
HISTORIC PRESERVATION DEPARTMENT
PO Box 4950, Window Rock, Arizona 86515
TEL: (928) 871-7198 FAX: (928) 871-7886

CULTURAL RESOURCE COMPLIANCE FORM

ROUTE COPIES TO:	NNHPD NO.: HPD-16-588
☑ DCRM	OTHER PROJECT NO.: DCRM 2016-06

PROJECT TITLE: A Cultural Resource Inventory of Eight Abandoned Uranium Mines (Northern Region) for MWH Americas, Inc. in the Western and Shiprock Agencies of the Navajo Nation, in Utah, Arizona, and New Mexico.

LEAD AGENCY: BIA/NR

SPONSOR: Sadie Hoskie, Trustee, Navajo National AUM, Environmental Response Trust, P.O. Box 3330, Window Rock, AZ 86515

PROJECT DESCRIPTION: The proposed undertaking will involve proposing to complete Removal Site Evaluations to define the horizontal extent of contamination in surface soils and sediments at the eight former uranium mine areas. The proposed undertaking may involve intensive ground disturbance with the use of heavy equipment and hand tools. The area of potential effect is 54.4-acres.

LAND STATUS:	Navajo Tribal Trust													
CHAPTER:	Oljato, Dennehotso, Mexican Water, Sweetwater, and Red Valley													
LOCATION:	*T.*	43	*S.,*	*R.*	24&14	*E-*	*Sec.*	14&24;	Oljato	Quadrangle,	San Juan	County	UT	SLPM
	T.	43	*S.,*	*R.*	14	*E-*	*Sec.*	13;	Oljato	Quadrangle,	San Juan	County	UT	SLPM
	T.	43	*S.,*	*R.*	19&23	*E-*	*Sec.*	UP;	Garnet Ridge	Quadrangle,	Apache	County	AZ	G&SRPM
	T.	43	*N.,*	*R.*	19	*E-*	*Sec.*	UP;	Mexican Hat	Quadrangle,	Apache	County	AZ	G&SRPM
	T.	41&40	*N.,*	*R.*	27, 28& 23	*E-*	*Sec.*	UP;	Toh Atin Mesa West	Quadrangle,	Apache	County	AZ	G&SRPM
	T	29	*N.,*	*R.*	21	*W-*	*Sec.*	UP;	Horse Mesa	Quadrangle,	San Juan	County	NM	NMPM

PROJECT ARCHAEOLOGIST:	Rena Martin
NAVAJO ANTIQUITIES PERMIT NO.:	B16728
DATE INSPECTED:	4/16/2016, 5/18/2016
DATE OF REPORT:	7/15/2016
TOTAL ACREAGE INSPECTED:	105.2 – ac
METHOD OF INVESTIGATION:	Class III pedestrian inventory with transects spaced 10 m apart.
LIST OF CULTURAL RESOURCES FOUND:	**(8) sites (UT-B-59-8, UT-C-63-12, AZ-I-5-25, AZ- I-7-72, AZ-I-6-79, NM-I-24-87, NM-I-24-88, NM-I-24-89)** **(1) In Use Area** **(23) Isolated Occurrences (IOs)**
LIST OF ELIGIBLE PROPERTIES:	**(8) sites (UT-B-59-8, UT-C-63-12, AZ-I-5-25, AZ-I-7-72, AZ-I-6-79, NM-I-24-87, NM-I-24-88, NM-I-24-89)**
LIST OF NON-ELIGIBLE PROPERTIES:	**(1) In Use Area, (23) IOs**
LIST OF ARCHAEOLOGICAL RESOURCES:	**(5) sites (UT-B-59-8, UT-C-63-12, AZ-I-7-72, AZ-I-6-79, NM-I-24-89)**

EFFECT/CONDITIONS OF COMPLIANCE: No historic properties affected with the following conditions:

Sites: UT-B-59-8, UT-C-63-12, AZ-I-5-25, AZ- I-7-72, AZ-I-6-79, NM-I-24-87, NM-I-24-89:
1. Prior to any construction, the site boundaries will be flagged and/or temporarily fenced under the direction of a qualified archaeologist & shown to the construction foreman.
2. All ground disturbance within the 50 ft. of the site boundaries will be monitored by a qualified archaeologist.
3. No construction, equipment or vehicular traffic will be allowed within the site boundaries.
4. A brief letter/report documenting the result of the monitoring will be submitted to NNHPD within 30 days of monitoring activities.
5. All future maintenance activities shall avoid the site by a minimum of 50 ft. from the site boundaries.

Site NM-I-24-88:
Given the environmental hazards the mine possesses, and the thorough extent of the ethnographic information, all research potential has been exhausted. No further work is warranted.

TCPs.
No effect by proposed undertaking.

In the event of a discovery [*"discovery"* means any previously unidentified or incorrectly identified cultural resources including but not limited to archaeological deposits, human remains, or locations reportedly associated with Native American religious/traditional beliefs or practices], all operations in the immediate vicinity of the discovery must cease, and the Navajo Nation Historic Preservation Department must be notified at (928) 871-7198.

FORM PREPARED BY: **Tamara Billie**
FINALIZED: September 9, 2016

Notification to Proceed Recommended	☑ Yes ☐ No	Tamara Billie	9/9/16
Conditions:	☑ Yes ☐ No	The Navajo Nation Historic Preservation Office	Date
Navajo Region Approval	☒ Yes ☐ No	Acting BIA Navajo Regional Office	SEP 28 2016 Date

6 11-7/16

NNDFW Review No. 15mwh101-hb3

BIOLOGICAL RESOURCES COMPLIANCE FORM
NAVAJO NATION DEPARTMENT OF FISH AND WILDLIFE
P.O. BOX 1480, WINDOW ROCK, ARIZONA 86515-1480

It is the Department's opinion the project described below, with applicable conditions, is in compliance with Tribal and Federal laws protecting biological resources including the Navajo Endangered Species and Environmental Policy Codes, U.S. Endangered Species, Migratory Bird Treaty, Eagle Protection and National Environmental Policy Acts. This form does not preclude or replace consultation with the U.S. Fish and Wildlife Service if a Federally-listed species is affected.

PROJECT NAME & NO.: Harvey Blackwater No. 3 - Abandoned Uranium Mine Project

DESCRIPTION: Proposed Phase I & II scientific investigations at an abandoned mine site. Phase I would entail biological and land surveying with a maximum of 5 people onsite for no more than 5-7 days. Disturbance would be light. Phase II would require the use of an excavator or a small mobile drilling unit to collect one or more soil samples with up to 8 people onsite for a period of one week. A temporary travel corridor 20 ft. in width would be necessary to move equipment to the site. Disturbance would be light to moderate. No permanent structures would be left onsite. The proposed project area (mine boundary and buffer) would be approximately 23.2 acres.

LOCATION: 36°59.980'N 109°50.372'W, Dennehotso Chapter, Apache/San Juan County, Arizona/Utah

REPRESENTATIVE: Lori Gregory, Adkins Consulting, Inc. for MWH Global/Stantec

ACTION AGENCY: U.S. Environmental Protection Agency and Navajo Nation

B.R. REPORT TITLE / DATE / PREPARER: BE-Harvey Blackwater No. 3 Abandoned Uranium Mine Project/AUG 2016/Lori Gregory, Plant Survey Report for Species of Concern At Harvey Blackwater No. 3 Project Site/AUG 2016/Redente Ecological Consultants

SIGNIFICANT BIOLOGICAL RESOURCES FOUND: Area 1 & 3. Suitable nesting habitat is present in the project area for Migratory Birds not listed under the NESL or ESA. Migratory Birds and their habitats are protected under the Migratory Bird Treaty Act (16 USC §703-712) and Executive Order 13186. Under the EO, all federal agencies are required to consider management impacts to protect migratory non-game birds.

POTENTIAL IMPACTS

NESL SPECIES POTENTIALLY IMPACTED: Aquila chrysaetos (Golden Eagle) G3, GBENPR, BGEPA, MBTA.

FEDERALLY-LISTED SPECIES AFFECTED: NA

OTHER SIGNIFICANT IMPACTS TO BIOLOGICAL RESOURCES: NA

AVOIDANCE / MITIGATION MEASURES: Mitigation measures will be implemented to ensure that there are no impacts to migratory birds that could potentially nest in the project area.

CONDITIONS OF COMPLIANCE*: Phase I and Phase II project activities shall avoid the Golden Eagle (Aquila chrysaetos) breeding season of 15 JAN-15 JUL if the nest is active. Consult with staff zoologist.

FORM PREPARED BY / DATE: Pamela A. Kyselka/17 NOV 2016

COPIES TO: (add categories as necessary)

☒ BIA NRO ☐ _____

2 NTC § 164 Recommendation:	Signature	Date
☐Approval ☒Conditional Approval (with memo) ☐Disapproval (with memo) ☐Categorical Exclusion (with request letter) ☐None (with memo)	Gloria M. Tom, Director, Navajo Nation Department of Fish and Wildlife	11/18/16

*I understand and accept the conditions of compliance, and acknowledge that lack of signature may be grounds for the Department not recommending the above described project for approval to the Tribal Decision-maker.

Representative's signature Date

PRESIDENT
RUSSELL BEGAYE
VICE PRESIDENT
JONATHAN NEZ

NAVAJO FISH AND WILDLIFE P.O. BOX 1480 WINDOW ROCK, AZ 86515

17 November 2016 15mwh101-hb3

Lori Gregory, Wildlife Biologist
Adkins Consulting, Inc.
180 East 12th Street, Unit 5
Durango, Colorado 81301

Dear Lori,

The Navajo Nation Department of Fish and Wildlife (NNDFW) reviewed the Biological Evaluation for the proposed **Harvey Blackwater No. 3 AUM-ERT** project located in the Dennehotso Chapter, Arizona/Utah. The purpose of this letter is to inform you that we are granting the proposed project a Conditional Approval. Phase I and Phase II project activities shall avoid the Golden Eagle (*Aquila chrysaetos*) breeding season of 15 JAN-15 JUL if the nest is active per Golden & Bald Eagle Nest Protection Regulations.

Please contact me at 928-871-7065 with any questions that you have concerning the review of this project.

Sincerely,

Pamela A. Kyselka, Wildlife Biologist
Navajo Natural Heritage Program

CONCURRENCE

Gloria Tom, Director
Department of Fish and Wildlife

11/18/16
Date

xc: CONS-100-16
BIA

From:	Nystedt, John
To:	Justin Peterson
Cc:	Lori Gregory; Pam Kyselka; tbillie@navajo-nsn.gov; Harrilene Yazzie; Melissa Mata
Subject:	Navajo Nation AUM Environmental Response Trust - -First Phase
Date:	Monday, November 07, 2016 4:08:30 PM
Attachments:	image001.png

Justin,

Thank you for your November 6, 2016, email. This email documents our response regarding the subject project, in compliance with section 7 of the Endangered Species Act of 1973 (ESA) as amended (16 U.S.C. 1531 et seq.). Based on the information you provided, we believe no endangered or threatened species or critical habitat will be affected by this project; nor is this project likely to jeopardize the continued existence of any proposed species or adversely modify any proposed critical habitat. No further review is required for this project at this time. Should project plans change or if new information on the distribution of listed or proposed species becomes available, this determination may need to be reconsidered. In all future communication on this project, please refer to consultation numbers given below.

In keeping with our trust responsibilities to American Indian Tribes, by copy of this email, we will notify the Navajo Nation, which may be affected by the proposed action and encourage you to invite the Bureau of Indian Affairs to participate in the review of your proposed action.

Should you require further assistance or if you have any questions, please contact me as indicated below, or my supervisor, Brenda Smith, at 556-2157. Thank you for your continued efforts to conserve endangered species.

Claim 28	02EAAZ00-2016-SLI-0358
Section 26 (Desiddero Group)	02ENNM00-2016-SLI-0447
Mitten #3	06E23000-2016-SLI-0210
NA-0904	02EAAZ00-2016-SLI-0363
Occurrence B	02EAAZ00-2016-SLI-0361
Standing Rock	02ENNM00-2016-SLI-0448
Alongo Mines	02ENNM00-2016-SLI-0465
Tsosie 1*	02EAAZ00-2016-SLI-0364
Boyd Tisi No. 2 Western	02EAAZ00-2016-SLI-0355
Harvey Blackwater #3	02EAAZ00-2016-SLI-0356 / 06E23000-2016-SLI-0207
Oak 124/125	02ENNM00-2016-SLI-0466
NA-0928	02EAAZ00-2016-SLI-0360
Hoskie Tso #1	02EAAZ00-2016-SLI-0362
Charles Keith	06E23000-2016-SLI-0208
Barton 3	02EAAZ00-2016-SLI-0354
Eunice Becenti	02ENNM00-2016-SLI-0444

* It is our understanding that the Tsosie No. 1 site has been put on hold indefinitely due to access issues. However, provided the results of the survey were negative (i.e., no potential for

any ESA-listed species) then we would come to the same conclusion, above, as for the other 15 projects.

.··..··..··..··...··..··..··..··..··..··..··..··..··...··..··..··..··..··.

Fish and Wildlife Biologist/AESO Tribal Coordinator
USFWS AZ Ecological Services Office - Flagstaff Suboffice
Southwest Forest Science Complex, 2500 S Pine Knoll Dr, Rm 232
Flagstaff, AZ 86001-6381 (928) 556-2160 Fax-2121 Cell:(602) 478-3797
http://www.fws.gov/southwest/es/arizona/

Appendix F Data Usability Report, Laboratory Analytical Data, and Data Validation Reports

F.1 Data Usability Report

F.2 Laboratory Analytical Data and Data Validation Reports

(provided in a separate electronic file due to its file size and length)

F.1 Data Usability Report

DATA USABILITY REPORT

1.0 INTRODUCTION

This data usability report presents a summary of the validation results for the sample data collected from the Harvey Blackwater No. 3 Site (the Site) as part of the Removal Site Evaluation (RSE) performed for the Navajo Nation AUM Environmental Response Trust—First Phase. The purpose of the validation was to ascertain the data usability measured against the data quality objectives (DQOs) and confirm that results obtained are scientifically defensible.

Samples were collected between October 15, 2016 and March 18, 2017 and were analyzed by ALS Environmental of Ft. Collins, Colorado, for all methods. Samples were analyzed for one or more of the following:

- Radium-226 in soil by United States Environmental Protection Agency (USEPA) Method 901.1
- Metals in soil by USEPA Method SW6020
- Isotopic thorium in soil by USDOEAS-06/EMSL/LV

Samples were collected and analyzed according to the procedures and specific criteria presented in the *Quality Assurance Project Plan, Navajo Nation AUM Environmental Response Trust (QAPP),* (MWH 2016).

Project data were validated as follows:

- Laboratory Data Consultants, Inc. (LDC) of Carlsbad, California, performed validation of all radiological data, plus ten percent of the non-radiological data (Level IV only)
- All non-radiological data were validated by the Stantec Consulting Services Inc. (Stantec; formerly MWH) Project Chemist (Level III only)
- All samples received Level III data validation
- Ten percent of the sample results for all methods received a more detailed Level IV validation

The analytical data were validated based on the results of the following data evaluation parameters or quality control (QC) samples:

- Compliance with the QAPP
- Sample preservation
- Sample extraction and analytical holding times

- Initial calibration (ICAL), initial calibration verification (ICV), and continuing calibration verification (CCV) results
- Method and initial/continuing calibration blank (ICB/CCB) sample results
- Matrix spike/matrix spike duplicate (MS/MSD) sample results
- Laboratory duplicate results
- Serial dilution (metals analysis only)
- Interference check samples (ICS) (metals analysis only)
- Laboratory control sample (LCS) and laboratory control sample duplicate (LCSD) results
- Field duplicate sample results
- Minimum detectable concentration (radiological analyses only)
- Reporting limits
- Sample result verification
- Completeness evaluation
- Comparability evaluation

Sample results that were qualified due to quality control parameters outside of acceptance criteria are listed on Table F.1-1.

2.0 DATA VALIDATION RESULTS

Stantec reviewed the data validation reports and assessed the qualified data against the (DQOs) for the project. The following summarizes the data validation findings for each of the data evaluation parameters.

2.1 QUALITY ASSURANCE PROJECT PLAN COMPLIANCE EVALUATION

Based on the data validation, all samples were analyzed following the quality control criteria specified in the QAPP, with the following exception: ALS routinely dilutes all metals samples by a factor of 10 times in order to protect their ICP-MS instrument from the adverse effects of running samples with high total dissolved solids. This also includes running a long series of samples (as is common in a production laboratory) with intermediate dissolved solids. The vulnerable parts of the instrument are the nebulizer, which produces an aerosol, and the cones, which disperse the aerosol. These areas form scaly deposits from the samples in the sample solution, despite the

nitric acid and other acids present in the digestate. These parts of the instrument periodically need to be taken apart and cleaned, but in a production setting the laboratory wants to avoid any downtime as much as possible. As an ameliorating factor, the laboratory also takes account of this dilution factor up front in the project planning stages. The laboratory will not quote a reporting limit for this instrument that cannot be achieved after the 10 times dilution required for the instrument. Not all of the requested reporting limits can be met using the laboratory's routine protocol. The dilution is narrated by the laboratory merely as a matter of transparency, as well as for the validator's information. The dilution should have no impact on the project's sensitivity goals.

Sample Preservation Evaluation. All samples were preserved as specified in the QAPP.

Holding Time Evaluation. All analytical holding times were met.

Initial Calibration, Initial Calibration Verification, and Continuing Calibration Verification Evaluation. All ICAL, ICV, and CCV results were within acceptance criteria.

Method Blank Evaluation. No sample data were qualified due to method blank results.

Initial and Continuing Calibration Blank Evaluation. No sample data were qualified due to ICB/CCB data.

Matrix Spike/Matrix Spike Duplicate Samples Evaluation. All MS/MSD recoveries were within acceptance criteria with the exception of a few metals. Table F.1-1 lists the analytes where an MS and/or MSD percent recovery was outside the acceptance criteria. Samples results were qualified with a "J+" flag for results that were estimated and potentially biased high; sample results were qualified with a "J-" flag for results that were estimated and potentially biased low. Three MS/MSD relative percent differences (RPDs) for metals were outside the acceptance criteria; results were qualified as estimated with a "J" flag if not otherwise qualified.

Laboratory Duplicate Sample Evaluation. For some analyses, the laboratory prepared and analyzed a duplicate sample. RPD results were evaluated between the parent and laboratory duplicate samples. Sample results qualified due to laboratory duplicate RPDs outside of the acceptance criteria are listed on Table F.1-1. The sample results were qualified with a "J" flag to indicate an estimated result.

Serial Dilution Evaluation. All serial dilution percent differences were within acceptance criteria with the exception of a few metals. Sample results associated with out-of-compliance serial dilution were qualified with a "J" flag if not otherwise qualified (see Table F.1-1).

Interference Check Sample Evaluation. All interference check samples were within acceptance criteria.

Laboratory Control Sample/Laboratory Control Sample Duplicate Evaluation. All LCS and LCSD recoveries were within acceptance criteria. All LCS/LCSD RPDs were within acceptance criteria.

Field Duplicate Evaluation. The RPDs were less than the guidance RPD of 30 percent established in the QAPP for all field duplicate pairs, with the exception of results for four metals and one radium-226. The sample IDs, sample results, and RPDs for those results that did not meet the guidance RPD are listed in Table F.1-2. Sample results were not qualified due to RPDs exceeding the guidance criteria, as described in the QAPP.

Minimum Detectable Concentration Evaluation. All minimum detectable concentrations met reporting limits with the exception of eight samples for the analysis of radium-226. However, the reported activity for each of these samples was greater than the achieved minimum detectable concentration and no qualification was needed.

Reporting Limit Evaluation. All sample data were reported to the reporting limit established in the QAPP, with the exception of the metals, as discussed at the beginning of this section related to dilution.

Sample Result Verification. All sample result verifications were acceptable with the exception of 43 samples analyzed for radium-226. The sample density exceeded the limit of +/- 15% of the density of the calibration standard. In all cases the results were qualified with a "J-" flag as estimated, potentially biased low (see Table F.1-1).

Completeness Evaluation. All samples and QC samples were collected as scheduled, resulting in 100 percent sampling completeness for this project. Based on the results of the data validation described in the previous sections, all data are considered valid as qualified. No data were rejected; consequently, analytical completeness was 100 percent, which met the 95 percent analytical completeness goal established in the QAPP.

Comparability Evaluation. Comparability is a qualitative parameter that expresses the confidence that one data set may be compared to another. For this project, sample collection and analysis followed standard methods and the data were reported using standard units of measure as specified in the QAPP. In addition, QC data for this project indicate the data are comparable. As a result, the data from this project should be comparable to other data collected at this Site using similar sample collection and analytical methodology.

3.0 DATA VALIDATION SUMMARY

Precision. Based on the MS/MSD sample, LCS/LCSD sample, laboratory duplicate sample, and field duplicate results, the data are precise as qualified.

Accuracy. Based on the ICAL, ICV, CCV, MS/MSD, and LCS, the data are accurate as qualified.

Representativeness. Based on the results of the sample preservation and holding time evaluation; the method and ICB/CCB blank sample results; the field duplicate sample evaluation; and the RL evaluation the data are considered representative of the Site as reported.

Completeness. All media and QC sample results were valid and collected as scheduled; therefore, completeness for this RSE is 100 percent.

Comparability. Standard methods of sample collection and standard units of measure were used during this project. The analysis performed by the laboratory was in accordance with current USEPA methodology and the QAPP.

Based on the results of the data validation, all data are considered valid as qualified.

Table F.1-1
Summary of Qualified Data
Harvey Blackwater No. 3
Removal Site Evaluation Report - Final
Navajo Nation AUM Environmental Response Trust - First Phase

Field Sample Identification	Sample Date	Analysis Code	Analyte	Sample Result	Units	QC Type	QC Result	QC Limit	Added Flag	Comment
S239-BG1-001	10/15/16	SW6020	Molybdenum	1.2	mg/kg	LR	52%	20%	J	Result is estimated, bias unknown. LR RPD outside acceptance criteria.
S239-BG1-001	10/15/16	E901.1	Radium-226	0.88	pCi/g	Result Verification		±15%	J-	Result is estimated, potentially biased low. Sample density differs by more than 15% of LCS density.
S239-BG1-001	10/15/16	SW6020	Uranium	0.63	mg/kg	MS LR Serial Dilution	135% 72% 11%	75% - 125% 20% 10%	J+	Result is estimated, potentially biased high. MS recovery above acceptance criteria. LR RPD outside acceptance criteria. Serial dilution %D greater than acceptance criteria.
S239-BG1-002	10/15/16	E901.1	Radium-226	0.54	pCi/g	Result Verification		±15%	J-	Result is estimated, potentially biased low. Sample density differs by more than 15% of LCS density.
S239-BG1-003	10/15/16	E901.1	Radium-226	0.57	pCi/g	Result Verification		±15%	J-	Result is estimated, potentially biased low. Sample density differs by more than 15% of LCS density.
S239-BG1-004	10/15/16	E901.1	Radium-226	0.47	pCi/g	Result Verification		±15%	J-	Result is estimated, potentially biased low. Sample density differs by more than 15% of LCS density.
S239-BG1-005	10/15/16	E901.1	Radium-226	0.51	pCi/g	Result Verification		±15%	J-	Result is estimated, potentially biased low. Sample density differs by more than 15% of LCS density.
S239-BG1-007	10/15/16	E901.1	Radium-226	0.63	pCi/g	Result Verification		±15%	J-	Result is estimated, potentially biased low. Sample density differs by more than 15% of LCS density.
S239-BG1-008	10/15/16	E901.1	Radium-226	0.5	pCi/g	Result Verification		±15%	J-	Result is estimated, potentially biased low. Sample density differs by more than 15% of LCS density.
S239-BG1-006	10/15/16	E901.1	Radium-226	0.52	pCi/g	Result Verification		±15%	J-	Result is estimated, potentially biased low. Sample density differs by more than 15% of LCS density.

Notes
mg/kg milligrams per kilogram
pCi/g picocuries per gram
%D percent difference
LCS laboratory control sample
LR laboratory replicate (duplicate)
MS matrix spike
MSD matrix spike duplicate
RPD relative percent difference

Table F.1-1
Summary of Qualified Data
Harvey Blackwater No. 3
Removal Site Evaluation Report - Final
Navajo Nation AUM Environmental Response Trust - First Phase

Field Sample Identification	Sample Date	Analysis Code	Analyte	Sample Result	Units	QC Type	QC Result	QC Limit	Added Flag	Comment
S239-BG1-009	10/15/16	E901.1	Radium-226	0.45	pCi/g	Result Verification		±15%	J-	Result is estimated, potentially biased low. Sample density differs by more than 15% of LCS density.
S239-BG1-206	10/15/16	E901.1	Radium-226	0.49	pCi/g	Result Verification		±15%	J-	Result is estimated, potentially biased low. Sample density differs by more than 15% of LCS density.
S239-BG2-001	10/15/16	E901.1	Radium-226	1.24	pCi/g	Result Verification		±15%	J-	Result is estimated, potentially biased low. Sample density differs by more than 15% of LCS density.
S239-BG2-002	10/15/16	E901.1	Radium-226	0.91	pCi/g	Result Verification		±15%	J-	Result is estimated, potentially biased low. Sample density differs by more than 15% of LCS density.
S239-BG2-003	10/15/16	E901.1	Radium-226	1.04	pCi/g	Result Verification		±15%	J-	Result is estimated, potentially biased low. Sample density differs by more than 15% of LCS density.
S239-BG2-005	10/15/16	E901.1	Radium-226	1.23	pCi/g	Result Verification		±15%	J-	Result is estimated, potentially biased low. Sample density differs by more than 15% of LCS density.
S239-BG2-006	10/15/16	E901.1	Radium-226	0.85	pCi/g	Result Verification		±15%	J-	Result is estimated, potentially biased low. Sample density differs by more than 15% of LCS density.
S239-BG2-009	10/15/16	E901.1	Radium-226	0.79	pCi/g	Result Verification		±15%	J-	Result is estimated, potentially biased low. Sample density differs by more than 15% of LCS density.
S239-BG2-010	10/15/16	SW6020	Arsenic	2.1	mg/kg	MSD MS/MSD RPD Serial Dilution	158% 36% 17%	75% - 125% 20% 10%	J+	Result is estimated, potentially biased high. MSD recovery above acceptance criteria. MS/MSD RPD outside acceptance criteria. Serial dilution %D greater than acceptance criteria.
S239-BG2-004	10/15/16	E901.1	Radium-226	1.13	pCi/g	Result Verification		±15%	J-	Result is estimated, potentially biased low. Sample density differs by more than 15% of LCS density.

Notes
mg/kg milligrams per kilogram
pCi/g picocuries per gram
%D percent difference
LCS laboratory control sample
LR laboratory replicate (duplicate)
MS matrix spike
MSD matrix spike duplicate
RPD relative percent difference

Table F.1-1
Summary of Qualified Data
Harvey Blackwater No. 3
Removal Site Evaluation Report - Final
Navajo Nation AUM Environmental Response Trust - First Phase

Field Sample Identification	Sample Date	Analysis Code	Analyte	Sample Result	Units	QC Type	QC Result	QC Limit	Added Flag	Comment
S239-BG2-010	10/15/16	E901.1	Radium-226	1.11	pCi/g	Result Verification		±15%	J-	Result is estimated, potentially biased low. Sample density differs by more than 15% of LCS density.
S239-BG2-010	10/15/16	SW6020	Uranium	1.2	mg/kg	MSD MS/MSD RPD Serial Dilution	170% 37% 22%	75% - 125% 20% 10%	J+	Result is estimated, potentially biased high. MSD recovery above acceptance criteria. MS/MSD RPD outside acceptance criteria. Serial dilution %D greater than acceptance criteria.
S239-BG2-010	10/15/16	SW6020	Vanadium	6	mg/kg	MS/MSD RPD LR Serial Dilution	22% 32% 24%	20% 20% 10%	J	Result is estimated, bias unknown. MS/MSD RPD outside acceptance criteria. LR RPD outside acceptance criteria. Serial dilution %D greater than acceptance criteria.
S239-BG2-206	10/15/16	E901.1	Radium-226	1.16	pCi/g	Result Verification		±15%	J-	Result is estimated, potentially biased low. Sample density differs by more than 15% of LCS density.
S239-BG3-002	3/18/17	SW6020	Arsenic	11	mg/kg	MS MSD LR	15% 13% 146%	75% - 125% 75% - 125% 20%	J-	Result is estimated, potentially biased low. MS and MSD recoveries below acceptance criteria. LR RPD outside acceptance criteria.
S239-BG3-002	3/18/17	SW6020	Molybdenum	1.2	mg/kg	LR	91%	20%	J	Result is estimated, bias unknown. LR RPD outside acceptance criteria.
S239-BG3-003	3/18/17	E901.1	Radium-226	0.99	pCi/g	Result Verification		±15%	J-	Result is estimated, potentially biased low. Sample density differs by more than 15% of LCS density.
S239-BG3-005	3/18/17	E901.1	Radium-226	0.78	pCi/g	Result Verification		±15%	J-	Result is estimated, potentially biased low. Sample density differs by more than 15% of LCS density.
S239-BG3-006	3/18/17	E901.1	Radium-226	1.24	pCi/g	Result Verification		±15%	J-	Result is estimated, potentially biased low. Sample density differs by more than 15% of LCS density.
S239-BG3-11-1	3/18/17	E901.1	Radium-226	0.93	pCi/g	Result Verification		±15%	J-	Result is estimated, potentially biased low. Sample density differs by more than 15% of LCS density.

Notes
mg/kg milligrams per kilogram
pCi/g picocuries per gram
%D percent difference
LCS laboratory control sample
LR laboratory replicate (duplicate)
MS matrix spike
MSD matrix spike duplicate
RPD relative percent difference

Table F.1-1
Summary of Qualified Data
Harvey Blackwater No. 3
Removal Site Evaluation Report - Final
Navajo Nation AUM Environmental Response Trust - First Phase

Field Sample Identification	Sample Date	Analysis Code	Analyte	Sample Result	Units	QC Type	QC Result	QC Limit	Added Flag	Comment
S239-C02-001	10/27/16	E901.1	Radium-226	0.5	pCi/g	Result Verification		±15%	J-	Result is estimated, potentially biased low. Sample density differs by more than 15% of LCS density.
S239-C03-001	10/27/16	E901.1	Radium-226	8.1	pCi/g	Result Verification		±15%	J-	Result is estimated, potentially biased low. Sample density differs by more than 15% of LCS density.
S239-C04-001	10/27/16	E901.1	Radium-226	4.67	pCi/g	Result Verification		±15%	J-	Result is estimated, potentially biased low. Sample density differs by more than 15% of LCS density.
S239-C05-001	10/27/16	E901.1	Radium-226	4.42	pCi/g	Result Verification		±15%	J-	Result is estimated, potentially biased low. Sample density differs by more than 15% of LCS density.
S239-CX-002	10/27/16	E901.1	Radium-226	1.72	pCi/g	Result Verification		±15%	J-	Result is estimated, potentially biased low. Sample density differs by more than 15% of LCS density.
S239-CX-004	10/27/16	E901.1	Radium-226	0.82	pCi/g	Result Verification		±15%	J-	Result is estimated, potentially biased low. Sample density differs by more than 15% of LCS density.
S239-CX-007	10/27/16	E901.1	Radium-226	7.7	pCi/g	Result Verification		±15%	J-	Result is estimated, potentially biased low. Sample density differs by more than 15% of LCS density.
S239-CX-008	10/27/16	SW6020	Uranium	7.9	mg/kg	LR	29%	20%	J	Result is estimated, bias unknown. LR RPD outside acceptance criteria.
S239-BG3-203	3/18/17	E901.1	Radium-226	0.75	pCi/g	Result Verification		±15%	J-	Result is estimated, potentially biased low. Sample density differs by more than 15% of LCS density.
S239-CX-009	10/27/16	E901.1	Radium-226	2.7	pCi/g	Result Verification		±15%	J-	Result is estimated, potentially biased low. Sample density differs by more than 15% of LCS density.
S239-SCX-002-1	10/28/16	E901.1	Radium-226	1.02	pCi/g	Result Verification		±15%	J-	Result is estimated, potentially biased low. Sample density differs by more than 15% of LCS density.

Notes
mg/kg milligrams per kilogram
pCi/g picocuries per gram
%D percent difference
LCS laboratory control sample
LR laboratory replicate (duplicate)
MS matrix spike
MSD matrix spike duplicate
RPD relative percent difference

Table F.1-1
Summary of Qualified Data
Harvey Blackwater No. 3
Removal Site Evaluation Report - Final
Navajo Nation AUM Environmental Response Trust - First Phase

Field Sample Identification	Sample Date	Analysis Code	Analyte	Sample Result	Units	QC Type	QC Result	QC Limit	Added Flag	Comment
S239-SCX-002-2	10/28/16	E901.1	Radium-226	2.3	pCi/g	Result Verification		±15%	J-	Result is estimated, potentially biased low. Sample density differs by more than 15% of LCS density.
S239-SCX-004-1	10/28/16	E901.1	Radium-226	10.1	pCi/g	Result Verification		±15%	J-	Result is estimated, potentially biased low. Sample density differs by more than 15% of LCS density.
S239-SCX-006-1	10/28/16	E901.1	Radium-226	3.03	pCi/g	Result Verification		±15%	J-	Result is estimated, potentially biased low. Sample density differs by more than 15% of LCS density.
S239-SCX-008-1	10/28/16	E901.1	Radium-226	19.8	pCi/g	Result Verification		±15%	J-	Result is estimated, potentially biased low. Sample density differs by more than 15% of LCS density.
S239-SCX-008-2	10/28/16	E901.1	Radium-226	18.4	pCi/g	Result Verification		±15%	J-	Result is estimated, potentially biased low. Sample density differs by more than 15% of LCS density.
S239-SCX-016-01	11/15/16	SW6020	Arsenic	3	mg/kg	MSD	137%	75% - 125%	J+	Result is estimated, potentially biased high. MSD recovery above acceptance
S239-SCX-016-01	11/15/16	SW6020	Vanadium	7.4	mg/kg	MSD	166%	75% - 125%	J+	Result is estimated, potentially biased high. MSD recovery above acceptance
S239-SCX-017-01	11/15/16	SW6020	Molybdenum	2.4	mg/kg	Serial Dilution	12%	10%	J	Result is estimated, bias unknown. Serial dilution %D greater than acceptance criteria.
S239-SCX-017-01	11/15/16	SW6020	Uranium	0.82	mg/kg	MS MSD	135% 127%	75% - 125% 75% - 125%	J+	Result is estimated, potentially biased high. MS and MSD recoveries above acceptance criteria.
S239-SCX-017-02	11/15/16	E901.1	Radium-226	2.06	pCi/g	Result Verification		±15%	J-	Result is estimated, potentially biased low. Sample density differs by more than 15% of LCS density.
S239-SCX-021-04	11/15/16	E901.1	Radium-226	66	pCi/g	Result Verification		±15%	J-	Result is estimated, potentially biased low. Sample density differs by more than 15% of LCS density.

Notes
mg/kg milligrams per kilogram
pCi/g picocuries per gram
%D percent difference
LCS laboratory control sample
LR laboratory replicate (duplicate)
MS matrix spike
MSD matrix spike duplicate
RPD relative percent difference

Table F.1-1
Summary of Qualified Data
Harvey Blackwater No. 3
Removal Site Evaluation Report - Final
Navajo Nation AUM Environmental Response Trust - First Phase

Field Sample Identification	Sample Date	Analysis Code	Analyte	Sample Result	Units	QC Type	QC Result	QC Limit	Added Flag	Comment
S239-SXC-009-02	11/14/16	E901.1	Radium-226	57.3	pCi/g	Result Verification		±15%	J-	Result is estimated, potentially biased low. Sample density differs by more than 15% of LCS density.
S239-SXC-011-01	11/14/16	E901.1	Radium-226	2.79	pCi/g	Result Verification		±15%	J-	Result is estimated, potentially biased low. Sample density differs by more than 15% of LCS density.
S239-SXC-012-01	11/14/16	E901.1	Radium-226	2.22	pCi/g	Result Verification		±15%	J-	Result is estimated, potentially biased low. Sample density differs by more than 15% of LCS density.

Notes

mg/kg milligrams per kilogram	LR laboratory replicate (duplicate)
pCi/g picocuries per gram	MS matrix spike
%D percent difference	MSD matrix spike duplicate
LCS laboratory control sample	RPD relative percent difference

Table F.1-2
Results that did not Meet the Relative Percent Difference Guidance
Harvey Blackwater No. 3
Removal Site Evaluation Report - Final
Navajo Nation AUM Environmental Response Trust - First Phase

Primary Sample / Duplicate Indentification	Sample Date	Parameter	Primary Result	Duplicate Result	Units	RPD (%)
S239-BG1-006/S239-BG1-206	10/15/2016	Arsenic	1.8	1.2	mg/kg	40
S239-BG2-006/S239-BG2-206	10/15/2016	Radium-226	0.85	1.16	pCi/g	31
S239-CX-008/S239-CX-208	10/27/2016	Uranium	7.9	5.6	mg/kg	34
S239-BG3-007/S239-BG3-207	3/18/2017	Arsenic	4.2	5.8	mg/kg	32
S239-BG3-007/S239-BG3-207	3/18/2017	Molybdenum	0.59	1.1	mg/kg	60

Notes
mg/kg milligrams per kilogram
pCi/g picocuries per gram
RPD relative percent difference